SPECIFICATIONS

FASTENER TIGHTENING SPECIFICATIONS

Fastener Tightening Specifications

Description of Usage	Ref No.*	Qty	Size	Specification	
				Metric	English
Accumulator Cover to Case	58	1	M6x1.0x65	8-14 N.m	6-10 lb ft
Accumulator Cover to Case	117	1	M6x1.0x65	8-14 N.m	6-10 lb ft
Accumulator Cover to Case	118	2	M6x1.0x28.0	8-14 N.m	6-10 lb ft
Accumulator Cover to Case	59	2	M6x1.0x35	8-14 N.m	6-10 lb ft
A/Trans Case Extension (Y-Car)	100	1	M10x1.5x55	18-22 N.m	13-16 lb ft
Converter Housing to Case	94	8	M10x1.5gx45	65-75 N.m	48-55 lb ft
Cooler Pipe Connector	95	2	1/4-18NSPS (SPL)	35-41 N.m	26-30 lb ft
Detent Spring to Valve Body	64	1	M8x1.25x20	20-27 N.m	15-20 lb ft
Extension Housing to Case	32	6	M10x1.5x33.4	42-48 N.m	31-35 lb ft
Extension Housing to Case (4WD Shipping)	N/A	4	M10x1.5x33.4	11-23 N.m	8-17 lb in
Forward Accumulator Cover to Valve Body	364	3	M6x1.0x17.7	8-14 N.m	6-10 lb ft
Line Pressure Test Hole Plug	39	1	1/8-27NPTF	8-14 N.m	6-10 lb ft
Manual Shaft to Detent Lever Nut	90	1	M10x1.5	27-34 N.m	20-25 lb ft
Oil Cooler Pipe Fitting	10	2	1/4-18NPS(SPL)	35-41 N.m	26-30 lb ft
Oil Pan to Case	76	16	M8x1.25x19.3	16 N.m	11.8 lb ft
Oil Passage Cover (Spacer Plate Support) to Case	77	3	M6x1.0x17.7	8-14 N.m	6-10 lb ft
Oil Passage Cover (Spacer Plate Support) to Case	115	1	M6x1.0x19.0	8-14 N.m	6-10 lb ft

cardiagn.com

Park Lock Bracket to Case	87	1	M8x1.25x20	27-34 N.m	20-25 lb ft
Plate to Case (Shipping)	N/A	2	M10x1.5x35	27-34 N.m	20-25 lb ft
Plate to Converter (Shipping)	N/A	1	M10x1.5x25	27-34 N.m	20-25 lb ft
Plate to Converter (Shipping)	N/A	1	M10x1.5x15	27-34 N.m	20-25 lb ft
Plug Assembly, Oil Pan (C/K)	107	1	M12x1.75x19.25	30-40 N.m	22-30 lb ft
Plug Assembly, Oil Pan (Y-car)	101	1	M16x1.50x16	28-32 N.m	21-24 lb ft
Pressure Control Solenoid Bracket to Valve Body Bolt	364	1	M6x1.0x17.7	8-14 N.m	6-10 lb ft
Pump Assembly to Case	2	7	M8x1.25x60	26-32 N.m	19-24 lb ft
Pump Cover to Pump Body	233	5	M8x1.25x40	20-27 N.m	15-20 lb ft
Secondary Fluid Pump Assembly to Valve Body	109	2	M6x1.0x4.5	11-14 N.m	8-10 lb ft
Secondary Fluid Pump Assembly to Valve Body	110	1	M6x1.0x4.5	11-14 N.m	8-10 lb ft
Speed Sensor to Case	35	1	M6x1.0x15	11-14 N.m	8-10 lb ft
TCC Solenoid Assembly to Case	68	2	M6x1.0x12	8-14 N.m	6-10 lb ft
Transmission Fluid Pressure (TFP) Manual Valve Position Switch to Body	70	2	M6x1.0x17.7	8-14 N.m	6-10 lb ft
Valve Body to Case	62,58	3	M6x1.0x65	8-14 N.m	6-10 lb ft
Valve Body to Case	N/A	3	M6x1.0x54.4	8-14 N.m	6-10 lb ft
Valve Body to Case	N/A	9	M6x1.0x47.5	8-14 N.m	6-10 lb ft
Valve Body to Case	59	4	M6x1.0x35	8-14 N.m	6-10 lb ft
Valve Body to Case	64	3	M8x1.25x20	8-14 N.m	6-10 lb ft
Valve body to Case	68	2	M6x1.0x12	8-14 N.m	6-10 lb ft
Valve Body to Case	70,77	7	M6x1.0x18	8-14 N.m	6-10 lb ft
* Reference Number refers to the callout number on the disassembled view.					

cardiagn.com

FLUID CAPACITY SPECIFICATIONS

Fluid Capacity - Approximate

Application	Specification	
	Metric	English
Pan Removal	4.7 liters	5 quarts
Overhaul	10.6 liters	11 quarts

END PLAY SPECIFICATIONS

Transmission End Play Washer Selection Chart

Identification	Washer Thickness (mm)	Washer Thickness (in)
67	1.87-1.97	0.074-0.078
68	2.04-2.14	0.080-0.084
69	2.21-2.31	0.087-0.091
70	2.38-2.48	0.094-0.098
71	2.55-2.65	0.100-0.104
72	2.72-2.82	0.107-0.111
73	2.89-2.99	0.113-0.117
74	3.06-3.16	0.120-0.124

LOW AND REVERSE CLUTCH SPACER PLATE SELECTION

Low and Reverse Clutch Plate Selection Table

Selective Plate		Thickness
Measured Dimension	Identification	
28.065-27.545 mm (1.105-1.084 in)	None	1.684-1.829 mm (0.066-0.072 in)
28.586-28.066 mm (1.125-1.105 in)	0	1.314-1.168 mm (0.052-0.046 in)
27.544-27.026 mm (1.084-1.064 in)	1	2.198-2.344 mm (0.087-0.092 in)

FORWARD CLUTCH BACKING PLATE SELECTION

Forward Clutch Backing Plate Selection

Plate Thickness	Identification
6.92-7.07 mm (0.272-0.278 in)	A
6.33-6.48 mm (0.249-0.255 in)	B
5.74-5.89 mm (0.226-0.232 in)	C
5.15-5.30 mm (0.203-0.208 in)	D
4.56-4.71 mm (0.180-0.185 in)	E

Backing Plate Travel

- 245 mm = 0.766-1.756 mm (0.030-0.069 in)

cardiagn.com

- 298 mm/300 mm = 0.866-1.876 mm (0.034-0.074 in)

THIRD AND FOURTH CLUTCH BACKING PLATE SELECTION

3rd and 4th Clutch Backing Plate Selection Table

Dimension	Identification
5.88-5.68 mm (0.231-0.224 in)	A
4.99-4.76 mm (0.196-0.187 in)	B
4.10-3.90 mm (0.161-0.154 in)	C
Use a backing plate which gives the correct travel. The travel should be 2.10-0.90 mm (0.083-0.035 in).	

REVERSE INPUT CLUTCH BACKING PLATE SELECTION

Reverse Input Clutch Backing Plate Selection Table

Plate Thickness	Identification
7.249-7.409 mm (0.285-0.292 in)	2
6.678-6.519 mm (0.263-0.257 in)	3
5.947-5.787 mm (0.234-0.228 in)	4
Backing Plate Travel: 1.02-1.94 mm (0.40-0.76 in)	

OIL PUMP ROTOR AND SLIDE MEASUREMENT

Oil Pump Rotor and Slide Measurement

Thickness (mm)	Thickness (in)
Oil Pump Rotor	
17.948-17.961	0.7066-0.7071
17.961-17.974	0.7071-0.7076
17.974-17.987	0.7076-0.7081
17.987-18.000	0.7081-0.7086
18.000-18.013	0.7086-0.7091
Oil Pump Slide	
17.948-17.961	0.7066-0.7071
17.961-17.974	0.7071-0.7076
17.974-17.987	0.7076-0.7081
17.987-18.000	0.7081-0.7086
18.000-18.013	0.7086-0.7091

SECONDARY FLUID PUMP ASSEMBLY SPECIFICATIONS (M33 ONLY)

Secondary Fluid Pump Assembly Specifications (M33 Only)

Application	Specification	
	Metric	English

cardiagn.com

Pump		
• Type	Gerotor - Internal/External Gear	
• Weight	0.589 kg	1.3 lb
• Pump Deliver	2.5 lpm +/-0.1 @ 93.3°C (200°F)	0.5-1.3 gpm +/-0.026 @ 93.3°C (200°F)
• Pressure	110.3-275.7 kPa +/-3.44	16-40 psi +/-0.5
Relief Pressure		
• Minimum	550 kPa	79.7 psi
• Maximum	900 kPa	130.5 psi
Operating Temperature		
• Minimum	21°C	69.8°F
• Maximum	104°C	219.2°F
Motor		
Operating Voltage		
• Maximum	14.5 Volts	
• Minimum	11 Volts	
• Operating Range	14.5-13.5 Volts	
• Maximum Current	10 amp	
• Nominal Current Load	4.464 amp	
• Terminal/Winding Resistance	0.0-0.937 ohm	

TORQUE CONVERTER END PLAY INSPECTION

Torque Converter End Play Check

Torque Converter Size	Specification
245 mm (9.65 in)	0-.38 mm (0-0.015 in)
258 mm (10.16 in)	0.1-0.5 mm (.004-.020 in)
298 mm (11.73 in)	0.1-0.48 mm (.004-.019 in)
300 mm (11.81 in)	0.1-0.5 mm (.004-.020 in)

2-4 SERVO PIN SELECTION

cardiagn.com

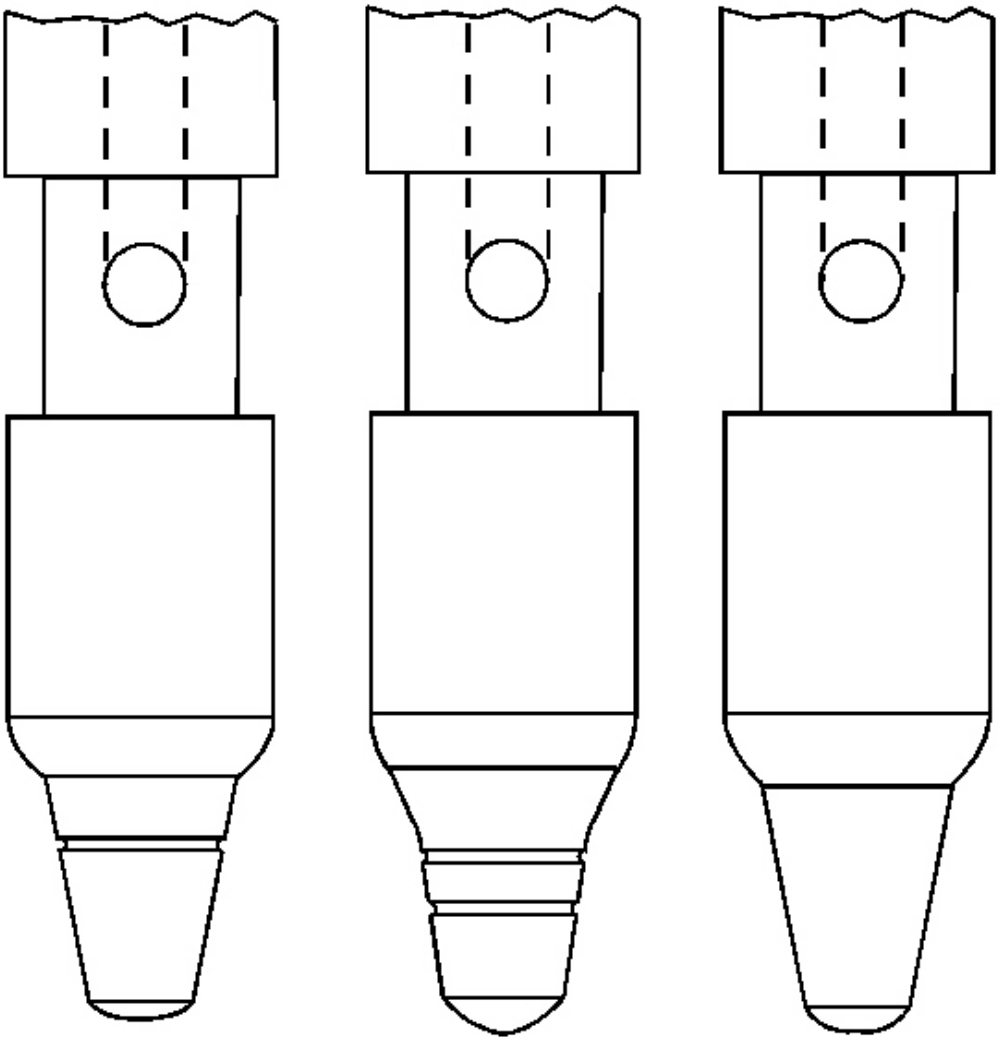

Fig. 1: 2-4 Servo Pin Selection
Courtesy of GENERAL MOTORS CORP.

2-4 Servo Pin Selection

Pin Length		Pin Identification
mm	inch	
65.82-66.12	2.59-2.60	1 Groove
67.23-67.53	2.65-2.66	2 Grooves
68.64-68.94	2.70-2.71	No Groove

cardiagn.com

COMPONENT LOCATOR

DISASSEMBLED VIEWS

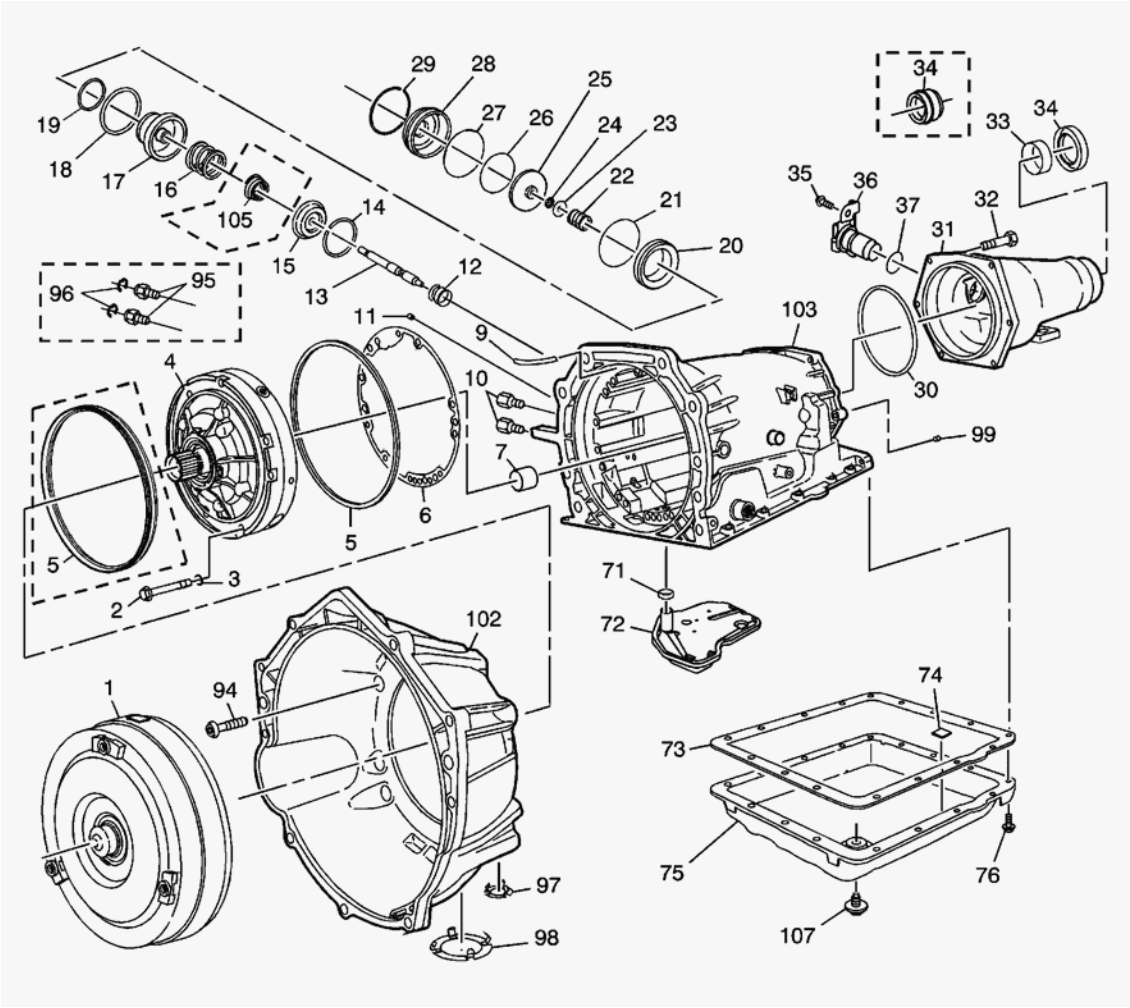

Fig. 2: Case & Associated Parts Disassembled Views (1 Of 2)
Courtesy of GENERAL MOTORS CORP.

Callouts For Fig. 2

Callout	Component Name
1	Torque Converter Assembly - Model Dependent On Size
2	Pump to Case Bolt
3	Pump to Case Bolt O-Ring
4	Oil Pump Assembly
5	A/T Fluid Pump Seal - Pump to Case - Model Dependent
5	A/T Fluid Pump Seal - Pump to Case - Model Dependent
6	Pump Cover to Case Gasket
7	Case Bushing

cardiagn.com

9	Transmission Vent Assembly
10	Oil Cooler Pipe Connector - Model Dependent
11	Case Servo Plug
12	Servo Return Spring
13	2nd Apply Piston Pin
14	Retainer Ring - 2nd Apply Piston
15	Servo Cushion Spring Retainer
16	Servo Cushion Spring - Outer
17	2nd Apply Piston
18	Oil Seal Ring - 2nd Apply Piston - Outer
19	Oil Seal Ring - 2nd Apply Piston - Inner
20	Servo Piston Housing - Inner
21	O-Ring Seal
22	Servo Apply Pin Spring
23	Servo Apply Pin Washer
24	Retainer Ring - Apply Pin
25	4th Apply Piston
26	Oil Seal Ring - 4th Apply Piston - Outer
27	O-Ring Seal - 2-4 Servo Cover
28	2-4 Servo Cover
29	Servo Cover Retaining Ring
30	Case Extension to Case Seal
31	Case Extension - Model Dependent
32	Case Extension to Case Bolt
33	Case Extension Bushing
34	Case Extension Oil Seal Assembly - Model Dependent
34	Case Extension Oil Seal Assembly - Model Dependent
35	Speed Sensor Retaining Bolt
36	Internal Transmission Speed Sensor
37	O-Ring Seal - ITSS to Case Extension
71	Filter Seal
72	Transmission Oil Filter Assembly - Model Dependent
73	Transmission Oil Pan Gasket
74	Chip Collector Magnet
75	Transmission Oil Pan - Model Dependent
76	Transmission Oil Pan Screw
94	Converter Housing to Case Bolt
95	Oil Cooler Quick Connector - Model Dependent
96	Oil Cooler Quick Connect Clip - Model Dependent
97	Converter Housing Access Hole Plug - Model Dependent
98	Converter Bolt Inspection Plate - Model Dependent

cardiagn.com

99	Cup D4 Orifice Plug
102	Converter Housing - Model Dependent
103	Main Section Case - Model Dependent
105	Servo Cushion Spring - Inner - Model Dependent
107	A/T Oil Pan Hex Head Plug Assembly - Model Dependent

cardiagn.com

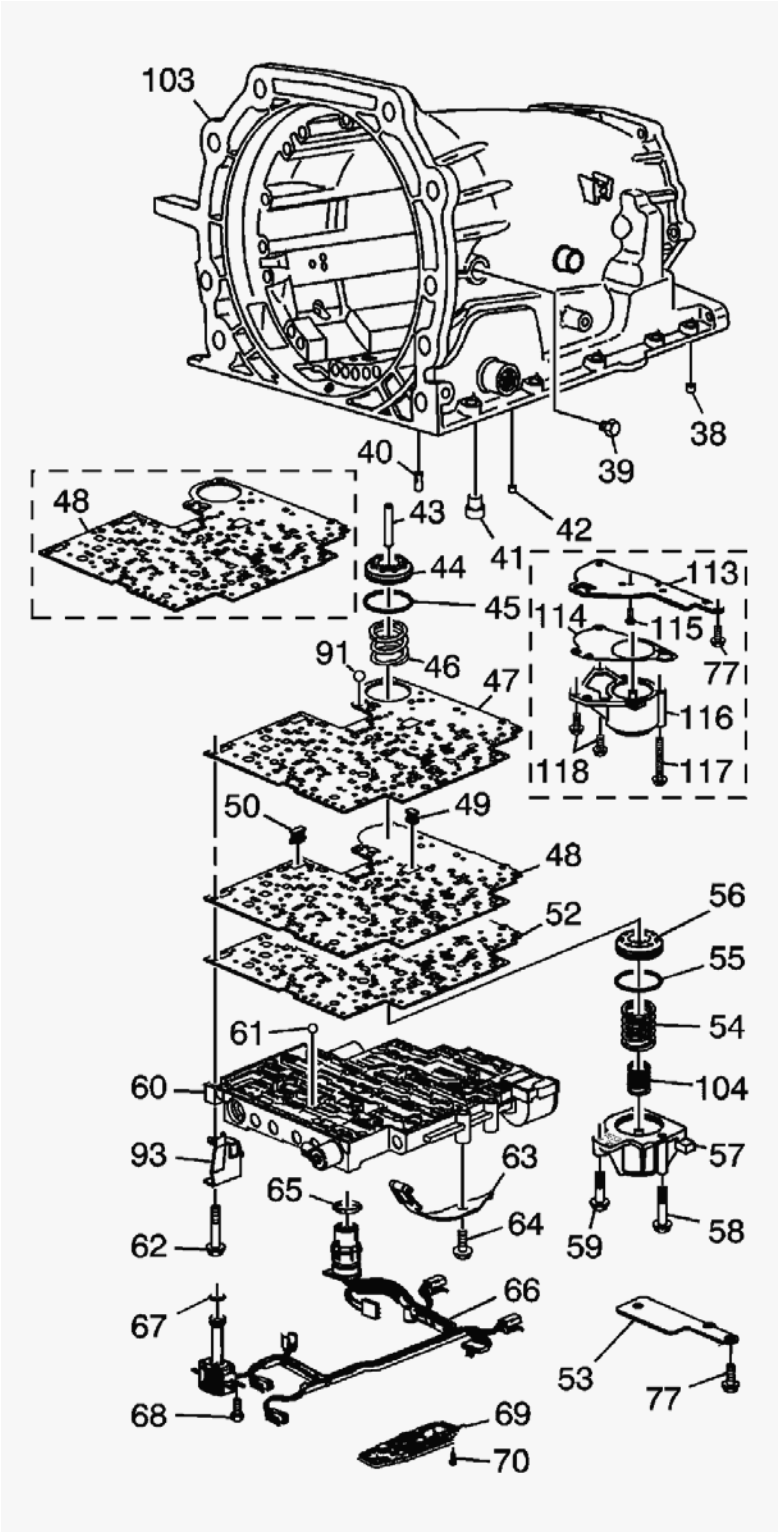

Fig. 3: Case & Associated Parts Disassembled View (2 Of 2) - M30/M32
Courtesy of GENERAL MOTORS CORP.

Callouts For Fig. 3

cardiagn.com

Callout	Component Name
38	Transmission Case Plug - Accumulator Bleed
39	Pressure Plug
40	Third Accumulator (#7) Retainer and Ball Assembly
41	Band Anchor Pin
42	Retainer and Ball Assembly - Double Orifice (#10)
43	Accumulator Piston Pin
44	3-4 Accumulator Piston
45	Oil Seal Ring - 3-4 Accumulator Piston
46	3-4 Accumulator Spring - Model Dependent
47	Spacer Plate to Case Gasket
48	Valve Body Spacer Plate
48	Valve Body Spacer Plate
49	Shift Solenoids Screen
50	Pressure Control Solenoid Screen
52	Spacer Plate to Valve Body Gasket
53	Spacer Plate Support Plate
54	1-2 Accumulator Spring - Outer
55	Oil Seal Ring - 1-2 Accumulator
56	1-2 Accumulator Piston
57	1-2 Accumulator Cover and Pin Assembly - Model Dependent
58	Accumulator Cover Bolt
59	Accumulator Cover Bolt
60	Control Body Valve Assembly - Model Dependent
61	Checkball (#2, 3, 4, 5, 6, 8, 12)
62	Valve Body Bolt
63	Manual Detent Spring Assembly
64	Manual Detent Spring Bolt
65	Wiring Harness Pass-Through Connector O-Ring Seal
66	Wiring Harness Solenoid Assembly - Model Dependent
67	O-Ring Seal - Solenoid
68	Hex Washer Head Bolt - Solenoid
69	Transmission Fluid Pressure Manual Valve Position Switch Assembly
70	Pressure Switch Assembly Bolt
77	Spacer Plate Support Bolt
77	Spacer Plate Support Bolt
91	Number 1 Checkball
93	Dipstick Stop Bracket - Model Dependent
103	Main Section Case - Model Dependent
104	1-2 Accumulator Spring - Inner
113	Spacer Plate Support Plate - Colorado/Canyon

cardiagn.com

114	Accumulator Gasket - Colorado/Canyon
115	Accumulator Bolt - Colorado/Canyon
116	Accumulator Cover - Colorado/Canyon
117	Accumulator Bolt - Colorado/Canyon
118	Accumulator Bolt - Colorado/Canyon

cardiagn.com

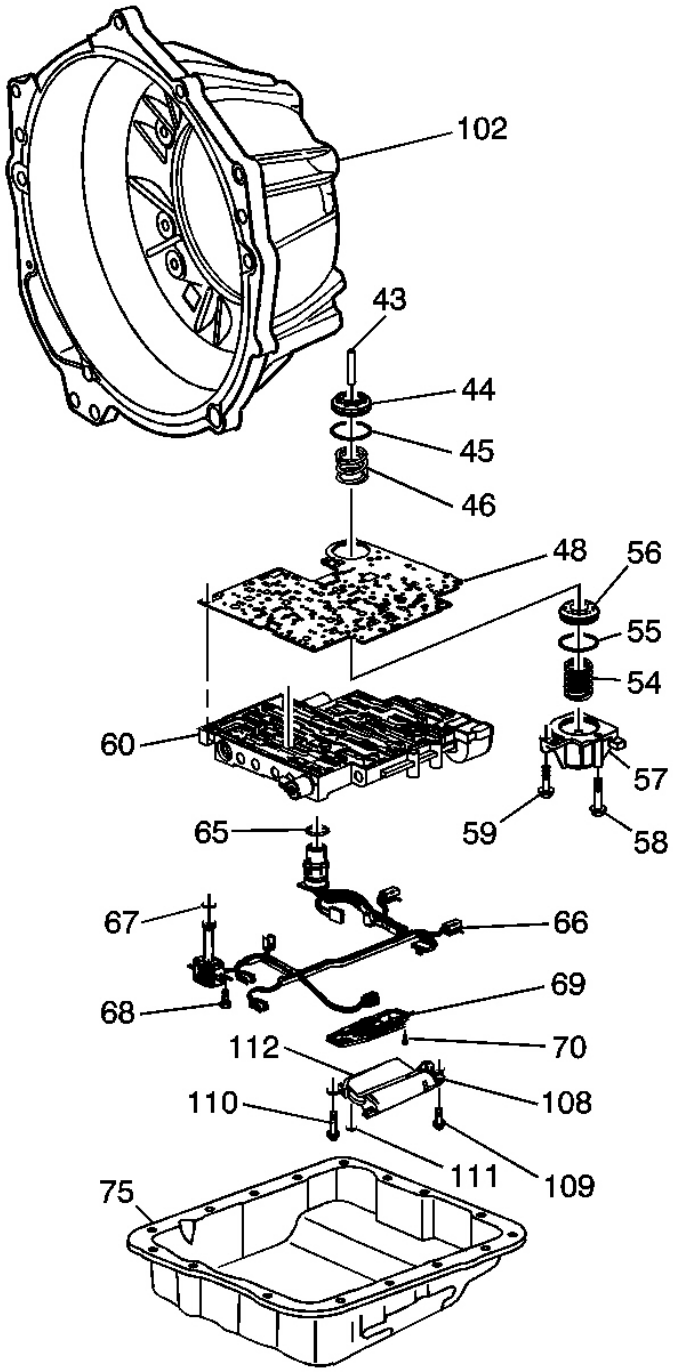

Fig. 4: Case & Associated Parts Disassembled View (2 Of 2) - M33 Only
Courtesy of GENERAL MOTORS CORP.

Callouts For Fig. 4

cardiagn.com

Callout	Component Name
43	Accumulator Piston Pin
44	3-4 Accumulator Piston
45	Oil Seal Ring - 3-4 Accumulator Piston
46	3-4 Accumulator Spring - Model Dependent
48	Valve Body Spacer Plate with Bonded Gasket
54	1-2 Accumulator Spring - Outer
55	Oil Seal Ring - 1-2 Accumulator
56	1-2 Accumulator Piston
57	1-2 Accumulator Cover and Pin Assembly
58	Accumulator Cover Bolt
59	Accumulator Cover Bolt
60	Control Body Valve Assembly - Model Dependent
65	Wiring Harness Pass-through Connector O-Ring Seal
66	Wiring Harness Solenoid Assembly - Model Dependent
67	O-Ring Seal - Solenoid
68	Hex Washer Head Bolt - Solenoid
69	Transmission Fluid Pressure Manual Valve Position Switch Assembly
70	Pressure Switch Assembly Bolt
75	Transmission Oil Pan
102	Converter Housing
108	Secondary Fluid Pump Assembly
109	Secondary Fluid Pump Bolts
110	Secondary Fluid Pump Bolt
111	Filter Retainer
112	Secondary Fluid Pump Filter

cardiagn.com

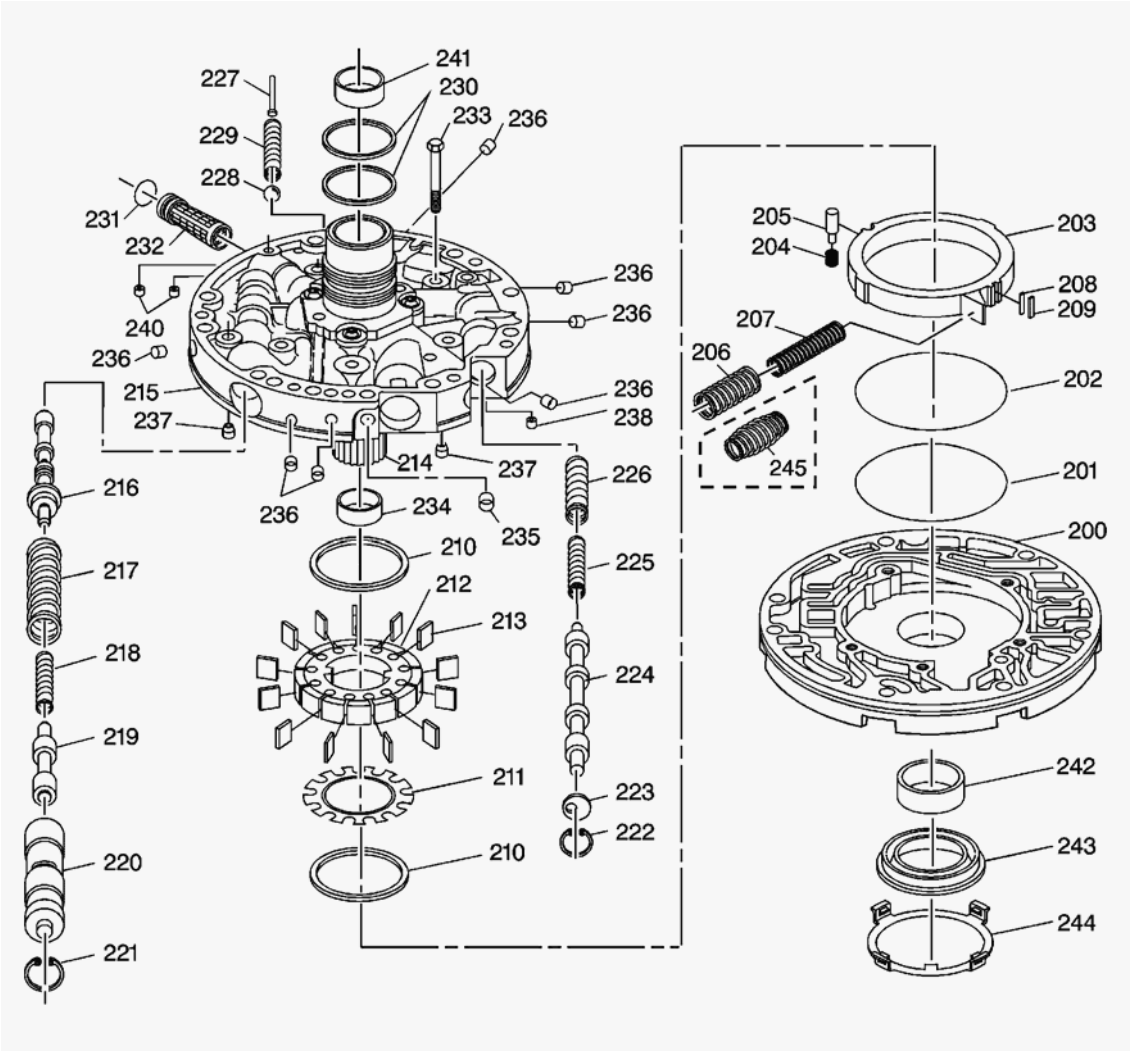

Fig. 5: Oil Pump Assembly Disassembled View
Courtesy of GENERAL MOTORS CORP.

Callouts For Fig. 5

Callout	Component Name
200	Pump Body
201	Oil Seal Ring - Slide to Wear Plate
202	O-Ring Seal - Slide Seal Back-Up
203	Pump Slide
204	Pivot Pin Spring
205	Pivot Slide Pin
206	Pump Slide Spring - Outer
207	Pump Slide Spring - Inner
208	Pump Slide Seal Support
209	Pump Slide Seal
210	Pump Vane Ring

cardiagn.com

210	Pump Vane Ring
211	Rotor Guide
212	Oil Pump Rotor
213	Pump Vane
214	Stator Shaft
215	Pump Cover
216	Pressure Regulator Valve
217	Pressure Regulator Valve Spring
218	Pressure Regulator Isolator Spring
219	Reverse Boost Valve
220	Reverse Boost Valve Sleeve
221	Oil Pump Reverse Boost Valve Retaining Ring
222	Oil Pump Converter Clutch Valve Retaining Ring
223	Stop Valve
224	Converter Clutch Valve
225	Converter Clutch Valve Spring - Inner
226	Converter Clutch Valve Spring - Outer
227	Pressure Relief Bolt Rivet
228	Pressure Relief Ball
229	Pressure Relief Spring
230	Oil Seal Ring - Stator Shaft
231	Oil Pump Cover Screen Seal
232	Oil Pump Cover Screen
233	Bolt M8 X 1.25 X 40 - Cover to Body
234	Stator Shaft Bushing - Front
235	Oil Pump Cover Plug - FWD Clutch Feed
236	Oil Pump Cover Plug
236	Oil Pump Cover Plug
236	Oil Pump Cover Plug
236	Oil Pump Cover Plug
236	Oil Pump Cover Plug
236	Oil Pump Cover Plug
237	Check Valve Retainer and Ball Assembly
237	Check Valve Retainer and Ball Assembly
238	Converter Clutch Signal Orifice - Cup Plug
240	Cup Orifice Plug
241	Stator Shaft Bushing - Rear
242	Pump Body Bushing
243	Oil Seal Assembly
244	Front Helix Retainer
245	A/T Fluid Pump Slide Outer Spring

cardiagn.com

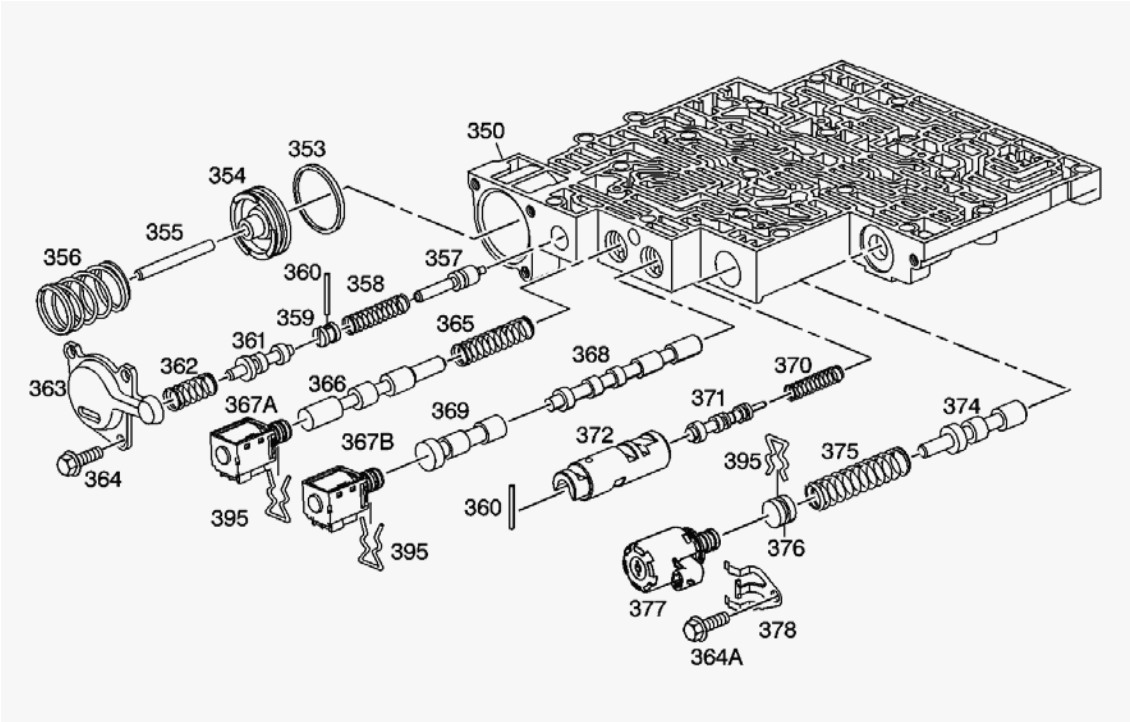

Fig. 6: Control Valve Body Assembly Disassembled View (1 Of 2)
Courtesy of GENERAL MOTORS CORP.

Callouts For Fig. 6

Callout	Component Name
350	Control Valve Body Assembly
353	Forward Accumulator Oil Seal
354	Forward Accumulator Piston
355	Forward Accumulator Pin
356	Forward Accumulator Spring
357	Forward Abuse Valve
358	Forward Abuse Valve Spring
359	Bore Plug
360	Coiled Spring Pin
360	Coiled Spring Pin
361	Low Overrun Valve
362	Low Overrun Valve Spring
363	Forward Accumulator Cover
364	Forward Accumulator Cover Bolt
364a	Pressure Control Solenoid Retainer Bolt
365	1-2 Shift Valve Spring - Model Dependent
366	1-2 Shift Valve - Model Dependent
367a	1-2 Shift Solenoid Valve

cardiagn.com

367b	2-3 Shift Solenoid Valve
368	2-3 Shift Valve
369	2-3 Shuttle Valve
370	1-2 Accumulator Valve Spring
371	1-2 Accumulator Valve
372	1-2 Accumulator Valve Sleeve
374	Actuator Feed Limit Valve
375	Actuator Feed Limit Valve Spring
376	Bore Plug
377	Pressure Control Solenoid Valve
378	Pressure Control Solenoid Retainer
395	Bore Plug and Solenoid Retainer
395	Bore Plug and Solenoid Retainer
395	Bore Plug and Solenoid Retainer

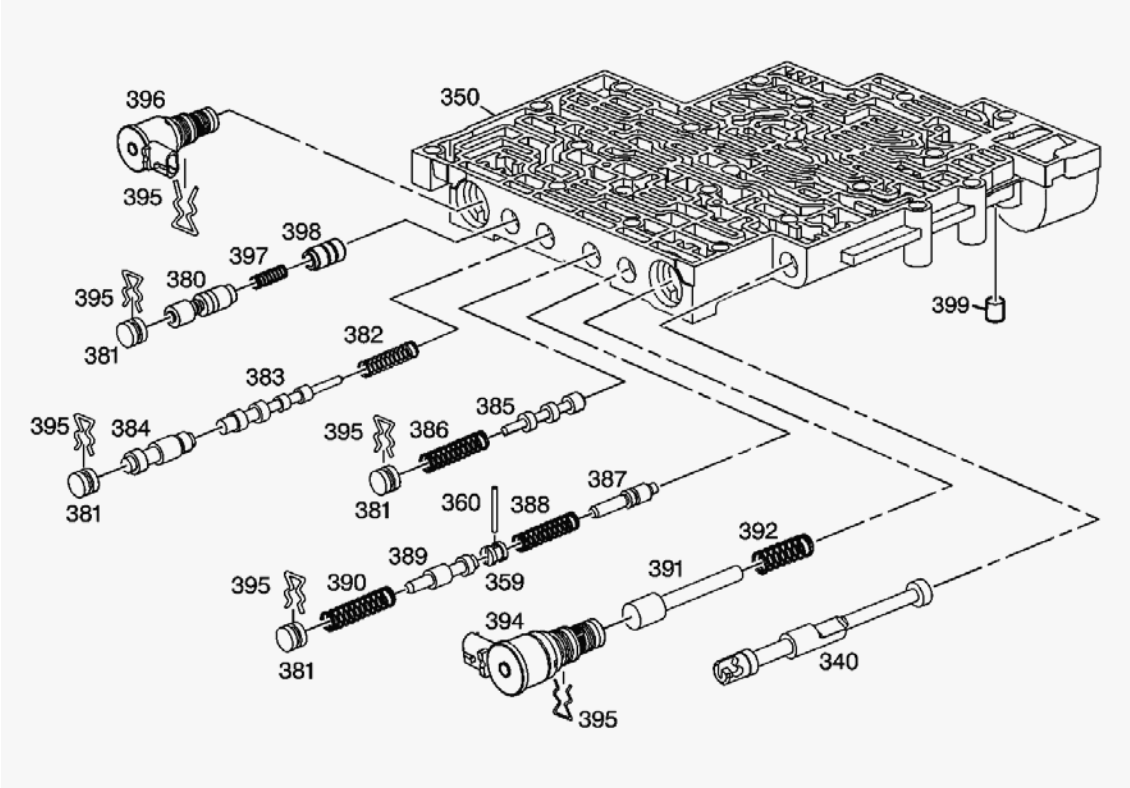

Fig. 7: Control Valve Body Assembly Disassembled View (2 Of 2)
Courtesy of GENERAL MOTORS CORP.

Callouts For Fig. 7

Callout	Component Name
340	Manual Valve
350	Control Valve Body Assembly

cardiagn.com

359	Bore Plug
360	Coiled Spring Pin
380	Regulator Apply Valve
381	Bore Plug
381	Bore Plug
381	Bore Plug
381	Bore Plug
382	4-3 Sequence Valve Spring
383	4-3 Sequence Valve
384	3-4 Relay Valve
385	3-4 Shift Valve
386	3-4 Shift Valve Spring
387	Reverse Abuse Valve
388	Reverse Abuse Valve Spring
389	3-2 Downshift Valve
390	3-2 Downshift Valve Spring
391	3-2 Control Valve
392	3-2 Control Valve Spring
394	3-2 Control Solenoid Valve
395	Bore Plug and Solenoid Retainer
395	Bore Plug and Solenoid Retainer
395	Bore Plug and Solenoid Retainer
395	Bore Plug and Solenoid Retainer
395	Bore Plug and Solenoid Retainer
395	Bore Plug and Solenoid Retainer
396	TCC PWM Solenoid Valve
397	Regulator Apply Spring
398	Isolator Valve
399	Pump Ball Check Valve - M33 Only

cardiagn.com

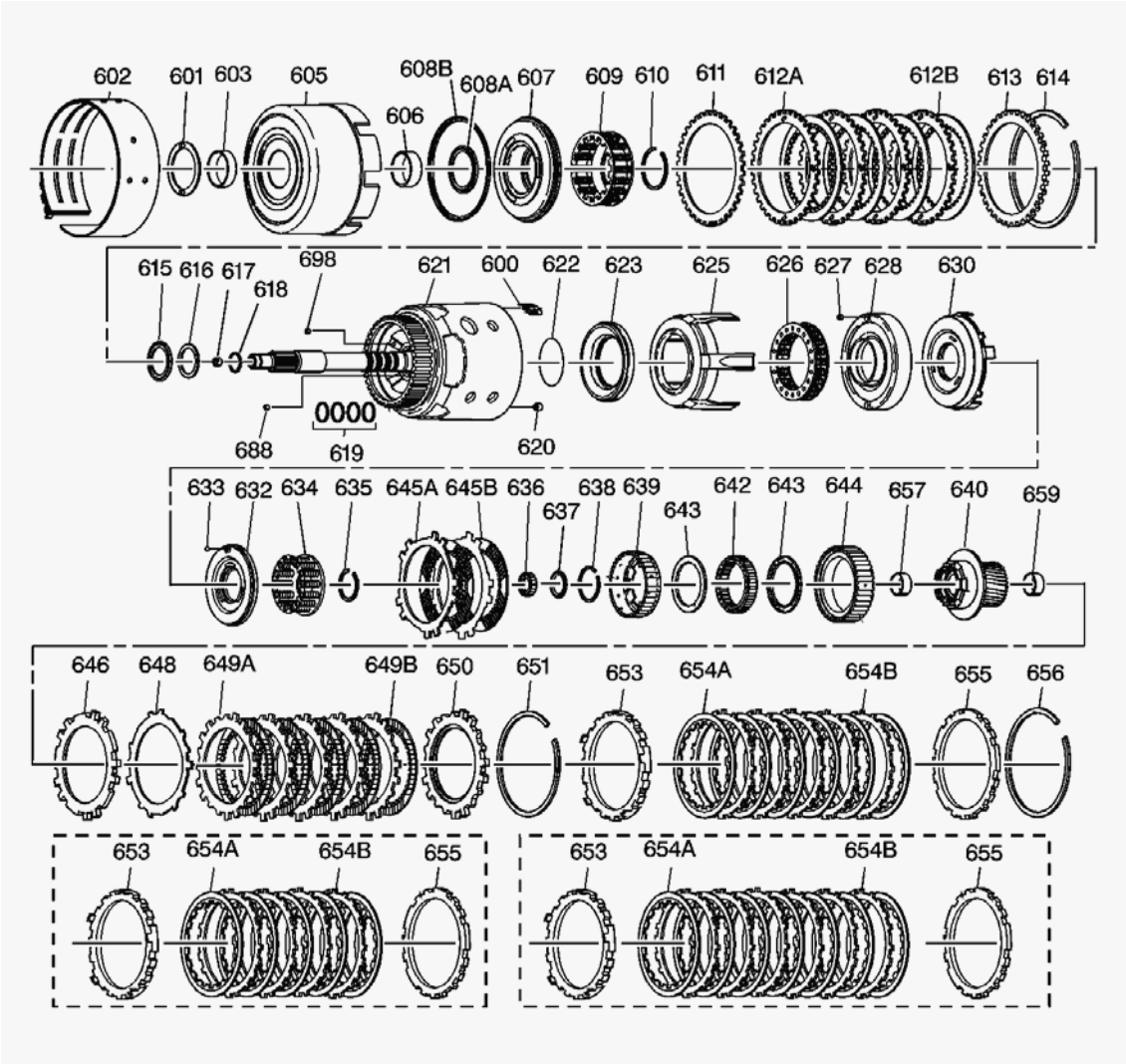

Fig. 8: Internal Parts Disassembled View (1 Of 2)
Courtesy of GENERAL MOTORS CORP.

Callouts For Fig. 8

Callout	Component Name
600	3-4 Clutch Boost (5) Spring Assembly
601	Thrust Washer - Pump to Drum
602	2-4 Band Assembly
603	Reverse Input Clutch Bushing - Front
605	Reverse Input Clutch Housing and Drum Assembly
606	Reverse Input Clutch Bushing - Rear
607	Reverse Input Clutch Piston Assembly
608a	Reverse Input Clutch Seal - Inner
608b	Reverse Input Clutch Seal - Outer
609	Reverse Input Clutch Spring Assembly

cardiagn.com

610	Reverse Input Clutch Spring Retainer Ring
611	Reverse Input Clutch Plate - Belleville
612a	Reverse Input Clutch Turbulator Plate - Steel
612b	Reverse Input Clutch Plate Assembly - Fiber
613	Reverse Input Clutch Backing Plate - Selective
614	Reverse Input Clutch Retaining Ring
615	Stator Shaft/Selective Washer Bearing Assembly
616	Thrust Washer - Selective
617	Check Valve Retainer and Ball Assembly
618	O-Ring Seal - Location Model Dependent
619	Oil Seal Ring - Solid
620	Retainer and Checkball Assembly
621	Input Housing and Shaft Assembly - Model Dependent
622	O-Ring Input to Forward Clutch Housing Seal
623	3rd and 4th Clutch Piston
625	3rd and 4th Clutch Ring - Apply
626	3rd and 4th Clutch Spring Assembly
627	Forward Clutch Housing Retainer and Ball Assembly
628	Forward Clutch Housing
630	Forward Clutch Piston
632	Overrun Clutch Piston
633	Overrun Clutch Ball
634	Overrun Clutch Spring Assembly
635	Overrun Clutch Spring Retainer Snap Ring
636	Input Housing to Output Shaft Seal
637	Input Sun Gear Bearing Assembly
638	Overrun Clutch Hub Retaining Snap Ring
639	Overrun Clutch Hub
640	Forward Sprag Clutch Inner Race and Input Sun Gear Assembly
642	Forward Sprag Assembly
643	Sprag Assembly Retainer Ring
643	Sprag Assembly Retainer Ring
644	Forward Clutch Race - Outer
645a	Overrun Clutch Plate - Steel
645b	Overrun Clutch Plate Assembly - Fiber
646	Forward Clutch Plate - Apply
648	Forward Clutch Plate - Waved
649a	Forward Clutch Plate - Steel
649b	Forward Clutch Plate Assembly - Fiber
650	Forward Clutch Backing Plate - Selective
651	Forward Clutch Backing Plate Retainer Ring

cardiagn.com

653	3rd and 4th Clutch Apply Plate - Stepped
653	3rd and 4th Clutch Apply Plate - Stepped
653	3rd and 4th Clutch Apply Plate - Stepped
654a	3rd and 4th Clutch Plate Assembly - Fiber - Quantity Model Dependent 5, 6 or 7 Plates
654a	3rd and 4th Clutch Plate Assembly - Fiber - Quantity Model Dependent 5, 6 or 7 plates
654a	3rd and 4th Clutch Plate Assembly - Fiber - Quantity Model Dependent 5, 6 or 7 plates
654b	3rd and 4th Clutch Plate - Steel - Quantity Model Dependent
654b	3rd and 4th Clutch Plate - Steel - Quantity Model Dependent
654b	3rd and 4th Clutch Plate - Steel - Quantity Model Dependent
655	3rd and 4th Clutch Backing Plate - Selective - Model Dependent
655	3rd and 4th Clutch Backing Plate - Selective - Model Dependent
655	3rd and 4th Clutch Backing Plate - Selective - Model Dependent
656	3rd and 4th Clutch Backing Plate Retainer Ring
657	Input Sun Gear Front Bushing
659	Input Sun Gear Rear Bushing
688	Cup Plug
698	Orificed Cup Plug

cardiagn.com

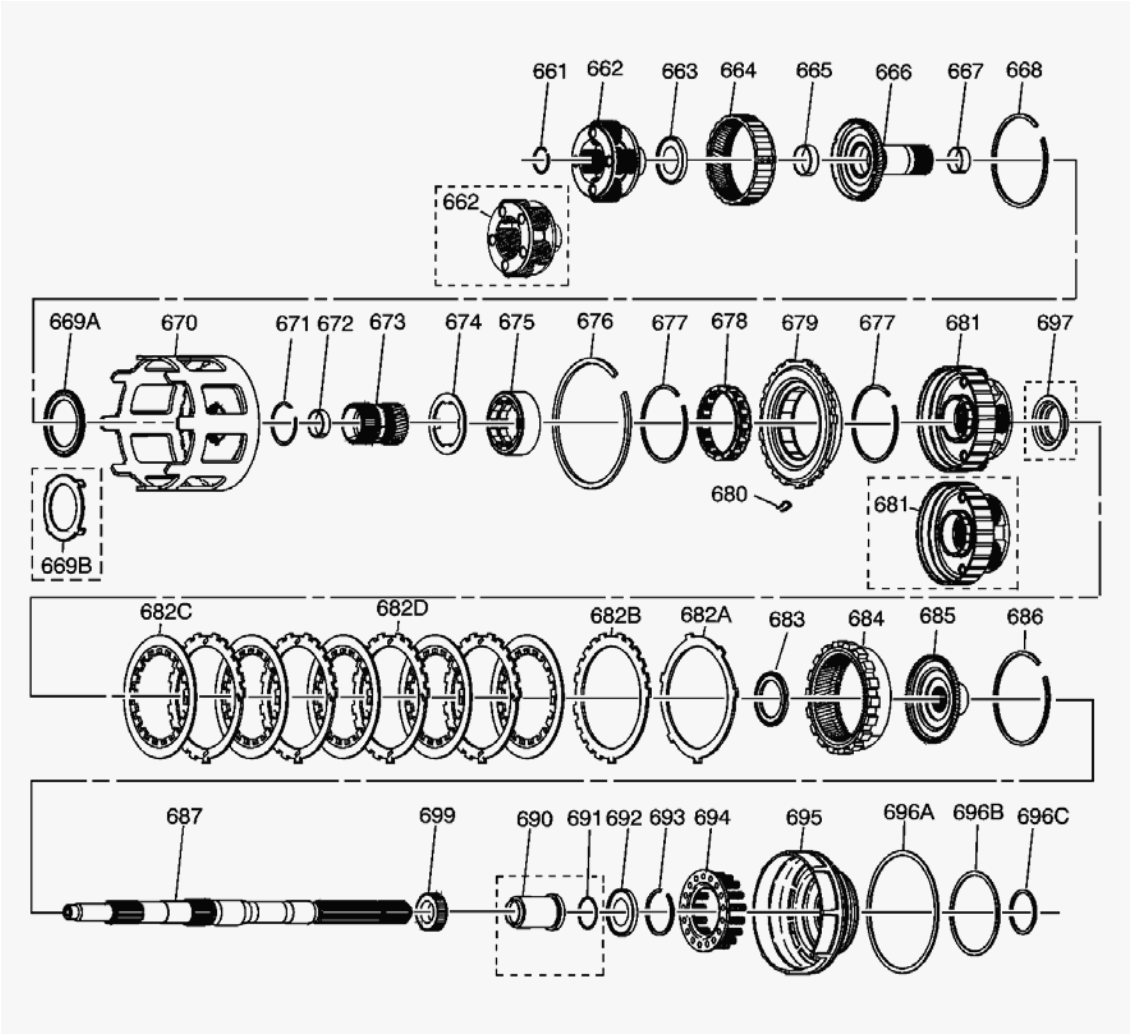

Fig. 9: Internal Parts Disassembled View (2 Of 2)
Courtesy of GENERAL MOTORS CORP.

Callouts For Fig. 9

Callout	Component Name
661	Output Shaft to Input Carrier Retainer
662	Input Carrier Assembly - 4 or 5 Pinion-Model Dependent
662	Input Carrier Assembly
663	Thrust Bearing Assembly - Input Carrier to Reaction Shaft
664	Input Internal Gear
665	Reaction Carrier Shaft Front Bushing
666	Reaction Carrier Shaft
667	Reaction Carrier Shaft Rear Bushing
668	Reaction Shaft/Internal Gear Retainer Ring
669a	Thrust Bearing Assembly - Reaction Shaft Shell
669b	Thrust Bearing Assembly - Reaction Shaft Shell - Some Models

cardiagn.com

670	Reaction Sun Shell
671	Reaction Sun Gear Retainer Ring
672	Reaction Sun Bushing
673	Reaction Sun Gear
674	Thrust Washer - Race/Reaction Shell
675	Low and Reverse Roller Clutch Race
676	Low and Reverse Support to Case Retainer Ring
677	Low and Reverse Roller Assembly Retainer Ring - Cam
677	Low and Reverse Roller Assembly Retainer Ring - Cam
678	Low and Reverse Roller Clutch Assembly
679	Low and Reverse Clutch Support Assembly
680	Low and Reverse Clutch Support Retainer Spring
681	Reaction Carrier Assembly - 4 or 5 Pinion-Model Dependent
681	Reaction Carrier Assembly - 4 or 5 Pinion-Model Dependent
682a	Low and Reverse Clutch Plat - Waved
682b	Spacer Low and Reverse Clutch Plate - Selective
682c	Low and Reverse Clutch Plate Assembly - Fiber
682d	Low and Reverse Clutch Turbulator Plate - Steel
683	Thrust Bearing Assembly - Reaction Carrier/Support
684	Internal Reaction Gear
685	Internal Reaction Gear Support
686	Reaction Gear/Support Retainer Ring
687	Output Shaft
690	Output Shaft Sleeve - Model Dependent 2WD only
691	Output Shaft Seal - Model Dependent 2WD only
692	Reaction Gear Support to Case Bearing
693	Low and Reverse Clutch Retainer Ring
694	Low and Reverse Clutch Spring Assembly
695	Low and Reverse Clutch Piston
696a	Low and Reverse Clutch Seal - Outer
696b	Low and Reverse Clutch Seal - Center
696c	Low and Reverse Clutch Seal - Inner
697	Oil Deflector - High Output Models Only
699	Internal Transmission Speed Sensor Rotor

cardiagn.com

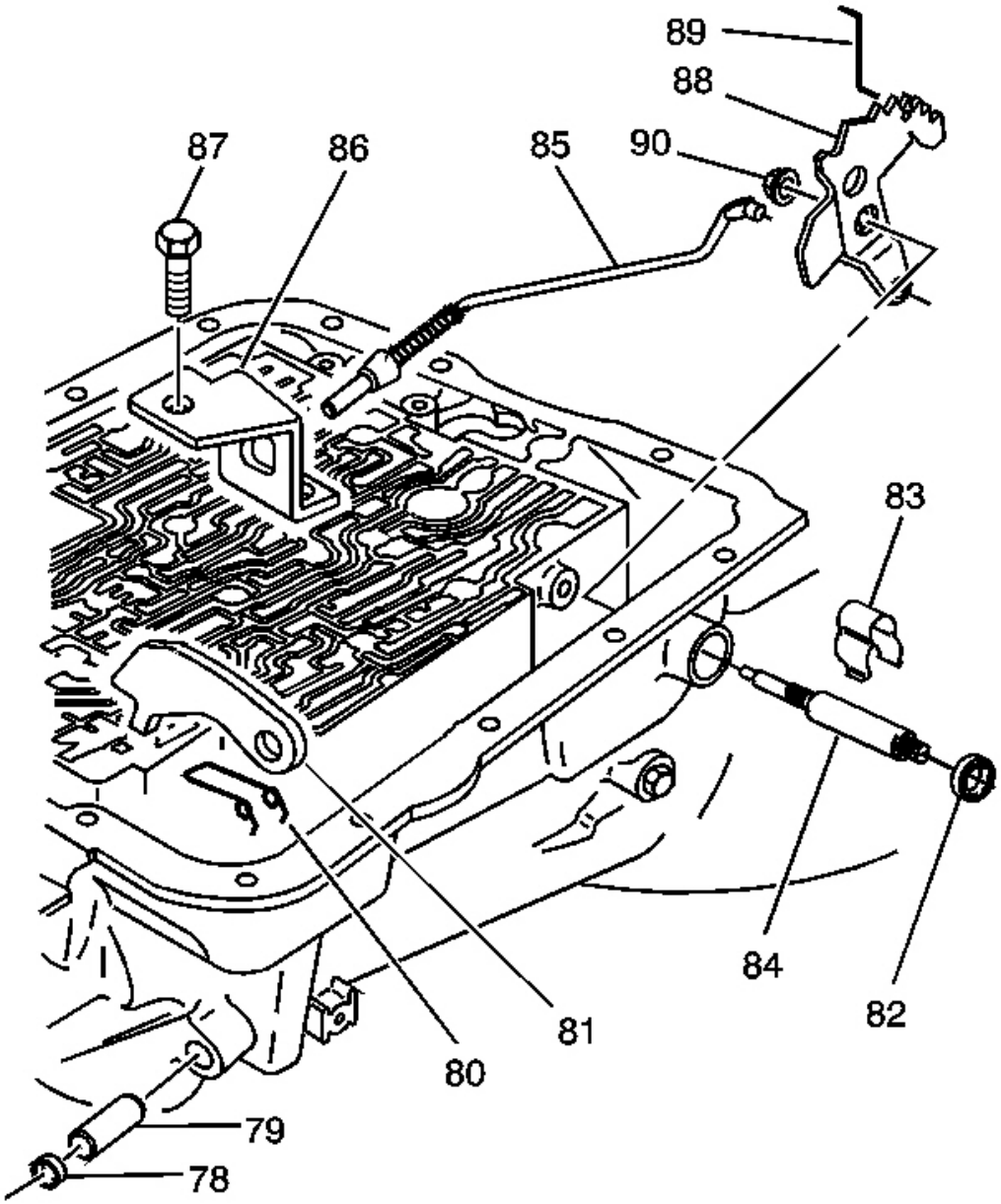

Fig. 10: Parking Lock & Manual Shift Shaft Assembly Disassembled View
Courtesy of GENERAL MOTORS CORP.

Callouts For Fig. 10

Callout	Component Name
78	Steel Cup Plug

cardiagn.com

79	Parking Brake Pawl Shaft
80	Parking Pawl Return Spring
81	Parking Brake Pawl
82	Manual Shaft Seal
83	Manual Shaft Retainer
84	Manual Shaft - Model Dependent
85	Parking Lock Actuator Assembly
86	Parking Lock Bracket
87	Parking Lock Bracket Bolt
88	Inside Detent Lever
89	Manual Valve Link
90	Hex Head Nut

AUTOMATIC TRANSMISSION ELECTRONIC COMPONENT VIEWS

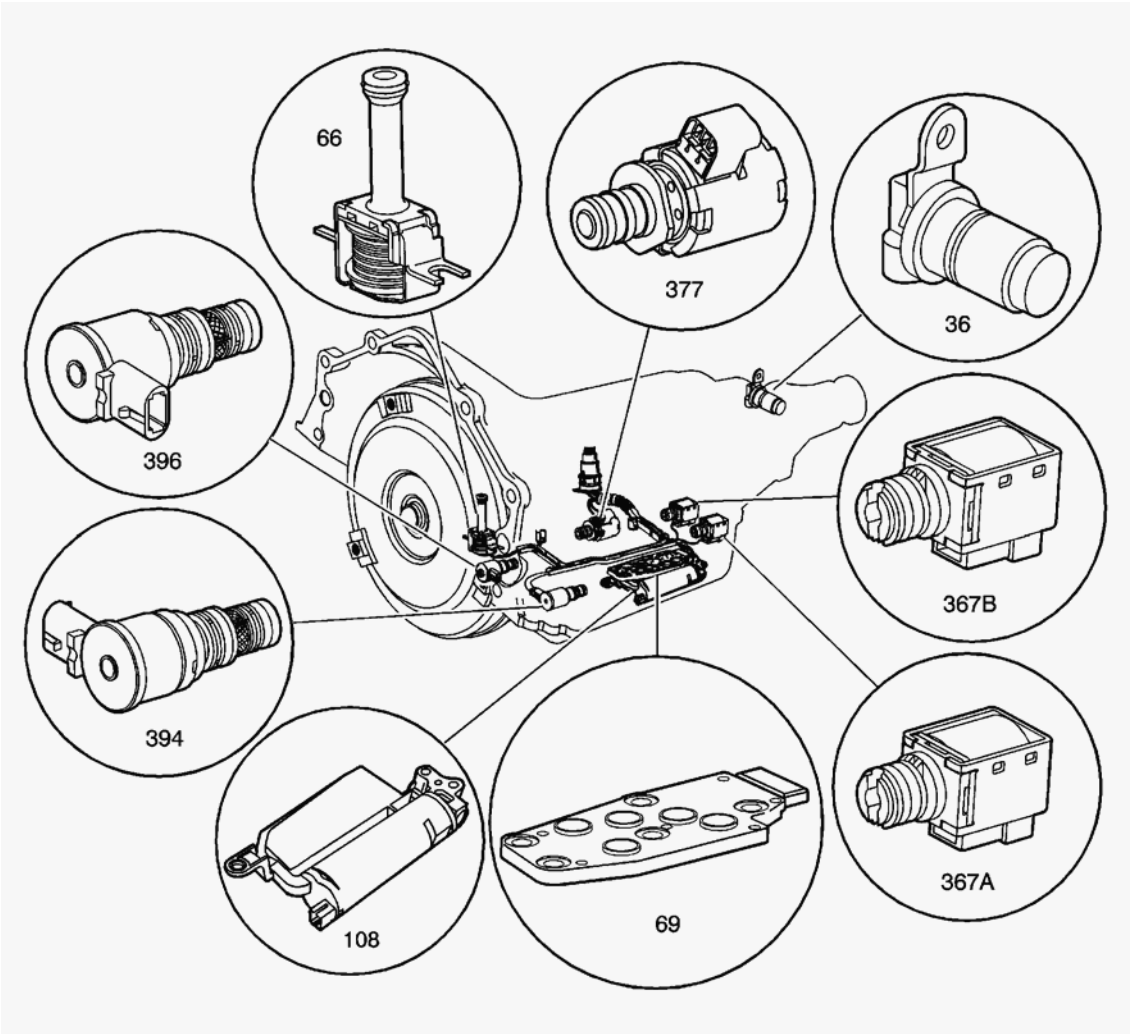

Fig. 11: Electronic Component View

cardiagn.com

Courtesy of GENERAL MOTORS CORP.

Callouts For Fig. 11

Callout	Component Name
36	Vehicle Speed Sensor (VSS)
66	Torque Converter Clutch (TCC) Solenoid Valve
69	Automatic Transmission Fluid Pressure (TFP) Manual Valve Position Switch
108	Secondary Fluid Pump Assembly (M33 Models Only)
367a	1-2 Shift Solenoid (SS) Valve
367b	2-3 Shift Solenoid (SS) Valve
377	Pressure Control (PC) Solenoid Valve
394	3-2 Shift Solenoid (SS) Valve Assembly
396	Torque Converter Clutch Pulse Width Modulation (TCC PWM) Solenoid Valve

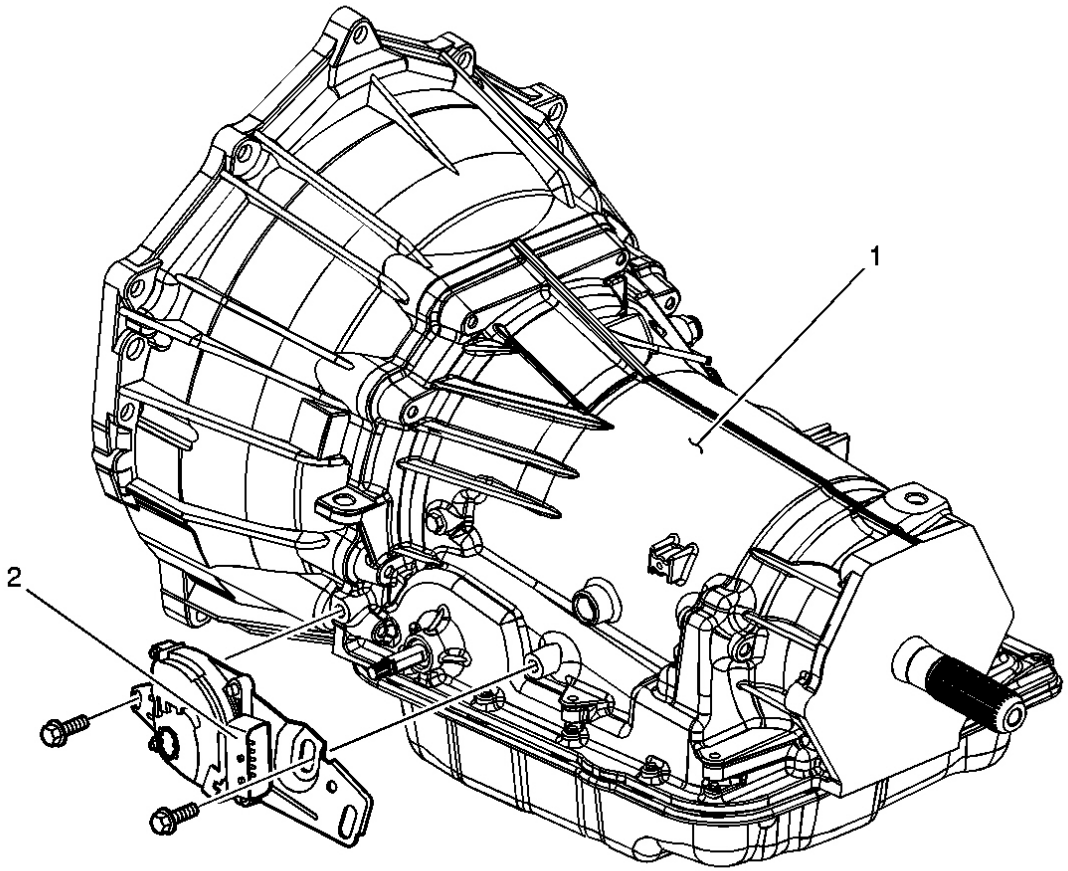

Fig. 12: Park Neutral Position (PNP) Switch Component View
Courtesy of GENERAL MOTORS CORP.

cardiagn.com

Callouts For Fig. 12

Callout	Component Name
1	Automatic Transmission 4L60-E/4L65-E
2	Park/Neutral Position (PNP) Switch

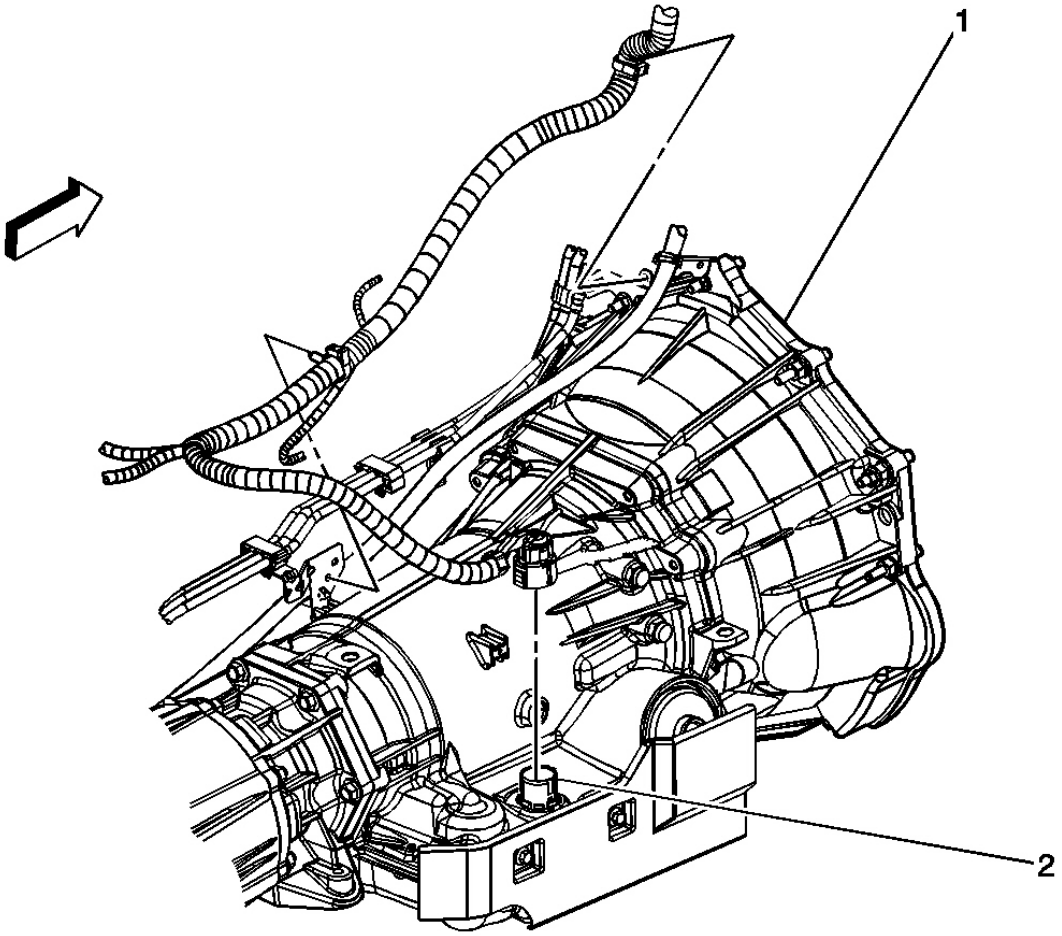

Fig. 13: C175 Component View
Courtesy of GENERAL MOTORS CORP.

Callouts For Fig. 13

Callout	Component Name
1	Automatic Transmission
2	C175

cardiagn.com

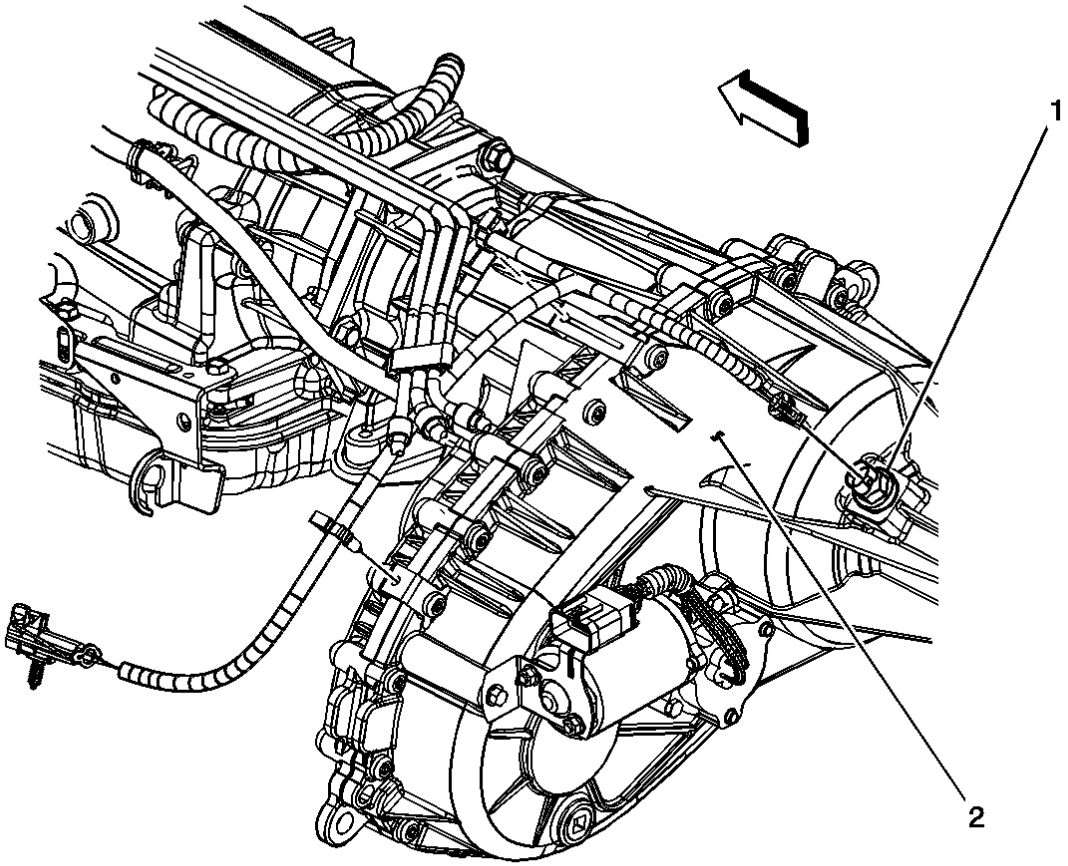

Fig. 14: Vehicle Speed Sensor (VSS) Component View
Courtesy of GENERAL MOTORS CORP.

Callouts For Fig. 14

Callout	Component Name
1	VSS Sensor
2	Transfer Case

COMPONENT LOCATION

cardiagn.com

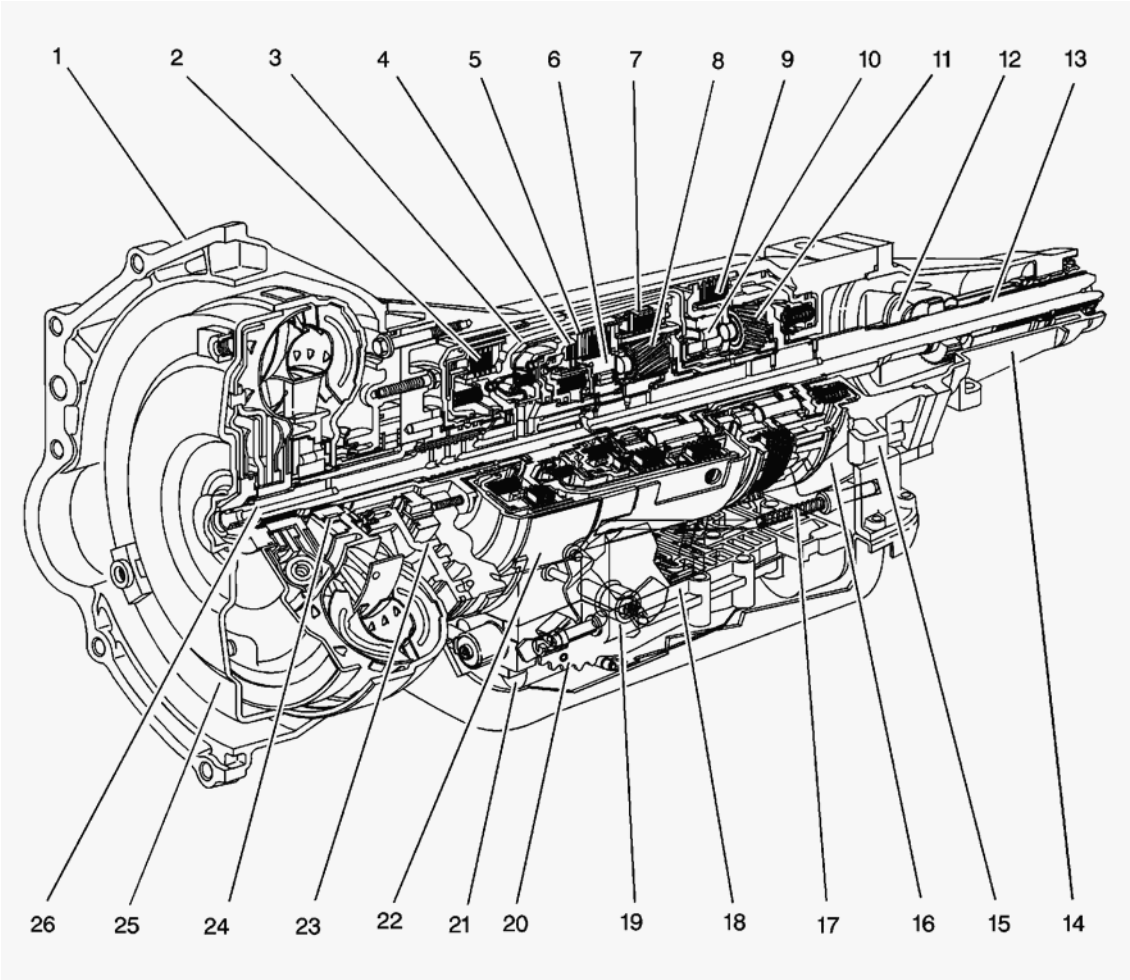

Fig. 15: Components Location
Courtesy of GENERAL MOTORS CORP.

Callouts For Fig. 15

Callout	Component Name
1	Converter Housing
2	Reverse Input Clutch
3	Input Clutch Housing
4	Overrun Clutch
5	Forward Clutch
6	Forward Sprag Clutch Assembly
7	3-4 Clutch
8	Input Planetary Gear Set
9	Lo and Reverse Clutch
10	Lo Roller Clutch Assembly
11	Reaction Planetary Gear Set
12	Speed Sensor

cardiagn.com

13	Output Shaft
14	Case Extension
15	Main Section Case
16	Parking Pawl
17	Parking Lock Actuator Assembly
18	Control Valve Assembly
19	Manual Shaft
20	Inside Detent Lever
21	Secondary Fluid Pump Assembly - M33 Models Only
22	2-4 Band Assembly
23	Pump Assembly
24	Stator Roller Clutch
25	Torque Converter Assembly
26	Turbine Shaft

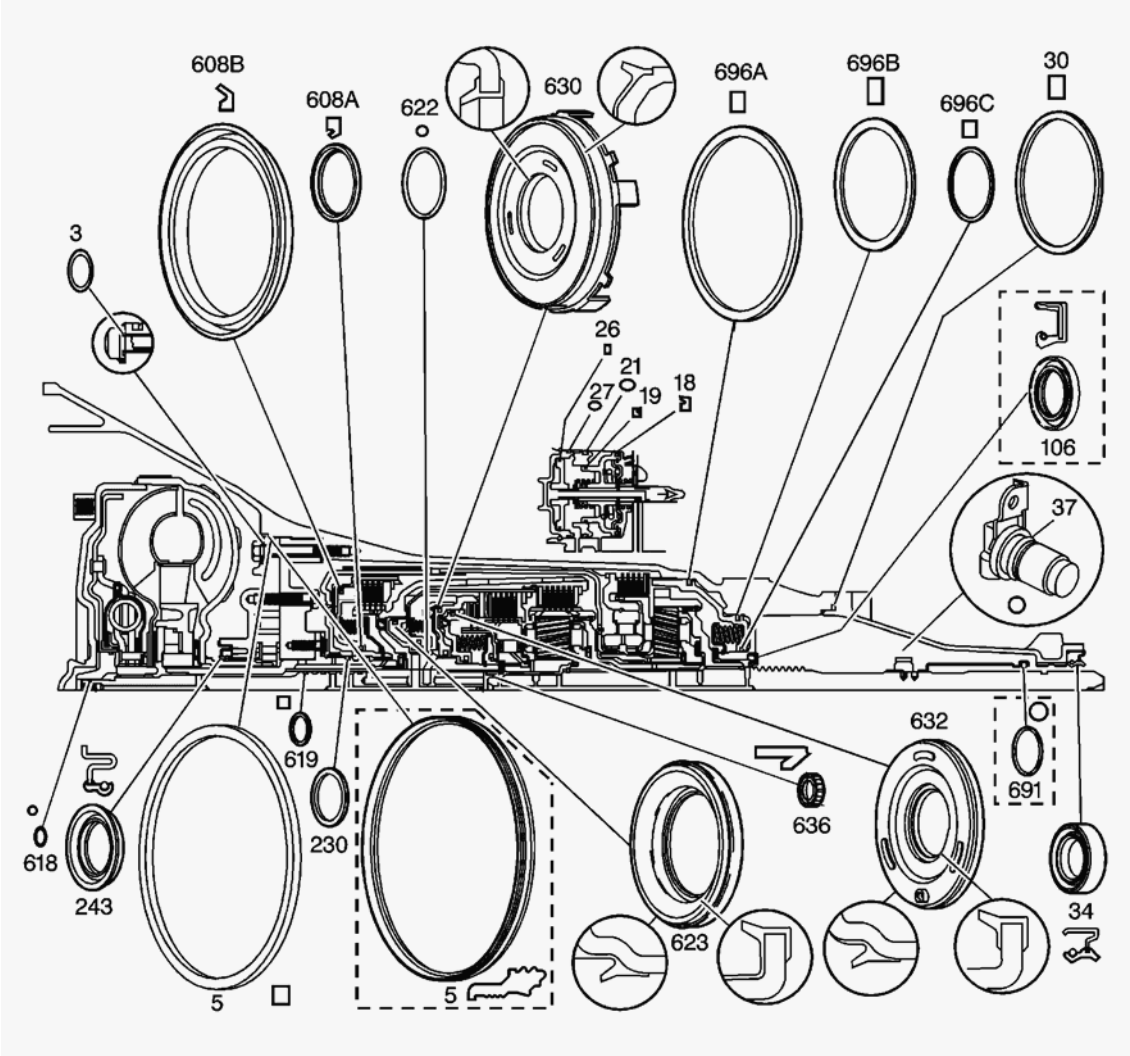

cardiagn.com

Fig. 16: Seals Component Location
Courtesy of GENERAL MOTORS CORP.

Callouts For Fig. 16

Callout	Component Name
3	Pump to Case Bolt O-Ring
5	Oil Seal - Pump to Case - Model Dependent
5	Oil Seal - Pump to Case - Model Dependent
18	Oil Seal Ring - 2nd Apply Piston-Outer
19	Oil Seal Ring - 2nd Apply Piston-Inner
21	O-Ring Seal
26	Oil Seal Ring - 4th Apply Piston-Outer
27	O-Ring Seal - 2-4 Servo Cover
30	Case Extension to Case Seal
34	Case Extension Oil Seal Assembly
37	O-Ring Seal - Speed Sensor to Case Extension
106	Case Oil Seal Assembly - Y-Car Only
230	Oil Seal Ring - Stator Shaft
243	Oil Seal Assembly
608a	Reverse Input Clutch Seal - Inner
608b	Reverse Input Clutch Seal - Outer
618	O-Ring Seal - Turbine Shaft/Selective Washer
619	Oil Seal Ring - Solid
622	O-Ring Input to Forward Housing Seal
623	3rd and 4th Clutch Piston
630	Forward Clutch Piston
632	Overrun Clutch Piston
636	Input Housing to Output Shaft Seal
691	Output Shaft - Model Dependent Seal
696a	Low and Reverse Clutch - Outer Seal
696b	Low and Reverse Clutch - Center Seal
696c	Low and Reverse Clutch - Inner Seal

cardiagn.com

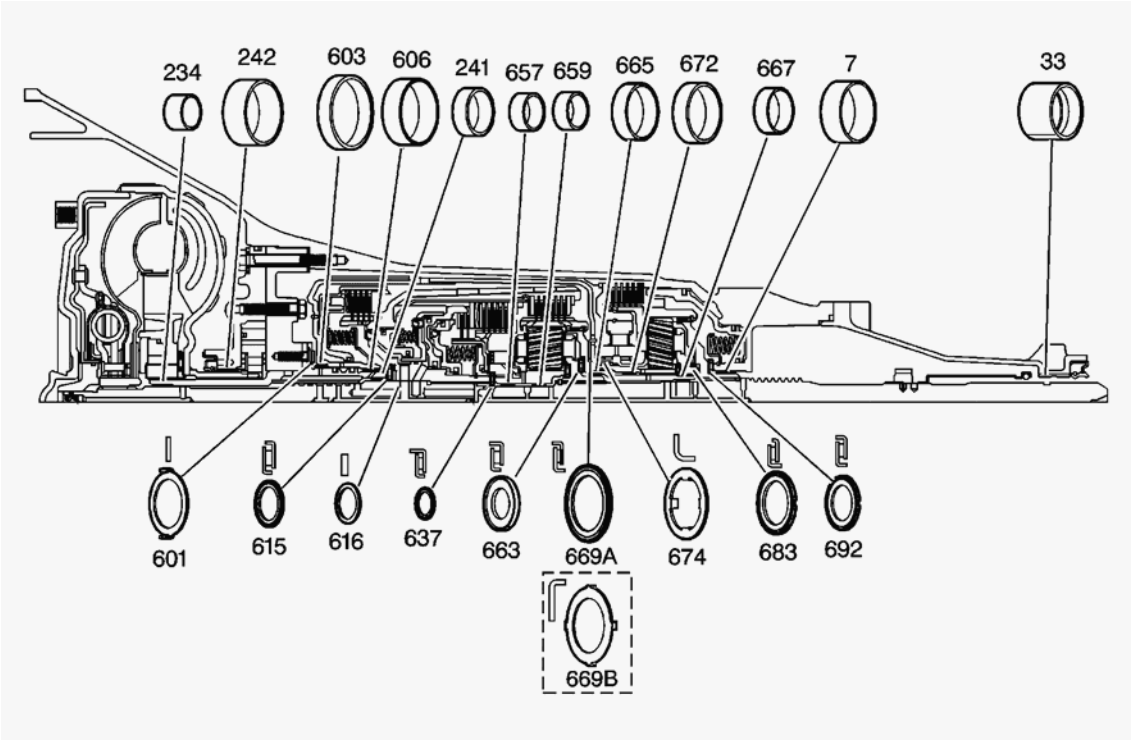

Fig. 17: Bearings & Bushings Component Location
Courtesy of GENERAL MOTORS CORP.

Callouts For Fig. 17

Callout	Component Name
7	Case Bushing
33	Case Extension Bushing
234	Stator Shaft Bushing - Front
241	Stator Shaft Bushing - Rear
242	Oil Pump Body Bushing
601	Thrust Washer - Pump to Drum
603	Reverse Input Cl. Bushing - Front
606	Reverse Input Clutch Bushing - Rear
615	Stator Shaft/Selective Washer Bearing Assembly
616	Thrust Washer - Selective
637	Input Sun Gear Bearing Assembly
657	Input Sun Gear Bushing - Front
659	Input Sun Gear Bushing - Rear
663	Thrust Bearing Assembly - Input Carrier to Reaction Shaft
665	Reaction Carrier Shaft Bushing - Front
667	Reaction Carrier Shaft Bushing - Rear
669a	Thrust Washer - Reaction Shaft/Shell
669b	Thrust Washer - Reaction Shaft/Shell - Some Models

cardiagn.com

672	Reaction Gear Bushing
674	Thrust Washer - Race/Reaction Shell
683	Thrust Bearing Assembly - Reaction Carrier/Support
692	Reaction Gear Support to Case Bearing

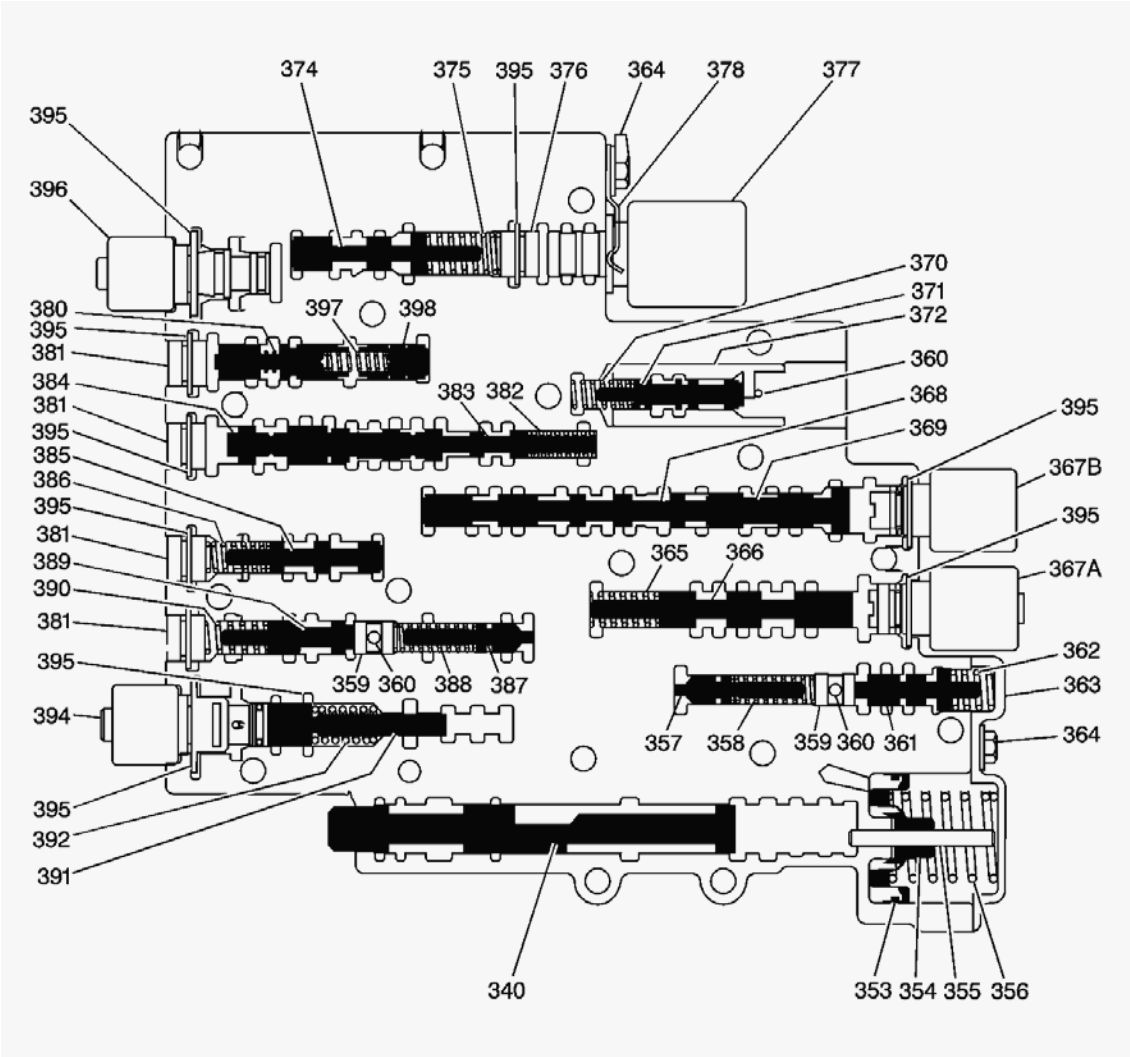

Fig. 18: Valve Trains Component Location
Courtesy of GENERAL MOTORS CORP.

Callouts For Fig. 18

Callout	Component Name
340	Manual Valve
353	Forward Accumulator Oil Seal
354	Forward Accumulator Piston
355	Forward Accumulator Pin
356	Forward Accumulator Spring

cardiagn.com

357	Forward Abuse Valve
358	Forward Abuse Valve Spring
359	Bore Plug
359	Bore Plug
360	Coiled Spring Pin
360	Coiled Spring Pin
360	Coiled Spring Pin
361	Low Overrun Valve
362	Low Overrun Valve Spring
363	Forward Accumulator Cover
364	Forward Accumulator Cover Bolt
364	Forward Accumulator Cover Bolt
365	1-2 Shift Valve Spring - Model Dependent
366	1-2 Shift Valve - Model Dependent
367a	1-2 Shift Solenoid Valve
367b	2-3 Shift Solenoid Valve
368	2-3 Shift Valve
369	2-3 Shuttle Valve
370	1-2 Accumulator Valve Spring
371	1-2 Accumulator Valve
372	1-2 Accumulator Valve Sleeve
374	Actuator Feed Limit Valve
375	Actuator Feed Limit Valve Spring
376	Bore Plug
377	Pressure Control Solenoid Valve
378	Pressure Control Solenoid Retainer
380	Regulator Apply Valve - Model Dependent
381	Bore Plug
381	Bore Plug
381	Bore Plug
381	Bore Plug
382	4-3 Sequence Valve Spring
383	4-3 Sequence Valve
384	3-4 Relay Valve
385	3-4 Shift Valve
386	3-4 Shift Valve Spring
387	Reverse Abuse Valve
388	Reverse Abuse Valve Spring
389	3-2 Downshift Valve
390	3-2 Downshift Valve Spring
391	3-2 Control Valve

cardiagn.com

392	3-2 Control Valve Spring
394	3-2 Control Solenoid Valve
395	Bore Plug and Solenoid Retainer
395	Bore Plug and Solenoid Retainer
395	Bore Plug and Solenoid Retainer
395	Bore Plug and Solenoid Retainer
395	Bore Plug and Solenoid Retainer
395	Bore Plug and Solenoid Retainer
395	Bore Plug and Solenoid Retainer
395	Bore Plug and Solenoid Retainer
395	Bore Plug and Solenoid Retainer
396	TCC PWM Solenoid Valve
397	Regulator Apply Spring
398	Isolator Valve

TORQUE CONVERTER HOUSING IDENTIFICATION

cardiagn.com

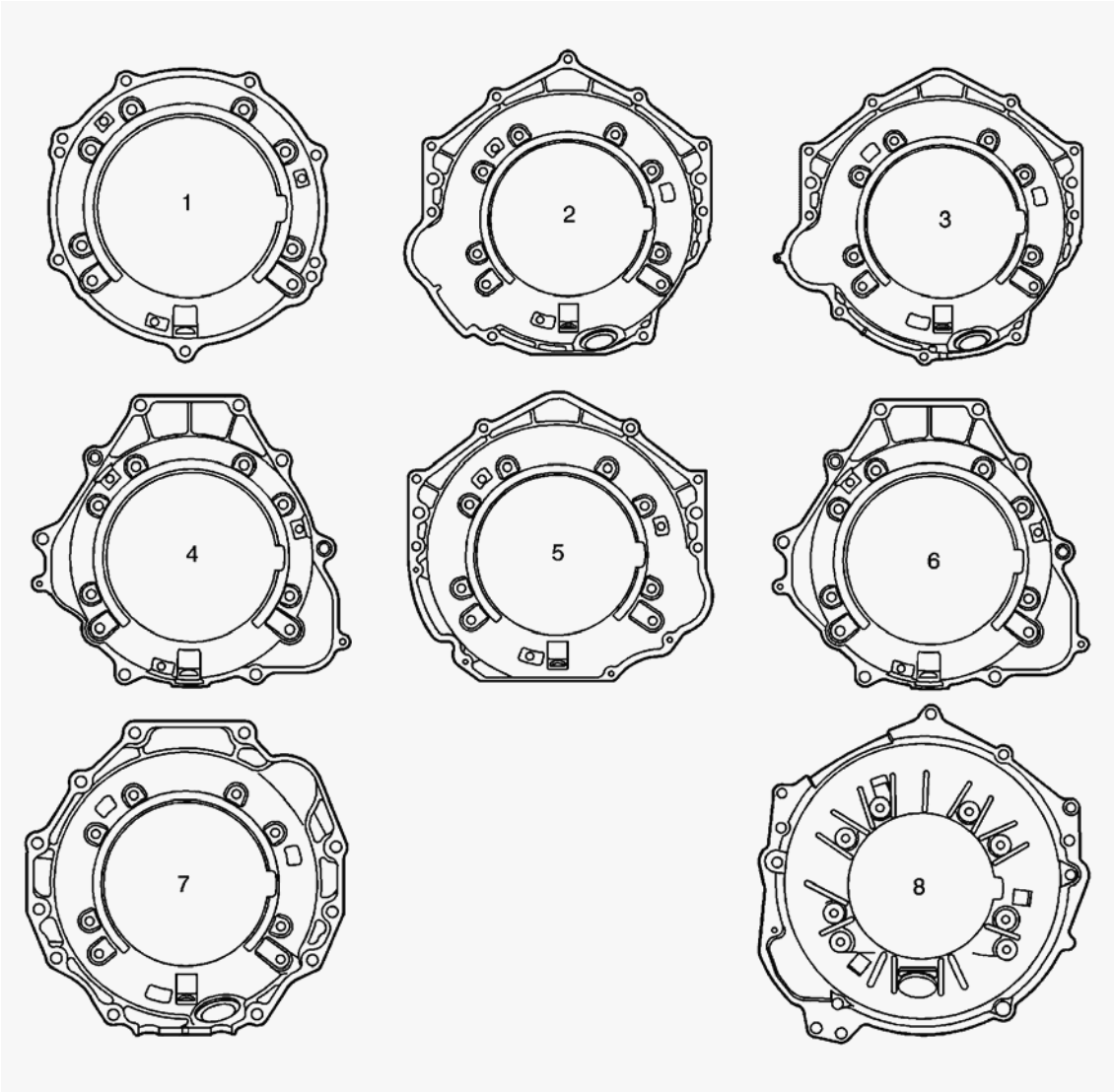

Fig. 19: Torque Converter Housing Identification
Courtesy of GENERAL MOTORS CORP.

Callouts For Fig. 19

Callout	Component Name
1	Domestic Bell V-8 - Corvette
2	Domestic Gen lll Large Bell V-8 (300 mm)
3	Domestic Gen l/ll Large Bell V-8/V-6
4	Holden Small Bell V-6
5	Holden Gen lll Large Bell V-8
6	Domestic Small Bell V-6
7	Domestic Bell L-6
8	Hybrid Pickup Truck - V8 Bell

cardiagn.com

TRANSMISSION FLUID PAN IDENTIFICATION

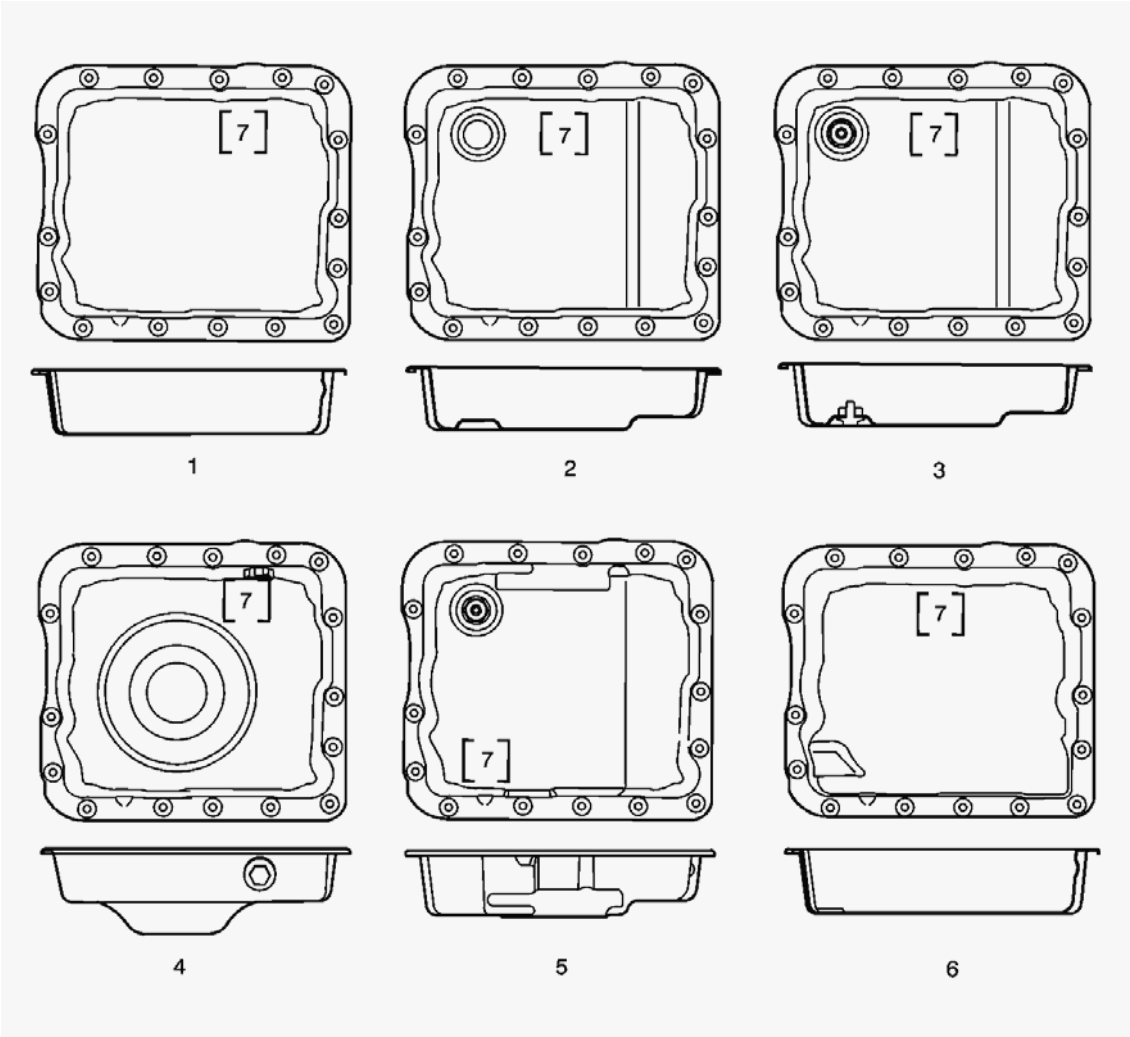

Fig. 20: Fluid Pan Identification
Courtesy of GENERAL MOTORS CORP.

Callouts For Fig. 20

Callout	Component Name
1	Regular Sump
2	Deep Sump
3	Deep Sump with Drain Plug
4	Corvette
5	Hybrid Pickup Truck - M33 Model
6	Colorado/Canyon
7	Pan Magnet Location
7	Pan Magnet Location
7	Pan Magnet Location

cardiagn.com

7	Pan Magnet Location
7	Pan Magnet Location
7	Pan Magnet Location

CASE EXTENSION IDENTIFICATION

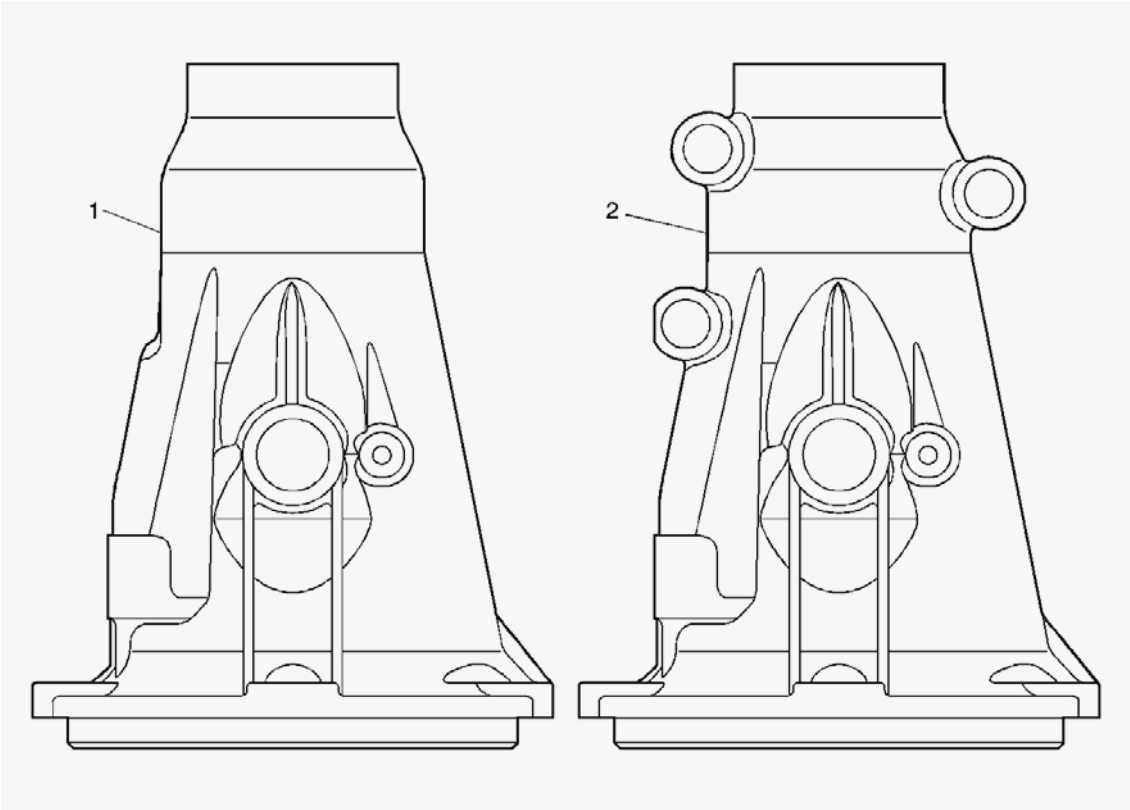

Fig. 21: Case Extension Identification
Courtesy of GENERAL MOTORS CORP.

Callouts For Fig. 21

Callout	Component Name
1	Case Extension - used on C-Truck, G-Van, M-Van, S-Truck
2	Case Extension - Some Models

REPAIR INSTRUCTIONS

DO NOT USE AIR TOOLS

NOTE: **Do not use air powered tools in order to disassemble or assemble any vehicle component. Bolt torques are vital to diagnosis. You can detect bolt torques only when using hand tools. Improper bolt torques can contribute to vehicle repair problems.**

cardiagn.com

HOLDING FIXTURE INSTALLATION

Tools Required

J 8763-02 Holding Fixture and Base. See **Special Tools and Equipment** .

Installation Procedure

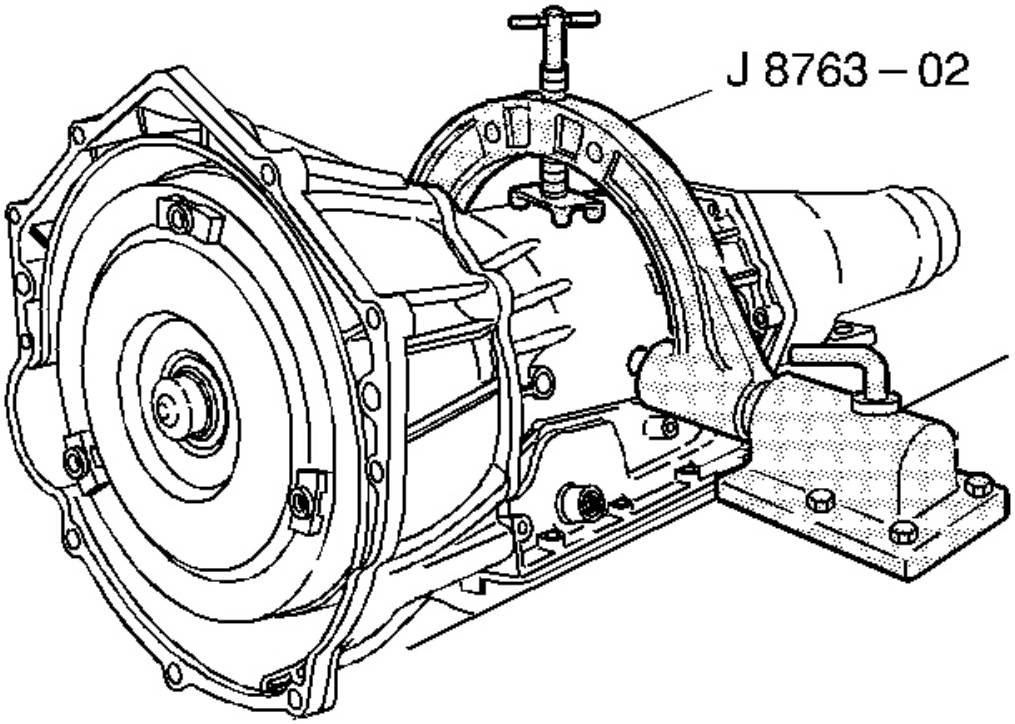

Fig. 22: View Of J 8763-B
Courtesy of GENERAL MOTORS CORP.

1. Install the **J 8763-02** onto the transmission.
2. Install the **J 8763-02** into the base.

TORQUE CONVERTER ASSEMBLY REMOVAL

CAUTION: The torque converter weighs approximately 65 lbs. Personal injury may result if you lift the torque converter improperly.

cardiagn.com

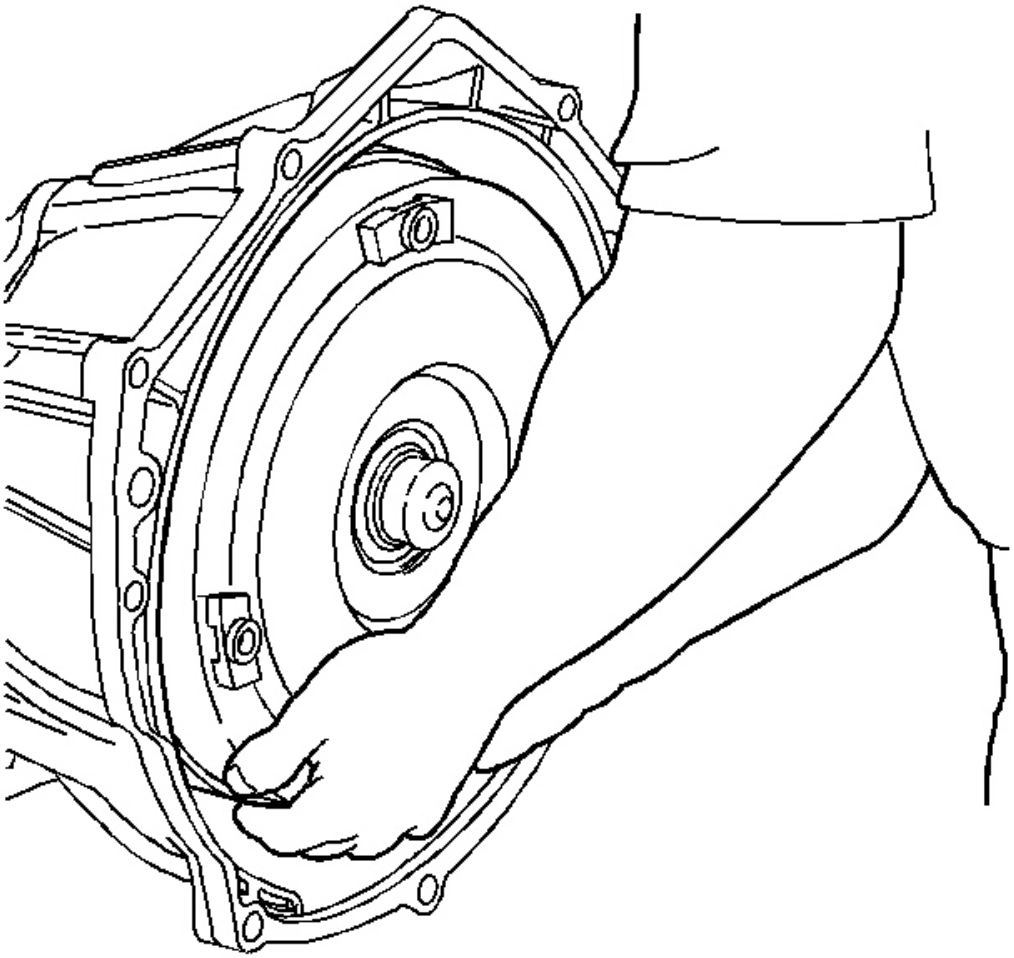

Fig. 23: Removing Torque Converter
Courtesy of GENERAL MOTORS CORP.

Remove the torque converter.

DRAIN OIL

cardiagn.com

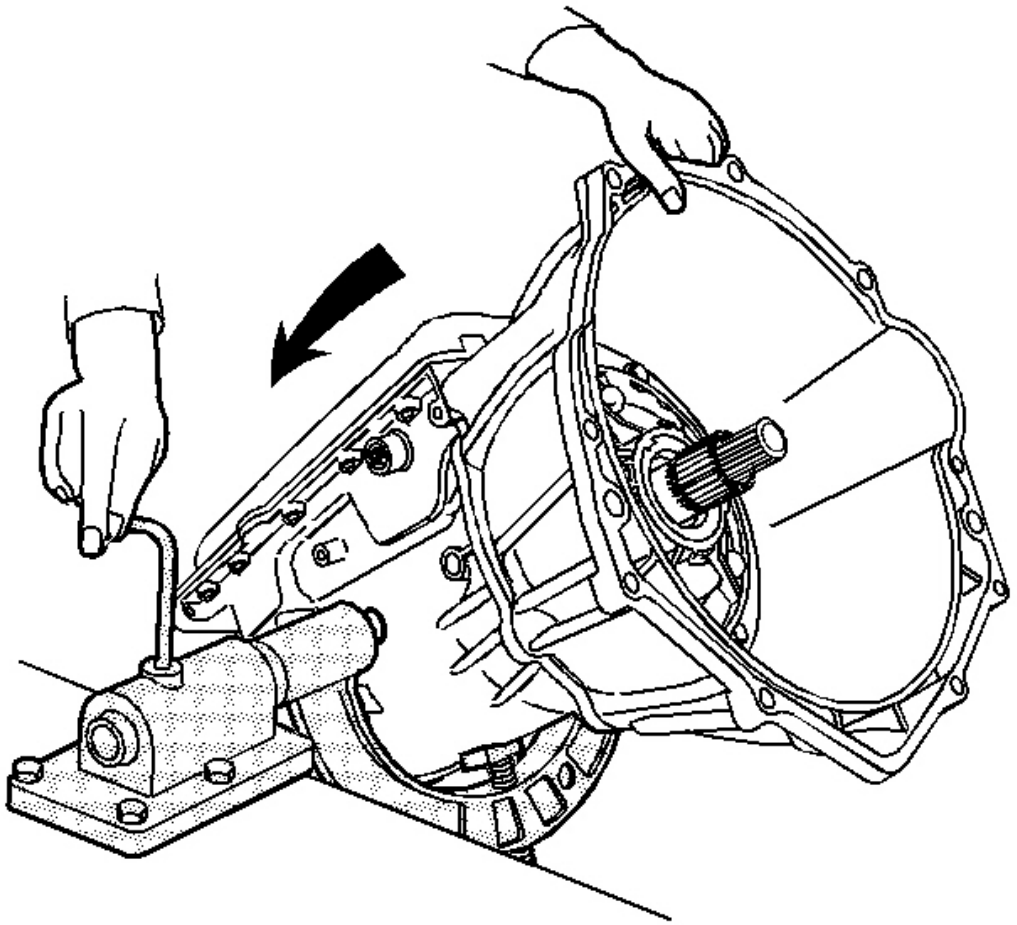

Fig. 24: Draining Transmission Oil
Courtesy of GENERAL MOTORS CORP.

Rotate the transmission so that the converter housing is up. Allow the transmission fluid to drain from the case extension.

CONVERTER HOUSING REMOVAL

Tools Required

J 41510 T-50 Plus Bit. See **Special Tools and Equipment** .

Removal Procedure

cardiagn.com

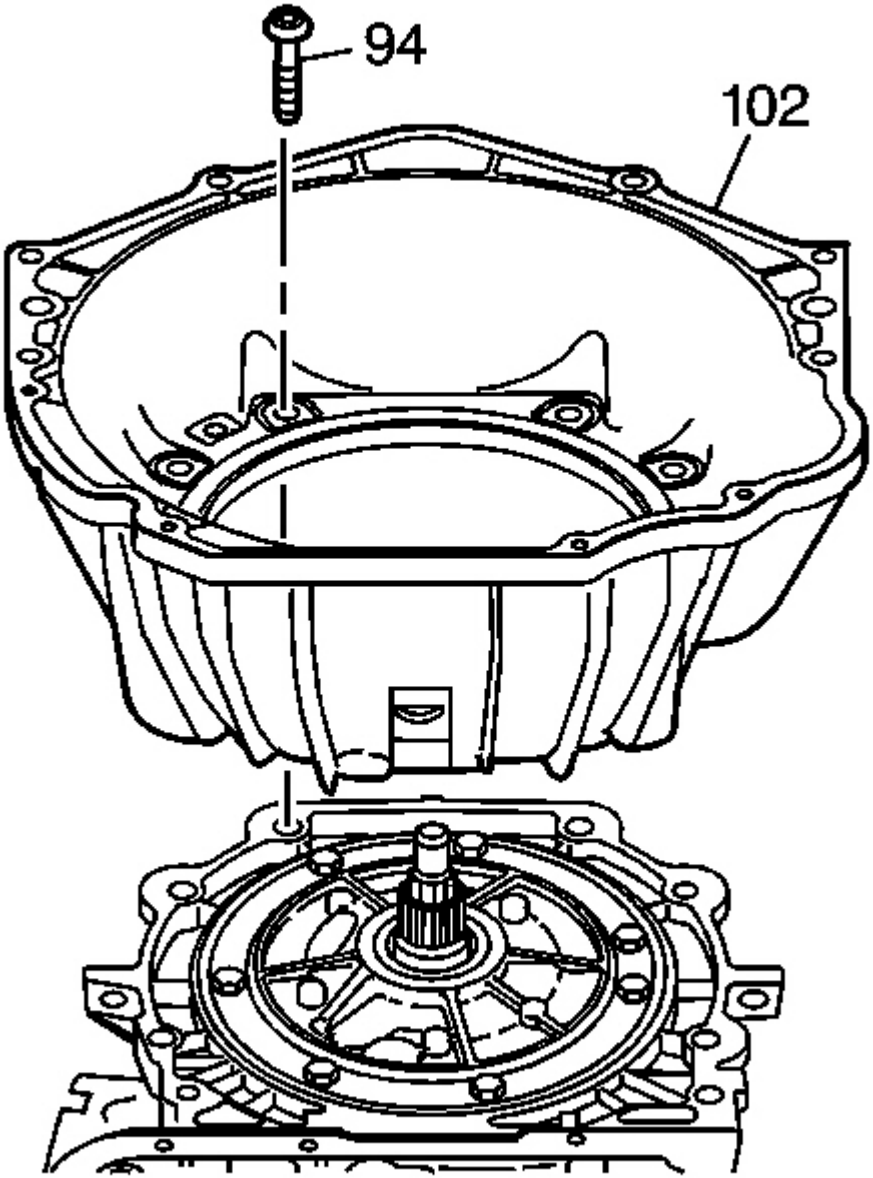

Fig. 25: View Of Converter Housing Bolts
Courtesy of GENERAL MOTORS CORP.

1. Remove the converter housing bolts (94). Use the **J 41510** .
2. Remove the converter housing (102).

cardiagn.com

2-4 SERVO COVER AND ASSEMBLY REMOVAL

Tools Required

J 29714-A Servo Cover Compressor. See **Special Tools and Equipment** .

Removal Procedure

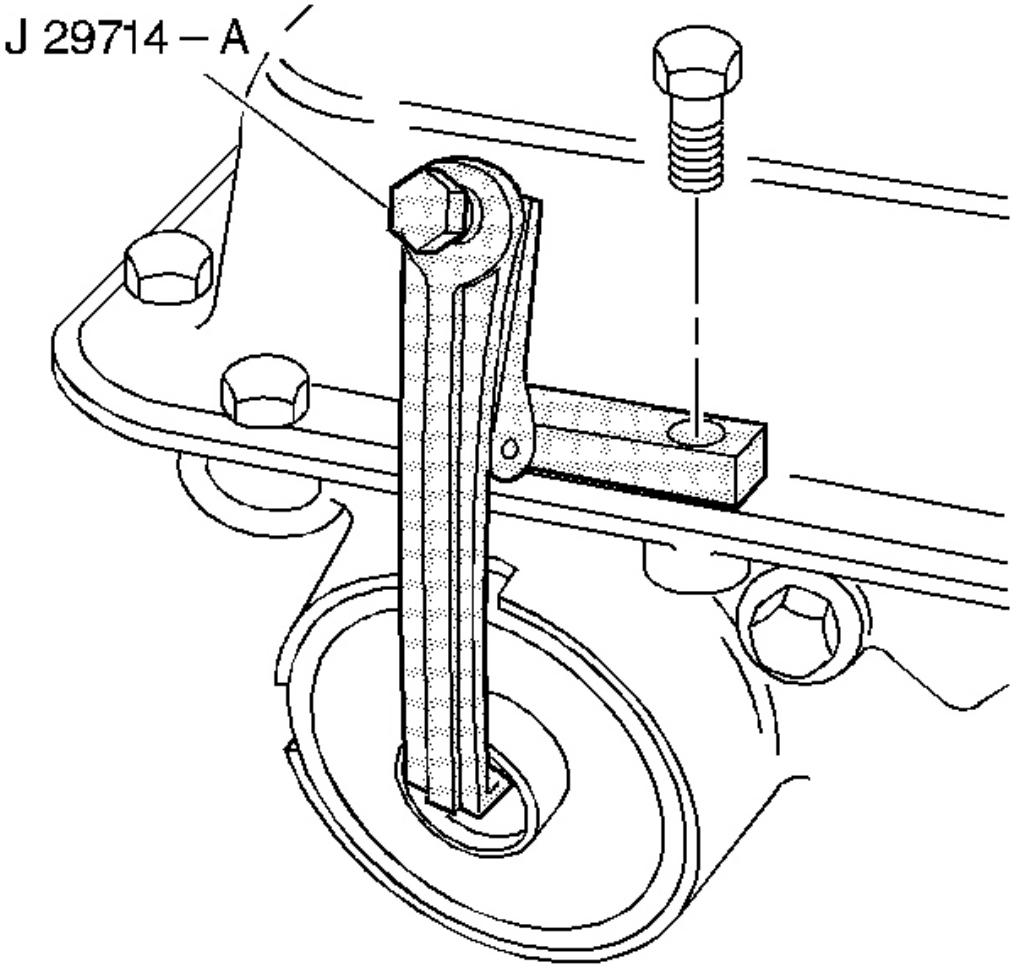

Fig. 26: Installing J 29714-A
Courtesy of GENERAL MOTORS CORP.

1. Install the **J 29714-A** .

cardiagn.com

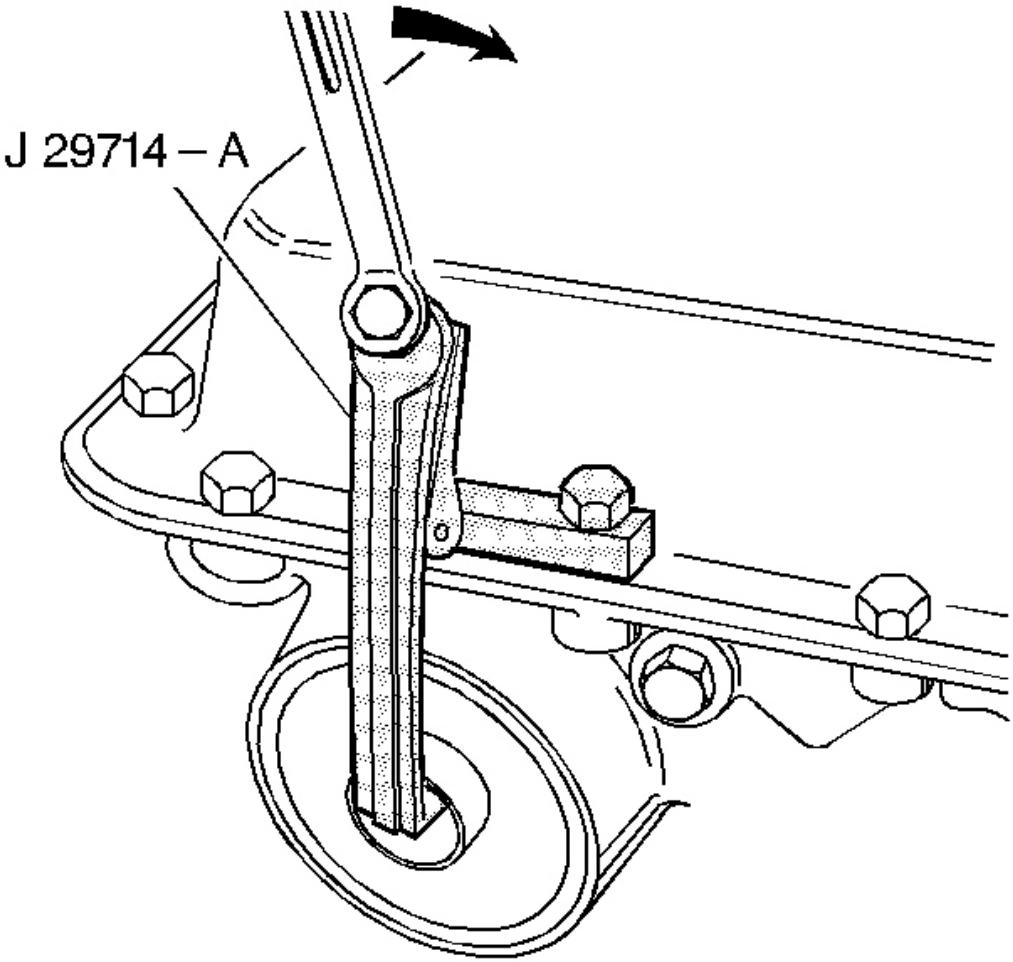

Fig. 27: Compressing Servo Cover With J 29714-A
Courtesy of GENERAL MOTORS CORP.

IMPORTANT: If cover does not move inwards with tool, use a block of wood or suitable material and lightly tap on cover using a hammer to free up cover in bore.

2. Tighten the **J 29714-A** bolt to compress the servo cover.

cardiagn.com

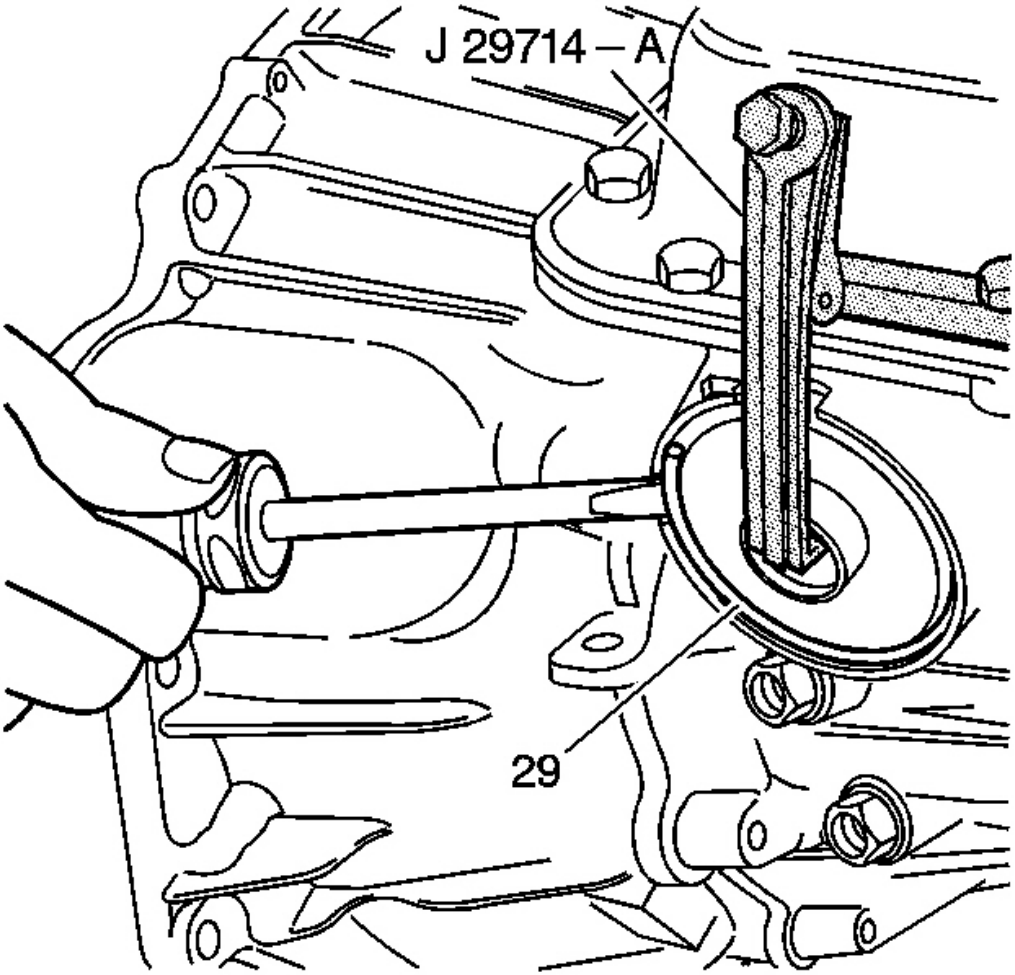

Fig. 28: Locating Servo Cover Retaining Ring
Courtesy of GENERAL MOTORS CORP.

3. Remove the servo cover retaining ring (29) and the **J 29714-A** .

cardiagn.com

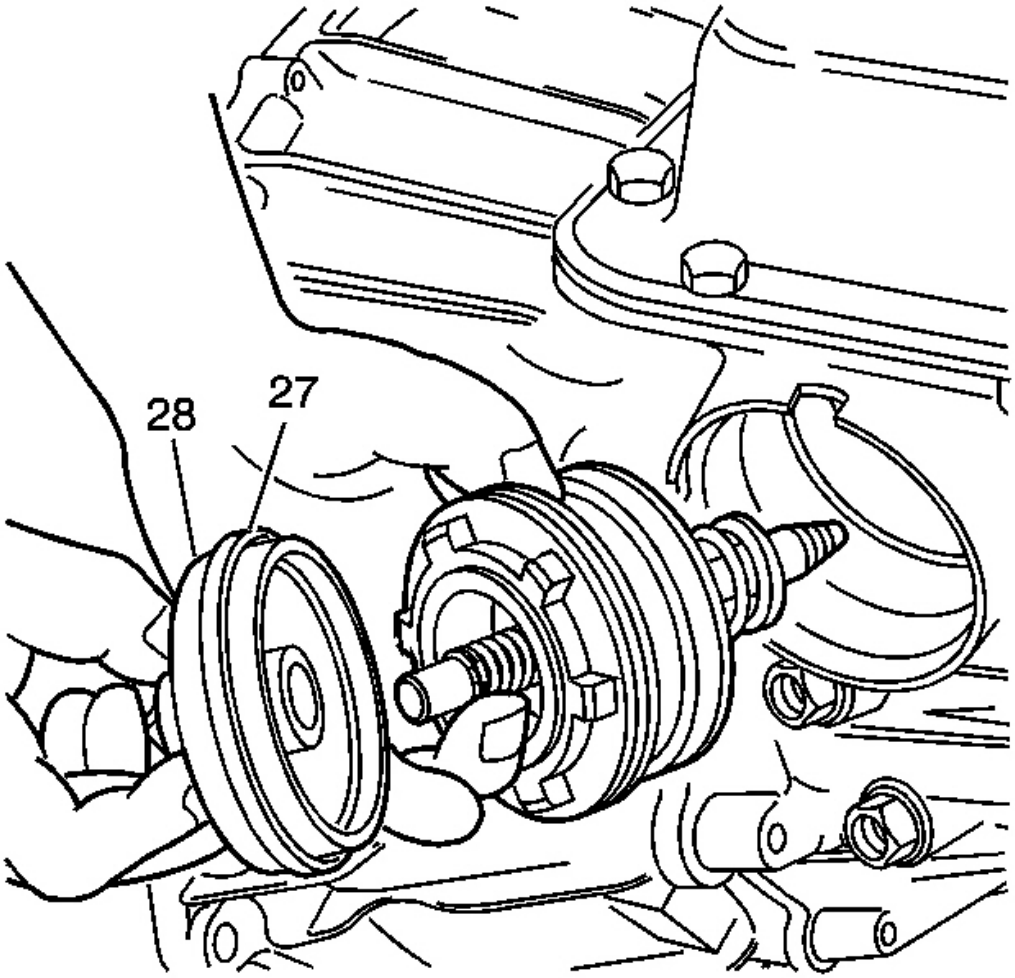

Fig. 29: View Of 2-4 Servo Assembly
Courtesy of GENERAL MOTORS CORP.

4. Remove the servo cover (28) and O-ring seal (27). If the servo cover seems to be hung up on the seal, cut and remove the O-ring seal before removing the cover.
5. Remove the 2-4 servo assembly.

2-4 SERVO PIN LENGTH CHECK

Tools Required

J 33037 2-4 Intermediate Band Apply Pin Gage. See **Special Tools and Equipment** .

cardiagn.com

Checking Procedure

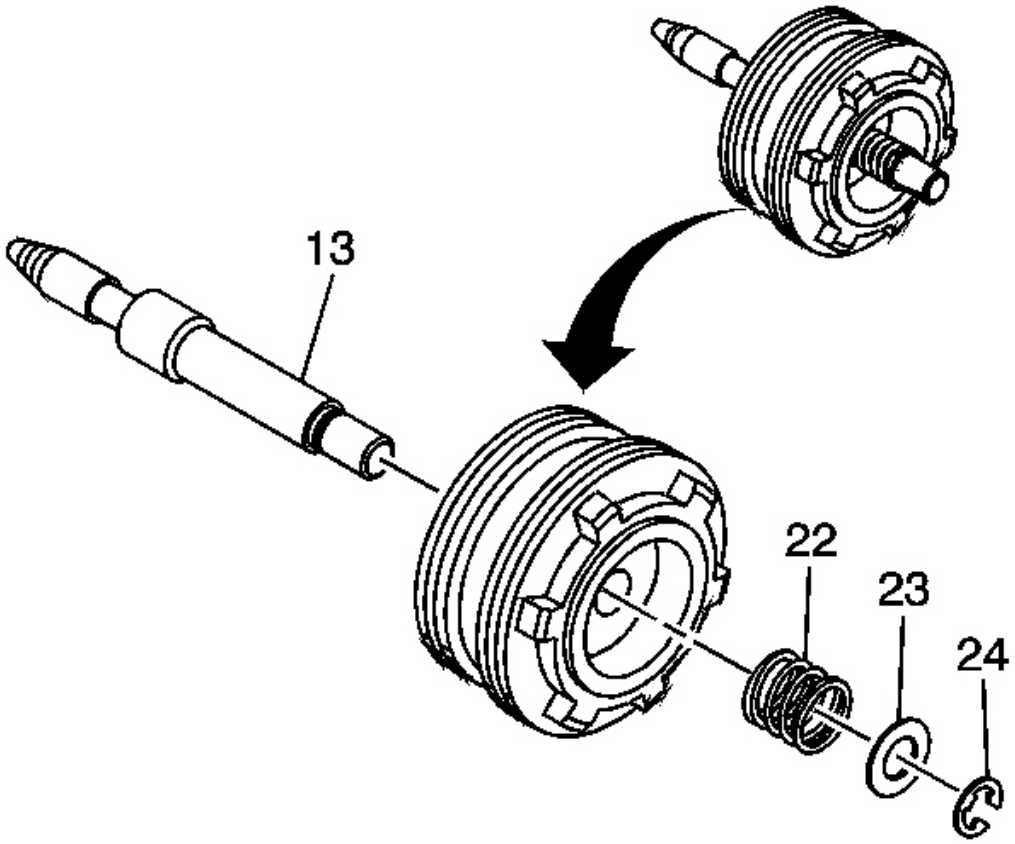

Fig. 30: 2-4 Servo Assembly
Courtesy of GENERAL MOTORS CORP.

1. Disassemble the 2-4 servo assembly. If necessary, refer to **2-4 Servo Disassemble** .

cardiagn.com

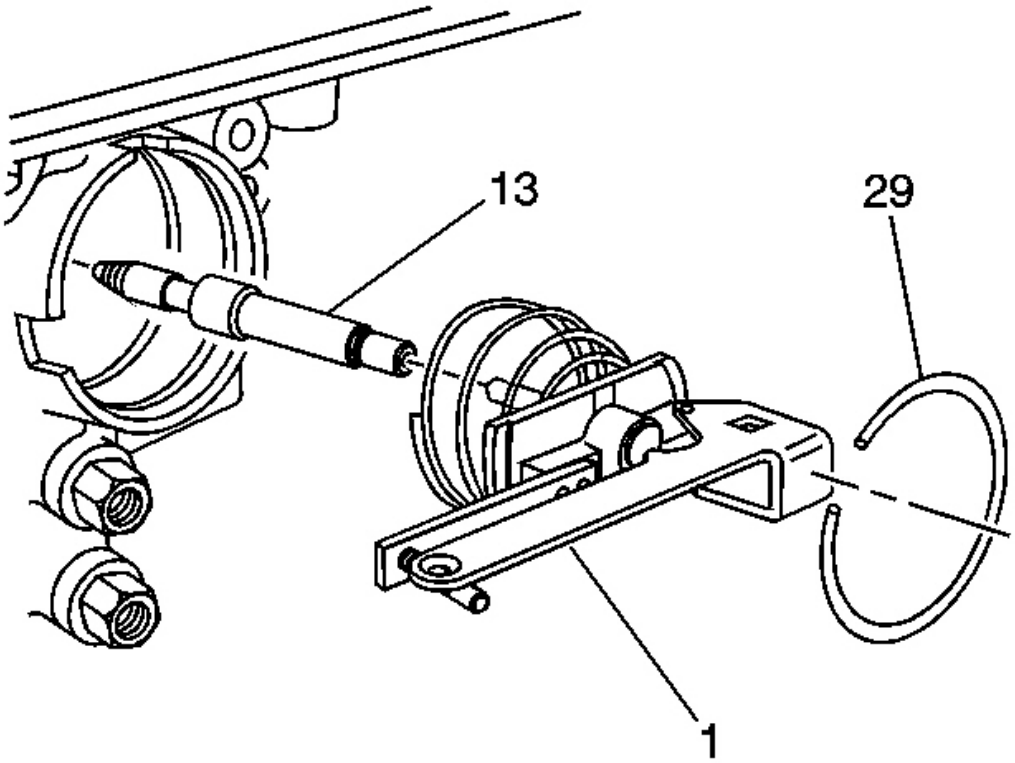

Fig. 31: Locating Servo Cover Retaining Ring
Courtesy of GENERAL MOTORS CORP.

2. Install the band apply pin (13) and the **J 33037** (1).
3. Install the servo cover retaining ring (29) to secure the tool.

cardiagn.com

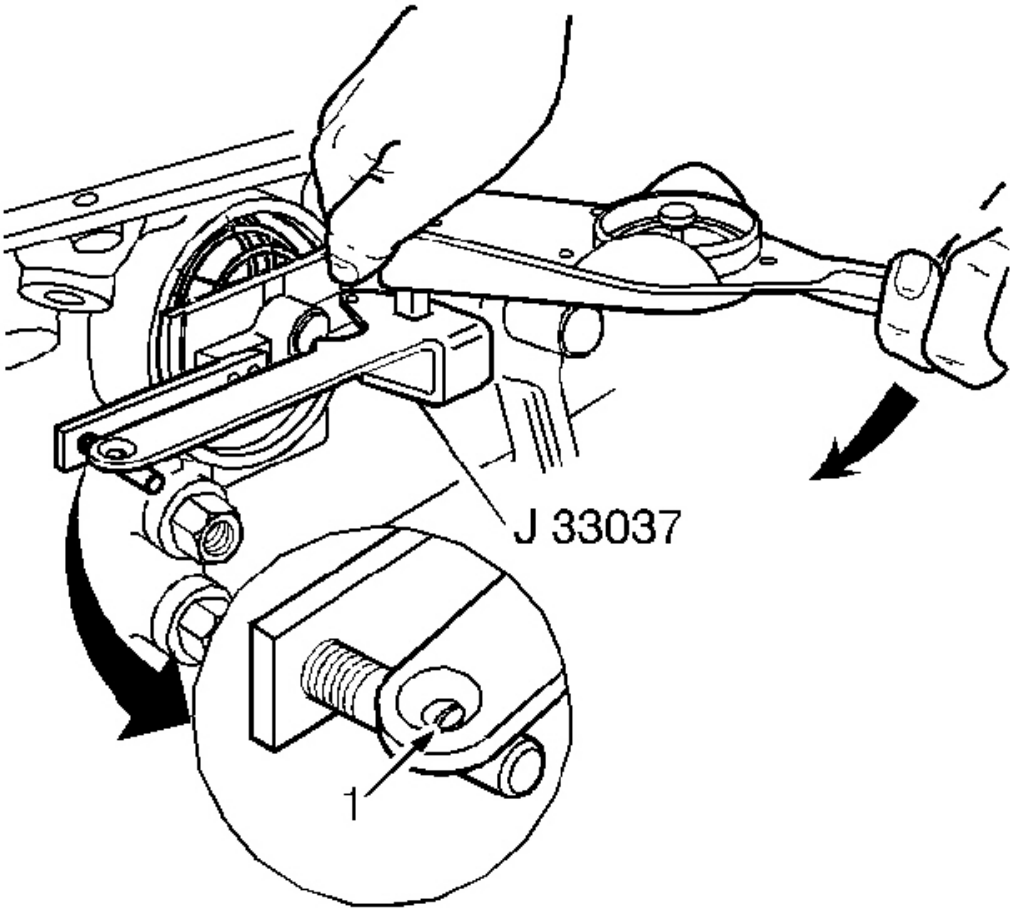

Fig. 32: Identifying Gage Slot
Courtesy of GENERAL MOTORS CORP.

4. Apply 11 N.m (98 lb in) torque. If the white line appears in the gage slot (1), the pin length is correct.
5. If a new pin is needed, refer to **2-4 Servo Pin Selection** in order to determine correct pin length.

SPEED SENSOR AND CASE EXTENSION REMOVAL (2WD TRUCK/UTILITY/VAN ONLY)

Tools Required

J 29837-A Output Shaft Support Fixture. See **Special Tools and Equipment** .

Removal Procedure

cardiagn.com

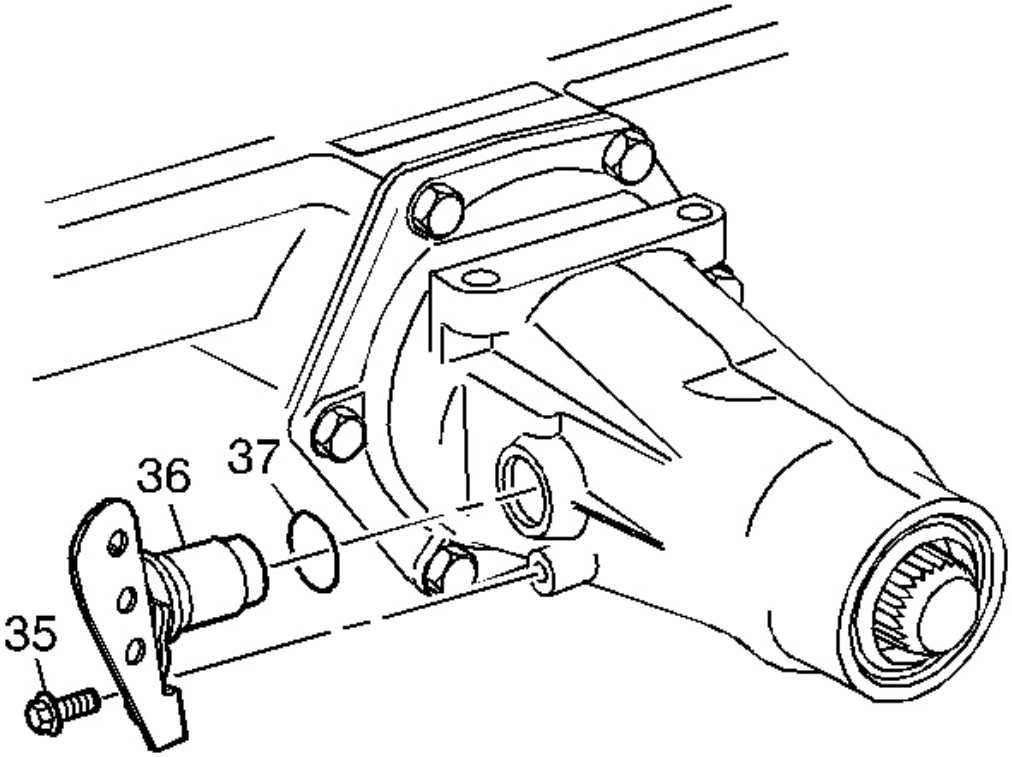

Fig. 33: View Of Internal Transmission Speed Sensor
Courtesy of GENERAL MOTORS CORP.

1. Remove the sensor retaining bolt (35).
2. Remove the speed sensor (36) and O-ring seal (37).

cardiagn.com

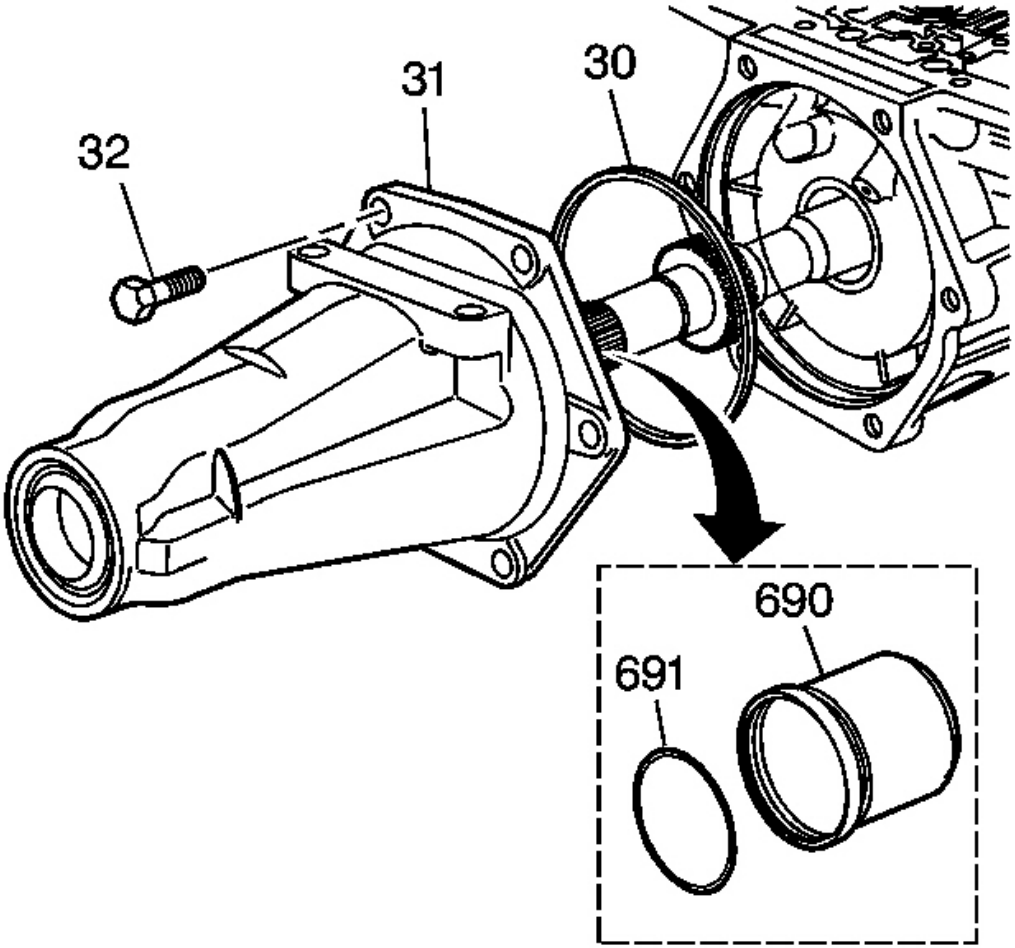

Fig. 34: Identifying Output Shaft Components
Courtesy of GENERAL MOTORS CORP.

3. Remove the case extension bolts (32).
4. Remove the case extension (31) and the case extension to case seal (30).
5. Remove the output shaft sleeve (690) and the output shaft O-ring seal (691). Not all models use an output shaft sleeve (690) and O-ring seal (691).

cardiagn.com

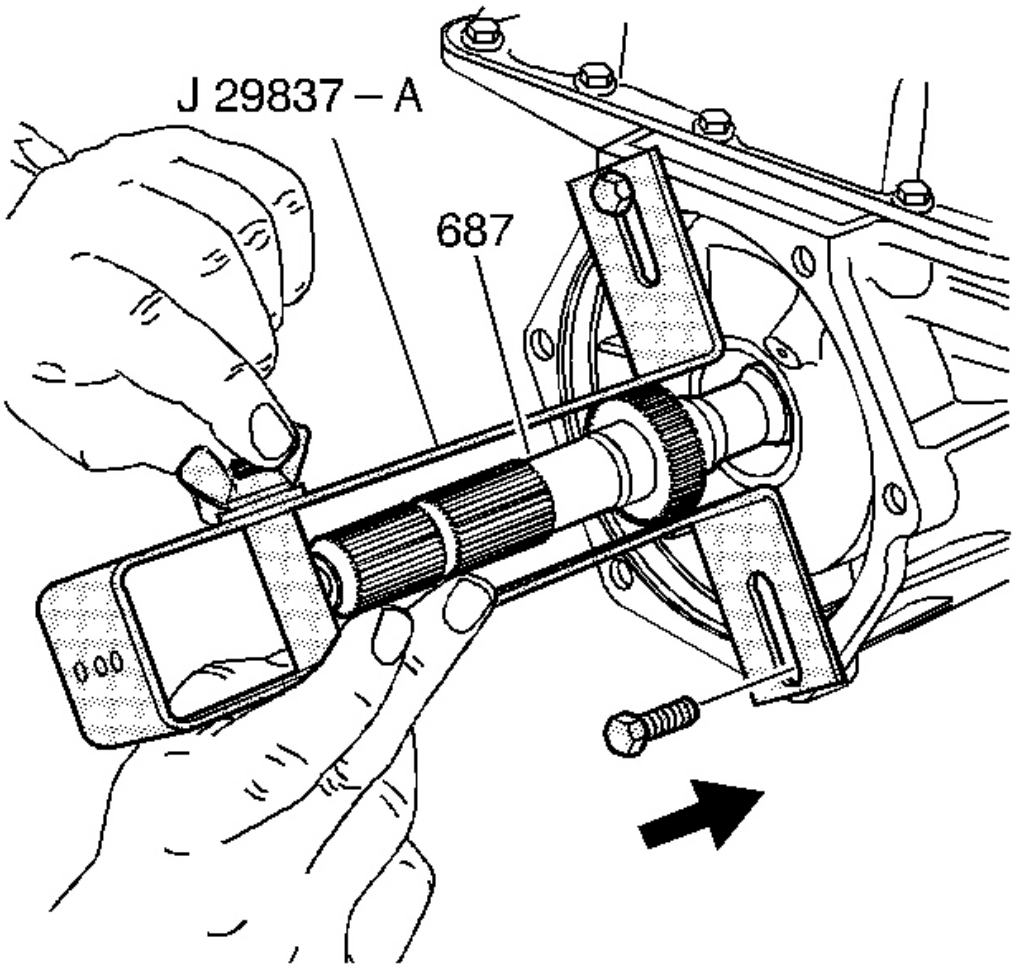

Fig. 35: Installing J 29837-A
Courtesy of GENERAL MOTORS CORP.

6. Install the **J 29837-A** .

   If the **J 29837-A** is not used, the output shaft (687) may fall free when the input carrier retaining ring is removed.

PAN AND FILTER ASSEMBLY REMOVAL

cardiagn.com

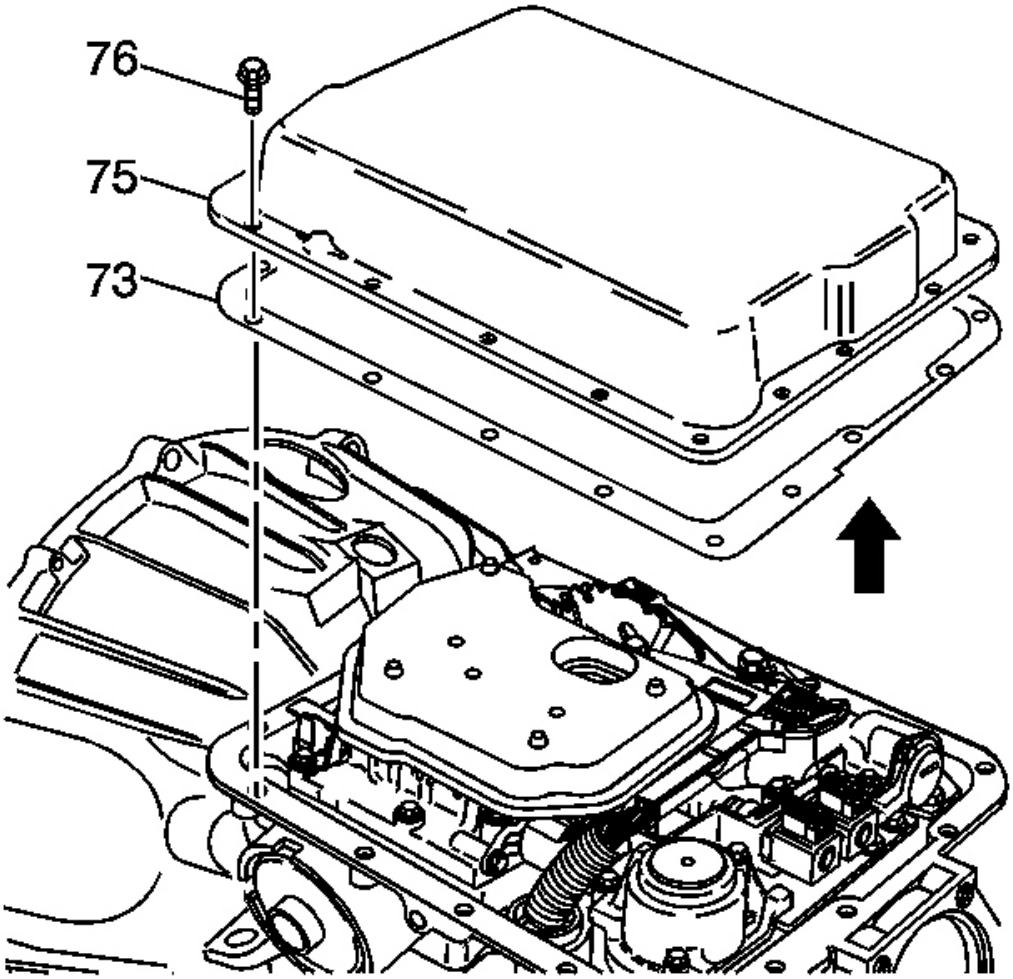

Fig. 36: View Of Transmission Oil Pan & Gasket
Courtesy of GENERAL MOTORS CORP.

1. Remove the transmission oil pan screws (76).
2. Remove the transmission oil pan (75) and the transmission oil pan gasket (73).

cardiagn.com

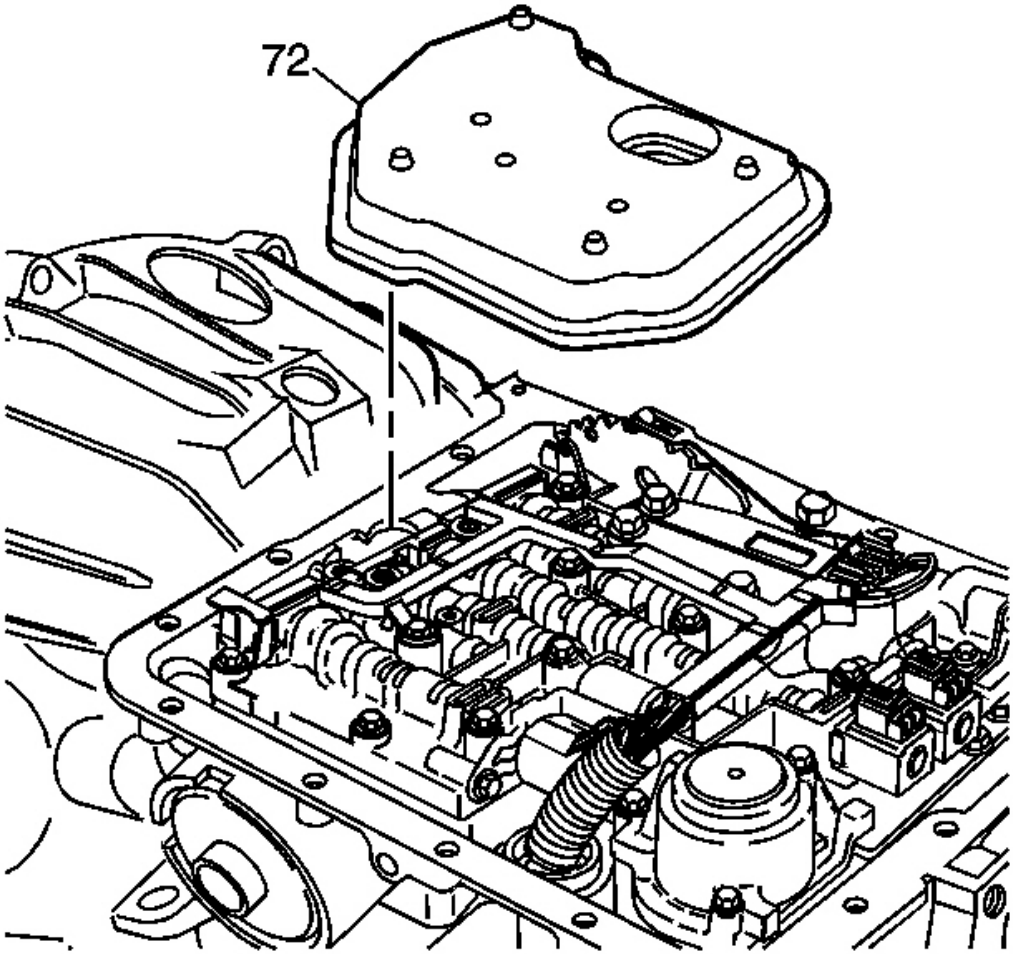

Fig. 37: Identifying Transmission Oil Filter Assembly
Courtesy of GENERAL MOTORS CORP.

3. Remove the transmission oil filter assembly (72).
4. The filter may help in diagnosis. Cut away the top portion of the plastic filter housing and remove. Inspect the filter for the presence of the following items which may indicate wear or corrosion:
    - Clutch material
    - Bronze slivers indicating bushing wear
    - Steel particles

cardiagn.com

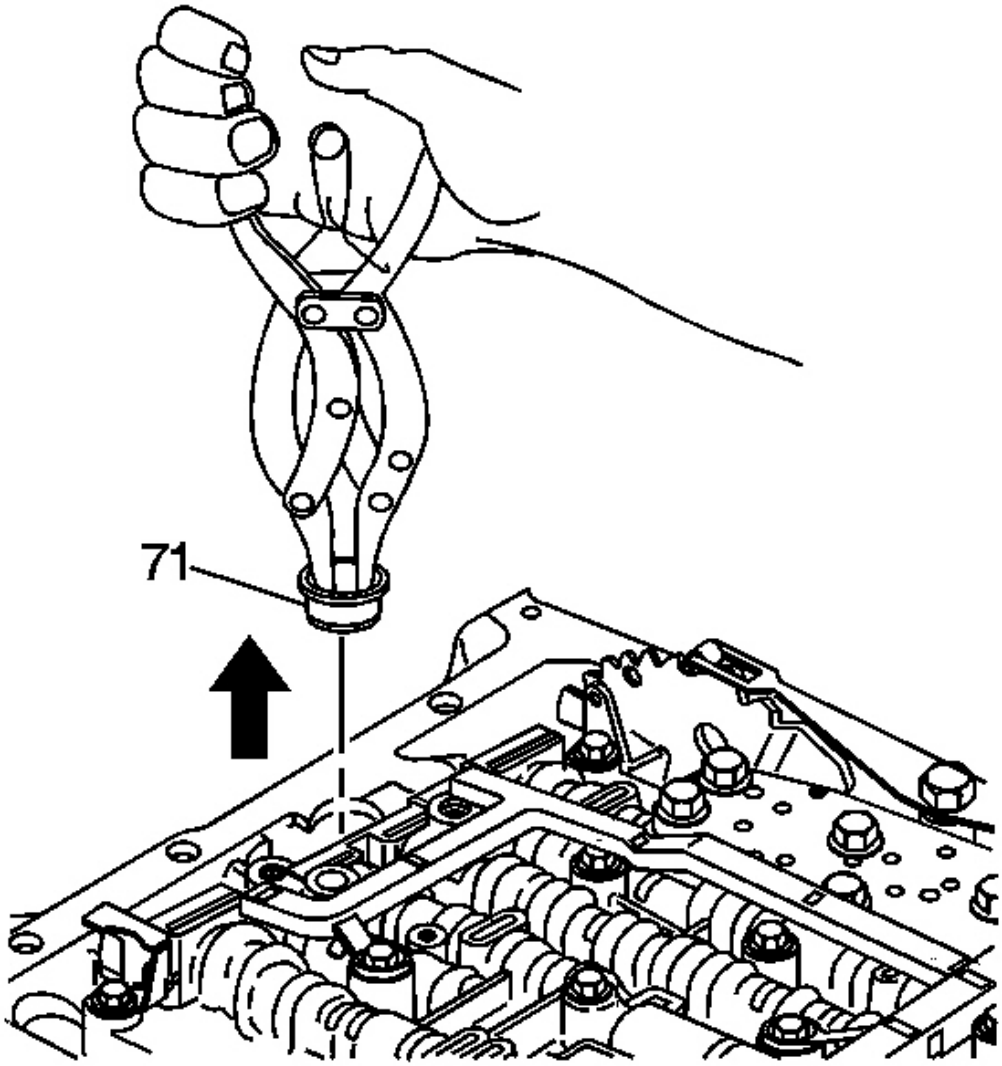

Fig. 38: Removing Oil Filter Seal
Courtesy of GENERAL MOTORS CORP.

5. Remove the oil filter seal (71).

SECONDARY FLUID PUMP ASSEMBLY REMOVAL (M33 MODEL ONLY)

cardiagn.com

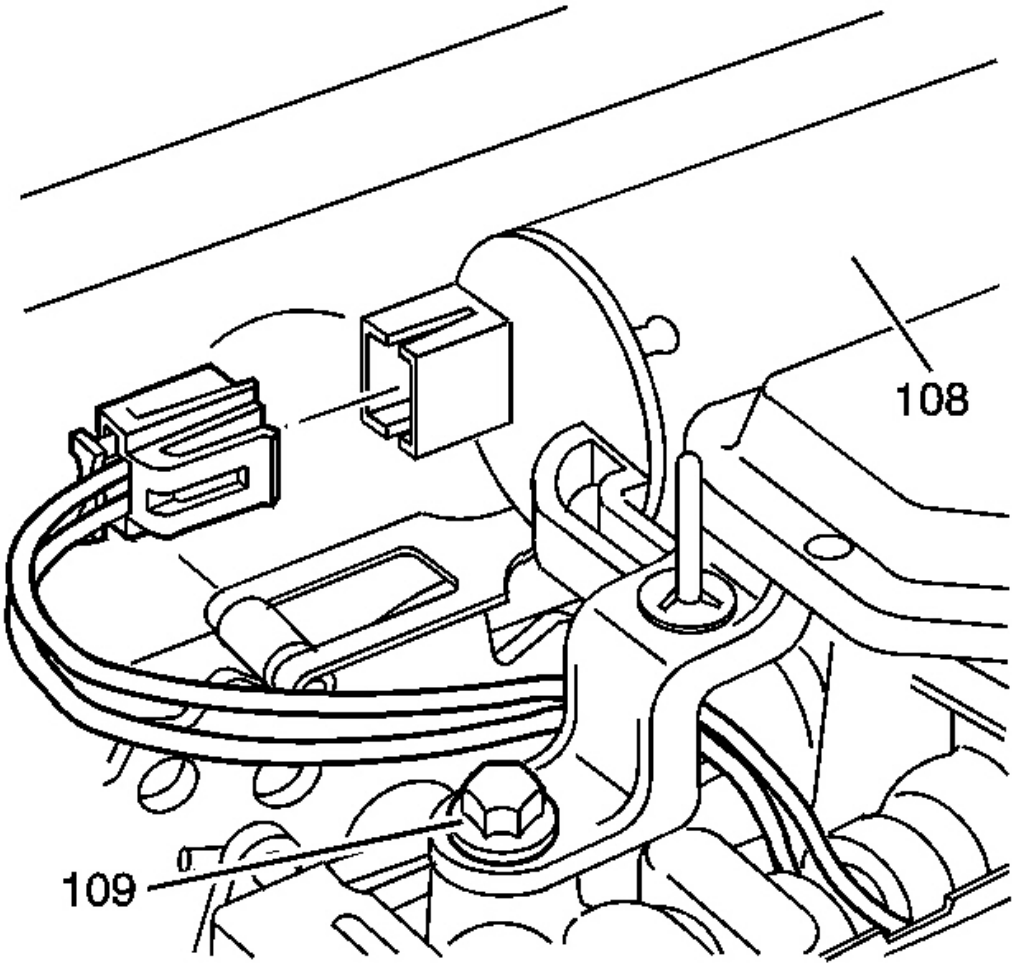

Fig. 39: Locating Secondary Fluid Pump Electrical Connector & Retaining Bolts
Courtesy of GENERAL MOTORS CORP.

1. Disconnect the electrical connector from the secondary fluid pump (108).
2. Remove retaining bolts (109 and 110) from the secondary fluid pump (108).

cardiagn.com

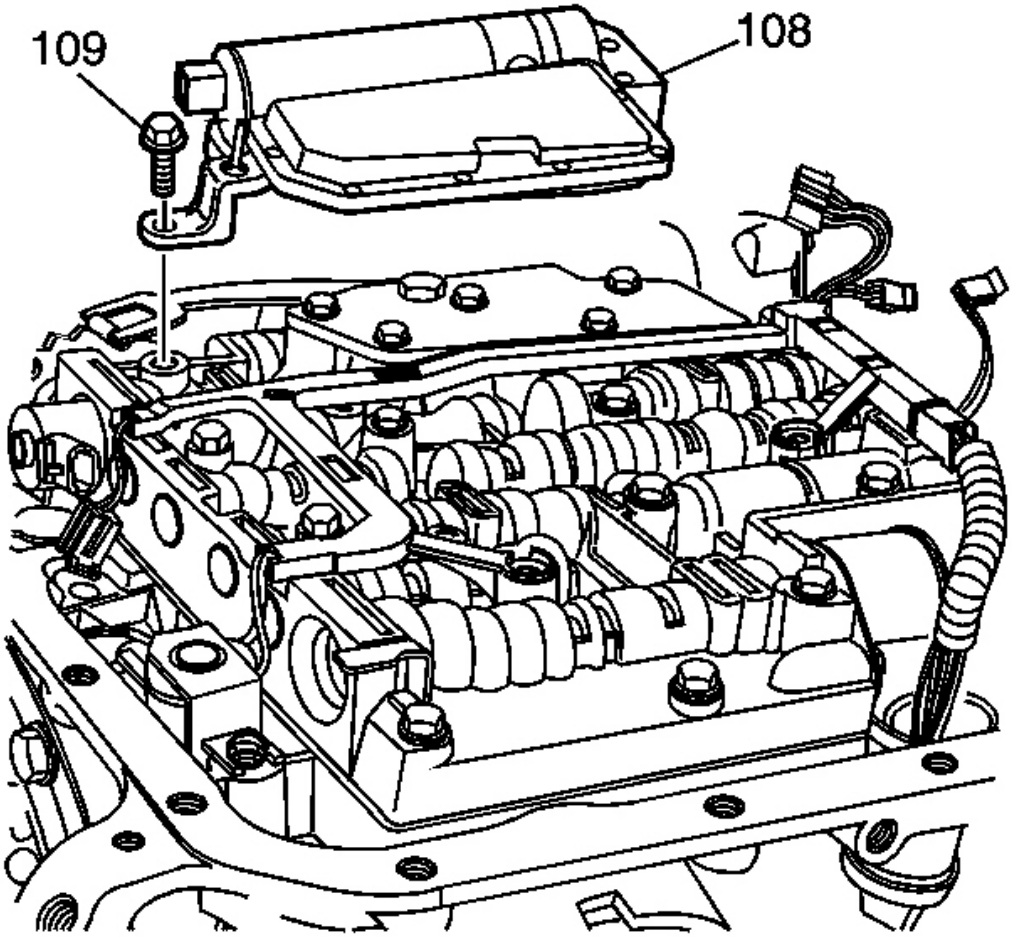

Fig. 40: Identifying Secondary Fluid Pump
Courtesy of GENERAL MOTORS CORP.

3. Remove the secondary fluid pump (108).

VALVE BODY AND WIRING HARNESS REMOVAL

cardiagn.com

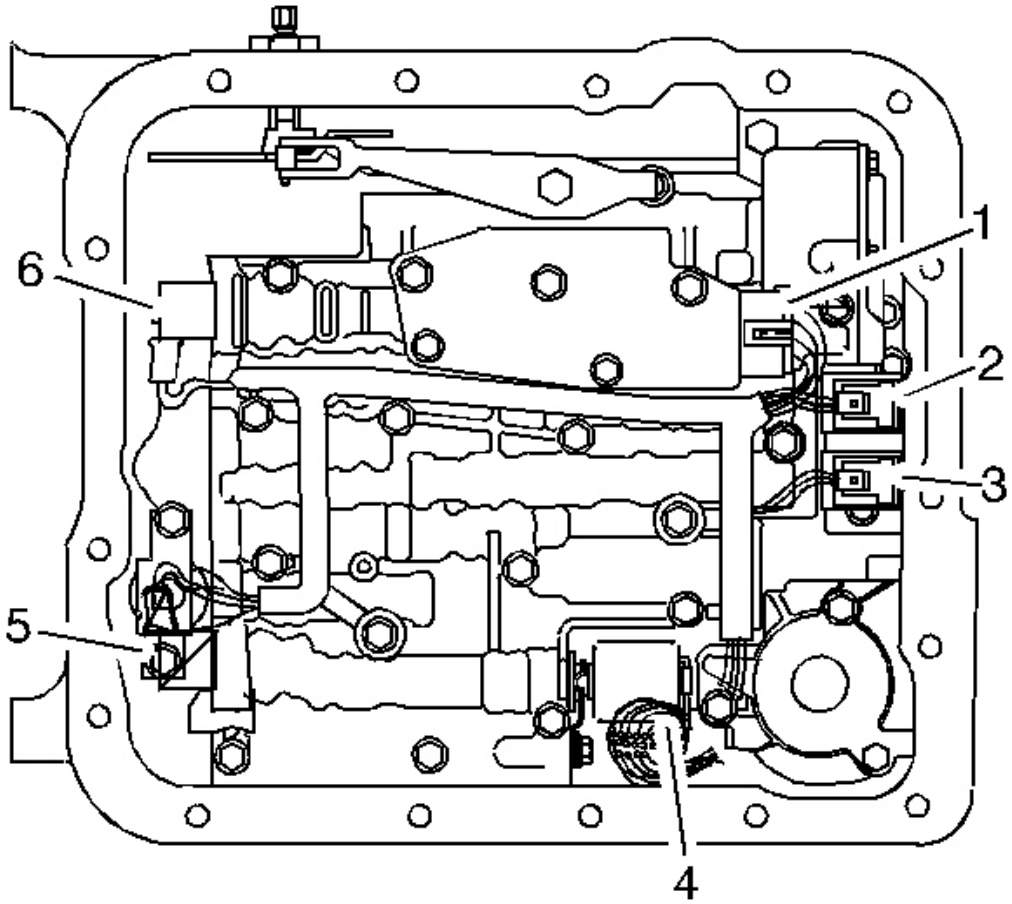

Fig. 41: Identifying Valve Body Electrical Connections
Courtesy of GENERAL MOTORS CORP.

1. Remove all electrical connectors (1-6) from the electrical components.

cardiagn.com

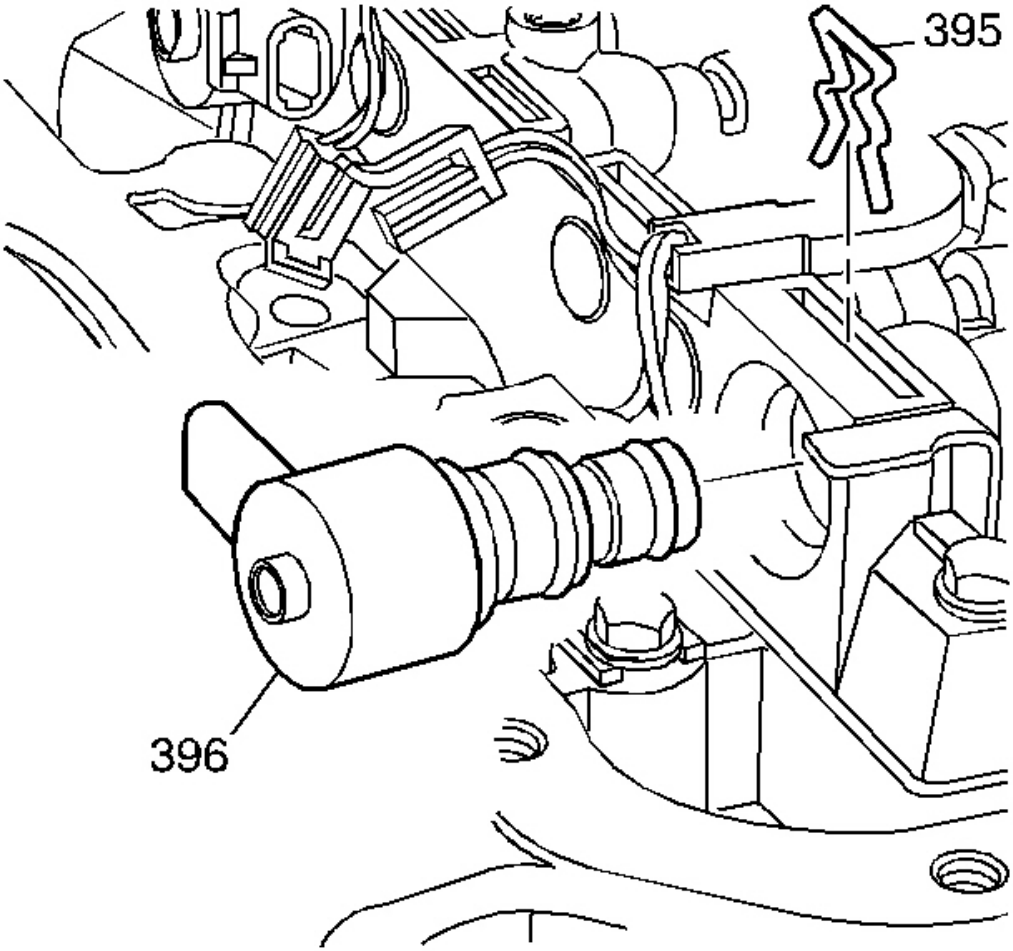

Fig. 42: Removing TCC/PWM Solenoid & Clip
Courtesy of GENERAL MOTORS CORP.

2. Remove the torque converter clutch (TCC/PWM) pulse width modulation retainer clip (395).
3. Remove the TCC/PWM solenoid (396).

cardiagn.com

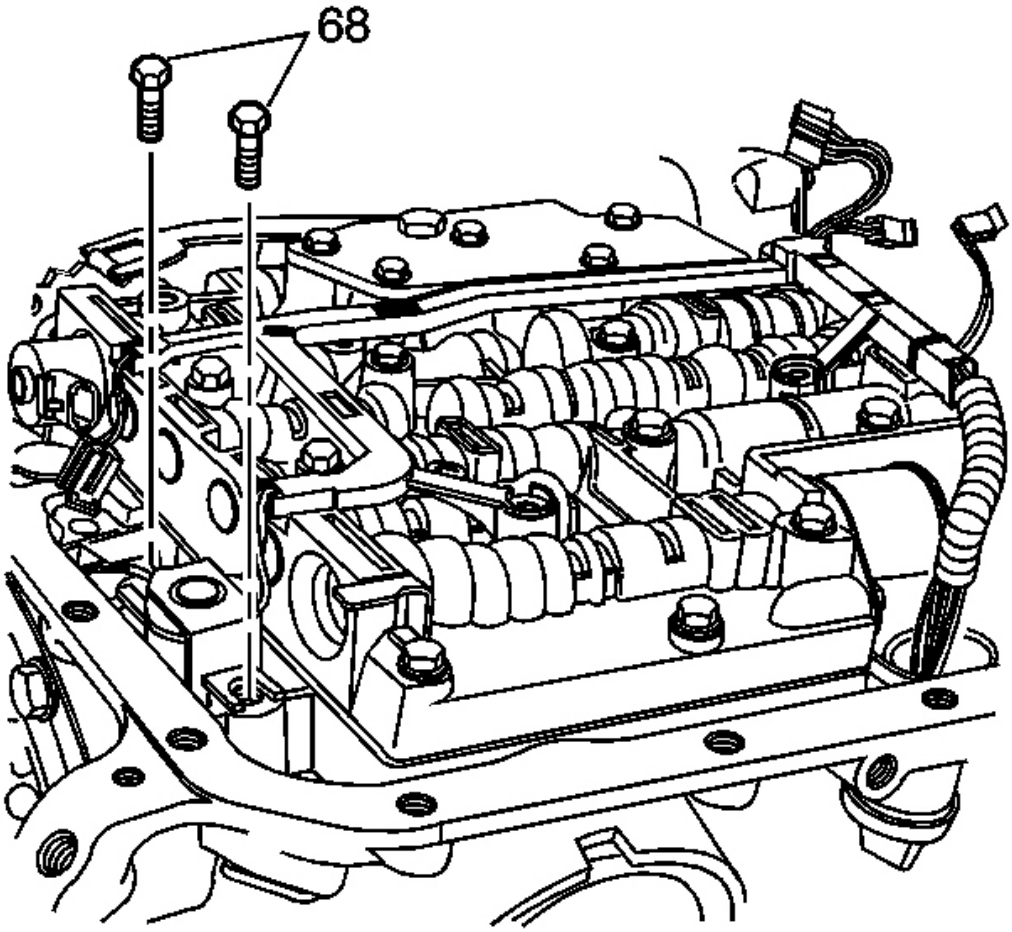

Fig. 43: Identifying TCC Solenoid Valve Mounting Bolts
Courtesy of GENERAL MOTORS CORP.

4. Remove the TCC solenoid bolts (68).

cardiagn.com

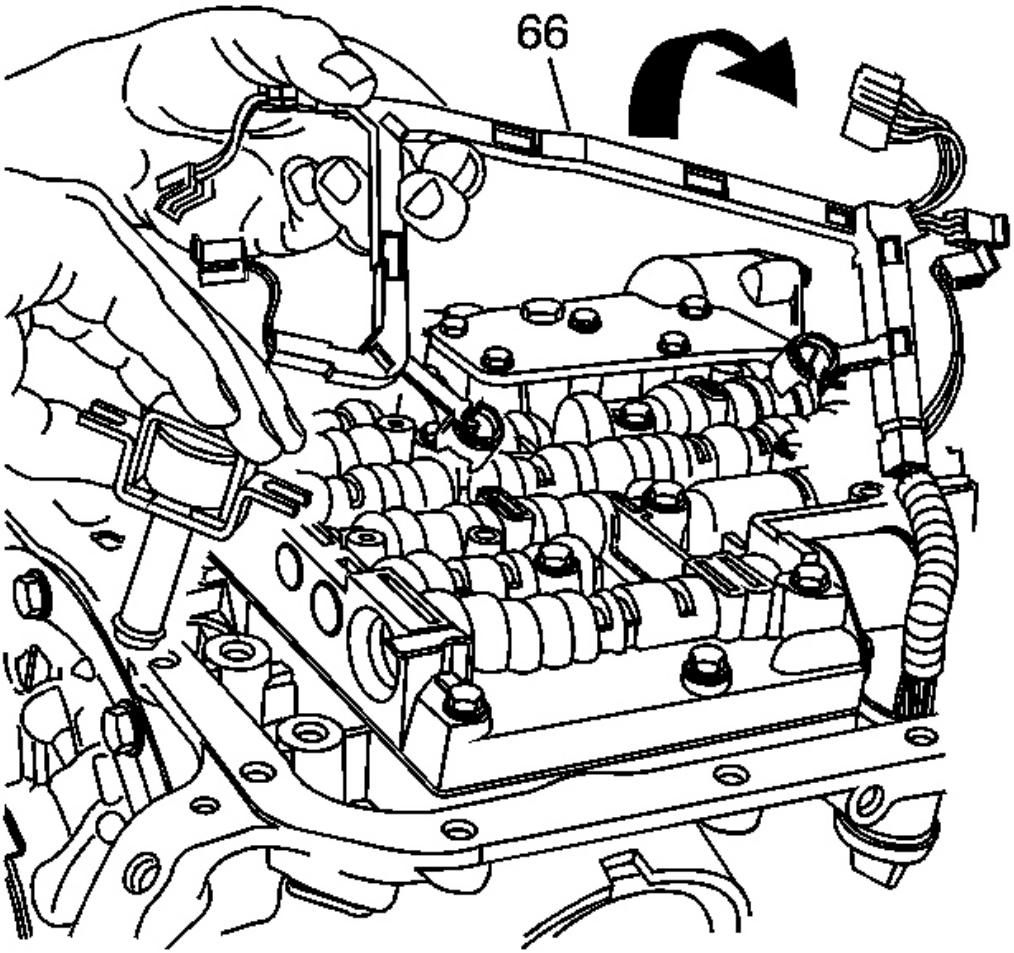

Fig. 44: Removing TCC Solenoid And Wiring Harness
Courtesy of GENERAL MOTORS CORP.

5. Remove the TCC solenoid and wiring harness (66). Turn the wiring harness over so that it hangs over the side of the transmission.

cardiagn.com

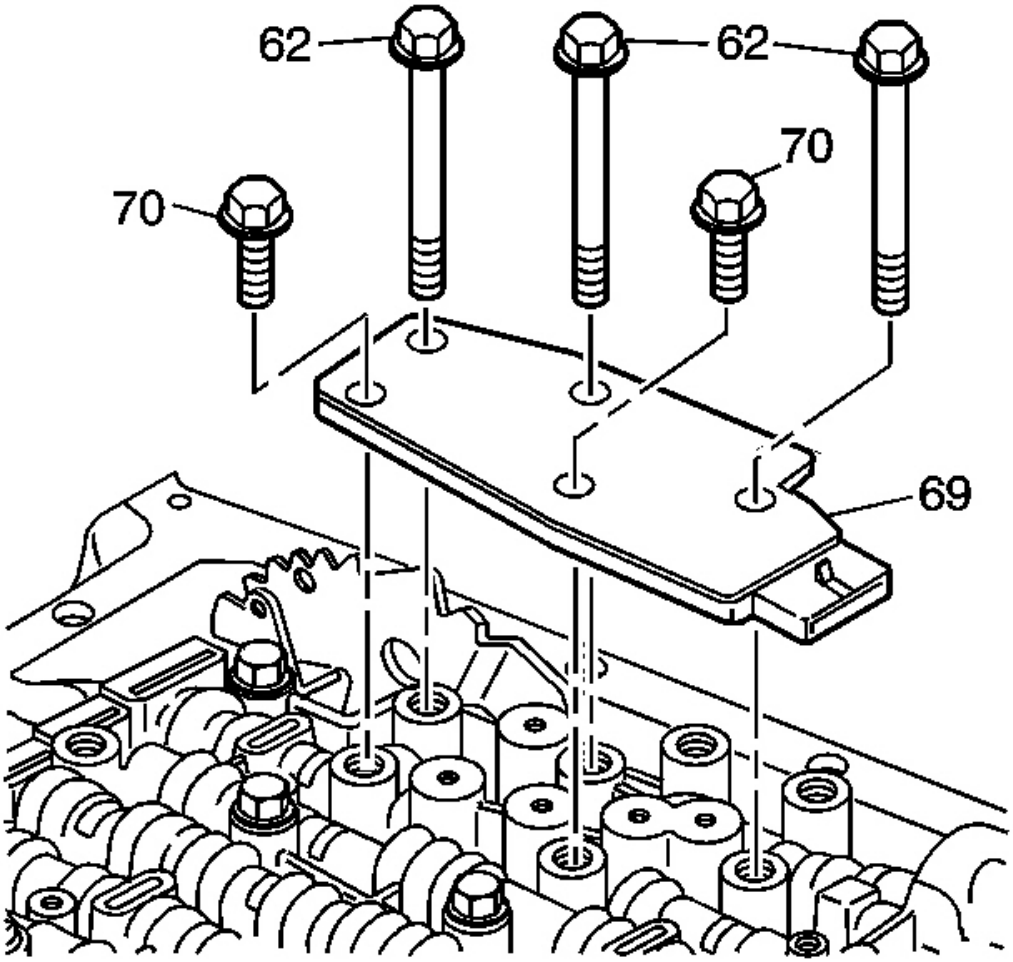

Fig. 45: TFP Manual Valve Position Switch Retaining Bolts
Courtesy of GENERAL MOTORS CORP.

6. Remove the transmission fluid pressure (TFP) manual valve position switch assembly bolts (62, 70).
7. Remove the TFP manual valve position switch (69).

cardiagn.com

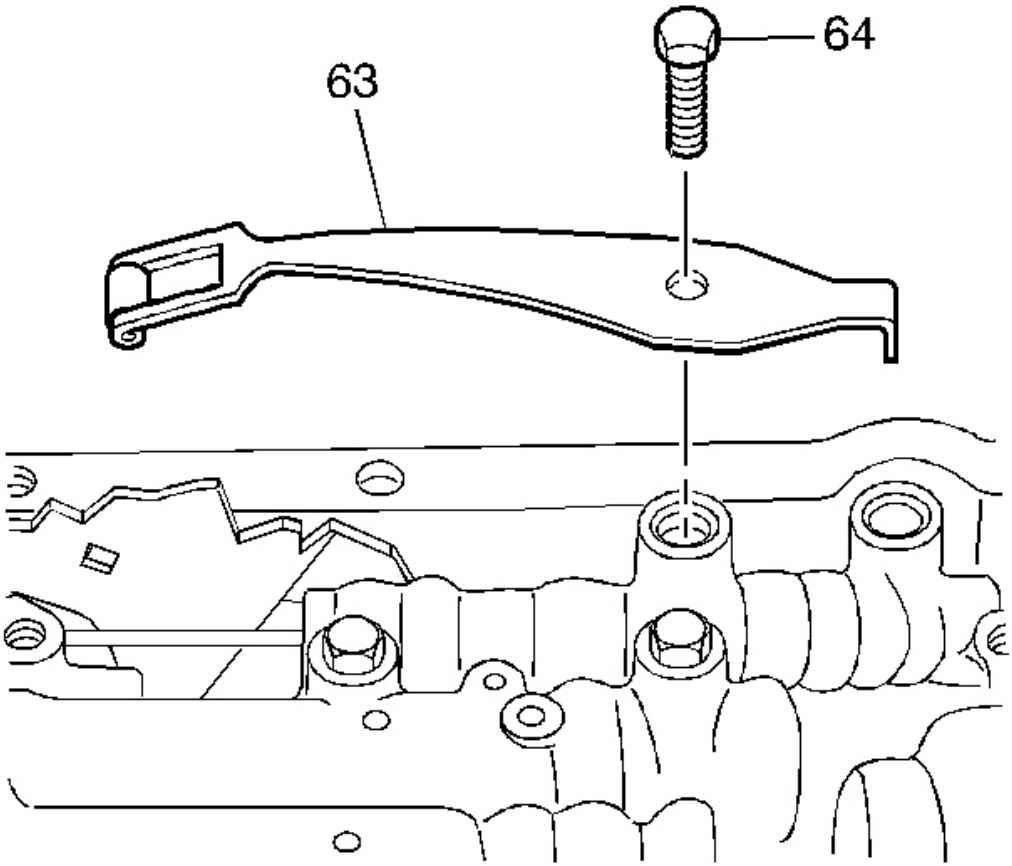

Fig. 46: View Of Manual Detent Spring Assembly
Courtesy of GENERAL MOTORS CORP.

8. Remove the manual detent spring bolt (64).
9. Remove the manual detent spring assembly (63).

cardiagn.com

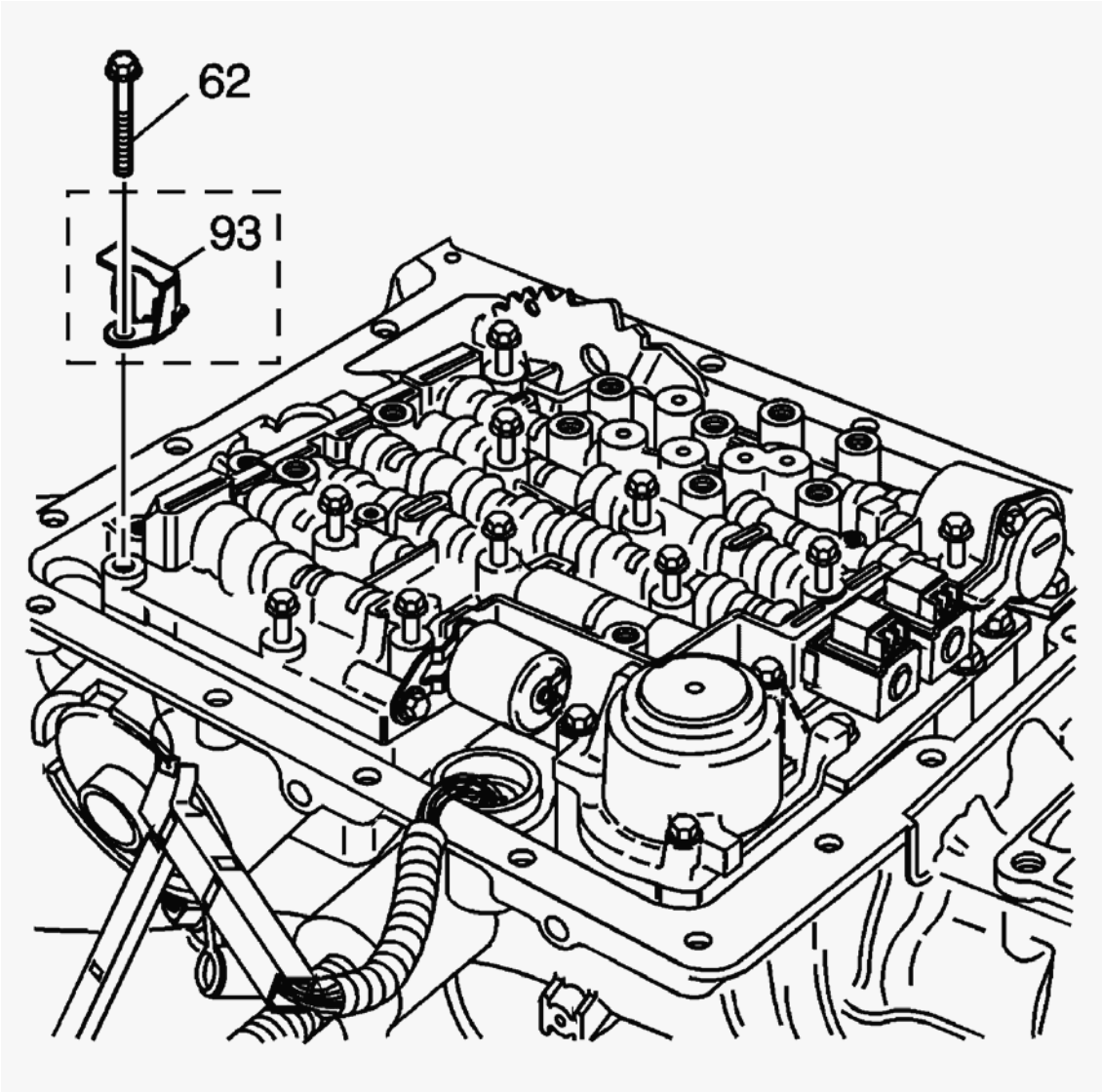

Fig. 47: Locating Valve Body Bolts & Fluid Level Indicator Stop Bracket
Courtesy of GENERAL MOTORS CORP.

10. Remove all valve body bolts (62).

IMPORTANT: Fluid level indicator stop bracket is model dependent. Some models do not have a dipstick stop.

11. Remove the fluid level indicator stop bracket (93) - model dependent.

cardiagn.com

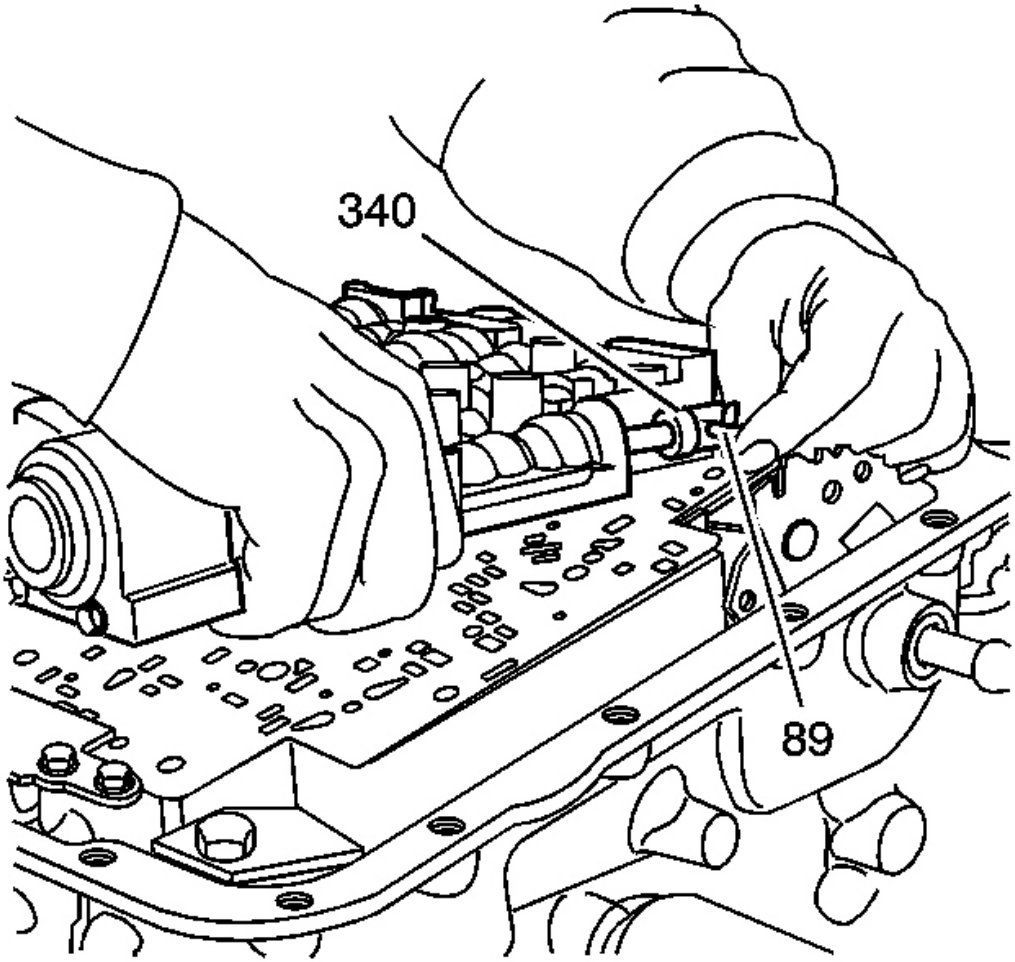

Fig. 48: Disconnecting Manual Valve Link
Courtesy of GENERAL MOTORS CORP.

12. Lift the valve body carefully so that the checkballs remain on the spacer plate in the correct location. While lifting the valve body, disconnect the manual valve link from the manual valve.

cardiagn.com

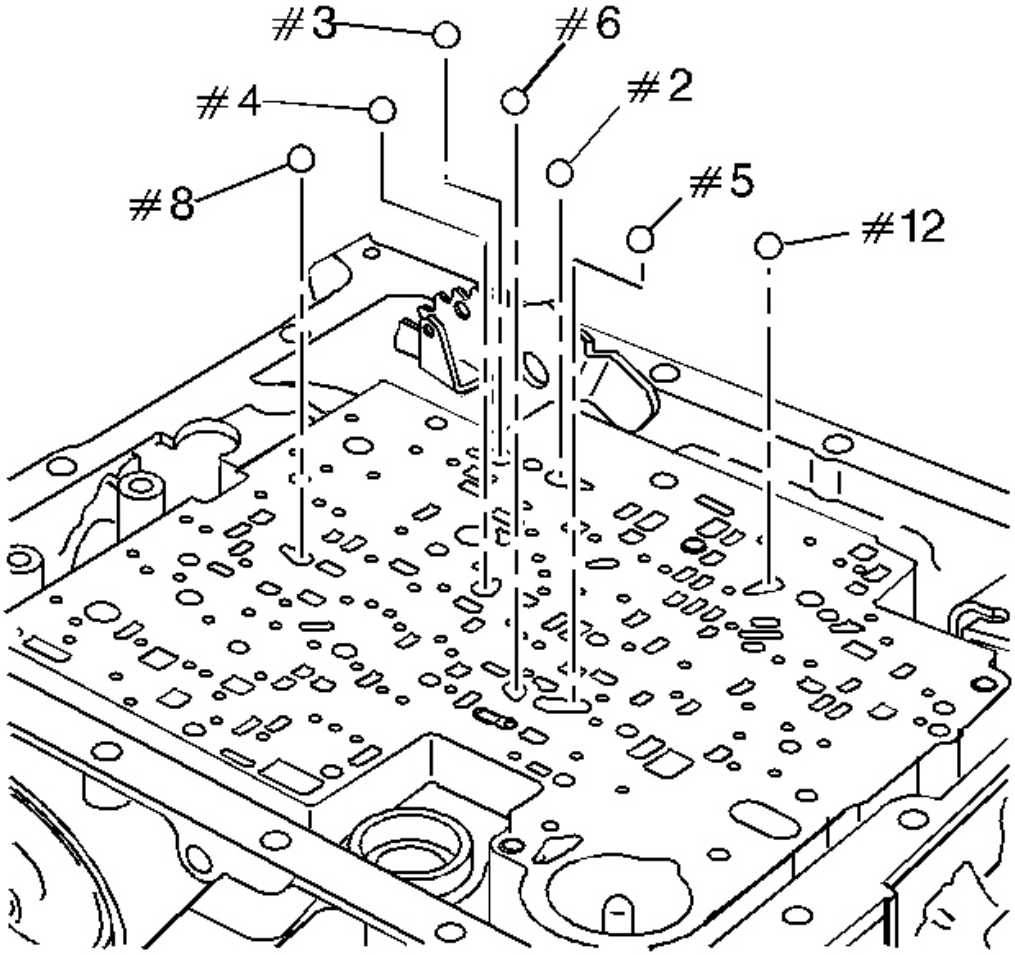

Fig. 49: Identifying Valve Body Checkballs
Courtesy of GENERAL MOTORS CORP.

NOTE: **Do not use a magnet in order to remove the control valve body ball check valves. This may magnetize the control valve body ball check valves, causing metal particles to stick to them.**

13. Remove the 7 valve body checkballs (2-6, 8, 12).

cardiagn.com

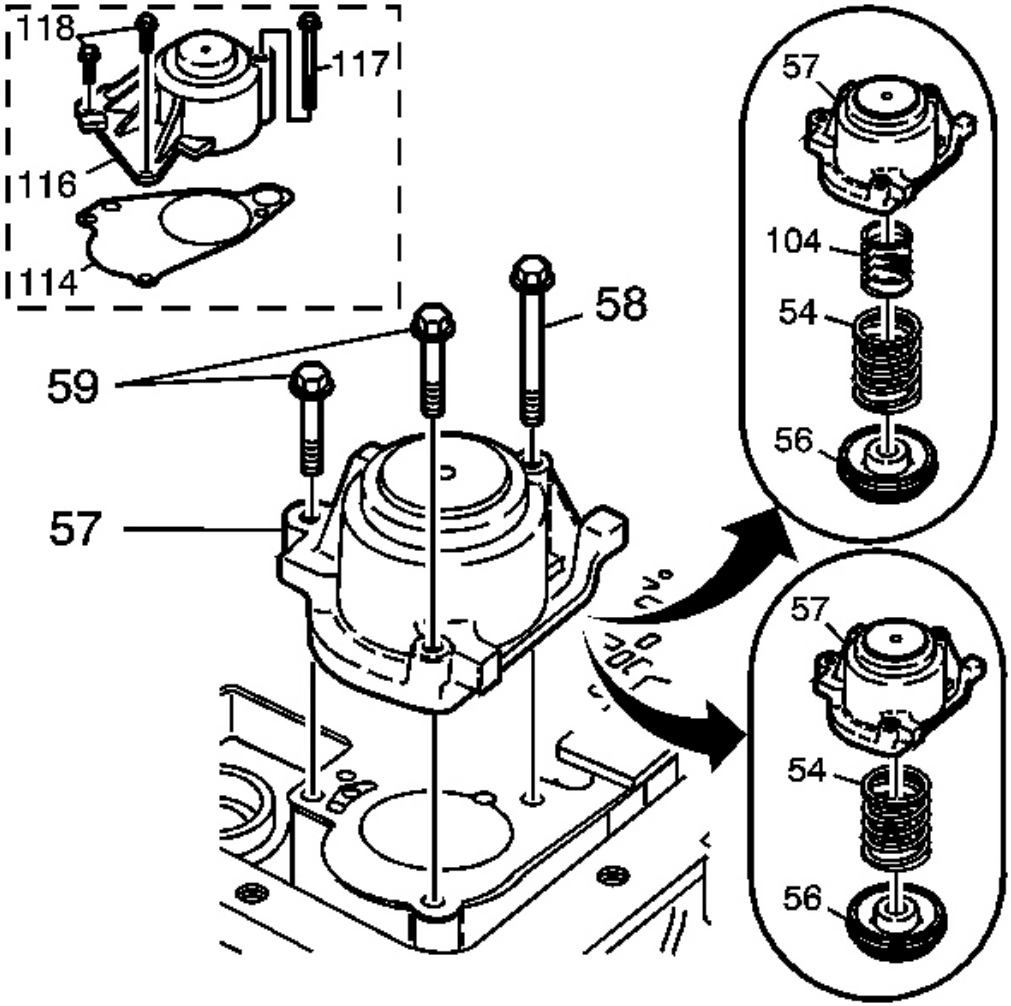

Fig. 50: Views Of 1-2 Accumulator Assemblies
Courtesy of GENERAL MOTORS CORP.

14. Remove the accumulator cover bolts (58, 59 or 117, 118).
15. Remove the 1-2 accumulator cover and pin assembly (57 or 116).

IMPORTANT: M33 models do not use 1-2 accumulator spring - inner (104).

16. Disassemble the 1-2 accumulator assembly (54, 56, 57, 104).

cardiagn.com

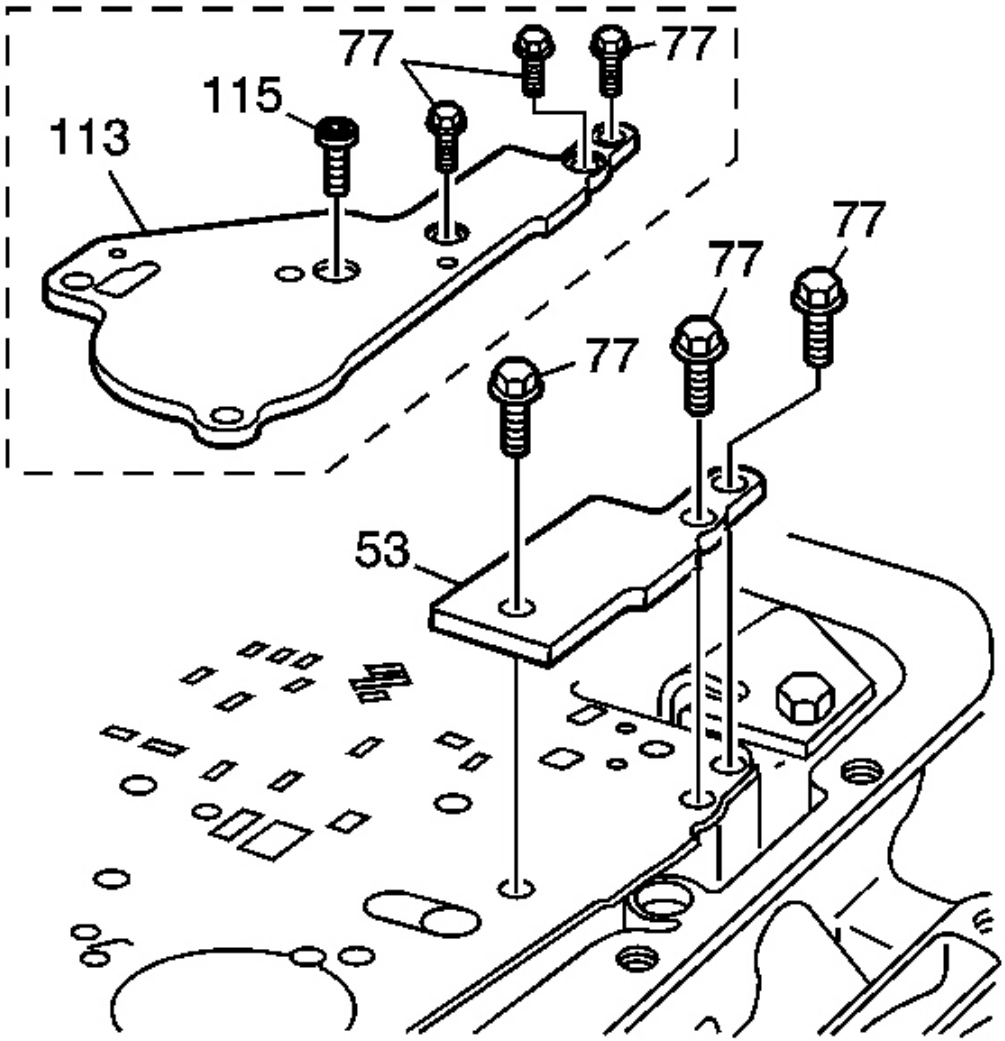

Fig. 51: View Of Spacer Plate Support Plate & Bolts
Courtesy of GENERAL MOTORS CORP.

17. Remove the spacer plate support bolts (77).
18. Remove the spacer plate support (53 or 113).

cardiagn.com

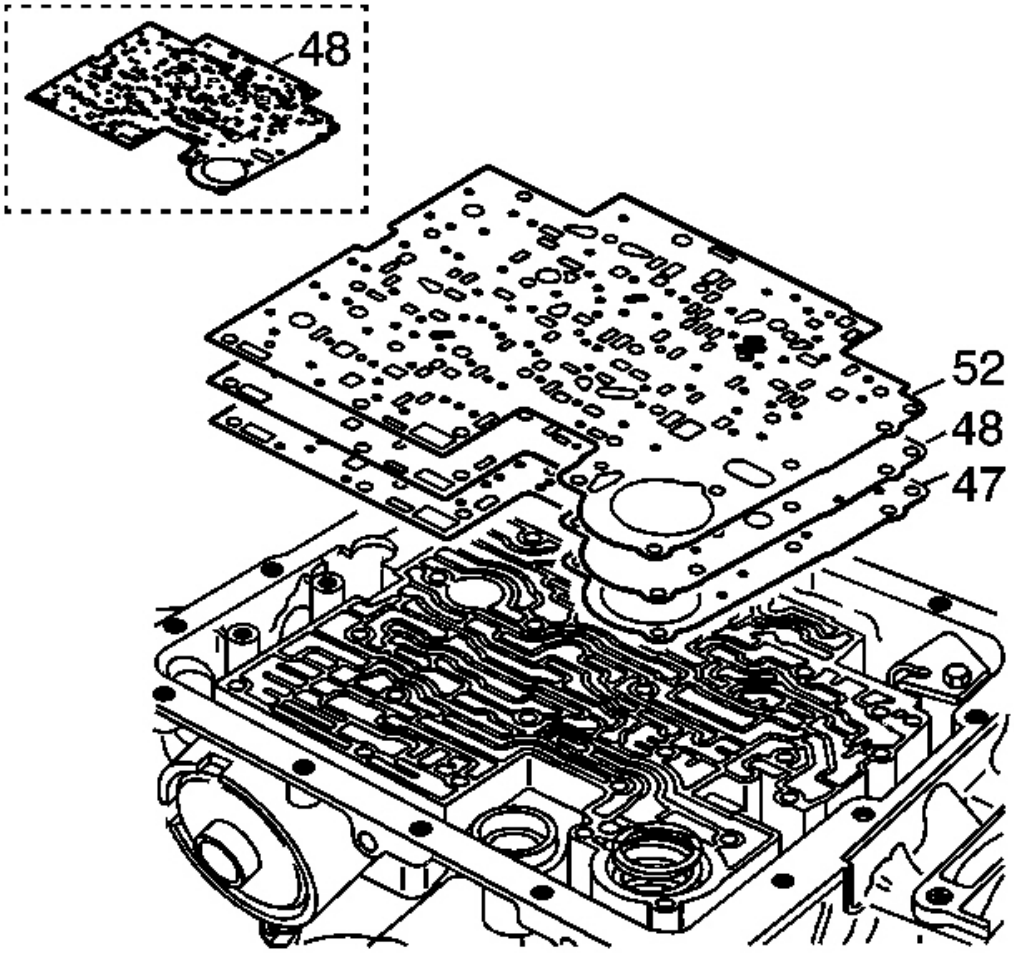

Fig. 52: Identifying Valve Body Gasket
Courtesy of GENERAL MOTORS CORP.

IMPORTANT: Some models have a bonded spacer plate (48).

19. Remove the valve body gasket (52), the valve body spacer plate (48) and the case gasket (47).

    Discard gaskets. Do not reuse.

cardiagn.com

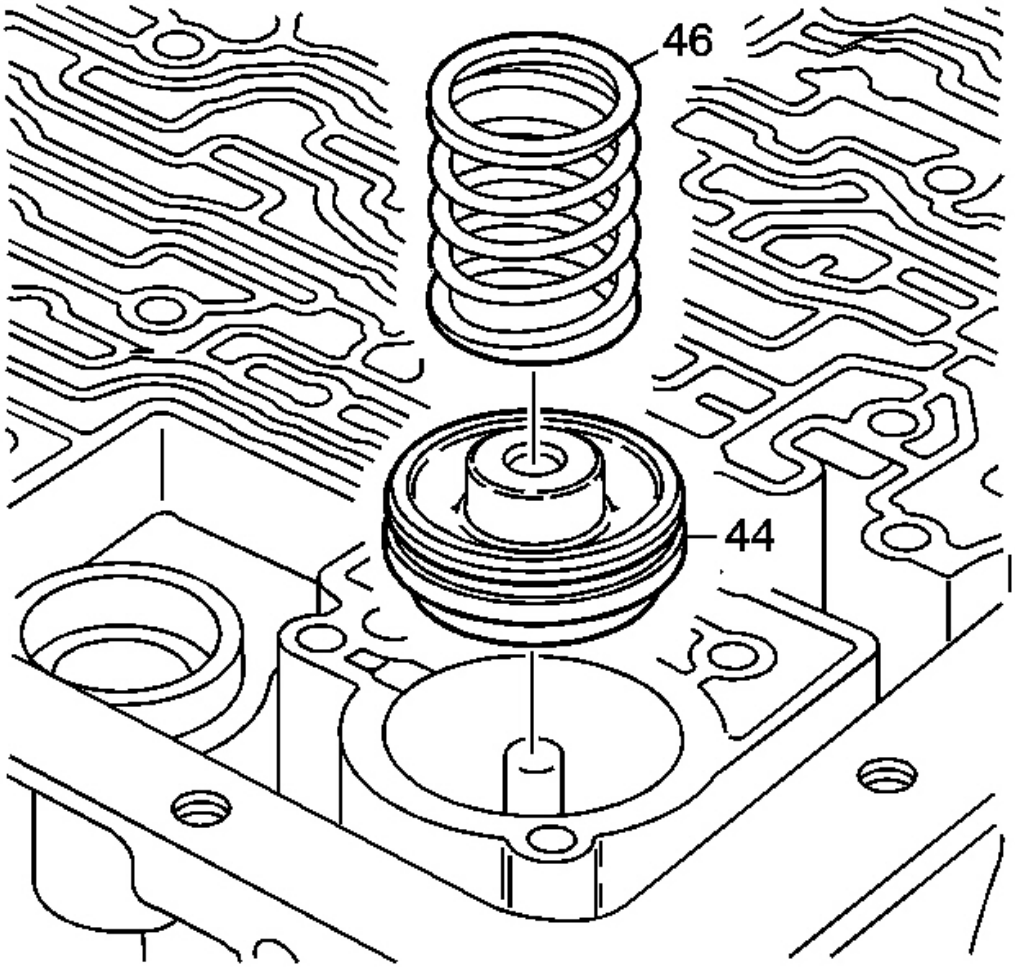

Fig. 53: View Of 3-4 Accumulator Piston & Seal Assembly
Courtesy of GENERAL MOTORS CORP.

20. Remove the 3-4 accumulator spring (model dependent) and the 3-4 accumulator piston.

cardiagn.com

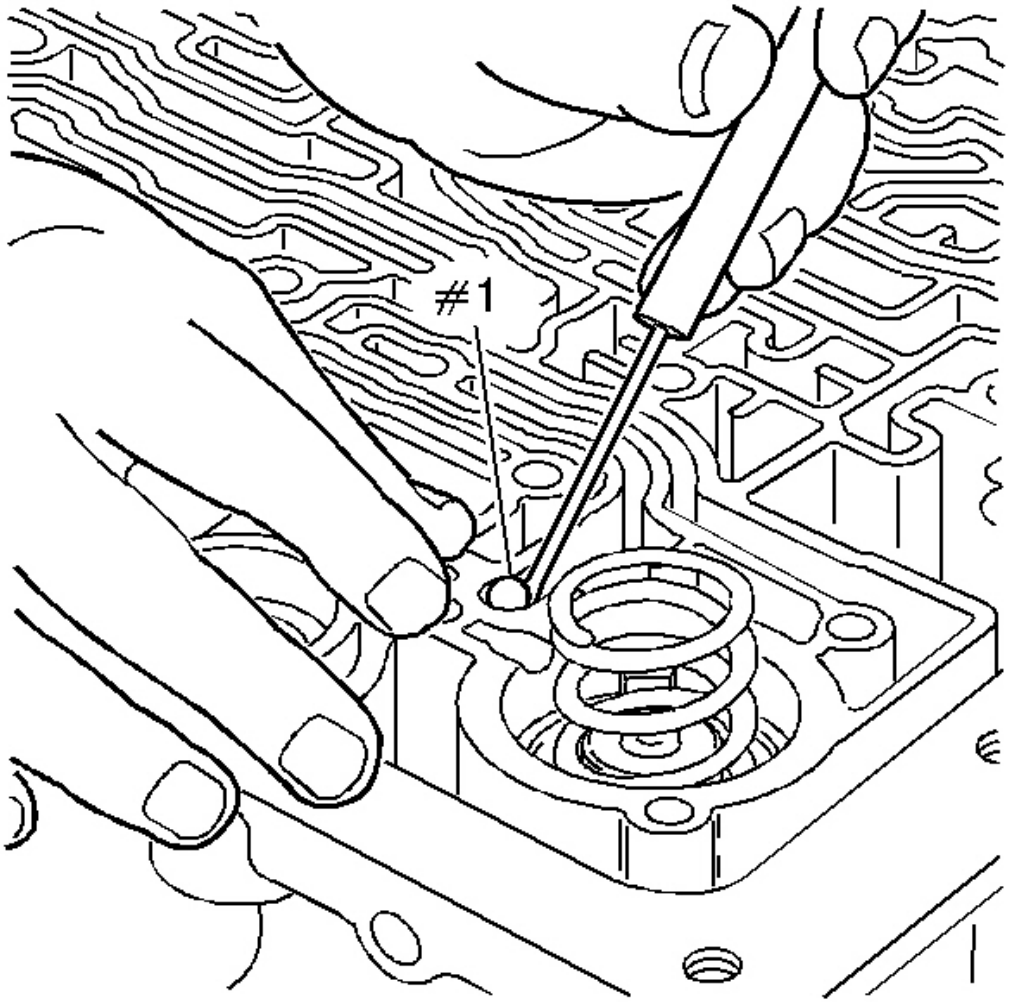

Fig. 54: Locating #1 Checkball
Courtesy of GENERAL MOTORS CORP.

NOTE: **Do not use a magnet in order to remove the control valve body ball check valves. This may magnetize the control valve body ball check valves, causing metal particles to stick to them.**

21. Remove the case checkball (#1).

TURBINE SHAFT O-RING REMOVAL

cardiagn.com

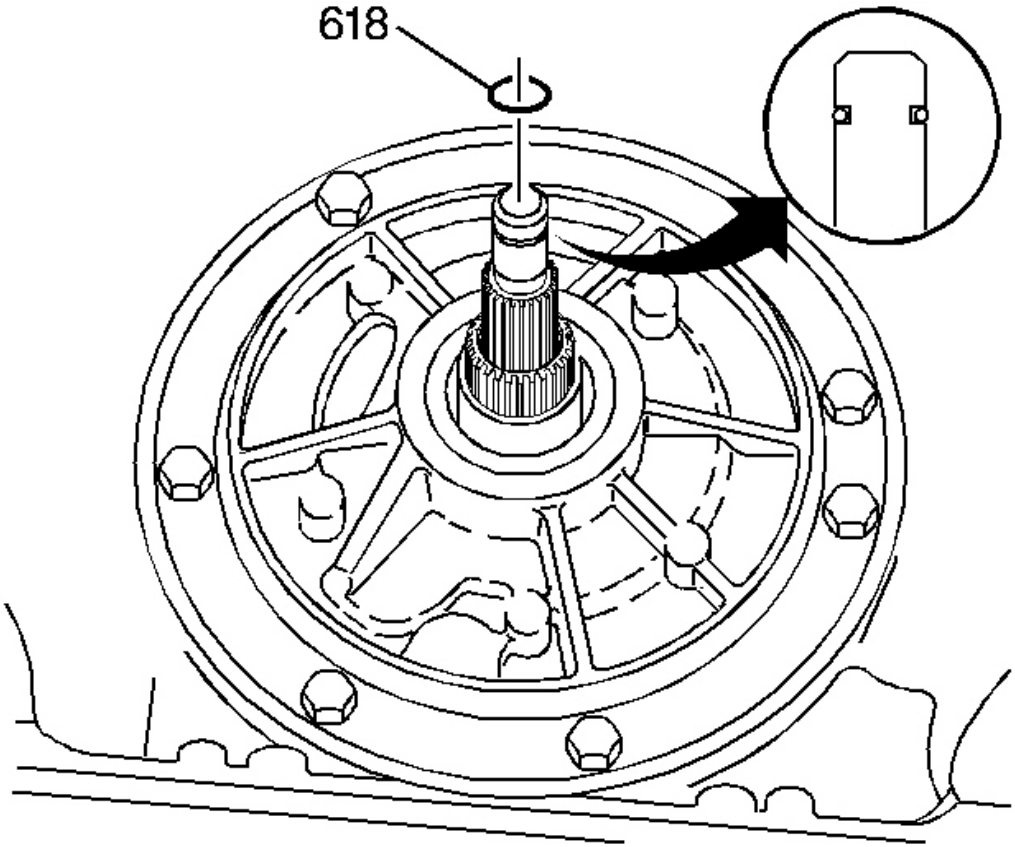

Fig. 55: Identifying Turbine Shaft O-Ring
Courtesy of GENERAL MOTORS CORP.

Remove the O-ring (618) from the turbine shaft. O-Ring location is model dependent.

TRANSMISSION END PLAY CHECK

Tools Required

- **J 25022** End Play Fixture Adapter (245 mm and 258 mm). See **Special Tools and Equipment** .
- **J 34725** End Play Checking Adapter (298 mm). See **Special Tools and Equipment** .
- **J 43205** End Play Fixture Adapter (300 mm). See **Special Tools and Equipment** .
- **J 24773-A** Oil Pump Remover. See **Special Tools and Equipment** .
- **J 8001** Dial Indicator Set. See **Special Tools and Equipment** .
- **J 25025-7A** Dial Indicator Mounting Post. See **Special Tools and Equipment** .

cardiagn.com

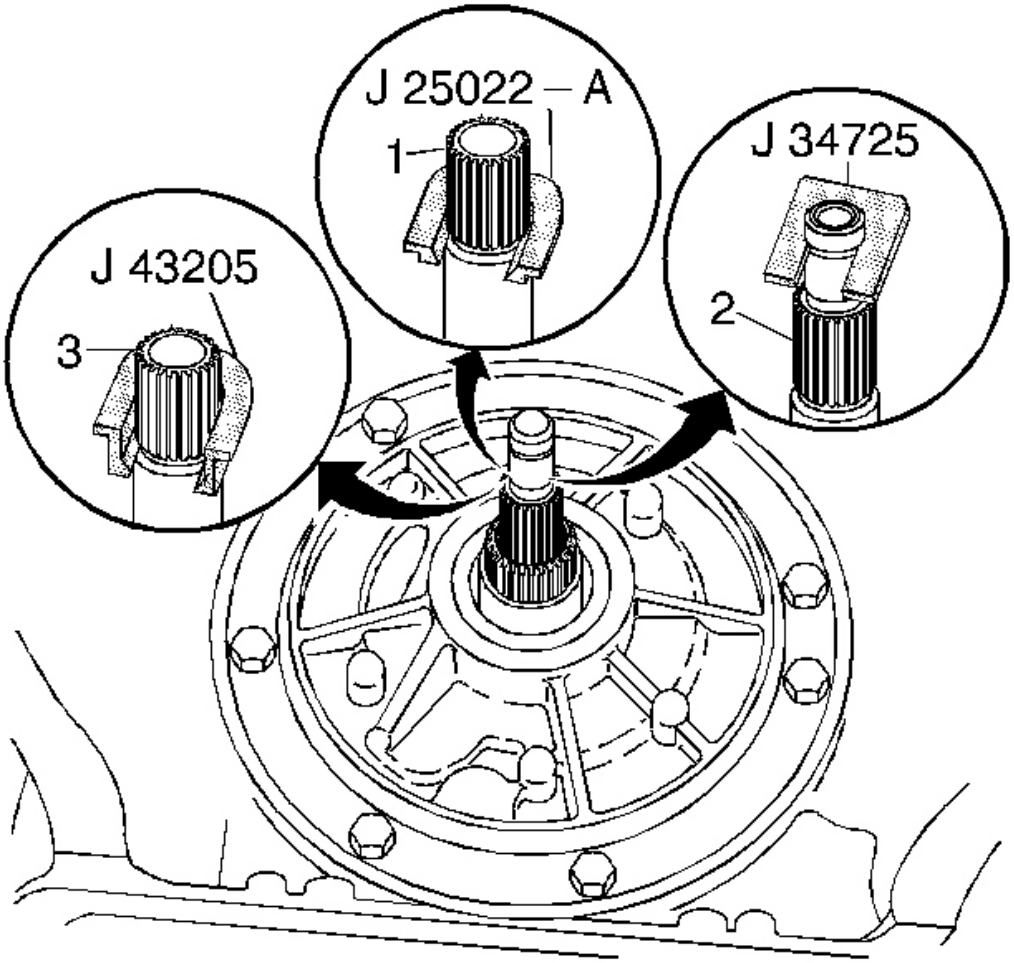

Fig. 56: Identifying Different End Play Fixture Adapters
Courtesy of GENERAL MOTORS CORP.

IMPORTANT: Torque converter size is model dependent.

1. Install an end play fixture adapter.
   - Use **J 25022** for a 245 mm and 258 mm turbine shaft (1). See **Special Tools and Equipment** .
   - Use **J 34725** for a 298 mm turbine shaft (2). See **Special Tools and Equipment** .
   - Use **J 43205** for a 300 mm turbine shaft (3). See **Special Tools and Equipment** .

cardiagn.com

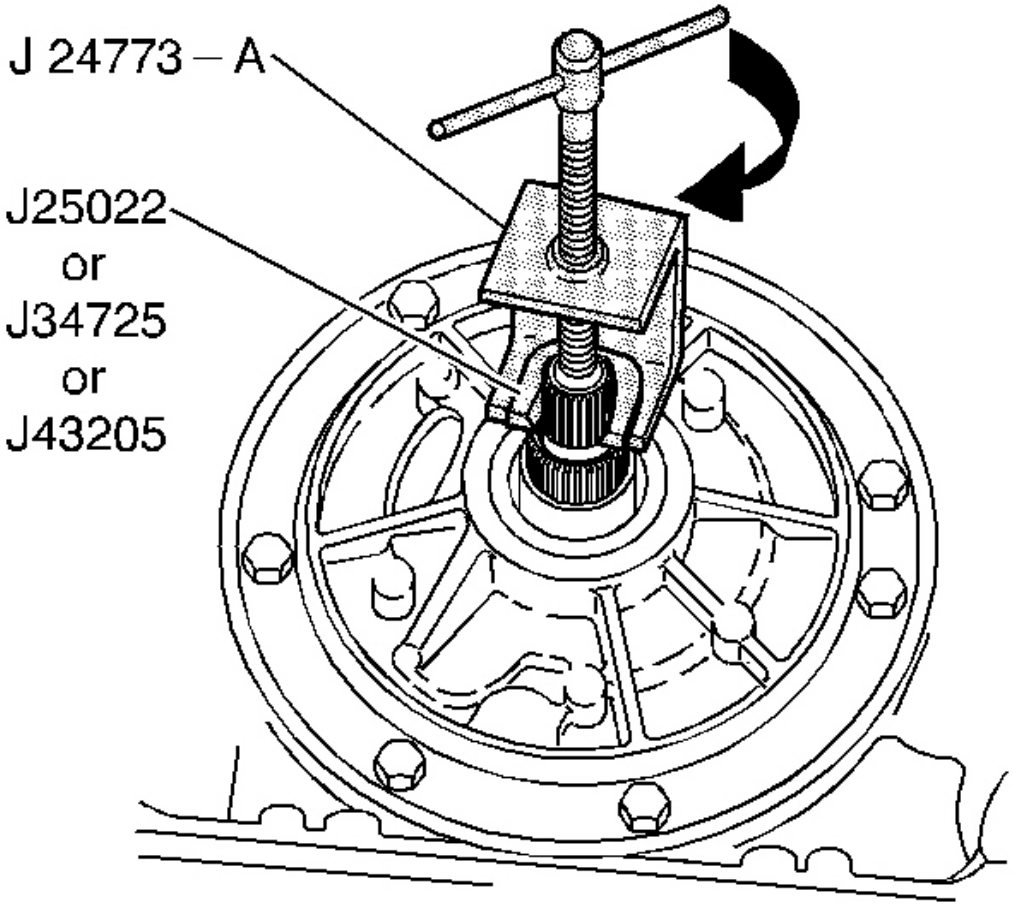

Fig. 57: Identifying J 24773-A
Courtesy of GENERAL MOTORS CORP.

2. Install the **J 24773-A** .

cardiagn.com

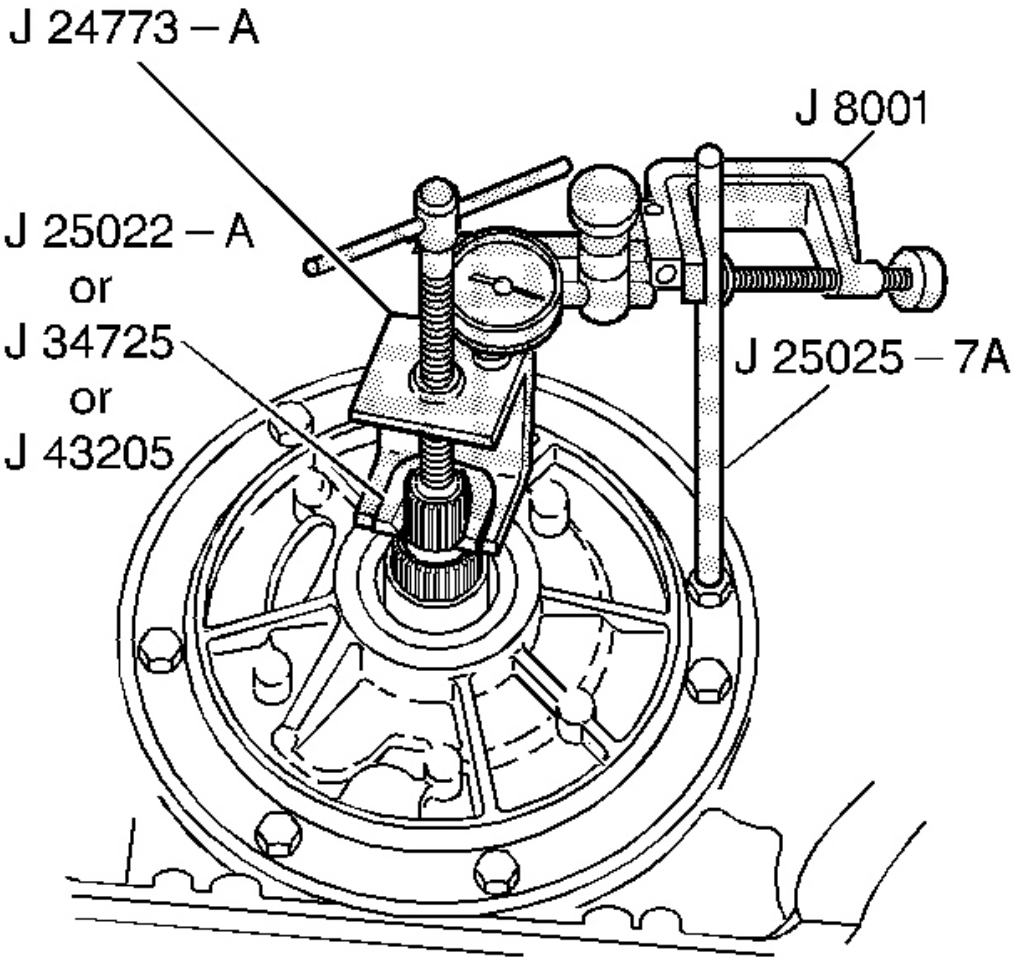

Fig. 58: Installing J 25025-7A With J 8001
Courtesy of GENERAL MOTORS CORP.

3. Remove an oil pump bolt.
4. Install **J 25025-7A** (or a 278 mm or 11 in bolt) and lock nut.
5. Install **J 8001** .

cardiagn.com

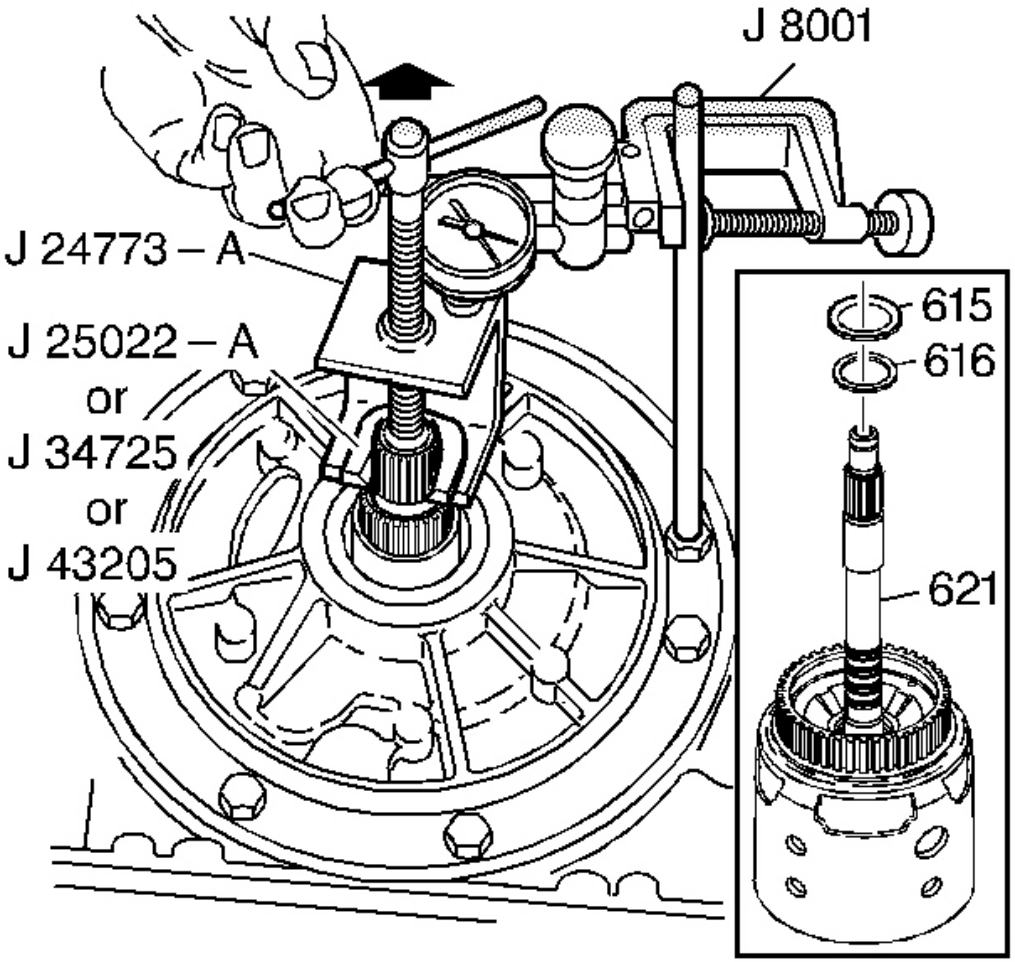

Fig. 59: Checking End Play With J 8001
Courtesy of GENERAL MOTORS CORP.

6. Set the **J 8001** to zero.
7. Pull up on **J 24773-A** .

   Proper end play should be 0.13-0.92 mm (0.005-0.036 in).

8. The selective washer (616), which controls the end play, is located between the input housing (621) and the thrust bearing (615) on the oil pump hub.

   If the end play measurement is incorrect, refer to **End Play Specifications** . Choose a new selective washer (616) based on the original selective washer and the information contained in the table.

cardiagn.com

If the dial indicator shows no end play, the selective washer (616) and thrust bearing (615) may have been misassembled.

9. Correct the end play by changing the selective washer (616).

OIL PUMP REMOVAL

Tools Required

- **J 37789-A** Oil Pump Remover/Installer. See **Special Tools and Equipment** .
- **J 39119** Oil Pump Remover/Installer Adapter. See **Special Tools and Equipment** .

cardiagn.com

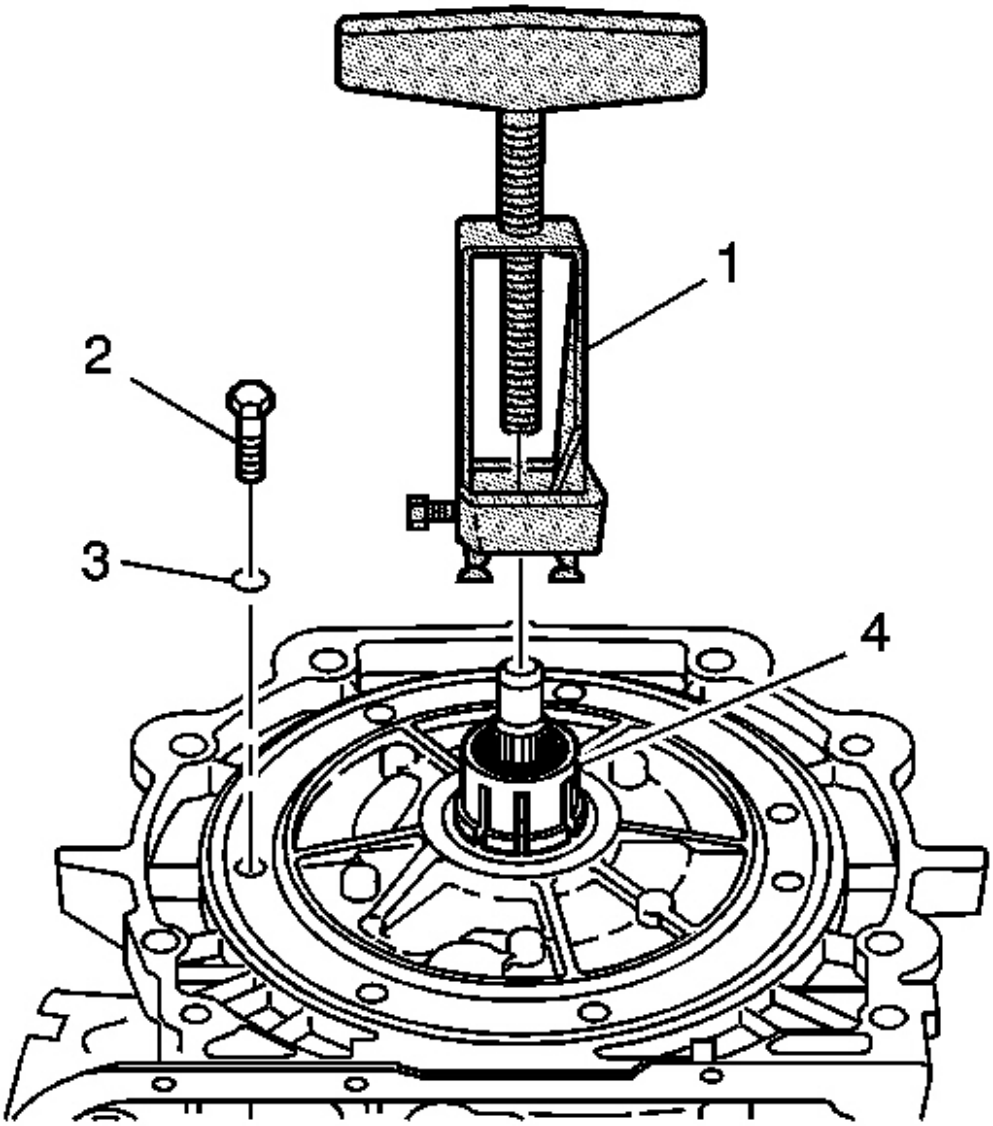

Fig. 60: Locating Pump Bolts
Courtesy of GENERAL MOTORS CORP.

1. Remove all pump bolts (2).
2. Install **J 39119** over stator shaft until it locks under splines.
3. Install **J 37789-A** .

cardiagn.com

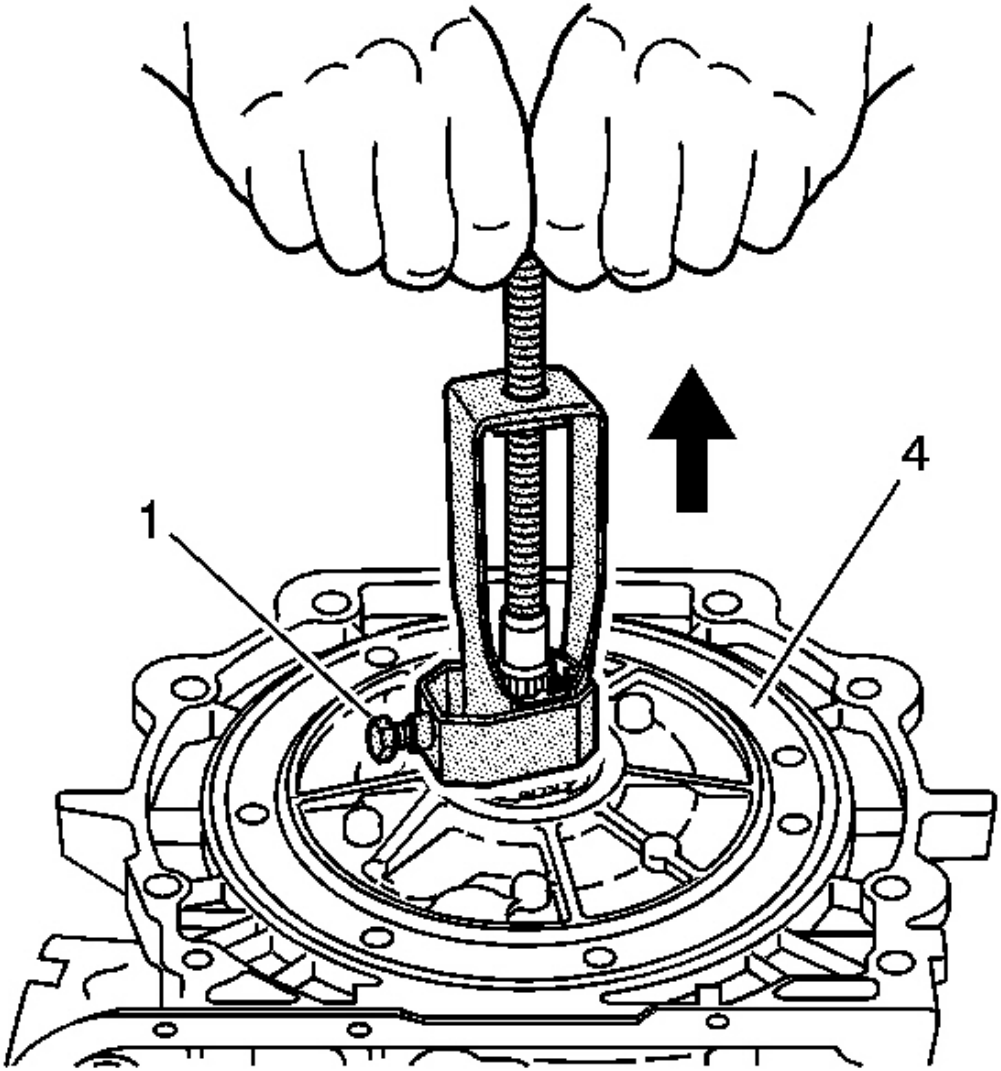

Fig. 61: Installing J 37789-A & J 39119
Courtesy of GENERAL MOTORS CORP.

4. To prevent slipping, securely fasten the **J 37789-A** around the **J 39119** by tightening the bolt (1) with a wrench.
5. Turn the T-handle on top of **J 37789-A** .
6. Lift the pump out of the case.

cardiagn.com

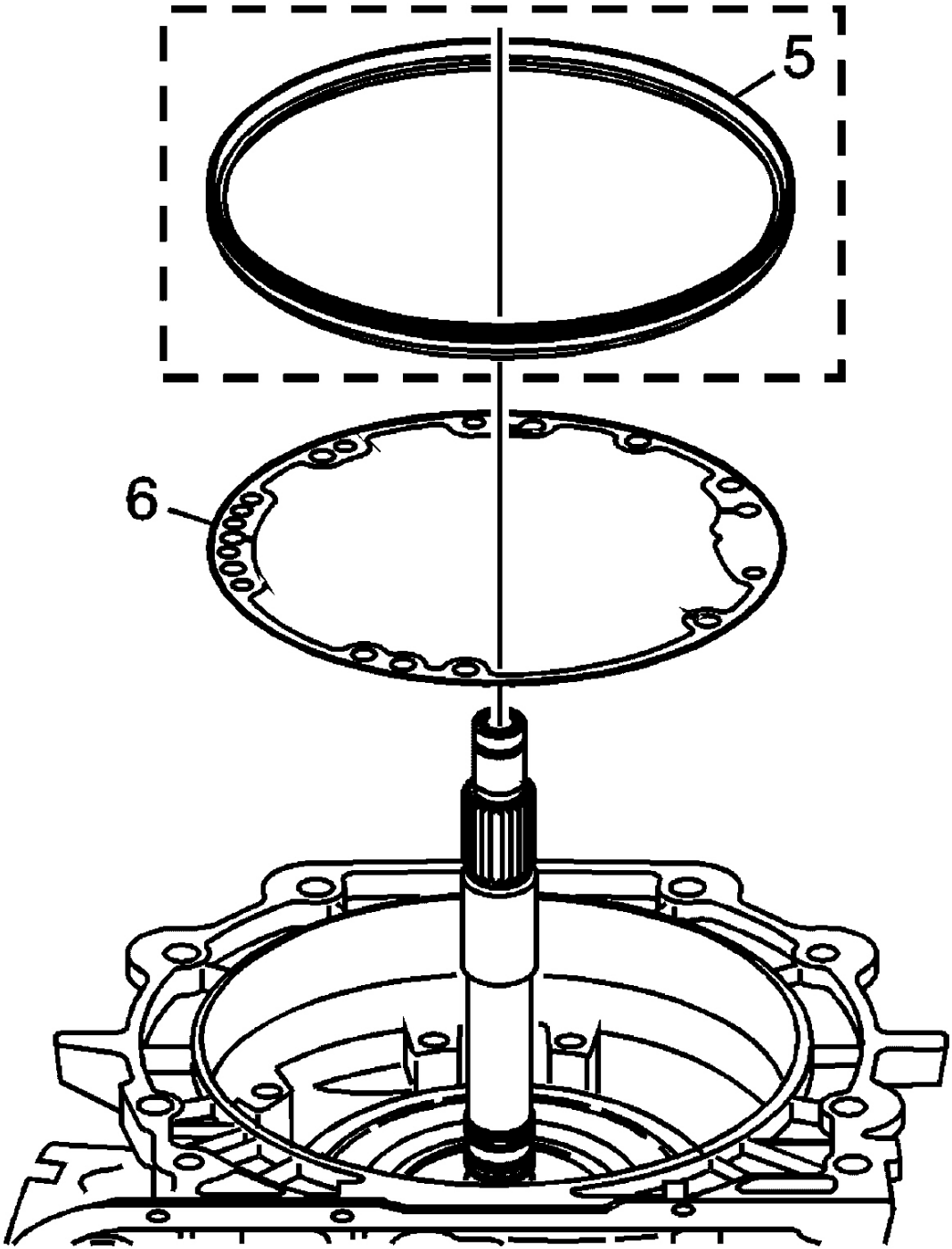

Fig. 62: Identifying External Fluid Pump Seal
Courtesy of GENERAL MOTORS CORP.

7. Some Models use an external fluid pump seal (5) that can be removed after the pump is removed.

cardiagn.com

8. Remove the pump cover to case gasket (6).

2-4 BAND, INPUT CLUTCHES, INPUT GEAR SET REMOVAL

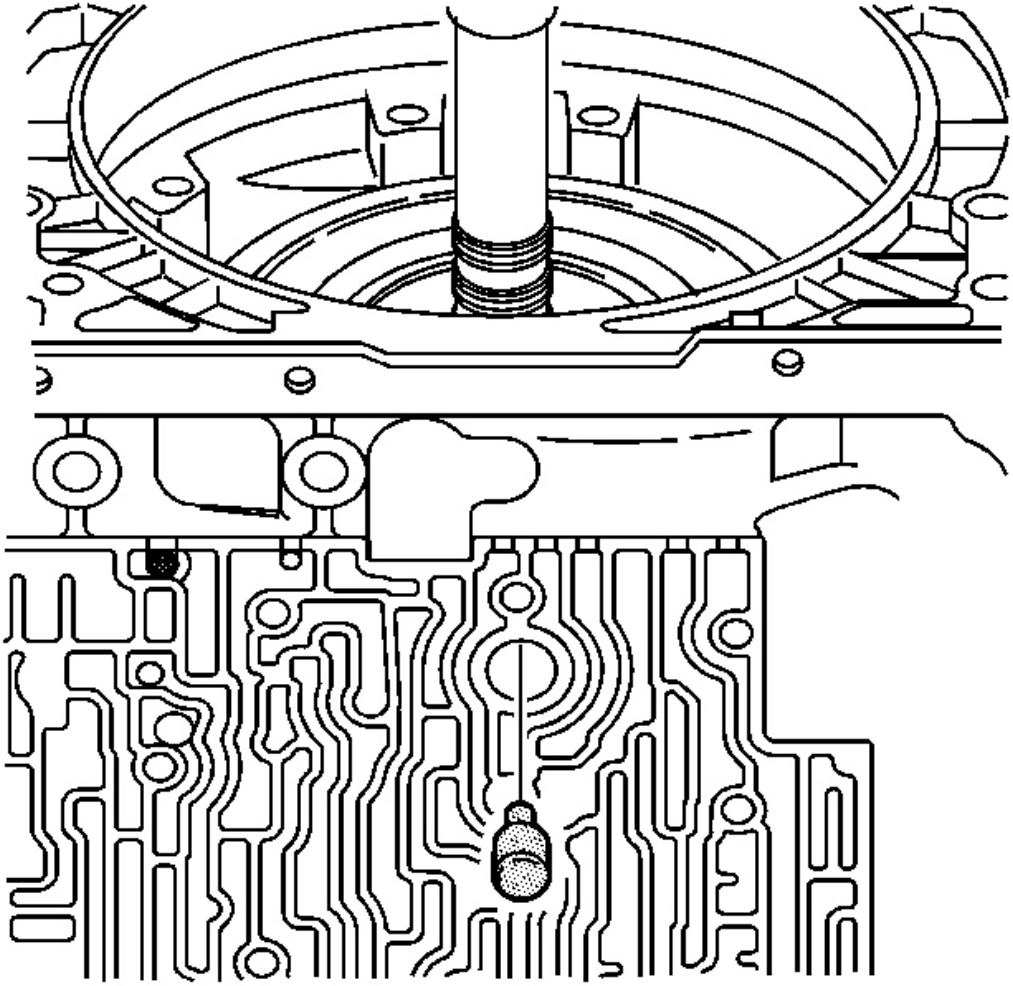

Fig. 63: Identifying Band Anchor Pin
Courtesy of GENERAL MOTORS CORP.

1. Remove the band anchor pin.

cardiagn.com

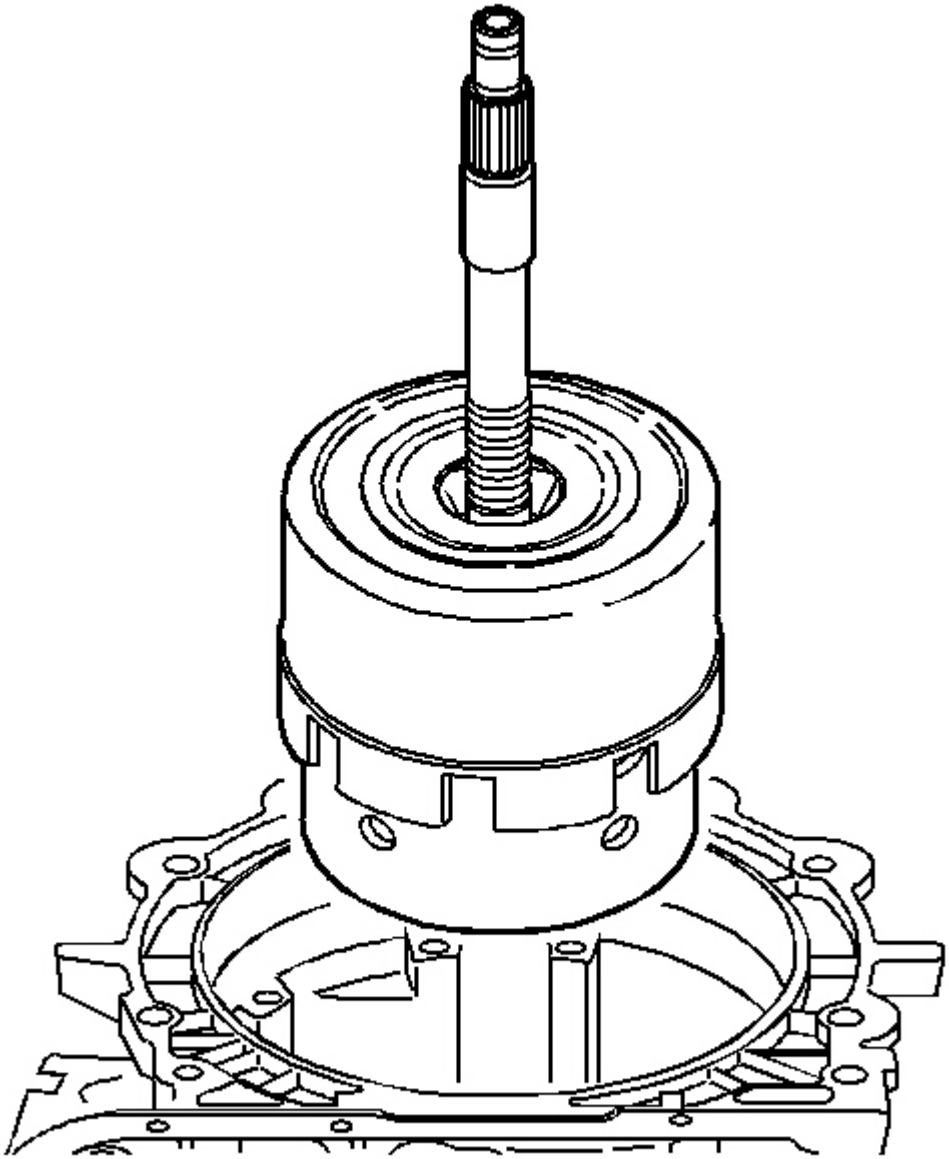

Fig. 64: Removing Input Housing And Shaft Assembly & Reverse Input Clutch Housing And Drum Assembly
Courtesy of GENERAL MOTORS CORP.

2. Remove the input housing and shaft assembly and the reverse input clutch housing and drum assembly.

cardiagn.com

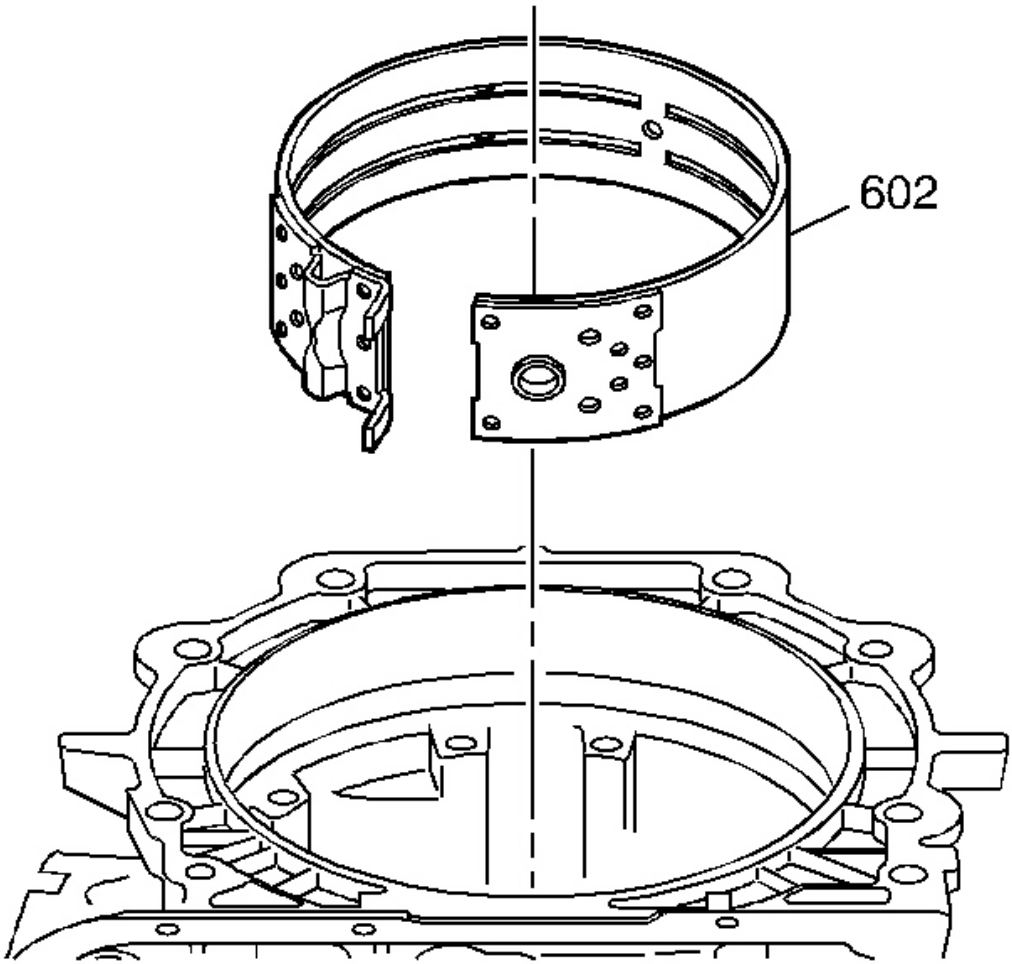

Fig. 65: View Of 2-4 Band Assembly
Courtesy of GENERAL MOTORS CORP.

3. Remove the 2-4 band assembly (602).

REACTION GEAR SET REMOVAL

cardiagn.com

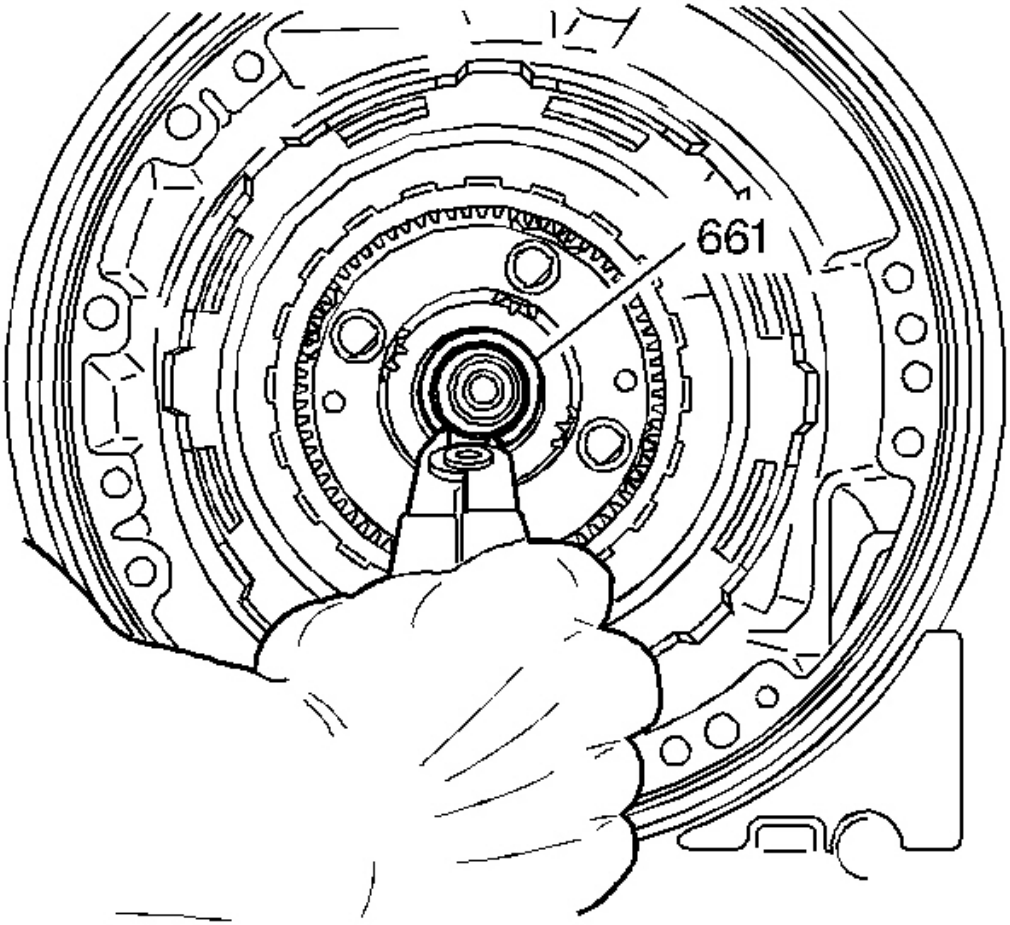

Fig. 66: View Of Output Shaft To Input Carrier Retainer
Courtesy of GENERAL MOTORS CORP.

IMPORTANT: The retainer must be replaced.

1. Use snap ring pliers remove the output shaft to input carrier retainer (661).

cardiagn.com

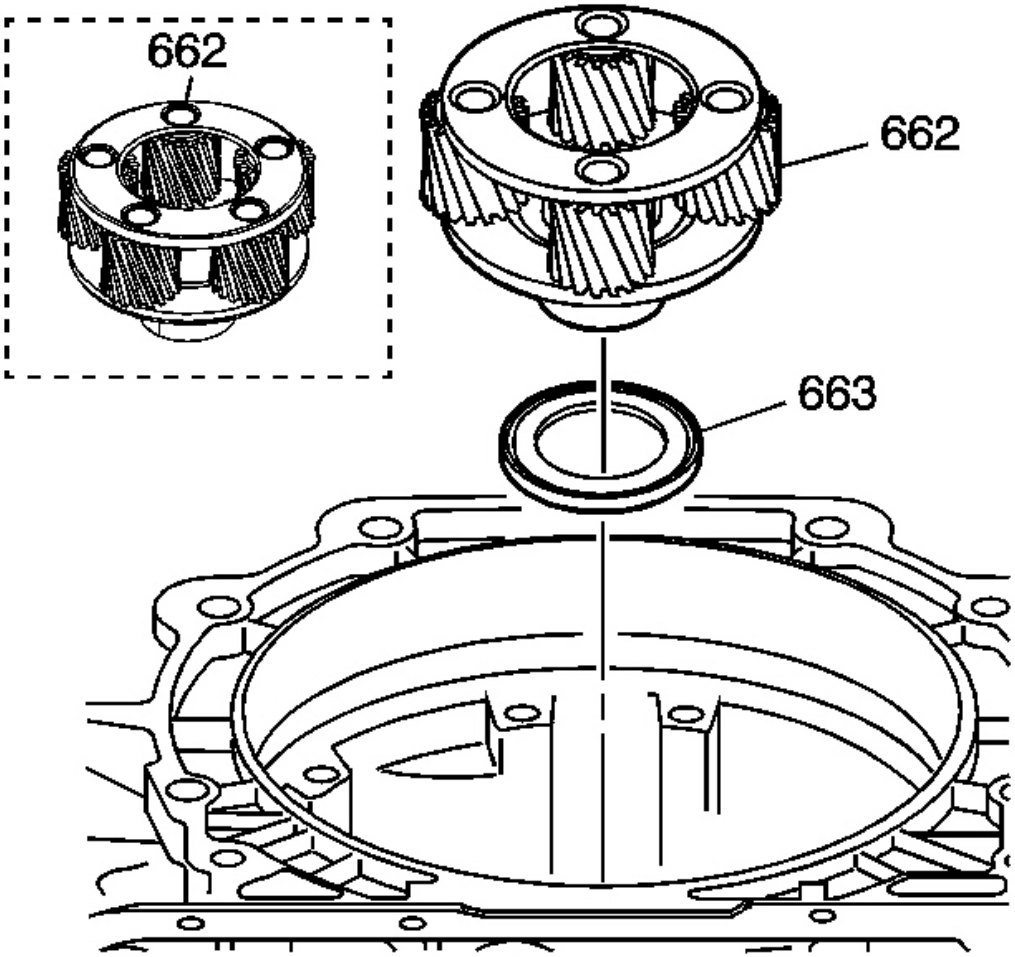

Fig. 67: Identifying Input Carrier Assembly
Courtesy of GENERAL MOTORS CORP.

IMPORTANT: The carrier assembly can be a 4 or 5 pinion design depending on model.

2. Remove the input carrier assembly (662) and remove the bearing assembly (663).

cardiagn.com

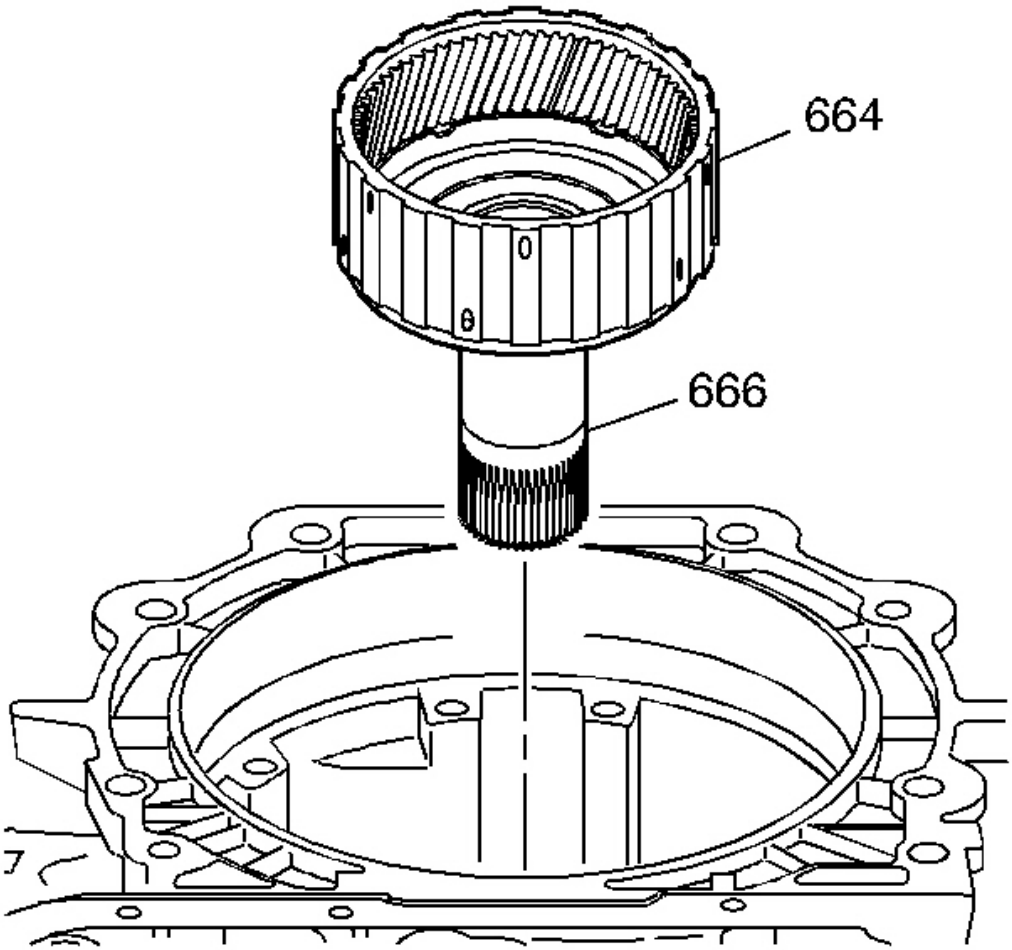

Fig. 68: Reaction Carrier Shaft Assembly & Input Internal Gear
Courtesy of GENERAL MOTORS CORP.

3. Remove the input internal gear (664) and the reaction carrier shaft assembly (666).

cardiagn.com

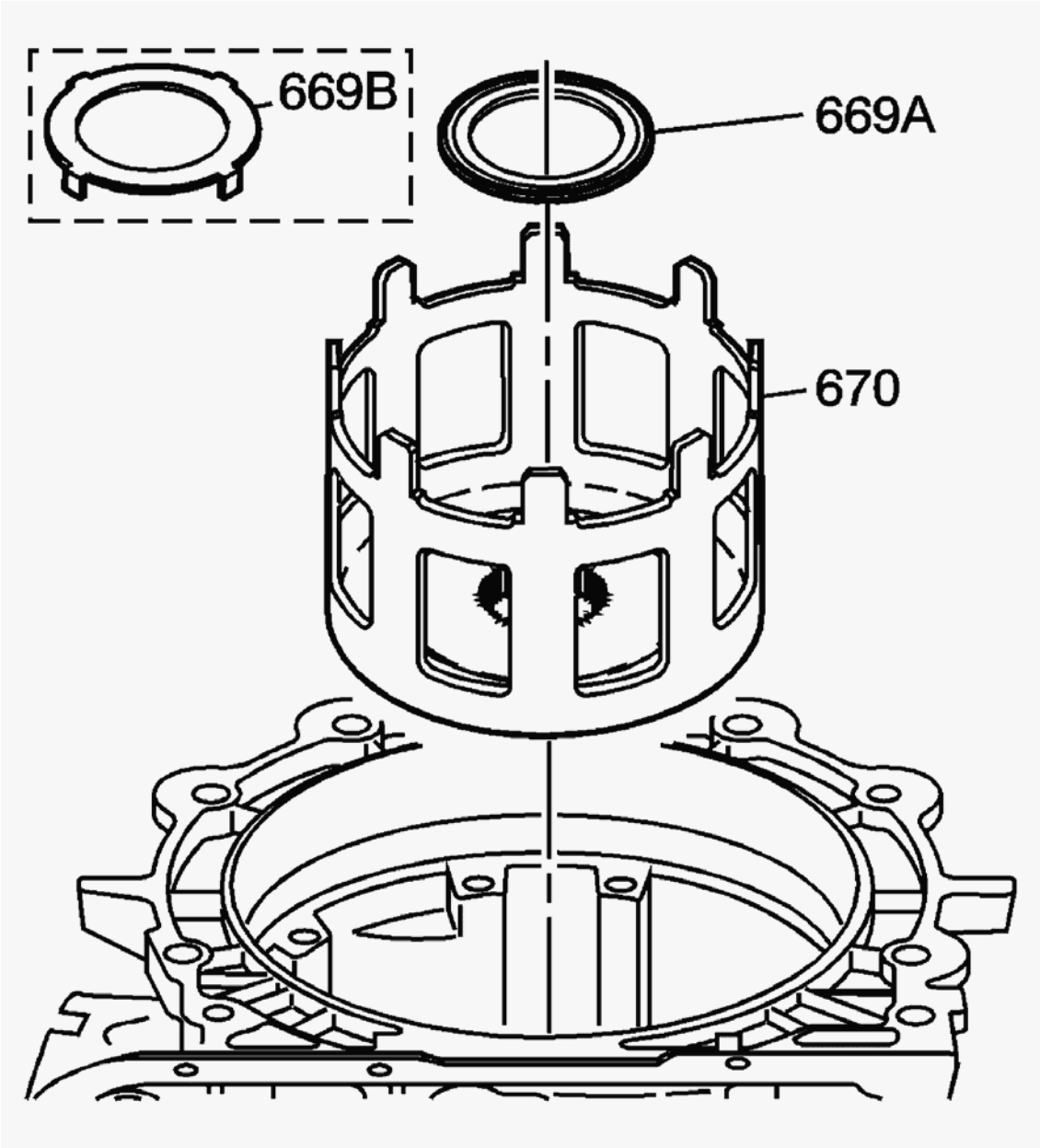

Fig. 69: View Of Reaction Sun Shell & Thrust Washer
Courtesy of GENERAL MOTORS CORP.

4. Remove the thrust washer (669a or 669b) and the reaction sun shell (670).

OUTPUT SHAFT, REACTION GEAR, LOW/REV CLUTCH REMOVAL

Tools Required

J 29837-A Output Shaft Support Fixture

Removal Procedure

cardiagn.com

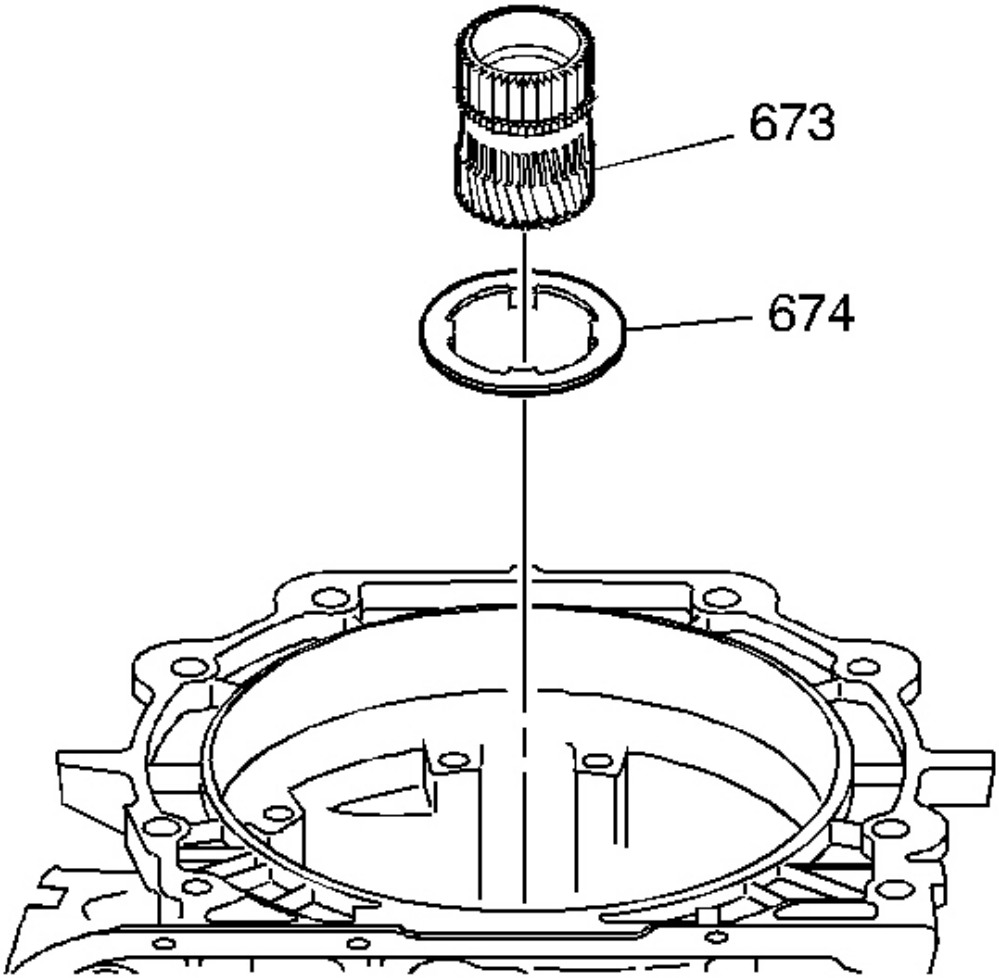

Fig. 70: Identifying Reaction Sun Gear & Thrust Washer
Courtesy of GENERAL MOTORS CORP.

1. Remove the reaction sun gear (673) and the thrust washer (674).

cardiagn.com

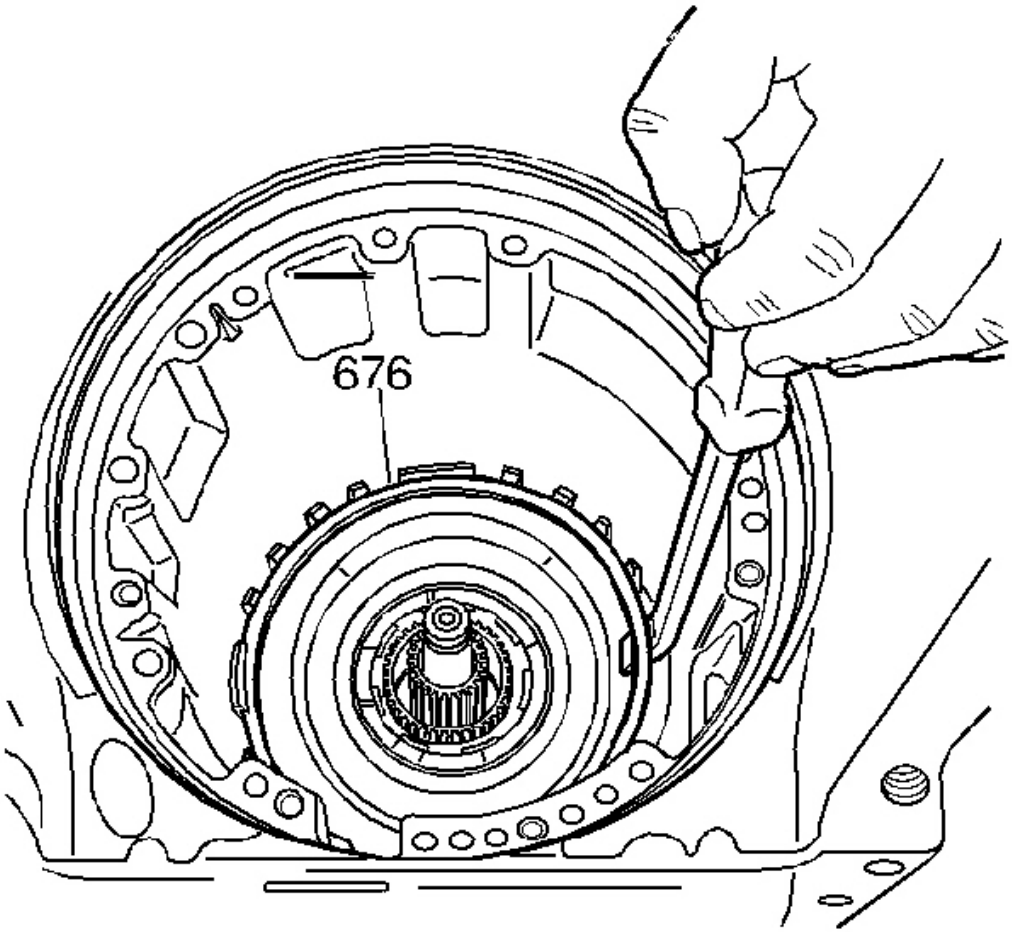

Fig. 71: Removing Low And Reverse Support Retainer Ring
Courtesy of GENERAL MOTORS CORP.

2. Remove the low and reverse support retainer ring (676).

cardiagn.com

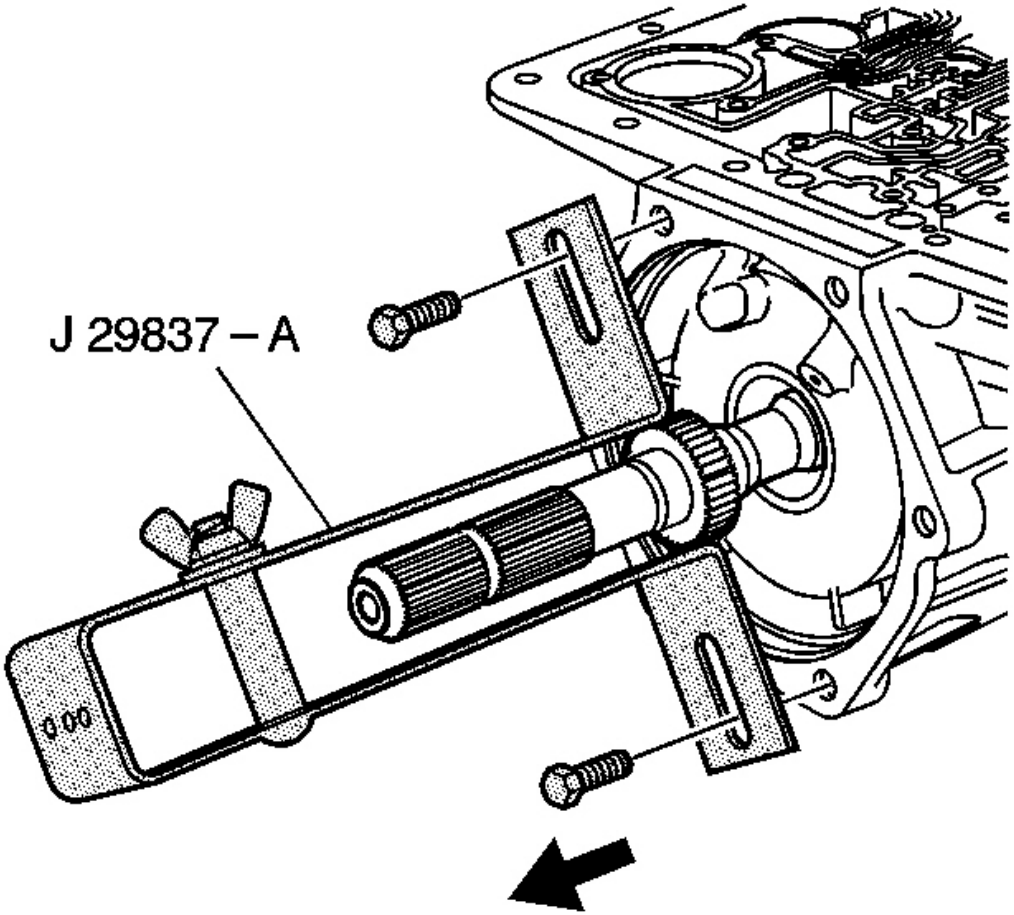

Fig. 72: Identifying J 29837-A
Courtesy of GENERAL MOTORS CORP.

3. Remove the **J 29837-A** .

cardiagn.com

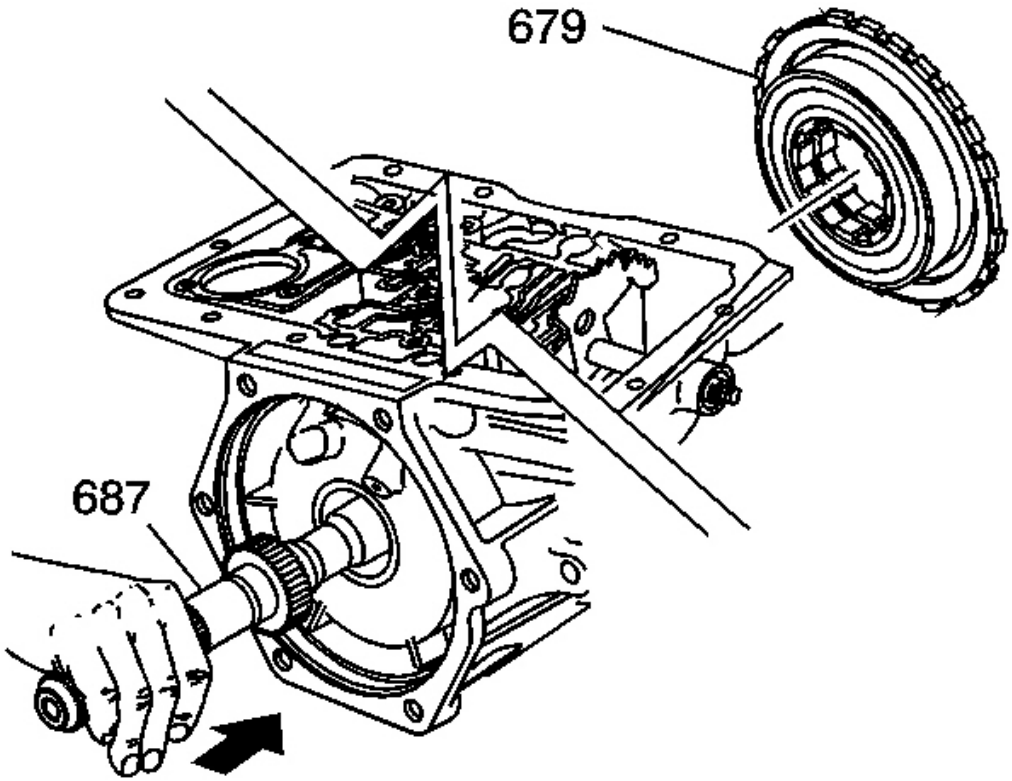

Fig. 73: View Of Low And Reverse Clutch Support
Courtesy of GENERAL MOTORS CORP.

4. Push on the output shaft (687) in order to loosen the low and reverse clutch support (679).
5. Remove the low and reverse clutch support (679).

cardiagn.com

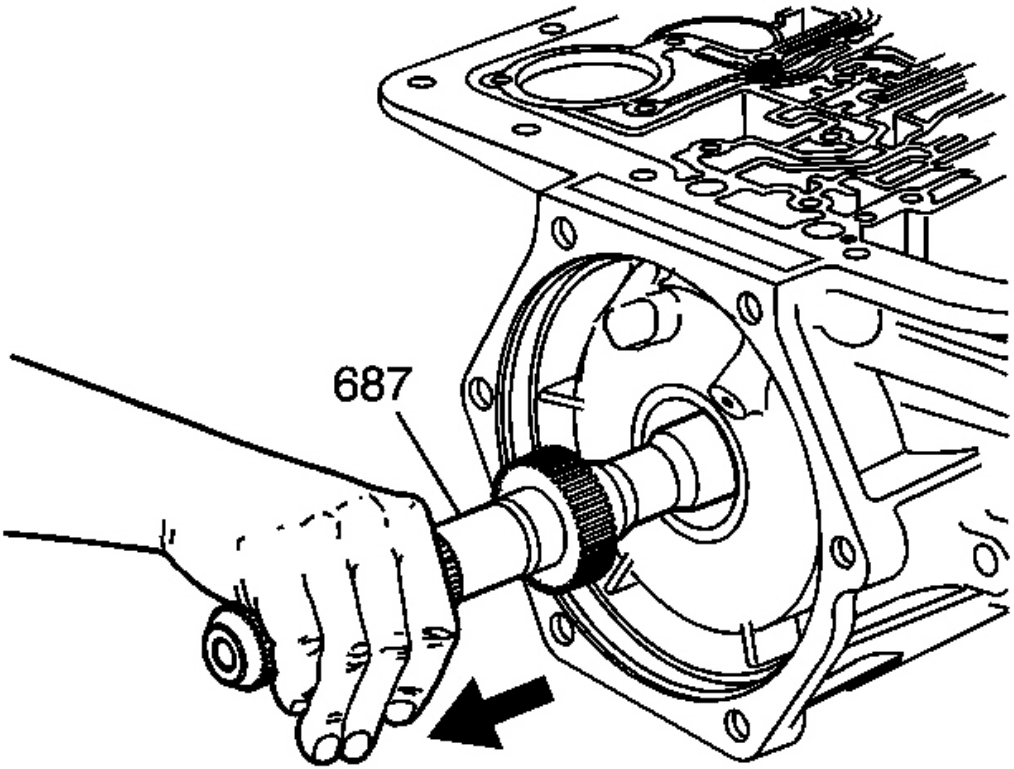

Fig. 74: Locating Output Shaft
Courtesy of GENERAL MOTORS CORP.

6. Remove the output shaft (687).

cardiagn.com

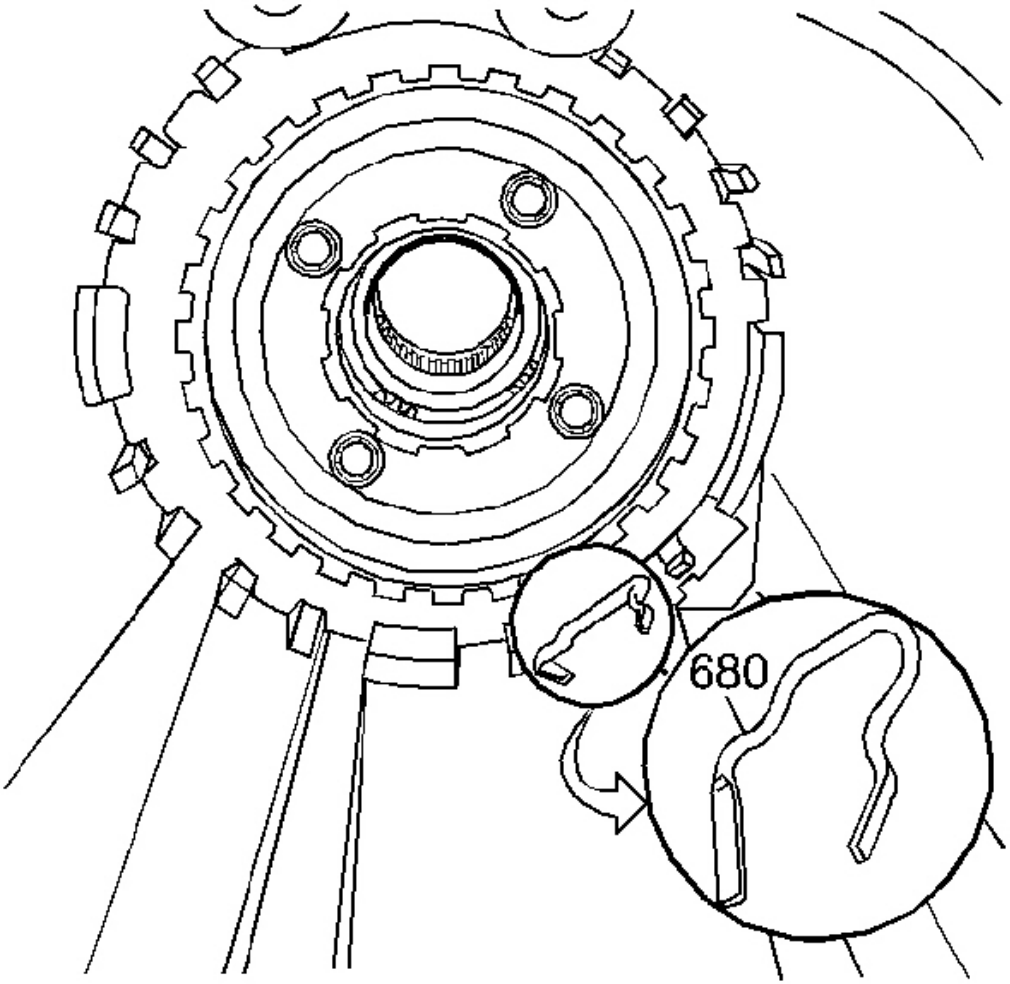

Fig. 75: View Of Low And Reverse Clutch Support Retainer Spring
Courtesy of GENERAL MOTORS CORP.

7. Remove the low and reverse clutch support retainer spring (680).

cardiagn.com

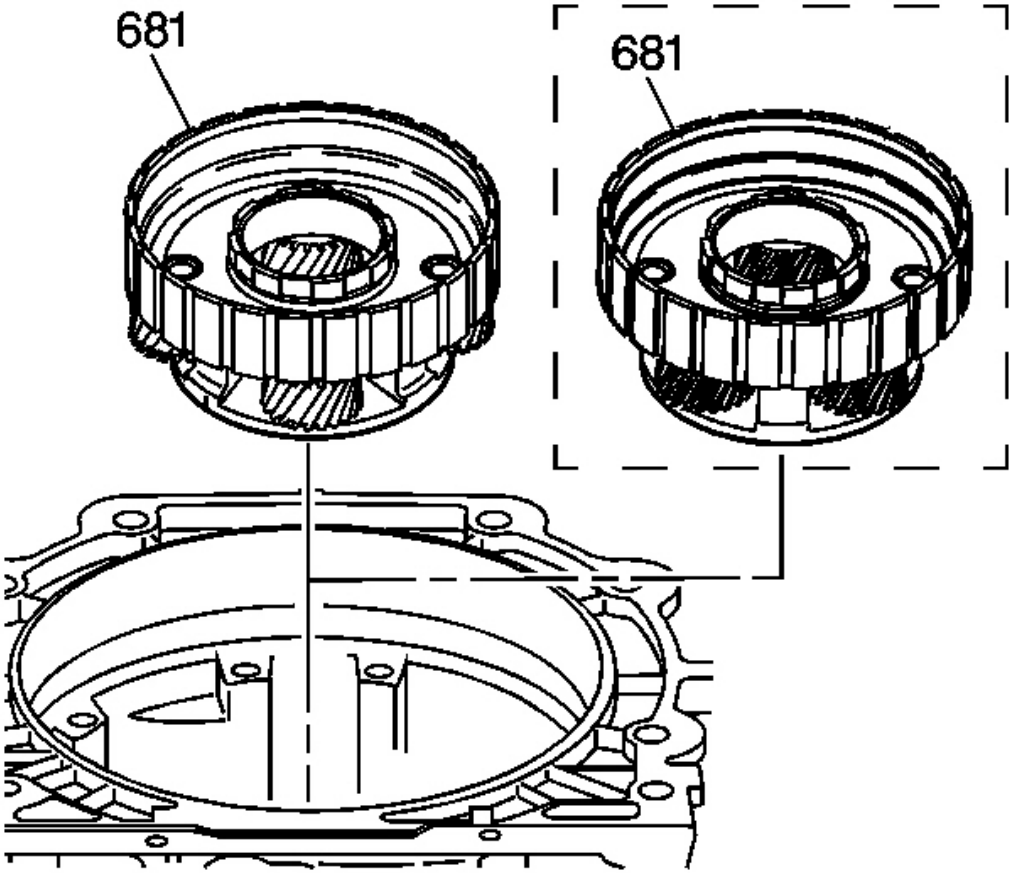

Fig. 76: Identifying Reaction Carrier Assembly
Courtesy of GENERAL MOTORS CORP.

IMPORTANT: The reaction carrier assembly (681) can be a 4 or 5 pinion design depending on the transmission model.

8. Remove the reaction carrier assembly (681).

cardiagn.com

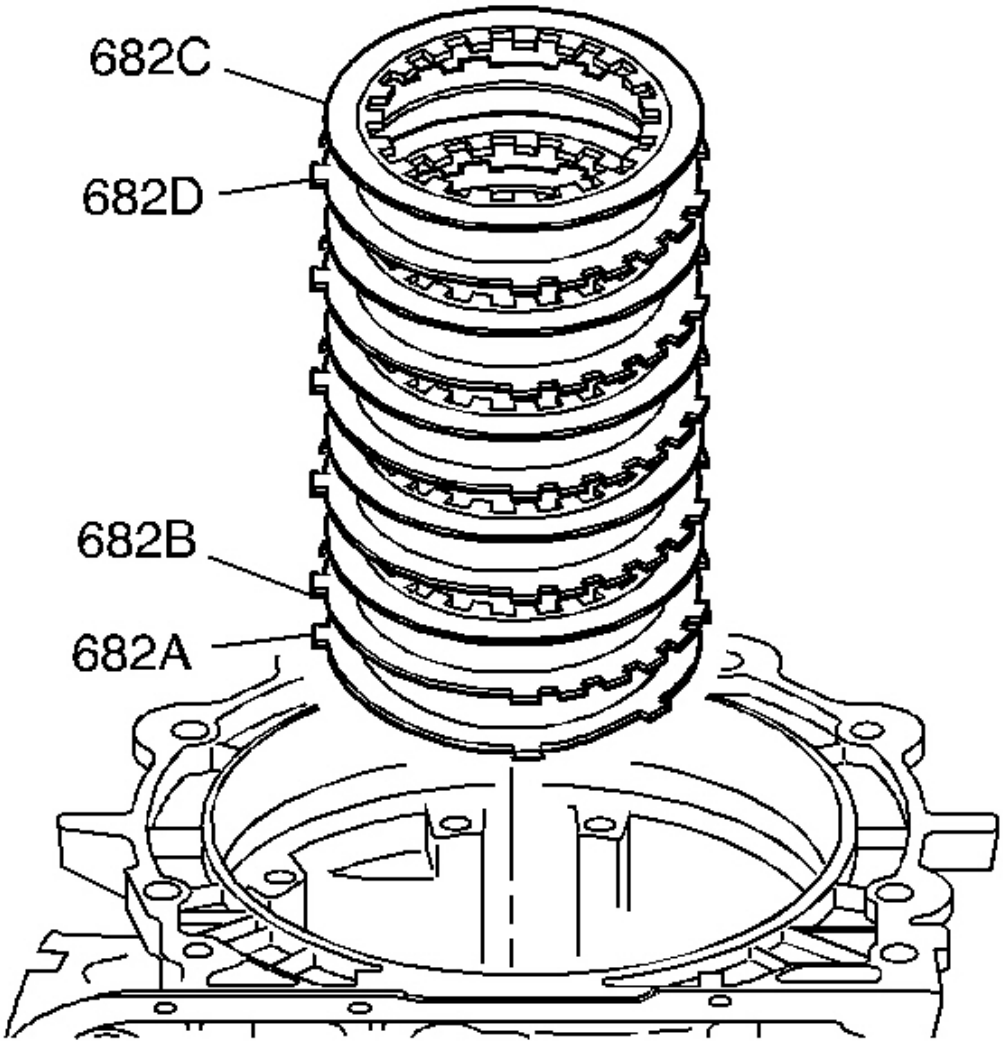

Fig. 77: Locating Low And Reverse Clutch Components
Courtesy of GENERAL MOTORS CORP.

9. Remove the following components:
    1. The low and reverse clutch fiber plate assembly (682C)
    2. The low and reverse clutch steel plates (682D)
    3. The low and reverse clutch selective plate (682B)
    4. The low and reverse clutch waved plate (682A)

cardiagn.com

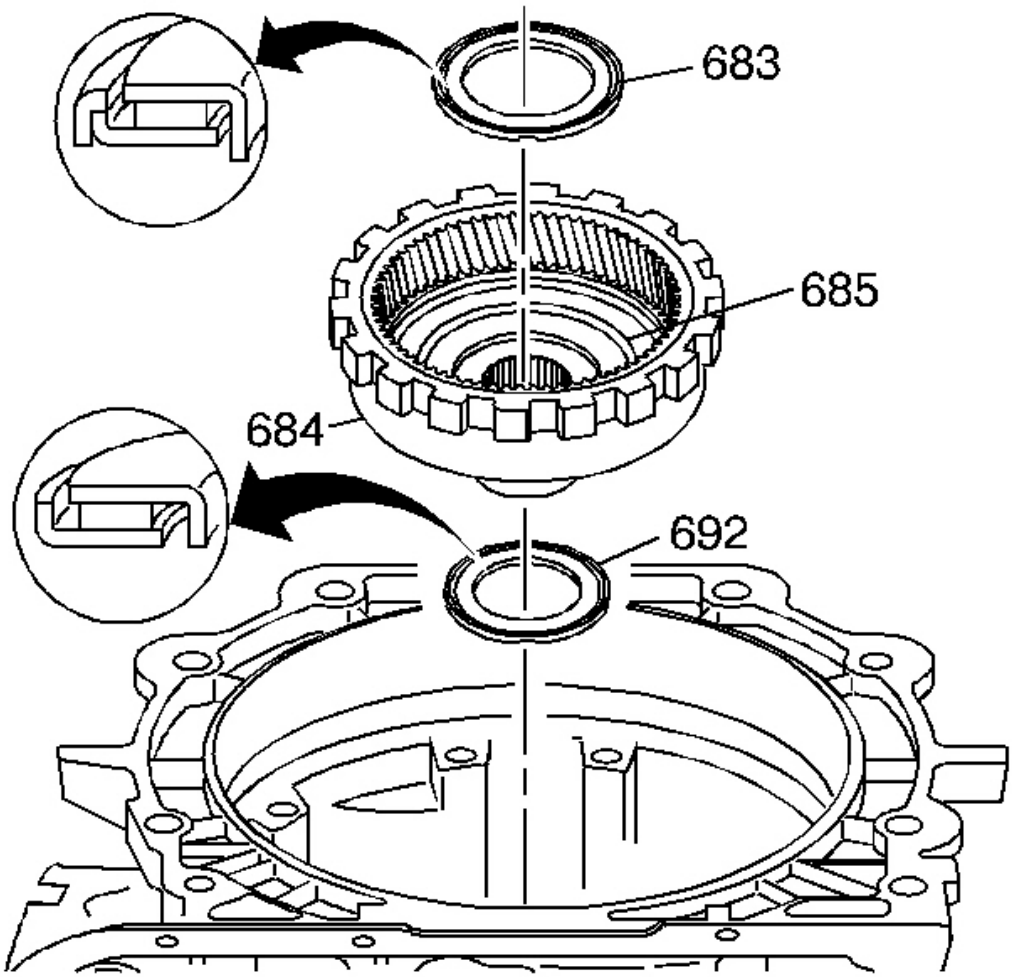

Fig. 78: View Of Reaction Carrier/Support Thrust Bearing Assembly
Courtesy of GENERAL MOTORS CORP.

10. Remove the following components:
    1. The thrust bearing assembly (reaction carrier support) (683)
    2. The internal reaction gear (684)
    3. The internal reaction gear support (685)
    4. The reaction gear support bearing (692)

INNER MANUAL LINKAGE REMOVAL

cardiagn.com

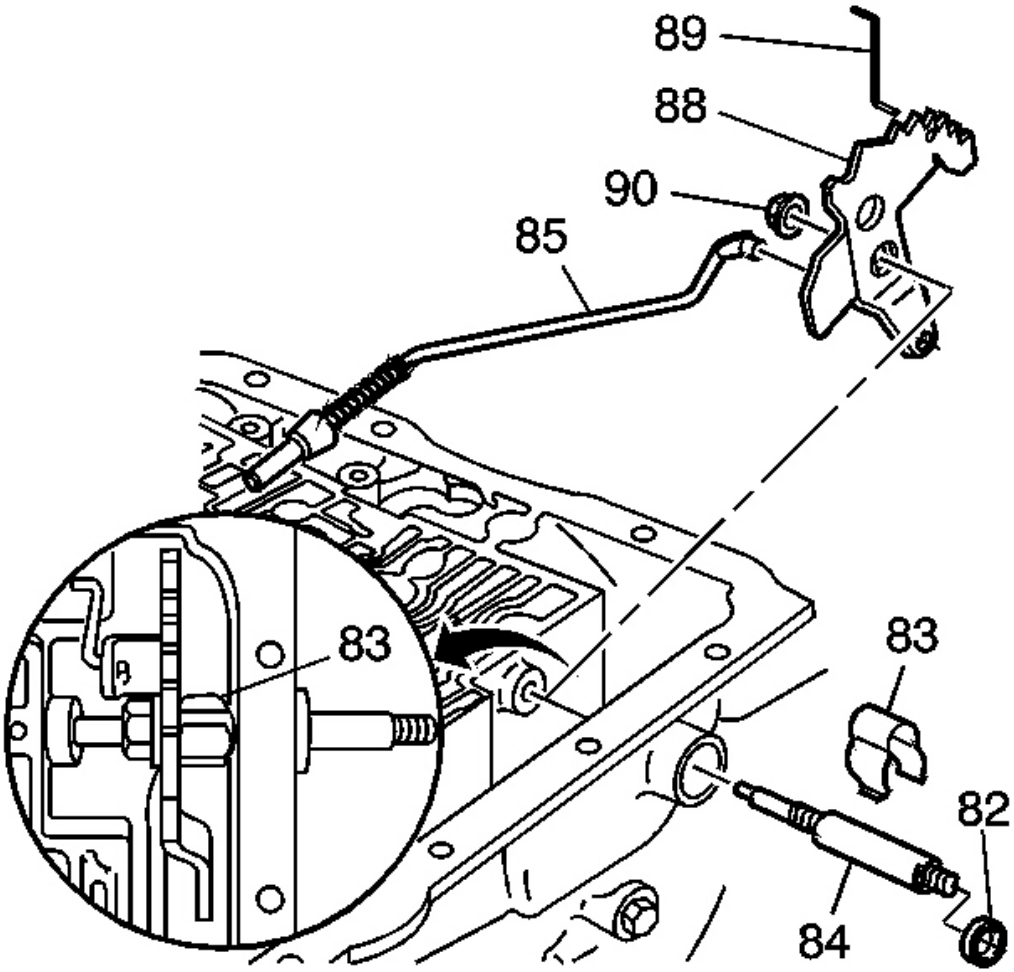

Fig. 79: Inspecting Inner Manual Linkage
Courtesy of GENERAL MOTORS CORP.

1. Remove the following parts:
    1. Hex head nut (90)
    2. Manual valve link (89)
    3. Detent lever (88)
    4. Parking lock actuator assembly (85)
    5. Manual shaft retainer (83)
    6. Manual shaft (84)

cardiagn.com

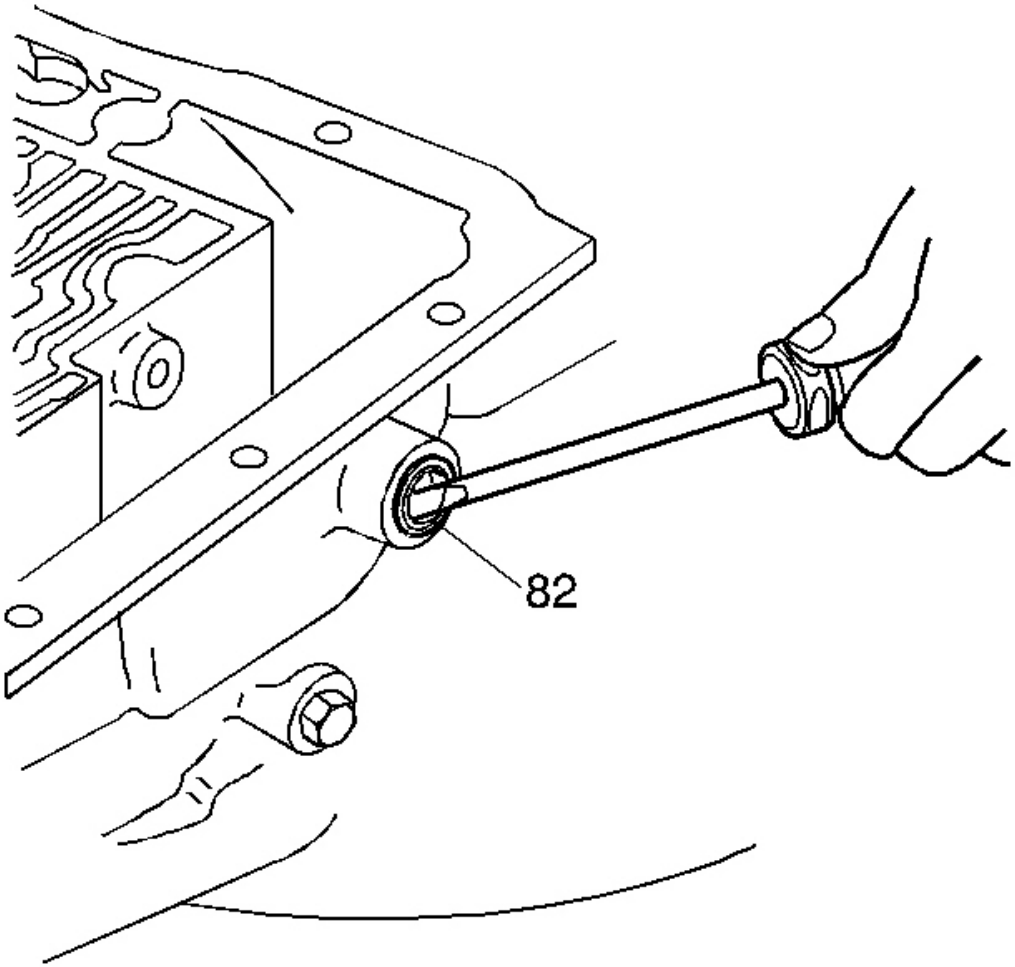

Fig. 80: Removing Manual Shaft Seal
Courtesy of GENERAL MOTORS CORP.

2. Remove the manual shaft seal (82) with a screwdriver.

cardiagn.com

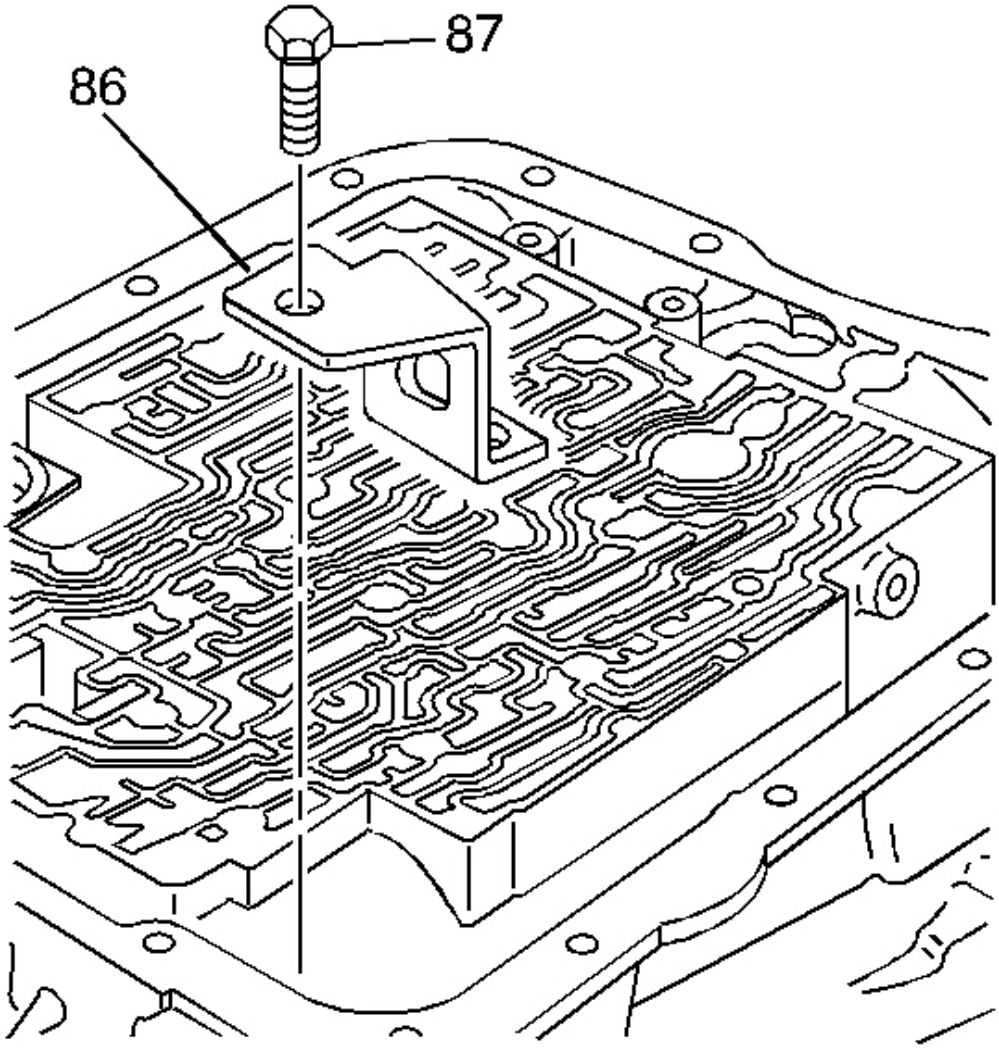

Fig. 81: View Of Parking Lock Bracket & Bolt
Courtesy of GENERAL MOTORS CORP.

3. Remove the following components:
    1. The parking lock bracket bolt (87)
    2. The parking lock bracket (86)

LOW AND REVERSE CLUTCH PISTON REMOVAL

Tools Required

cardiagn.com

- **J 23327-1** Forward Clutch Spring Compressor (Bridge). See **Special Tools and Equipment** .
- **J 34627** Snap Ring Remover and Installer. See **Special Tools and Equipment** .
- **J 42628** Disc. See **Special Tools and Equipment** .

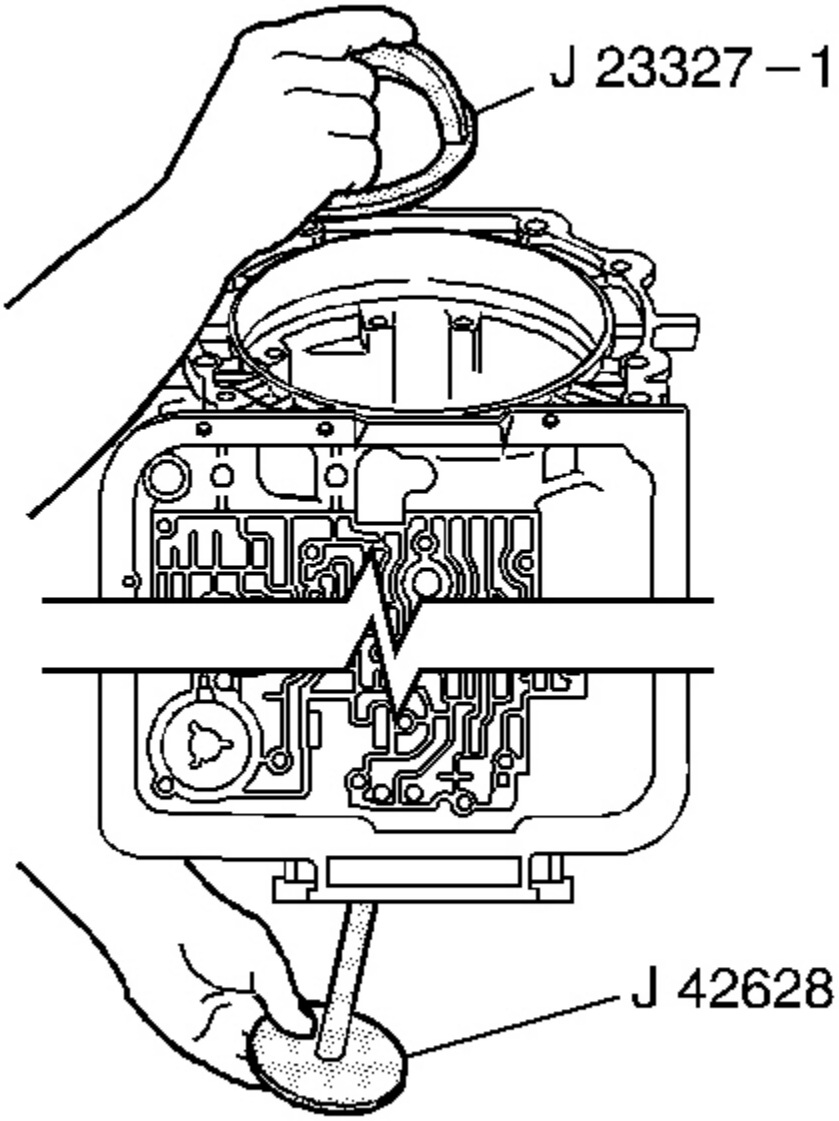

Fig. 82: Installing J 23327-1 & J 42628
Courtesy of GENERAL MOTORS CORP.

cardiagn.com

1. Install the **J 23327-1** and the **J 42628** .

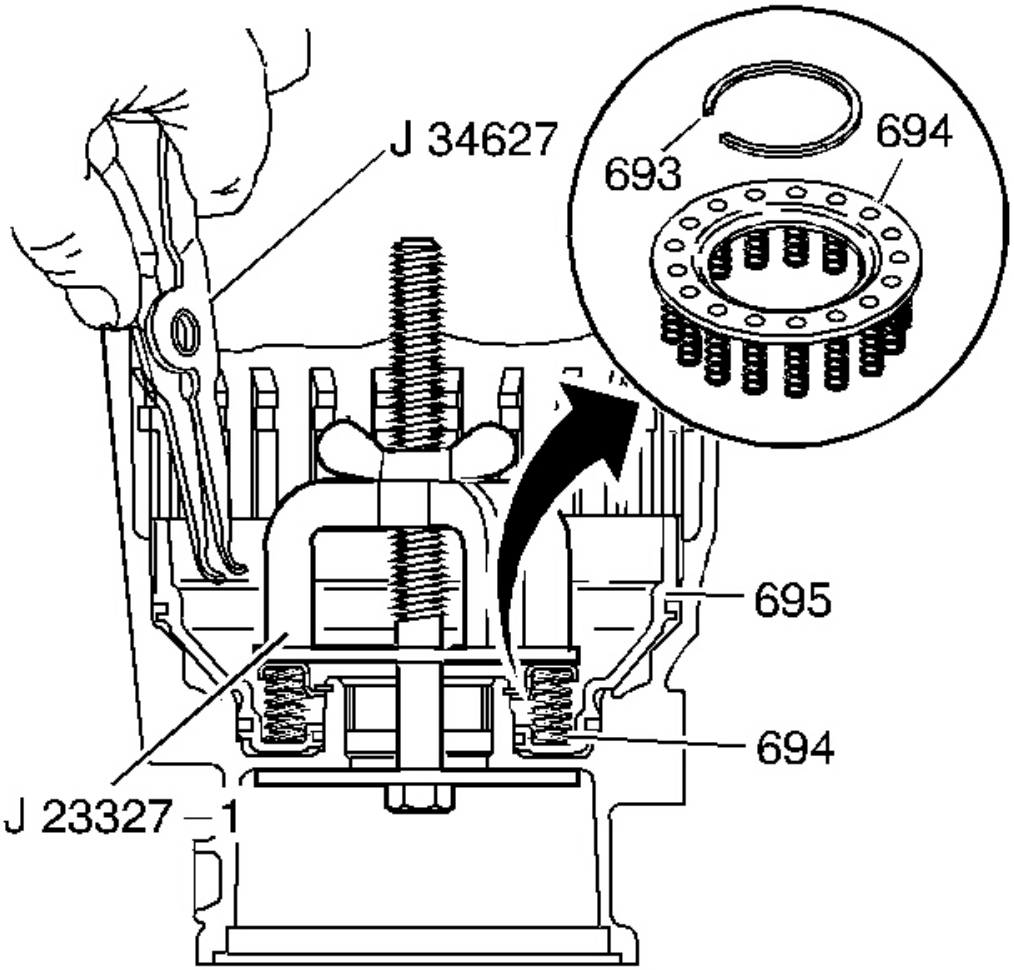

Fig. 83: View Of Low And Reverse Clutch Spring Assembly & Retainer Ring
Courtesy of GENERAL MOTORS CORP.

2. Tighten the **J 23327-1** .
3. Remove the low and reverse clutch retainer ring (693) using the **J 34627** .
4. Remove the low and reverse clutch spring assembly (694).

cardiagn.com

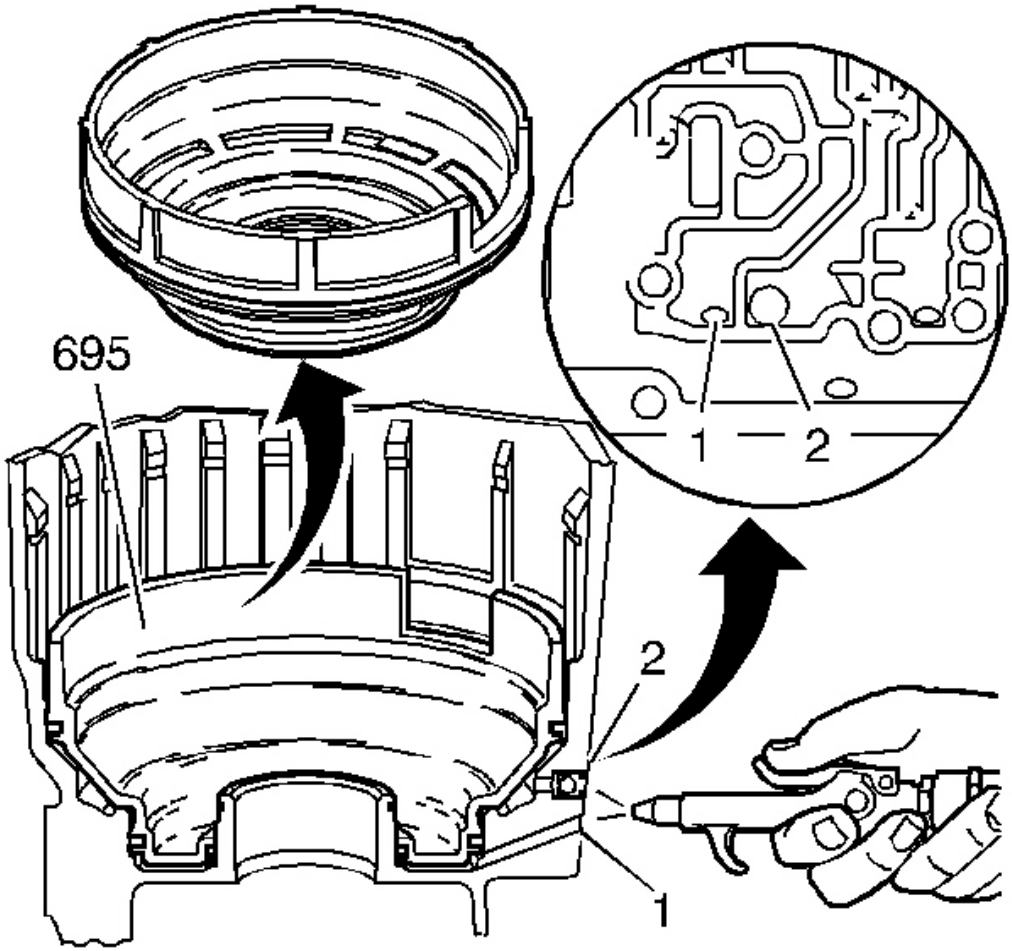

Fig. 84: Blowing Air Into Case Passage
Courtesy of GENERAL MOTORS CORP.

5. Blow compressed air into the case passage to remove the low and reverse clutch piston (695).
    - (1) LO Feed Passage
    - (2) REV Feed Passage

CASE ASSEMBLY INSPECTION

cardiagn.com

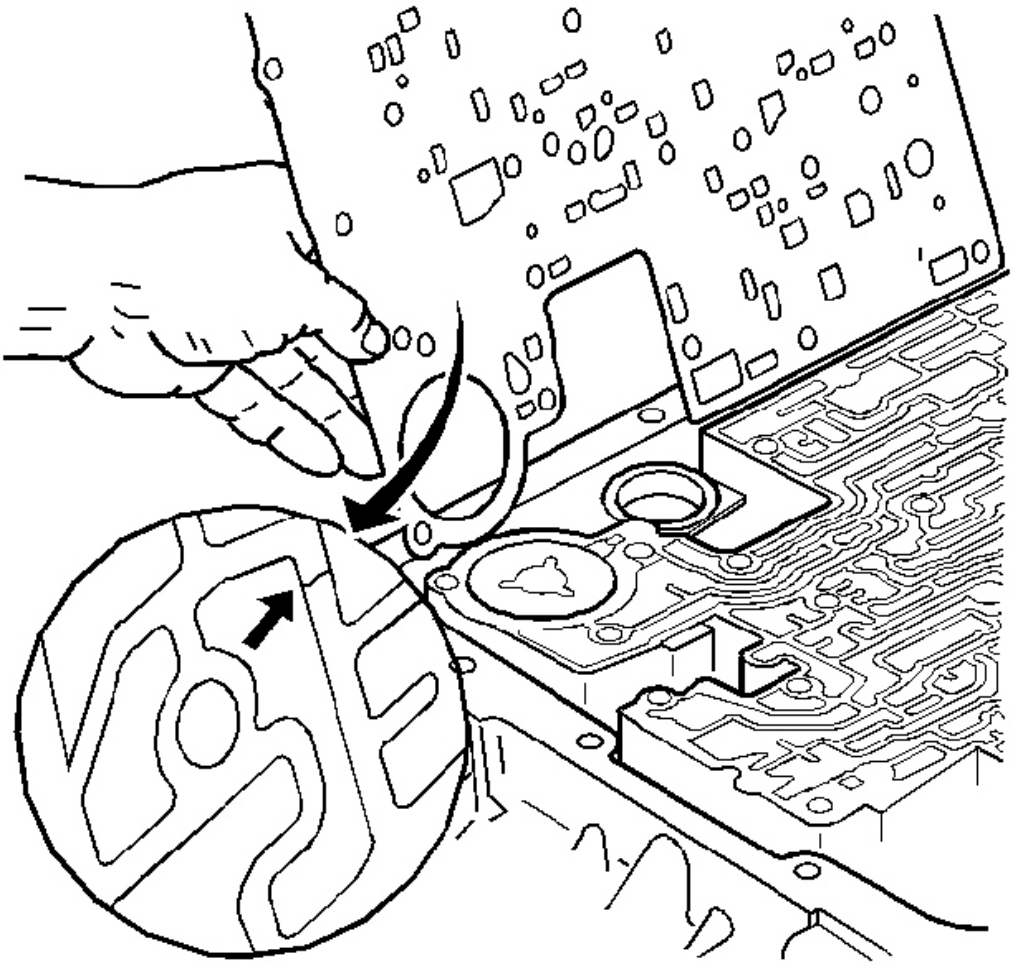

Fig. 85: Inspecting Spacer Plate To Case Gasket For Witness Marks
Courtesy of GENERAL MOTORS CORP.

1. Inspect the spacer plate to case gasket for witness marks. The witness marks should be complete. Incomplete witness marks may come from an uneven case surface or from cross channel leaks.

cardiagn.com

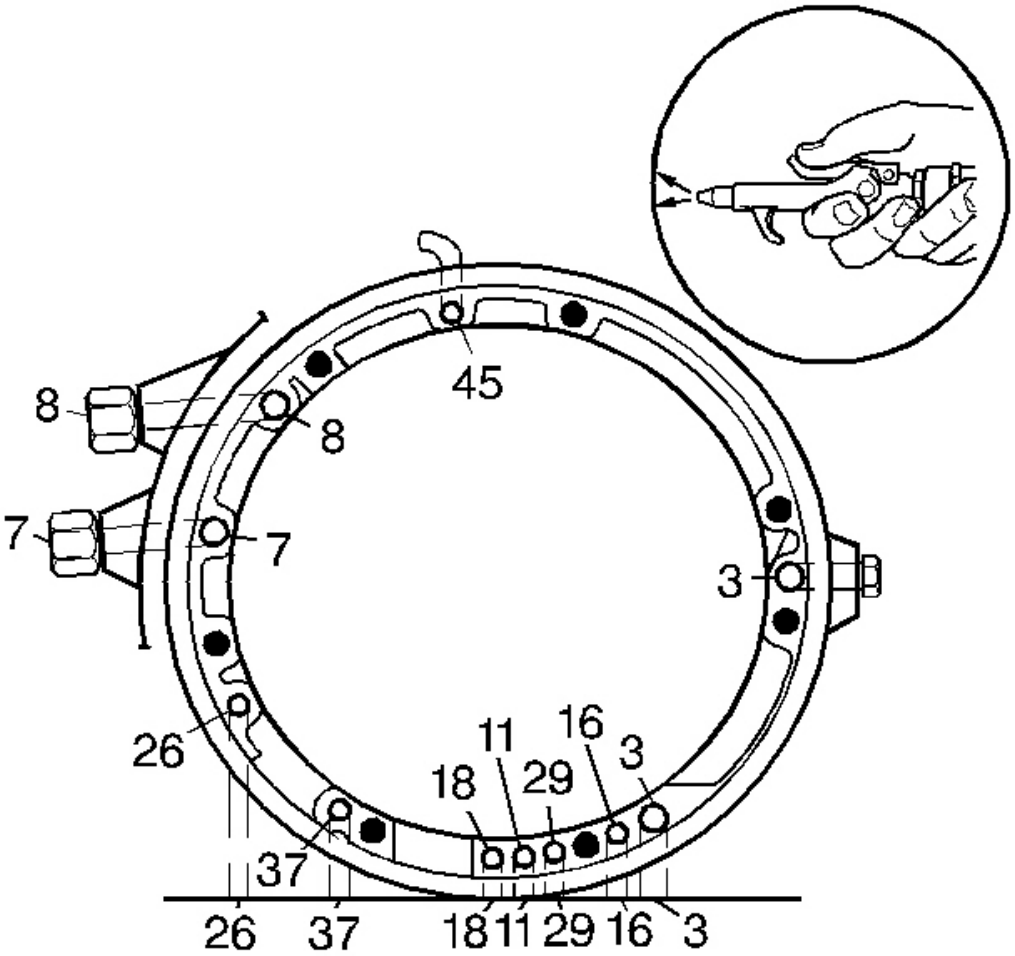

Fig. 86: Identifying Case Fluid Passages
Courtesy of GENERAL MOTORS CORP.

2. Using compressed air, blow into all of the case fluid passages (3, 7, 8, 11, 16, 18, 26, 29, 37, 45) to ensure that all case fluid passages are clear of any obstruction.

cardiagn.com

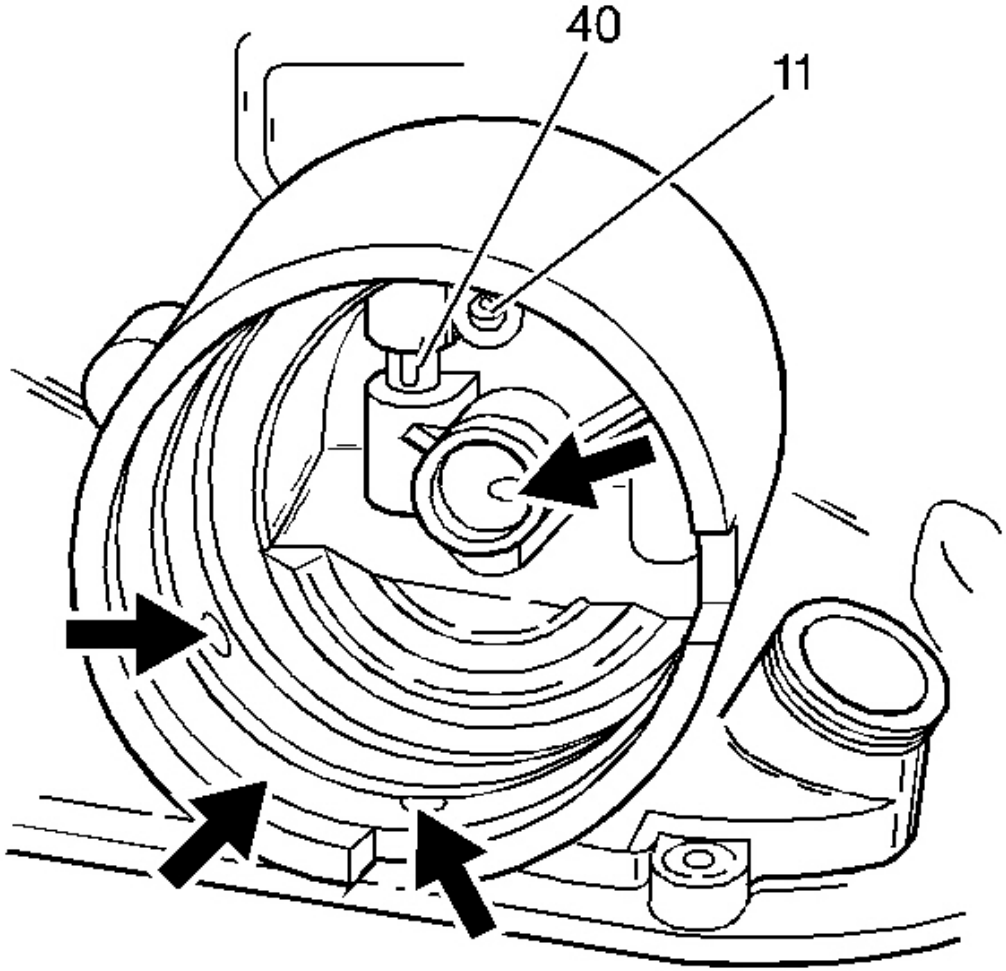

Fig. 87: Inspecting Case Assembly Components For Damage
Courtesy of GENERAL MOTORS CORP.

3. Inspect the 2-4 servo bore, the 3rd accumulator retainer and ball assembly (40), the orifice cup plug (11) in the servo bore, and the 2nd apply piston pin bore for any of the following conditions:
   - Porosity
   - Burrs
   - Debris
   - Any other damage

cardiagn.com

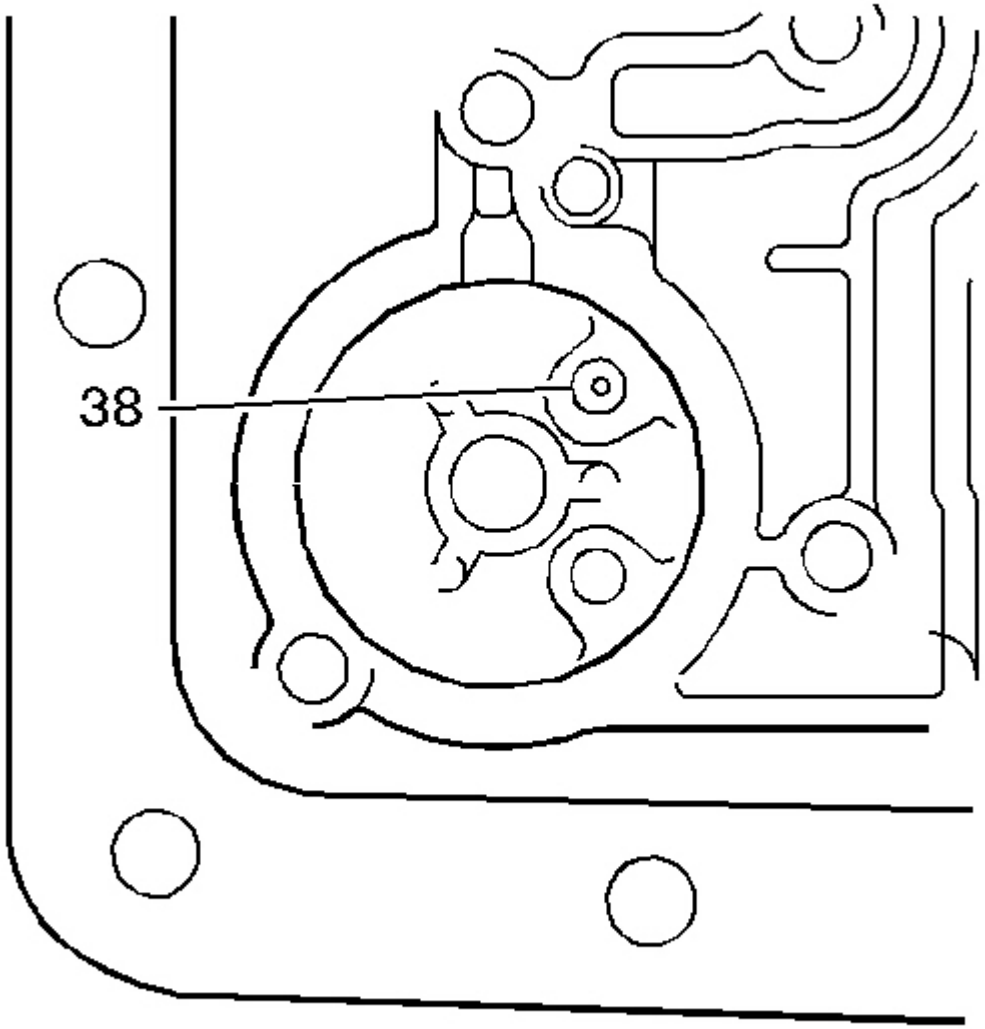

Fig. 88: Locating Orifice Cup Plug
Courtesy of GENERAL MOTORS CORP.

4. Inspect the 3-4 accumulator bore and the orifice cup plug (38) for any of the following conditions:
    - Porosity
    - Burrs
    - Blockage
    - Any other damage
5. Inspect all bolt holes for thread damage. Use heli-coil to repair damaged threads.

cardiagn.com

6. Inspect the cooler connectors for damage and proper torque.

   Specification: Cooler connector torque should be 38 N.m (28 lb ft)

RETAINER AND BALL ASSEMBLY LEAK CHECK

Tools Required

J 29714-A Servo Cover Compressor. See **Special Tools and Equipment** .

Installation Procedure

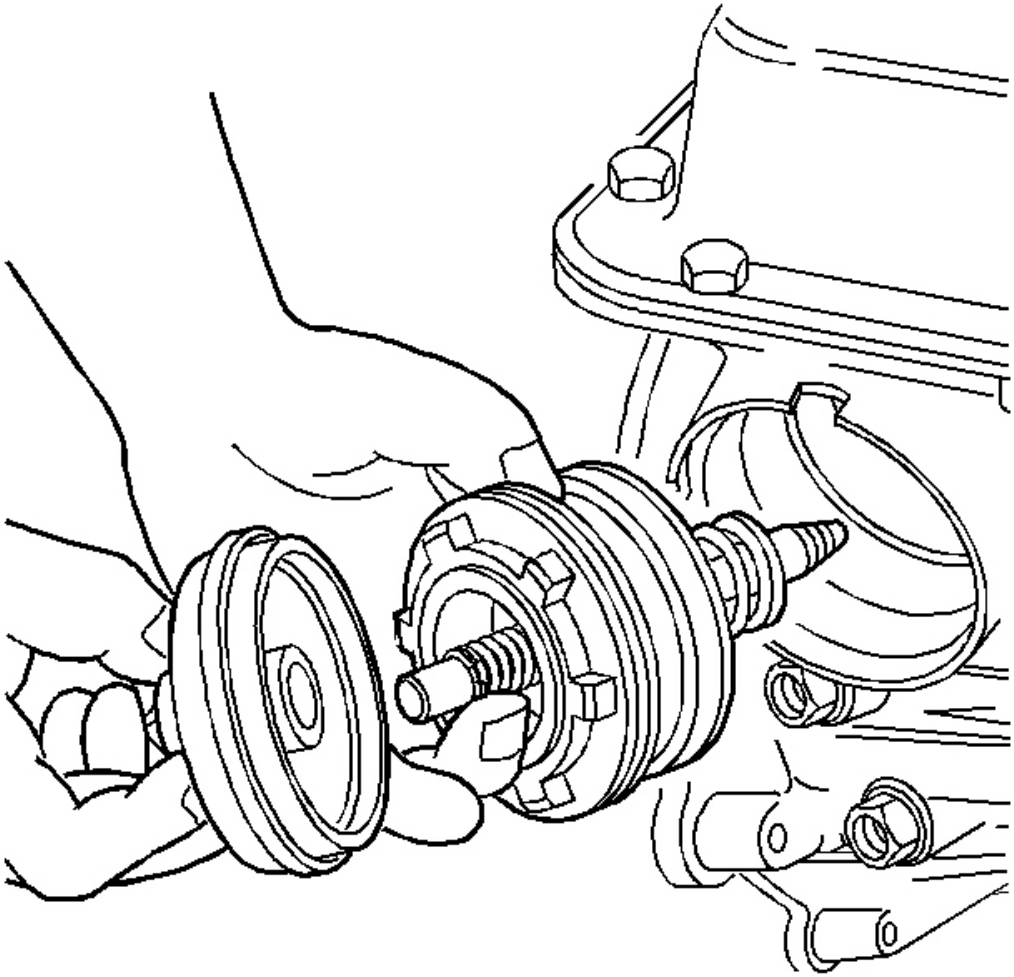

Fig. 89: View Of 2-4 Servo

cardiagn.com

Courtesy of GENERAL MOTORS CORP.

1. Install the 2-4 servo into the case.

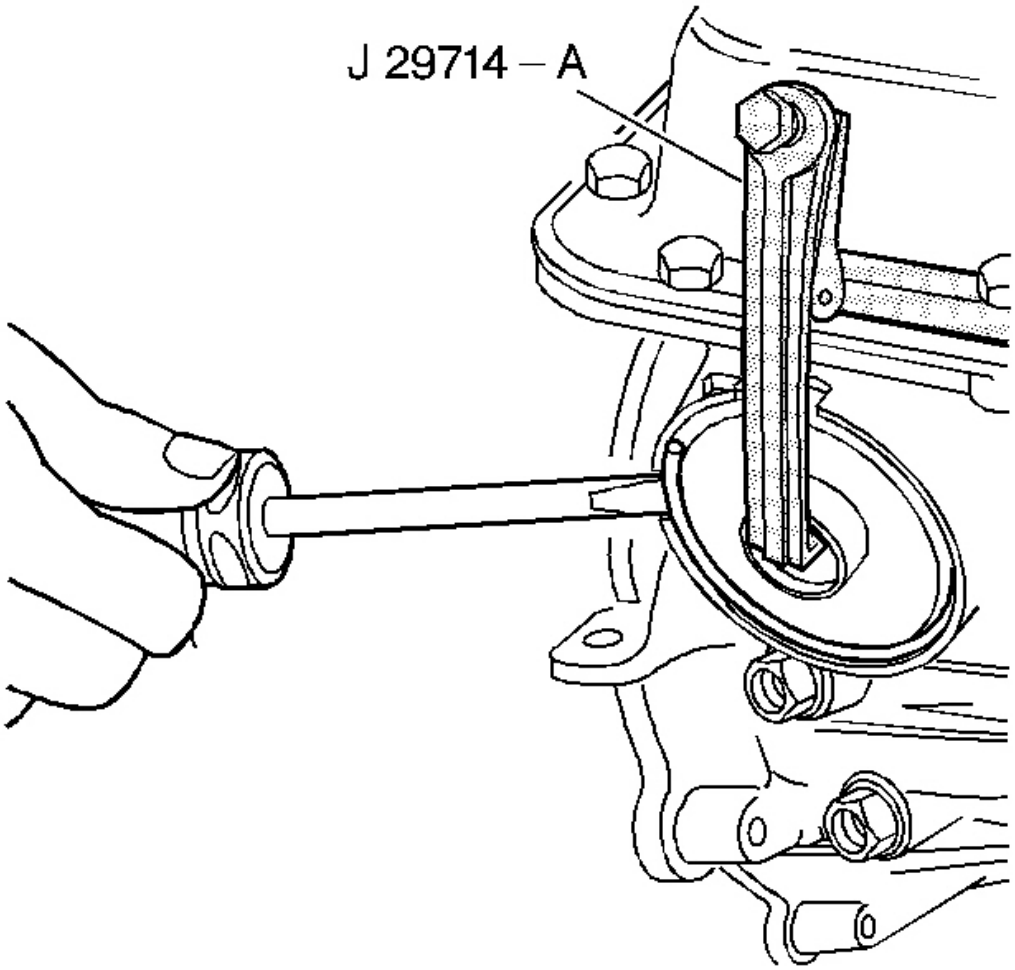

Fig. 90: Identifying J 29714-A
Courtesy of GENERAL MOTORS CORP.

2. Install oil pan with only four bolts to align pan to case.
3. Use the **J 29714-A** in order to compress the servo cover.
4. Install the servo cover retaining ring.

cardiagn.com

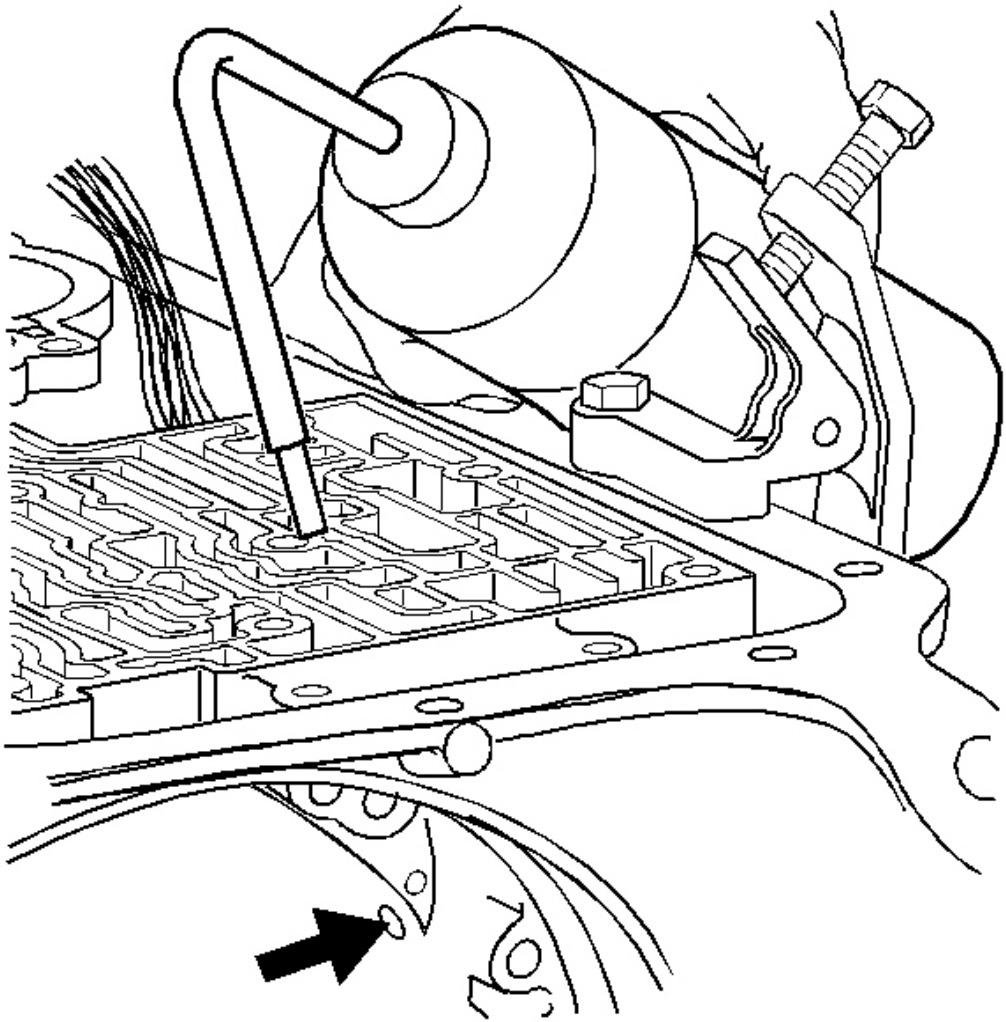

Fig. 91: Locating Small Hole In Accumulator
Courtesy of GENERAL MOTORS CORP.

5. Remove oil pan.
6. Pour solvent into the accumulator bore until the channel is filled. Watch for leaks in the case channel.

IMPORTANT: It is normal to see leakage from the small hole next to the larger oval hole, see arrow.

7. If leakage from the oval shaped hole is observed, replace the third accumulator retainer and ball assembly.

cardiagn.com

THIRD ACCUMULATOR RETAINER AND BALL REPLACEMENT

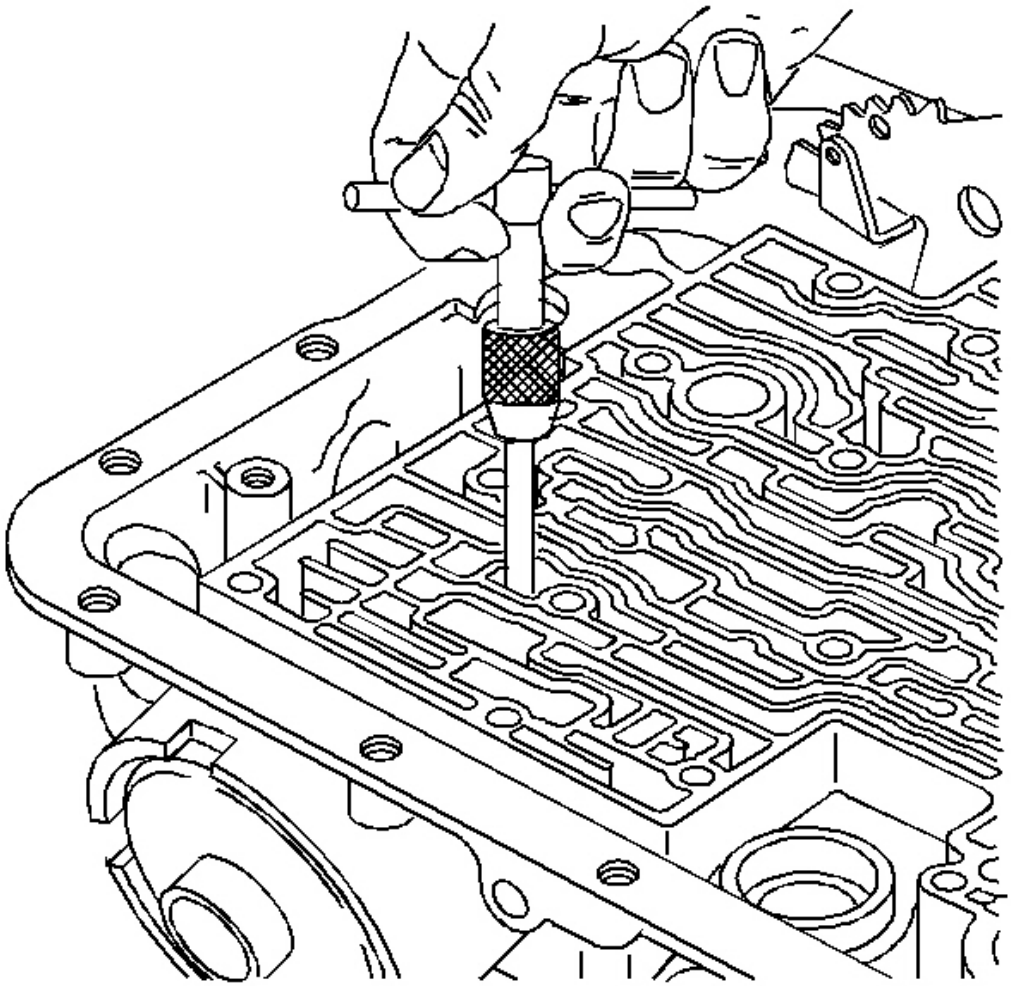

Fig. 92: Extracting Third Accumulator Retainer And Ball Assembly
Courtesy of GENERAL MOTORS CORP.

1. Remove the third accumulator retainer and ball assembly, using a 6.3 mm (0.25 in) #4 screw extractor.

cardiagn.com

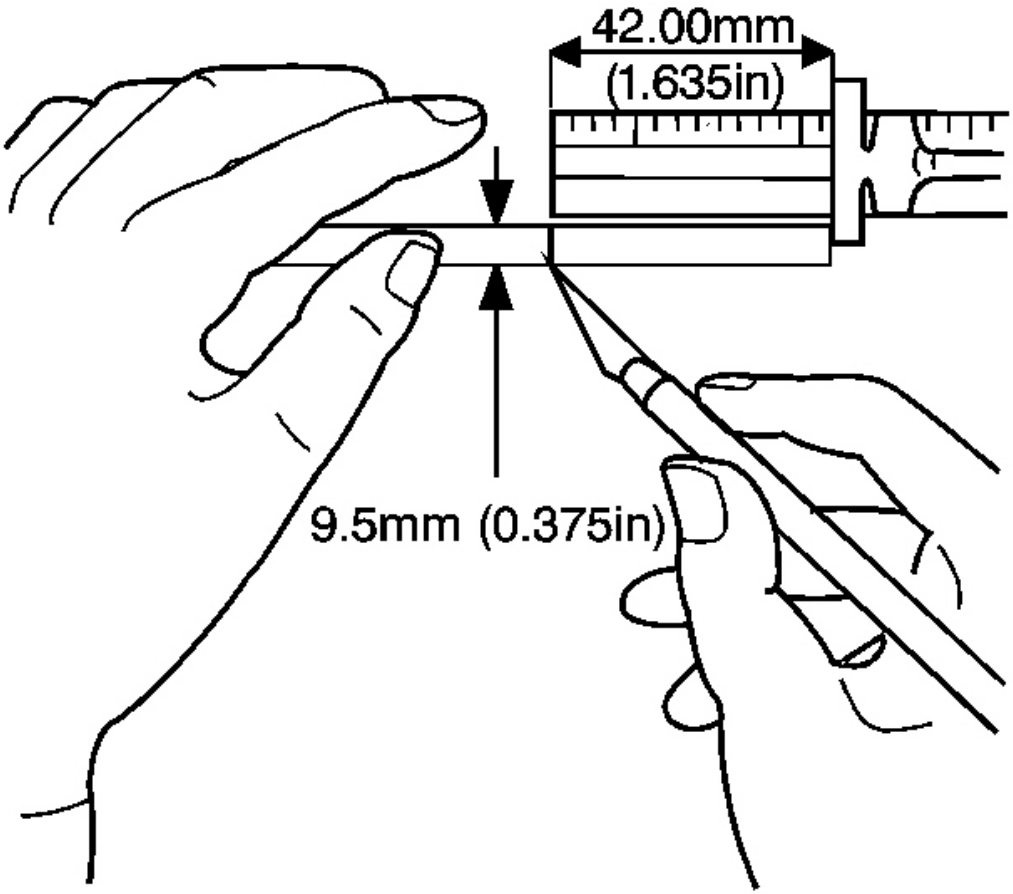

Fig. 93: Scribing Mark On Rod For Gaging Proper Depth Of Third Accumulator Retainer And Ball Assembly
Courtesy of GENERAL MOTORS CORP.

2. Scribe a mark at 42 mm (1.653 in) on a 9.5 mm (0.375 in) diameter metal rod. The scribe mark is used to gage the proper depth of the third accumulator retainer and ball assembly.

cardiagn.com

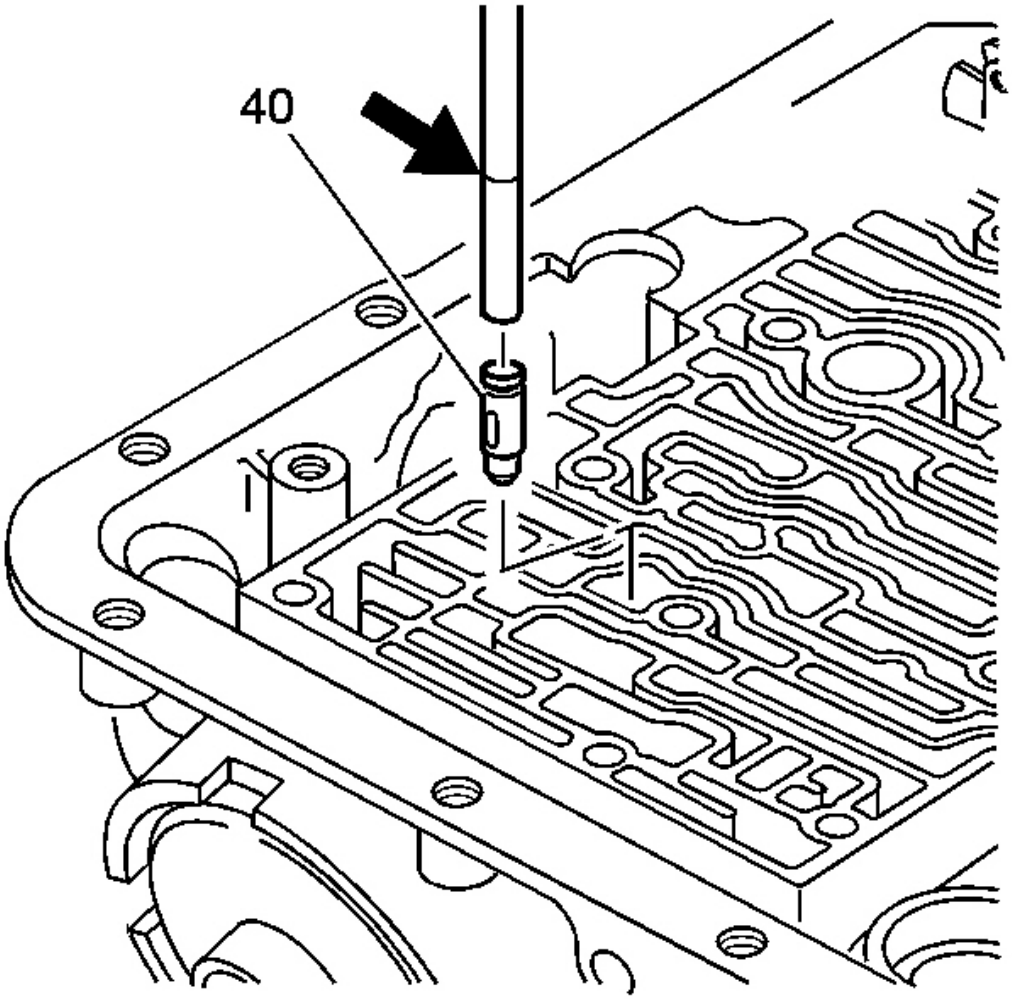

Fig. 94: Installing Third Accumulator Retainer And Ball Assembly
Courtesy of GENERAL MOTORS CORP.

3. Perform the following functions:
    1. Line up the oil feed slots in the third accumulator retainer and ball assembly (40) with the servo bore.
    2. Using the 9.5 mm (0.375 in) diameter metal rod, install the third accumulator retainer and ball assembly.

cardiagn.com

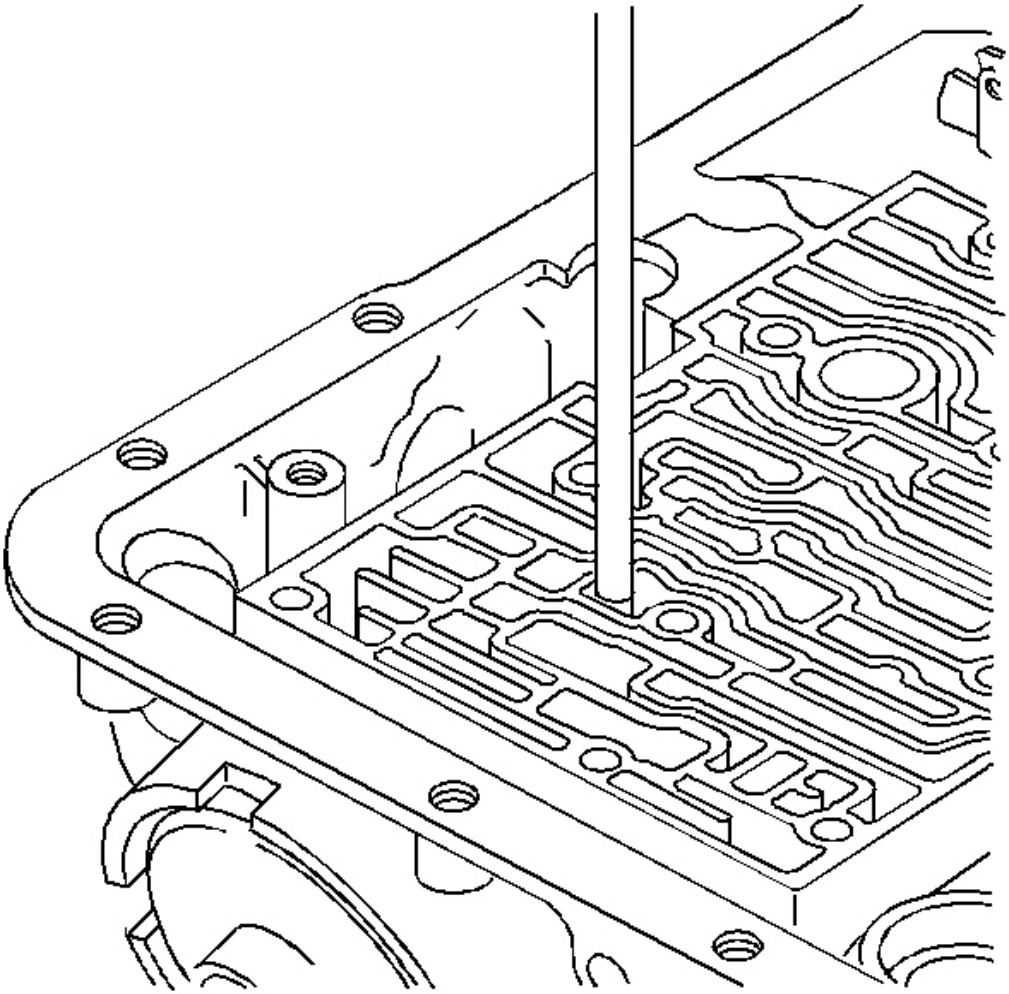

Fig. 95: Checking Third Accumulator Retainer And Ball Assembly Alignment
Courtesy of GENERAL MOTORS CORP.

4. Ensure that the third accumulator retainer and ball assembly and the scribe mark on the rod are flush with the case surface.

cardiagn.com

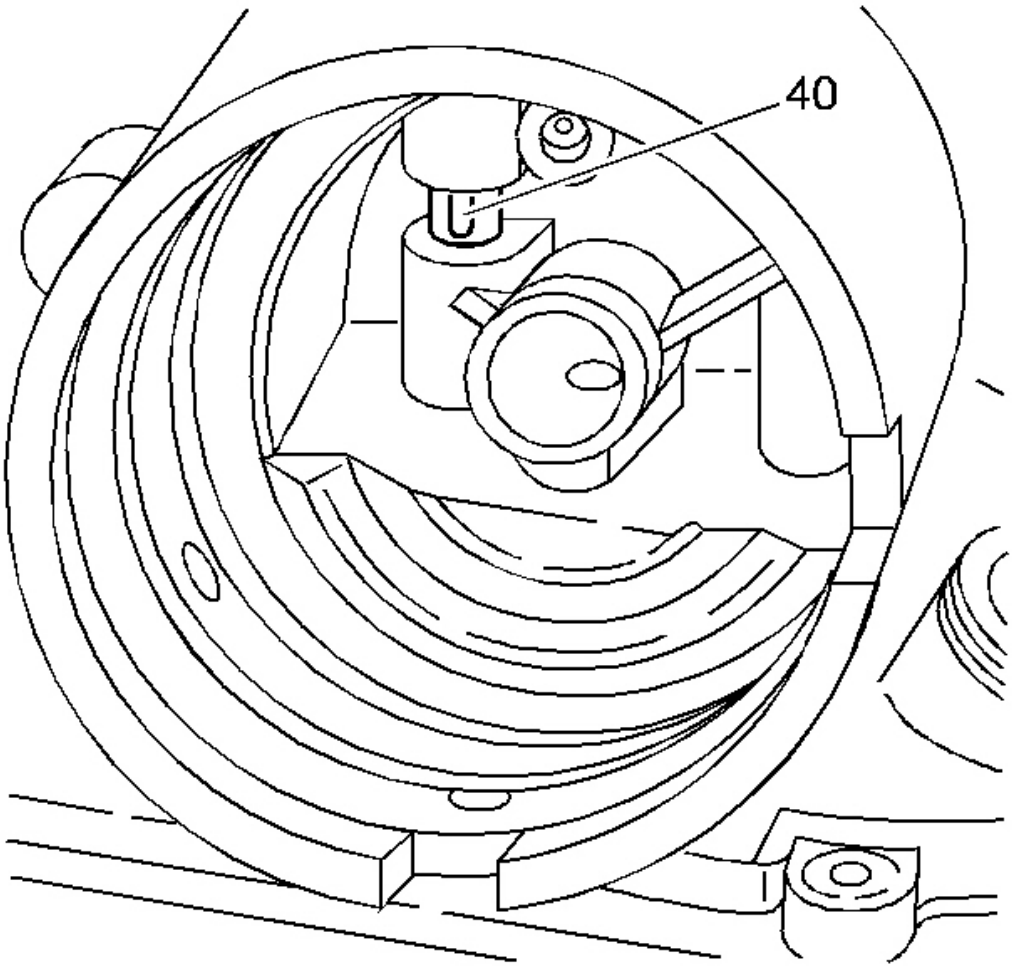

Fig. 96: Aligning Third Accumulator Retainer And Ball Assembly With Retainer Slot
Courtesy of GENERAL MOTORS CORP.

5. Check the third accumulator retainer and ball assembly (40) for alignment. The slot in the retainer must be completely open in the servo bore.

CASE BUSHING

Removal Procedure

Tools Required

- J 8092 Driver Handle

cardiagn.com

- **J 34196-B** Transmission Bushing Service Set. See **Special Tools and Equipment** .

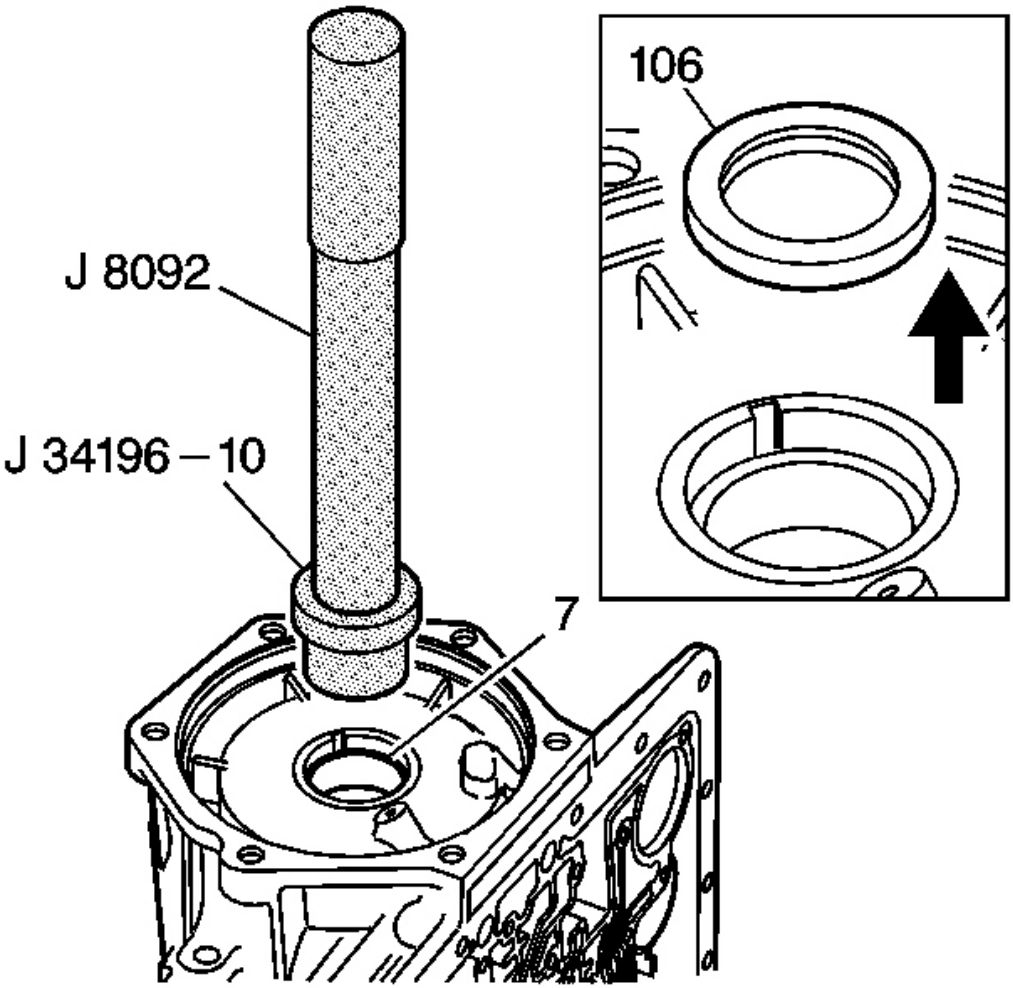

Fig. 97: Identifying Case Rear Oil Seal & Case Bushing
Courtesy of GENERAL MOTORS CORP.

1. Remove the case rear oil seal (106) (Y-car Only).
2. Remove the case bushing (7) using J 8092 and **J 34196-10** which is part of kit **J 34196-B** .

Installation Procedure

Tools Required

cardiagn.com

- J 8092 Driver Handle
- **J 34196-B** Transmission Bushing Service Set. See **Special Tools and Equipment** .
- **J 42198** Case Rear Oil Seal Installer. See **Special Tools and Equipment** .

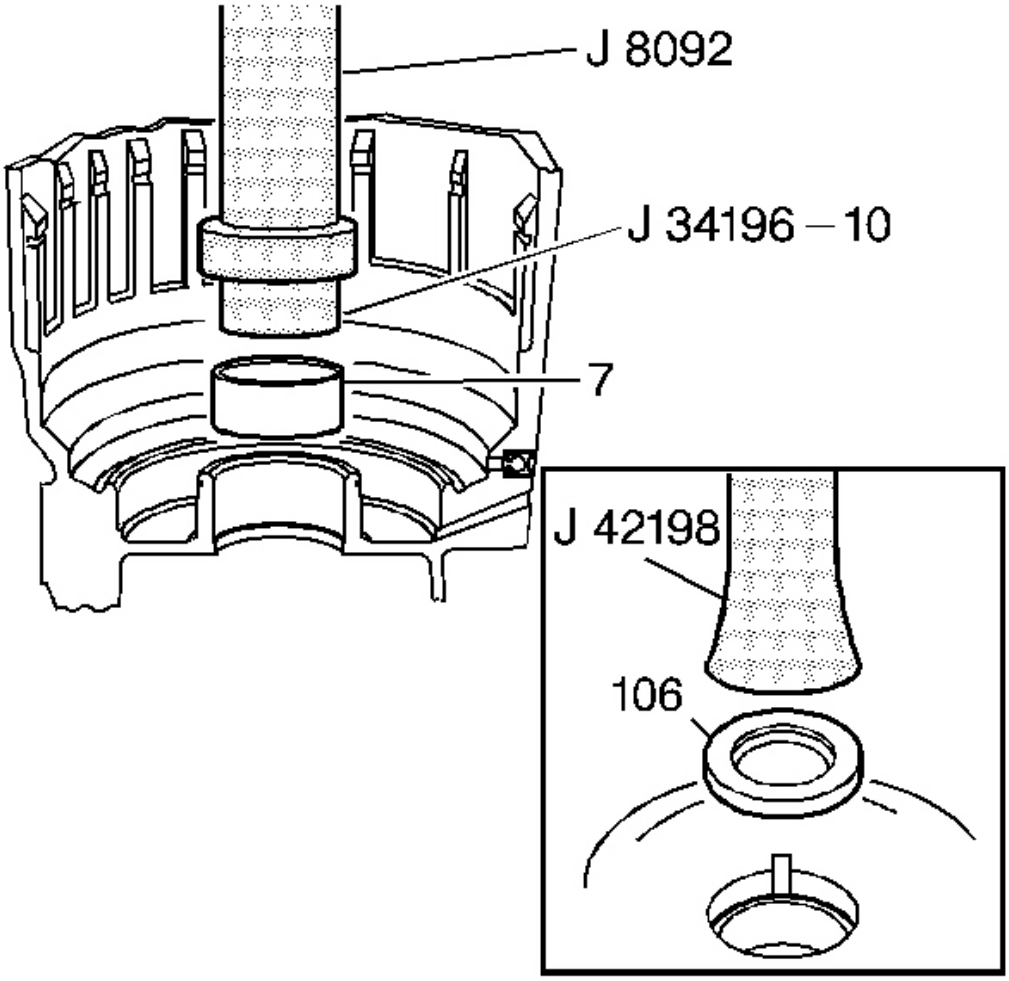

Fig. 98: View Of Case Bushing & Case Rear Oil Seal
Courtesy of GENERAL MOTORS CORP.

1. Install a case bushing (7) using J 8092 and **J 34196-10** which is part of kit **J 34196-B** .
2. Install a case rear oil seal (106) (Y-car Only) using **J 42198** .

MANUAL SHAFT SEAL INSTALLATION

cardiagn.com

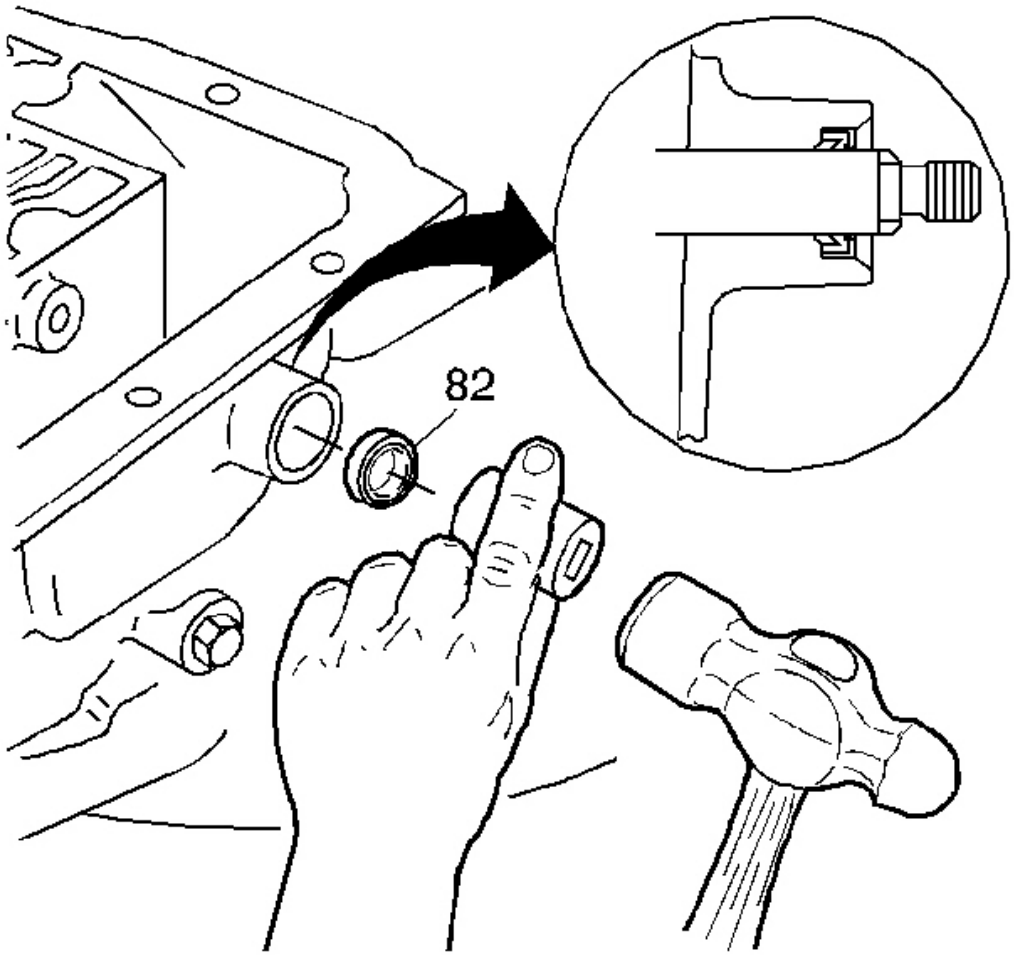

Fig. 99: Installing Manual Shaft Seal
Courtesy of GENERAL MOTORS CORP.

Install a new manual shaft seal (82).

LOW AND REVERSE CLUTCH PISTON INSTALLATION

Tools Required

- **J 23327-1** Forward Clutch Spring Compressor (Bridge). See **Special Tools and Equipment** .
- **J 34627** Snap Ring Remover and Installer. See **Special Tools and Equipment** .
- **J 36850** Transjel Lubricant. See **Special Tools and Equipment** .

cardiagn.com

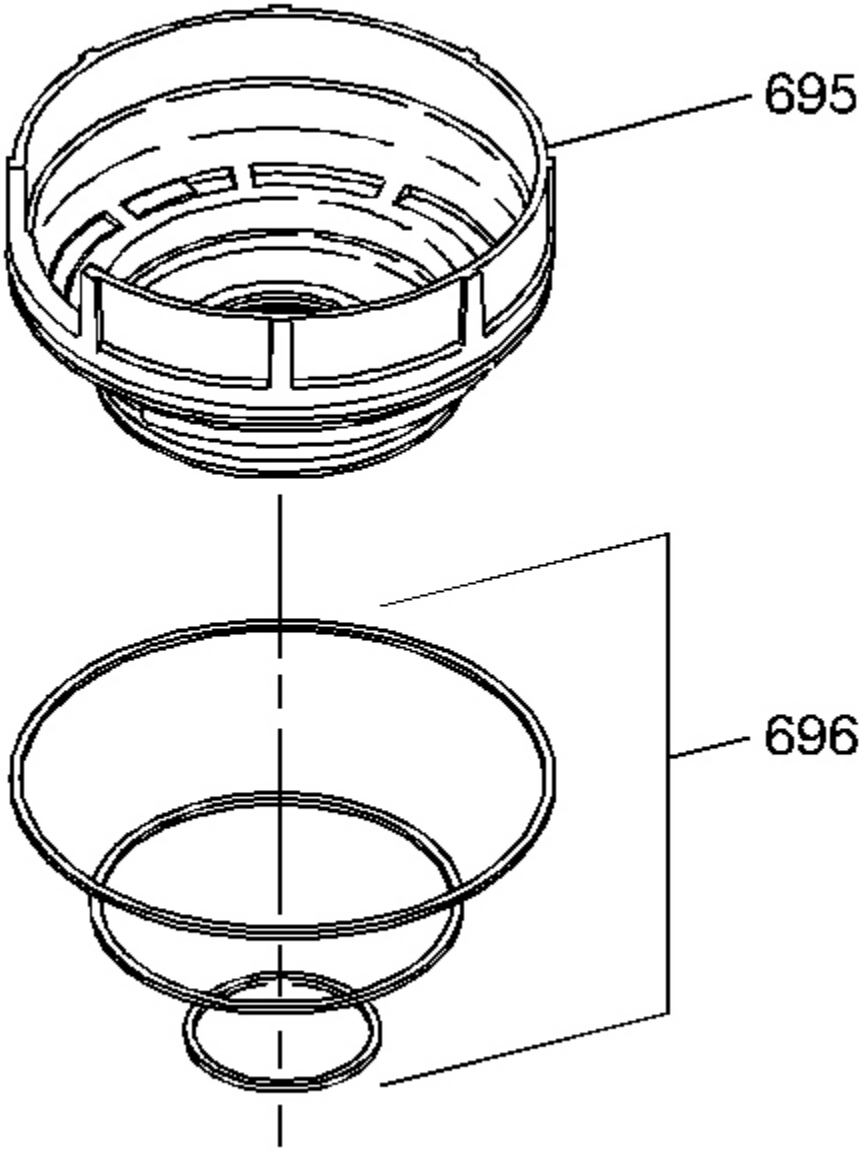

Fig. 100: Installing Transmission Seals Onto Low And Reverse Clutch Piston
Courtesy of GENERAL MOTORS CORP.

1. Install the transmission (low and reverse clutch outer, center, inner) seals (696) on the low and reverse clutch piston (695).
2. Lubricate the seals with assembly lubricant **J 36850** or an equivalent.

cardiagn.com

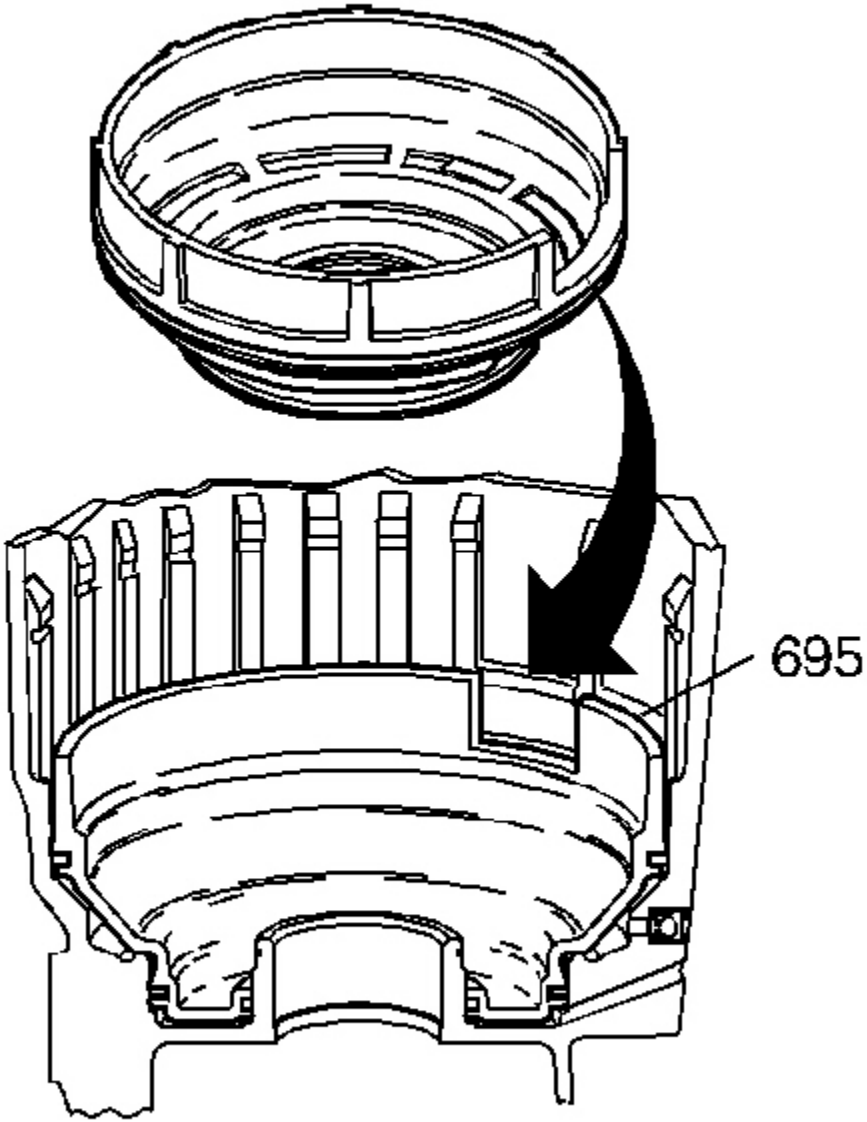

Fig. 101: Aligning Parking Brake Pawl Window With Notch In Piston
Courtesy of GENERAL MOTORS CORP.

3. Install the low and reverse clutch piston (695) into the case. The notch in the piston must be aligned with the parking brake pawl window, in the case.

cardiagn.com

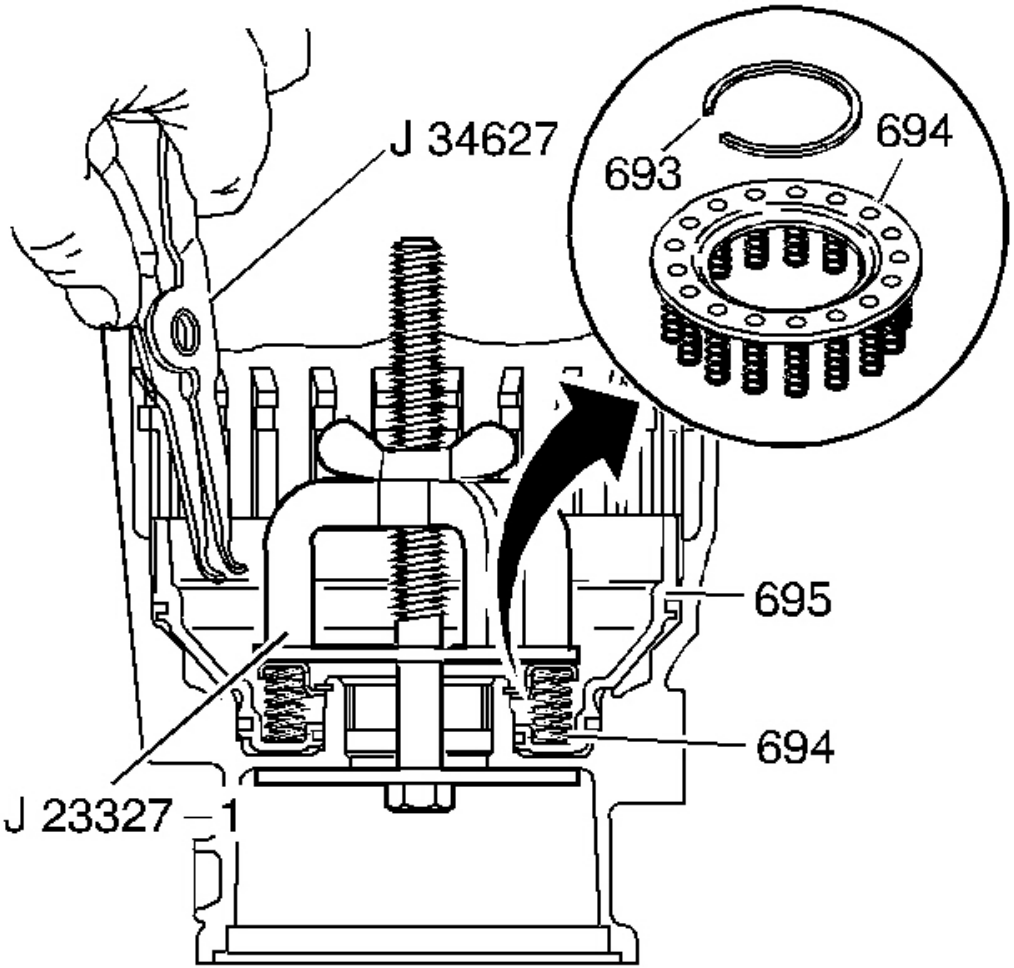

Fig. 102: View Of Low And Reverse Clutch Spring Assembly & Retainer Ring
Courtesy of GENERAL MOTORS CORP.

4. Install the low and reverse clutch spring assembly (694).
    1. Using the **J 23327-1** , compress the low and reverse clutch spring assembly (694).
    2. Using **J 36850** install the low and reverse clutch retainer ring (693).

INNER MANUAL LINKAGE INSTALLATION

cardiagn.com

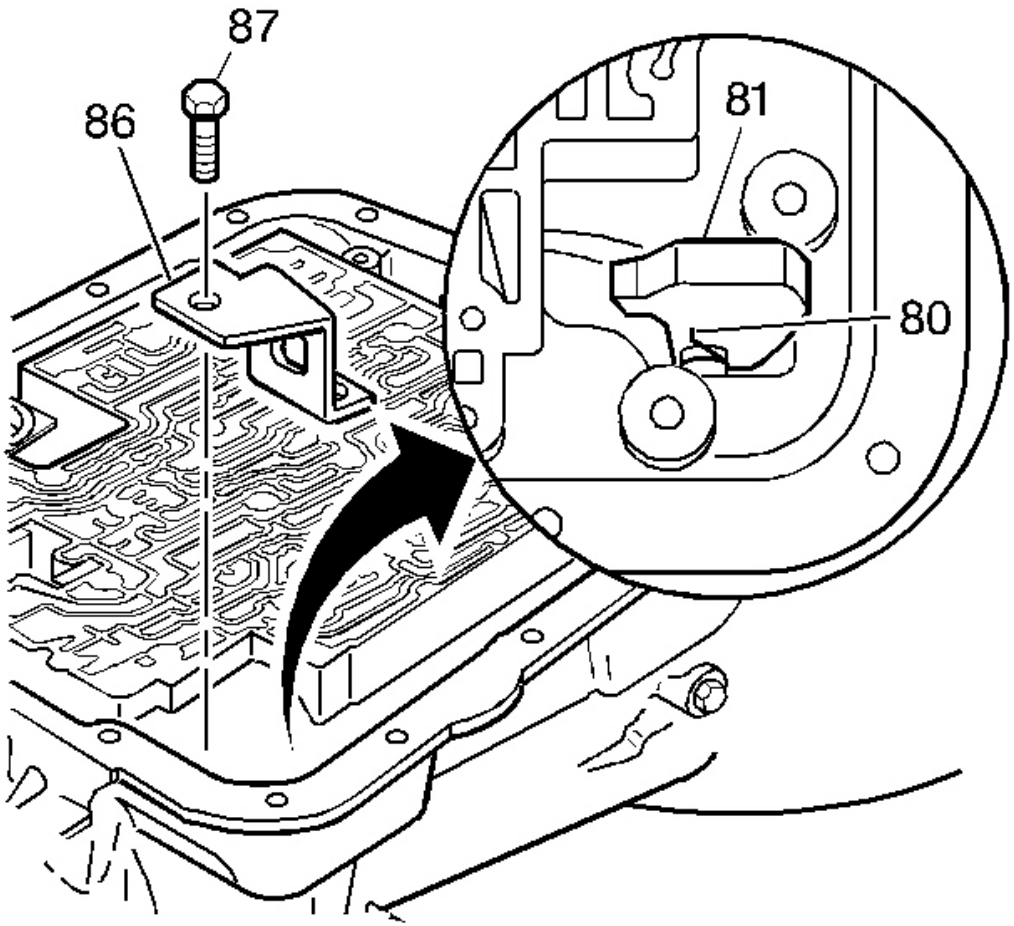

Fig. 103: Locating Parking Brake Pawl & Return Spring
Courtesy of GENERAL MOTORS CORP.

1. Install the parking lock bracket (86).

   NOTE: Refer to Fastener Notice in Cautions and Notices.

2. Install the parking lock bracket bolt (87).

   Tighten: Tighten the bolt to 31 N.m (23 lb ft).

3. Inspect the following items:
   - The parking brake pawl (81) for damage or cracks

cardiagn.com

- The parking pawl return spring (80) for being broken or missing

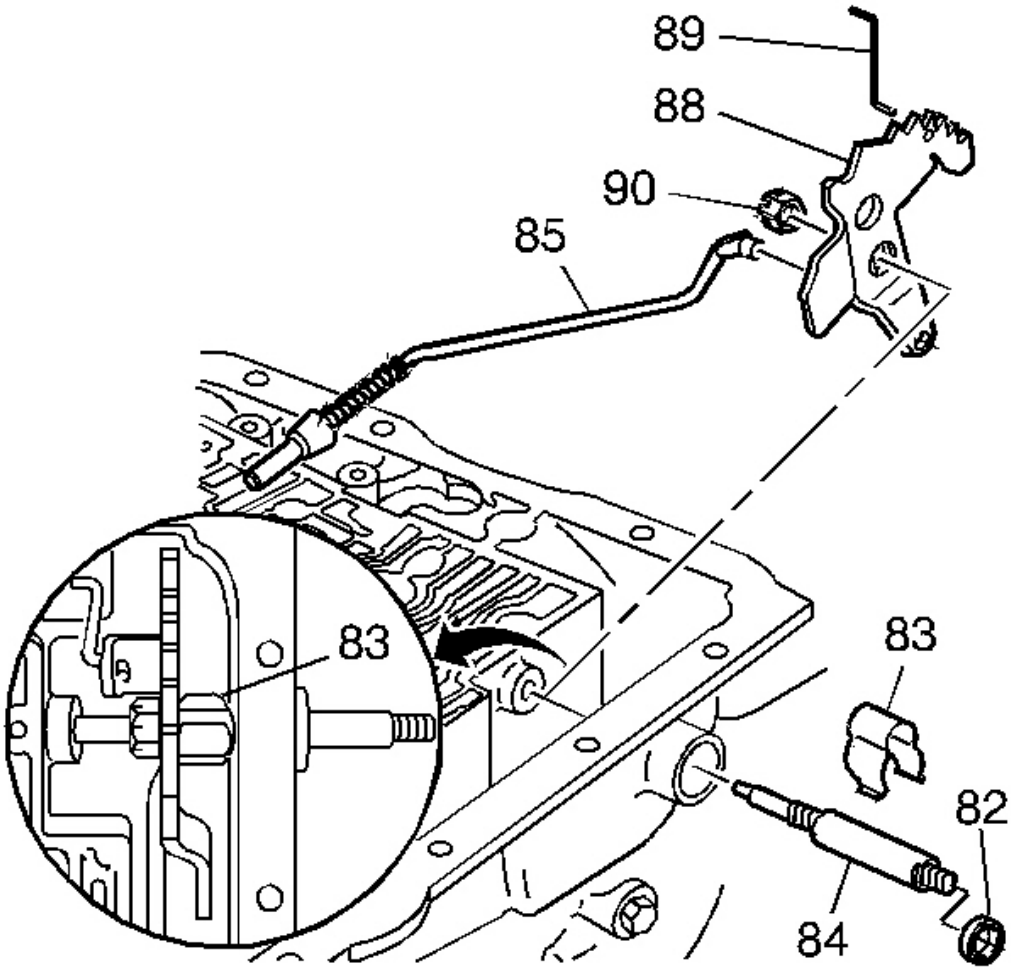

Fig. 104: Identifying Inner Manual Linkage Inspection Areas
Courtesy of GENERAL MOTORS CORP.

4. Inspect the following items:
    - The manual shaft retainer (83) for damage or cracks
    - The manual shaft (84) for damage or burrs
    - The parking lock actuator assembly (85) for damage
    - The inside detent lever (88) for damage or cracks
    - The manual valve link (89) for damage

cardiagn.com

- The hex head nut (90) for damage or stripped threads

5. Install the following items:
    - The inside detent lever (88)
    - The parking lock actuator assembly (85)
    - The manual shaft (84) (model dependent)
    - The manual shaft retainer (83)
    - The hex head nut (90)
    - The manual valve link (89)

    Tighten: Tighten the nut to 31 N.m (23 lb ft).

REACTION GEAR AND CARRIER INSPECTION

cardiagn.com

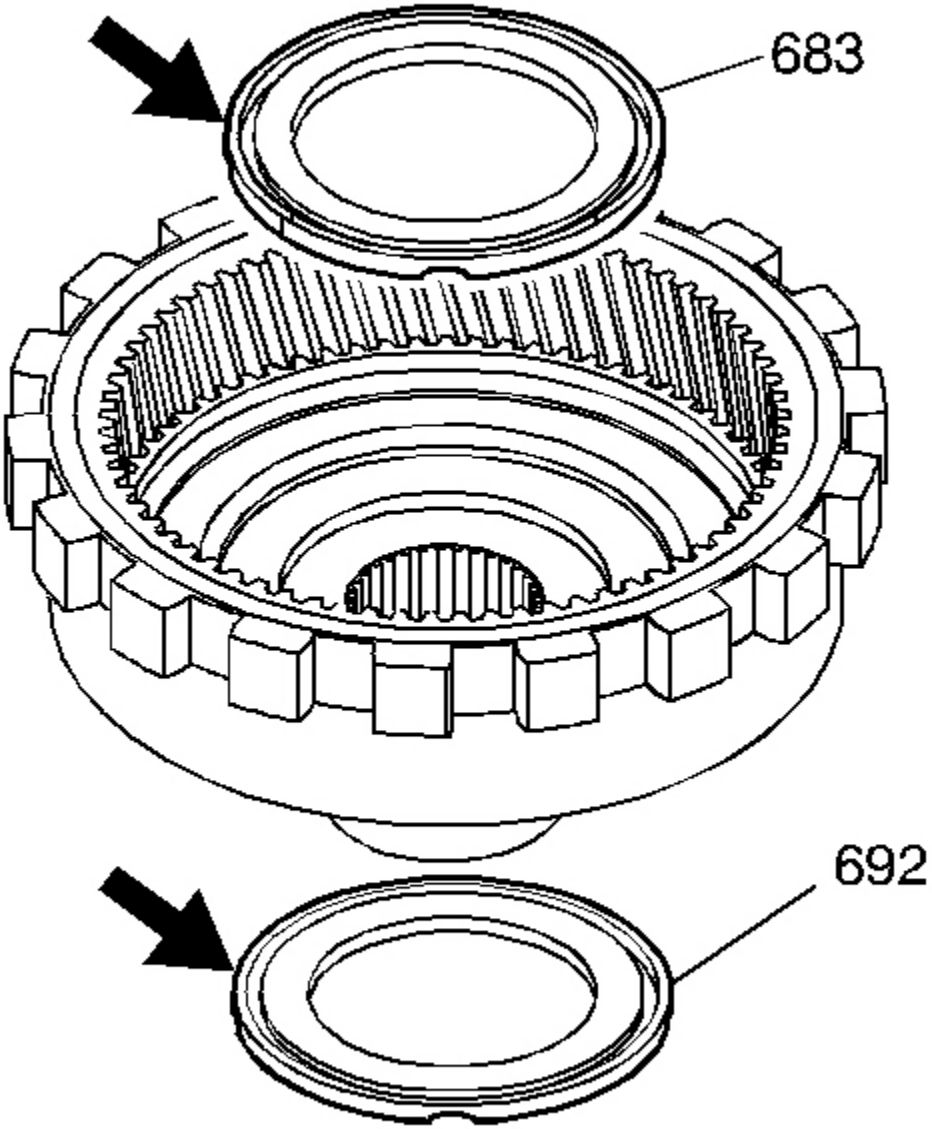

Fig. 105: Inspecting Areas Of Reaction Carrier/Support Thrust Bearing Assembly
Courtesy of GENERAL MOTORS CORP.

1. Inspect the reaction carrier/support thrust bearing assembly (683) for wear or damage.
2. Inspect the reaction gear support to case bearing (692) for wear or damage.

cardiagn.com

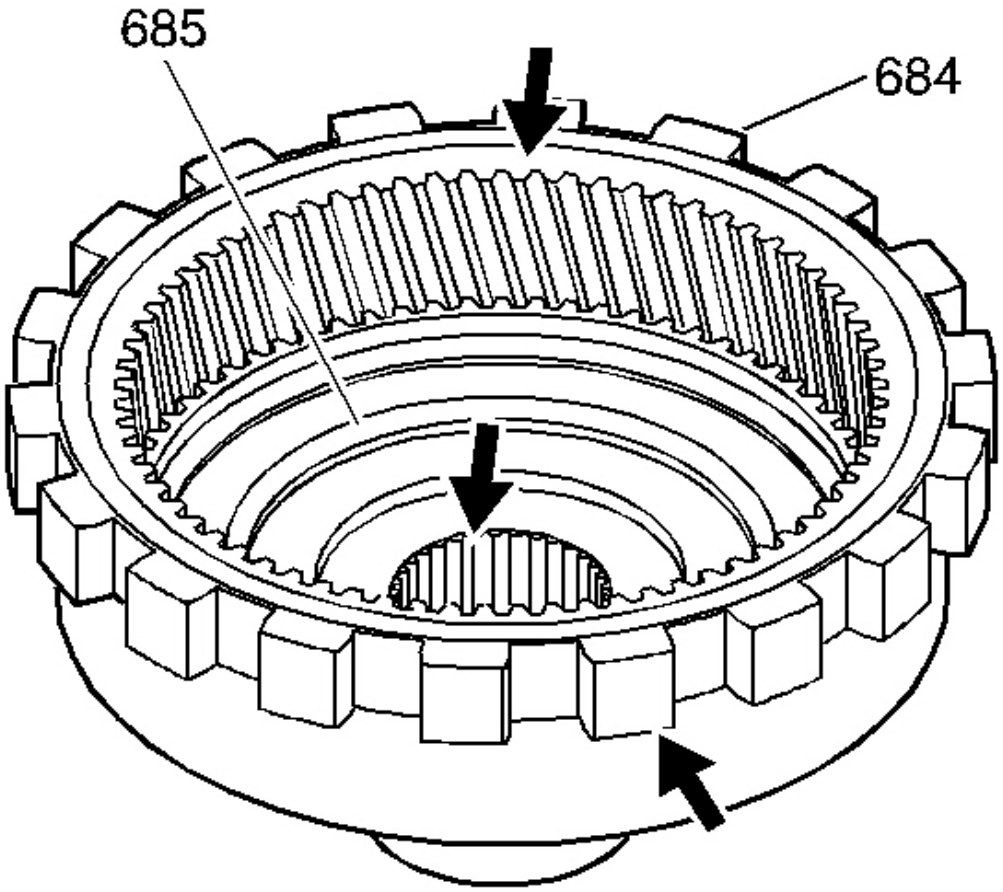

Fig. 106: View Of Reaction Gear And Carrier Inspection Areas
Courtesy of GENERAL MOTORS CORP.

3. Inspect the internal reaction gear (684) and the internal reaction gear support (685) for proper assembly, stripped splines, cracks, teeth, and lug damage.

cardiagn.com

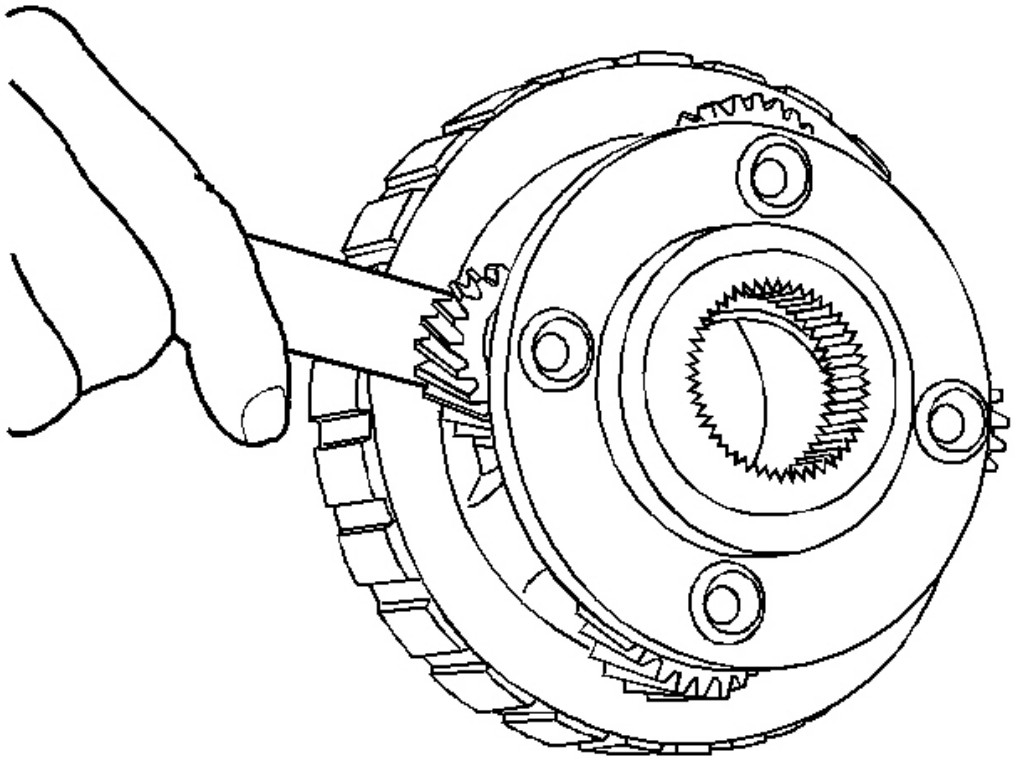

Fig. 107: Checking Reaction Carrier Pinion End Play With Feeler Gage
Courtesy of GENERAL MOTORS CORP.

IMPORTANT: Inspect all pinions, either 4 or 5 depending on model.

4. Check the reaction carrier pinion end play. The end play must not exceed 0.61 mm (0.024 in).

   Inspect the reaction carrier for the following conditions:

   - Pinion gear damage
   - Proper pinion staking
   - Excessive pinion washer wear
   - Keystoned pinion gears
5. Ensure that the pinions turn freely.

cardiagn.com

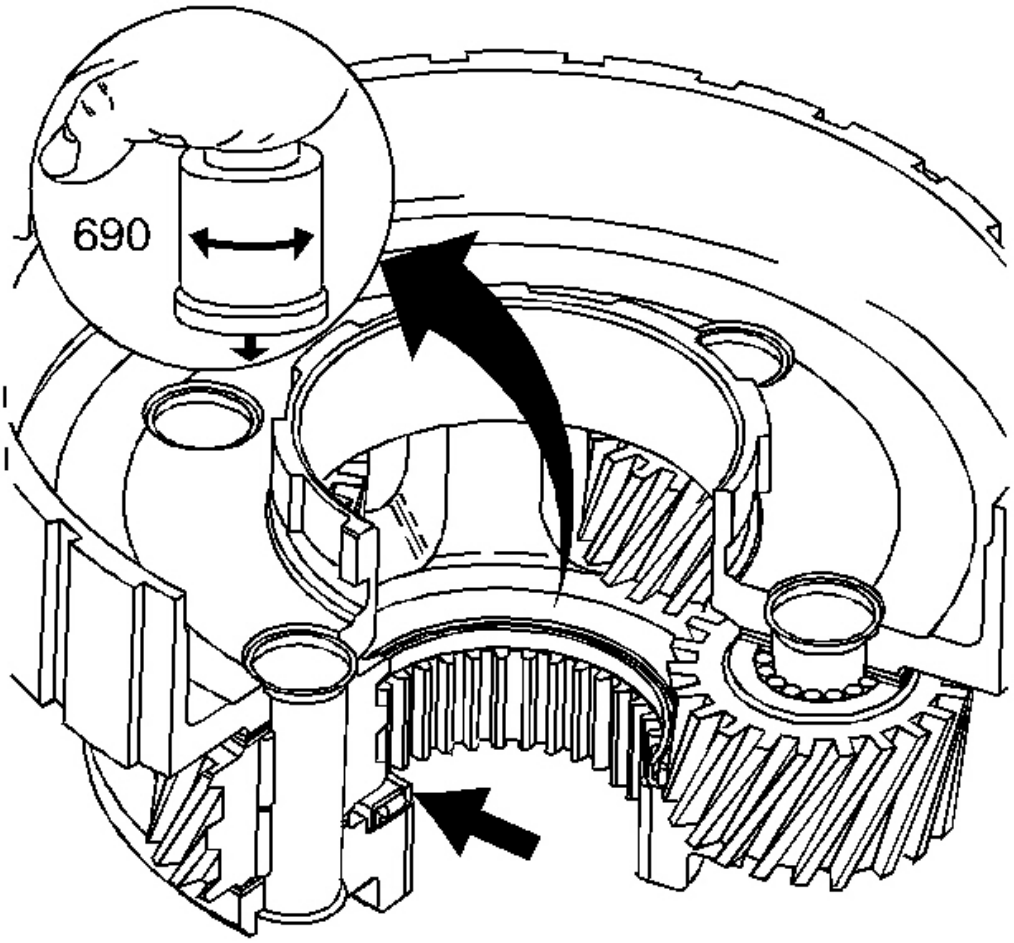

Fig. 108: Illustrating Proper Inspection Of Reaction Carrier Captive Thrust Bearing
Courtesy of GENERAL MOTORS CORP.

6. Inspect the reaction carrier captive thrust bearing for wear or damage.
    1. Without touching the pinion gears, place a bushing or an output shaft sleeve (690) onto the bearing race, and turn it with the palm of your hand.
    2. Any imperfections will be felt through the bushing.

REACTION GEAR AND CARRIER INSTALLATION

Tools Required

J 36850 Transjel Lubricant. See **Special Tools and Equipment** .

cardiagn.com

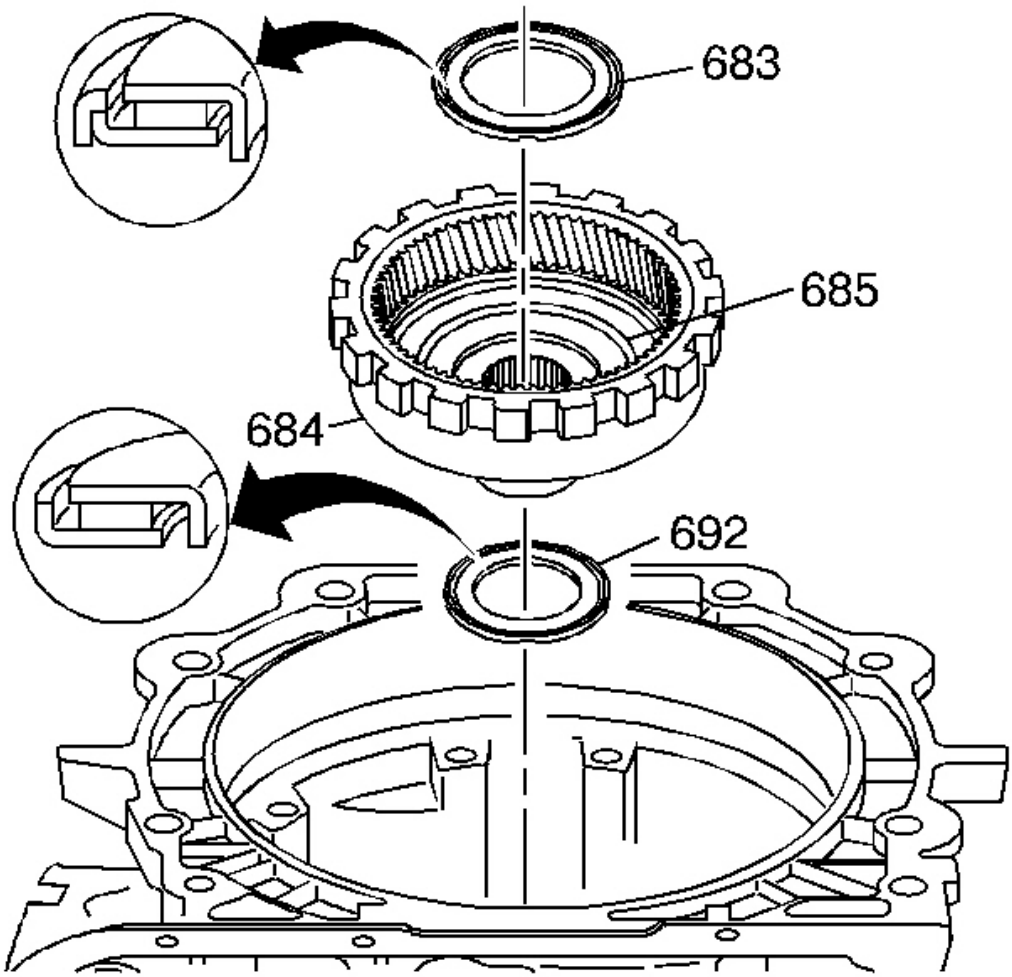

Fig. 109: View Of Reaction Carrier/Support Thrust Bearing Assembly
Courtesy of GENERAL MOTORS CORP.

1. Install the reaction carrier/support thrust bearing assembly (683) into the internal reaction gear support (685).
2. Install the reaction gear support to case bearing (692) onto the internal reaction gear support (685). Retain the bearing using **J 36850** or equivalent.
3. Install the internal reaction gear (684) and the internal reaction gear support (685) into the case.

cardiagn.com

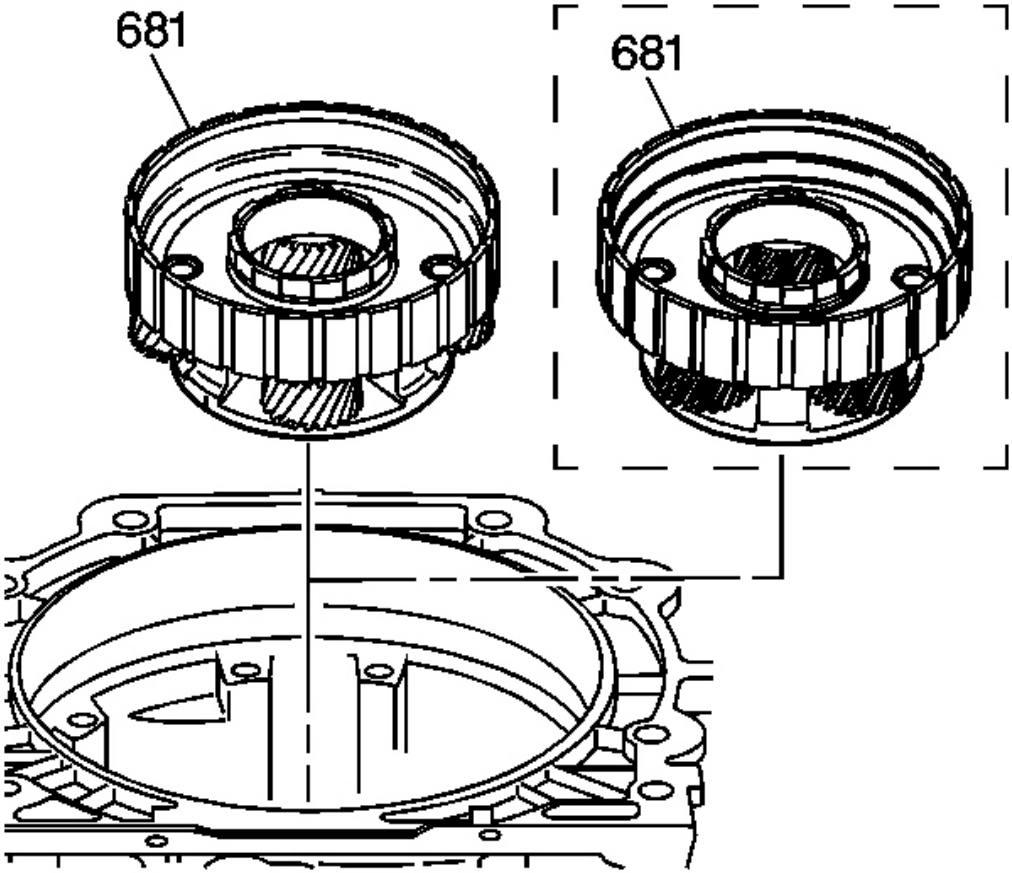

Fig. 110: Identifying Reaction Carrier Assembly
Courtesy of GENERAL MOTORS CORP.

4. Install the reaction carrier assembly (681) into the internal reaction gear.

LOW AND REVERSE CLUTCH SPACER PLATE SELECTION

Tools Required

- **J 8001** Dial Indicator Set. See **Special Tools and Equipment** .
- **J 26900-13** Magnetic Indicator Base. See **Special Tools and Equipment** .

cardiagn.com

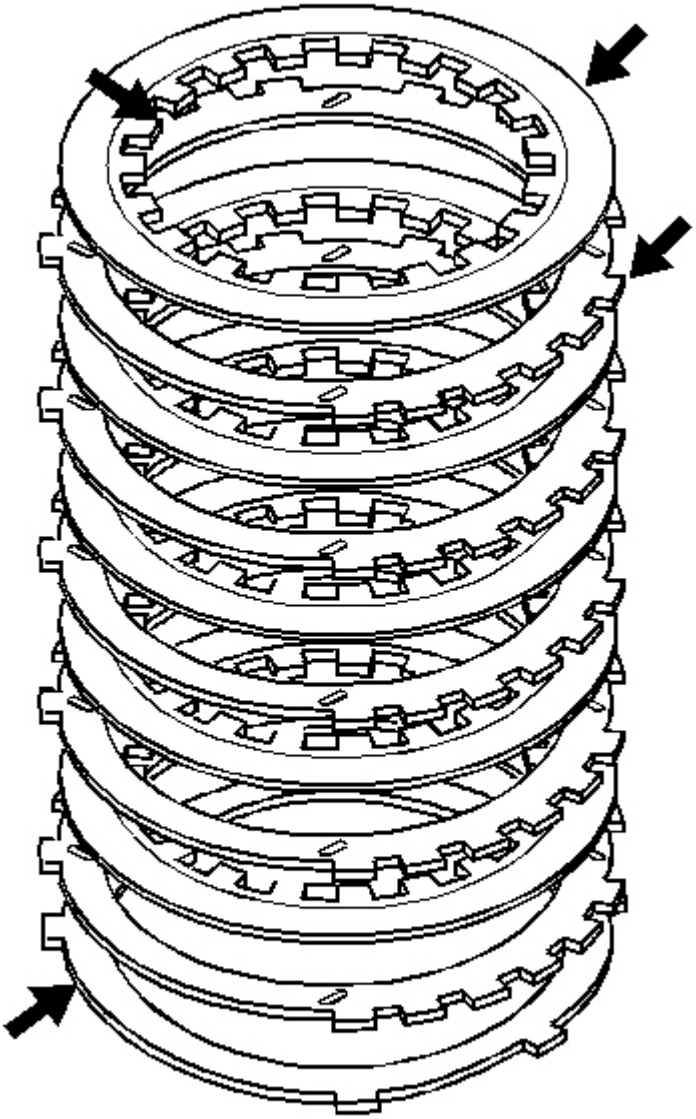

Fig. 111: Locating Inspection Areas On Low And Reverse Clutch Plates
Courtesy of GENERAL MOTORS CORP.

1. Inspect the low and reverse clutch plates for the following conditions:
    - Composition material wear
    - Composition material heat damage
    - Composition material delamination

cardiagn.com

- Steel plates heat damage
- Steel plates surface finish damage

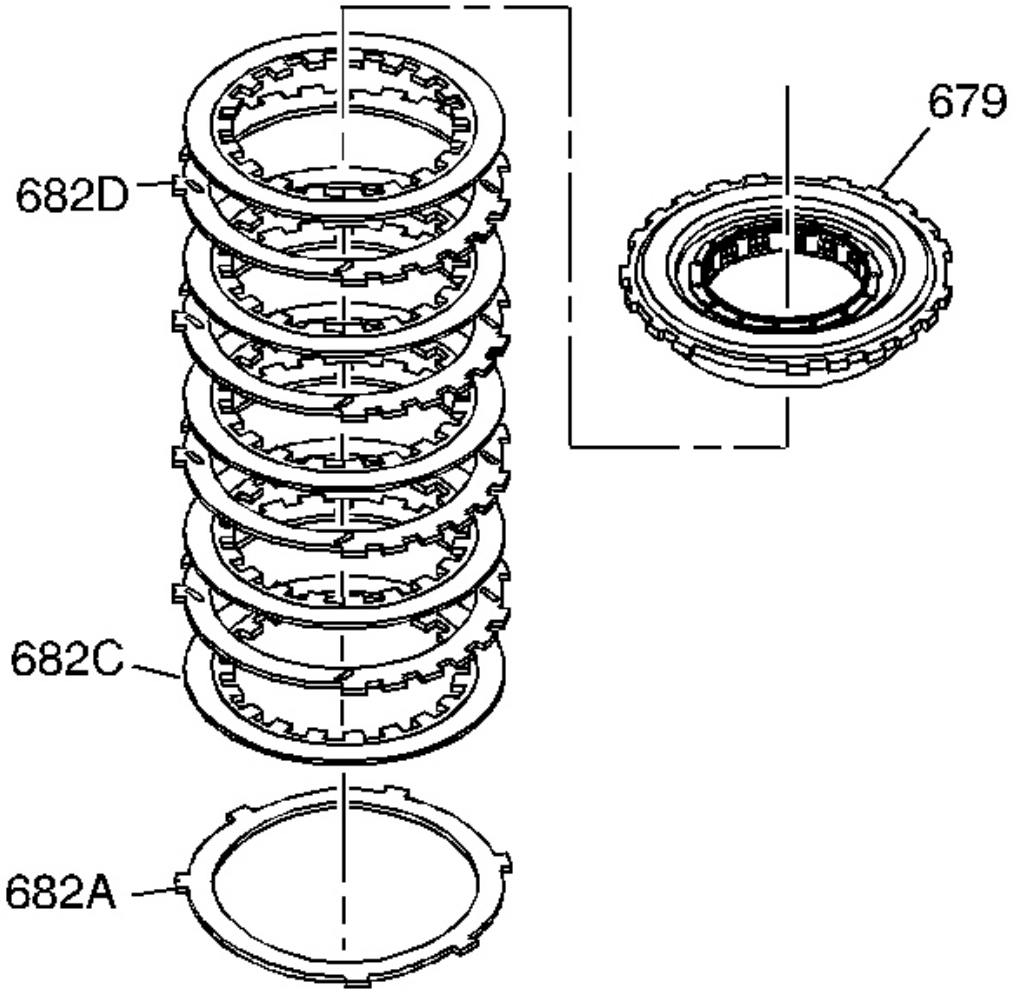

Fig. 112: View Of Low And Reverse Clutch Plate Assembly
Courtesy of GENERAL MOTORS CORP.

2. Stack the low and reverse clutch plate assembly on a flat surface in the following order:
    1. One waved plate (682A)
    2. Five fiber plate assemblies (682C) and four steel plates (682D), starting with one fiber plate assembly and alternating with steel
    3. Low and reverse clutch support (679)

cardiagn.com

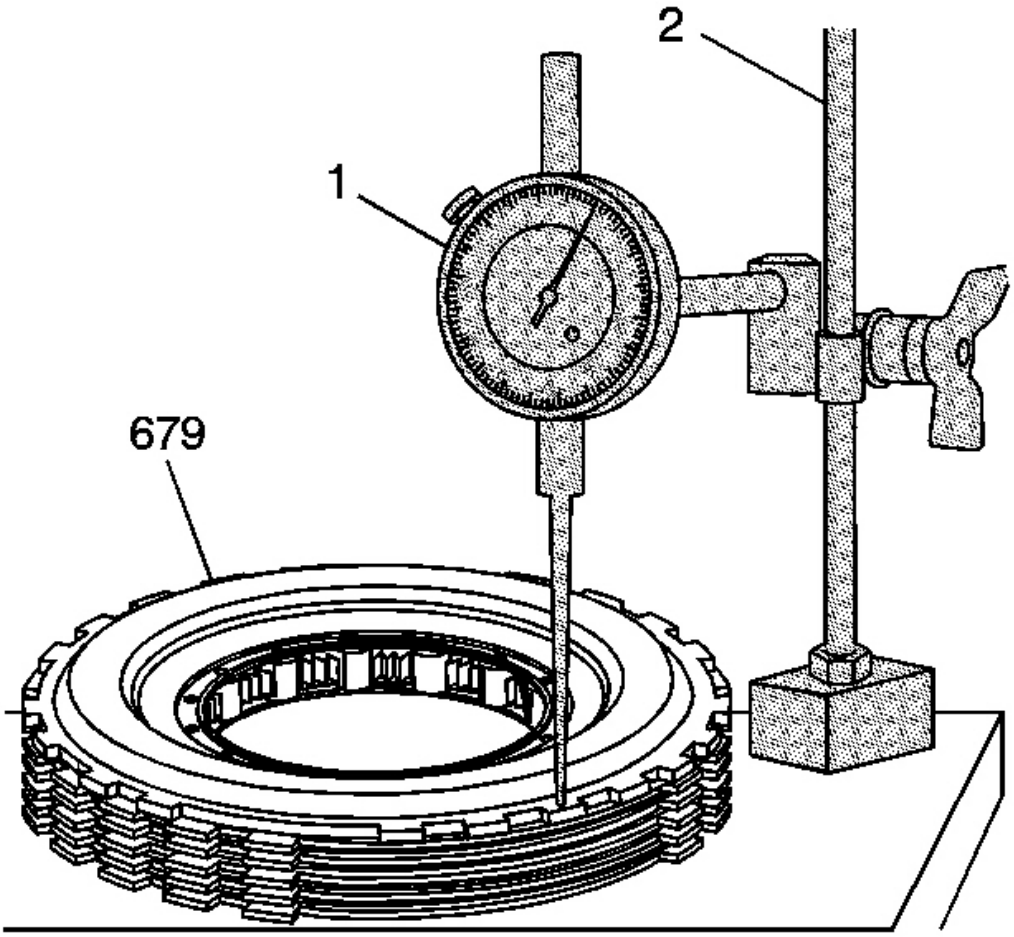

Fig. 113: Measuring Clutch Pack Height With J 8001
Courtesy of GENERAL MOTORS CORP.

3. Using the **J 8001** (1) and the **J 26900-13** (2), measure the height of the clutch pack from the work surface to the top of the low and reverse clutch support (679).
4. Refer to **Low and Reverse Clutch Spacer Plate Selection** in order to select the proper thickness of the low and reverse clutch selective spacer plate (682B).

cardiagn.com

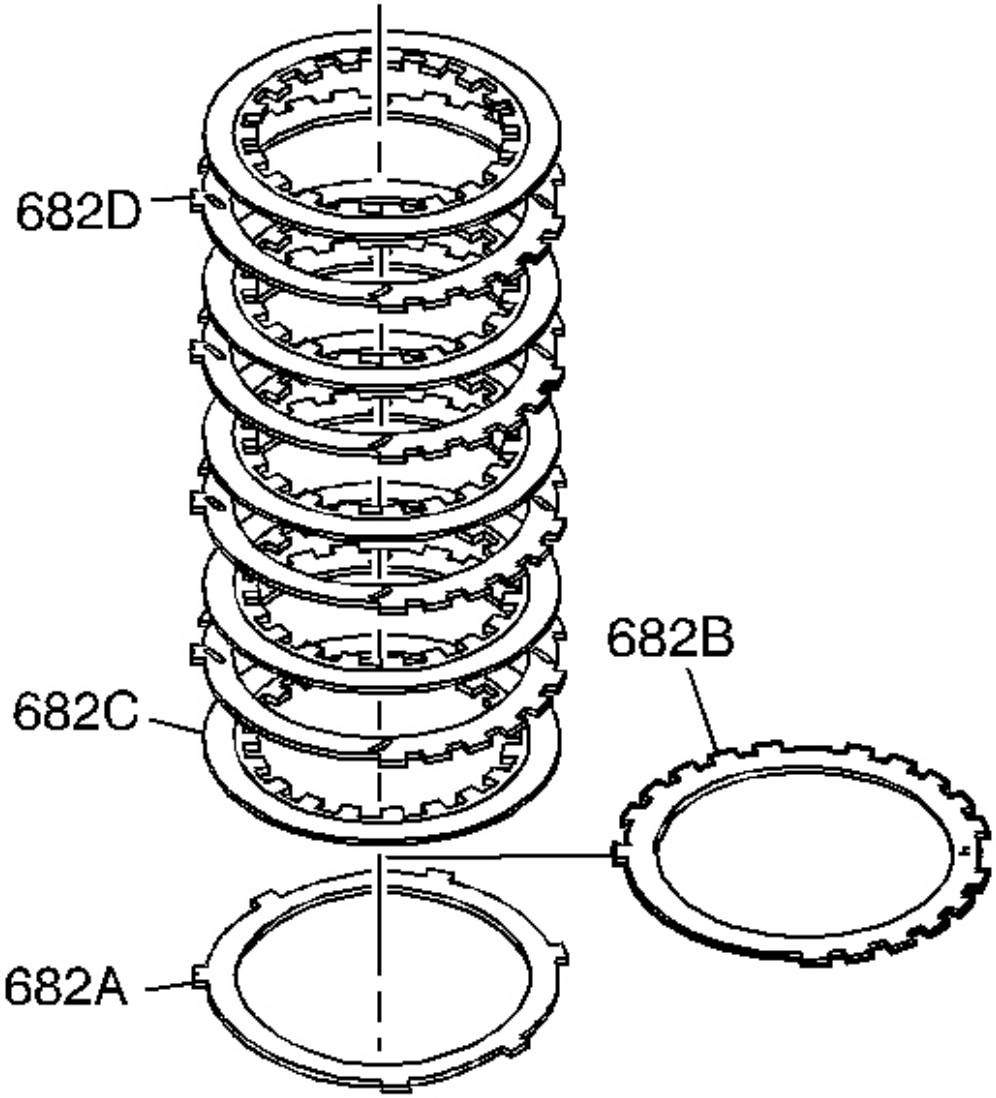

Fig. 114: View Of Clutch Pack
Courtesy of GENERAL MOTORS CORP.

5. Install the proper selective spacer plate (682B) between the wave plate (682A) and the first fiber plate assembly (682C), with the identification side up.

   The overall height for the clutch pack including the selective spacer plate should be 29.22-29.90 mm (1.15-1.18 in).

cardiagn.com

LOW AND REVERSE CLUTCH PLATES INSTALLATION

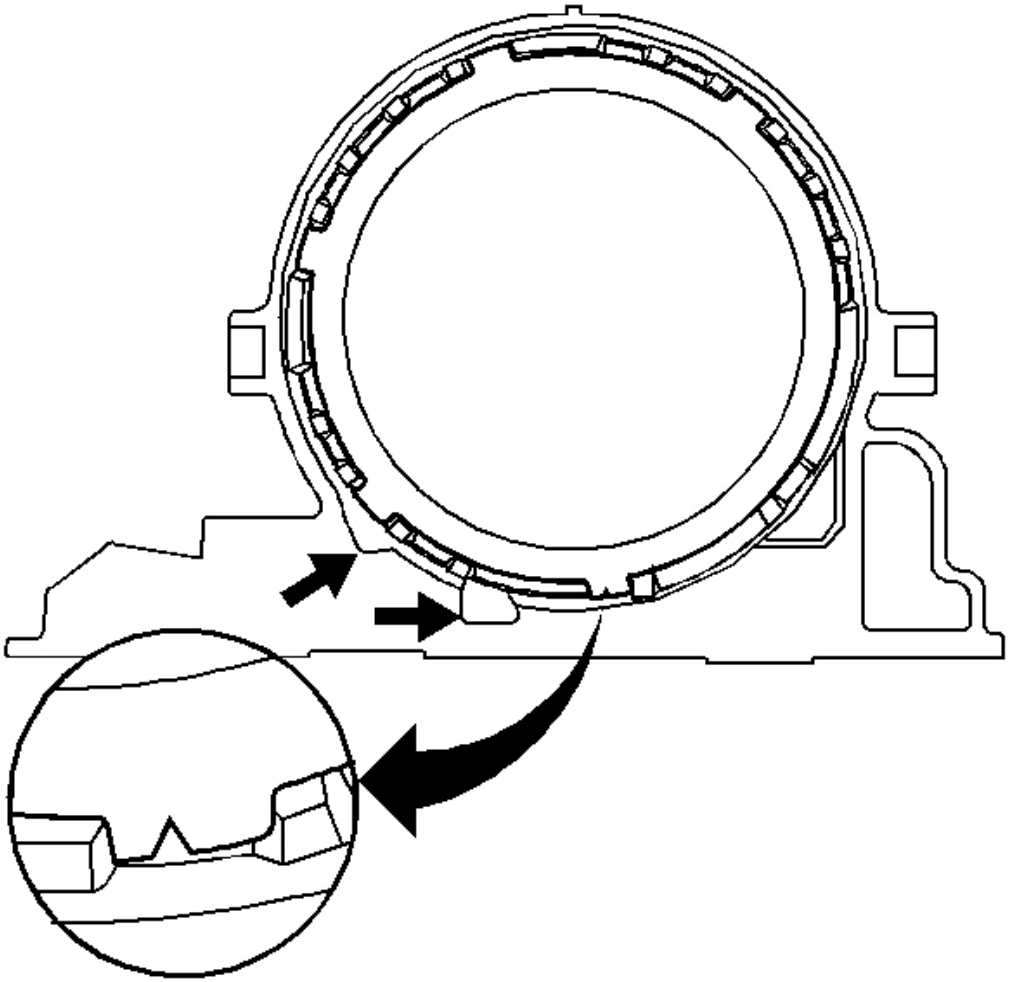

Fig. 115: Illustrating Steel Plate Spline Alignment
Courtesy of GENERAL MOTORS CORP.

1. Install the waved plate.
2. Install the correct selective spacer plate (from the selection procedure).
3. Install the five fiber plate assemblies and four steel plates, starting with one fiber plate assembly and alternating with steel.
4. Index the steel plate splines in the case as shown.

LOW AND REVERSE CLUTCH SUPPORT DISASSEMBLE

cardiagn.com

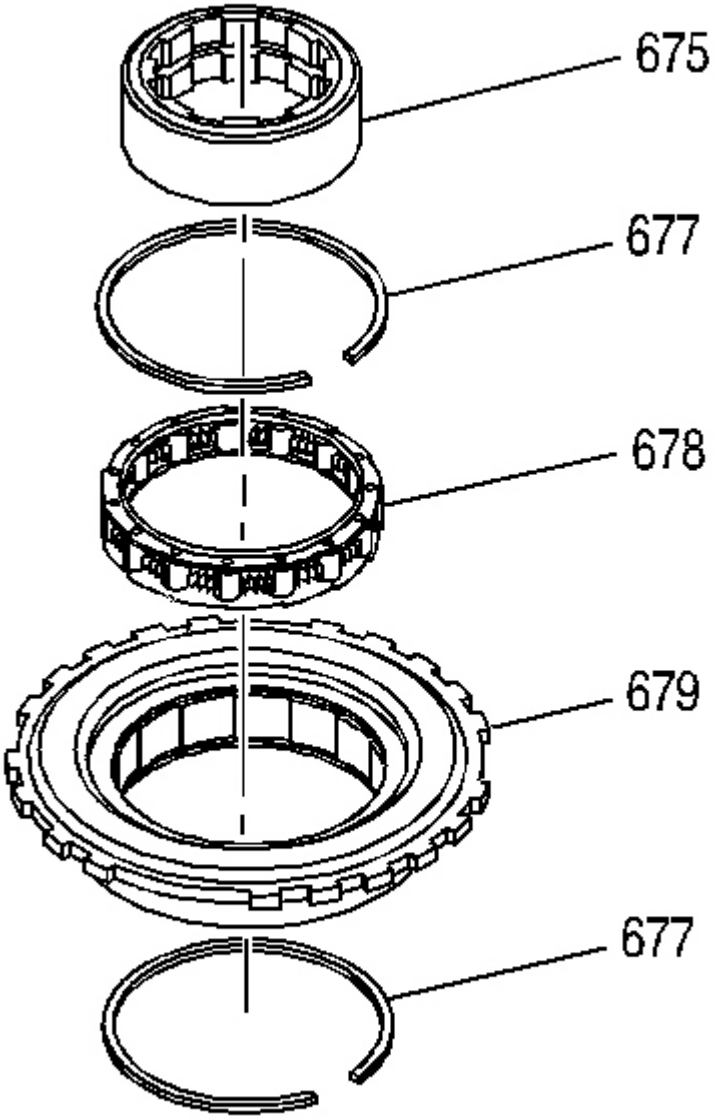

Fig. 116: Low and Reverse Clutch Support Components
Courtesy of GENERAL MOTORS CORP.

1. Remove the low and reverse roller clutch race (675) from the low and reverse clutch support (679). Inspect the race for damage and surface finish.
2. Remove the low and reverse roller retainer ring (677) and the low and reverse roller clutch assembly (678). Inspect the roller clutch assembly for damaged rollers and broken springs.

cardiagn.com

3. Inspect the low and reverse clutch support (679) for loose cam and cam surface finish. Check the support for cracks and damaged lugs.

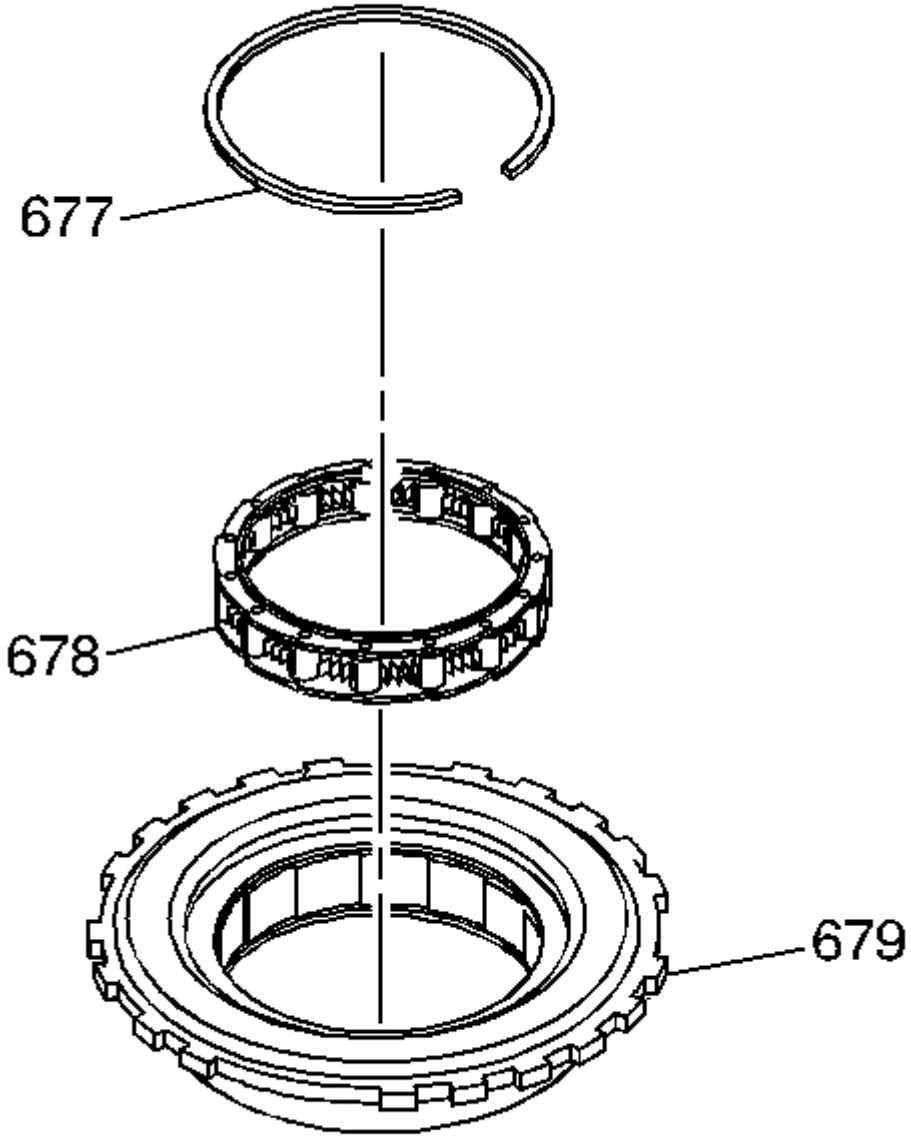

Fig. 117: Identifying Low And Reverse Roller Clutch Assembly
Courtesy of GENERAL MOTORS CORP.

4. Clean and install the low and reverse roller clutch assembly (678) into the low and reverse clutch support

cardiagn.com

(679). Install the low and reverse retainer ring (677).

LOW AND REVERSE CLUTCH SUPPORT INSTALLATION

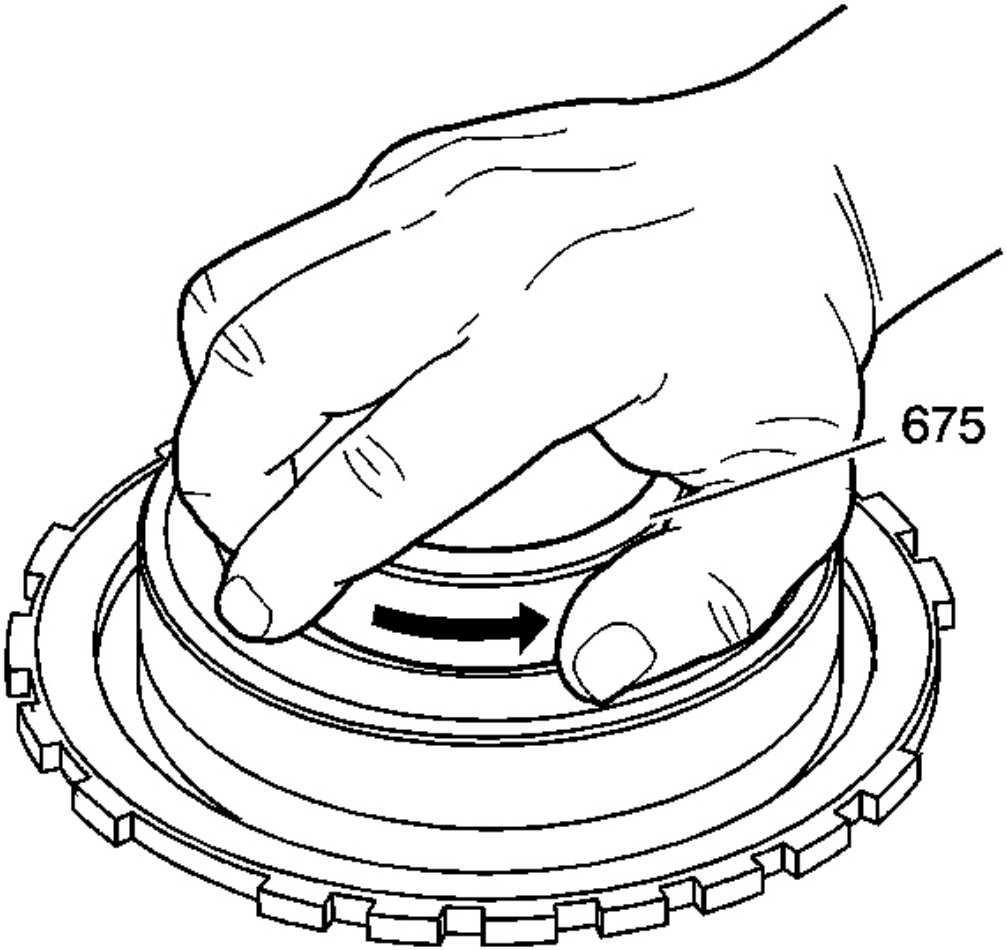

Fig. 118: Checking Low And Reverse Roller Clutch Race Rotation
Courtesy of GENERAL MOTORS CORP.

1. Install the low and reverse roller clutch race (675). Simultaneously, turn and insert the race.
2. Rotate the race in order to verify proper operation. The race should only rotate in one direction.

cardiagn.com

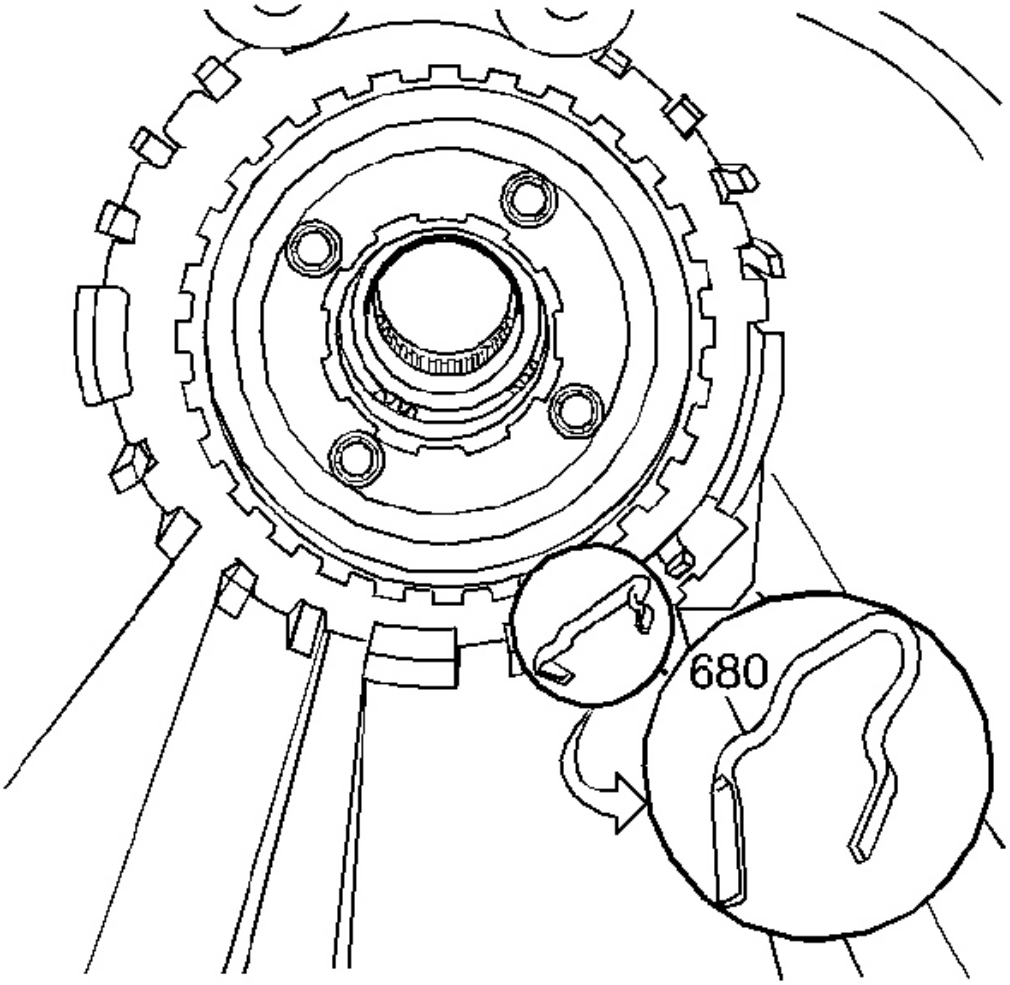

Fig. 119: View Of Low And Reverse Clutch Support Retainer Spring
Courtesy of GENERAL MOTORS CORP.

3. Install the (680) into the case.

cardiagn.com

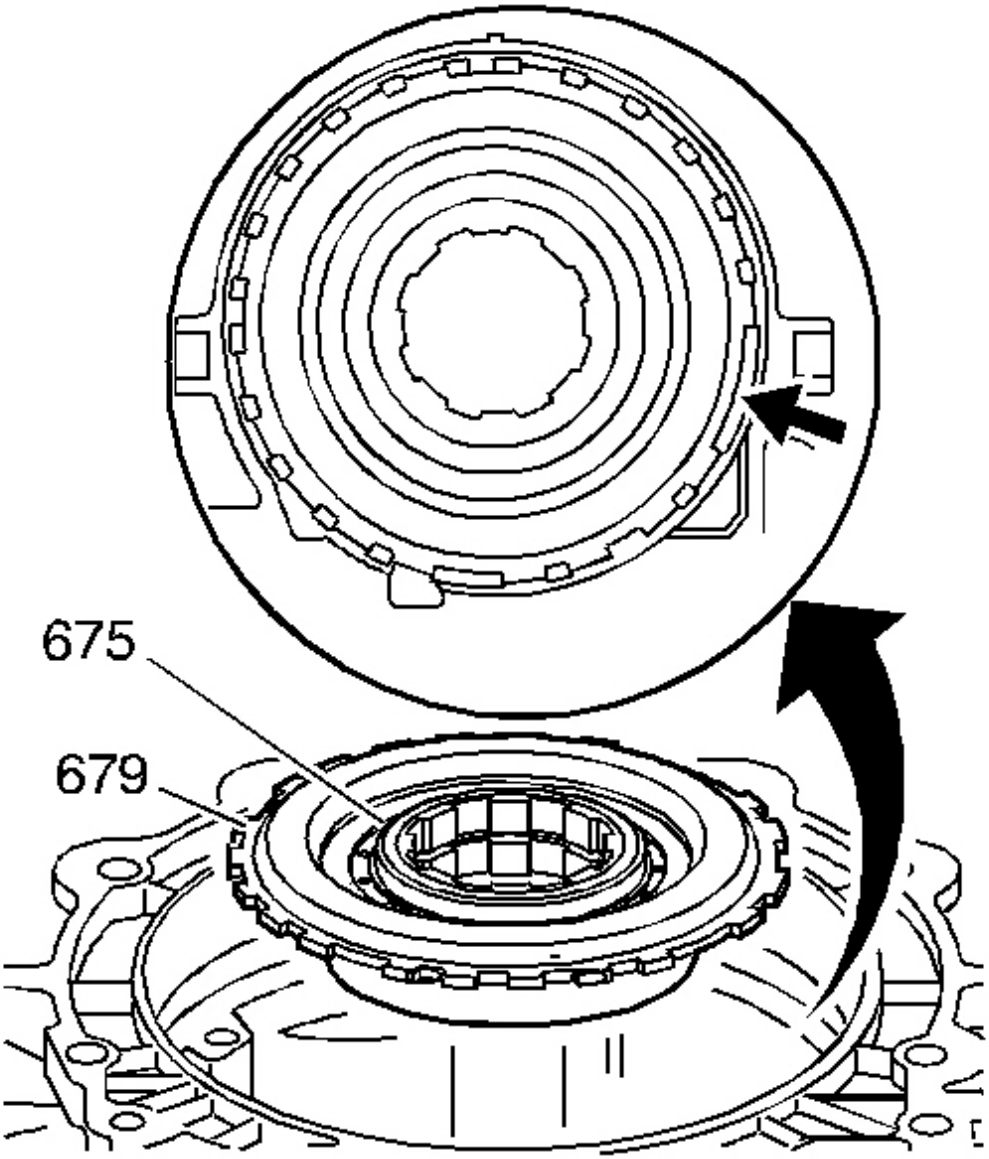

Fig. 120: Aligning Wide Case Lug With Wide Low And Reverse Clutch Support Notch
Courtesy of GENERAL MOTORS CORP.

IMPORTANT: Align the wide low and reverse clutch support notch with the wide case lug.

cardiagn.com

4. Install the low and reverse clutch support (679), roller clutch and roller clutch race (675) assembly into the case. Position the hub side down during the installation.

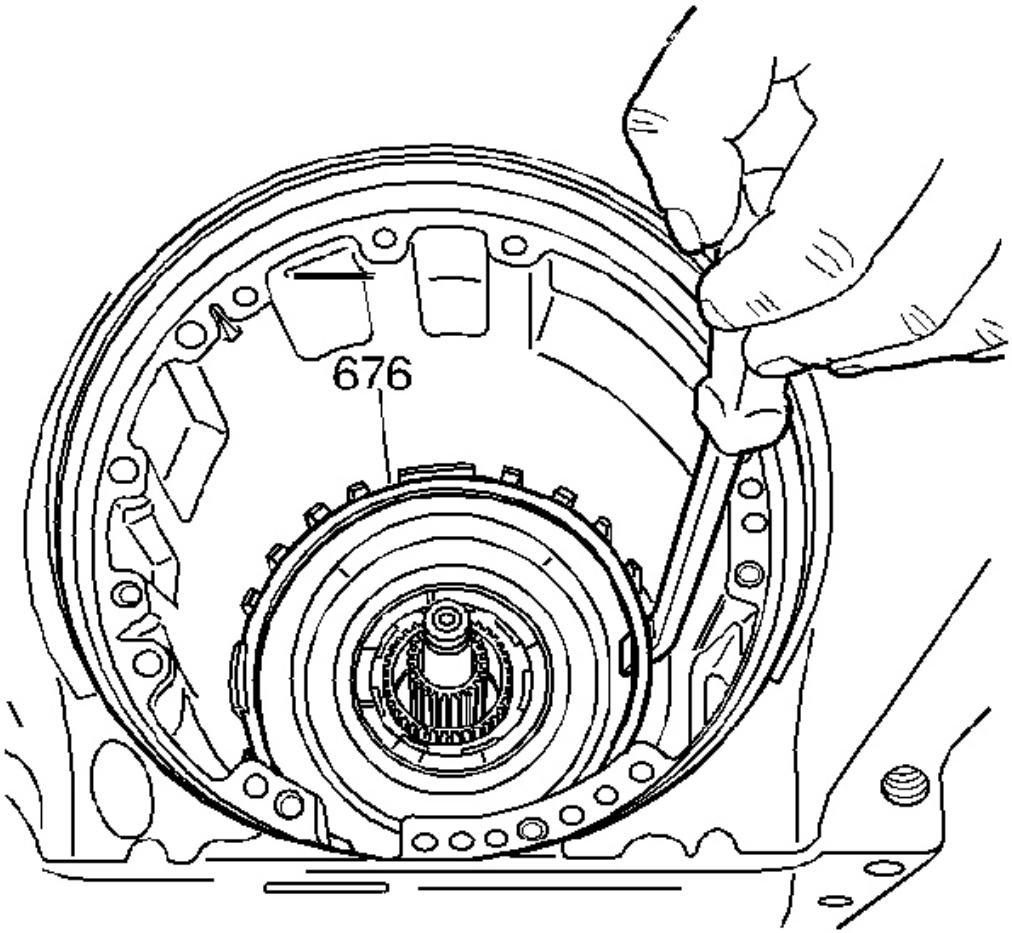

Fig. 121: Identifying Low And Reverse Support Retainer Ring
Courtesy of GENERAL MOTORS CORP.

IMPORTANT: Align the opening of the low and reverse clutch support retainer ring (676) with the low and reverse clutch support retainer spring (680). It is important that the low and reverse clutch support retainer ring opening is centered around the retainer spring. This will allow the retainer ring to fully seat in all of the transmission case lugs. If the retainer ring lays up against the retainer spring, the retainer ring will not fully seat. Possible damage to the transmission case lugs can occur if the low and reverse

cardiagn.com

clutch support retainer ring is not fully seated in the transmission case lug.

5. Install the low and reverse support retainer ring (676) into the case.

REACTION SUN GEAR INSTALLATION

Tools Required

- **J 34196-B** Transmission Bushing Service Set. See **Special Tools and Equipment** .
- J 8092 Universal Driver Handle - 3/4 in

IMPORTANT: Do not remove the retaining ring (671), except to replace it.

cardiagn.com

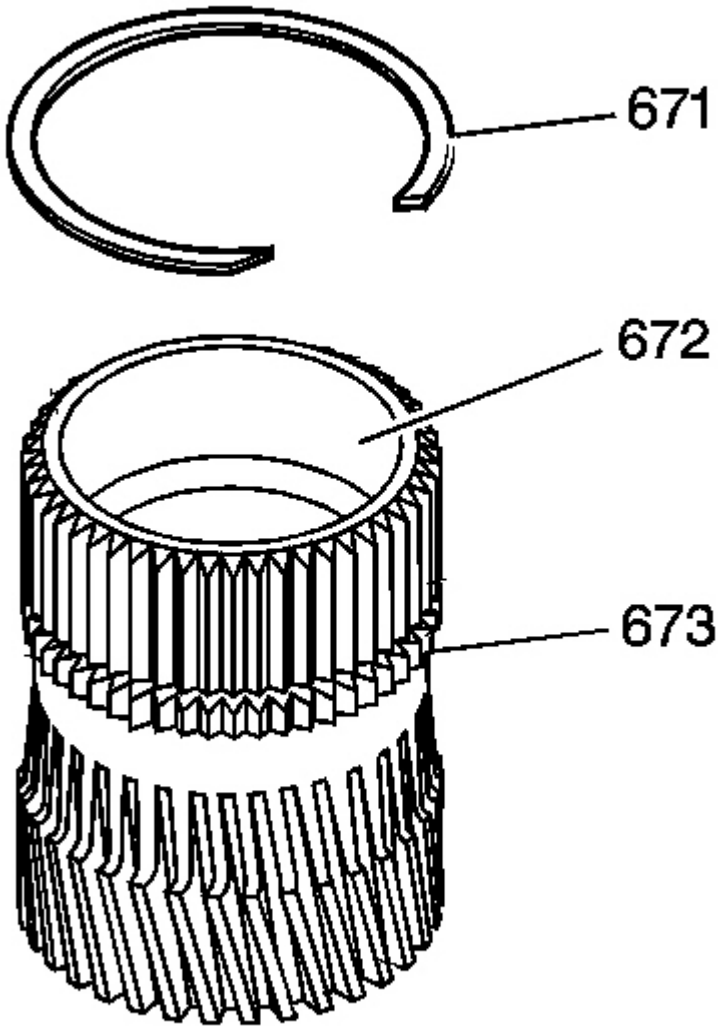

Fig. 122: Inspection Areas On Reaction Sun Gear
Courtesy of GENERAL MOTORS CORP.

1. Inspect the reaction sun gear (673) for the following defects:
    - Nicks
    - Scores
    - Damaged spline or teeth
    - A worn bushing (672)
    - A loose or weak retaining ring (671)

cardiagn.com

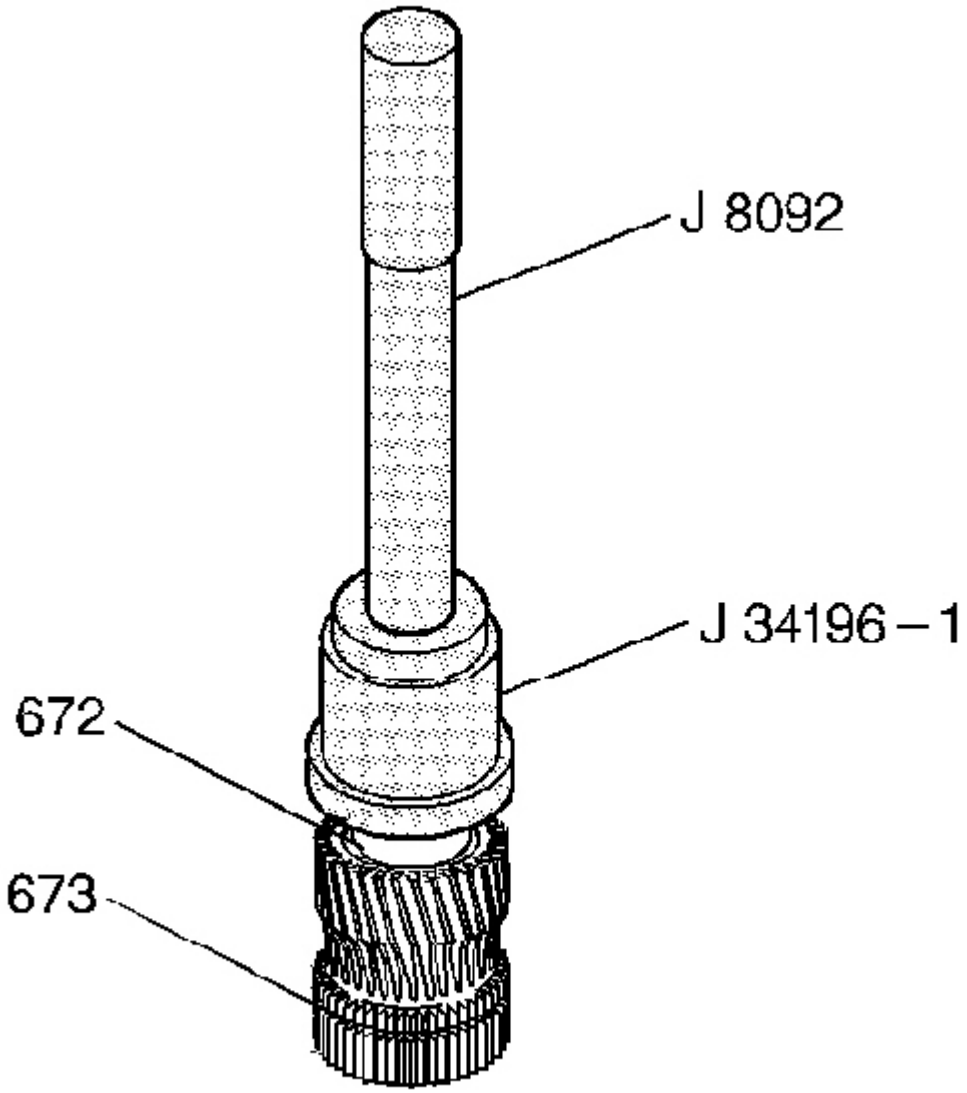

Fig. 123: Removing Reaction Sun Bushing From Reaction Sun Gear
Courtesy of GENERAL MOTORS CORP.

2. If the reaction sun gear bushing (672) needs replacement, use **J 34196-1** which is part of kit **J 34196-B** with J 8092 to remove the reaction sun bushing (672) from the reaction sun gear (673).

cardiagn.com

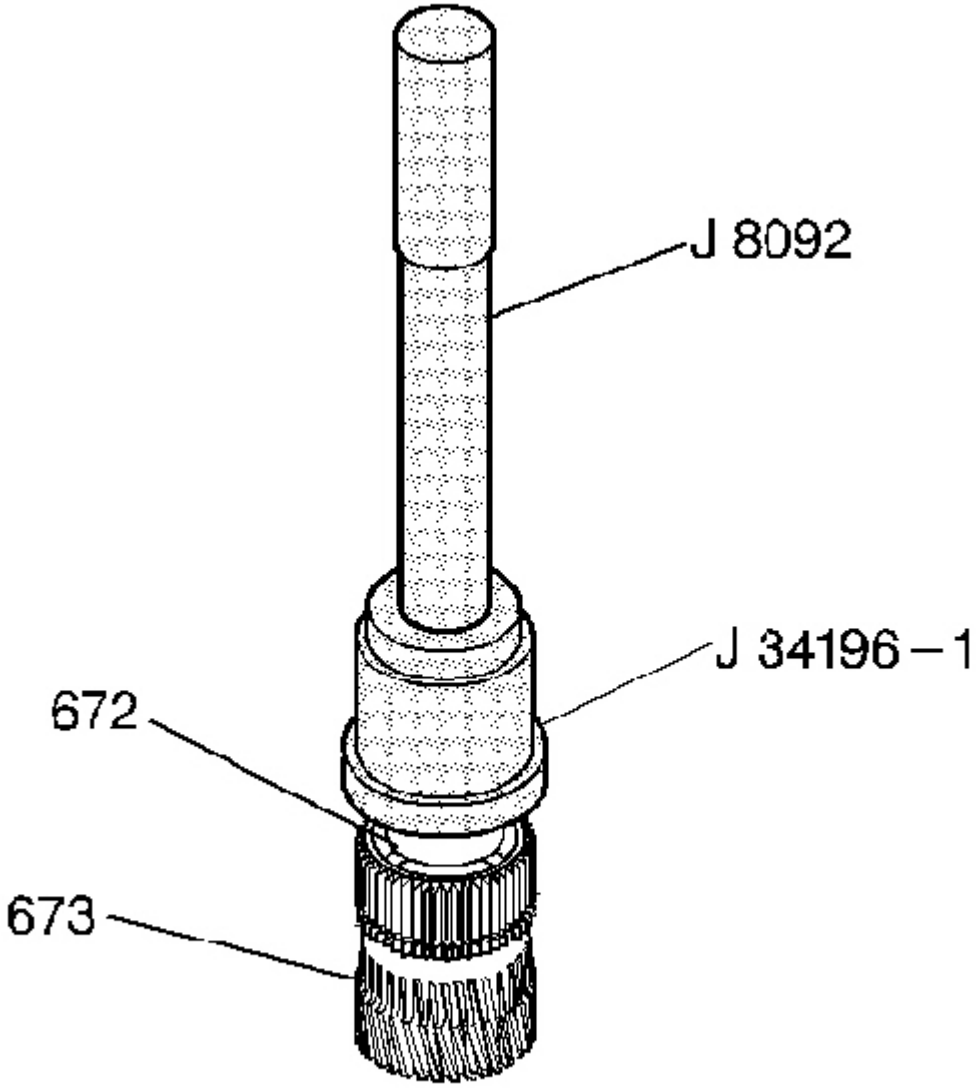

Fig. 124: Installing Reaction Sun Bushing
Courtesy of GENERAL MOTORS CORP.

3. Using **J 34196-1** which is part of kit **J 34196-B** with J 8092 , install a new reaction sun bushing (672) into the reaction sun gear (673).

cardiagn.com

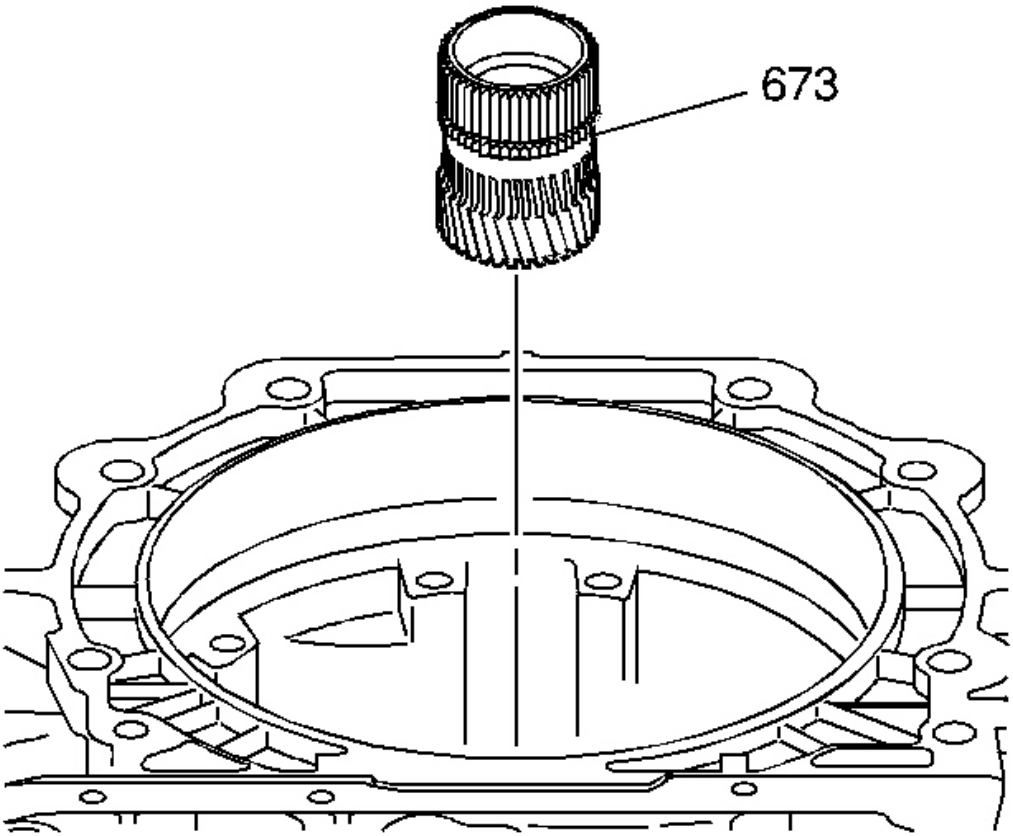

Fig. 125: Identifying Reaction Sun Gear
Courtesy of GENERAL MOTORS CORP.

4. Install the reaction sun gear (673) into the reaction carrier.

cardiagn.com

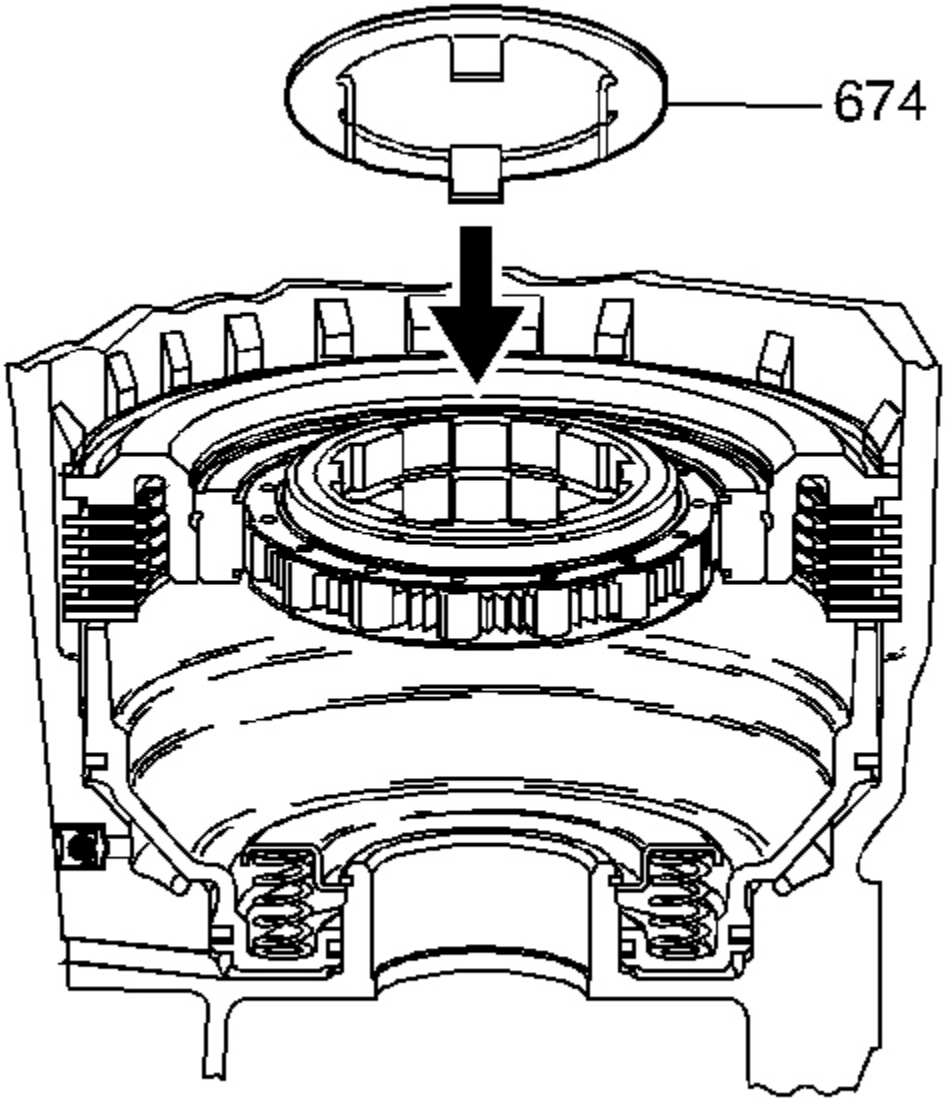

Fig. 126: Aligning Thrust Washer Tangs With Low And Reverse Roller Clutch Race Splines
Courtesy of GENERAL MOTORS CORP.

5. Install the thrust washer (674) with the tangs pointing down. Index the tangs of the thrust washer with the splines of the low and reverse roller clutch race.

REACTION CARRIER SHAFT REPLACEMENT

cardiagn.com

Removal Procedure

Tools Required

- J 8092 Universal Driver Handle - 3/4 in - 10
- **J 7004-A** Universal Remover. See **Special Tools and Equipment** .
- **J 23907** Slide Hammer with Bearing Adapter. See **Special Tools and Equipment** .
- **J 25019-14** Stator Pump Bushing Remover. See **Special Tools and Equipment** .
- **J 29369-2** Bushing and Bearing Remover 2-3 in. See **Special Tools and Equipment** .
- **J 34196-B** Transmission Bushing Service Set. See **Special Tools and Equipment** .

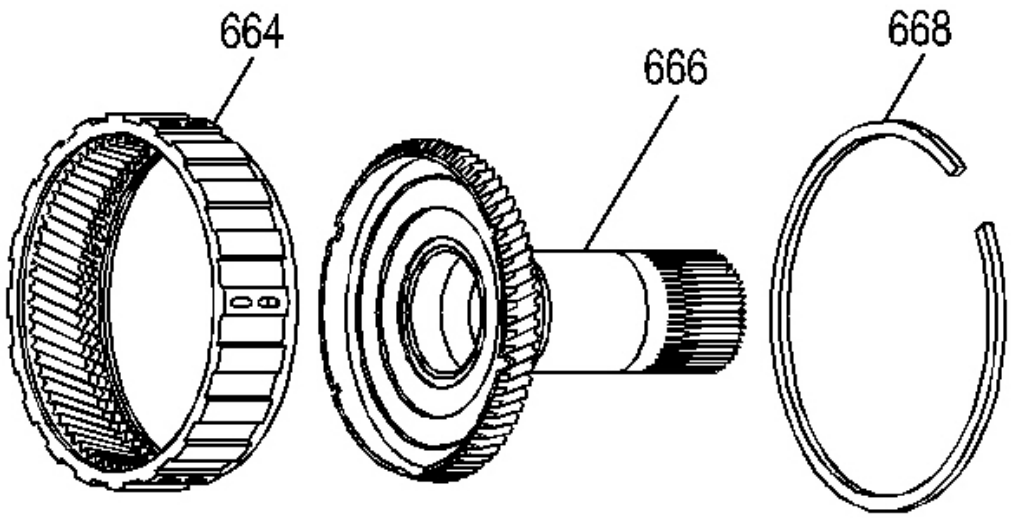

Fig. 127: Identifying Reaction Carrier Components
Courtesy of GENERAL MOTORS CORP.

1. Remove the reaction carrier shaft/internal gear retainer (668) and the reaction carrier shaft (666) from the input internal gear (664).
2. Inspect the reaction carrier shaft (666) and the input internal gear (664) for the following defects:
    - Scoring
    - Cracking
    - Damaged or worn bushings
    - A cracked shaft
    - A damaged spline

cardiagn.com

- Damaged gear teeth

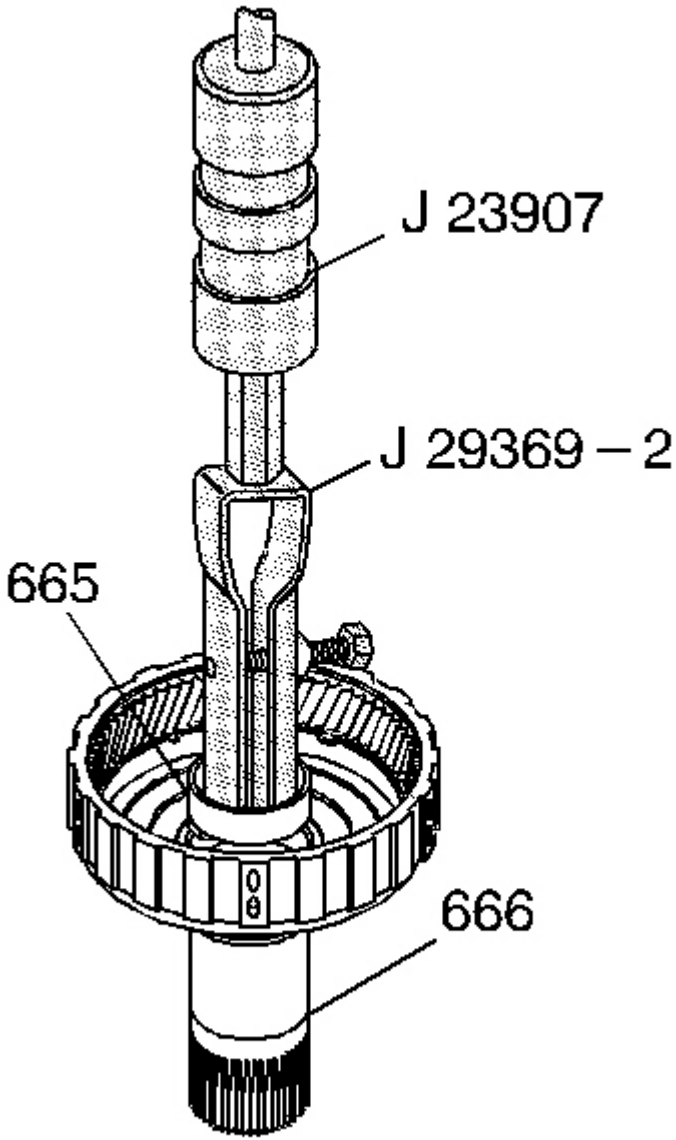

Fig. 128: Removing Reaction Carrier Shaft Front Bushing
Courtesy of GENERAL MOTORS CORP.

3. Using**J 29369-2** with **J 23907** , remove the reaction carrier shaft front bushing (665).

cardiagn.com

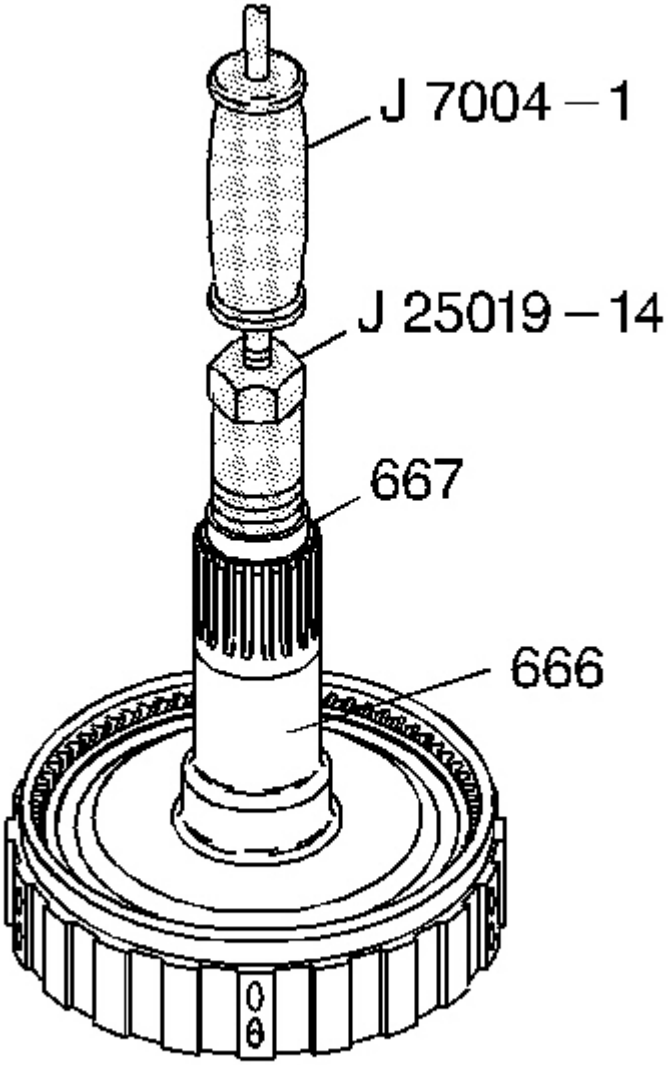

Fig. 129: Using J 25019-14 & J 25019-14 To Remove Reaction Carrier Shaft Rear Bushing
Courtesy of GENERAL MOTORS CORP.

4. Using**J 25019-14** with **J 7004-A** , remove the reaction carrier shaft rear bushing (667).

Installation Procedure

cardiagn.com

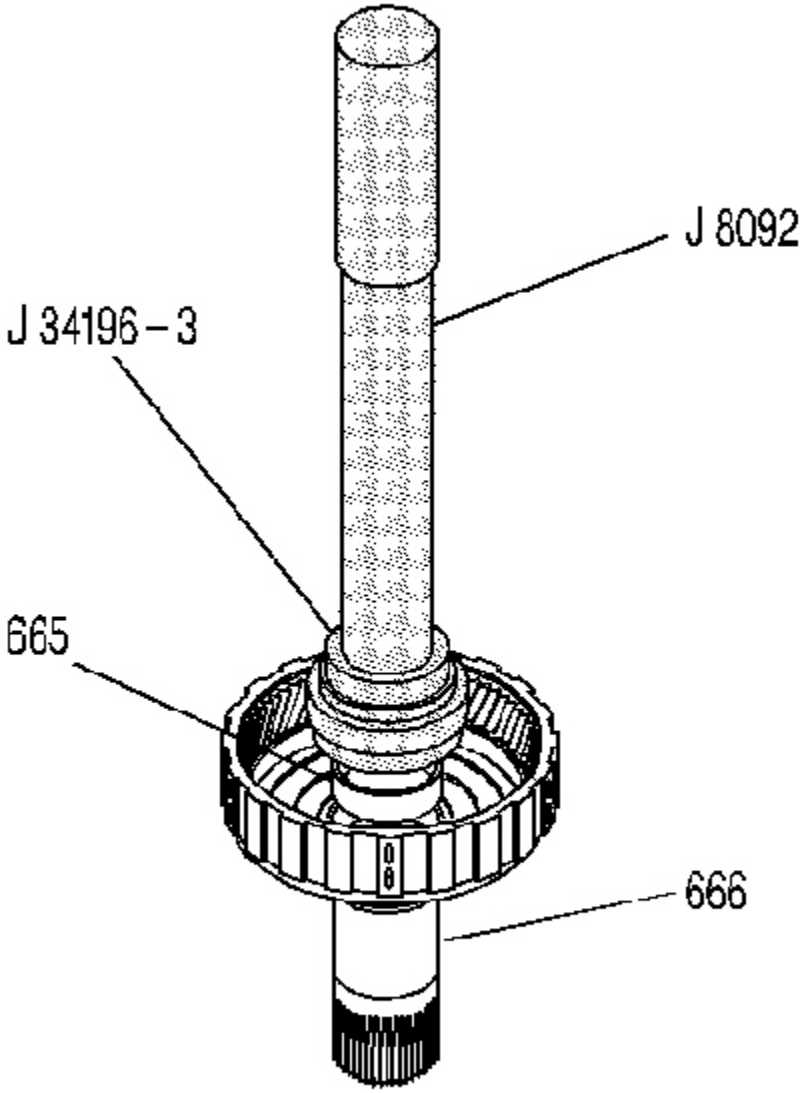

Fig. 130: Installing Reaction Carrier Shaft Front Bushing
Courtesy of GENERAL MOTORS CORP.

1. Using **J 34196-3** which is part of kit **J 34196-B** with J 8092 , install a new reaction carrier shaft front bushing (665).

cardiagn.com

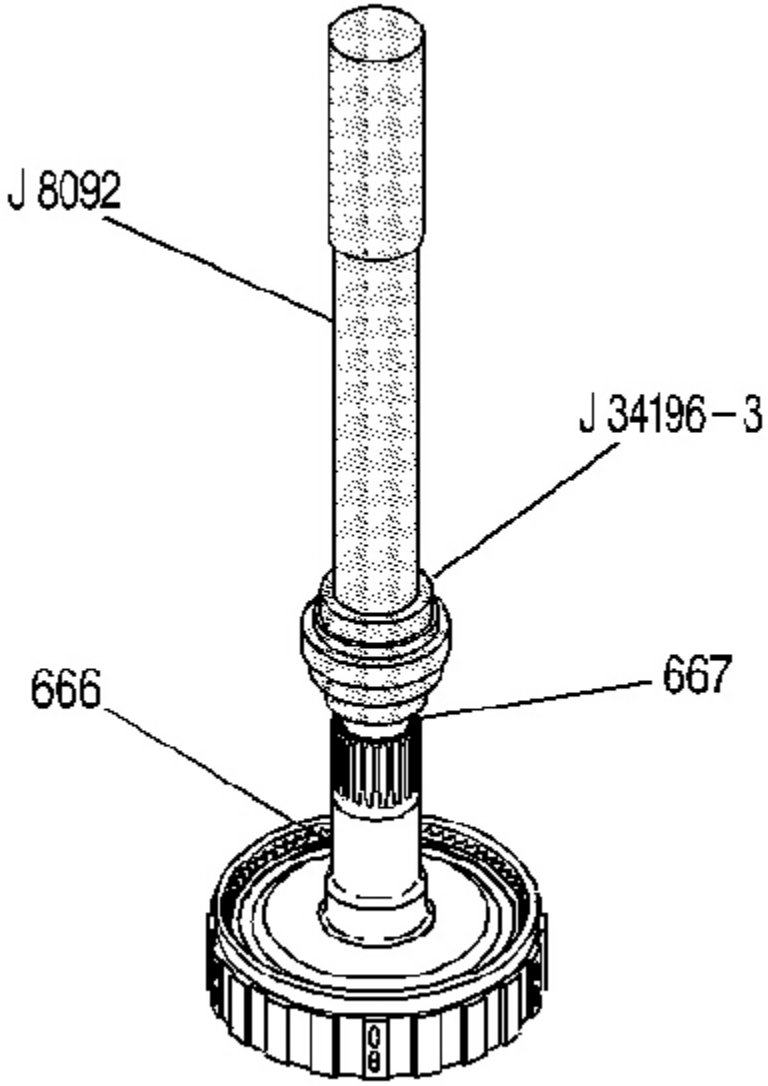

Fig. 131: View Of Reaction Carrier Shaft Rear Bushing
Courtesy of GENERAL MOTORS CORP.

2. Using **J 34196-3** which is part of kit **J 34196-B** with J 8092 , install a reaction carrier shaft rear bushing (667).

INPUT INTERNAL GEAR, REACTION SHAFT AND SHELL INSTALLATION

Tools Required

cardiagn.com

J 36850 Transjel Lubricant. See **Special Tools and Equipment** .

Installation Procedure

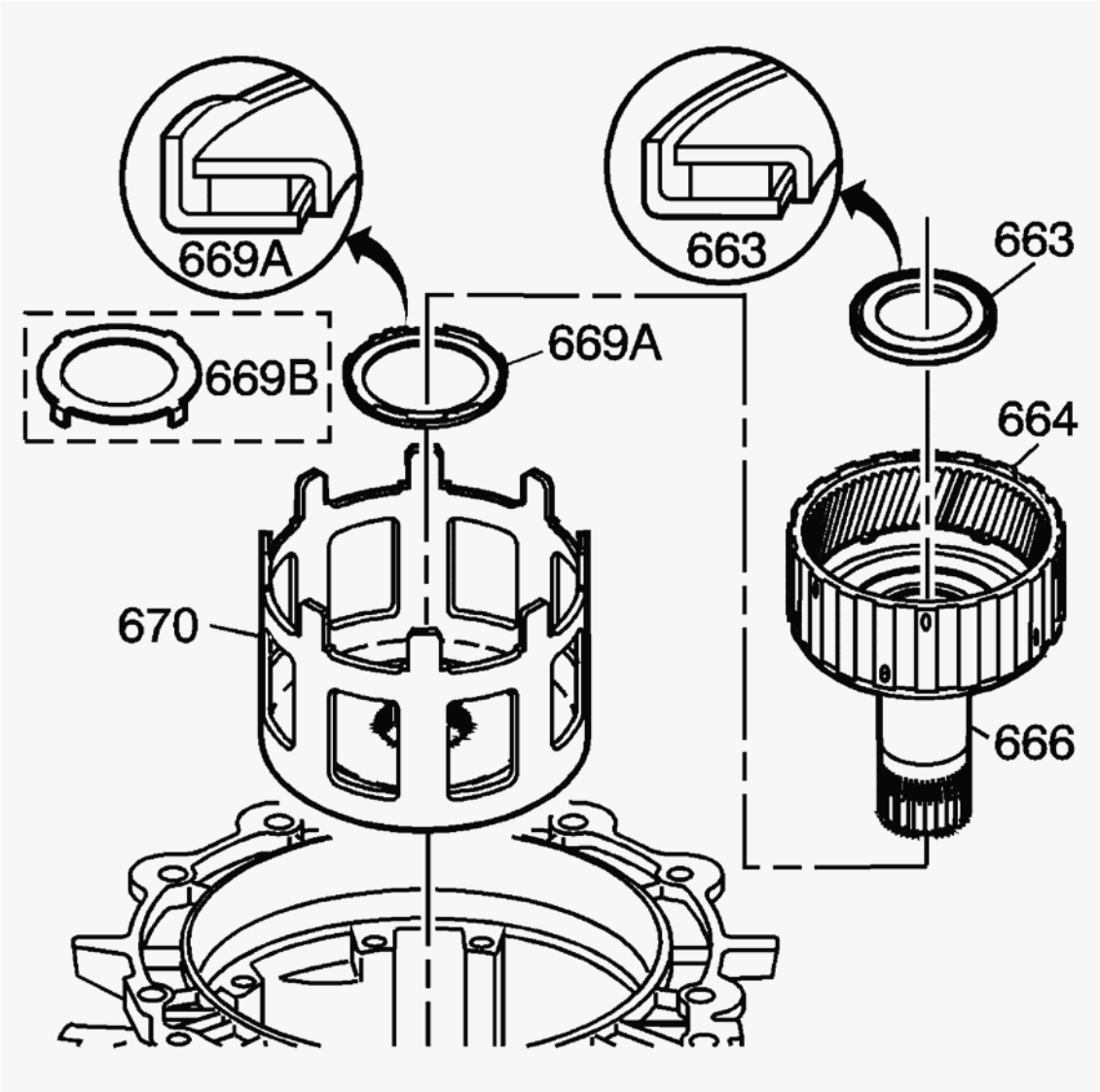

Fig. 132: Installing Reaction Sun Shell Into Reaction Sun Gear
Courtesy of GENERAL MOTORS CORP.

1. Install the reaction sun shell (670) into the reaction sun gear.
2. Depending on model, install either a thrust bearing (669A) or thrust washer (669B) as follows:
   - Install thrust washer (669B), tangs down into the holes in the reaction sun shell.
   - Install the thrust bearing (669A) using **J 36850** onto the reaction carrier shaft, tangs up, towards the shaft.
3. Install the input internal gear (664) and reaction carrier shaft (666) assembly into the sun gear shell. Index the reaction carrier shaft spline into the reaction carrier.

cardiagn.com

4. Install the input carrier to reaction shaft thrust bearing assembly (663).

INTERNAL TRANSMISSION SPEED SENSOR ROTOR REPLACEMENT

Removal Procedure

Tools Required

- **J 8433** Two Jaw Puller. See **Special Tools and Equipment** .
- **J 21427-A** Speedometer Gear Puller Adapter. See **Special Tools and Equipment** .
- **J 36352** Speed Sensor Rotor Installer Kit. See **Special Tools and Equipment** .

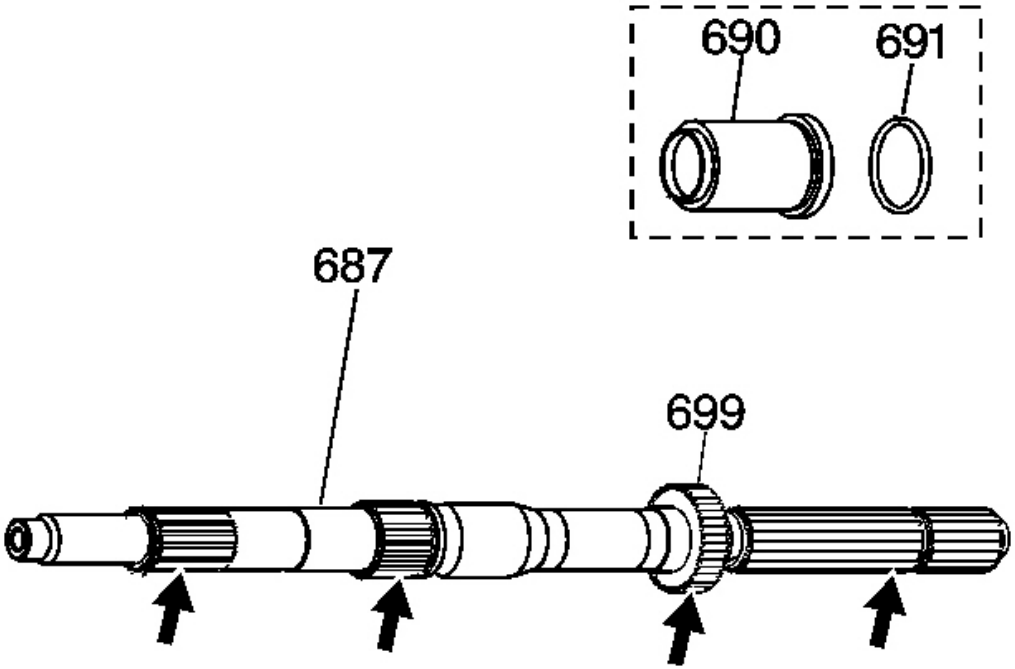

Fig. 133: Identifying Output Shaft Seal & Output Shaft Sleeve
Courtesy of GENERAL MOTORS CORP.

1. Inspect the internal transmission speed sensor rotor (699) for cracks or damaged teeth.
2. Inspect all splines on the output shaft (687) for cracks or damaged splines.
3. Remove the output shaft seal (691) and the output shaft sleeve (690) (model dependent) 2WD units only.

cardiagn.com

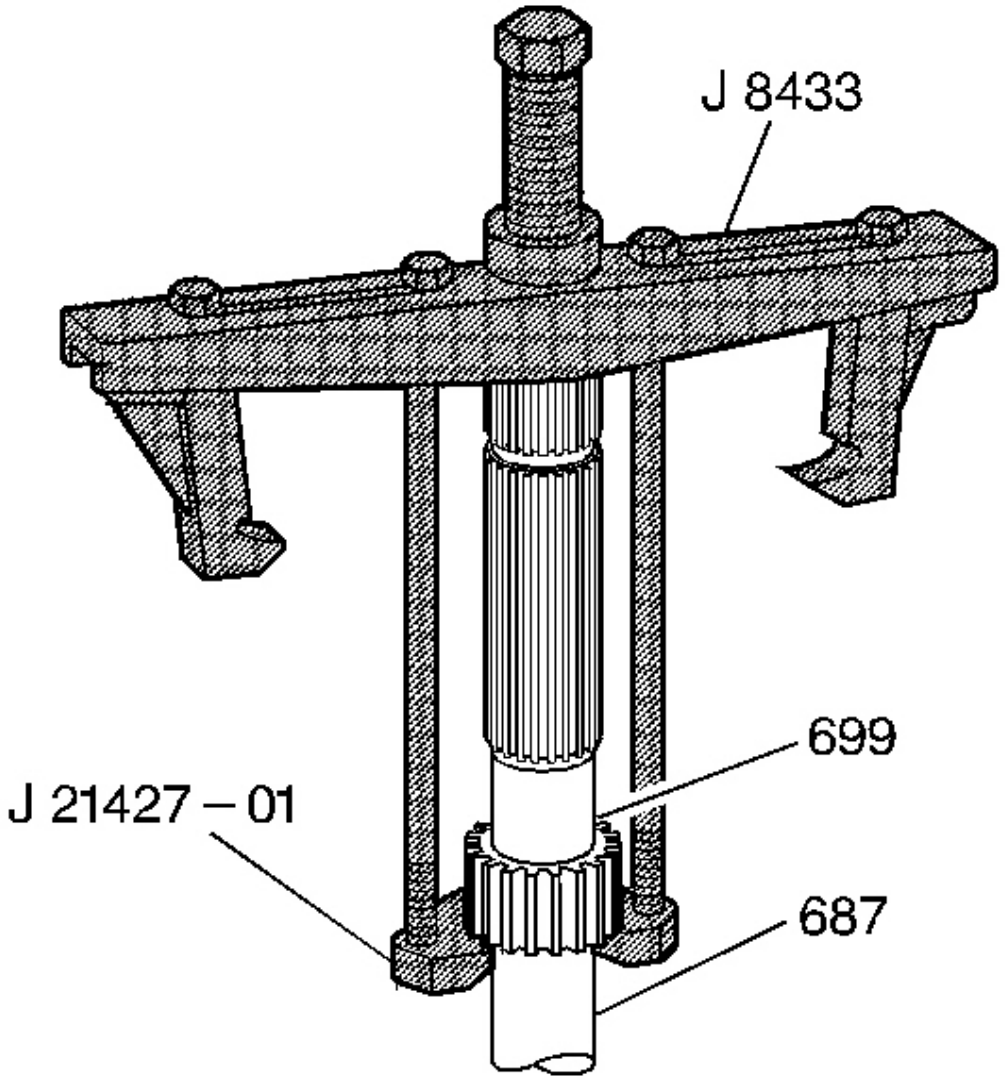

Fig. 134: Using J 8433 & J 21427-01 To Remove Internal Speed Sensor Rotor
Courtesy of GENERAL MOTORS CORP.

4. If the internal speed sensor rotor (699) is damaged, replace it.
5. Using **J 8433** with**J 21427-01** , remove the internal speed sensor rotor (699) from the output shaft (687).

Installation Procedure

cardiagn.com

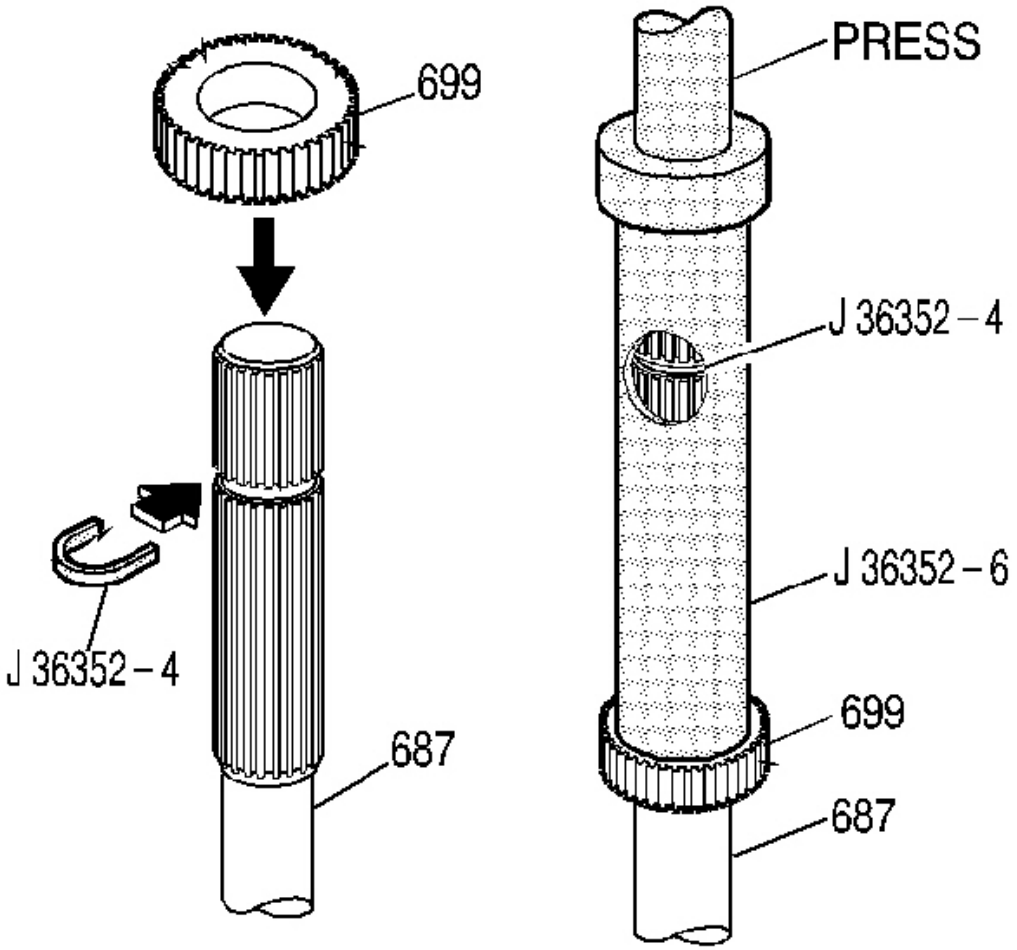

Fig. 135: Pressing Internal Speed Sensor Rotor Onto Output Shaft
Courtesy of GENERAL MOTORS CORP.

IMPORTANT: Do not re-use an internal speed sensor rotor that has been removed.

1. Slip a new internal speed sensor rotor (699) over the output shaft splines.
2. Install the **J 36352-4** in the groove on the output shaft (687).
3. Place the **J 36352-6** on the output shaft (687). Press on the **J 36352-6** until it contacts the **J 36352-4** in the window (the **J 36352-4** will be a positive stop for the **J 36352-6**).

OUTPUT SHAFT INSTALLATION

Tools Required

cardiagn.com

J 29837-A Output Shaft Support Fixture. See **Special Tools and Equipment** .

Installation Procedure

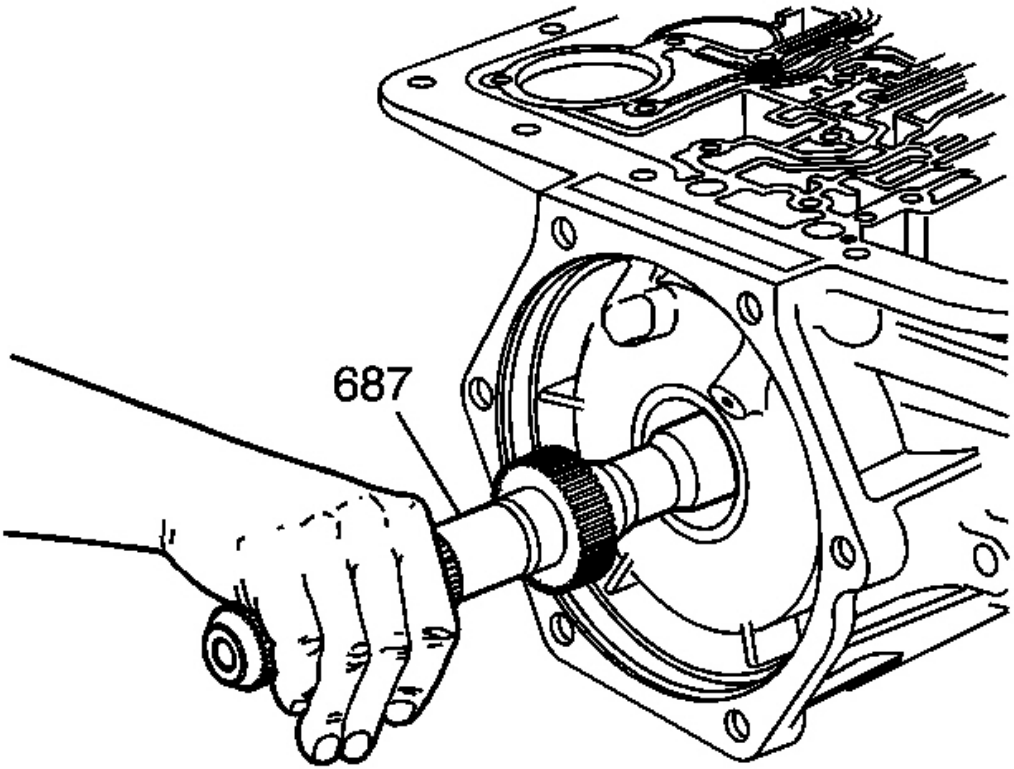

Fig. 136: View Of Output Shaft
Courtesy of GENERAL MOTORS CORP.

IMPORTANT: It is important to note that the input shaft may need a light tap to fully seat into position. If the input shaft is not completely engaged, the output shaft to input carrier retainer (661) will not seat.

1. Install the output shaft (687).

cardiagn.com

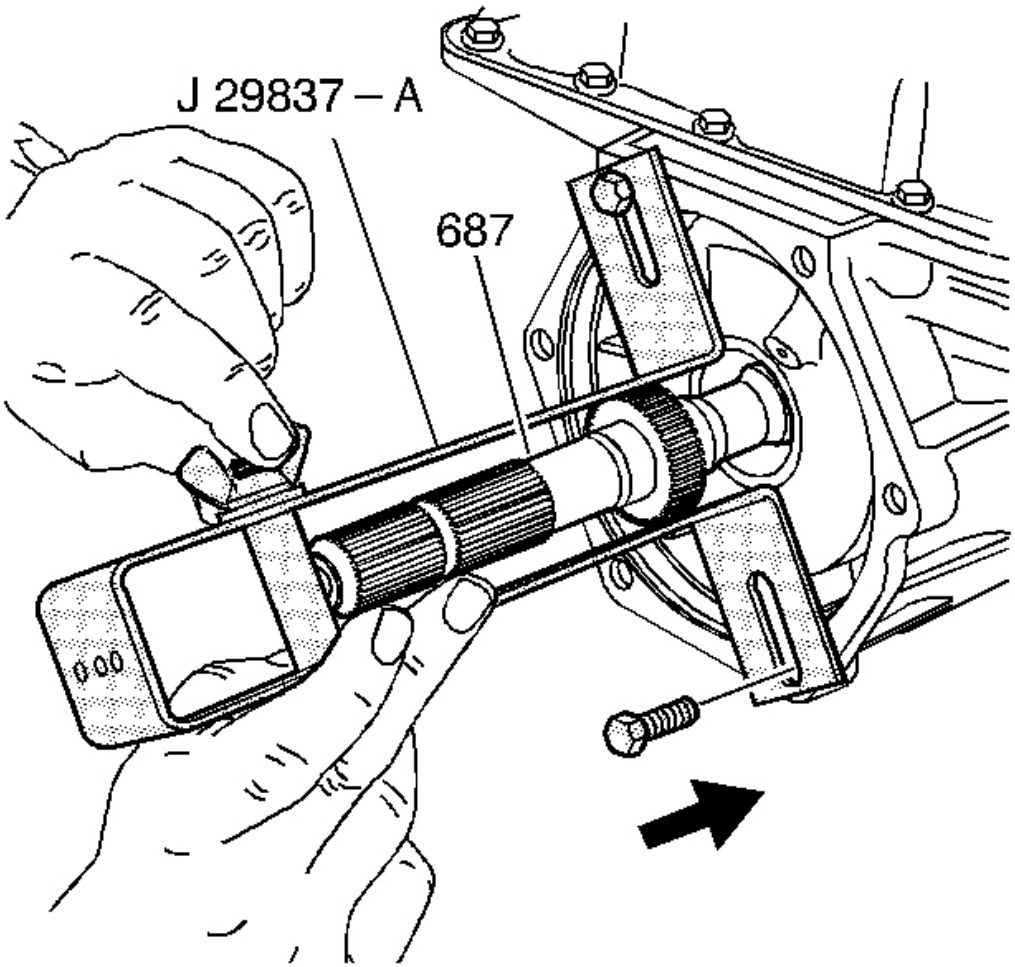

Fig. 137: Installing J 29837-A
Courtesy of GENERAL MOTORS CORP.

2. Install the **J 29837-A** .

INPUT CARRIER INSPECTION

cardiagn.com

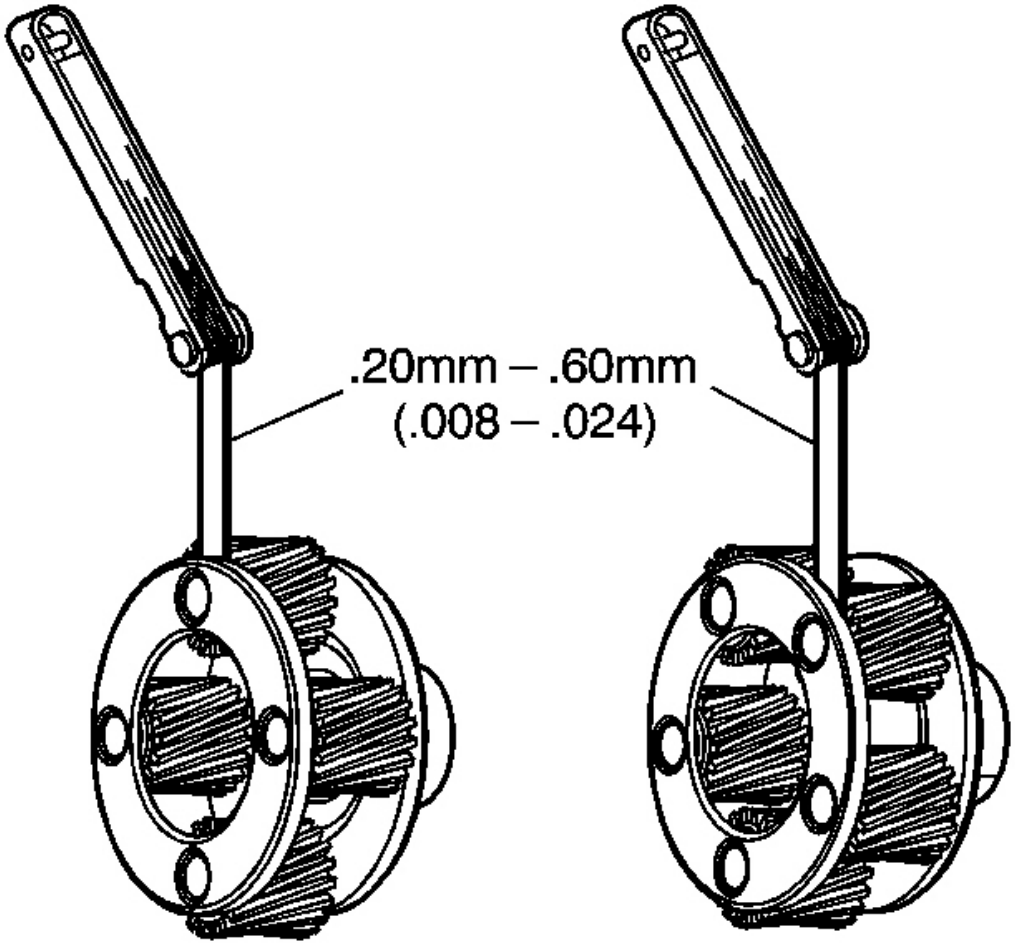

Fig. 138: Identifying Input Carrier Pinion End Play Measurements
Courtesy of GENERAL MOTORS CORP.

IMPORTANT: Check end play on each pinion. Clearance is the same for 4 or 5 pinion design.

1. Check the input carrier pinion end play. The end play must not exceed 0.61 mm (0.024 in).
2. Inspect the input carrier for pinion gear damage, proper pin stake and keystoned pinion gears. Pinions must rotate freely.

INPUT SUN GEAR BUSHINGS REPLACEMENT

Removal Procedure

cardiagn.com

Tools Required

- J 8092 Universal Driver Handle - 3/4 in - 10
- **J 34196-B** Transmission Bushing Service Set. See **Special Tools and Equipment** .

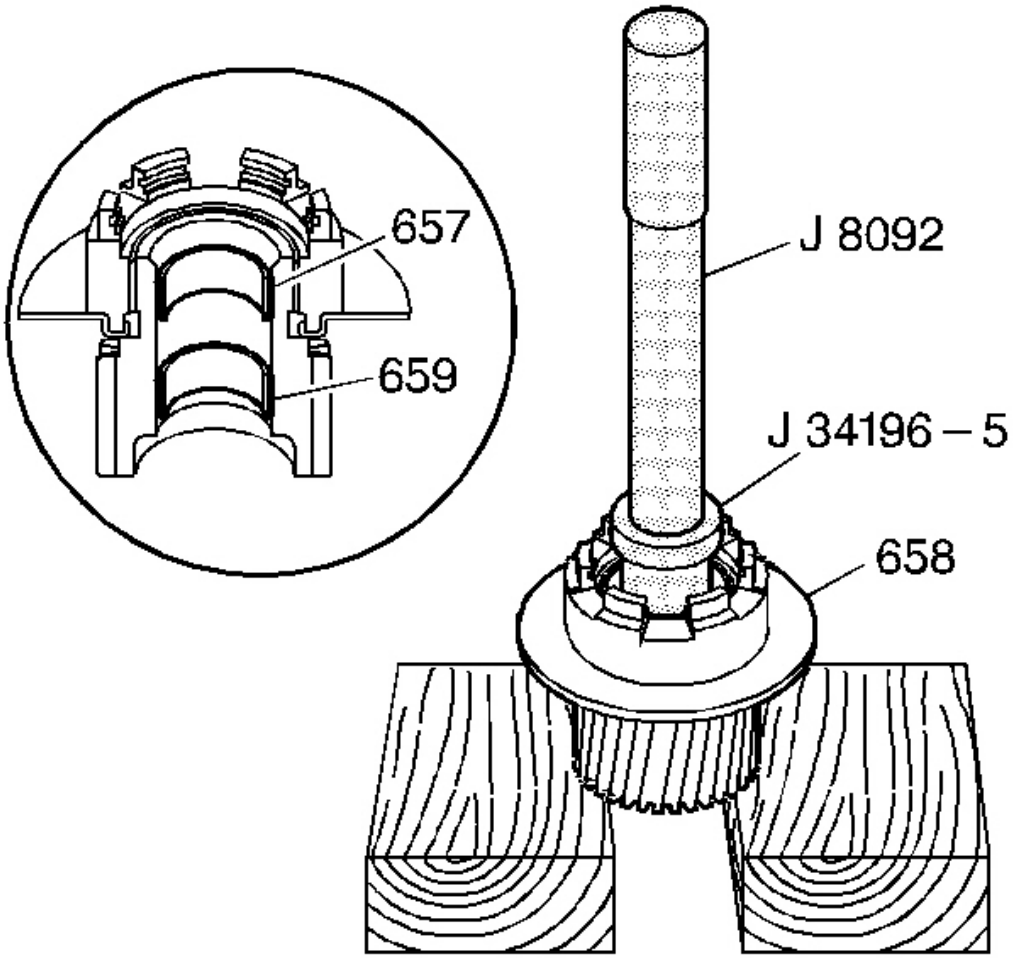

Fig. 139: Removing Input Sun Gear Front Bushing
Courtesy of GENERAL MOTORS CORP.

Using **J 34196-5** which is part of kit **J 34196-B** with J 8092 , remove the input sun gear front bushing (657) and rear bushing (659).

Installation Procedure

cardiagn.com

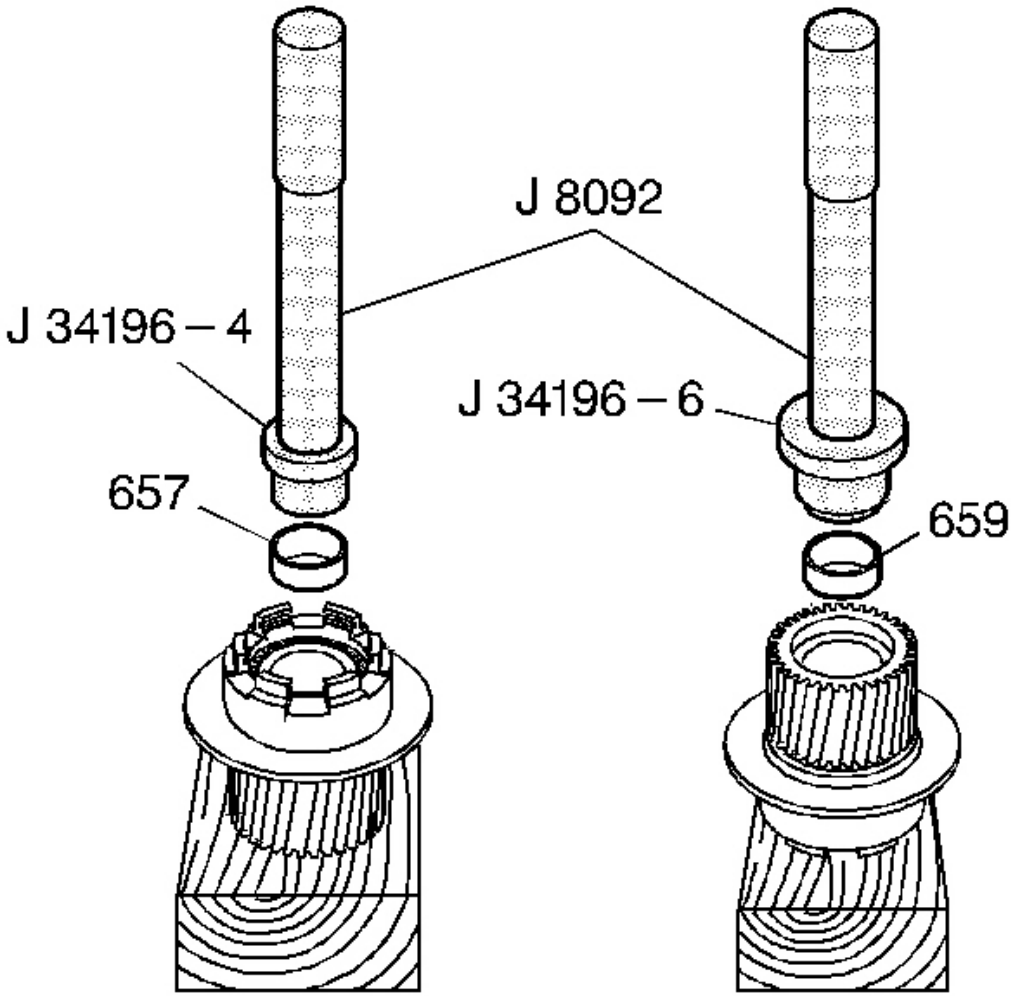

Fig. 140: Installing Input Sun Gear Front Bushing
Courtesy of GENERAL MOTORS CORP.

1. Using **J 34196-4** which is part of kit **J 34196-B** with J 8092 , install the input sun gear front bushing (657).
2. Using **J 34196-6** which is part of kit **J 34196-B** with J 8092 , install the input sun gear rear bushing (659).

INPUT CARRIER INSPECTION AND INSTALLATION

cardiagn.com

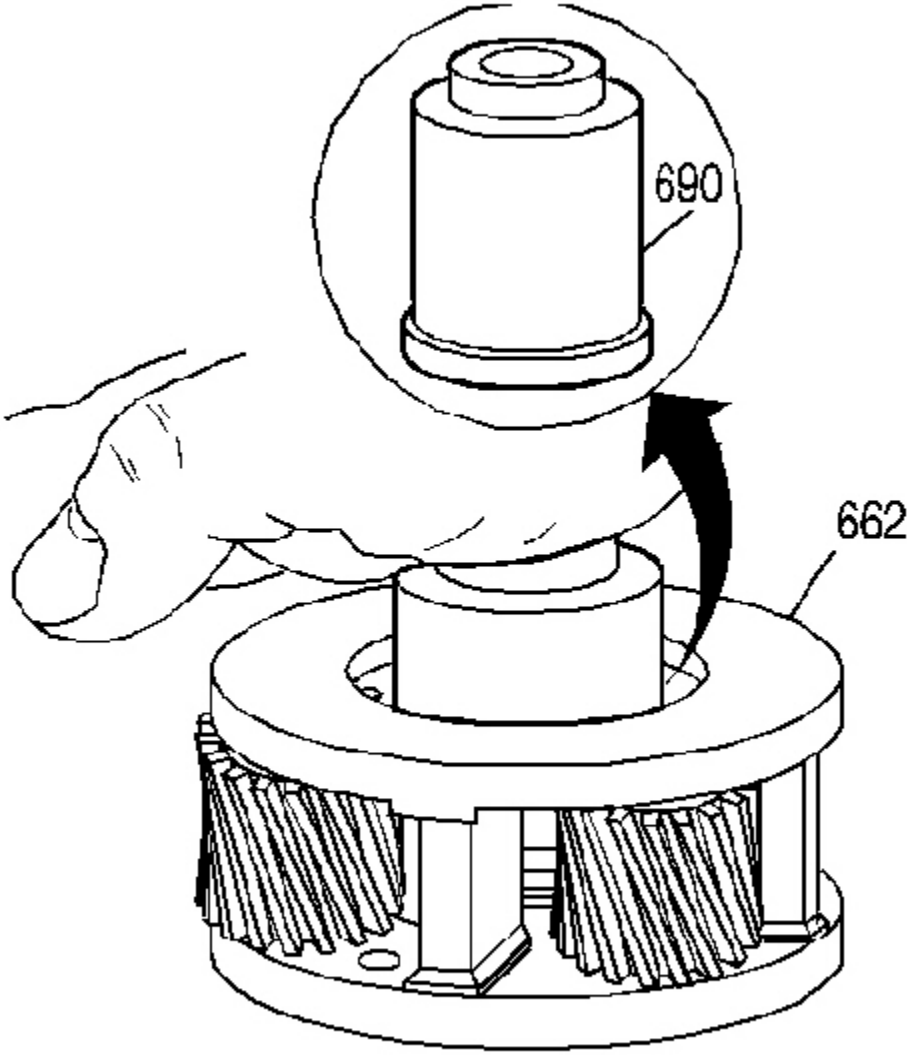

Fig. 141: View Of Input Carrier Captive Thrust Bearing Assembly
Courtesy of GENERAL MOTORS CORP.

1. Inspect the input carrier captive thrust bearing assembly. To check the captive thrust bearing in the input carrier (662) for wear, place a bushing or an output shaft sleeve (690) onto the bearing race and turn it with the palm of your hand. Do not touch the pinion gears. Any imperfections will be felt through the bushing.

cardiagn.com

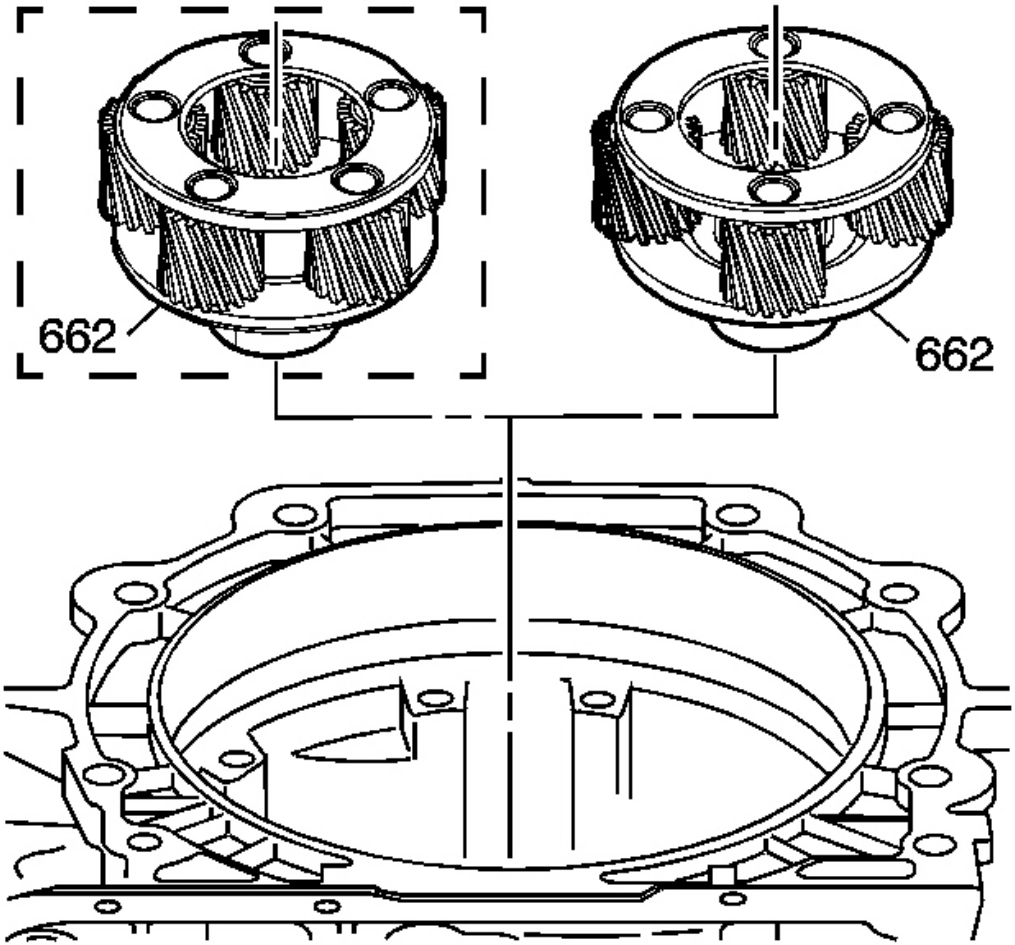

Fig. 142: Locating Input Carrier Assembly
Courtesy of GENERAL MOTORS CORP.

2. Install the input carrier assembly (662) onto the output shaft. The carrier assembly can be either a 4 or 5 pinion design, depending on model.

cardiagn.com

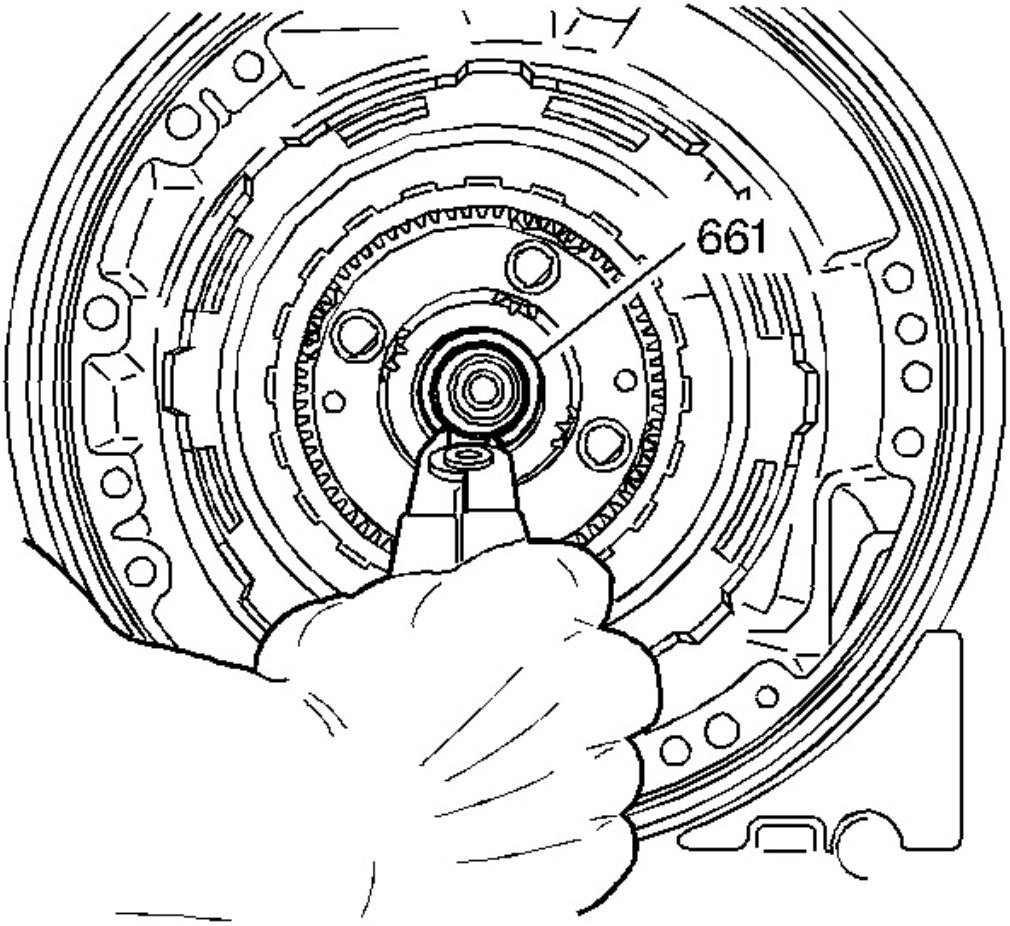

Fig. 143: View Of Output Shaft To Input Carrier Retainer
Courtesy of GENERAL MOTORS CORP.

IMPORTANT:

- **Do not reuse the old output shaft to input carrier retainer (661).**
- **Do not over expand the new output shaft to input carrier retainer during installation.**

3. Install a new output shaft to input carrier retainer (661).

cardiagn.com

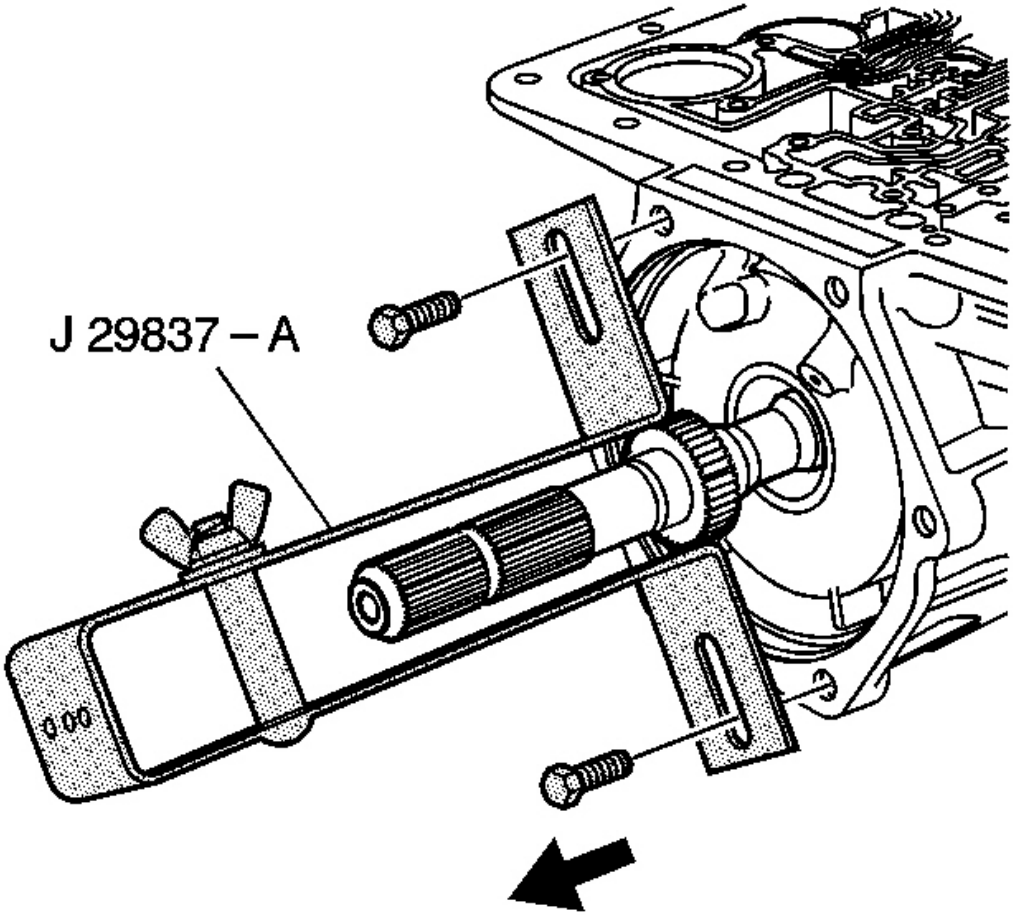

Fig. 144: Identifying J 29837-A
Courtesy of GENERAL MOTORS CORP.

4. Remove the **J 29837-A** .

INPUT CLUTCH ASSEMBLY DISASSEMBLE

Removal Procedure

Tools Required

- **J 23327-1** Forward Clutch Spring Compressor (Bridge). See **Special Tools and Equipment** .
- **J 23456** Booster and Clutch Pack Compressor. See **Special Tools and Equipment** .
- **J 25018-A** Clutch Spring Compressor Adapter. See **Special Tools and Equipment** .

cardiagn.com

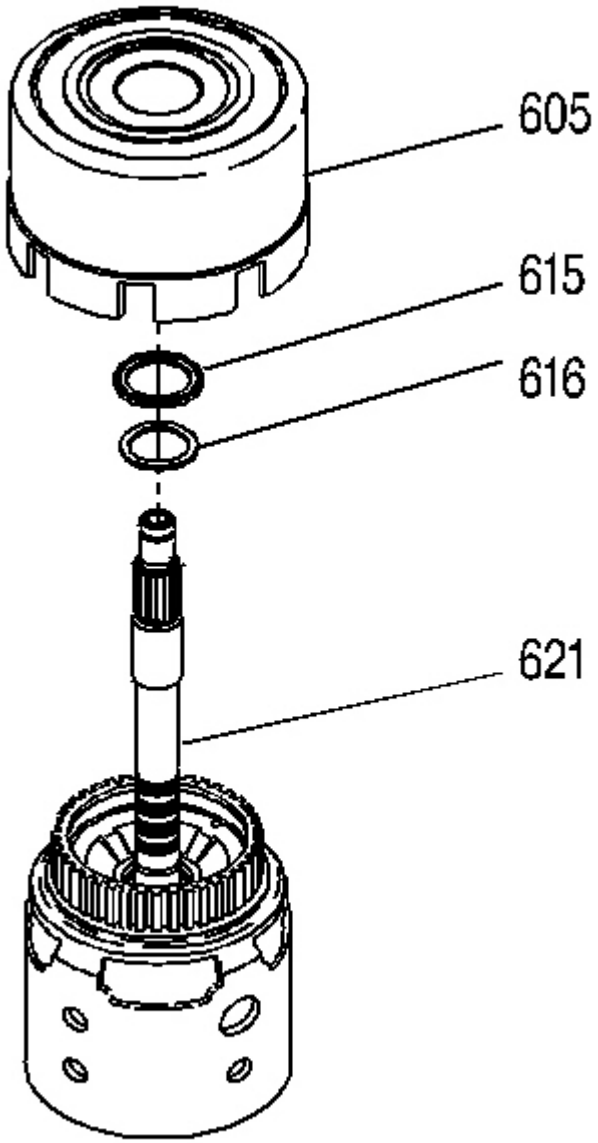

Fig. 145: View Of Stator Shaft/Selective Washer Bearing Assembly
Courtesy of GENERAL MOTORS CORP.

1. Remove the reverse input clutch housing and drum assembly (605) from the input clutch assembly (621).
2. Remove the stator shaft/selective washer bearing assembly (615).
3. Remove the selective thrust washer (616).

cardiagn.com

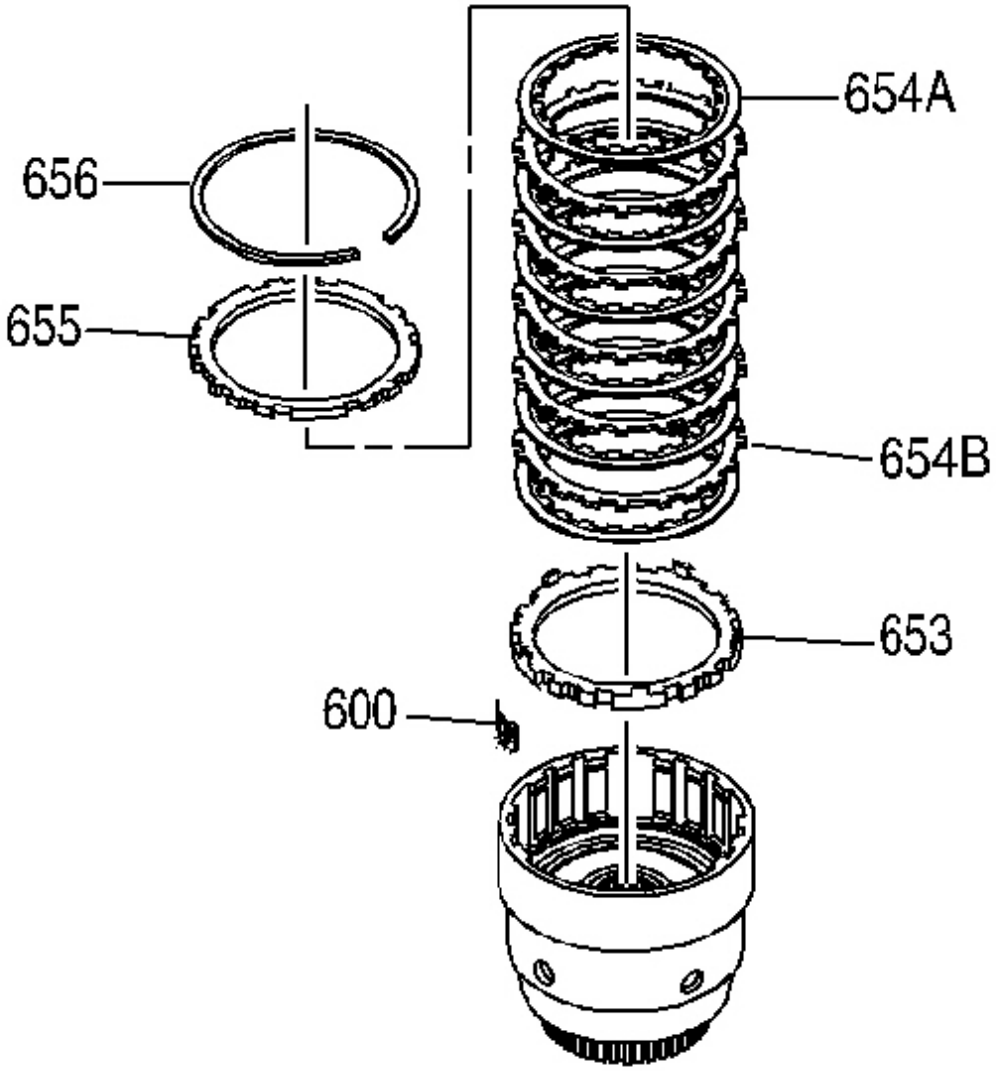

Fig. 146: Locating 3rd & 4th Clutch Backing Plate Retainer Ring
Courtesy of GENERAL MOTORS CORP.

4. Remove the 3rd and 4th clutch backing plate retainer ring (656).

NOTE: **The correct number of fiber plates must be used to avoid damage to the transmission. An incorrect stack up height can cause either excessive clutch slippage or insufficient release, resulting in burned clutch plates.**

cardiagn.com

IMPORTANT: The 3rd and 4th clutch plate stack is model specific. Clutch plate stack up could be either 6 or 7 plates.

5. Remove all 3rd and 4th clutch plates (653-655).
6. Remove the 3-4 clutch boost spring assemblies (600).

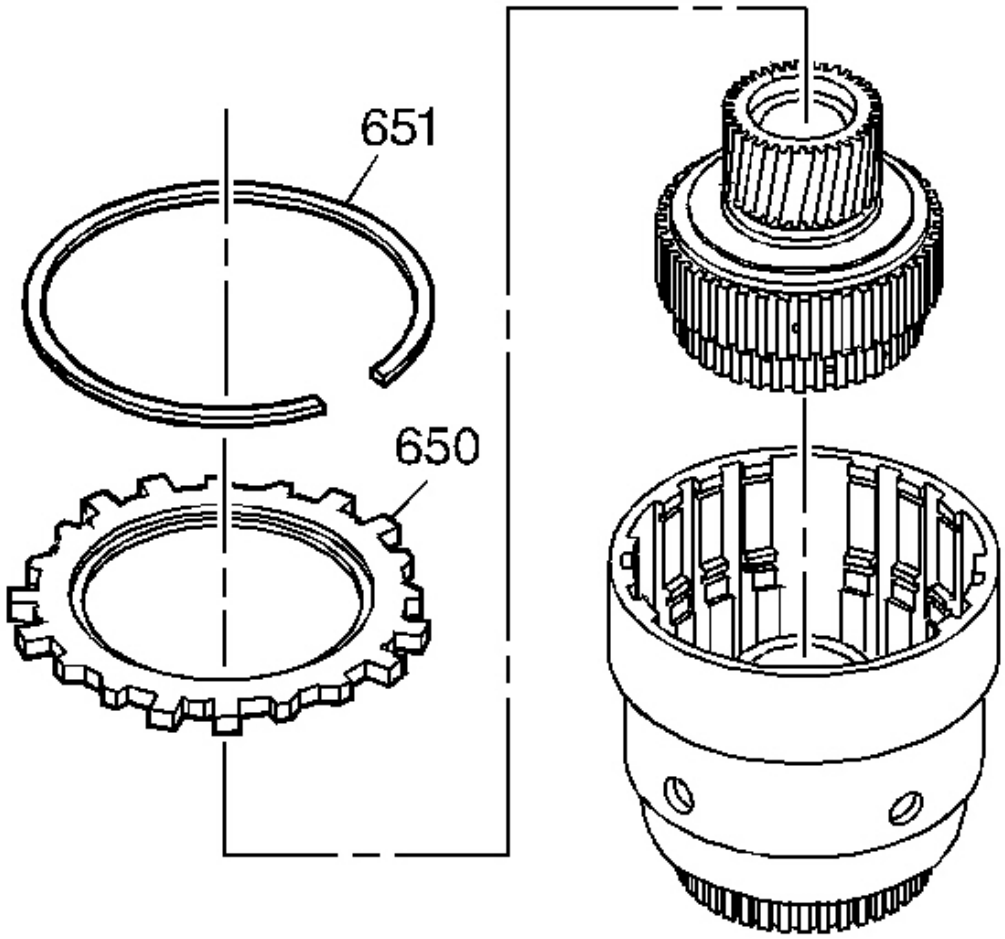

Fig. 147: Identifying Forward Clutch Selective Backing Plate & Retainer Ring
Courtesy of GENERAL MOTORS CORP.

7. Remove the forward clutch backing plate retainer ring (651).
8. Remove the forward clutch selective backing plate (650).
9. Remove the forward clutch sprag assembly.

cardiagn.com

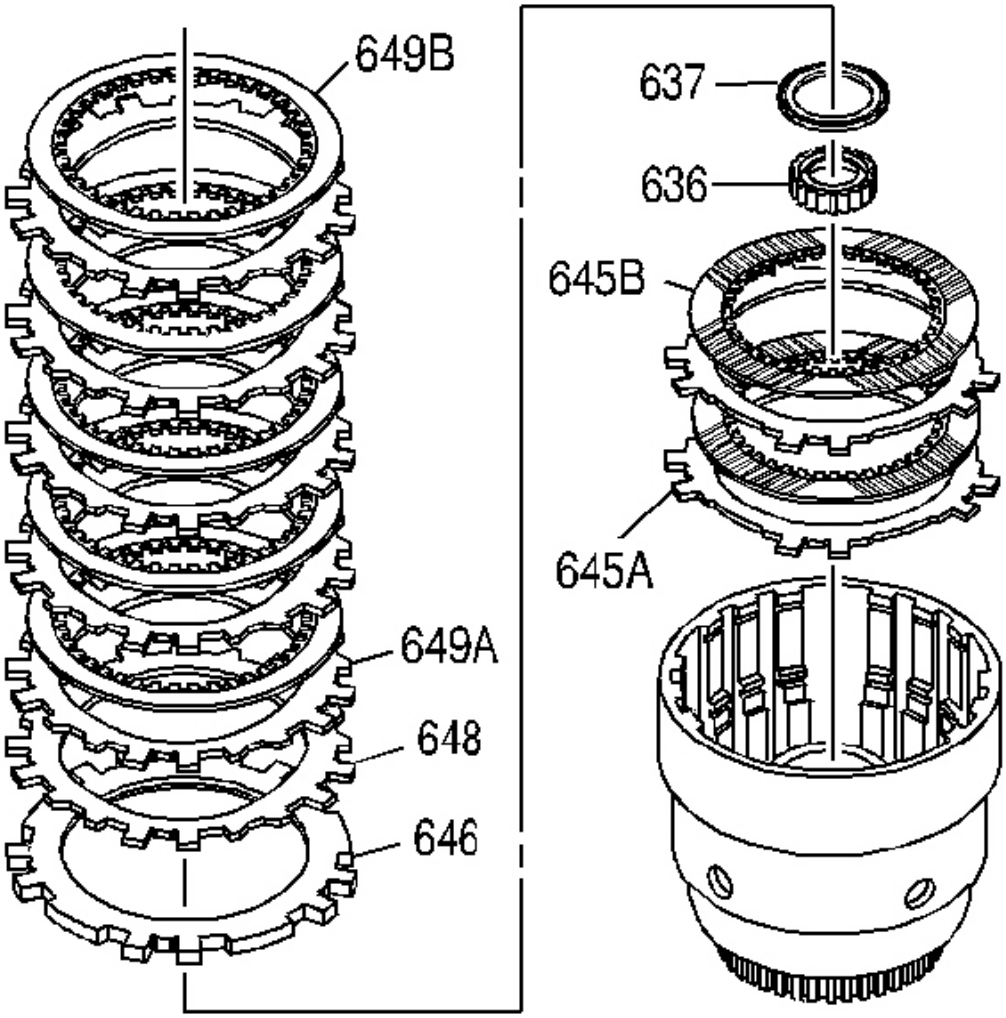

Fig. 148: View Of Forward Clutch Plates
Courtesy of GENERAL MOTORS CORP.

10. Remove all forward clutch plates (646, 648, 649A, 649B).
11. Remove the input sun gear bearing assembly (637).
12. Remove the input housing to output shaft seal (636).
13. Remove all overrun clutch plates (645A, 645B).

cardiagn.com

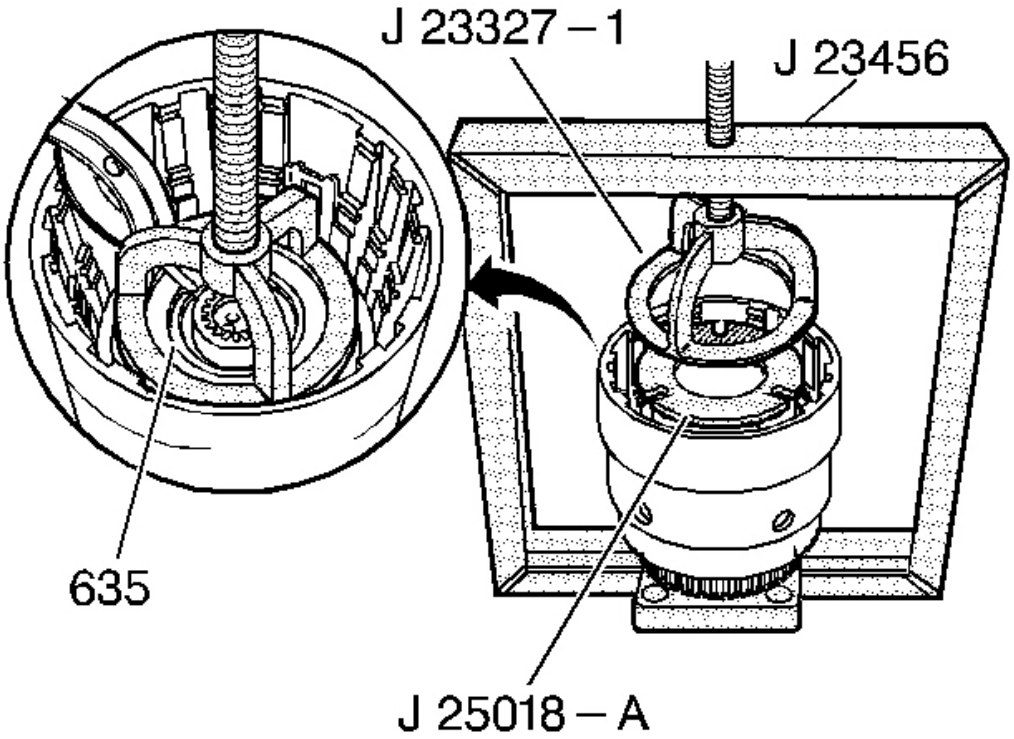

Fig. 149: Installing J 23327-1 & J 25018-A
Courtesy of GENERAL MOTORS CORP.

14. Install the **J 23327-1** and the **J 25018-A** .
15. Compress the overrun clutch spring, using the **J 23456** .
16. Remove the overrun clutch spring retainer snap ring (635).
17. Remove the **J 23327-1** and the **J 25018-A** .

cardiagn.com

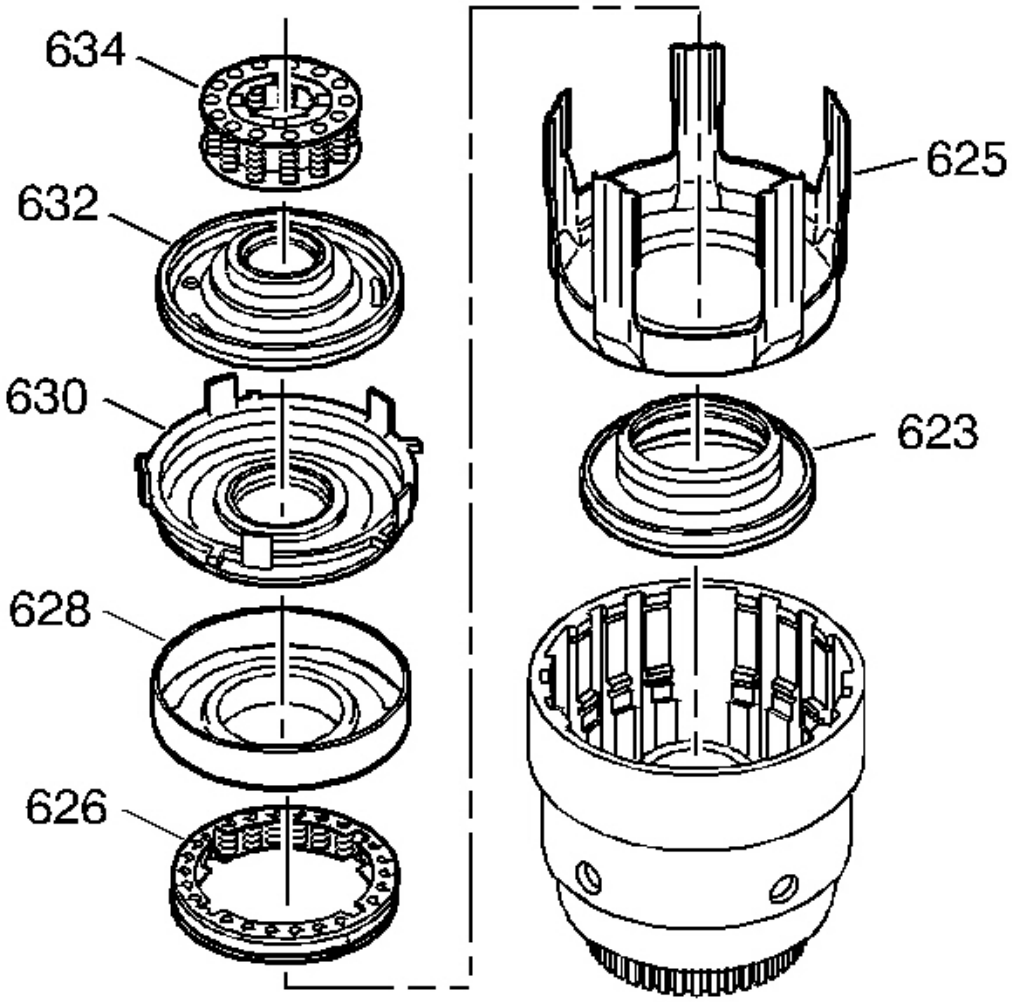

Fig. 150: Input Clutch Assembly
Courtesy of GENERAL MOTORS CORP.

18. Remove the overrun clutch spring assembly (634).
19. Remove the overrun clutch piston (632).
20. Remove the forward clutch piston (630).
21. Remove the forward clutch housing (628).
22. Remove the 3rd and 4th clutch spring assembly (626).
23. Remove the 3rd and 4th clutch apply ring (625).
24. Remove the 3rd and 4th clutch piston (623).

cardiagn.com

INPUT HOUSING AND SHAFT ASSEMBLY INSPECTION

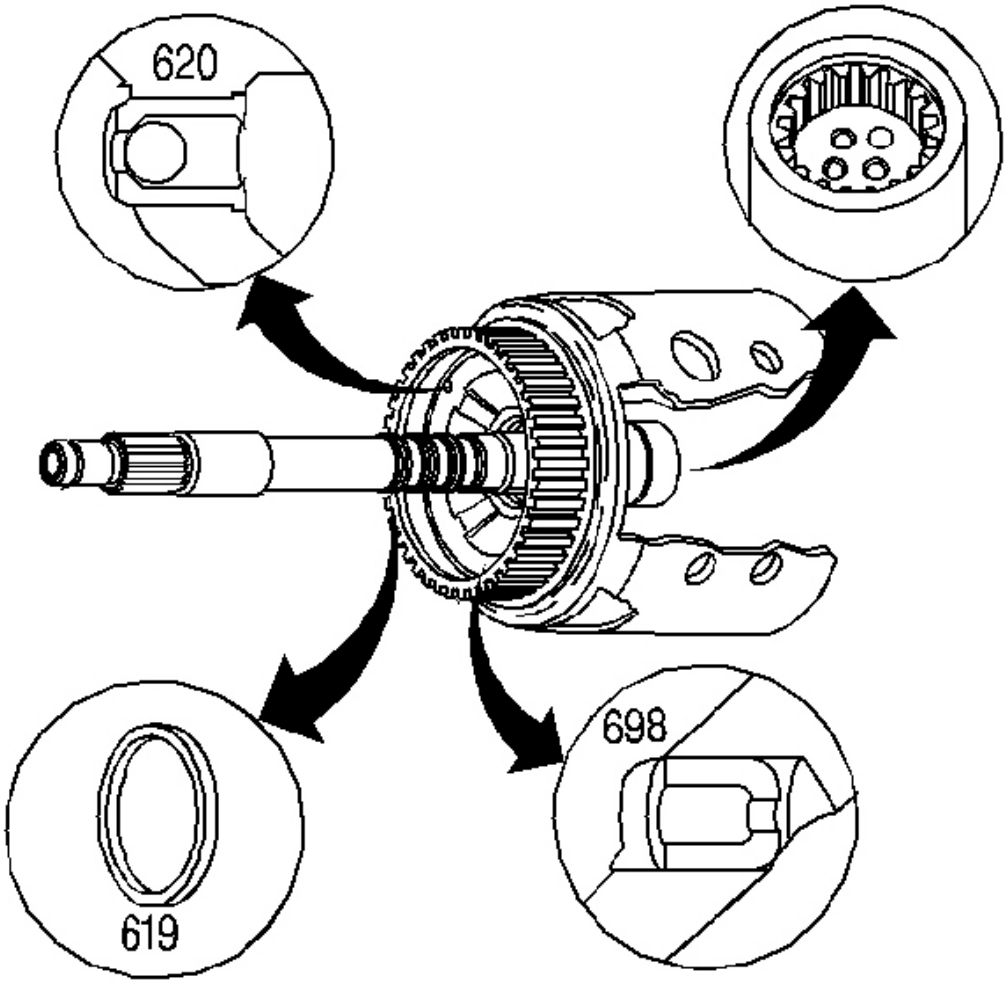

Fig. 151: Expanded View Of Input Housing
Courtesy of GENERAL MOTORS CORP.

1. Inspect the input housing and shaft assembly for the following items:
    - Porosity
    - Spline wear
    - Three turbine shaft checkballs
    - Retainer and checkball assembly (620)
    - Orificed cup plug (698)

cardiagn.com

- Lube hole cracks

2. Inspect the turbine shaft oil seal ring grooves for damage or burrs. The oil seal rings (619) must fit loose into the ring grooves.

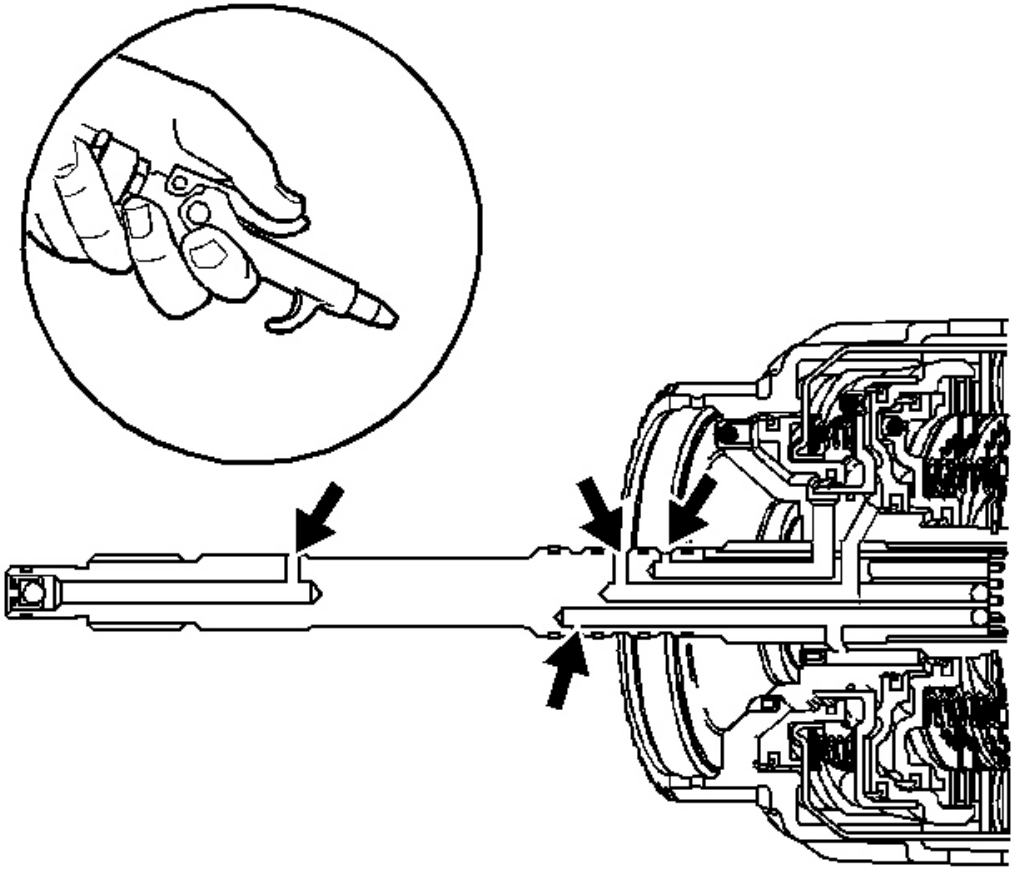

Fig. 152: Blowing Air Into Oil Feed Passages
Courtesy of GENERAL MOTORS CORP.

3. Inspect the oil feed passages for obstructions.
4. Apply compressed air into the passages indicated.

INPUT HOUSING AND SHAFT ASSEMBLY ASSEMBLE

Tools Required

- **J 23327-1** Forward Clutch Spring Compressor (Bridge). See **Special Tools and Equipment** .

cardiagn.com

- **J 23456** Booster and Clutch Pack Compressor. See **Special Tools and Equipment** .
- **J 25018-A** Clutch Spring Compressor Adapter. See **Special Tools and Equipment** .
- **J 26744-A** Seal Installer. See **Special Tools and Equipment** .
- **J 29882** Overrun Clutch Seal Protector. See **Special Tools and Equipment** .
- **J 29883** Forward Clutch Seal Protector. See **Special Tools and Equipment** .

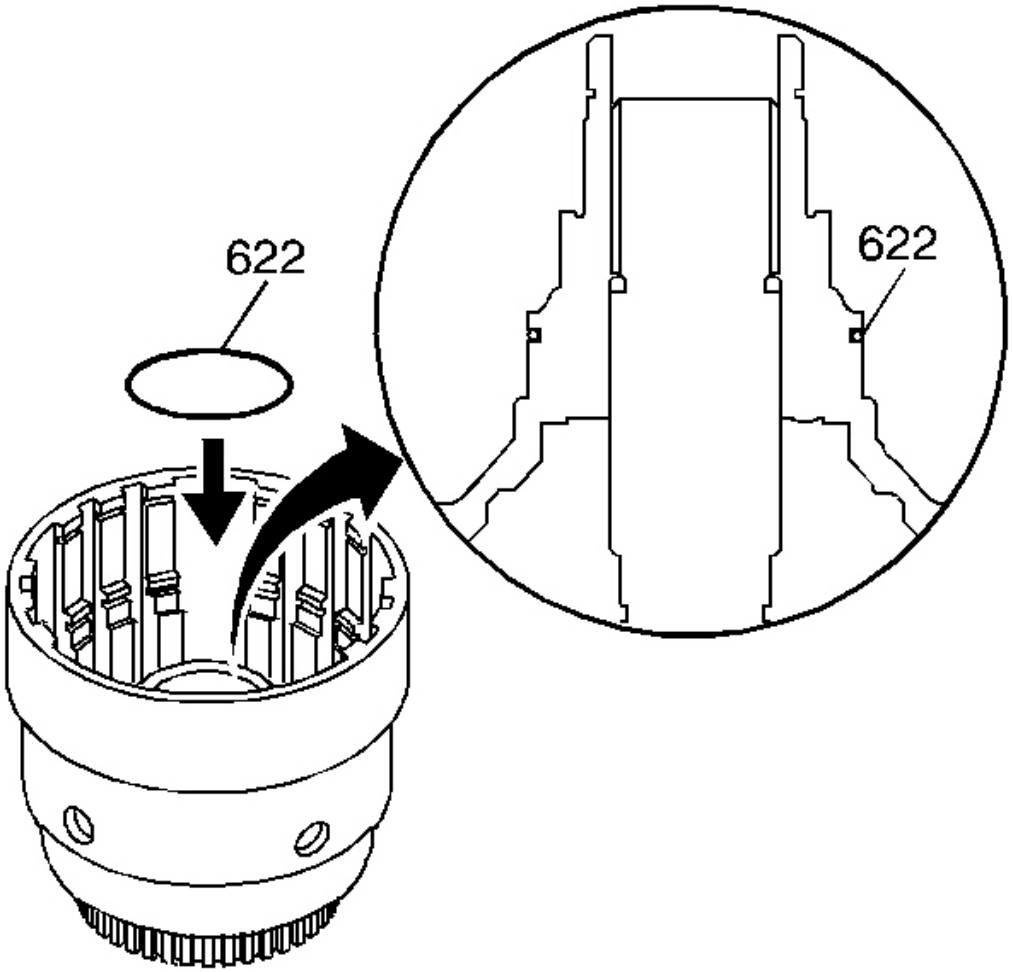

Fig. 153: Locating Forward Clutch Housing O-Ring Seal
Courtesy of GENERAL MOTORS CORP.

1. Install a new input to forward clutch housing O-ring seal (622).

cardiagn.com

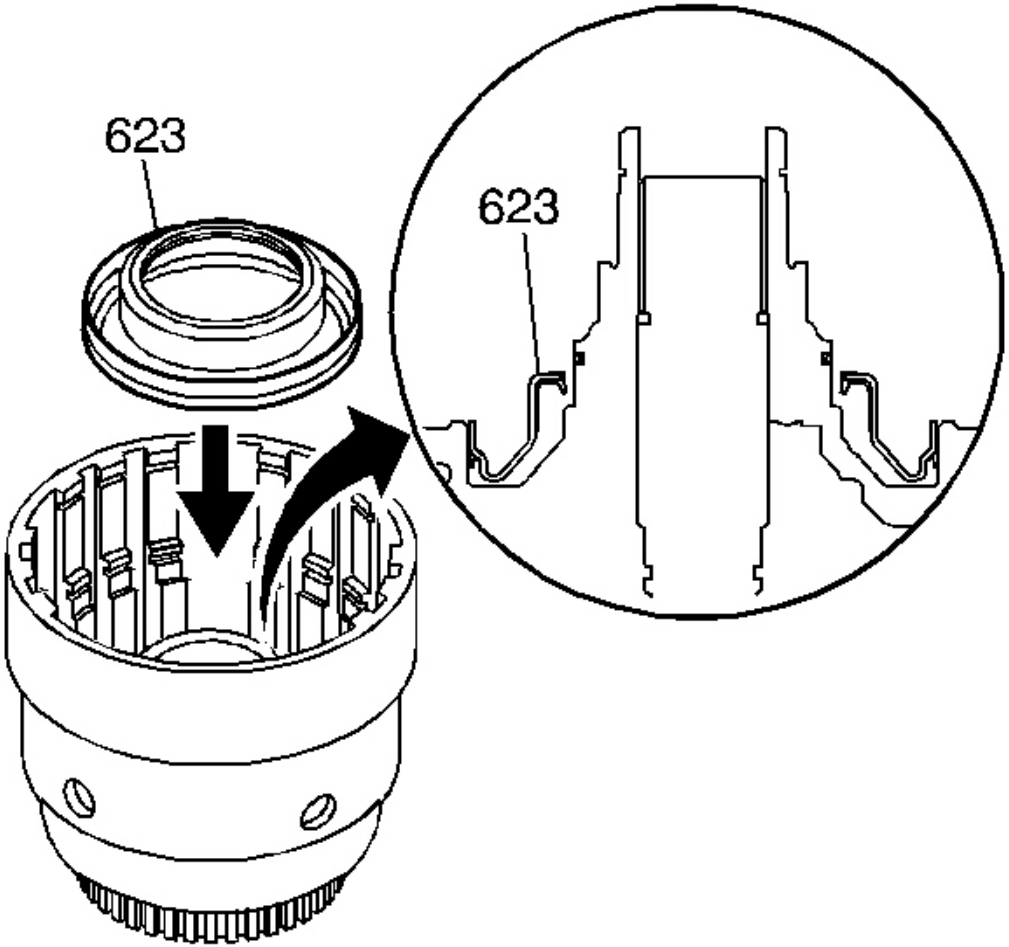

Fig. 154: Identifying 3rd & 4th Clutch Piston Inspection Areas
Courtesy of GENERAL MOTORS CORP.

2. Inspect the 3rd and 4th clutch piston (623) for the following conditions:
    - Porosity or damage
    - Seal damage
3. Install the 3rd and 4th clutch piston (623) into the input housing.

cardiagn.com

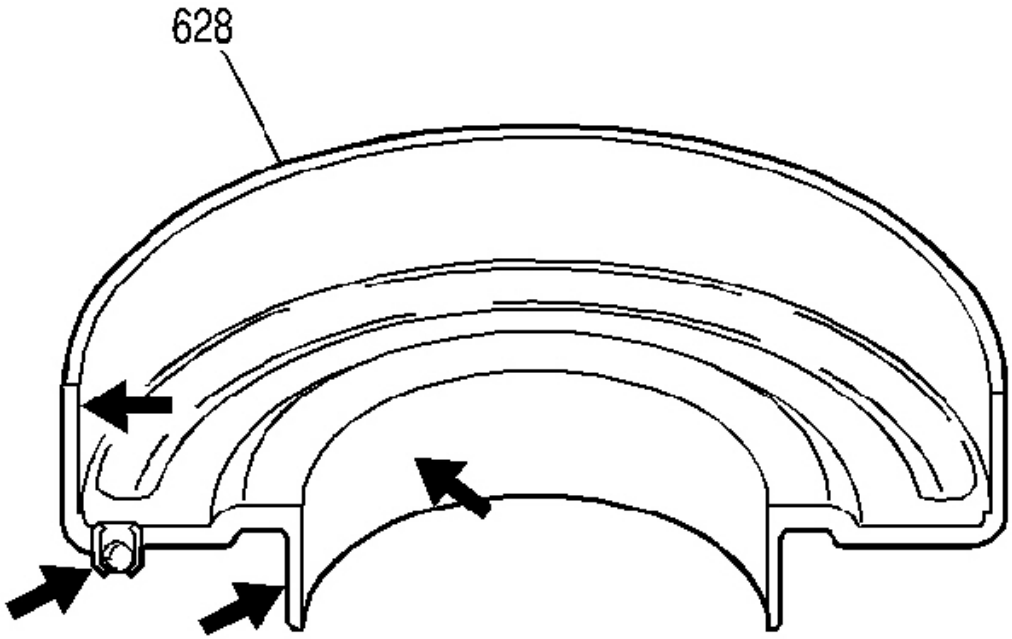

Fig. 155: Forward Clutch Housing Inspection Areas
Courtesy of GENERAL MOTORS CORP.

4. Inspect the forward clutch housing (628) for the following conditions:
    - Proper check ball operation
    - Damage or distortion
    - Burrs in the seal areas
    - Cracks

cardiagn.com

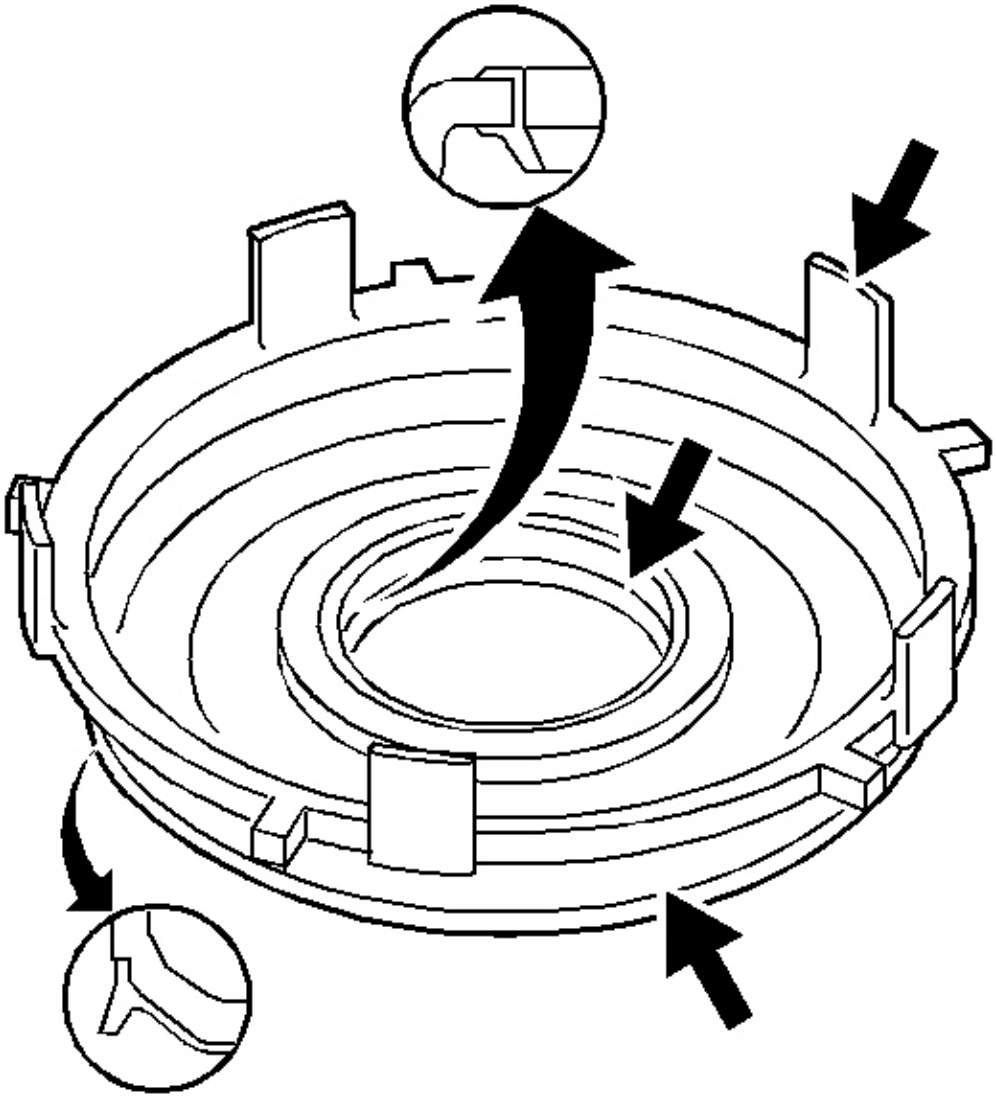

Fig. 156: Inspecting Forward Clutch Piston For Damage Or Wear
Courtesy of GENERAL MOTORS CORP.

5. Inspect the forward clutch piston for the following conditions:
    - Porosity or damage
    - Seal damage
    - Apply leg damage

cardiagn.com

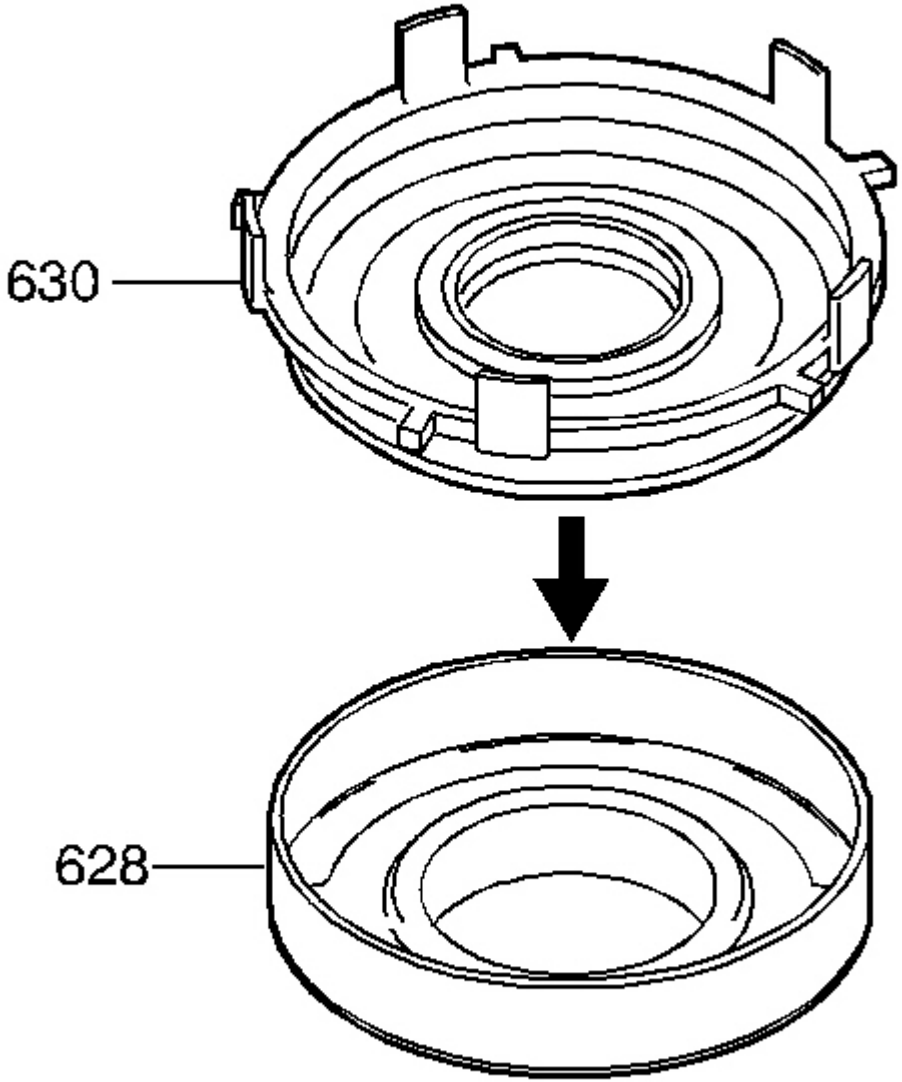

Fig. 157: Installing Forward Clutch Piston
Courtesy of GENERAL MOTORS CORP.

6. Install the forward clutch piston (630) into the forward clutch housing (628).

cardiagn.com

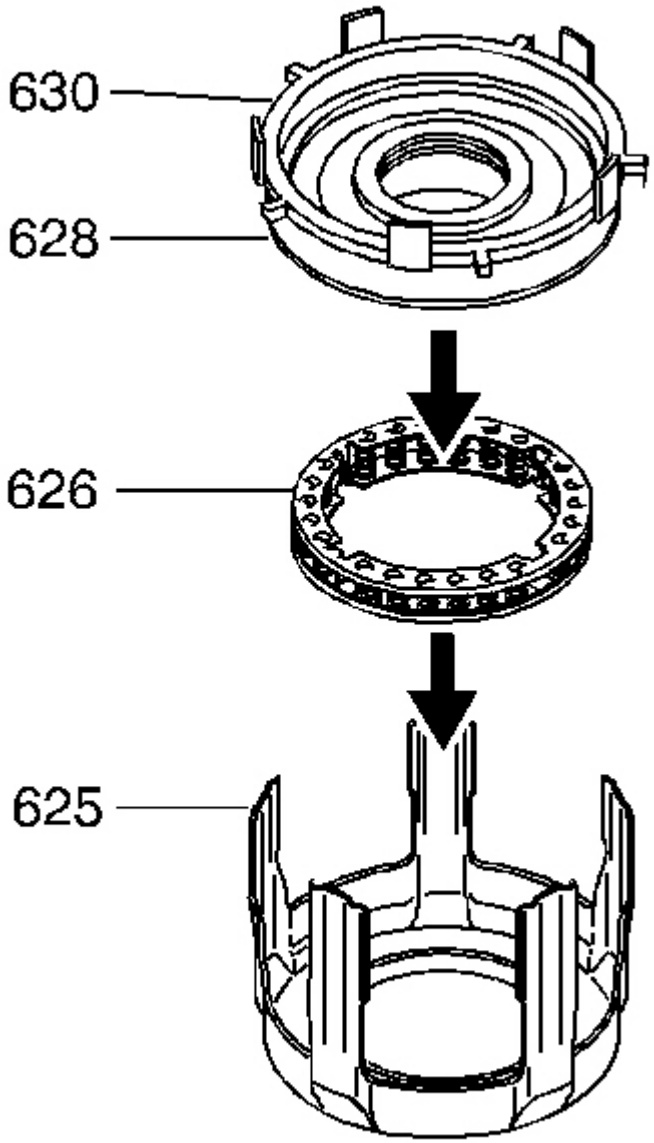

Fig. 158: Locating 3rd & 4th Spring Assembly
Courtesy of GENERAL MOTORS CORP.

7. Install the 3rd and 4th spring assembly (626) into the 3rd and 4th clutch apply ring (625).

IMPORTANT: The forward clutch piston (630) apply legs must be indexed with the 3rd and 4th clutch apply ring (625) legs.

cardiagn.com

8. Install the forward clutch housing (628) and forward clutch piston (630) into the 3rd and 4th apply ring (625).

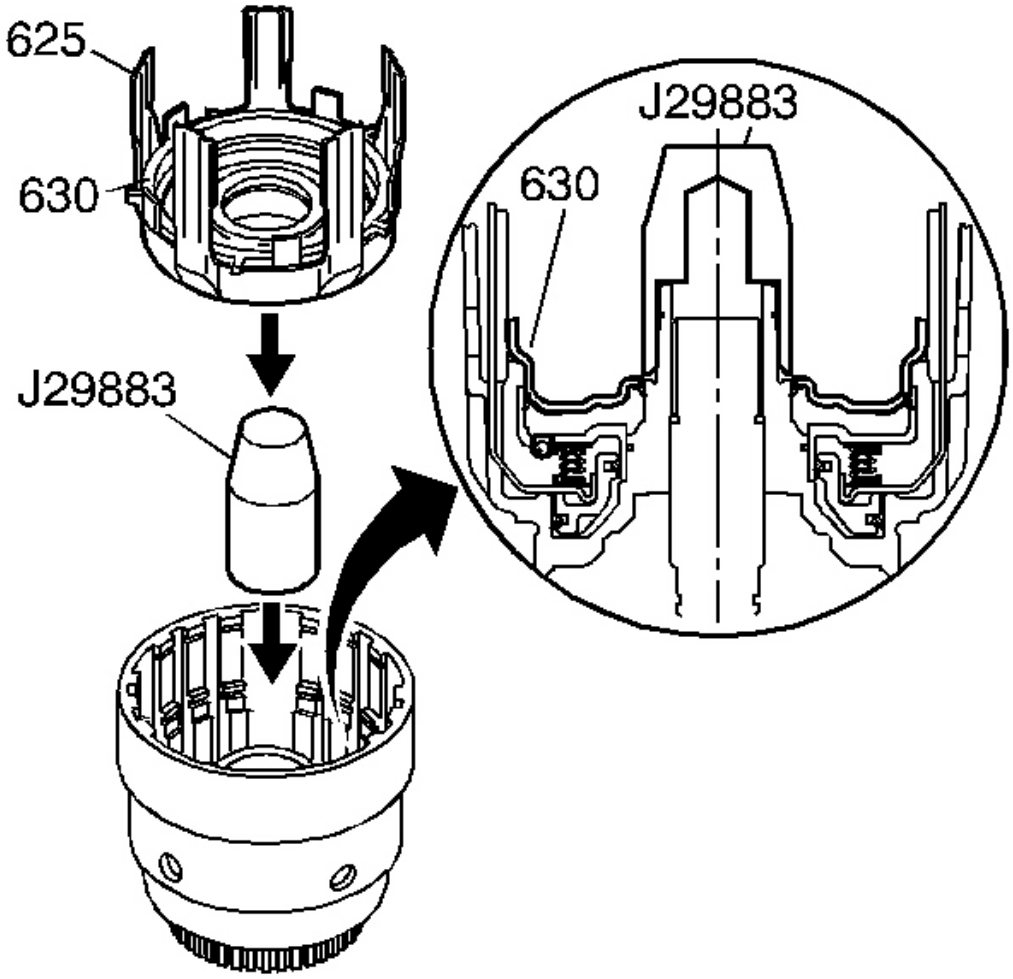

Fig. 159: View Of J 29883 Installed In Input Housing
Courtesy of GENERAL MOTORS CORP.

9. Install the **J 29883** on the input housing.
10. Install the 3rd and 4th clutch apply ring and the forward housing and piston assembly using the following procedure:
    - Hold the assembly by the 3rd and 4th clutch apply ring (625) legs during installation.
    - Do not let the forward clutch piston (630) separate from the forward clutch housing.

cardiagn.com

- Firmly seat the assembly.

11. Remove the **J 29883** from the input housing.

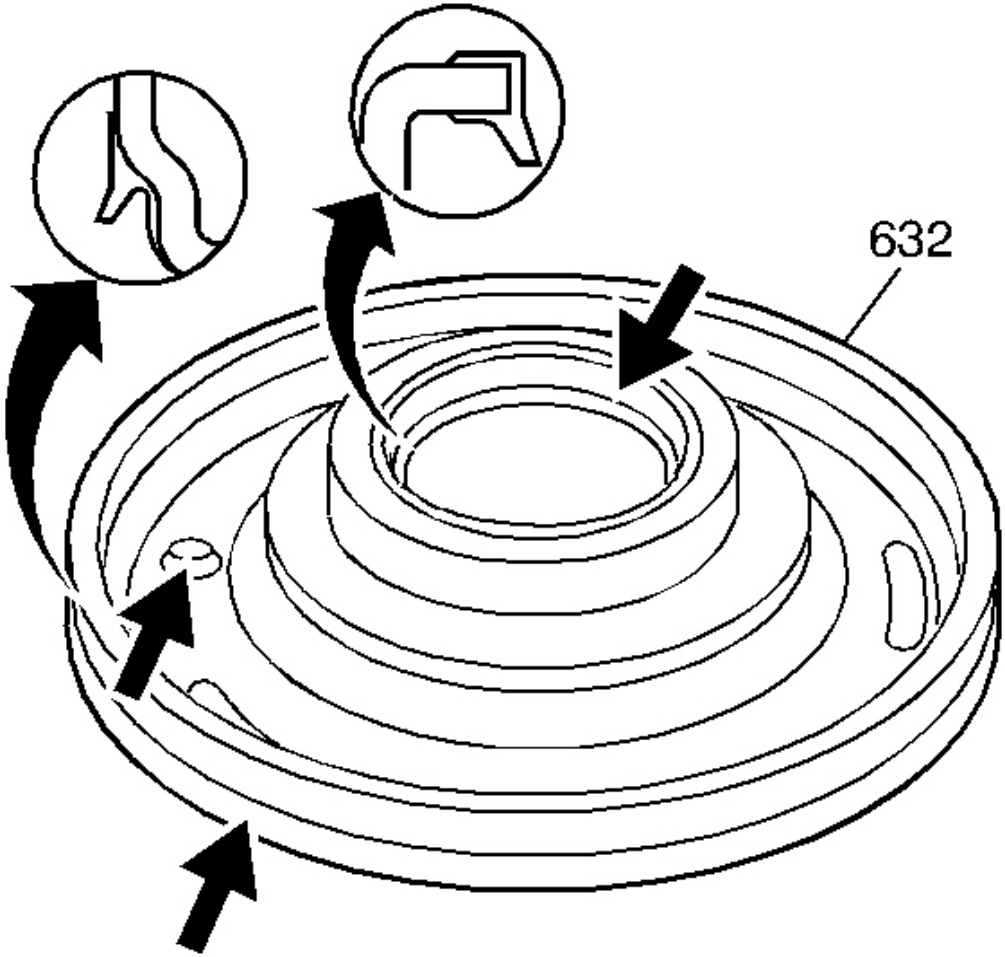

Fig. 160: Inspection Areas On Overrun Clutch Piston
Courtesy of GENERAL MOTORS CORP.

12. Inspect the overrun clutch piston (632) for the following conditions:
    - Porosity or damage
    - Seal damage
    - Overrun clutch ball proper operation

cardiagn.com

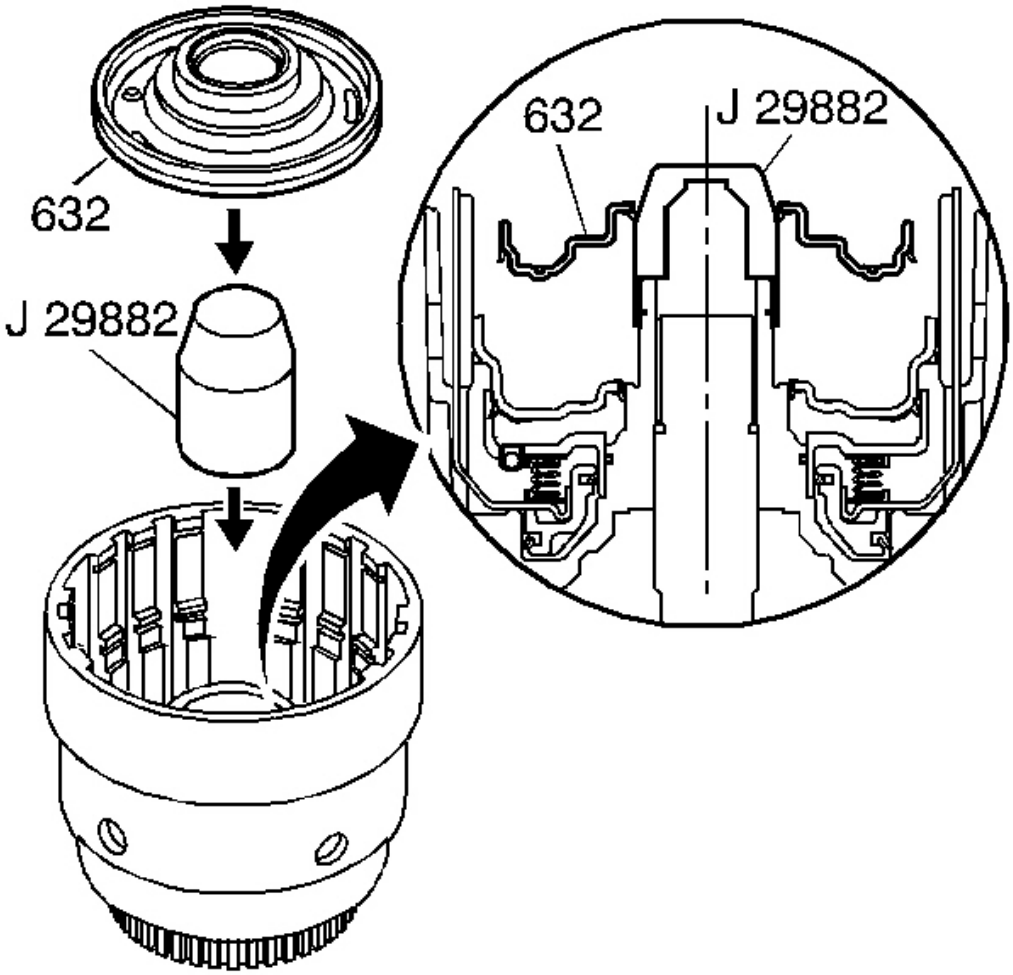

Fig. 161: Identifying Overrun Clutch Piston
Courtesy of GENERAL MOTORS CORP.

13. Install the **J 29882** on the input housing.
14. Install the overrun clutch piston (632) into the input housing.
15. Remove the **J 29882** from the input housing.

cardiagn.com

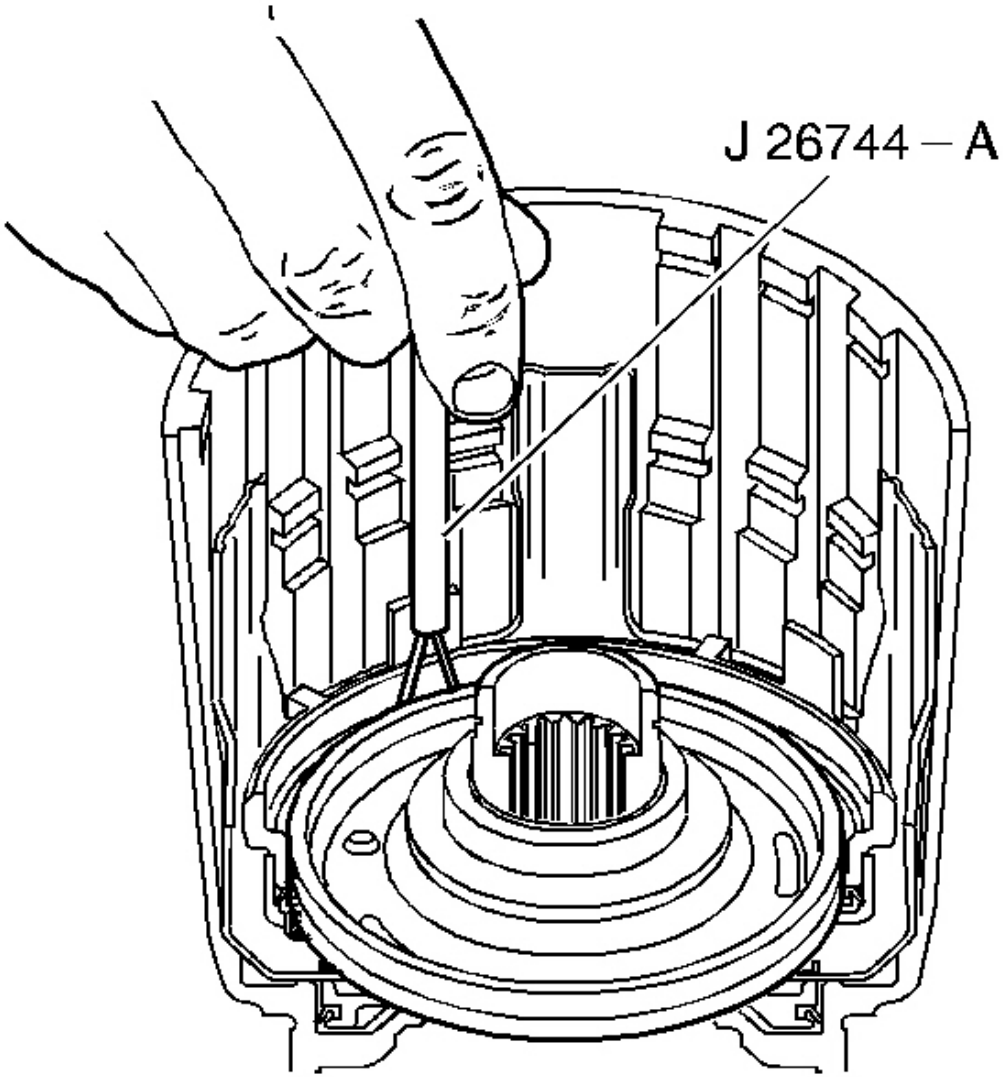

Fig. 162: Installing Overrun Clutch Piston Outer Seal With J 26744-A
Courtesy of GENERAL MOTORS CORP.

16. Using the **J 26744-A** , carefully install the overrun clutch piston outer seal.

cardiagn.com

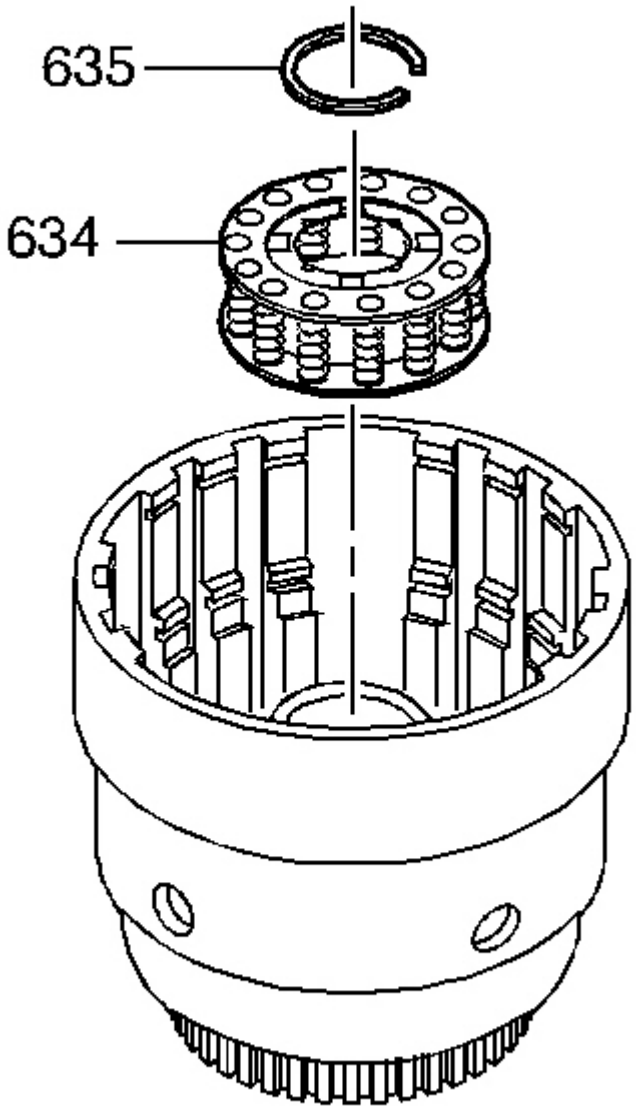

Fig. 163: View Of Overrun Clutch Spring Assembly
Courtesy of GENERAL MOTORS CORP.

17. Install the overrun clutch spring (634) assembly.

cardiagn.com

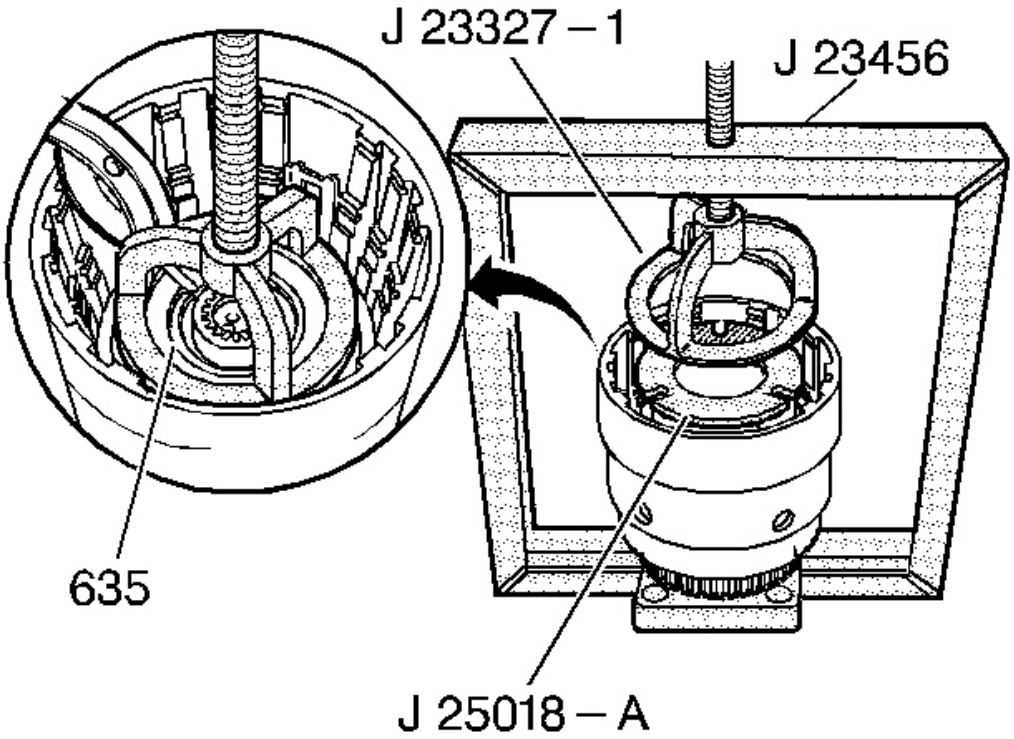

Fig. 164: Locating Overrun Clutch Spring Retainer Snap Ring
Courtesy of GENERAL MOTORS CORP.

18. Install the **J 23327-1** and the **J 25018-A** , and compress the overrun clutch spring assembly using **J 23456** .
19. Install the overrun clutch spring retainer snap ring (635).
20. Remove the **J 23327-1** and the **J 25018-A** .

INPUT HOUSING TO OUTPUT SHAFT SEAL INSTALLATION

cardiagn.com

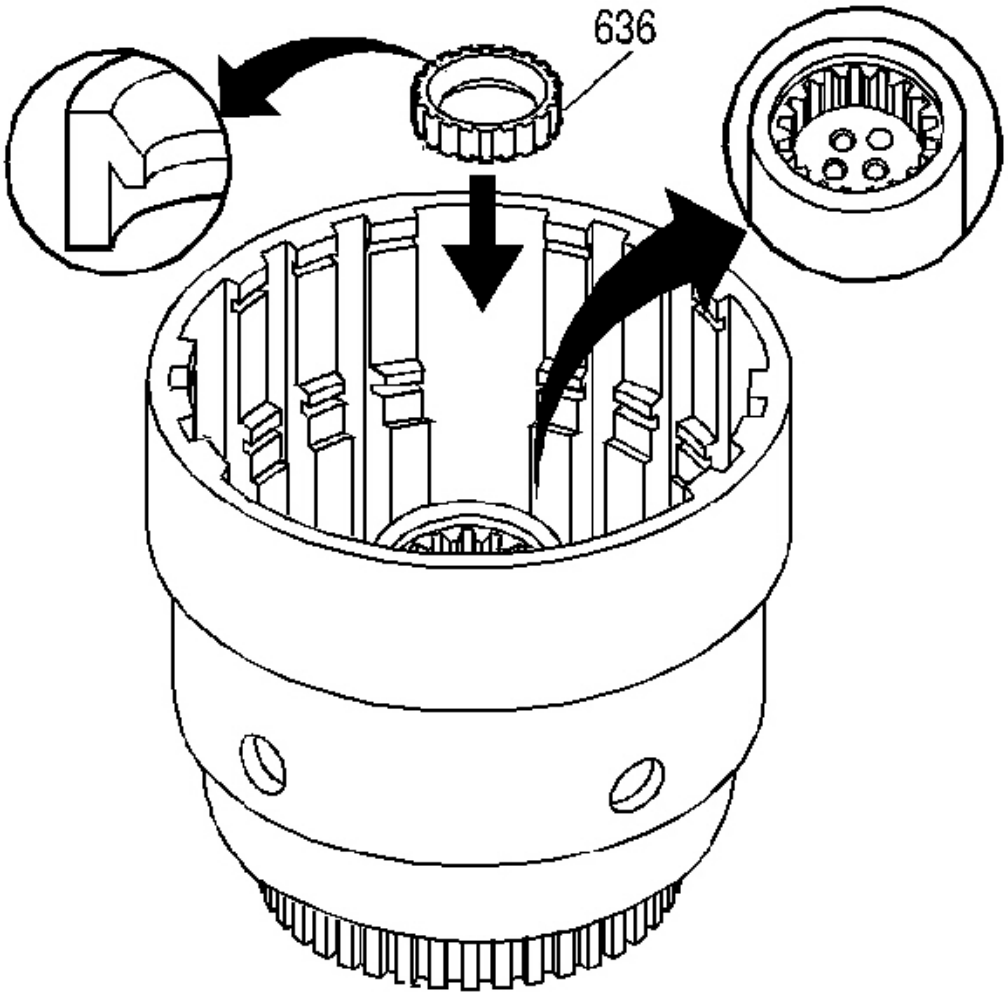

Fig. 165: View Of Input Housing To Output Shaft Seal
Courtesy of GENERAL MOTORS CORP.

Install a new input housing to output shaft seal (636).

OVERRUN CLUTCH INSTALLATION

cardiagn.com

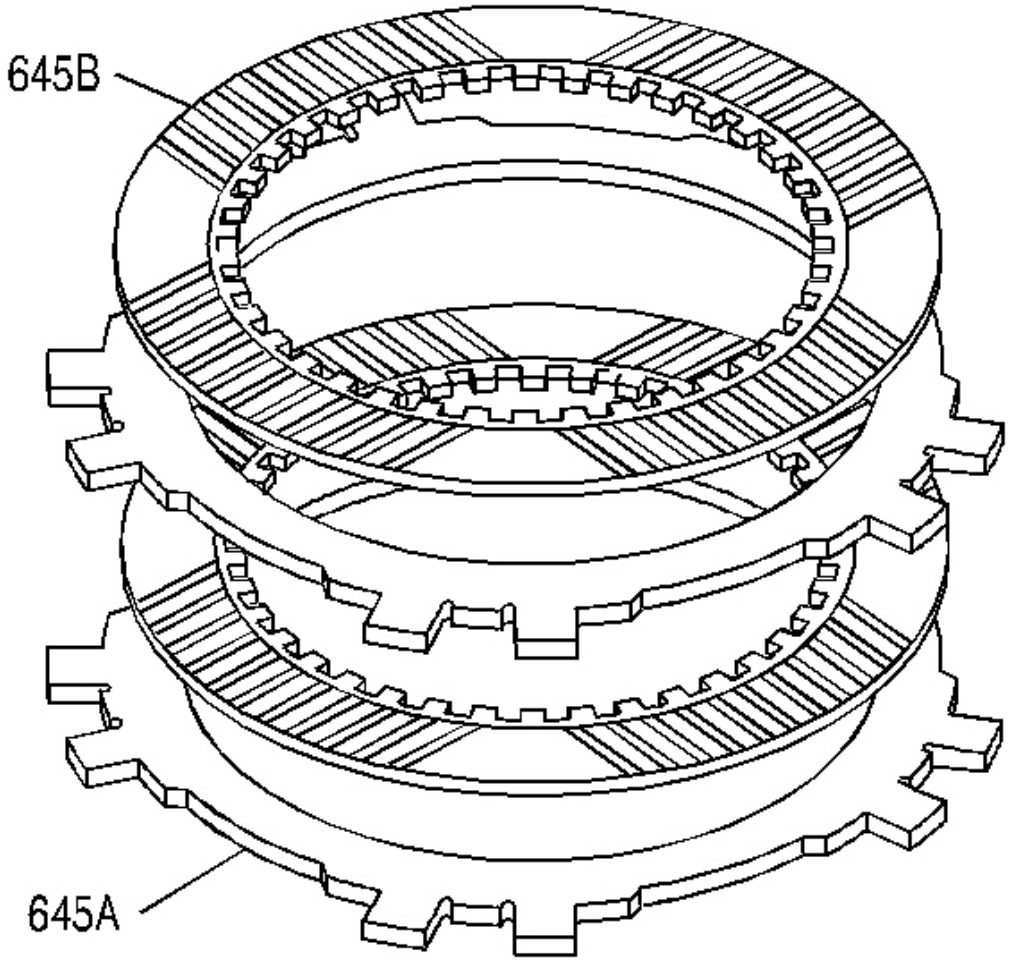

Fig. 166: Identifying Overrun Clutch Plates
Courtesy of GENERAL MOTORS CORP.

1. Inspect the fiber plate assemblies (645B) and the steel plates (645A) for the following defects:
    - Damaged tangs
    - Delamination
    - Excessive wear
    - Wear or heat damage

cardiagn.com

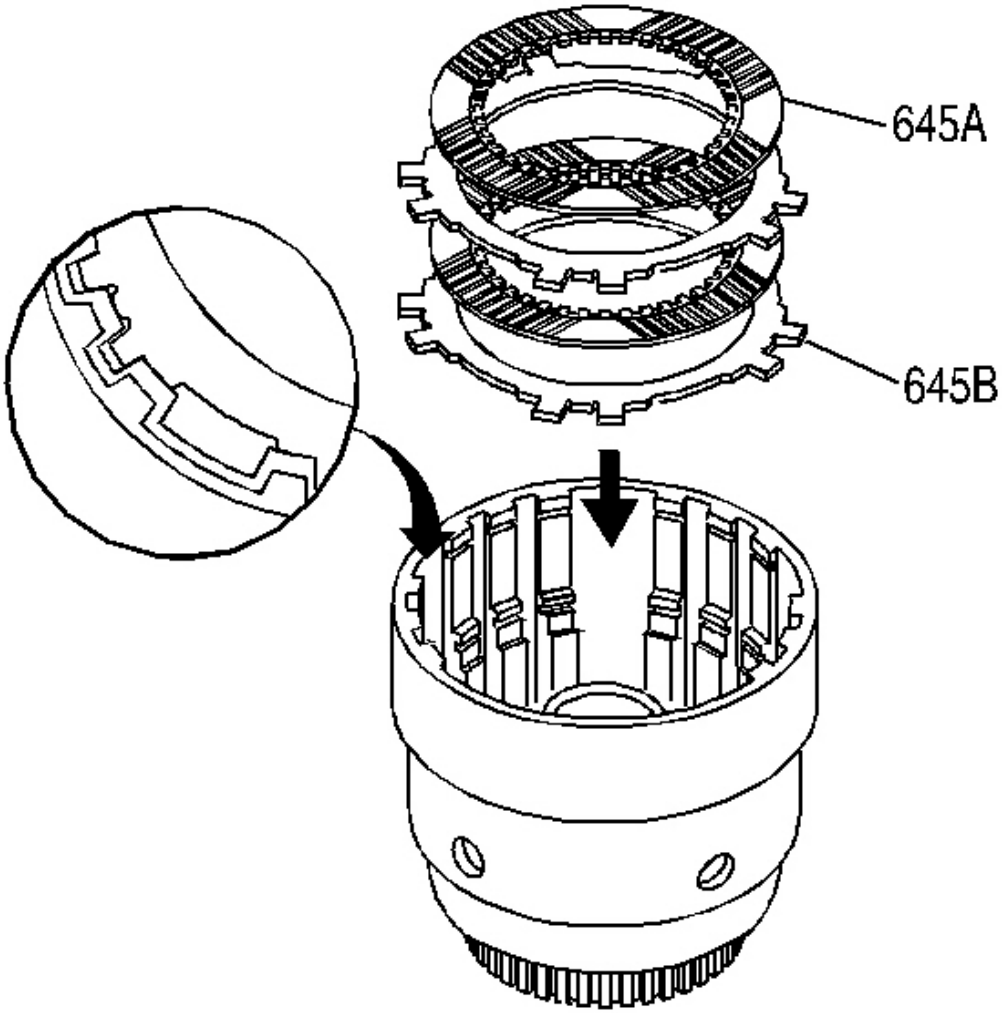

Fig. 167: Aligning Overrun Clutch Plates
Courtesy of GENERAL MOTORS CORP.

2. Install the overrun clutch plates into the input housing starting with a steel plate (645B) and alternating with fiber plate assemblies (645A).
3. Index the plates in the input housing with the wide notches remaining open.

cardiagn.com

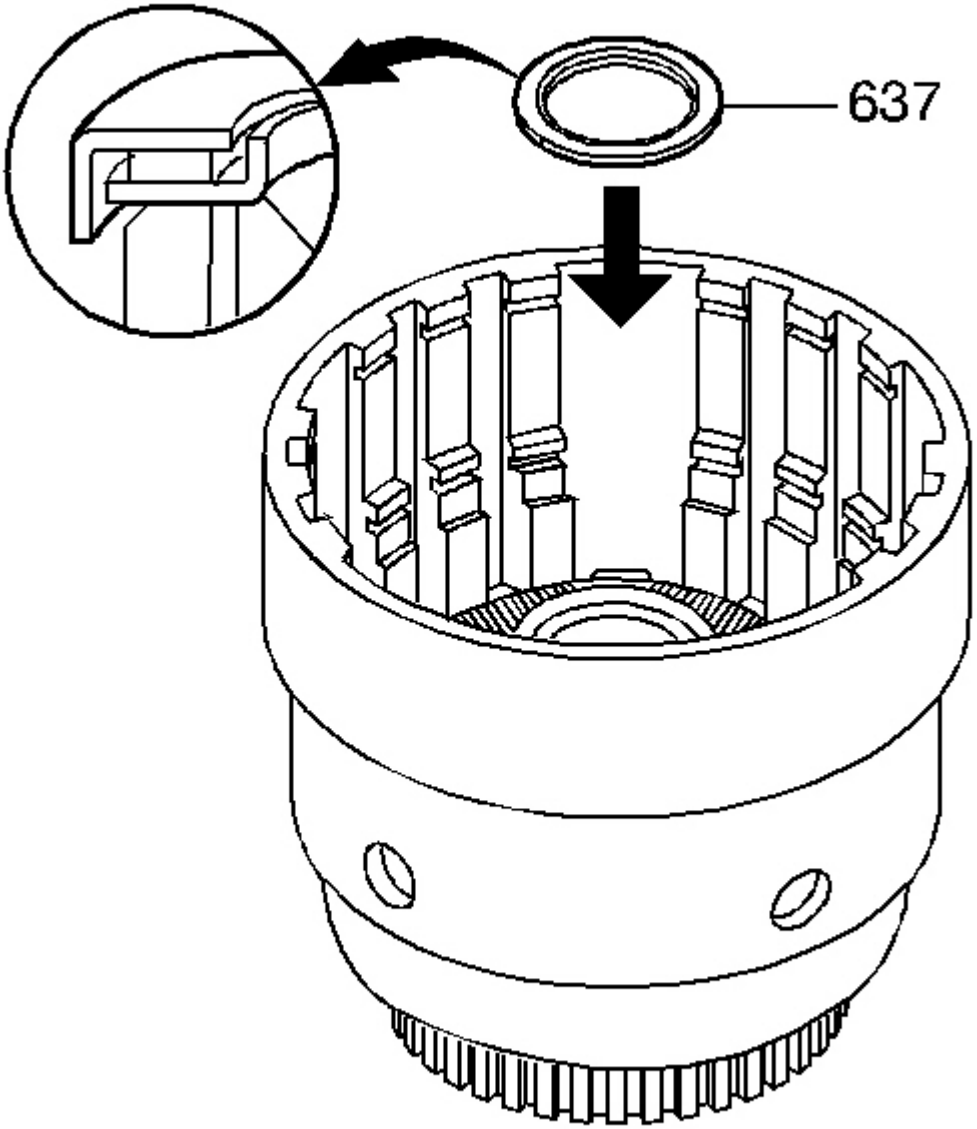

Fig. 168: Input Sun Gear Bearing Assembly
Courtesy of GENERAL MOTORS CORP.

4. Install the input sun gear bearing assembly (637) into the input housing.

FORWARD CLUTCH SPRAG DISASSEMBLE

cardiagn.com

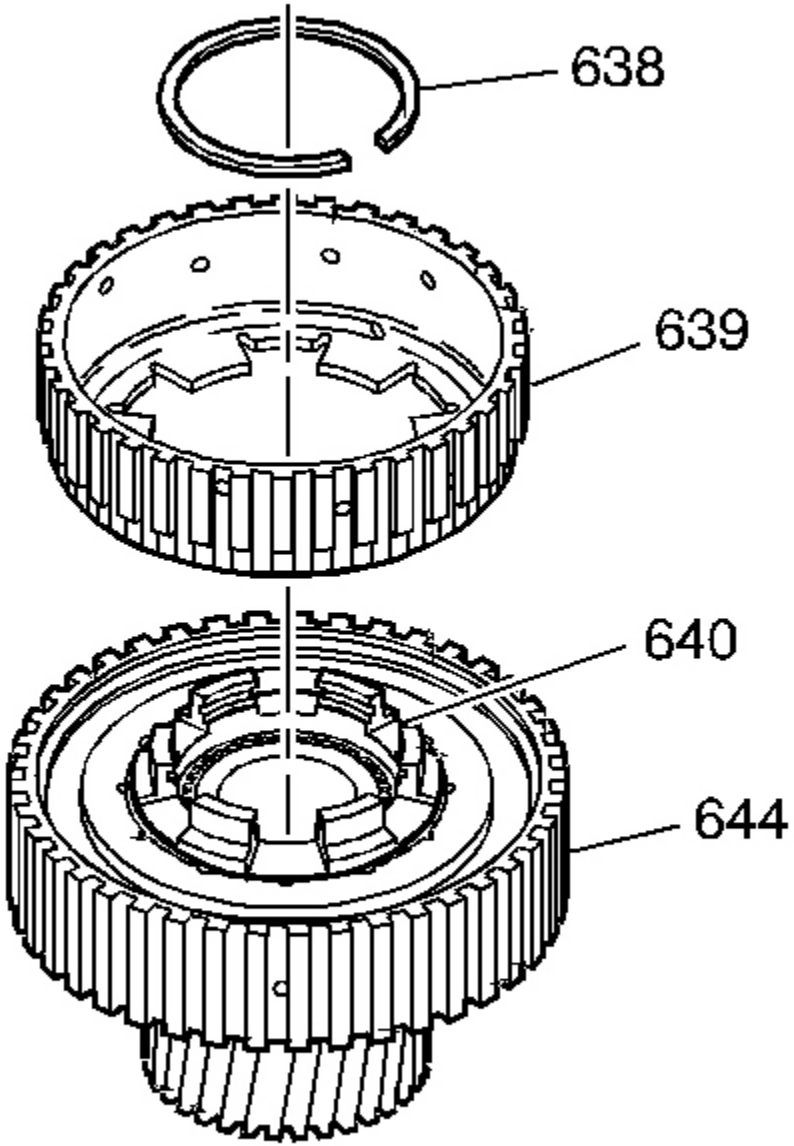

Fig. 169: Locating Overrun Clutch
Courtesy of GENERAL MOTORS CORP.

1. Remove the overrun clutch hub retaining snap ring (638).
2. Remove the overrun clutch hub (639).
3. Remove the forward sprag clutch inner race and input sun gear assembly (640).

cardiagn.com

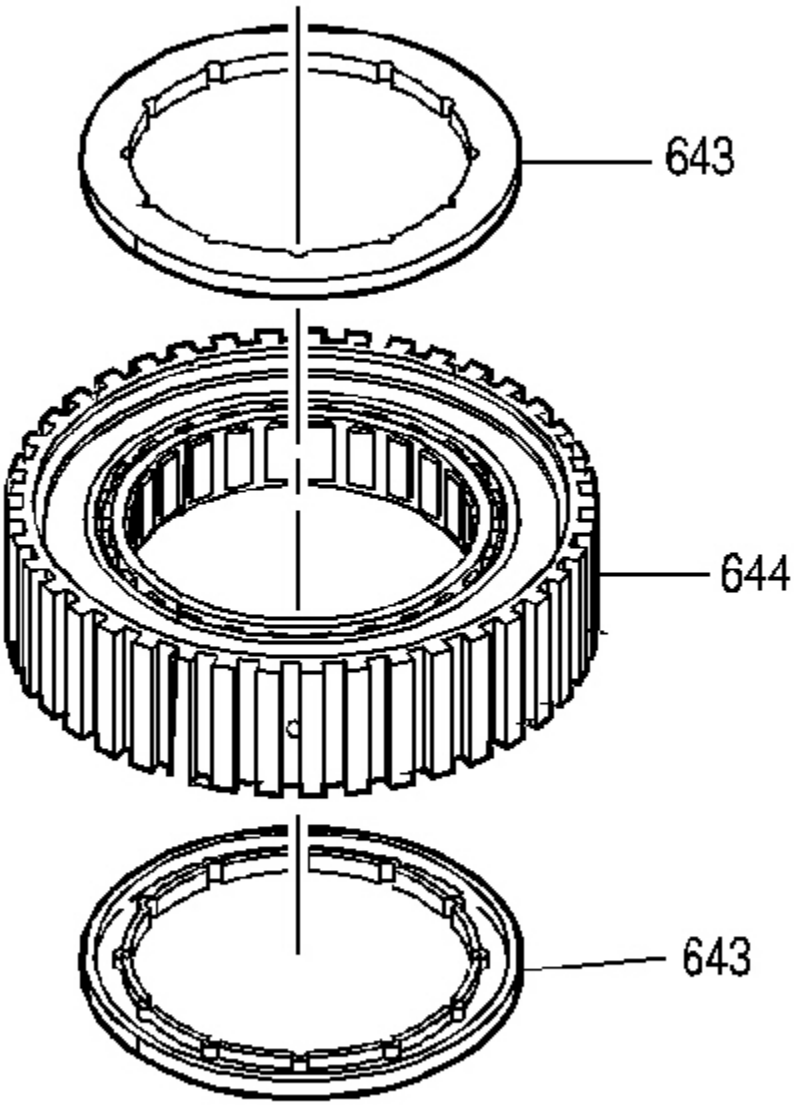

Fig. 170: View Of Sprag Assembly Retainer Rings
Courtesy of GENERAL MOTORS CORP.

4. Remove the sprag assembly retainer rings (643).
5. Remove the forward sprag assembly from the forward clutch outer race (644).

FORWARD CLUTCH SPRAG ASSEMBLE

cardiagn.com

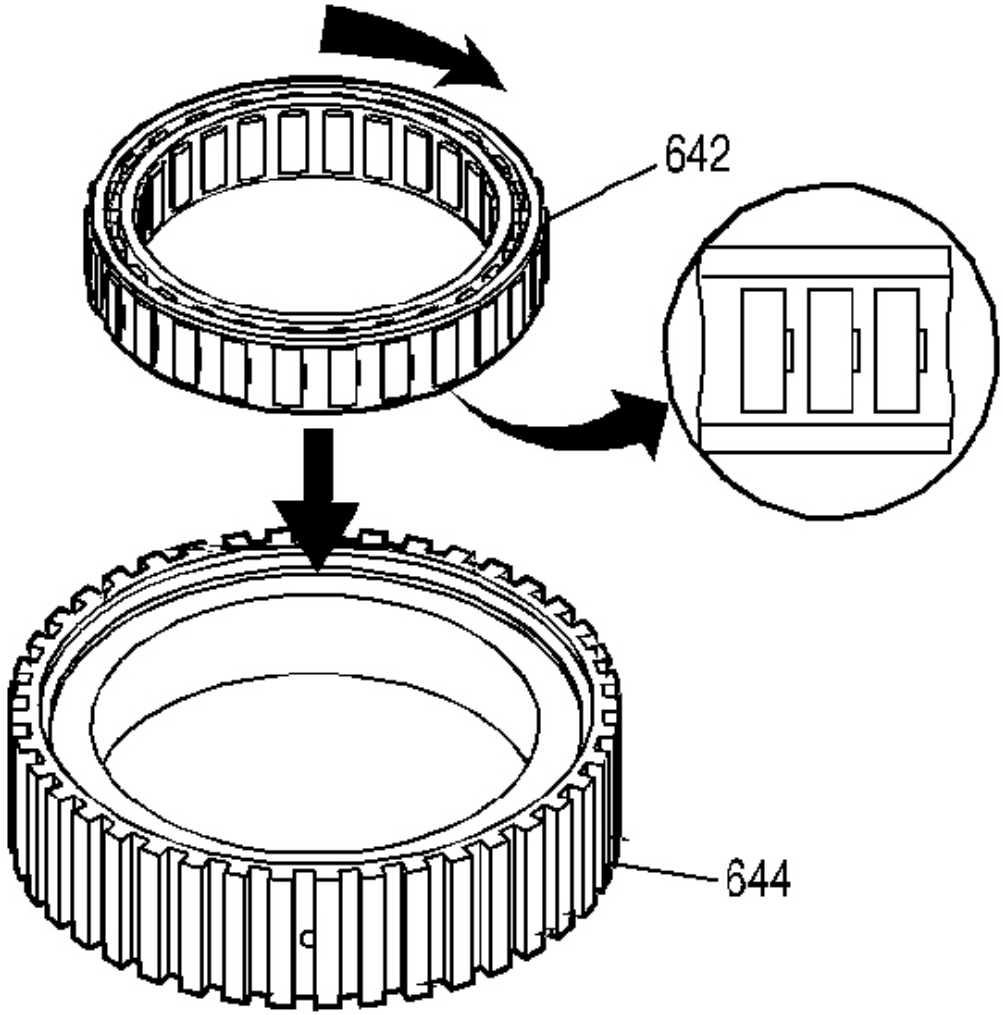

Fig. 171: Forward Sprag Assembly
Courtesy of GENERAL MOTORS CORP.

1. Inspect the forward sprag assembly (642) for the following conditions:
    - Wear or damage
    - Weak or broken springs
2. Inspect the forward clutch outer race (644) for the following conditions:
    - Race wear or damage
    - Spline wear

cardiagn.com

- Surface finish damage

3. Install the forward sprag assembly (642) into the forward clutch outer race (644).

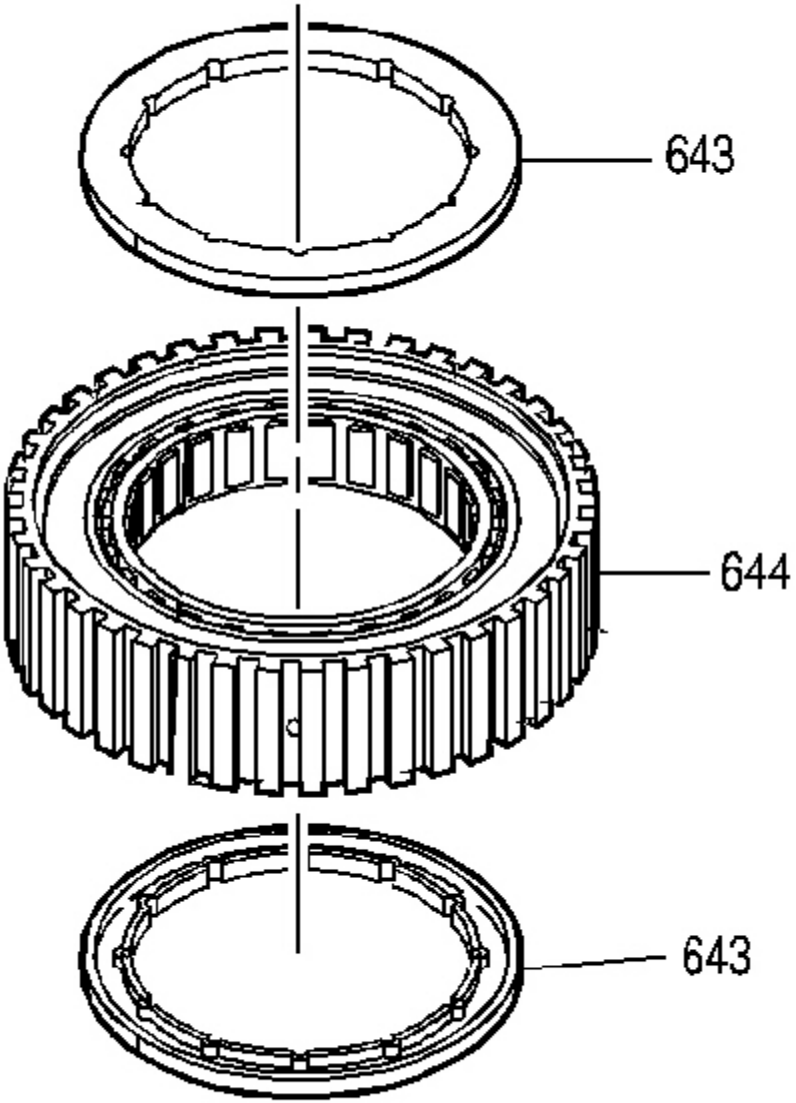

Fig. 172: View Of Sprag Assembly Retainer Rings
Courtesy of GENERAL MOTORS CORP.

4. Inspect the sprag assembly retainer rings (643) for wear or damage.

cardiagn.com

5. Install the sprag assembly retainer rings (643) into the forward clutch sprag assembly (644).

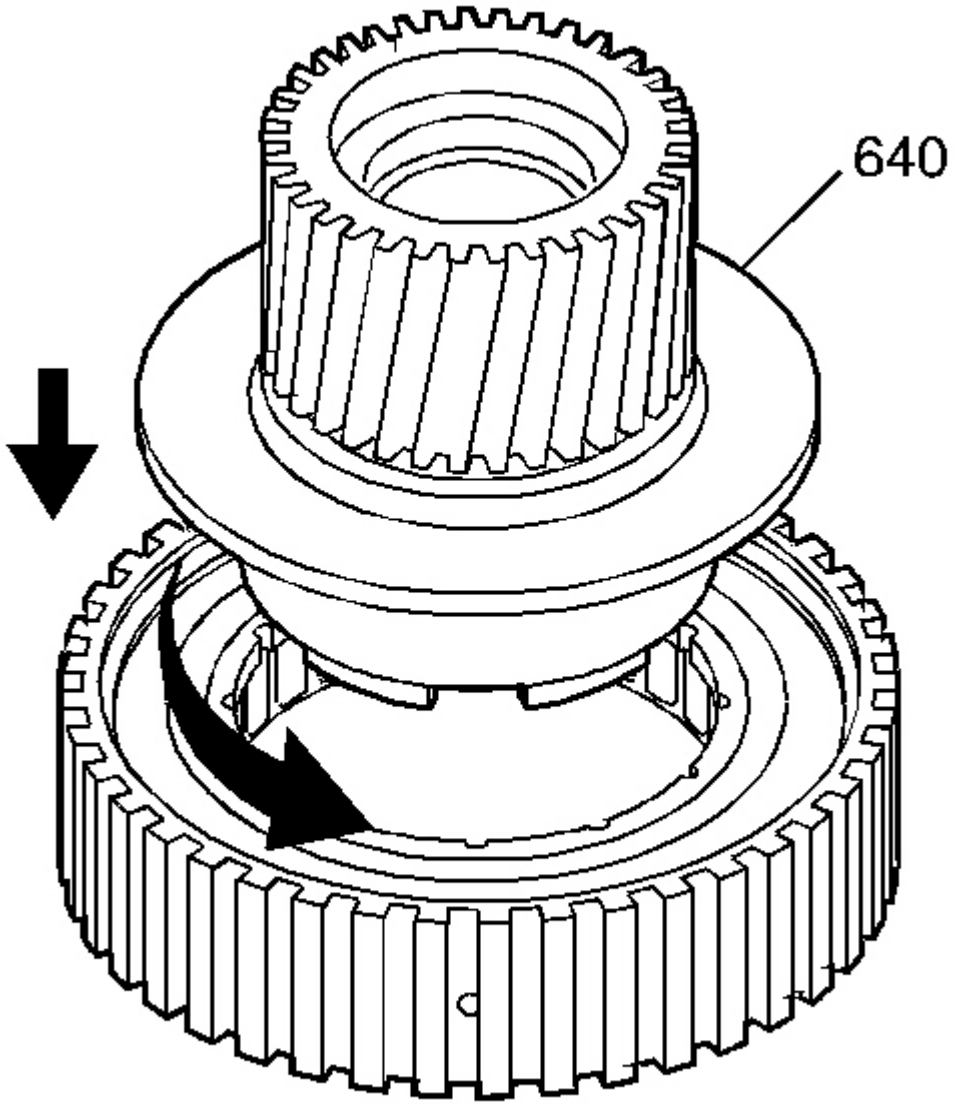

Fig. 173: Inspection Areas On Forward Sprag Clutch Inner Race And Input Sun Gear Assembly
Courtesy of GENERAL MOTORS CORP.

6. Inspect the forward sprag clutch inner race and input sun gear assembly (640) for the following conditions:

cardiagn.com

- Damaged spline or gear teeth
- Ring groove damage
- Surface finish damage
- Loose retainer
- Wear
- Cracks

7. Install the forward sprag clutch inner race and input sun gear assembly (640) into the forward sprag and outer race assembly.

cardiagn.com

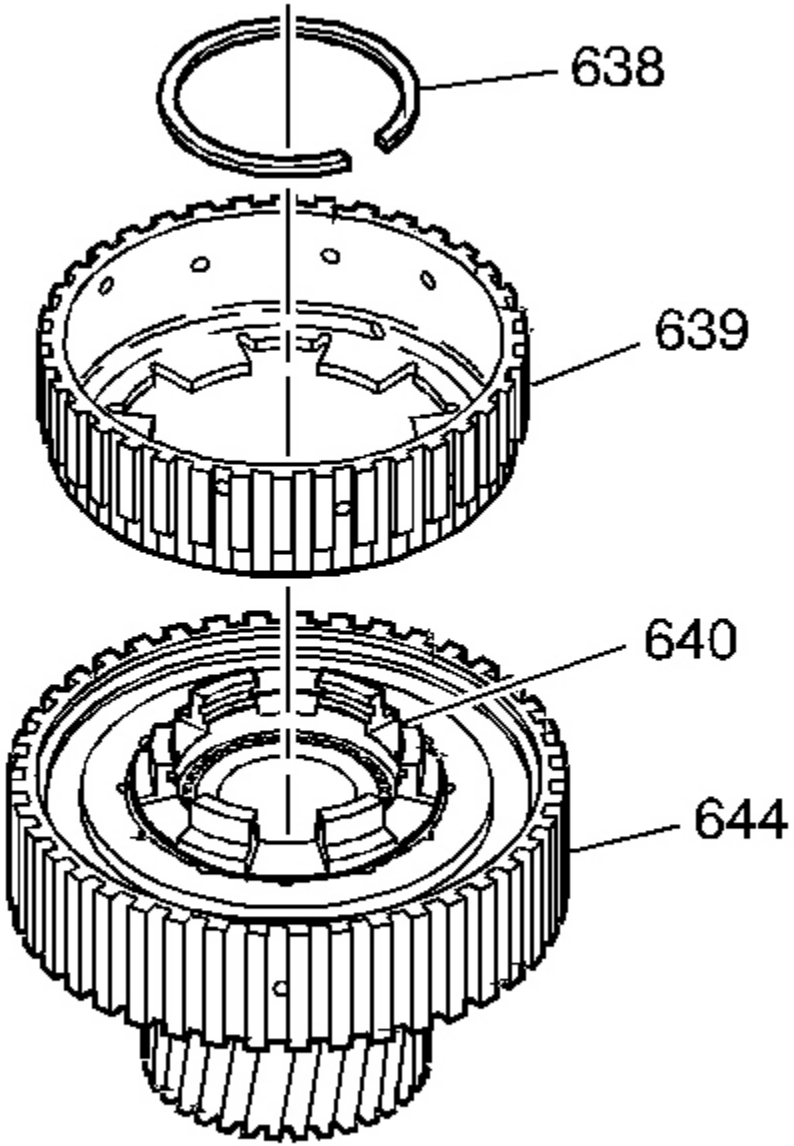

Fig. 174: Locating Overrun Clutch Hub
Courtesy of GENERAL MOTORS CORP.

8. Inspect the overrun clutch hub (639) for the following conditions:
    - Spline damage
    - Plugged lubrication holes

cardiagn.com

- Damaged tangs
- Cracks

9. Install the overrun clutch hub (639) onto the sprag clutch inner race and input sun gear assembly (640).
10. Install the overrun clutch hub retaining snap ring (638).

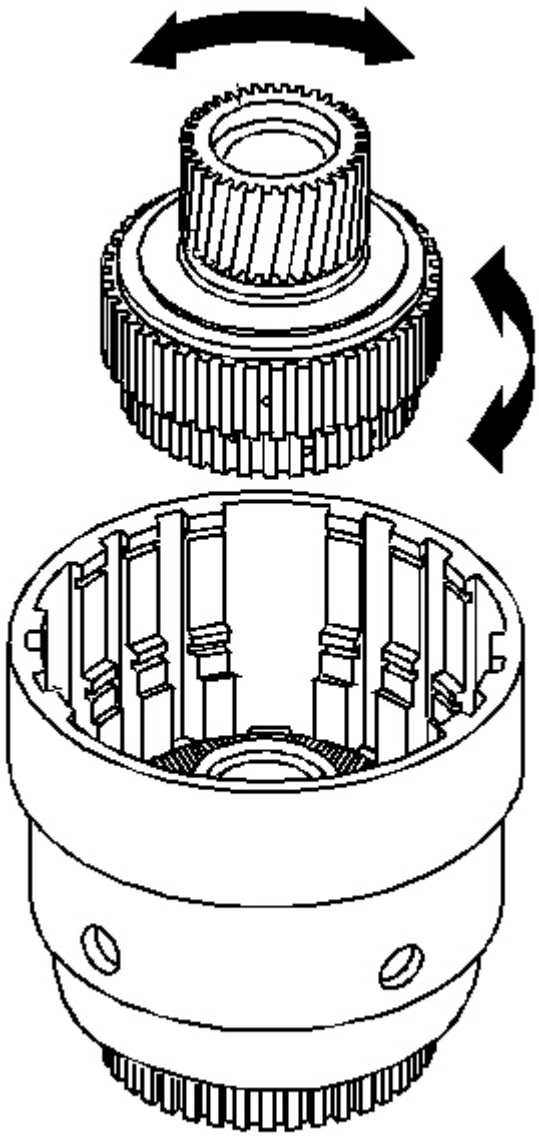

Fig. 175: Checking Sun Gear Rotation

cardiagn.com

Courtesy of GENERAL MOTORS CORP.

IMPORTANT: If the forward clutch sprag assembly operates backwards, you have installed the sprag backwards. Reassemble the sprag correctly.

11. Test the forward clutch sprag assembly for proper operation.
    1. Position the forward clutch sprag assembly with the input sun gear facing up.

    IMPORTANT: The sun gear should only rotate in a counterclockwise direction.

    2. Hold the forward sprag clutch outer race with one hand and rotate the input sun gear with the other hand.
12. Install the forward clutch sprag and input sun gear assembly into the input clutch housing.
13. Index the overrun clutch hub into the overrun clutch plates.

FORWARD CLUTCH ASSEMBLY ASSEMBLE

cardiagn.com

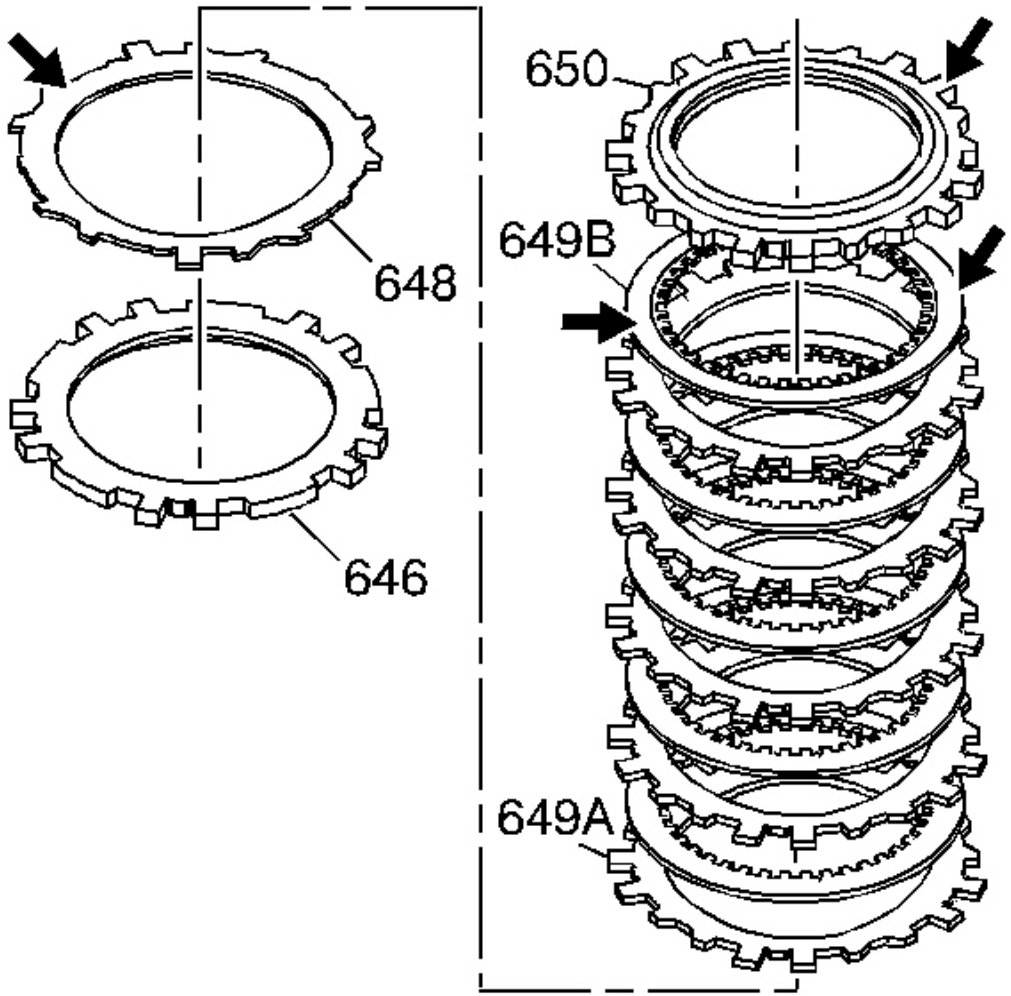

Fig. 176: Inspecting Forward Clutch Assembly For Wear Or Damage
Courtesy of GENERAL MOTORS CORP.

1. Inspect the forward clutch waved plate (648), the apply plate (646), the fiber plate assemblies (649B), the steel plates (649A) and the selective backing plate (650) for the following conditions:
    - Damaged tangs
    - Delamination
    - Excessive wear
    - Heat damage
    - Flatness

cardiagn.com

- Surface finish damage
- Burrs and nicks

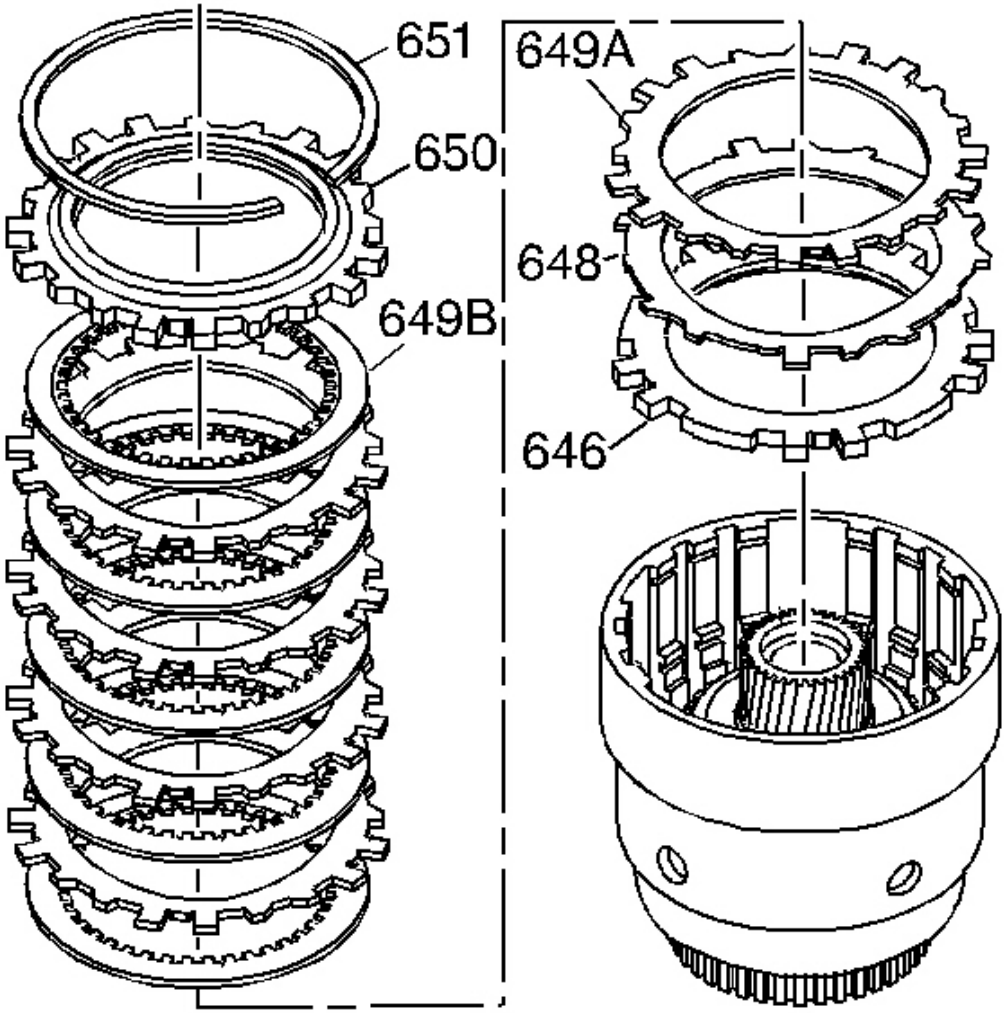

Fig. 177: Identifying Forward Clutch Apply Plates
Courtesy of GENERAL MOTORS CORP.

2. Install the forward clutch apply plate (646).
3. Install the forward clutch waved plate (648).
4. Install the forward clutch steel plates (649A) and alternate with the fiber plate assemblies (649B).
5. Install the forward clutch selective backing plate (650).

cardiagn.com

6. Install the forward clutch backing plate retainer ring (651).

FORWARD CLUTCH PISTON TRAVEL CHECK

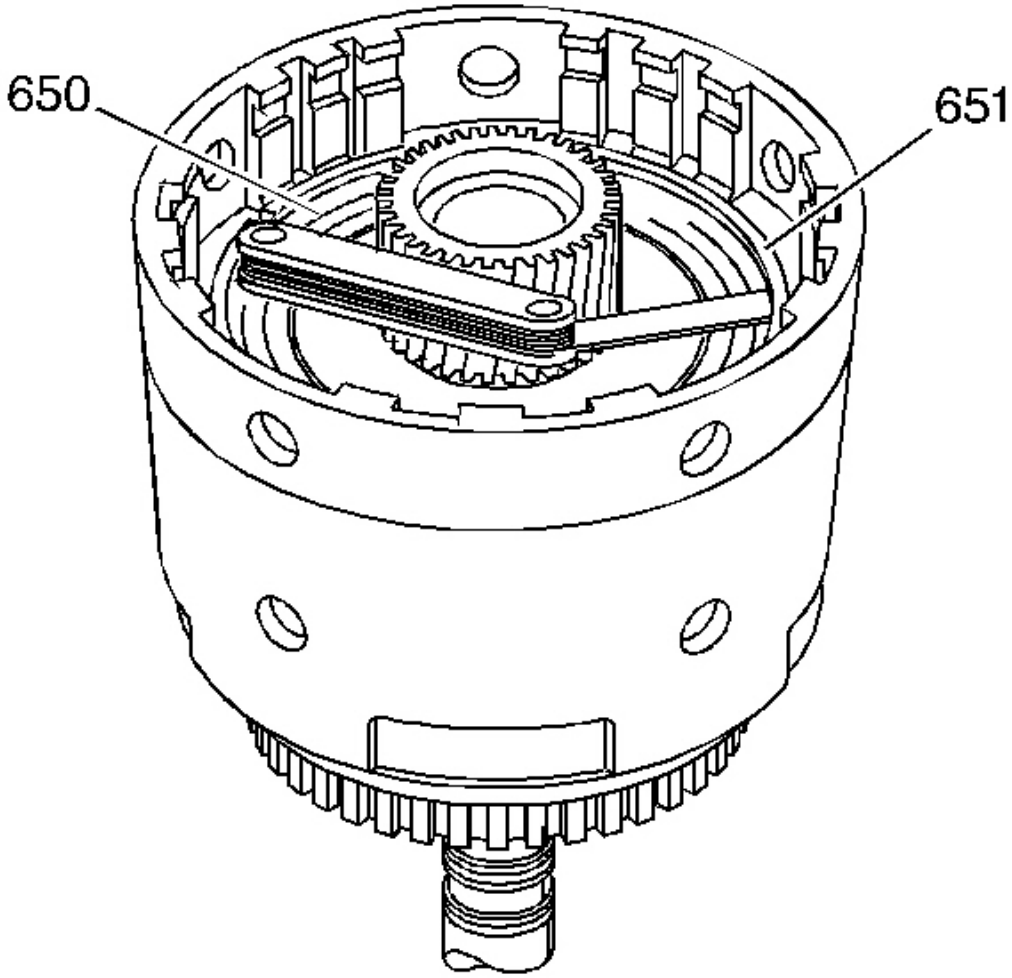

Fig. 178: Measuring Forward Clutch Plate Travel
Courtesy of GENERAL MOTORS CORP.

1. Use feeler gauges to check the forward clutch plate travel. Check travel between the forward clutch backing plate retainer ring (651) and the forward clutch selective backing plate (650).

   The forward clutch plate travel should be:

cardiagn.com

Specification:

- 245 mm Torque Converter- 0.766-1.756 mm (0.030-0.069 in)
- 298 mm/300 mm Torque Converter- 0.866-1.876 mm (0.034-0.074 in)

2. Select the proper forward clutch selective backing plate (650) to obtain the correct travel. Refer to **Forward Clutch Backing Plate Selection** .

3-4 CLUTCH ASSEMBLE

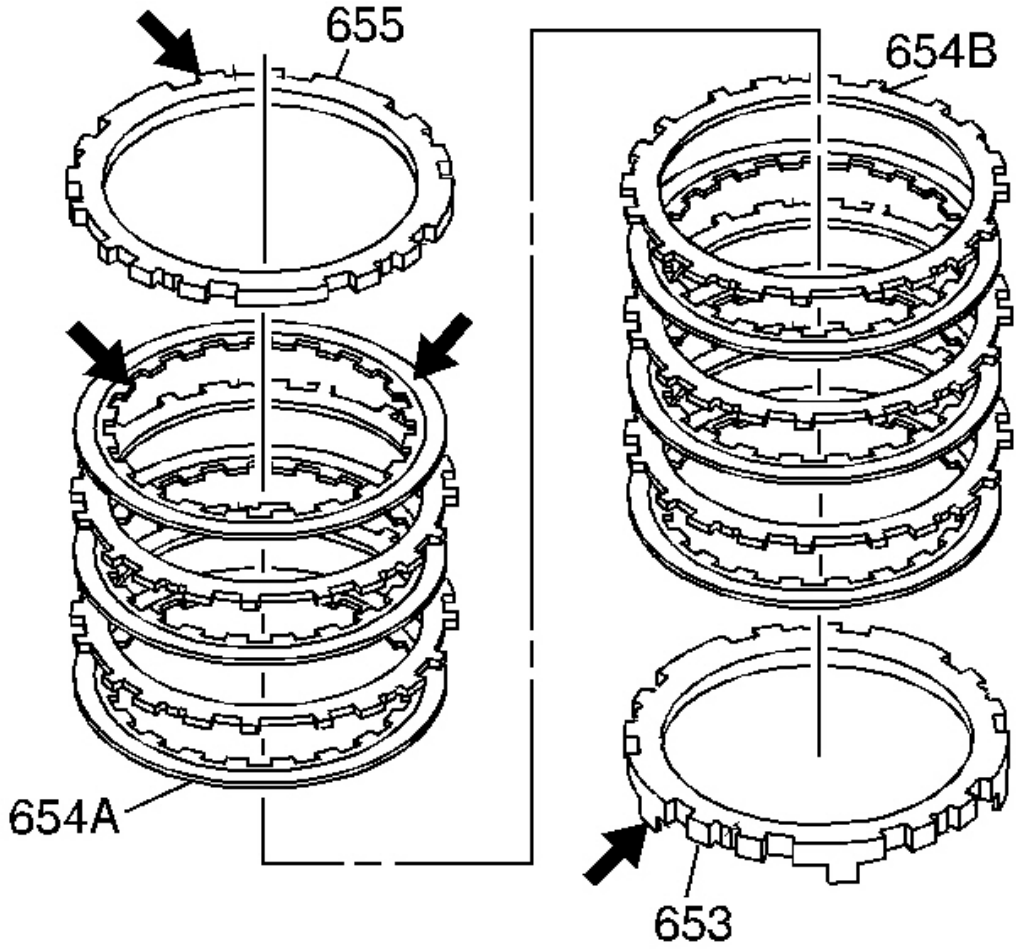

Fig. 179: View Of Inspection Areas On Clutch Apply Plates
Courtesy of GENERAL MOTORS CORP.

IMPORTANT: The part 654A may have 5, 6 or 7 plates.

cardiagn.com

1. Inspect the 3rd and 4th clutch apply plate (653), the fiber plate assemblies (654A), the steel plates (654B) and the selective backing plate (655) for the following conditions:
   - Damaged tangs
   - Delamination
   - Excessive wear
   - Heat damage or wear
   - Surface finish
   - Flatness

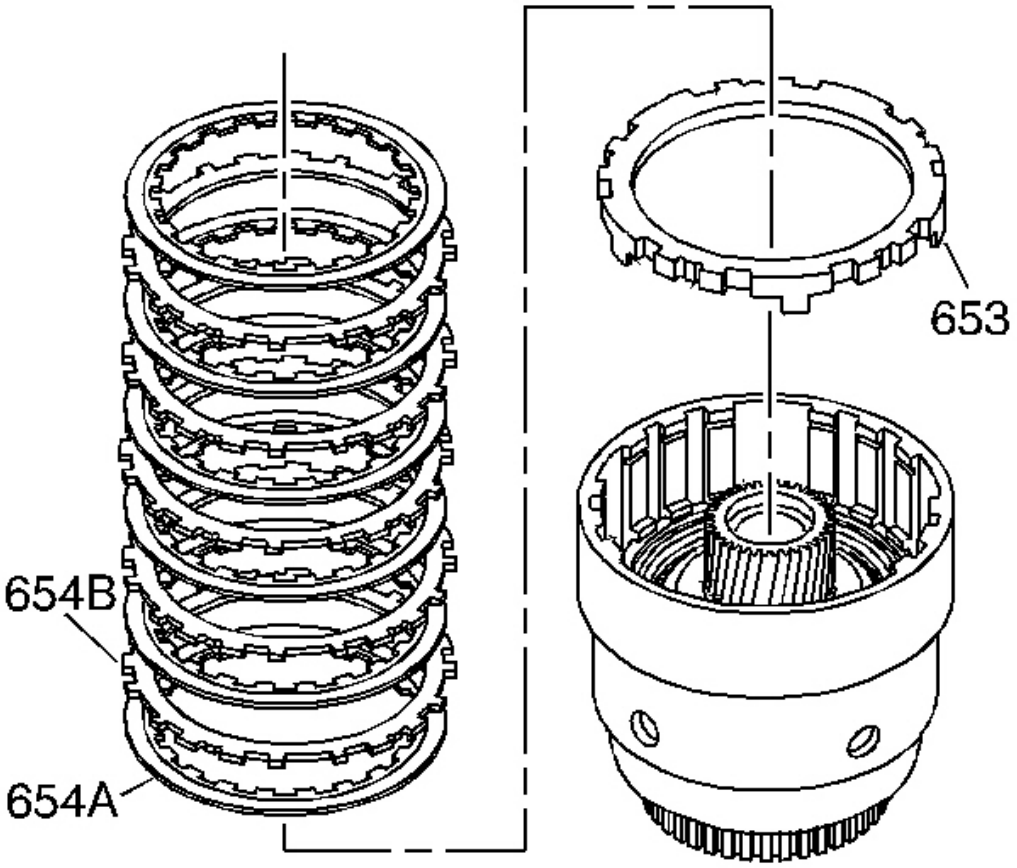

Fig. 180: Installing Clutch Apply Plates Into Input Housing
Courtesy of GENERAL MOTORS CORP.

2. Install the 3rd and 4th clutch apply plate (653) into the input housing. Index each leg of the apply plate into the apply ring legs.

cardiagn.com

NOTE: **The correct number of fiber plates must be used to avoid damage to the transmission. An incorrect stack up height can cause either excessive clutch slippage or insufficient release, resulting in burned clutch plates.**

IMPORTANT: **The first steel plate (654B) has the same spline configuration as the 3rd and 4th clutch apply plate (653).**

IMPORTANT: **The 3rd and 4th clutch plate stack is model specific. Clutch plate stack up could be either 6 or 7 plates.**

3. Install the 3rd and 4th clutch plates starting with a fiber plate assembly (654A) and alternate with a steel plate (654B).

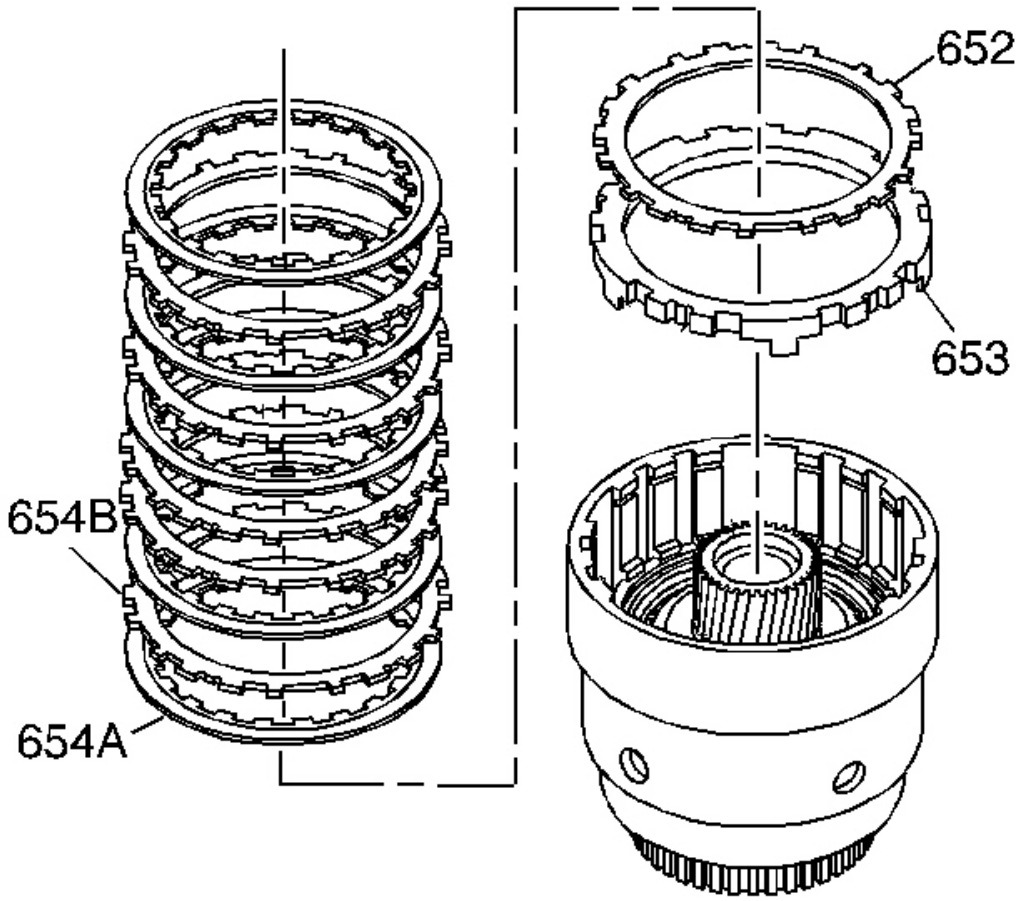

Fig. 181: Illustrating Clutch Plate Assembly

cardiagn.com

Courtesy of GENERAL MOTORS CORP.

4. Continue the stack up if seven 654A plates are used.

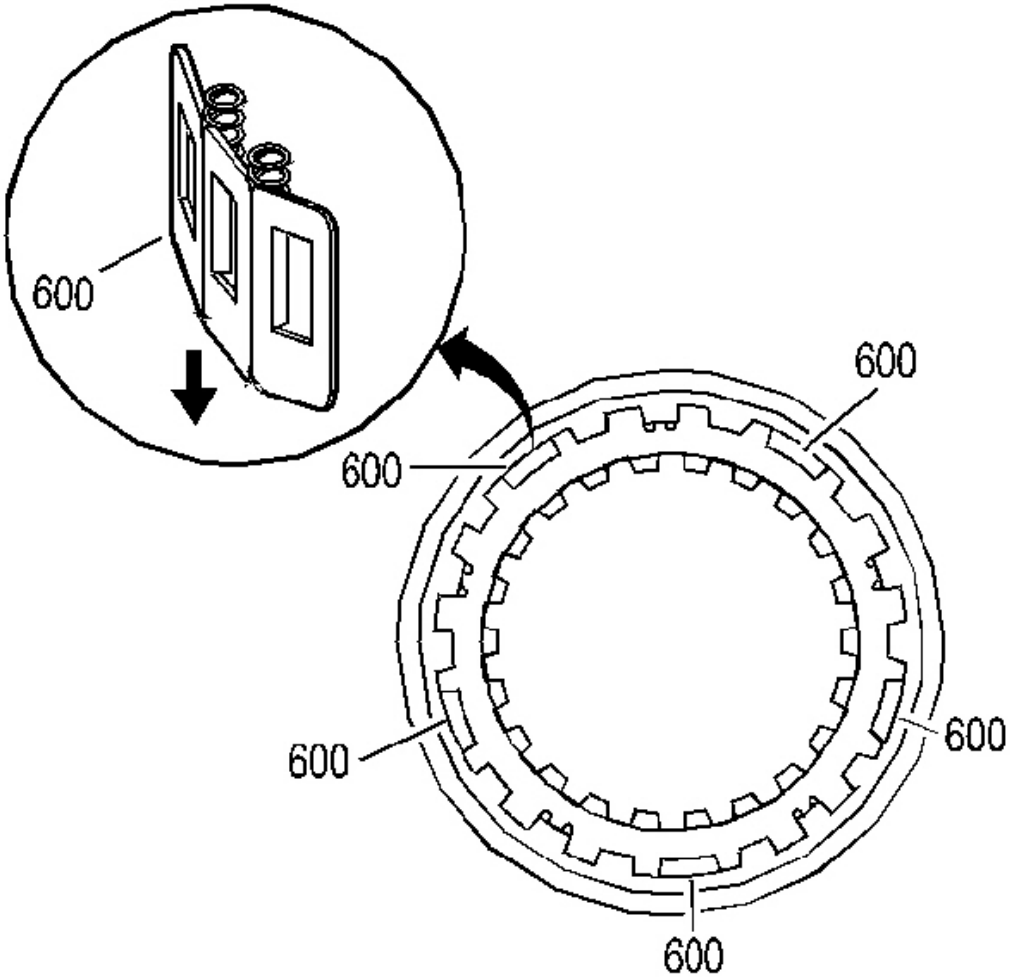

Fig. 182: Identifying 3-4 Clutch Boost Spring Assemblies
Courtesy of GENERAL MOTORS CORP.

5. Inspect the five 3-4 clutch boost spring assemblies (600) for damaged, worn, broken or missing springs. Springs must be held securely by retainer.
6. Install the 3-4 clutch boost spring assemblies (600) into the input housing.

cardiagn.com

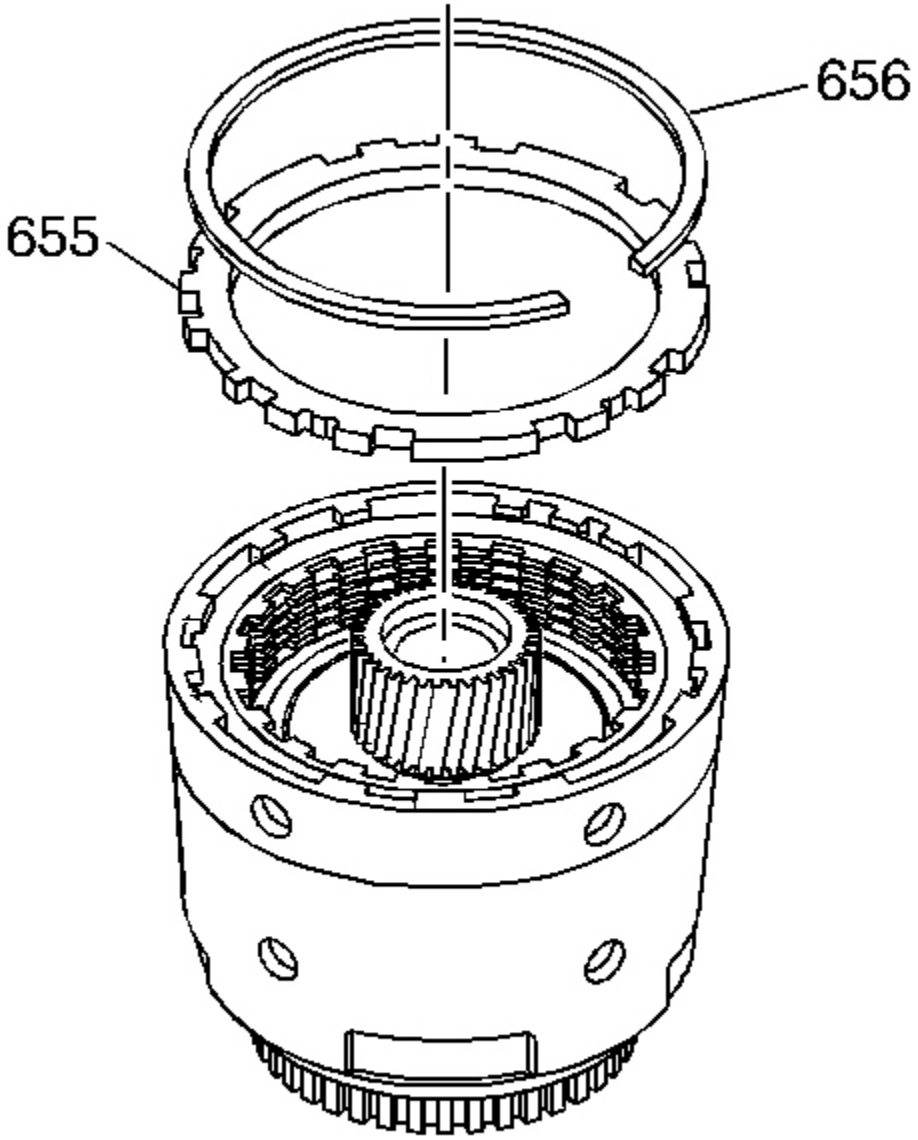

Fig. 183: Locating 3rd & 4th Clutch Selective Backing Plate & Retainer Ring
Courtesy of GENERAL MOTORS CORP.

7. Install the 3rd and 4th clutch selective backing plate (655). Some models may have a chamfer on one side of the selective backing plate. Install the chamfer side up.
8. Install the 3rd and 4th clutch backing plate retainer ring (656).

cardiagn.com

3-4 CLUTCH PLATE TRAVEL CHECK

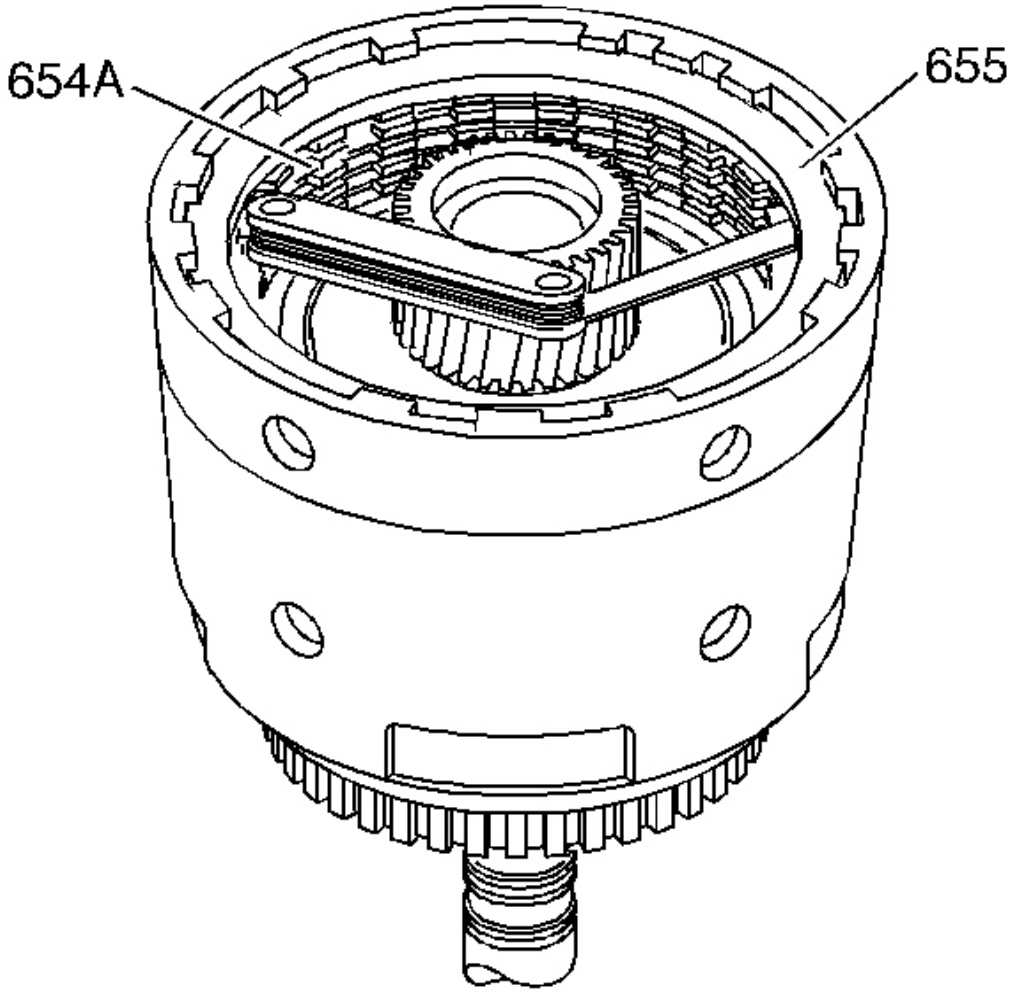

Fig. 184: Checking 3rd & 4th Clutch Plate Travel
Courtesy of GENERAL MOTORS CORP.

1. Use feeler gauges to check the 3rd and 4th clutch plate travel.
2. Check the travel between the selective backing plate (655) and the first fiber plate assembly (654A).

   The 3rd and 4th clutch plate travel should be 0.90-2.10 mm (0.035-0.083 in).

3. Select the proper 3rd and 4th clutch selective backing plate to obtain the correct travel. Refer to **Third and Fourth Clutch Backing Plate Selection** .

cardiagn.com

CLUTCH AIR CHECK

Inspection Procedure

IMPORTANT: When the overrun clutch is checked, the air will blow by the forward clutch piston lip seals and exit out of the forward clutch feed hole in the turbine shaft.

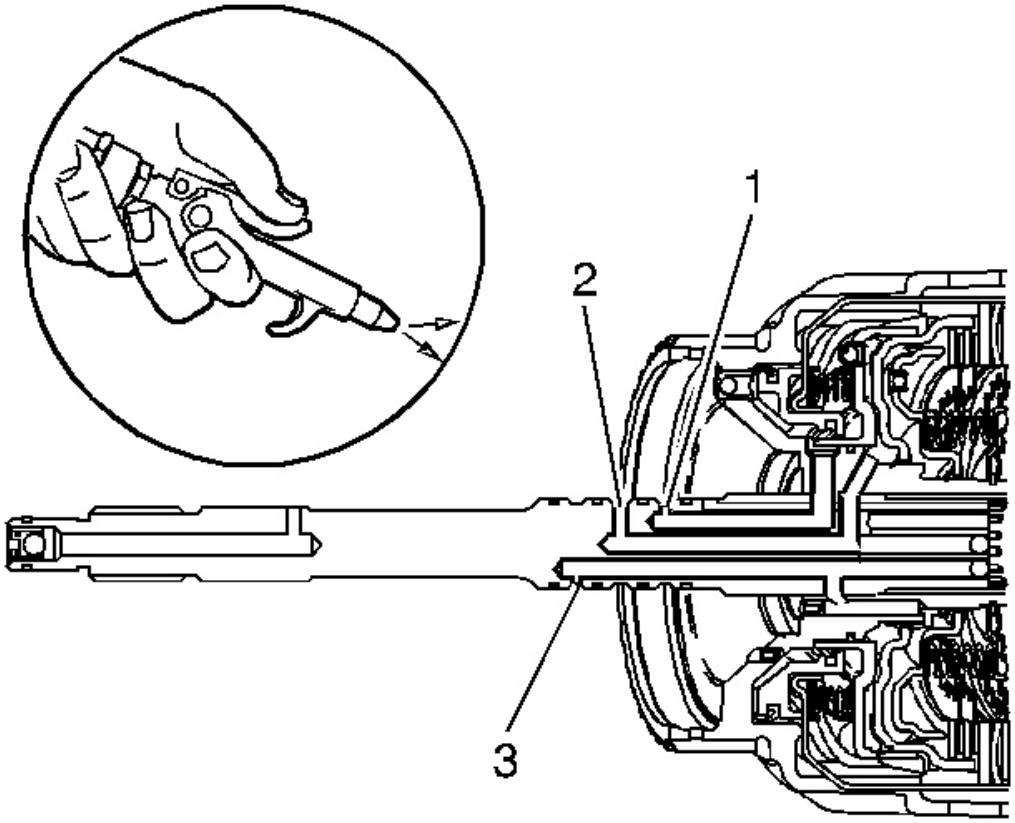

Fig. 185: Applying Air To Check Overrun Clutch
Courtesy of GENERAL MOTORS CORP.

Apply air into the feed holes in the turbine shaft in order to check the following items:

- The 3rd and 4th clutch (1)
- The forward clutch (2)
- The overrun clutch (3)

cardiagn.com

TURBINE SHAFT SEALS INSTALLATION

Tools Required

- **J 36418-1B** Turbine Shaft Seal Installer. See **Special Tools and Equipment** .
- **J 36418-2A** Turbine Shaft Seal Sizer. See **Special Tools and Equipment** .

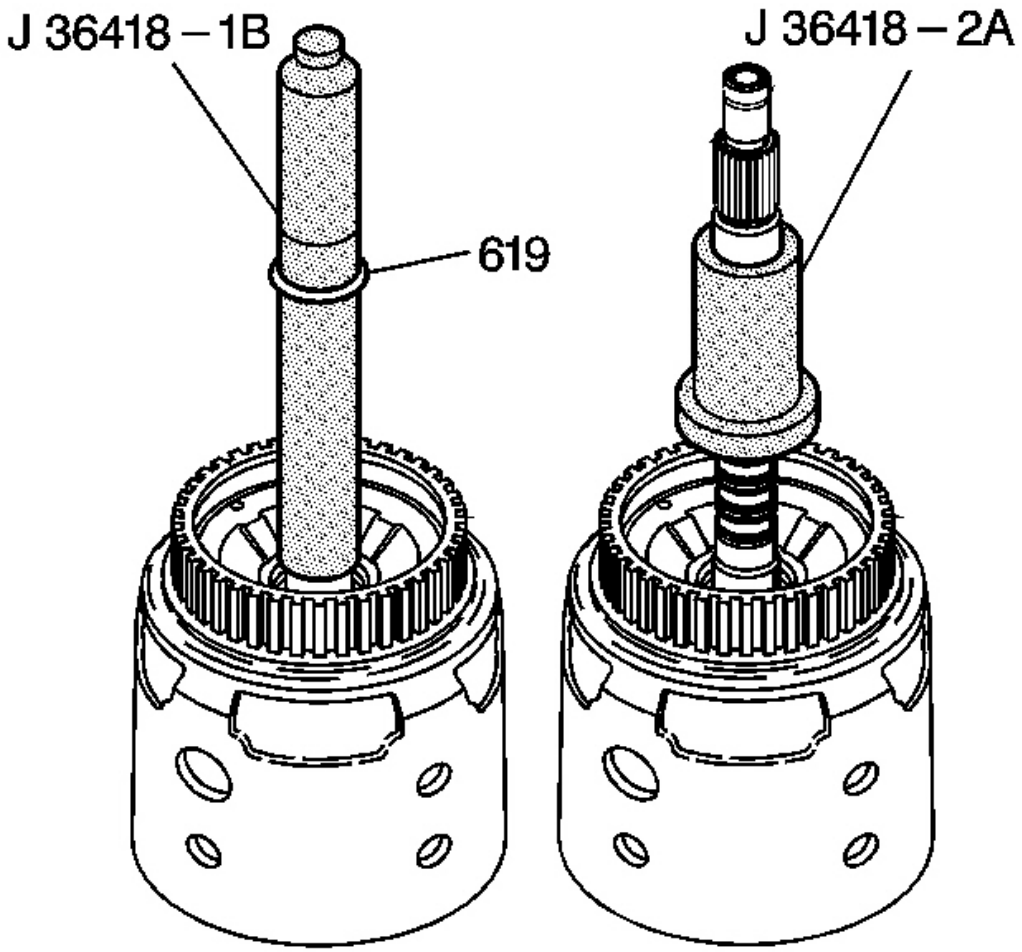

Fig. 186: Identifying J 36418-1B & J 36418-2A
Courtesy of GENERAL MOTORS CORP.

1. Use the **J 36418-1B** in order to install the four turbine shaft oil seal rings (619).
2. Place the **J 36418-2A** over the turbine shaft oil seal rings (619). Leave the **J 36418-2A** on the shaft until the reverse input clutch must be installed on the input clutch.

cardiagn.com

REVERSE INPUT CLUTCH DISASSEMBLE

Tools Required

- **J 23327-1** Forward Clutch Spring Compressor (Bridge). See **Special Tools and Equipment** .
- **J 25018-A** Clutch Spring Compressor Adapter. See **Special Tools and Equipment** .

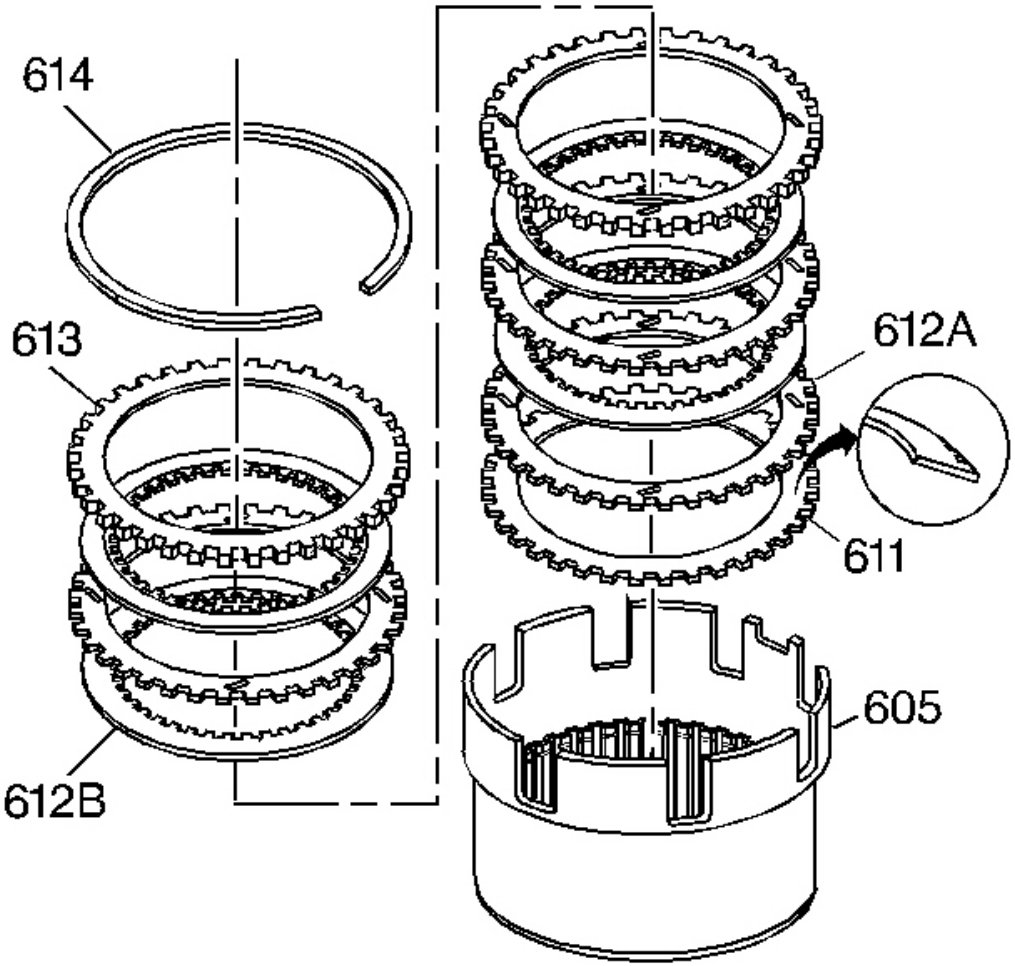

Fig. 187: Locating Reverse Input Clutch Plates
Courtesy of GENERAL MOTORS CORP.

1. Remove the reverse input clutch retaining ring (614).
2. Remove all reverse input clutch plates (611-613).

cardiagn.com

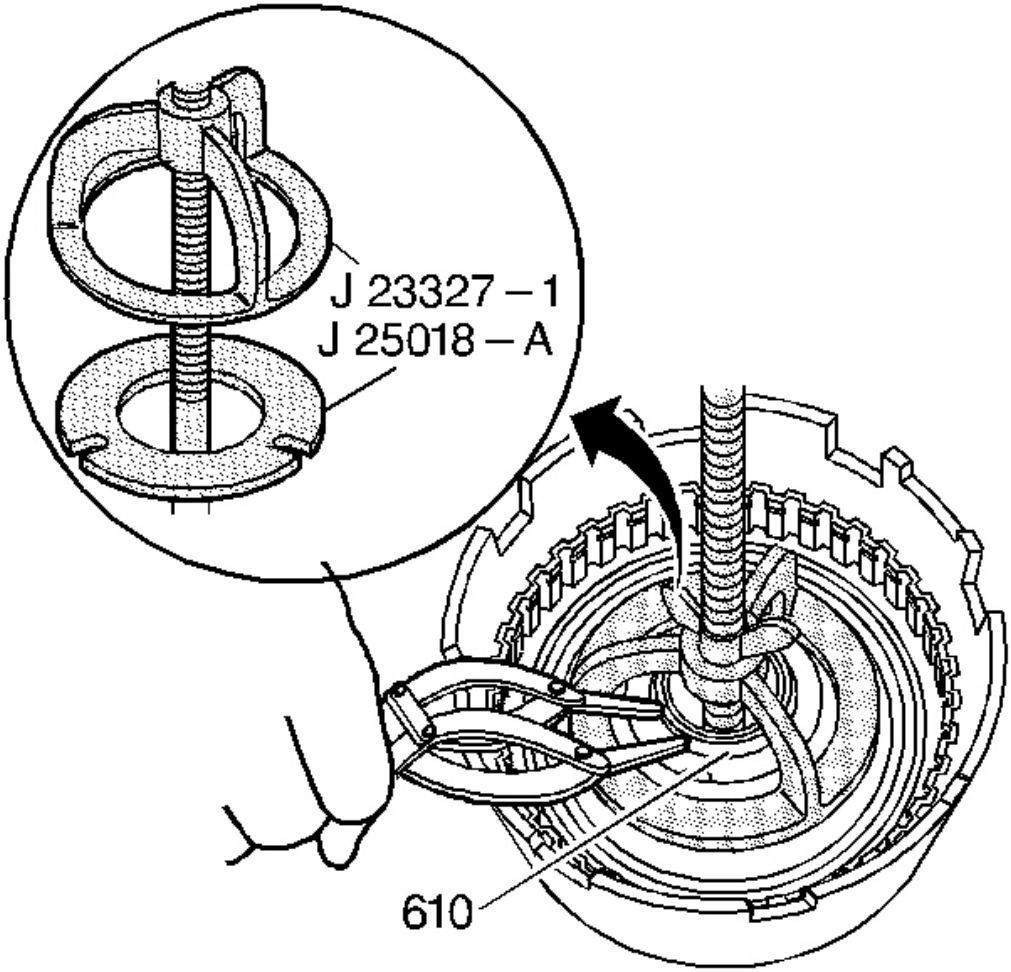

Fig. 188: View Of Reverse Input Clutch Spring Retainer Ring
Courtesy of GENERAL MOTORS CORP.

3. Install the **J 23327-1** and the **J 25018-A** .
4. Compress the reverse input clutch spring assembly.
5. Remove the reverse input clutch spring retainer ring (610).

cardiagn.com

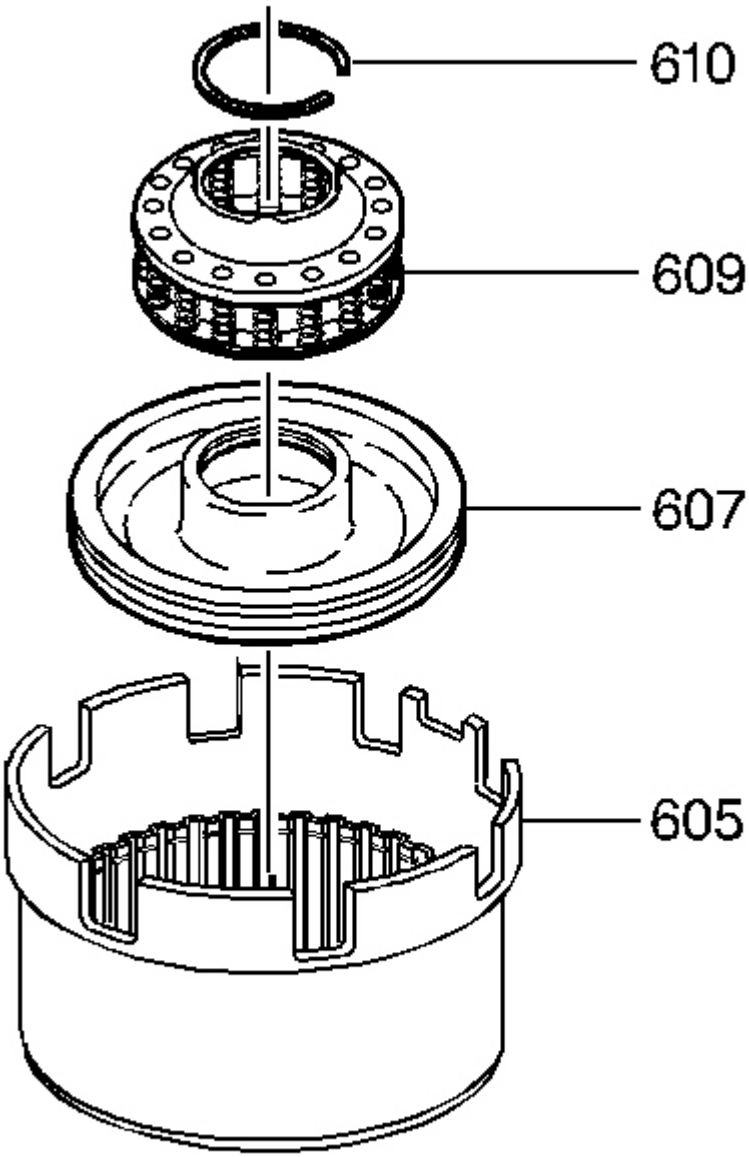

Fig. 189: Identifying Reverse Input Clutch Spring & Piston Assemblies
Courtesy of GENERAL MOTORS CORP.

6. Remove the reverse input clutch spring assembly (609).
7. Remove the reverse input clutch piston assembly (607).

cardiagn.com

REVERSE INPUT CLUTCH BUSHING REPLACEMENT

Removal Procedure

Tools Required

- **J 25019** Bushing Service Set. See **Special Tools and Equipment** .
- **J 34196-B** Transmission Bushing Service Set. See **Special Tools and Equipment** .
- **J 7004-A** Universal Remover. See **Special Tools and Equipment** .
- J 8092 Universal Driver Handle - 3/4 in - 10

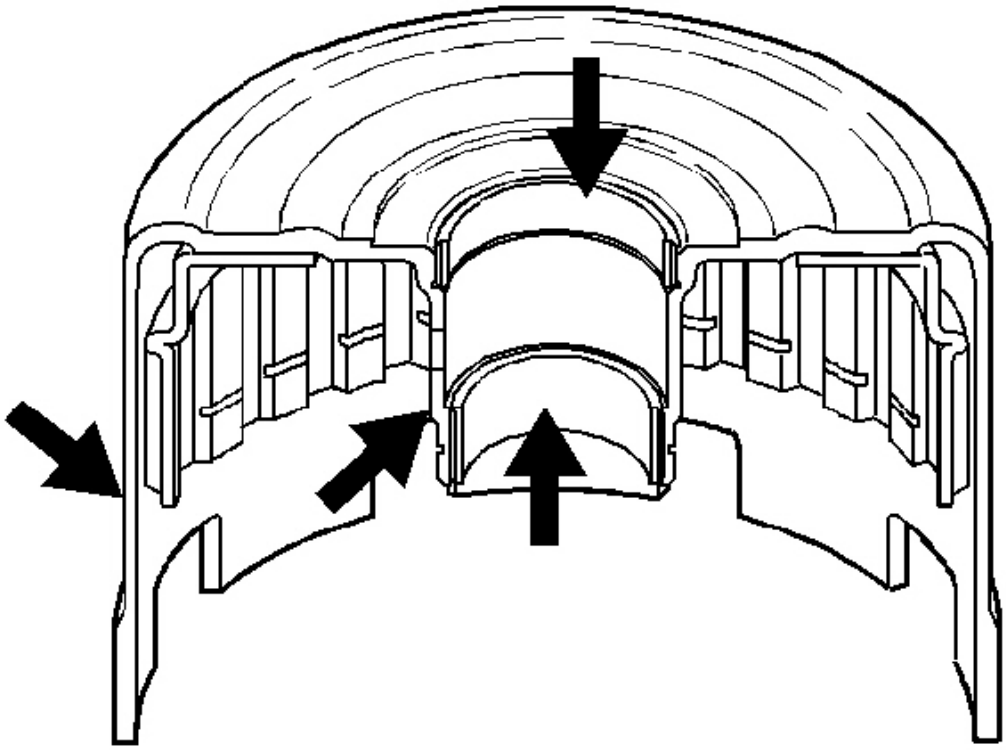

Fig. 190: Inspection Areas On Reverse Input Clutch Housing & Drum Assembly
Courtesy of GENERAL MOTORS CORP.

1. Inspect the reverse input clutch housing and drum assembly for the following conditions:
   - Damaged or worn bushings
   - Surface finish on the hub and outer housing - check band surface for flatness

cardiagn.com

- Leak at the weld
- Heat distortion
- Rolled or distorted retaining ring groove

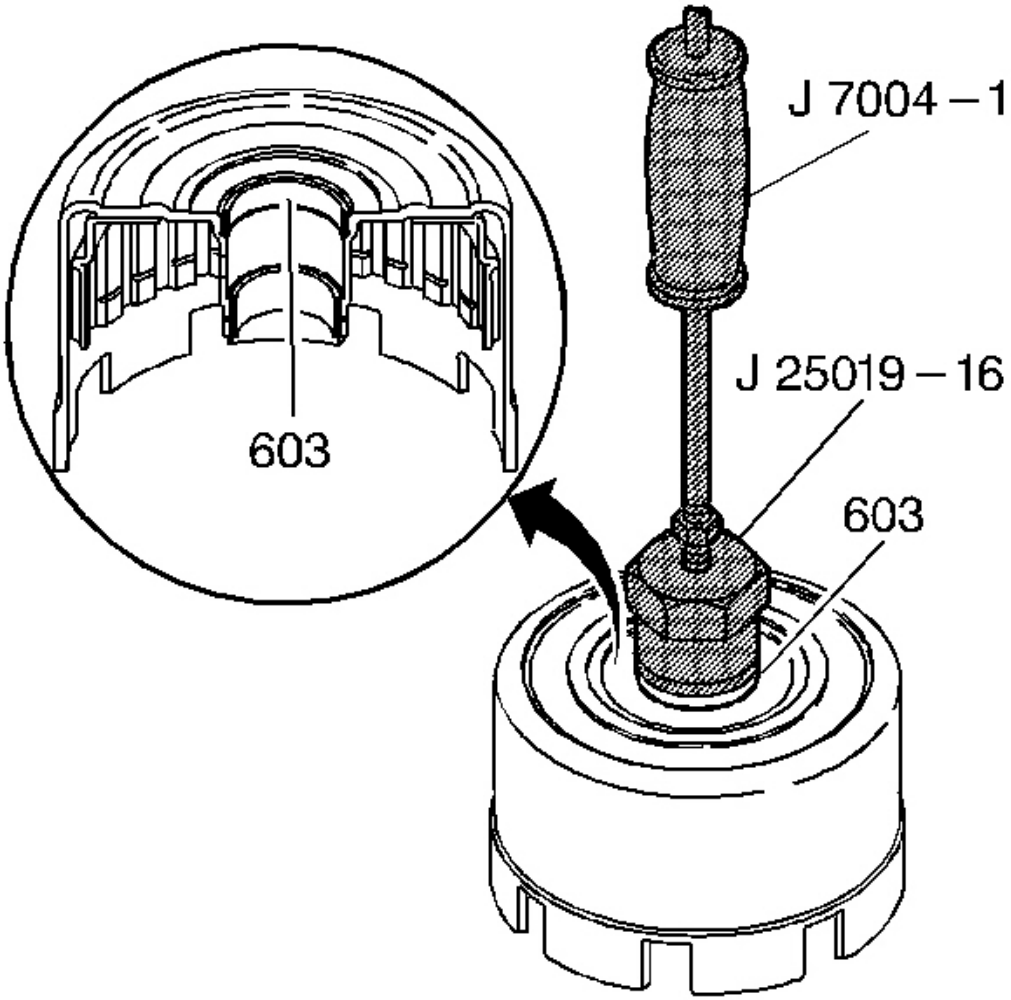

Fig. 191: Identifying Reverse Input Clutch Front Bushing
Courtesy of GENERAL MOTORS CORP.

2. Using the J 25019-16 with the **J 7004-A** , remove the reverse input clutch front bushing (603).

cardiagn.com

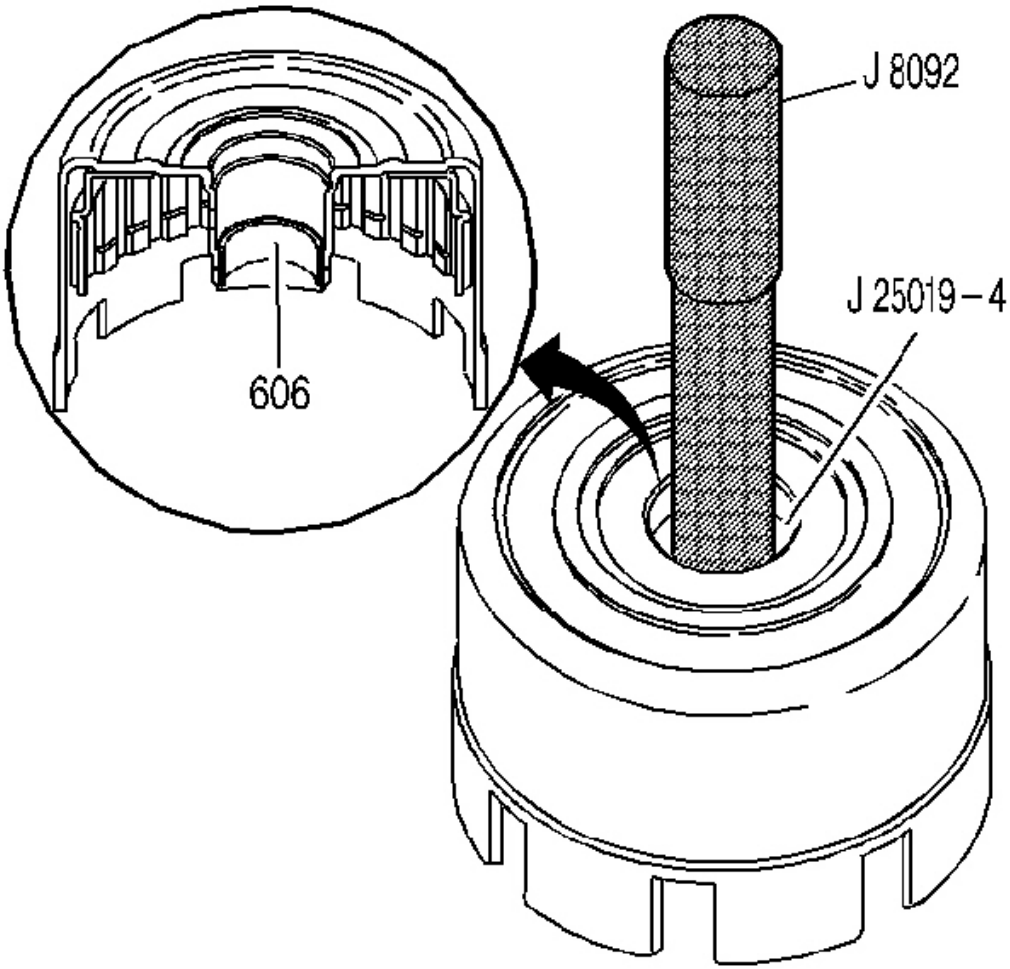

Fig. 192: Locating Reverse Input Clutch Rear Bushing
Courtesy of GENERAL MOTORS CORP.

3. Using the **J 25019-4** with the J 8092 , remove the reverse input clutch rear bushing (606).

Installation Procedure

cardiagn.com

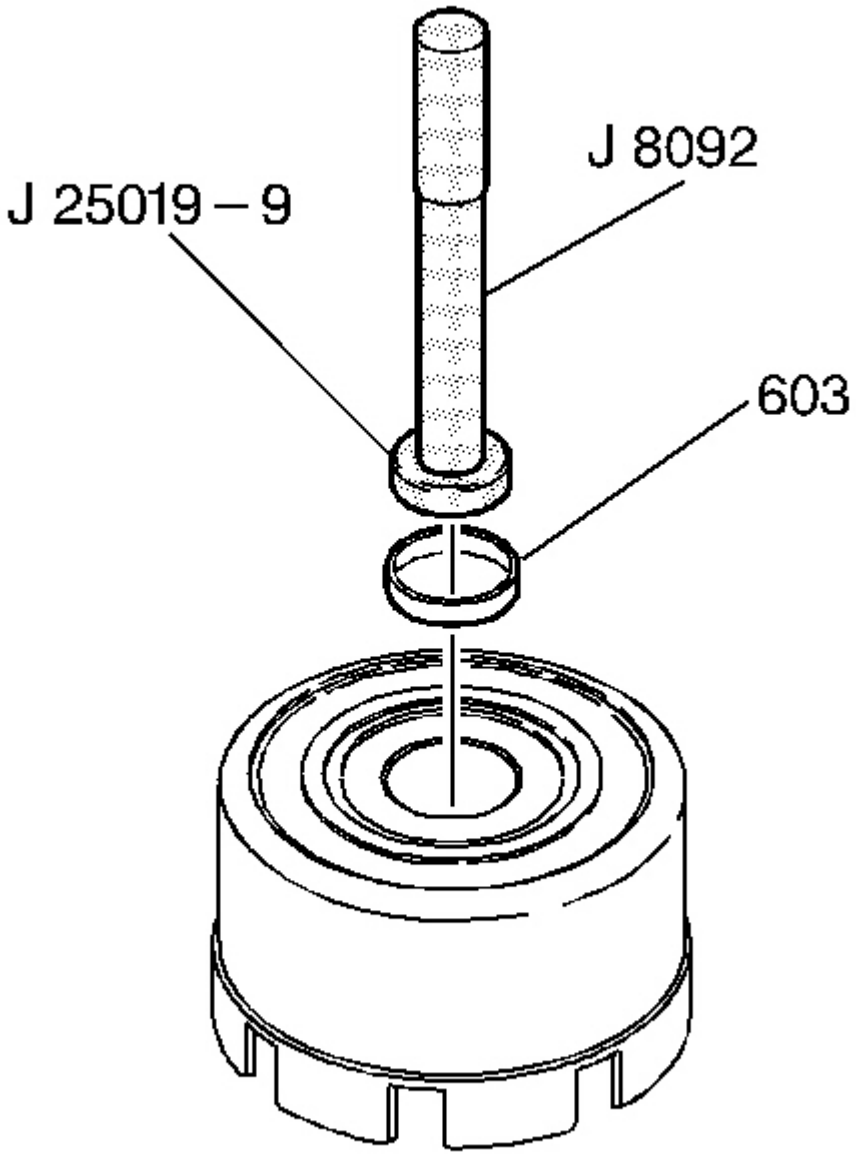

Fig. 193: View Of Reverse Input Clutch Front Bushing
Courtesy of GENERAL MOTORS CORP.

1. Using the **J 25019-9** with the J 8092 , install a reverse input clutch front bushing (603).

cardiagn.com

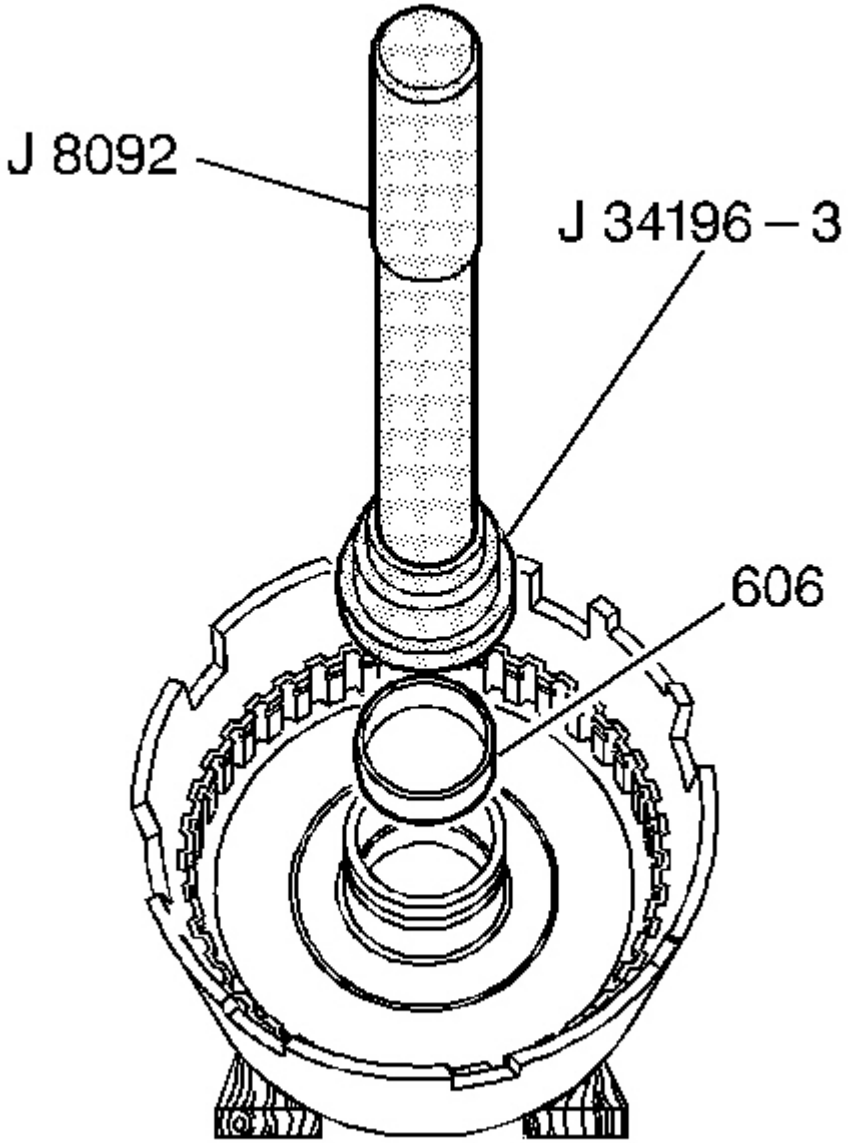

Fig. 194: Installing Reverse Input Clutch Rear Bushing
Courtesy of GENERAL MOTORS CORP.

2. Using the **J 34196-3** which is part of kit **J 34196-B** with the J 8092 , install a reverse input clutch rear bushing (606).

REVERSE INPUT CLUTCH ASSEMBLE

cardiagn.com

Tools Required

- **J 23327-1** Forward Clutch Spring Compressor (Bridge). See **Special Tools and Equipment** .
- **J 25018-A** Clutch Spring Compressor Adapter. See **Special Tools and Equipment** .
- **J 44571-1** Reverse Input Clutch Piston Installer. See **Special Tools and Equipment** .

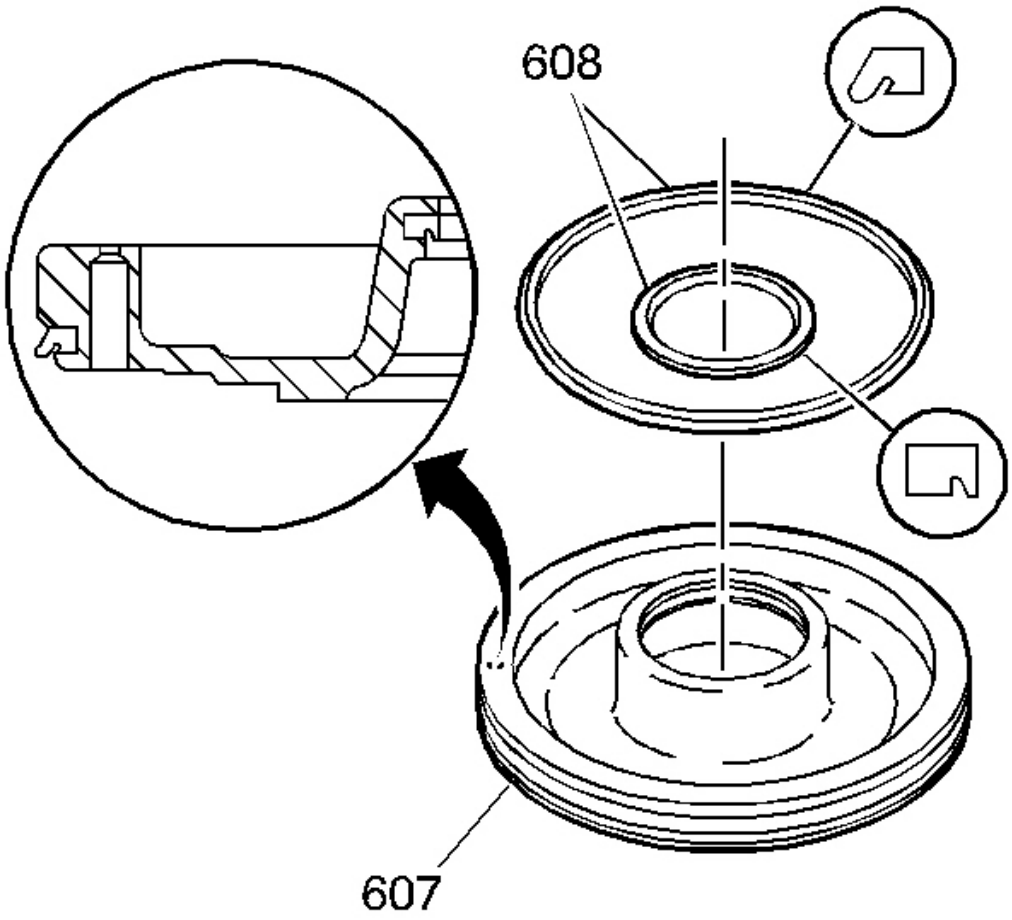

Fig. 195: Locating Inspection Areas On Reverse Input Clutch Piston
Courtesy of GENERAL MOTORS CORP.

1. Inspect the reverse input clutch piston (607) for the following defects:
   - Damaged or porosity
   - Ring groove damage
2. Install the reverse input clutch inner and outer seals (608) on the piston.

cardiagn.com

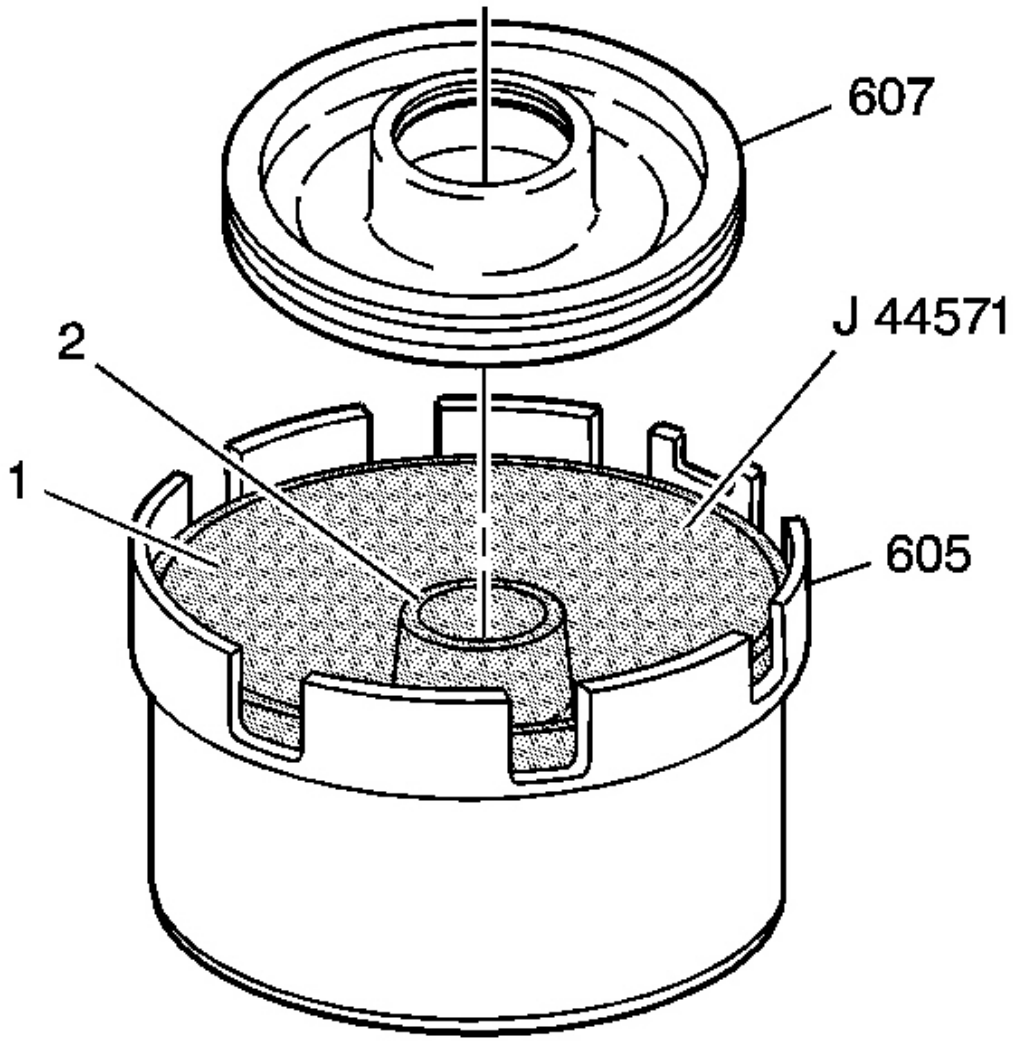

Fig. 196: View Of J 44571-1
Courtesy of GENERAL MOTORS CORP.

3. Install the **J 44571-1** inner (2) and outer (1) reverse input clutch piston installer.
4. Install the piston (607 into the housing (605).
5. Remove the **J 44571-1** .

cardiagn.com

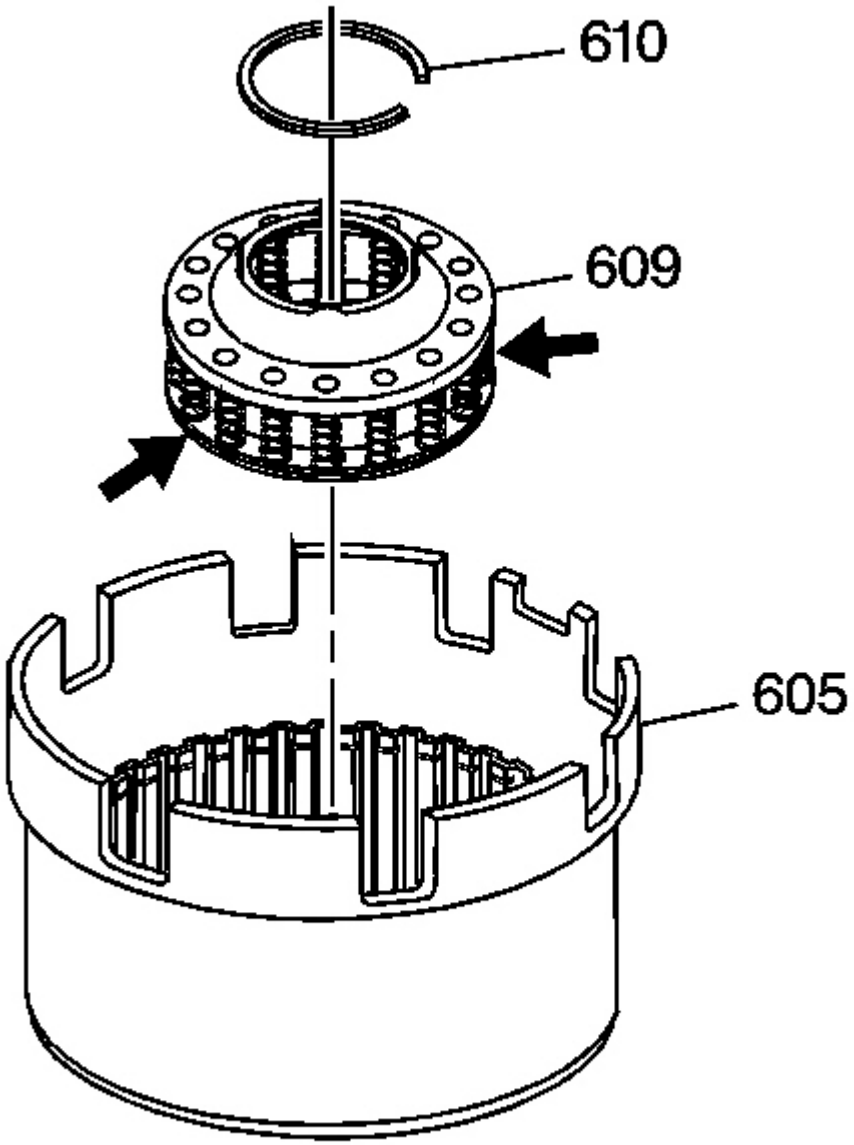

Fig. 197: Identifying Reverse Input Clutch Spring Assembly
Courtesy of GENERAL MOTORS CORP.

6. Inspect the reverse input clutch spring assembly (609) for distortion or damage.
7. Install the reverse input clutch spring assembly (609).

cardiagn.com

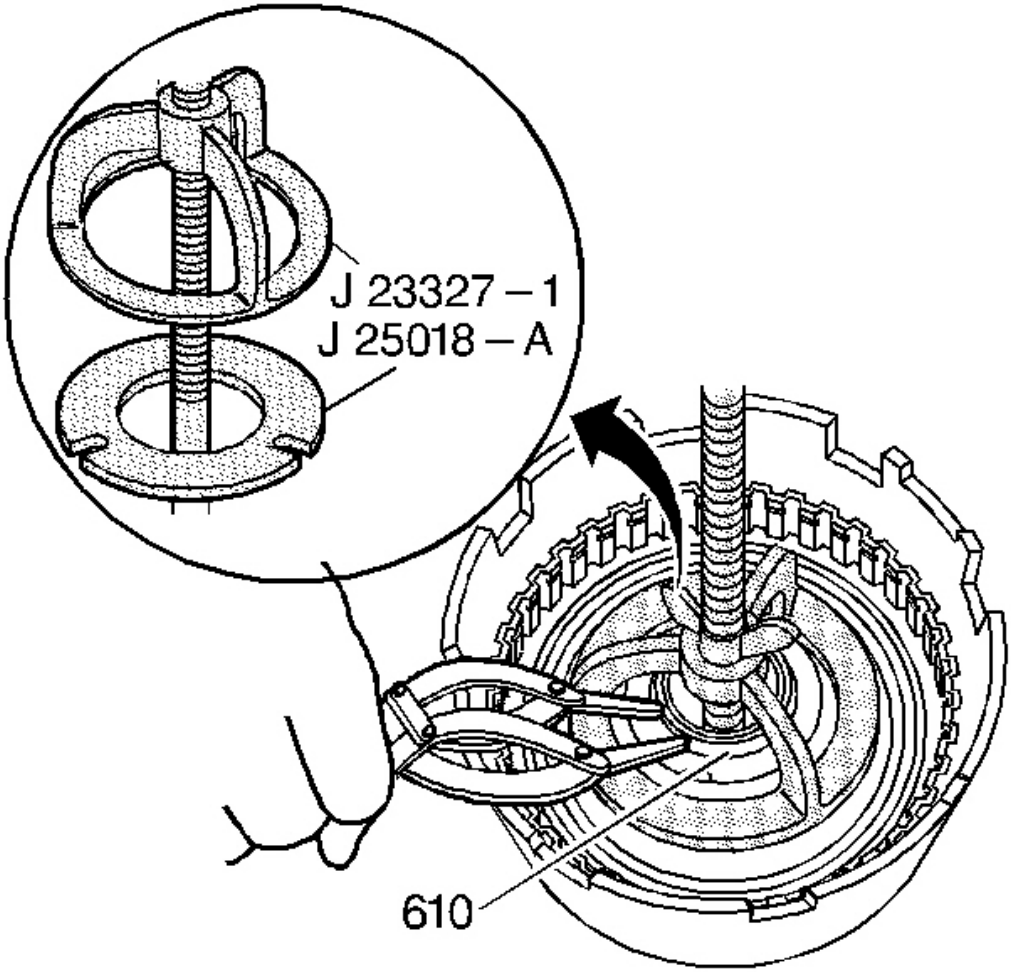

Fig. 198: View Of Reverse Input Clutch Spring Retainer Ring
Courtesy of GENERAL MOTORS CORP.

8. Install the **J 23327-1** and the **J 25018-A** .
9. Install the reverse input clutch spring retainer ring (610).

cardiagn.com

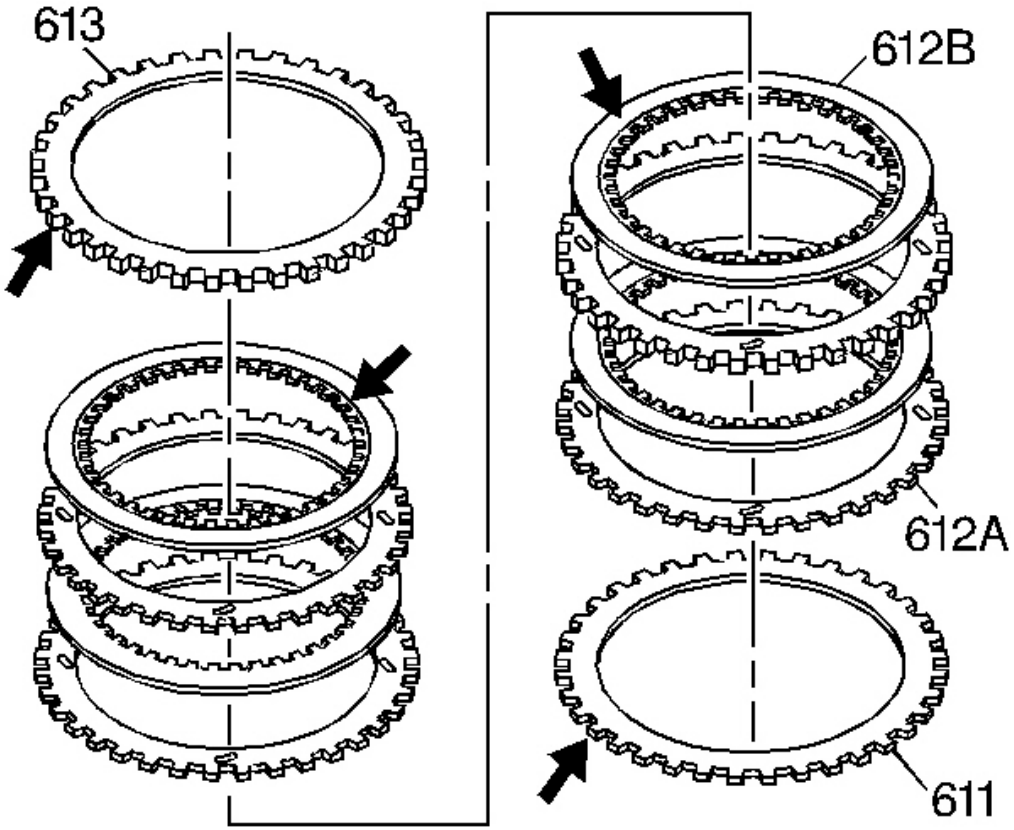

Fig. 199: Inspecting Plates For Damage Or Wear
Courtesy of GENERAL MOTORS CORP.

10. Inspect the belleville plate (611), the fiber plate assemblies (612B), the steel turbulator plates (612A) and the selective backing plate (613) for the following items:
    - Damaged tangs
    - Delamination
    - Excessive wear
    - Heat damage or wear
    - Surface finish
    - Flatness

cardiagn.com

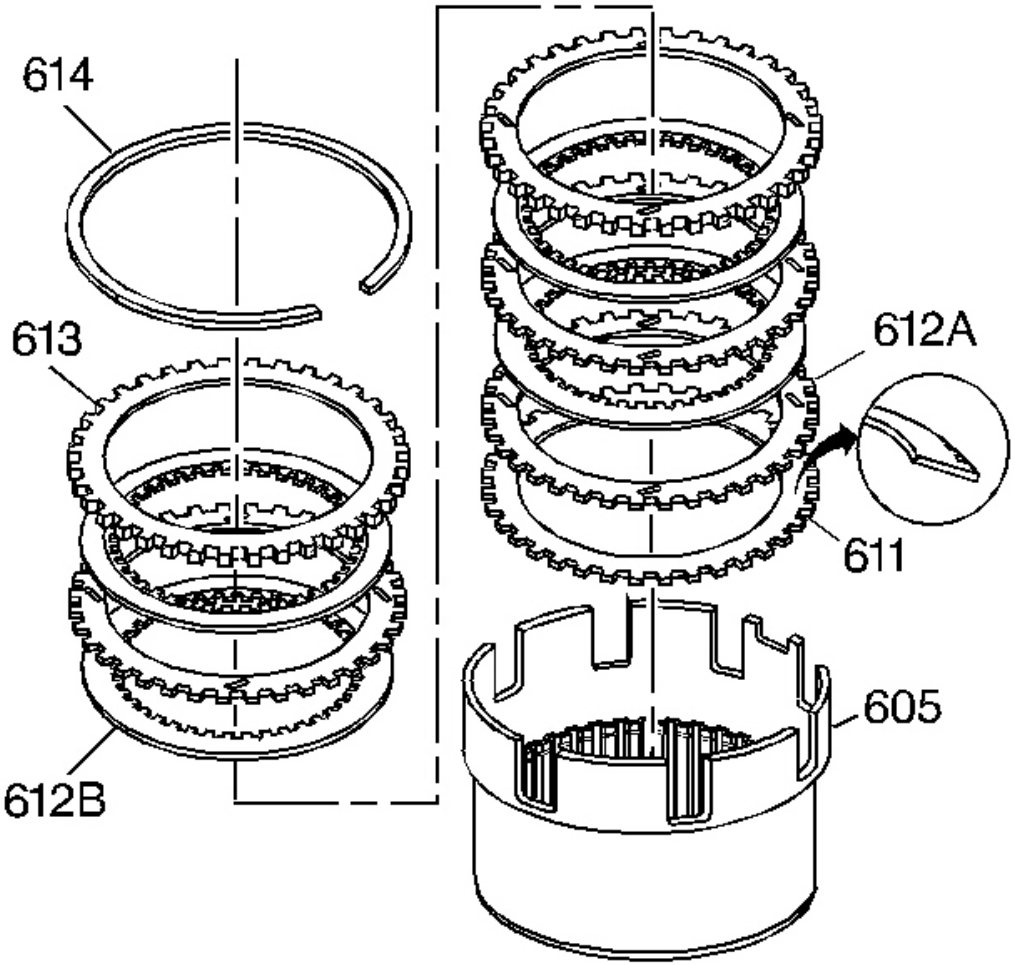

Fig. 200: Exploded View Of Reverse Input Clutch Plates
Courtesy of GENERAL MOTORS CORP.

11. Install the reverse input clutch belleville plate (611), with the inner diameter up, into the reverse input clutch housing and drum assembly (605).
12. Install the reverse input clutch plates starting with a steel turbulator plate (612A) and alternate with a fiber plate assembly (612B).
13. Install the reverse input clutch selective backing plate (613).
14. Install the reverse input clutch retaining ring (614).

REVERSE INPUT CLUTCH PLATE TRAVEL CHECK

cardiagn.com

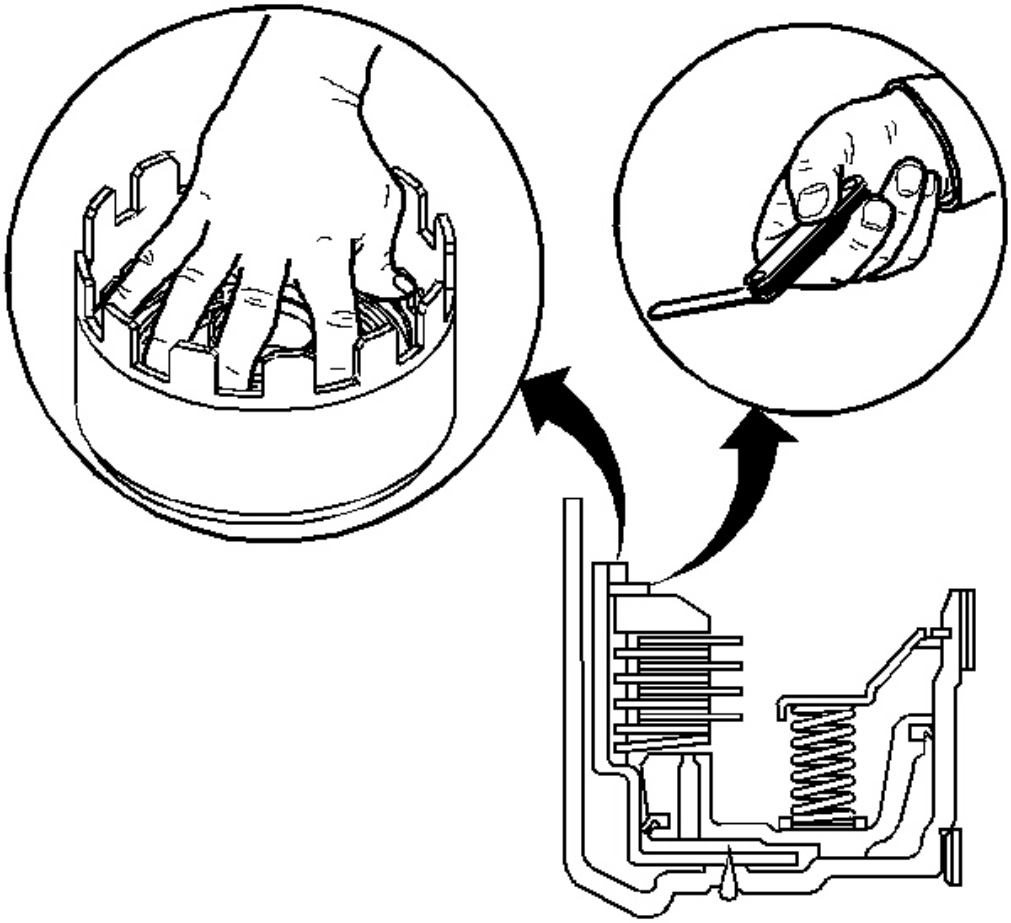

Fig. 201: Checking Reverse Input Clutch Plate Travel
Courtesy of GENERAL MOTORS CORP.

1. Apply an evenly distributed load to the clutch pack.
2. Use feeler gages to check the reverse input clutch plate travel.
3. Check the travel between the selective backing plate and the reverse input clutch retainer ring.

   Clutch Plate Travel Specifications: The reverse input clutch plate travel should be 1.02-1.94 mm (0.040-0.076 in).

4. Select the proper selective backing plate to obtain the correct travel. Refer to **Reverse Input Clutch Backing Plate Selection** .

REVERSE INPUT AND INPUT CLUTCHES INSTALLATION

cardiagn.com

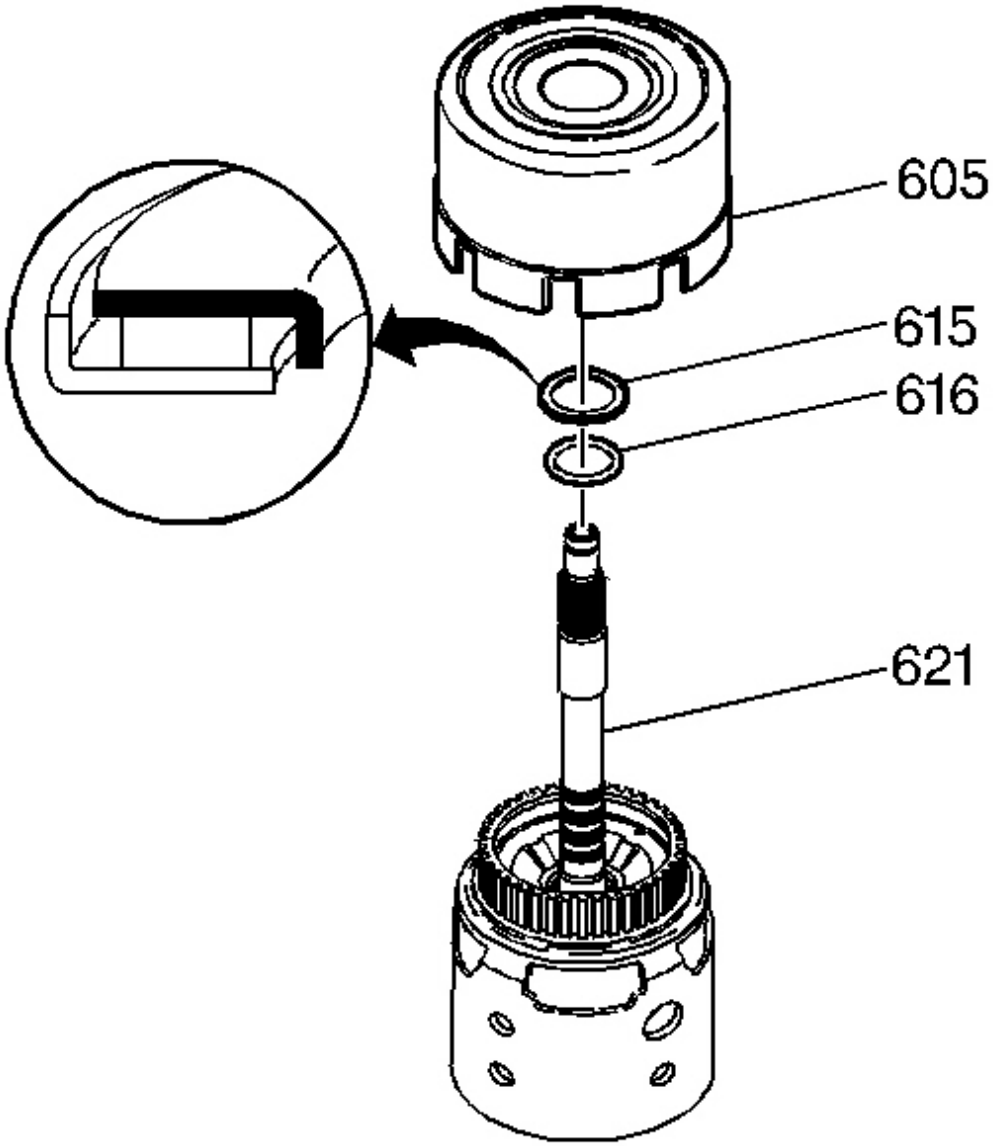

Fig. 202: Locating Selective Thrust Washer
Courtesy of GENERAL MOTORS CORP.

1. Install the selective thrust washer (616) on the input housing (621).
2. Install the stator shaft/selective washer bearing assembly (615) on the input housing (621).

   The black race on the bearing goes toward the oil pump.

cardiagn.com

3. Install the reverse input clutch assembly (605) on the input housing (621).
4. Index the reverse input clutch plates with the input clutch hub. Make certain all clutch plates are fully engaged.

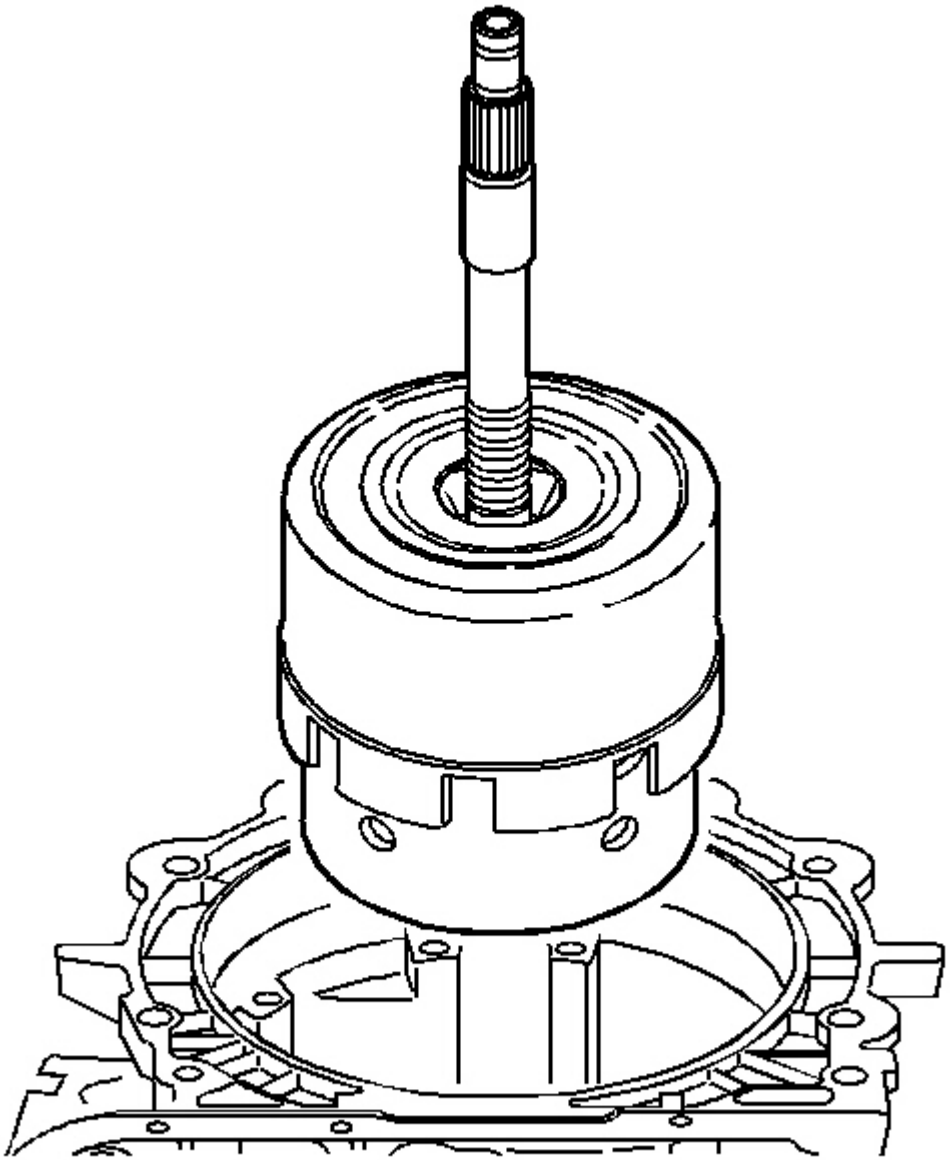

Fig. 203: Identifying Reverse Input & Input Clutch Assembly
Courtesy of GENERAL MOTORS CORP.

cardiagn.com

5. Install the reverse input and the input clutch assembly into the transmission case.
6. Index the 3rd and 4th clutch plates with the input internal gear.
    - Ensure that all clutch plates are fully engaged.
    - When properly assembled, the reverse input clutch housing will be located just below the case oil pump face.

2-4 BAND ASSEMBLY INSTALLATION

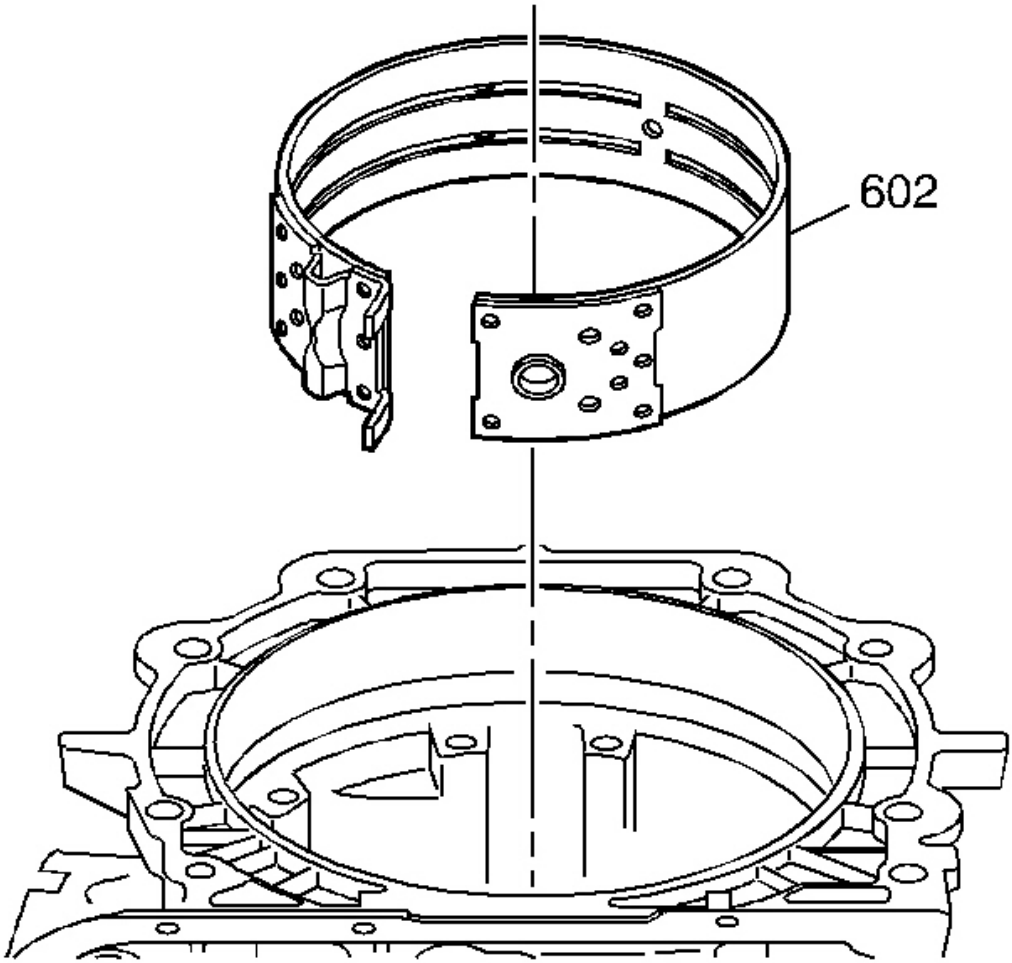

Fig. 204: View Of 2-4 Band Assembly
Courtesy of GENERAL MOTORS CORP.

1. Inspect the 2-4 band assembly (602) for damage or wear.

cardiagn.com

2. Install the 2-4 band (602) into the case.

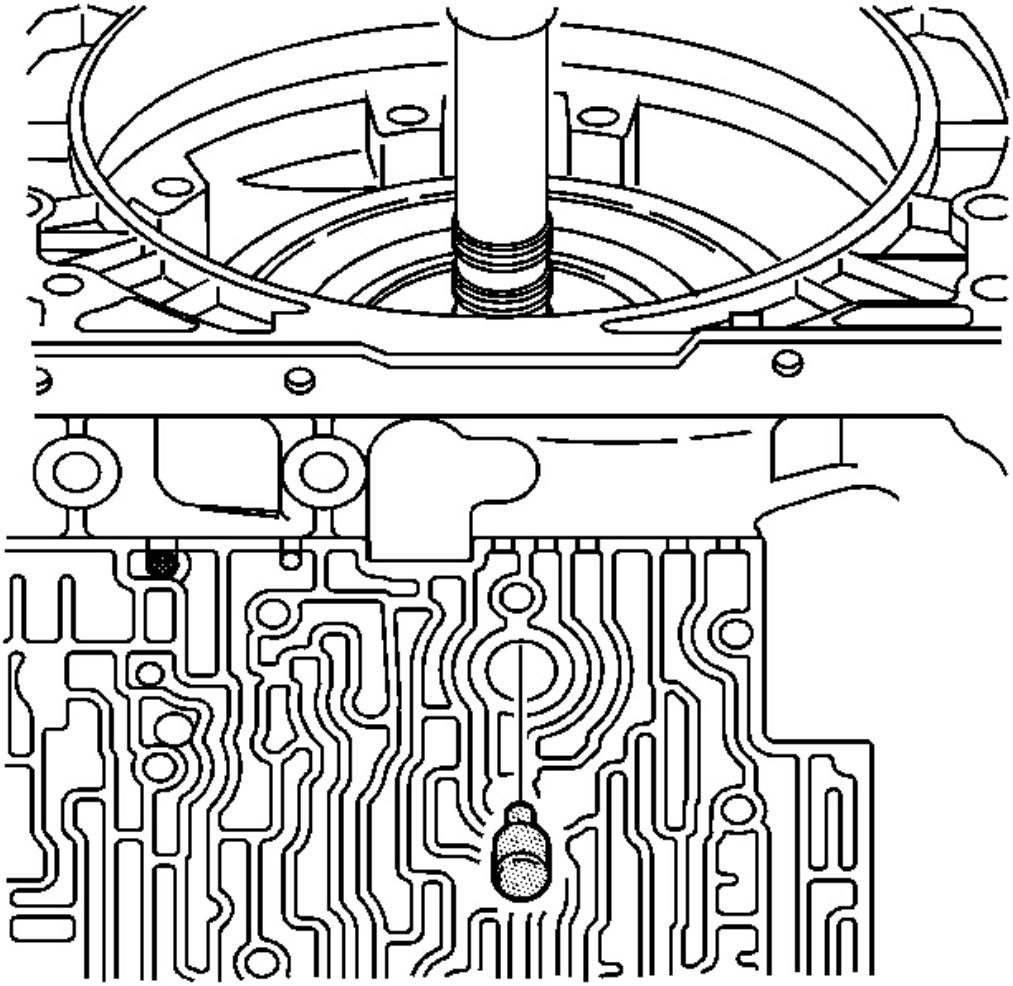

Fig. 205: Identifying Band Anchor Pin
Courtesy of GENERAL MOTORS CORP.

3. Install the band anchor pin into the case.
4. Index the band to fit the band anchor pin into the band.

OIL PUMP DISASSEMBLE

cardiagn.com

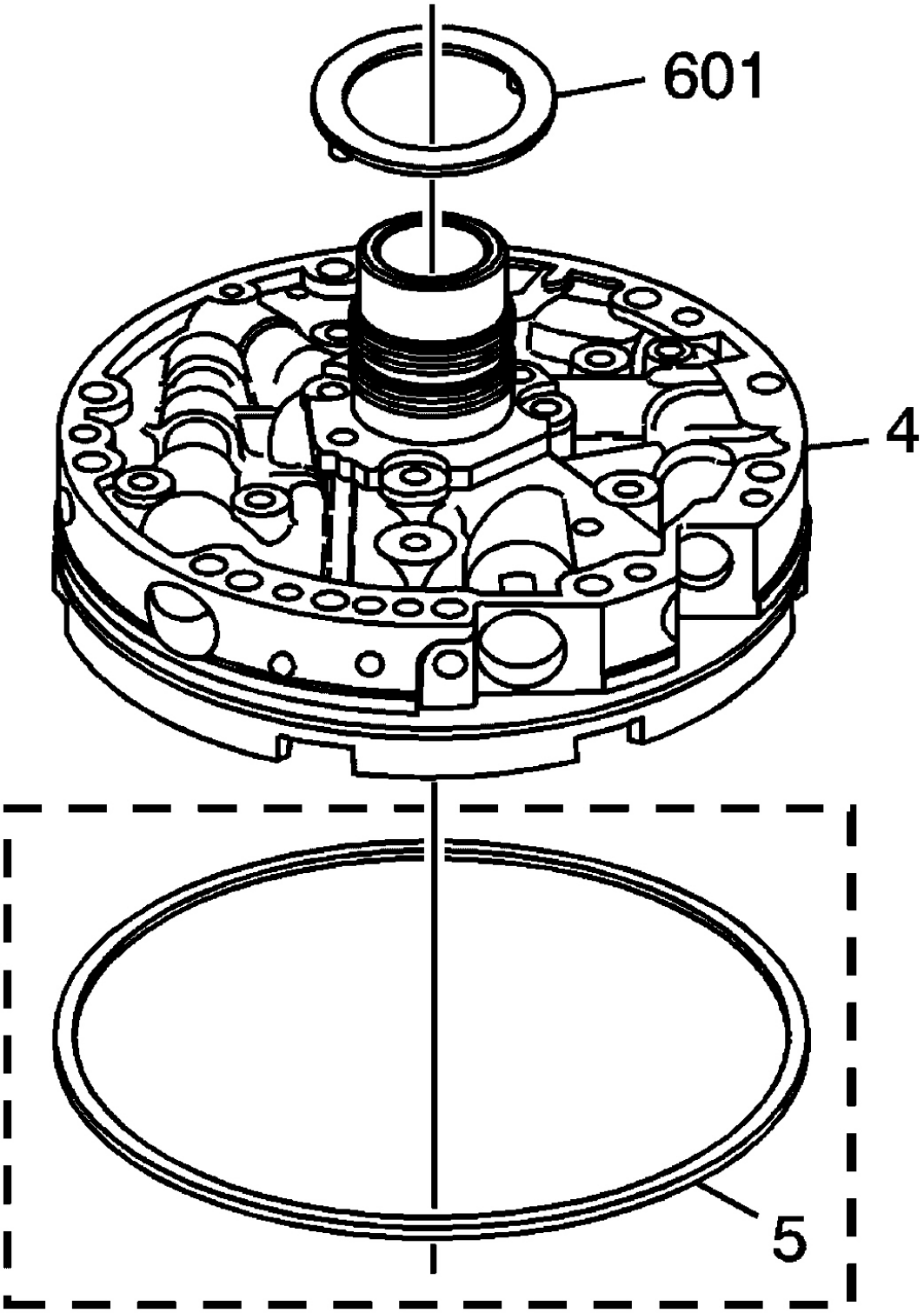

Fig. 206: View Of Pump To Drum Thrust Washer

cardiagn.com

Courtesy of GENERAL MOTORS CORP.

1. Remove the thrust (pump to drum) washer (601).
2. Remove the oil (pump to case) O-ring seal (5) - some models.

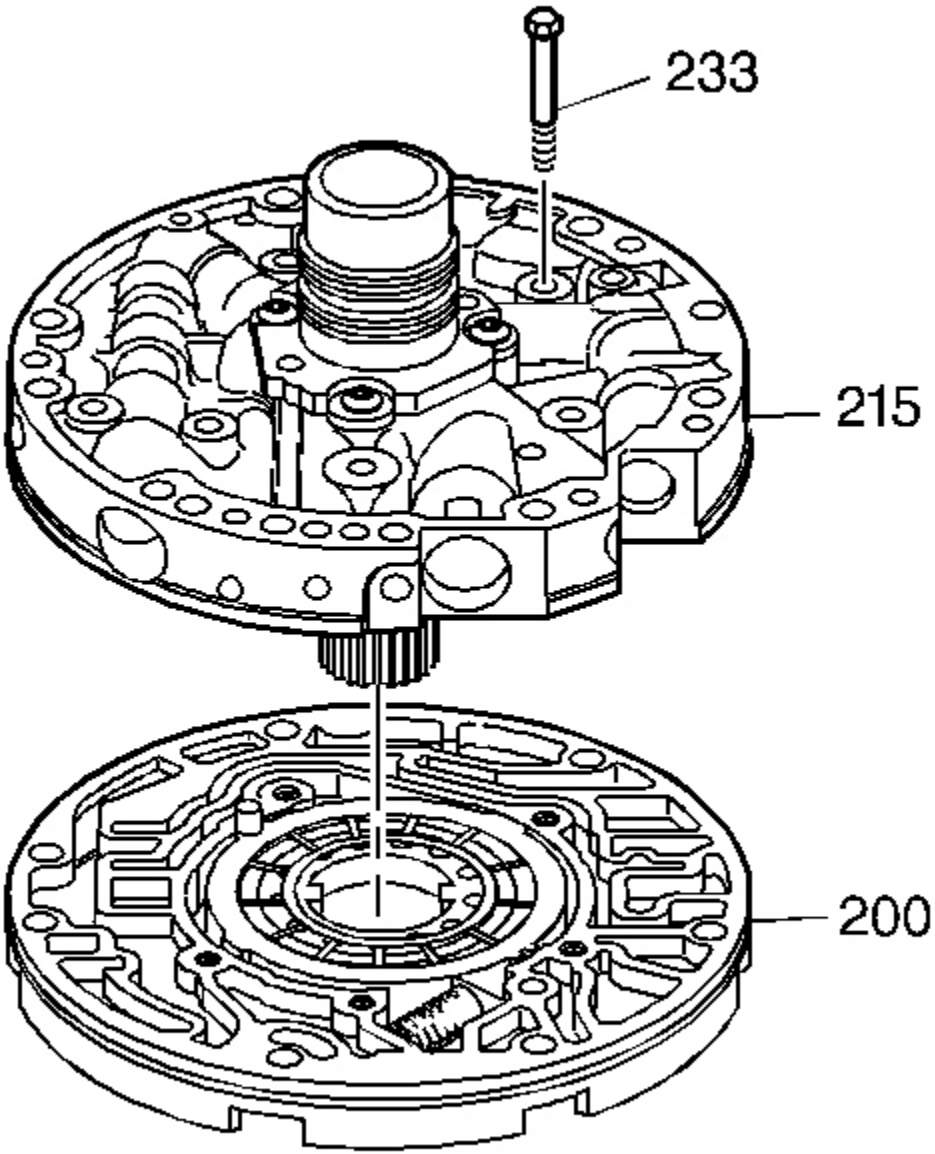

Fig. 207: Locating Pump Cover Bolts

cardiagn.com

Courtesy of GENERAL MOTORS CORP.

3. Remove the pump cover bolts (233).
4. Remove the pump cover (215) from the pump body (200).

OIL PUMP BODY DISASSEMBLE

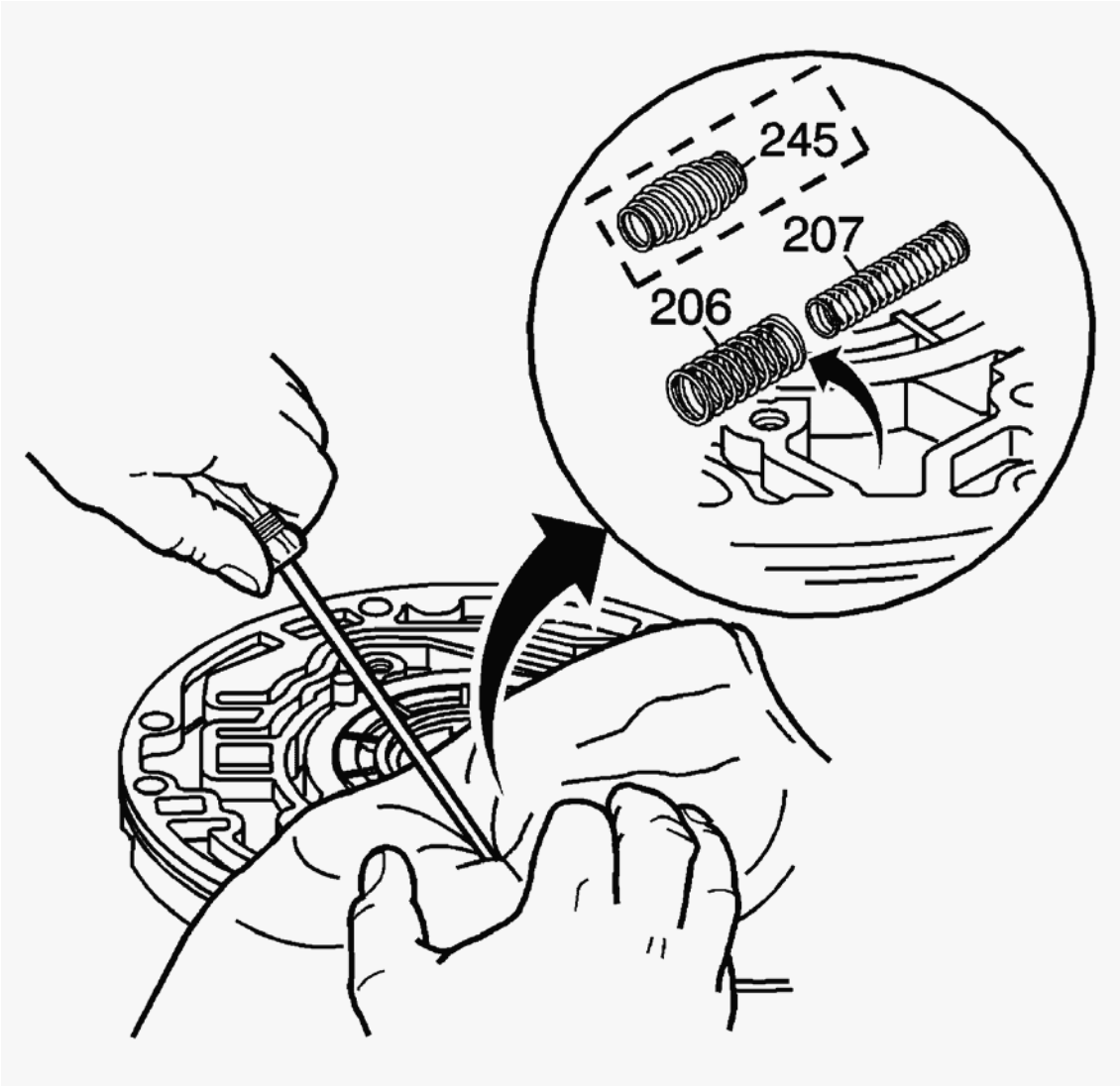

Fig. 208: Retaining Pump Slide Springs With A Rag
Courtesy of GENERAL MOTORS CORP.

1. Remove the pump slide inner (207) and outer (206) springs or spring (245) - some models.
2. Place a rag over the spring or springs while removing them to prevent the springs from flying out.

cardiagn.com

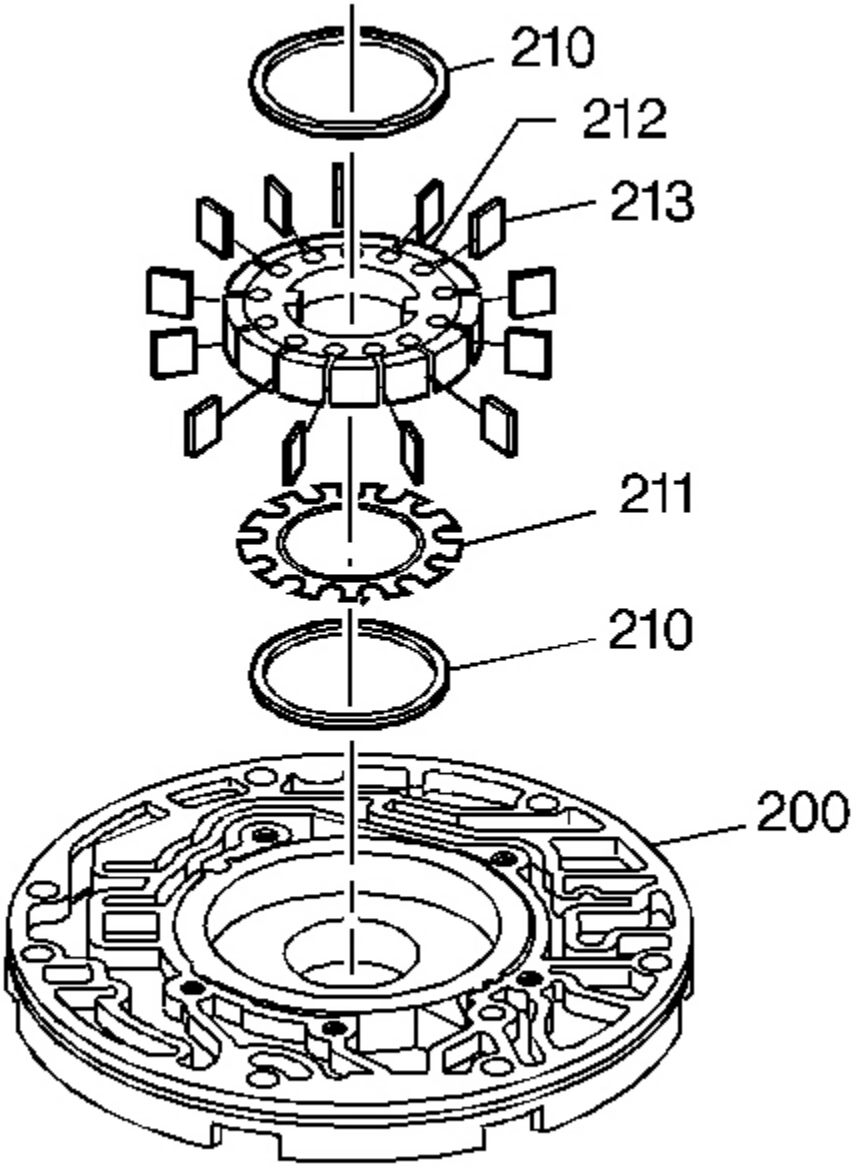

Fig. 209: Identifying Pump Vane Ring Assemblies
Courtesy of GENERAL MOTORS CORP.

3. Remove the oil pump rotor (212) and pump vane rings (210).
4. Remove the pump vanes (213).
5. Remove the rotor guide (211).

cardiagn.com

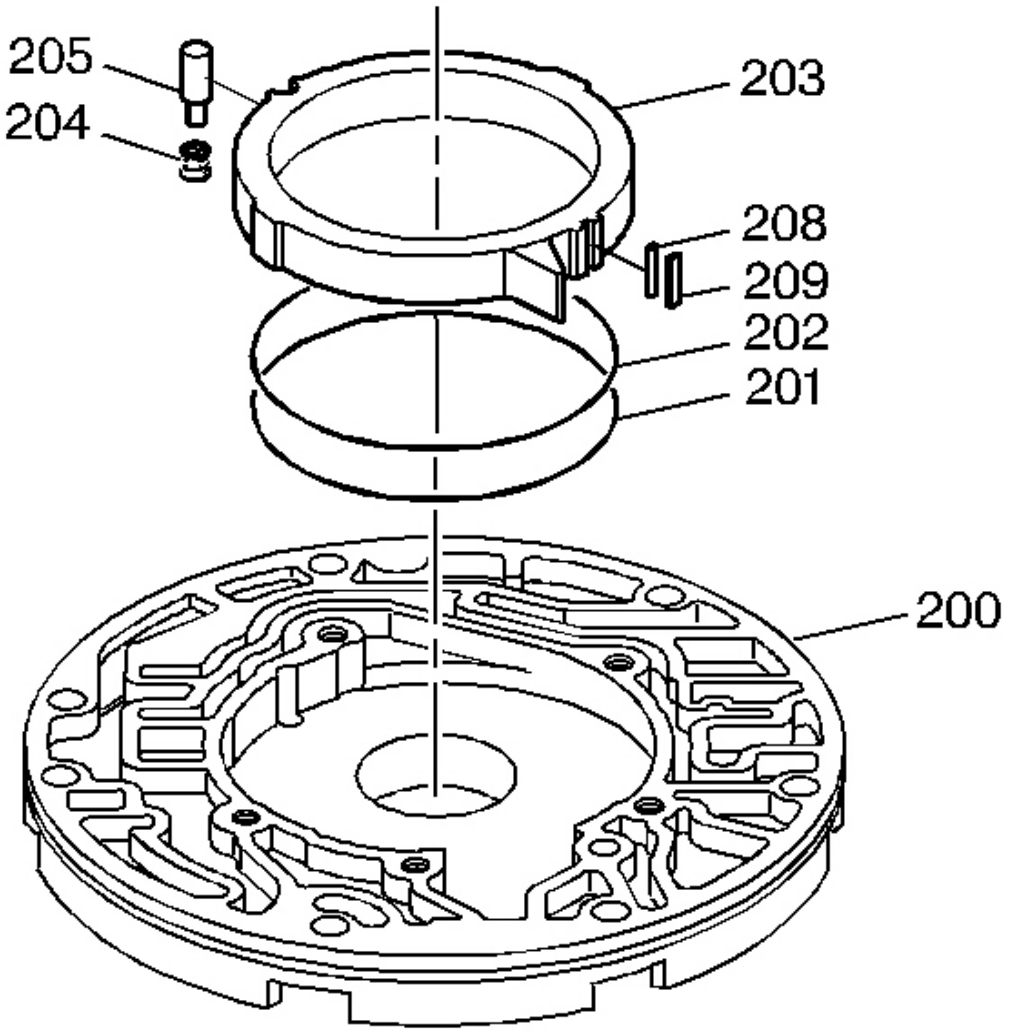

Fig. 210: Identifying Pump Slide Components
Courtesy of GENERAL MOTORS CORP.

6. Remove the pump slide (203), pump slide support seal (208) and the pump slide seal (209).
7. Remove the slide seal back-up O-ring seal (202) and the oil seal - slide to wear plate, ring (201).
8. Remove the pivot slide pin (205) and the pivot pin spring (204).

OIL PUMP ROTOR AND SLIDE MEASUREMENT

cardiagn.com

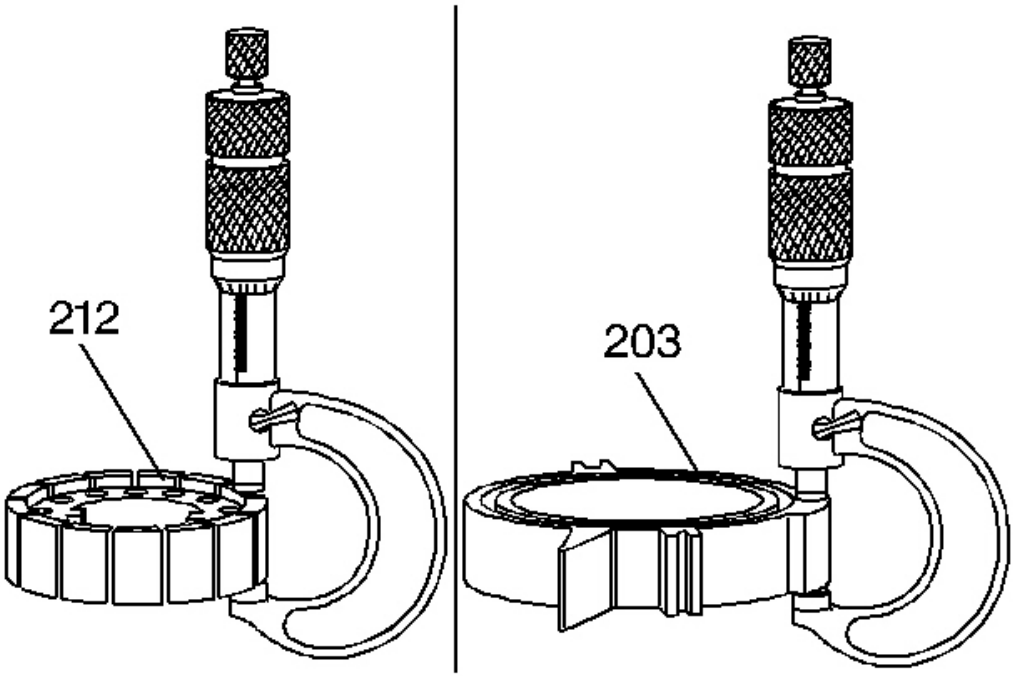

Fig. 211: Measuring Oil Pump Rotor & Slide
Courtesy of GENERAL MOTORS CORP.

IMPORTANT: Measure the rotor and slide thickness for surface wear. The rotor and slide measurements must both fall into the same thickness range. If the rotor and slide measurements do not fall into the same thickness range, or are outside of all the ranges, the oil pump must be replaced as an assembly.

- Refer to **Oil Pump Rotor and Slide Measurement** .
- Measure the oil pump rotor (212) thickness.
- Measure the oil pump slide (203) thickness.

OIL PUMP BODY BUSHING REPLACEMENT

Removal Procedure

Tools Required

- **J 41778-1** Pump Body Bushing Installer/Remover. See **Special Tools and Equipment** .

cardiagn.com

- **J 41778-2** Pump Body Bushing Position Stop. See **Special Tools and Equipment** .

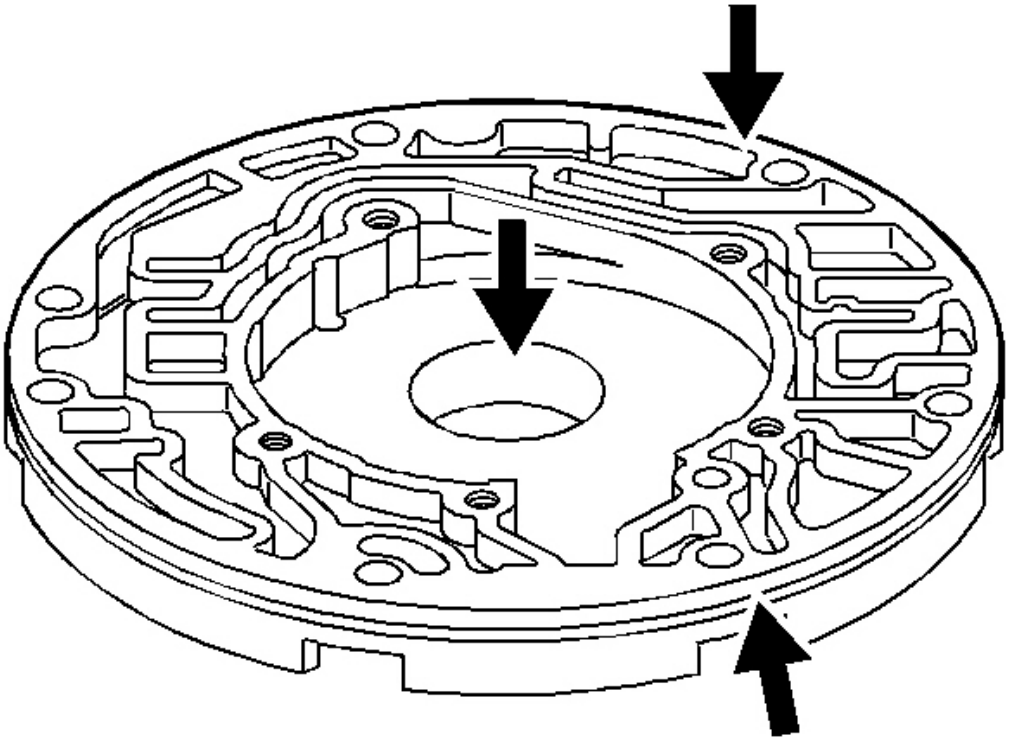

Fig. 212: Identifying Oil Pump Body Inspection Areas
Courtesy of GENERAL MOTORS CORP.

1. Inspect the oil pump body for the following defects:
    - Worn or damaged bushings
    - Foreign material or debris
    - Porosity
    - Scored or irregular mating faces
    - Cross channel leaks
    - Ring groove damage

cardiagn.com

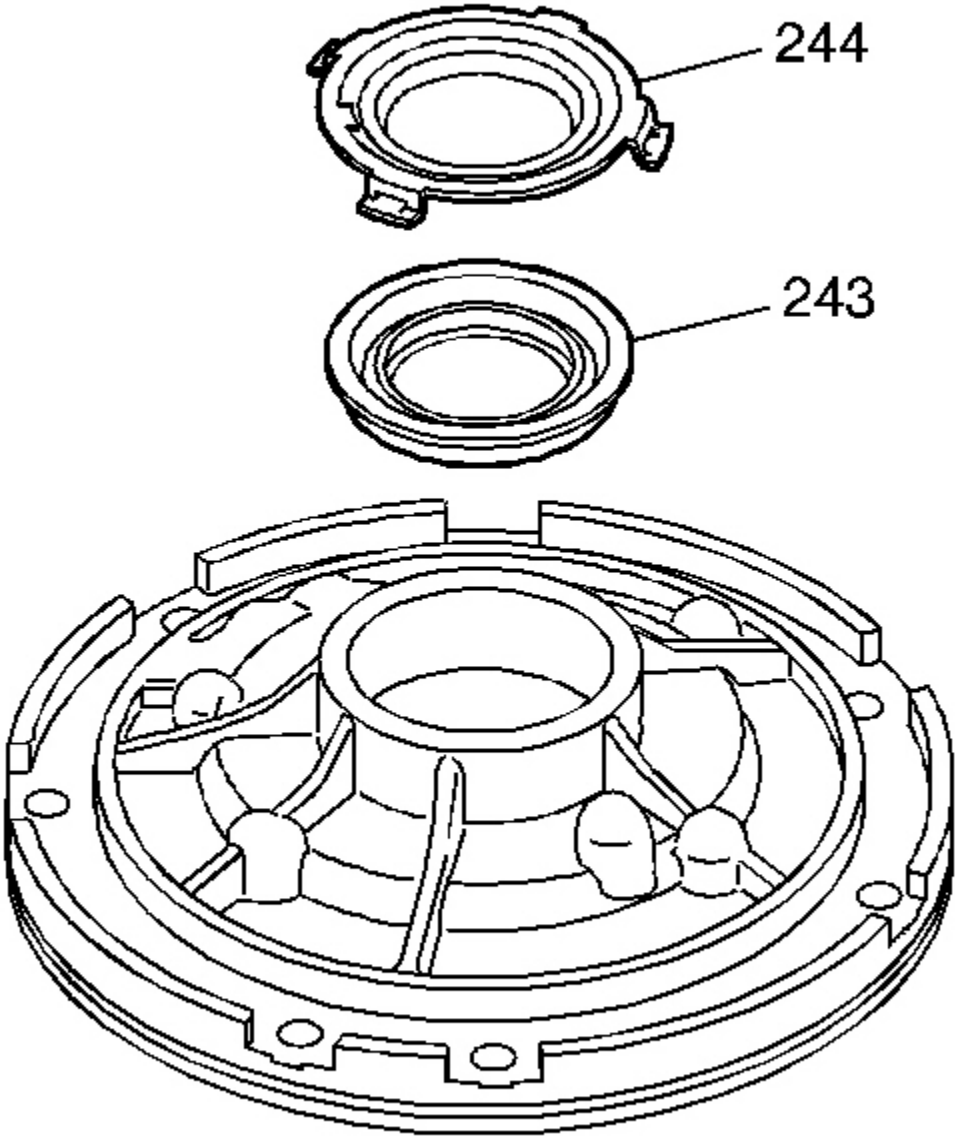

Fig. 213: Locating Front Helix Retainer & Oil Seal Assembly
Courtesy of GENERAL MOTORS CORP.

2. Remove the front helix retainer (244).
3. Remove the oil seal assembly (243).

cardiagn.com

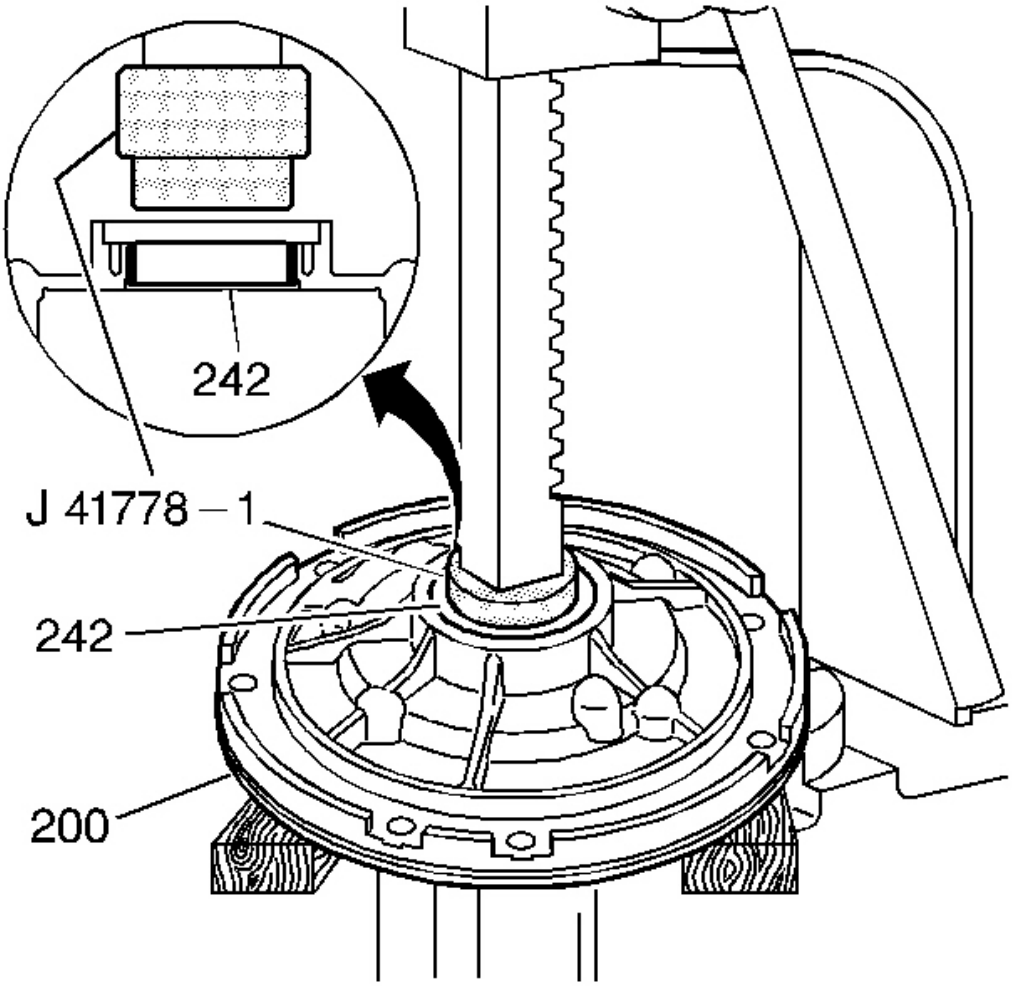

Fig. 214: Removing Pump Body Bushing
Courtesy of GENERAL MOTORS CORP.

4. Using the **J 41778-1** with an arbor press, remove the pump body bushing (242).

cardiagn.com

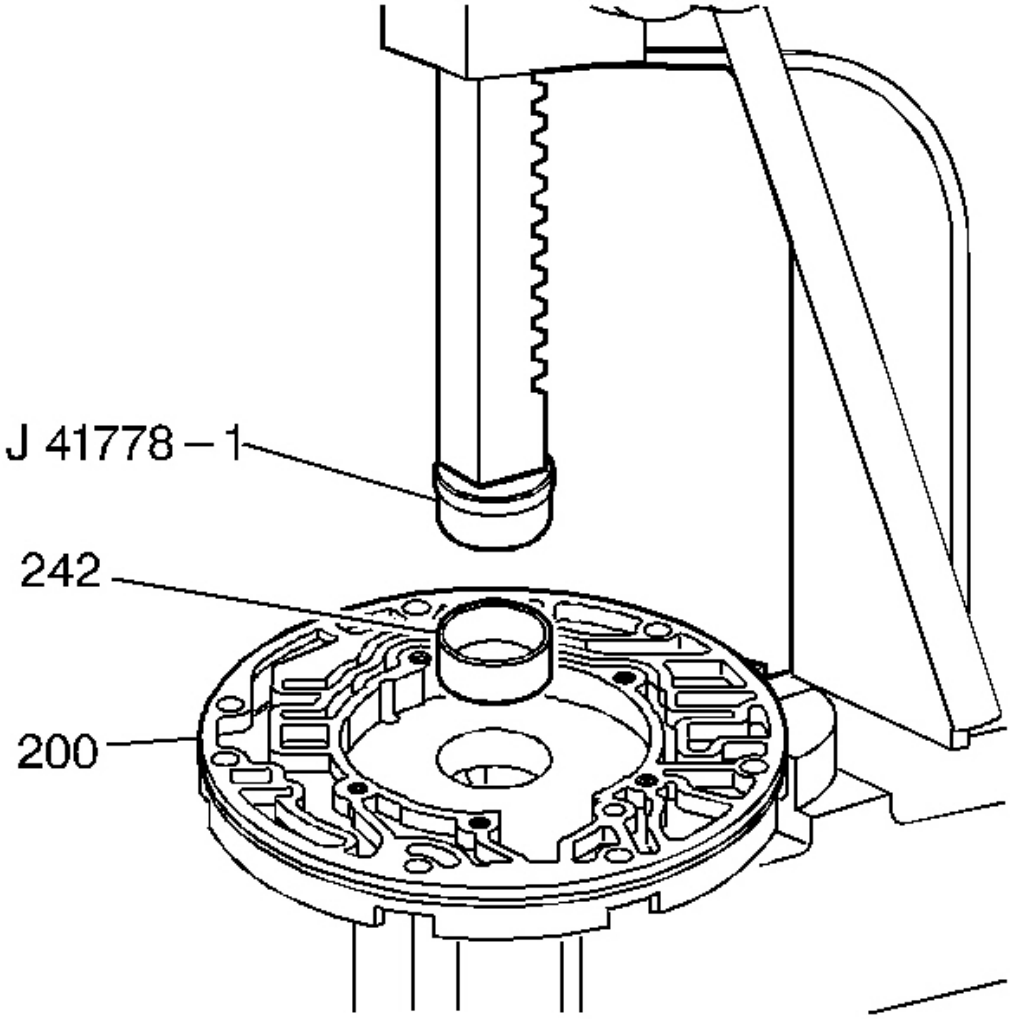

Fig. 215: Pressing In Pump Body Bushing
Courtesy of GENERAL MOTORS CORP.

5. Using **J 41778-1** with an arbor press, install a new pump body bushing (242).

cardiagn.com

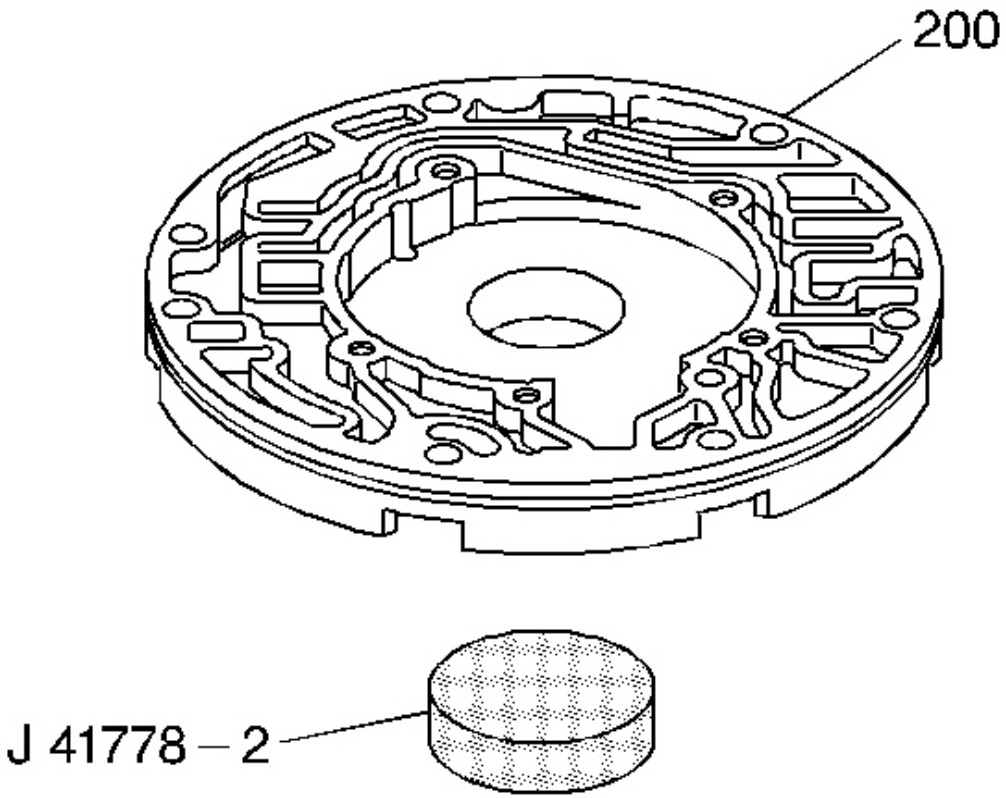

Fig. 216: Identifying J 41778-2
Courtesy of GENERAL MOTORS CORP.

6. Use the **J 41778-2** to ensure proper bushing depth.

OIL PUMP BODY ASSEMBLE

Tools Required

- **J 25016** Pump Seal and speedometer gear Installer. See **Special Tools and Equipment** .
- **J 36850** Transjel Lubricant. See **Special Tools and Equipment** .

cardiagn.com

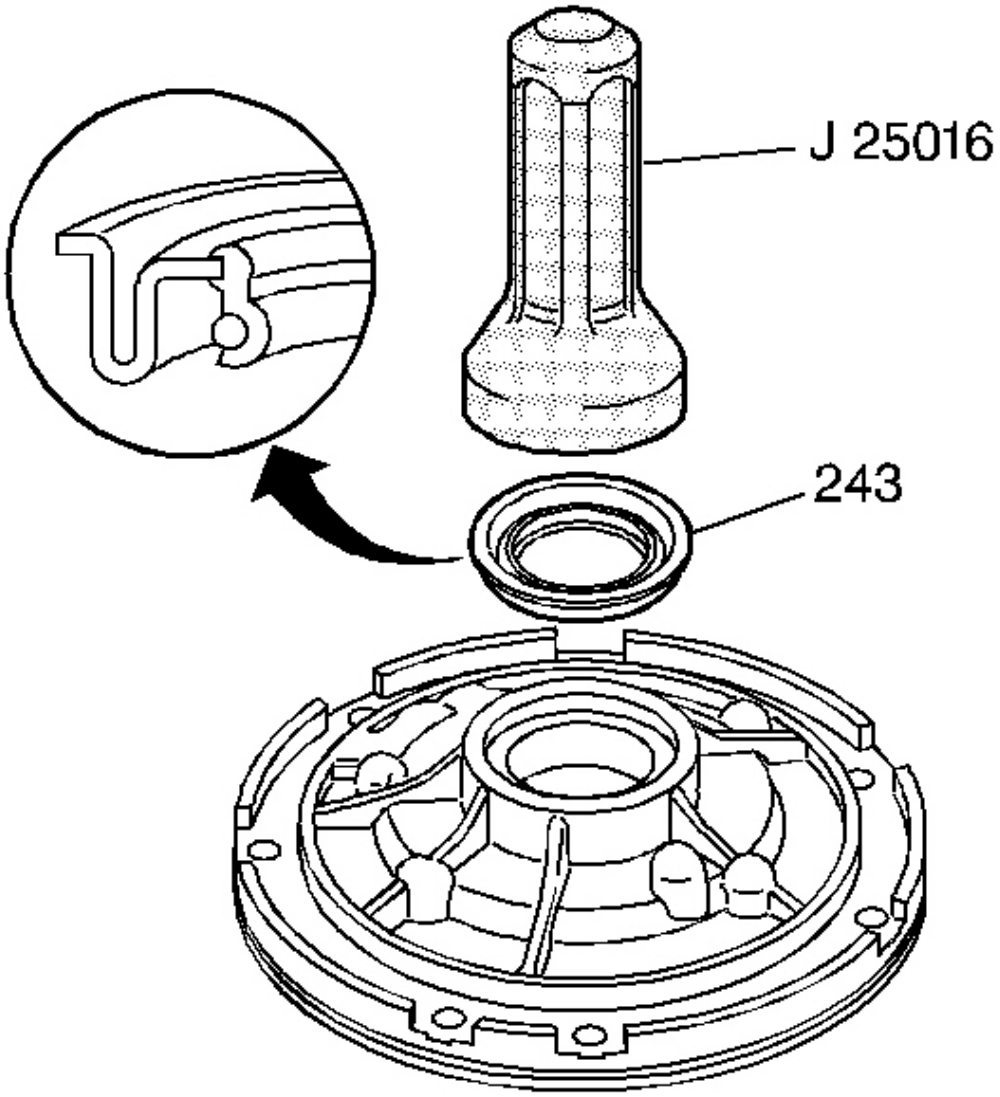

Fig. 217: Using J 25016 To Install Oil Seal Assembly
Courtesy of GENERAL MOTORS CORP.

1. Using the **J 25016** , install the oil seal assembly (243).

cardiagn.com

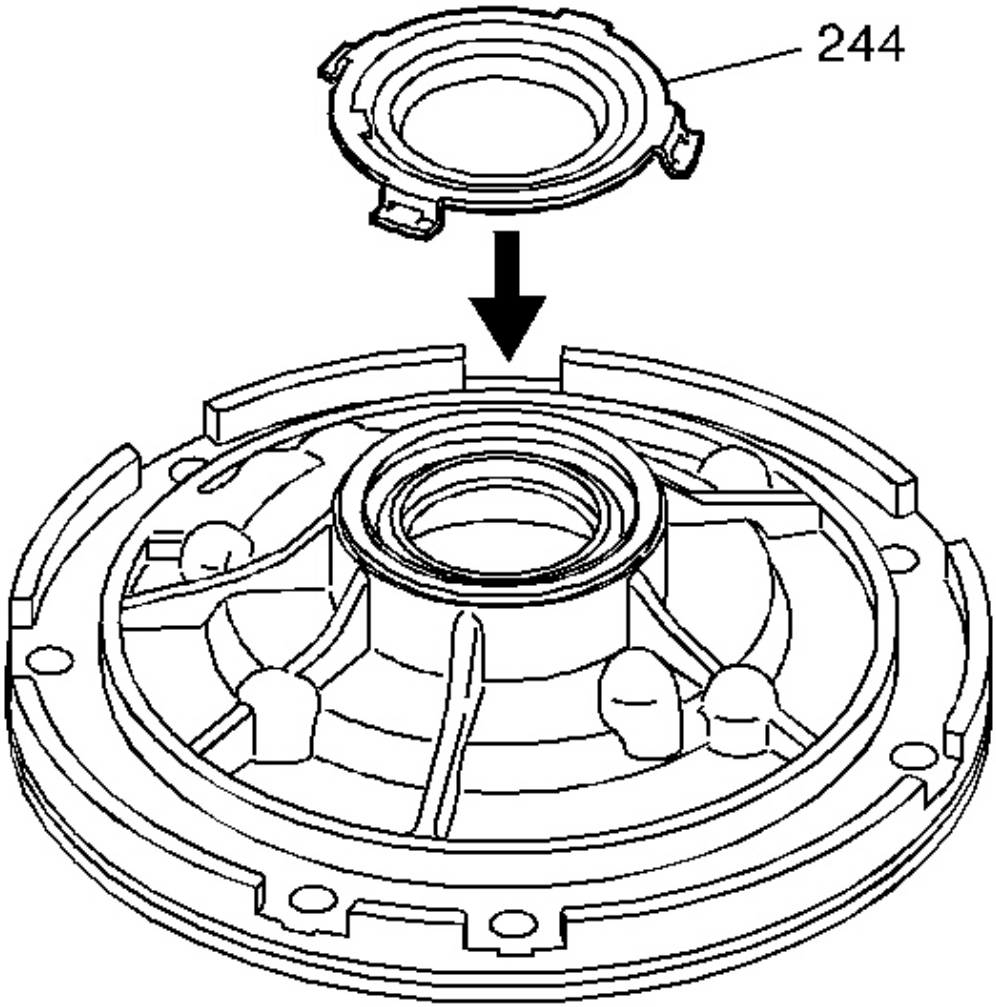

Fig. 218: Installing Front Helix Retainer
Courtesy of GENERAL MOTORS CORP.

2. Install the front helix retainer (244).

cardiagn.com

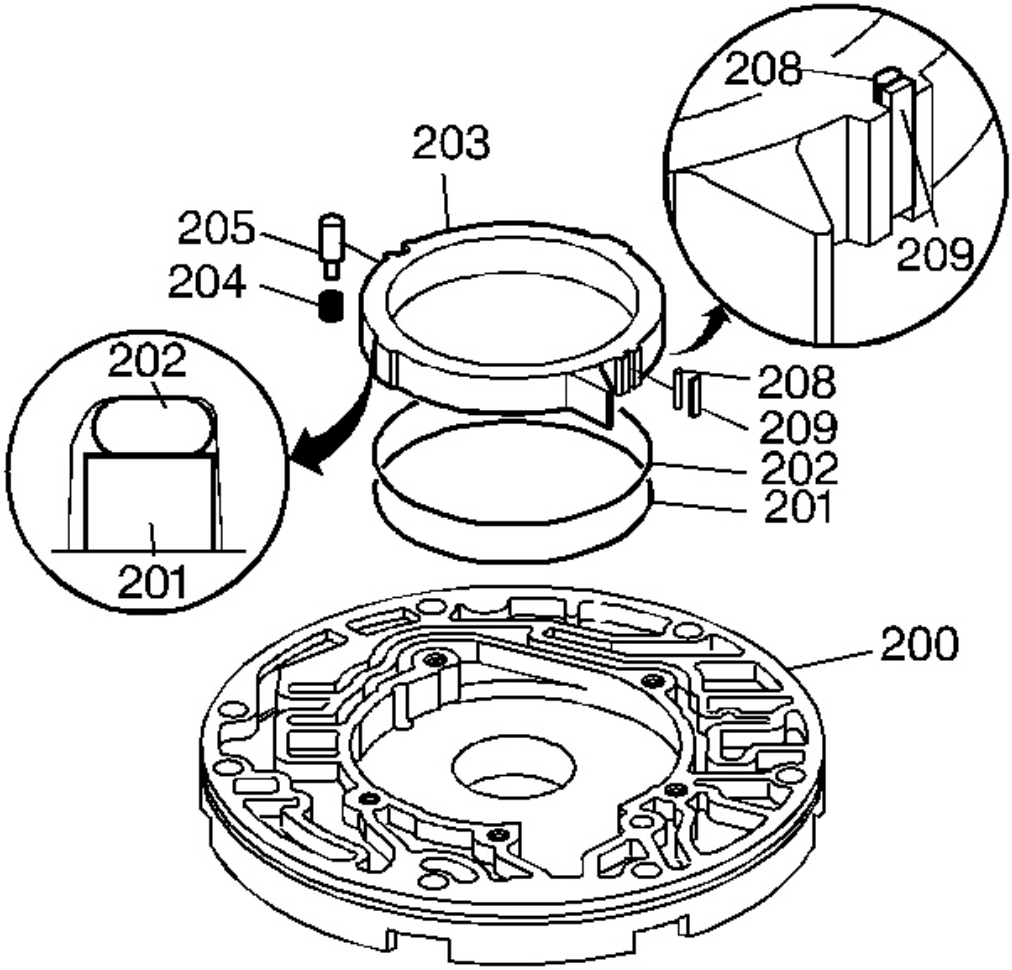

Fig. 219: Identifying Pump Slide Components
Courtesy of GENERAL MOTORS CORP.

3. Install an O-ring seal (202) and oil seal ring (201) into the groove on the back side of the pump slide (203).
4. Use **J 36850** , or an equivalent, to retain the seal and the ring on the slide.
5. Install the pivot pin spring (204) and the pivot pin (205).
6. Install the pump slide (203).
7. Index the slide notch with the pivot pin (205).

The oil seal ring must face downward into the pump pocket.

cardiagn.com

8. Install the pump slide seal support (208) and the pump slide seal (209).

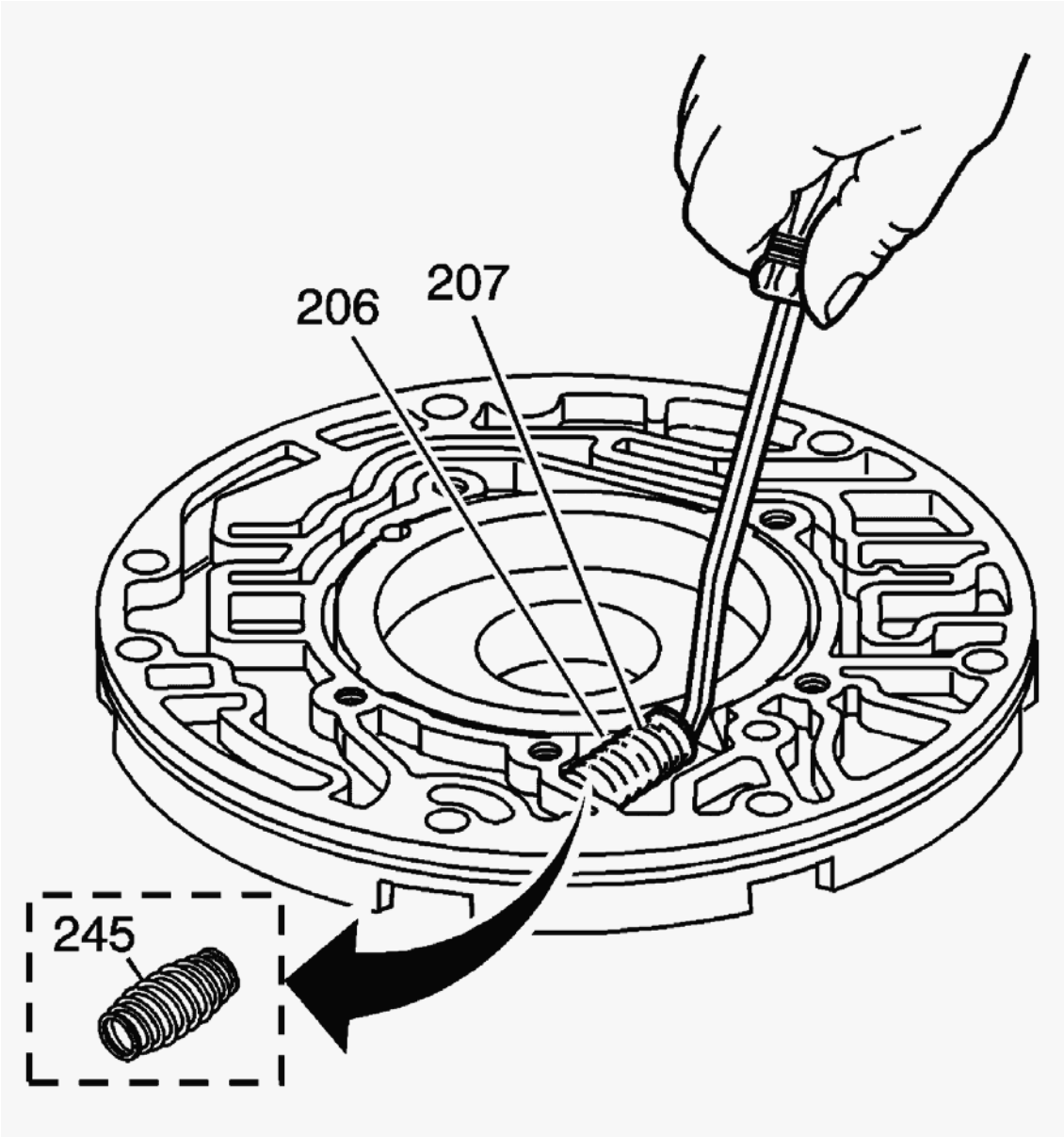

Fig. 220: View Of Fluid Pump Slide Outer Spring
Courtesy of GENERAL MOTORS CORP.

9. Install the pump slide inner (207) and outer (206) springs, some models will use only one fluid pump slide outer spring (245).

cardiagn.com

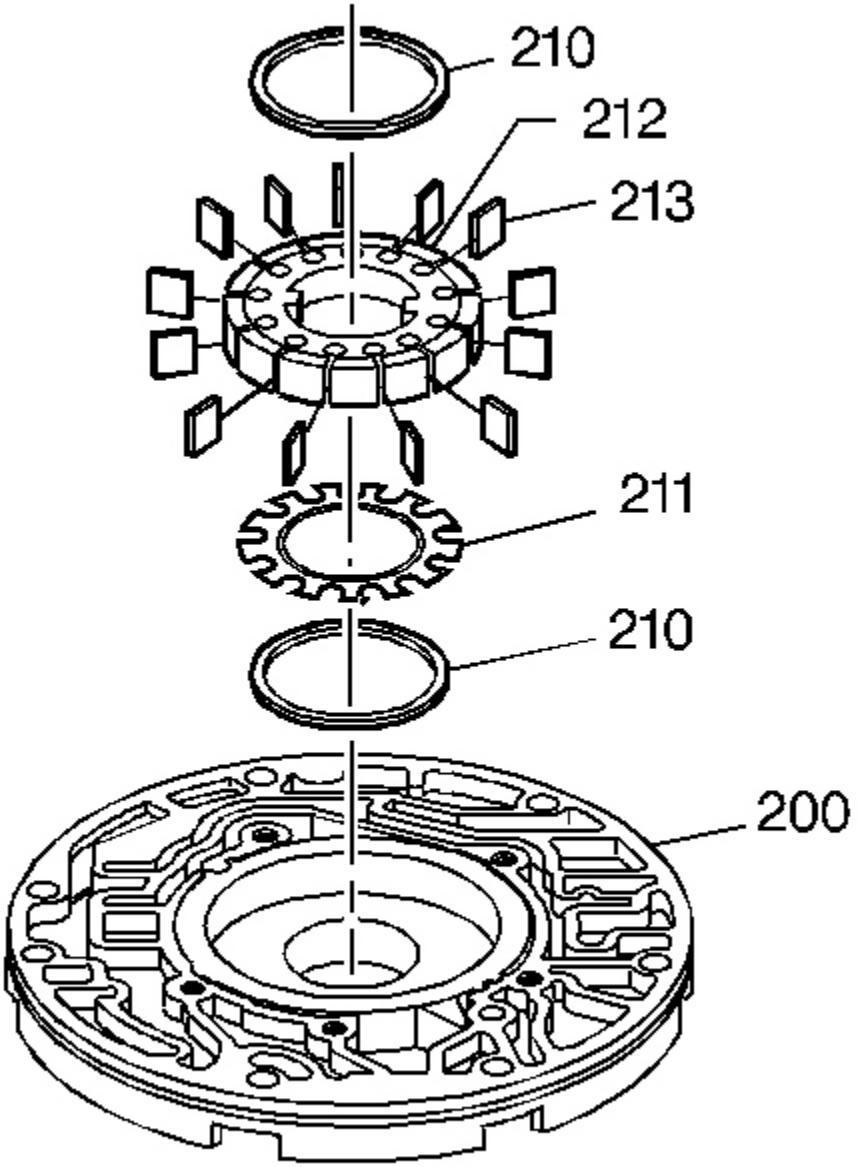

Fig. 221: Identifying Pump Vane Ring Assemblies
Courtesy of GENERAL MOTORS CORP.

10. Install the bottom pump vane ring (210) and the rotor guide (211) into the rotor (212) and retain with **J 36850** or an equivalent.
11. Install the rotor (212) with the rotor guide (211) toward the pump pocket.

cardiagn.com

12. Install the pump vanes (213).
13. Install the top pump vane ring (210).

OIL PUMP COVER DISASSEMBLE

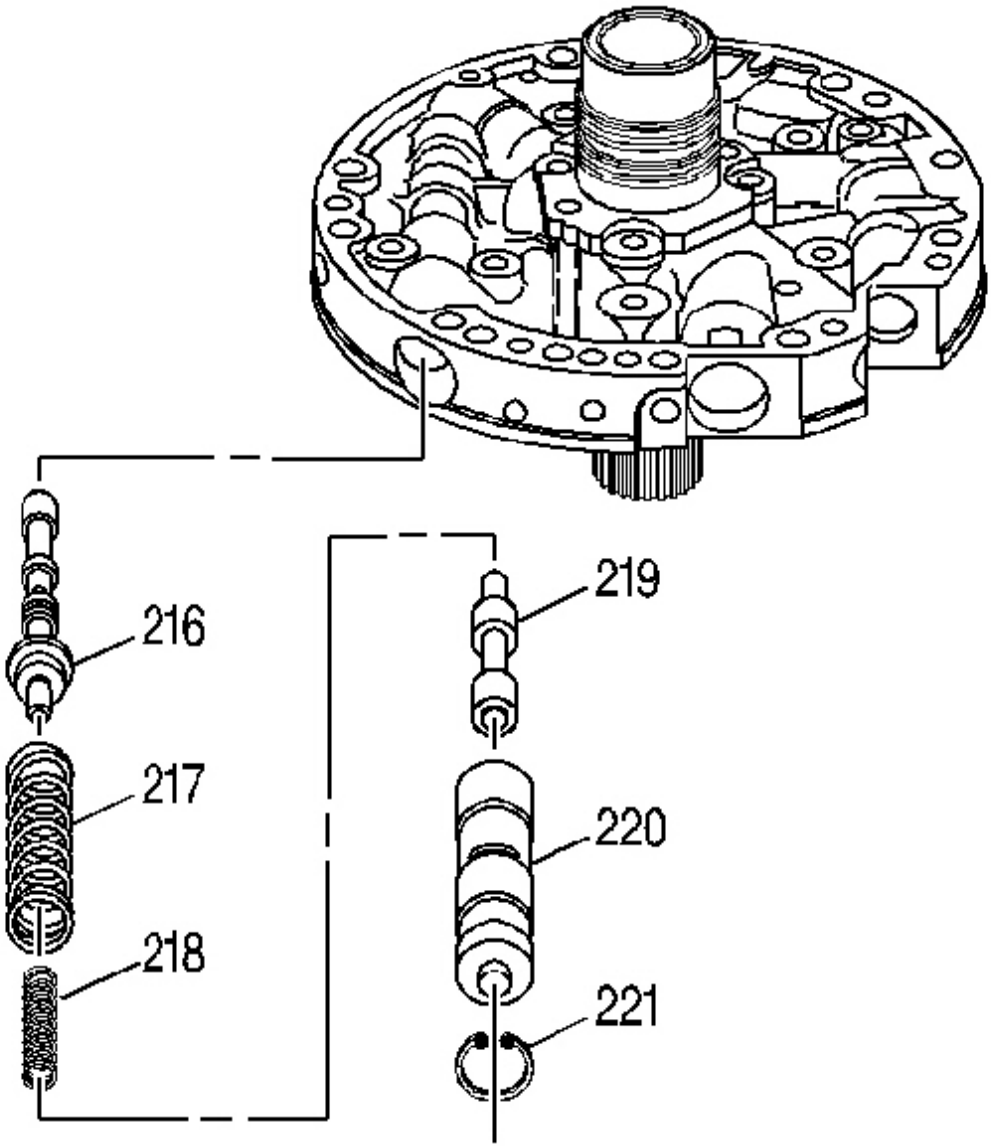

Fig. 222: View Of Reverse Boost Valve & Pressure Regulator Components

cardiagn.com

Courtesy of GENERAL MOTORS CORP.

1. Remove the oil pump reverse boost valve retaining ring (221).
2. Remove the reverse boost valve sleeve (220) and the reverse boost valve (219).
3. Remove the pressure regulator isolator spring (218) and the pressure regulator valve spring (217).
4. Remove the pressure regulator valve (216).

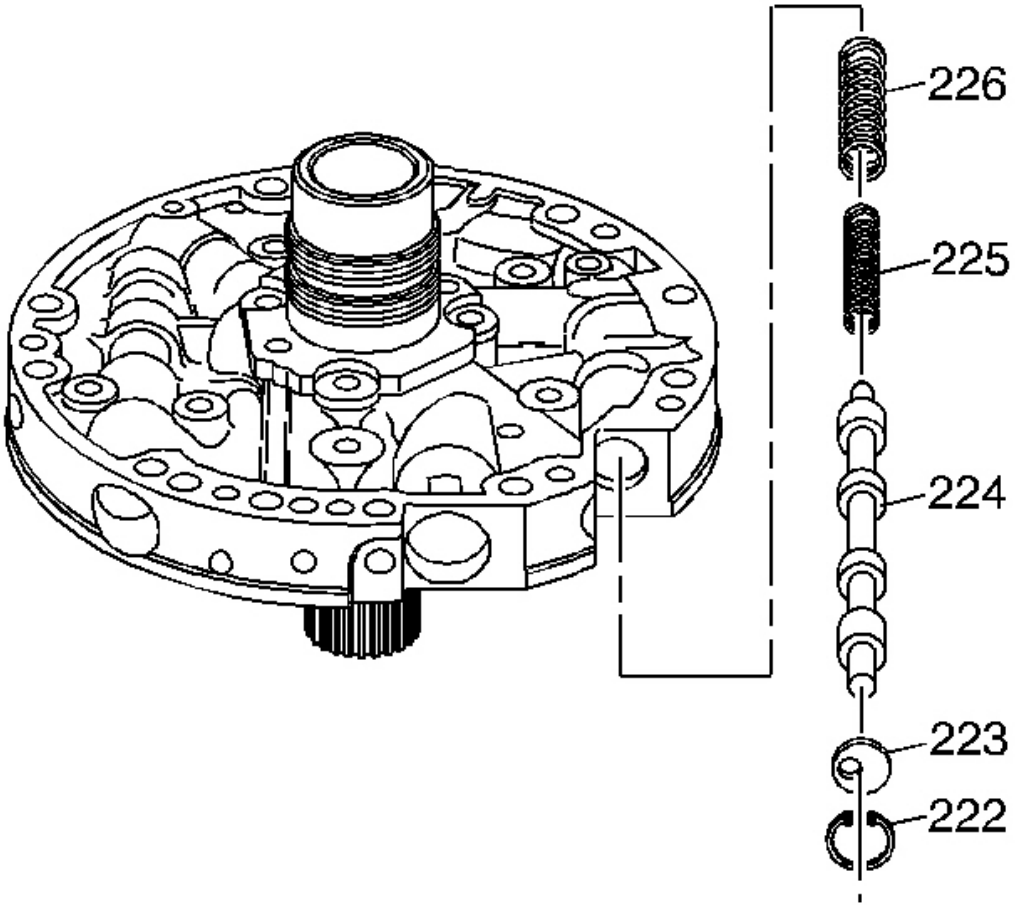

Fig. 223: Locating Converter Clutch Valve
Courtesy of GENERAL MOTORS CORP.

5. Remove the oil pump converter clutch valve retaining ring (222).
6. Remove the stop valve (223) and the converter clutch valve (224).
7. Remove the converter clutch valve inner (225) and outer (226) springs.

cardiagn.com

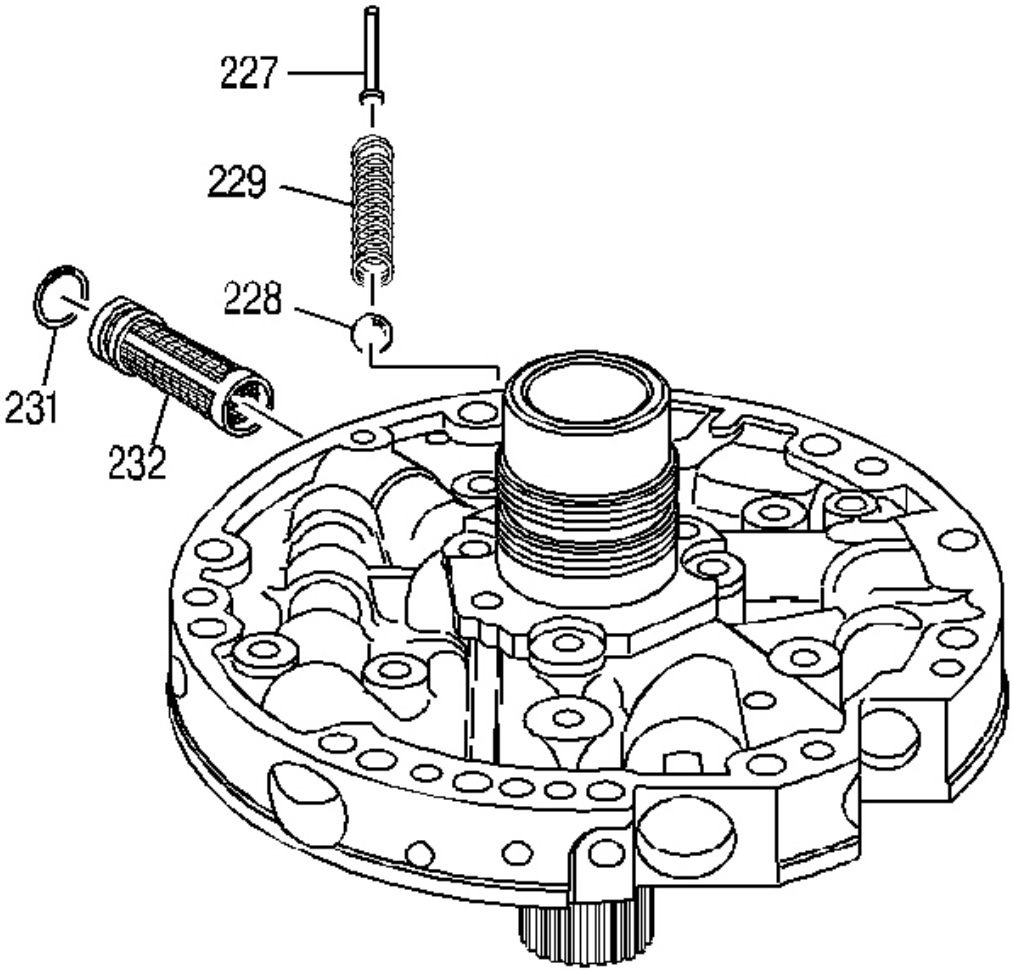

Fig. 224: Removing Oil Pump Cover Screen & Pressure Relief Components
Courtesy of GENERAL MOTORS CORP.

8. Remove the pressure relief bolt rivet (227).
9. Remove the pressure relief spring (229) and the pressure relief ball (228).
10. Remove the oil pump cover screen (232) and the oil pump cover screen seal (231).

cardiagn.com

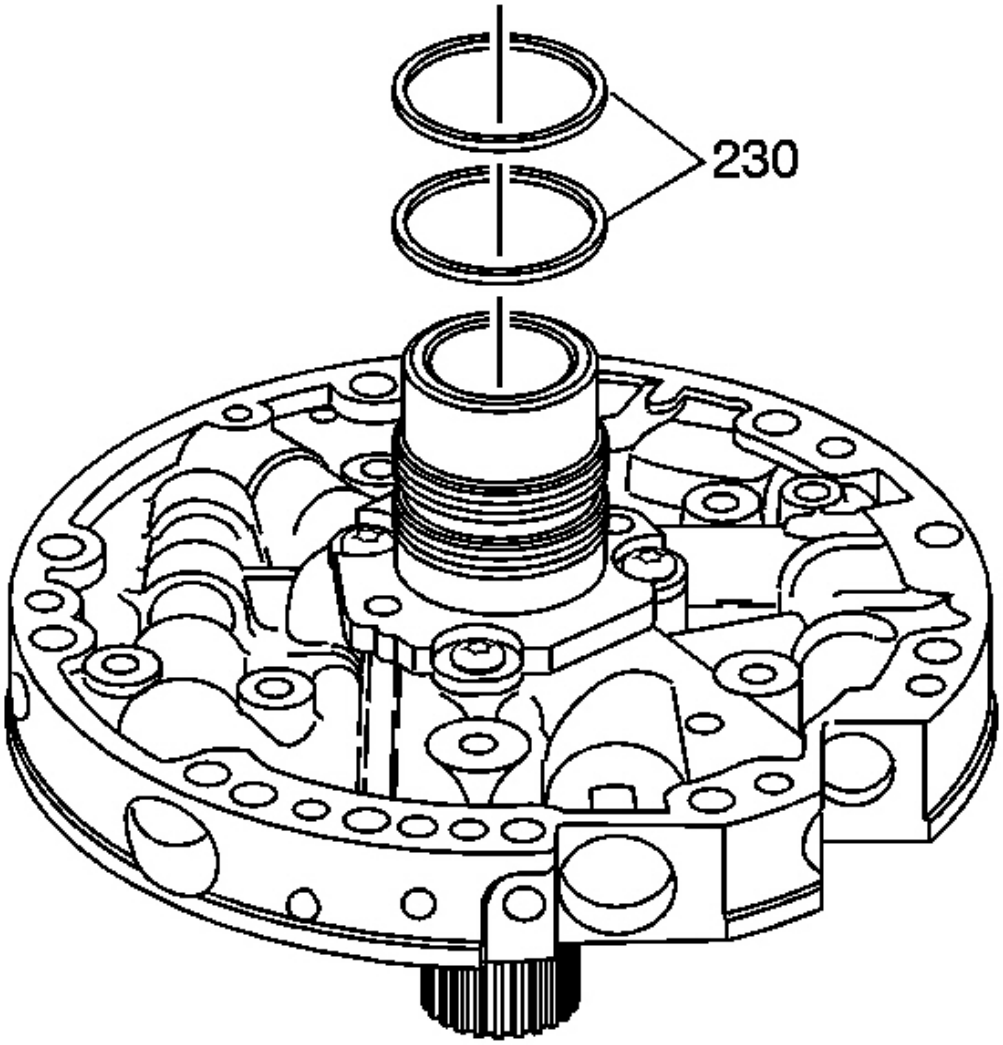

Fig. 225: Locating Stator Shaft Oil Seal Rings
Courtesy of GENERAL MOTORS CORP.

11. Remove the stator shaft oil seal rings (230).

OIL PUMP STATOR SHAFT BUSHING REPLACEMENT

Removal Procedure

Tools Required

cardiagn.com

- **J 7004-A** Universal Remover. See **Special Tools and Equipment** .
- J 8092 Universal Driver Handle - 3/4 in - 10
- **J 21465-01** Bushing Service Set. See **Special Tools and Equipment** .
- **J 34196-B** Transmission Bushing Service Set. See **Special Tools and Equipment** .

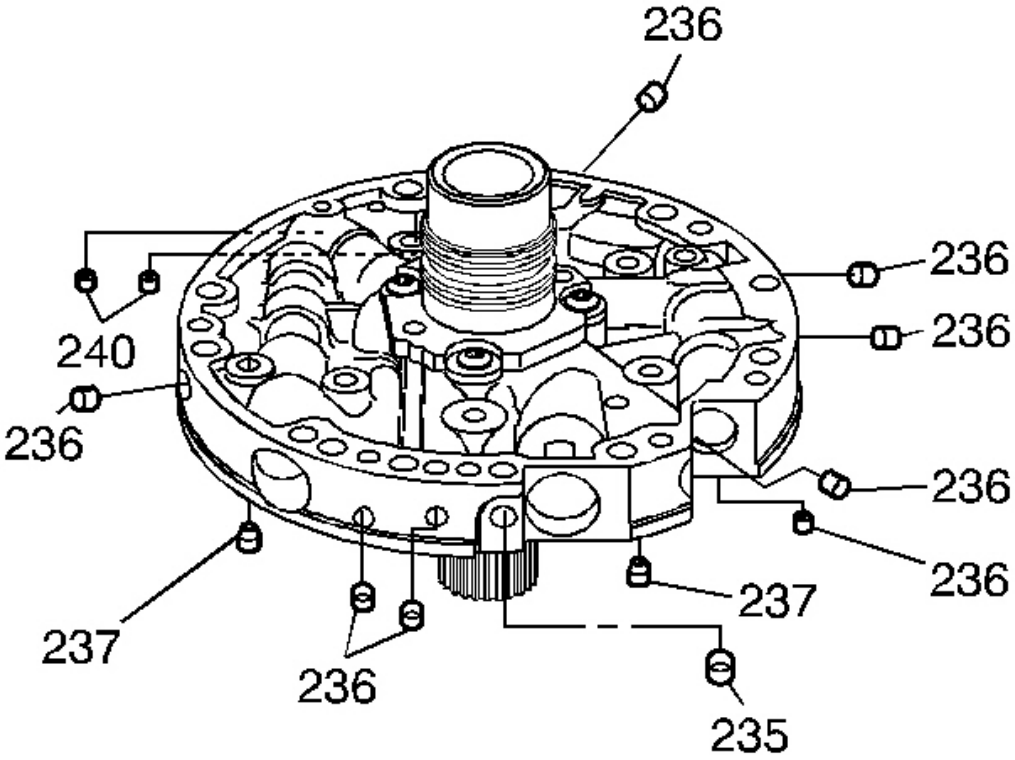

Fig. 226: Identifying Pump Cover Components
Courtesy of GENERAL MOTORS CORP.

1. Inspect the pump cover, all check valve retainer and ball assemblies (237), cup plugs (235, 236) and orificed cup plugs (238, 240).

cardiagn.com

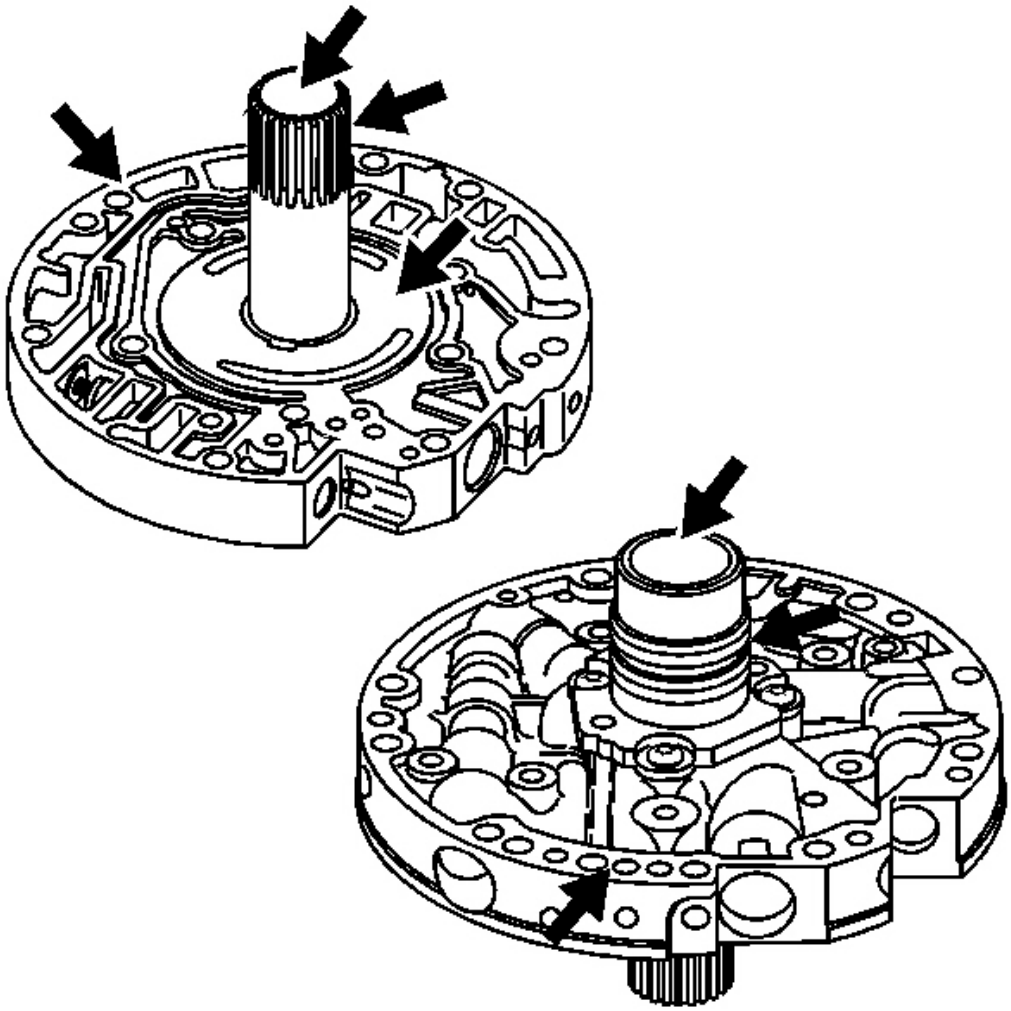

Fig. 227: View Of Pump Cover Inspection Areas
Courtesy of GENERAL MOTORS CORP.

2. Inspect the pump cover for the following:
    - Worn or damaged bushings
    - Foreign material or debris
    - Porosity
    - Scored or irregular mating faces
    - Cross channel leaks
    - Ring groove damage

cardiagn.com

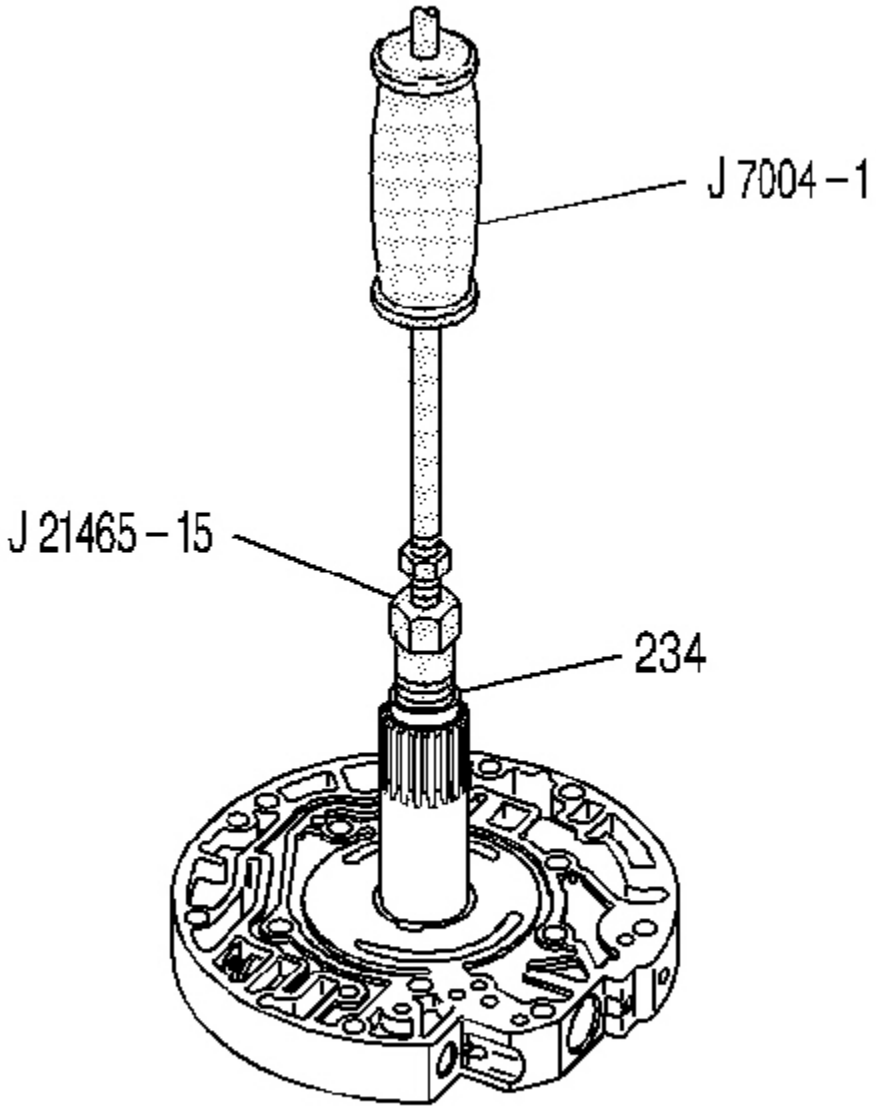

Fig. 228: Locating Stator Shaft Front Bushing
Courtesy of GENERAL MOTORS CORP.

3. Using the **J 21465-15** with the **J 7004-A** , remove the stator shaft front bushing (234).

cardiagn.com

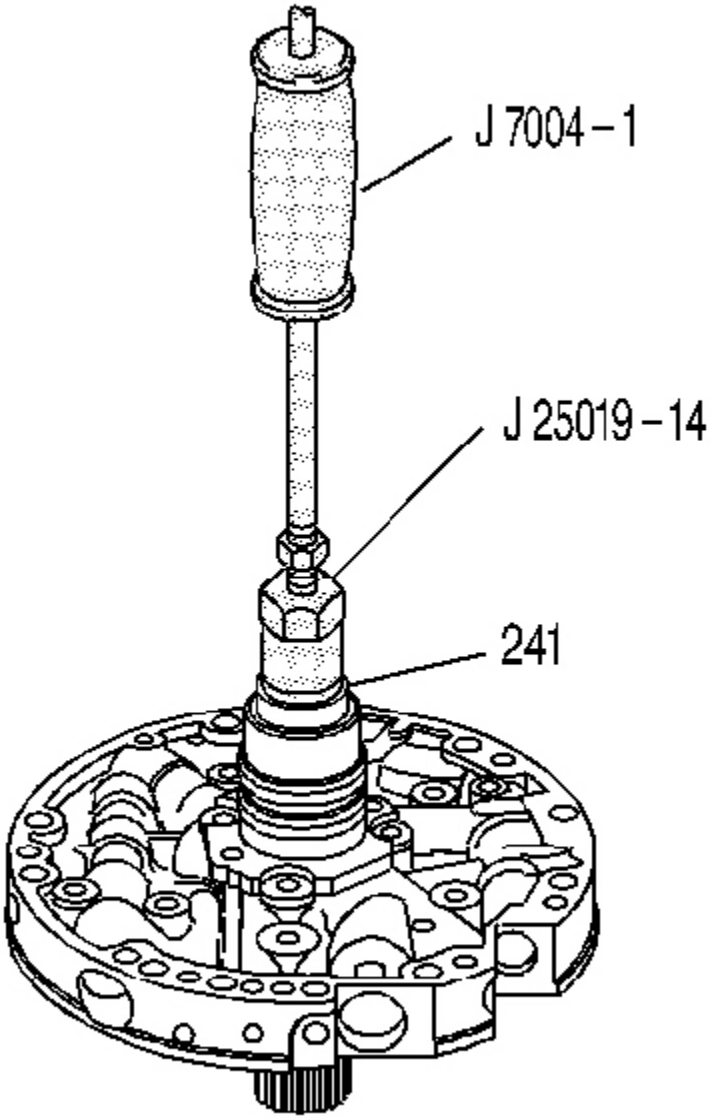

Fig. 229: Removing Stator Shaft Rear Bushing
Courtesy of GENERAL MOTORS CORP.

4. Using the **J 25019-14** with the **J 7004-A** , remove the stator shaft rear bushing (241).

Installation Procedure

cardiagn.com

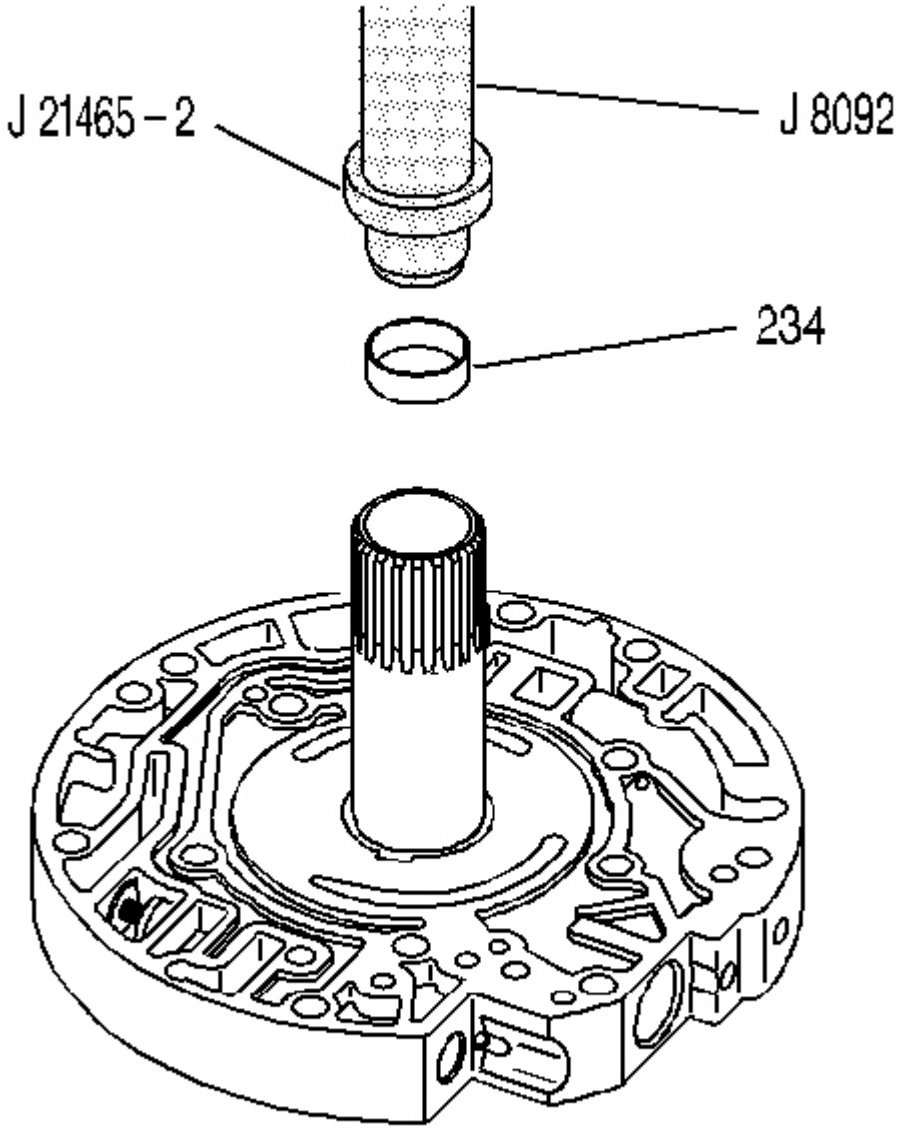

Fig. 230: View Of Stator Shaft Front Bushing
Courtesy of GENERAL MOTORS CORP.

1. Using the **J 21465-2** and the J 8092 , install a new stator shaft front bushing (234).

cardiagn.com

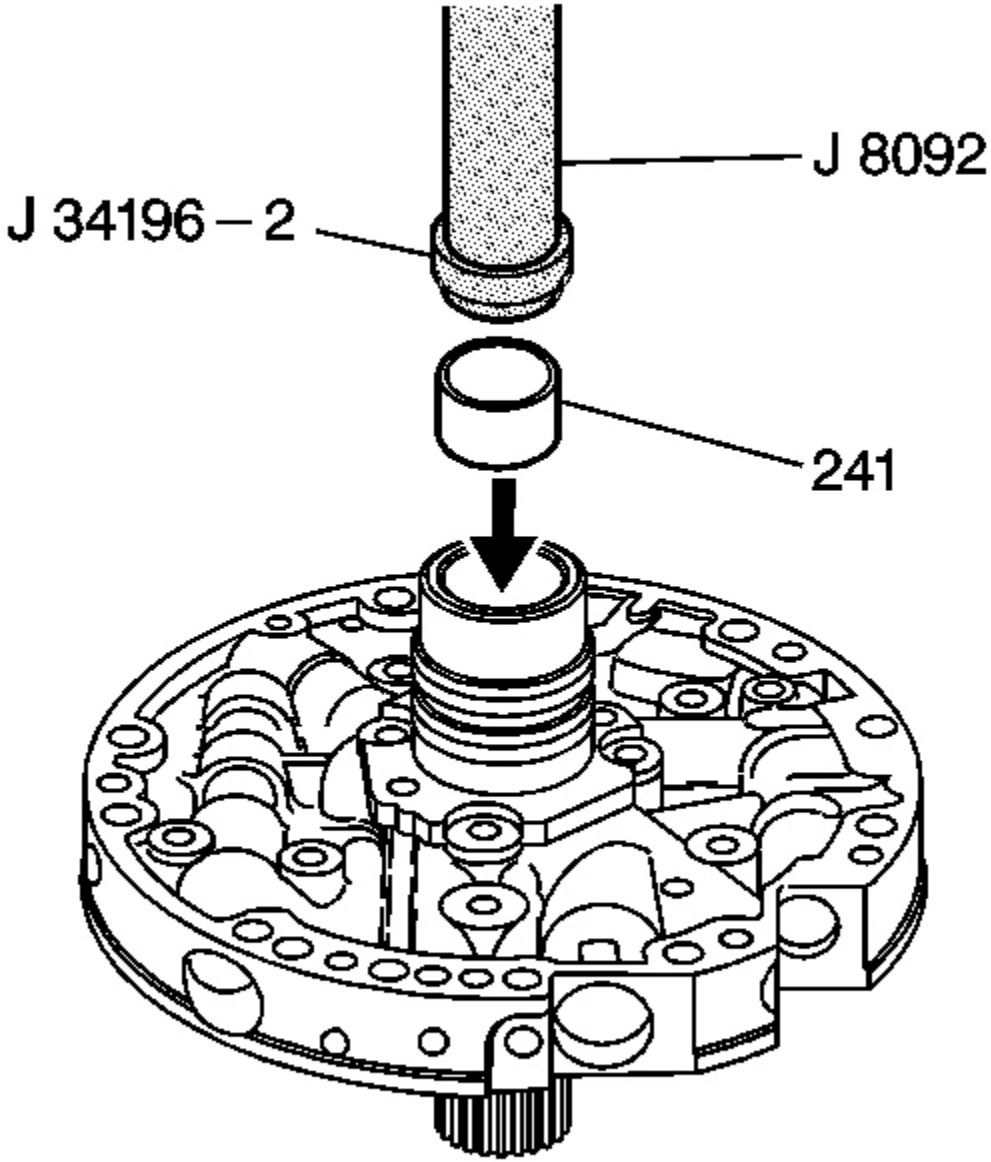

Fig. 231: Installing Stator Shaft Rear Bushing
Courtesy of GENERAL MOTORS CORP.

2. Using the **J 34196-2** which is part of kit **J 34196-B** and the J 8092 , install the stator shaft rear bushing (241).

cardiagn.com

OIL PUMP COVER ASSEMBLE

Tools Required

- **J 38735-3** Pusher. See **Special Tools and Equipment** .
- **J 39855** Stator Shaft Seal Installer. See **Special Tools and Equipment** .

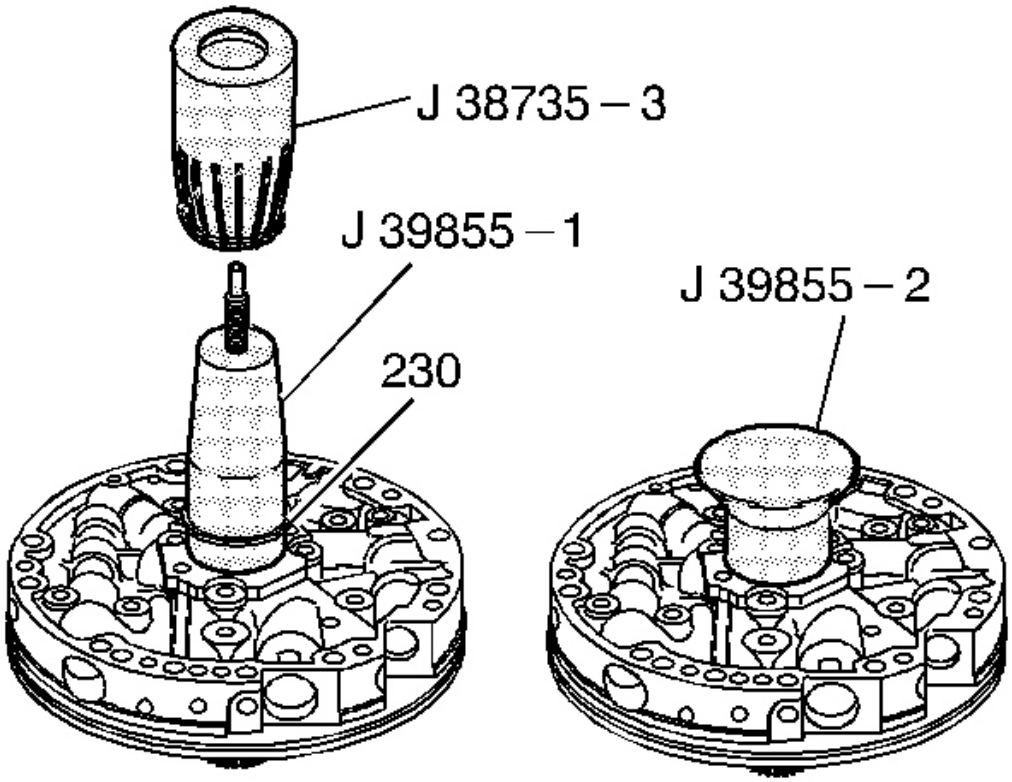

Fig. 232: Identifying J 39855 Components
Courtesy of GENERAL MOTORS CORP.

1. Using the **J 39855-1** which is part of kit **J 39855** and the **J 38735-3** , install the stator shaft oil seal rings (230).
2. Place **J 39855-2** which is part of kit **J 39855** over the seals.
3. Leave **J 39855-2** which is part of kit **J 39855** on the stator shaft until just before the pump is to be installed into the transmission.

cardiagn.com

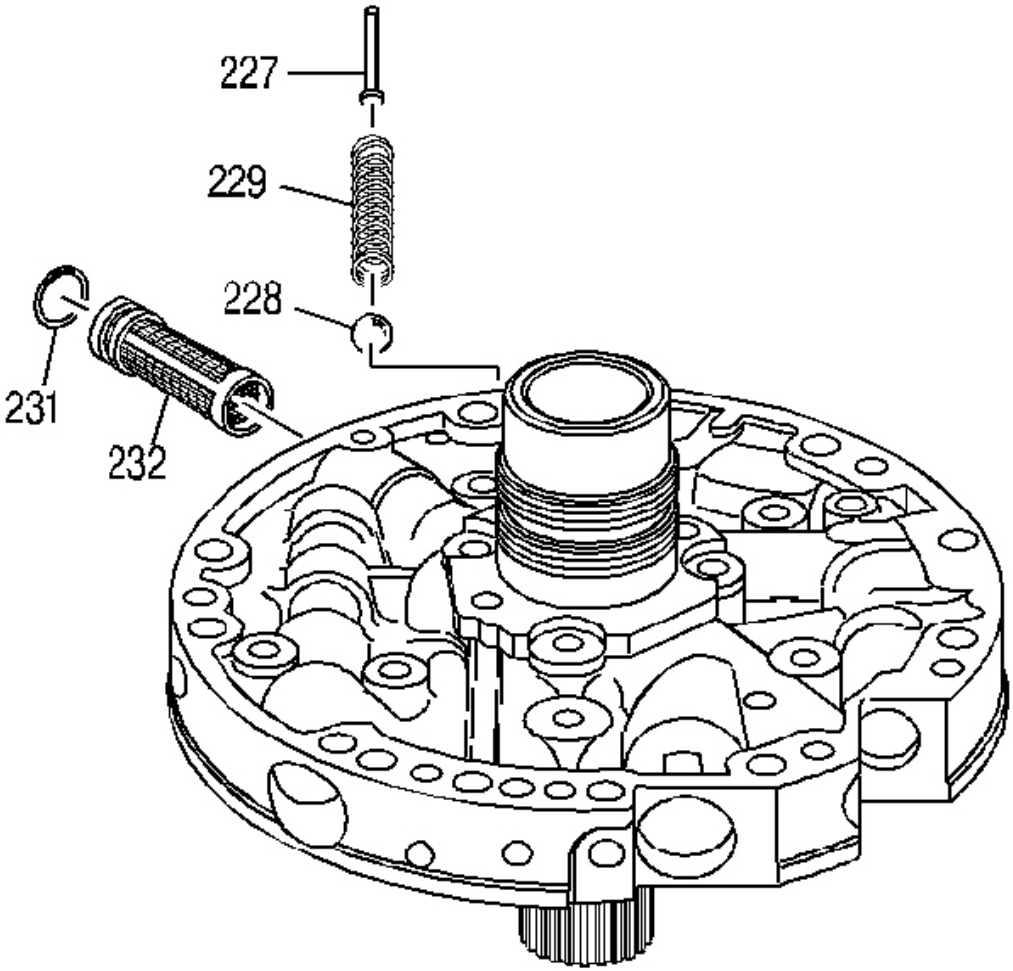

Fig. 233: View Of Oil Pump Cover Screen
Courtesy of GENERAL MOTORS CORP.

4. Install the pressure relief ball (228) and pressure relief spring (229).
5. Install the pressure relief bolt rivet (227).
6. Install the oil pump cover screen seal (231) on the (232).
7. Install the oil pump cover screen (232) into the pump cover.

cardiagn.com

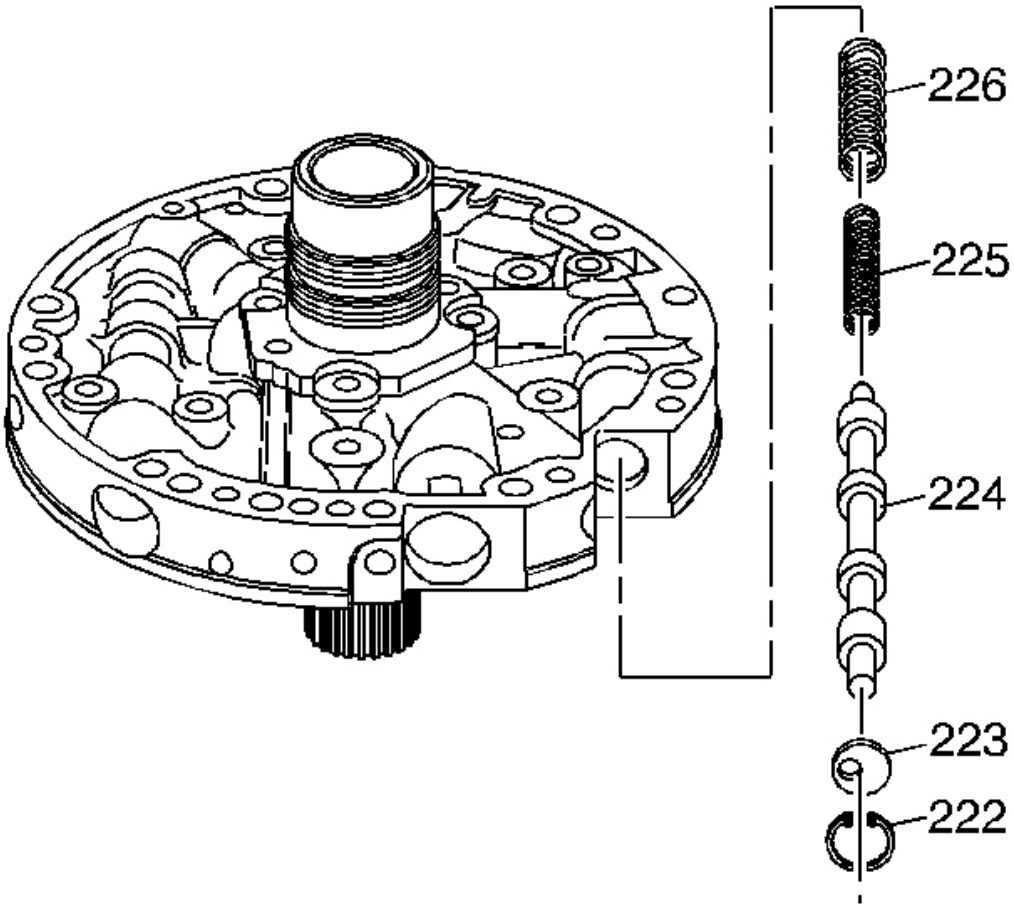

Fig. 234: Locating Converter Clutch Valve
Courtesy of GENERAL MOTORS CORP.

8. Install the converter clutch valve inner (225) and outer (226) springs.
9. Install the converter clutch valve (224).
10. Install the stop valve (223) and the oil pump converter clutch valve retaining ring (222).

cardiagn.com

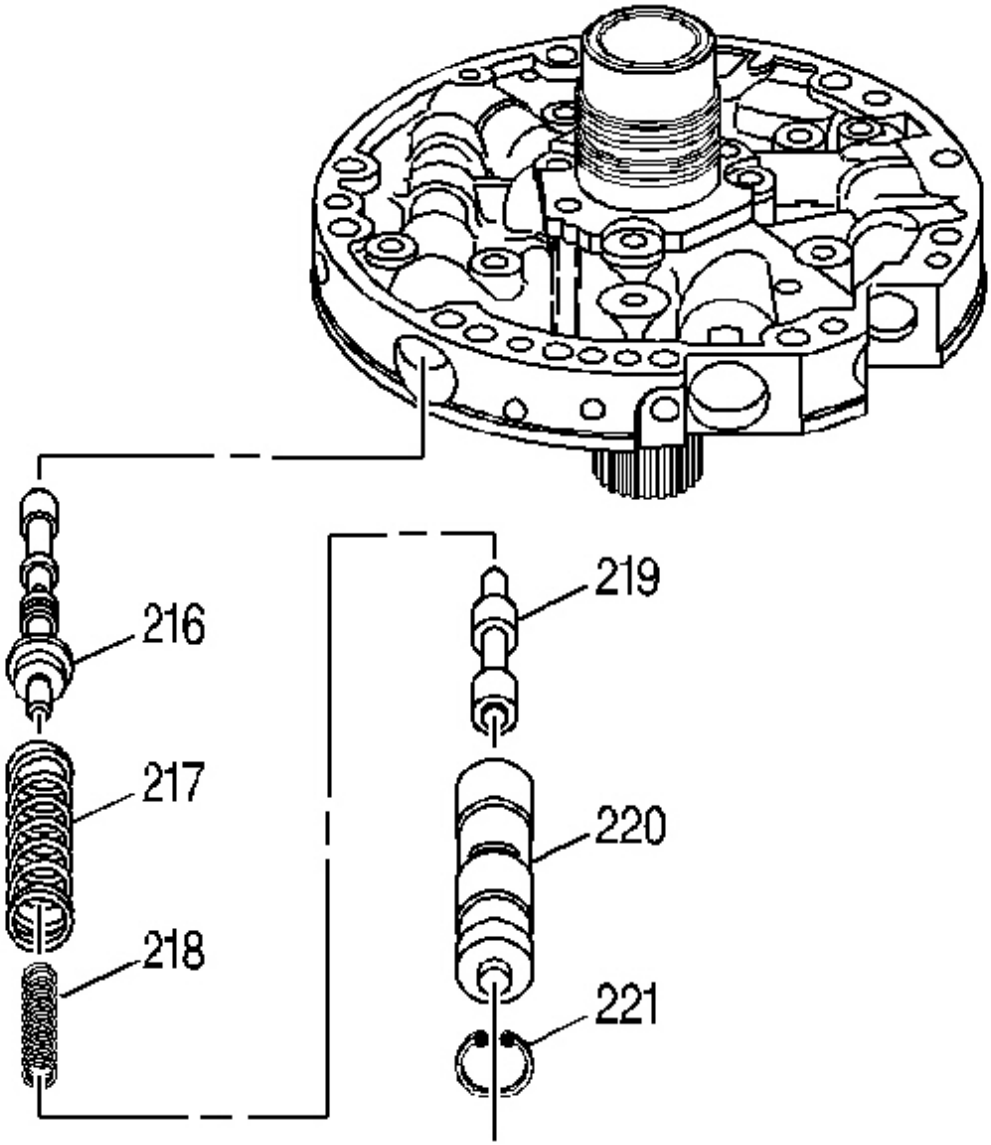

Fig. 235: View Of Pressure Regulator Valve
Courtesy of GENERAL MOTORS CORP.

11. Install the pressure regulator valve (216).
12. Install the pressure regulator isolator spring (218) and the pressure regulator valve spring (217).
13. Install the reverse boost valve (219) in the reverse boost valve sleeve (220).

cardiagn.com

14. Install the reverse boost valve and sleeve in the pump cover.
15. Install the oil pump reverse boost valve retaining ring (221).

OIL PUMP COVER AND BODY ASSEMBLE

Tools Required

J 21368 Pump Body and Cover Alignment Band. See **Special Tools and Equipment** .

Assembly Procedure

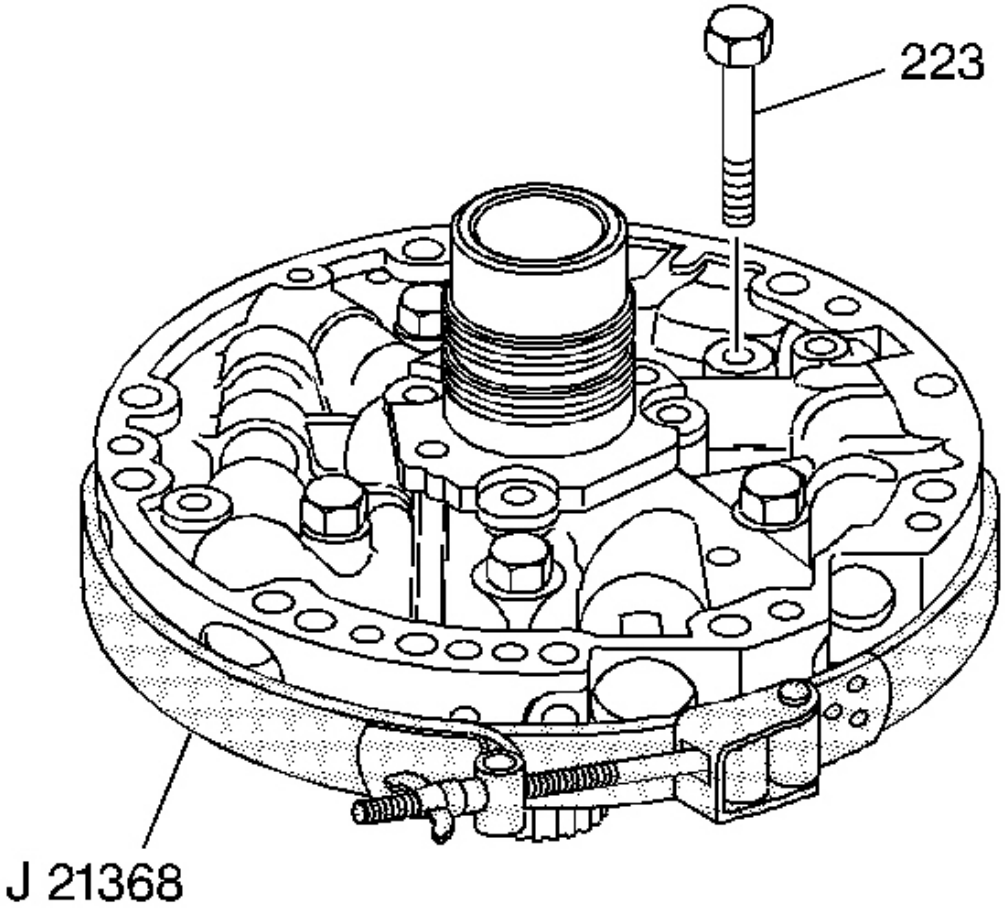

Fig. 236: Locating Pump Cover Bolts
Courtesy of GENERAL MOTORS CORP.

cardiagn.com

1. Place the oil pump cover onto the oil pump body and put stator shaft through a hole in the bench.
2. Install the pump cover bolts (223) finger tight only.
3. Install the **J 21368** .

NOTE: Refer to Fastener Notice in Cautions and Notices.

4. Tighten the pump cover bolts (223).

   Tighten: Tighten the bolts to 24 N.m (18 lb ft).

5. Remove the **J 21368** .

OIL PUMP ASSEMBLY INSTALLATION

Tools Required

- **J 25025-1** Dial Indicator Mounting Post. See **Special Tools and Equipment** .
- **J 39855** Stator Shaft Seal Installer. See **Special Tools and Equipment** .

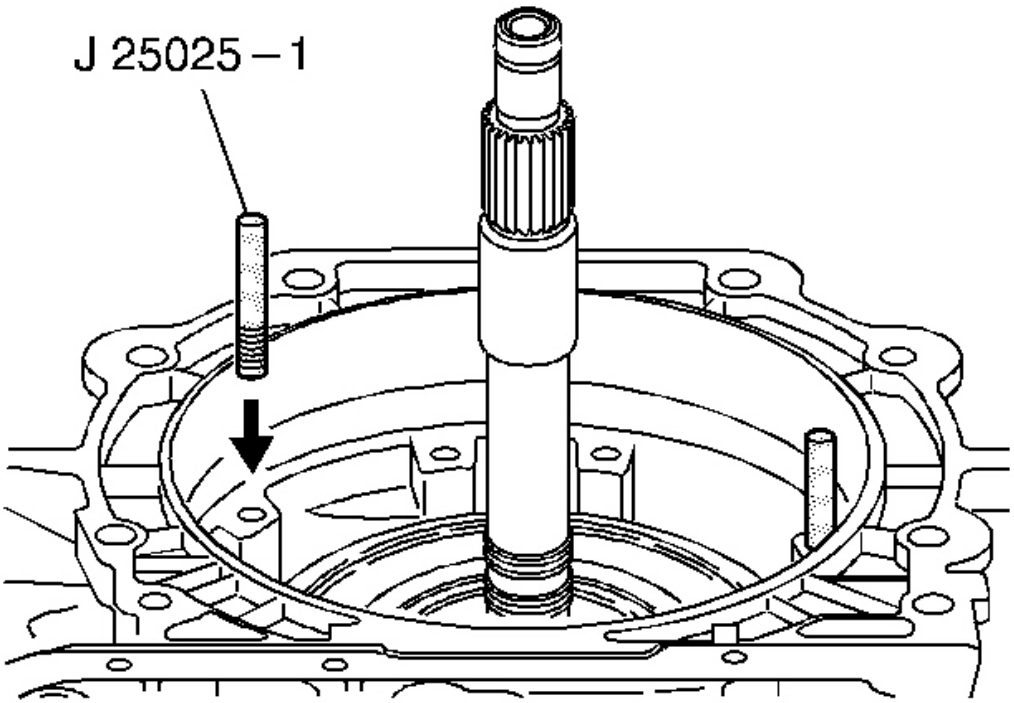

cardiagn.com

Fig. 237: Installing J 25025-1
Courtesy of GENERAL MOTORS CORP.

1. Install the **J 25025-1** .

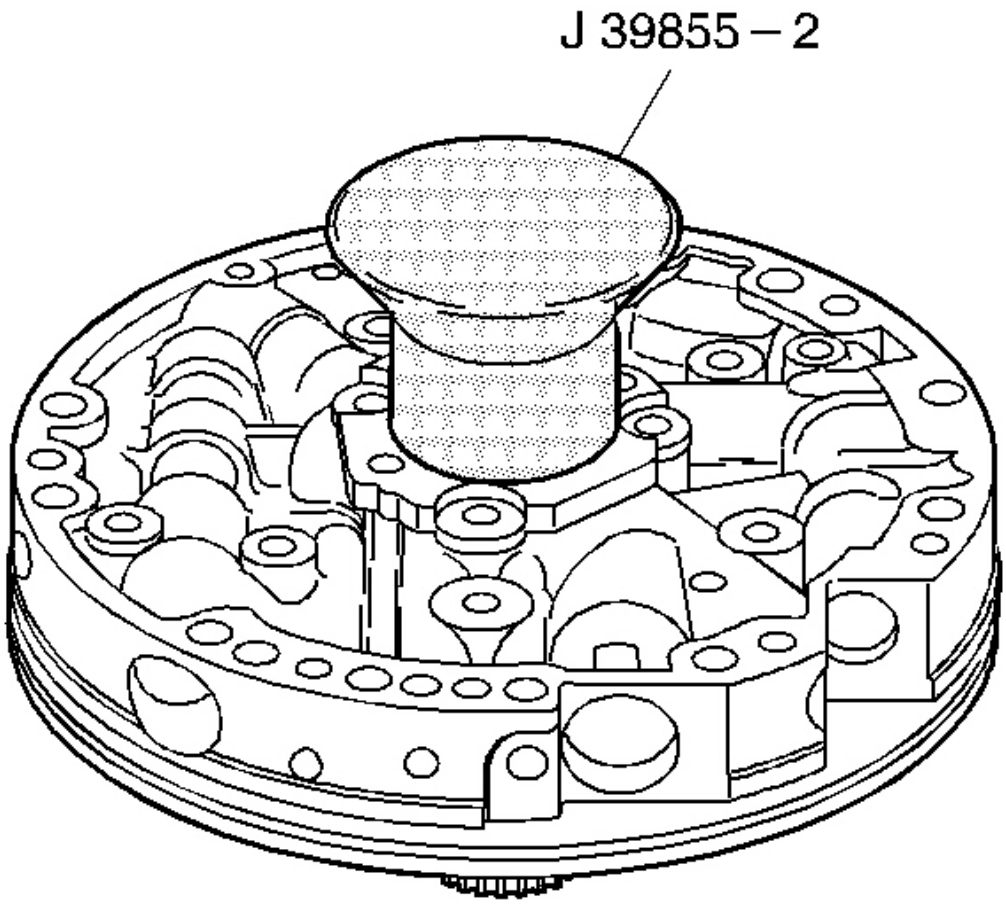

Fig. 238: Identifying J 39855-2
Courtesy of GENERAL MOTORS CORP.

2. Remove the **J 39855-2** which is part of kit **J 39855** .

cardiagn.com

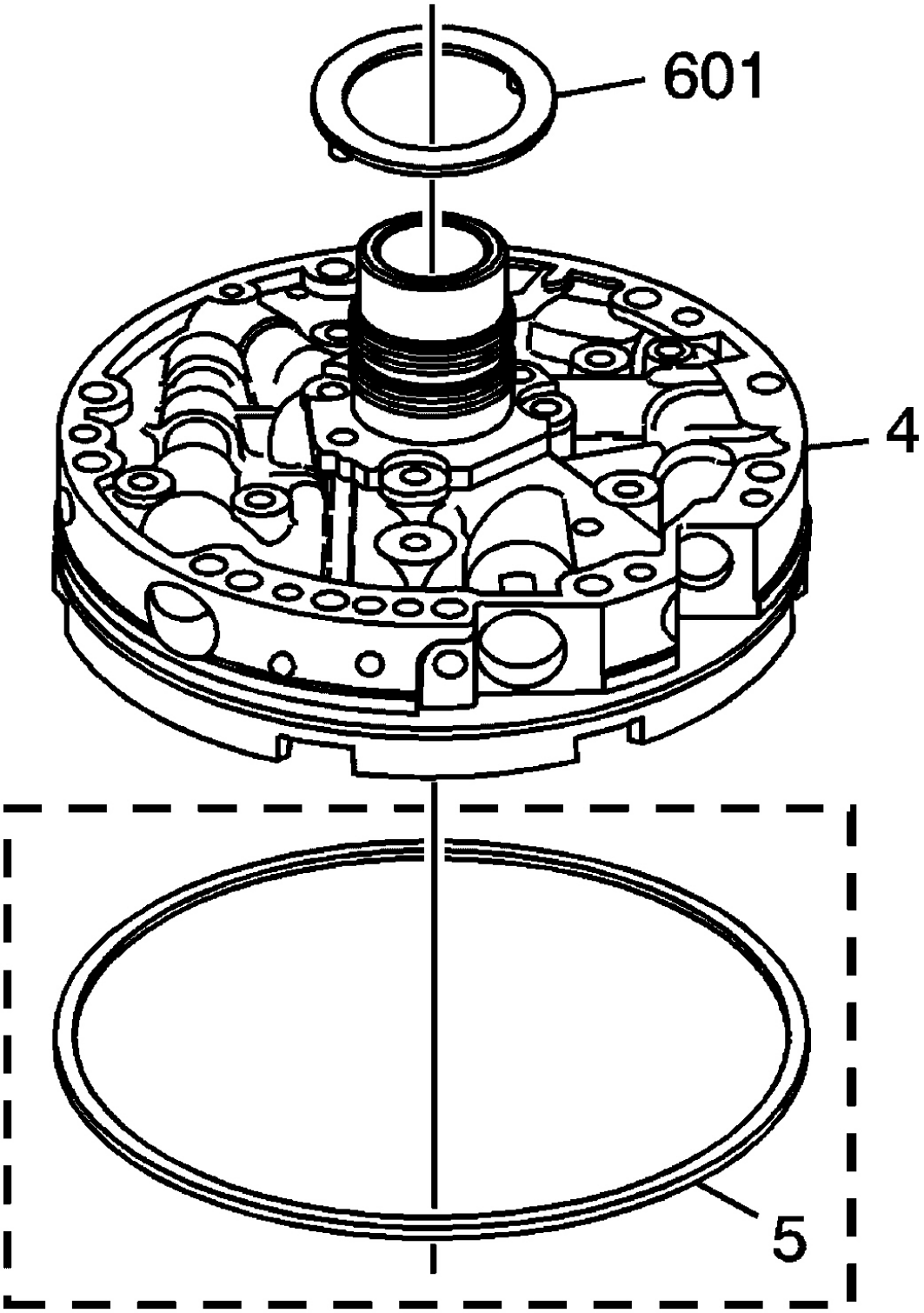

Fig. 239: View Of Pump To Drum Thrust Washer

cardiagn.com

Courtesy of GENERAL MOTORS CORP.

3. Install the pump to drum thrust washer (601).
4. Use **J 36850** or equivalent to retain the washer to the pump.
5. Install the oil pump o-ring seal into the oil pump o-ring groove - some models.

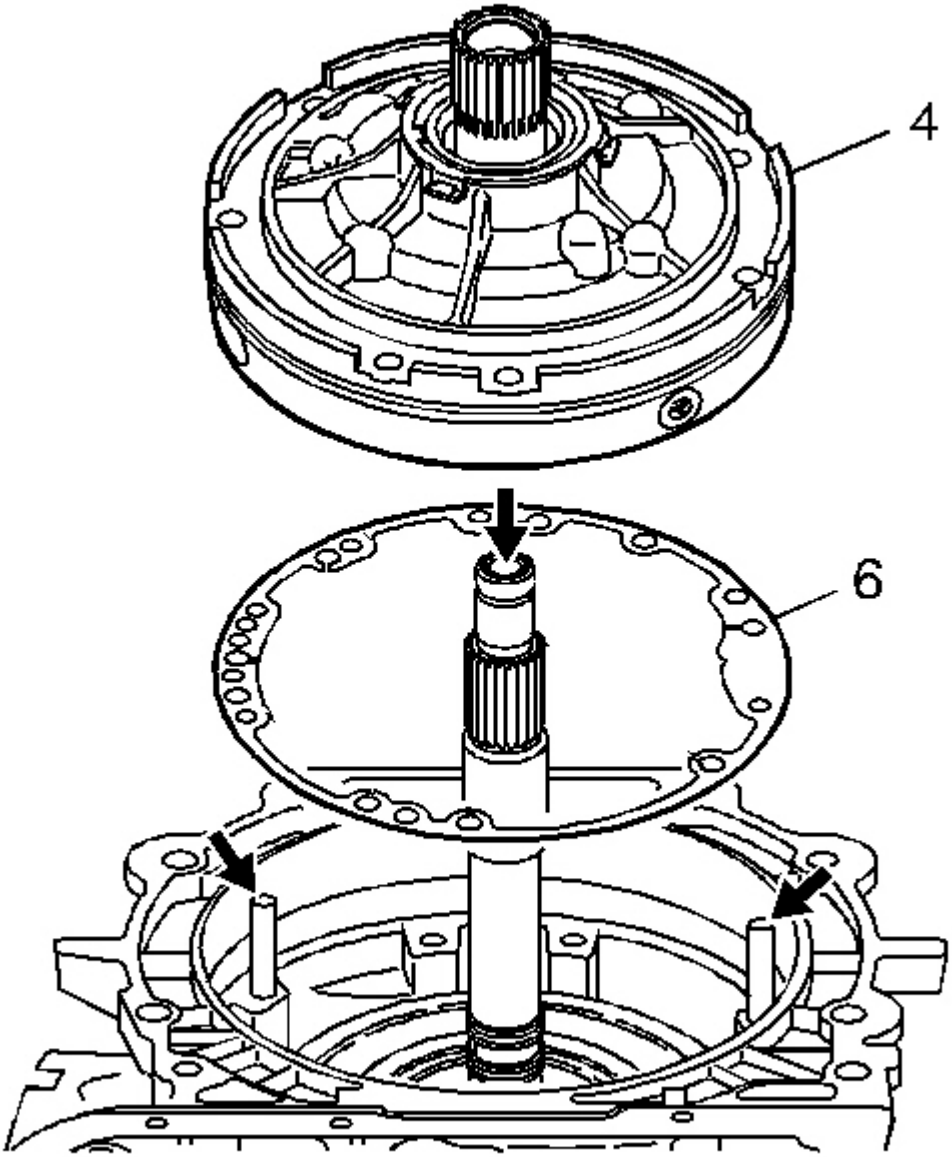

cardiagn.com

Fig. 240: Aligning Pump Cover To Case Gasket
Courtesy of GENERAL MOTORS CORP.

6. Install the pump cover to case gasket (6).
7. Install the oil pump assembly (4) into the case and align all holes properly.

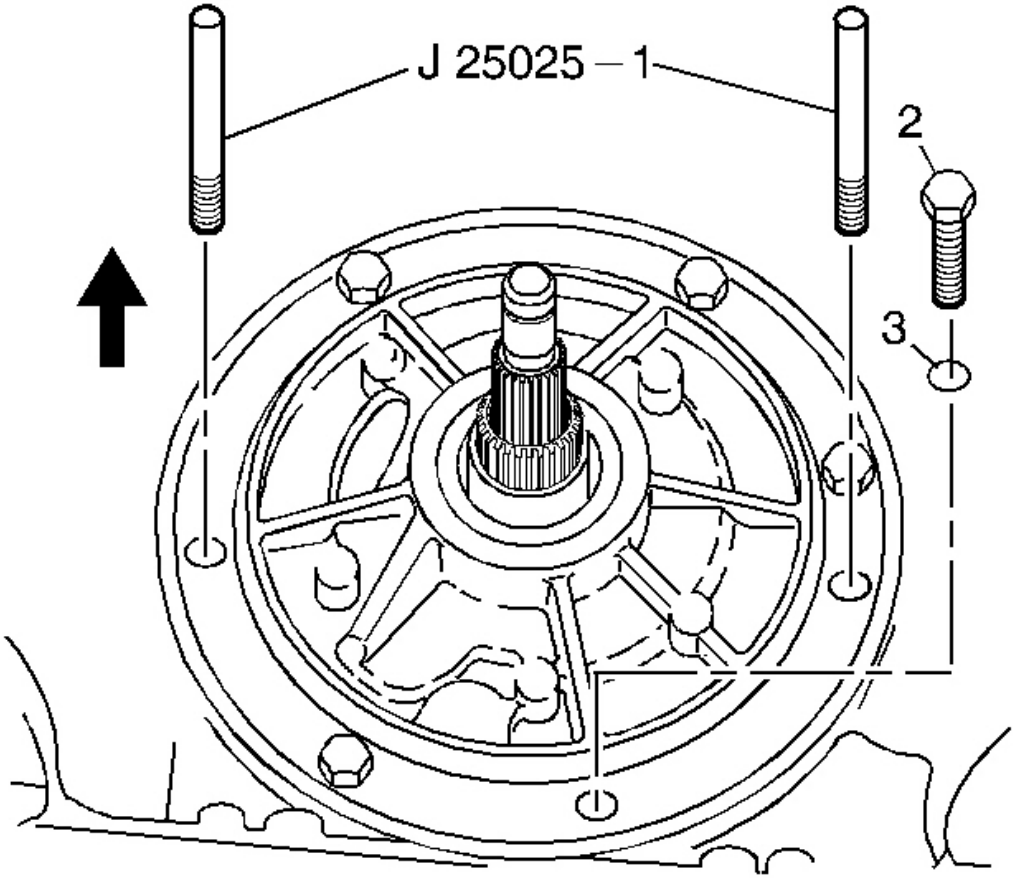

Fig. 241: View Of J 25025-1
Courtesy of GENERAL MOTORS CORP.

NOTE: Refer to Fastener Notice in Cautions and Notices.

IMPORTANT: The pump to case bolt O-ring seals (3) must be replaced.

8. Install the pump to case bolts (2) with new O-ring seals (3).

cardiagn.com

Tighten: Tighten the bolts to 29 N.m (21 lb ft).

9. Remove the **J 25025-1** .

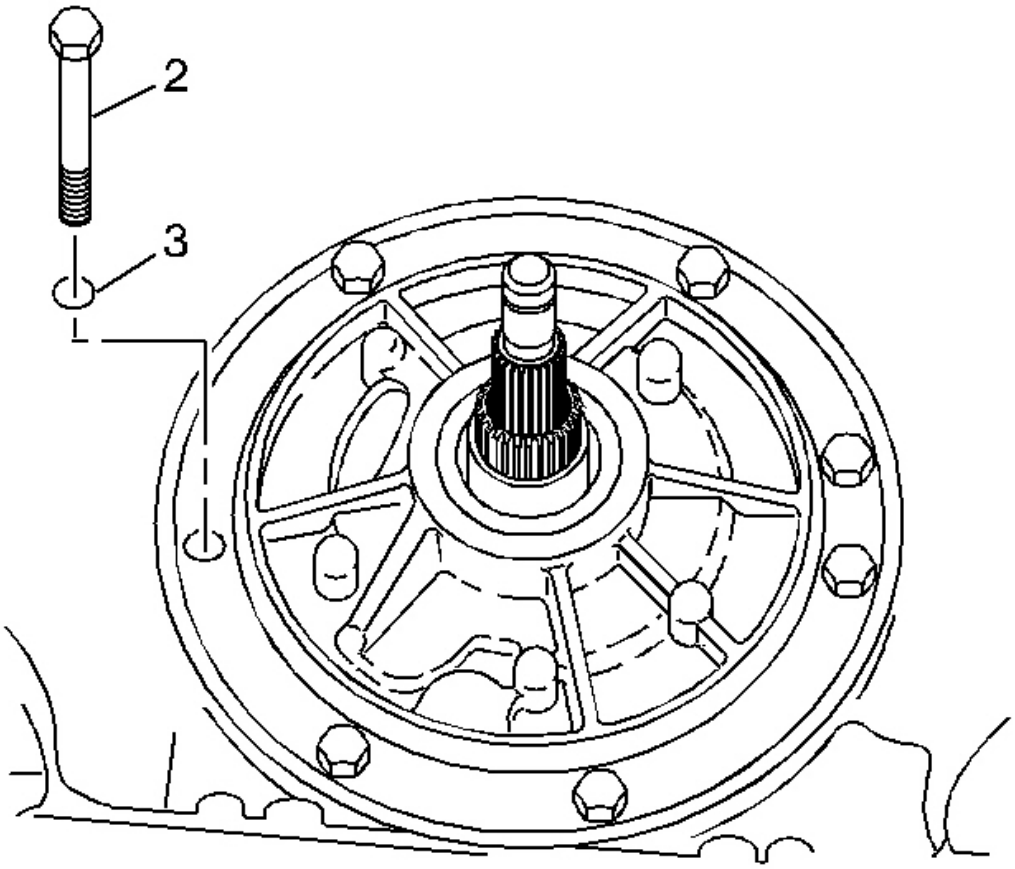

Fig. 242: Locating Pump To Case Bolts & O-Ring Seals
Courtesy of GENERAL MOTORS CORP.

10. Install the remaining pump to case bolts (2) and O-ring seals (3), in the holes where the **J 25025-1** were.

    Tighten: Tighten the bolts to 29 N.m (21 lb ft).

TRANSMISSION END PLAY CHECK

Tools Required

- **J 25022** End Play Fixture Adapter. See **Special Tools and Equipment** .

cardiagn.com

- **J 34725** End Play Checking Adapter. See **Special Tools and Equipment** .
- **J 43205** End Play Fixture Adapter (300 mm). See **Special Tools and Equipment** .
- **J 24773-A** Oil Pump Remover. See **Special Tools and Equipment** .
- **J 8001** Dial Indicator Set. See **Special Tools and Equipment** .
- **J 25025-7A** Dial Indicator Post. See **Special Tools and Equipment** .

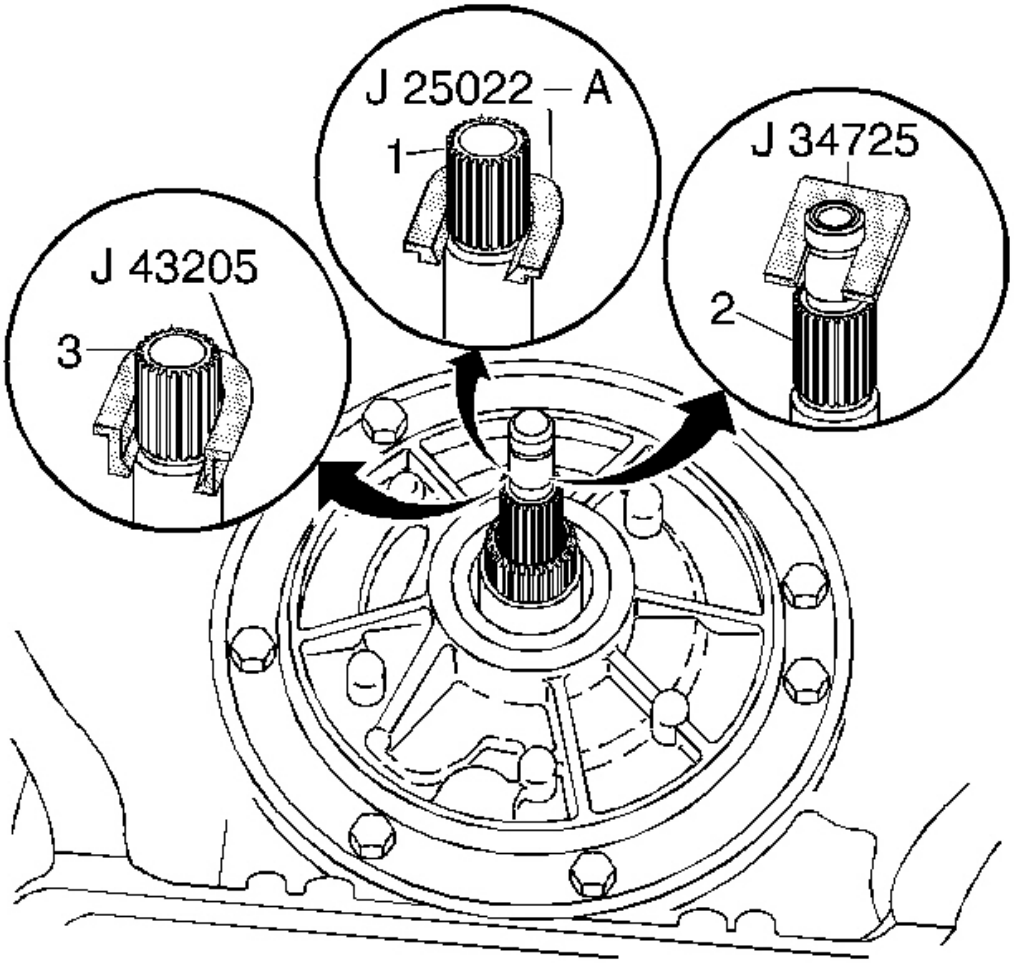

Fig. 243: Identifying Different End Play Fixture Adapters
Courtesy of GENERAL MOTORS CORP.

IMPORTANT: Torque converter size is model dependent.

1. Install an end play fixture adapter.

cardiagn.com

- Use **J 25022** for a 245 mm and 258 mm turbine shaft (1).
- Use **J 34725** for a 298 mm turbine shaft (2).
- Use **J 43205** for a 300 mm turbine shaft (3).

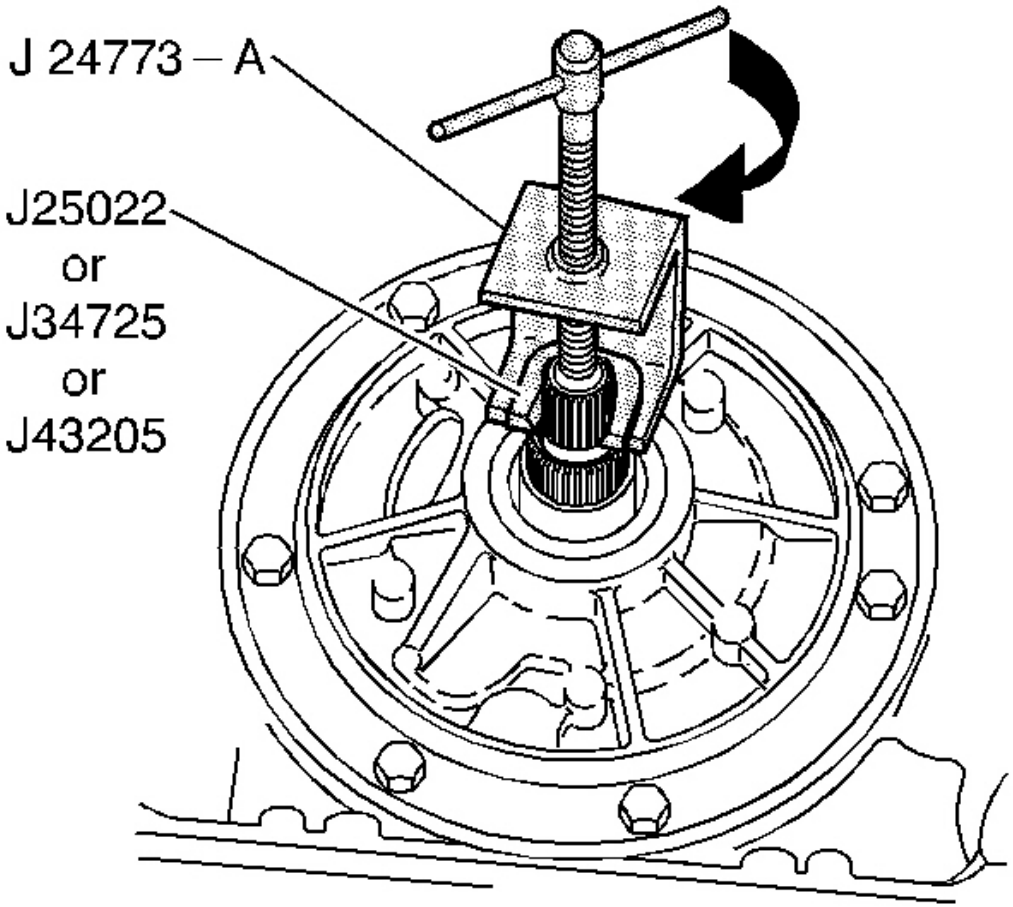

Fig. 244: Identifying J 24773-A
Courtesy of GENERAL MOTORS CORP.

2. Install the **J 24773-A** .

cardiagn.com

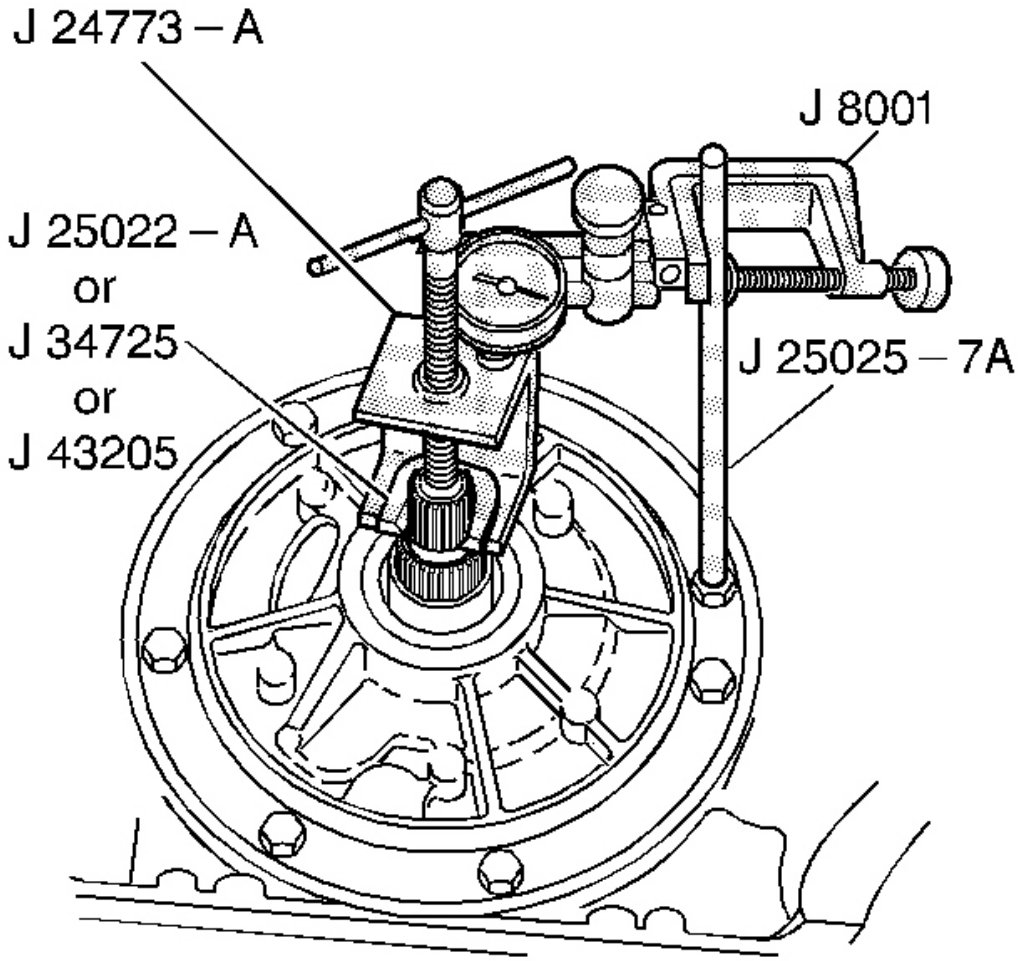

Fig. 245: Installing J 25025-7A With J 8001
Courtesy of GENERAL MOTORS CORP.

3. Remove an oil pump bolt.
4. Install **J 25025-7A** (or a 278 mm or 11 in bolt) and lock nut.
5. Install **J 8001** .

cardiagn.com

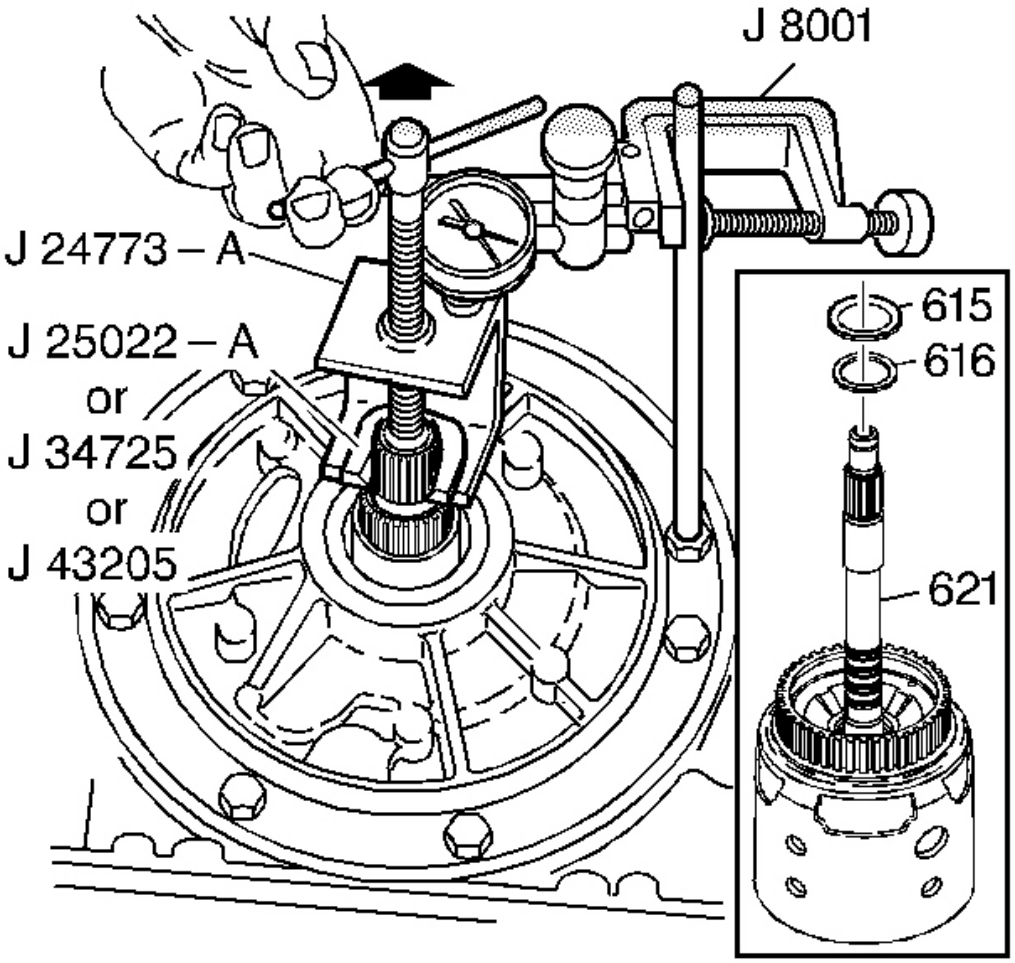

Fig. 246: Checking End Play With J 8001
Courtesy of GENERAL MOTORS CORP.

6. Set the **J 8001** to zero.
7. Pull up on **J 24773-A** .

   Proper end play should be 0.13-0.92 mm (0.005-0.036 in).

8. The selective washer (616), which controls the end play, is located between the input housing (621) and the thrust bearing (615) on the oil pump hub.

   If the end play measurement is incorrect, refer to the **End Play Specifications** table. Choose a new selective washer (616) based on the original selective washer and the information contained in the table.

cardiagn.com

If the dial indicator shows no end play, the selective washer (616) and thrust bearing (615) may have been misassembled.

9. Correct the end play by changing the selective washer (616).

CONVERTER HOUSING INSTALLATION

Tools Required

J 41510 T-50 Plus Bit. See **Special Tools and Equipment** .

Installation Procedure

cardiagn.com

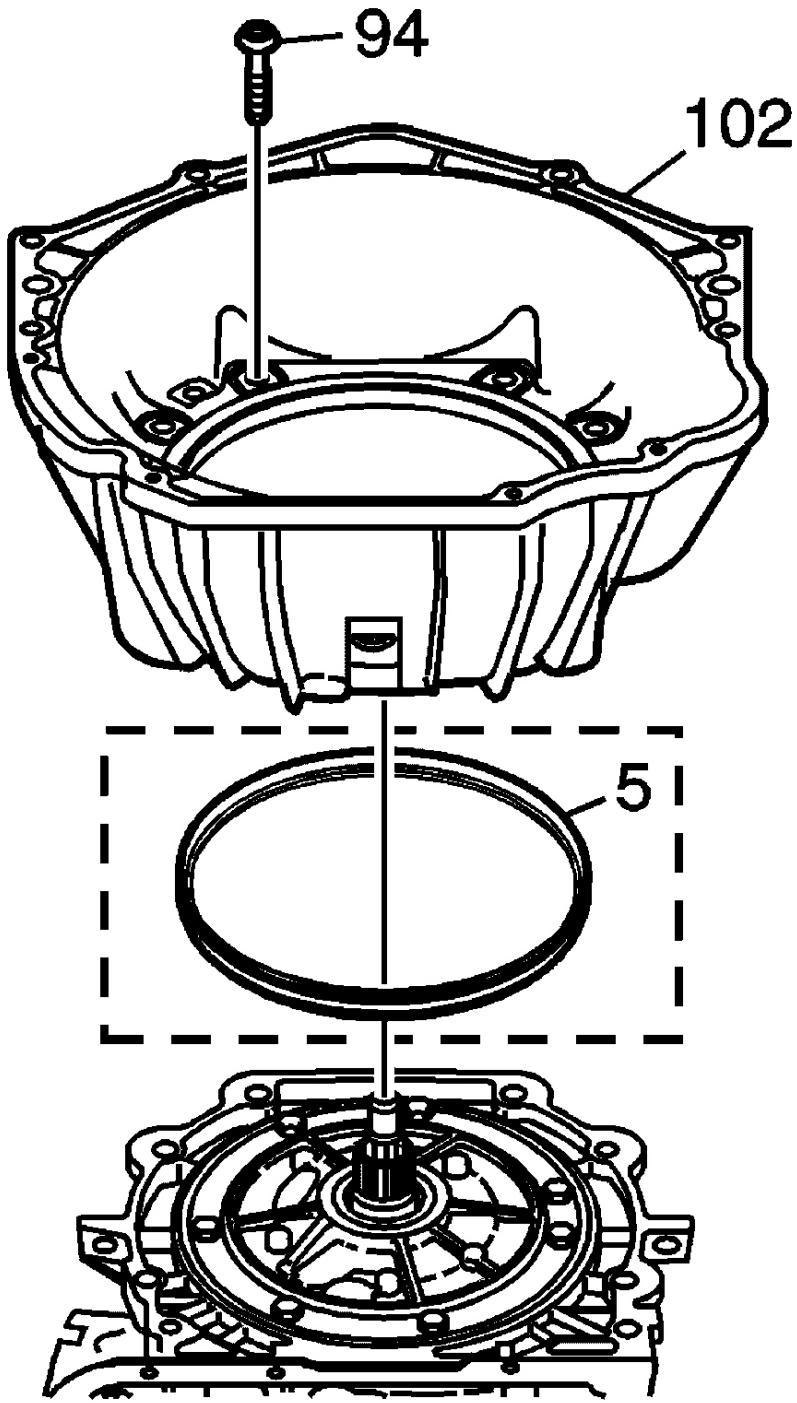

Fig. 247: Locating Oil Pump Seal
Courtesy of GENERAL MOTORS CORP.

IMPORTANT: Ensure converter housing and case face are clean before installing new

cardiagn.com

pump seal.

1. Install the oil pump seal (5) - some models. Seat oil pump seal (5) by hand, between pump body and case. Ensure the seal is evenly seated.
2. Install the converter housing (102).

NOTE: Refer to Fastener Notice in Cautions and Notices.

3. Install the converter housing bolts (94) to the transmission case. Use the **J 41510** .

Tighten:

- Tighten converter housing bolts evenly in a star pattern sequence.
- Tighten the converter housing bolts (94) to 65-75 N.m (48-55 lb ft).

TURBINE SHAFT O-RING INSTALLATION

cardiagn.com

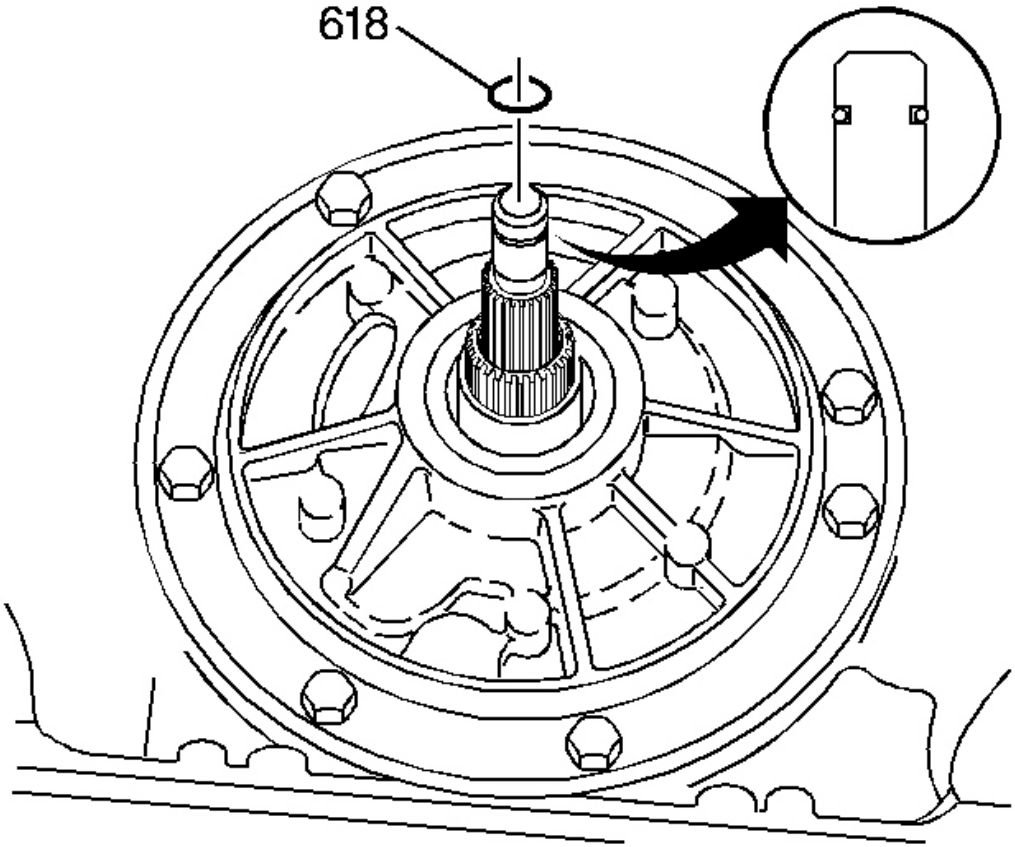

Fig. 248: Identifying Turbine Shaft O-Ring
Courtesy of GENERAL MOTORS CORP.

Install the O-ring (618) on the turbine shaft. O-Ring location is location dependent.

CONTROL VALVE BODY DISASSEMBLE

cardiagn.com

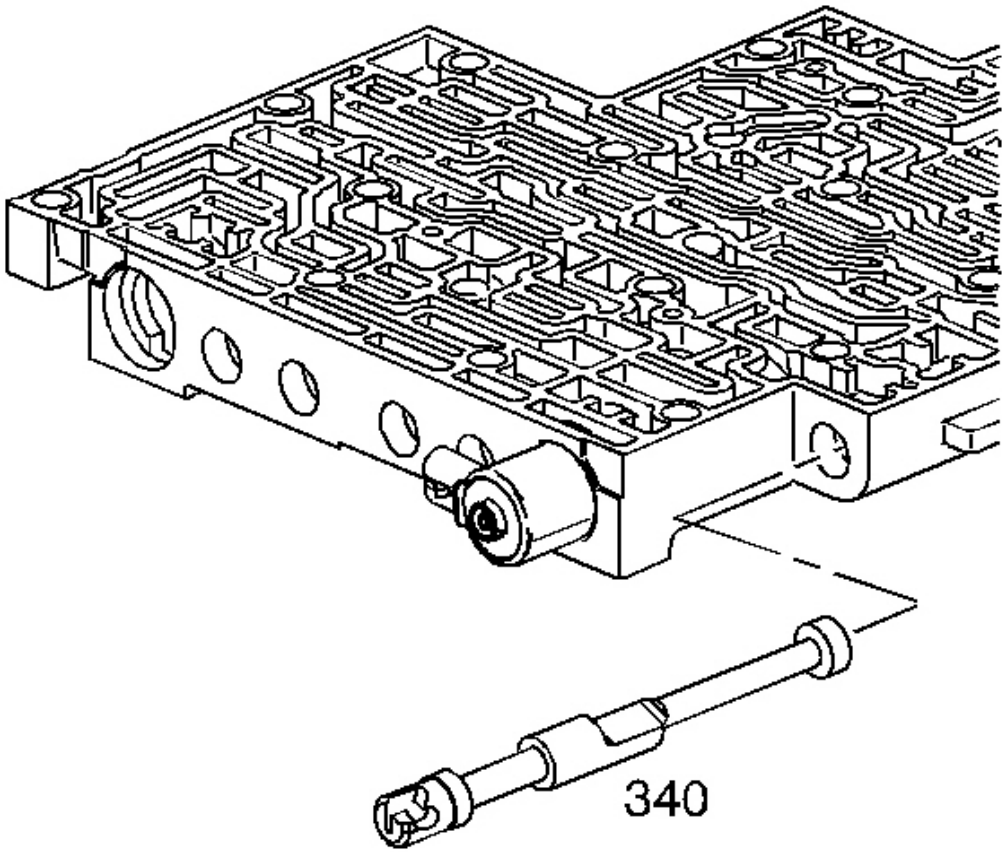

Fig. 249: View Of Manual Valve
Courtesy of GENERAL MOTORS CORP.

CAUTION: Refer to Valve Springs Can Be Tightly Compressed Caution in Cautions and Notices.

1. Remove the manual valve (340).

cardiagn.com

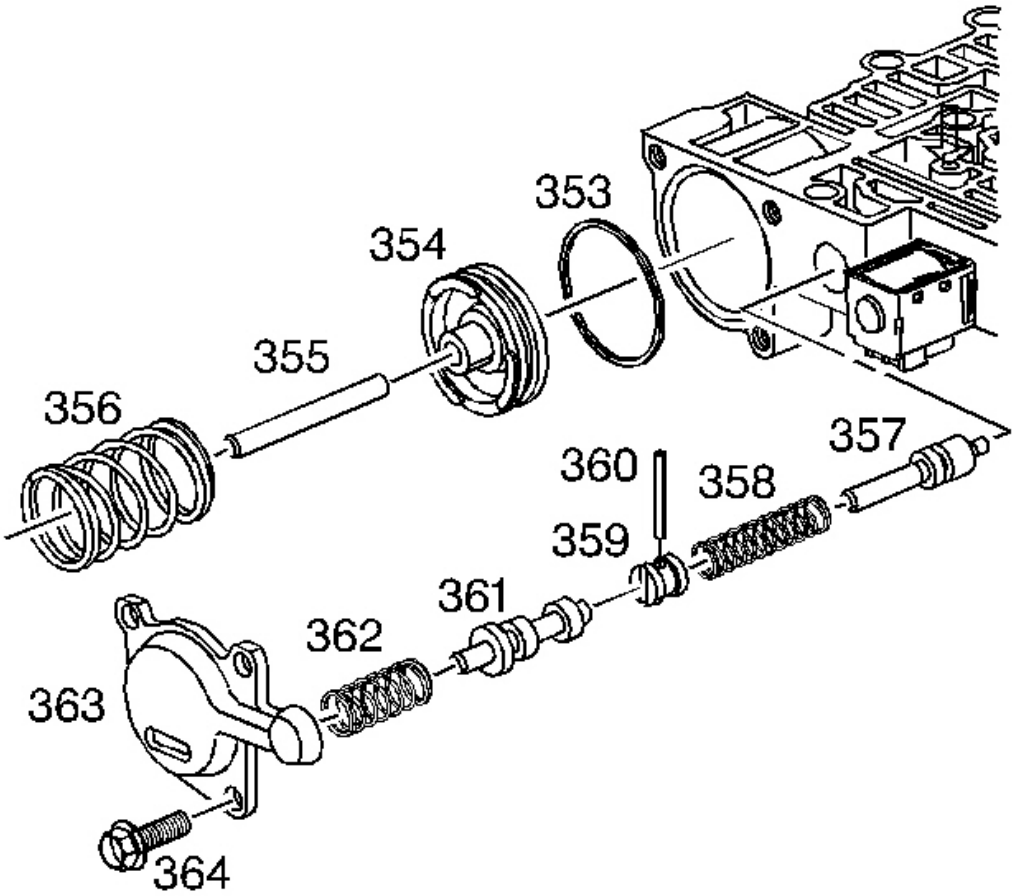

Fig. 250: Exploded View Of Forward Abuse & Low Overrun Components
Courtesy of GENERAL MOTORS CORP.

2. Remove the forward accumulator cover bolts (364) and the forward accumulator cover (363).
3. Remove the forward accumulator spring (356), forward accumulator piston (354), and the forward accumulator pin (355).
4. Remove the low overrun valve spring (362) and the low overrun valve (361).
5. Remove the coiled spring pin (360) and the bore plug (359).
6. Remove the forward abuse valve spring (358) and the forward abuse valve (357).

cardiagn.com

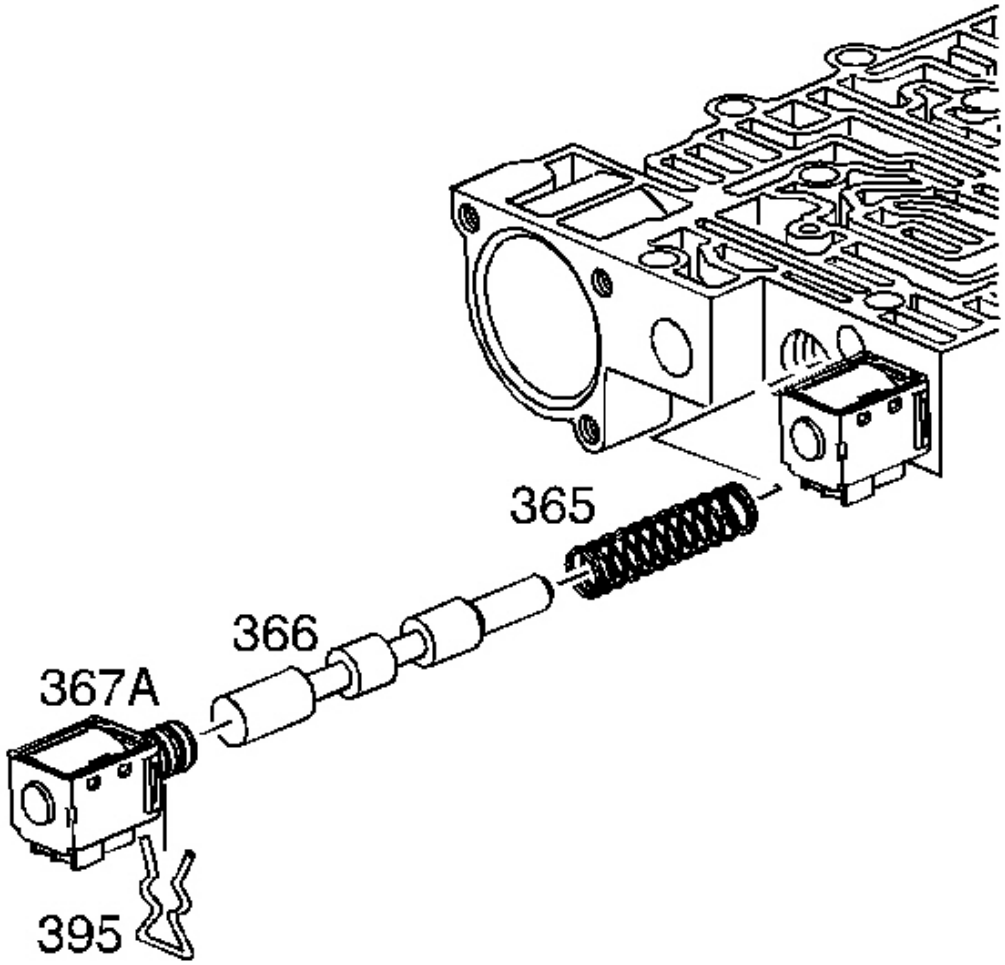

Fig. 251: Locating 1-2 Shift Valve & Solenoid Components
Courtesy of GENERAL MOTORS CORP.

7. Remove the solenoid retainer (395) and the 1-2 shift solenoid (367A).
8. Remove the 1-2 shift valve (366) and the 1-2 shift valve spring (365).

cardiagn.com

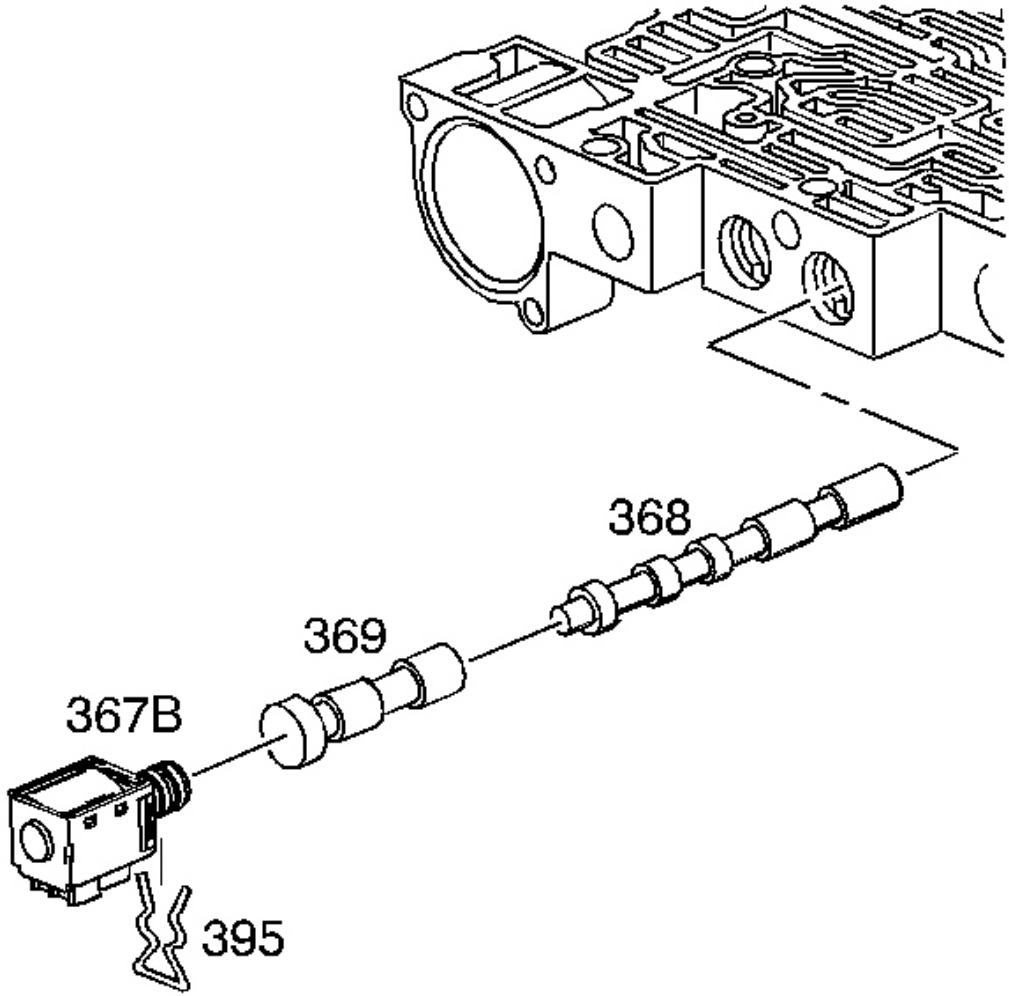

Fig. 252: Identifying 2-3 Shuttle Valve & Solenoid Components
Courtesy of GENERAL MOTORS CORP.

9. Remove the solenoid retainer (395) and the 2-3 shift solenoid (367B).
10. Remove the 2-3 shuttle valve (369) and the 2-3 shift valve (368).

cardiagn.com

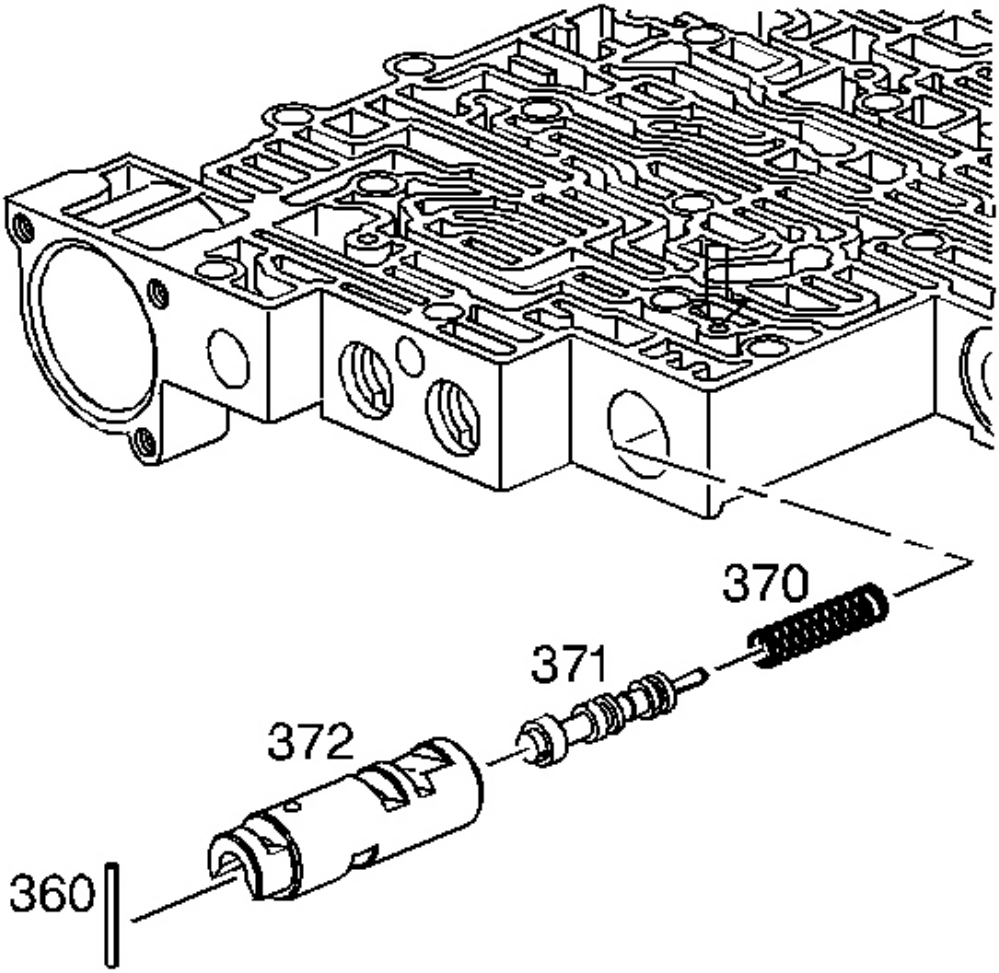

Fig. 253: View Of 1-2 Accumulator Valve & 1-2 Accumulator Valve Sleeve
Courtesy of GENERAL MOTORS CORP.

11. Remove the coiled spring pin (360).
12. Remove the 1-2 accumulator valve sleeve (372).
13. Remove the 1-2 accumulator valve (371) and the 1-2 accumulator valve spring (370).

cardiagn.com

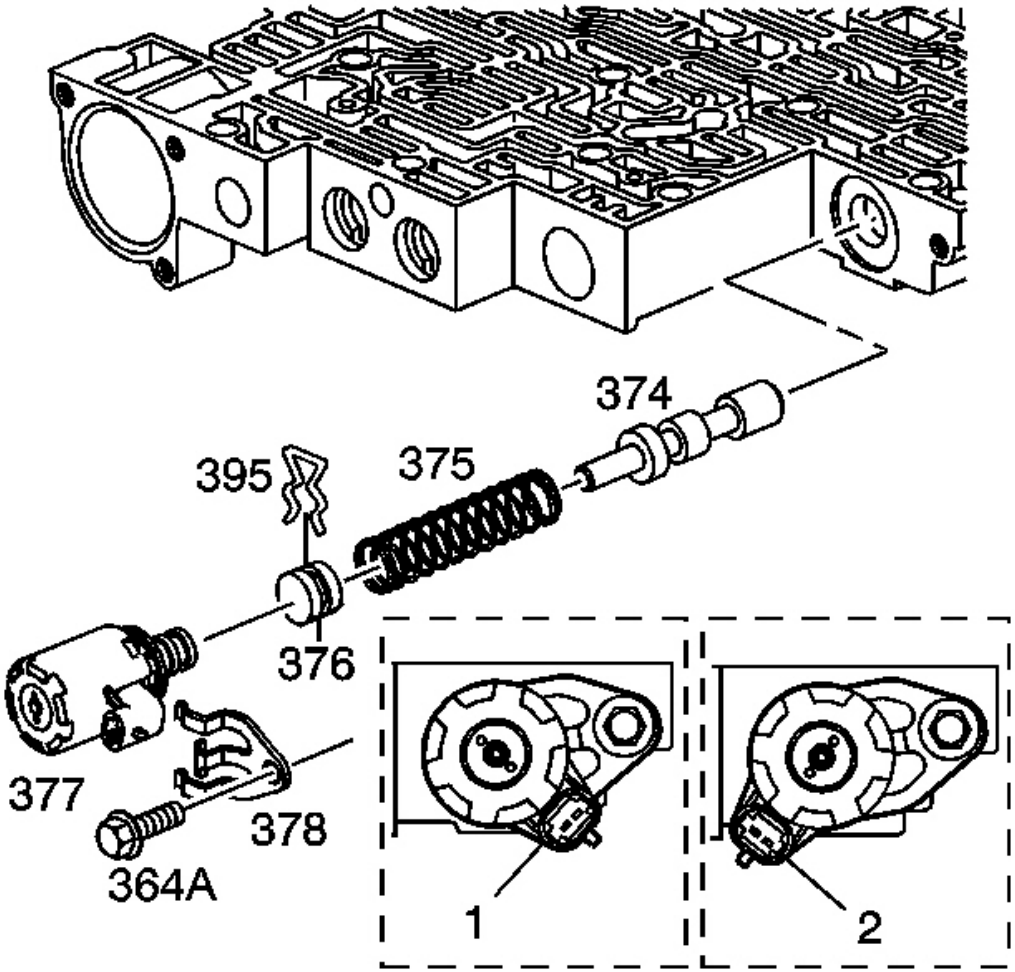

Fig. 254: Locating Actuator Feed Limit Valve & Pressure Control Solenoid
Courtesy of GENERAL MOTORS CORP.

14. Remove the solenoid retainer bolt (364A) and the solenoid retainer (378). Remove the pressure control solenoid (377), note orientation upon removal.

CAUTION: Refer to Valve Springs Can Be Tightly Compressed Caution in Cautions and Notices.

15. Compress the actuator feed limit valve spring (375).
16. Remove the bore plug retainer (395) and release the spring slowly.
17. Remove the bore plug (376).

cardiagn.com

18. Remove the actuator feed limit valve spring (375) and the actuator feed limit valve (374).

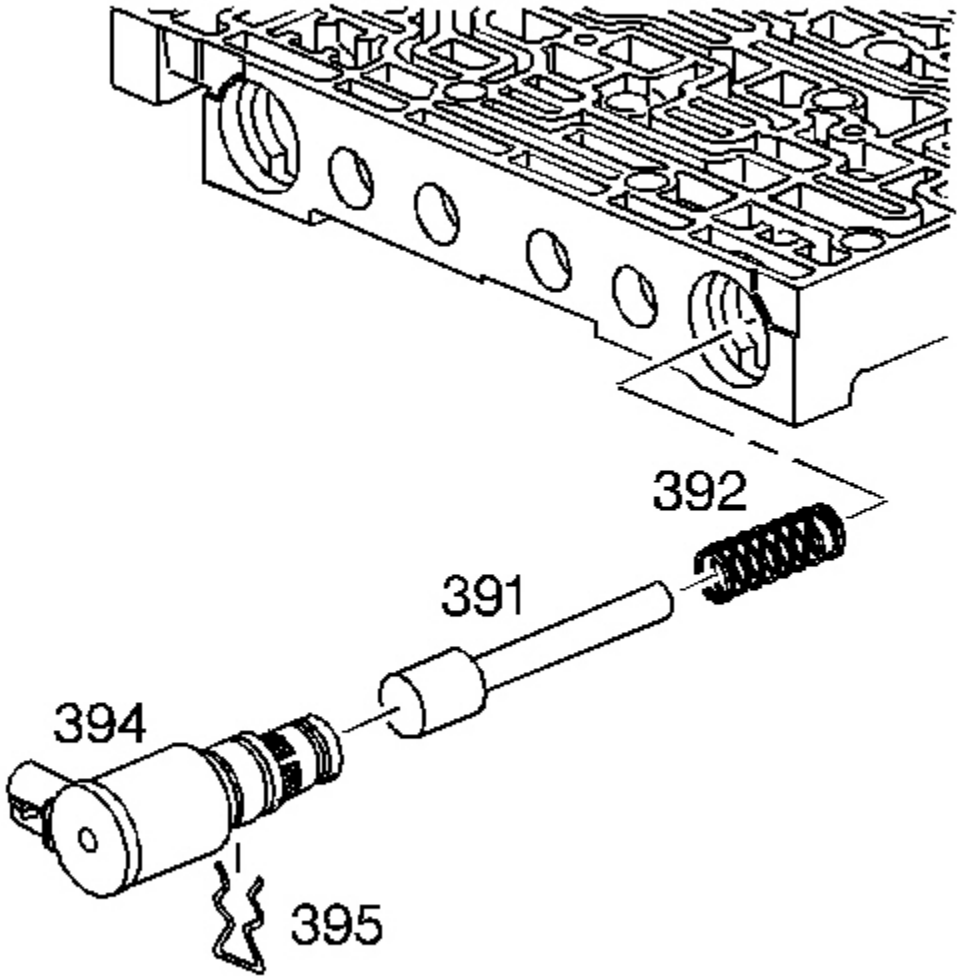

Fig. 255: Identifying 3-2 Control Valve & 3-2 Control Solenoid
Courtesy of GENERAL MOTORS CORP.

19. Remove the solenoid retainer (395) and the 3-2 control solenoid (394).
20. Remove the 3-2 control valve (391) and the 3-2 control valve spring (392).

cardiagn.com

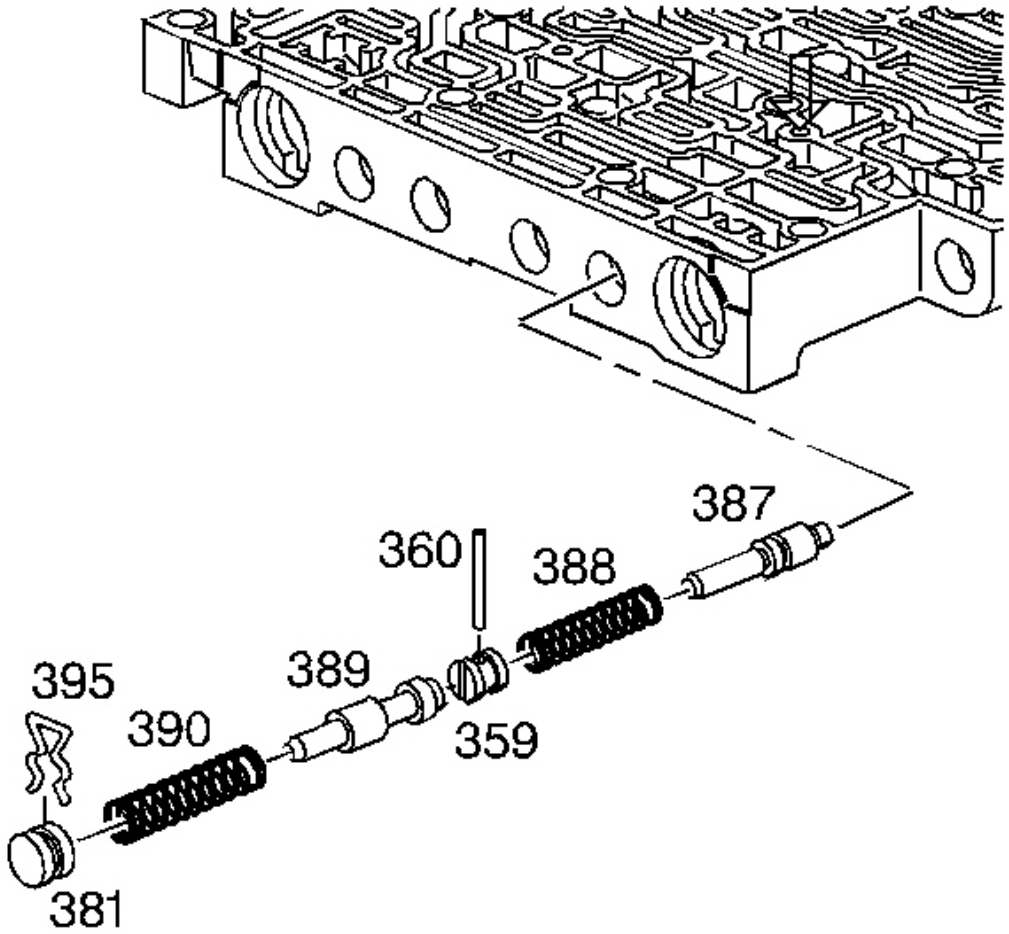

Fig. 256: View Of Reverse Abuse Valve & 3-2 Downshift Valve
Courtesy of GENERAL MOTORS CORP.

CAUTION: Refer to Valve Springs Can Be Tightly Compressed Caution in Cautions and Notices.

21. Remove the bore plug retainer (395) and the bore plug (381).
22. Remove the 3-2 downshift valve spring (390) and the 3-2 downshift valve (389).
23. Remove the coiled spring pin (360) and the bore plug (359).
24. Remove the reverse abuse valve spring (388) and the reverse abuse valve (387).

cardiagn.com

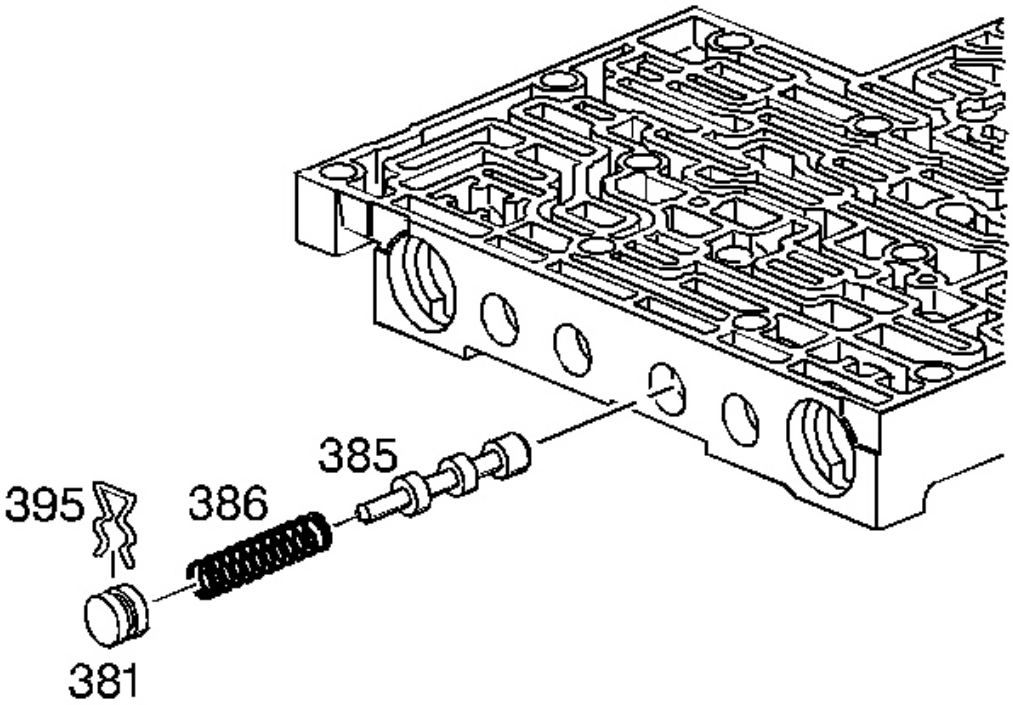

Fig. 257: Locating 3-4 Shift Valve
Courtesy of GENERAL MOTORS CORP.

CAUTION: Refer to Valve Springs Can Be Tightly Compressed Caution in Cautions and Notices.

25. Remove the bore plug retainer (395) and the bore plug (381).
26. Remove the 3-4 shift valve spring (386) and the 3-4 shift valve (385).

cardiagn.com

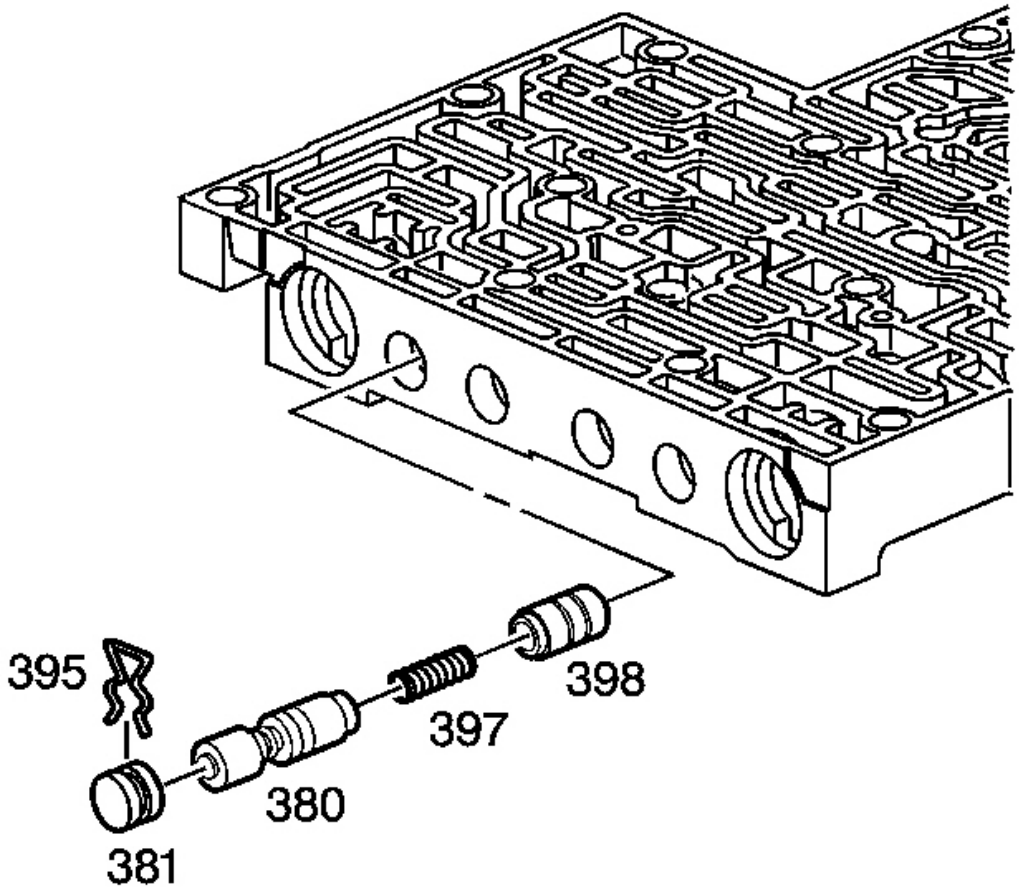

Fig. 258: Identifying Isolator Valve & Regulator Apply Valve
Courtesy of GENERAL MOTORS CORP.

27. Remove the bore plug retainer (395) and the bore plug (381).
28. Remove the regulator apply valve (380) and the regulator apply spring (397) and the isolator valve (398).

cardiagn.com

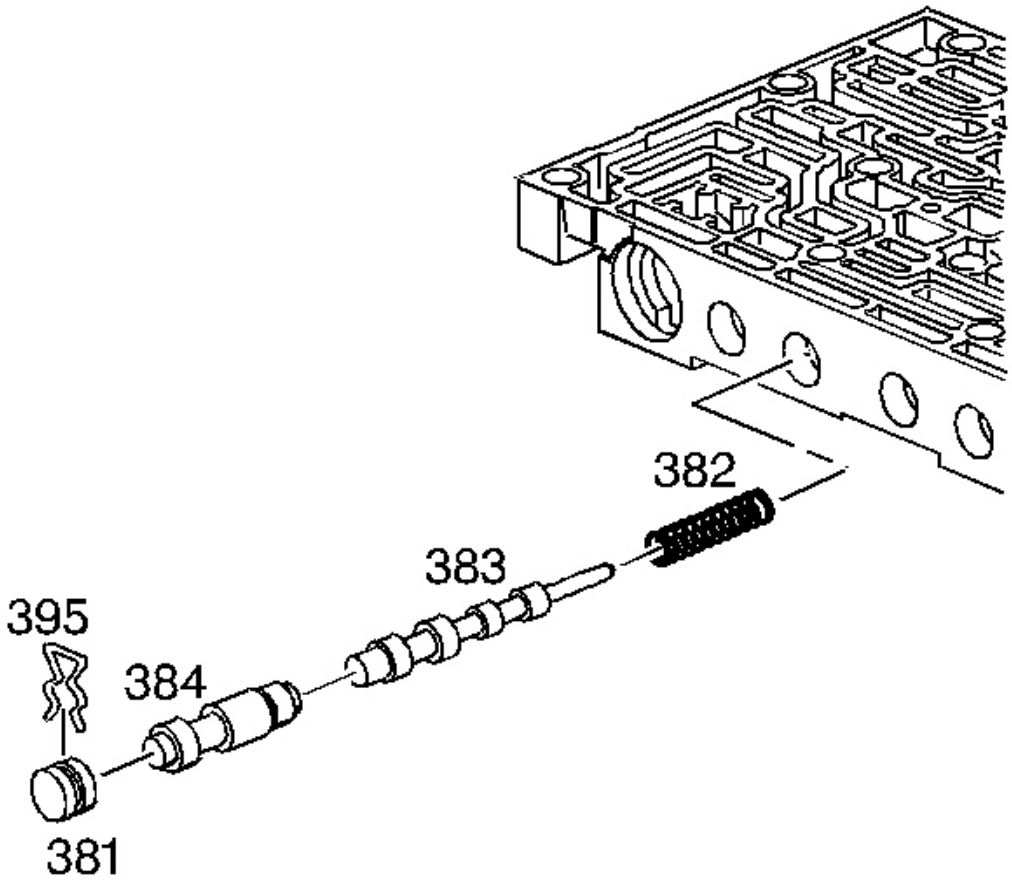

Fig. 259: View Of 4-3 Sequence Valve & 3-4 Relay Valve
Courtesy of GENERAL MOTORS CORP.

29. Remove the bore plug retainer (395) and the bore plug (381).
30. Remove the 3-4 relay valve (384) and the 4-3 sequence valve (383) and the 4-3 sequence valve spring (382).

CONTROL VALVE BODY ASSEMBLE

Inspection Procedure

cardiagn.com

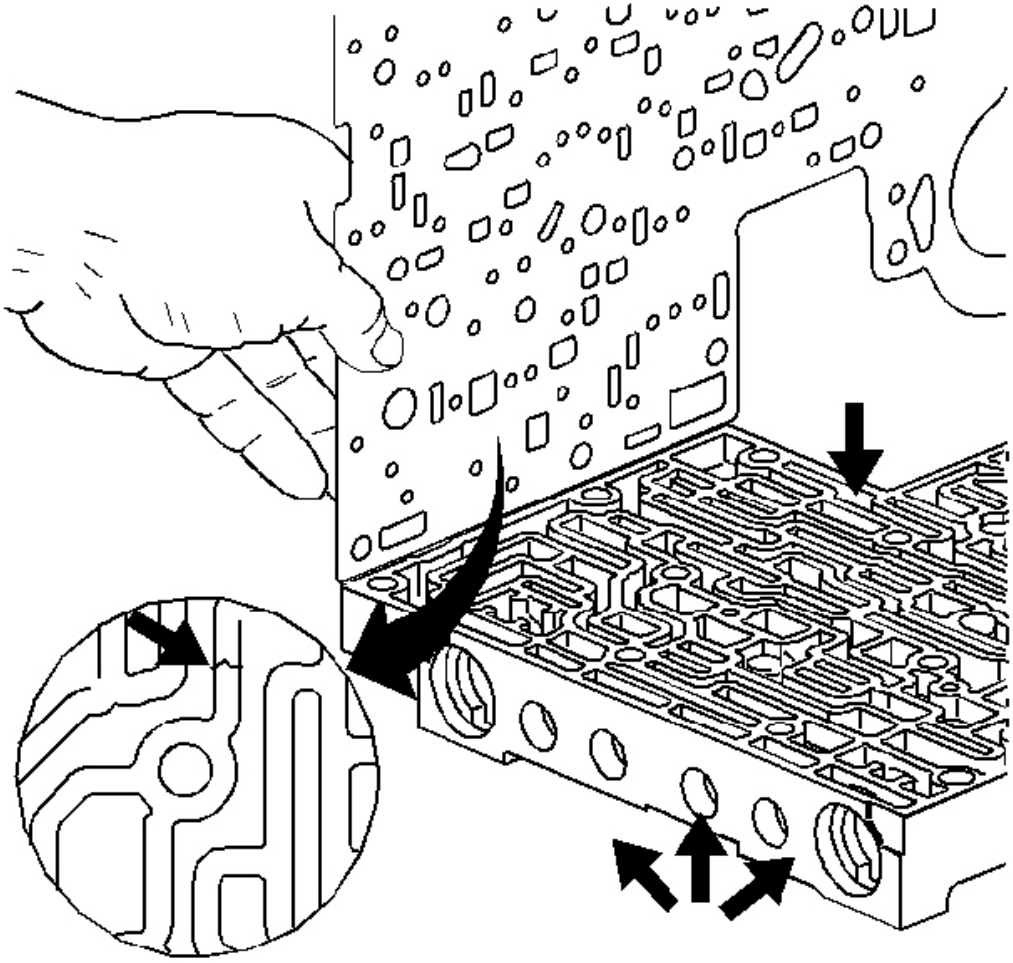

Fig. 260: Inspecting Control Valve Body For Channel Witness Marks
Courtesy of GENERAL MOTORS CORP.

1. Inspect the valve body to spacer plate gasket for valve body channel witness marks. The witness marks should be complete. Incomplete witness marks may be caused by an uneven case surface. Incomplete witness marks may also be caused by cross-channel leaks.
2. Inspect the valve body casting for the following conditions:
    - Porosity
    - Cracks
    - Damaged machined surfaces
    - Chips or debris

cardiagn.com

Cleaning Procedure

1. Clean all the valves, springs, bushings, and the control valve body in clean solvent.
2. Dry all the parts using compressed air.

Installation Procedure

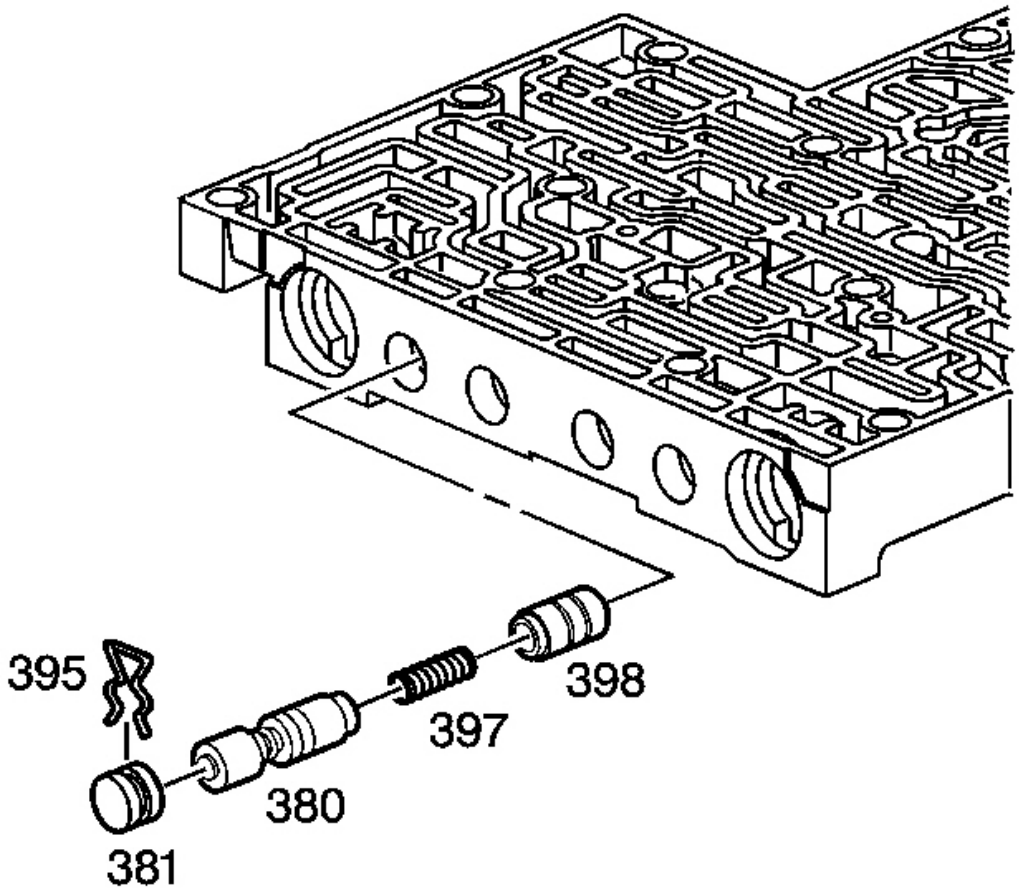

Fig. 261: Identifying Isolator Valve & Regulator Apply Valve
Courtesy of GENERAL MOTORS CORP.

CAUTION: Refer to Valve Springs Can Be Tightly Compressed Caution in Cautions and Notices.

IMPORTANT: Lubricate all parts with DEXRON(R)III automatic transmission fluid before

cardiagn.com

installation.

1. Install the following items:
    1. The isolator valve (398)
    2. The regulator apply spring (397)
    3. The regulator apply valve (380)
    4. The bore plug (381)
    5. The bore plug retainer (395)

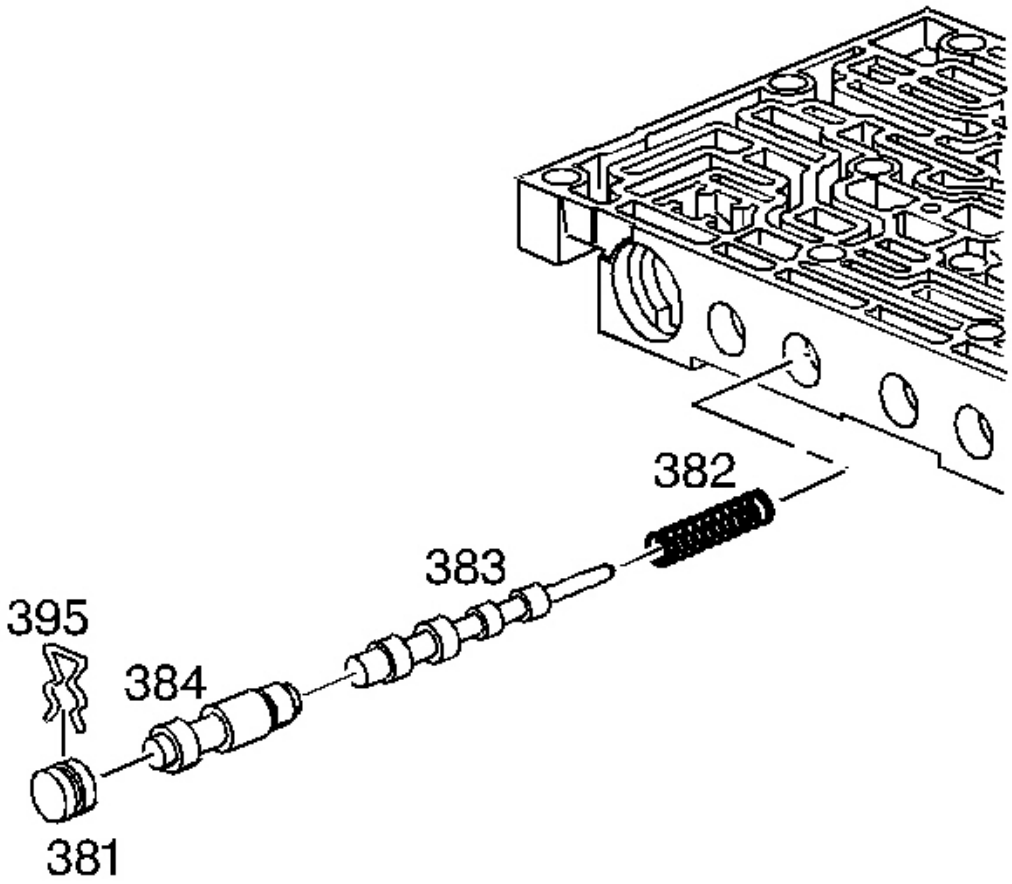

Fig. 262: View Of 4-3 Sequence Valve & 3-4 Relay Valve
Courtesy of GENERAL MOTORS CORP.

2. Install the following items:

cardiagn.com

1. The 4-3 sequence valve spring (382)
2. The 4-3 sequence valve (383)
3. The 3-4 relay valve (384)
4. The bore plug (381)
5. The bore plug retainer (395)

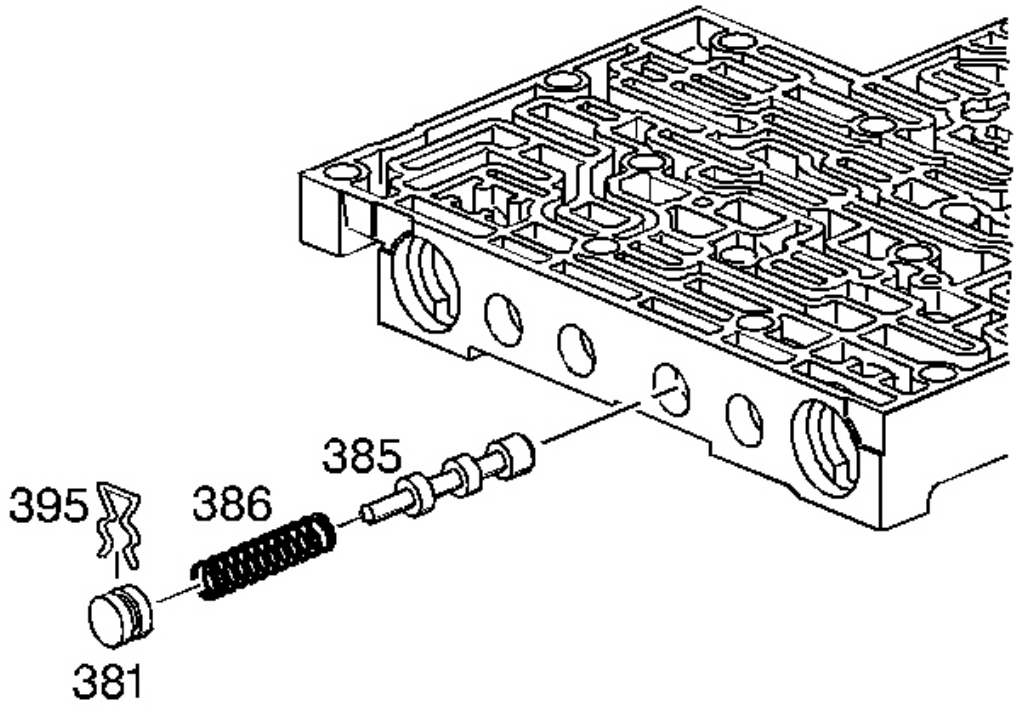

Fig. 263: Locating 3-4 Shift Valve
Courtesy of GENERAL MOTORS CORP.

3. Install the following items:
    1. The 3-4 shift valve (385)
    2. The 3-4 shift valve spring (386)
    3. The bore plug (381)
    4. The bore plug retainer (395)

cardiagn.com

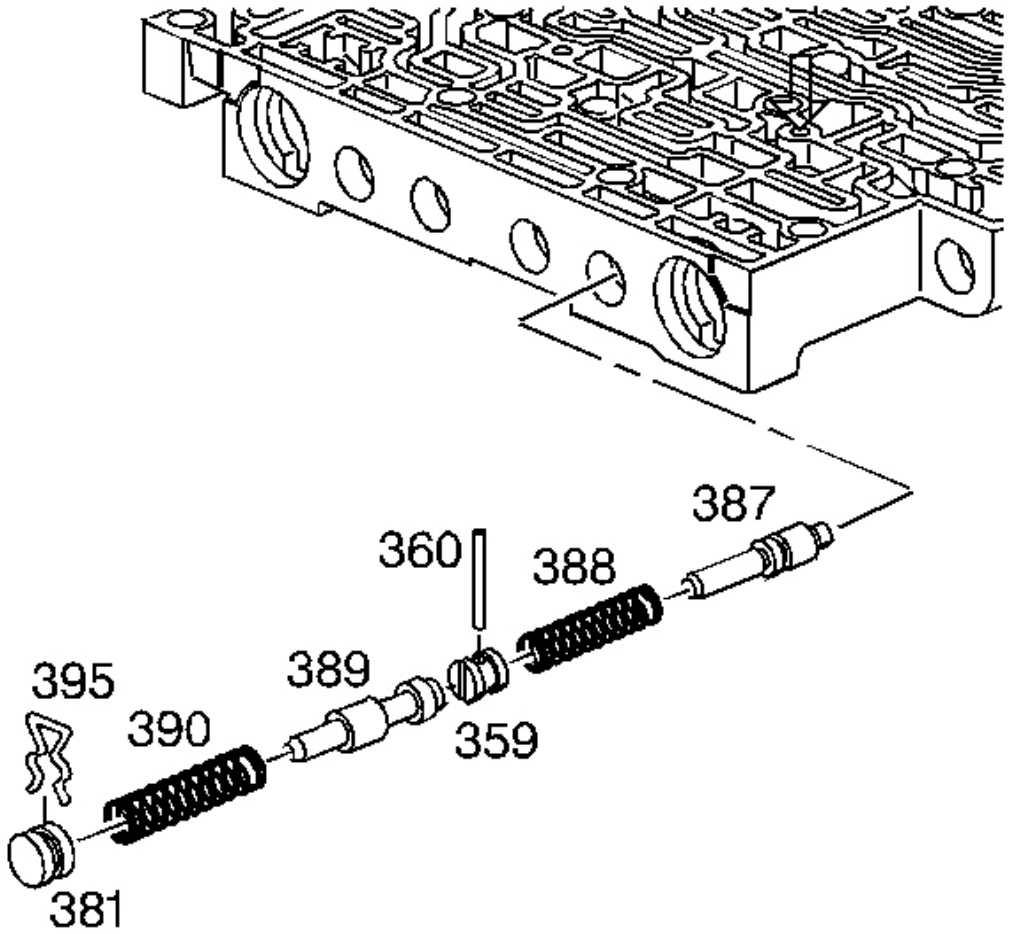

Fig. 264: View Of Reverse Abuse Valve & 3-2 Downshift Valve
Courtesy of GENERAL MOTORS CORP.

4. Install the following items:
    1. The reverse abuse valve (387)
    2. The reverse abuse valve spring (388)
    3. The bore plug (359)
    4. The coiled spring pin (360)
    5. The 3-2 downshift valve (389)
    6. The 3-2 downshift valve spring (390)
    7. The bore plug (381)
    8. The bore plug retainer (395)

cardiagn.com

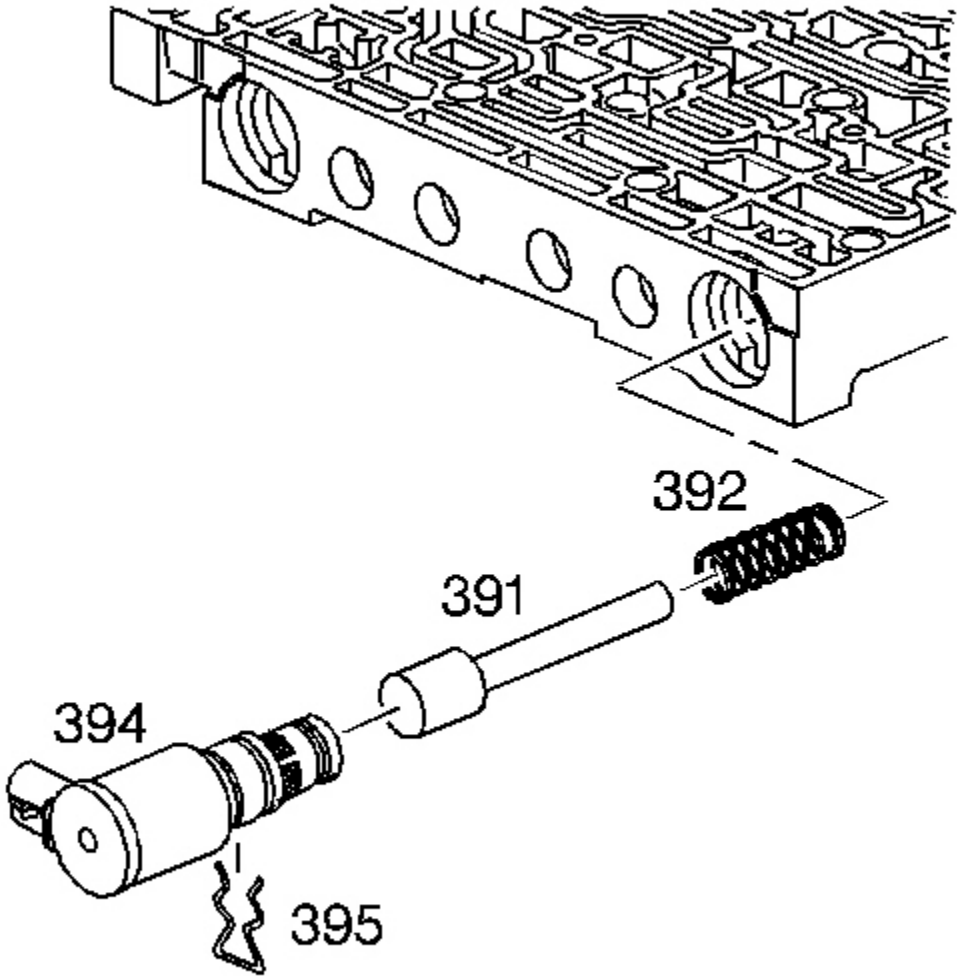

Fig. 265: Identifying 3-2 Control Valve & 3-2 Control Solenoid
Courtesy of GENERAL MOTORS CORP.

5. Install the following items:
    1. The 3-2 control valve spring (392)
    2. The 3-2 control valve (391)
    3. The 3-2 control solenoid (394)
    4. The solenoid retainer (395)

cardiagn.com

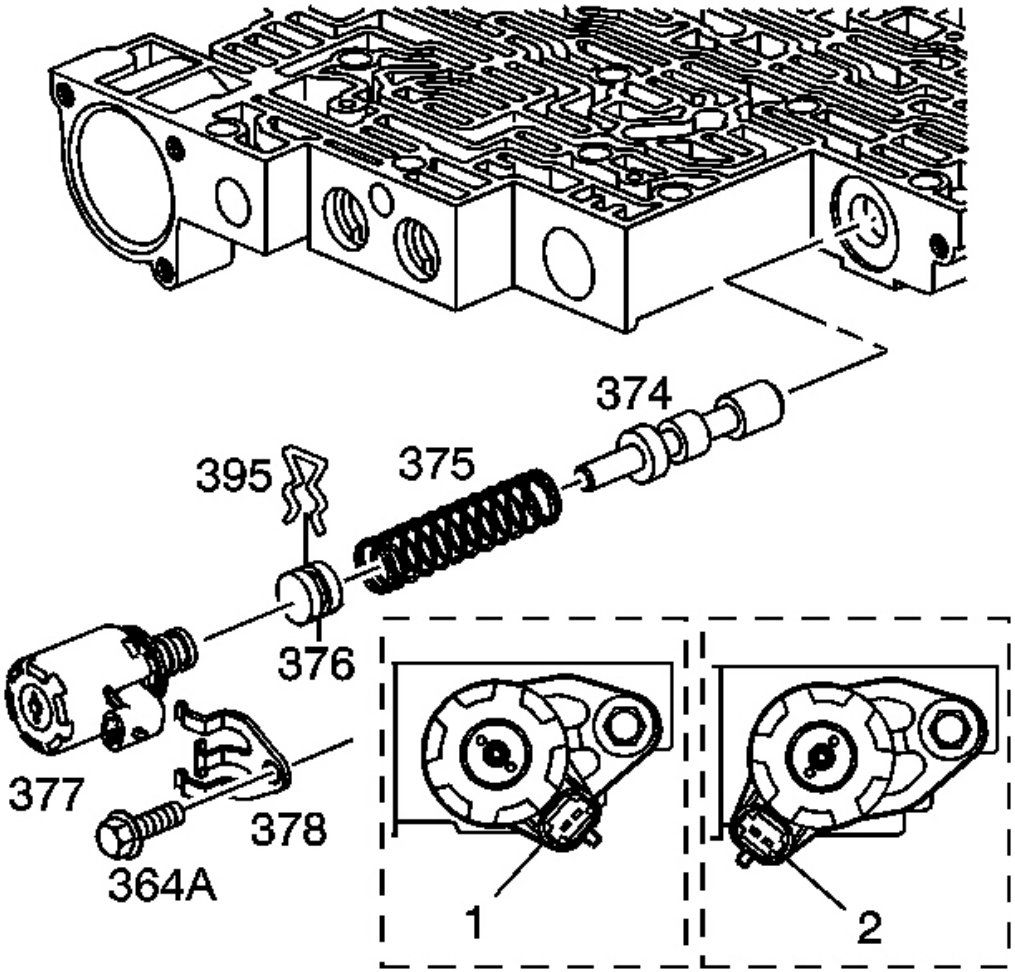

Fig. 266: Locating Actuator Feed Limit Valve & Pressure Control Solenoid
Courtesy of GENERAL MOTORS CORP.

6. Install the following items:
    1. The actuator feed limit valve (374)
    2. The actuator feed limit valve spring (375)
    3. The bore plug (376)
    4. The bore plug retainer (395)
    5. The pressure control solenoid (377)
        - 1 - Colorado/Canyon
        - 2 - All other models

cardiagn.com

6. The solenoid retainer (378)

NOTE: **Refer to Fastener Notice in Cautions and Notices.**

7. The solenoid retainer bolt (364)

Tighten: Tighten the bolt to 8-14 N.m (6-10 lb ft).

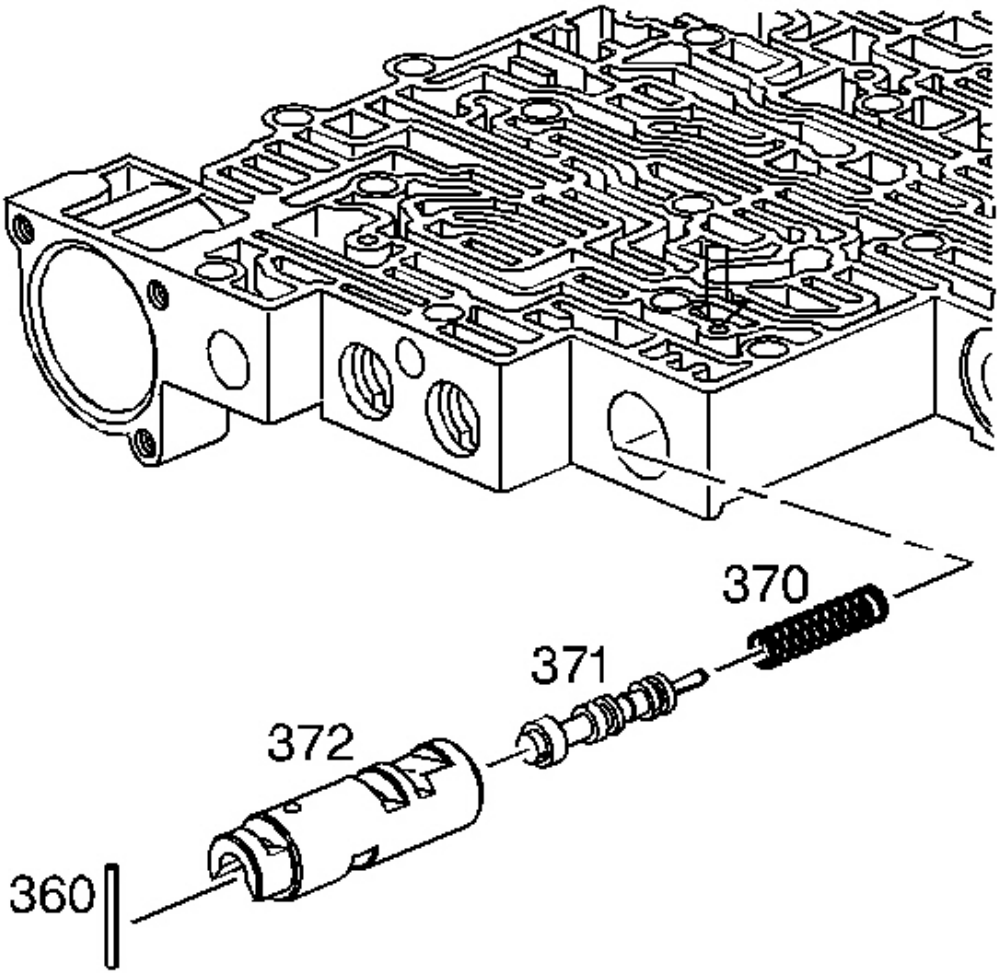

Fig. 267: View Of 1-2 Accumulator Valve & 1-2 Accumulator Valve Sleeve
Courtesy of GENERAL MOTORS CORP.

cardiagn.com

7. Install the following items:
    1. The 1-2 accumulator valve spring (370)
    2. The 1-2 accumulator valve (371) in the 1-2 accumulator valve sleeve (372)
    3. The 1-2 accumulator valve and sleeve assembly
    4. The coiled spring pin (360)

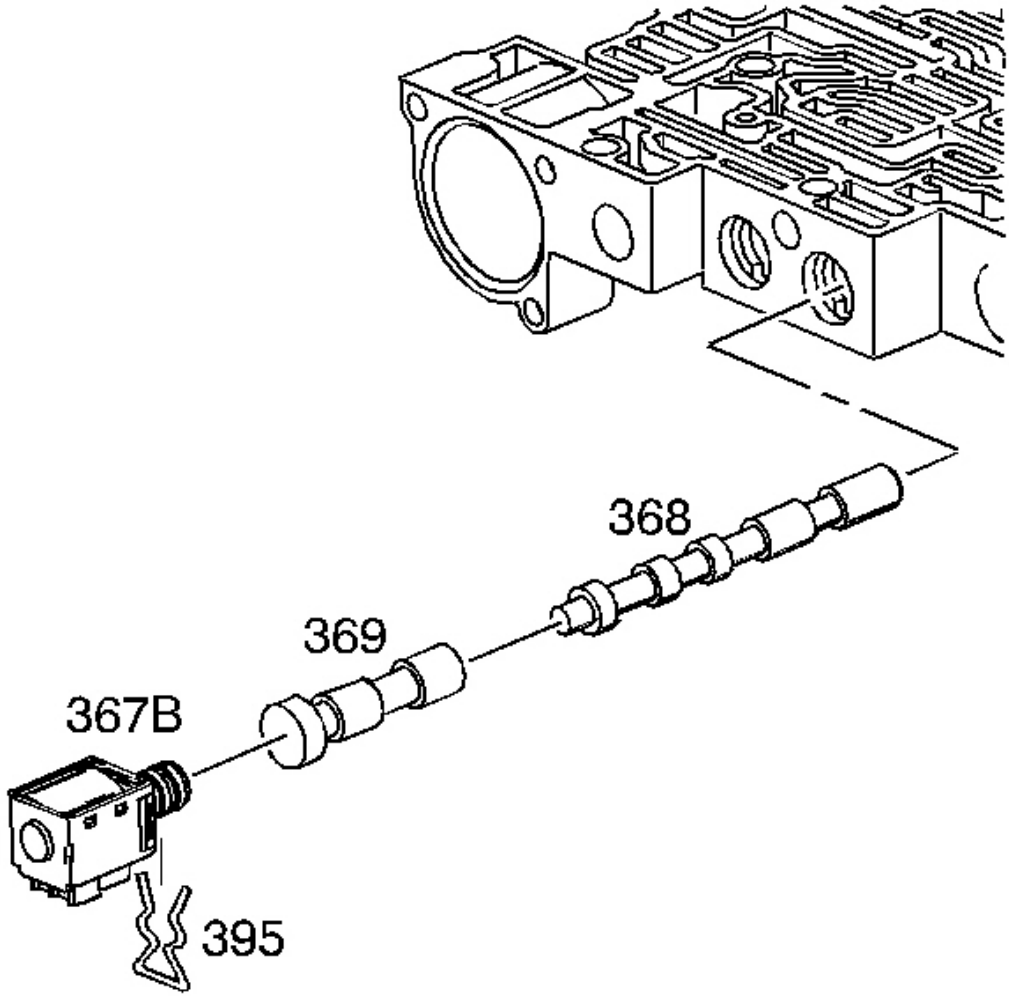

Fig. 268: Identifying 2-3 Shuttle Valve & Solenoid Components
Courtesy of GENERAL MOTORS CORP.

8. Install the following items:

cardiagn.com

1. The 2-3 shift valve (368)
2. The 2-3 shuttle valve (369)
3. The 2-3 shift solenoid valve (367B)
4. The solenoid retainer (395)

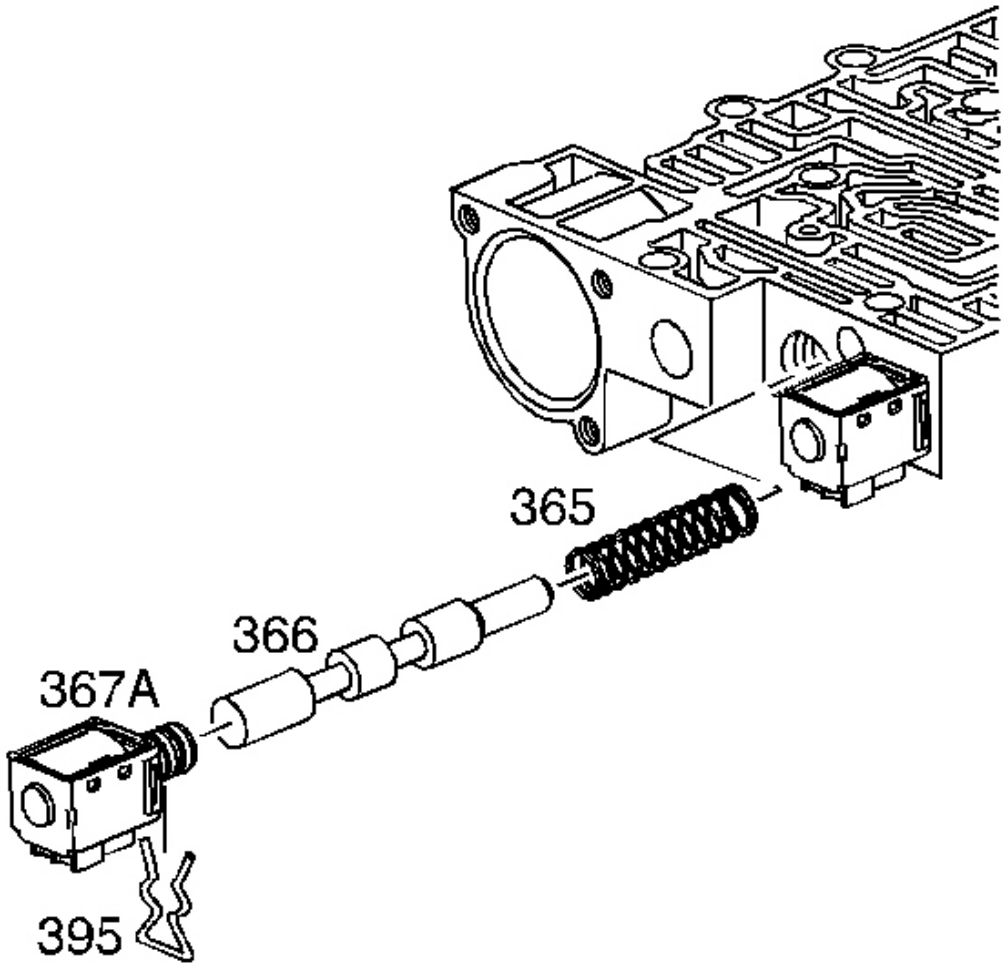

Fig. 269: Locating 1-2 Shift Valve & Solenoid Components
Courtesy of GENERAL MOTORS CORP.

9. Install the following items:
    1. The 1-2 shift valve spring (365)
    2. The 1-2 shift valve (366)

cardiagn.com

3. The 1-2 shift solenoid valve (367A)
4. The solenoid valve retainer (395)

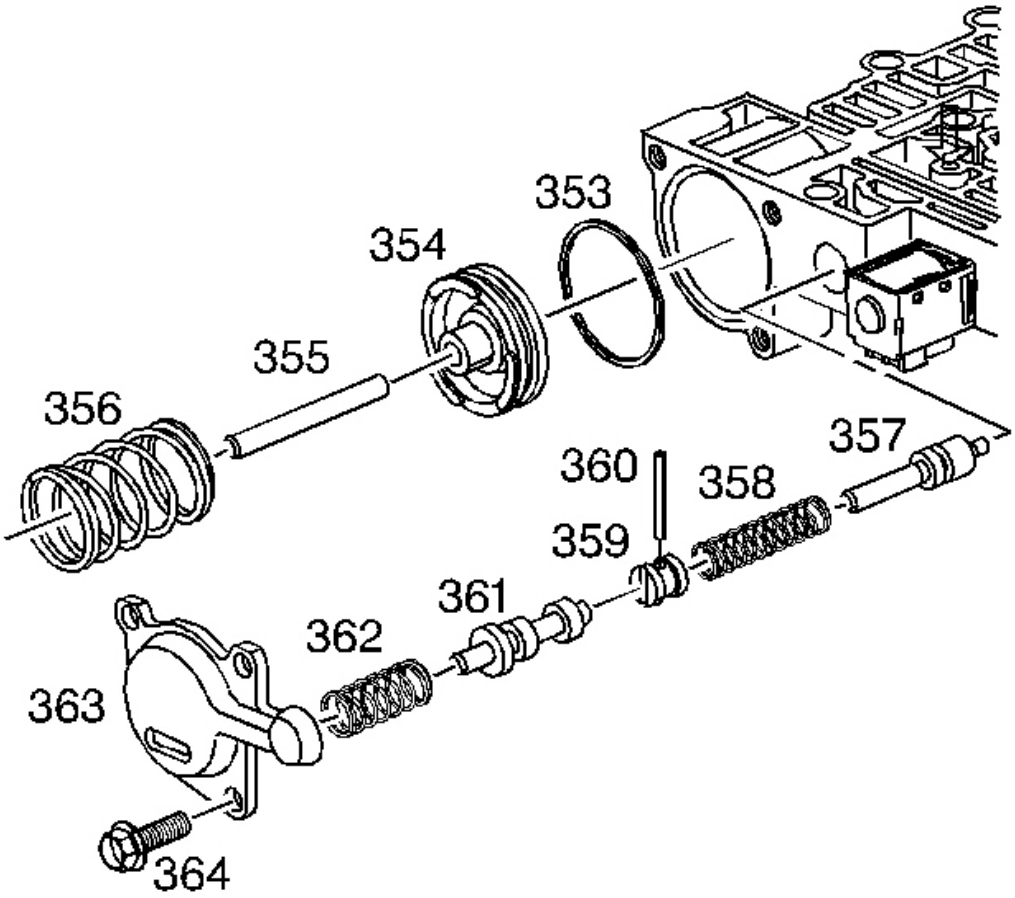

Fig. 270: Exploded View Of Forward Abuse & Low Overrun Components
Courtesy of GENERAL MOTORS CORP.

10. Install the following items:
    1. The forward abuse valve (357)
    2. The forward abuse valve spring (358)
    3. The bore plug (359)
    4. The coiled spring pin (360)
    5. The low overrun valve (361)
    6. The low overrun valve spring (362)

cardiagn.com

11. Install the following items:
    1. The forward accumulator oil seal (353) on the forward accumulator piston (354)
    2. The forward accumulator pin (355)
    3. The forward accumulator piston (354)
    4. The forward accumulator spring (356)
    5. The forward accumulator cover (363)
    6. The forward accumulator cover bolts (364)

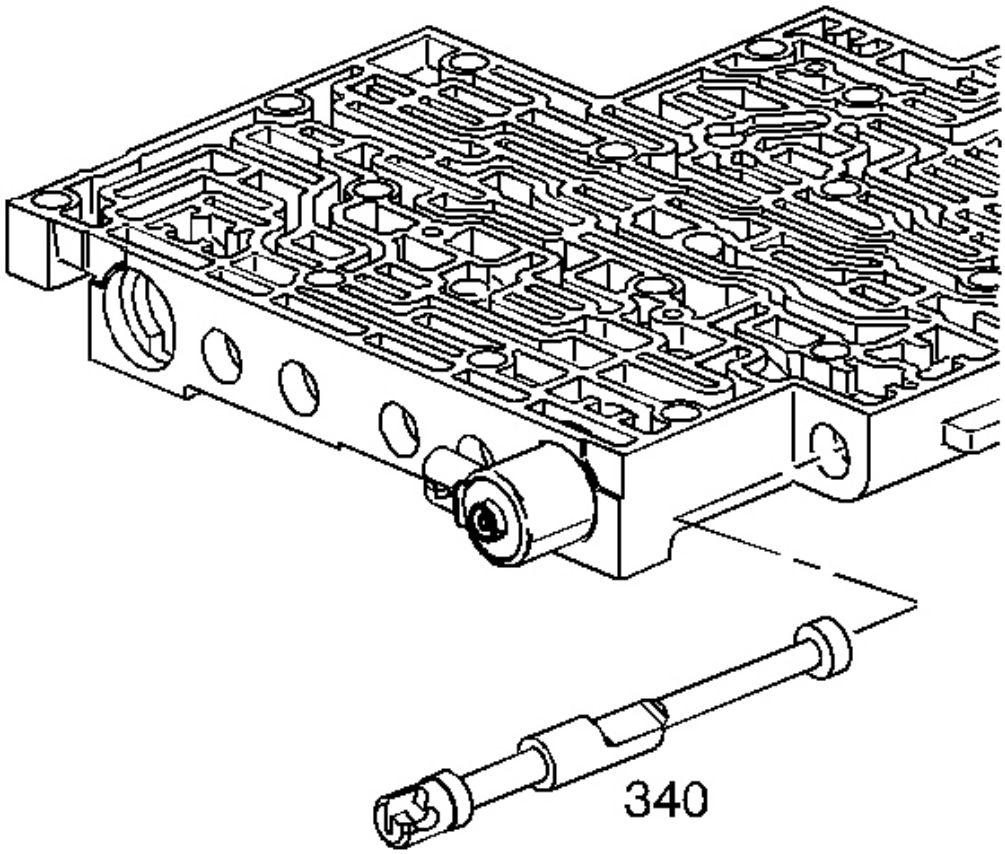

Fig. 271: View Of Manual Valve
Courtesy of GENERAL MOTORS CORP.

12. Install the (340).

3-4 ACCUMULATOR INSTALLATION

cardiagn.com

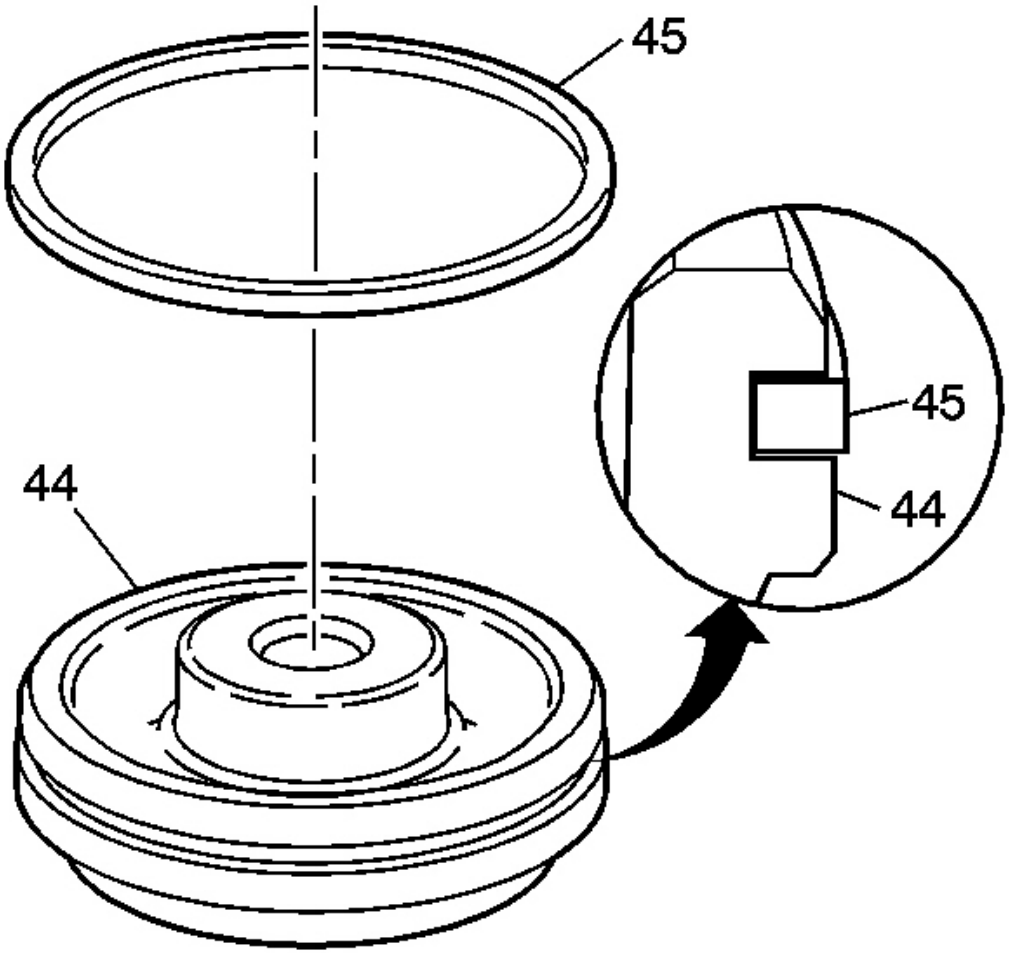

Fig. 272: Identifying Inspection Areas On 3-4 Accumulator Piston
Courtesy of GENERAL MOTORS CORP.

1. Inspect the 3-4 accumulator piston (44) for the following conditions:
    - Porosity
    - Cracks
    - Scoring
    - Nicks and scratches
2. Install the 3-4 accumulator piston oil seal ring (45) on the 3-4 accumulator piston (44).

cardiagn.com

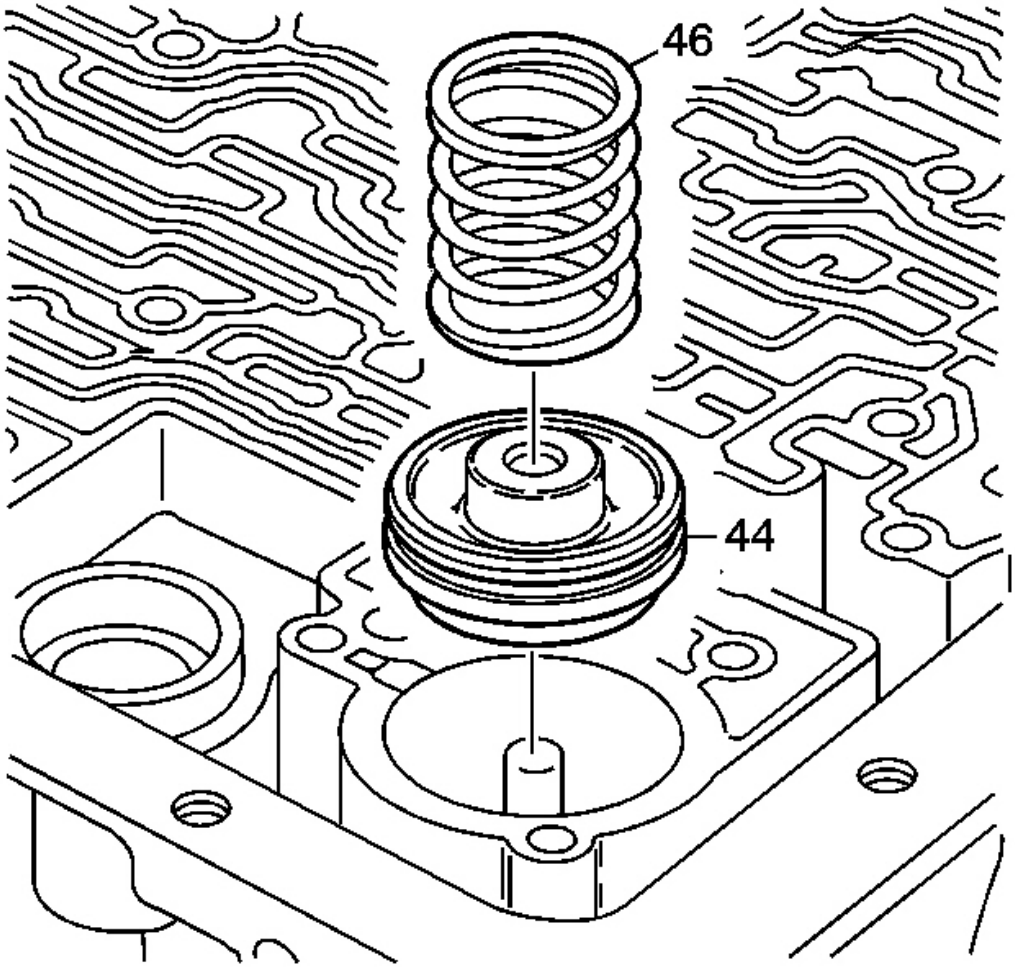

Fig. 273: View Of 3-4 Accumulator Piston & Seal Assembly
Courtesy of GENERAL MOTORS CORP.

3. Install the 3-4 accumulator piston (44) and seal assembly into the bore.
4. Inspect the 3-4 accumulator spring (46) for cracks.

IMPORTANT: Some models do not use a 3-4 accumulator spring.

5. Install the 3-4 accumulator spring.

1-2 ACCUMULATOR DISASSEMBLE

cardiagn.com

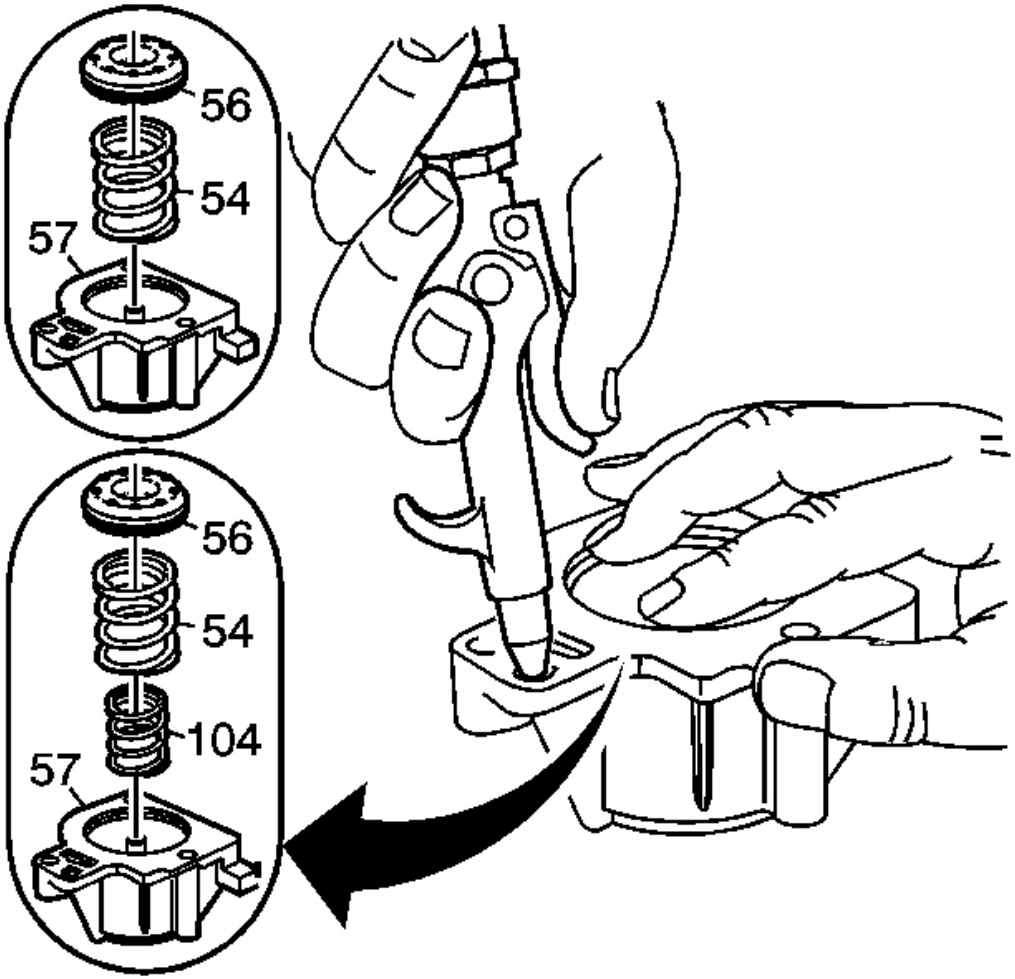

Fig. 274: View Of 1-2 Accumulator Components
Courtesy of GENERAL MOTORS CORP.

IMPORTANT: Some models do not use 1-2 accumulator spring - inner (104).

1. Blow air into the 1-2 accumulator housing (57) to remove the 1-2 accumulator piston (56).
2. Remove the 1-2 inner (104) and outer (54) accumulator springs.

1-2 ACCUMULATOR ASSEMBLE

cardiagn.com

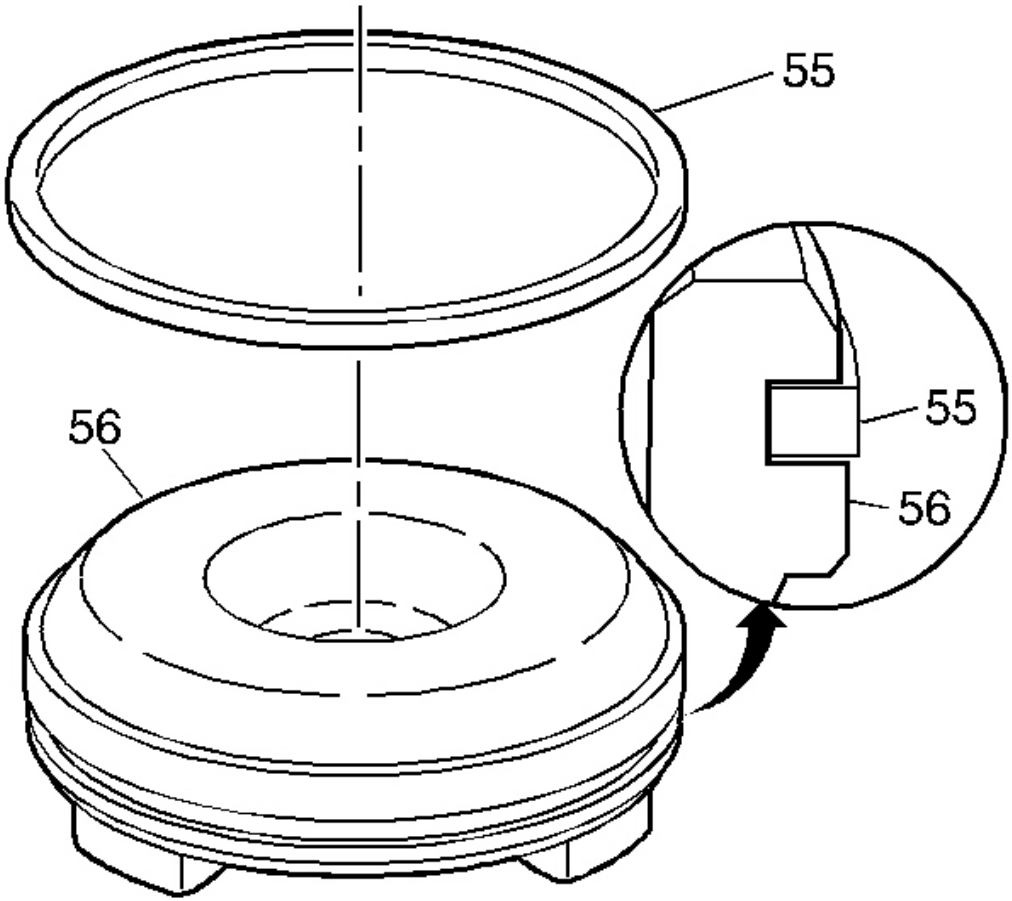

Fig. 275: Inspecting 1-2 Accumulator Piston
Courtesy of GENERAL MOTORS CORP.

1. Inspect the 1-2 accumulator piston (56) for the following conditions:
    - Porosity
    - Cracks
    - Scoring
    - Nicks and Scratches
2. Install a 1-2 accumulator piston oil seal ring (55) on the 1-2 accumulator piston (56).

cardiagn.com

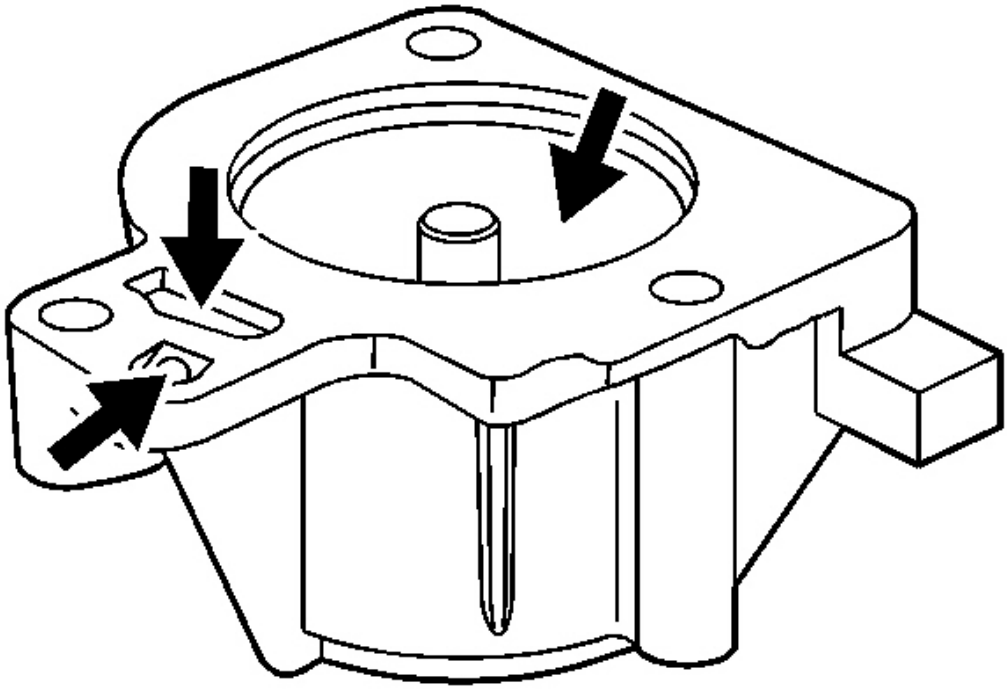

Fig. 276: Locating 1-2 Accumulator Housing Inspection Areas
Courtesy of GENERAL MOTORS CORP.

3. Inspect the 1-2 accumulator housing for the following conditions:
    - Porosity
    - Cracks
    - Scoring
    - Nicks and Scratches
    - Debris or blocked passages

cardiagn.com

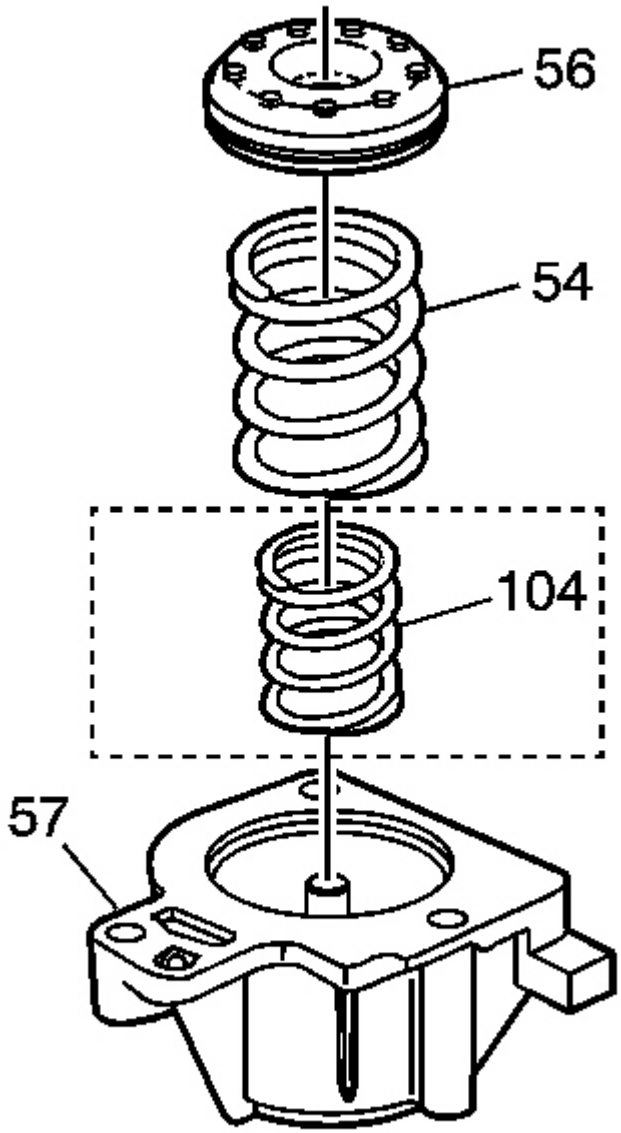

Fig. 277: View Of 1-2 Inner & Outer Springs
Courtesy of GENERAL MOTORS CORP.

IMPORTANT: Some models do not use 1-2 accumulator spring - inner (104).

4. Install the 1-2 inner (104) and outer (54) accumulator springs.
5. Install the 1-2 accumulator piston (56).

cardiagn.com

1-2 ACCUMULATOR INSTALLATION

Tools Required

- **J 25025-5** Guide Pins. See **Special Tools and Equipment** .
- **J 36850** Transjel Lubricant. See **Special Tools and Equipment** .

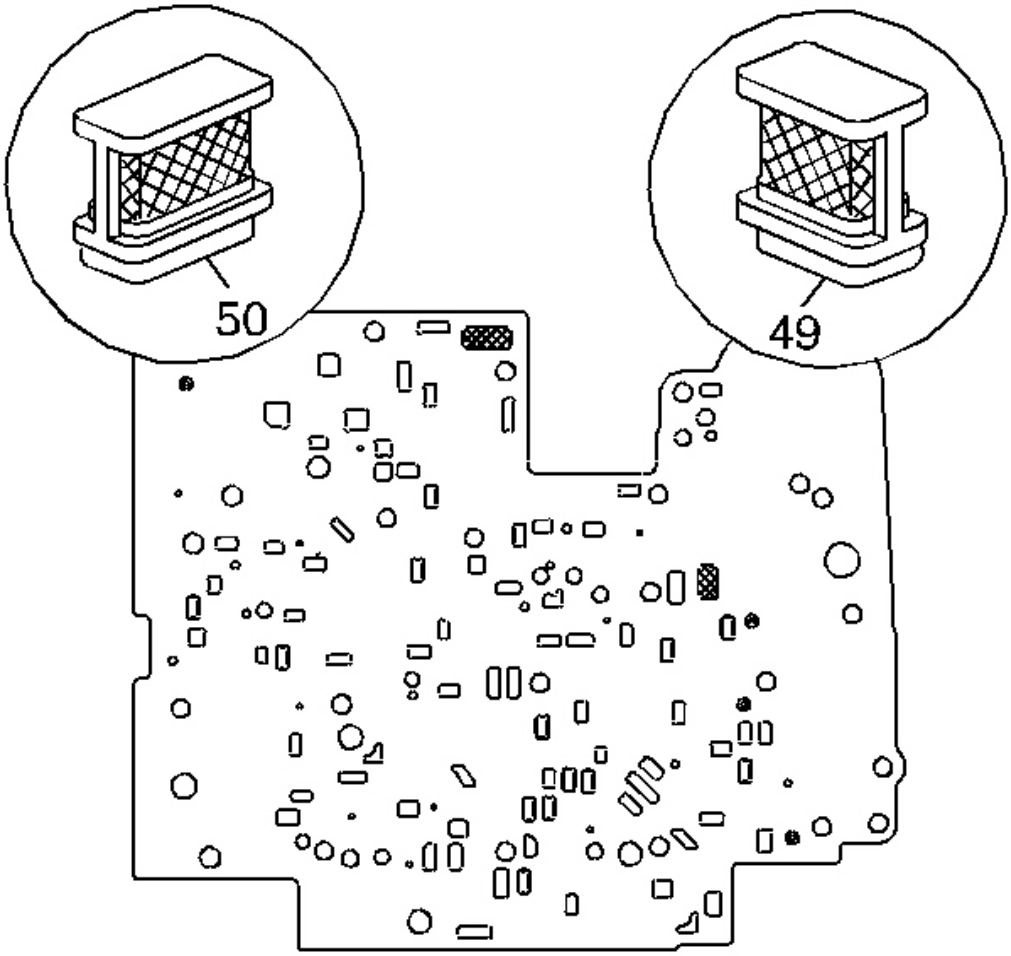

Fig. 278: Identifying Solenoid Screens
Courtesy of GENERAL MOTORS CORP.

1. Inspect the valve body spacer plate and the solenoid screens (49, 50) for damage or debris.

   Replace the solenoid screens (49, 50) if necessary.

cardiagn.com

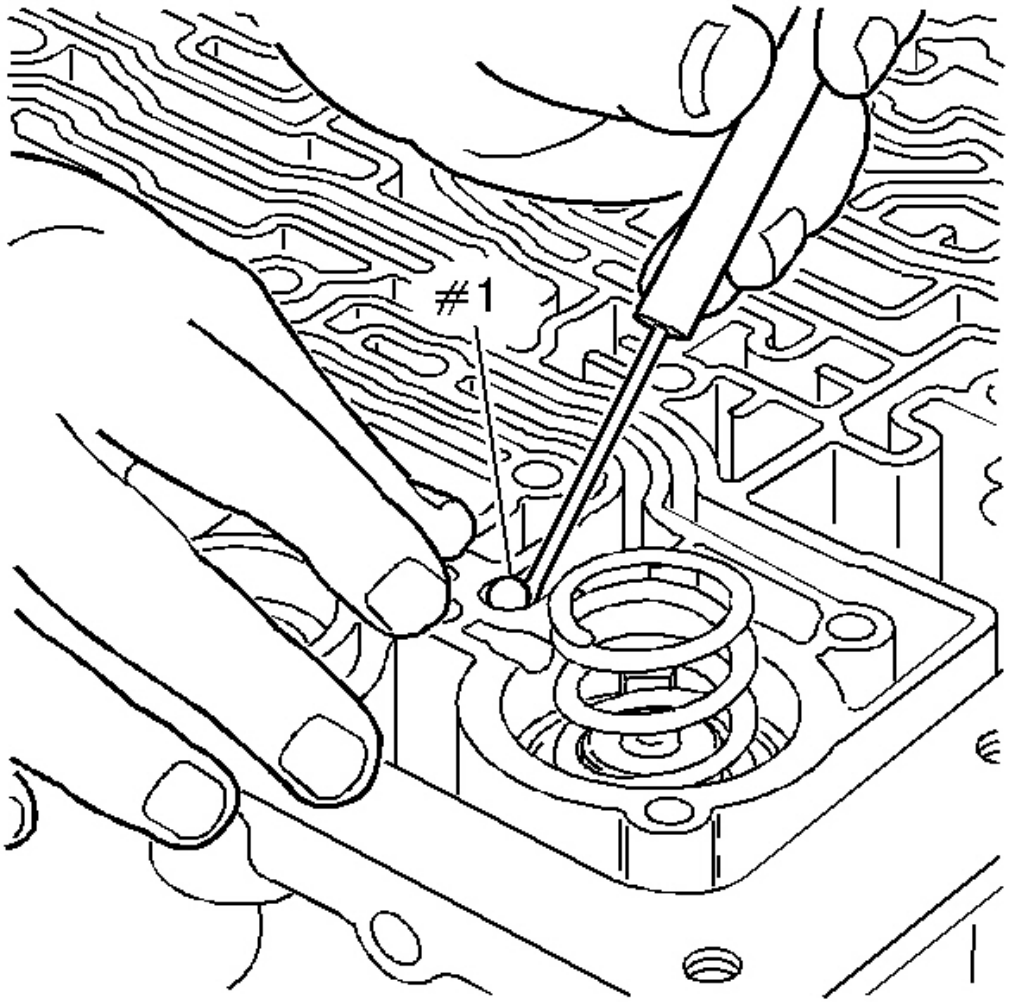

Fig. 279: Locating #1 Checkball
Courtesy of GENERAL MOTORS CORP.

2. Install the #1 checkball into the case.

cardiagn.com

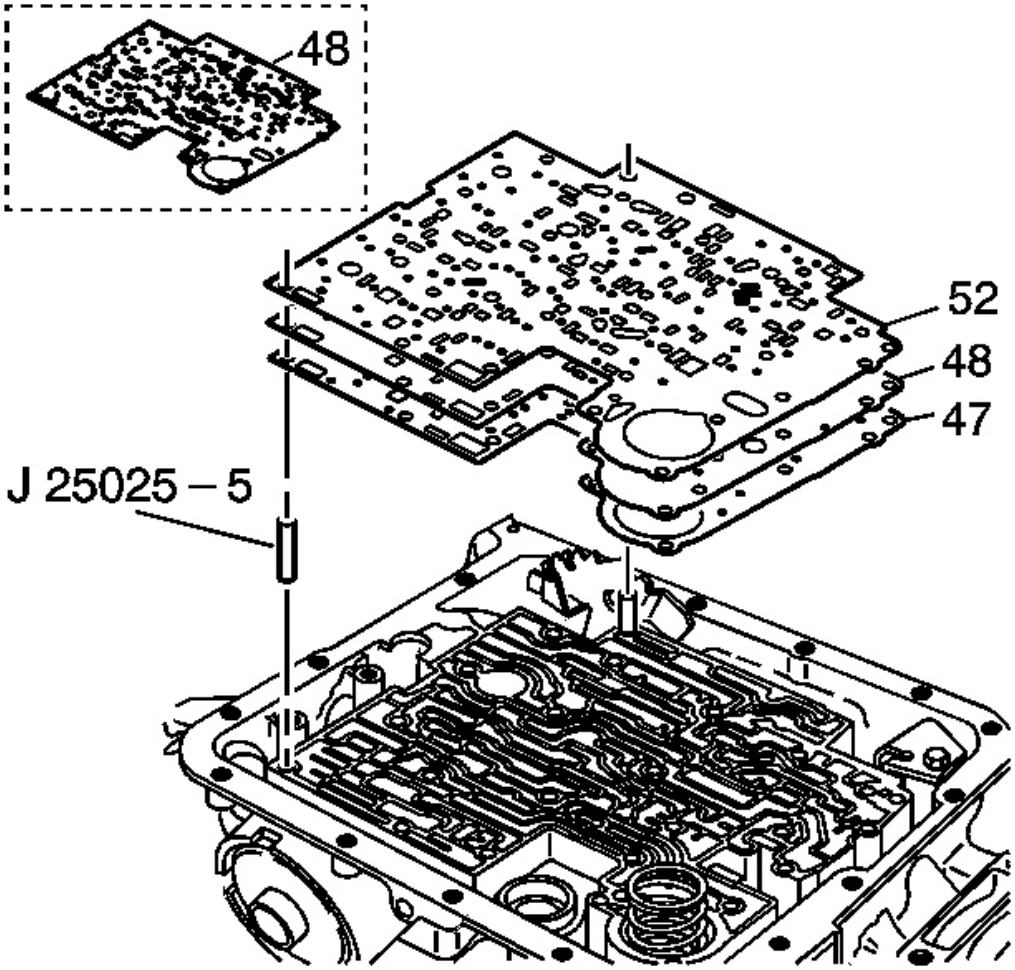

Fig. 280: Using J 25025-5 To Install Spacer Plate
Courtesy of GENERAL MOTORS CORP.

3. Install the **J 25025-5** into the case.

IMPORTANT: M33 models use a bonded spacer plate (48).

4. Place the spacer plate to case gasket (47) (identified by a "C") and the spacer plate to valve body gasket (52) (identified by a "V") on the spacer plate (48). Retain gaskets on the spacer plate with **J 36850** or equivalent.
5. Place the spacer and the spacer plate gaskets on the case.

cardiagn.com

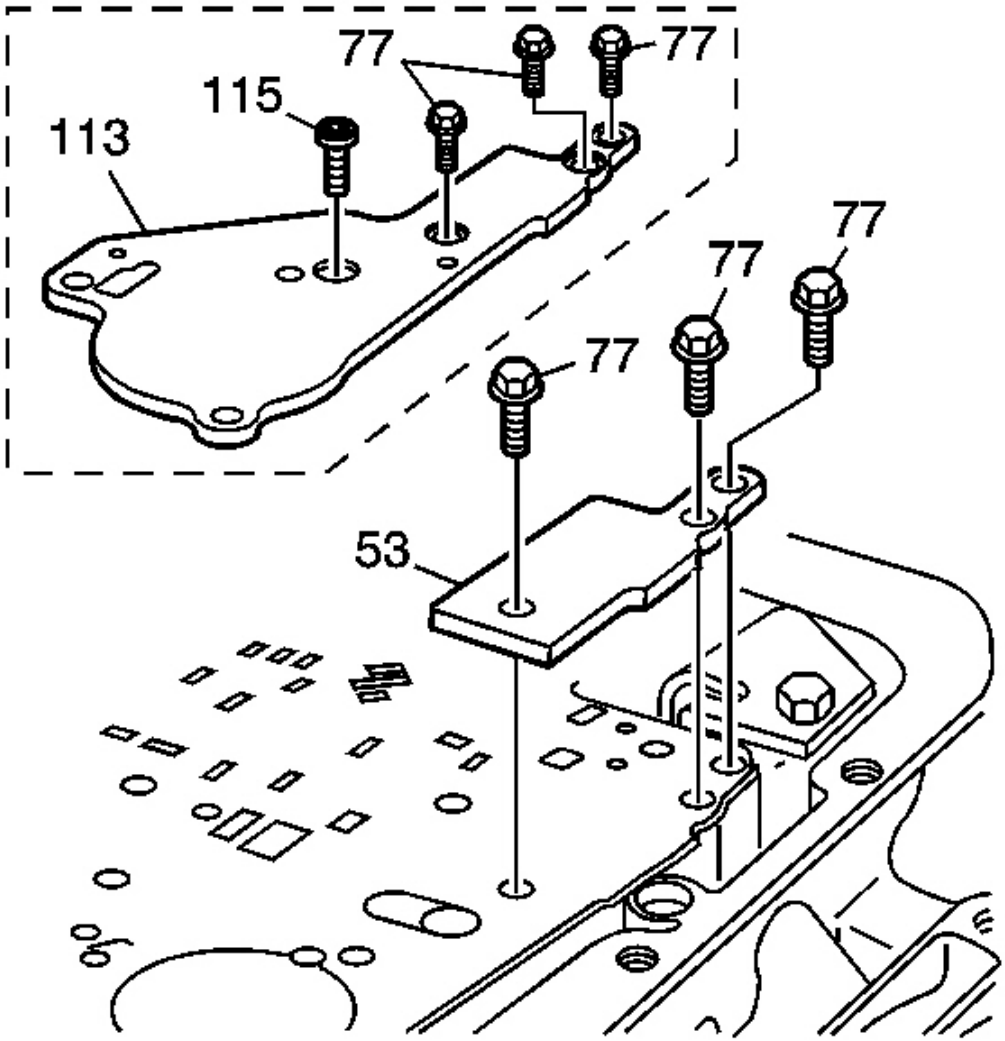

Fig. 281: View Of Spacer Plate Support Plate & Bolts
Courtesy of GENERAL MOTORS CORP.

6. Install the spacer plate support plate (53 or 113).
7. Install the spacer plate support bolts (77).

NOTE: Refer to Fastener Notice in Cautions and Notices.

8. Install the accumulator bolt (115), model dependent.

cardiagn.com

Tighten: Tighten the accumulator bolt to 11 N.m (8.11 lb ft).

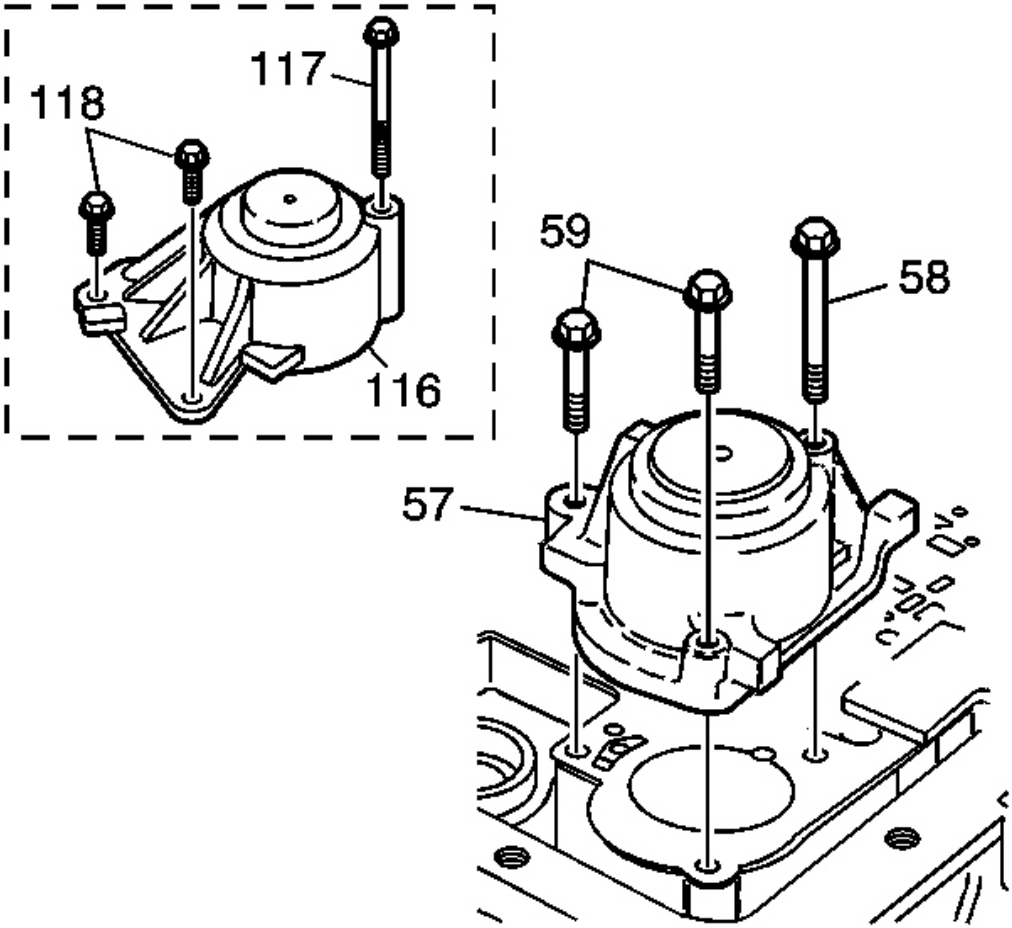

Fig. 282: Installing 1-2 Accumulator Housing Bolts
Courtesy of GENERAL MOTORS CORP.

9. Install the 1-2 accumulator housing assembly (57 or 116).
10. Install the 1-2 accumulator housing bolts (58, 59 or 117, 118).

Tighten:

- Tighten the bolts 58 and 59 to 11 N.m (8 lb ft).
- Tighten the bolts 117 and 118 to 8-14 N.m (6-10 lb ft).

CONTROL VALVE BODY INSTALLATION

cardiagn.com

Tools Required

- **J 25025-5** Guide Pins
- **J 36850** Transjel Lubricant

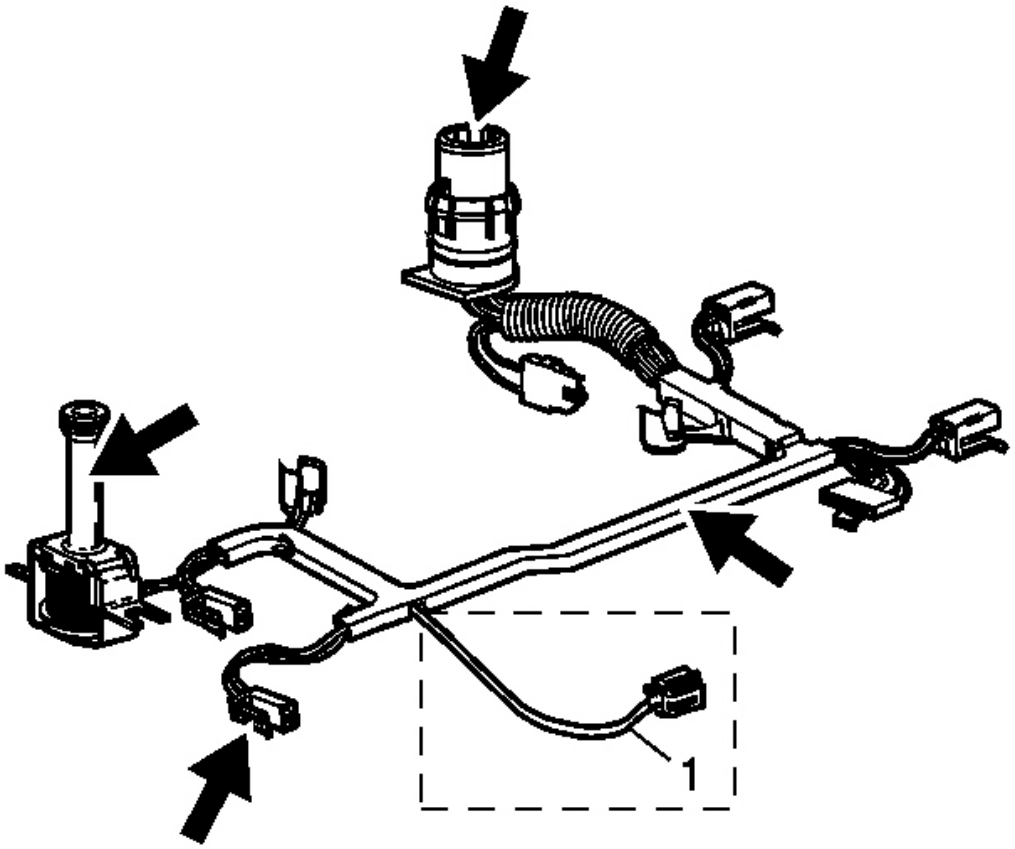

Fig. 283: Locating Wiring Harness And Solenoid Assembly Inspection Areas
Courtesy of GENERAL MOTORS CORP.

IMPORTANT: Secondary fluid pump connector (1) is used for M33 models only.

1. Inspect the wiring harness and solenoid assembly for the following conditions:
    - Damage
    - Cracked connectors
    - Exposed wires
    - Loose electrical terminals

cardiagn.com

- Damaged wiring loom
- Worn, missing, or cut pass-through connector O-ring seal.

2. Install the transmission wiring harness pass-through connector into the transmission case. Ensure connector tabs lock into place.
3. Move the harness to one side in order to install the valve body.

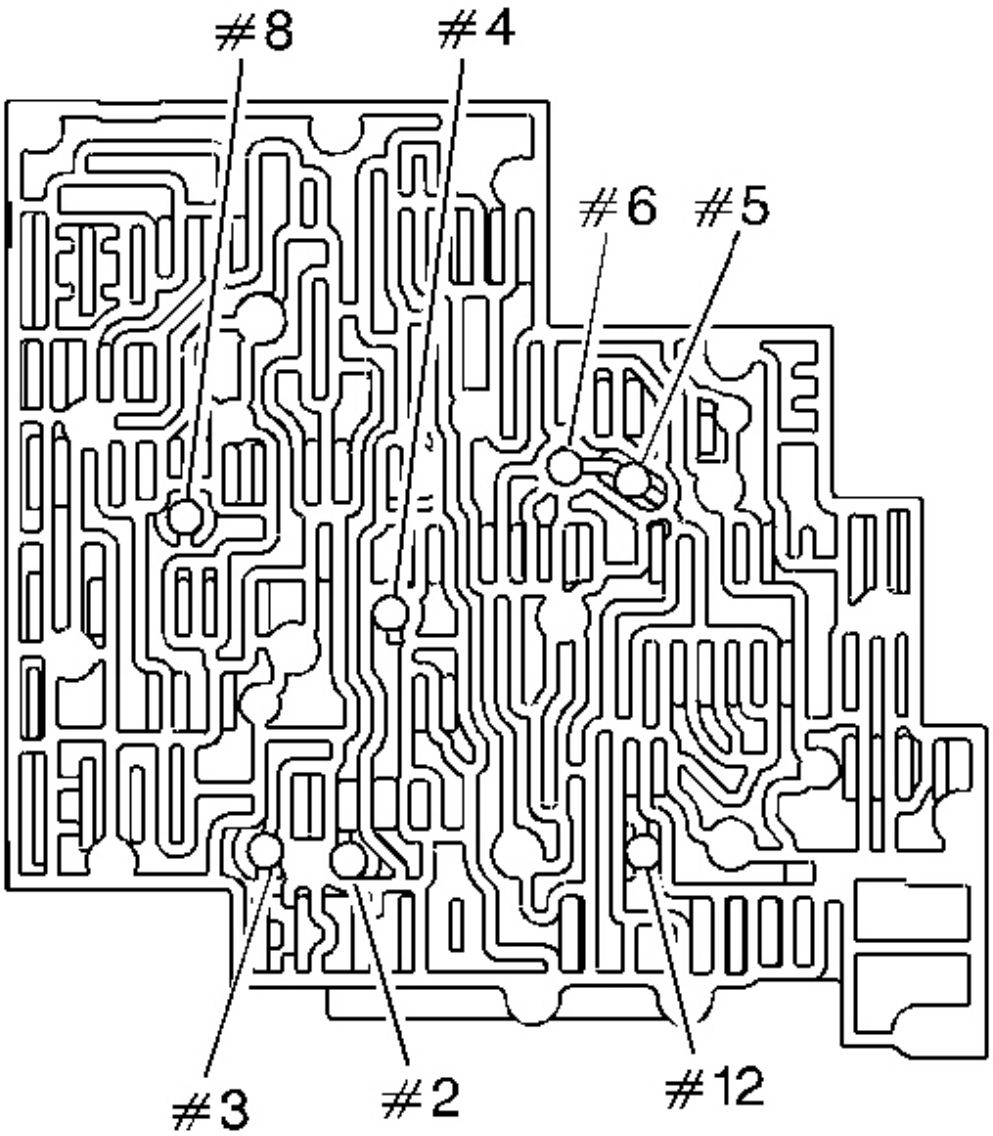

cardiagn.com

Fig. 284: Identifying Checkball Installation Positions
Courtesy of GENERAL MOTORS CORP.

IMPORTANT: Valve bodies are model dependent.

4. Install the checkballs (2-6, 8, 12) in the valve body and retain checkballs with **J 36850** or an equivalent. Some models do not use a #5 checkball.

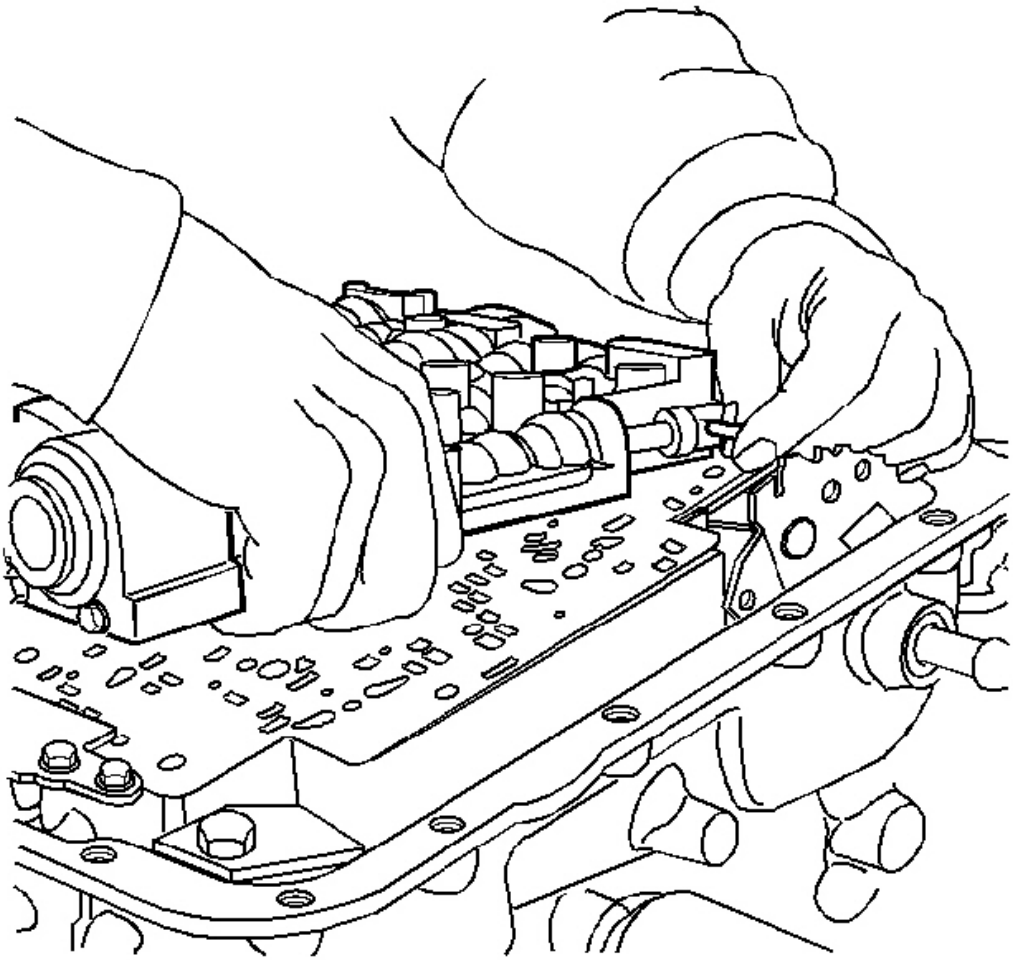

Fig. 285: Installing Valve Body
Courtesy of GENERAL MOTORS CORP.

5. Install the valve body over the **J 25025-5** Guide Pins, and connect the manual valve link to the manual valve.

cardiagn.com

6. Install two bolts to hold the valve body in place.
7. Remove the **J 25025-5** .

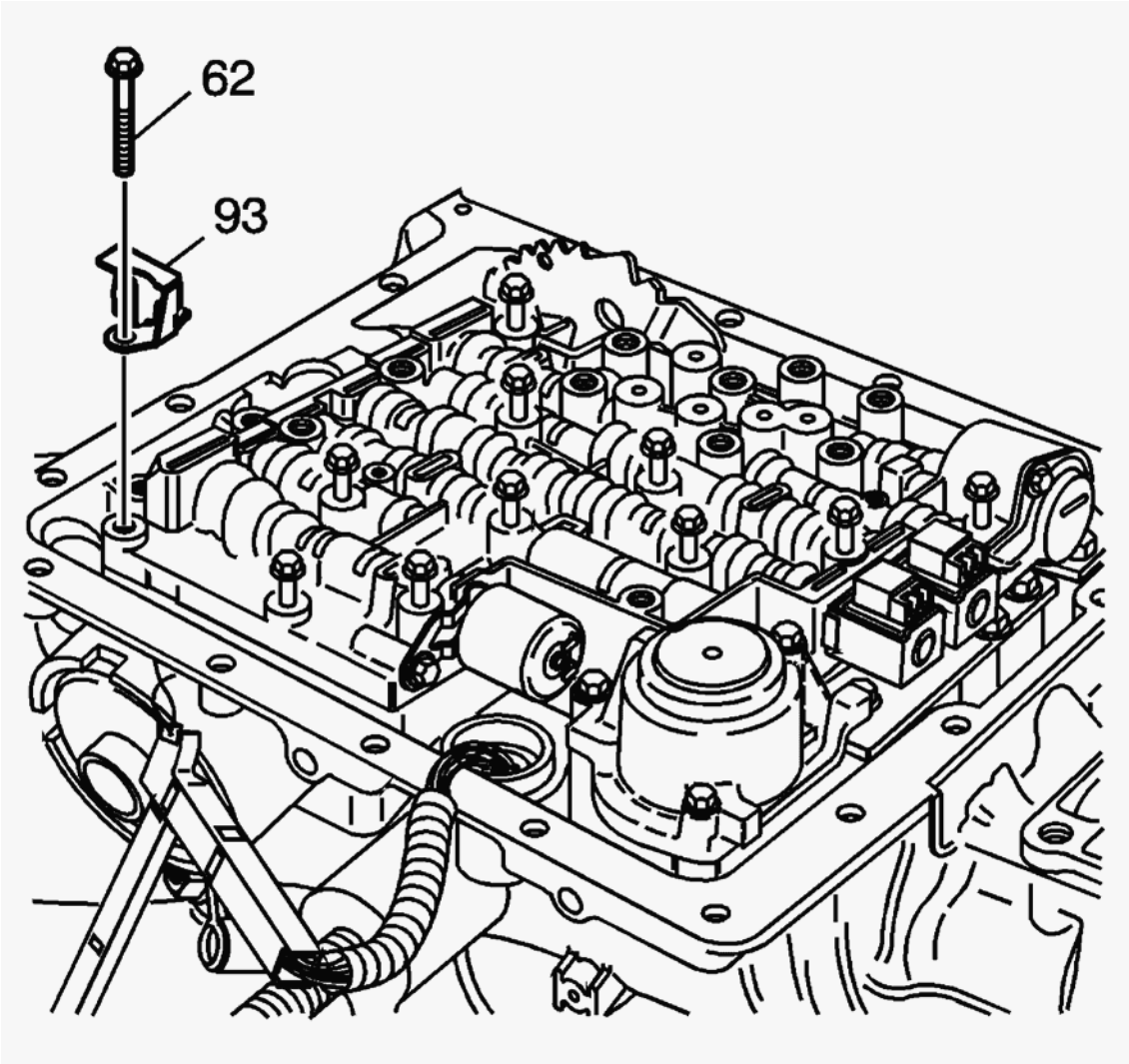

Fig. 286: Locating Fluid Level Indicator Stop Bracket & Valve Body Bolts
Courtesy of GENERAL MOTORS CORP.

8. Install the fluid level indicator stop bracket (93) if equipped and the valve body bolts (62) that are shown only.
9. Finger tighten the bolts.

cardiagn.com

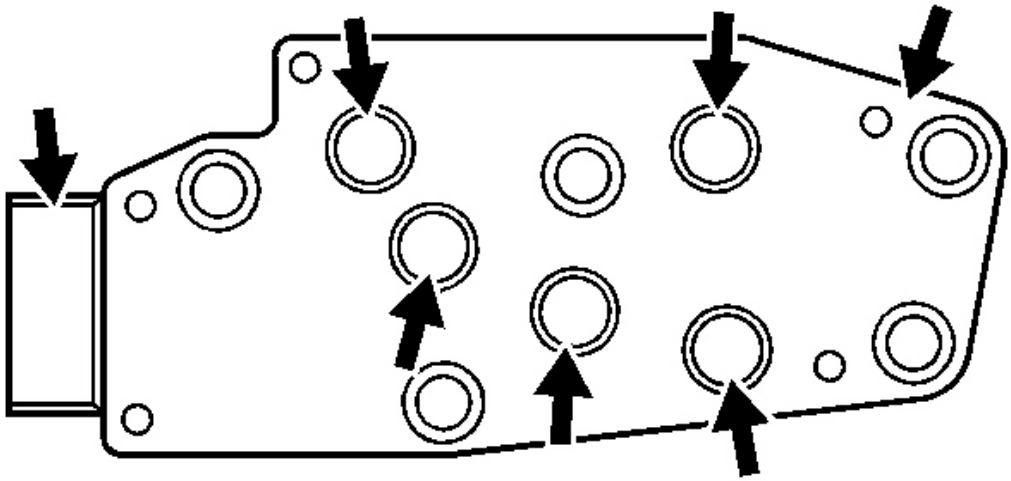

Fig. 287: Inspection Areas On Transmission Fluid Pressure (TFP) Manual Valve Position Switch Assembly
Courtesy of GENERAL MOTORS CORP.

10. Inspect the Transmission Fluid Pressure (TFP) Manual Valve Position Switch Assembly for the following conditions:
    - Damage
    - Debris
    - Damaged or missing O-rings
    - Cracked connector
    - Loose electrical terminals
    - Poor terminal retention
    - Sediment in switch membrane

cardiagn.com

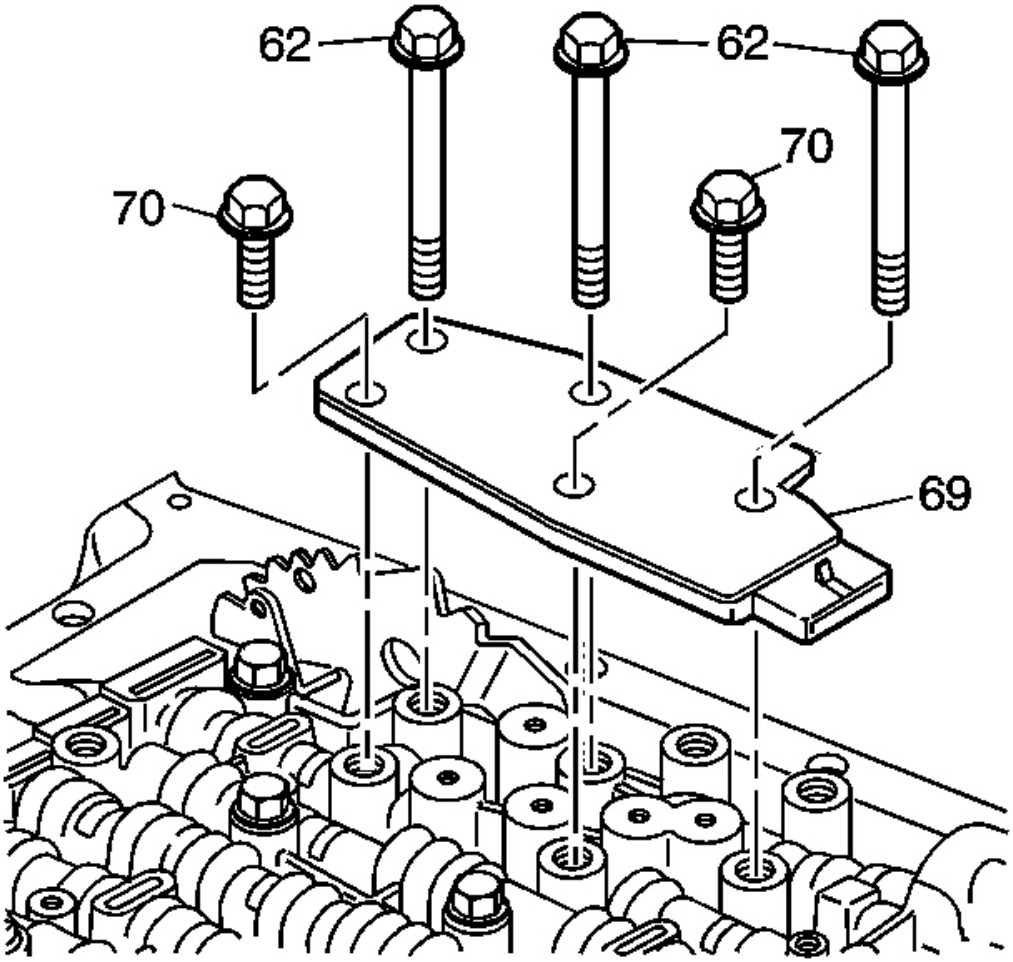

Fig. 288: TFP Manual Valve Position Switch Retaining Bolts
Courtesy of GENERAL MOTORS CORP.

11. Install the TFP manual valve position switch (69) and bolts (62, 70).

cardiagn.com

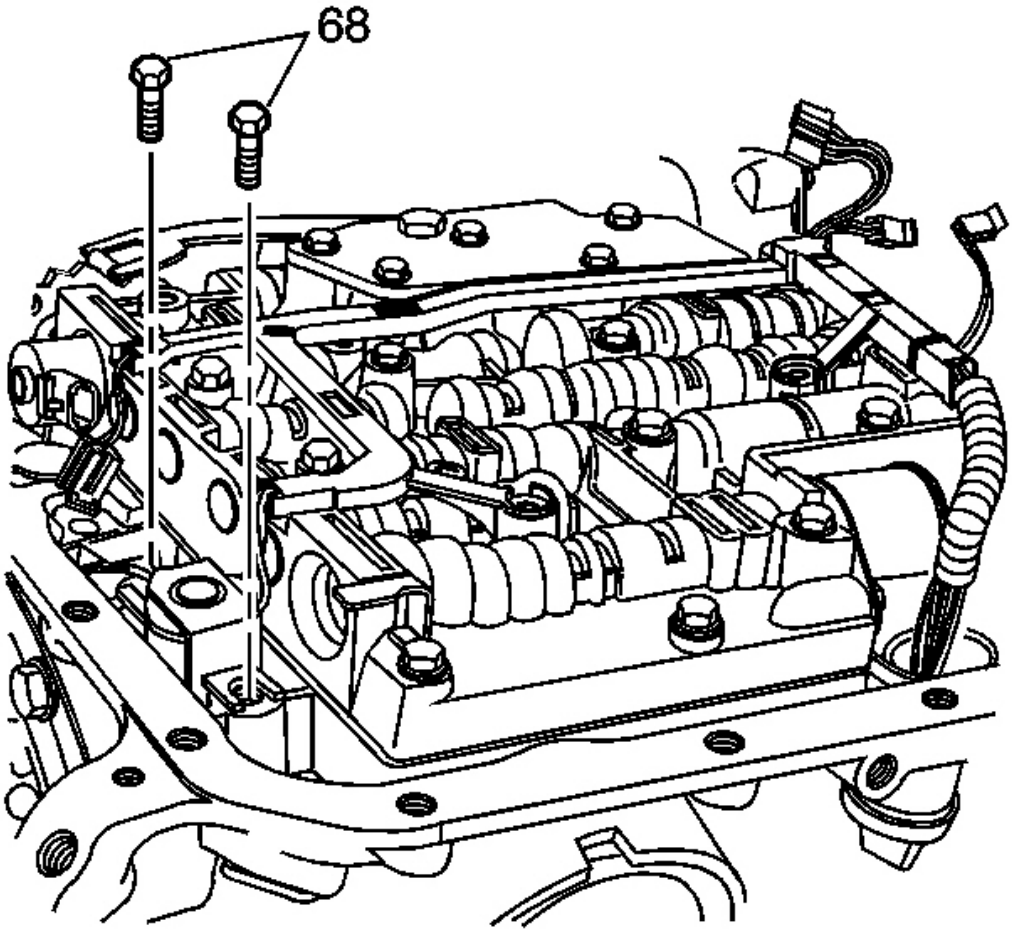

Fig. 289: Identifying TCC Solenoid Valve Mounting Bolts
Courtesy of GENERAL MOTORS CORP.

12. Install the transmission wiring harness on the valve body.

NOTE: **Refer to Fastener Notice in Cautions and Notices.**

13. Install the TCC solenoid valve and bolts (68).

Tighten: Tighten the bolts to 8-14 N.m (6-10 lb ft).

cardiagn.com

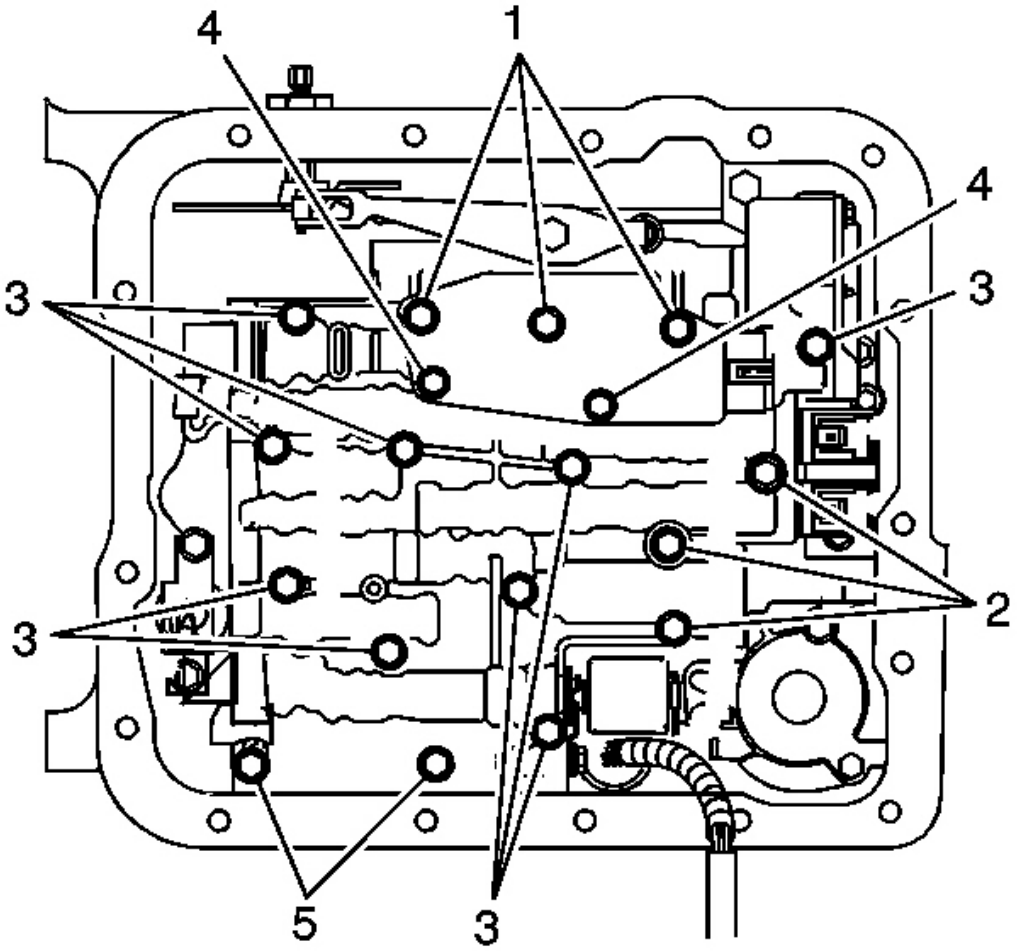

Fig. 290: Locating Valve Body Bolts
Courtesy of GENERAL MOTORS CORP.

NOTE: **Do not over-tighten the bolts. Over-tightening the bolts will distort the valve bores. Begin tightening from the center of the valve body tighten the bolts in a outward direction.**

14. Check that all the valve body bolts are in the correct location.

Each bolt number refers to a specific bolt size, as indicated by the following list:

- 1 - M6 x 1.0 x 65.0
- 2 - M6 x 1.0 x 54.4

cardiagn.com

- 3 - M6 x 1.0 x 47.5
- 4 - M6 x 1.0 x 17.7
- 5 - M6 x 1.0 x 35.0

15. Tighten the bolts from the center of the valve body working your way out in a spiral pattern to the outside edge.

    Tighten: Tighten the bolts to 8-14 N.m (6-10 lb ft).

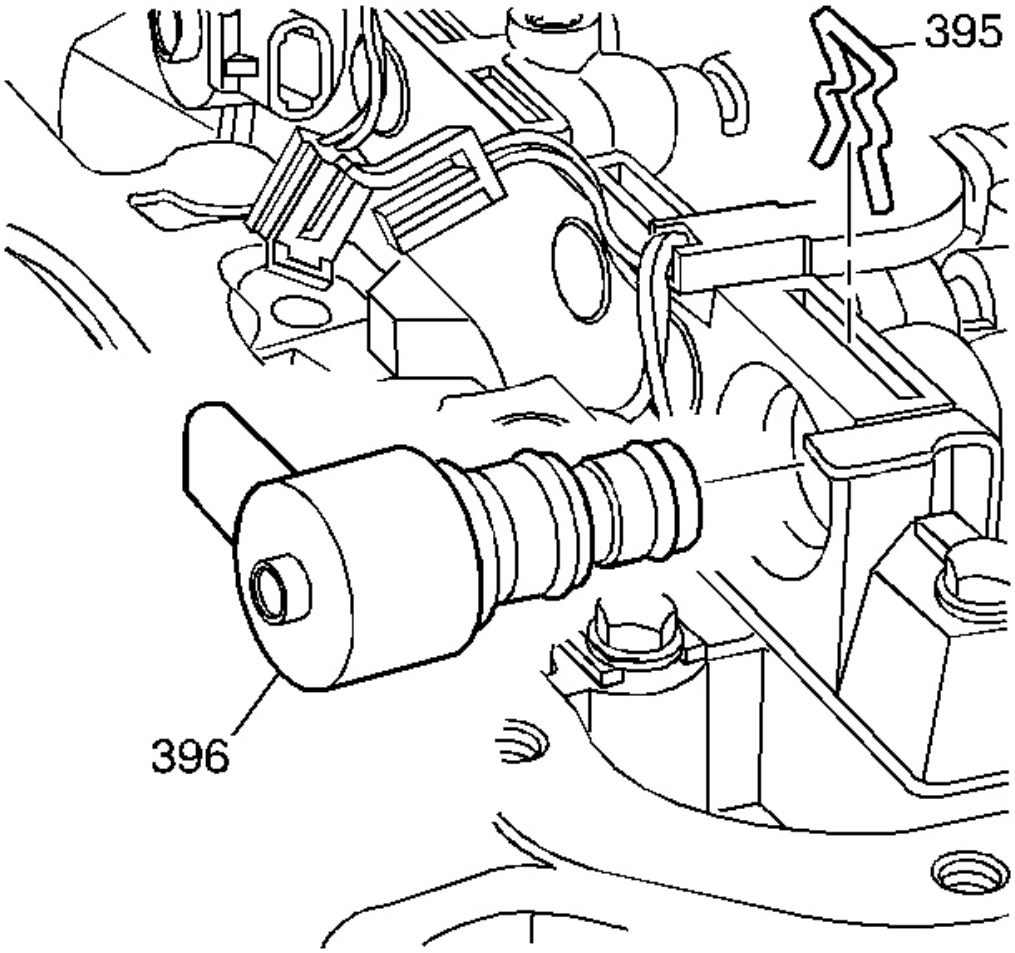

Fig. 291: Locating TCC PWM Solenoid Valve
Courtesy of GENERAL MOTORS CORP.

16. Install the TCC PWM solenoid valve (396) and the solenoid retainer (395).

cardiagn.com

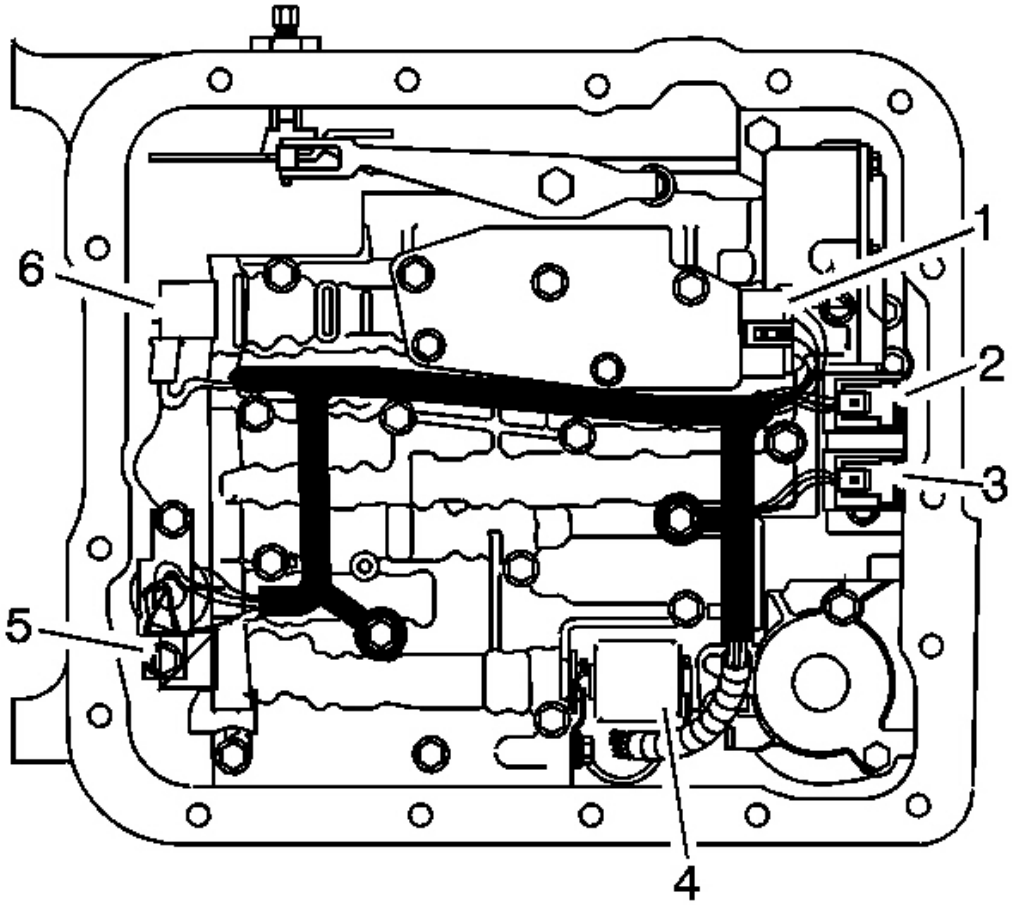

Fig. 292: Identifying Electrical Components In Valve Body
Courtesy of GENERAL MOTORS CORP.

17. Snap the wiring harness in place on the valve body bolts. Ensure the harness loom tab is located under the TFP switch.
18. Install the wiring connectors to the electrical components as indicated by the following list:
    - 1 - Transmission Fluid Pressure (TFP) manual valve position switch
    - 2 - 1-2 Shift Solenoid
    - 3 - 2-3 Shift Solenoid
    - 4 - Pressure Control Solenoid (PCS)
    - 5 - Torque Converter Clutch Pulse Width Modulation (TCC PWM) Solenoid
    - 6 - 3-2 Shift Solenoid

cardiagn.com

MANUAL DETENT SPRING INSTALLATION

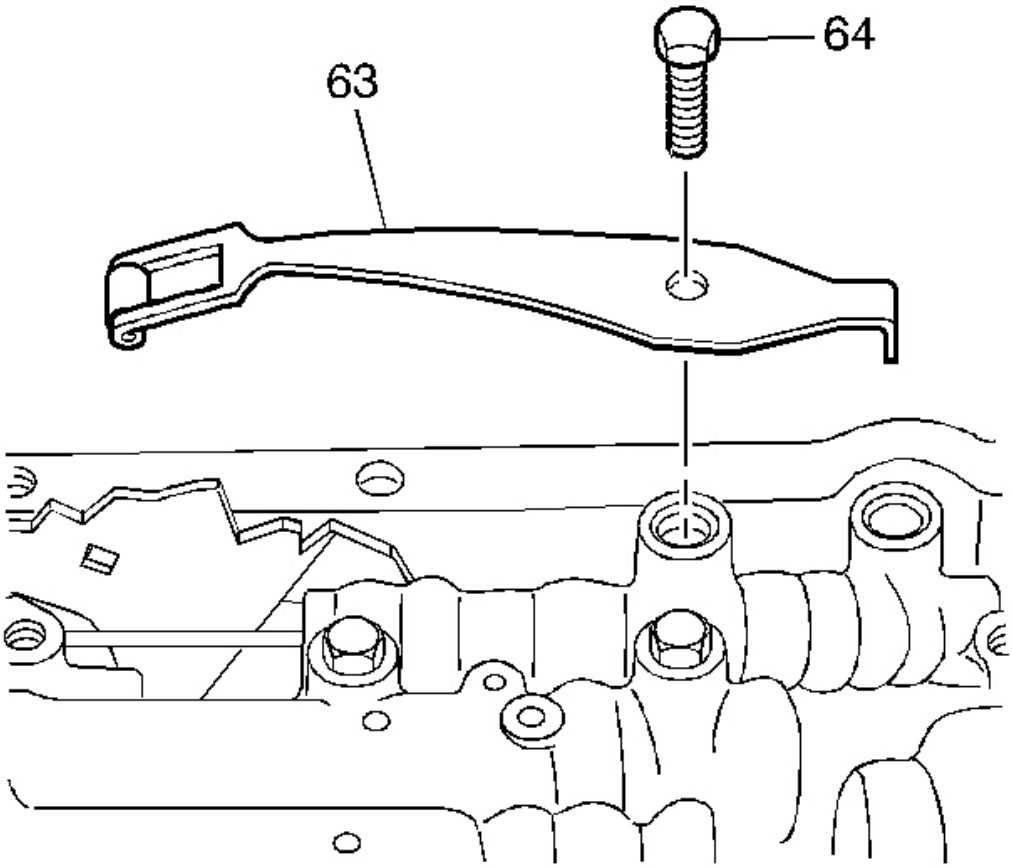

Fig. 293: View Of Manual Detent Spring Assembly
Courtesy of GENERAL MOTORS CORP.

1. Inspect the manual detent spring assembly (63) for cracks or damage.
2. Install the manual detent spring assembly (63).

NOTE: **Refer to Fastener Notice in Cautions and Notices.**

3. Install the manual detent spring bolt (64).

   Tighten: Tighten the bolt to 20-27 N.m (15-20 lb ft).

SECONDARY FLUID PUMP ASSEMBLY INSTALLATION (M33 MODEL ONLY)

cardiagn.com

Tools Required

J 41510 T-50 Plus Bit. See **Special Tools and Equipment** .

Installation Procedure

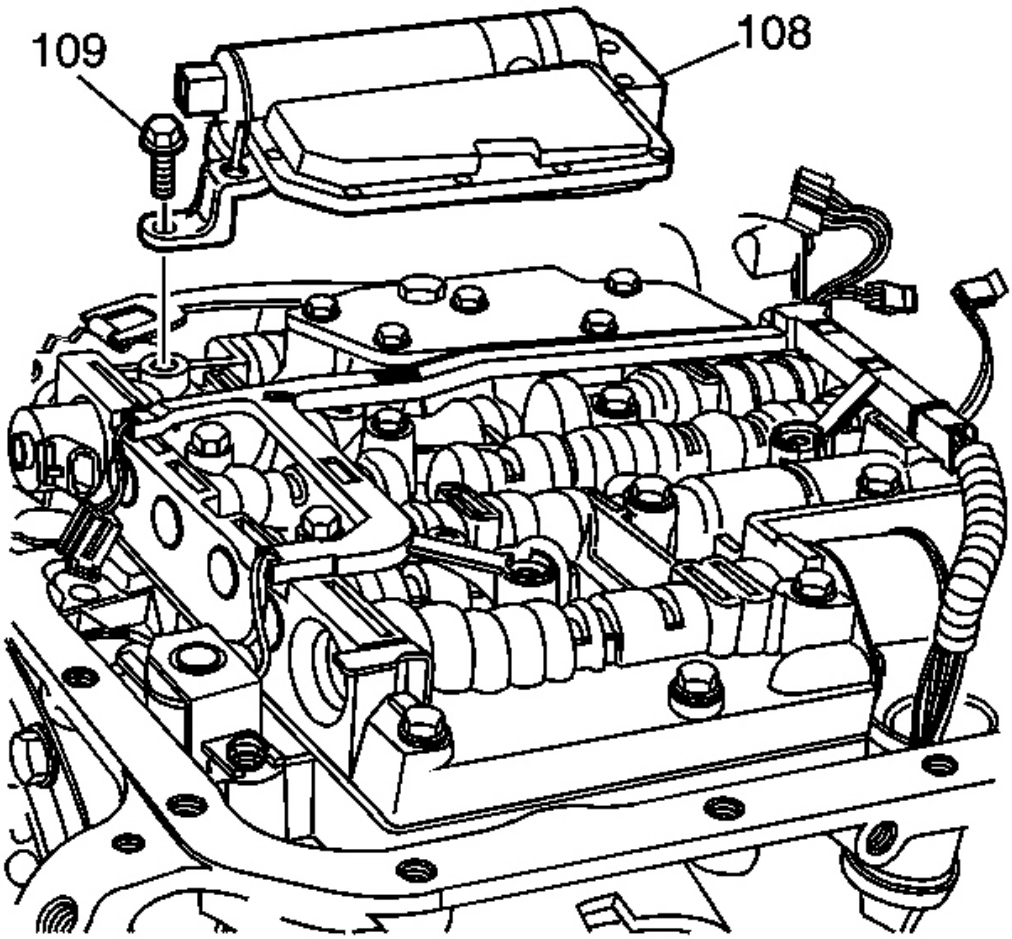

Fig. 294: Identifying Secondary Fluid Pump
Courtesy of GENERAL MOTORS CORP.

IMPORTANT: Be sure check ball is in the proper place before the secondary fluid pump is bolted on to the valve body.

1. Install the secondary fluid pump to the valve body.

cardiagn.com

NOTE: **Refer to Fastener Notice in Cautions and Notices.**

2. Install the secondary fluid pump bolts (109, 110).

   Tighten: Tighten the secondary fluid pump bolts to 11-14 N.m (8-10 lb ft).

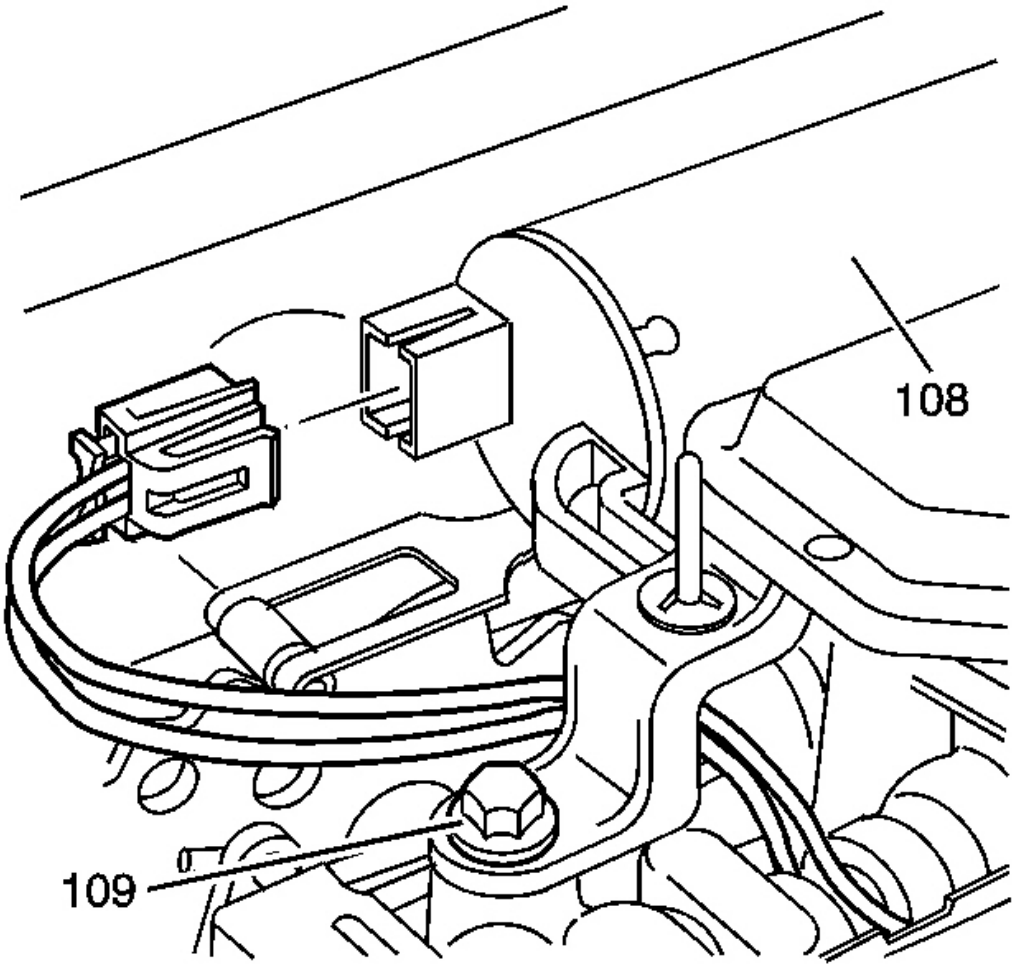

Fig. 295: View Of Wiring Harness Connector For Secondary Fluid Pump
Courtesy of GENERAL MOTORS CORP.

IMPORTANT: **Wiring harness connector for the secondary fluid pump must pass under the pump bracket as shown.**

cardiagn.com

3. Connect the electrical connector to the secondary fluid oil pump.

OIL FILTER ASSEMBLY INSTALLATION

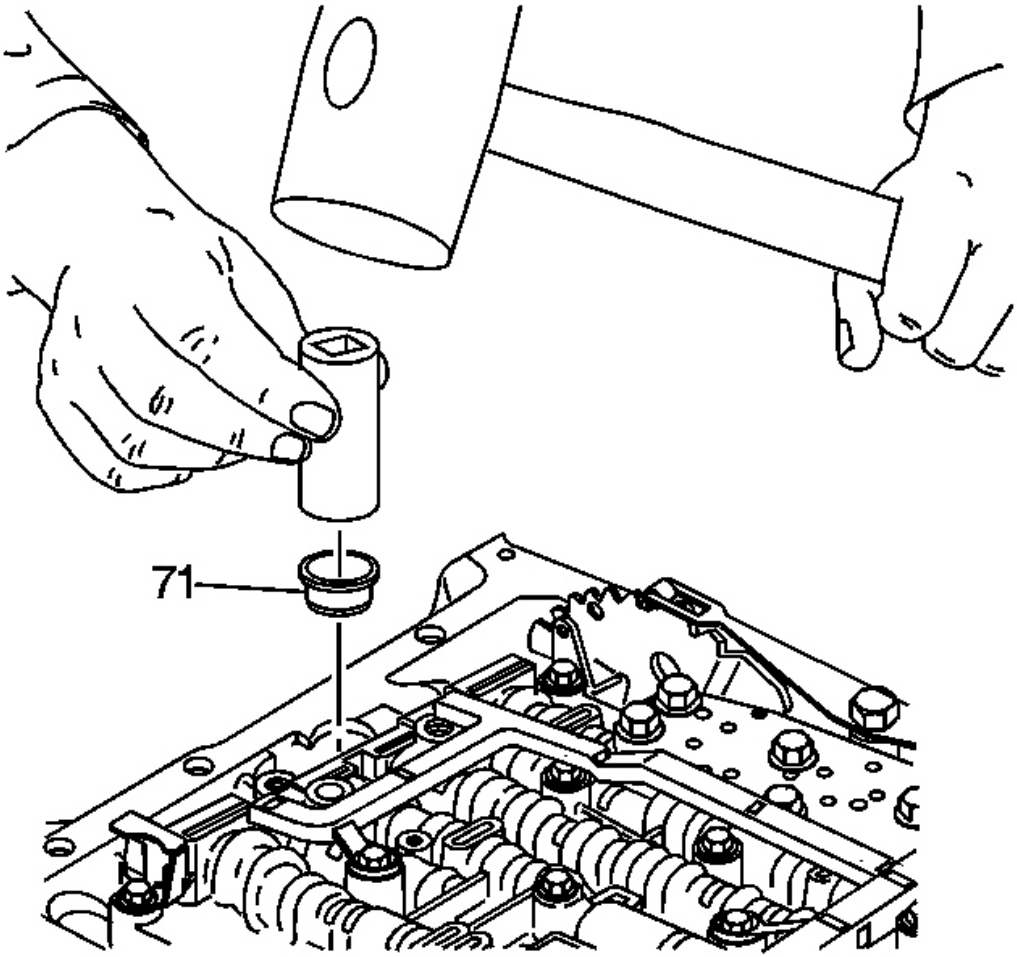

Fig. 296: Locating Oil Filter Seal
Courtesy of GENERAL MOTORS CORP.

1. Lubricate the filter seal (71) with transmission fluid.
2. Use a socket the same size diameter as the filter seal (71) and install the seal.

cardiagn.com

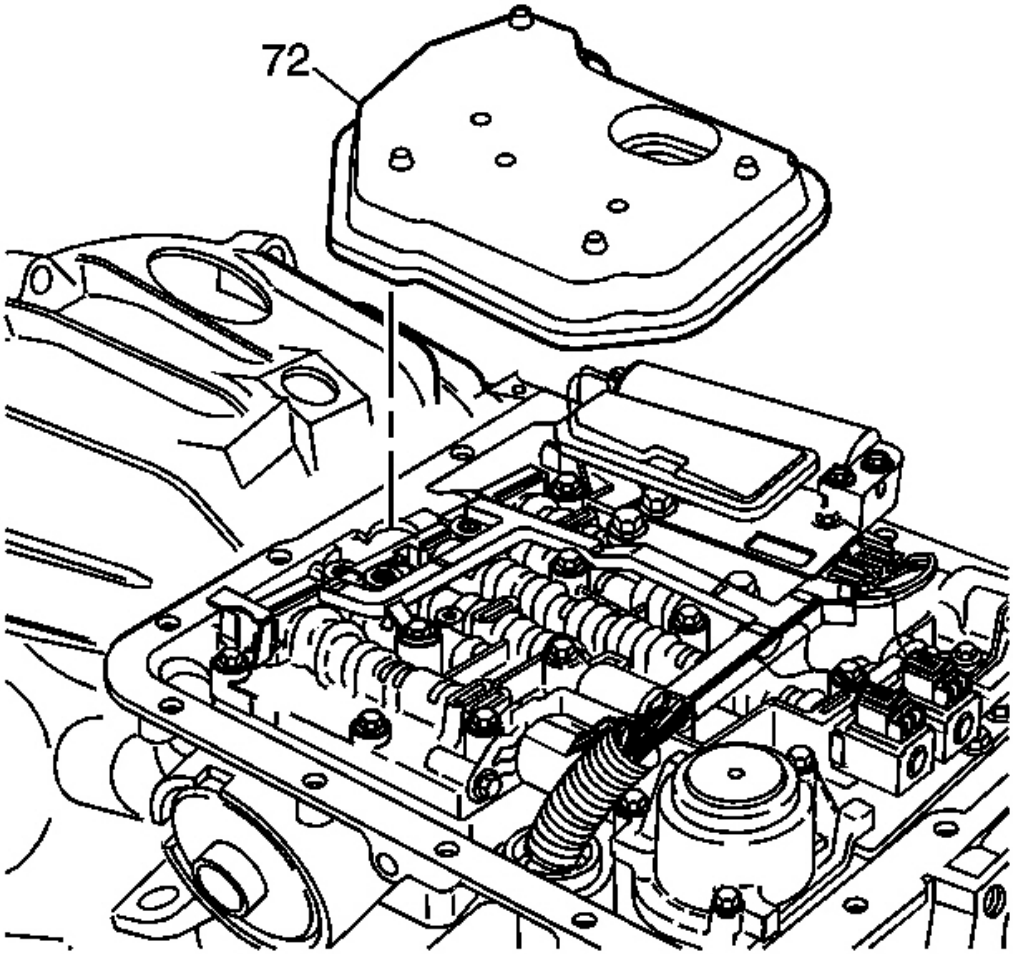

Fig. 297: View Of Transmission Oil Filter Assembly
Courtesy of GENERAL MOTORS CORP.

3. Install the transmission oil filter assembly (72).

SECONDARY FLUID PUMP FILTER REPLACEMENT (M33 MODEL ONLY)

cardiagn.com

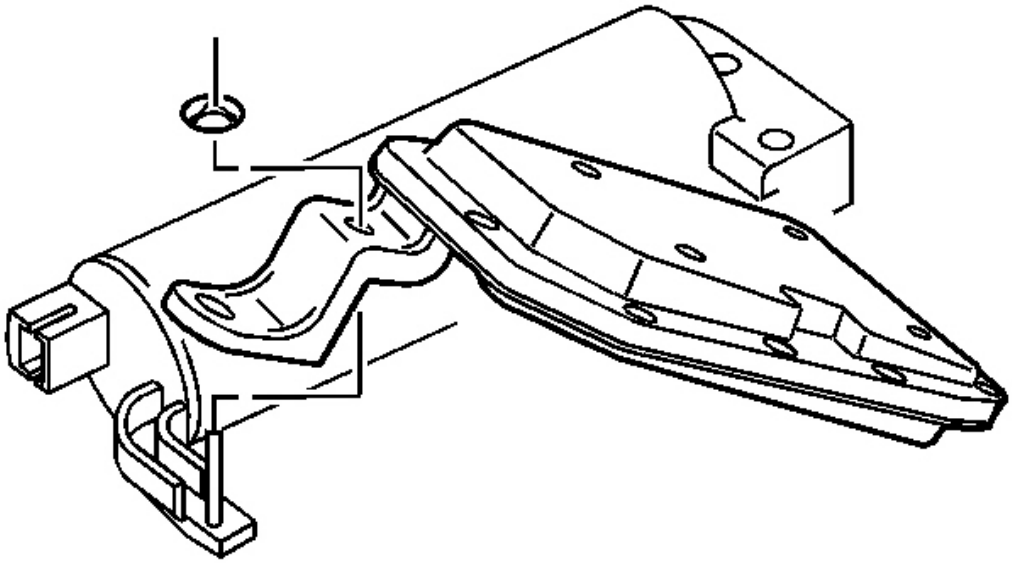

Fig. 298: View Of Secondary Fluid Pump & Clip
Courtesy of GENERAL MOTORS CORP.

1. Remove the secondary fluid pump. Refer to **Secondary Fluid Pump Assembly Removal (M33 Model Only)** .
2. Remove the retaining push clip from the secondary fluid pump.
3. Rotate filter upward and separate from the pump.
4. Install a new filter and rotate filter downward.
5. Install a new push clip.
6. Install the secondary fluid pump. Refer to **Secondary Fluid Pump Assembly Installation (M33 Model Only)** .

TRANSMISSION OIL PAN INSTALLATION

cardiagn.com

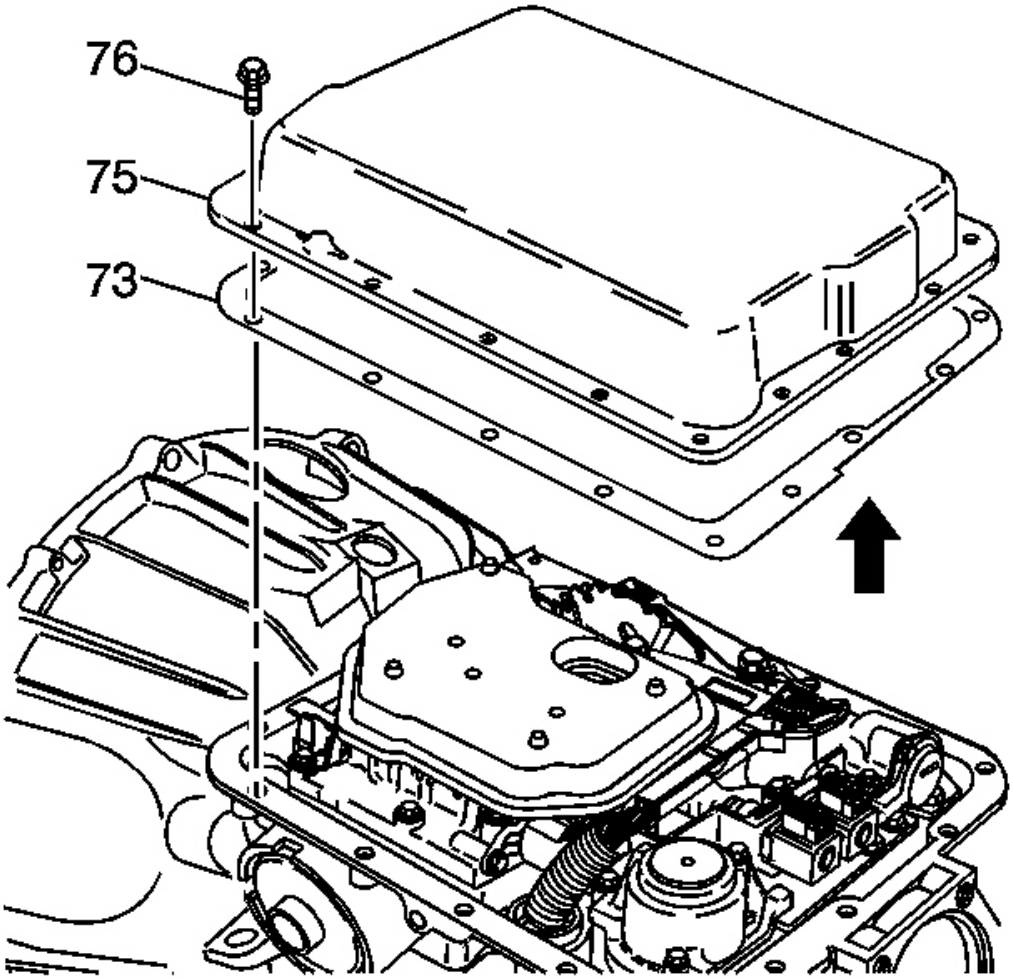

Fig. 299: View Of Transmission Oil Pan & Gasket
Courtesy of GENERAL MOTORS CORP.

1. Place the transmission oil pan gasket (73) on the case.
2. Place the transmission oil pan (75) on the case.

NOTE: **Refer to Fastener Notice in Cautions and Notices.**

3. Install all of the transmission oil pan screws (76).

Tighten: Tighten the screws to 16 N.m (11.8 lb ft).

cardiagn.com

2-4 SERVO DISASSEMBLE

Tools Required

J 22269-01 Accumulator and Servo Piston Remover. See **Special Tools and Equipment** .

Disassembly Procedure

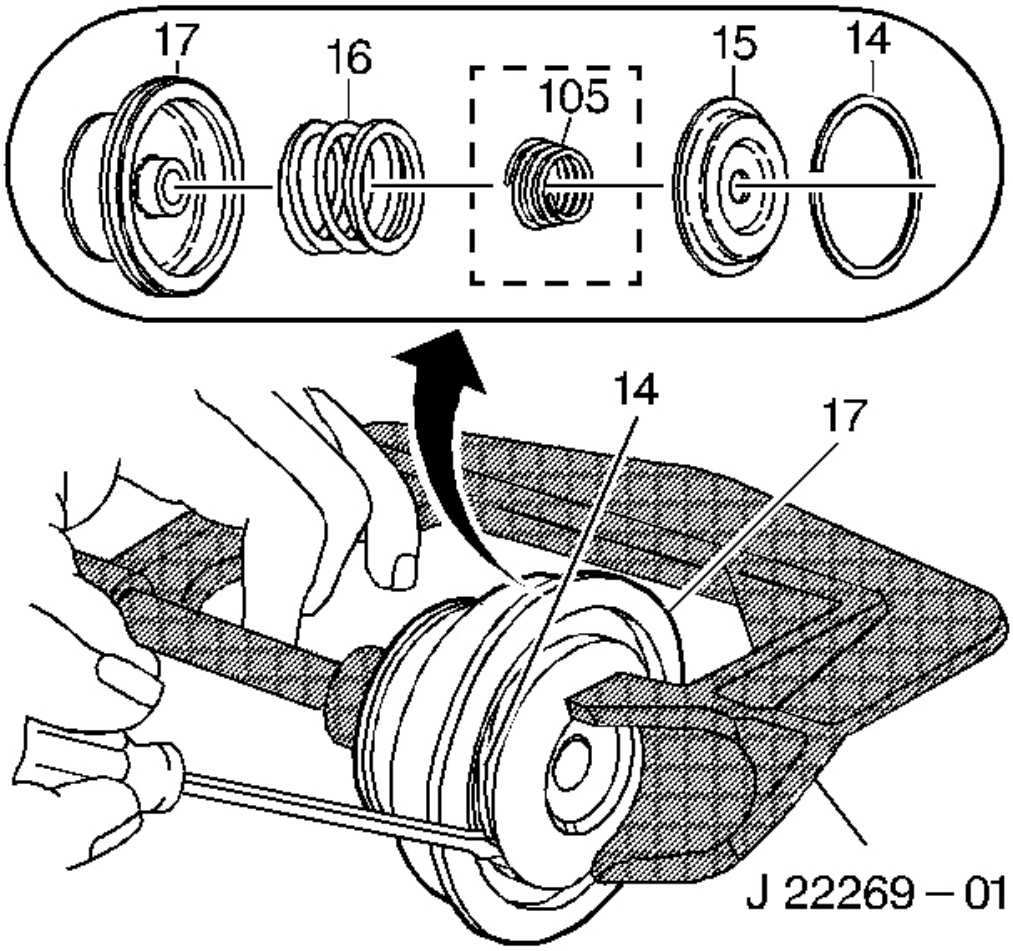

Fig. 300: Locating Servo Cushion Outer & Inner Spring With Retainer
Courtesy of GENERAL MOTORS CORP.

1. Use a **J 22269-01** to compress the second apply piston assembly (17).
2. Remove the second apply piston retaining ring (14).

cardiagn.com

3. Remove the servo cushion spring retainer (15), the servo cushion outer spring (16) and the servo cushion inner spring (105) (model dependent).

2-4 SERVO PIN LENGTH CHECK

Tools Required

J 33037 2-4 Intermediate Band Apply Pin Gage. See **Special Tools and Equipment** .

Checking Procedure

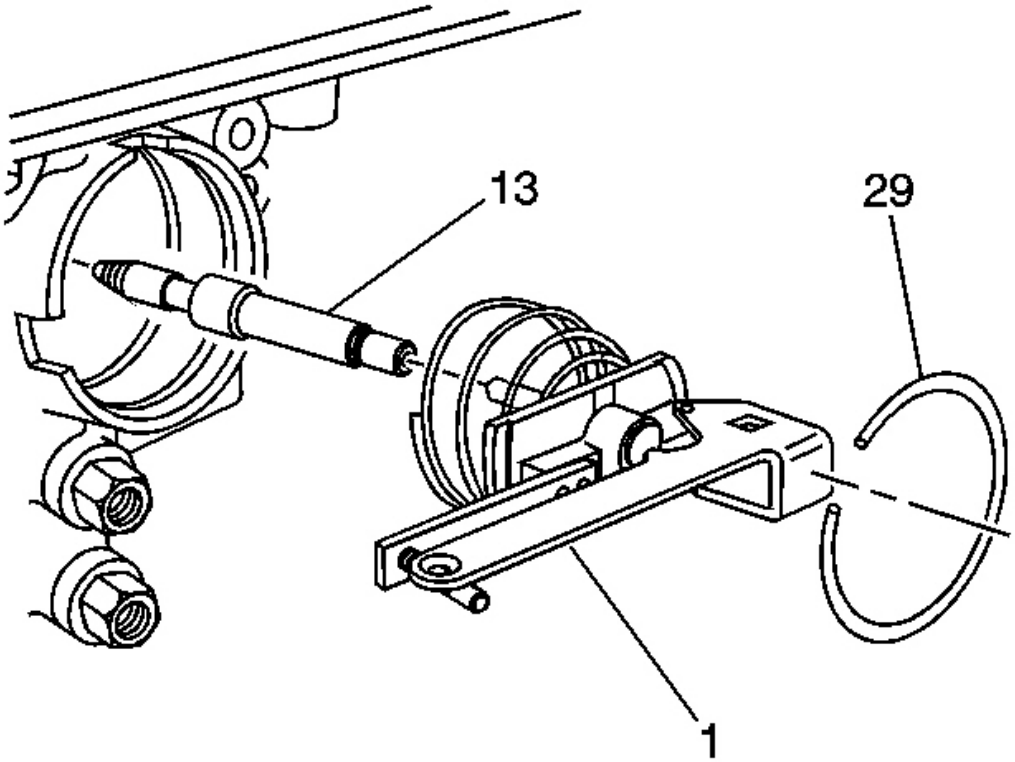

Fig. 301: Locating Servo Cover Retaining Ring
Courtesy of GENERAL MOTORS CORP.

1. Install the band apply pin and the **J 33037** .
2. Install the servo cover retaining ring to secure the tool.

cardiagn.com

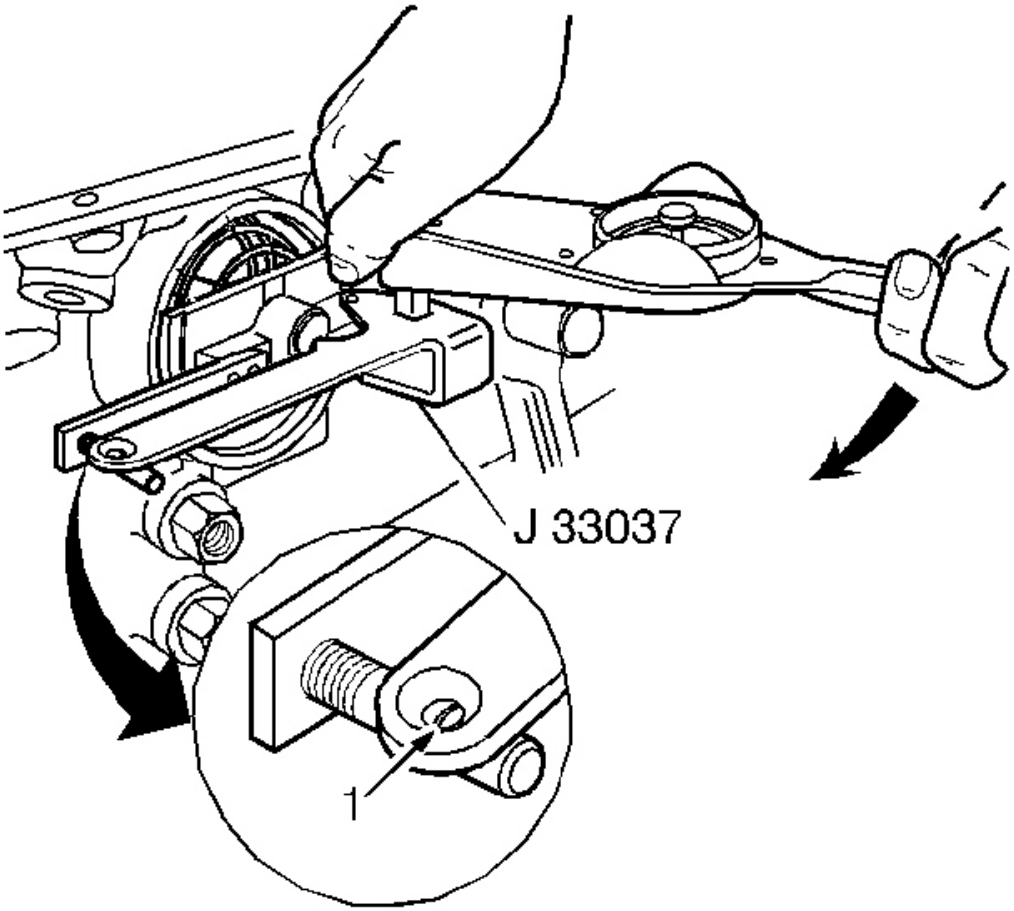

Fig. 302: Identifying Gage Slot
Courtesy of GENERAL MOTORS CORP.

3. Apply 11 N.m (98 lb in) torque. If the white line appears in the gage slot (1), the pin length is correct.
4. If a new pin is needed, refer to **2-4 Servo Pin Selection** in order to determine the correct pin length.

2-4 SERVO ASSEMBLY INSTALLATION

Tools Required

- **J 22269-01** Accumulator and Servo Piston Remover. See **Special Tools and Equipment** .
- **J 29714-A** Servo Cover Depressor. See **Special Tools and Equipment** .

cardiagn.com

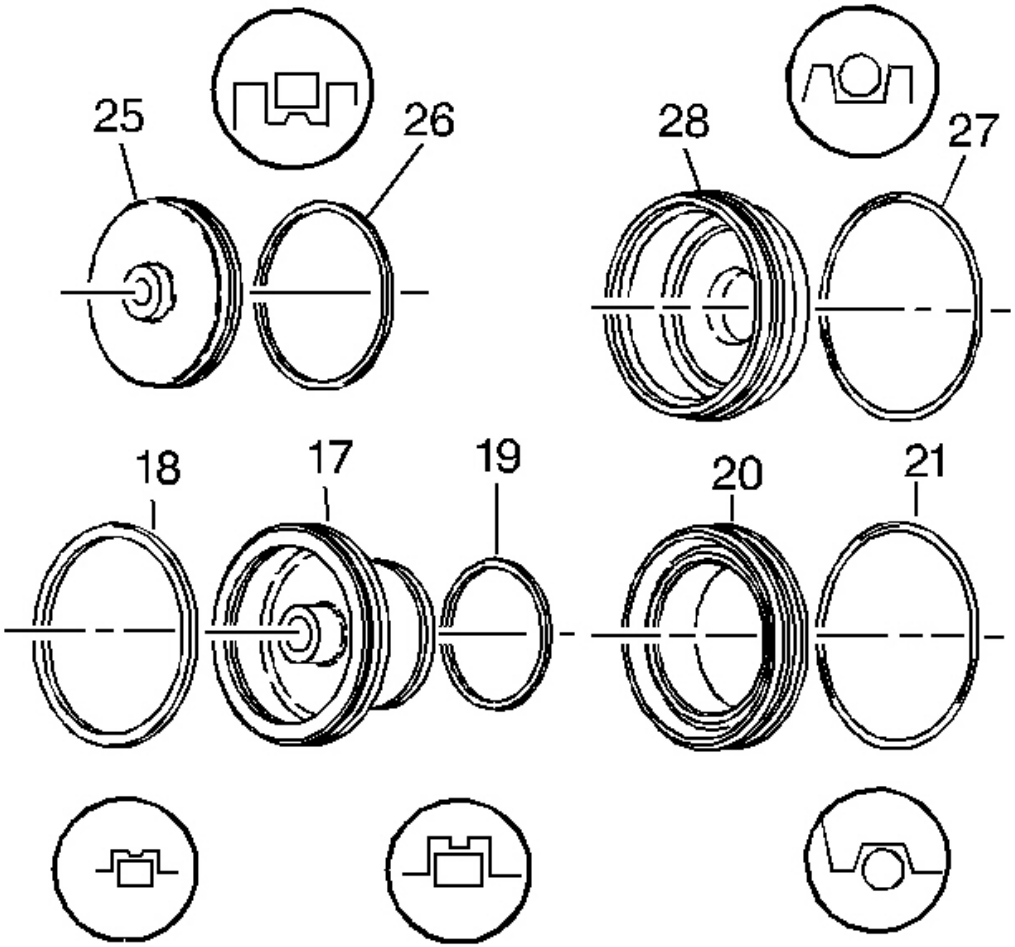

Fig. 303: 2-4 Servo Assembly Components
Courtesy of GENERAL MOTORS CORP.

1. Inspect the 4th apply piston (25), the 2-4 servo cover (28), the 2nd apply piston (17), and the servo piston inner housing (20) for the following conditions:
    - Cracks
    - Scoring
    - Burrs and nicks
2. Install the following seals:
    - The 4th apply piston outer oil seal ring (26) on the 4th apply piston (25).
    - The 2-4 servo cover O-ring seal (27) on the 2-4 servo cover (28).
    - The 2nd apply piston outer (18) and inner (19) oil seal rings on the 2nd apply piston (17).

cardiagn.com

- The O-ring seal (21) on the servo piston inner housing (20).

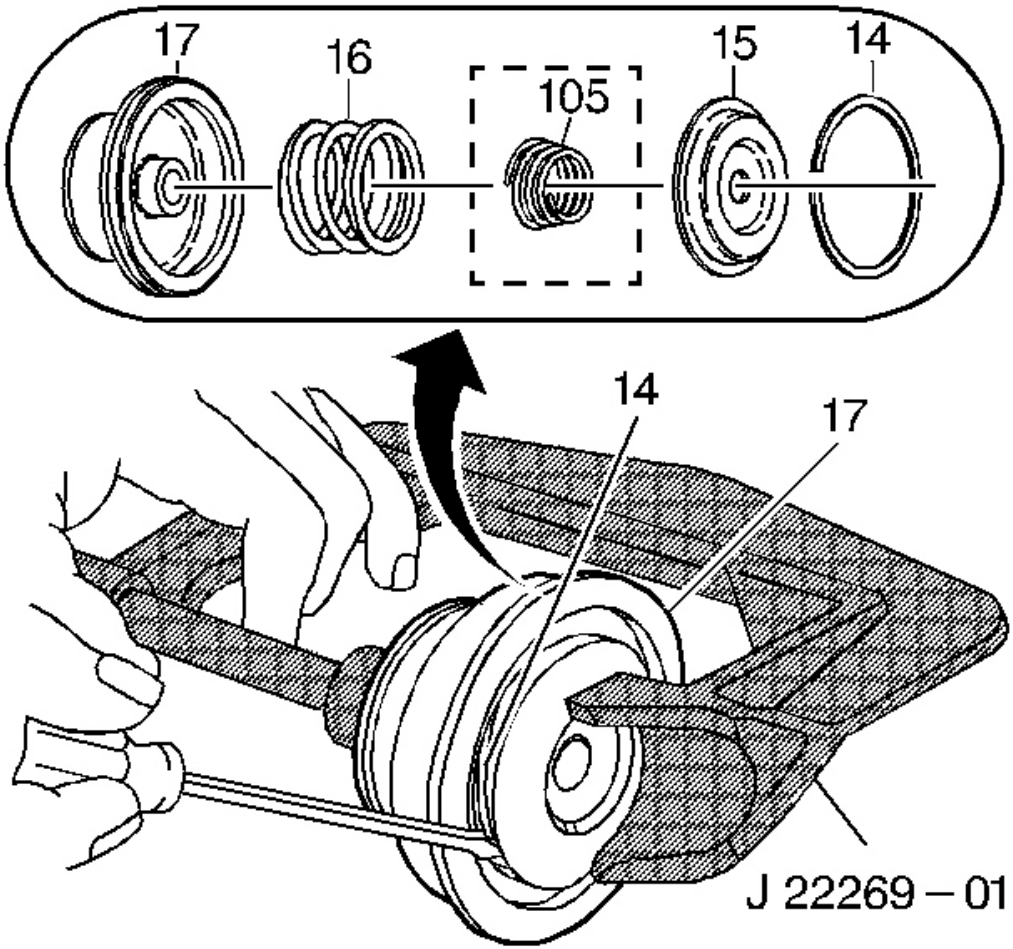

Fig. 304: Locating Servo Cushion Outer & Inner Spring With Retainer
Courtesy of GENERAL MOTORS CORP.

3. Install the servo cushion outer spring (16), the servo cushion inner spring (105) (model dependent) and the cushion spring retainer (15) in the 2nd apply piston (17).
4. Use the **J 22269-01** and compress the second apply piston assembly (17).
5. Install the second apply piston retaining ring (14).

cardiagn.com

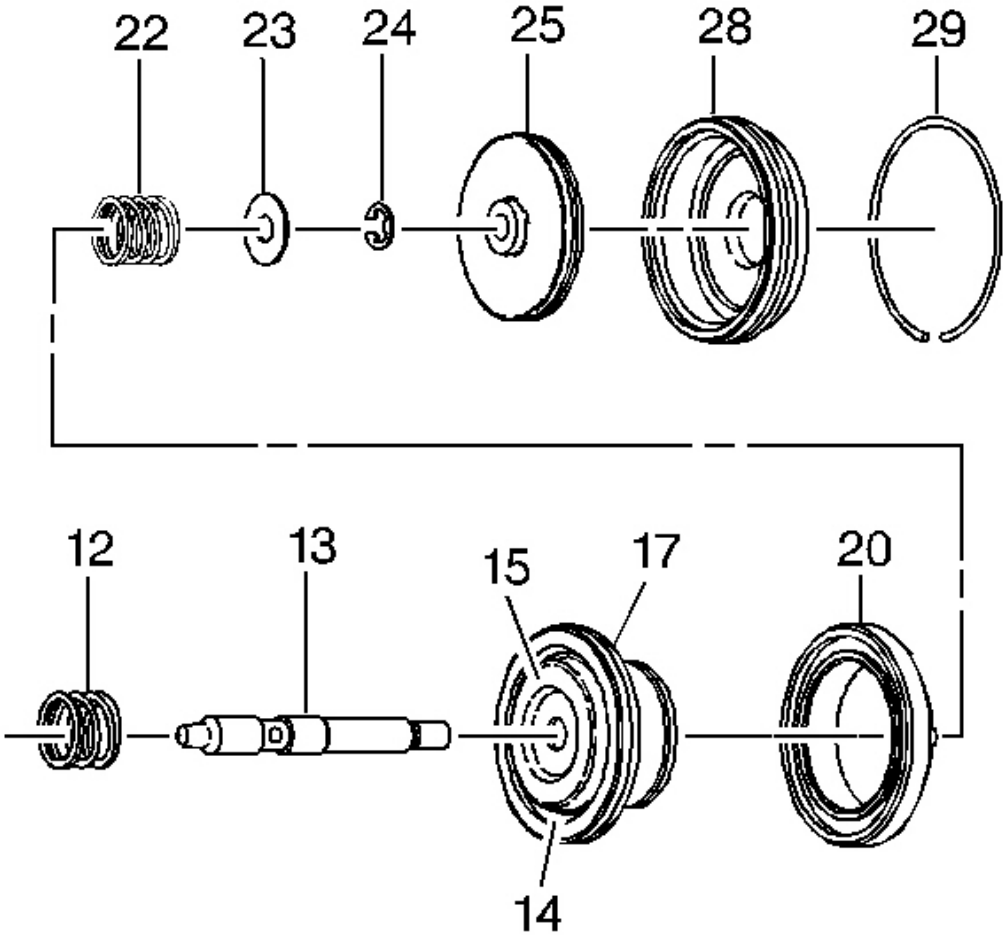

Fig. 305: Illustrating Assembly Order Of 2-4 servo components
Courtesy of GENERAL MOTORS CORP.

6. Assemble the 2-4 servo components in the order shown: (12-15, 17, 20, 22-25, 28, 29).

cardiagn.com

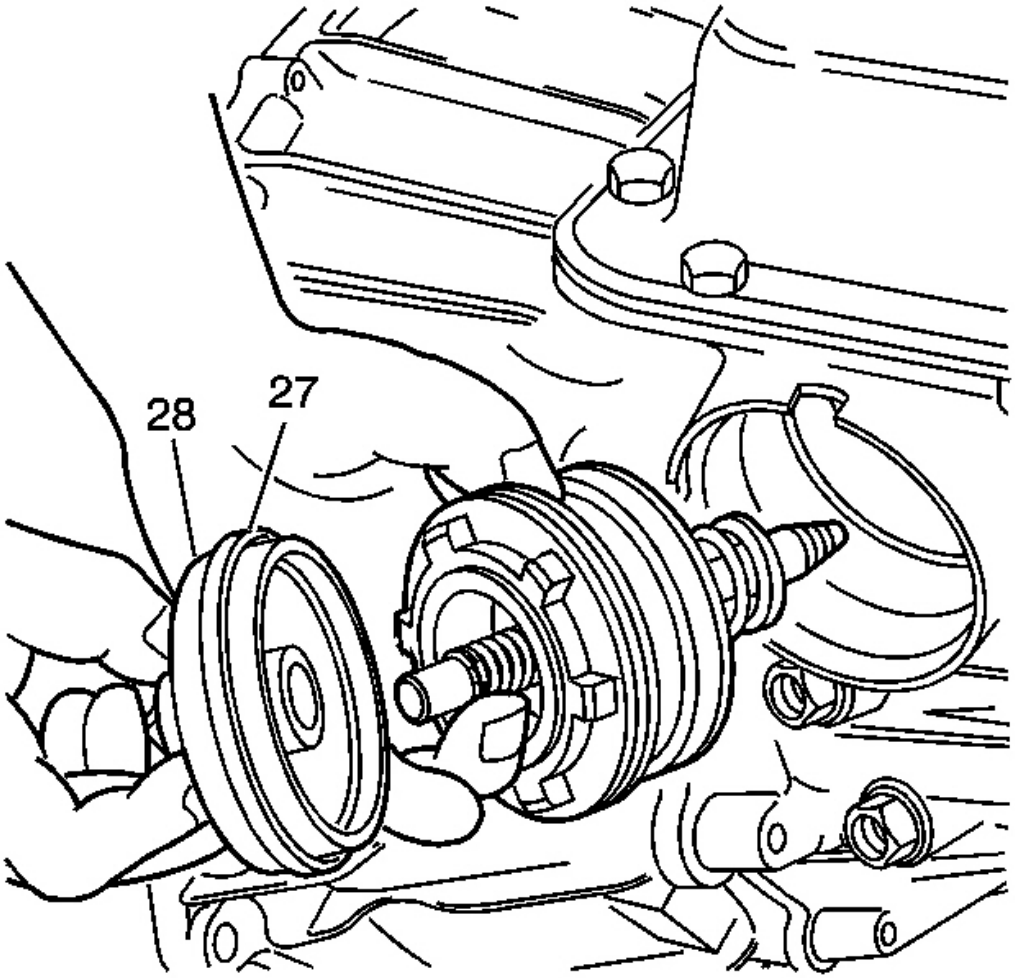

Fig. 306: View Of 2-4 Servo Assembly
Courtesy of GENERAL MOTORS CORP.

7. Install the 2-4 servo assembly into the 2-4 servo bore.

cardiagn.com

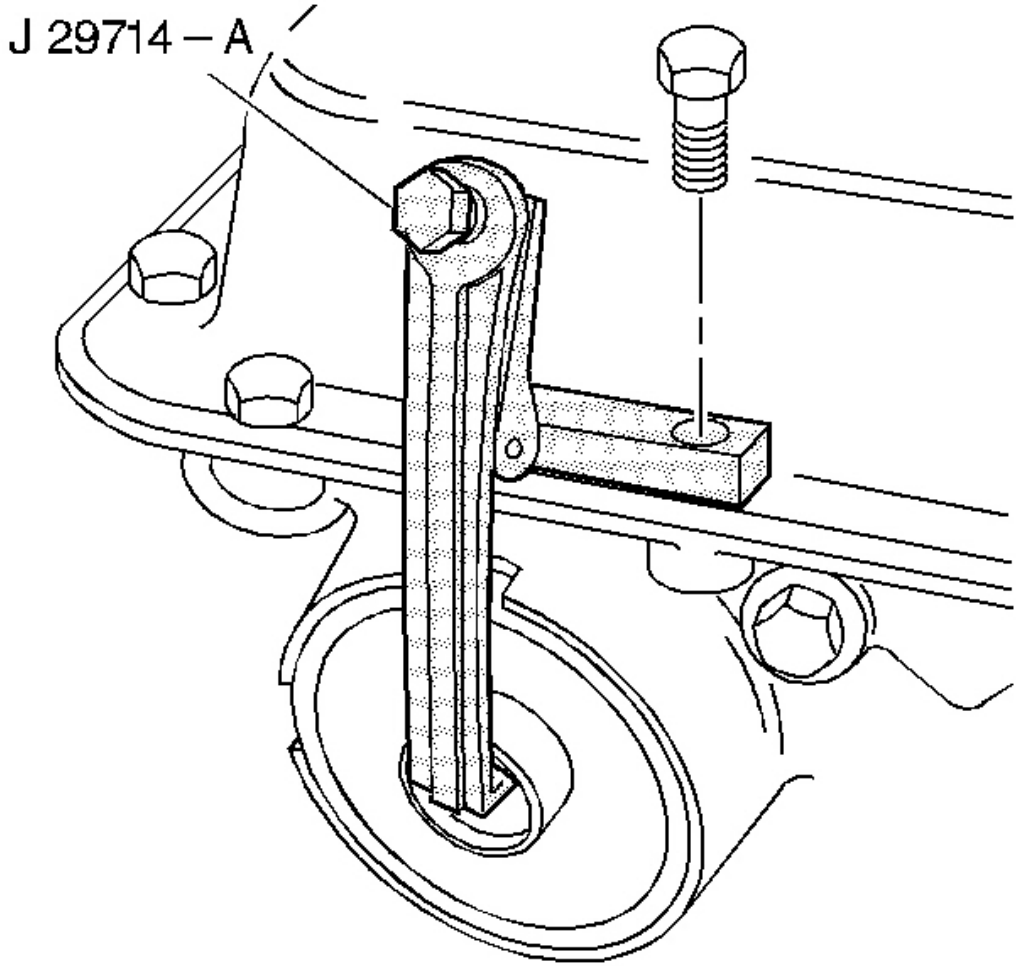

Fig. 307: Installing J 29714-A
Courtesy of GENERAL MOTORS CORP.

8. Install the **J 29714-A** .

cardiagn.com

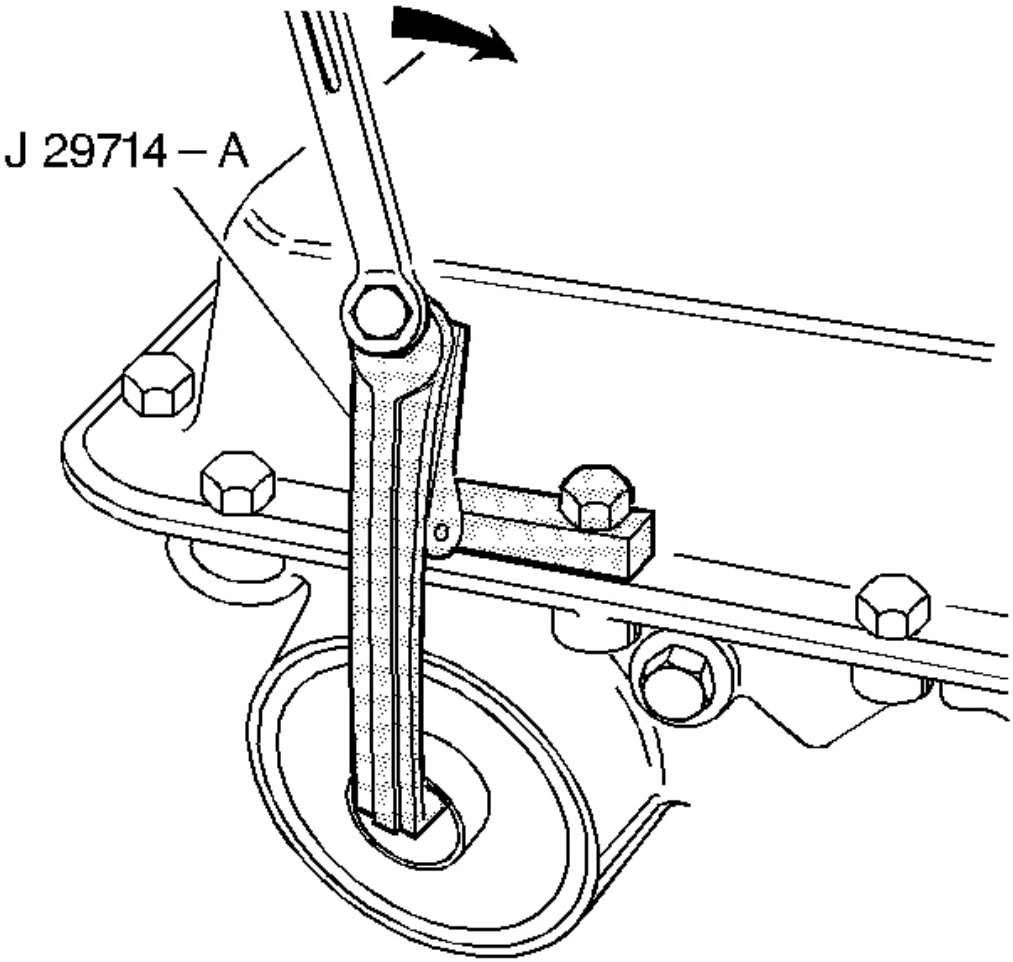

Fig. 308: Compressing Servo Cover With J 29714-A
Courtesy of GENERAL MOTORS CORP.

9. Tighten the bolt on the **J 29714-A** in order to compress the servo cover.

cardiagn.com

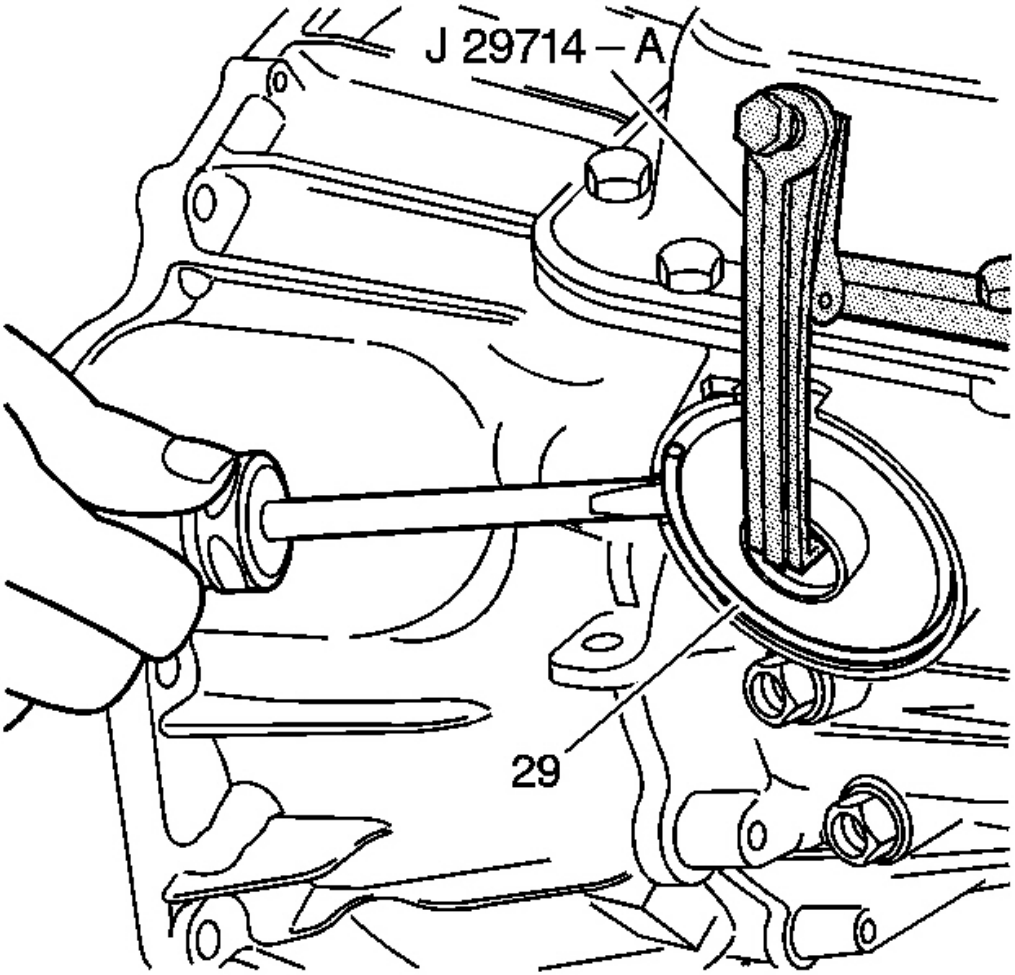

Fig. 309: Locating Servo Cover Retaining Ring
Courtesy of GENERAL MOTORS CORP.

10. Install the servo cover retaining ring.

CASE EXTENSION BUSHING REPLACEMENT (2WD TRUCK/UTILITY/VAN ONLY)

Tools Required

- J 8092 Driver Handle
- J 23062-14 Bushing Remover
- **J 34196-B** Transmission Bushing Service Set

cardiagn.com

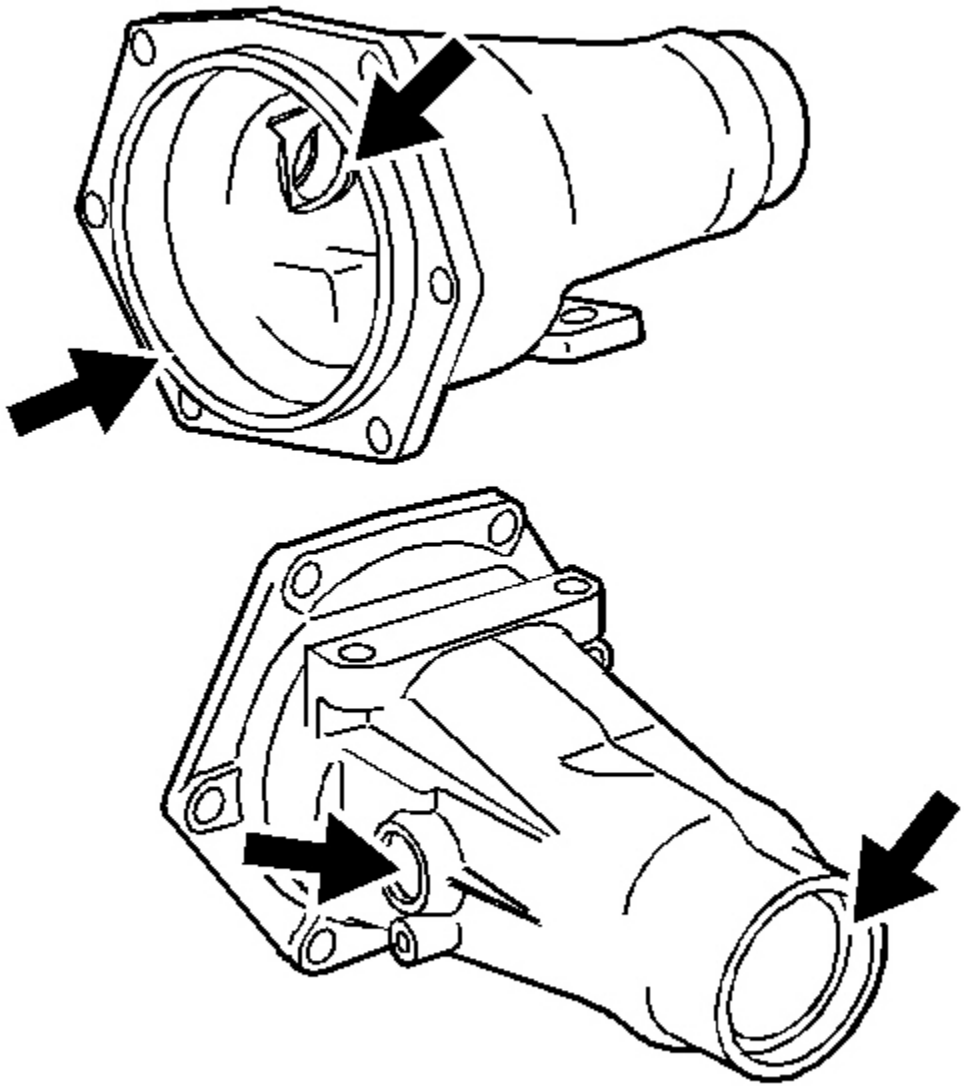

Fig. 310: Identifying Inspection Areas On Case Extension
Courtesy of GENERAL MOTORS CORP.

1. Inspect the case extension for the following conditions:
    - Porosity
    - Cracks
    - Nicks

cardiagn.com

- Burrs
- Worn bushings

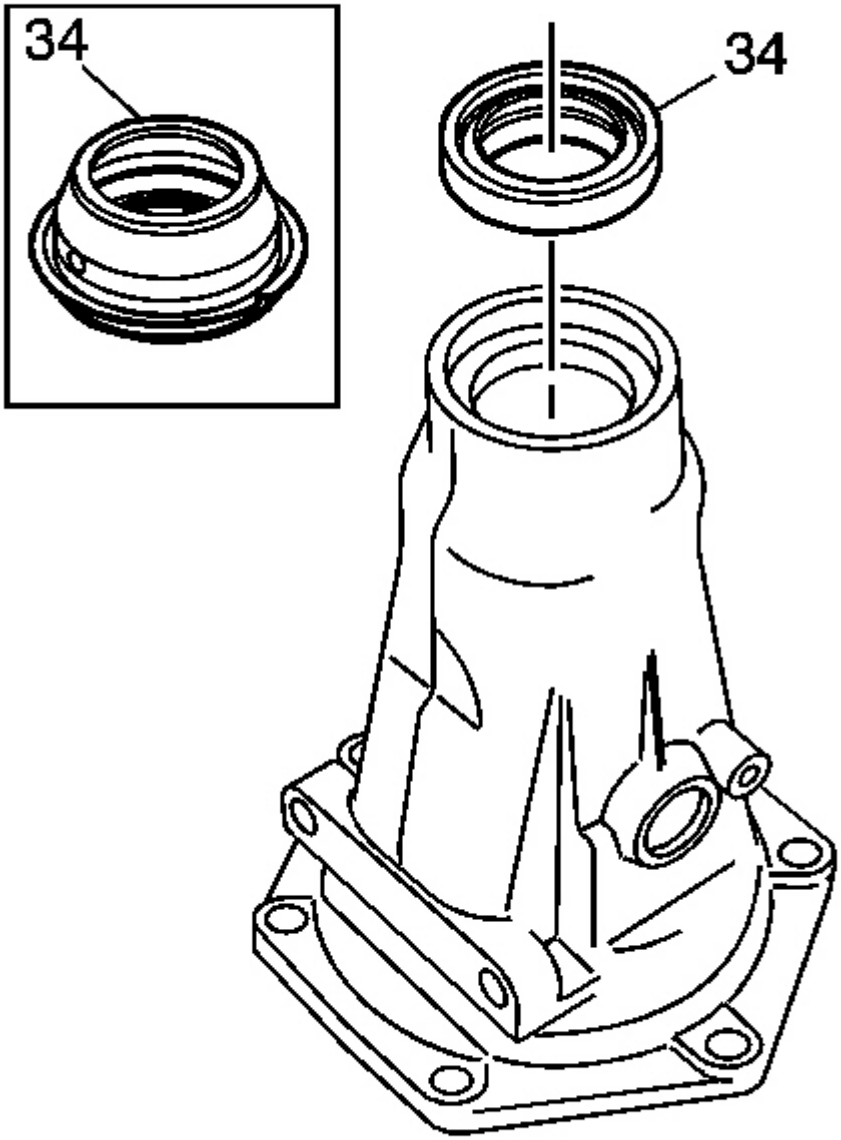

Fig. 311: View Of Case Extension Oil Seal Assembly
Courtesy of GENERAL MOTORS CORP.

cardiagn.com

2. Remove the case extension oil seal assembly (34) (model dependent).

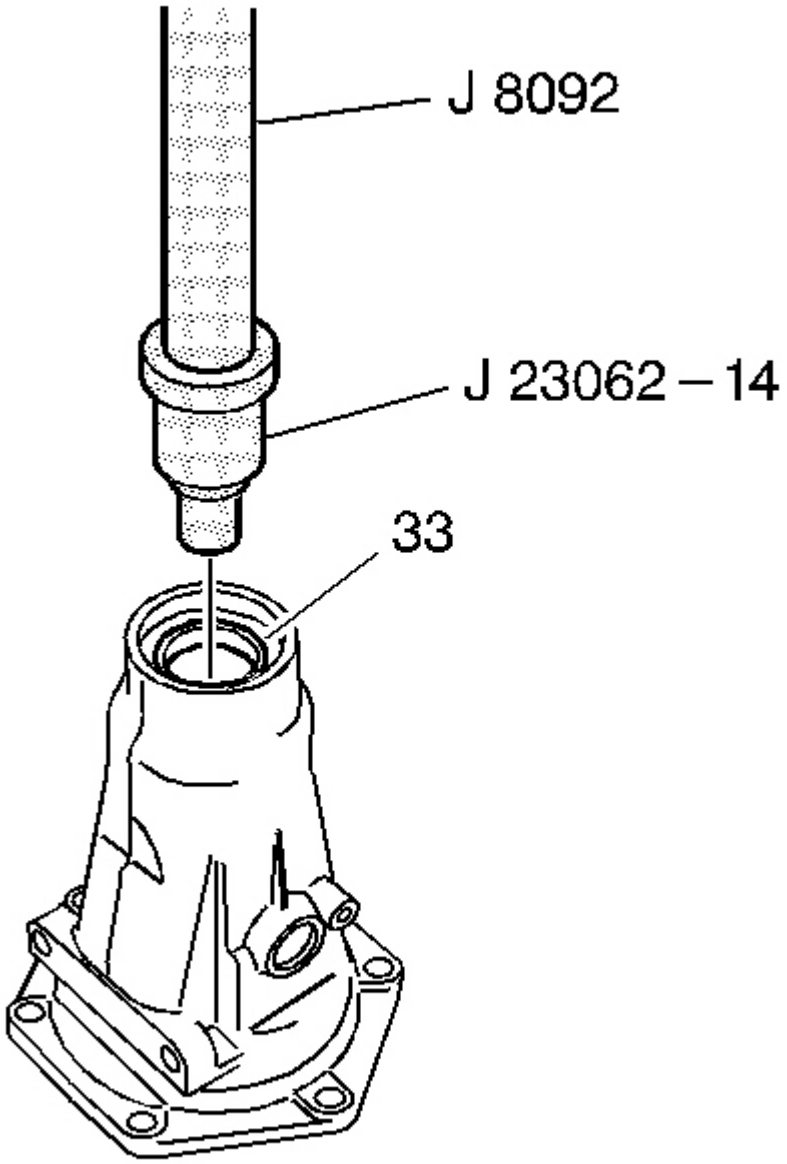

Fig. 312: Removing Case Extension Bushing
Courtesy of GENERAL MOTORS CORP.

3. Using the J 23062-14 and the J 8092 , remove the case extension bushing (33).

cardiagn.com

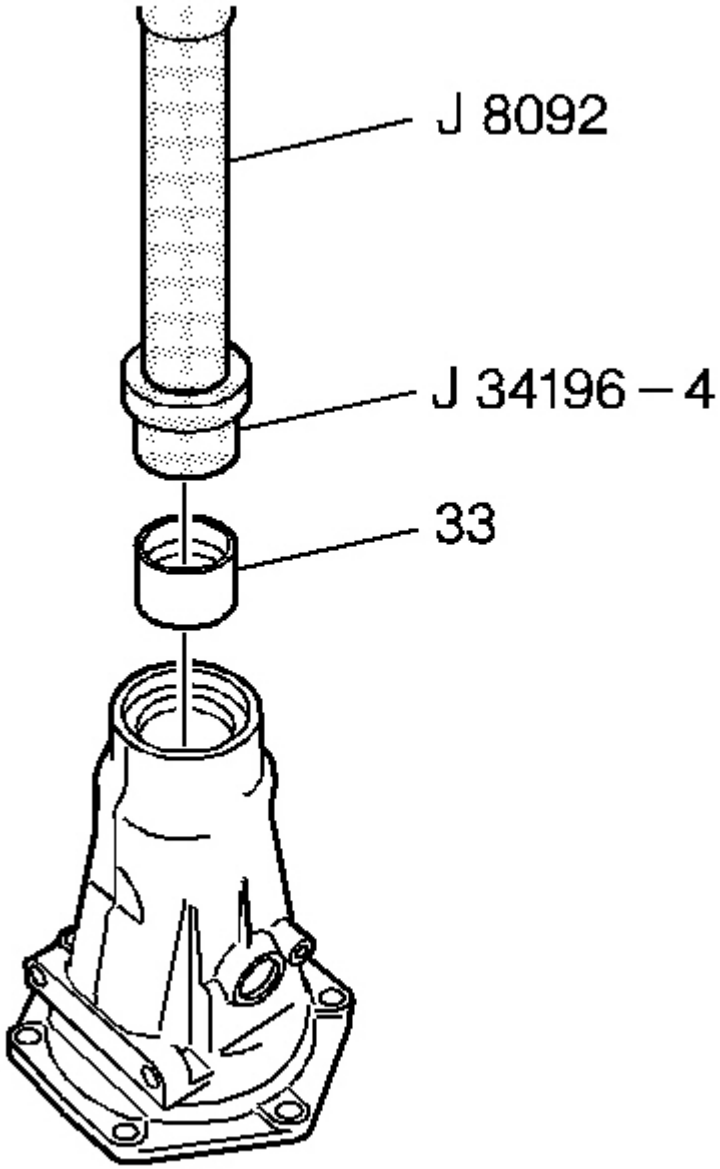

Fig. 313: Installing Case Extension Bushing
Courtesy of GENERAL MOTORS CORP.

4. Using the **J 34196-4** which is part of kit **J 34196-B** and the J 8092 , install a case extension bushing (33).

SPEED SENSOR AND CASE EXTENSION INSTALLATION (2WD APPLICATIONS ONLY)

cardiagn.com

Tools Required

J 21426 Rear Seal Installer. See **Special Tools and Equipment** .

Installation Procedure

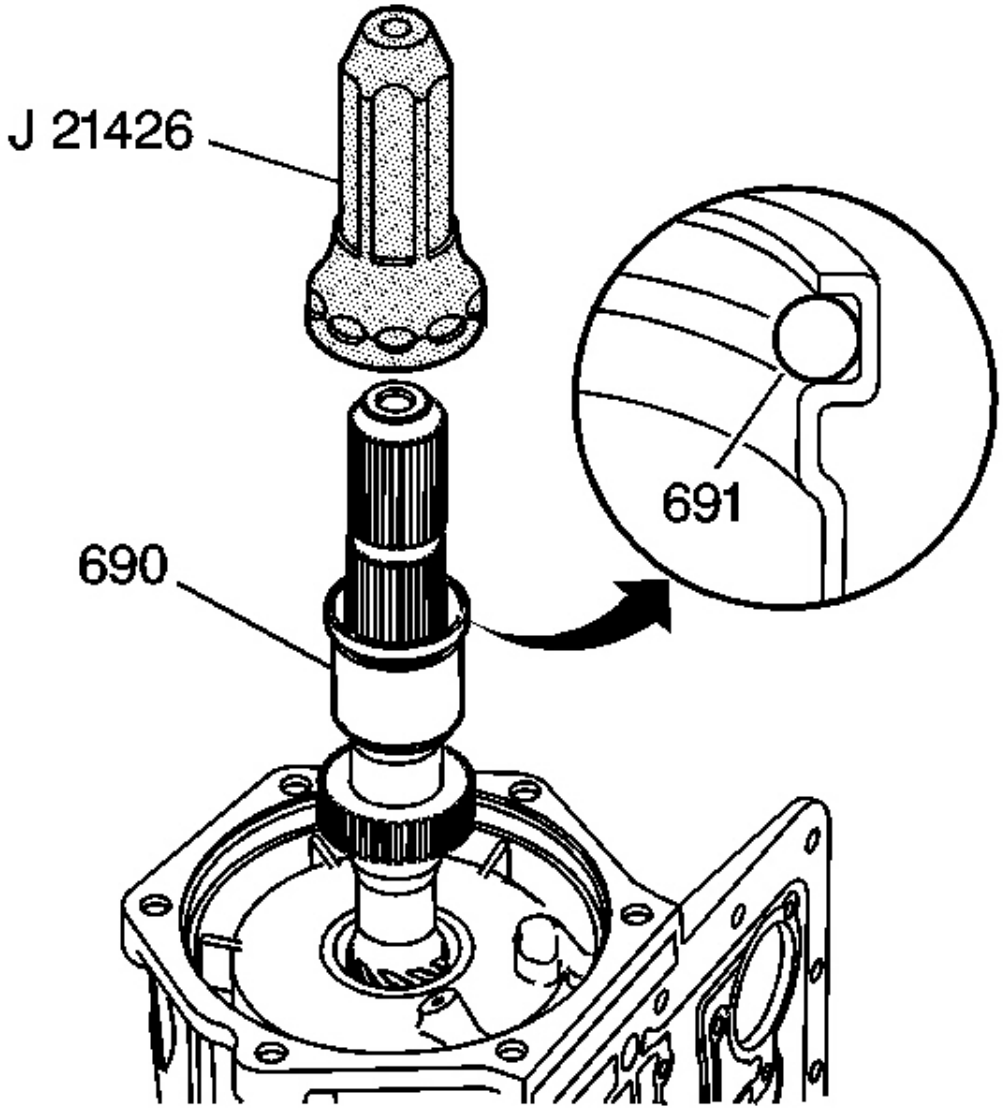

Fig. 314: Cross Sectional View Of Output Shaft Seal
Courtesy of GENERAL MOTORS CORP.

cardiagn.com

1. Using the **J 21426** , install an output shaft sleeve (690) and an output shaft seal (691).

   Do not push the sleeve past the machined surface on the output shaft.

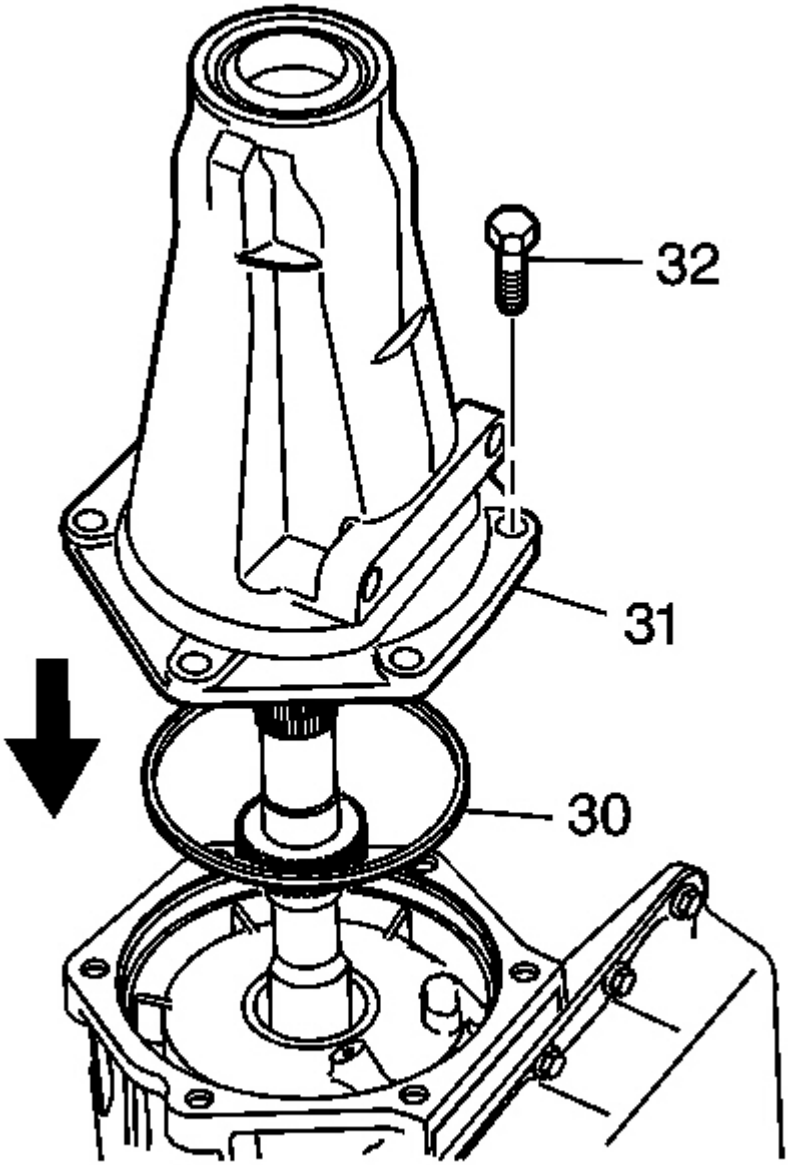

Fig. 315: Locating Case Extension Case Seal
Courtesy of GENERAL MOTORS CORP.

cardiagn.com

2. Install the case extension to case seal (30) and the case extension (31).

NOTE: Refer to Fastener Notice in Cautions and Notices.

3. Install the case extension to case bolts (32).

Tighten: Tighten the bolts to 45 N.m (33 lb ft).

cardiagn.com

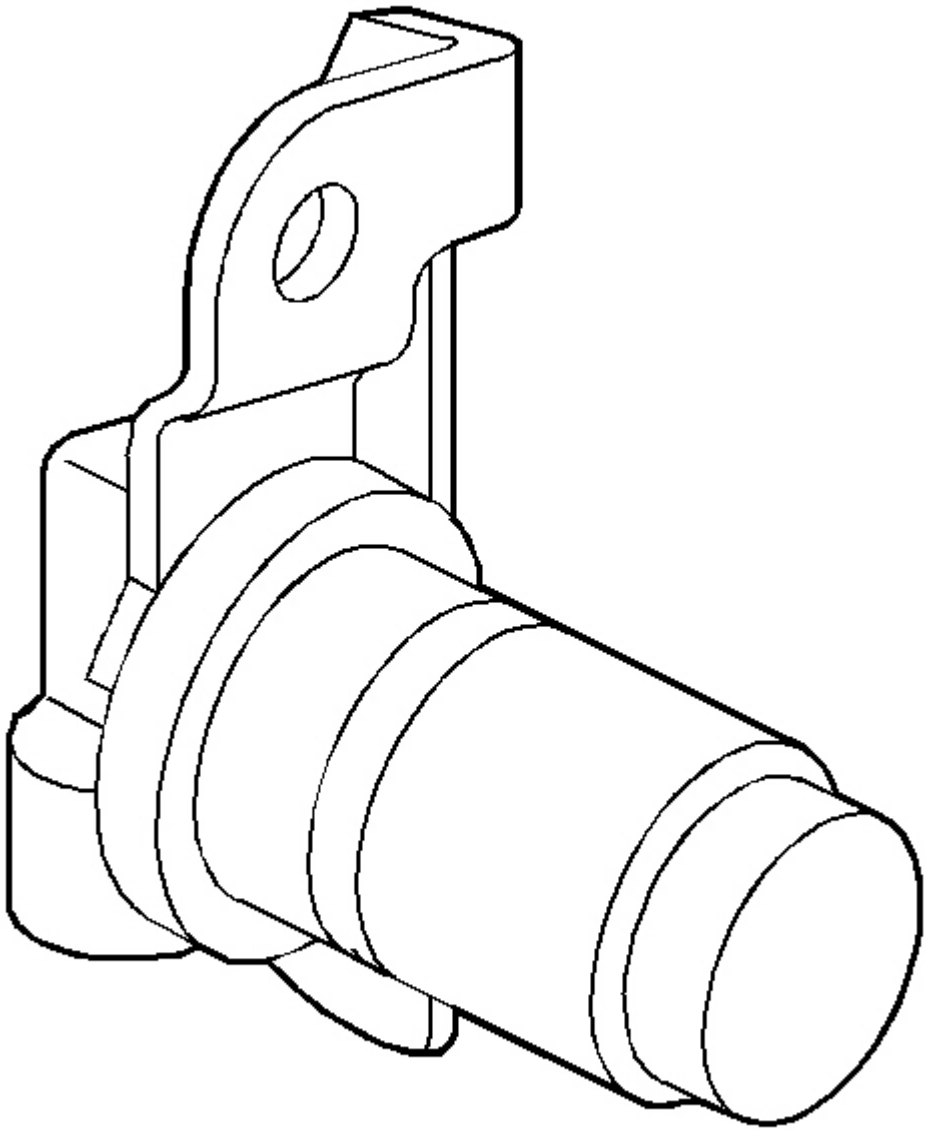

Fig. 316: Identifying Transmission Speed Sensor
Courtesy of GENERAL MOTORS CORP.

4. Inspect the transmission speed sensor for the following conditions:
    - Cracks
    - Nicks

cardiagn.com

- Damage

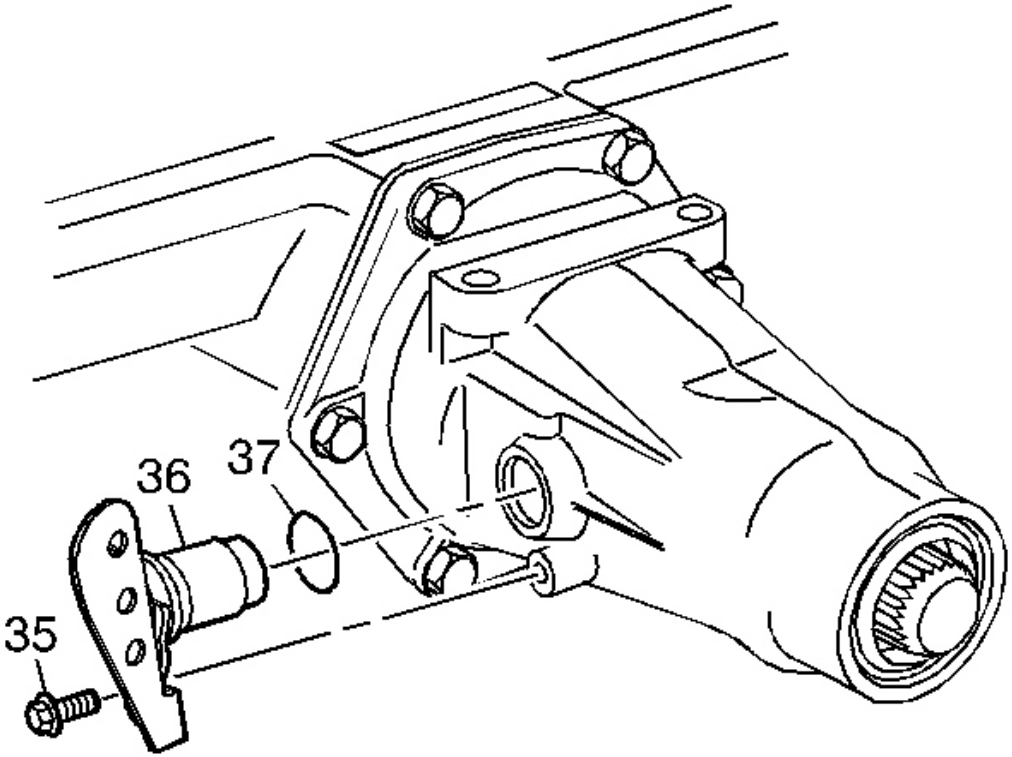

Fig. 317: View Of Internal Transmission Speed Sensor
Courtesy of GENERAL MOTORS CORP.

5. Install a new O-ring seal (37) on the internal transmission speed sensor (36).
6. Install the internal transmission speed sensor (36).
7. Install the speed sensor retaining bolt (35).

Tighten: Tighten the bolt to 12 N.m (9 lb ft).

cardiagn.com

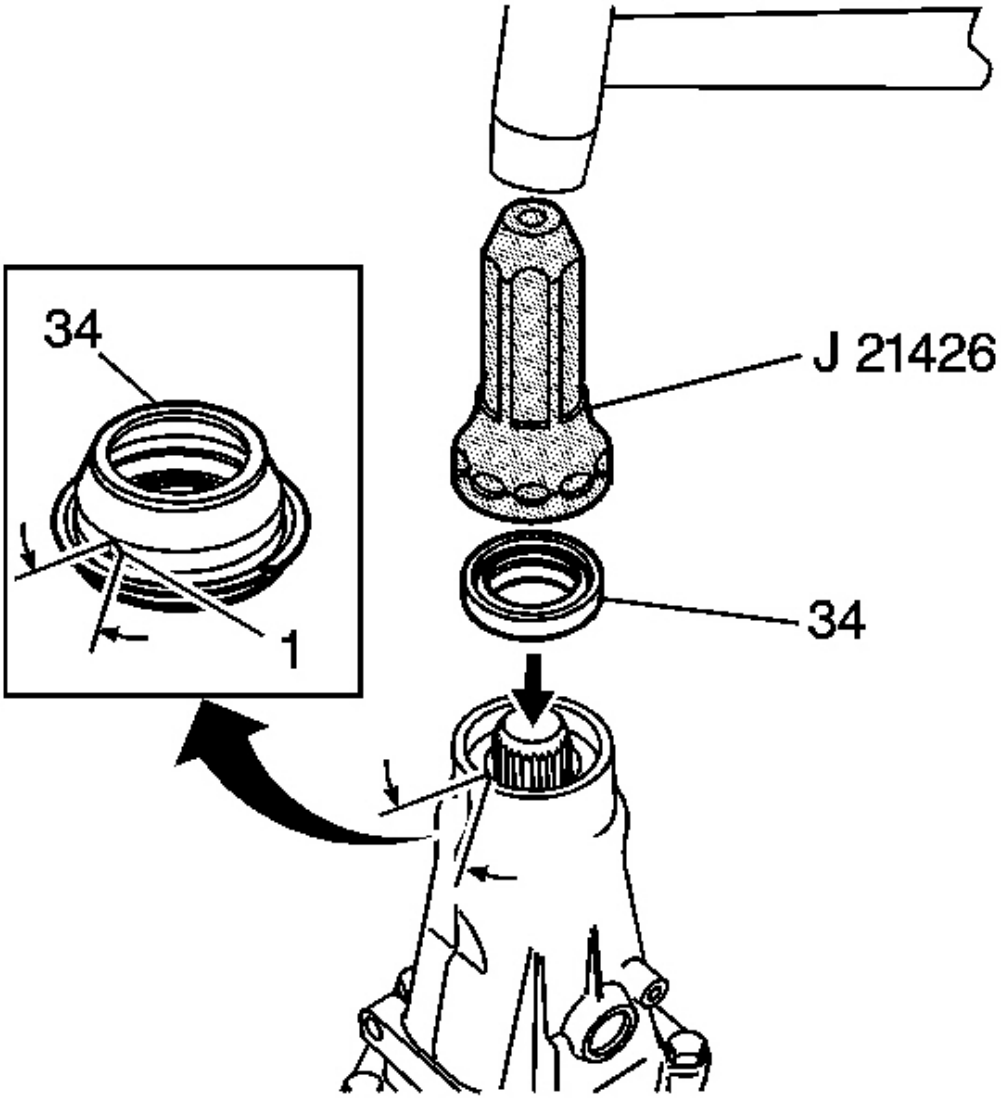

Fig. 318: Locating Case Extension Oil Seal Assembly
Courtesy of GENERAL MOTORS CORP.

8. Using the **J 21426** , install the case extension oil seal assembly (34) (model dependent).

TORQUE CONVERTER END PLAY INSPECTION

Tools Required

cardiagn.com

- **J 8001** Dial Indicator Set. See **Special Tools and Equipment** .
- **J 26900-13** Magnetic Indicator Base. See **Special Tools and Equipment** .
- **J 35138** Converter End Play Checker. See **Special Tools and Equipment** .
- **J 39195** Converter End Play Check Tool. See **Special Tools and Equipment** .

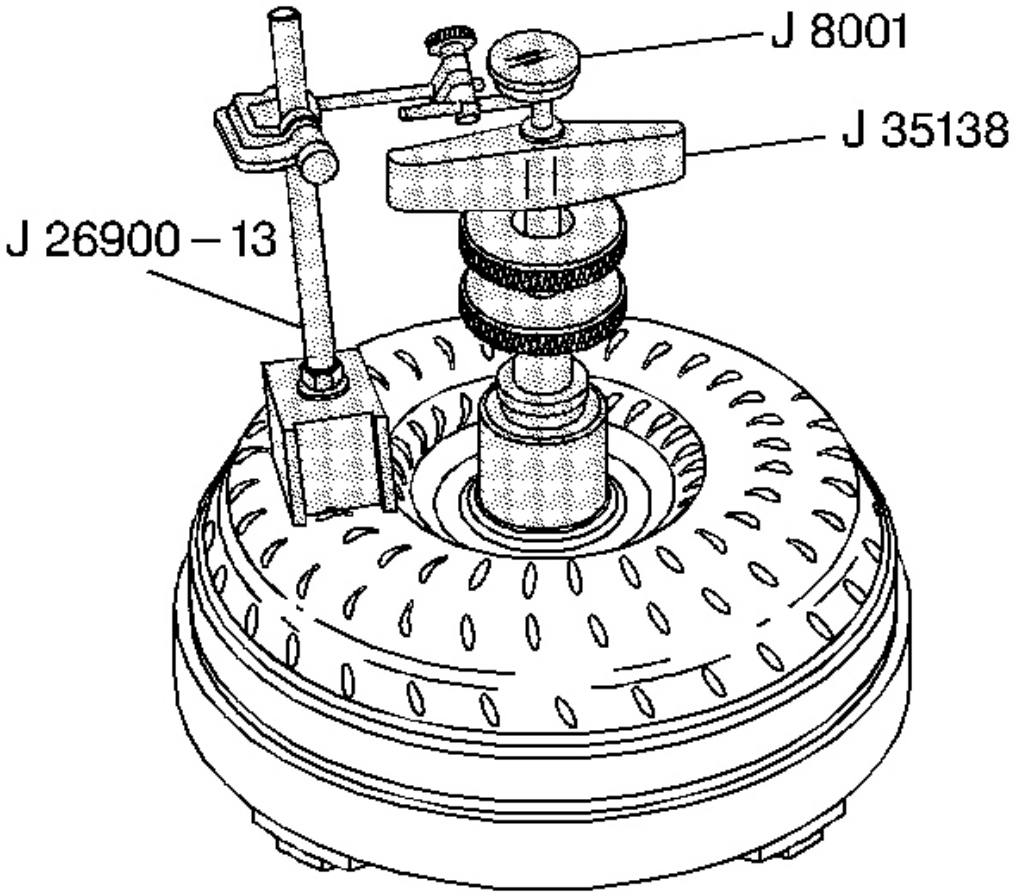

Fig. 319: Identifying J 35138, J 26900-13 & J 8001
Courtesy of GENERAL MOTORS CORP.

1. Inspect the torque converter and replace if any of the following conditions exist:
    - Evidence of damage to the pump assembly.
    - Metal particles are found after flushing the cooler and cooler lines.
    - External leaks in the hub area.
    - Converter pilot is broken, damaged or poor fit into the crankshaft.

cardiagn.com

- Converter hub is scored or damaged.
- Internal damage to the stator.
- Contamination from engine coolant.
- Excessive end play.

IMPORTANT: The torque converter should not be replaced if the fluid has an odor, discoloration or no evidence of metal or clutch plate material. Flushing the torque converter is not recommended.

2. Install the **J 35138** , the **J 26900-13** and the **J 8001** or **J 39195** to be used with the 300 mm torque converter.

   Specification:
   - The end play for a 245 mm torque converter should be 0-0.38 mm (0-0.015 in).
   - The end play for a 298 mm torque converter should be 0.1-0.48 mm (0.004-0.019 in).
   - The end play for a 258 mm and 300 mm torque converter should be 0.1-0.5 mm (0.004-0.020 in).

3. Remove the tools.

TORQUE CONVERTER INSTALLATION

Tools Required

J 21366 Converter Holding Strap. See **Special Tools and Equipment** .

Installation Procedure

CAUTION: The torque converter weighs approximately 65 lbs. Personal injury may result if you lift the torque converter improperly.

cardiagn.com

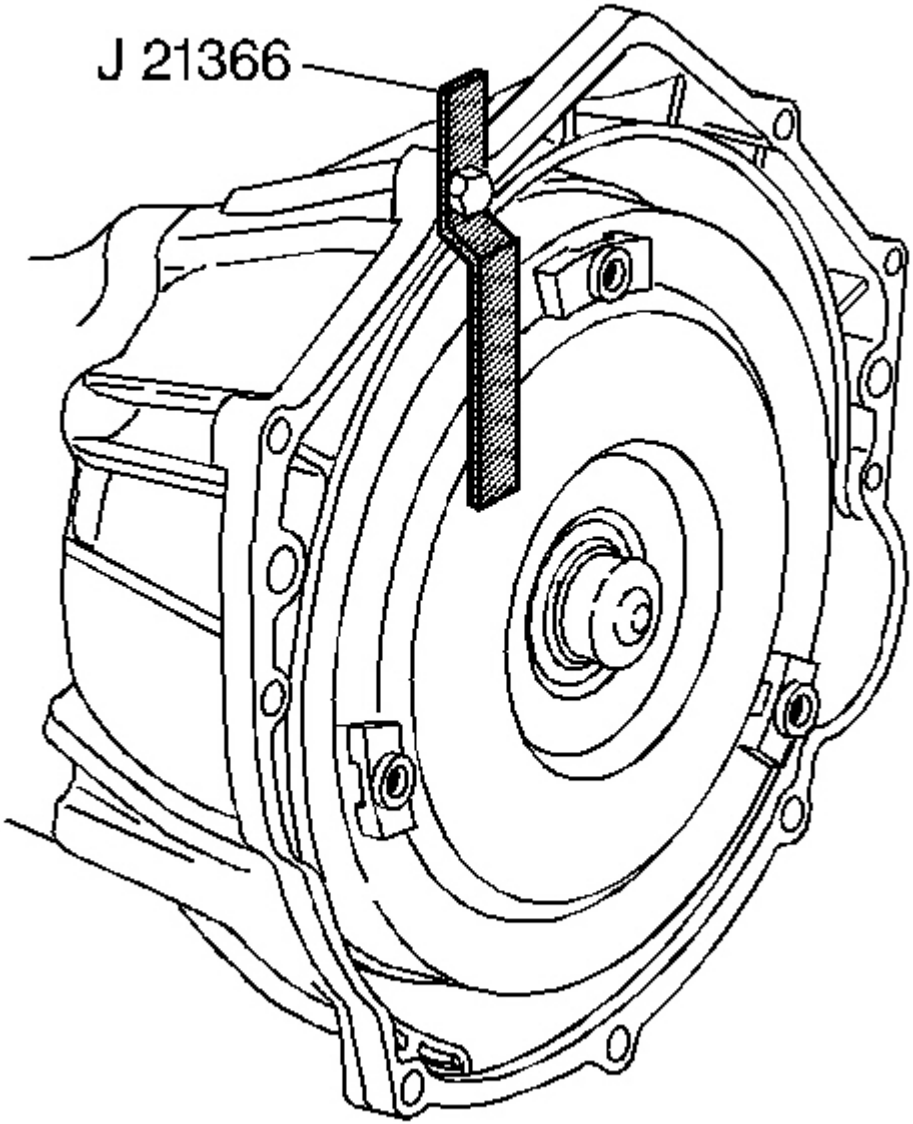

Fig. 320: View Of J 21366 Installed On Torque Converter
Courtesy of GENERAL MOTORS CORP.

1. Install the torque converter.
2. Install the **J 21366** .

HOLDING FIXTURE REMOVAL

cardiagn.com

Tools Required

J 8763-B Holding Fixture and Base. See **Special Tools and Equipment** .

Removal Procedure

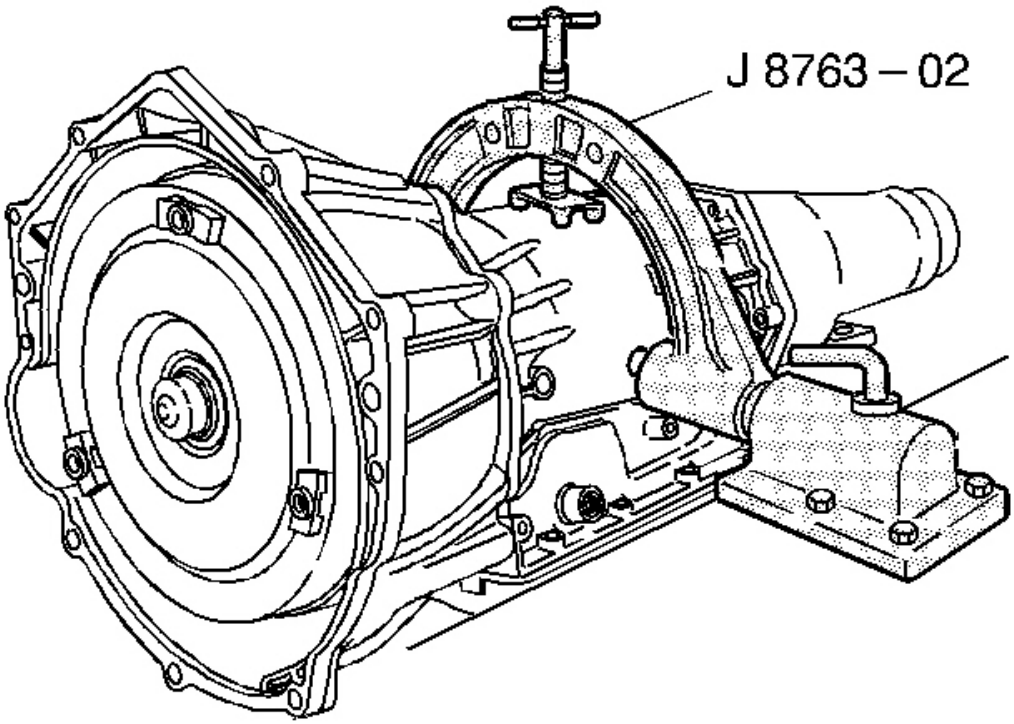

Fig. 321: View Of J 8763-B
Courtesy of GENERAL MOTORS CORP.

Remove the transmission from the **J 8763-B** .

DESCRIPTION AND OPERATION

TRANSMISSION ID INFORMATION

cardiagn.com

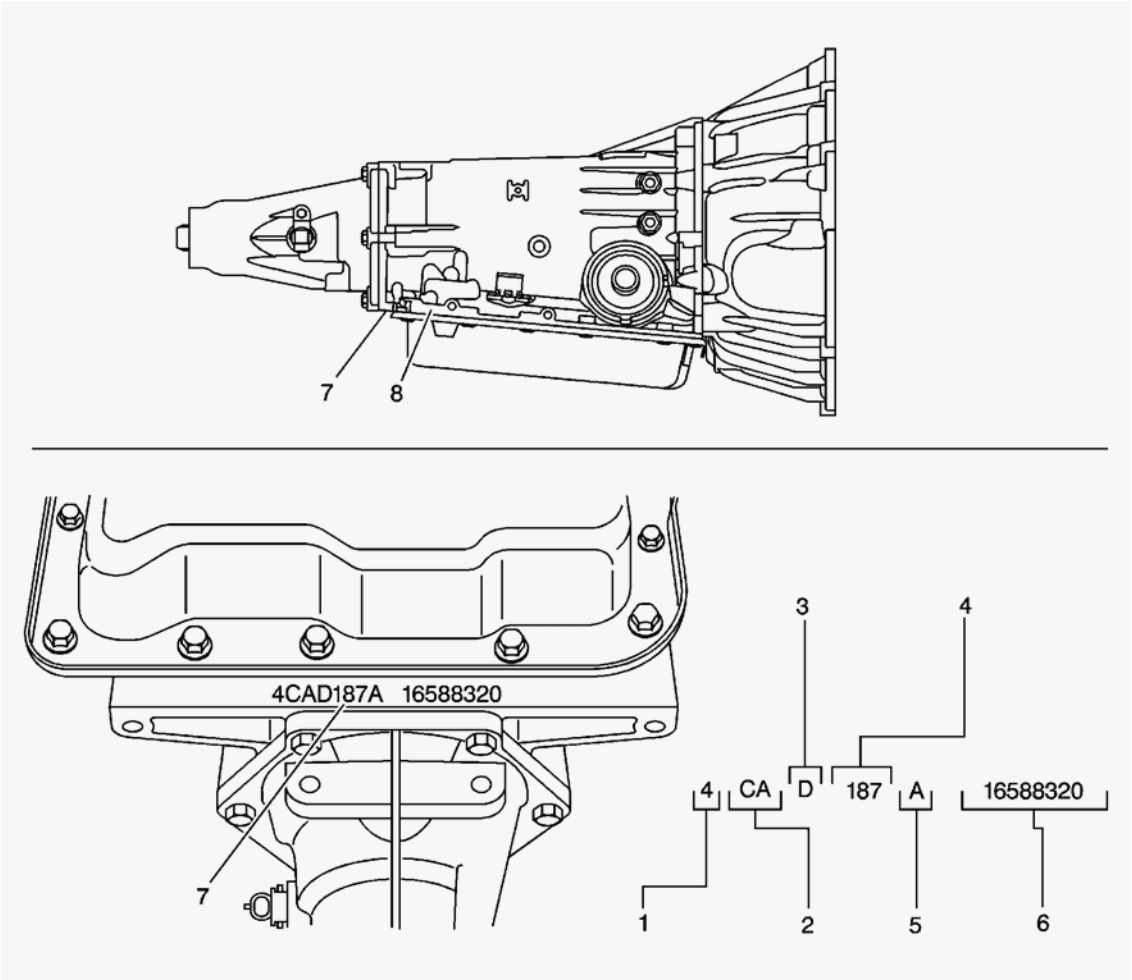

Fig. 322: Transmission ID Information
Courtesy of GENERAL MOTORS CORP.

Callouts For Fig. 322

Callout	Component Name
1	4 = 2004
2	Model
3	Hydra-Matic 4L60-E
4	Julian Date - or Day of the Year
5	Shift Built - A, B, J = First Shift; C, H, W = Second Shift
6	Serial Number
7	Transmission ID Location
7	Transmission ID Location
8	Optional Transmission ID Location

PARK - ENGINE RUNNING

With the gear selector lever in the PARK (P) position and the engine running, the line pressure from the oil

cardiagn.com

pump assembly is directed to various components in the valve body and the oil pump.

Pressure Regulator Valve

The pressure regulator valve regulates the oil pump output (line pressure) in response to the signal fluid pressure, the spring force and the line pressure acting on the end of the valve. The line pressure is routed through the valve and into both the converter feed and the decrease fluid circuits. Regulated line pressure is also directed to the manual valve, the converter clutch valve, the actuator feed limit valve, and the regulated apply valve.

Pressure Relief Valve

Controlled by spring force, this checkball limits the maximum value of the line pressure. When the line pressure reaches this limiting value, fluid is exhausted past the ball and returns to the sump.

Line Pressure Tap

The line pressure tap provides a location to measure the line pressure with a fluid pressure gage.

Actuator Feed Limit Valve

Biased by spring force and orificed AFL fluid, it limits the maximum value of line pressure entering the AFL fluid circuit. Below this limiting value, the AFL fluid pressure equals the line pressure. The AFL fluid is routed to the pressure control solenoid valve, the 3-2 control solenoid valve, the TCC PWM solenoid valve, the 1-2 and 2-3 shift solenoid valves, and the 2-3 shift valve train.

Pressure Control (PC) Solenoid Valve

Controlled by the powertrain control module (PCM), the PC solenoid valve regulates the filtered AFL fluid into the torque signal fluid pressure. The PCM controls this regulation by varying the current value to the PC solenoid valve in relation to the throttle position and other vehicle operating conditions.

Torque Converter Clutch (TCC)

Torque Converter Clutch PWM Solenoid and Regulator Apply and Isolator Valve

AFL fluid is routed to the TCC PWM solenoid valve, in Park the PCM has the duty cycle turned OFF. This prevents AFL fluid from entering the converter clutch signal fluid circuit. Regulated line pressure is routed to the regulator apply valve, which is open with CC signal circuit empty, and blocks line pressure from entering the regulated apply circuit. Any fluid in the regulated apply circuit will exhaust at the regulated apply valve.

TCC Solenoid Valve

IMPORTANT: TCC converter feed valve assembly (#4), in the converter feed circuit, prevents converter drain down. The orifice is smaller than the exhaust through the TCC solenoid valve. Therefore, fluid pressure does not build up at the end of the converter clutch apply valve.

cardiagn.com

Under normal operating conditions, the PCM keeps the normally open TCC solenoid valve de-energized (OFF). Converter feed fluid exhausts through the open TCC solenoid valve, and spring force keeps the converter clutch apply valve in the release position.

Converter Clutch Valve

Held in the release position by spring force, it directs converter feed fluid into the release fluid circuit. Also, fluid returning from the converter in the apply fluid circuit is routed through the valve and into the cooler fluid circuit.

Torque Converter

Release fluid pressure unseats the TCC apply checkball (#9), keeps the pressure plate released from the converter cover and fills the converter with fluid. Fluid exits the converter between the converter hub and the stator shaft in the apply fluid circuit.

Cooler and Lubrication System

Cooler fluid from the converter clutch apply valve is routed through the transmission fluid cooler and into the lubrication fluid circuits.

Manual Valve

Controlled by the selector lever and the manual shaft, the manual valve is in the Park (P) position and directs the line pressure into the PR (Park/Reverse) fluid circuit. Line pressure is blocked from entering any other fluid circuit at the manual valve.

Lo and Reverse Clutch Applies

Lo and Reverse Clutch Piston

The PR fluid seats the lo and reverse clutch checkball (#10) and is orificed to the outer area of the piston. Orificing the PR fluid around the #10 checkball helps control the lo and reverse clutch apply. Also, Lo/reverse fluid pressure from the lo overrun valve acts on the inner area of the lo and reverse clutch piston in order to increase the clutch holding capacity.

Lo Overrun Valve

The PR fluid pressure moves the valve against the spring force and fills the Lo/reverse fluid circuit. Lo/reverse fluid is orificed (323) back to the lo overrun valve in order to assist the PR fluid in moving the valve against the spring force. The spring force provides a time delay for the PR fluid filling the Lo/reverse fluid circuit. The Lo/reverse fluid is routed to the inner area of the lo and reverse clutch piston in order to increase the holding capacity of the clutch.

Transmission Fluid Pressure (TFP) Manual Valve Position Switch Assembly

The TFP manual valve position switch consists of five fluid pressure switches: D2 and D3 are normally closed and D4, Lo and Rev are normally open. All fluid circuits routed to the assembly are empty and the TFP manual

cardiagn.com

valve position switch signals the PCM that the transmission is in either Park or Neutral.

Shift Solenoid Valves (1-2 and 2-3)

Both shift solenoid valves, which are normally open, are energized by the PCM and block fluid from exhausting. This maintains the signal A fluid pressure at the 1-2 shift solenoid valve and signal B fluid pressure at the 2-3 shift solenoid valve.

Shift Valves (1-2, 2-3 and 3-4)

Signal A fluid pressure holds the 1-2 shift valve in the downshift position and the 3-4 valve in the upshift (first and fourth gear) position. The signal B fluid pressure from the 2-3 shift solenoid valve holds the 2-3 shift valve train in the downshift position.

cardiagn.com

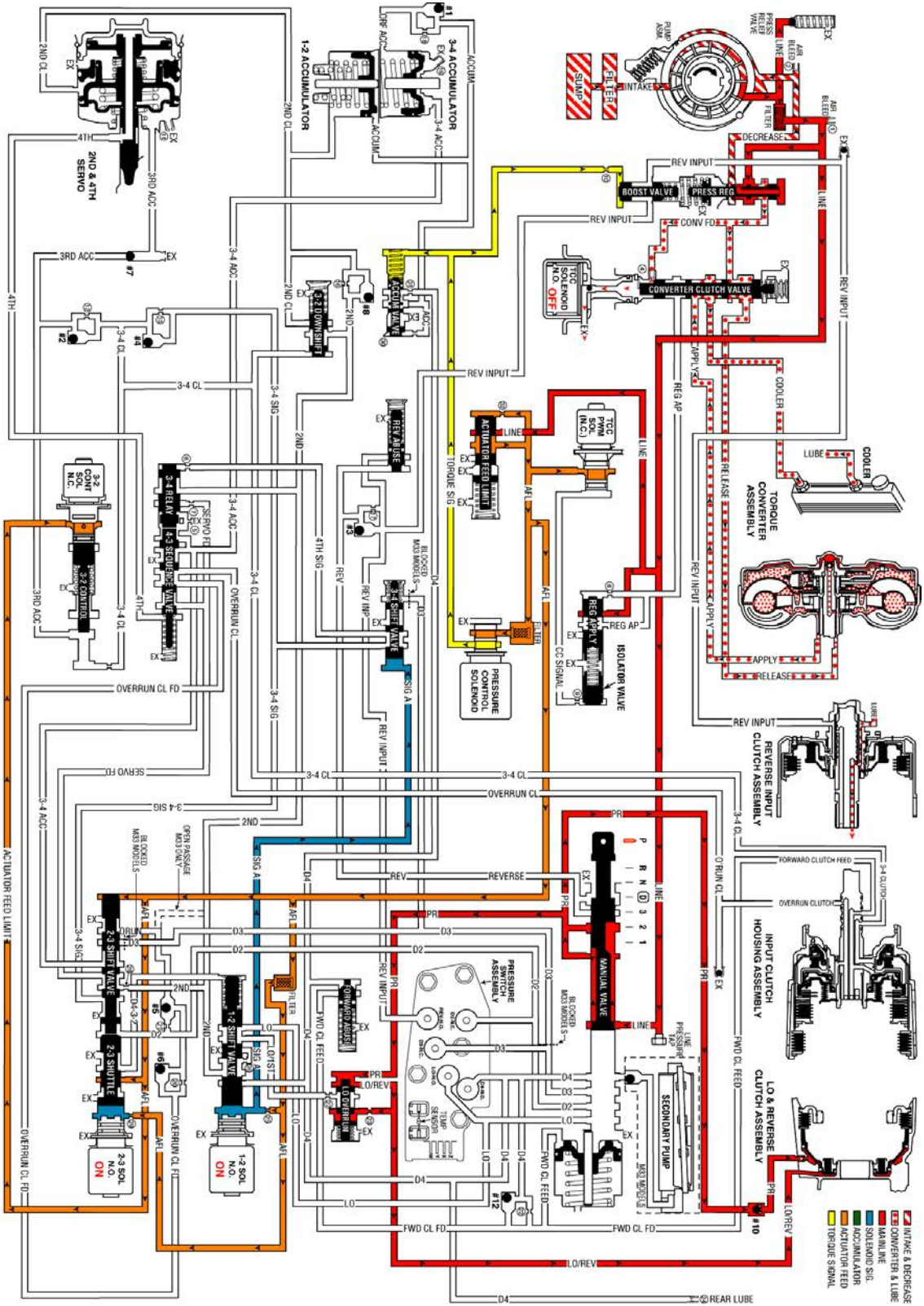

Fig. 323: Park - Engine Running
Courtesy of GENERAL MOTORS CORP.

cardiagn.com

REVERSE

When the gear selector lever is moved to the Reverse (R) position (from the Park position), the following changes occur to the transmissions hydraulic and electrical systems:

Manual Valve

The manual valve moves to the Reverse position and line pressure enters the reverse fluid circuit. As in Park, line pressure also fills the PR (Park/Reverse) fluid circuit. All other fluid circuits are blocked by the manual valve.

Lo and Reverse Clutch

As in Park, PR fluid pressure acts on the outer area of the lo and reverse clutch piston to apply the lo and reverse clutch. Also, Lo/reverse fluid from the lo overrun valve acts on the inner area of the piston to increase the holding capacity of the clutch (see Note below).

Reverse Input Checkball (#3)

Reverse fluid pressure seats the #3 checkball, flows through orifice #17 and fills the reverse input fluid circuit. This orifice helps control the reverse input clutch apply rate when engine speed is at idle.

Reverse Abuse Valve

Reverse fluid pressure acts on the end of the valve opposite of spring force. At engine speeds above idle, reverse fluid pressure, which is fed by line pressure, increases and moves the valve against spring force (as shown). Reverse fluid can then fill the reverse input fluid circuit through the reverse abuse valve. This bypasses the control of orifice #17 and provides a faster clutch apply.

Boost Valve

Reverse input fluid pressure moves the boost valve against the pressure regulator valve spring. The spring acts on the pressure regulator valve to increase the operating range of line pressure in Reverse. Reverse input fluid also flows through the valve and to the reverse input clutch piston. Remember that torque signal fluid pressure continually acts on the boost valve to control line pressure in response to vehicle operating conditions.

Reverse Input Clutch Piston

Reverse input fluid pressure moves the piston to apply the reverse input clutch plates and obtain Reverse.

Reverse Input Air Bleed Checkball

This ball and capsule is located in the reverse input fluid circuit in the oil pump to provide an air escape when the fluid pressure increases. It also allows air into the circuit to displace the fluid when the clutch releases.

Transmission Fluid Pressure (TFP) Manual Valve Position Switch Assembly

cardiagn.com

Reverse input fluid pressure closes the normally open reverse switch in the TFP manual valve position switch This signals the PCM that the manual valve is in the Reverse (R) position.

Shift Solenoid Valves (1-2 and 2-3)

Both shift solenoid valves are energized as in the Park range. Signal A and signal B fluids are blocked from exhausting through the shift solenoid valves to maintain fluid pressure in these circuits at the end of the shift valves.

Shift Valves (1-2, 2-3 and 3-4)

Signal A fluid pressure holds the 1-2 shift valve in the downshifted position and the 3-4 shift valve in the upshifted (First and Fourth gear) position. Signal B fluid pressure from the 2-3 shift solenoid valve holds the 2-3 shift valve train in the downshifted position.

Pressure Control (PC) Solenoid Valve

The PC solenoid valve continues to regulate AFL fluid into torque signal fluid pressure. The PCM varies the current at the solenoid to regulate torque signal fluid pressure in response to throttle position and other PCM input signals. Torque signal fluid pressure is used to control line pressure at the boost and pressure regulator valves.

Note: The explanation in each gear range is, for the most part, limited.

cardiagn.com

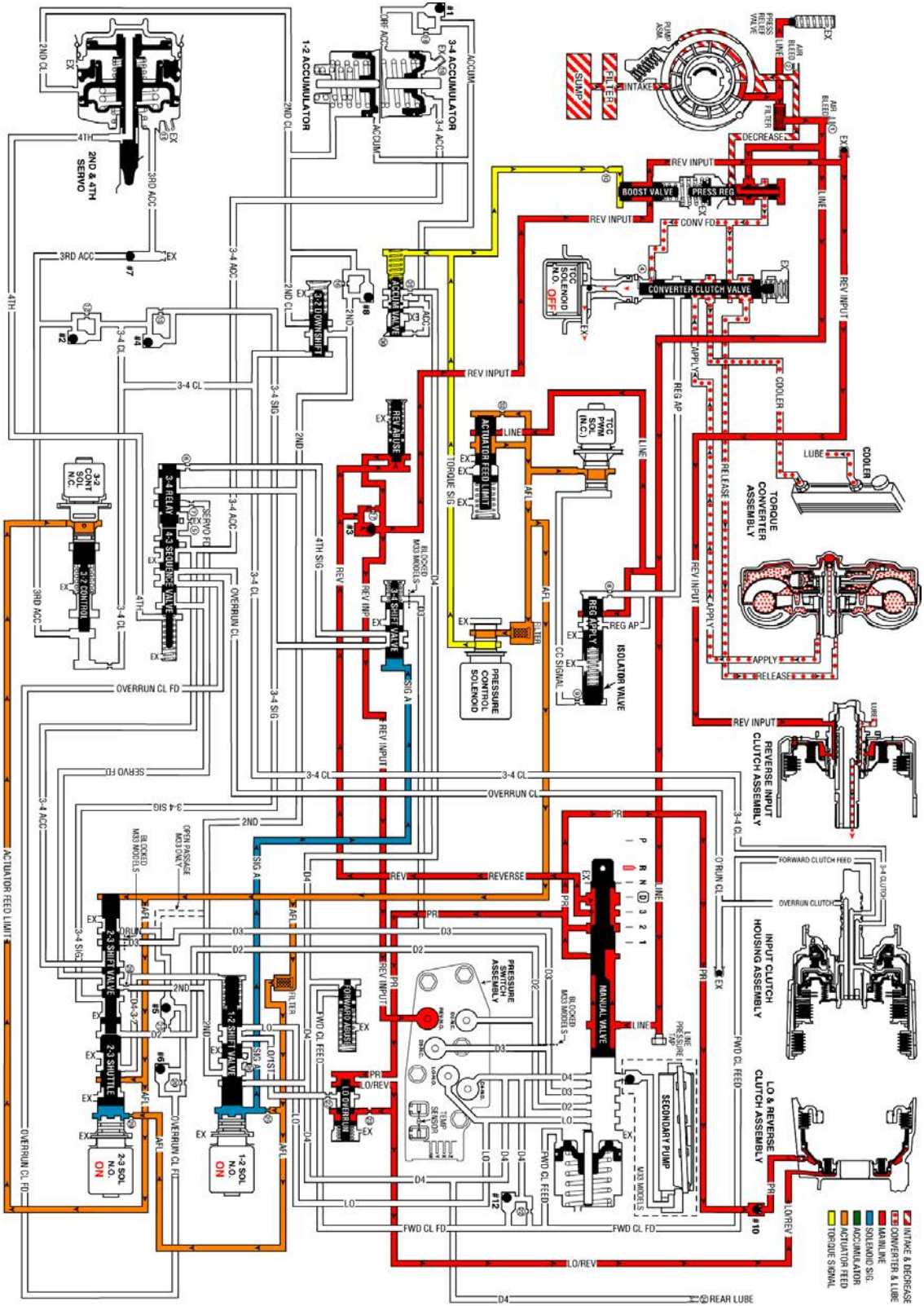

Fig. 324: Reverse
Courtesy of GENERAL MOTORS CORP.

cardiagn.com

NEUTRAL - ENGINE RUNNING

When the gear selector lever is moved to the Neutral position (N) from the Reverse position, the following changes occur to the transmission hydraulic and electrical systems.

Manual Valve

In the Neutral position, the manual valve blocks the line pressure from entering any other fluid circuits. Reverse and PR fluids exhaust past the manual valve.

Lo and Reverse Clutch Releases

Lo and Reverse Clutch Piston

PR and Lo/reverse fluids exhaust from the piston, thereby releasing the lo and reverse clutch plates. Exhausting PR fluid unseats the lo and reverse clutch checkball (#10) for a quick exhaust.

Lo Overrun Valve

Spring force closes the valve when the PR fluid pressure exhausts. Lo/reverse fluid exhausts through the valve, into the Lo/1st fluid circuit, past the 1-2 shift valve, into the Lo fluid circuit and through an exhaust port at the manual valve.

Reverse Input Cutch Releases

Reverse Input Clutch Piston

Reverse input fluid pressure exhausts from the piston, through the boost valve, past the #3 checkball and to the manual valve. With the reverse input fluid exhausted, the reverse input clutch plates are released and the transmission is in Neutral.

Reverse Abuse Valve

Reverse fluid pressure exhausts and spring force closes the valve.

Boost Valve

Reverse input fluid pressure exhausts and line pressure returns to the normal operating range as in the Park and Overdrive positions.

Reverse Input Checkball (#3)

Exhausting reverse input fluid unseats the ball for a quick exhaust through the reverse fluid circuit and past the manual valve.

Transmission Fluid Pressure (TFP) Manual Valve Position Switch Assembly

cardiagn.com

IMPORTANT: In Park, Reverse and Neutral the shift solenoid valves are shown energized. This is the normal operating state when the vehicle is stationary or at low vehicle speeds. However, the PCM will change the shift solenoid valve states depending on the vehicle speed. For example, if Neutral is selected when the transmission is operating in Second Gear, the shift solenoid valves will remain in a Second Gear state. However, with the manual valve blocking line pressure, the shift solenoid valve states do not affect transmission operation in Park, Reverse and Neutral.

Reverse input fluid exhausts from the TFP manual valve position switch. With no other fluid routed to it, the TFP manual valve position switch signals the PCM that the transmission is operating in either Park or Neutral.

cardiagn.com

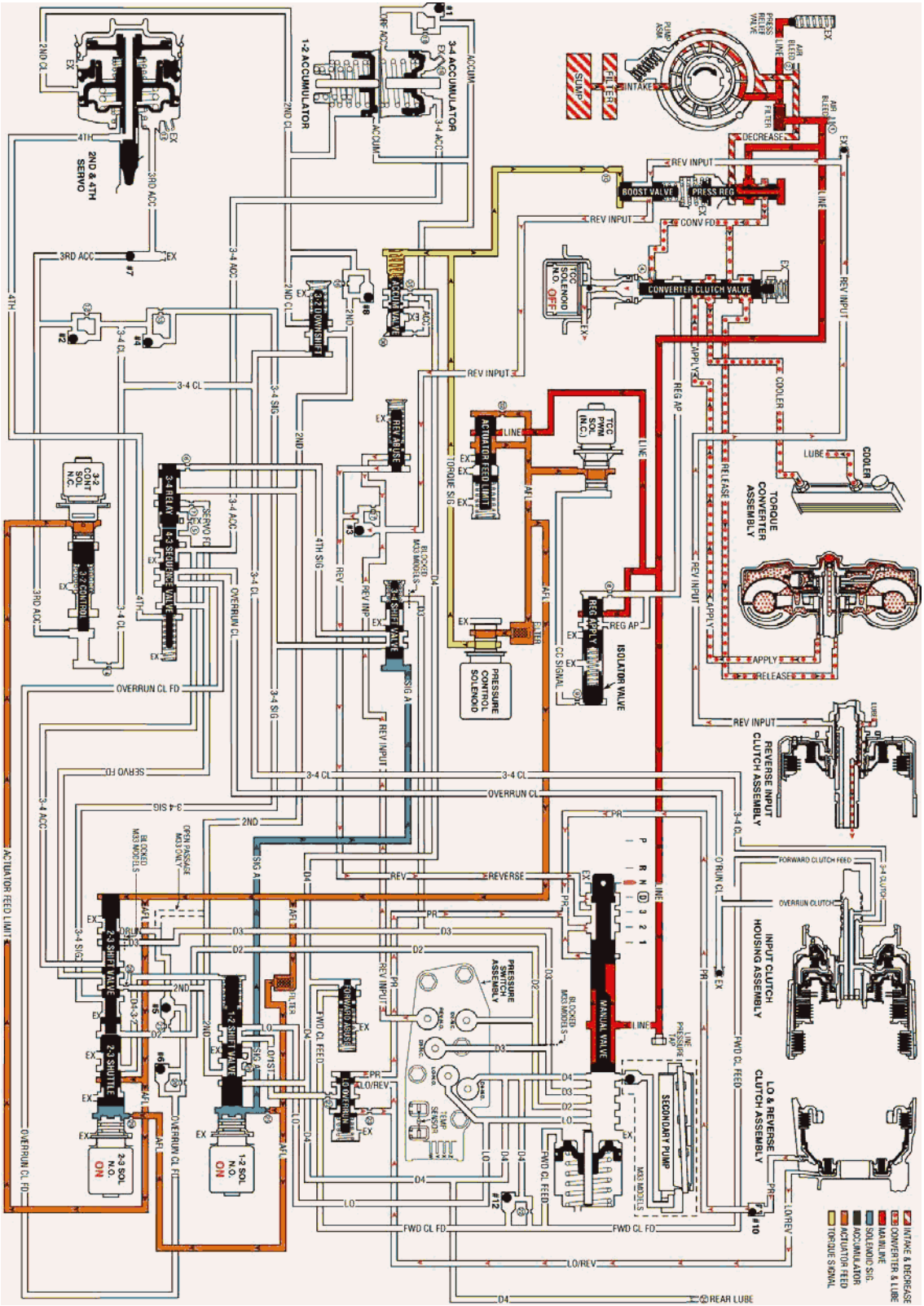

Fig. 325: Neutral - Engine Running
Courtesy of GENERAL MOTORS CORP.

cardiagn.com

OVERDRIVE RANGE, FIRST GEAR

When the gear selector lever is moved to the Overdrive position, from the neutral position, the following changes occur to the transmission's hydraulic and electrical systems:

Manual Valve

Line pressure flows through the manual valve and fills the D4 fluid circuit. All other fluid circuits remain empty with the manual valve in the Overdrive position.

Forward Clutch Applies

Forward Clutch Accumulator Checkball (#12)

D4 fluid pressure seats the checkball and is orificed (#22) into the forward clutch feed fluid circuit. This orifice helps control the forward clutch apply rate.

Forward Clutch Accumulator Piston

Forward clutch feed fluid pressure moves the piston against spring force. This action absorbs some of the initial increase of forward clutch feed fluid pressure to cushion the forward clutch apply.

Forward Clutch Abuse Valve

D4 fluid pressure acts on the valve opposite of spring force. At engine speeds greater than idle, D4 fluid pressure increases and moves the valve against spring force (as shown). D4 fluid can then quickly fill the forward clutch feed fluid circuit, thereby bypassing the control of orifice #22 and providing a faster apply of the forward clutch. Otherwise, with increased throttle opening and engine torque, the clutch may slip during apply.

Transmission Fluid Pressure (TFP) Manual Valve Position Switch Assembly

D4 fluid pressure is routed to the TFP manual valve position switch and closes the normally open D4 fluid pressure switch. This signals the PCM that the transmission is operating in Overdrive range.

1-2 Shift Solenoid (SS) Valve

Energized (ON) as in Neutral, the normally open solenoid is closed and blocks signal A fluid from exhausting through the solenoid. This maintains pressure in the signal A fluid circuit.

2-3 Shift Solenoid (SS) Valve

Energized (ON) as in Neutral, the normally open solenoid is closed and blocks signal B fluid from exhausting through the solenoid. This maintains signal B fluid pressure at the solenoid end of the 2-3 shift valve.

2-3 Shift Valve Train

Signal B fluid pressure at the solenoid end of the 2-3 shift valve holds the valve train in the downshifted position against AFL fluid pressure acting on the 2-3 shift valve. In this position, the 2-3 shuttle valve blocks

cardiagn.com

AFL fluid from entering the D432 fluid circuit. The D432 fluid circuit is open to an exhaust port past the valve.

1-2 Shift Valve

Signal A fluid pressure holds the valve in the downshifted position against spring force. In the First gear position, the valve blocks D4 fluid from entering the 2nd fluid circuit.

Accumulator Valve

Biased by torque signal fluid pressure, spring force and orificed accumulator fluid pressure at the end of the valve, the accumulator valve regulates D4 fluid into accumulator fluid pressure. Accumulator fluid is routed to both the 1-2 and 3-4 accumulator assemblies in preparation for the 1-2 and 3-4 upshifts respectively.

Rear Lube (All Except Y-Car)

D4 fluid is routed through an orifice cup plug (#24) in the rear of the transmission case to feed the rear lube fluid circuit.

Pressure Control (PC) Solenoid Valve

Remember that the PC solenoid valve continually varies torque signal fluid pressure in relation to throttle position and vehicle operating conditions. This provides a precise control of line pressure.

3-2 Control Solenoid Valve

The PCM keeps the solenoid OFF in First gear and the normally closed solenoid blocks filtered AFL fluid from entering the 3-2 signal fluid circuit.

Torque Converter Clutch PWM Solenoid Valve

In first gear, at approximately 6 mph, the PCM operates the TCC PWM solenoid valve at approximately a 90 percent duty cycle. This opens the AFL fluid circuit, to fill the converter clutch signal fluid circuit through the #9 orifice, and flows to the isolator valve. The CC signal fluid pressure, acting on the isolator valve, will move the regulated apply valve towards the closed position. Regulated line pressure is now routed into the regulated apply circuit, and flows to the closed converter clutch valve, and is blocked from entering the converter clutch apply circuit. Regulated apply fluid is routed through the #8 orifice to the front of the regulated apply valve, and regulates the line pressure entering the regulated apply circuit, in response to the CC signal fluid acting on the isolator valve.

cardiagn.com

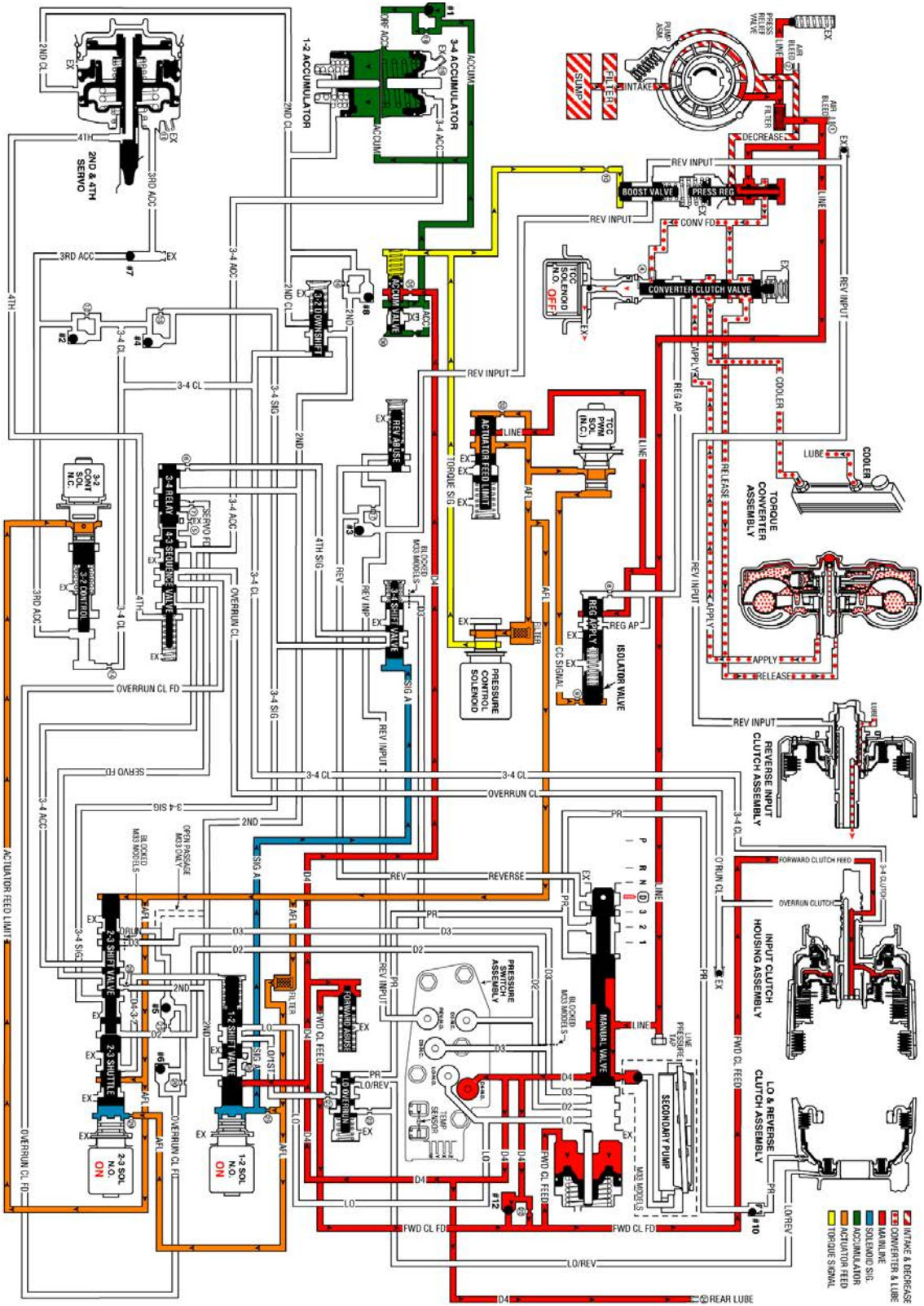

Fig. 326: Overdrive Range, First Gear
Courtesy of GENERAL MOTORS CORP.

cardiagn.com

OVERDRIVE RANGE, SECOND GEAR

As vehicle speed increases and other operating conditions are appropriate, the PCM de-energizes the 1-2 shift solenoid valve in order to shift the transmission to second gear.

1-2 Shift Solenoid (SS) Valve

De-energized (turned OFF) by the PCM, the normally open solenoid opens and signal A fluid exhausts through the solenoid.

2-3 Shift Solenoid (SS) Valve

IMPORTANT: The actuator feed limit (AFL) fluid continues to feed the signal A fluid circuit through orifice #25. However, the exhaust port through the solenoid is larger than orifice #25 in order to prevent a pressure buildup in the signal A fluid circuit. Exhausting signal A fluid is represented by the blue arrows.

Energized (ON) as in first gear, the 2-3 shift solenoid valve blocks signal B fluid from exhausting through the solenoid. This maintains signal B fluid pressure at the solenoid end of the 2-3 shift valve.

1-2 Shift Valve

Without signal A fluid pressure, spring force moves the valve into the upshift position. D4 fluid is routed through the valve and fills the 2nd fluid circuit.

1-2 Shift Checkball (#8)

The 2nd fluid pressure seats the #8 checkball, flows through orifice #16, and fills the 2nd clutch fluid circuit. This orifice helps control the 2-4 band apply rate.

2-4 Servo Assembly

The 2nd clutch fluid pressure moves the #8 checkball, flows through orifice #16 and fills the 2nd clutch fluid circuit. This orifice helps to control the 2-4 band apply rate.

1-2 Accumulator

The 2nd clutch fluid pressure also moves the 1-2 accumulator piston against the spring force and the accumulator fluid pressure. This action absorbs the initial 2nd clutch fluid pressure in order to cushion the 2-4 band apply rate. Also, the movement of the 1-2 accumulator piston forces some accumulator fluid out of the accumulator assembly. This accumulator fluid is routed back to the accumulator valve.

Accumulator Valve

The accumulator fluid forced out of the 1-2 accumulator is orificed (#30) to the end of the accumulator valve. This pressure moves the valve against the spring force and the torque signal fluid pressure in order to regulate the exhaust of excess accumulator fluid. This regulation provides additional control for the 2-4 band apply rate.

cardiagn.com

The fluid circuit shows the exhaust of the accumulator fluid during the shift by the arrow directions in the accumulator fluid circuit.

2-3 Shift Valve Train

The signal B fluid pressure from the 2-3 shift solenoid valve holds the valve train in the downshift position. The 2nd fluid is routed through the 2-3 shuttle valve and fills the servo feed fluid circuit.

3-4 Relay Valve and 4-3 Sequence Valve

Spring force holds these valves in the downshift position (first, second and third gear positions). The 2nd fluid is blocked by the 3-4 relay valve and the servo feed fluid is blocked by both valves in preparation for a 3-4 upshift.

3-2 Downshift Valve

Spring force holds the valve closed, blocking the 2nd fluid and the 2nd clutch fluid. This valve is used in order to help control the 3-2 downshift.

3-2 Control Solenoid Valve

In second gear, the PCM energizes the normally closed solenoid. This opens the AFL fluid circuit to fill the 3-2 signal fluid circuit.

3-2 Control Valve

The 3-2 signal fluid pressure moves the valve against the spring force. This action does not affect the transmission operation in second gear.

3-4 Shift Valve

Signal A fluid pressure exhausts and spring force moves the valve into the downshift position (second and third gear positions).

Overrun Clutch Applied - M33 Only

In order to achieve the highest fuel efficiency, the overrun clutch is applied during vehicle coast and braking. With the transmission in overdrive and either second or third gear, the overrun clutch is applied, allowing power to be transferred back through the torque converter to the electric machine and engine.

With the transmission in the D4 range and in either third or second gear, the M33 model applies the overrun clutch in order to maximize fuel efficiency during vehicle coast and braking. In this state, vehicle inertia is used to drive the engine and the electrical machine through the transmission. While in D4 third gear, the 2-3 SS valve is de-energized and the 2-3 shift valve train is in the upshift position. However, D3 oil is not available to apply the overrun clutch. In order to apply the overrun clutch, the spacer plate is used to redirect D2 oil to the overrun clutch circuit through the 2-3 valve train.

cardiagn.com

In D4 second gear, the 2-3 SS valve is energized and the 2-3 shift valve train is in the downshift position normally allowing overrun clutch circuit to exhaust. With the spacer plate redirecting the D2 oil, the overrun clutch can be applied.

Control Valve Body Ball Check Valve - M33 Only

Fluid pressure, from the automatic transmission secondary fluid pump assembly, unseats the ball check valve to allow fluid flow to the manual valve, where it is directed to the overrun clutch hydraulic circuit. The check valve prevents fluid, from the main transmission oil pump, from flowing into the secondary fluid pump.

Torque Converter Clutch

TCC Solenoid Valve

Under normal operating conditions, in Overdrive Range-Second Gear, the PCM keeps the normally open TCC solenoid valve de-energized. Converter feed fluid exhausts through the open solenoid, and spring force keeps the converter clutch apply valve in the release position.

cardiagn.com

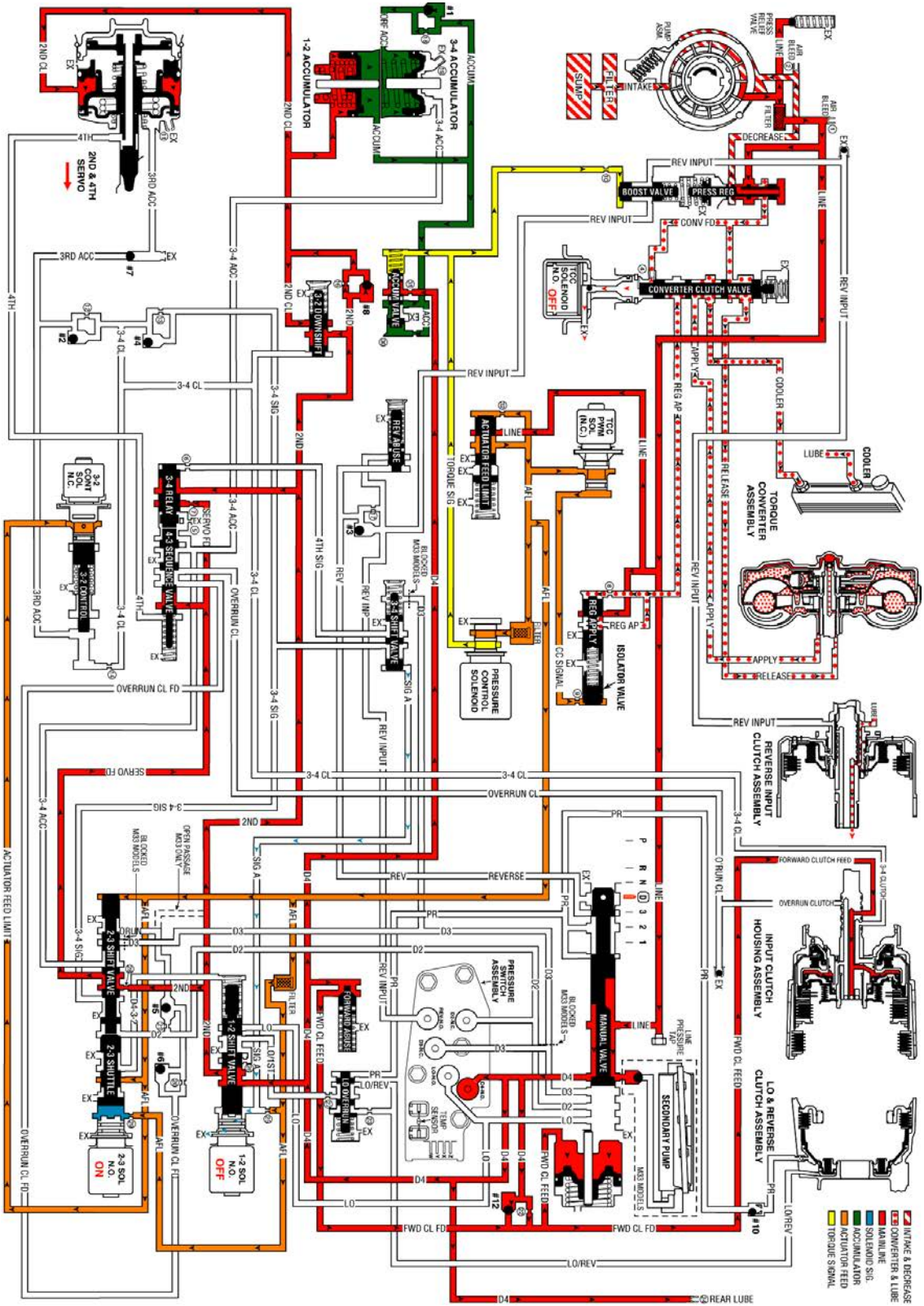

Fig. 327: Overdrive Range, Second Gear
Courtesy of GENERAL MOTORS CORP.

cardiagn.com

OVERDRIVE RANGE, THIRD GEAR

As vehicle speed increases further and other vehicle operating conditions are appropriate, the PCM de-energizes the normally open 2-3 shift solenoid valve in order to shift the transmission into Third gear.

2-3 Shift Solenoid (SS) Valve

De-energized (turned OFF) by the PCM, the solenoid opens and actuator feed limit signal B fluid exhausts through the solenoid.

Note: AFL fluid continues to feed signal B fluid to the solenoid through orifice #29. However, the exhaust port through the solenoid is larger than orifice #29 to prevent a buildup of pressure in the signal B fluid circuit at the solenoid end of the 2-3 shift valve. Exhausting signal B fluid is represented by the arrows through the solenoid.

2-3 Shift Valve Train

AFL fluid pressure at the 2-3 shift valve moves the valve train toward the solenoid. In the upshifted position, the following changes occur:

- AFL fluid is routed through the 2-3 shift valve and fills the D432 fluid circuit.
- 2nd fluid is blocked from entering the servo feed fluid circuit and is orificed (#28) into the 3-4 signal fluid circuit. This orifice helps control the 3-4 clutch apply rate.
- Servo feed fluid exhausts past the valve into the 3-4 accumulator fluid circuit and through an exhaust port at the 3-4 relay valve.

3-4 Clutch Exhaust Checkball (#4)

3-4 signal fluid unseats the ball and enters the 3-4 clutch fluid circuit.

3-4 Clutch Piston

3-4 clutch fluid pressure moves the piston to apply the 3-4 clutch plates and obtain 3rd gear. However, the 2-4 band must release as the 3-4 clutch applies.

3rd Accumulator Checkball (#2)

3-4 clutch fluid pressure unseats the ball and fills the 3rd accumulator fluid circuit.

3rd Accumulator Exhaust Checkball (#7)

3rd accumulator fluid seats the ball against the orificed exhaust and is routed to the released side of the 2nd apply piston. Before the #7 checkball seats, air in the 3rd accumulator fluid circuit is exhausted through the orifice.

2-4 Servo Assembly

3rd accumulator fluid pressure acts on the release side of the 2nd apply piston and assists servo return spring

cardiagn.com

force. The surface area on the release side of the piston is greater than the surface area on the apply side. Therefore, 3rd accumulator fluid pressure and servo return spring force move the 2nd apply piston against 2nd clutch fluid pressure. This action serves two functions:

- Move the apply pin to release the 2-4 band.
- Act as an accumulator by absorbing initial 3-4 clutch fluid to cushion the 3-4 clutch apply rate. Remember that the 3rd accumulator fluid circuit is fed by 3-4 clutch fluid.

3-2 Downshift Valve

3-4 clutch fluid pressure moves the valve against spring force. This opens the valve and allows 2nd fluid to feed the 2nd clutch fluid circuit through the valve.

3-2 Control Solenoid Valve and 3-2 Control Valve

The solenoid remains open and routes AFL fluid into the 3-2 signal fluid circuit. 3-2 signal fluid pressure holds the 3-2 control valve against spring force, thereby blocking the 3rd accumulator and 3-4 clutch fluid circuits.

1-2 Shift Solenoid (SS) Valve and 1-2 Shift Valve

The 1-2 SS valve remains de-energized and signal A fluid is exhausted through the solenoid. Also, D432 fluid pressure from the 2-3 shift valve assists spring force to hold the 1-2 shift valve in the upshifted position.

3-4 Shift Valve

Spring force holds the valve in the downshifted position, blocking 3-4 clutch fluid in preparation for a 3-4 upshift.

Overrun Clutch Applied - M33 Only

In order to achieve the highest fuel efficiency, the overrun clutch is applied during vehicle coast and braking. With the transmission in overdrive and either second or third gear, the overrun clutch is applied, allowing power to be transferred back through the torque converter to the electric machine and engine.

With the transmission in the D4 range and in either third or second gear, the M33 model applies the overrun clutch in order to maximize fuel efficiency during vehicle coast and braking. In this state, vehicle inertia is used to drive the engine and the electrical machine through the transmission. While in D4 third gear, the 2-3 SS valve is de-energized and the 2-3 shift valve train is in the upshift position. However, D3 oil is not available to apply the overrun clutch. In order to apply the overrun clutch, the spacer plate is used to redirect D2 oil to the overrun clutch circuit through the 2-3 valve train.

In D4 second gear, the 2-3 SS valve is energized and the 2-3 shift valve train is in the downshift position normally allowing overrun clutch circuit to exhaust. With the spacer plate redirecting the D2 oil, the overrun clutch can be applied.

Control Valve Body Ball Check Valve - M33 Only

cardiagn.com

Fluid pressure, from the automatic transmission secondary fluid pump assembly, unseats the ball check valve to allow fluid flow to the manual valve, where it is directed to the overrun clutch hydraulic circuit. The check valve prevents fluid, from the main transmission oil pump, from flowing into the secondary fluid pump.

Torque Converter Clutch

TCC Solenoid Valve

Under normal operating conditions, in Overdrive Range-Third Gear, the PCM keeps the normally open TCC solenoid valve de-energized. Converter feed fluid exhausts through the open solenoid, and spring force keeps the converter clutch apply valve in the release position. However, at speeds above approximately 121 km/h (75 mph), with the transmission still in third gear, the PCM will command TCC apply in third gear. Refer to **Overdrive Range, Fourth Gear - Torque Converter Clutch (TCC) Applied** for more information on TCC apply.

cardiagn.com

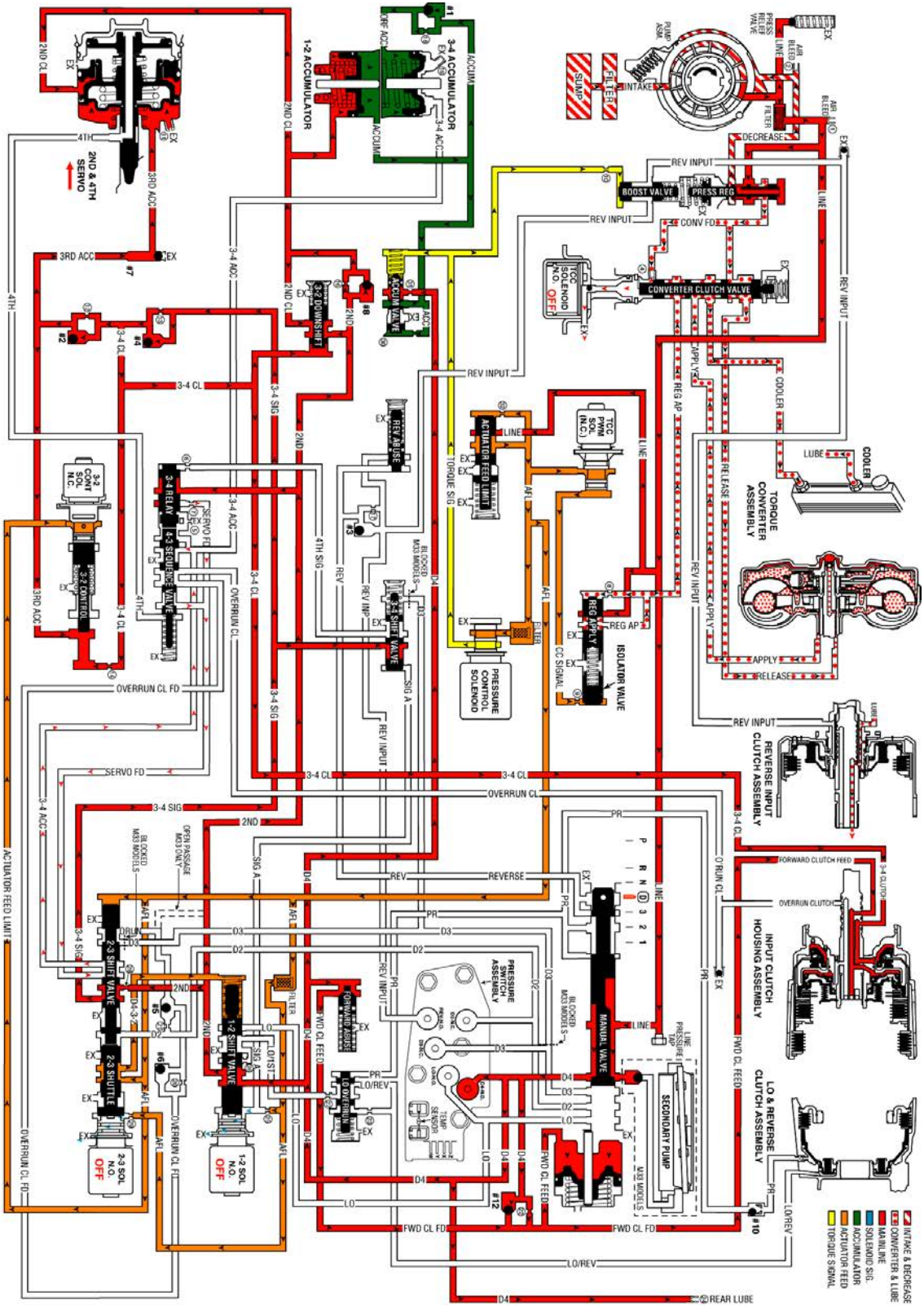

Fig. 328: Overdrive Range, Third Gear
Courtesy of GENERAL MOTORS CORP.

cardiagn.com

OVERDRIVE RANGE, FOURTH GEAR - TORQUE CONVERTER CLUTCH (TCC) APPLIED

At higher vehicle speeds, the Hydra-matic 4L60-E transmission uses an overdrive gear ratio (fourth gear) in order to increase fuel economy and in order to maximize engine performance. When vehicle operating conditions are appropriate, the PCM energizes the 1-2 shift solenoid valve to shift the transmission into fourth gear.

1-2 Shift Solenoid (SS) Valve

Energized (turned ON) by the PCM, the normally open solenoid closes and blocks signal A fluid from exhausting through the solenoid. This creates pressure in the signal A fluid circuit.

2-3 Shift Solenoid (SS) Valve

De-energized (OFF) as in third gear, the 2-3 shift solenoid valve exhausts signal B fluid through the solenoid.

1-2 Shift Valve

D432 fluid pressure from the 2-3 shift valve and spring force hold the valve in the upshift position against signal A fluid pressure.

3-4 Shift Valve

Signal A fluid pressure moves the valve into the upshift position against the spring force. In this position, the valve routes 3-4 signal fluid into the 4th signal fluid circuit.

3-4 Relay Valve and 4-3 Sequence Valve

4th signal fluid pressure moves both valves into the upshift (fourth gear) position against the spring force acting on the 4-3 sequence valve. This causes the following changes:

- Orificed (#7) 2nd fluid is routed through the 3-4 relay valve and into the servo feed fluid circuit.
- Servo feed fluid is routed through the 4-3 sequence valve and into the 4th fluid circuit.
- 3-4 accumulator fluid routed from the 2-3 shuttle valve is blocked by both valves.

2-4 Servo Assembly

4th fluid is routed through the center of the servo apply pin and acts on the apply side of the 4th apply piston. 4th fluid pressure moves the 4th apply piston against the apply pin spring force acting on the release side of the 4th apply piston. This action moves the apply pin and applies the 2-4 band in order to obtain fourth gear.

2-4 Band Apply Accumulation

2-3 Shift Valve Train

The valve train remains in the upshift position with the AFL fluid pressure acting on the 2-3 shift valve. In addition to its operation third gear, the 2-3 shift valve directs servo feed fluid into the 3-4 accumulator fluid

cardiagn.com

circuit.

3-4 Accumulator Assembly

3-4 accumulator fluid pressure moves the 3-4 accumulator piston against spring force and orificed accumulator fluid pressure. This action absorbs initial 4th clutch apply fluid pressure in order to cushion the 2-4 band apply. Remember that both of the 3-4 accumulator and 4th fluid circuits are fed by servo feed fluid. As 3-4 accumulator fluid fills the accumulator, any air in the system will exhaust through office #19. This piston movement forces some orificed accumulator fluid out of the 3-4 accumulator assembly.

3-4 Accumulator Checkball (#1)

The accumulator fluid forced from the accumulator unseats the #1 checkball and enters the accumulator fluid circuit. This fluid is routed to the accumulator valve. This is shown by the arrow directions in the fluid circuit.

Accumulator Valve

Accumulator fluid forced from the 3-4 accumulator is orificed to the end of the accumulator valve. This fluid pressure, in addition to spring force and torque signal fluid pressure, regulates the exhaust of excess accumulator fluid pressure through the middle of the valve. This regulation helps control the 2-4 band apply feel.

3-2 Control Solenoid Valve and 3-2 Control Valve

The solenoid remains open and routes AFL fluid into the 3-2 signal fluid circuit. 3-2 signal fluid pressure holds the 3-2 control valve against spring force, thereby blocking the 3rd accumulator and 3-4 clutch fluid circuits.

Torque Converter Clutch Applies

TCC Solenoid Valve

When operating conditions are appropriate, the PCM energizes the normally open TCC solenoid valve. This closes the solenoid, blocks the converter feed fluid from exhausting, and creates pressure in the converter feed fluid circuit at the converter clutch apply valve and TCC solenoid valve.

Converter Clutch Apply Valve

Converter feed fluid pressure moves the valve against spring force and into the apply position. In this position, release fluid is open to an exhaust port, and regulated apply fluid fills the apply fluid circuit. Converter feed fluid is routed through the converter clutch apply valve to feed the cooler fluid circuit.

Torque Converter

Release fluid from behind the pressure plate exhausts through the end of the turbine shaft. Apply fluid pressure is routed between the converter hub and stator shaft where it enters the torque converter. This fluid applies the converter clutch against the converter cover and keeps the converter filled with fluid.

TCC Apply Checkball (#9)

cardiagn.com

Release fluid, exhausting from the converter, seats the #9 checkball located in the end of the turbine shaft, and is orificed around the ball. Orificing the exhausting release fluid controls the converter clutch apply rate, along with the TCC PWM solenoid valve.

TCC PWM Solenoid Valve

The torque converter clutch pulse width modulation (TCC PWM) solenoid valve controls the regulated apply valve position. This is done through the use of pulse width modulation (duty cycle operation). The solenoid duty cycle is controlled by the PCM in relation to vehicle operating conditions and regulates actuator feed limit (AFL) fluid into the CC signal circuit, through the #9 orifice, and to the isolator valve. This controls line pressure flow through the regulated apply valve, into the regulated apply circuit, and provides a smooth engagement of the TCC.

cardiagn.com

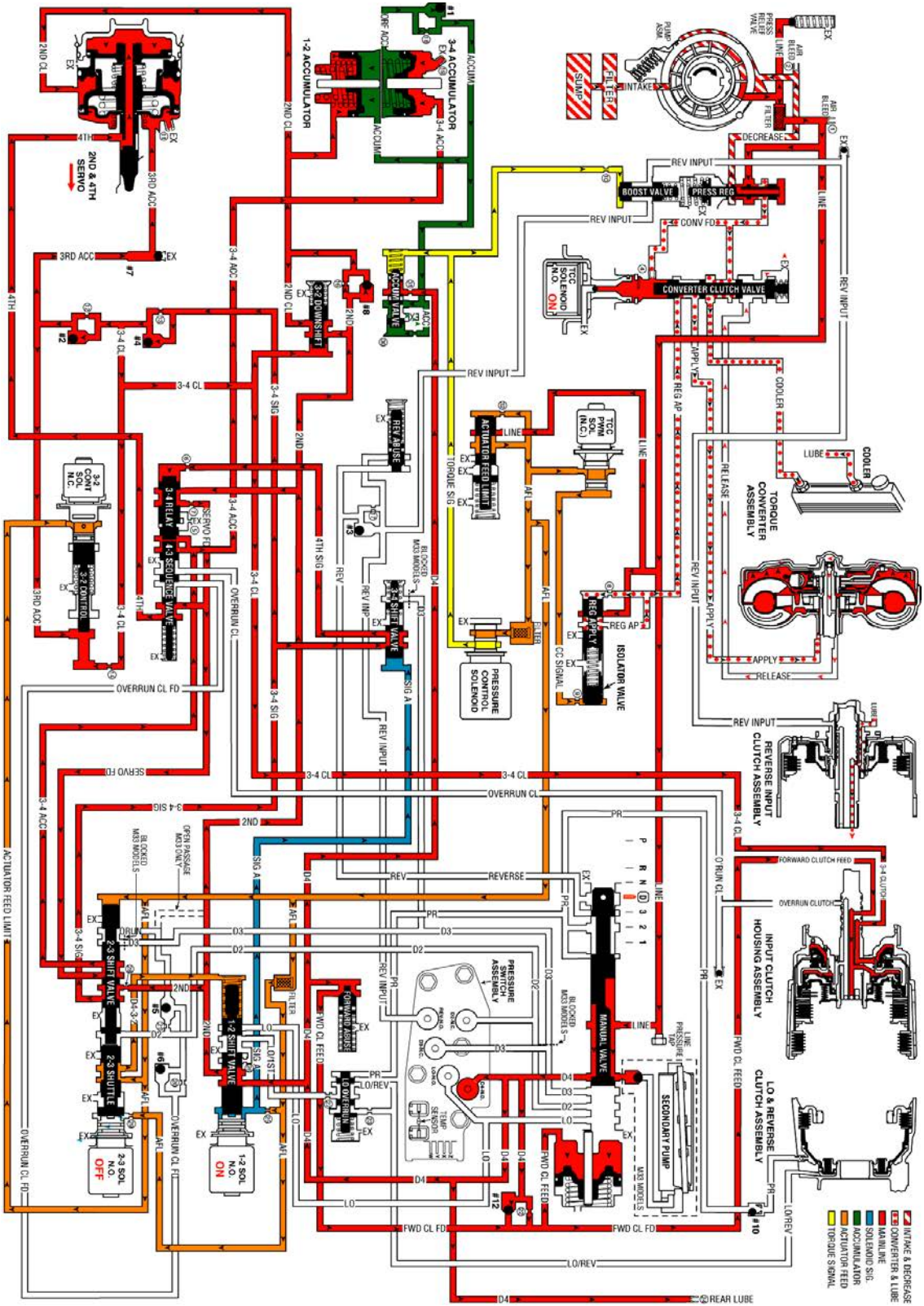

Fig. 329: Overdrive Range, Fourth Gear - TCC Applied
Courtesy of GENERAL MOTORS CORP.

cardiagn.com

OVERDRIVE RANGE, 4-3 DOWNSHIFT

When the transmission is operating in fourth gear, a forced 4-3 downshift occurs if there is a significant increase in throttle position. At minimum throttle, the vehicle speed decreases gradually (coastdown) and the PCM commands a 4-3 downshift. The PCM also initiates a forced 4-3 downshift when the throttle position remains constant but engine load is increased, such as driving up a steep incline. To achieve a 4-3 downshift, the PCM de-energizes the 1-2 shift solenoid valve and the following changes occur to the transmission's electrical and hydraulic systems:

1-2 Shift Solenoid (SS) Valve

De-energized by the PCM, the normally open solenoid opens and signal A fluid exhausts through the solenoid.

1-2 Shift Valve

As in Fourth gear, D432 fluid pressure and spring force hold the valve in the upshift position.

2-4 Band Releases

3-4 Shift Valve

With the signal A fluid pressure exhausted, the spring force moves the valve into the downshift position. In this position, the valve blocks the 3-4 signal fluid and the 4th signal fluid exhausts past the valve.

3-4 Relay Valve and 4-3 Sequence Valve

These valves control the timing of the 2-4 band release. With the 4th signal fluid pressure exhausted, the 3-4 accumulator fluid pressure moves the 3-4 relay valve into the third gear position. This opens the 3-4 accumulator fluid to an orificed exhaust (#5) past the 3-4 relay valve (shown by red arrows). Because the exhaust is orificed, the 3-4 accumulator fluid pressure momentarily holds the 4-3 sequence valve against spring force before completely exhausting.

When the exhausting 3-4 accumulator fluid pressure decreases sufficiently, the spring force moves the 4-3 sequence valve into the third gear position as shown. This opens both the 3-4 accumulator and the 4th fluid circuits to a quick exhaust past the 4-3 sequence valve. In this position the valve blocks the 2nd fluid from entering the servo feed fluid circuit.

2-4 Servo Assembly

The 4th fluid exhausts from the 4th apply piston in the servo assembly. The apply pin spring moves the 4th apply piston and the apply pin in order to release the band from the reverse input drum and shift the transmission into third gear.

3-4 Accumulator Assembly

The 3-4 accumulator fluid exhausts from the 3-4 accumulator piston. The orificed accumulator fluid pressure and the spring force move the piston into a third gear position.

cardiagn.com

3-4 Accumulator Checkball (#1)

As the accumulator fluid fills the 3-4 accumulator, it seats the #1 checkball and is forced through orifice #18. This orifice controls the rate at which accumulator fluid pressure fills the 3-4 accumulator and the 3-4 accumulator fluid exhausts from the accumulator assembly.

Accumulator Valve

Biased by torque signal fluid pressure and spring force, the accumulator valve regulates the D-4 fluid into the accumulator fluid circuit.

2-3 Shift Solenoid (SS) Valve

This solenoid remains de-energized as in fourth gear and the signal B fluid exhausts through the solenoid.

2-3 Shift Valve Train

The AFL fluid pressure at the 2-3 shift valve holds the valves in the upshift position. This allows the servo feed fluid to exhaust through the valve, into the 3-4 accumulator fluid circuit and past the 4-3 sequence valve.

Torque Converter Clutch Solenoid Valve

TCC PWM Solenoid Valve

The PCM de-energizes the TCC solenoid valve, and operates the duty cycle of the TCC PWM solenoid valve to release the converter clutch for a smooth disengagement, prior to initiating the 4-3 downshift.

Pressure Control (PC) Solenoid Valve

Remember that the PC solenoid valve continually adjusts the torque signal fluid pressure in relation to the various PCM input signals (mainly the throttle position).

cardiagn.com

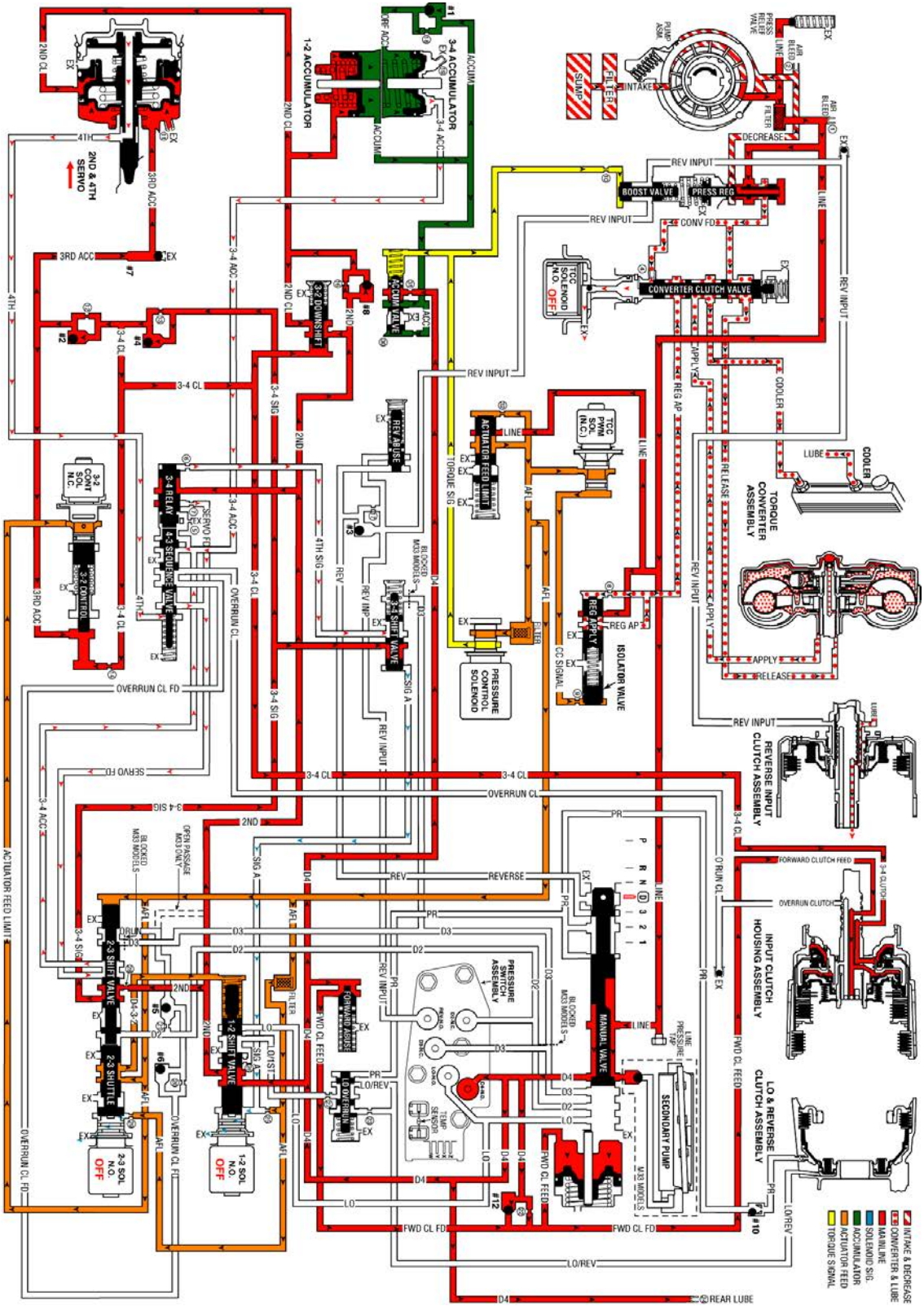

Fig. 330: Overdrive Range, 4-3 Downshift
Courtesy of GENERAL MOTORS CORP.

cardiagn.com

OVERDRIVE RANGE, 3-2 DOWNSHIFT

Similar to a forced 4-3 downshift, a forced 3-2 downshift can occur because of minimum throttle (coastdown conditions), heavy throttle or increased engine load. In order to achieve a forced 3-2 downshift, the PCM energizes the 2-3 shift solenoid valve and the following changes occur:

Energized by the PCM, the normally open solenoid closes and blocks the signal B fluid from exhausting through the solenoid. This creates pressure in the signal B fluid circuit at the solenoid end of the 2-3 shift valve.

2-3 Shift Valve Train

The signal B fluid pressure from the shift solenoid moves both valves to the downshift position against AFL fluid pressure acting on the 2-3 shift valve. This causes the following changes:

- The AFL fluid is blocked from the D432 fluid circuit and the D432 fluid exhausts past the 2-3 shuttle valve.
- The 2nd fluid is blocked from feeding the 3-4 signal fluid circuit and the 2nd fluid is routed into the servo feed fluid circuit.
- The 3-4 signal fluid is exhausted past the valve. The 3-4 clutch fluid and the 3rd accumulator fluid, which were fed by the 3-4 signal fluid, also exhaust.

3-4 Clutch Releases and 2-4 Band Applies

3-4 Clutch Piston

The 3-4 clutch fluid exhausts from the piston and the 3-4 clutch plates are released.

3-4 Clutch Exhaust Checkball (#4)

Exhausting 3-4 clutch fluid seats the #4 checkball and is forced through orifice #13. This orifice controls the 3-4 clutch fluid exhaust and the 3-4 clutch release rate.

2-4 Servo Assembly

The 3rd accumulator fluid exhausts from the servo assembly. The 2nd clutch fluid pressure moves the 2nd apply piston against the servo return spring force in order to move the apply pin and apply the 2-4 band.

3-2 Downshift Valve and 1-2 Upshift Checkball (#8)

The 3-4 clutch fluid exhausts from the valve and the spring force moves the valve into the second gear position. However, before the spring force overcomes the exhausting 3-4 clutch fluid pressure, the 2nd fluid feeds the 2nd clutch fluid circuit through the valve. This bypasses the control of orifice #16 at the #8 checkball and provides a faster 2-4 band apply. Remember that the #8 checkball and orifice #16 are used to help control the 2-4 band apply during a 1-2 upshift.

Downshift Timing and Control

cardiagn.com

At higher vehicle speeds, the 2-4 band apply must be delayed to allow the engine speed RPM to increase sufficiently for a smooth transfer of engine load to the 2-4 band. Therefore, exhaust of the 3rd accumulator fluid must be delayed. However, at lower speeds the band must be applied quickly. In order to provide for the varying requirements for the 2-4 band apply rate, the exhausting 3rd accumulator fluid is routed to both the 3rd accumulator checkball (#2) and the 3-2 control valve.

3rd Accumulator Checkball (#2)

The exhausting 3rd accumulator fluid seats the #2 checkball and is forced through orifice #12. This fluid exhausts through the 3-4 clutch and the 3-4 signal fluid circuits and past the 2-3 shift valve. Orifice #12 slows the exhaust of the 3rd accumulator fluid and delays the 2-4 band apply rate.

3-2 Control Solenoid Valve and 3-2 Control Valve

These components are used to increase the exhaust rate of 3rd accumulator fluid, as needed, depending on the vehicle speed.

The 3-2 control solenoid valve is a normally closed On/Off solenoid controlled by the PCM. The PCM controls the solenoid state during a 3-2 downshift according to vehicle speed.

Low Speed

- At lower vehicle speeds, the PCM operates the 3-2 control solenoid valve in the Off position.
- In the Off position the solenoid blocks actuator feed limit fluid pressure from the 3-2 control valve.
- With no actuator feed limit fluid pressure, the 3-2 control valve spring force keeps the valve open to allow a faster exhaust of 3rd accumulator fluid through orifice #14 into the 3-4 clutch fluid circuit.
- A faster exhaust of the 3rd accumulator exhaust fluid provides a faster apply of the 2-4 band, as needed at lower vehicle speeds.

High Speed

- At high vehicle speed, the PCM operates the 3-2 control solenoid valve in the On position allowing actuator feed limit fluid to pass through the solenoid. This pushes the 3-2 control valve into the closed position.
- This action permits a slow apply of the 2-4 band by blocking off 3rd accumulator exhaust fluid from entering the 3-4 clutch fluid circuit through orifice #14.
- This allows the engine speed to easily come up to the necessary RPM before the 2-4 band is applied.

3rd Accumulator Exhaust Checkball (#7)

After the downshift is completed, the #7 checkball unseats and allows the residual fluid in the 3rd accumulator fluid circuit to exhaust.

Pressure Control (PC) Solenoid Valve

Remember that the PC solenoid valve continually adjusts torque signal fluid in relation to the various PCM

cardiagn.com

input signals (mainly the throttle position).

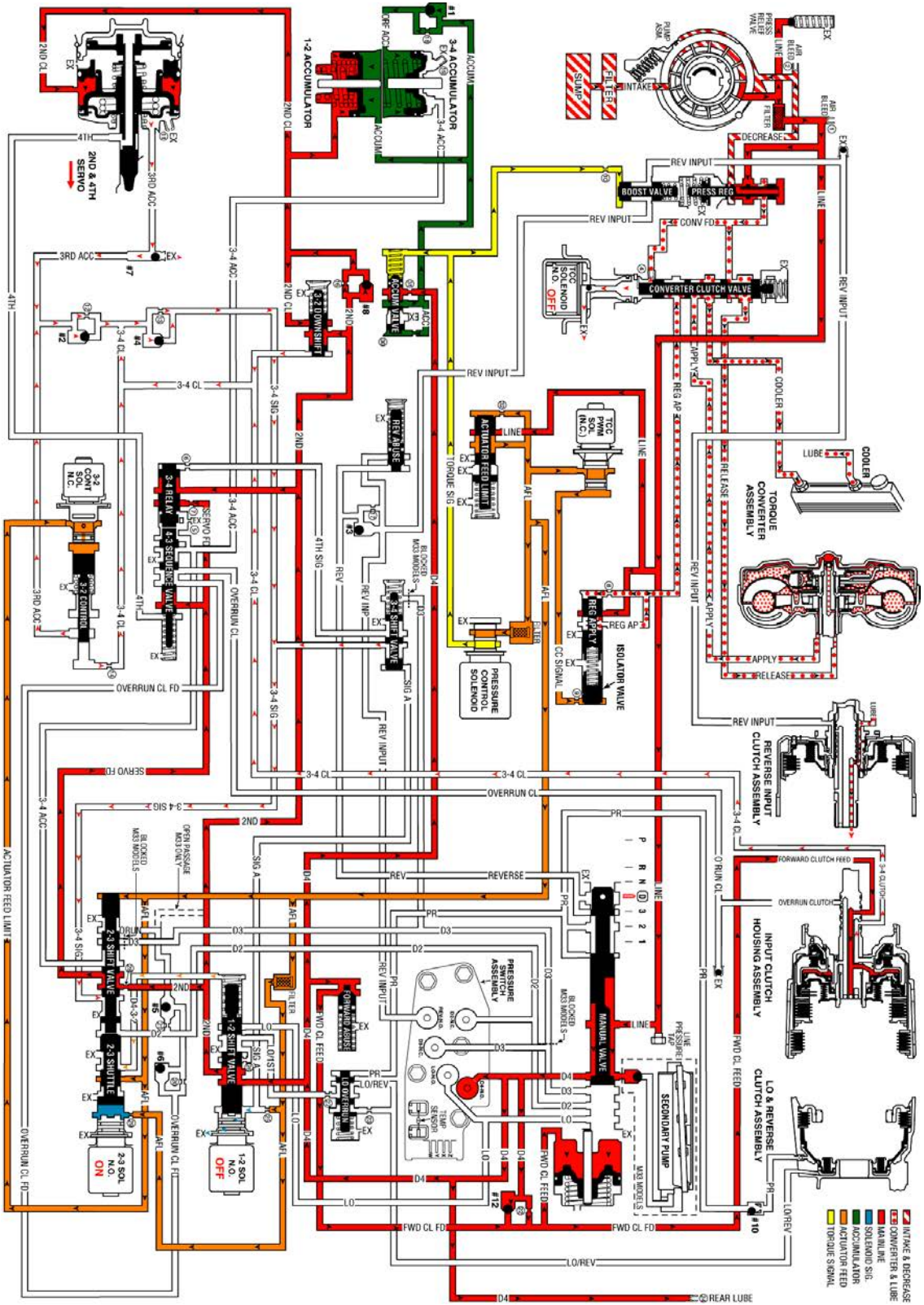

cardiagn.com

Fig. 331: Overdrive Range, 3-2 Downshift
Courtesy of GENERAL MOTORS CORP.

MANUAL THIRD GEAR

A manual 4-3 downshift is available to increase vehicle performance when the use of only three gear ratios is desired. Manual Third gear range also provides engine braking in Third gear when the throttle is released. A manual 4-3 downshift is accomplished by moving the selector lever into the Manual Third (D) position. This moves the manual valve and immediately downshifts the transmission into Third gear. Refer to **Overdrive Range, Fourth Gear - Torque Converter Clutch (TCC) Applied** for a complete description of a 4-3 downshift. In Manual Third, the transmission is prevented, both hydraulically and electronically, from shifting into Fourth gear. The following information explains the additional changes during a manual 4-3 downshift as compared to a forced 4-3 downshift.

Manual Valve

The selector lever moves the manual shaft and manual valve into the Manual Third position (D). This allows line pressure to enter the D3 fluid circuit.

Transmission Fluid Pressure (TFP) Manual Valve Position Switch Assembly

D3 fluid is routed to the TFP manual valve position switch and opens the normally closed D3 fluid pressure switch. The combination of the opened D3 switch and the closed D4 switch signals the PCM that the transmission is operating in Manual Third.

1-2 Shift Solenoid (SS) Valve

When Manual Third is selected, the PCM de-energizes the 1-2 SS valve to immediately downshift the transmission into Third gear. This electronically prevents Fourth gear.

3-4 Shift Valve

D3 fluid pressure assists spring force to keep the valve in the downshifted position against the signal A fluid circuit. In this position, the valve blocks 3-4 signal fluid and the 4th signal fluid circuit is open to an exhaust port past the valve. Therefore, with D3 fluid pressure assisting spring force, Fourth gear is hydraulically prevented.

2-3 Shift Valve Train

With the 2-3 SS valve de-energized and open, actuator feed limit (AFL) fluid acting on the 2-3 shift valve holds both valves in the upshifted position. This allows D3 fluid to feed the overrun fluid circuit through the 2-3 shift valve.

Overrun Clutch Feed Checkball (#5)

Overrun fluid pressure seats the ball against the empty D2 fluid circuit.

cardiagn.com

Overrun Clutch Control Checkball (#6)

Overrun fluid pressure seats the #6 checkball and is orificed (#20) to fill the overrun clutch feed fluid circuit. This orifice controls the overrun clutch apply rate.

3-4 Relay Valve and 4-3 Sequence Valve

4th signal fluid pressure is exhausted from the end of the 3-4 relay valve. Overrun clutch feed fluid pressure assists spring force and closes both valves. This allows overrun clutch feed fluid to flow through the 4-3 sequence valve and fill the overrun clutch fluid circuit.

Overrun Clutch Piston

Overrun clutch fluid pressure moves the piston to apply the overrun clutch plates. The overrun clutch plates provide engine compression braking in Manual Third - Third Gear.

Overrun Clutch Air Bleed Checkball

This ball and capsule is located in the overrun clutch fluid circuit in the oil pump. It allows air to exhaust from the circuit as fluid pressure increases and also allows air into the circuit to displace the fluid when the clutch releases.

Overrun Clutch Applied - M33 Only

In order to achieve the highest fuel efficiency, the overrun clutch is applied during vehicle coast and braking. With the transmission in overdrive and either second or third gear, the overrun clutch is applied, allowing power to be transferred back through the torque converter to the electric machine and engine.

With the transmission in the D4 range and in either third or second gear, the M33 model applies the overrun clutch in order to maximize fuel efficiency during vehicle coast and braking. In this state, vehicle inertia is used to drive the engine and the electrical machine through the transmission. While in D4 third gear, the 2-3 SS valve is de-energized and the 2-3 shift valve train is in the upshift position. However, D3 oil is not available to apply the overrun clutch. In order to apply the overrun clutch, the spacer plate is used to redirect D2 oil to the overrun clutch circuit through the 2-3 valve train.

In D4 second gear, the 2-3 SS valve is energized and the 2-3 shift valve train is in the downshift position normally allowing overrun clutch circuit to exhaust. With the spacer plate redirecting the D2 oil, the overrun clutch can be applied.

Control Valve Body Ball Check Valve - M33 Only

Fluid pressure, from the automatic transmission secondary fluid pump assembly, unseats the ball check valve to allow fluid flow to the manual valve, where it is directed to the overrun clutch hydraulic circuit. The check valve prevents fluid, from the main transmission oil pump, from flowing into the secondary fluid pump.

Torque Converter Clutch and Torque Converter Clutch PWM Solenoid Valve

cardiagn.com

The PCM de-energizes the TCC solenoid valve and operates the duty cycle of the TCC PWM solenoid valve to release the converter clutch prior to downshifting, (assuming the converter clutch is applied in Overdrive Range-Fourth Gear when Manual Third is selected). The PCM will re-apply the converter clutch in Manual Third-Third Gear when proper driving conditions have been met.

Pressure Control (PC) Solenoid Valve

The PC solenoid valve operates in the same manner as Overdrive Range, regulating in response to throttle position and other vehicle operating conditions.

Manual Third - First and Second Gears: Overrun Clutch Released

In Manual Third, the transmission upshifts and downshifts normally between First, Second and Third gears. However, in First and Second gears, the 2-3 SS valve is energized and the 2-3 shift valve train is in the downshifted position. The 2-3 shift valve blocks D3 fluid from entering the overrun fluid circuit and opens the overrun fluid circuit to an exhaust port at the valve. This prevents overrun clutch apply and engine compression braking in Manual Third-First and Second Gears.

cardiagn.com

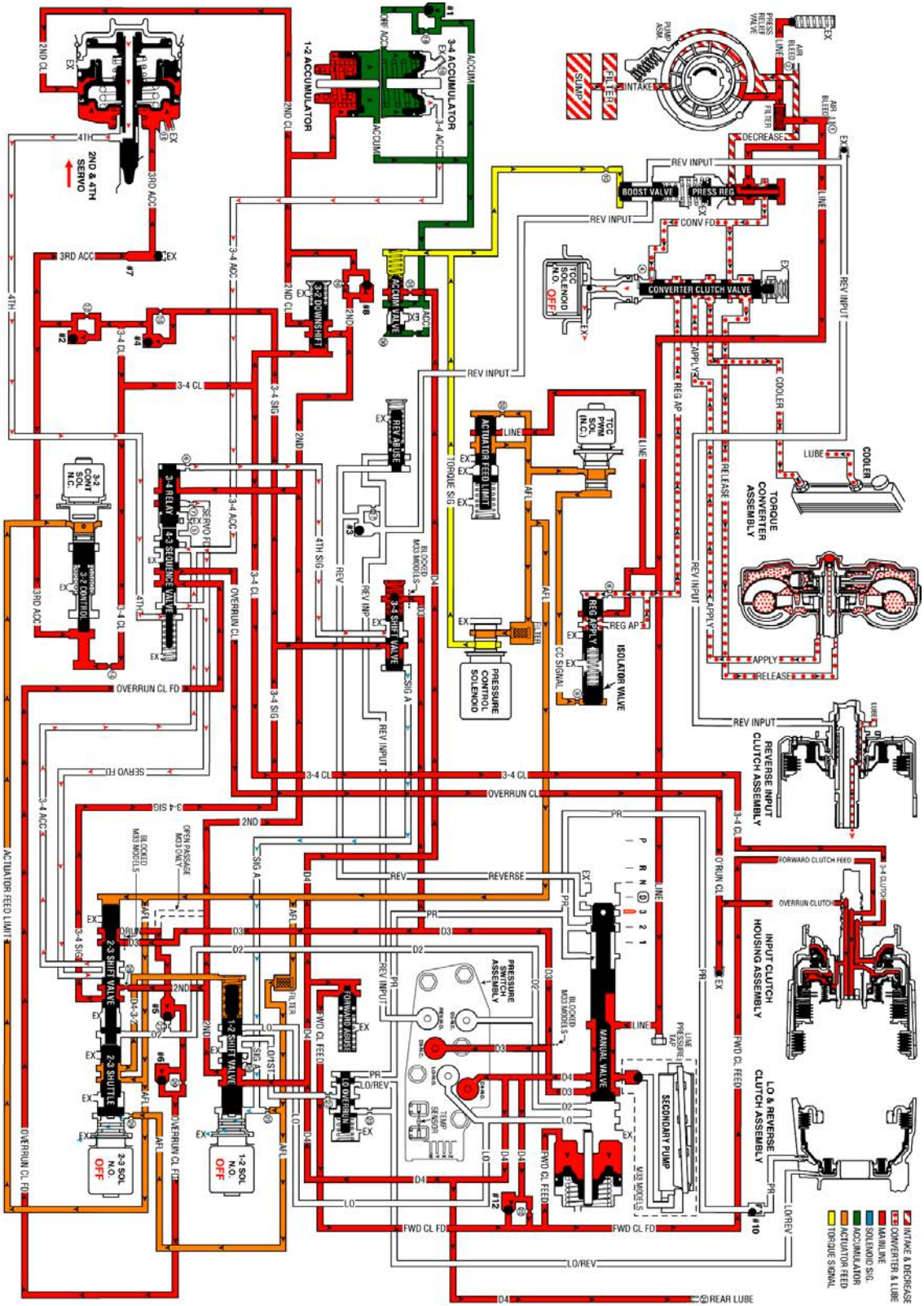

Fig. 332: Manual Third Gear
Courtesy of GENERAL MOTORS CORP.

cardiagn.com

MANUAL SECOND GEAR

A manual 3-2 downshift can be accomplished by moving the gear selector lever into the Manual Second (2) position when the transmission is operating in third gear. This causes the transmission to shift immediately into second gear regardless of vehicle operating conditions. Also, the transmission is prevented from operating in any other gear, first, third or fourth. The following information explains the additional changes during a manual 3-2 downshift, as compared to a forced 3-2 downshift. Some vehicles in manual second gear will start out in first gear, while other vehicles will have a second gear start. Refer to the owners manual for specific applications.

Manual Valve

The selector lever moves the manual shaft and the manual valve into the manual second (2) position. This allows the line pressure to enter the D2 fluid circuit.

Transmission Fluid Pressure (TFP) Manual Valve Position Switch Assembly

The D2 fluid is routed to the TFP manual valve position switch where it opens the normally closed D2 fluid pressure switch. With the D2 and the D3 pressure switches closed and the D4 pressure switch open, the TFP manual valve position switch signals the PCM that the transmission is operating in manual second.

Third and Fourth Gears Prevented

2-3 Shift Solenoid (SS) Valve

The PCM energizes the 2-3 SS valve and the AFL fluid pressure holds the 2-3 shift valve in the downshift position. This electronically prevents operation of the third and fourth gears.

2-3 Shift Valve Train

The D2 fluid is routed between the 2-3 shuttle and the 2-3 shift valves and causes the following:

- Regardless of the operating conditions, the D2 fluid pressure holds the 2-3 shift valve in the downshift position against the AFL fluid pressure.
- The 2nd fluid is blocked from entering the 3-4 signal fluid circuit and the 3-4 signal fluid circuit is open to an exhaust port at the valve.
- The 3-4 clutch cannot apply with the 3-4 signal fluid exhausted. Therefore, third and fourth gears are hydraulically prevented.
- The 2nd fluid feeds the servo feed fluid circuit, but the 2nd fluid circuit has no function in manual second.
- The AFL fluid is blocked by the 2-3 shift valve and the D432 fluid circuit is exhausted through the valve.
- The overrun fluid is exhausted through the 2-3 shuttle valve.

1-2 Shift Valve

The 1-2 SS valve is OFF, the signal A fluid exhausts through the solenoid and the spring force holds the valve in the upshifted position.

cardiagn.com

First Gear Prevented

The prevention of first gear is controlled electronically by the PCM through the 1-2 SS valve. The PCM keeps the 1-2 SS valve de-energized, regardless of the vehicle operating conditions when the TFP manual valve position switch signals manual second gear range. This keeps signal A fluid exhausted and the spring force holds the 1-2 shift valve in the upshift position.

Overrun Clutch Remains Applied

Overrun Clutch Feed Checkball (#5)

Orificed D2 fluid pressure seats the #5 checkball against the empty overrun clutch fluid circuit. This is done simultaneously with the overrun clutch fluid exhausting so that there is a continuous fluid supply to the overrun clutch feed fluid circuit.

Overrun Clutch Piston

A continuous supply of fluid pressure is routed to the piston in order to keep the overrun clutch plates applied.

Torque Converter Clutch

The converter clutch is released prior to downshifting into manual second-second gear. Under normal operating conditions, the TCC will not apply in second gear.

Pressure Control (PC) Solenoid Valve

IMPORTANT: Some vehicles in Manual Second Gear, at a stop, will start out in 1st gear, while others will have a second gear start. Refer to Vehicle Owners Manual.

The PCM output signal to the PC solenoid valve increases the operating range of torque signal fluid pressure in manual second. This provides the increased line pressure for the additional torque requirements during the engine compression braking and increased engine loads.

cardiagn.com

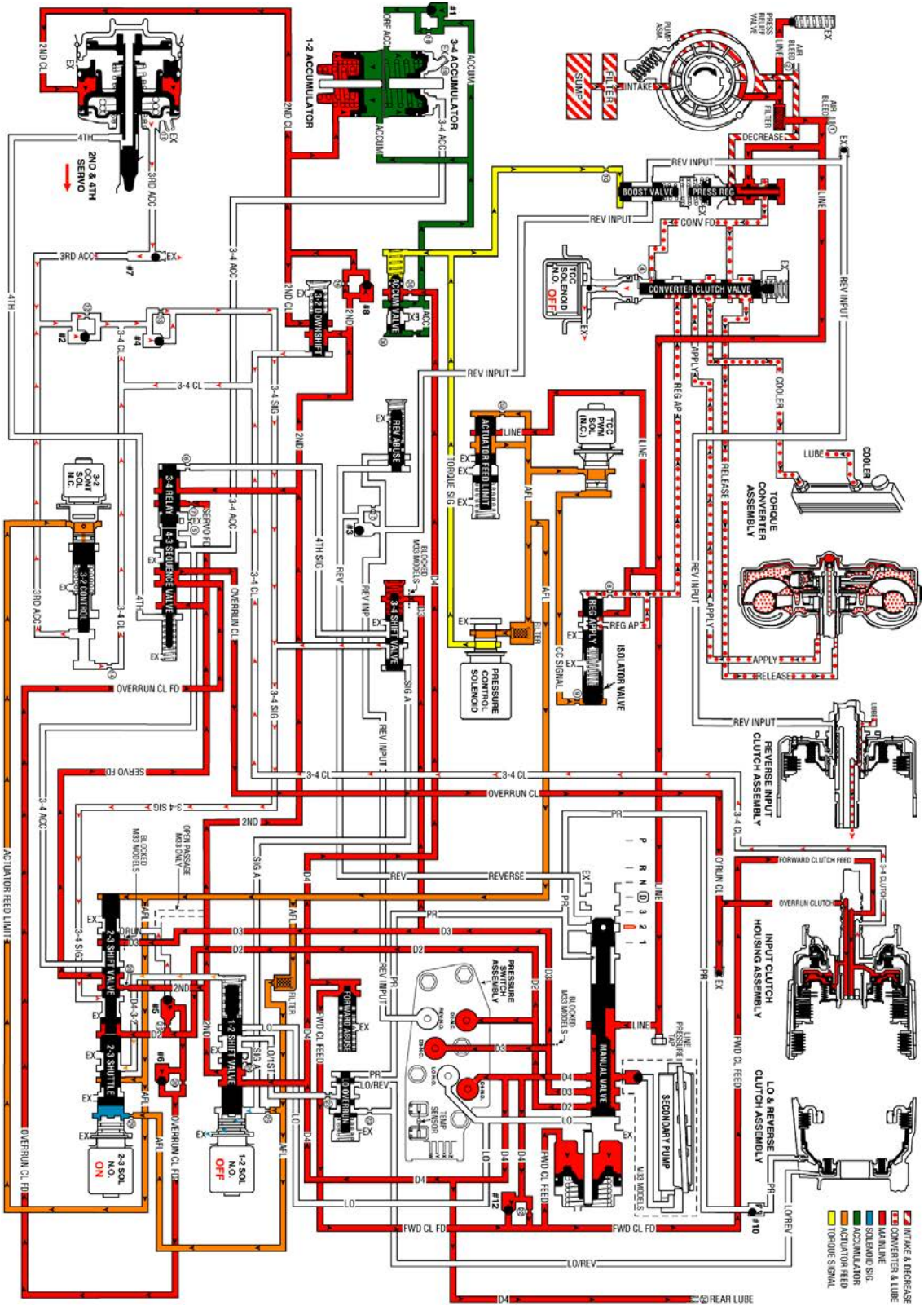

Fig. 333: Manual Second Gear
Courtesy of GENERAL MOTORS CORP.

cardiagn.com

MANUAL FIRST GEAR

A manual 2-1 downshift can be accomplished by moving the gear selector lever into the manual first (1) position when the transmission is operating in second gear. The downshift to first gear is controlled electronically by the PCM. The PCM will not energize the 1-2 shift solenoid valve to initiate the downshift until the vehicle speed is below approximately 48 to 56 km/h (30 to 35 mph). Above this speed, the transmission operates in a manual first-second gear state. The following text explains the manual 2-1 downshift.

Manual Valve

The selector lever moves the manual shaft and the manual valve into the manual first (1) position. This allows the line pressure to enter the Lo fluid circuit.

Transmission Fluid Pressure (TFP) Manual Valve Position Switch Assembly

Lo fluid is routed to the TFP manual valve position switch where it closes the normally open lo pressure switch. The addition of the lo pressure switch being closed signals to the PCM that manual first is selected.

2-3 Shift Solenoid (SS) Valve

In both first and second gears, this solenoid is energized and maintains the signal B fluid pressure at the solenoid end of the 2-3 shift valve train.

2-3 Shift Valve Train

Held in the downshift position by the signal B fluid pressure from the solenoid, the valve train blocks the AFL fluid from entering the D432 fluid circuit. The D432 fluid circuit is open to exhaust past the valve.

1-2 Shift Solenoid (SS) Valve

Below approximately 48 to 56 km/h (30 to 35 mph) the PCM energizes the normally open solenoid. This blocks the signal A fluid pressure from exhausting through the solenoid and creates the pressure in the signal A fluid circuit. Above this speed, the PCM keeps the solenoid de-energized and the transmission operates in manual first-second gear.

1-2 Shift Valve

Signal A fluid pressure moves the valve against the spring force and into the downshift position. In this position, Lo fluid from the manual valve is routed into the Lo/1st fluid circuit and D4 fluid is blocked from entering the 2nd fluid circuit. The 2nd fluid exhausts through an orifice and an annulus exhaust port past the valve. This orifice (#26) helps control the 2-4 band release during a 2-1 downshift.

2-4 Band Releases

2-4 Servo Assembly

The 2nd clutch fluid, which was fed by the 2nd fluid, exhausts from the servo. This allows the spring force from the servo cushion and the servo return springs to move the 2nd apply piston and apply the pin to release the 2-4

cardiagn.com

band. These spring forces help control the 2-4 band release.

1-2 Accumulator Assembly

The 2nd clutch fluid also exhausts from the 1-2 accumulator assembly. The spring force and the accumulator fluid pressure move the accumulator piston to assist the 2nd clutch fluid exhaust.

Accumulator Valve

As the accumulator fluid is filling the 1-2 accumulator assembly, the accumulator valve regulates the D4 fluid into the accumulator fluid circuit. This regulation, biased by torque signal fluid pressure and spring force, helps control the movement of the 1-2 accumulator piston. The 2nd clutch fluid exhaust, and the 2-4 band release.

1-2 Upshift Checkball (#8)

Exhausting the 2nd clutch fluid pressure unseats the ball and is routed through the 2nd fluid circuit.

Lo and Reverse Clutch Applies

Lo Overrun Valve

The Lo/1st fluid is regulated through the lo overrun valve and into the Lo/reverse fluid circuit in order to control the lo and reverse clutch apply.

Lo and Reverse Piston

The Lo/reverse fluid pressure acts on the inner area of the piston in order to move the piston and in order to apply the lo and reverse clutch plates.

Overrun Clutch Applied

The overrun clutch remains applied in manual first in order to provide engine compression braking.

Pressure Control (PC) Solenoid Valve

Similar to manual second, the PCM output signal to the PC solenoid valve increases the operating range of the torque signal fluid pressure. This provides the increased line pressure for the additional torque requirements during the engine compression braking and the increased engine loads.

3-2 Downshift Control Solenoid Valve and the 3-2 Control Valve

In first gear the solenoid is OFF, the AFL fluid is blocked by the solenoid, and the 3-2 signal fluid exhausts through the solenoid and the spring force opens the 3-2 control valve.

cardiagn.com

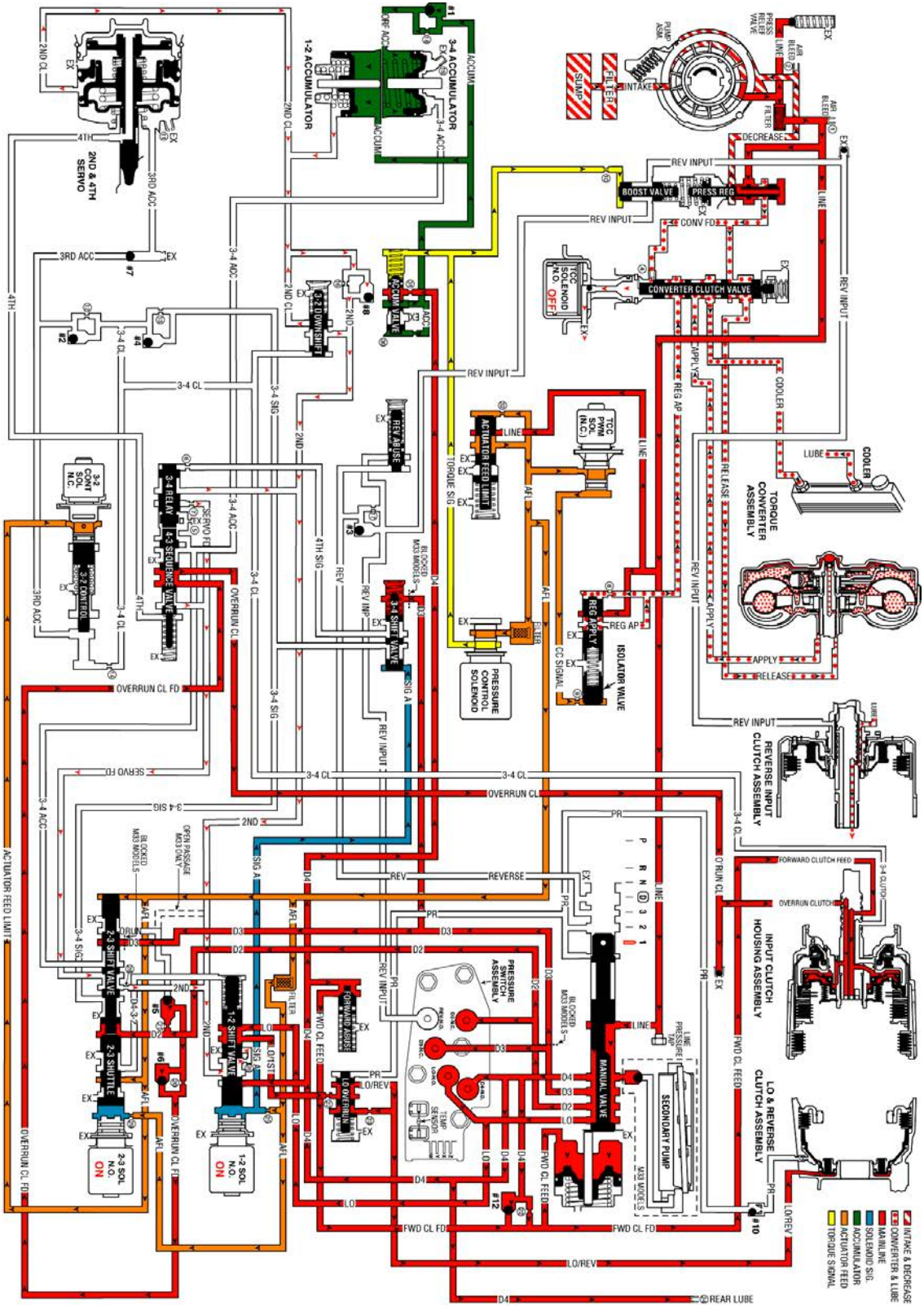

Fig. 334: Manual First Gear
Courtesy of GENERAL MOTORS CORP.

cardiagn.com

FLUID PASSAGES

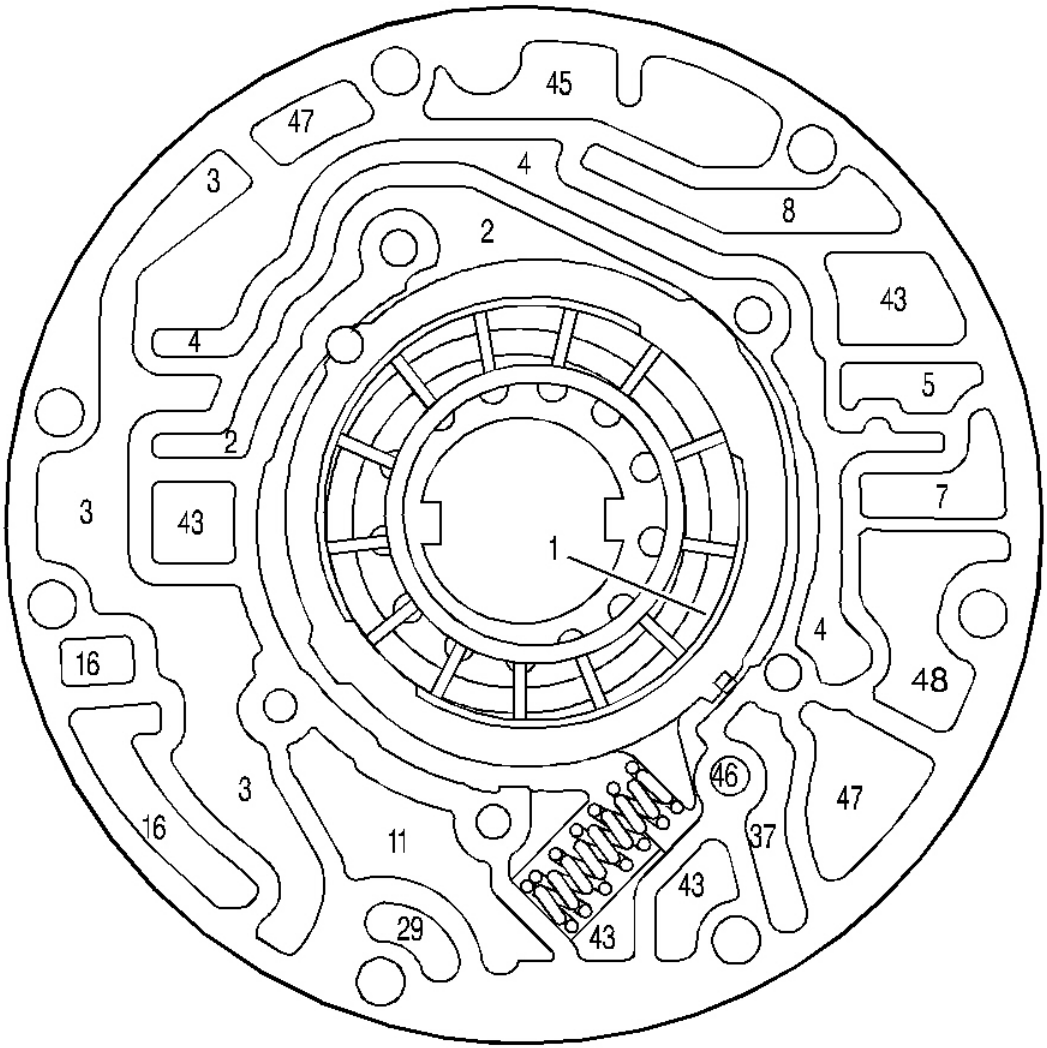

Fig. 335: Pump Body Fluid Passages (Pump Cover Side)
Courtesy of GENERAL MOTORS CORP.

Callouts For Fig. 335

Callout	Component Name
1	Suction (intake)
2	Decrease
2	Decrease
3	Line
3	Line

cardiagn.com

3	Line
4	Converter Feed
4	Converter Feed
4	Converter Feed
5	Release
7	To Cooler
8	Lube from Cooler
11	Torque Signal
16	Reverse Input
16	Reverse Input
29	3-4 Clutch
37	Overrun Clutch
43	Exhaust
43	Exhaust
43	Exhaust
43	Exhaust
45	Vent
46	Seal Drain
47	Void
47	Void
48	Regulated Apply

cardiagn.com

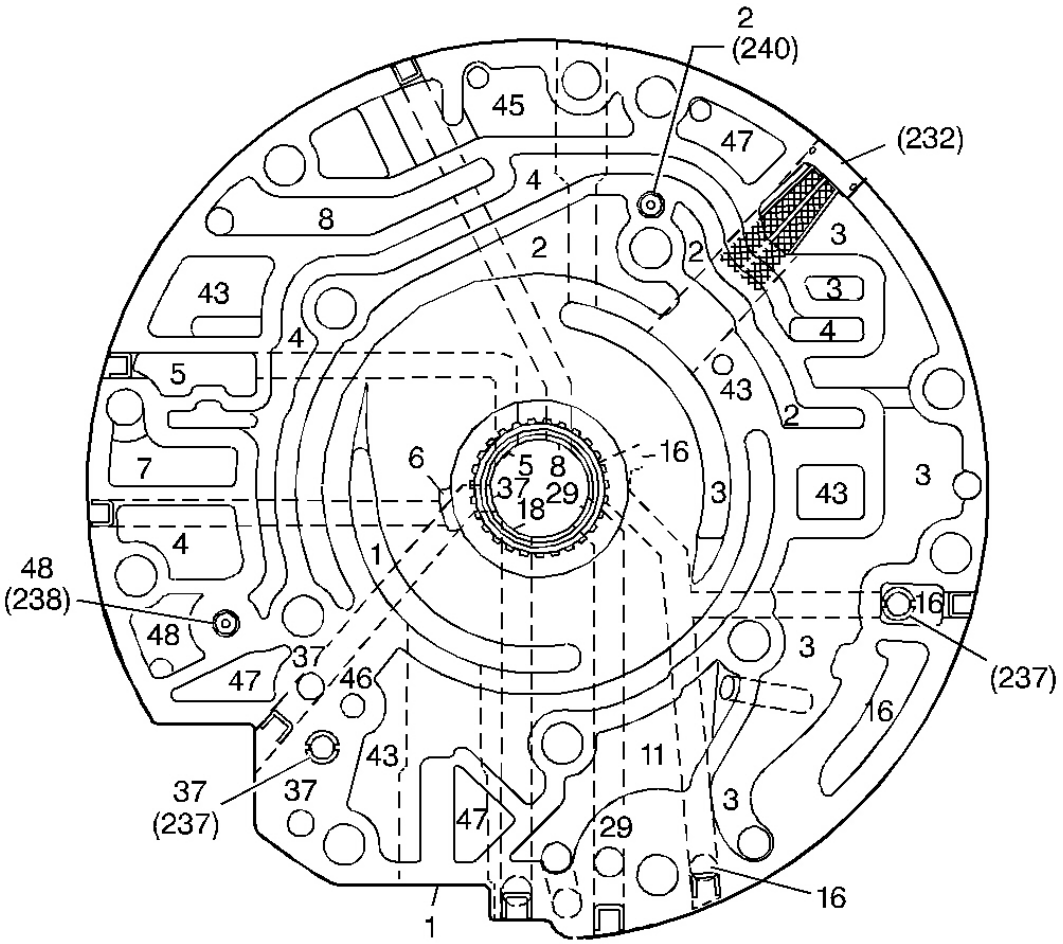

Fig. 336: Pump Cover Fluid Passages (Pump Body Side)
Courtesy of GENERAL MOTORS CORP.

Callouts For Fig. 336

Callout	Component Name
1	Suction (intake)
1	Suction (intake)
2	Decrease
2	Decrease
2	Decrease
2	Decrease
3	Line
3	Line
3	Line
3	Line

cardiagn.com

3	Line
3	Line
4	Converter Feed
4	Converter Feed
4	Converter Feed
4	Converter Feed
5	Release
5	Release
6	Apply
7	To Cooler
8	Lube from Cooler
8	Lube from Cooler
11	Torque Signal
16	Reverse Input
16	Reverse Input
16	Reverse Input
16	Reverse Input
18	Forward Clutch Feed
29	3-4 Clutch
29	3-4 Clutch
37	Overrun Clutch
37	Overrun Clutch
37	Overrun Clutch
37	Overrun Clutch
43	Exhaust
43	Exhaust
43	Exhaust
43	Exhaust
45	Vent
46	Seal Drain
47	Void
47	Void
47	Void
48	Regulated Apply
48	Regulated Apply
232	Oil Pump Cover Screen
237	Check Valve Retainer and Ball Assembly
237	Check Valve Retainer and Ball Assembly
238	Converter Clutch Signal Orificed Cup Plug
240	Orificed Cup Plug

cardiagn.com

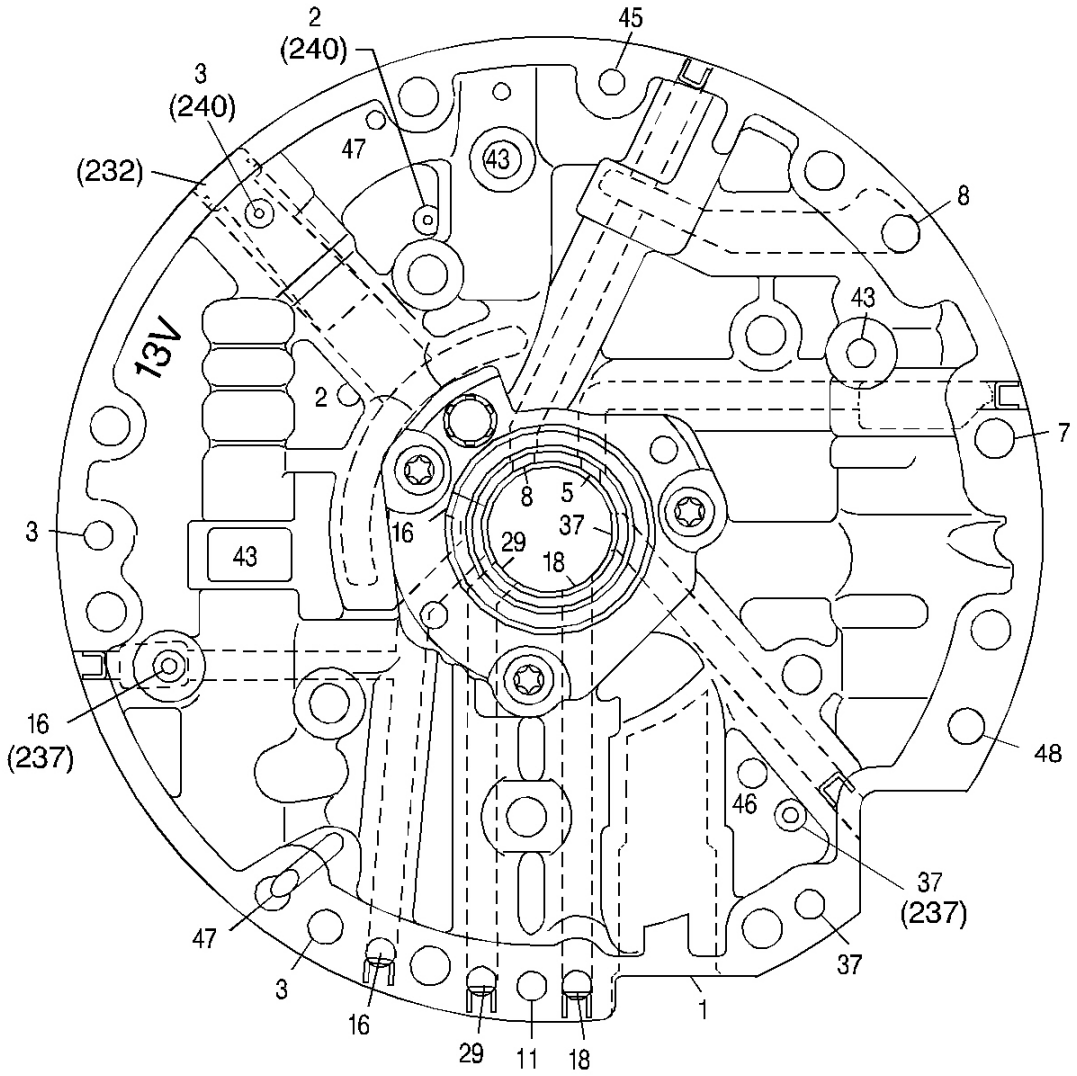

Fig. 337: Pump Cover Fluid Passages (Case Side)
Courtesy of GENERAL MOTORS CORP.

Callouts For Fig. 337

Callout	Component Name
1	Suction (Intake)
2	Decrease
2	Decrease
3	Line
3	Line
3	Line
5	Release

cardiagn.com

7	To Cooler
8	Lube from Cooler
8	Lube from Cooler
11	Torque Signal
16	Reverse Input (Rev. Clutch
16	Reverse Input (Rev. Clutch
16	Reverse Input (Rev. Clutch
18	Forward Clutch Feed
18	Forward Clutch Feed
29	3-4 Clutch
29	3-4 Clutch
37	Overrun Clutch
37	Overrun Clutch
37	Overrun Clutch
43	Exhaust
43	Exhaust
43	Exhaust
45	Vent
46	Seal Drain
47	Void
47	Void
48	Regulated Apply
232	Oil Pump Cover Screen
237	Check Valve Retainer and Ball Assembly
237	Check Valve Retainer and Ball Assembly
240	Orificed Cup Plug
240	Orificed Cup Plug

cardiagn.com

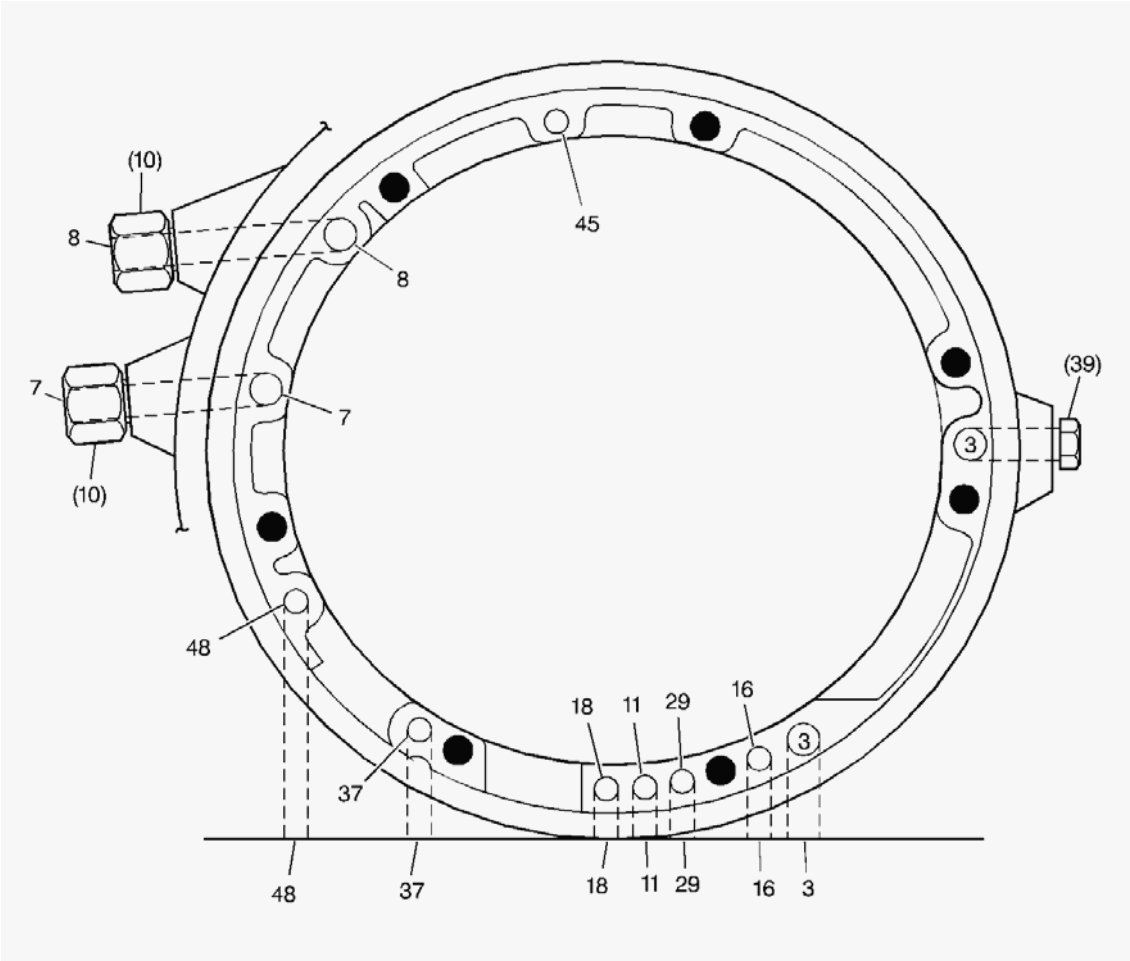

Fig. 338: Case Fluid Passages (Pump Cover Side)
Courtesy of GENERAL MOTORS CORP.

Callouts For Fig. 338

Callout	Component Name
3	Line
3	Line
3	Line
7	To Cooler
7	To Cooler
8	Lube from Cooler
8	Lube from Cooler
10	Oil Cooler Pipe Connector
10	Oil Cooler Pipe Connector
11	Torque Signal
11	Torque Signal
16	Reverse Input
16	Reverse Input

cardiagn.com

18	Forward Clutch Feed
18	Forward Clutch Feed
29	3-4 Clutch
29	3-4 Clutch
37	Overrun Clutch
37	Overrun Clutch
39	Pressure Plug
45	Vent
48	Regulated Apply
48	Regulated Apply

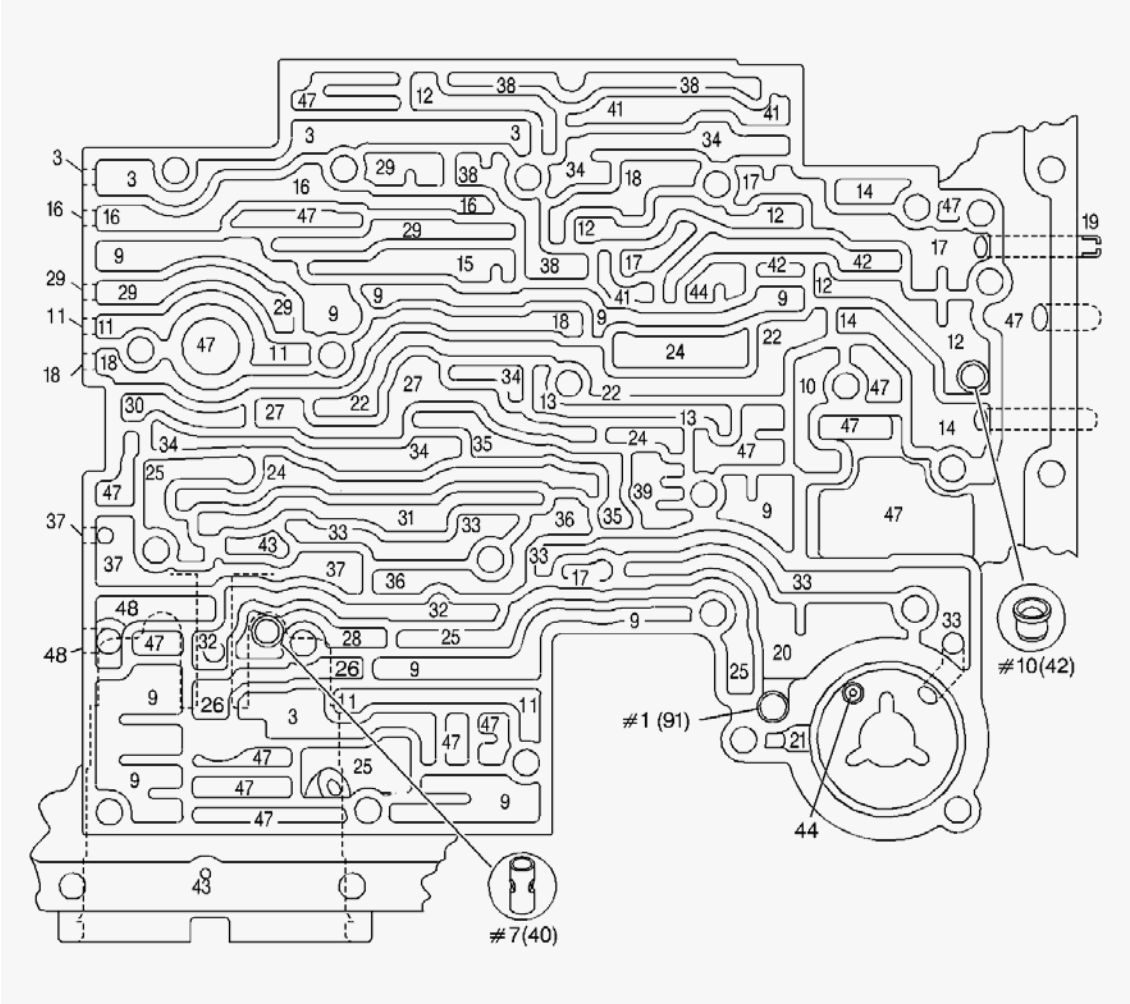

Fig. 339: Case Fluid Passages (Control Valve Body Side)
Courtesy of GENERAL MOTORS CORP.

Callouts For Fig. 339

Callout	Component Name
#1	Checkball (91)

cardiagn.com

#7	3rd Accumulator Retainer and Ball Assembly (40)
#10	Checkball (42)
3	Line
3	Line
3	Line
3	Line
3	Line
9	Actuator Feed Limit
9	Actuator Feed Limit
9	Actuator Feed Limit
9	Actuator Feed Limit
9	Actuator Feed Limit
9	Actuator Feed Limit
9	Actuator Feed Limit
9	Actuator Feed Limit
9	Actuator Feed Limit
9	Actuator Feed Limit
9	Actuator Feed Limit
10	Filtered Actuator Feed
11	Torque Signal
11	Torque Signal
11	Torque Signal
11	Torque Signal
11	Torque Signal
12	PR
12	PR
12	PR
12	PR
12	PR
13	D4-3-2
13	D4-3-2
14	Lo/Reverse
14	Lo/Reverse
14	Lo/Reverse
15	Reverse
16	Reverse Input (Rev. Clutch
16	Reverse Input (Rev. Clutch
16	Reverse Input (Rev. Clutch
16	Reverse Input (Rev. Clutch
17	D4
17	D4

cardiagn.com

17	D4
17	D4
18	Forward Clutch Feed
18	Forward Clutch Feed
18	Forward Clutch Feed
18	Forward Clutch Feed
19	Rear Lube
20	Accumulator
21	Orificed Accumulator
22	Signal A
22	Signal A
22	Signal A
24	2nd
24	2nd
24	2nd
25	2nd Clutch
25	2nd Clutch
25	2nd Clutch
25	2nd Clutch
26	C.C. Signal
26	C.C. Signal
27	3-4 Signal
27	3-4 Signal
28	3rd Accumulator
29	3-4 Clutch
29	3-4 Clutch
29	3-4 Clutch
29	3-4 Clutch
29	3-4 Clutch
30	4th Signal
31	Servo Feed
32	4th
32	4th
33	3-4 Accumulator
33	3-4 Accumulator
33	3-4 Accumulator
33	3-4 Accumulator
33	3-4 Accumulator
34	D3
34	D3
34	D3

cardiagn.com

34	D3
34	D3
35	Overrun
35	Overrun
36	Overrun Clutch Feed
36	Overrun Clutch Feed
37	Overrun Clutch
37	Overrun Clutch
37	Overrun Clutch
38	D2
38	D2
38	D2
38	D2
39	Orificed D2
41	Lo
41	Lo
41	Lo
42	Lo/1st
42	Lo/1st
43	Exhaust
43	Exhaust
44	Orificed Exhaust
44	Orificed Exhaust
47	Void
47	Void
47	Void
47	Void
47	Void
47	Void
47	Void
47	Void
47	Void
47	Void
47	Void
47	Void
47	Void
47	Void
47	Void
47	Void
48	Regulated Apply
48	Regulated Apply

cardiagn.com

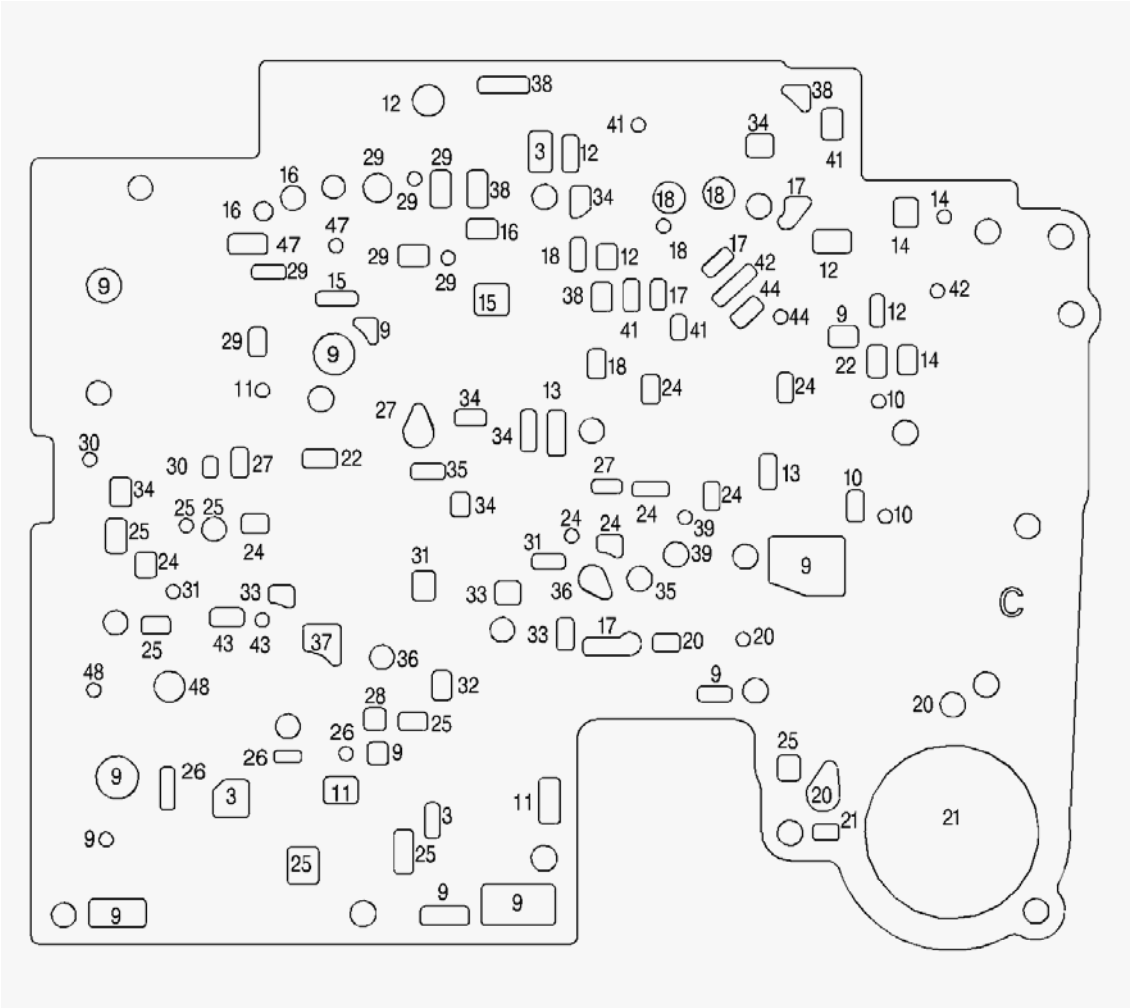

Fig. 340: Spacer Plate to Case Gasket - M30/M32
Courtesy of GENERAL MOTORS CORP.

Callouts For Fig. 340

Callout	Component Name
3	Line
3	Line
3	Line
9	Actuator Feed Limit
9	Actuator Feed Limit
9	Actuator Feed Limit
9	Actuator Feed Limit
9	Actuator Feed Limit
9	Actuator Feed Limit
9	Actuator Feed Limit
9	Actuator Feed Limit
9	Actuator Feed Limit

cardiagn.com

9	Actuator Feed Limit
10	Filtered Actuator Feed
10	Filtered Actuator Feed
10	Filtered Actuator Feed
10	Filtered Actuator Feed
10	Filtered Actuator Feed
11	Torque Signal
11	Torque Signal
11	Torque Signal
12	PR
12	PR
12	PR
12	PR
12	PR
13	D4-3-2
13	D4-3-2
14	Lo/Reverse
14	Lo/Reverse
14	Lo/Reverse
15	Reverse
15	Reverse
16	Reverse Input (Rev. Cl.)
16	Reverse Input (Rev. Cl.)
16	Reverse Input (Rev. Cl.)
17	D4
17	D4
17	D4
17	D4
18	Forward Clutch Feed
18	Forward Clutch Feed
18	Forward Clutch Feed
18	Forward Clutch Feed
18	Forward Clutch Feed
20	Accumulator
20	Accumulator
20	Accumulator
20	Accumulator
21	Orificed Accumulator
21	Orificed Accumulator
22	Signal A
22	Signal A

cardiagn.com

24	2nd
24	2nd
24	2nd
24	2nd
24	2nd
24	2nd
24	2nd
24	2nd
25	2nd Clutch
25	2nd Clutch
25	2nd Clutch
25	2nd Clutch
25	2nd Clutch
25	2nd Clutch
25	2nd Clutch
25	2nd Clutch
25	2nd Clutch
25	2nd Clutch
25	2nd Clutch
26	C.C. Signal
26	C.C. Signal
26	C.C. Signal
27	3-4 Signal
27	3-4 Signal
27	3-4 Signal
28	3rd Accumulator
29	3-4 Clutch
29	3-4 Clutch
29	3-4 Clutch
29	3-4 Clutch
29	3-4 Clutch
29	3-4 Clutch
29	3-4 Clutch
30	4th Signal
30	4th Signal
31	Servo Feed
31	Servo Feed
31	Servo Feed
32	4th
33	3-4 Accumulator
33	3-4 Accumulator

cardiagn.com

33	3-4 Accumulator
34	D3
34	D3
34	D3
34	D3
34	D3
34	D3
35	Overrun
35	Overrun
36	Overrun Clutch Feed
36	Overrun Clutch Feed
37	Overrun Clutch
38	D2
38	D2
38	D2
38	D2
39	Orificed D2
39	Orificed D2
41	Lo
41	Lo
41	Lo
41	Lo
42	Lo/1st
42	Lo/1st
43	Exhaust
43	Exhaust
44	Orificed Exhaust
44	Orificed Exhaust
47	Void
47	Void
48	Regulated Apply
48	Regulated Apply

cardiagn.com

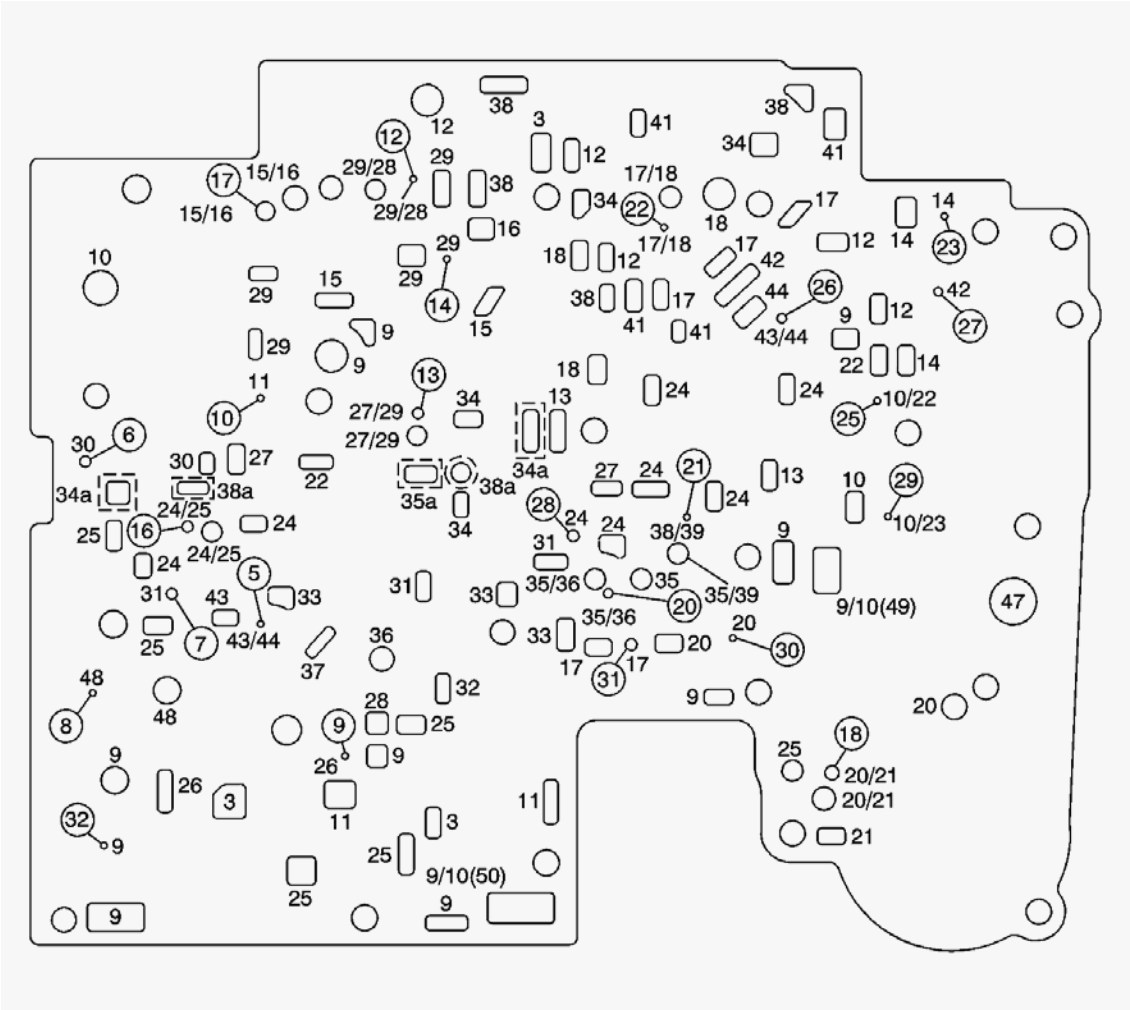

Fig. 341: Spacer Plate Fluid Passages
Courtesy of GENERAL MOTORS CORP.

Callouts For Fig. 341

Callout	Component Name
3	Line
3	Line
3	Line
9	Actuator Feed Limit
9	Actuator Feed Limit
9	Actuator Feed Limit
9	Actuator Feed Limit
9	Actuator Feed Limit
9	Actuator Feed Limit
9	Actuator Feed Limit
9	Actuator Feed Limit
9	Actuator Feed Limit
9	Actuator Feed Limit

cardiagn.com

9	Actuator Feed Limit
9/10	Actuator Feed Limit/Filtered Actuator Feed
9/10	Actuator Feed Limit/Filtered Actuator Feed
10	Filtered Actuator Feed
10	Filtered Actuator Feed
10/22	Filtered Actuator Feed/Signal A
10/23	Filtered Actuator Feed/Signal B
11	Torque Signal
11	Torque Signal
11	Torque Signal
12	PR
12	PR
12	PR
12	PR
12	PR
13	D4-3-2
13	D4-3-2
14	Lo/Reverse
14	Lo/Reverse
14	Lo/Reverse
15	Reverse
15	Reverse
15/16	Reverse/Reverse Input (Rev. Clutch
15/16	Reverse/Reverse Input (Rev. Clutch
16	Reverse Input (Rev. Clutch
17	D4
17	D4
17	D4
17	D4
17	D4
17/18	D4
17/18	D4
18	Forward Clutch Feed
18	Forward Clutch Feed
18	Forward Clutch Feed
20	Accumulator
20	Accumulator
20	Accumulator
20/21	Accumulator/Orificed Accumulator
20/21	Accumulator/Orificed Accumulator
21	Orificed Accumulator

cardiagn.com

22	Signal A
22	Signal A
24	2nd
24	2nd
24	2nd
24	2nd
24	2nd
24	2nd
24	2nd
24	2nd
24/25	2nd/2nd Clutch
24/25	2nd/2nd Clutch
25	2nd Clutch
25	2nd Clutch
25	2nd Clutch
25	2nd Clutch
25	2nd Clutch
25	2nd Clutch
26	C.C. Signal
26	C.C. Signal
27	3-4 Signal
27	3-4 Signal
27/29	3-4 Signal
27/29	3-4 Signal
28	3rd Accumulator
29/28	3-4 Clutch/3rd Accumulator
29/28	3-4 Clutch/3rd Accumulator
29	3-4 Clutch
29	3-4 Clutch
29	3-4 Clutch
29	3-4 Clutch
29	3-4 Clutch
30	4th Signal
30	4th Signal
31	Servo Feed
31	Servo Feed
31	Servo Feed
32	4th
33	3-4 Accumulator
33	3-4 Accumulator
33	3-4 Accumulator

cardiagn.com

34a	D3 - Blocked on M33 Models
34a	D3 - Blocked on M33 Models
34	D3
34	D3
34	D3
34	D3
34	D3
34	D3
35a	Overrun- Blocked on M33 Models
35a	Overrun- Blocked on M33 Models
35	Overrun
35/36	Overrun/Overrun Clutch Feed
35/36	Overrun/Overrun Clutch Feed
35/39	Overrun/Orificed D2
36	Overrun Clutch Feed
37	Overrun Clutch
38a	D2 - M33 Models Only
38a	D2 - M33 Models Only
38	D2
38	D2
38	D2
38	D2
38	D2
38	D2
38/39	D2/Orificed D2
41	Lo
41	Lo
41	Lo
41	Lo
42	Lo/1st
42	Lo/1st
43	Exhaust
43/44	Exhaust/Orificed Exhaust
43/44	Exhaust/Orificed Exhaust
44	Orificed Exhaust
47	Void
48	Regulated Apply
48	Regulated Apply
49	Shift Solenoids Screen
50	Pressure Control Solenoid Screen

cardiagn.com

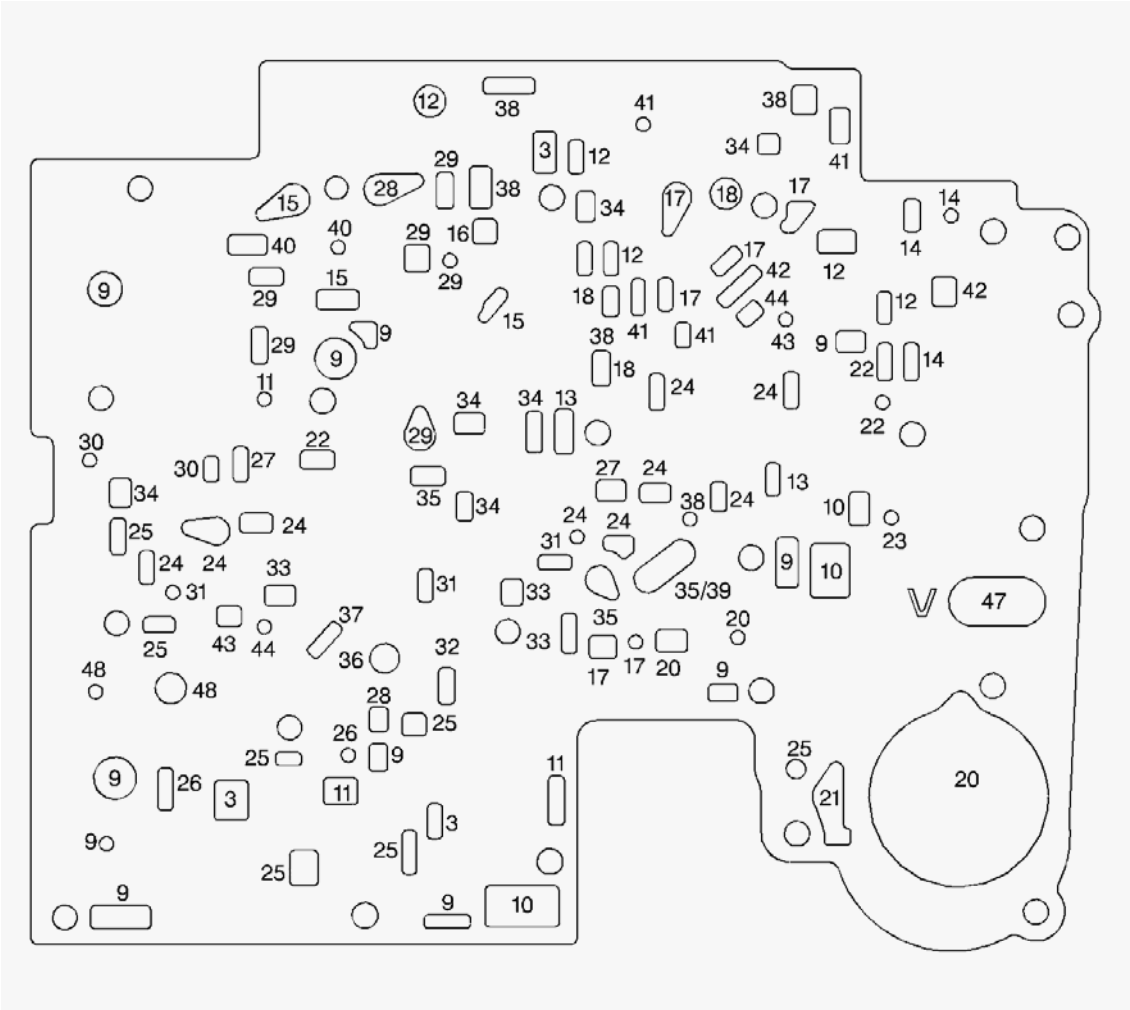

Fig. 342: Spacer Plate to Control Valve Body Gasket
Courtesy of GENERAL MOTORS CORP.

Callouts For Fig. 342

Callout	Component Name
3	Line
3	Line
3	Line
9	Actuator Feed Limit
9	Actuator Feed Limit
9	Actuator Feed Limit
9	Actuator Feed Limit
9	Actuator Feed Limit
9	Actuator Feed Limit
9	Actuator Feed Limit
9	Actuator Feed Limit
9	Actuator Feed Limit

cardiagn.com

10	Filtered Actuator Feed
10	Filtered Actuator Feed
10	Filtered Actuator Feed
10	Filtered Actuator Feed
11	Torque Signal
11	Torque Signal
11	Torque Signal
12	PR
12	PR
12	PR
12	PR
12	PR
13	D4-3-2
13	D4-3-2
14	Lo/Reverse
14	Lo/Reverse
14	Lo/Reverse
15	Reverse
15	Reverse
15	Reverse
16	Reverse Input (Rev. Cl.)
17	D4
17	D4
17	D4
17	D4
17	D4
17	D4
18	Forward Clutch Feed
18	Forward Clutch Feed
18	Forward Clutch Feed
20	Accumulator
20	Accumulator
20	Accumulator
21	Orificed Accumulator
22	Signal A
22	Signal A
22	Signal A
23	Signal B
24	2nd
24	2nd
24	2nd

cardiagn.com

24	2nd
24	2nd
24	2nd
24	2nd
24	2nd
24	2nd
25	2nd Clutch
25	2nd Clutch
25	2nd Clutch
25	2nd Clutch
25	2nd Clutch
25	2nd Clutch
25	2nd Clutch
25	2nd Clutch
25	2nd Clutch
26	C.C. Signal
26	C.C. Signal
27	3-4 Signal
27	3-4 Signal
28	3rd Accumulator
28	3rd Accumulator
29	3-4 Clutch
29	3-4 Clutch
29	3-4 Clutch
29	3-4 Clutch
29	3-4 Clutch
29	3-4 Clutch
30	4th Signal
30	4th Signal
31	Servo Feed
31	Servo Feed
31	Servo Feed
32	4th
33	3-4 Accumulator
33	3-4 Accumulator
33	3-4 Accumulator
34	D3
34	D3
34	D3
34	D3
34	D3

cardiagn.com

34	D3
35	Overrun
35	Overrun
35/39	Overrun/Orificed D2
36	Overrun Clutch Feed
37	Overrun Clutch
38	D2
38	D2
38	D2
38	D2
38	D2
40	3-2 Signal
40	3-2 Signal
41	Lo
41	Lo
41	Lo
41	Lo
42	Lo/1st
42	Lo/1st
43	Exhaust
43	Exhaust
44	Orificed Exhaust
44	Orificed Exhaust
47	Void
48	Regulated Apply
48	Regulated Apply

cardiagn.com

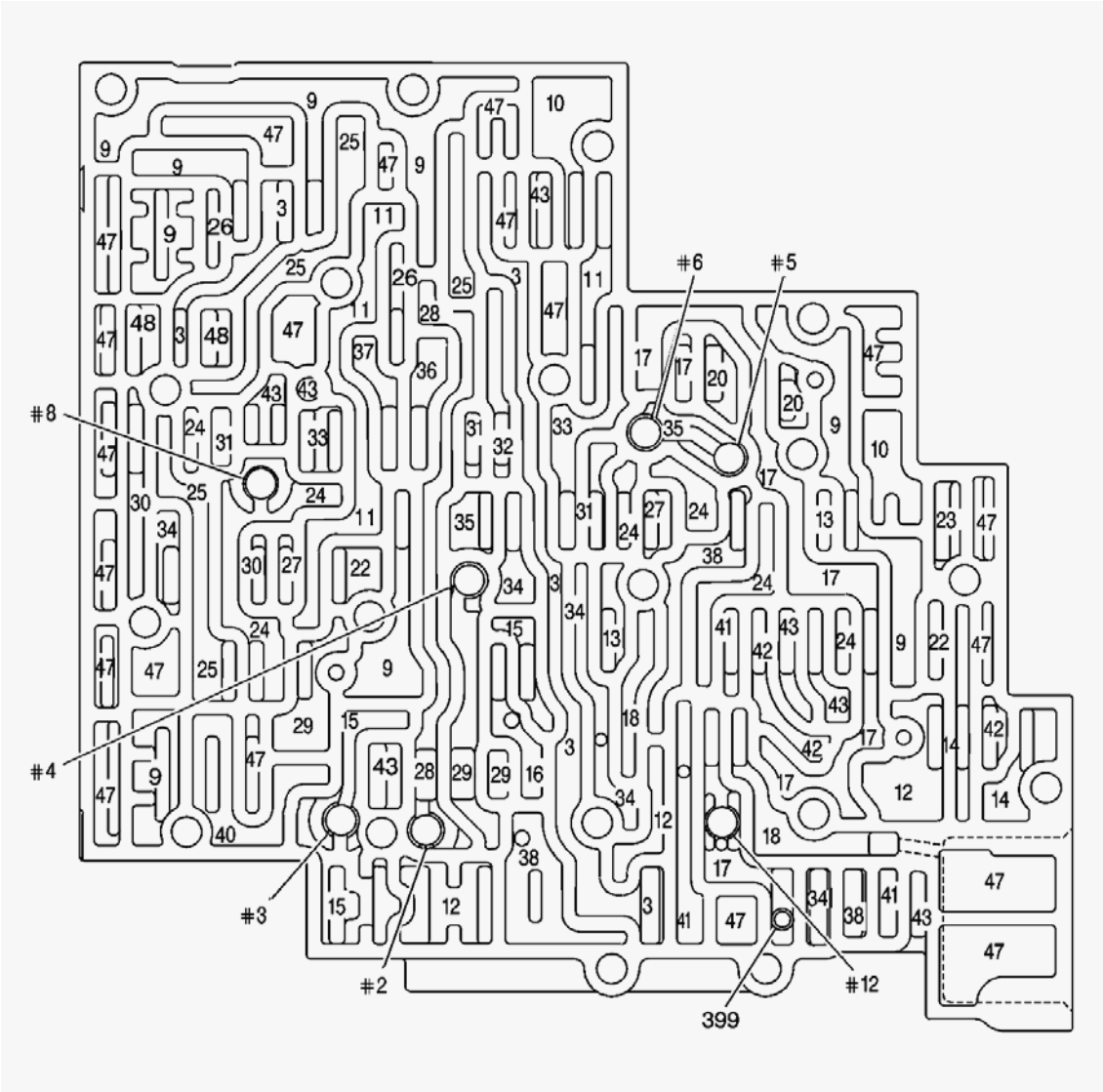

Fig. 343: Control Valve Body Fluid Passages (Case Side)
Courtesy of GENERAL MOTORS CORP.

Callouts For Fig. 343

Callout	Component Name
#2	Checkball (61)
#3	Checkball (61)
#4	Checkball (61)
#5	Checkball (61) - Model Dependent
#6	Checkball (61)
#8	Checkball (61)
#12	Checkball (61)
3	Line
3	Line

cardiagn.com

3	Line
3	Line
3	Line
3	Line
9	Actuator Feed Limit
9	Actuator Feed Limit
9	Actuator Feed Limit
9	Actuator Feed Limit
9	Actuator Feed Limit
9	Actuator Feed Limit
9	Actuator Feed Limit
9	Actuator Feed Limit
9	Actuator Feed Limit
10	Filtered Actuator Feed
10	Filtered Actuator Feed
11	Torque Signal
11	Torque Signal
11	Torque Signal
11	Torque Signal
12	PR
12	PR
12	PR
13	D4-3-2
13	D4-3-2
14	Lo/Reverse
14	Lo/Reverse
15	Reverse
15	Reverse
15	Reverse
16	Reverse Input (Rev. Clutch)
17	D4
17	D4
17	D4
17	D4
17	D4
17	D4
17	D4
18	Forward Clutch Feed
18	Forward Clutch Feed
20	Accumulator
20	Accumulator

cardiagn.com

22	Signal A
22	Signal A
23	Signal B
24	2nd
24	2nd
24	2nd
24	2nd
24	2nd
24	2nd
24	2nd
25	2nd Clutch
25	2nd Clutch
25	2nd Clutch
25	2nd Clutch
25	2nd Clutch
25	2nd Clutch
26	C.C. Signal
26	C.C. Signal
27	3-4 Signal
27	3-4 Signal
28	3rd Accumulator
28	3rd Accumulator
29	3-4 Clutch
29	3-4 Clutch
29	3-4 Clutch
30	4th Signal
30	4th Signal
31	Servo Feed
31	Servo Feed
31	Servo Feed
32	4th
33	3-4 Accumulator
33	3-4 Accumulator
34	D3
34	D3
34	D3
34	D3
34	D3
35	Overrun
35	Overrun
36	Overrun Clutch Feed

cardiagn.com

37	Overrun Clutch
38	D2
38	D2
38	D2
40	3-2 Signal
41	Lo
41	Lo
41	Lo
42	Lo/1st
42	Lo/1st
42	Lo/1st
43	Exhaust
43	Exhaust
43	Exhaust
43	Exhaust
43	Exhaust
43	Exhaust
43	Exhaust
47	Void
47	Void
47	Void
47	Void
47	Void
47	Void
47	Void
47	Void
47	Void
47	Void
47	Void
47	Void
47	Void
47	Void
47	Void
47	Void
47	Void
47	Void
47	Void
47	Void
47	Void
47	Void
48	Regulated Apply

cardiagn.com

48	Regulated Apply
399	Ball Check Valve - M33 Models

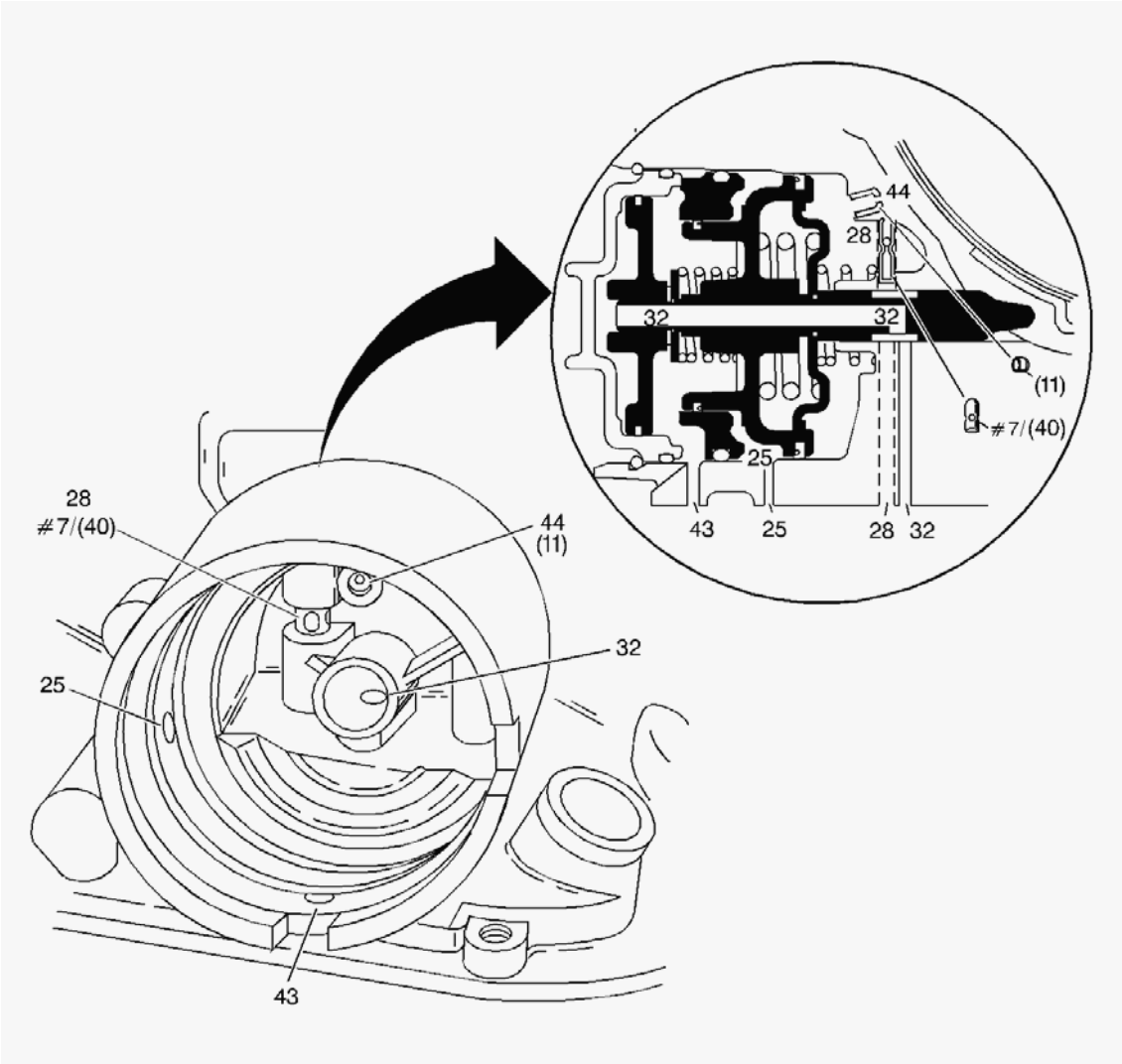

Fig. 344: 2-4 Servo Fluid Passages
Courtesy of GENERAL MOTORS CORP.

Callouts For Fig. 344

Callout	Component Name
#7	3rd Accumulator Retainer and Ball Assembly (40)
#7	3rd Accumulator Retainer and Ball Assembly (40)
11	Case Servo Orificed Plug
11	Case Servo Orificed Plug
25	2nd Clutch
25	2nd Clutch
25	2nd Clutch

cardiagn.com

28	3rd Accumulator
28	3rd Accumulator
28	3rd Accumulator
32	4th
32	4th
32	4th
32	4th
43	Exhaust
43	Exhaust
44	Orificed Exhaust
44	Orificed Exhaust

cardiagn.com

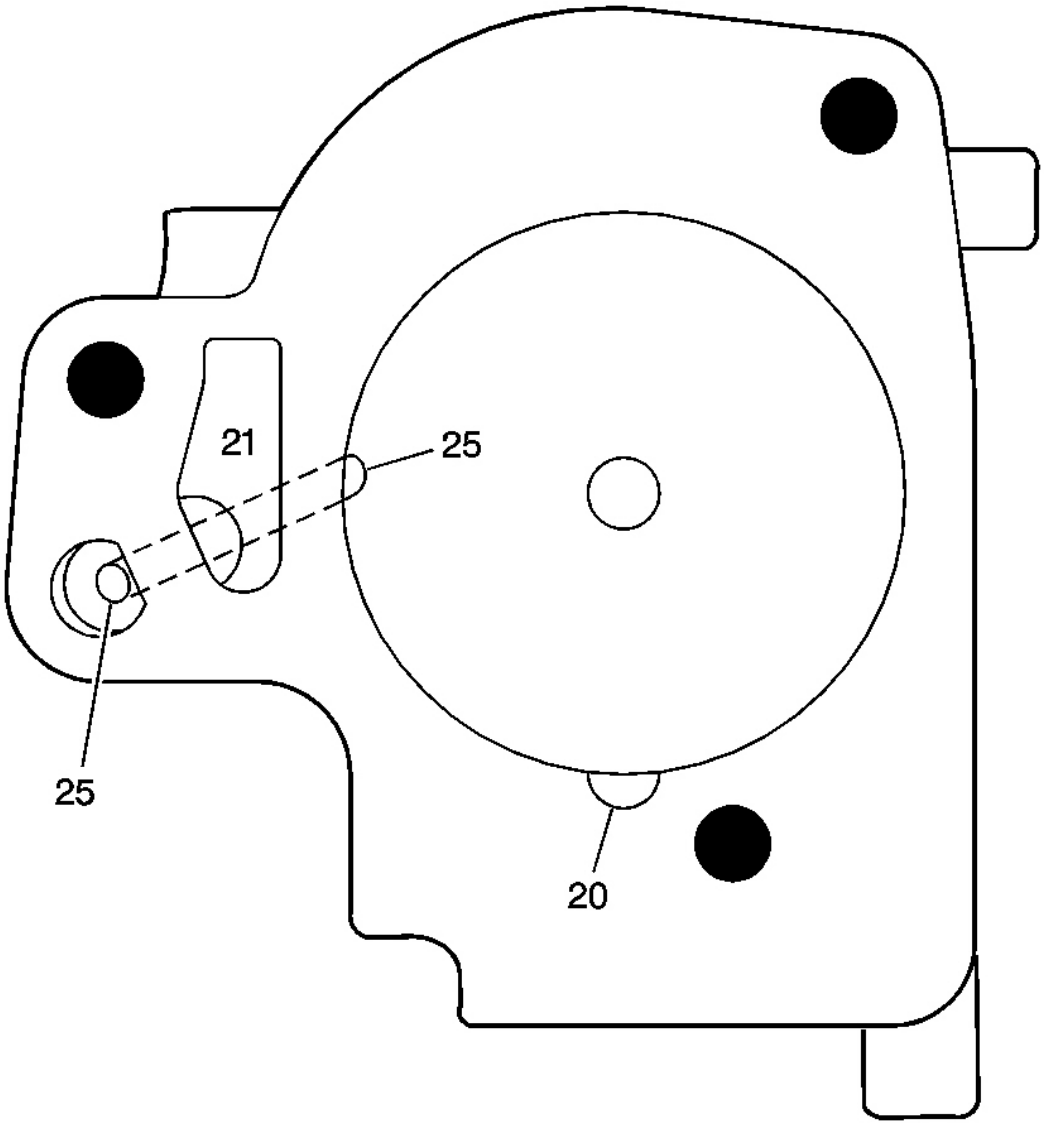

Fig. 345: 1-2 Accumulator Cover Fluid Passages
Courtesy of GENERAL MOTORS CORP.

Callouts For Fig. 345

Callout	Component Name
20	Accumulator
21	Orificed Accumulator
25	2nd Clutch
25	2nd Clutch

cardiagn.com

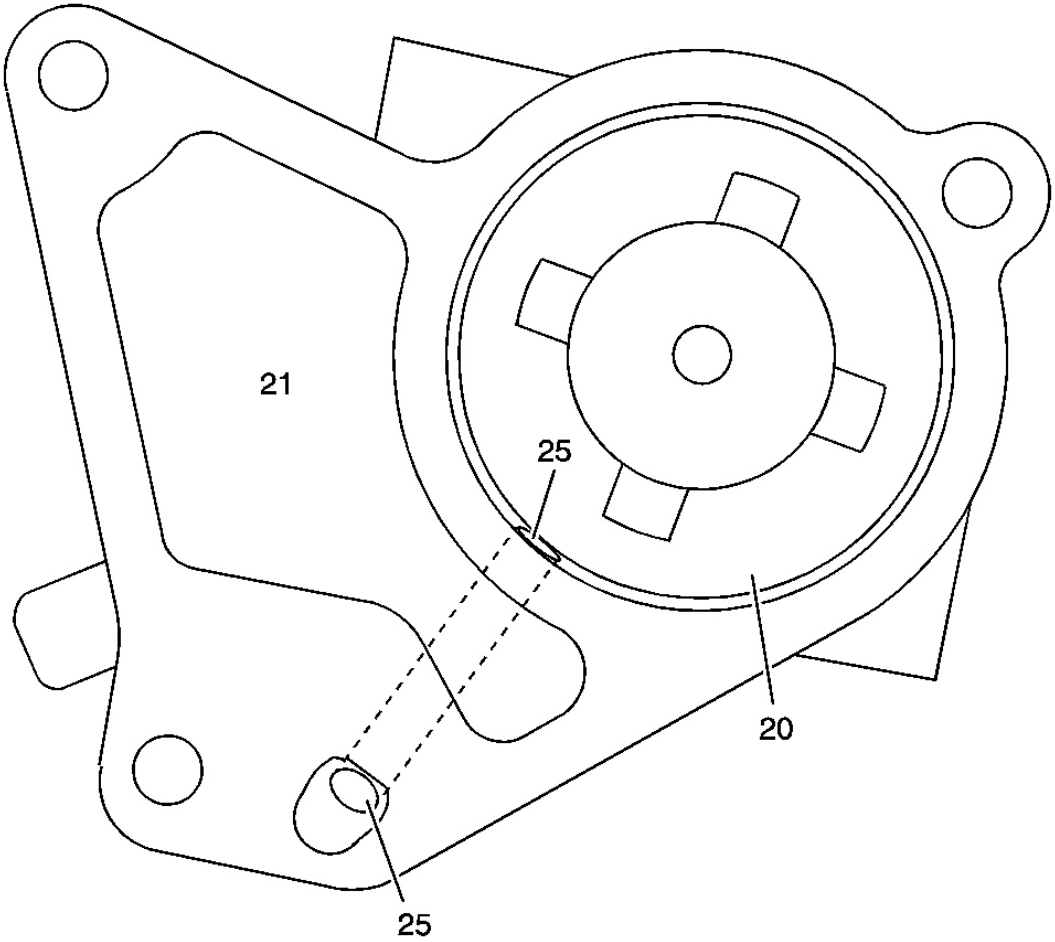

Fig. 346: 1-2 Accumulator Cover Fluid Passages
Courtesy of GENERAL MOTORS CORP.

Callouts For Fig. 346

Callout	Component Name
20	Accumulator
21	Orificed Accumulator
25	2nd Clutch
25	2nd Clutch

SPECIAL TOOLS AND EQUIPMENT

SPECIAL TOOLS (UNIT REPAIR)

Special Tools (Unit Repair)

cardiagn.com

Illustration	Tool Number/Description
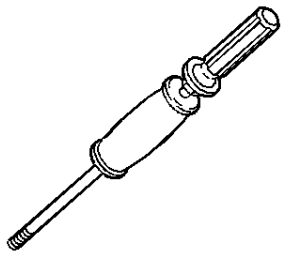	J 7004-1 Universal Remover
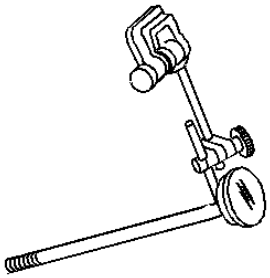	J 8001 Dial Indicator Set
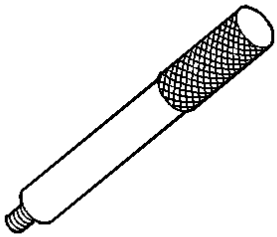	J 8092 Driver Handle
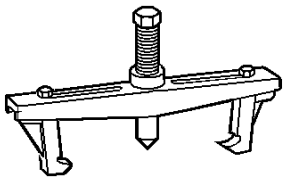	J 8433 Two Jaw Puller

cardiagn.com

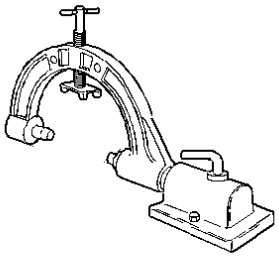	J 8763-02 Holding Fixture and Base
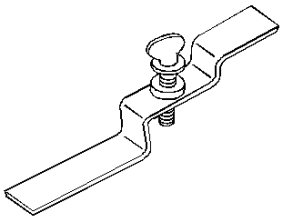	J 21366 Converter Holding Strap
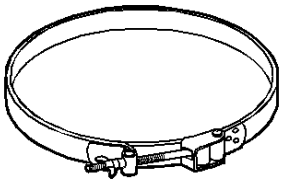	J 21368 Pump Body and Cover Alignment Band
	J 21426 Rear Seal Installer

cardiagn.com

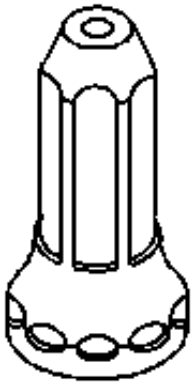	
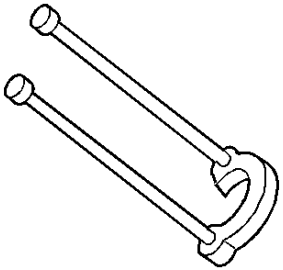	J 21427-01 Speedometer Gear Puller Adapter
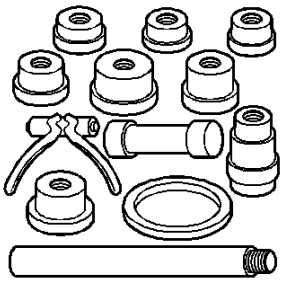	J 21465-01 Bushing Service Set
	J 21465-2

cardiagn.com

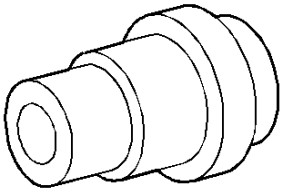	Pump Cover Bushing Installer
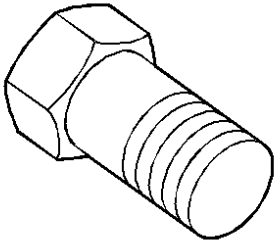	J 21465-15 Sun Gear and Stator Shaft Bushing Remover
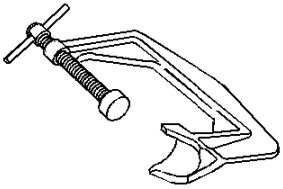	J 22269-01 Accumulator and Servo Piston Remover
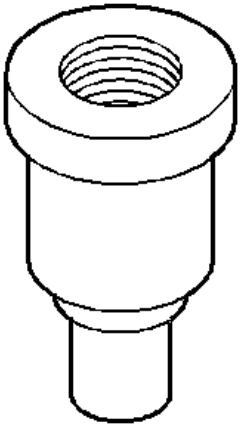	J 23062-14 Bushing Remover

cardiagn.com

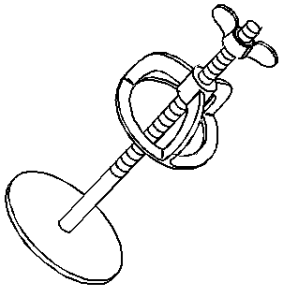	J 23327-1 Forward Clutch Spring Compressor (Bridge)
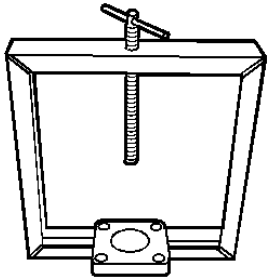	J 23456 Booster and Clutch Pack Compressor
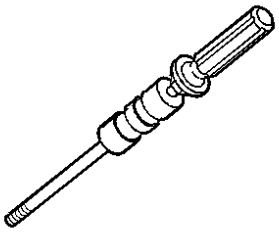	J 23907 Slide Hammer with Bearing Adapter
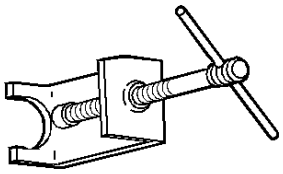	J 24773-A Oil Pump Remover

cardiagn.com

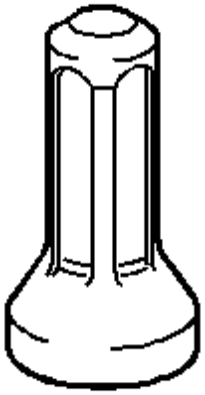	J 25016 Pump Seal and Speedometer gear Installer
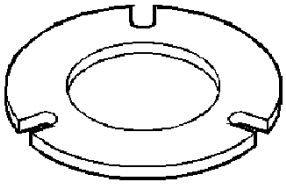	J 25018-A Clutch Spring Compressor Adapter
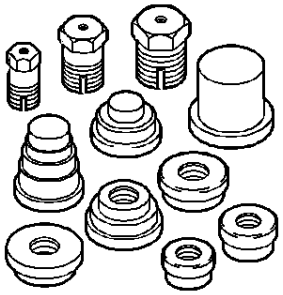	J 25019 Bushing Service Set
	J 25019-4 Direct Clutch Bushing Remover

cardiagn.com

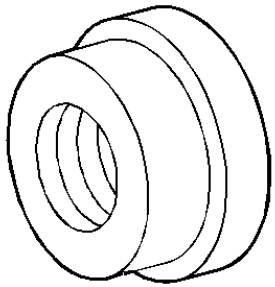	
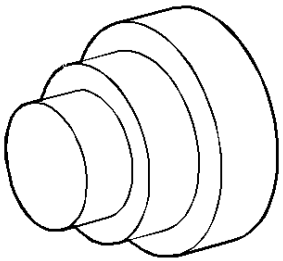	J 25019-9 Bushing Installer
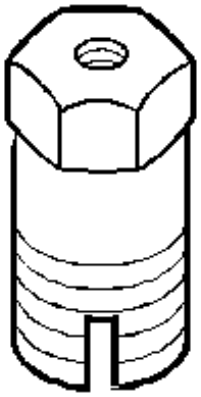	J 25019-14 Stator Pump Bushing Remover

cardiagn.com

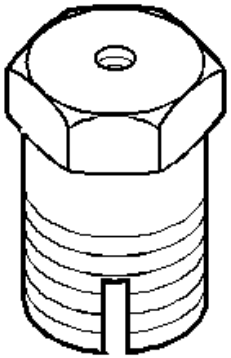	J 25019-16 Bushing Remover
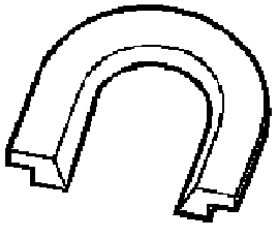	J 25022-A End Play Fixture Adapter
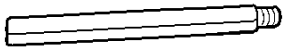	J 25025-1 Dial Indicator Mounting Post
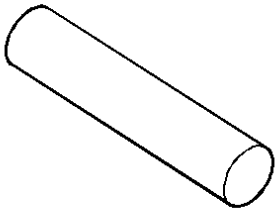	J 25025-5 Guide Pins
	J 25025-7A Dial Indicator Post

cardiagn.com

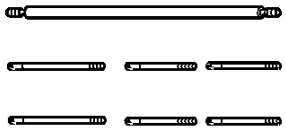	
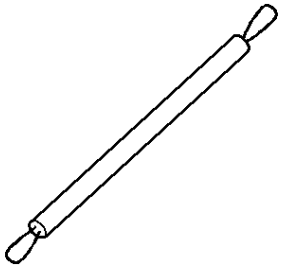	J 26744-A Seal Installer
	J 26900-13 Magnetic Indicator Base

cardiagn.com

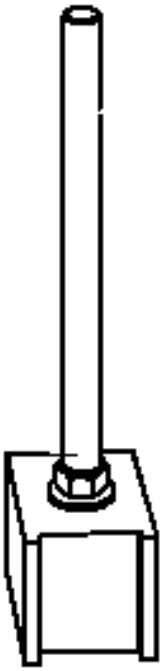	
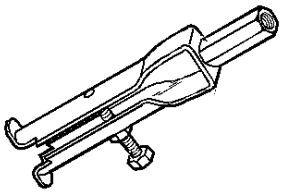	J 29369-2 Bushing and Bearing Remover - 2-3 in
	J 29714-A

cardiagn.com

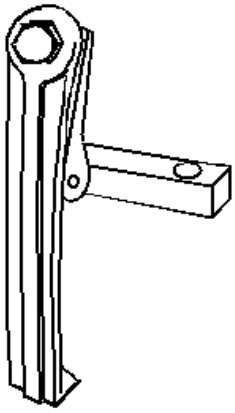	Servo Cover Depressor
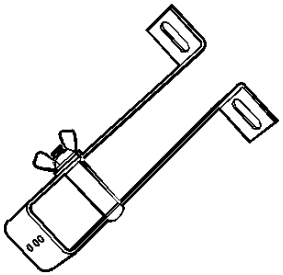	J 29837-A Output Shaft Support Fixture
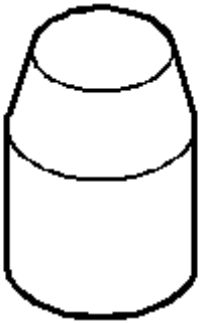	J 29882 Overrun Clutch Inner Seal Protector

cardiagn.com

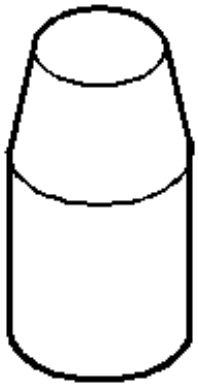	J 29883 Forward Clutch Inner Seal Protector
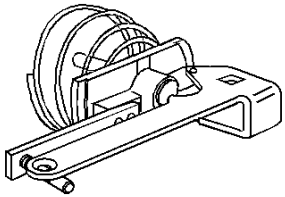	J 33037 2-4 Intermediate Band Apply Pin Gage
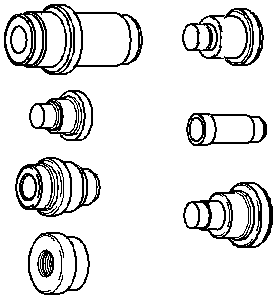	J 34196-B Transmission Bushing Service Set
	J 34627

cardiagn.com

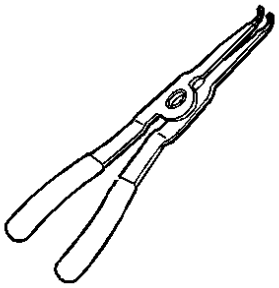	Snap Ring Remover and Installer
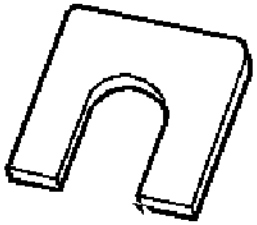	J 34725 End Play Checking Adapter
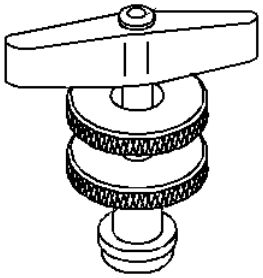	J 35138 Converter End Play Checker
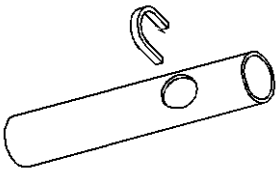	J 36352 Speed Sensor Rotor Installer Kit

cardiagn.com

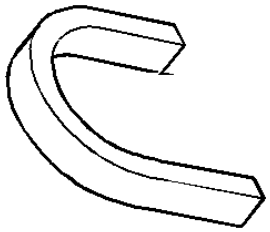	J 36352-4 Speed Sensor Rotor Installation Depth C Washer
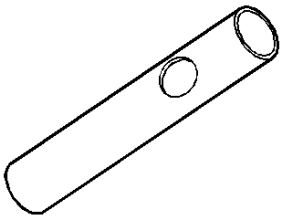	J 36352-6 Speed Sensor Rotor Installation Tube
	J 36418-1B Turbine Shaft Seal Installer

cardiagn.com

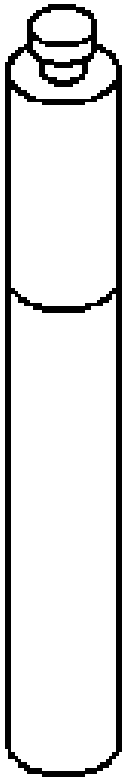

J 36418-2A
Turbine Shaft Seal Sizer

cardiagn.com

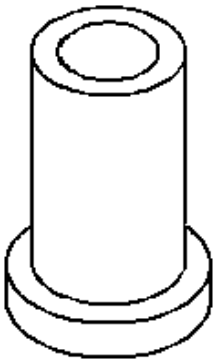	
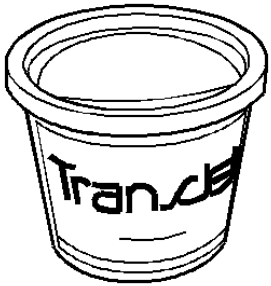	J 36850 Transjel Lubricant
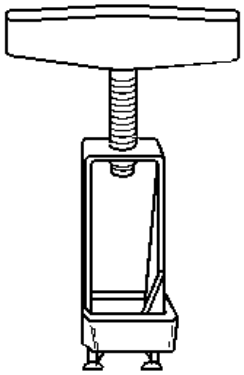	J 37789-A Pump Remover and Installer

cardiagn.com

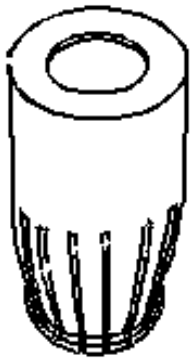	J 38735-3 Pusher
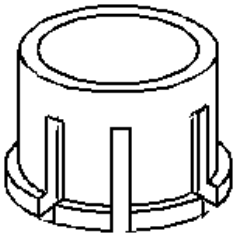	J 39119 Oil Pump Remover/Installer Adapter
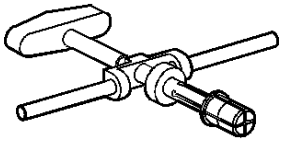	J 39195 Converter End Play Tool
	J 39855 Stator Shaft Seal Installer

cardiagn.com

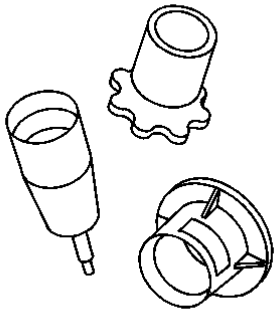	
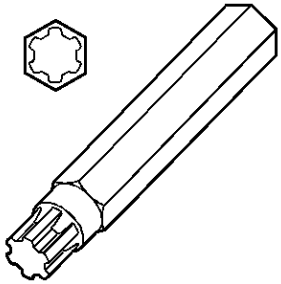	J 41510 T-50 Plus Bit
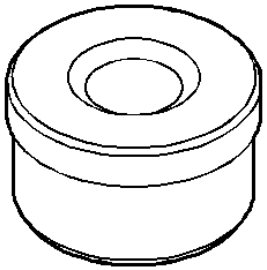	J 41778-1 Pump Body Bushing Installer/Remover
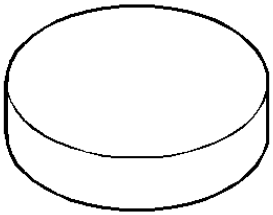	J 41778-2 Pump Body Bushing Position Stop

cardiagn.com

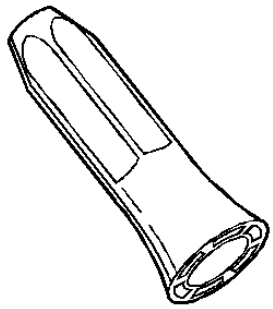	J 42198 Case Rear Oil Seal Installer
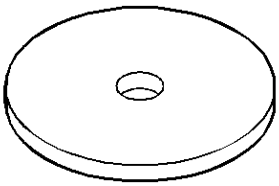	J 42628 Disc
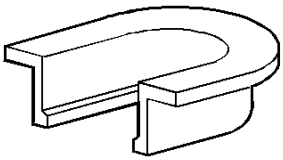	J 43205 End Play Fixture Adapter (300 mm converter)
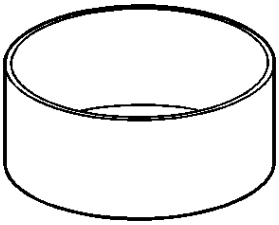	J 44571-1 Reverse Input Clutch Piston Installer

cardiagn.com