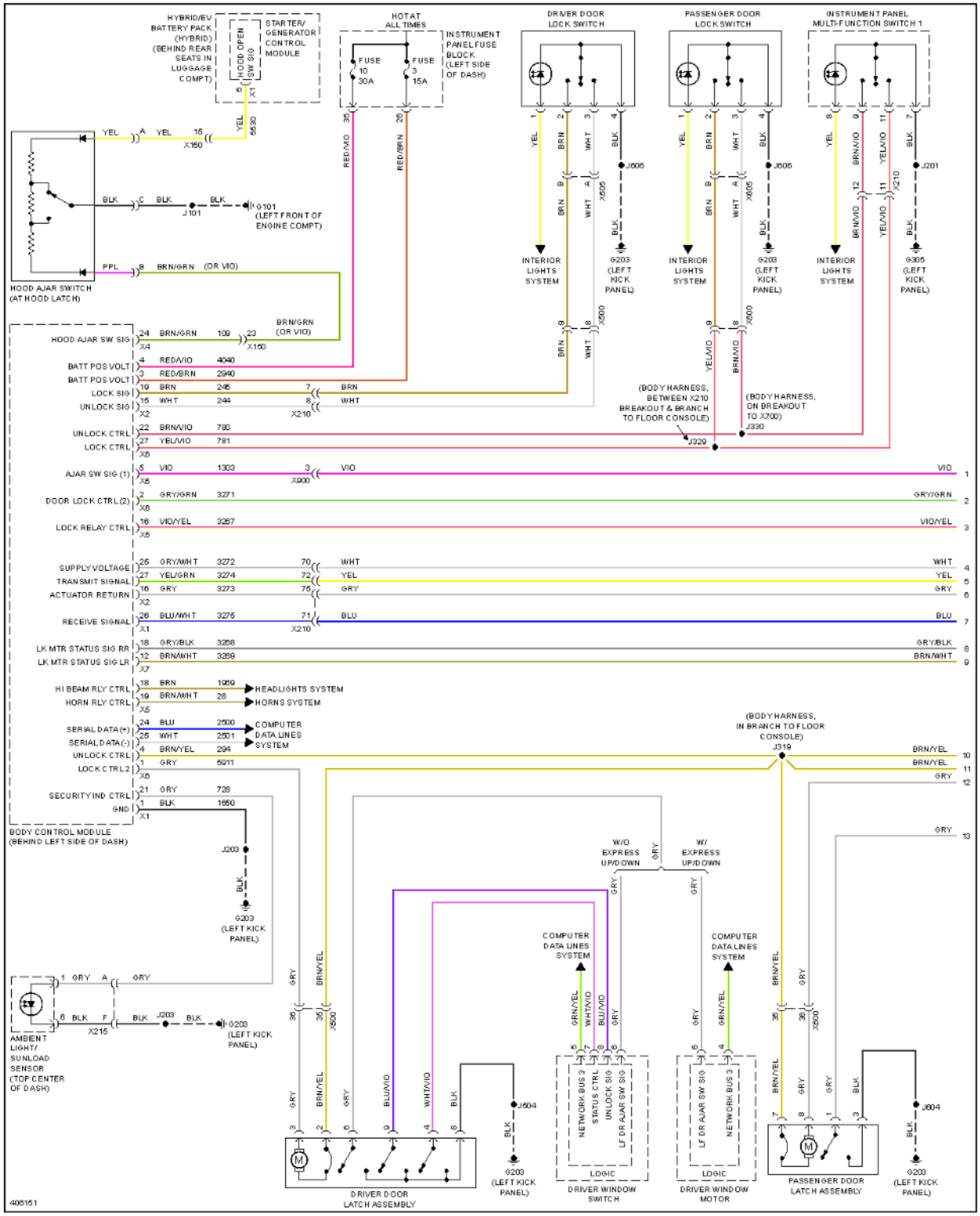

Fig. 15: Forced Entry Circuit, W/O Passive Keyless Entry (1 of 2)

Cardiagn.com

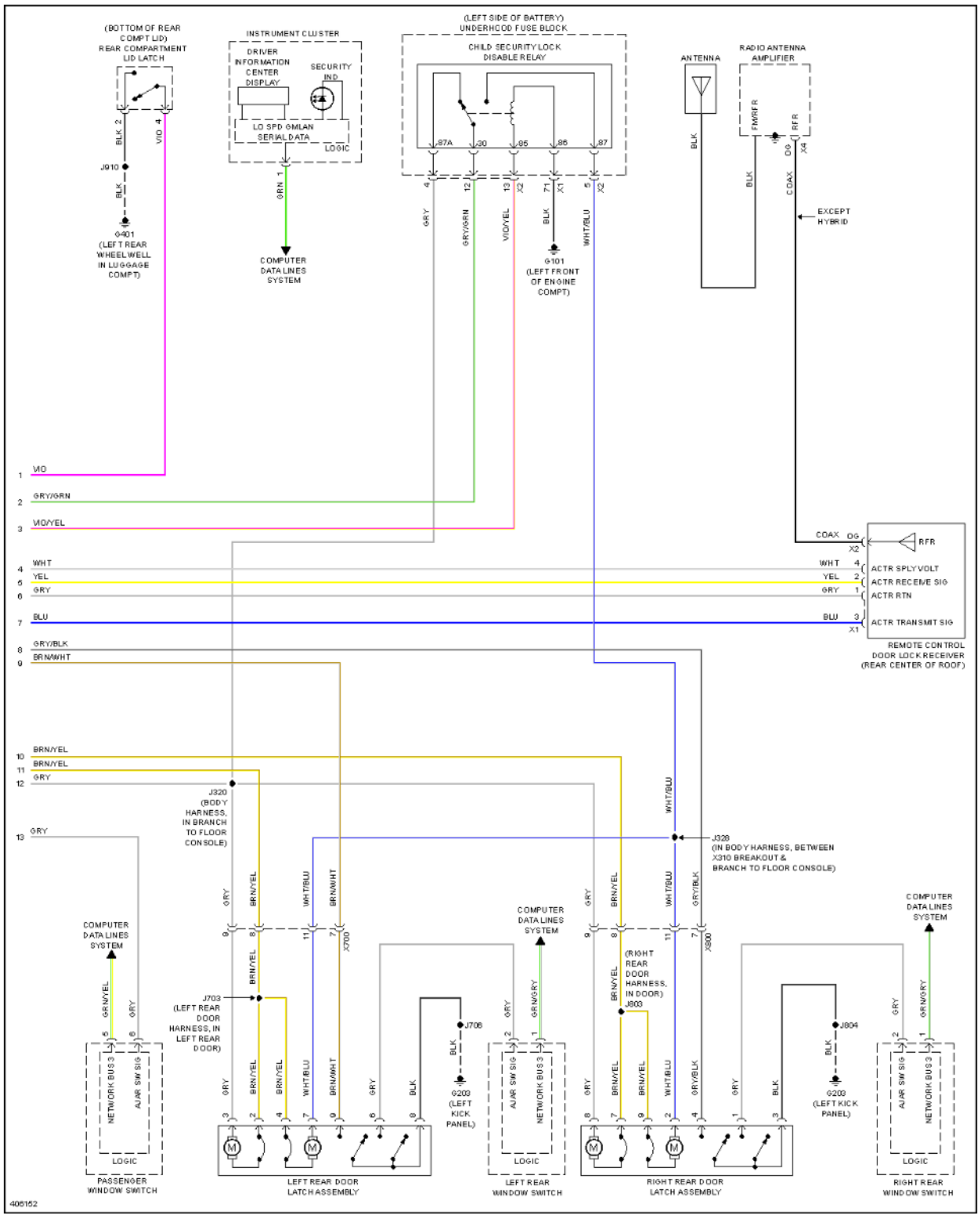

Fig. 16: Forced Entry Circuit, W/O Passive Keyless Entry (2 of 2)

Cardiagn.com