General Motors Corp. Hydra-Matic 4L60-E Overhaul

APPLICATION

TRANSMISSION APPLICATIONS

Application	Transaxle
Corvette	4L60-E

IDENTIFICATION

The 4L60-E transmission can be identified by a letter code contained in identification number. Identification number is stamped on transmission case above oil pan rail on right rear side, or to rear of oil pan. See **Fig. 1** . Identification number contains information which must be used when ordering replacement parts. Transmission RPO code is M30.

cardiagn.com

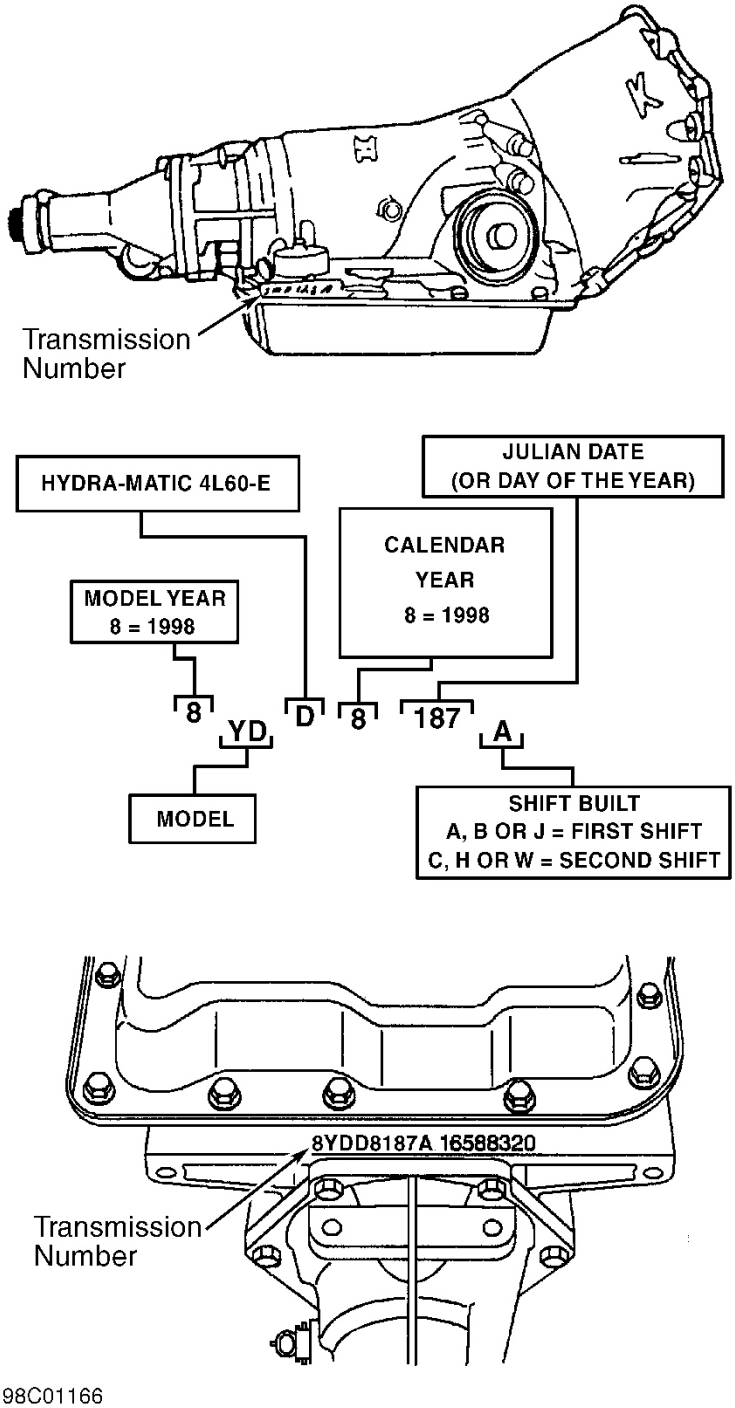

Fig. 1: Locating Transmission Identification Number
Courtesy of GENERAL MOTORS CORP.

DESCRIPTION

cardiagn.com

The 4L60-E is a fully automatic transmission consisting of a 3-element hydraulic torque converter with a Torque Converter Clutch (TCC). The 4-speed transmission is equipped with 2 planetary gear sets, 5 multiple-disc clutches, one sprag clutch, one roller clutch and a 2-4 band. See **Fig. 2** .

A hydraulic system, pressurized by a variable capacity vane type oil pump, provides pressure required to operate friction elements and automatic controls. The 4L60-E also contains electronic solenoids to control hydraulic operations. A Powertrain Control Module (PCM) receives signals from Vehicle Speed Sensor (VSS), Throttle Position (TP) Sensor, fluid pressure switch assembly, and temperature sensor. These signals help PCM determine when to switch 2 shift solenoids, 3-2 downshift solenoid, and/or TCC solenoid on or off. PCM can also control line pressure via pressure control solenoid (force motor).

cardiagn.com

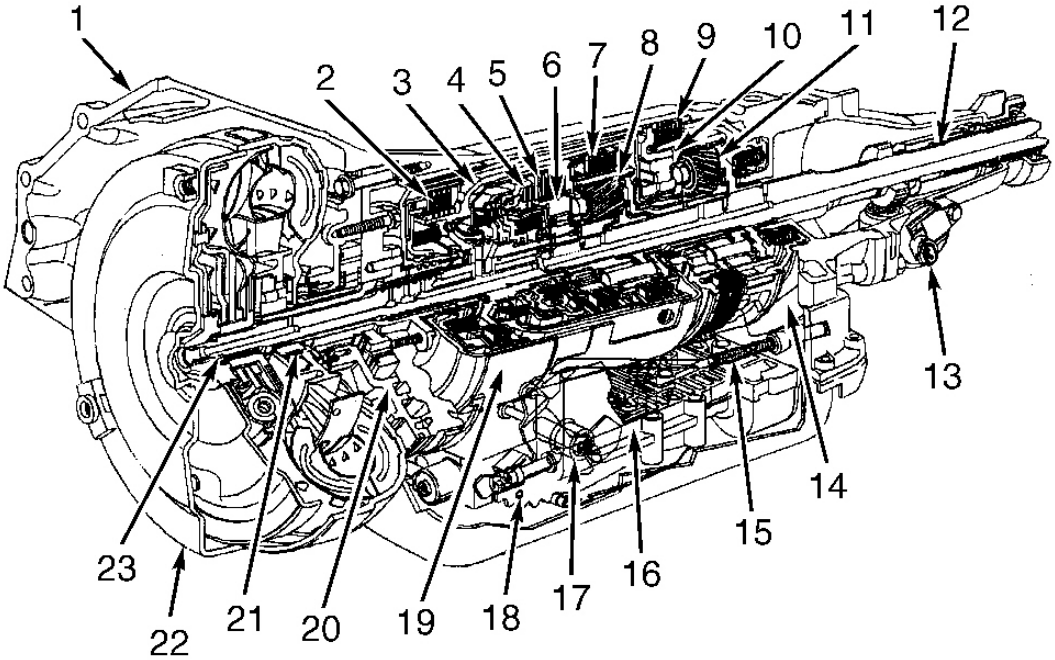

1. Transmission Case
2. Reverse Input Clutch
3. Input Clutch Housing
4. Overrun Clutch
5. Forward Clutch
6. Forward Clutch Sprag
7. 3-4 Clutch
8. Input Planetary Gear Set
9. Lo/Reverse Clutch
10. Lo Roller Clutch Assembly
11. Reaction Planetary Gear Set
12. Output Shaft
13. Speed Sensor
14. Parking Pawl
15. Parking Lock Actuator
16. Control Valve Assembly
17. Manual Shaft
18. Detent Lever
19. 2-4 Band
20. Oil Pump Assembly
21. Stator Roller Clutch
22. Torque Converter
23. Turbine Shaft

98E01167

Fig. 2: Locating 4L60-E Transmission Components
Courtesy of GENERAL MOTORS CORP.

LUBRICATION

See TRANSMISSION SERVICING - A/T article in the TRANSMISSION SERVICING section.

ON-VEHICLE SERVICE

cardiagn.com

OIL COOLER FLUSHING

1. If available, fill Line Flusher (J-35944) with solution, and install line flusher to transmission end of cooler line that feeds bottom fitting of transmission cooler. Connect discharge hose to top cooler line and attach drain hose to oil drain container. Follow manufacturer's instructions to flush oil cooler and cooler lines.
2. If line flusher is not available, flush cooler and cooler lines with a mixture of clean solvent and water. Flush cooler in both directions until all old fluid and debris are removed. If necessary, replace plugged or damaged cooler and/or lines.

REAR OIL SEAL

Removal & Installation

Mark drive shaft for reassembly reference. Remove drive shaft. Pry oil seal from extension housing. Coat outside edge of NEW oil seal with non-hardening sealer. Using Seal Installer (J-21426), install oil seal. To complete installation, install drive shaft. Check fluid level.

VALVE BODY

CAUTION: Note valve body bolt length and location during removal procedure. Transmission case damage may occur if bolts are incorrectly installed.

Removal

1. Remove transmission oil pan. Remove oil filter and "O" ring. Ensure "O" ring is removed from transmission case. Remove electrical connectors from switches and solenoids, and mark for reassembly reference. Remove pressure switch assembly. Remove detent spring bolt. Remove detent spring. Remove valve body bolts. Note length and location of bolts for installation reference.
2. Note direction of manual valve link. Remove manual valve link from manual valve at valve body. See **Fig. 3** . Remove valve body. Note location of check balls. **DO NOT** lose balls. See **Fig. 4** and **Fig. 5** .

cardiagn.com

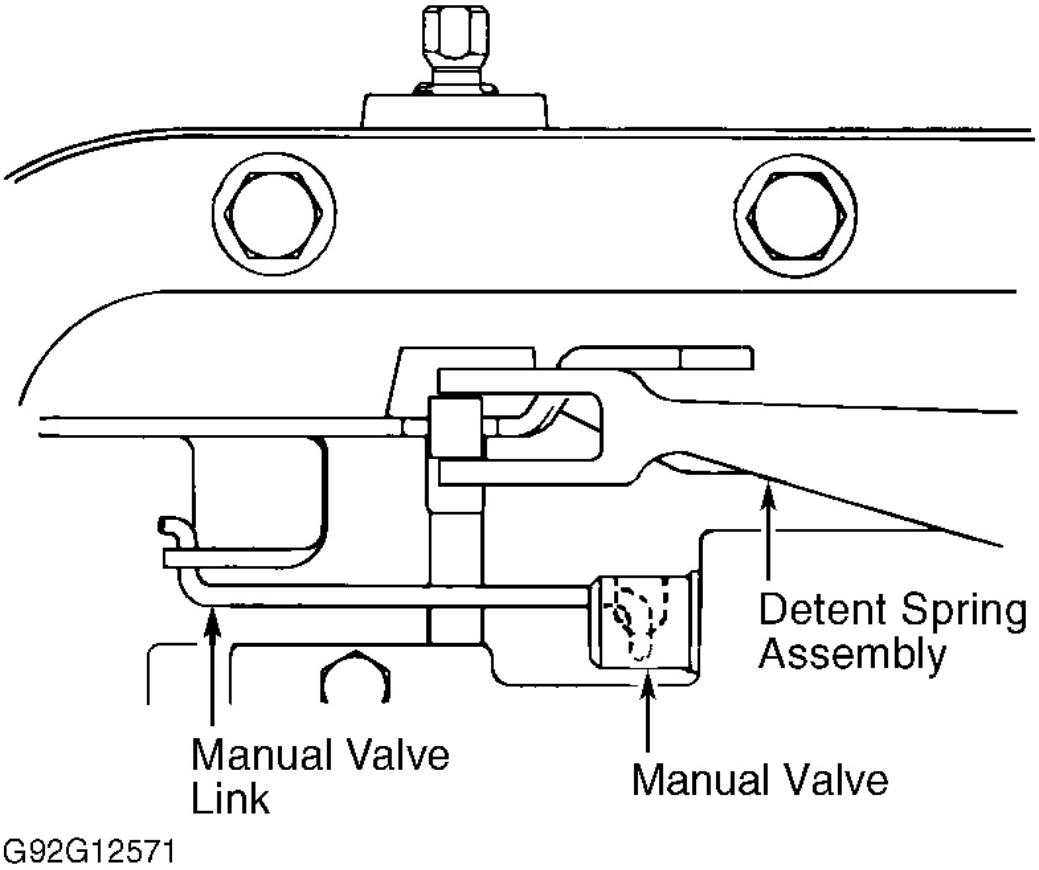

Fig. 3: Installing Manual Valve Link
Courtesy of GENERAL MOTORS CORP.

cardiagn.com

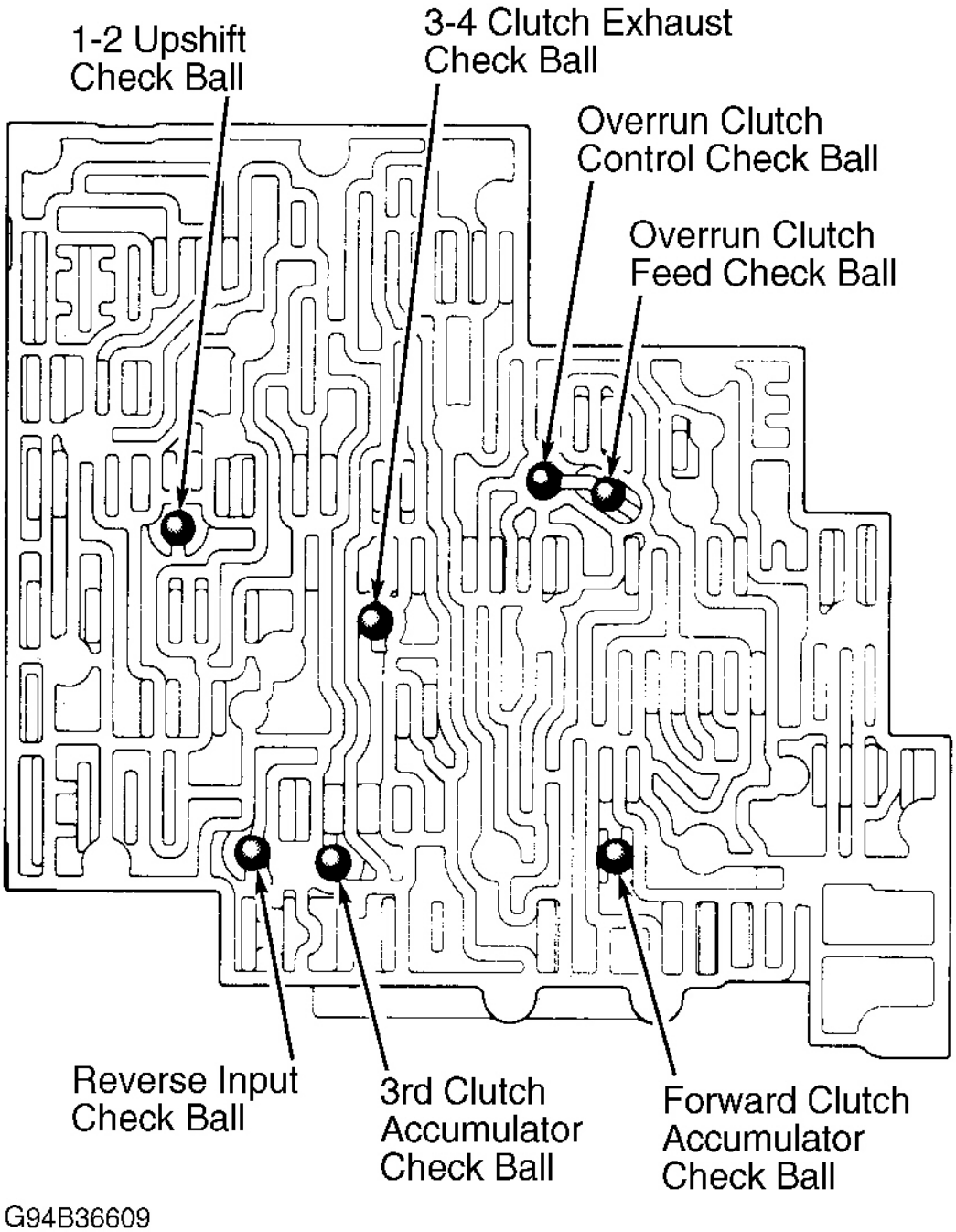

Fig. 4: Locating Valve Body Check Balls
Courtesy of GENERAL MOTORS CORP.

cardiagn.com

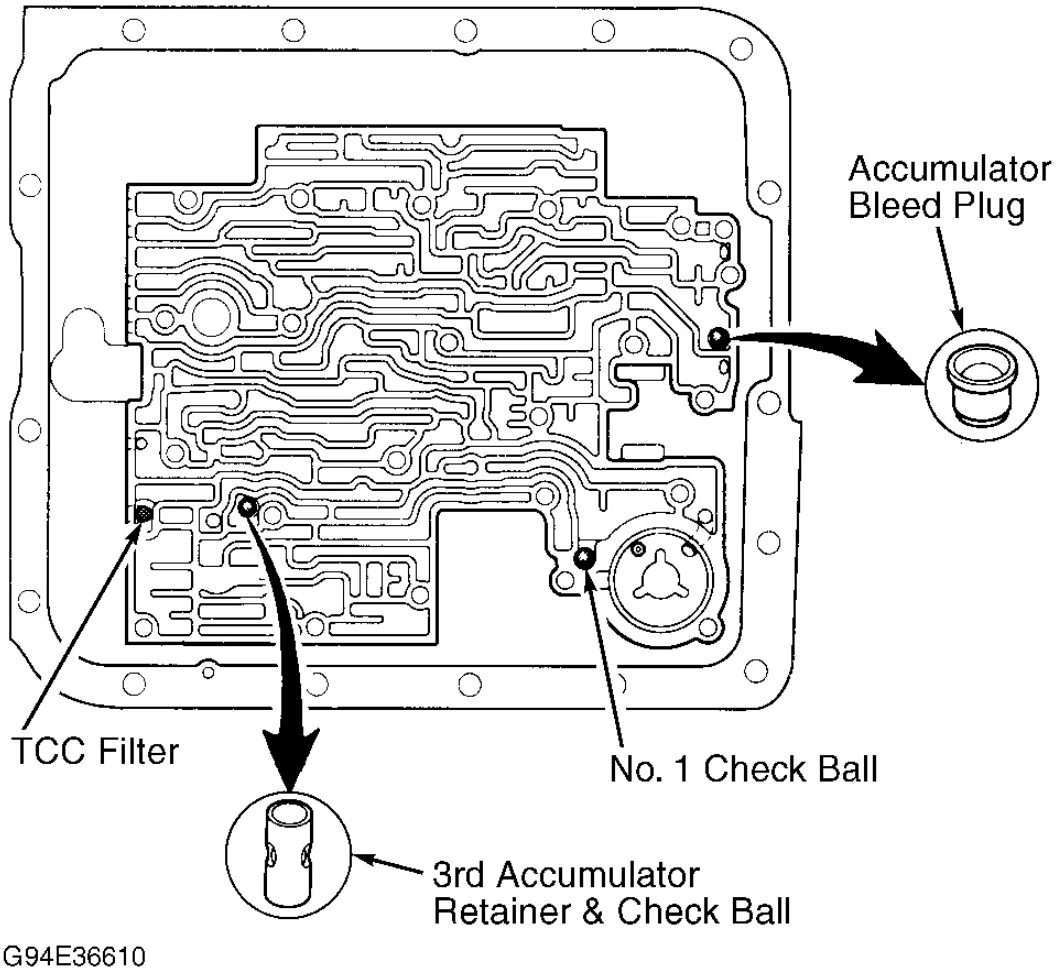

Fig. 5: Locating Check Balls In Case
Courtesy of GENERAL MOTORS CORP.

Installation

1. Coat check balls with petroleum jelly. Install check balls in proper locations on separator plate. See **Fig. 4** and **Fig. 5** . Install manual valve link. Ensure manual valve link is properly seated in manual valve. See **Fig. 3** . Improper positioning may prevent vehicle operation in "D" range.

   NOTE: Improper positioning of throttle valve link will result in erratic shift points or high oil pressure.

2. Install valve body and retaining bolts. Tighten all bolts to specification. See **TORQUE SPECIFICATIONS** . Lubricate oil filter "O" ring with ATF before installation. To complete installation, reverse removal procedure. Fill transmission with fluid.

cardiagn.com

2-4 SERVO ASSEMBLY

Removal & Installation

Install Piston Compressor (J-29714) on oil pan. Compress servo cover, and remove retaining ring. See **Fig. 6** . Remove servo cover and "O" ring. Remove 2-4 servo assembly. To install, reverse removal procedure. For servo pin length check, see 2-4 SERVO ASSEMBLY under **TRANSMISSION DISASSEMBLY** .

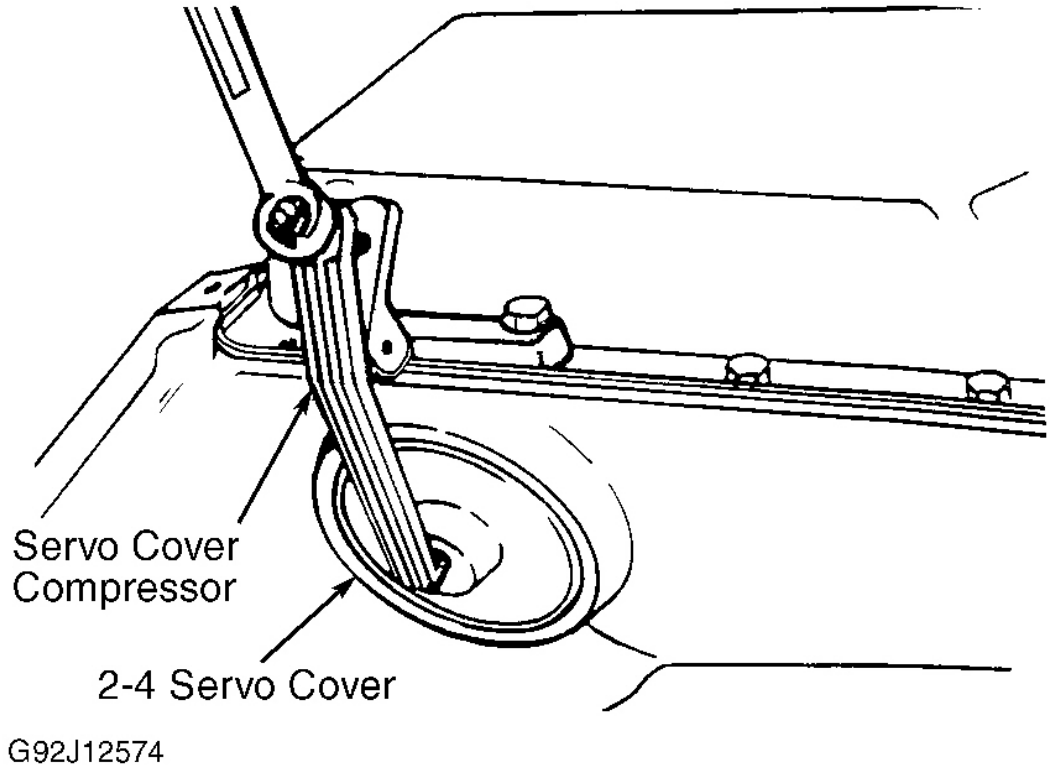

Fig. 6: Compressing Servo Cover
Courtesy of GENERAL MOTORS CORP.

ADJUSTMENTS

See TRANSMISSION SERVICING - A/T article in the TRANSMISSION SERVICING section.

TROUBLE SHOOTING

NOTE: **For testing and diagnostic procedures of electronic components, see AUTO TRANS DIAGNOSIS article.**

cardiagn.com

NOTE: **For clutch and band applications, see CLUTCH & BAND APPLICATION CHART .**

SYMPTOM DIAGNOSIS

1st Gear Only, No Upshift

Check 1-2 shift valve sticking in valve body. Spacer plate or gaskets damaged or not positioned properly. Case-to-valve body face damaged or not flat. 2-4 servo assembly restricted or blocked case passages. Nicks or burrs on servo pin or case pin bore. Missing or damaged piston or pin seals. 4th servo piston installed backward. 2-4 band worn or damaged, or band anchor pin not engaged. Check shift solenoids.

Slips In 1st Gear

Defective forward clutch assembly. Clutch plates worn. Piston porous or damaged. Piston seals missing or damaged. Input housing-to-forward clutch housing "O" ring seal missing or damaged. Damaged housing. Housing retainer and ball assembly damaged or not seating. Input shaft and housing assembly turbine shaft seals missing or damaged. Accumulator valve stuck in valve body.

Valve body face not flat, damaged lands, or interconnected passages. Spacer plate or gaskets incorrect, damaged or not positioned properly. Check for defective 1-2 accumulator piston assembly. Porosity in piston or cover and pin assembly. Damaged piston ring grooves. Piston seal missing or damaged. Cover gasket missing or damaged. Broken accumulator spring.

Incorrect oil pressure. Torque converter stator roller clutch not holding or 4th servo piston in backward. Damage to low roller clutch lugs or inner ramps. Rollers not free moving, inadequate spring tension or damage to inner splines. Oil passage plugged. Forward clutch accumulator piston seal missing or damaged. Piston out of its bore. Stuck abuse valve.

Slipping Or Rough 1-2 Shift

Check for defective valve body assembly. 1-2 shift valve train or accumulator valve stuck. Gaskets or spacer plate incorrect, damaged or not installed properly. Valve body face not flat.

Defective 2-4 servo assembly. Apply pin length incorrect. Servo seals or "O" ring seals missing or damaged. Restricted or missing oil passages. Case servo bore damaged. Defective 2nd accumulator. Porosity in 1-2 accumulator housing or piston. Piston seal or groove damaged. Nicks or burrs in 1-2 accumulator housing. Missing or restricted oil passages or 2-4 band worn or not positioned properly. Oil pump assembly or case faces not flat.

Slipping, Rough Or No 2-3 Shift

Check for defective valve body assembly. 2-3 shift valve train or accumulator valve stuck. Gaskets or spacer plate incorrect, damaged or not installed properly. Valve body face not flat.

Defective 2-4 servo assembly. Apply pin length incorrect. Servo seals or "O" ring seals missing or damaged. Restricted or missing oil passages. Case servo bore damaged. Defective 2nd accumulator. Porosity in 1-2 accumulator housing or piston. Piston seal or groove damaged. Nicks or burrs in 1-2 accumulator housing.

cardiagn.com

Missing or restricted oil passages or 2-4 band worn or not positioned properly. Oil pump assembly or case faces not flat.

1st & 4th Or 2nd & 3rd Gear Only

Check shift solenoids for dirt, damaged seals or electrical connections.

3rd Gear Only

Check 2-3 shift solenoid and 3-2 control solenoid circuits, damaged seals or electrical connections.

3-2 Flare Or Tie Up

Check 3-2 control solenoid for dirt, damaged seals or electrical connections.

Slipping, Rough Or No 3-4 Shift

Check oil pump assembly faces not flat or pump cover retainer and ball assembly omitted or damaged. Valve body assembly 2-3 shift train, accumulator valve, 1-2 shift valve or 3-2 control valve stuck. Manual valve link bent or damaged. Spacer plate or gaskets incorrect, damaged or not positioned properly. Defective 2-4 servo assembly.

Incorrect band apply pin. Servo seals missing or damaged. Porosity in pistons, cover or case. Plugged or missing orifice cup plug. Case 3rd accumulator retainer and ball assembly leaking. Porosity in 3-4 accumulator piston or bore. 3-4 accumulator piston seal or seal grooves damaged. Restricted oil passage. Defective input housing assembly. Forward or 3-4 clutch plates worn, or excessive plate travel.

Forward or 3-4 piston seals damaged. Porosity in 3-4 clutch housing or piston. 3-4 piston check ball stuck, damaged or not sealing. Restricted apply passages. Forward clutch piston retainer and ball assembly not seating. 2-4 band worn or not positioned properly. Sealing balls loose or missing.

No Reverse Or Slips In Reverse

Defective input housing assembly. 3-4 apply ring stuck in applied position. Forward clutch not releasing. Turbine shaft seals missing or damaged. Manual valve link disconnected.

Defective valve body assembly. 2-3 shift valve stuck. Manual linkage out of adjustment. Spacer plate and gaskets incorrect, damaged or not positioned properly. Defective reverse input clutch assembly. Clutch plate worn. Housing and drum assembly cracked at weld. Clutch plate or return spring assembly retaining ring out of groove. Piston deformed or dished.

Seals damaged or missing. Retainer and ball assembly not sealing. Restricted apply passage. Defective low-reverse clutch. Clutch plates worn or retaining ring not positioned properly. Porosity in piston. Seals damaged. Return spring assembly retaining ring not positioned properly. Case porosity. Case cover plate not tightened properly or gasket missing or damaged.

No Part-Throttle Or Delayed Downshifts

cardiagn.com

Check for defective 2-4 servo assembly. Servo cover retaining ring missing or not assembled properly. 4th apply piston damaged or not assembled properly. Inner housing damaged or not assembled properly. Defective valve body assembly. 3-2 control valve stuck. 4-3 sequence valve body channel blocked. No. 5 check ball missing.

Harsh Garage Shifts

Check valve body for missing check ball, or orifice cup plug.

No Overrun Braking In Manual 3-2-1

Defective valve body assembly. 4-3 sequence valve or throttle valve stuck. No. 3 check ball not positioned properly. Spacer plate and gaskets incorrect, damaged or not positioned properly. Defective input clutch assembly. Turbine shaft oil passages plugged or not drilled. Turbine shaft seal rings damaged. Turbine shaft sealing balls loose or missing. Porosity in forward or overrun clutch piston. Overrun piston seals damaged or cut. Overrun piston check ball not sealing.

Drives (Creeps) In Neutral

Forward clutch not releasing. Manual valve link disconnected. Converter clutch apply valve stuck in oil pump. Face of transmission case not flat or internal leakage in case.

Starts In 2nd In "D"

Forward sprag clutch assembly installed backward.

No Park

Parking linkage binding, loose, missing or not positioned properly.

Oil Pressure High Or Low

Oil pressure regulator valve stuck or valve spring damaged. Rotor guide omitted or not assembled properly. Rotor cracked or reverse boost valve or sleeve stuck, damaged or not assembled properly. Orifice hole in pressure regulator valve plugged. Sticking slide or excessive rotor clearance. Pressure relief ball not seated or damaged. Pump cover or body has porosity. Incorrect pump cover or pump face not flat. Excessive rotor clearance.

Intake pipe restricted by casting flash. Cracks in filter body or intake pipe. "O" ring seal missing, cut or damaged. Incorrect lubricant used during rebuild procedure.

Manual valve scored or damaged. Spacer plate or gaskets incorrect, damaged or not assembled properly. Check for stuck 2-3 shift valve, damaged pressure control solenoid or damaged pressure switch assembly. Check for missing check balls or incorrect assembly. Case-to-valve body face not flat.

Harsh Shifts

cardiagn.com

Check PCM input signals from TP sensor, pressure switch assembly, fluid temperature sensor, VSS and engine coolant temperature sensor. Inspect pressure control solenoid for damaged pins or seals, or dirt in oil circuits.

High Or Low Shift Points

Check for stuck pressure regulator valve or pump slide sticking. Spacer plate or gaskets damaged, incorrect or not assembled properly.

Valve body pad porous or damaged. 2-4 accumulator has porosity. Servo piston seals damaged. Apply pin damaged or has improper length. 2-4 band burned or anchor pin not engaged. Throttle Position (TP) sensor, VSS and/or 4WD low switch (if equipped) disconnected or damaged.

No Converter Clutch Apply

Transmission not supplied 12 volts. Outside electrical connector damaged. Inside electrical connector wiring harness or solenoid damaged. Solenoid wire pinched. Solenoid not grounded. Pressure switches incorrect or damaged. Temperature sensor damaged. Damaged engine speed sensor or pressure switch assembly. Converter internal damage.

Converter clutch valve stuck or assembled backward, or retaining ring not positioned properly. Pump-to-case gasket not positioned properly. Orifice cup plug restricted or damaged. Solenoid "O" ring seal cut or damaged. Pump-to-body cover high or uneven bolt torque.Turbine shaft "O" ring seal cut or damaged. Turbine shaft retainer and ball assembly restricted or damaged. TCC shift valve or apply valve stuck. Solenoid "O" ring leaking. Solenoid screen is blocked.

Converter Shudder

Torque converter has internal damage. Converter clutch valve stuck. Restricted oil passages. Crack in filter body. Restriction in filter neck. "O" ring seal cut or damaged. Turbine shaft "O" ring cut or damaged. Turbine shaft retainer and ball assembly restricted or damaged. Low oil pressure. Engine not tuned properly.

No Converter Clutch Release

Solenoid external ground. Converter internal damage. Converter clutch valve stuck. Converter clutch apply valve stuck in apply position. PCM external ground faulty.

Converter Clutch Applies When Cold

Check engine coolant temperature sensor and trouble codes.

Ratcheting Noise

Parking pawl return spring weak, damaged or not assembled properly.

Oil Leaking Out Vent

Chamber in pump body rotor pocket too large. Fluid level overfilled. Cross leak out of pump body and cover.

cardiagn.com

Vibration In Reverse & Whining Noise In Park

Broken oil pump vane rings.

Front Oil Leak

Torque converter welded seam leaking. Damaged torque converter hub. Damaged front seal.

Pump Bushing Spins Out, "Walks" Into Seal, Or Seizes To Converter Hub

Transmission and engine center lines do not match. Excessive crankshaft runout. Bent flexplate (drive plate). Excessive converter hub runout. Pump bushing I.D. not centered in pump. Bushing too loose in pump. Not enough hub-to-bushing clearance.

Falls Out Of 4th Gear During Coasting

Low line pressure at idle (weak pressure regulator spring).

Binds Up On 3-4 Shift (Feels Like Brake Drag)

Forward pressure plate installed incorrectly. Too many plates in overrun clutch. Incorrect top steel plate installed in overrun clutch.

No Forward Or Reverse Gears (Line Pressure Reading Okay)

Mismatched converter input shaft or broken turbine hub.

Binds Up In Reverse

Stator sleeve rotated out of position. Stuck2-3 shift valve. Servo pin jammed in case. Stuck 3-4 relay or 4-3 sequence valve.

No Drive In "D" Range

Torque converter stator roller clutch not holding.

No Drive In "OD" Range

Faulty output sprag. Teeth "hammered" out of forward friction plates.

CLUTCH & BAND APPLICATION CHART

Selector Lever	Shift Solenoid	Elements In Use
"D" (Overdrive) First Gear	1-2 ON/2-3 ON	Forward Clutch, Forward Sprag & Low Roller Clutch
"D" (Overdrive) Second Gear	1-2 OFF/2-3 ON	Forward Clutch, Forward Sprag & 2-4 Band

cardiagn.com

"D" (Overdrive) Third Gear	1-2 OFF/2-3 OFF	Forward Clutch, Forward Sprag & 3-4 Clutch
"D" (Overdrive) Overdrive	1-2 ON/2-3 OFF	Forward Clutch, 2-4 Band & 3-4 Clutch
"D" (Drive) First Gear	1-2 ON/2-3 ON	Forward Clutch, Forward Sprag & Low Roller Clutch
"D" (Drive) Second Gear	1-2 OFF/2-3 ON	Forward Clutch, Forward Sprag & 2-4 Band
"D" (Drive) Third Gear	1-2 OFF/2-3 OFF	Forward Clutch, Forward Sprag, Overrun Clutch & 3-4 Clutch
"2" (Intermediate) First Gear	1-2 ON/2-3 ON	Forward Clutch, Forward Sprag, Low Roller Clutch & Overrun Clutch
"2" (Intermediate) Second Gear	1-2 OFF/2-3 ON	Forward Clutch, Forward Sprag, Overrun Clutch & 2-4 Band
"1" (Low) First Gear	1-2 ON/2-3 ON	Forward Clutch, Forward Sprag, Low Reverse Clutch, Low Roller Clutch & Overrun Clutch
"1" (Low) Second Gear (1)	1-2 OFF/2-3 ON	Forward Clutch, Forward Sprag, Overrun Clutch & 2-4 Band
"R" (Reverse)	1-2 ON/2-3 ON	Low Reverse Clutch & Reverse Input Clutch
"P" (Park)	1-2 ON/2-3 ON	Low Reverse Clutch
"N" (Neutral)	1-2 ON/2-3 ON	All Clutches & Bands Released Or Ineffective
(1) Gear is only available above 30-35 MPH.		

ELECTRONIC SELF-DIAGNOSTICS

NOTE: **See AUTO TRANS DIAGNOSIS - 4L60-E article.**

TESTING

ROAD TEST

NOTE: **Shift speed charts reference throttle position angle instead of minimum or wide open throttle position. This measurement is more accurate. A scan tool should be used to monitor throttle position angle. For transmission model code, refer to metal identification tag attached to transmission.**

Gear Selector Position "D4" (Overdrive)

1. With gear selector in "D4" (overdrive) position, choose throttle position angle of 12 or 25 percent. See **Fig. 7** or **Fig. 8** . Set scan tool to monitor throttle position angle and vehicle speed. Accelerate vehicle to

cardiagn.com

chosen throttle position angle and hold throttle steady.

2. Note shift speed engagement points in 2nd gear, 3rd gear and overdrive gear. Use charts as a reference for proper shift speeds. See **Fig. 7** or **Fig. 8** . Also note Torque Converter Clutch (TCC) engagement point while in overdrive. Repeat procedure using different throttle position angle.

NOTE: **Shift speeds may vary due to slight hydraulic delays responding to electronic controls. A change from original equipment tire size also affects shift speeds. Ensure TCC engages in 3rd or overdrive. TCC should not apply unless transmission has reached a minimum operating temperature of 64°F (18°C) and engine coolant temperature is 140°F (60°C).**

3. At vehicle speeds of 40-50 MPH in overdrive, quickly increase throttle position angle to more than 50 percent. Verify TCC releases, transmission immediately downshifts to 3rd gear and 1-2 shift solenoid turns off.
4. At vehicle speeds of 40-50 MPH in overdrive, quickly depress accelerator to wide open position (full throttle detent downshift). Verify TCC releases, transmission immediately downshifts to 2nd gear, 1-2 solenoid is off and 2-3 solenoid is on.
5. At vehicle speeds of 40-55 MPH in overdrive, release accelerator pedal while moving gear selector to "D3" (third gear) position. Verify TCC releases, transmission immediately downshifts into 3rd gear, and engine braking slows vehicle.
6. Move gear selector to "D4" (overdrive) position, and accelerate to 40-45 MPH. Release accelerator pedal while moving gear selector to "D2" (2nd gear) position. Verify TCC releases, transmission immediately downshifts to 2nd gear, and engine braking slows vehicle.
7. Move gear selector to "D4" (overdrive) position, and accelerate to 30 MPH. Release accelerator pedal while moving gear selector to "D1" (1st gear) position. Verify TCC releases, transmission immediately downshifts to 1st gear and engine braking slows vehicle.
8. With gear selector in the "D4" (overdrive) position, accelerate vehicle to overdrive gear with TCC applied. Release accelerator pedal, and lightly apply brakes. Verify TCC releases and downshifts occur at speeds shown in shift speed charts. See **Fig. 7** or **Fig. 8** .

NOTE: **Upshifts in manual gear ranges are controlled by shift solenoids. Perform following steps by accelerating vehicle at throttle position angle of 10-15 percent.**

Gear Selector Position "D3" (3rd Gear)

With vehicle stopped, move gear selector to "D3" (3rd gear) position and steadily increase throttle pressure to accelerate vehicle. Note speeds at which vehicle shifts into 2nd and 3rd gears. See **Fig. 7** or **Fig. 8** .

Gear Selector Position "D2" (2nd Gear)

With vehicle stopped, move gear selector to "D2" (2nd gear) position. Accelerate vehicle and note speed at which vehicle shifts from 1st gear to 2nd gear. Accelerate vehicle to 35 MPH. Verify transmission does not shift into 3rd gear, and TCC does not apply.

cardiagn.com

Gear Selector Position "D1" (1st Gear)

With vehicle stopped, move gear selector to "D1" (1st gear) position. Accelerate vehicle to 20 MPH. Verify transmission does not upshift, and TCC does not apply.

Gear Selector Position "R" (Reverse)

With vehicle stopped, move gear selector to "R" (Reverse) position. Verify 1-2 and 2-3 shift solenoids are on.

SHIFT SPEED CHARTS

		1–2 Shift @ +/- 250 RPM Output Shaft Speed			2–3 Shift @ +/- 200 RPM Output Shaft Speed			3–4 Shift @ +/- 150 RPM Output Shaft Speed			3–1 @ +/- 100 RPM Output Shaft Speed	3–2 @ +/- 100 RPM Output Shaft Speed	3-1 Wide Open Throttle Shift	2–3 Wide Open Throttle Shift	MIN TCC Apply @ 12% Throttle (RPM)
% of TPS		12	25	50	12	25	50	12	25	50					
Trans Cal	Axle														
A	2.73	463	641	1132	819	1175	1958	1175	1780	4770	N/A	641	1495	6000	1495
B	3.15	451	658	1028	822	1151	1973	1192	1767	4809	N/A	558	1439	6000	1521
C EXPT	2.73	463	641	1032	819	1175	1958	1175	1780	4770	N/A	641	1495	6000	1495

98A01170

Fig. 7: Hydra-Matic 4L60-E Shift Speed Charts (1997)
Courtesy of GENERAL MOTORS CORP.

		1–2 Shift @ +/- 250 RPM Output Shaft Speed			2–3 Shift @ +/- 200 RPM Output Shaft Speed			3–4 Shift @ +/- 150 RPM Output Shaft Speed			3–1 @ +/- 100 RPM Output Shaft Speed	3–2 @ +/- 100 RPM Output Shaft Speed	3-1 Wide Open Throttle Shift	2–3 Wide Open Throttle Shift	MIN TCC Apply @ 12% Throttle (RPM)
% of TPS		12	25	50	12	25	50	12	25	50					
Trans Cal	Axle														
A	2.73	459	635	1130	812	1165	2083	1165	1765	5471	N/A	635	1412	5900	1588
B	3.15	449	653	1142	816	1142	2081	1183	1754	5467	N/A	653	1428	5900	1591

G98C01171

Fig. 8: Hydra-Matic 4L60-E Shift Speed Charts (1998)
Courtesy of GENERAL MOTORS CORP.

HYDRAULIC PRESSURE TEST

CAUTION: Parking and service brakes must be applied throughout hydraulic pressure test. Total time for testing with vehicle in any driving gear should

cardiagn.com

not exceed 2 minutes. Transmission damage may occur.

1. Before performing hydraulic pressure test, check fluid level and condition. Check manual control linkages for correct adjustment, and ensure engine is properly tuned.
2. Connect scan tool to Data Link Connector (DLC). Apply parking brake and start engine. Check for stored trouble codes. If trouble codes are present, diagnose as necessary. See AUTO TRANS DIAGNOSIS article. Turn engine off. Connect oil pressure gauge to line pressure test port. See **Fig. 9** .
3. Start engine and warm to normal operating temperature. With vehicle in Reverse, line pressure should be 64-324 psi (441-2234 kPa). With vehicle in Park, Neutral or Drive, line pressure should be 55-189 psi (379-1303 kPa).
4. Shift transaxle into Park. Access Pressure Control Solenoid (PCS) test on scan tool. Increase DESIRED PCS in .1 amp increments and read corresponding line pressure on oil pressure gauge. Allow pressure to stabilize for 5 seconds after each current change. Compare readings to **LINE PRESSURE SPECIFICATIONS** . If pressure readings are not as specified, and no trouble codes are present, internal malfunction exists. See **TROUBLE SHOOTING** .

NOTE: **Scan tool is only able to control pressure control solenoid in Park and Neutral with vehicle stopped. This protects clutches from extremely high or low pressures in Reverse and Drive.**

LINE PRESSURE SPECIFICATIONS

PCS Current (Amp)	Line Pressure - psi (kPa)
.02	170-190 (1172-1310)
.10	165-185 (1137-1275)
.20	160-180 (1103-1241)
.30	155-175 (1068-1207)
.40	148-168 (1020-1158)
.50	140-160 (965-1103)
.60	130-145 (896-1000)
.70	110-130 (758-896)
.80	90-115 (621-793)
.90	65-90 (448-621)
.98	55-65 (379-448)

cardiagn.com

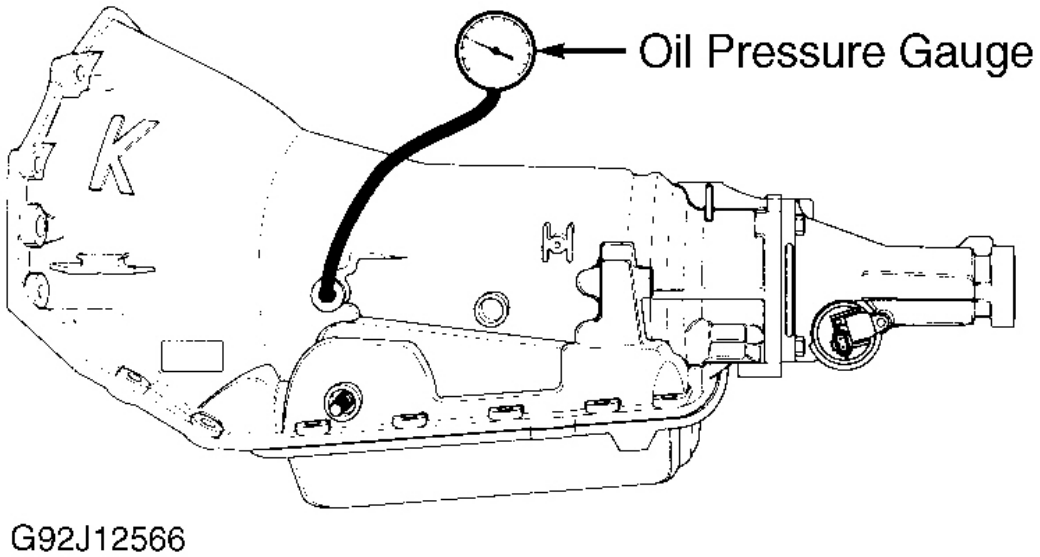

Fig. 9: Installing Oil Pressure Gauge
Courtesy of GENERAL MOTORS CORP.

TORQUE CONVERTER

NOTE: **Torque converter is a sealed unit and must be serviced as a complete assembly.**

TORQUE CONVERTER INSPECTION

Torque converter must be replaced for any of the following reasons:

- Damage To Pump Assembly
- Metal Particles Present In Oil
- Leaks In Hub Weld Area
- Hub Scored Or Damaged
- Stator Failure
- Torque Converter Imbalance
- Engine Coolant Contamination
- Excessive End Play

TORQUE CONVERTER STALL TEST

cardiagn.com

1. Torque converter whine is usually noticed when vehicle is stopped and transmission is in Reverse or Drive. Whine will increase when engine RPM is increased and will stop when vehicle is moving or when torque converter clutch is applied. Stall test is to ensure whine is coming from torque converter.
2. Start engine, and allow it to reach normal operating temperature. Apply parking and service brakes. Put transmission in Drive. Depress accelerator to about 1200 RPM for less than 6 seconds. **DO NOT** depress accelerator for more than 6 seconds or transmission damage may occur. Torque converter noise will increase under this load.

NOTE: **Torque converter whine should not be confused with pump whine, which is usually noticeable in Park, Neutral and all other gear ranges. Pump whine will vary with pressure.**

TORQUE CONVERTER STATOR CHECK

1. Torque converter stator roller clutch can either remain locked up at all times or freewheel in both directions. If stator is freewheeling at all times, vehicle tends to have poor acceleration from a stop. Vehicle may act normal at speeds above 30-35 MPH.
2. If poor acceleration is noted, ensure exhaust system is not blocked, engine timing is correct and transmission is in 1st gear when starting from a stop. If stator is locked up at all times, performance from a stop appears normal. Engine RPM and acceleration is limited at high speeds. Engine may overheat from this condition.
3. A visual inspection of torque converter may reveal converter is Blue from overheating. If torque converter has been removed from vehicle, stator roller clutch can be checked by inserting a finger into splined inner race of roller clutch and trying to turn race in both directions. Inner race should turn freely clockwise but should not turn or should be difficult to turn counterclockwise.

TORQUE CONVERTER END PLAY CHECK

1. Inspect torque converter for hub scoring, cracks or weld area cracks before checking end play. Install End Play Checking Tool(J-35138) on torque converter. See **Fig. 10** .
2. Note end play of torque converter. End play must be within specification. See **TORQUE CONVERTER END PLAY SPECIFICATIONS** table. Replace torque converter if end play is not within specification or damage to hub area exists.

TORQUE CONVERTER END PLAY SPECIFICATIONS

Converter Diameter: In. (mm)	End Play: In. (mm)
9.65 (245.0)	.0-.020 (.0-.51)
11.73 (298.0)	.0-.024 (.0-.61)

cardiagn.com

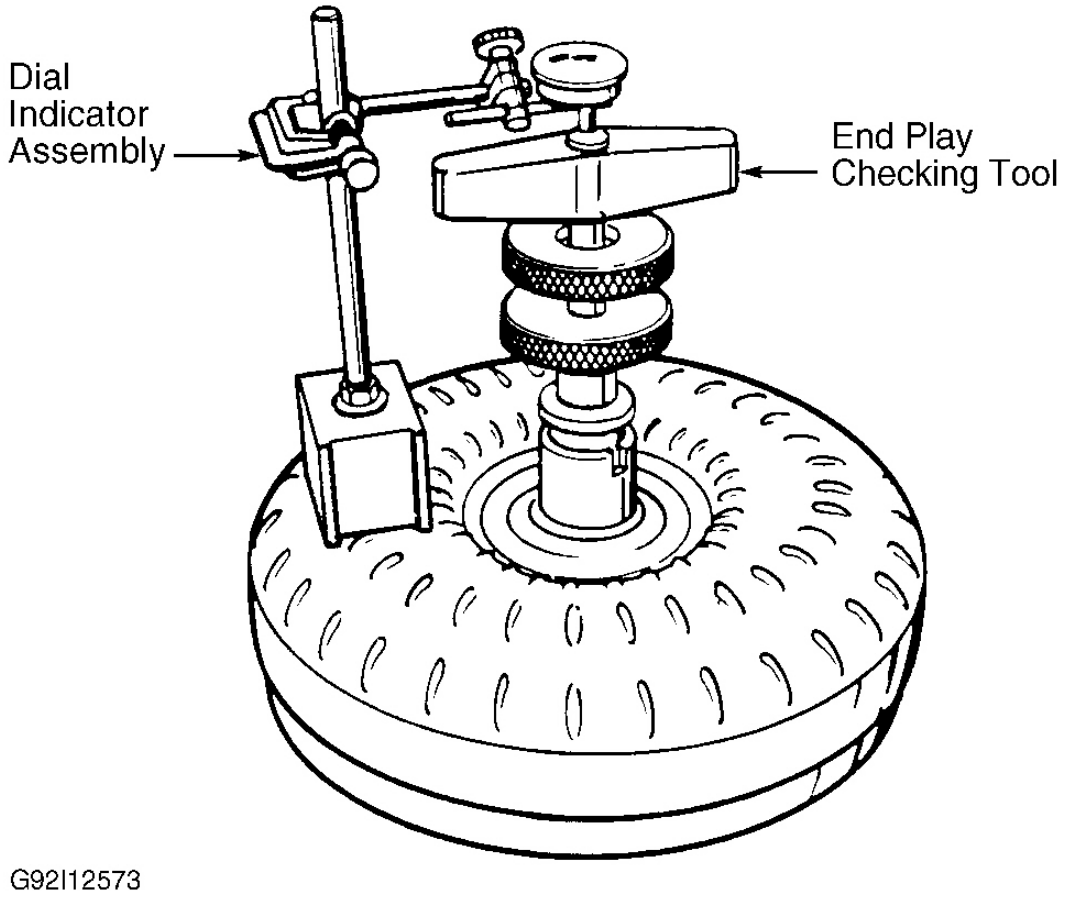

Fig. 10: Checking Torque Converter End Play
Courtesy of GENERAL MOTORS CORP.

REMOVAL & INSTALLATION

See TRANSMISSION REMOVAL & INSTALLATION - A/T article in the TRANSMISSION SERVICING section.

TRANSMISSION DISASSEMBLY

NOTE: **Beginning at start of production for all 1996 models, some 4L60-E transmissions were built with a bolt-on bellhousing. Design change will make 4L60-E transmission more versatile for a wide variety of engine sizes. Bolts securing bellhousing require a Torx-Plus 50-IP bit for removal. Bolt heads will strip if incorrect tool is used during removal. Transmission case has a totally different casting design for bolt-on bellhousing. Oil pump body has a machined ring added to front of pump body to center bellhousing on installation.**

cardiagn.com

2-4 SERVO ASSEMBLY

1. Mount transmission on bench using Holding Fixture (J-8763-02). Remove torque converter. Install Servo Cover Compressor (J-29714) on oil pan. See **Fig. 6** . Compress servo cover. Remove retaining ring, servo cover and "O" ring.
2. Remove 2-4 servo assembly. Servo pin length should be checked before disassembling assembly to determine 2-4 band and reverse input drum wear or damage.

CHECKING SERVO PIN LENGTH

1. Remove 4th apply piston and return spring. See **Fig. 11** . Remove retainer ring, washer, apply pin spring and 2nd apply pin. Install Piston Compressor (J-22269-01) on the 2nd apply piston. See **Fig. 12** .
2. Remove retainer ring, cushion spring and spring retainer. Install Band Apply Pin Tool (J-33037) and apply pin. See **Fig. 13** . Apply 100 INCH lbs. (11 N.m) torque.
3. White line on band apply tool should be within gauge slot if pin length is correct. If White line is not within gauge slot, inspect 2-4 band and reverse input drum for wear and damage during disassembly.
4. Servo pin length must be checked during reassembly. Servo pin is preset and must not be readjusted. See **SERVO PIN SPECIFICATIONS** table under 2-4 BAND & SERVO ASSEMBLY under TRANSMISSION REASSEMBLY.

cardiagn.com

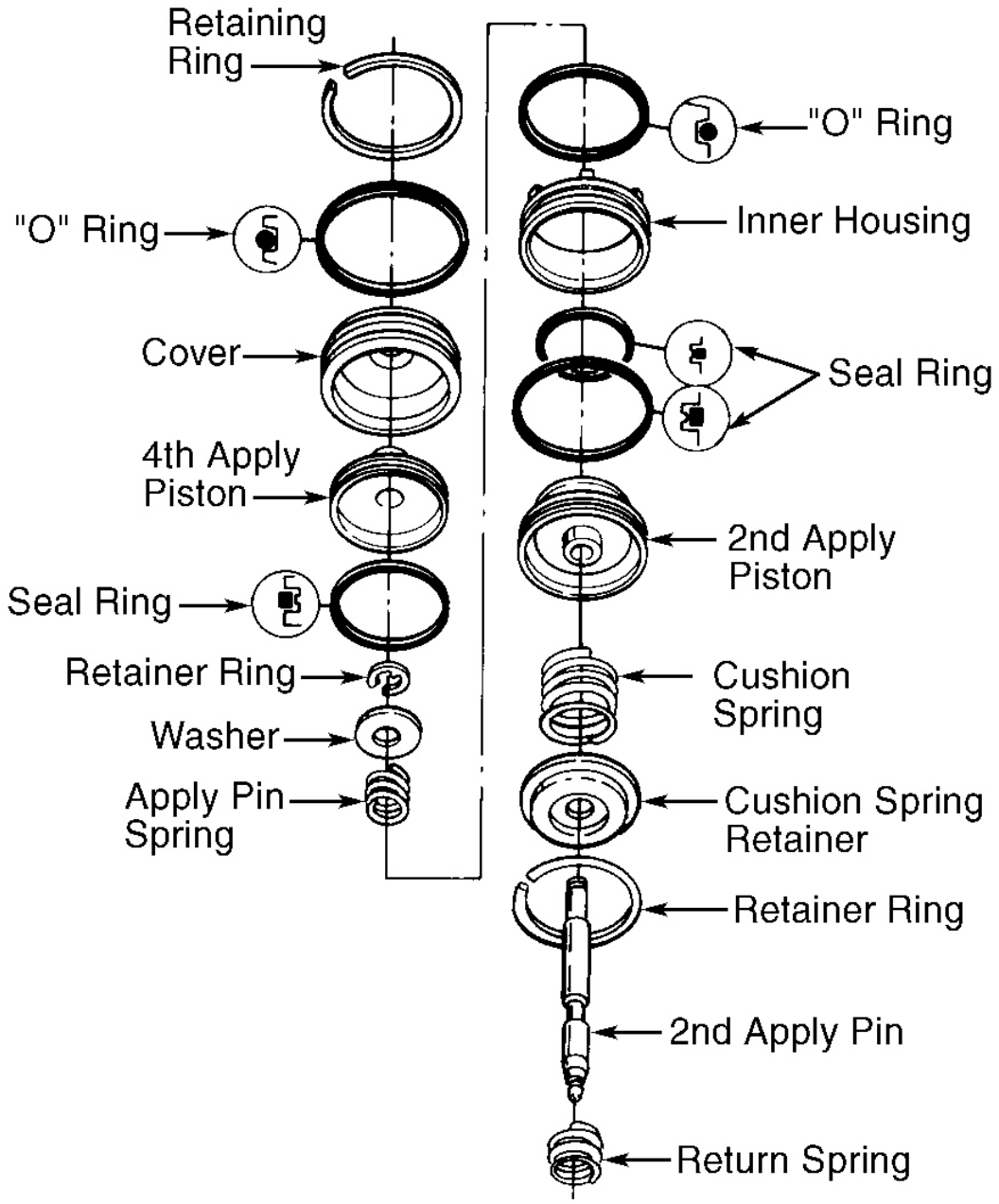

Fig. 11: Exploded View Of 2-4 Servo Assembly
Courtesy of GENERAL MOTORS CORP.

cardiagn.com

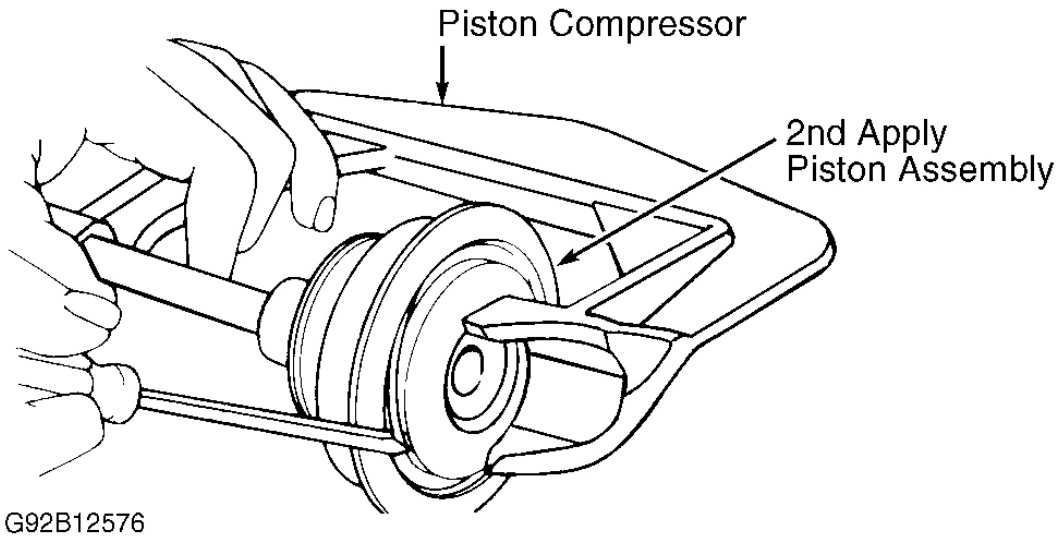

Fig. 12: Compressing 2nd Apply Piston
Courtesy of GENERAL MOTORS CORP.

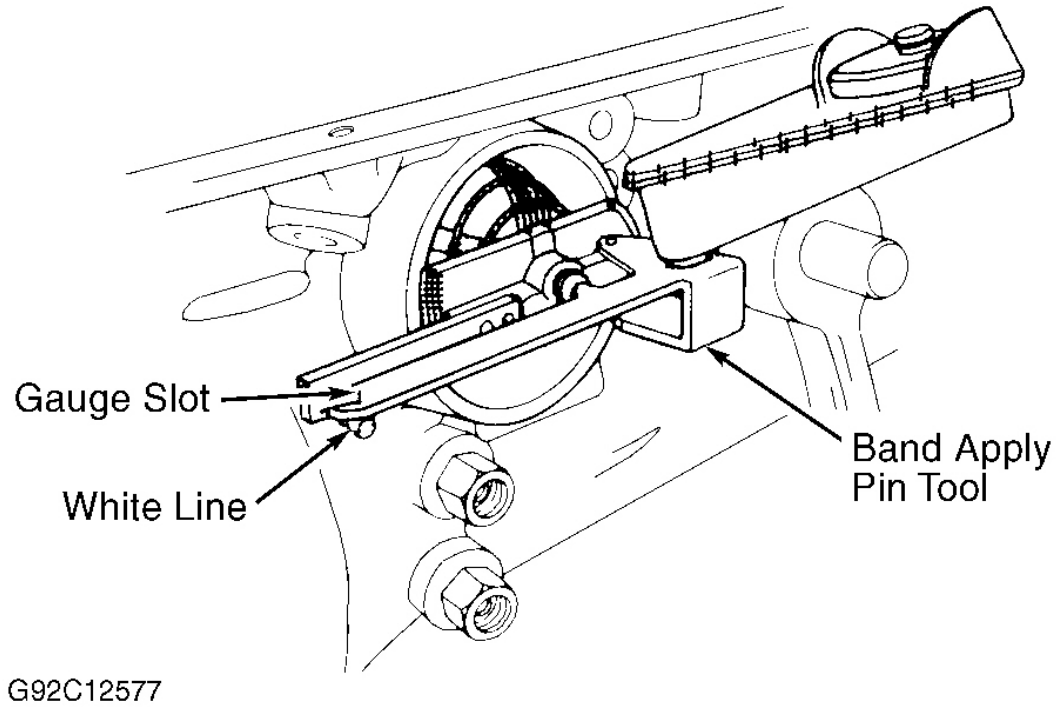

cardiagn.com

Fig. 13: Measuring Servo Pin Length
Courtesy of GENERAL MOTORS CORP.

EXTENSION HOUSING

Remove speed sensor retaining bolt. Using Puller (J-38417), remove speed sensor assembly and "O" ring. See **Fig. 16** . Remove extension housing and seal. Remove output shaft sleeve and "O" ring (if equipped). Remove speed sensor rotor from output shaft (if necessary). Install Gear Puller (J-21427-01) and Adapter (J-8433) on rotor. Pull rotor from output shaft.

1-2 ACCUMULATOR & SPACER PLATES

1. Remove solenoid retaining bolts. Remove solenoid and "O" ring. Remove wiring harness, and note location for reassembly reference. Carefully remove accumulator cover retaining bolts, 1-2 accumulator cover and pin assembly. See **Fig. 16** .
2. Remove 1-2 accumulator piston, seal and spring. Remove spacer plate, and note check ball and filter locations. Remove spring, 3-4 accumulator piston and pin. Note spacer plate and gasket locations. See **Fig. 5** for check ball and filter locations.

TRANSMISSION END PLAY CHECK

NOTE: Check transmission end play before disassembly. If end play is not within specification, check for damaged parts during disassembly.

Install Pump Remover/End Play Fixture (J-24773-A) and End Play Adapter (J-25022-A) on end of turbine shaft. See **Fig. 14** . Clamp dial indicator on long bolt with indicator tip on end play fixture. Zero dial indicator. Pull up on end play fixture. Measure transmission end play. Transmission end play should be .005-.036" (.13-.91 mm).

cardiagn.com

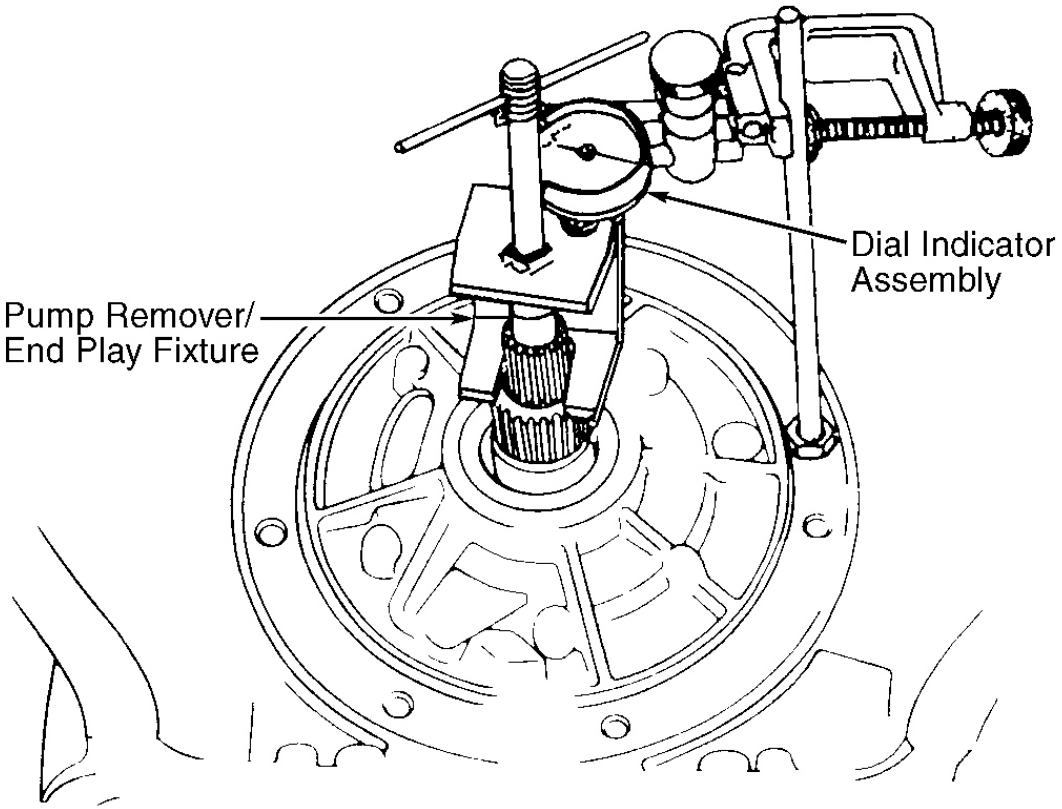

Fig. 14: Checking Transmission End Play
Courtesy of GENERAL MOTORS CORP.

OIL PUMP, INPUT CLUTCH & REVERSE CLUTCH

1. Ensure TCC solenoid assembly and oil filter are removed before oil pump removal. Remove oil pump retaining bolts. Using Oil Pump Remover (J-37789-A) and Adapter (J-39119), pull oil pump assembly free from case. See **Fig. 15** .
2. Remove oil pump, seal and gasket. Remove reverse input clutch-to-pump thrust washer from pump. Lift out turbine shaft with reverse input clutch assembly.

cardiagn.com

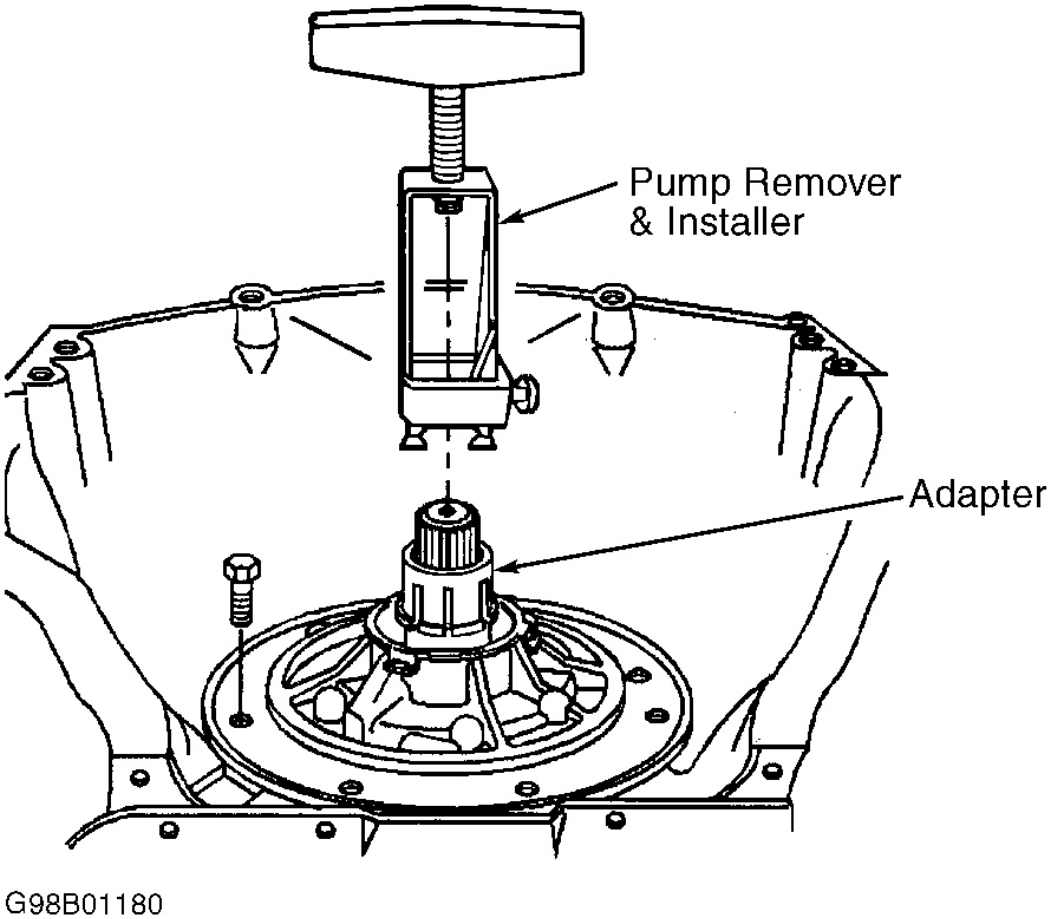

Fig. 15: Removing Oil Pump Assembly
Courtesy of GENERAL MOTORS CORP.

2-4 BAND & INPUT GEAR SET

1. Remove band anchor pin from case. See **Fig. 16** . Remove 2-4 band assembly from case. Remove input sun gear. See **Fig. 17** .

CAUTION: Output shaft must be held in place when removing input carrier retainer ring.

2. Install Output Shaft Support (J-29837) on output shaft. See **Fig. 18** . Remove input carrier to output shaft retainer ring. Remove input carrier. Remove output shaft. Remove input carrier thrust bearing from reaction carrier shaft.

cardiagn.com

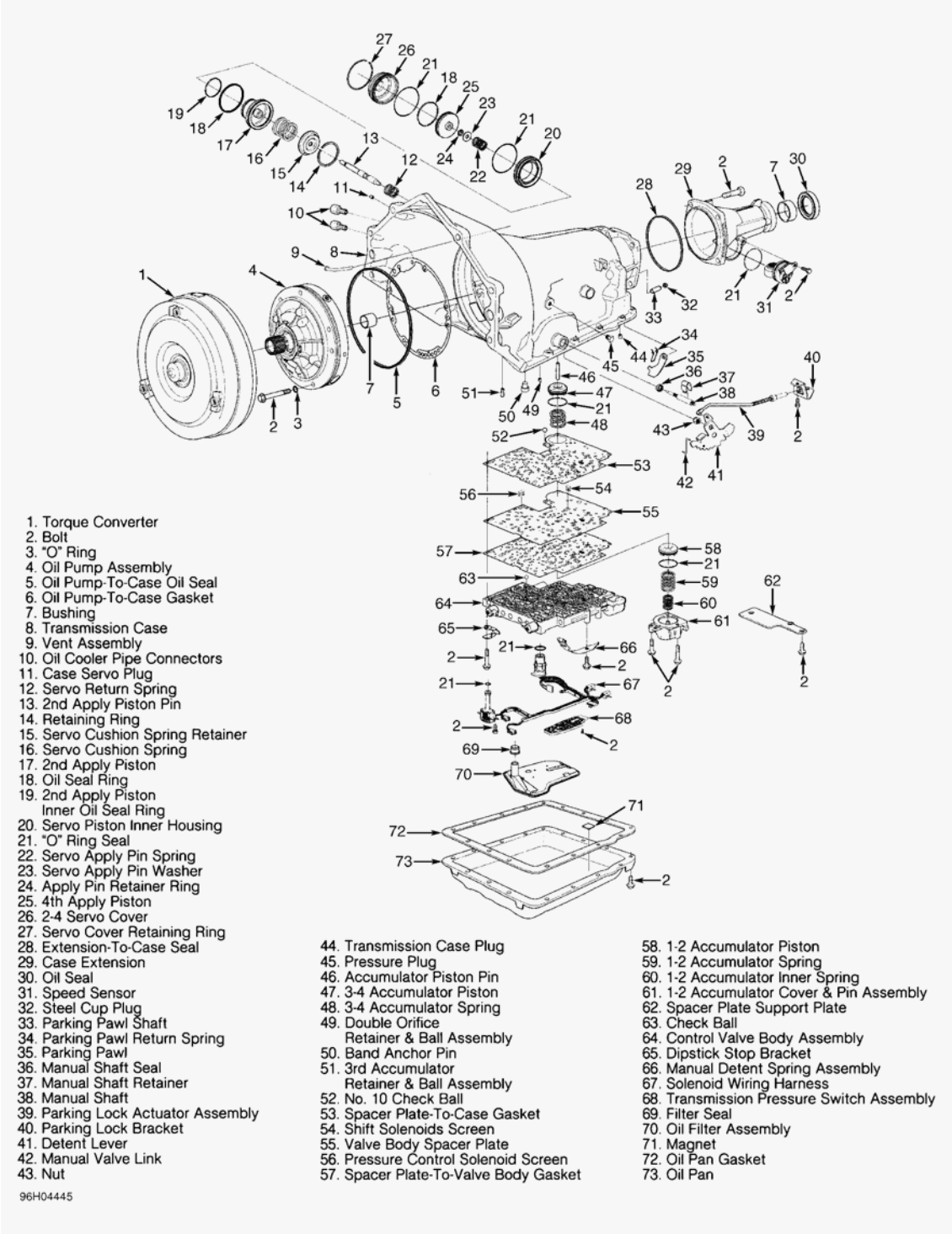

Fig. 16: Exploded View Of 4L60-E Transmission External Components
Courtesy of GENERAL MOTORS CORP.

cardiagn.com

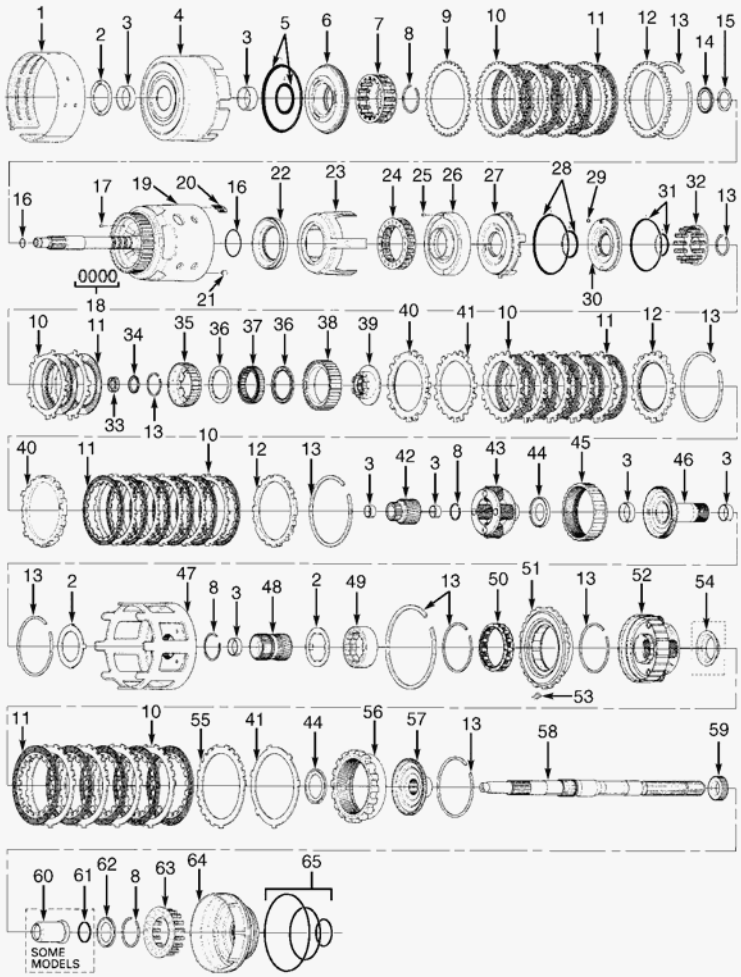

1. 2-4 Band Assembly
2. Thrust Washer
3. Bushing
4. Reverse Input Clutch Housing & Drum Assembly
5. Reverse Input Clutch Seals
6. Clutch Piston
7. Clutch Spring Assembly
8. Retainer Ring
9. Belleville Plate
10. Steel Plate
11. Composition Plate
12. Selective Backing Plate
13. Snap Ring
14. Stator Shaft Bearing Assembly
15. Selective Thrust Washer
16. "O" Ring Seal
17. Orificed Cup Plug
18. Oil Seal Rings
19. Input Shaft & Housing Assembly
20. 3-4 Clutch Boost Spring Assembly
21. Check Ball & Retainer Assembly
22. 3-4 Clutch Piston
23. 3-4 Clutch Apply Ring
24. 3-4 Clutch Spring Assembly
25. Forward Clutch Housing Ball & Retainer Assembly
26. Forward Clutch Housing
27. Forward Clutch Piston
28. Forward Clutch Seals
29. Overrun Clutch Ball
30. Overrun Clutch Piston
31. Overrun Clutch Seals
32. Overrun Clutch Spring Assembly
33. Input Housing-To-Output Shaft Seal
34. Input Sun Gear Bearing Assembly
35. Overrun Clutch Hub
36. Sprag Assembly Retainer Rings
37. Forward Sprag Assembly
38. Forward Clutch Race
39. Sprag Retainer & Race Assembly
40. Apply Plate
41. Waved Plate
42. Input Sun Gear
43. Input Carrier Assembly
44. Thrust Bearing
45. Input Internal Gear
46. Reaction Carrier Shaft
47. Reaction Sun Shell
48. Reaction Sun Gear
49. Low-Reverse Roller Clutch Race
50. Low-Reverse Roller Clutch Assembly
51. Low-Reverse Clutch Support Assembly
52. Reaction Carrier Assembly
53. Support Retainer Spring
54. Oil Deflector (High Output Models)
55. Selective Spacer Plate
56. Internal Reaction Gear
57. Internal Reaction Gear Support
58. Output Shaft
59. Speed Sensor Rotor
60. Output Shaft Sleeve
61. Output Shaft Seal
62. Bearing
63. Low-Reverse Clutch Spring Assembly
64. Low-Reverse Clutch Piston
65. Low-Reverse Clutch Seals

G96J04446

Fig. 17: Exploded View Of 4L60-E Transmission Internal Components
Courtesy of GENERAL MOTORS CORP.

cardiagn.com

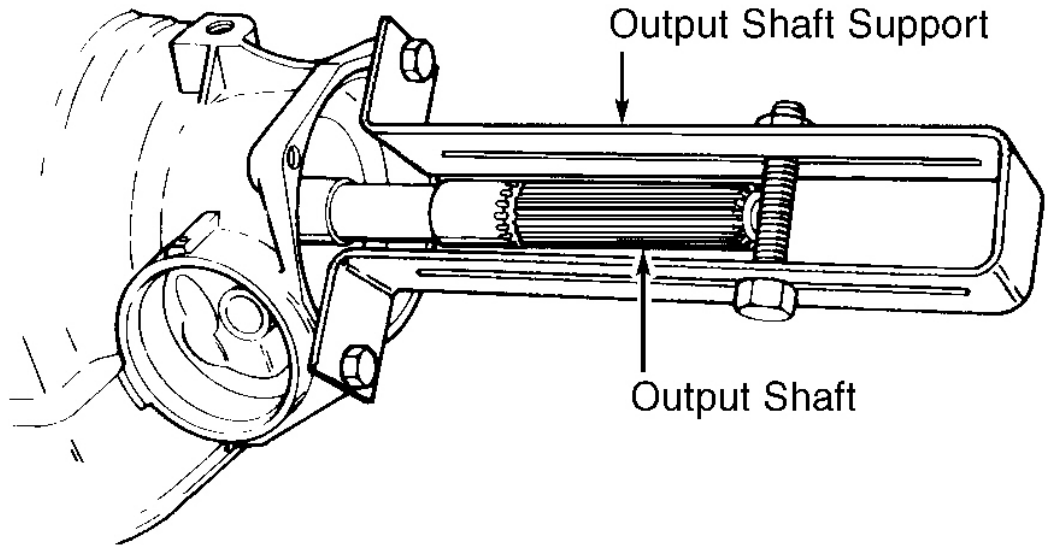

Fig. 18: Installing Output Shaft Support
Courtesy of GENERAL MOTORS CORP.

REACTION GEAR SET

1. Remove input internal gear and reaction carrier shaft. Remove reaction sun shell and thrust washer. Remove sun shell-to-clutch race thrust washer. Remove support-to-case snap ring.
2. Remove support retainer spring from low-reverse support. Remove reaction sun gear, low-reverse roller clutch race, roller clutch, support assembly and reaction carrier assembly. See **Fig. 17** .
3. Remove low-reverse clutch plates. Note locations of components. Remove internal reaction gear and thrust bearing. Remove internal reaction gear support-to-case thrust bearing.

LOW-REVERSE CLUTCH

NOTE: Parking pawl may require removal to access low-reverse clutch.

1. Remove parking lock bracket retaining bolts. Remove lock bracket. Using screw extractor, remove shaft plug. Remove parking pawl shaft, parking pawl and return spring if necessary. See **Fig. 16** .
2. Using Clutch Spring Compressor (J-23327), compress low reverse clutch spring retainer. Remove spring retaining ring and low-reverse spring assembly. Remove low-reverse clutch piston by applying air pressure in case apply passage. See **Fig. 19** .

cardiagn.com

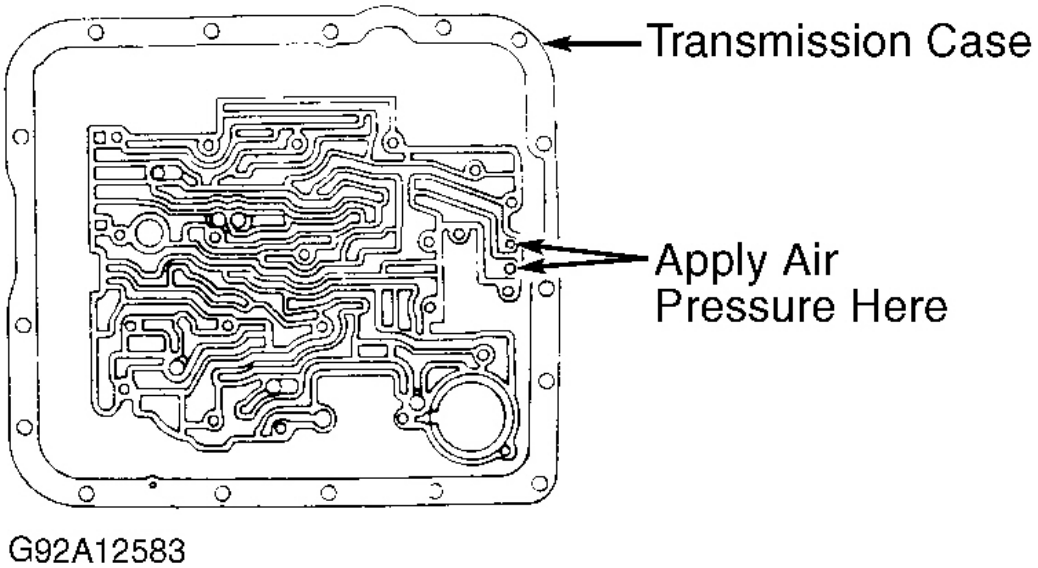

Fig. 19: Removing Low-Reverse Clutch Piston
Courtesy of GENERAL MOTORS CORP.

INNER MANUAL SHAFT LINKAGE

Remove manual shaft nut. Remove manual shaft and retainer. Remove parking lock actuator assembly and inner detent lever. Remove manual shaft seal from transmission case. See **Fig. 16** .

3RD ACCUMULATOR CHECK VALVE

1. Check 3rd accumulator check valve before removing it. **DO NOT** remove check valve unless it is leaking. Install servo assembly in bore. Install servo cover and retaining ring. See **Fig. 6** . Pour clean solvent in bore. Inspect for leaks in transmission case. Replace check valve assembly if it leaks. See **Fig. 20** . Remove servo assembly.
2. For check valve removal, install No. 4 screw extractor in check valve assembly. Remove check valve. Ensure bore is free of burrs. Installation tool must be made to ensure proper installation depth is obtained. Using a 3/8" O.D. rod, scribe indicator mark at 1.653" (41.98 mm) from end of rod. Install check valve until scribe mark on rod is flush with case. See **Fig. 20** .

cardiagn.com

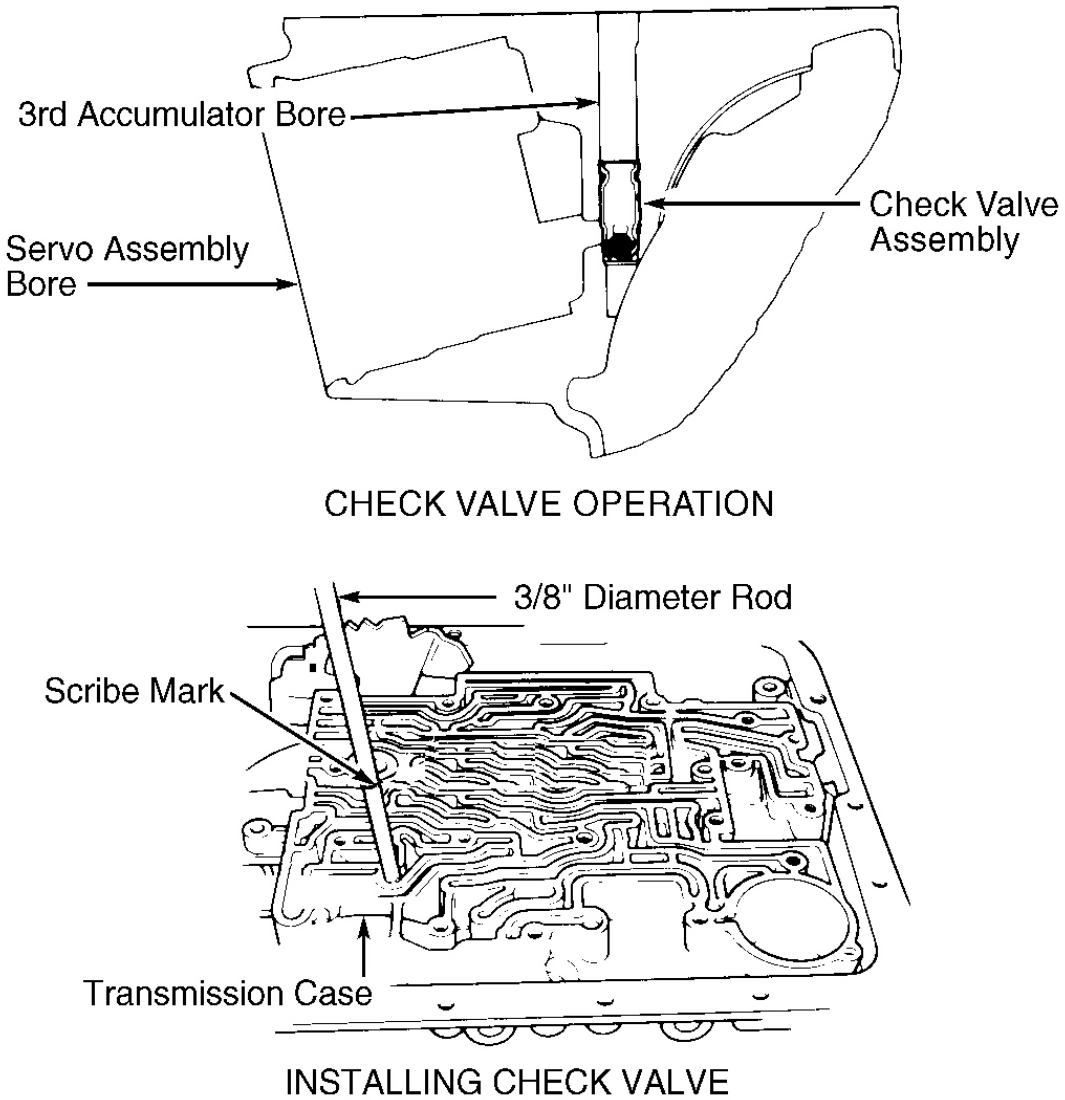

Fig. 20: Installing 3rd Accumulator Check Valve Assembly
Courtesy of GENERAL MOTORS CORP.

CLEANING & INSPECTION

TRANSMISSION CASE

Cleaning & Inspection

Clean transmission case and dry with compressed air. Inspect case assembly for damage, cracks and damaged bolt hole threads. Inspect valve body surface for flatness and land damage. Check case oil passages for

cardiagn.com

restrictions and blockage. Inspect case internal clutch plate lugs for damage and wear. Inspect servo and accumulator bores for damage. Inspect all snap ring grooves for damage.

CASE ATTACHMENTS

Cleaning & Inspection

Clean all parts and dry with compressed air. Inspect 1-2 and 3-4 accumulator parts for damage to pistons or housing. Inspect for flatness and condition of accumulator, oil passage plate and gasket. Inspect wiring harness leads and connectors for damage. Inspect speed sensor rotor teeth for damage and distortion.

REACTION & INPUT GEAR SETS, LOW-REVERSE CLUTCH & SUPPORT

Cleaning & Inspection

1. Clean all parts and dry with compressed air. Inspect reaction and input carriers for pinion gear damage, excessive wear and improper staking of pinion pins. Inspect carrier bearings for heat damage, flatness and roller condition. Place output shaft sleeve inside reaction carrier and input carrier.
2. Rotate sleeve and note smoothness of bearing operation. Replace carrier assembly if roughness is felt. Check pinion gear end play on reaction and input carriers.
3. Pinion gear end play should be .008-.024" (.20-.61 mm). Inspect internal reaction gear and support for cracks and damaged splines. Inspect low-reverse clutch plates for wear and signs of excessive heat.
4. Inspect low-reverse clutch piston for roughness or damage in seal ring area. Inspect retainer ring and spring assembly for damage. Inspect sun and internal gears and supports for spline and bushing wear and damage. Replace damaged parts as necessary.

COMPONENT DISASSEMBLY & REASSEMBLY

REVERSE INPUT CLUTCH

Disassembly

1. Remove snap ring from reverse input clutch housing. Remove selective backing plate, steel plates, composition plates and Belleville plate. See **Fig. 17** . Note number of clutch plates for reassembly reference. Compress reverse input clutch spring assembly.
2. Remove retainer ring and spring assembly. Remove piston and seals. Thickness of composition plates should be .068-.074" (1.73-1.88 mm). Thickness of steel plates should be .075-.081" (1.90-2.05 mm). Thickness of Belleville plate should be .087-.091" (2.21-2.31 mm).

Inspection

Inspect all plates for damage, distortion, flatness and burred edges. Inspect spring retainer for distortion. Check piston for deformation or damage. Inspect clutch housing bushings for wear. Inspect clutch housing for dishing. Replace worn or damaged parts as necessary.

NOTE: Soak clutch plates in ATF before installation.

cardiagn.com

Reassembly

1. Apply ATF to piston seals. Install seals on piston with seal lips facing away from plates. Install piston in clutch housing. Install spring assembly with large opening toward piston. Compress spring assembly. Install retainer ring.

CAUTION: Ensure correct retainer ring is used. Ensure reverse input clutch retainer ring is not interchanged with low-reverse retainer ring.

2. Install Belleville plate. Install clutch plates starting with steel plate and alternating with composition plate. Install backing plate with chamfered side upward. Install snap ring. Apply even pressure to backing plate using fingers.
3. **DO NOT** apply too much pressure or Belleville plate will be distorted. Using feeler gauge, measure clearance between snap ring and backing plate. Clearance should be .040-.076" (1.02-1.93 mm). Select backing plate. See REVERSE INPUT CLUTCH BACKING PLATE SPECIFICATIONS table.

REVERSE INPUT CLUTCH BACKING PLATE SPECIFICATIONS

Identification Number	Thickness In. (mm)
2	.285-.292 (7.24-7.42)
3	.257-.263 (6.53-6.68)
4	.228-.234 (5.79-5.94)

LOW-REVERSE SUPPORT ASSEMBLY

CAUTION: Note direction roller clutch is installed in support. Roller clutch must be installed in proper direction to provide lockup of inner race when rotated.

Disassembly & Inspection

Remove inner race and snap ring. Remove roller clutch assembly. Check inner race for damage and surface finish. See **Fig. 21** . Inspect roller and springs for damage and distortion. Inspect support for loose cam, cracks and damaged surface finish. Replace damaged parts as necessary.

Reassembly

1. Install roller clutch assembly in low-reverse support. See **Fig. 21** . Place support in case with hub facing downward. Install inner race. Rotate inner race while pushing downward. Use care not to damage roller and springs during installation.
2. Ensure inner race is fully seated. Bottom tangs will be flush with carrier hub when fully seated. Inner race should rotate clockwise and lock counterclockwise with clutch hub downward. Insert support retainer spring into case between case lug and open notch in support.

cardiagn.com

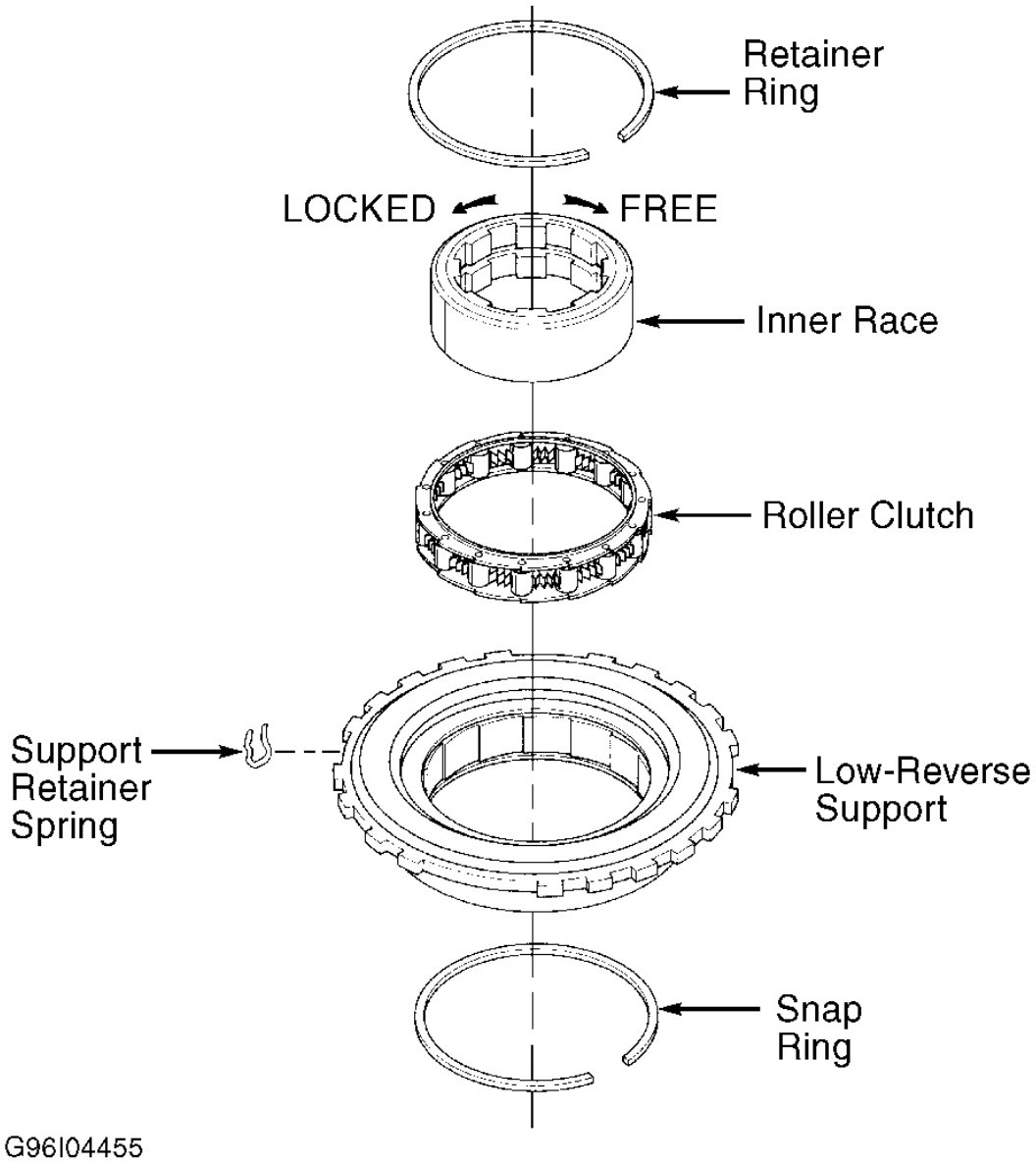

Fig. 21: Exploded View Of Low-Reverse Clutch Assembly
Courtesy of GENERAL MOTORS CORP.

INPUT CLUTCH & FORWARD CLUTCH HUB ASSEMBLY

Disassembly

1. Remove snap ring and backing plate. Remove 3-4 clutch plates. Note number and location of parts for reassembly reference. Remove 3-4 apply plate and clutch ring retainer. See **Fig. 17** .

cardiagn.com

2. Remove forward clutch snap ring, and remove backing plate. Remove forward clutch sprag assembly and bearing. Remove input housing seal. Remove forward clutch plates. Note number and location of parts for reassembly reference. Remove waved and apply plates. Remove overrun clutch plates (2 steel and 2 composition). Compress overrun clutch spring retainer.
3. Remove snap ring and spring assembly. Remove overrun clutch piston and forward clutch piston. Remove seals from pistons. Note direction of seals. Remove forward clutch housing. Remove 3-4 clutch spring, 3-4 clutch apply ring and piston. Remove "O" ring from input housing. Remove turbine shaft oil seal rings.
4. Remove forward clutch race. Remove snap ring and overrun clutch hub. Remove sprag retainer and race. Note direction race is installed. Use care not to lose rollers from roller cage.

Inspection

1. Inspect sprag assembly for weak or damaged springs and retainers and worn rollers. Inspect overrun clutch hub for spline damage, excessive wear and open oil passages. Inspect retainer and race for spline damage, surface wear and damaged ring grooves.
2. Replace sprag assembly if damaged. Inspect forward clutch race for spline damage, excessive wear and open oil passages. Inspect input shaft and housing for spline damage, wear and open feed passages.
3. Inspect 3 sealing check balls located in rear of turbine shaft for tightness. Turbine shaft contains one open lubrication hole. Ensure orifice cup plug is installed. Inspect turbine shaft seal areas for roughness and burrs.
4. Inspect check ball located in input housing for free operation. Inspect pistons for wear, damage and porosity. Inspect spring assemblies for damage and distortion.
5. Inspect steel and composition plates for damage. Inspect snap rings for distortion and damage. Check backing plates for flatness and distortion. Inspect clutch apply rings for distortion and damaged tangs.
6. Inspect forward clutch housing check ball for proper operation (if equipped). Inspect housing for cracks and damage in seal areas. Inspect bearings for excessive wear, flatness, damage and flat rollers.

Reassembly

1. For input housing check ball replacement, drive retainer and ball assembly from housing using 1/4" diameter drift. Install NEW check ball assembly using 1/4" drift. Check ball assembly should seat on housing shoulder. Assemble forward clutch sprag assembly.
2. Install sprag assembly in forward clutch race. Notches located in sprag must face upward. See **Fig. 22** . Install snap ring on sprag retainer and race. Snap ring flange must face away from retainer and race.

cardiagn.com

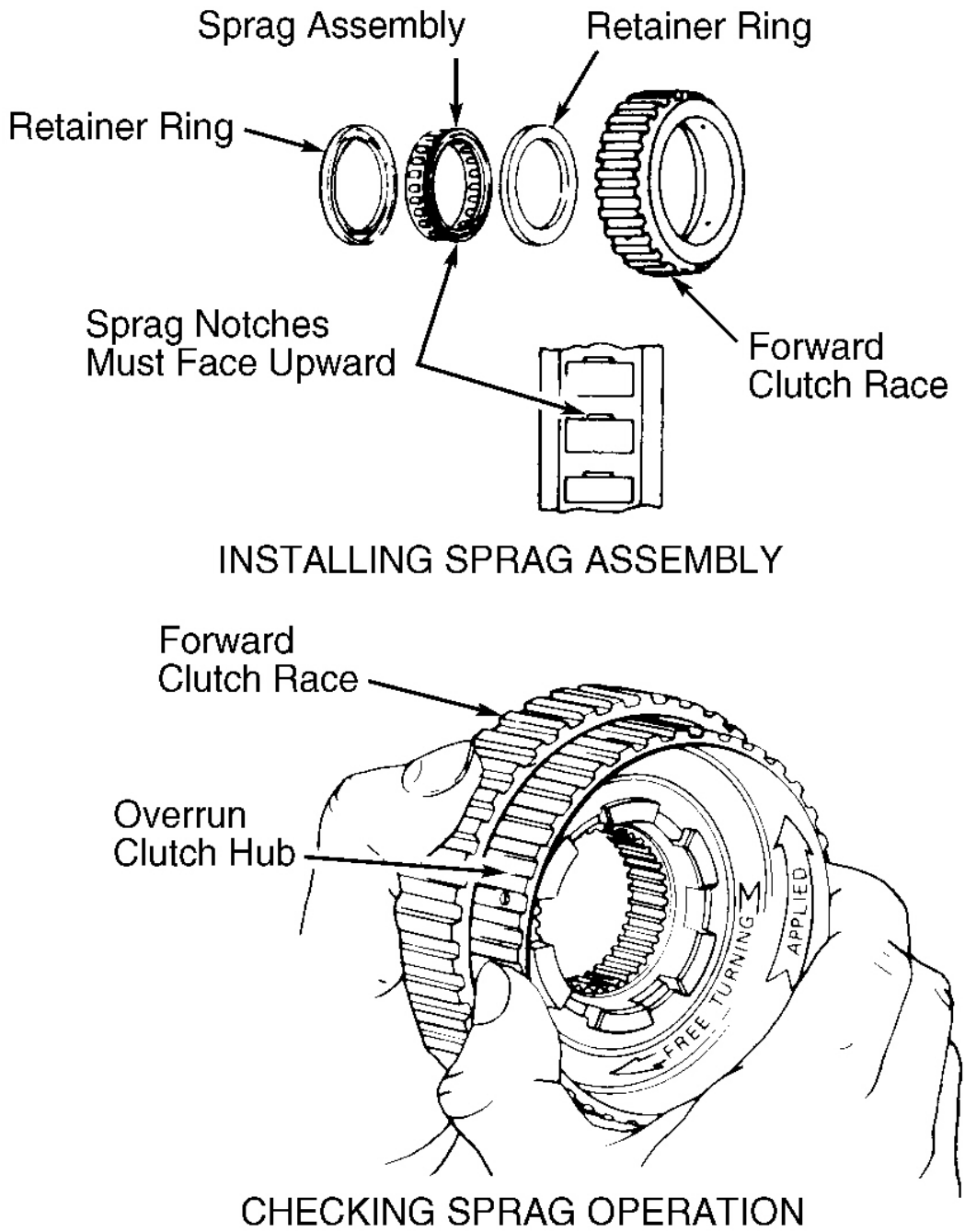

Fig. 22: Installing & Checking Forward Clutch Sprag Assembly
Courtesy of GENERAL MOTORS CORP.

3. Hold forward clutch race in left hand. Support sprag assembly. Install sprag retainer and race assembly in

cardiagn.com

sprag assembly. See **Fig. 17** . Rotate sprag retainer and race assembly counterclockwise. Install remaining retainer ring. Install overrun clutch hub. Install snap ring.

4. Check sprag operation. Holding forward clutch race, rotate overrun clutch hub. Overrun clutch hub should turn freely clockwise and lock counterclockwise. See **Fig. 22** .
5. Place input clutch housing with turbine shaft downward. Install 3-4 piston seals with lips facing away from hub. Install 3-4 piston in input housing.
6. Install 3-4 clutch apply ring. Install "O" ring seal in input clutch housing. Install forward clutch housing. Install seals on forward clutch piston with lips facing away from tangs.
7. Install forward clutch piston in forward clutch housing. Install 3-4 spring on 3-4 clutch apply ring. Install forward clutch assembly on3-4 spring assembly. Align forward clutch piston legs with tangs of3-4 apply ring. Install Seal Protector (J-29883) on input housing.
8. Install 3-4 apply ring and forward clutch assembly in input clutch housing. Hold apply ring tangs while installing. **DO NOT** allow forward clutch piston to separate from assembly. Ensure assembly is firmly seated.
9. Install Seal Protector (J-29883) on input housing. Install overrun clutch piston with hub facing upward. If fully seated, overrun piston should be 3/16" below top of snap ring groove in input housing hub. Install spring assembly on overrun clutch piston. Compress springs, and install snap ring. Install input housing seal.

NOTE: Soak clutch plates in ATF before installation. Coat all seals and "O" rings with ATF. Coat thrust washers and bearings with petroleum jelly.

10. Install 4 overrun clutch plates, starting with steel plate. Align wide notches with case lugs. Install remaining clutch plates, alternating steel and composition plates.
11. Install bearing assembly on input clutch hub. Bearing inner race must face input housing hub. Ensure bearing is centered. Align clutch plate tabs. Install forward clutch sprag assembly in input housing. Align overrun clutch hub with clutch plates.
12. Install forward clutch apply plate in input housing. Install forward clutch waved plate. Ensure all plates are aligned with input housing tangs. Starting with steel plate, install clutch plates, alternating steel and composition plates. Install backing plate and snap ring. See **FORWARD CLUTCH PLATE SPECIFICATIONS** table.
13. Using 2 feeler gauges, measure clearance between backing plate and snap ring. Clearance should be .030-.063" (.75-1.60 mm). Install proper size backing plate with chamfered side upward. See **FORWARD CLUTCH BACKING PLATE SPECIFICATIONS** table. Install snap ring.
14. Install 3-4 clutch plates and backing plate. Install clutch plates and backing plate with chamfered side upward. Install retainer ring. Using feeler gauge, measure clearance between backing plate and first composition plate. Clearance should be .035-.083" (.89-2.11 mm).
15. Select proper backing plate to obtain correct clearance. See **3-4 BACKING PLATE SPECIFICATIONS** table. Air check all clutches at feed holes in turbine shaft.
16. During overrun clutch test, air pressure will blow past forward clutch piston seals and exit out forward clutch feed hole in turbine shaft. Turbine shaft seals require sizing and should be installed just before oil pump installation.

FORWARD CLUTCH PLATE SPECIFICATIONS

cardiagn.com

Plate Type	Quantity	Thickness In. (mm)
Apply	1	.169 (4.29)
Backing	1	Selective
Composition	5	.070 (1.78)
Flat Steel	5	.090 (2.29)
Waved Steel	1	.070 (1.78)

FORWARD CLUTCH BACKING PLATE SPECIFICATIONS

Identification Letter	Thickness In. (mm)
A	.274-.278 (6.96-7.06)
B	.250-.255 (6.35-6.48)
C	.227-.232 (5.77-5.89)
D	.205-.208 (5.21-5.28)
E	.180-.185 (4.57-4.70)

3-4 CLUTCH PLATE SPECIFICATIONS

Plate Type	Quantity	Thickness In. (mm)
Backing	1	Selective
Composition	6	.079 (2.01)
Flat Steel (1)	1	.070 (1.78)
Flat Steel	5	.107 (2.71)
Stepped Apply	1	.220 (5.59)
(1) Same spline configuration as apply plate.		

3-4 BACKING PLATE SPECIFICATIONS

Identification	Thickness In. (mm)
A	.224-.231 (5.69-5.87)
B	.187-.196 (4.75-4.98)
C	.153-.161 (3.89-4.09)

OIL PUMP ASSEMBLY

Disassembly

1. Remove reverse input clutch drum-to-oil pump thrust washer, pump-to-case gasket and pump-to-case oil seal ring from pump assembly. Remove pump cover retaining bolts. Separate pump cover from pump body.

CAUTION: Pump slide spring and pressure relief spring rivet are under high pressure. To prevent possible injury, cover springs during removal.

cardiagn.com

2. Using needle-nose pliers, compress pump slide spring. Remove from pump by pulling straight out. Remove pump vane rings, pump vanes, pump rotor and rotor guide from pump pocket.

CAUTION: Keep pump vanes in installed position. If pump vanes are installed upside-down or backwards, they will quickly wear out.

3. Remove slide from pump pocket. Remove slide seal and seal support from pump slide. See **Fig. 23** . Remove pivot pin and pivot pin spring. Remove seal ring and "O" ring from pump slide. Remove seal retainer and seal from pump body.
4. Check condition of pump bushing. If bushing is in good condition, **DO NOT** remove it. Push inward on converter clutch valve stop to compress spring. Remove snap ring. Remove valve stop, converter clutch apply valve and springs.
5. Using a small punch, remove pressure relief spring retaining rivet. Remove relief spring and check ball. Remove oil screen and "O" ring from pump cover. Remove reverse boost valve sleeve. Remove reverse boost valve, pressure regulator valve spring and pressure regulator valve.

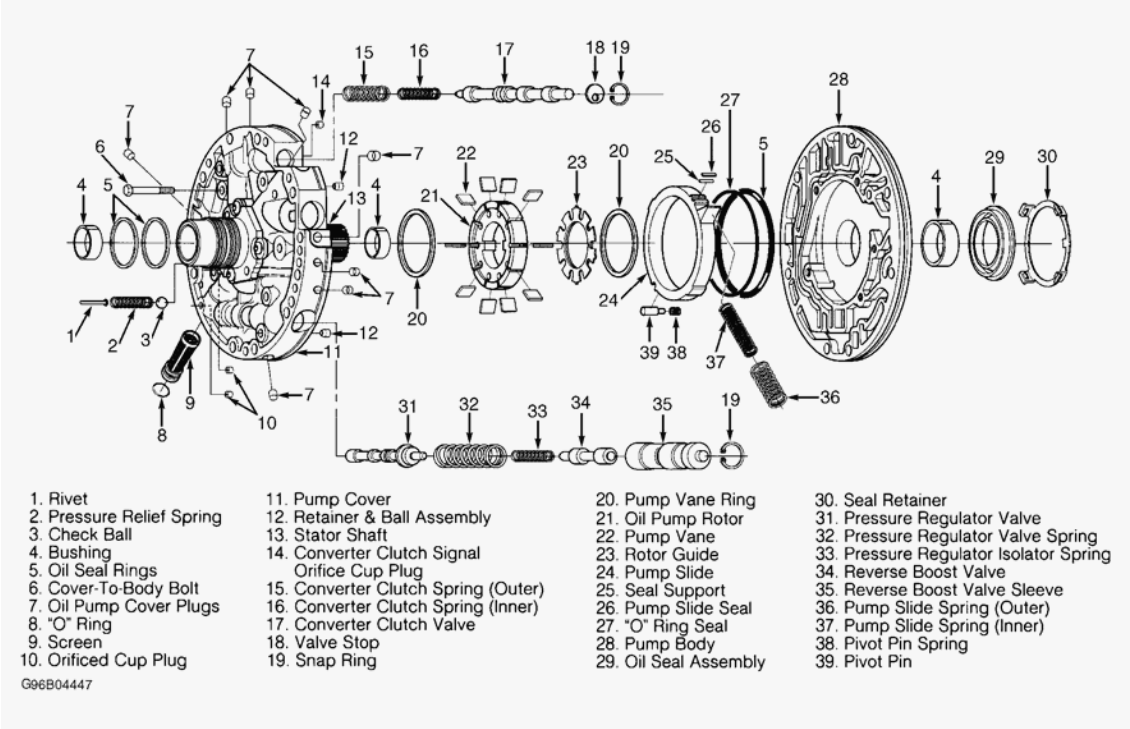

Fig. 23: Exploded View Of Oil Pump Assembly
Courtesy of GENERAL MOTORS CORP.

Inspection

1. Inspect all valves, springs, sleeves and bushings for chips, burrs, distortion and free movement in bores. Check pressure relief check ball and spring for damage and distortion. Low line pressure will exist if check ball and spring are damaged.
2. Inspect pump cover screen and "O" ring for wear and damage. Clean pump body and cover. Check all

cardiagn.com

bores for obstructions. Inspect mating sides of cover and body for scoring, flatness and damage between channels. Check channels for dirt and damaged passages. Inspect stator shaft and pump body bushings for damage.

3. Inspect rotor and slide for scoring, cracks and damage. Check rotor guide and pump vane rings for excessive wear and damage. Inspect all seals for damage. Measure pump rotor and slide thickness in undamaged area if replacement is required. See OIL PUMP COMPONENT THICKNESS table. Ensure replacement parts are matched to fit within specification.

OIL PUMP COMPONENT THICKNESS

Component	In. (mm)
Pump Rotor & Slide	.7066-.7071 (17.948-17.960), .7071-.7076 (17.960-17.973), .7076-.7081 (17.973-17.986), .7081-.7086 (17.976-17.998), .7086-.7091 (17.998-18.011)

Reassembly

1. Install "O" ring and seal ring in groove on back side of pump slide. Retain seal ring using petroleum jelly. Install pivot pin and spring in pump body. Install pump slide. Notch in pump slide must align with pivot pin hole and with flat oil seal ring facing downward in pump pocket. Install slide seal and support.

CAUTION: Keep pump vanes in installed position. If pump vanes are installed upside-down or backwards, they will quickly wear out.

2. Install pump vane ring into pump pocket. Coat rotor guide with petroleum jelly. Install rotor guide on rotor. Install rotor and guide into pump pocket with guide toward pump pocket. Install vanes in rotor. Install vane guide ring. Compress pump slide spring and install into pump pocket. All parts must be even with pump body surface. Install "O" ring on pump screen, and install screen in pump cover with "O" ring end out.
3. Install oil seal in pump body. Install seal retainer. Install pressure relief check ball and spring in pump cover. Install retaining rivet. Install converter clutch valve springs and converter clutch valve. Install valve stop and snap ring. Install pressure regulator valve and spring in pump cover. See **Fig. 23** .
4. Coat reverse boost valve with petroleum jelly. Install reverse boost valve in boost valve sleeve with small end first. Install reverse boost valve sleeve in pump cover.
5. Install pump cover on pump body. Install retaining bolts finger tight. Align pump body and cover using Alignment Strap (J-21368). Place bolt through pump-to-case bolt hole. Tighten retaining bolts to specification. See **TORQUE SPECIFICATIONS** . Remove alignment strap.
6. Position pump-to-case gasket on pump, and retain it using petroleum jelly. Install oil seal rings on stator hub. Retain oil seal rings using petroleum jelly. Install pump-to-case oil seal on cover. Ensure seal is not twisted. Coat seal with ATF. Install pump-to-drum thrust washer. Ensure tangs on washer engage with holes in hub.

2-4 SERVO ASSEMBLY

Disassembly

1. Remove 4th apply piston and housing from 2nd apply piston assembly. Remove return spring from apply

cardiagn.com

pin. Install Piston Compressor (J-22269-01) on 2nd apply piston. See **Fig. 12** .

2. Compress 2nd servo apply piston assembly. Remove retainer ring. Separate 2nd apply piston, spring and retainer. Remove retainer ring, washer and spring from apply pin, and remove pin. Remove all oil seal rings. See **Fig. 11** .

Inspection

Inspect all pistons for porosity and damage. Check for ring groove damage and servo bore in case for any wear which may cut servo seals. Check all springs and oil seal rings for distortion and damage.

Reassembly

Different servo piston housings and 2nd apply pistons are used for different applications. If servo piston housing or 2nd apply piston is replaced, inside dimension of parts must be checked. Measure inside diameter of piston housing and 2nd apply piston. Dimension must be same as original. To reassemble, reverse disassembly procedure. Coat seals with petroleum jelly before assembly.

VALVE BODY

NOTE: Valves are held in valve body by pins or retainers. Valves may be under spring pressure. Note location of all parts during disassembly for reassembly reference.

Disassembly

Remove valve train, and note direction of valve installation. See **Fig. 24** . Remove all valve pins, retainers and bore plugs. Remove shift solenoids. Note locations of all parts.

Inspection

Inspect valves and sleeves for scoring and cracks. Ensure valves move freely in bores. Inspect valve body for cracks and scored bores. Inspect machined surfaces for damage. Inspect springs for damaged coils. Replace damaged parts as necessary.

Reassembly

For reassembly, reverse disassembly procedure. Ensure all parts are installed in correct location. See **Fig. 24** . Ensure pins, retainers and bore plugs are fully installed and do not extend into machined areas.

cardiagn.com

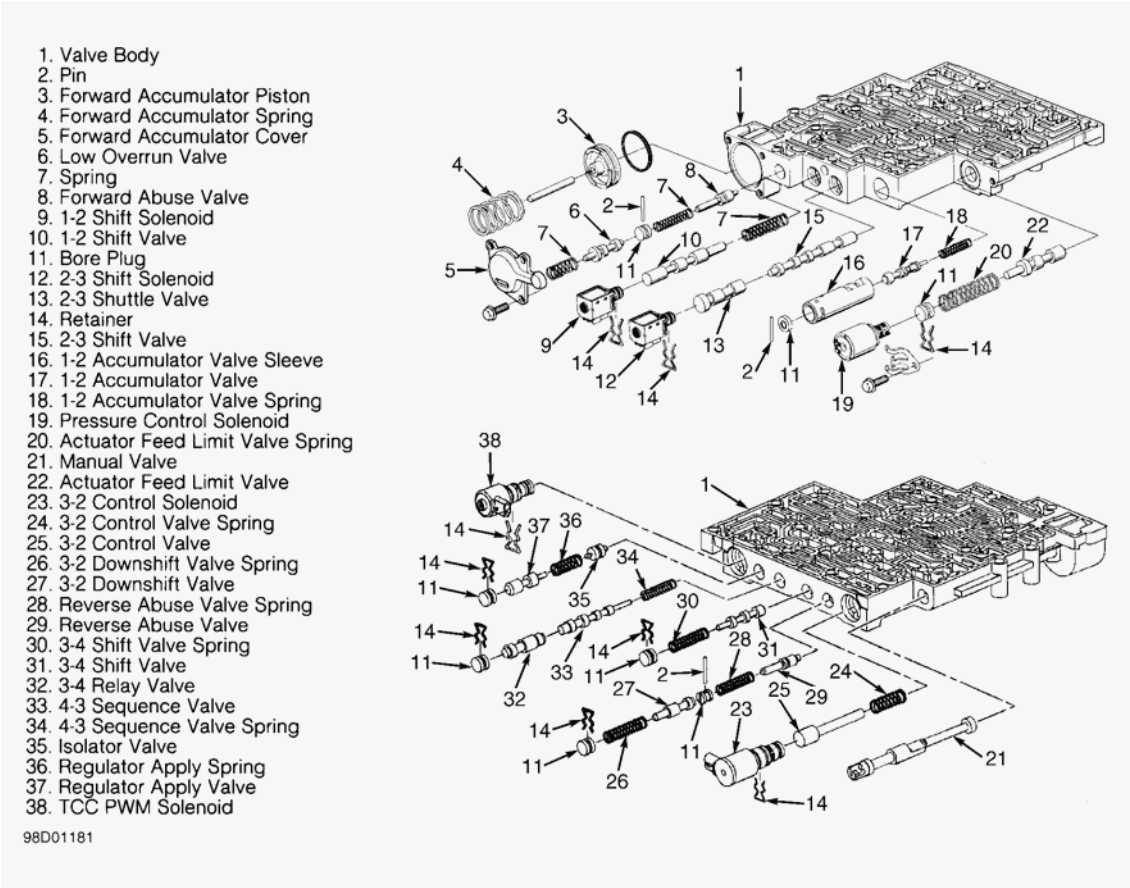

Fig. 24: Exploded View Of Valve Body
Courtesy of GENERAL MOTORS CORP.

TRANSMISSION REASSEMBLY

NOTE: **To identify bushing, seal, thrust bearing and thrust washer locations and direction, see BUSHINGS, SEALS, BEARINGS & THRUST WASHERS . See Fig. 26 and Fig. 27 .**

LOW-REVERSE CLUTCH

1. Place transmission in a vertical position. Install seals on low-reverse clutch piston. Apply petroleum jelly to seals. Align and install piston with notch in bottom of transmission case. Ensure piston is fully seated and parking pawl aligns with opening in piston wall. Install spring assembly with flat side of retainer upward. Compress springs and install retainer ring.
2. Coat bearing assembly with petroleum jelly. Install bearing assembly on case hub with outside bearing race toward case hub. Install internal reaction gear and support. Install bearing assembly onto support with outside bearing race toward support. Install oil deflector (if equipped) and reaction carrier assembly in case. See **Fig. 17** . Ensure clutch plates are proper thickness.
3. Install clutch plates. See **LOW-REVERSE CLUTCH PLATE USAGE** table. Ensure clutch plates align with splines of reaction carrier and case and that steel plates are aligned. Place waved plate on work

cardiagn.com

bench. Install 5 composition plates and 4 steel plates alternately, starting with composition plate.

4. Install low-reverse support. Apply light pressure to low-reverse support. **DO NOT** flatten waved plate. Measure height of clutch pack from work bench to top of low-reverse support. Using height dimension, determine proper selective spacer plate to be used. See SPACER PLATE SELECTION table.
5. Place spacer plate between waved plate and first composition plate with identification facing upward. Measure overall height of clutch pack. Overall height should be 1.15-1.18" (29.2-29.9 mm). Install clutch pack assembly in transmission case.
6. Install low-reverse support in case with hub downward. Install inner race by pushing downward while rotating until it is fully engaged. Bottom tangs will be flush with hub when fully installed. Install spring retainer in case between case lug and open notch in support. Install low-reverse snap ring.

LOW-REVERSE CLUTCH PLATE USAGE

Type	No. Used	Thickness: In. (mm)
Composition	5	.089 (2.26)
Flat Steel	4	.069 (1.75)

SPACER PLATE SELECTION (1)

Measured Clutch Pack Height: In. (mm) (2)	Plate Thickness: In. (mm)
1.084-1.105 (27.53-28.07)	.066-.072 (1.67-1.85)
1.105-1.125 (28.07-28.58)	.046-.052 (1.17-1.31)
1.064-1.084 (27.03-27.53)	.087-.092 (2.19-2.34)

(1) Spacer plates are available in select sizes. Plate .066-.072" (1.67-1.85 mm) thick has no identifying marks. Other plates are marked "0" or "1".

(2) Clutch pack height is measured without spacer plate in position.

REACTION & INPUT GEAR SETS

1. Install retainer ring on reaction sun gear (if removed). Install sun gear into reaction carrier. Install thrust washer on low-reverse clutch race. Install reaction sun gear shell on reaction sun gear.
2. Install thrust washer on reaction sun gear shell. Ensure thrust washer tangs engage on gear shell. Install input internal gear and reaction carrier shaft in sun gear shell. Carrier shaft splines must engage with reaction carrier. See **Fig. 17** .
3. Install thrust washer on reaction carrier shaft. Outer race must face toward reaction carrier shaft. Install output shaft in transmission. Ensure output shaft engages with all parts.
4. Install Output Shaft Support (J-29837). Adjust support so output shaft is positioned upward as far as possible. Install input carrier assembly with hub end down on output shaft. Install NEW retainer ring on output shaft. Remove output shaft support. Install input sun gear, indexing gear end with input carrier pinions.

REVERSE INPUT ASSEMBLY & INPUT CLUTCH

Install selective thrust washer on input housing. Install bearing assembly on selective thrust washer. Inner race (Black) must go toward oil pump. Position reverse input assembly on input clutch assembly. Reverse input

cardiagn.com

clutch plates must align with input clutch hub. Ensure all clutch plates are fully engaged.

REVERSE & INPUT CLUTCHES

Install reverse and input clutch assemblies in transmission case as an assembly. Align 3-4 clutch plates of input assembly with input internal gear. Assembly is fully seated when reverse input clutch housing is just below oil pump face of case.

2-4 BAND & SERVO ASSEMBLY

1. Install 2-4 band in case. Align band anchor pin end with case pin hole. Install band anchor pin in case. Ensure band anchor pin aligns with end of 2-4 band.
2. Install 2-4 servo assembly into case, and index apply pin on band end. Check for proper engagement of apply pin on band end. Recheck 2-4 servo apply pin selection to ensure correct pin is installed. See **CHECKING SERVO PIN LENGTH** under TRANSMISSION DISASSEMBLY.
3. Different length servo pins are available. See **SERVO PIN SPECIFICATIONS** table. Select proper length servo pin. Install servo cover and "O" ring. Compress cover and install cover retaining ring. Index ring ends with slot in case.

SERVO PIN SPECIFICATIONS

Pin ID	Pin Length - In. (mm)
1 Groove	2.59-2.60 (65.8-66.0)
2 Grooves	2.65-2.66 (67.3-67.5)
No Groove	2.70-2.71 (68.6-68.8)

BUSHINGS, SEALS, BEARINGS & THRUST WASHERS

NOTE: To identify bushing, seal, thrust bearing and thrust washer locations and direction, see Fig. 26 and Fig. 27 .

cardiagn.com

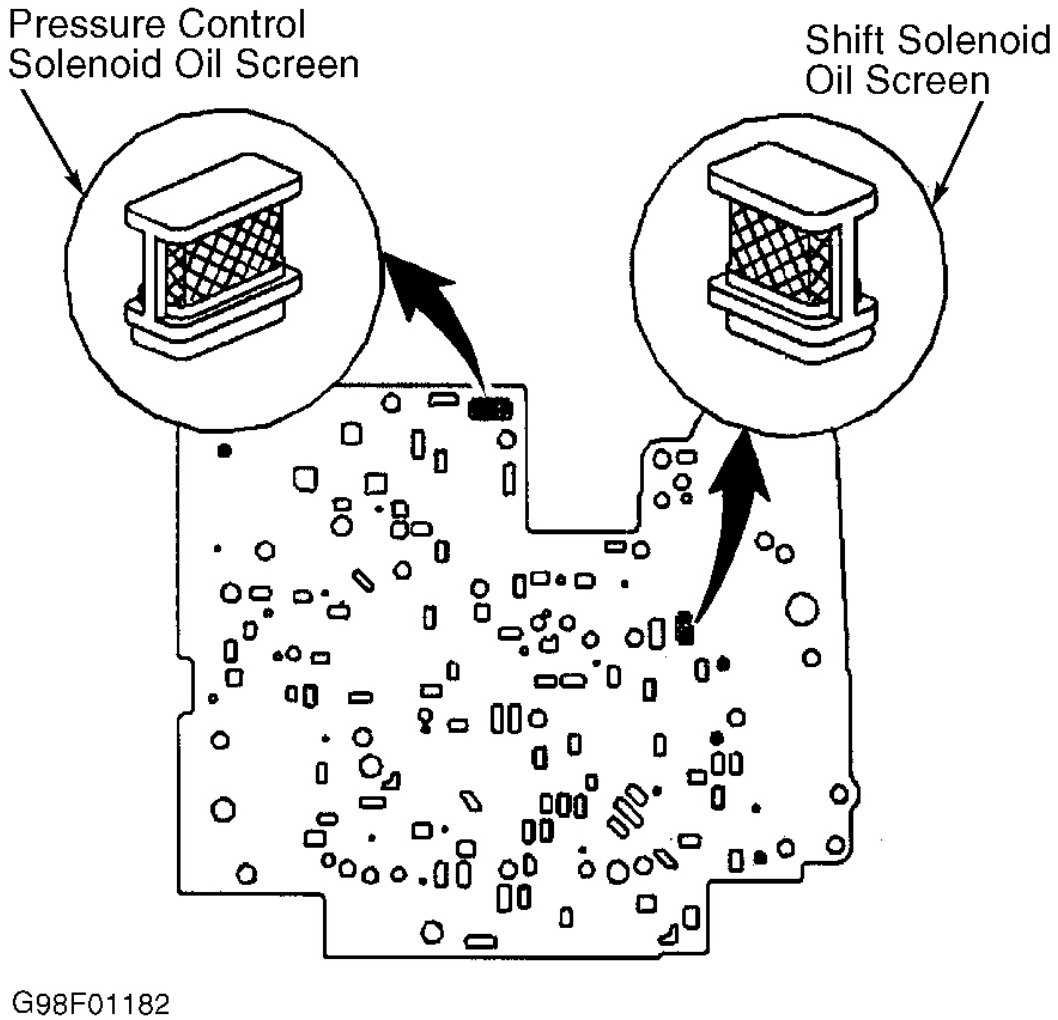

Fig. 25: Locating Oil Screens
Courtesy of GENERAL MOTORS CORP.

cardiagn.com

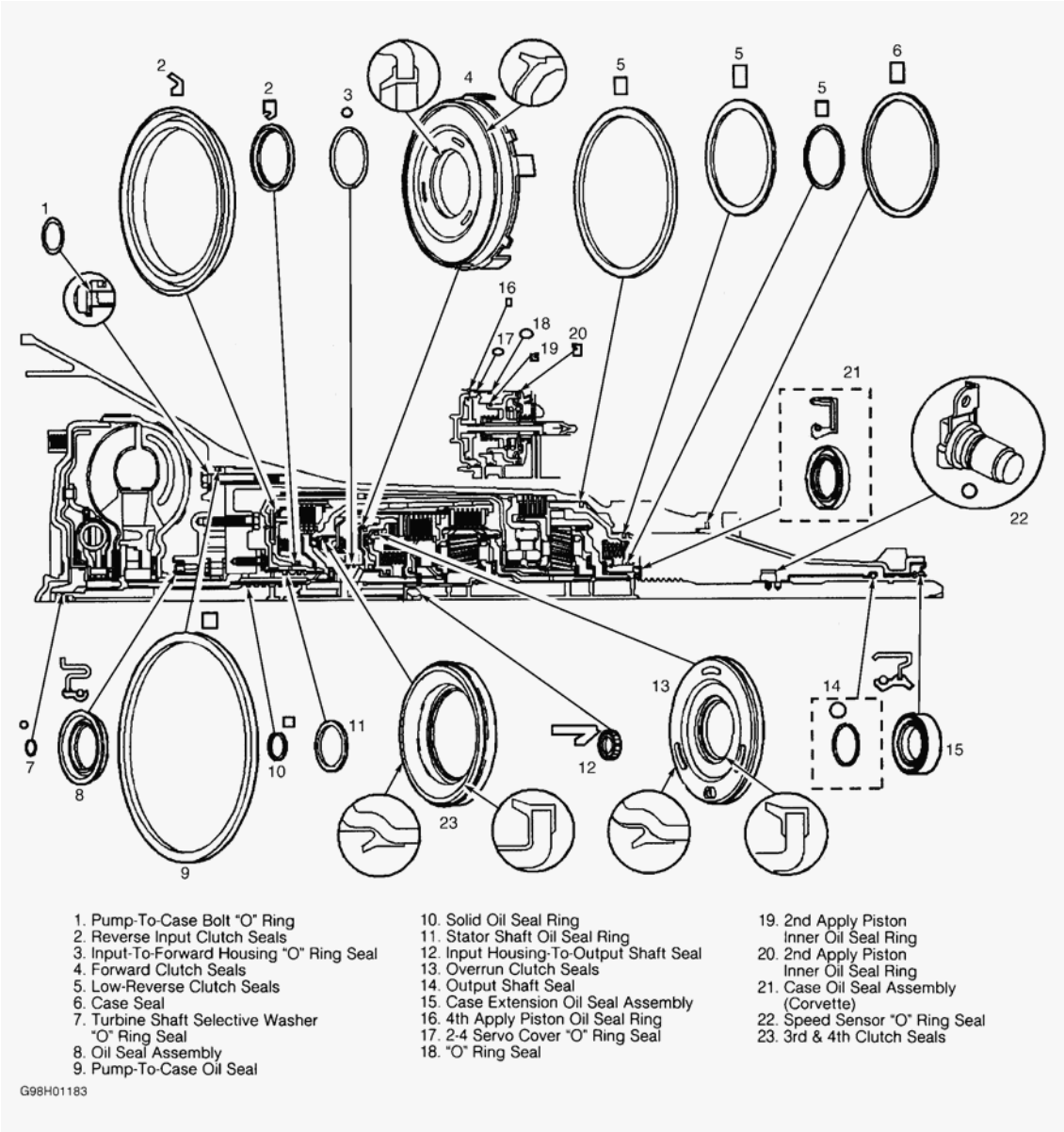

Fig. 26: Location & Direction Of Transmission Oil Seals
Courtesy of GENERAL MOTORS CORP.

cardiagn.com

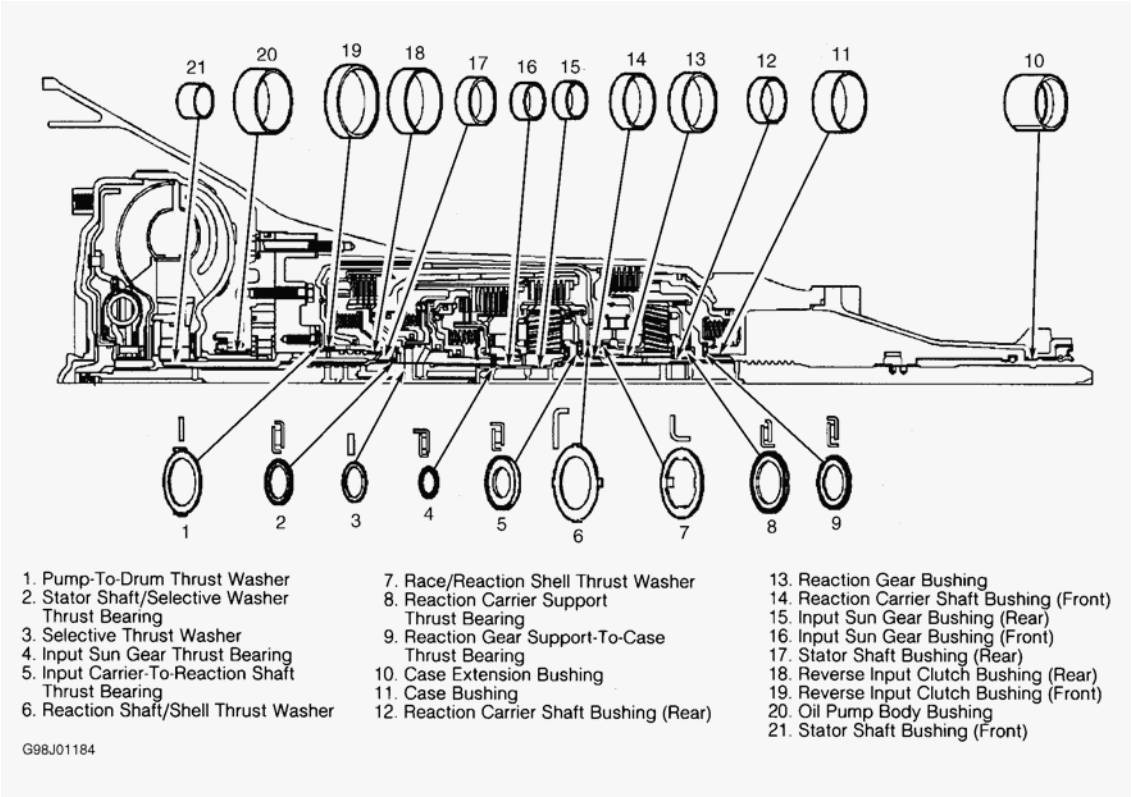

Fig. 27: Location & Direction Of Transmission Bushings, Thrust Bearings & Thrust Washers
Courtesy of GENERAL MOTORS CORP.

OIL PUMP ASSEMBLY

1. Turbine shaft seals should be installed prior to oil pump installation. Position Seal Installer (J-36418-1) on input shaft. See **Fig. 28** . Adjustment screw in seal installer must be adjusted to obtain correct height for each seal installation. Install 4 turbine shaft seals.

cardiagn.com

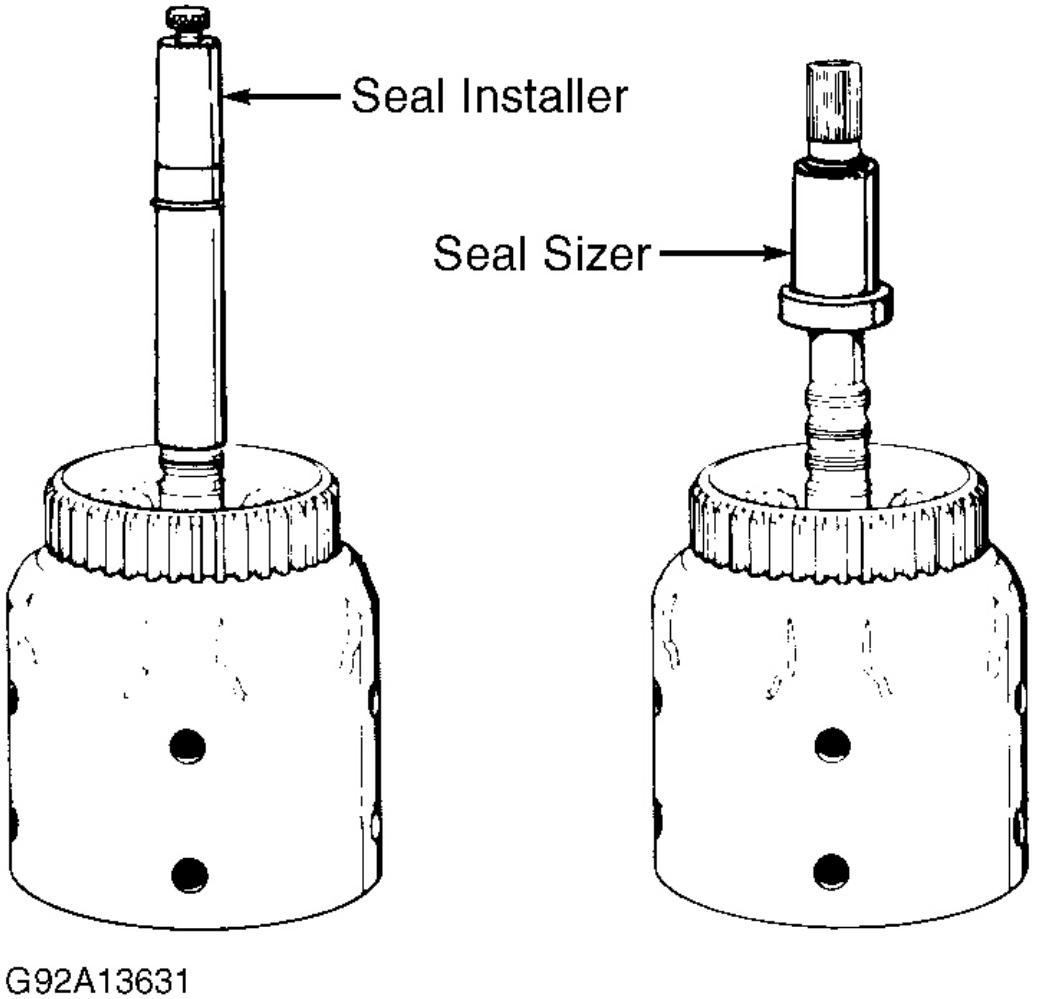

Fig. 28: Installing & Sizing Turbine Shaft Seals
Courtesy of GENERAL MOTORS CORP.

2. Turbine shaft seals must be sized using Seal Sizer (J-36418-2A) after installation. Install aligning pins in 2 opposing pump bolt holes in case. Ensure thrust washer is installed on rear of oil pump. Thrust washer can be retained using petroleum jelly.
3. Install oil pump into case, aligning filter and pressure regulator holes with holes in case. Install retaining bolts. Tighten bolts to specification. See **TORQUE SPECIFICATIONS** . Place transmission in a horizontal position.
4. Turbine shaft should rotate by hand. If turbine shaft will not rotate, loosen pump retaining bolts and attempt to rotate shaft again. If shaft now turns, reverse and input assemblies have not been indexed properly or some other assembly problem has occurred, such as thrust washer not positioned properly.
5. Check transmission end play. See **TRANSMISSION END PLAY CHECK** under TRANSMISSION

cardiagn.com

DISASSEMBLY. Transmission end play should be .005-.036" (.13-.91 mm). If transmission end play is not within specification, thrust washer must be changed between oil pump and input housing.

6. See **OIL PUMP THRUST WASHER SPECIFICATIONS** table. Install thrust washer, and recheck end play. Install torque converter. Ensure converter hub is aligned with oil pump. Install torque converter retaining strap to hold converter.

OIL PUMP THRUST WASHER SPECIFICATIONS

Identification Number	Thickness In. (mm)
67	.074-.078 (1.88-1.98)
68	.080-.084 (2.03-2.13)
69	.087-.091 (2.21-2.31)
70	.094-.098 (2.39-2.49)
71	.100-.104 (2.54-2.64)
72	.107-.111 (2.72-2.82)
73	.113-.118 (2.87-3.00)
74	.120-.124 (3.05-3.15)

1-2 ACCUMULATOR & SPACER PLATES

CAUTION: If spacer plate and gasket replacement is required, ensure NEW spacer plate and gasket are identical as those removed.

1. Install 3-4 accumulator piston pin in case. Install 3-4 piston seal on piston. Install 3-4 accumulator piston on pin. Legs of piston must face valve body.
2. Install 3-4 accumulator spring. Install oil screens in proper locations. See **Fig. 25** . Install special retainer and ball assembly. See **Fig. 5** for check ball and filter installation locations. Install spacer plate gasket and spacer plate.
3. Install 1-2 accumulator spring, oil seal ring and 1-2 accumulator piston. Install accumulator cover and bolts. Tighten bolts to specification. See **TORQUE SPECIFICATIONS** .

VALVE BODY

Install valve body. See VALVE BODY under **ON-VEHICLE SERVICE** .

EXTENSION HOUSING

1. Install speed sensor rotor retaining clip on output shaft. Install "O" ring in output shaft sleeve. Install output shaft sleeve on output shaft. **DO NOT** position output sleeve past machined surface of output shaft. Install seal ring on extension housing.
2. Position extension housing on transmission case. Install retaining bolts. Install oil seal in extension housing. Install speed sensor assembly. Install retainer and bolt. Tighten bolt to specification. Install outside electrical connector and manual shift lever.

cardiagn.com

TRANSMISSION SPECIFICATIONS

TRANSMISSION SPECIFICATIONS

Application	In. (mm)
Clearance	
Forward Clutch	.030-.063 (.75-1.60)
Reverse Input Clutch	.040-.076 (1.02-1.93)
3-4 Clutch	.035-.083 (.89-2.11)
End Play	
Reaction & Input Planetary Pinion Gear	.008-.024 (.20-.61)
Torque Converter	
9.65" (245 mm)	.0-.020 (.0-.51)
11.73" (298 mm)	.0-.024 (.0-.61)
Transmission	.005-.036 (.13-.91)
Height (Low-Reverse Clutch)	1.15-1.18 (29.2-29.9)

TORQUE SPECIFICATIONS

TORQUE SPECIFICATIONS

Application	Ft. Lbs. (N.m)
Converter Housing Bolt	55 (75)
Cooler Pipe Connector	28 (38)
Detent Spring-To-Valve Body Bolt	18 (24)
Extension Housing Bolt	26 (35)
Fill Tube Bolt	35 (47)
Manual Shaft-To-Detent Lever Nut	23 (31)
Oil Pump Cover-To-Body Bolt	18 (24)
Oil Pump-To-Case Bolt	18 (24)
Park Bracket-To-Case Bolt	23 (31)
Torque Converter-To-Flexplate Bolt	46 (62)
Transmission-To-Engine Bolt	35 (47)
	INCH Lbs. (N.m)
Accumulator Cover-To-Case Bolt	96 (11)
Line Pressure Plug	96 (11)
Oil Pan-To-Case Bolt	96 (11)
Oil Passage Cover Bolt	96 (11)
Pressure Switch Assembly	96 (11)
Solenoid Bolt	96 (11)
Speed Sensor Bolt	96 (11)
Valve Body-To-Case Bolt (1)	96 (11)

cardiagn.com

(1) Tighten valve body bolts in a spiral pattern starting in center of valve body.

WIRING DIAGRAMS

cardiagn.com

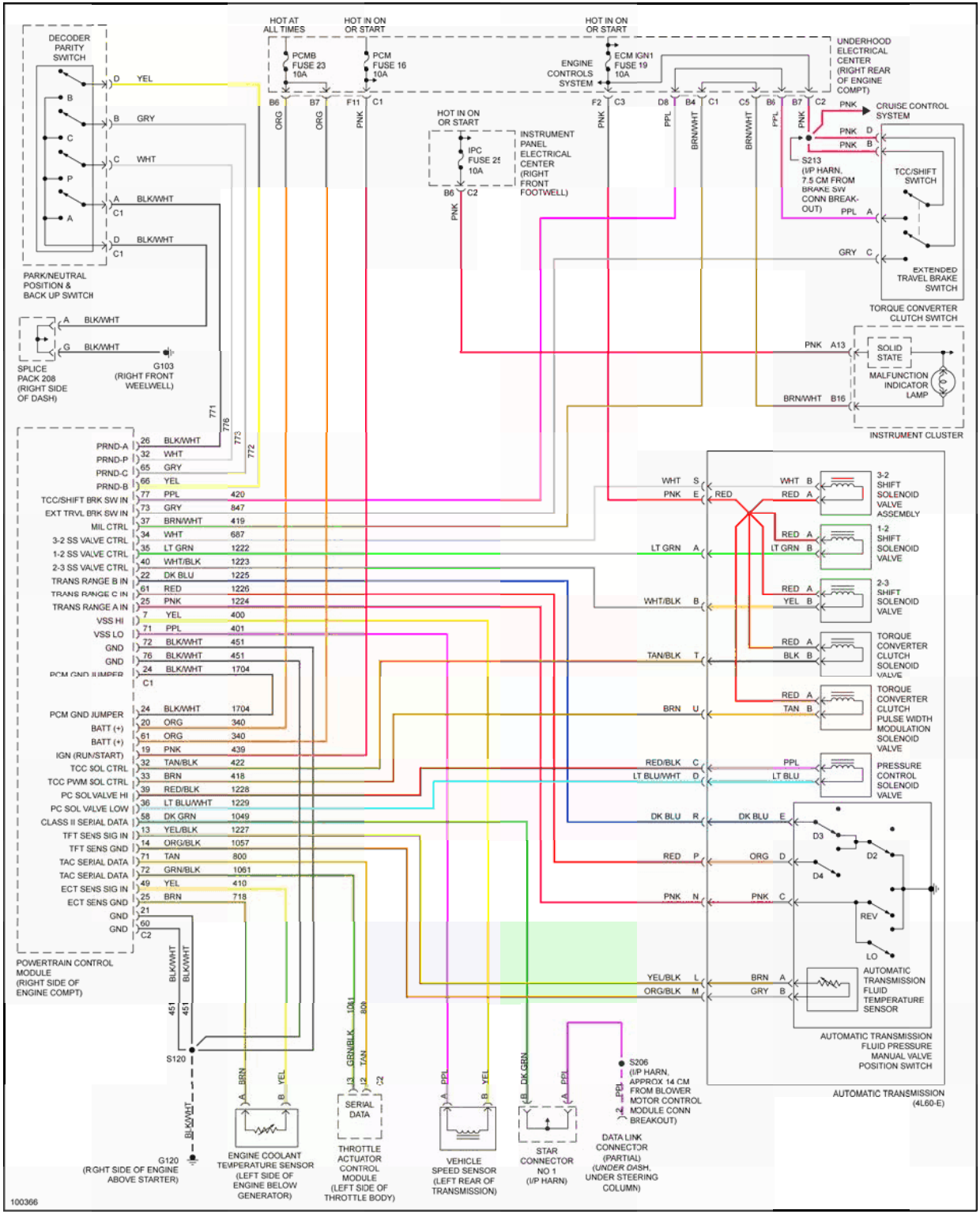

cardiagn.com

Fig. 29: Wiring Diagram

cardiagn.com