2001 ACCESSORIES & EQUIPMENT

Analog Instrument Panels - Corvette

DESCRIPTION

WARNING: Deactivate air bag system before performing any service operation. See appropriate AIR BAG RESTRAINT SYSTEMS article. DO NOT apply electrical power to any component on steering column without first deactivating air bag system. Air bag may deploy.

Instrument Panel Cluster (IPC) contains gauges for speedometer, fuel level, tachometer, coolant temperature, oil pressure and voltage. Warning indicator lights are used for: turn signals, high beam, fasten seat belt, air bag, brake system, check gauges, ABS, Malfunction Indicator Light (MIL), SECURITY, MPH, traction system, and 1-4 SHIFT. IPC can also perform ambient light sensor processing, chime functions, warning/status message display and Driver Information Center (DIC) functions. See **Fig. 1** .

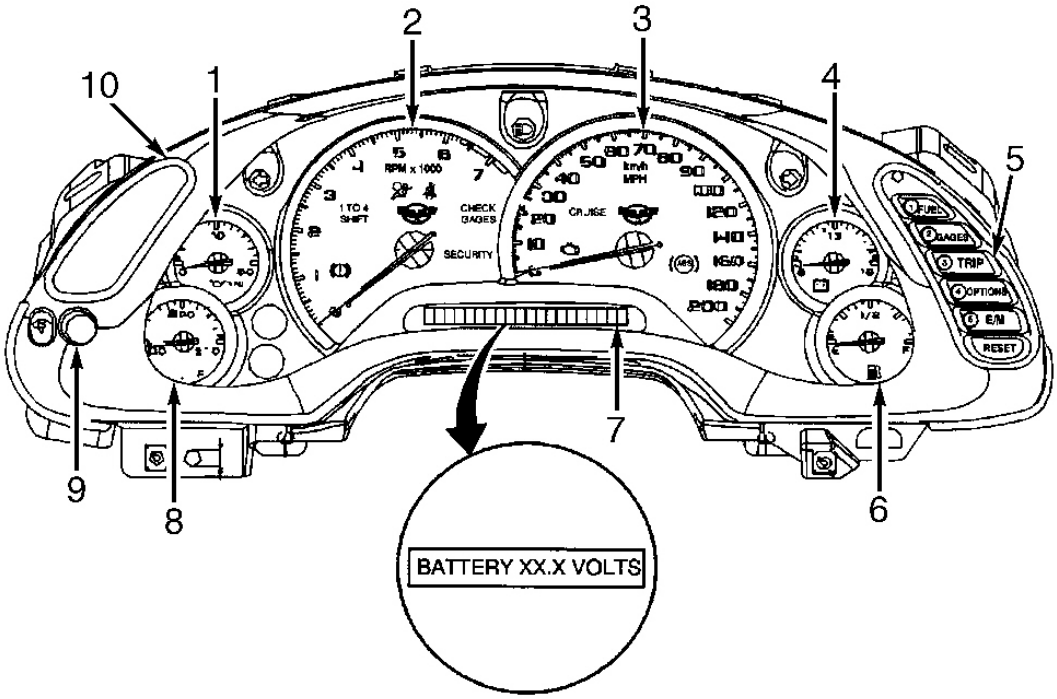

1. Oil Pressure Gauge
2. Tachometer
3. Speedometer
4. Battery Voltage Gauge
5. Driver's Information Center (DIC) Buttons
6. Fuel Gauge
7. Driver's Information Center (DIC)
8. Coolant Temperature Gauge
9. Dimmer Knob
10. Heads-Up Display (HUD) Controls

G99J03932

Fig. 1: Identifying Instrument Cluster
Courtesy of GENERAL MOTORS CORP.

OPERATION

HEAD-UP DISPLAY

The instrument cluster Head-Up Display (HUD) system projects selected driver information on the windshield and is viewed from the driver's seat. HUD system has an electric tilt adjust that is controlled by HUD up/down switch. See **Fig. 2** . Moving this switch moves the HUD image up or down on the windshield. HUD has ability to sense outside light conditions, via a photo-cell, and automatically adjusts brightness levels. HUD image brightness can be manually adjusted by moving HUD dim switch. An ambient light sensor allows HUD image display to adapt to

brightness levels of environment. During the start up of the vehicle all segments of the head-up display illuminate for 3 seconds.

Information may be displayed in English or Metric units by pressing the E/M button. See **Fig. 3** . There are 4 major components to the HUD system. The HUD display unit, Instrument Panel Cluster (IPC), HUD control switch and windshield (labeled SHADED HUD on lower right side). There are 5 different HUD display modes. Press and hold the PAGE button on the LH switch assembly to select any of the following display modes.

- Speed Only
- Speed And Gauge
- Speed, Tach And Gauge
- Speed And Tach
- Tachometer Only

HUD displays the following images:

- Speedometer (English or metric units).
- Turn signal indicators.
- High beam indicator.
- 1-4 shift indicator.
- Check gauges indicator.
- Oil pressure gauge, coolant temp gauge, or fuel gauge. Press PAGE button to change between these gauges.

IPC monitors different inputs and vehicle messages and sends information to the HUD. When HUD receives low oil pressure, high coolant temperature or low fuel information, the CHECK GAGES indicator illuminates.

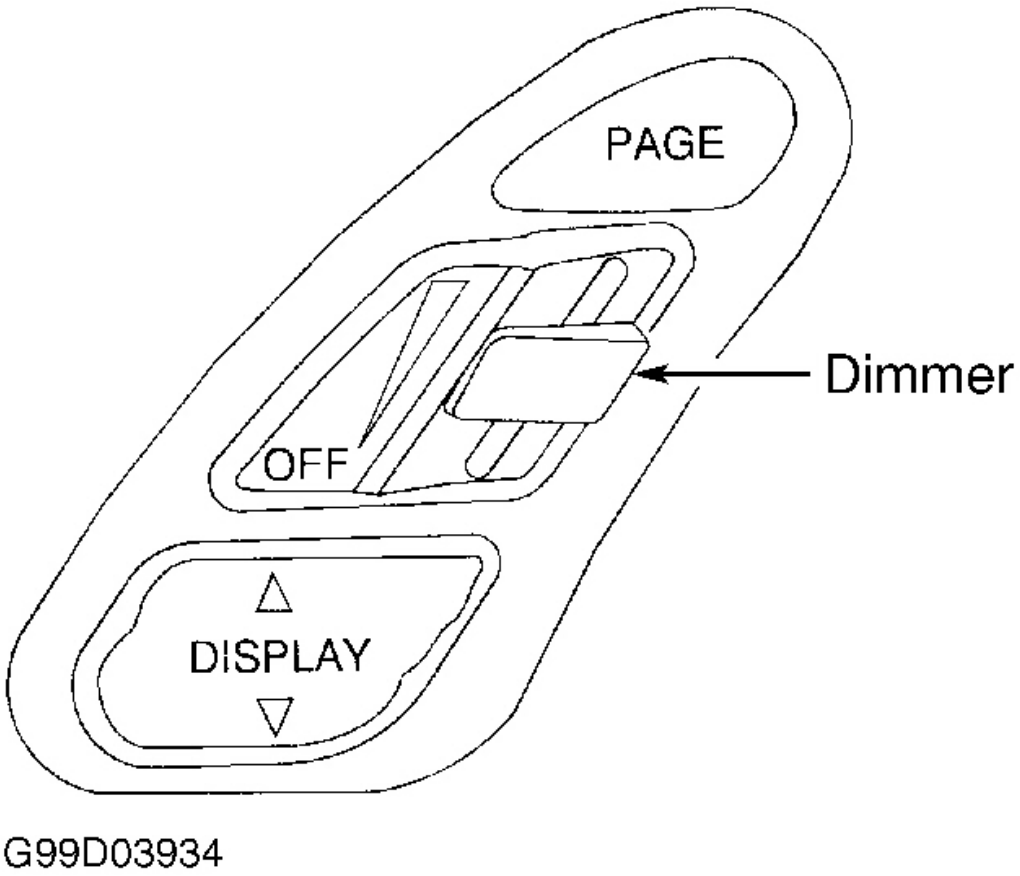

Fig. 2: Identifying Head-Up Display (HUD) Controls
Courtesy of GENERAL MOTORS CORP.

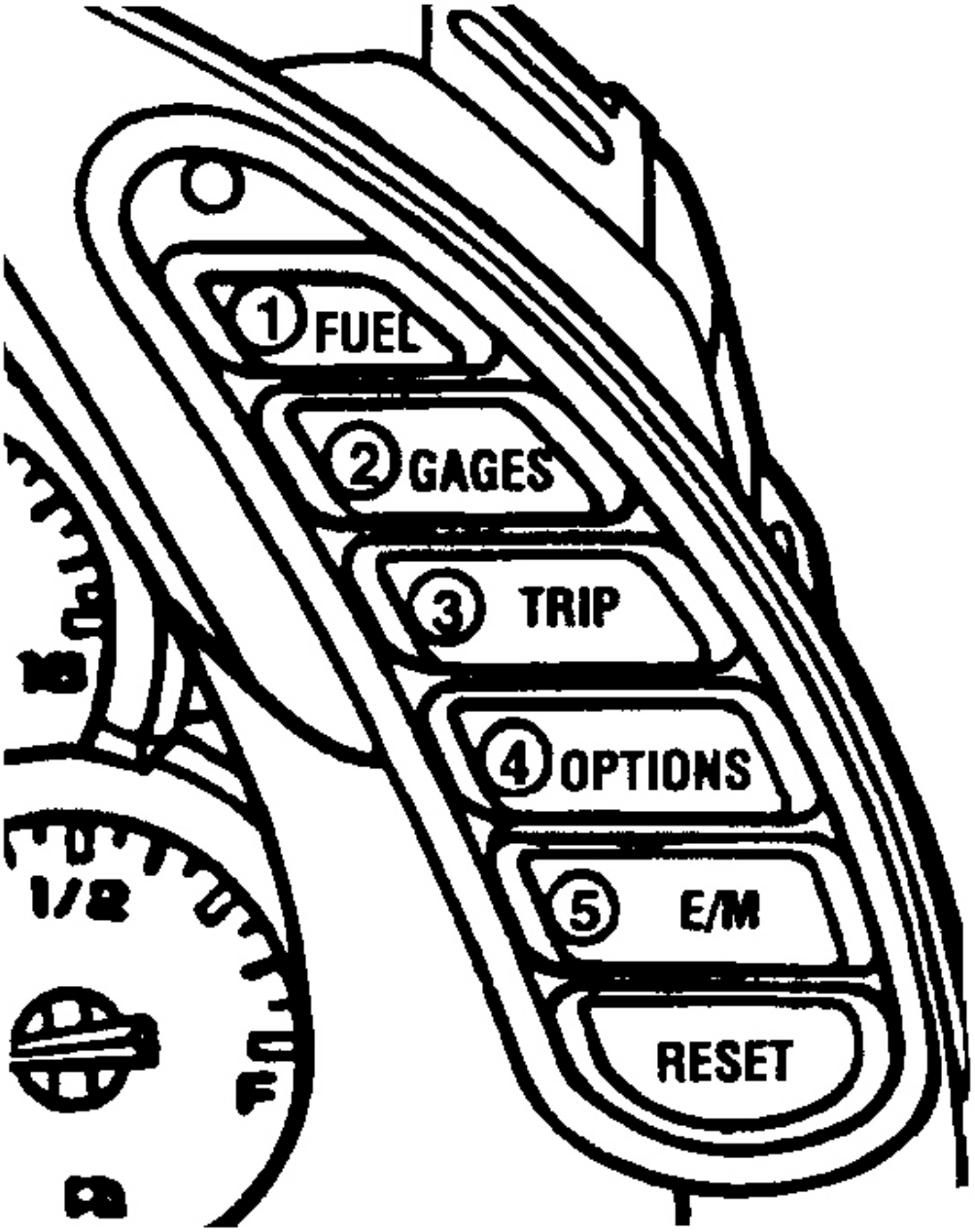

DIC CONTROL PANEL

G98J12228

Fig. 3: Identifying Driver's Information Center (DIC) Buttons
Courtesy of GENERAL MOTORS CORP.

INSTRUMENT PANEL CLUSTER

Some vehicle systems share data over a serial data line to execute various vehicle functions. Communication between each system is accomplished by sending digitally coded messages, which consist of specific information the system module must follow. Each system module is assigned its own recognition code, so that it can respond to appropriate messages.

Signals that activate the IPC are known as "wake-up" signals. IPC is asleep when it is not controlling or monitoring the following wake-up functions: any activity on serial data line, headlight switch on, courtesy lights on, power mode message received from Body Control Module (BCM), battery disconnection and reconnection, or ignition is turned on. The IPC will enter a sleep state (to reduce parasitic load) when all of the following conditions exist: no activity on serial data line for about 10 seconds, ignition is turned off, headlights are off, courtesy lights are off, power mode message was not received from BCM and SECURITY indicator is not on.

GAUGES

The IPC controls gauge functions with signals received on the serial data line or by a dedicated circuit from another system. The gauges may be toggled between English and Metric units by pressing the E/M button. Each gauge contains damping fluid to ensure smooth and steady operation of the needle.

The IPC receives a 4000 pulse-per mile Vehicle Speed Sensor (VSS) input over a dedicated circuit from the PCM. Engine RPM input information sent from PCM on a dedicated circuit to the IPC. The IPC also receives engine RPM data on the serial data line. The PCM is responsible for processing and sending VSS and engine RPM data to the IPC.

IPC receives fuel level, oil pressure and coolant temperature data from the PCM on the serial data line. The IPC receives vehicle voltage data through ignition 1 circuit which is directly connected to the IPC.

DRIVER INFORMATION CENTER

Display Functions

Driver's Information Center (DIC) has the ability to communicate to driver, current status of monitored systems. Driver can manually select desired systems to monitor by using the switches located to right of instrument cluster. See **DRIVER INFORMATION CENTER (DIC) SWITCHES** . DIC will automatically display warning messages if a monitored system is

malfunctioning. Warning messages will have priority over manually monitored system displays. See **DRIVER INFORMATION CENTER (DIC) WARNING MESSAGES** under OPERATION. Vehicle is equipped with an on-board diagnostic display feature capable displaying DTCs. By selecting specific buttons on IPC, DTCs are displayed on the DIC. This feature allow DTCs to be read or cleared without the use of a scan tool. See **ON-BOARD DIAGNOSTIC CAPABILITIES** .

Driver Information Center (DIC) Switches

Driver Information Center (DIC) buttons allow driver to change display functions and customize electrical features. DIC also contains the ambient light sensor, which provides IPC and other systems with information needed for interior light dimming functions. See **Fig. 3** .

- **FUEL (Switch 1)**

  Allows fuel information to be displayed in average fuel economy mode (determined over last 20 gallons), instantaneous fuel economy mode (updated every one second), or fuel range mode (estimated distance vehicle can travel under current fuel economy and fuel level conditions).

- **GAUGES (Switch 2)**

  Allows information to be displayed on oil pressure, oil temperature, coolant temperature, transmission fluid temperature (A/T models), battery voltage, and front and rear tire pressure.

- **TRIP (Switch 3)**

  Allows information to be displayed for odometer, TRIP A odometer, TRIP B odometer, elapsed time feature, average speed (since last ignition cycle or system was manually reset), or oil life remaining.

- **OPTIONS (Switch 4)**

  Allows the following vehicle options to be customized: lock and arm, alarm, passive unlock, approach lights, auto lock and unlock, easy entry, language, and a blank page (for FOB or tire training access). For programming of tire pressure monitoring system, see **PROGRAMMING** . For programming of Remote Keyless Entry (RKE) transmitters or personalizing alarm functions under the OPTION menu of DIC, see PROGRAMMING in REMOTE KEYLESS ENTRY SYSTEMS - CORVETTE article.

- **E/M (Switch 5)**

  Allows IPC to change unit of measurement (from English to Metric).

- **RESET**

  Allows driver to perform the following functions: acknowledge IPC messages, reset trip odometer functions, start/stop elapsed time, reset average speed, reset oil life system, reset fuel economy functions, or customize vehicle electrical functions.

On-Board Diagnostic Capabilities

When diagnostic mode is first entered, Driver Information Center (DIC) will enter an automatic display sequence of all systems that communicate on serial data line. After each system is displayed, DIC will display the number of DTCs (current or history) set in that system. At any time during this automatic display sequence, the manual diagnostic mode may be selected.

In manual diagnostic mode, a specific module can be manually selected for diagnosis by pressing specific buttons on DIC. Only DTCs for that particular module will be displayed until another system is requested. See **USING ON-BOARD DIAGNOSTICS** under SELF-DIAGNOSTIC SYSTEM for additional information.

DRIVER INFORMATION CENTER WARNING MESSAGES

DIC will automatically display warning messages if a monitored system is malfunctioning. See **WARNING/STATUS MESSAGE DISPLAY MESSAGES** table. Warning messages will be displayed in all modes except configuration and diagnostic modes. Warning messages will overwrite any other messages that may be displayed. Message will be displayed until system sends a stop broadcasting signal to IPC over serial data line, or it is acknowledged/cleared by pressing RESET button (unless system requests a continuous message display). Warning messages will have priority over manually monitored system displays.

WARNING/STATUS MESSAGE DISPLAY MESSAGES

Warning/Status Message	Monitored System
ABS ACTIVE	ABS
ACTIVE HANDLING	ABS
ACT HNDLG-WARMING UP	ABS
BRAKE BEFORE SHIFT	IPC
CHANGE OIL NOW	PCM
CHANGE OIL SOON	PCM

CHARGE SYSTEM FAULT	PCM
COMPETITIVE DRIVING	ABS
COOLANT OVER TEMP	PCM
CRUISE DISENGAGED	PCM
CRUISE SET XX KM/H (XX MPH)	PCM
DOOR AJAR	BCM
ENGINE PROTECTION REDUCE ENGINE RPM	PCM
FLAT TIRE - XX - MAX SPD 55, REDUCED HNDLG (1)	RFA/TPM
HATCH AJAR	BCM
HIGH OIL TEMPERATURE, REDUCE ENGINE RPM	IPC
HIGH TIRE PRESSURE - XX (1)	RFA/TPM
HIGH TRANS TEMP	PCM
HIGH VOLTAGE	IPC
LOW BRAKE FLUID	IPC
LOW FUEL	PCM
LOW OIL LEVEL	PCM
LOW OIL PRESSURE	PCM
LOW TIRE PRESSURE - XX (1)	RFA/TPM
LOW VOLTAGE	IPC
LOW WASHER FLUID	IPC
MAXIMUM SPEED 129 KM/H (80 MPH)	PCM
OVER SPEED WARNING	PCM & IPC
PULL KEY-WAIT 10 SEC	BCM
REDUCE ENGINE POWER	PCM
RESERVE FUEL	PCM
SERVICE ABS	ABS
SERVICE ACTIVE HNDLG	ABS
SERVICE COLUMN LOCK	BCM
SERVICE RIDE CONTROL	RTD
SERVICE TIRE MONITOR	RFA/TPM
SERVICE TRACTION SYSTEM	ABS
SERVICE VEHICLE SOON	PCM, BCM, ABS, RFA & RTD

SHOCKS INOPERATIVE	RTD
TONNEAU AJAR	BCM
TRACTION SYSTEM ACTIVE	ABS
TRAC/ACT HNDLG - ON/OFF	ABS
TRUNK AJAR	BCM
UPSHIFT NOW!	PCM
WARM UP COMPLETE	ABS
(1) Message will indicate appropriate tire.	

TIRE PRESSURE MONITORING SYSTEM

Tire Pressure Monitor (TPM) system allows driver to display all 4 tire pressures on Driver Information Center (DIC) while vehicle is being driven. TPM system uses Remote Control Door Lock Receiver (RCDLR), Body Control Module (BCM), Powertrain Control Module (PCM), 4 radio frequency transmitting pressure sensors inside each wheel/tire assembly, and a class 2 serial data circuit to perform the system functions. When vehicle is stationary for more than 20 minutes, sensors go into power down mode. In this mode, sensors transmit tire pressure data once every 60 minutes, this minimizes sensor battery consumption. These batteries are not serviceable and require sensor replacement if low. As vehicle speed increases to 20 MPH, the sensor's internal roll switches turn the sensors on and they begin to transmit a unique identification code and a radio frequency signal. RCDLR receives and translates this data in to tire location and tire pressure.

If TPM system detects a tire pressure more than 42 psi (289 kPa), HIGH TIRE PRESSURE warning message is displayed. If system senses a tire pressure 5-25 psi (34-172 kPa), LOW TIRE PRESSURE warning message is displayed. If system senses less than 5 psi (34 kPa), FLAT TIRE warning message is displayed. After this message 2 chimes will sound followed by MAX SPEED 55 MPH message. Next message to appear is REDUCED HANDLING.

TPM system can also compensate for high and low altitudes using PCM's barometric pressure sensor via a class 2 serial data circuit. RCDLR has ability to detect malfunctions within TPM system. Any malfunctions detected will cause DIC to display SERVICE TIRE MONITOR warning message. For more information on the RCDLR or Remote Function Actuation (RFA) system, go to REMOTE KEYLESS ENTRY SYSTEM - CORVETTE article.

To program TPM system, go to **TIRE PRESSURE MONITOR SENSOR PROGRAMMING** under PROGRAMMING. For TPM system diagnosis and repair, go to TIRE PRESSURE MONITORING DIAGNOSTIC SYSTEM CHECK under SELF-DIAGNOSTIC SYSTEM in BODY CONTROL MODULES - CORVETTE article.

COMPONENT LOCATIONS

COMPONENT LOCATIONS

Component	Location
Brake Fluid Level Indicator Switch	On Left Side Of Brake Fluid Reservoir
Data Link Connector (DLC)	Behind Left Side Of Instrument Panel, Below Steering Column
Drivers/Passenger's Door Control Module (D/PDCM)	Behind Bottom Center Of Corresponding Door Trim Panel
Engine Coolant Level Indicator Switch	In Right Rear Corner Of Engine Compartment, In Bottom Of Coolant Reservoir
Parking Brake Switch	In Center Console, Under Parking Brake
Underhood Fuse Block	Right Rear Corner Of Engine Compartment, Between Battery & Coolant Reservoir
Windshield Washer Solvent Level Switch	Rear Of Washer Fluid Reservoir

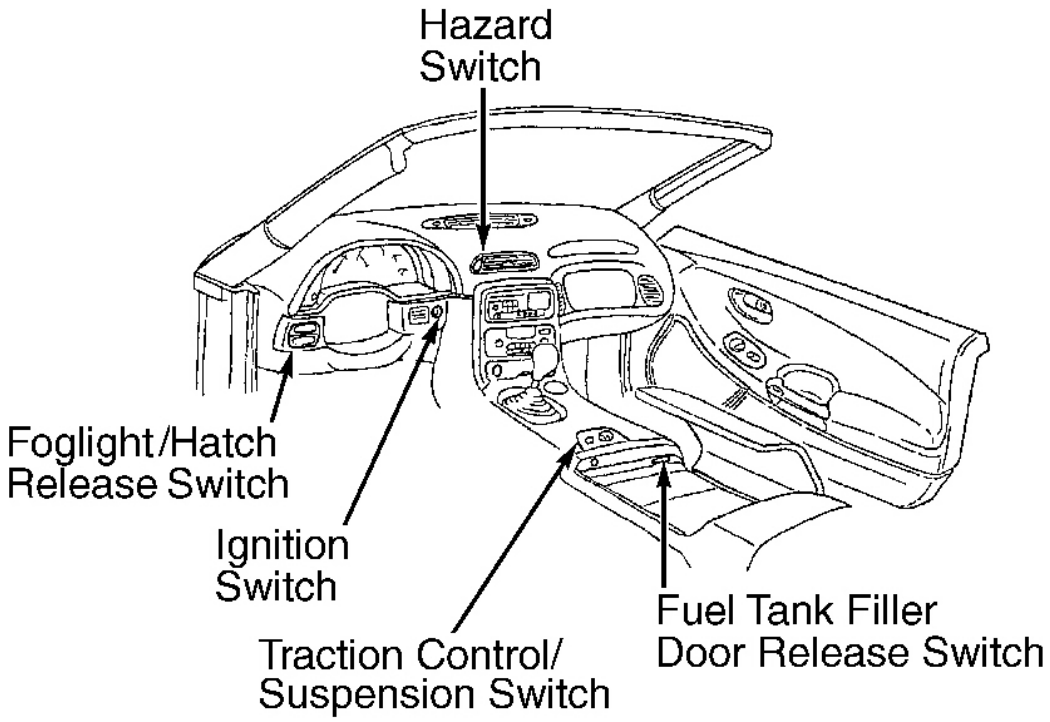

G00011674

Fig. 4: Locating Instrument Panel Components
Courtesy of GENERAL MOTORS CORP.

PROGRAMMING

NOTE: For programming of Remote Keyless Entry (RKE) transmitters or personalizing alarm functions under the OPTION menu of Driver's Information Center (DIC), see PROGRAMMING in REMOTE KEYLESS ENTRY SYSTEMS - CORVETTE article.

OIL LIFE INDEX RESET

Turn ignition on. Press TRIP button on Driver's Information Center (DIC) until OIL LIFE REMAINING message appears. Press and hold RESET button on DIC for at least 2 seconds. Oil life remaining will reset to 100 percent. Turn ignition off.

POWERTRAIN CONTROL MODULE

NOTE: DO NOT program Powertrain Control Module (PCM) unless directed by a service procedure or technical service bulletin. Programming PCM at any other time may not permanently correct fault condition.

Programming Precautions

Ensure the following conditions are met before attempting to program Powertrain Control Module (PCM).

- Battery is fully charged. Battery charger is NOT connected.
- Charging system concerns are not present. Repair as necessary.
- All vehicle accessories are off.
- No components are connected that can put excessive load on electrical system.

Incorrect system voltage or voltage fluctuations from a battery charger can cause programming failure or can cause control module damage. Ensure ignition switch is in proper position specified. Scan tool will prompt to turn ignition on with engine off. During programming procedure, DO NOT change position of ignition switch unless instructed. When programming, DO NOT disturb scan tool connection. If an interruption occurs during programming, programming failure or PCM damage may occur.

Programming

After replacing Powertrain Control Module (PCM) or if program needs to be updated, refer to latest Techline information on PCM reprogramming. After reprogramming, perform **OIL LIFE INDEX RESET** . Also perform INSPECTION/MAINTENANCE COMPLETE SYSTEM SET PROCEDURE under INSPECTION/MAINTENANCE PROCEDURES in SELF-DIAGNOSTICS - CORVETTE article. Also perform CRANKSHAFT POSITION SENSOR VARIATION LEARN PROCEDURE, IDLE LEARN PROCEDURE and THEFT DETERRENT SYSTEM under PROGRAMMING in SELF-DIAGNOSTICS - CORVETTE article.

TIRE PRESSURE MONITOR SENSOR PROGRAMMING

Programming Sensors

NOTE: Make sure the vehicle has been stationary for at least 2 minutes before attempting to program the TPM sensors.

1. Turn ignition on. Press Driver Information Center (DIC) RESET button to clear any Instrument Panel Cluster (IPC) warning messages. See **Fig. 3** . Press DIC OPTIONS button until IPC display is blank.
2. Press and hold DIC RESET button for 3 seconds. Press DIC OPTIONS button again until TIRE TRAINING message appears. Press DIC RESET button until IPC LEARN L FRONT TIRE message appears to begin programming sequence.

NOTE: TPM Sensor Programming Tool (J 41760) is a large magnet.

3. Install TPM Sensor Programming Tool (J 41760) over left front wheel valve stem. See **Fig. 5** . Vehicle horn will sound, indicating TPM sensor is programmed. Proceed to next TPM sensor as directed by IPC messages. Sensor programming sequence is left front tire, right front tire, right rear tire then left rear tire.

NOTE: If a horn chirp does not sound after 15 seconds, remove then reinstall TPM sensor programming tool. This procedure may have to be attempted up to 3 times. If Remote Control Door Lock Receiver (RCDLR) still does not receive sensor ID being programmed, go to TIRE PRESSURE MONITORING DIAGNOSTIC SYSTEM CHECK under SELF-DIAGNOSTIC SYSTEM in BODY CONTROL MODULES - CORVETTE article.

Programming Cancellation

Programming sequence will cancel if one of the following conditions occur:

- Program Mode Is Exited Through DIC
- Ignition Is Turned Off
- All 4 TPM Sensors Have Been Programmed
- TPM system Has Been In Program Mode For More Than 2 Minutes and No Sensors Have Been Programmed

If program mode is cancelled with less than 4 TPM sensors stored, remote control door lock receiver will only accept codes programmed up to that point.

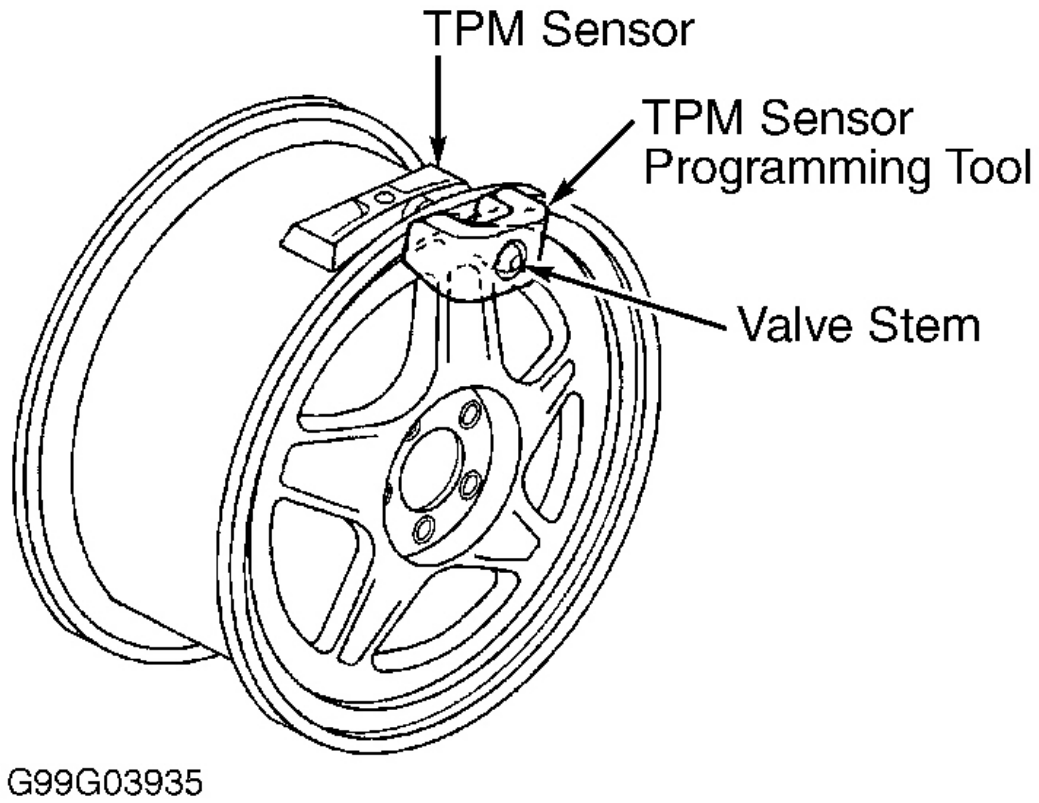

Fig. 5: Programming TPM Sensors
Courtesy of GENERAL MOTORS CORP.

SELF-DIAGNOSTIC SYSTEM

Instrument Panel Cluster (IPC) is equipped with a self-diagnostic system, which detects system Diagnostic Trouble Codes (DTC) or abnormalities. When a malfunction occurs, IPC will store a DTC. Malfunctions are recorded as history/intermittent failures or as current failures. Current DTCs indicate IPC has detected a fault which is currently present. A history DTC indicates that IPC has previously detected a malfunction that is not currently present as it is either an intermittent condition or the system is not being currently operated.

IPC is equipped with a 20-character vacuum fluorescent display feature identified as the Driver's Information Center (DIC) that can display specific warning/status messages. See **DRIVER INFORMATION CENTER (DIC) WARNING MESSAGES** under OPERATION. These warning messages will be displayed in order of priority. If ignition is cycled, IPC will display last message before ignition was cycled. Many messages may coincide with warning indicator lights or DTCs. DTCs should always be diagnosed first before any warning message.

To retrieve stored DTCs, perform **INSTRUMENT PANEL CLUSTER DIAGNOSTIC SYSTEM CHECK** . DIC can also be used to retrieve and clear DTCs. See **USING ON-BOARD DIAGNOSTICS** .

INSTRUMENT PANEL CLUSTER DIAGNOSTIC SYSTEM CHECK

CAUTION: Unless scan tool directions indicate otherwise, always exit all scan tool test before cycling ignition switch from OFF to ON position. Follow all scan tool manufacturer's instructions. If scan tool instructions are not followed, vehicle may set DTCs (may be false codes), vehicle systems may malfunction or scan tool may malfunction.

NOTE: Use this check as the starting point for any IPC complaint. IPC is a very reliable component, and is not likely the cause of malfunction. Most malfunctions are caused by faulty wiring, connectors or components.

Testing

1. Connect scan tool to DLC located under steering column. If scan tool powers up, go to next step. If scan tool does not power up, go to TEST A: SCAN TOOL DOES NOT POWER UP under SYSTEM TESTS in BODY CONTROL MODULES - CORVETTE article.
2. Turn ignition off. Connect scan tool. Turn ignition on. Attempt to establish communication with Body Control Module (BCM), Electronic Brake Control Module (EBCM), Inflatable Restraint Sensing and Diagnostic Module (SDM), Instrument Panel Cluster (IPC),

Powertrain Control Module (PCM) and Tire Pressure Module (TPM). If scan tool communicates with these modules, go to next step. If scan tool does not communicate with these modules, go to TEST B: SCAN TOOL DOES NOT COMMUNICATE WITH CLASS 2 DEVICE under SYSTEM TESTS in BODY CONTROL MODULES - CORVETTE article.

3. Select DISPLAY DTC function on scan tool for modules listed in previous step. If any DTCs are displayed, go to next step. If no DTCs are displayed, diagnose by symptom. See **SYMPTOM INDEX** table under SYSTEM TESTS.
4. If scan tool displays any DTCs that begin with "U", go to TEST B: SCAN TOOL DOES NOT COMMUNICATE WITH CLASS 2 DEVICE under SYSTEM TESTS in BODY CONTROL MODULES - CORVETTE article. If scan tool does not display any DTCs that begin with "U", go to next step.
5. If scan tool displays DTC B0605 or B1000, go to SELF-DIAGNOSTIC SYSTEM in BODY CONTROL MODULES - CORVETTE article. If scan tool does not display DTCB0605 or B1000, go to next step.
6. If scan tool displays DTC B0846, B0851,B2282, B2283, B2284, B2285, P0562, P0563, P1637, or P1638, go to SELF-DIAGNOSTIC SYSTEM in appropriate GENERATORS & REGULATORS article. If scan tool does not display DTC B0846, B0851,B2282, B2283, B2284, B2285, P0562, P0563, P1637, or P1638, go to **DIAGNOSTIC TROUBLE CODE DEFINITIONS** .

AUDIBLE WARNINGS DIAGNOSTIC SYSTEM CHECK

1. Connect scan tool to DLC located under steering column. If scan tool powers up, go to next step. If scan tool does not power up, go to TEST A: SCAN TOOL DOES NOT POWER UP under SYSTEM TESTS in BODY CONTROL MODULES - CORVETTE article.
2. Turn ignition off. Connect scan tool. Turn ignition on. Attempt to establish communication with Body Control Module (BCM) and Instrument Panel Cluster (IPC). If scan tool communicates with these modules, go to next step. If scan tool does not communicate with these modules, go to TEST B: SCAN TOOL DOES NOT COMMUNICATE WITH CLASS 2 DEVICE under SYSTEM TESTS in BODY CONTROL MODULES - CORVETTE article.
3. Select DISPLAY DTC function on scan tool for modules listed in previous step. If any DTCs are displayed, go to next step. If no DTCs are displayed, diagnose by symptom. See **SYMPTOM INDEX** table under SYSTEM TESTS.
4. If scan tool displays any DTCs that begin with "U", go to TEST B: SCAN TOOL DOES NOT COMMUNICATE WITH CLASS 2 DEVICE under SYSTEM TESTS in BODY CONTROL MODULES - CORVETTE article. If scan tool does not display any DTCs that begin with "U", go to next step.

5. If scan tool displays DTC B0605 or B1000, go to SELF-DIAGNOSTIC SYSTEM in BODY CONTROL MODULES - CORVETTE article. If scan tool does not display DTCB0605 or B1000, go to next step.
6. If scan tool displays DTC B0846, B0851, B2282, B2283, B2284, B2285, P0562, P0563, P1637, or P1638, go to SELF-DIAGNOSTIC SYSTEM in appropriate GENERATORS & REGULATORS article. If scan tool does not display DTC B0846, B0851, B2282, B2283, B2284, B2285, P0562, P0563, P1637, or P1638, go to **DIAGNOSTIC TROUBLE CODE DEFINITIONS** .

USING ON-BOARD DIAGNOSTICS

Retrieving Diagnostic Trouble Codes

Turn ignition on (engine off). Press RESET button to acknowledge any warning messages that may be present. Press OPTIONS button (switch 4) on Driver Information Center (DIC) and hold. See **Fig. 3** . While holding OPTIONS button, press FUEL button (switch 1) 4 times within 10 seconds. System will enter automatic display mode.

In automatic display mode, each system module will be displayed on IPC followed by DTCs that exist in that system. See **DIAGNOSTIC TROUBLE CODE DEFINITIONS** . If no DTCs exist, IPC will display NO CODES for that system. If DTCs exist, each DTC will be displayed for 3 seconds followed by a one second pause. If IPC cannot communicate with any system, IPC will display NO COMM for that system. At any time during automatic display mode, manual display feature can be activated by pressing any DIC button except E/M (switch 5). When all systems have been checked in automatic mode, IPC will display NO MORE CODES for 2 seconds, and will then enter manual mode.

When manual mode is entered, IPC will display MANUAL DIAGNOSTICS for 2 seconds or until any DIC button except E/M (switch 5) is pressed. IPC will then display first system and number of DTCs set in that system, and wait for further instructions. Using DIC buttons, move through system diagnostics as necessary. See **DIC BUTTON DIAGNOSTIC FUNCTIONS** table.

In both diagnostic modes, systems will be displayed in the following order.

- Powertrain Control Module (PCM)
- Traction Control System (TCS)
- Real Time Damping (RTD)
- Body Control Module (BCM)
- Sensing and Diagnostic Module (SDM)

- Instrument Panel Cluster (IPC)
- Radio
- Heater, Ventilation And Air Conditioning (HVAC)
- Left Door Control Module (LDCM)
- Right Door Control Module (RDCM)
- Seat Control Module (SCM)
- Remote Function Actuation (RFA)

If a DTC exists in any system, display will indicate whether DTC is current (with a "C") or history (with an "H"). When E/M button (switch 5) on DIC is pressed at any time, IPC will exit diagnostics mode. On-board diagnostics will also be exited automatically if no DIC buttons are pressed for longer than 60 seconds.

When E/M button (switch 5) on DIC is pressed at any time, IPC will exit diagnostics mode. On-board diagnostics will automatically exit if no DIC buttons are pressed for longer than 60 seconds.

DIC BUTTON DIAGNOSTIC FUNCTIONS

DIC Button	Function
FUEL (Switch 1)	Previous DTC
GAGES (Switch 2)	Next DTC
TRIP (Switch 3)	Previous System
OPTIONS (Switch 4)	Next System
E/M (Switch 5)	Exit Diagnostics
RESET	Clear DTCs

Clearing Diagnostic Trouble Codes

Use manual control functions to select and view DTC. See **RETRIEVING DIAGNOSTIC TROUBLE CODES** . Depress the RESET button on DIC for 2 seconds to clear the selected DTC from the selected module. See **DIC BUTTON DIAGNOSTIC FUNCTIONS** table. See **Fig. 3** .

SCAN TOOL

The scan tool has several features that can be used to help locate an intermittent condition. When scan tool is used for system tests, it will display values actually seen or commanded by various systems (i.e., BCM, PCM). This will usually include the following types of information:

- **Analog Data Input**

  Displays analog input seen by system.

- **Inputs/Outputs**

  Displays digital values as seen by system, and provides indication of whether input or output has cycled.

- **Special Functions (Output Controls)**

  Allows for outputs of system to be set at a desired value (ON or OFF). This will only indicate if IPC is sending the appropriate commands, not what action was actually taken.

- **Clear Codes**

  Will erase DTCs for system currently selected (if problem still exists in system, DTC may immediately reset).

Scan Tool Output Controls

Scan tool can be used to test individual gauges and indicators on the instrument panel cluster under scan tool outputs. Turn ignition on, engine off, doors and hatch closed and ensure parking brake is unapplied while performing procedure. Fuel pump can also be tested using this function under engine output controls.

- **Chime Test -** Chime will sound at slow, medium and fast speed depending on priority.

- **Coolant Gauge Sweep Test**

  IPC will move gauge needle at or more than 260°F (125°C) when UP is selected. IPC will move gauge needle at or less than 100°F (38°C) when DOWN is selected.

- **Fuel Gauge Sweep Test**

  IPC will move gauge needle at or more than full when UP is selected. IPC will move gauge needle at or less than empty when DOWN is selected.

- **Lamp Test**

  IPC will illuminate the following indicators when ON is selected. IPC will turn the

following indicators off when OFF is selected.

- ABS
- Air Bag
- BRAKE
- CHECK GAUGES
- MPH or Km/h
- SECURITY
- Traction

- **Oil Gauge Sweep Test**

  IPC will move gauge needle at or more than 80 psi. (552 kPa) when UP is selected. IPC will move gauge needle at or less than zero psi (0 kPa) when DOWN is selected.

- **Speed Gauge Sweep Test**

  IPC will move gauge needle at or more than 200 MPH when UP is selected. IPC will move gauge needle at or less than zero MPH when DOWN is selected.

- **Switch Dimming Test**

  IPC will illuminate the dimming circuit to its brightest point when ON is selected. IPC will turn off the dimming when OFF is selected.

- **Tach Gauge Sweep Test**

  IPC will move gauge needle at or more than 7000 RPM when UP is selected. IPC will move gauge needle at or less than zero RPM when DOWN is selected.

- **Volts Gauge Sweep Test**

  IPC will move gauge needle at or more than 18 volts when UP is selected. IPC will move gauge needle at or less than 8 volts when DOWN is selected.

- **Fuel Pump**

  PCM will turn fuel pump on when ON is selected. PCM will turn fuel pump off when OFF is selected.

DIAGNOSTIC TROUBLE CODE DEFINITIONS

DIAGNOSTIC TROUBLE CODE DEFINITIONS (1)

DTC	Description
B0516	Speedometer Signal Circuit Malfunction
B0521	Tachometer Signal Circuit Malfunction
B1512	DIC FUEL Switch Signal Short To Ground
B1517	DIC GAUGES Switch Signal Short To Ground
B1522	DIC TRIP Switch Signal Short To Ground
B1527	DIC OPTIONS Switch Signal Short To Ground
B1532	DIC E/M Switch Signal Short To Ground
B1537	DIC RESET Switch Signal Short To Ground
B1542	Oil Temperature Circuit Short To Ground
B1543	Oil Temperature Circuit Open
P0461	Left Fuel Level Sensor Circuit Performance
P0462	Left Fuel Level Sensor Circuit Low Voltage
P0463	Left Fuel Level Sensor Circuit High Voltage
P0522	Engine Oil Pressure Sensor Circuit Low Voltage
P0523	Engine Oil Pressure Sensor Circuit High Voltage
P0608	Vehicle Speed Output Circuit
P0654	Engine Speed Output Circuit
P1431	Right Fuel Level Sensor Circuit Performance
P1432	Right Fuel Level Sensor Circuit Low Voltage
P1433	Right Fuel Level Sensor Circuit High Voltage
U1000 & U1255 (2)	Class 2 Communication Malfunction
U1001-U1254 (2)	Loss Of Communication With XXX
U1300 (2)	Serial Data Line Short To Ground
U1301 (2)	Serial Data Line Short To Battery
UXXXX (2)	Scan Tool Does Not Communicate With Class 2 Device

(1) Codes listed in this table are only for testing in this article. For complete list of DTCs, see BODY CONTROL MODULES - CORVETTE article.

(2) See appropriate diagnosis and repair procedure under DIAGNOSTIC TESTS in BODY CONTROL MODULES - CORVETTE article.

DIAGNOSTIC TESTS

NOTE: For wiring and connector terminal identification, see WIRING DIAGRAMS .

NOTE: When testing procedure indicates to probe or check a terminal, use adapters from Connector Test Adapter Kit (J-35616-A). This will ensure terminal will not be damaged, and that connection is okay.

DTC B0516: SPEEDOMETER SIGNAL CIRCUIT MALFUNCTION

Description

Instrument Panel Cluster (IPC) receives vehicle speed information from Powertrain Control Module (PCM). IPC receives a 4000 pulse-per mile Vehicle Speed Sensor (VSS) input over a dedicated circuit from PCM. PCM is responsible for processing and sending VSS data to IPC. IPC monitors VSS output information sent from PCM for an out of range condition.

Code Enable Criteria

For DTC to run, engine must be running and vehicle driving at speed more than 25 MPH. DTC will set when IPC detects vehicle speed is over 200 MPH for one second. When DTC is set, IPC displays vehicle speed at 200 MPH.

Diagnostic Procedures

1. If IPC diagnostic system check was performed, go to next step. If IPC diagnostic system check was not performed, go to **INSTRUMENT PANEL CLUSTER DIAGNOSTIC SYSTEM CHECK** under SELF-DIAGNOSTIC SYSTEM. After performing IPC diagnostic system check, go to next step.
2. Turn ignition off. Raise and support drive wheels. Start engine and allow to idle. Place transmission in Drive (A/T) or 1st gear (M/T) and allow engine to continue to idle. If speedometer indicates a vehicle speed, go to **DIAGNOSTIC AIDS** .
3. Check for open, short to ground or short to voltage in Dark Green/White wire between splice S204 and IPC connector terminal A7. See **Fig. 6** . S204 located approximately 2" from 20-pin connector C150 located at right rear of engine compartment, below battery. Repair as necessary. After repairs, go to step 6 . If circuit is okay, go to next step.
4. Check for poor connections at IPC connector. Repair as necessary. After repairs, go to step 6 . If connections are okay, go to next step.
5. Replace IPC. See **INSTRUMENT PANEL CLUSTER** under REMOVAL &

INSTALLATION. After repairs, go to next step.

6. Using scan tool, clear DTCs. Operate vehicle within conditions for setting this DTC in FREEZE FRAME and/or FAILURE RECORDS. Recheck for DTC. If DTC does not reset, system is okay at this time. If DTC resets, go to step 2 .

Diagnostic Aids

PCM is unable to process correct vehicle speed data sent from VSS or intermittent or erratic VSS operation. If problem is intermittent, go to INTERMITTENTS in BODY CONTROL MODULES - CORVETTE article.

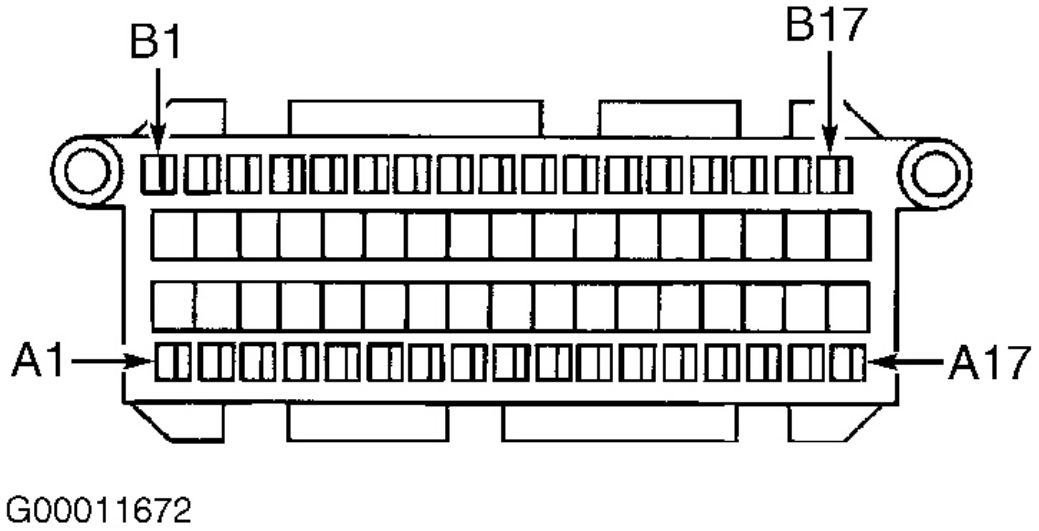

Fig. 6: Identifying Instrument Cluster Connector Terminals
Courtesy of GENERAL MOTORS CORP.

DTC B0521: TACHOMETER SIGNAL CIRCUIT MALFUNCTION

Description

Instrument Panel Cluster (IPC) receives engine RPM information from Powertrain Control Module (PCM) on a dedicated engine speed input to IPC. IPC also receives engine RPM data on serial data line. IPC monitors engine RPM output information sent from PCM for an out of range condition.

Code Enable Criteria

For DTC to run, engine must be running. DTC will set when IPC detects engine speed is at least 7400 RPM for one second. When DTC is set, IPC displays engine speed at 7400 RPM.

Diagnostic Procedures

1. If IPC diagnostic system check was performed, go to next step. If IPC diagnostic system check was not performed, go to **INSTRUMENT PANEL CLUSTER DIAGNOSTIC SYSTEM CHECK** under SELF-DIAGNOSTIC SYSTEM. After performing IPC diagnostic system check, go to next step.
2. Start engine and allow to idle. Monitor tachometer on IPC. If tachometer indicates correct engine speed in RPM, go to **DIAGNOSTIC AIDS** . If tachometer does not indicate correct engine speed in RPM, go to next step.
3. Check for open, short to ground or short to voltage in White wire between PCM connector C2 terminal No. 10 and IPC connector terminal A17. See **Fig. 6** , **Fig. 7** and **Fig. 8** . White wire passes through underhood fuse block at connector C1 terminal D4 and connector C2 terminal A3. See **Fig. 9** and **Fig. 10** . Repair as necessary. After repairs, go to step 6 . If circuit is okay, go to next step.
4. Check for poor connections at IPC connector. Repair as necessary. After repairs, go to step 6 . If connections are okay, go to next step.
5. Replace IPC. See **INSTRUMENT PANEL CLUSTER** under REMOVAL & INSTALLATION. After repairs, go to next step.
6. Using scan tool, clear DTCs. Operate vehicle within conditions for setting this DTC in FREEZE FRAME and/or FAILURE RECORDS. Recheck for DTC. If DTC does not reset, system is okay at this time. If DTC resets, go to step 2 .

Diagnostic Aids

PCM is unable to process correct engine speed data sent from PCM or intermittent or erratic RPM signal. If problem is intermittent, go to INTERMITTENTS in BODY CONTROL MODULES - CORVETTE article.

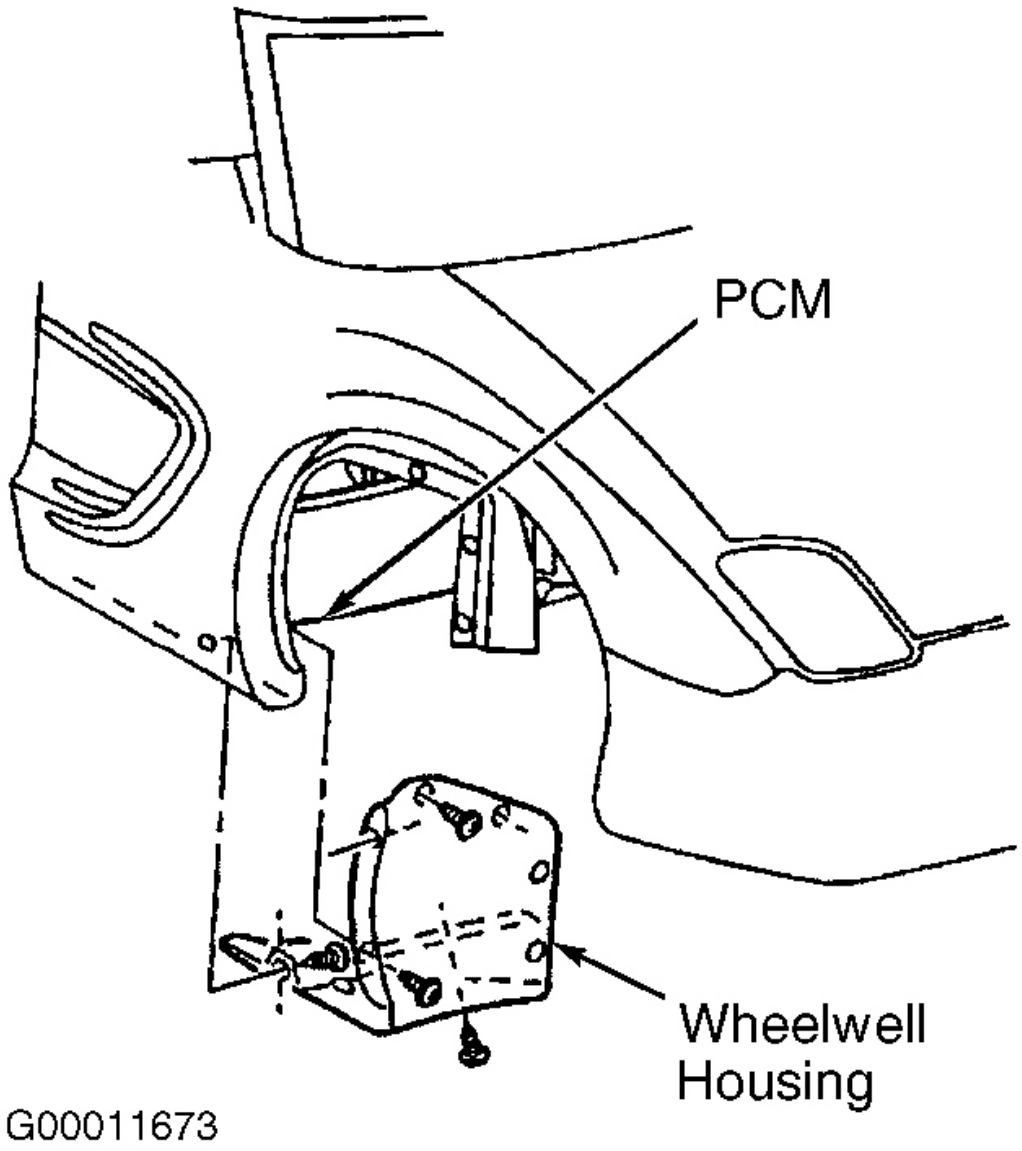

Fig. 7: Locating Powertrain Control Module
Courtesy of GENERAL MOTORS CORP.

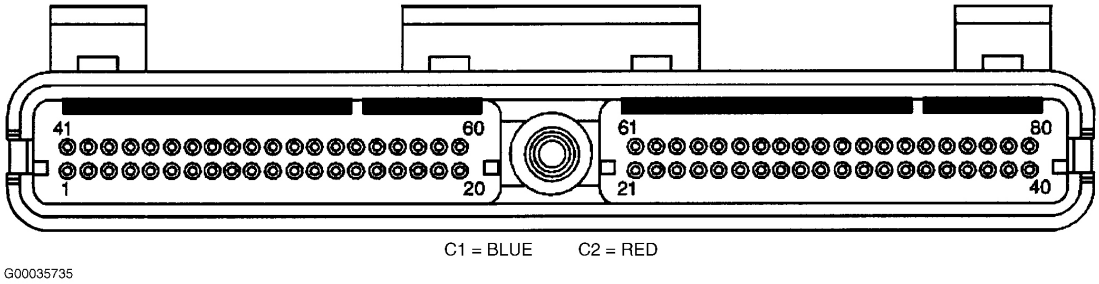

Fig. 8: Identifying Powertrain Control Module Connectors & Terminals
Courtesy of GENERAL MOTORS CORP.

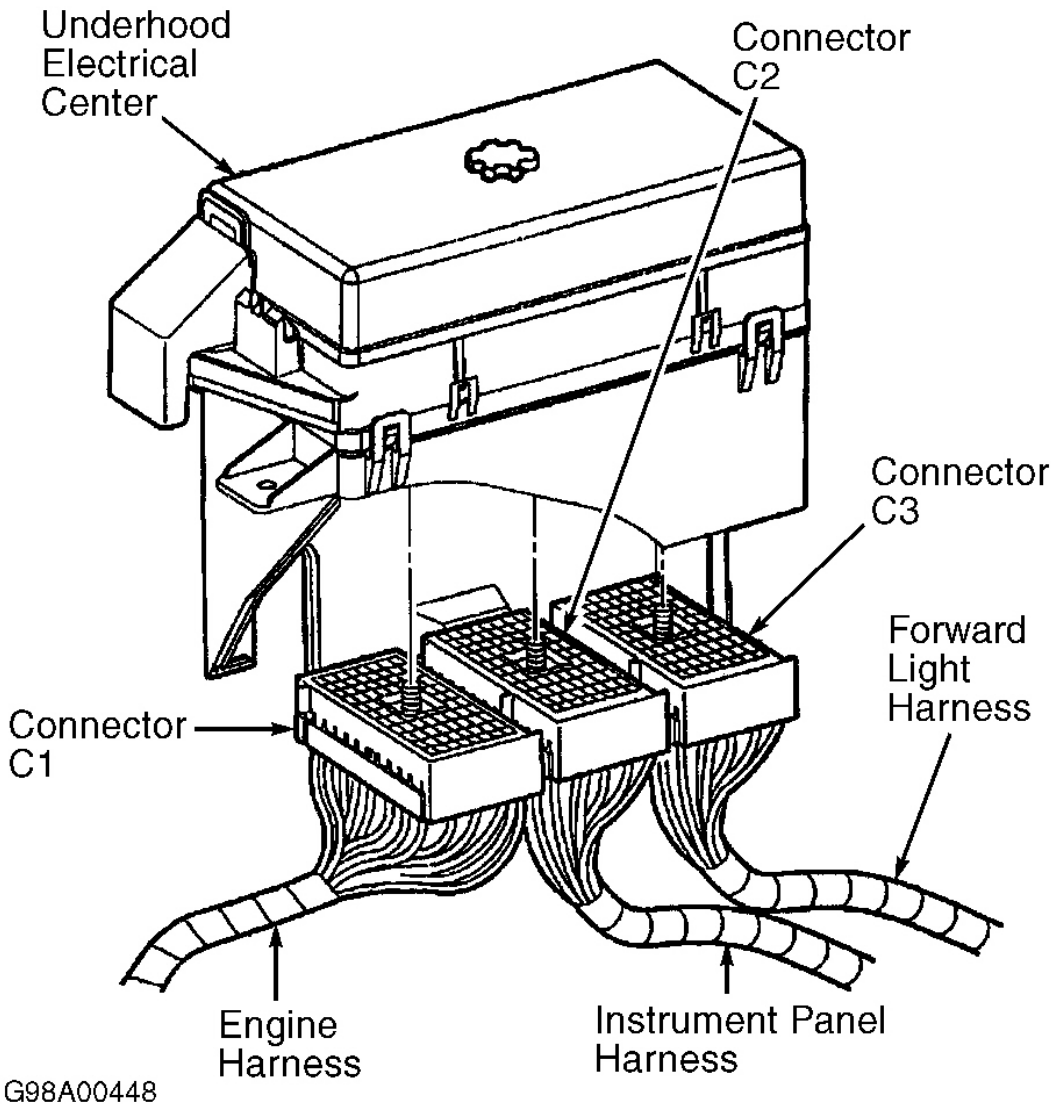

Fig. 9: Identifying Underhood Fuse Block Connectors
Courtesy of GENERAL MOTORS CORP.

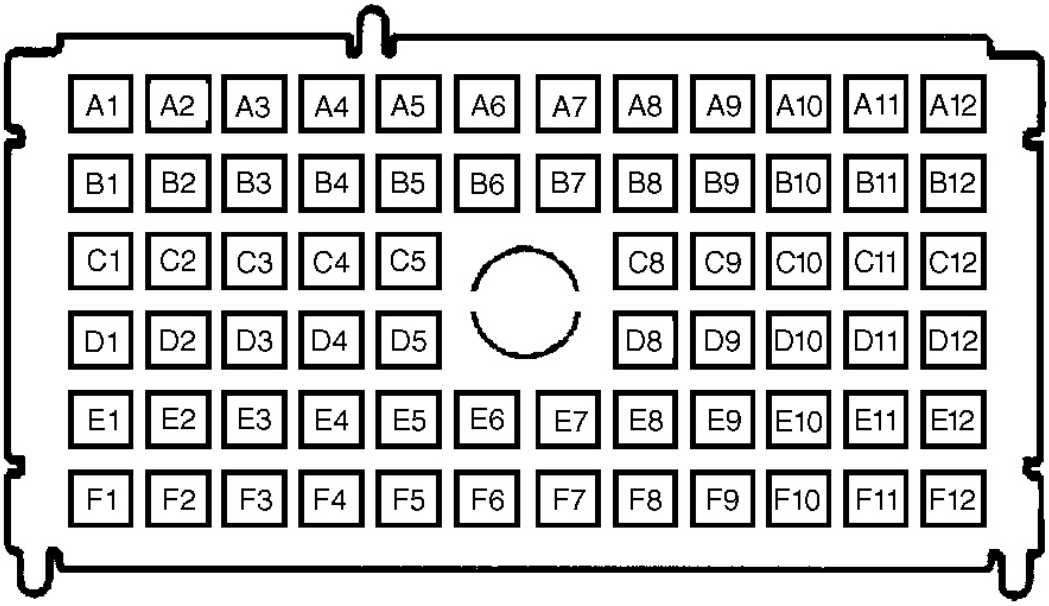

Fig. 10: Identifying Underhood Fuse Block Connector Terminals
Courtesy of GENERAL MOTORS CORP.

DTC B1512: DIC FUEL SWITCH SIGNAL SHORT TO GROUND, B1517: DIC GAUGES SWITCH SIGNAL SHORT TO GROUND, B1522: DIC TRIP SWITCH SIGNAL SHORT TO GROUND, B1527 B1527: DIC OPTIONS SWITCH SIGNAL SHORT TO GROUND, B1532: DIC E/M SWITCH SIGNA SIGNAL SHORT TO GROUND & B1537: DIC RESET SWITCH SIGNAL SHORT TO GROUND

Description

Driver Information Center (DIC) contains 6 switch circuits to allow Instrument Panel Cluster (IPC) functions to be performed. IPC detects DIC switch being pressed by monitoring voltage level on each DIC switch circuit.

Code Enable Criteria

For DTC to run, ignition must be on. DTC will set when IPC detects a low voltage level in DIC switch signal circuit for at least 60 seconds.

Diagnostic Procedures

1. If IPC diagnostic system check was performed, go to next step. If IPC diagnostic system

check was not performed, go to **INSTRUMENT PANEL CLUSTER DIAGNOSTIC SYSTEM CHECK** under SELF-DIAGNOSTIC SYSTEM. After performing IPC diagnostic system check, go to next step.

2. Using scan tool, select IPC data display. Monitor suspect DIC switch data. If scan tool displays suspect DIC switch data as INACTIVE, go to next step. If scan tool does not display suspect DIC switch data as INACTIVE, go to step 4 .
3. Observe scan tool suspect DIC switch data. Press suspect DIC switch. See **Fig. 3** . If status does not change from INACTIVE to ACTIVE, go to next step. If status changes from INACTIVE to ACTIVE, go to **DIAGNOSTIC AIDS** .
4. Turn ignition off. Disconnect DIC switch connector. See **DRIVER INFORMATION CENTER & HEAD-UP DISPLAY CONTROL SWITCHES** under REMOVAL & INSTALLATION. Turn ignition on. Monitor suspect DIC switch data. If scan tool does not display suspect DIC switch data as INACTIVE, go to next step. If scan tool displays suspect DIC switch data as INACTIVE, go to step 7 .
5. Check for short to ground in signal wire between DIC switch and IPC. See **WIRING DIAGRAMS** . Repair as necessary. After repairs, go to step 10 . If circuit is okay, go to next step.
6. Check for poor connections at IPC connector. Repair as necessary. After repairs, go to step 8 . If connections are okay, go to step 10 .
7. Check for poor connections at DIC switch connector. Repair as necessary. After repairs, go to step 9 . If connections are okay, go to step 10 .
8. Replace IPC. See **INSTRUMENT PANEL CLUSTER** under REMOVAL & INSTALLATION. After repairs, go to step 10 .
9. Replace DIC switch assembly. After repairs, go to next step.
10. Using scan tool, clear DTCs. Operate vehicle within conditions for setting this DTC in FREEZE FRAME and/or FAILURE RECORDS. Recheck for DTC. If DTC does not reset, system is okay at this time. If DTC resets, go to step 2 .

Diagnostic Aids

An intermittent short to ground in DIC switch signal circuit or an internal short to ground in DIC switch may cause DTC to set. If DIC switch is pressed for longer than 60 seconds, a DTC may set with no malfunctions present. Verify that this condition did not occur before diagnosing DTC. If problem is intermittent, go to INTERMITTENTS in BODY CONTROL MODULES - CORVETTE article.

DTC B1542: OIL TEMPERATURE CIRCUIT SHORT TO GROUND

Description

Instrument Panel Cluster (IPC) supplies a 5-volt reference signal to oil temperature sensor. When engine oil is cold, sensor resistance will decrease, and IPC reference voltage level will drop. IPC measures reference voltage change and displays calculated value on oil pressure gauge.

Code Enable Criteria

For DTC to run, engine must be running. DTC will set when IPC detects oil temperature is more than 374°F (190°C) for one second. When DTC is set, IPC displays oil temperature more than 374°F (190°C) and Driver's Information Center (DIC) displays HIGH OIL TEMPERATURE - REDUCE ENGINE RPM message.

Diagnostic Procedures

1. If IPC diagnostic system check was performed, go to next step. If IPC diagnostic system check was not performed, go to **INSTRUMENT PANEL CLUSTER DIAGNOSTIC SYSTEM CHECK** under SELF-DIAGNOSTIC SYSTEM. After performing IPC diagnostic system check, go to next step.
2. Using scan tool, select IPC data display and monitor oil temperature data. If oil temperature is not 14-374°F (-10 to 190°C), go to next step. If oil temperature is 14-374°F (-10 to 190° C), go to **DIAGNOSTIC AIDS** .
3. Turn ignition off. Disconnect oil temperature sensor connector. See **Fig. 11** . Turn ignition on. Monitor oil temperature data. If oil temperature is less than 14°F (-10°C), go to next step. If oil temperature is more than 14°F (-10°C), go to step 5 .
4. Turn ignition off. Connect a 3-amp fused jumper wire between oil temperature sensor connector terminals. Turn ignition on. Monitor oil temperature data. If oil temperature is less than 374°F (190°C), go to step 6 . If oil temperature is more than 374°F (190°C), go to step 7 .
5. Check for short to ground in Dark Green/White wire between IPC terminal A10 and oil temperature sensor connector terminal "B". See **Fig. 6** . Repair as necessary. After repairs, go to step 10 . If circuit is okay, go to step 7 .
6. Check for poor connections at oil temperature sensor. Repair as necessary. After repairs, go to step 10 . If connections are okay, go to step 8 .
7. Check for poor connections at IPC connector. Repair as necessary. After repairs, go to step 10 . If connections are okay, go to step 9 .
8. Replace oil temperature sensor. After repairs, go to step 10 .
9. Replace IPC. See **INSTRUMENT PANEL CLUSTER** under REMOVAL & INSTALLATION. After repairs, go to next step.
10. Using scan tool, clear DTCs. Operate vehicle within conditions for setting this DTC in FREEZE FRAME and/or FAILURE RECORDS. Recheck for DTC. If DTC does not reset,

system is okay at this time. If DTC resets, go to step 2 .

Diagnostic Aids

An intermittent short to ground in oil temperature sensor signal circuit or an internal short to ground in oil temperature sensor may cause this DTC to set. If problem is intermittent, go to INTERMITTENTS in BODY CONTROL MODULES - CORVETTE article.

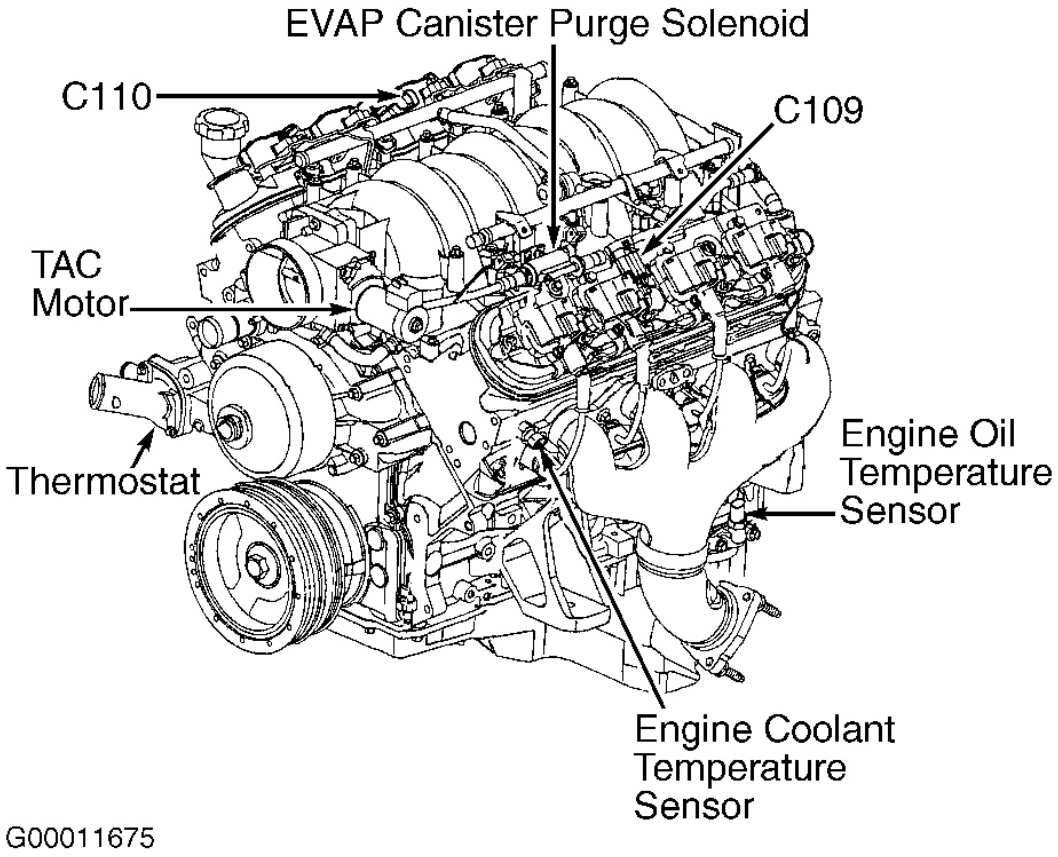

Fig. 11: Locating Engine Oil & Coolant Temperature Sensors
Courtesy of GENERAL MOTORS CORP.

DTC B1543: OIL TEMPERATURE CIRCUIT OPEN

Description

Instrument Panel Cluster (IPC) supplies a 5-volt reference signal to oil temperature sensor. When engine oil is cold, sensor resistance will decrease, and IPC reference voltage level will drop. IPC

measures reference voltage change and displays calculated value on oil pressure gauge.

Code Enable Criteria

For DTC to run, engine must be running. DTC will set when IPC detects oil temperature less than 14°F (-10°C) for more than 5 minutes. When DTC is set, IPC displays oil temperature as LOW.

Diagnostic Procedures

1. If IPC diagnostic system check was performed, go to next step. If IPC diagnostic system check was not performed, go to **INSTRUMENT PANEL CLUSTER DIAGNOSTIC SYSTEM CHECK** under SELF-DIAGNOSTIC SYSTEM. After performing IPC diagnostic system check, go to next step.
2. Using scan tool, select IPC data display and monitor oil temperature data. If oil temperature is not 14-374°F (-10 to 190°C), go to next step. If oil temperature is 14-374°F (-10 to 190° C), go to **DIAGNOSTIC AIDS** .
3. Turn ignition off. Disconnect oil temperature sensor connector. See **Fig. 11** . Connect a 3-amp fused jumper wire between oil temperature sensor connector terminals. Monitor oil temperature data. Turn ignition on. If oil temperature is more than 374°F (190°C), go to step 6 . If oil temperature is less than 374°F (190°C), go to next step.
4. Check for open in Dark Green/White wire between IPC terminal A10 and oil temperature sensor connector terminal "B". See **Fig. 6** . Repair as necessary. After repairs, go to step 10 . If circuit is okay, go to next step.
5. Check for open in Black wire between IPC terminal B8 and oil temperature sensor connector terminal "A". Repair as necessary. After repairs, go to step 10 . If circuit is okay, go to step 7 .
6. Check for poor connections at oil temperature sensor. Repair as necessary. After repairs, go to step 10 . If connections are okay, go to step 8 .
7. Check for poor connections at IPC connector terminals. Repair as necessary. After repairs, go to step 10 . If connections are okay, go to step 9 .
8. Replace oil temperature sensor. After repairs, go to step 10 .
9. Replace IPC. See **INSTRUMENT PANEL CLUSTER** under REMOVAL & INSTALLATION. After repairs, go to next step.
10. Using scan tool, clear DTCs. Operate vehicle within conditions for setting this DTC in FREEZE FRAME and/or FAILURE RECORDS. Recheck for DTC. If DTC does not reset, system is okay at this time. If DTC resets, go to step 2 .

Diagnostic Aids

An intermittent open in oil temperature sensor signal circuit or an internal open in oil temperature sensor may cause this DTC to set. If problem is intermittent, go to INTERMITTENTS in BODY CONTROL MODULES - CORVETTE article.

DTC P0461: LEFT FUEL LEVEL SENSOR CIRCUIT PERFORMANCE

Description

Fuel level sensor changes resistance based on fuel level. When fuel tank is full, sensor resistance is high. PCM monitors changes on signal circuit to determine fuel level. This information is sent to fuel gauge. PCM uses inputs from fuel level sensor to calculate total fuel remaining in fuel tanks. This information is then sent to IPC via class 2 serial data circuit.

Left tank fuel pump also supplies a small amount of pressurized fuel to right fuel tank siphon jet pump through auxiliary fuel feed rear pipe. The pressurized fuel creates a venturi action inside siphon jet pump that causes fuel to be drawn out of right fuel tank. Fuel is then transferred from right fuel tank to left fuel tank through auxiliary fuel return rear pipe. Fuel system is designed to maintain a greater level in left fuel tank when electric fuel pump is operating. Fuel level in both tanks equalize when electric fuel pump is not operating or fuel level is greater than 50 percent.

Code Enable Criteria

For DTC to run, engine must be running. DTC will set when one of the following occur:

- Primary fuel tank (left) is not full, more than 150 miles have been driven and PCM did not detect fuel level in left fuel tank change at least 1.1 gal. (4.0L).
- Primary fuel tank (left) is full, secondary fuel tank (right) is near empty and fuel level in both fuel tanks do not change after traveling more than 150 miles. If secondary fuel tank is empty, primary fuel level should decrease after 150 miles.

When DTC is set, fuel gauge defaults to empty, check gauges indicator illuminates and a message is displayed in the driver's information center.

Diagnostic Procedures

1. If IPC diagnostic system check was performed, go to next step. If IPC diagnostic system check was not performed, go to **INSTRUMENT PANEL CLUSTER DIAGNOSTIC SYSTEM CHECK** under SELF-DIAGNOSTIC SYSTEM. After performing IPC diagnostic system check, go to next step.
2. Turn ignition on. Raise and support vehicle. Disconnect left (driver's) fuel sensor connector. Connect a fused jumper wire between left fuel level sensor connector terminal "C" (Dark

Blue wire) and ground. Using scan tool, select PCM EVAP data list and monitor left fuel level sensor voltage. If voltage is zero volts, go to next step. If voltage is not zero volts, go to step 22 .

3. Remove fused jumper from ground and connect to left fuel level sensor connector terminal "B" (Gray wire). Monitor left fuel level sensor voltage. If voltage is zero volts, go to next step. If voltage is not zero volts, go to step 21 .
4. Check for additional DTCs. If DTC P1431 is also set, go to next step. If DTC P1431 is not set, go to step 13 .
5. Disconnect right (passenger's) fuel level sensor. Connect a fused jumper wire between right fuel level sensor connector terminal "C" (Light Blue wire) and ground. Using scan tool, select PCM EVAP data list and monitor right fuel level sensor voltage. If voltage is approximately zero volts, go to next step. If voltage is not approximately zero volts, go to step 23 .
6. Remove fused jumper from ground and connect to right fuel level sensor connector terminal "B" (Gray wire). Monitor right fuel level sensor voltage. If voltage is approximately zero volts, go to next step. If voltage is not approximately zero volts, go to step 24 .

NOTE: Scan tool will need to be commanded on several times to achieve required ON time for following steps.

7. Reconnect both fuel level sensor connectors. Disconnect auxiliary fuel feed rear pipe from right fuel tank sending unit. This hose comes from the left fuel tank sending unit. Place end of hose into an empty approved gasoline container. Command fuel pump on for 10 seconds. Measure amount of fuel in container after 10 seconds. If 0.633 pt. (300 ml) is measured, go to next step. If 0.633 pt. (300 ml) is not measured, go to step 20 .
8. Reconnect auxiliary fuel feed rear pipe to right fuel tank sending unit. While monitoring left fuel level sensor voltage on scan tool, drain left fuel tank until sensor voltage is 1.00-1.25 volts. Disconnect auxiliary fuel feed rear pipe from left fuel tank sending unit. Place end of hose into an empty approved gasoline container. Command fuel pump on for 10 seconds. Measure amount of fuel in container after 10 seconds. If 0.703 pt. (322.6 ml) is measured, go to next step. If 0.703 pt. (322.6 ml) is not measured, go to step 21 .
9. Reconnect auxiliary fuel feed rear pipe to left fuel tank sending unit. Verify with customer if vehicle was fueled to a full tank prior to requiring service. If vehicle was just filled, go to next step. If vehicle was not just filled, go to step 11 .
10. Ensure ignition is on. Using scan tool, monitor left and right fuel level sensor voltages. If both voltages are approximately 2.5 volts, go to **DIAGNOSTIC AIDS** . If both voltages are not approximately 2.5 volts, go to step 19 .
11. Lower vehicle. Turn ignition off. Add fuel until 1/2 tank is achieved. Start engine and allow

to idle for 10 minutes. Turn engine off and allow vehicle to sit for 2 hours. After 2 hours, monitor left and right fuel level sensor voltages. Start engine and allow to idle for 10 minutes. Monitor left and right fuel level sensor voltages again. If left fuel level sensor voltage increased, go to next step. If left fuel level sensor voltage did not increase, go to step 27 .

12. If right fuel level sensor voltage increased, go to **DIAGNOSTIC AIDS** . If right fuel level sensor voltage did not increase, go to step 29 .
13. Raise and support vehicle. Disconnect auxiliary fuel feed rear pipe from right fuel tank sending unit. This hose comes from the left fuel tank sending unit. Place end of hose into an empty approved gasoline container. Using scan tool, command fuel pump on for 10 seconds. See **SCAN TOOL** under SELF-DIAGNOSTIC SYSTEM. Measure amount of fuel in container after 10 seconds. If more than 0.633 pt. (300 ml) is measured, go to next step. If less than 0.633 pt. (300 ml) is measured, go to step 19 .
14. Reconnect auxiliary fuel feed rear pipe to right fuel tank sending unit. Monitor left fuel level sensor voltage on scan tool. If left fuel level sensor voltage is more than 1.25 volts, go to next step. If left fuel level sensor voltage is less than 1.25 volts, go to step 16 .
15. While monitoring left fuel level sensor voltage on scan tool, drain left fuel tank until sensor voltage is 1.00-1.25 volts. After draining tank, go to step 17 .
16. Disconnect auxiliary fuel feed rear pipe from left fuel tank sending unit. Place end of hose into an empty approved gasoline container. Command fuel pump on for 10 seconds. Measure amount of fuel in container after 10 seconds. If more than 0.703 pt. (322.6 ml) is measured, go to next step. If less than 0.703 pt. (322.6 ml) is measured, go to step 27 .
17. Turn ignition off. Remove left fuel tank sending unit. See **FUEL TANK SENDING UNITS** under REMOVAL & INSTALLATION. Check for stuck float arm or interference with pump body. Check for ice or other foreign particles. Repair as necessary. After repairs, go to step 29 . If fuel tank sending unit is okay, go to next step.
18. Replace faulty fuel tank sending unit. After repairs, go to step 29 .
19. Repair fuel lines between fuel tanks for restrictions, kinked line, faulty connection or improper routing. Repair as necessary. After repairs, go to step 29 .
20. Check fuel lines between fuel tanks for restrictions, kinked line, faulty connection or improper routing. Repair as necessary. After repairs, go to step 29 .
21. Check for open, short to ground or high resistance in Dark Blue wire between left fuel tank sending unit connector terminal "C" and PCM connector C2 terminal No. 54. See **Fig. 7** and **Fig. 8** . Repair as necessary. After repairs, go to step 29 . If circuit is okay, go to step 27 .
22. Check for open or high resistance in Gray wire between left fuel tank sending unit connector terminal "B" and PCM connector C1 terminal No. 23. See **Fig. 7** and **Fig. 8** .

Repair as necessary. After repairs, go to step 29 . If circuit is okay, go to step 27 .

23. Check for open, short to ground or high resistance in Light Blue wire between right fuel tank sending unit connector terminal "C" and PCM connector C2 terminal No. 73. See **Fig. 7** and **Fig. 8** . Repair as necessary. After repairs, go to step 29 . If circuit is okay, go to step 25 .
24. Repair open or high resistance in Gray wire between right fuel tank sending unit connector terminal "B" and PCM connector C1 terminal No. 23. See **Fig. 7** and **Fig. 8** . After repairs, go to step 29 .
25. Check for poor connections at PCM connectors. Repair as necessary. After repairs, go to step 29 .
26. Replace PCM. See **POWERTRAIN CONTROL MODULE** under REMOVAL & INSTALLATION. After repairs, go to step 29 .
27. Replace left fuel tank sending unit. See **FUEL TANK SENDING UNITS** under REMOVAL & INSTALLATION. After repairs, go to step 29 .
28. Replace right fuel tank sending unit. See **FUEL TANK SENDING UNITS** under REMOVAL & INSTALLATION. After repairs, go to next step.
29. Using scan tool, clear DTCs. Operate vehicle within conditions for setting this DTC in FREEZE FRAME and/or FAILURE RECORDS. Recheck for DTC. If DTC does not reset, system is okay at this time. If DTC resets, go to step 2 .

Diagnostic Aids

When checking for a deformed or warped fuel tank, measure resistance of suspect fuel level sensor at empty, with sensor in fuel tank, and again with sensor removed from fuel tank. Measured resistance values should be same at empty. If measured resistance values are not the same, replace fuel tank. Fuel sending unit may need to be removed to test resistance of the sensor. Resistance of sensor should change from 40 to 250 ohms as float arm is moved from empty to full positions.

PCM will not reset mileage for this diagnostic if fuel tanks are re-fueled to same level as before repair was made. Perform the following procedure to re-fuel vehicle after replacing a sending unit or fuel tank. Add 25 percent of fuel removed before repair. Start engine and idle for 5 minutes. Turn engine off. Add remainder of fuel.

If problem is intermittent, go to INTERMITTENTS in BODY CONTROL MODULES - CORVETTE article.

DTC P0462: LEFT FUEL LEVEL SENSOR CIRCUIT LOW VOLTAGE

Description

Fuel level sensor changes resistance based on fuel level. When fuel tank is full, sensor resistance is high. PCM monitors changes on signal circuit to determine fuel level. This information is sent to fuel gauge. PCM uses inputs from fuel level sensor to calculate total fuel remaining in fuel tanks. This information is then sent to IPC via class 2 serial data circuit.

Left tank fuel pump also supplies a small amount of pressurized fuel to right fuel tank siphon jet pump through auxiliary fuel feed rear pipe. The pressurized fuel creates a venturi action inside siphon jet pump that causes fuel to be drawn out of right fuel tank. Fuel is then transferred from right fuel tank to left fuel tank through auxiliary fuel return rear pipe. Fuel system is designed to maintain a greater level in left fuel tank when electric fuel pump is operating. Fuel level in both tanks equalize when electric fuel pump is not operating or fuel level is greater than 50 percent.

Code Enable Criteria

For DTC to run, ignition must be on. DTC will set when the following conditions are present for more than 2 minutes: fuel level sensor voltage for left fuel level sensor is less than 0.39 volts and fuel level signal is less than 3.5 percent. When DTC is set, DIC displays LOW FUEL message, fuel gauge defaults to empty and check gauges indicator illuminates.

Diagnostic Procedures

1. If IPC diagnostic system check was performed, go to next step. If IPC diagnostic system check was not performed, go to **INSTRUMENT PANEL CLUSTER DIAGNOSTIC SYSTEM CHECK** under SELF-DIAGNOSTIC SYSTEM. After performing IPC diagnostic system check, go to next step.
2. Turn ignition on. Using scan tool, select PCM ENHANCED EVAP data list and monitor FUEL TANK LEVEL REMAINING. If scan tool indicates fuel level is less than 4 percent, go to next step. If scan tool indicates fuel level is more than 4 percent, go to **DIAGNOSTIC AIDS** .
3. Turn ignition off. Disconnect left fuel tank sending unit connector. Turn ignition on. Using scan tool, monitor fuel level. If scan tool indicates fuel tank level remaining is more than 98 percent, go to step 5 . If scan tool indicates fuel tank level remaining is less than 98 percent, go to next step.
4. Check for short to ground in Dark Blue wire between left fuel tank sending unit connector terminal "C" and PCM connector C2 terminal No. 54. See **Fig. 7** and **Fig. 8** . Repair as necessary. After repairs, go to step 10 . If circuit is okay, go to step 7 .
5. Check for short to ground in Dark Blue wire between left fuel tank sending unit connector terminal "C" and left fuel tank sending unit. Repair as necessary. After repairs, go to step

10 . If circuit is okay, go to next step.

6. Check for poor connections at left fuel tank sending unit connector. Repair as necessary. After repairs, go to step 10 . If connections are okay, go to step 8 .
7. Check for poor connections at PCM. Repair as necessary. After repairs, go to step 10 . If connections are okay, go to step 9 .
8. Replace left fuel tank sending unit. See **FUEL TANK SENDING UNITS** under REMOVAL & INSTALLATION. After repairs, go to step 10 .
9. Replace PCM. See **POWERTRAIN CONTROL MODULE** under REMOVAL & INSTALLATION. After repairs, go to next step.
10. Using scan tool, clear DTCs. Operate vehicle within conditions for setting this DTC in FREEZE FRAME and/or FAILURE RECORDS. Recheck for DTC. If DTC does not reset, system is okay at this time. If DTC resets, go to step 2 .

Diagnostic Aids

When checking for a deformed or warped fuel tank, measure resistance of suspect fuel level sensor at empty, with sensor in fuel tank, and again with sensor removed from fuel tank. Measured resistance values should be same at empty. If measured resistance values are not the same, replace fuel tank.

If problem is intermittent, go to INTERMITTENTS in BODY CONTROL MODULES - CORVETTE article.

DTC P0463: LEFT FUEL LEVEL SENSOR CIRCUIT HIGH VOLTAGE

Description

Fuel level sensor changes resistance based on fuel level. When fuel tank is full, sensor resistance is high. PCM monitors changes on signal circuit to determine fuel level. This information is sent to fuel gauge. PCM uses inputs from fuel level sensor to calculate total fuel remaining in fuel tanks. This information is then sent to IPC via class 2 serial data circuit.

Left tank fuel pump also supplies a small amount of pressurized fuel to right fuel tank siphon jet pump through auxiliary fuel feed rear pipe. The pressurized fuel creates a venturi action inside siphon jet pump that causes fuel to be drawn out of right fuel tank. Fuel is then transferred from right fuel tank to left fuel tank through auxiliary fuel return rear pipe. Fuel system is designed to maintain a greater level in left fuel tank when electric fuel pump is operating. Fuel level in both tanks equalize when electric fuel pump is not operating or fuel level is greater than 50 percent.

Code Enable Criteria

For DTC to run, ignition must be on. DTC will set when the following conditions are present for greater than 2 minutes: fuel level sensor voltage for left level sensor is more than 2.9 volts and fuel level signal is more than 98 percent. When DTC is set, DIC displays LOW FUEL message, fuel gauge defaults to empty and check gauges indicator illuminates.

Diagnostic Procedures

1. If IPC diagnostic system check was performed, go to next step. If IPC diagnostic system check was not performed, go to **INSTRUMENT PANEL CLUSTER DIAGNOSTIC SYSTEM CHECK** under SELF-DIAGNOSTIC SYSTEM. After performing IPC diagnostic system check, go to next step.
2. Turn ignition on. Using scan tool, select PCM ENHANCED EVAP data list and monitor FUEL TANK LEVEL REMAINING. If scan tool indicates fuel level is more than 98 percent, go to next step. If scan tool indicates fuel level is less than 98 percent, go to **DIAGNOSTIC AIDS** .
3. Turn ignition off. Disconnect left fuel tank sending unit connector. Connect a fused jumper between left fuel tank sending unit connector terminals "B" (Gray wire) and "C" (Dark Blue wire). Turn ignition on. Using scan tool, monitor FUEL TANK LEVEL REMAINING. If scan tool indicates fuel tank level remaining is less than 4 percent, go to step 6 . If scan tool indicates fuel tank level remaining is more than 4 percent, go to next step.
4. Check for open, high resistance or short to voltage in Dark Blue wire between left fuel tank sending unit connector terminal "C" and PCM connector C2 terminal No. 54. See **Fig. 7** and **Fig. 8** . Repair as necessary. After repairs, go to step 12 . If circuit is okay, go to next step.
5. Check for open, high resistance or short to voltage in Gray wire between left fuel tank sending unit connector terminal "B" and PCM connector C1 terminal No. 23. Repair as necessary. After repairs, go to step 12 . If circuit is okay, go to step 9 .
6. Check for open, high resistance or short to voltage in Dark Blue wire between left fuel tank sending unit connector terminal "C" and fuel tank sending unit. Repair as necessary. After repairs, go to step 12 . If circuit is okay, go to next step.
7. Check for open, high resistance or short to voltage in Gray wire between left fuel tank sending unit connector terminal "B" and fuel tank sending unit. Repair as necessary. After repairs, go to step 12 . If circuit is okay, go to next step.
8. Check for poor connections at left fuel tank sending unit connector. Repair as necessary. After repairs, go to step 12 . If connections are okay, go to step 10 .
9. Check for poor connections at PCM. Repair as necessary. After repairs, go to step 12 . If connections are okay, go to step 11 .
10. Replace left fuel tank sending unit. See **FUEL TANK SENDING UNITS** under

REMOVAL & INSTALLATION. After repairs, go to step 12 .

11. Replace PCM. See **POWERTRAIN CONTROL MODULE** under REMOVAL & INSTALLATION. After repairs, go to next step.
12. Using scan tool, clear DTCs. Operate vehicle within conditions for setting this DTC in FREEZE FRAME and/or FAILURE RECORDS. Recheck for DTC. If DTC does not reset, system is okay at this time. If DTC resets, go to step 2 .

Diagnostic Aids

When checking for a deformed or warped fuel tank, measure resistance of suspect fuel level sensor at empty, with sensor in fuel tank, and again with sensor removed from fuel tank. Measured resistance values should be same at empty. If measured resistance values are not the same, replace fuel tank.

If problem is intermittent, go to INTERMITTENTS in BODY CONTROL MODULES - CORVETTE article.

DTC P0522: ENGINE OIL PRESSURE SENSOR CIRCUIT LOW VOLTAGE

Description

Engine Oil Pressure (EOP) sensor is mounted on top rear of engine. See **Fig. 12** . EOP sensor measures changes in engine oil pressure. EOP sensor changes resistance based on changes in engine oil pressure.

Code Enable Criteria

For DTC to run, engine must be running. DTC will set when EOP sensor voltage is less than 0.48 volts. When DTC is set, driver's information center displays an oil pressure message and oil pressure gauge displays zero psi.

Diagnostic Procedures

1. If IPC diagnostic system check was performed, go to next step. If IPC diagnostic system check was not performed, go to **INSTRUMENT PANEL CLUSTER DIAGNOSTIC SYSTEM CHECK** under SELF-DIAGNOSTIC SYSTEM. After performing IPC diagnostic system check, go to next step.
2. Start and operate engine at idle. Using scan tool, monitor FAILED THIS IGNITION under DTC STATUS for DTC P1635. If scan tool indicates that DTC P1635 failed in this ignition cycle, diagnose DTC P1635 first. See SELF-DIAGNOSTICS - CORVETTE article in ENGINE PERFORMANCE. If scan tool does not indicate that DTC P1635 failed this

ignition cycle, go to next step.

3. Using scan tool, monitor ENGINE DATA 3 and engine oil pressure voltage at idle. If voltage is more than 0.48 volt, go to next step. If voltage is less than 0.48 volt, go to step 5 .
4. Turn ignition on. Review FREEZE FRAME data and note parameters. Turn ignition off for 15 seconds. Operate vehicle within FREEZE FRAME parameters. If test indicates that this test failed this ignition cycle while operating vehicle, go to next step. If test does not indicate that this test failed this ignition cycle, go to **DIAGNOSTIC AIDS** .
5. Locate and disconnect EOP sensor connector. See **Fig. 12** . Connect a jumper wire between EOP sensor connector terminals "B" (Gray wire) and "C" (Tan/White wire). Monitor engine oil pressure voltage on scan tool. If voltage is not approximately 5 volts, go to next step. If voltage is approximately 5 volts, go to step 11 .
6. Using a test light connected to battery voltage, probe EOP sensor connector terminal "C" (Tan/White wire). Monitor engine oil pressure voltage on scan tool. If voltage is 5 volts, go to next step. If voltage is not 5 volts, go to step 9 .
7. Turn ignition off. Locate and disconnect PCM connectors. See **Fig. 7** . Check for open or short to ground in Gray wire between EOP sensor connector terminal "B" and PCM connector C1 terminal No. 7. See **Fig. 8** . Repair as necessary. After repairs, go to step 13 . If circuit is okay, go to next step.
8. Check for poor connection at PCM connector C1 terminal No. 7 (Gray wire). Repair as necessary. After repairs, go to step 13 . If connection is okay, go to step 12 .
9. Turn ignition off. Locate and disconnect PCM connectors. See **Fig. 7** . Check for open, short to ground or short to EOP sensor ground circuit in Tan/White wire between EOP sensor connector terminal "C" and PCM connector C2 terminal No. 58. See **Fig. 8** . Repair as necessary. After repairs, go to step 13 . If circuit is okay, go to next step.
10. Check for poor connection at PCM connector C2 terminal No. 58 (Tan/White wire). Repair as necessary. After repairs, go to step 13 . If connection is okay, go to step 12 .
11. Check for poor connections at EOP sensor connector. Repair as necessary. If EOP sensor connections are okay, replace EOP sensor. See **ENGINE OIL PRESSURE SENSOR** under REMOVAL & INSTALLATION. After replacing sensor or repairing connections, go to step 13 .
12. Replace PCM. See **POWERTRAIN CONTROL MODULE** under REMOVAL & INSTALLATION. After replacing PCM, go to next step.
13. Using scan tool, clear DTCs. Start engine and allow it to reach normal operating temperature at idle. Operate vehicle within FREEZE FRAME parameters for setting this DTC. If scan tool indicates that this test ran and passed, go to next step. If scan tool does not indicate that this test ran and passed, go to step 2 .
14. Using scan tool, select CAPTURE INFO, REVIEW INFO function. If any undiagnosed

DTCs are displayed, go to applicable DTC test. See **DIAGNOSTIC TROUBLE CODE DEFINITIONS** under SELF-DIAGNOSTIC SYSTEM. If DTCs are not displayed, system is okay.

Diagnostic Aids

Check for misrouted harness, rubbed through wire insulation or broken wire inside insulation. Ensure connectors are tight and clean.

Using FREEZE FRAME and/or FAILURE RECORD data mode may aid in locating an intermittent condition. If DTC cannot be duplicated, information included in FREEZE FRAME and/or FAILURE RECORDS data can be useful in determining how many miles since DTC set. FAIL COUNTER and PASS COUNTER can also be used to determine how many ignition cycles diagnostic reported a pass or a fail condition. To isolate when DTC failed, operate vehicle within same freeze frame conditions (RPM, load, vehicle speed, temperature, etc.).

If problem is intermittent, go to INTERMITTENTS in BODY CONTROL MODULES - CORVETTE article.

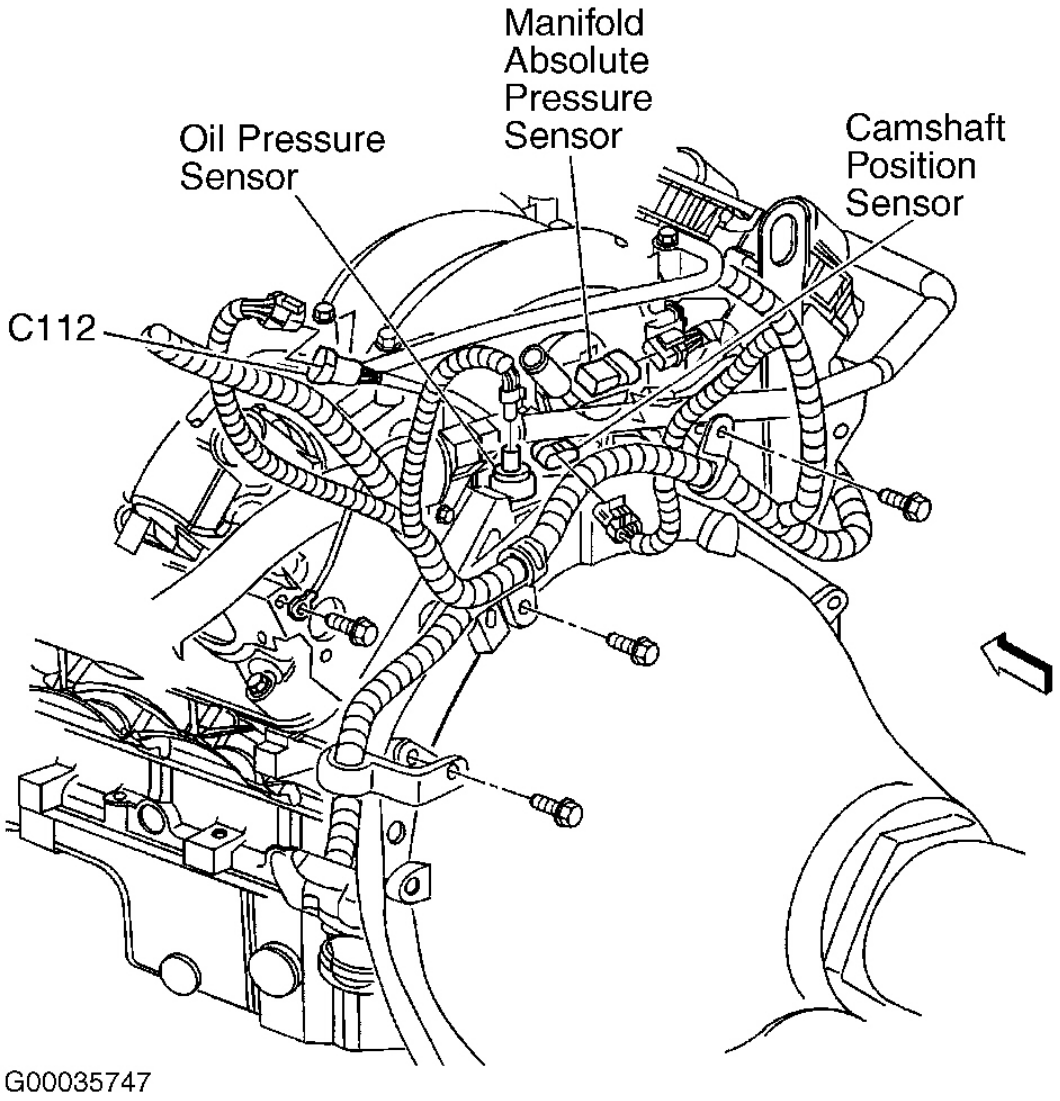

Fig. 12: Locating Components At Rear Of Engine
Courtesy of GENERAL MOTORS CORP.

DTC P0523: ENGINE OIL PRESSURE SENSOR CIRCUIT HIGH VOLTAGE

Description

Engine Oil Pressure (EOP) sensor is mounted on top rear of engine. See **Fig. 12** . EOP sensor measures changes in engine oil pressure. EOP sensor changes resistance based on changes in engine oil pressure.

Code Enable Criteria

When DTC is set, Driver's Information Center (DIC) displays oil pressure message and oil pressure gauge displays zero psi. Malfunction Indicator Light (MIL) will not illuminate. PCM commands a message on the Driver's Information Center (DIC). PCM records operating conditions at the time of failure in FREEZE FRAME/FAILURE RECORDS data. DIC message will turn off after one ignition cycle that DTC does not fail. Current DTC will clear when DTC runs and passes. History DTC will clear after 40 consecutive no fail cycles by this or any other emission related DTC. DTC can also be cleared manually using scan tool.

Diagnostic Procedures

1. If IPC diagnostic system check was performed, go to next step. If IPC diagnostic system check was not performed, go to **INSTRUMENT PANEL CLUSTER DIAGNOSTIC SYSTEM CHECK** under SELF-DIAGNOSTIC SYSTEM. After performing IPC diagnostic system check, go to next step.
2. Start and operate engine at idle. Using scan tool, monitor FAILED THIS IGNITION under DTC STATUS for DTC P1635. If scan tool indicates that DTC P1635 failed in this ignition cycle, diagnose DTC P1635 first. See SELF-DIAGNOSTICS - CORVETTE article in ENGINE PERFORMANCE. If scan tool does not indicate that DTC P1635 failed this ignition cycle, go to next step.
3. Using scan tool, monitor ENGINE DATA 3 engine oil pressure voltage at idle. If voltage is less than 4.5 volts, go to next step. If voltage is more than 4.5 volts, go to step 5 .
4. Turn ignition on. Review FREEZE FRAME data and note parameters. Turn ignition off for 15 seconds. Operate vehicle within FREEZE FRAME parameters. If test indicates that this test failed this ignition cycle while operating vehicle, go to next step. If test does not indicate that this test failed this ignition cycle, see **DIAGNOSTIC AIDS** .
5. Locate and disconnect EOP sensor connector. See **Fig. 12** . Monitor engine oil pressure voltage on scan tool. If voltage is less than one volt, go to next step. If voltage is more than one volt, go to step 7 .
6. Using a test light connected to battery voltage, probe EOP sensor connector terminal "A" (Black wire). If test light illuminates, go to step 8 . If test light does not illuminate, go to step 9 .
7. Check for short to voltage or short to Gray wire in Tan/White wire between EOP sensor connector terminal "C" and PCM connector C2 terminal No. 58. See **Fig. 8** . Repair as necessary. After repairs, go to step 14 . If circuit is okay, go to step 11 .
8. Using DVOM, measure voltage between ground and EOP sensor connector terminal "B" (Gray wire). If voltage is 5 volts or less, go to next step. If voltage is more than 5 volts, go to step 13 .

9. Locate and disconnect PCM connectors. See **Fig. 7** . Check for poor connection PCM connector C1 terminal No. 63 (Black wire). See **Fig. 8** . Repair as necessary. After repairs, go to step 14 . If connection is okay, go to next step.
10. Using DVOM, measure resistance of Black wire between EOP sensor connector terminal "A" and PCM connector C1 terminal No. 63. Repair as necessary. If resistance is more than 2 ohms, repair open or high resistance in Black wire. After repairs, go to step 14 . If resistance is less than 2 ohms, go to next step.
11. Replace PCM. See **POWERTRAIN CONTROL MODULE** under REMOVAL & INSTALLATION. After replacing PCM, go to step 14 .
12. Check for poor connections at EOP sensor connector. Repair as necessary. If EOP sensor connections are okay, replace EOP sensor. See **ENGINE OIL PRESSURE SENSOR** under REMOVAL & INSTALLATION. After replacing sensor or repairing connections, go to step 14 .
13. Repair short to voltage in Gray wire. After repairs, go to next step.
14. Using scan tool, clear DTCs. Start engine and allow it to reach normal operating temperature. Operate vehicle within FREEZE FRAME parameters for setting this DTC. If scan tool indicates that this test ran and passed, go to next step. If scan tool does not indicate that this test ran and passed, go to step 2 .
15. Using scan tool, select CAPTURE INFO, REVIEW INFO function. If any undiagnosed DTCs are displayed, go to applicable DTC test. See **DIAGNOSTIC TROUBLE CODE DEFINITIONS** under SELF-DIAGNOSTIC SYSTEM. If DTCs are not displayed, system is okay.

Diagnostic Aids

If oil pressure gauge displays maximum pressure, check ground circuit for open. PCM 5-volt reference circuits are internally connected within the PCM. If all engine oil pressure sensor circuits are OK, check related 5-volt reference circuits. For testing of 5-volt reference circuits, go to DTC P1635 in SELF-DIAGNOSTICS - CORVETTE article in ENGINE PERFORMANCE.

If problem is intermittent, go to INTERMITTENTS in BODY CONTROL MODULES - CORVETTE article.

DTC P0608: VEHICLE SPEED OUTPUT CIRCUIT

Description

Powertrain Control Module (PCM) creates vehicle speed output signal by rapidly grounding Vehicle Speed Sensor (VSS) output circuit via an internal switch called a driver. Driver operates

at same rate as VSS signal input. Various modules recognize voltage being pulled to ground as an indication of vehicle speed. Driver supplies ground for module being controlled. When PCM commands a module on, voltage of control circuit should be low (near zero volts). When PCM commands control circuit to a module off, voltage of control circuit should be high (near battery voltage).

Code Enable Criteria

For DTC to run, vehicle speed must be more than 400 RPM with ignition voltage 6.0-18.0 volts. DTC will set when PCM detects commanded state of driver and actual state of control circuit do not match for a minimum of 5 seconds.

Diagnostic Procedures

1. If IPC diagnostic system check was performed, go to next step. If IPC diagnostic system check was not performed, go to **INSTRUMENT PANEL CLUSTER DIAGNOSTIC SYSTEM CHECK** under SELF-DIAGNOSTIC SYSTEM. After performing IPC diagnostic system check, go to next step.

CAUTION: Support lower control arms so drive axles are in normal horizontal position, or drive axles will be damaged.

2. Turn ignition off. Raise and support drive wheels. Start engine and allow to idle. Place gear selector into gear. Allow engine to idle in gear. If speedometer does not indicate any speed, go to next step. If speedometer indicates any speed, see **DIAGNOSTIC AIDS** .
3. Turn ignition off. Locate and disconnect PCM connector C2. See **Fig. 7** . Turn ignition on. Using DVOM, measure voltage between ground and PCM connector C2 terminal No. 21 (Yellow wire). See **Fig. 8** . If voltage is less than 9.6 volts, go to next step. If voltage is more than 9.6 volts, go to step 6 .
4. Check for open, short to ground or high resistance in Yellow wire between VSS and PCM. Repair as necessary. After repairs, go to step 9 . If circuit is okay, go to next step.
5. Check for poor connections at IPC connector. Repair as necessary. After repairs, go to step 9 . If connections are okay, go to step 8 .
6. Check for poor connections at PCM. Repair as necessary. After repairs, go to step 9 . If connections are okay, go to next step.
7. Replace PCM. See **POWERTRAIN CONTROL MODULE** under REMOVAL & INSTALLATION. After replacing PCM, go to step 9 .
8. Replace IPC. See **INSTRUMENT PANEL CLUSTER** under REMOVAL & INSTALLATION. After repairs, go to next step.

9. Using scan tool, clear DTCs. Turn ignition off for 30 seconds. Start engine and allow it to reach normal operating temperature. Operate vehicle within conditions for setting this DTC. If DTC does not reset, system is okay. If DTC resets, go to step 2 .

Diagnostic Aids

If problem is intermittent, go to INTERMITTENTS in BODY CONTROL MODULES - CORVETTE article.

DTC P0654: ENGINE SPEED OUTPUT CIRCUIT

Circuit Description

Powertrain Control Module (PCM) creates vehicle speed output signal by rapidly grounding Vehicle Speed Sensor (VSS) output circuit via an internal switch called a driver. Driver operates at same rate as VSS signal input. Various modules recognize voltage being pulled to ground as an indication of vehicle speed. Driver supplies ground for module being controlled. When PCM commands a module ON, voltage of the control circuit should be low (near zero volts). When PCM commands control circuit to a module OFF, voltage potential of the circuit should be high (near battery voltage).

Code Enable Criteria

For DTC to run, engine speed is more than 400 RPM with ignition voltage more than 6 volts, but less than 18 volts. DTC will set when PCM detects commanded state of driver and actual state of control circuit do not match for a minimum of 5 seconds.

Diagnostic Procedures

1. If IPC diagnostic system check was performed, go to next step. If IPC diagnostic system check was not performed, go to **INSTRUMENT PANEL CLUSTER DIAGNOSTIC SYSTEM CHECK** under SELF-DIAGNOSTIC SYSTEM. After performing IPC diagnostic system check, go to next step.
2. With engine running, if vehicle tachometer indicates engine speed (RPM), see **DIAGNOSTIC AIDS** . If no engine RPM is indicated, go to next step.
3. Turn ignition off. Locate and disconnect PCM connectors. See **Fig. 7** . Install Signal Generator Tester (J-33431-B) between ground and PCM connector C2 terminal No. 10 (White wire). See **Fig. 8** . Turn ignition on. Turn tester on and set to generate a vehicle speed signal. If tachometer indicates any RPM, go to next step. If tachometer does not indicate any RPM, go to step 5 .
4. Check for poor connections at PCM connector. Repair as necessary. After repairs, go to

step 9 . If connections are okay, go to step 7 .

5. Check for open, short to ground or high resistance in White wire between PCM connector C2 terminal No. 10 and IPC connector terminal A17. See **Fig. 6** and **Fig. 8** . White wire passes through underhood fuse block at connector C1 terminal D4 and connector C2 terminal A3. See **Fig. 9** and **Fig. 10** . Repair as necessary. After repairs, go to step 9 . If circuit is okay, go to next step.
6. Check for poor connections at IPC. Repair as necessary. After repairs, go to step 9 . If connections are okay, go to step 8 .
7. Replace PCM. See **POWERTRAIN CONTROL MODULE** under REMOVAL & INSTALLATION. After replacing PCM, go to step 9 .
8. Replace IPC. See **INSTRUMENT PANEL CLUSTER** under REMOVAL & INSTALLATION. After repairs, go to next step.
9. Using scan tool, clear DTCs. Turn ignition off for 30 seconds. Start engine and allow it to reach normal operating temperature. Operate vehicle within conditions for setting this DTC. If DTC does not reset, system is okay. If DTC resets, go to step 2 .

Diagnostic Aids

If problem is intermittent, go to INTERMITTENTS in BODY CONTROL MODULES - CORVETTE article.

DTC P1431: RIGHT FUEL LEVEL SENSOR CIRCUIT PERFORMANCE

Description

Right fuel level sensor measures fuel level changes within right fuel tank. When fuel level is high, sensor signal voltage is high. When fuel level is low, sensor signal voltage is low. PCM uses inputs from left and right fuel level sensors to calculate total fuel remaining in both fuel tanks. This diagnostic tests for a stuck right fuel level sensor signal.

Left tank fuel pump also supplies a small amount of pressurized fuel to right fuel tank siphon jet pump through auxiliary fuel feed rear pipe. Pressurized fuel creates a venturi action inside the siphon jet pump. The venturi action causes fuel to be drawn out of right fuel tank to left fuel tank through auxiliary fuel return rear pipe. Fuel system is designed to maintain a greater level in left fuel tank when electric fuel pump is operating. Fuel transfer rate from left to right fuel tank is less than transfer rate from right to left fuel tank. Fuel level in fuel tanks equalize when electric fuel pump is not operating or fuel level is more than 50 percent.

Code Enable Criteria

For DTC to run, engine must be running. DTC will set when one of the following occur:

- Secondary fuel tank (right) is not full, more than 150 miles have been driven and PCM did not detect fuel level in left fuel tank change at least 1.1 gal. (4.0L).
- Secondary fuel tank (right) is not empty, primary fuel tank (left) is not full with engine operating more than 60 minutes and primary tank does not achieve top of its range. After operating engine for more than 60 minutes, fuel in right fuel tank will transfer to left fuel tank.
- Secondary fuel tank (right) is empty, primary fuel tank (left) is full and fuel level in both fuel tanks does not change after traveling more than 200 miles. If secondary fuel tank is empty, primary fuel tank level should decrease after 200 miles.

When DTC is set, fuel gauge defaults to empty, check gauges indicator illuminates and a message is displayed in the driver's information center.

Diagnostic Procedures

1. If IPC diagnostic system check was performed, go to next step. If IPC diagnostic system check was not performed, go to **INSTRUMENT PANEL CLUSTER DIAGNOSTIC SYSTEM CHECK** under SELF-DIAGNOSTIC SYSTEM. After performing IPC diagnostic system check, go to next step.
2. Turn ignition on. Raise and support vehicle. Disconnect right (passenger's) fuel sensor connector. Connect a fused jumper wire between right fuel level sensor connector terminal "C" (Light Blue wire) and ground. Using scan tool, select PCM EVAP data list and monitor right fuel level sensor voltage. If voltage is zero volts, go to next step. If voltage is not zero volts, go to step 10 .
3. Remove fused jumper from ground and connect to right fuel level sensor connector terminal "D" (Black wire). Monitor right fuel level sensor voltage. If voltage is zero volts, go to next step. If voltage is not zero volts, go to step 11 .

NOTE: Scan tool will need to be commanded on several times to achieve required ON time for following step.

4. Using scan tool, monitor fuel level in left fuel tank. Add fuel if necessary. Disconnect auxiliary fuel feed rear pipe from right fuel tank sending unit. This hose comes from the left fuel tank sending unit. Place end of hose into an empty approved gasoline container. Command fuel pump on for 10 seconds. Measure amount of fuel in container after 10 seconds. If more than 0.633 pt. (300 ml) is measured, go to next step. If less than 0.633 pt. (300 ml) is measured, go to step 12 .

5. Monitor left fuel level sensor voltage. If voltage is more than 1.25 volts, go to next step. If voltage is less than 1.25 volts, go to step 7 .
6. While monitoring left fuel level sensor voltage, drain left fuel tank until voltage is 1.00-1.25 volts. After draining tank to specification, go to next step.

NOTE: Scan tool will need to be commanded on several times to achieve required ON time for following step.

7. Reconnect auxiliary fuel feed rear pipe to right fuel tank sending unit. Disconnect auxiliary fuel feed rear pipe from left fuel tank sending unit. Place end of hose into an empty approved gasoline container. Command fuel pump on for 10 seconds. Measure amount of fuel in container after 8 seconds. If more than 0.703 pt. (322.6 ml) is measured, go to next step. If less than 0.703 pt. (322.6 ml) is measured, go to step 13 .
8. Turn ignition off. Remove right fuel tank sending unit. See **FUEL TANK SENDING UNITS** under REMOVAL & INSTALLATION. Check for stuck float arm or interference with pump body. Check for deformed fuel tank. Check for ice or other foreign particles. Repair as necessary. After repairs, go to step 17 . If fuel tank sending unit is okay, go to next step.
9. Using DVOM set to 400 ohms range, measure resistance between fuel level sensor connector terminals "C" and "D" (component side). Move fuel level sensor float arm from empty to full position, noting any fluctuations in resistance through out float arm range. At empty position, 250 ohms (+/- 2.4 ohms) should be measured. At full position, 40 ohms (+/- one ohm) should be measured. If DVOM reading fluctuates between empty and full positions, go to **DIAGNOSTIC AIDS** . If DVOM reading does not fluctuate between empty and full positions, go to step 14 .
10. Locate PCM and disconnect connectors. See **Fig. 7** . Check for high resistance in Light Blue wire between right fuel level sensor connector terminal "C" and PCM connector C2 terminal No. 73. See **Fig. 8** . Repair as necessary. After repairs, go to step 17 . If circuit is okay, go to step 15 .
11. Check for open or high resistance in Gray wire between right fuel level sensor connector terminal "D" and ground. Repair as necessary. After repairs, go to step 17 . If circuit is okay, go to step 15 .
12. Repair fuel lines between fuel tanks for restrictions, kinked line, faulty connection or improper routing. After repairs, go to step 17 .
13. Check fuel lines between fuel tanks for restrictions, kinked line, faulty connection or improper routing. Repair as necessary. After repairs, go to step 17 .
14. Replace right fuel tank sending unit. See **FUEL TANK SENDING UNITS** under REMOVAL & INSTALLATION. After repairs, go to step 17 .

15. Check for poor connections at PCM connectors. Repair as necessary. After repairs, go to step 17 .
16. Replace PCM. See **POWERTRAIN CONTROL MODULE** under REMOVAL & INSTALLATION. After repairs, go to next step.
17. Using scan tool, clear DTCs. Start engine and allow it to reach normal operating temperature. Operate vehicle within FREEZE FRAME parameters for setting this DTC. If scan tool indicates that this test ran and passed, go to next step. If scan tool does not indicate that this test ran and passed, go to step 2 .
18. Using scan tool, select CAPTURE INFO, REVIEW INFO function. If any undiagnosed DTCs are displayed, go to applicable DTC test. See **DIAGNOSTIC TROUBLE CODE DEFINITIONS** under SELF-DIAGNOSTIC SYSTEM. If DTCs are not displayed, system is okay.

Diagnostic Aids

When checking for a deformed or warped fuel tank, measure resistance of suspect fuel level sensor at empty, with sensor in fuel tank, and again with sensor removed from fuel tank. Measured resistance values should be same at empty. If measured resistance values are not the same, replace fuel tank. Fuel sending unit may need to be removed to test resistance of the sensor. Resistance of sensor should change from 40 to 250 ohms.

If DTC P0461 is also set, diagnose and repair as necessary. See **DTC P0461: LEFT FUEL LEVEL SENSOR CIRCUIT PERFORMANCE** .

If problem is intermittent, go to INTERMITTENTS in BODY CONTROL MODULES - CORVETTE article.

DTC P1432: RIGHT FUEL LEVEL SENSOR CIRCUIT LOW VOLTAGE

Description

Right fuel level sensor measures fuel level changes within right fuel tank. When fuel level is high, sensor signal voltage is high. When fuel level is low, sensor signal voltage is low. PCM uses inputs from left and right fuel level sensors to calculate total fuel remaining in both fuel tanks. This diagnostic tests for a stuck right fuel level sensor signal.

Left tank fuel pump also supplies a small amount of pressurized fuel to right fuel tank siphon jet pump through auxiliary fuel feed rear pipe. Pressurized fuel creates a venturi action inside the siphon jet pump. The venturi action causes fuel to be drawn out of right fuel tank to left fuel tank through auxiliary fuel return rear pipe. Fuel system is designed to maintain a greater level in left

fuel tank when electric fuel pump is operating. Fuel transfer rate from left to right fuel tank is less than transfer rate from right to left fuel tank. Fuel level in fuel tanks equalize when electric fuel pump is not operating or fuel level is more than 50 percent.

Code Enable Criteria

For DTC to run, ignition must be on. DTC will set when fuel level sensor voltage is less than 0.39 volts for more than 2 minutes. When DTC is set, DIC displays LOW FUEL message, fuel gauge defaults to empty and check gauges indicator illuminates.

Diagnostic Procedures

1. If IPC diagnostic system check was performed, go to next step. If IPC diagnostic system check was not performed, go to **INSTRUMENT PANEL CLUSTER DIAGNOSTIC SYSTEM CHECK** under SELF-DIAGNOSTIC SYSTEM. After performing IPC diagnostic system check, go to next step.
2. Turn ignition on. Using scan tool, select PCM ENHANCED EVAP data list and monitor right fuel tank sensor voltage. If voltage is less than 0.39 volt, go to step 4 . If voltage is more than 0.39 volt, go to next step.
3. Turn ignition on. Review FREEZE FRAME data and note parameters. Turn ignition off for 15 seconds. Operate vehicle within FREEZE FRAME parameters. If test indicates that this test failed this ignition cycle while operating vehicle, go to next step. If test does not indicate that this test failed this ignition cycle, see **DIAGNOSTIC AIDS** .
4. Turn ignition off. Raise and support vehicle. Disconnect right (passenger's) fuel level sensor connector. Turn ignition on. Monitor right fuel tank sensor voltage. If voltage is less than 0.39 volt, go to next step. If voltage is more than 0.39 volt, go to step 7 .
5. Turn ignition off. Locate and disconnect PCM connectors. See **Fig. 7** . Check for short to ground in Light Blue wire between right fuel level sensor connector terminal "C" and PCM connector C2 terminal No. 73. See **Fig. 8** . If grounded circuit is found, go to next step. If circuit is okay, go to step 8 .
6. Repair short to ground. After repairs, go to step 9 .
7. Replace right fuel tank sending unit. See **FUEL TANK SENDING UNITS** under REMOVAL & INSTALLATION. After repairs, go to step 9 .
8. Replace PCM. See **POWERTRAIN CONTROL MODULE** under REMOVAL & INSTALLATION. After repairs, go to next step.
9. Using scan tool, clear DTCs. Start engine and allow it to reach normal operating temperature. Operate vehicle within FREEZE FRAME parameters for setting this DTC. If scan tool indicates that this test ran and passed, go to next step. If scan tool does not indicate that this test ran and passed, go to step 2 .

10. Using scan tool, select CAPTURE INFO, REVIEW INFO function. If any undiagnosed DTCs are displayed, go to applicable DTC test. See **DIAGNOSTIC TROUBLE CODE DEFINITIONS** under SELF-DIAGNOSTIC SYSTEM. If DTCs are not displayed, system is okay.

Diagnostic Aids

When checking for a deformed or warped fuel tank, measure resistance of suspect fuel level sensor at empty, with sensor in fuel tank, and again with sensor removed from fuel tank. Measured resistance values should be same at empty. If measured resistance values are not the same, replace fuel tank. Fuel sending unit may need to be removed to test resistance of the sensor. Resistance of sensor should change from 40 to 250 ohms.

If fuel level sensor is okay, test operation of jet pump.

If problem is intermittent, go to INTERMITTENTS in BODY CONTROL MODULES - CORVETTE article.

DTC P1433: RIGHT FUEL LEVEL SENSOR CIRCUIT HIGH VOLTAGE

Description

Right fuel level sensor measures fuel level changes within right fuel tank. When fuel level is high, sensor signal voltage is high. When fuel level is low, sensor signal voltage is low. PCM uses inputs from left and right fuel level sensors to calculate total fuel remaining in both fuel tanks. This diagnostic tests for a stuck right fuel level sensor signal.

Left tank fuel pump also supplies a small amount of pressurized fuel to right fuel tank siphon jet pump through auxiliary fuel feed rear pipe. Pressurized fuel creates a venturi action inside the siphon jet pump. The venturi action causes fuel to be drawn out of right fuel tank to left fuel tank through auxiliary fuel return rear pipe. Fuel system is designed to maintain a greater level in left fuel tank when electric fuel pump is operating. Fuel transfer rate from left to right fuel tank is less than transfer rate from right to left fuel tank. Fuel level in fuel tanks equalize when electric fuel pump is not operating or fuel level is more than 50 percent.

Code Enable Criteria

For DTC to run, ignition must be on. DTC will set when fuel level sensor voltage is more than 2.9 volts for more than 2 minutes. When DTC is set, DIC displays LOW FUEL message, fuel gauge defaults to empty and check gauges indicator illuminates.

Diagnostic Procedures

1. If IPC diagnostic system check was performed, go to next step. If IPC diagnostic system check was not performed, go to **INSTRUMENT PANEL CLUSTER DIAGNOSTIC SYSTEM CHECK** under SELF-DIAGNOSTIC SYSTEM. After performing IPC diagnostic system check, go to next step.
2. Turn ignition on. Using scan tool, select PCM ENHANCED EVAP data list and monitor right fuel tank sensor voltage. If voltage is more than 2.9 volt, go to step 4 . If voltage is less than 2.9 volt, go to next step.
3. Turn ignition on. Review FREEZE FRAME data and note parameters. Turn ignition off for 15 seconds. Operate vehicle within FREEZE FRAME parameters. If test indicates that this test failed this ignition cycle while operating vehicle, go to next step. If test does not indicate that this test failed this ignition cycle, see **DIAGNOSTIC AIDS** .
4. Turn ignition off. Raise and support vehicle. Disconnect right (passenger's) fuel level sensor connector. Turn ignition on. Using DVOM, measure voltage between ground and right fuel level sensor connector terminal "C" (Light Blue wire). If voltage is less than 5 volts, go to next step. If voltage is more than 5 volts, go to step 15 .
5. Turn ignition off. Connect a fused jumper wire between right fuel level sensor connector terminals "B" (Gray wire) and "C" (Light Blue wire). Turn ignition on. Monitor right fuel tank sensor voltage on scan tool. If voltage is less than 2.9 volt, go to step 8 . If voltage is more than 2.9 volt, go to next step.
6. Remove fused jumper from terminal "B" and connect to ground. If voltage is less than 2.9 volt, go to step 10 . If voltage is more than 2.9 volt, go to next step.
7. Turn ignition off. Locate and disconnect PCM connectors. See **Fig. 7** . Check for open in Light Blue wire between right fuel level sensor connector terminal "C" and PCM connector C2 terminal No. 73. See **Fig. 8** . If open circuit is found, go to step 13 . If circuit is okay, go to step 16 .
8. Turn ignition off. Remove fused jumper from connector. Locate and disconnect PCM connectors. See **Fig. 7** . Using DVOM, measure resistance between PCM connector C2 terminal No. 73 (Light Blue wire) and all other terminals in both PCM connectors. See **Fig. 8** . If resistance is 0-2 ohms between any terminals, go to next step. If resistance is not 0-2 ohms between all terminals, go to step 11 .
9. Repair short between suspect circuits. After repairs, go to step 18 .
10. Locate and disconnect PCM connectors. See **Fig. 7** . Check for open in Gray wire between right fuel level sensor connector terminal "B" and PCM connectors C1 terminal No. 23. See **Fig. 8** . If open circuit is found, go to step 14 . If circuit is okay, go to step 16 .
11. Check for poor connections at fuel level sensor connector. Repair as necessary. After repairs, go to step 18 . If connections are okay, go to next step.
12. Replace right fuel tank sending unit. See **FUEL TANK SENDING UNITS** under

REMOVAL & INSTALLATION. After repairs, go to step 18 .

13. Repair open in Light Blue wire. After repairs, go to step 18 .
14. Repair open in Gray wire. After repairs, go to step 18 .
15. Repair short to voltage in Light Blue wire. After repairs, go to step 18 .
16. Check for poor connections at PCM. Repair as necessary. After repairs, go to step 18 . If connections are okay, go to next step.
17. Replace PCM. See **POWERTRAIN CONTROL MODULE** under REMOVAL & INSTALLATION. After repairs, go to next step.
18. Using scan tool, clear DTCs. Start engine and allow it to reach normal operating temperature. Operate vehicle within FREEZE FRAME parameters for setting this DTC. If scan tool indicates that this test ran and passed, go to next step. If scan tool does not indicate that this test ran and passed, go to step 2 .
19. Using scan tool, select CAPTURE INFO, REVIEW INFO function. If any undiagnosed DTCs are displayed, go to applicable DTC test. See **DIAGNOSTIC TROUBLE CODE DEFINITIONS** under SELF-DIAGNOSTIC SYSTEM. If DTCs are not displayed, system is okay.

Diagnostic Aids

When checking for a deformed or warped fuel tank, measure resistance of suspect fuel level sensor at empty, with sensor in fuel tank, and again with sensor removed from fuel tank. Measured resistance values should be same at empty. If measured resistance values are not the same, replace fuel tank. Fuel sending unit may need to be removed to test resistance of the sensor. Resistance of sensor should change from 40 to 250 ohms.

If fuel level sensor is okay, test operation of jet pump.

If problem is intermittent, go to INTERMITTENTS in BODY CONTROL MODULES - CORVETTE article.

SYSTEM TESTS

SYMPTOM INDEX

System/Symptom	Go To Test
Audible Warnings	
Chime Always On	A
Chime Inoperative	B
Driver's Information Center (DIC)	

Driver's Information Center Inoperative	C
Driver's Information Center Switches Inoperative	D
Gauges	
Engine Coolant Temperature Gauge Inaccurate Or Inoperative	E
Engine Oil Pressure Gauge Inaccurate Or Inoperative	F
Engine Oil Temperature Gauge Inaccurate Or Inoperative	G
Fuel Gauge Inaccurate Or Inoperative	H
Speedometer Or Odometer Inaccurate Or Inoperative	J
Tachometer Inaccurate Or Inoperative	K
Tire Pressure Gauge Inoperative	L
Transmission Fluid Temperature Gauge Inaccurate Or Inoperative	M
Volt Gauge Inaccurate Or Inoperative	N
Head-Up Display (HUD)	
Head-Up Display Image Adjustment Inoperative	O
Head-Up Display Inoperative	P
Head-Up Display Intensity Does Not Vary	Q
Head-Up Display Hazard Indicators Inoperative	R
Indicators/DIC Messages	
1-4 Shift Indicator Inoperative	(1)
ABS Indicator Always On	(2)
ABS Indicator Inoperative	(2)
Air Bag Indicator Circuit Malfunction	(3)
Brake Warning Indicator Always On	(2)
Brake Warning Indicator Inoperative	(2)
Change Oil Indicator Always On	S
Change Oil Indicator Inoperative	T
CHANGE OIL NOW Message Malfunction	S
CHANGE OIL SOON Message Malfunction	T
Charge Indicator Always On	(4)
Charge Indicator Inoperative	(4)
Check Gauges Indicator Inoperative	U
Door Ajar Indicator Inoperative	V

Engine Oil Temperature Indicator Always On	**W**
Foglight Indicator Inoperative	**X**
High Beam Indicator Inoperative	**Y**
Low Engine Oil Level Indicator Always On	**Z**
LOW FUEL Message Malfunction	**H**
LOW OIL PRESSURE Message Malfunction	**F**
LOW WASHER FLUID Message Always On	(5)
LOW WASHER FLUID Message Inoperative	(5)
Malfunction Indicator Light (Check Engine) Always On	(6)
Malfunction Indicator Light (Check Engine) Inoperative	(6)
MPH (Km/h) Indicator Inoperative	**AA**
Rear Hatch/Gate Ajar Indicator Always On	(7)
Rear Hatch/Gate Ajar Indicator Inoperative	(7)
RESERVE FUEL Message Malfunction	**H**
Seat Belt Indicator Inoperative	**AB**
Security Indicator Always On Or Flashing	(8)
Security Indicator Inoperative	(8)
SERVICE COLUMN LOCK Message Always On	(9)
SERVICE COLUMN LOCK Message Inoperative	(9)
Tonneau Cover Indicator Always On	(7)
Tonneau Cover Indicator Inoperative	(7)
Traction Control And Active Handling Indicator Always On	(2)
Traction Control And Active Handling Indicator Inoperative	(2)
Turn Signal Indicators And/Or Lights Inoperative	**AC**

(1) See appropriate ELECTRONIC CONTROLS article in MANUAL TRANSMISSIONS.

(2) See appropriate ANTI-LOCK/TCS article in BRAKES.

(3) See appropriate DIAGNOSIS & TESTING article in MITCHELL(R) AIR BAG SERVICE & REPAIR MANUAL, DOMESTIC & IMPORTED MODELS.

(4) See appropriate GENERATORS & REGULATORS article in STARTING &

CHARGING SYSTEMS.

(5) See SYSTEM TESTS in WIPER/WASHER SYSTEMS - CORVETTE article.

(6) See SELF-DIAGNOSTICS - CORVETTE article in ENGINE PERFORMANCE.

(7) See SYSTEM TESTS in POWER HATCH & FUEL DOOR RELEASE - CORVETTE article.

(8) See SYSTEM TESTS in ANTI-THEFT SYSTEMS - CORVETTE article.

(9) See STEERING COLUMN SWITCHES - CORVETTE article.

TEST A: CHIME ALWAYS ON

1. If audible warning diagnostic system check was performed, go to next step. If audible warning diagnostic system check was not performed, go to **AUDIBLE WARNINGS DIAGNOSTIC SYSTEM CHECK** under SELF-DIAGNOSTIC SYSTEM. After performing audible warning diagnostic system check, go to next step.
2. Turn ignition on. If any indicators/messages are present on IPC, diagnose those indicators/messages first. See **SYMPTOM INDEX** table. If no indicators/messages are present on IPC, go to next step.
3. Turn ignition off. Ensure headlight switch is off. Remove key from ignition. Open driver's door. If chime sounds, go to next step. If chime does not sound, problem is intermittent, go to INTERMITTENT TROUBLE CODE DETERMINATION in BODY CONTROL MODULES - CORVETTE article.
4. Close driver's door. Connect scan tool to Data Link Connector (DLC). Turn ignition on. Using scan tool, select BODY CONTROL MODULE INPUT data list and monitor KEY IN IGNITION. If key in ignition status is INACTIVE, go to next step. If key in ignition status is ACTIVE, go to step 6 .
5. Check for open in Black wire between ignition switch connector C2 terminal "E" and ground connection located at base of right "A" pillar. Repair as necessary. After repairs, go to step 11 . If circuit is okay, go to step 8 .
6. Remove key from ignition. Disconnect BCM connectors. BCM is located under passenger's toe board. See **Fig. 13** . Check for short to ground between ground and BCM connector C2 terminal C14 (Light Green/Black wire). See **Fig. 14** . If short to ground is found, go to next step. If circuit is okay, go to step 9 .
7. Disconnect ignition switch connector C1. Check for short to ground between ground and BCM connector C2 terminal C14 (Light Green/Black wire). Repair as necessary. After repairs, go to step 11 . If circuit is okay, go to step 10 .

8. Check for open in Tan wire between ignition switch connector C2 terminal "D" and BCM connector C2 terminal C6. See **Fig. 14** . Repair as necessary. After repairs, go to step 11 . If circuit is okay, go to step 10 .
9. Replace BCM. See REMOVAL & INSTALLATION in BODY CONTROL MODULES - CORVETTE article. After repairs, go to step 11 .
10. Replace ignition switch. See **IGNITION SWITCH** under REMOVAL & INSTALLATION. After repairs, go to next step.
11. Recheck system operation to verify the repair. If system operates properly, repair is complete. If system does not operate properly, go to step 2 .

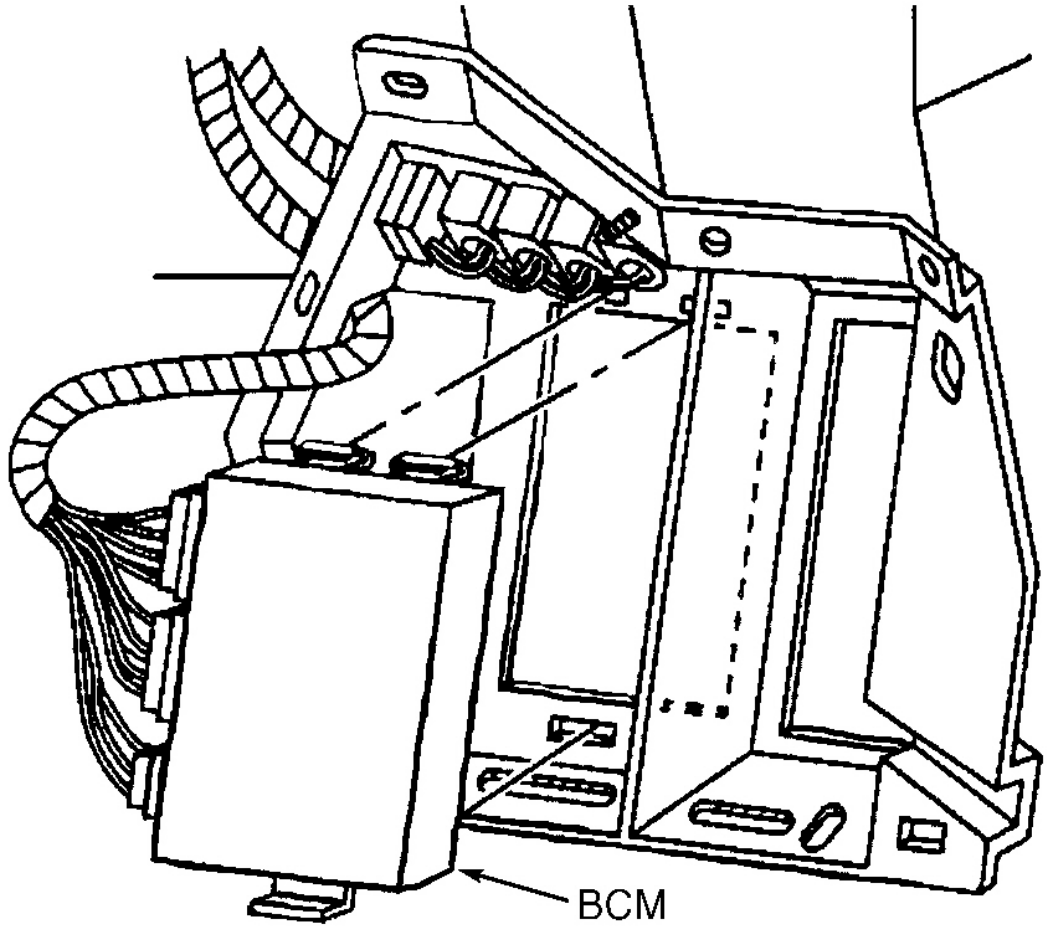

Fig. 13: Locating Body Control Module
Courtesy of GENERAL MOTORS CORP.

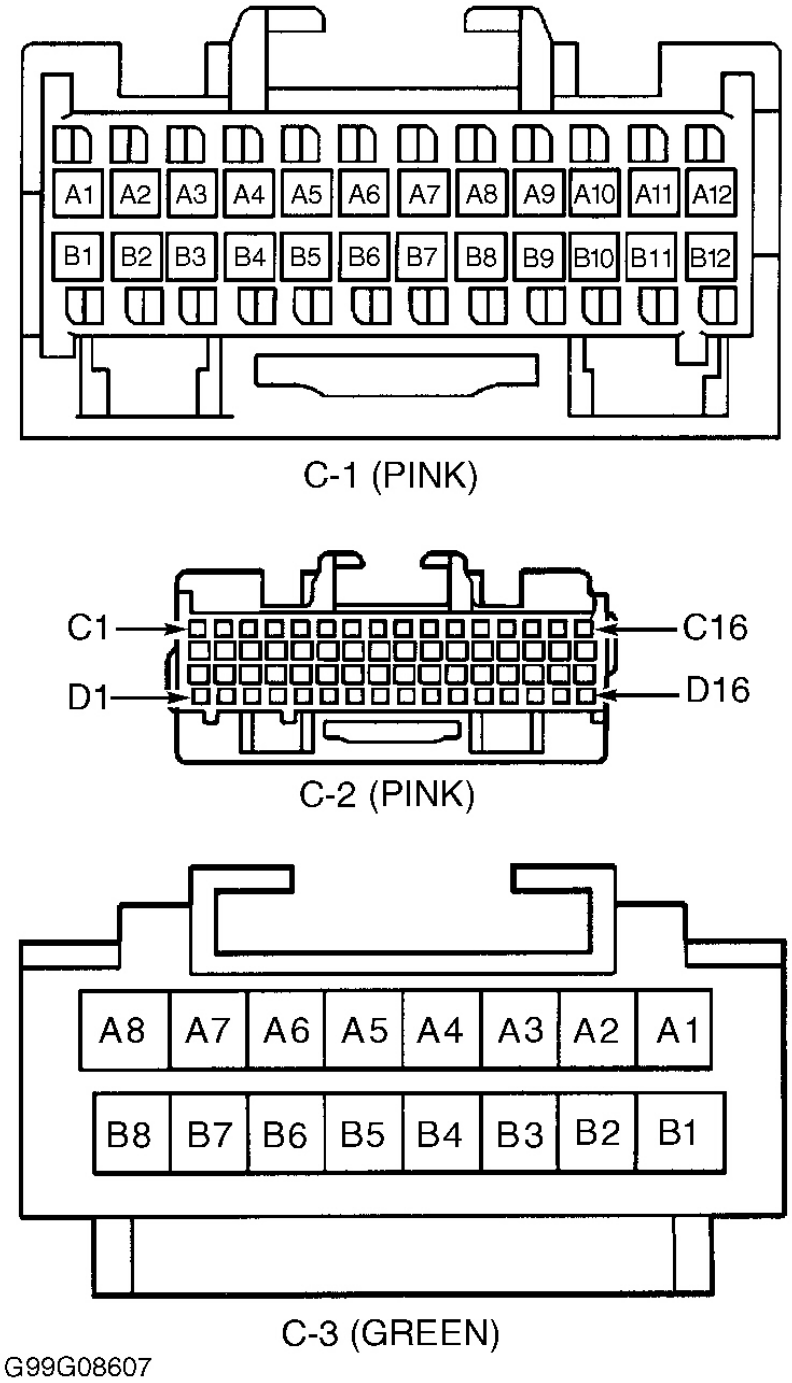

Fig. 14: Identifying Body Control Module Connector Terminals (C1, C2 & C3)

TEST B: CHIME INOPERATIVE

1. If audible warning diagnostic system check was performed, go to next step. If audible warning diagnostic system check was not performed, go to **AUDIBLE WARNINGS DIAGNOSTIC SYSTEM CHECK** under SELF-DIAGNOSTIC SYSTEM. After performing audible warning diagnostic system check, go to next step.
2. Turn ignition on and ensure driver's seat belt buckle is unfastened. Note operation of seat belt reminder indicator on Instrument Panel Cluster (IPC). If seat belt reminder indicator is inoperative, go to **TEST AB: SEAT BELT INDICATOR INOPERATIVE** . If seat belt reminder indicator operates properly, go to next step.
3. Turn headlights on. If headlights turn on, go to next step. If headlights do not turn on, diagnose inoperative headlights. See appropriate wiring diagram in HEADLIGHT SYSTEMS & DAYTIME RUNNING LIGHTS article.
4. Open driver's door. If DOOR AJAR message is displayed on Driver's Information Center (DIC), go to next step. If DOOR AJAR message is not displayed on DIC, go to **TEST V: DOOR AJAR INDICATOR INOPERATIVE** .
5. Replace BCM. See REMOVAL & INSTALLATION in BODY CONTROL MODULES - CORVETTE article. After repairs, go to next step.
6. Recheck system operation to verify the repair. If system operates properly, repair is complete. If system does not operate properly, go to step 2 .

TEST C: DRIVER'S INFORMATION CENTER INOPERATIVE

1. If IPC diagnostic system check was performed, go to next step. If IPC diagnostic system check was not performed, go to **INSTRUMENT PANEL CLUSTER DIAGNOSTIC SYSTEM CHECK** under SELF-DIAGNOSTIC SYSTEM. After performing IPC diagnostic system check, go to next step.
2. Replace IPC. See **INSTRUMENT PANEL CLUSTER** under REMOVAL & INSTALLATION. After repairs, go to next step.
3. Recheck system operation to verify the repair. If system operates properly, repair is complete. If system does not operate properly, go to step 2 .

TEST D: DRIVER'S INFORMATION CENTER SWITCHES INOPERATIVE

1. If IPC diagnostic system check was performed, go to next step. If IPC diagnostic system check was not performed, go to **INSTRUMENT PANEL CLUSTER DIAGNOSTIC SYSTEM CHECK** under SELF-DIAGNOSTIC SYSTEM. After performing IPC diagnostic system check, go to next step.
2. Replace driver's information center switch panel. See **DRIVER INFORMATION CENTER & HEAD-UP DISPLAY CONTROL SWITCHES** under REMOVAL &

INSTALLATION. After repairs, go to next step.

3. Replace IPC. See **INSTRUMENT PANEL CLUSTER** under REMOVAL & INSTALLATION. After repairs, go to next step.
4. Recheck system operation to verify the repair. If system operates properly, repair is complete. If system does not operate properly, go to step 2 .

TEST E: ENGINE COOLANT TEMPERATURE GAUGE INACCURATE OR INOPERATIVE

1. If IPC diagnostic system check was performed, go to next step. If IPC diagnostic system check was not performed, go to **INSTRUMENT PANEL CLUSTER DIAGNOSTIC SYSTEM CHECK** under SELF-DIAGNOSTIC SYSTEM. After performing IPC diagnostic system check, go to next step.
2. Using scan tool, select IPC SPECIAL FUNCTIONS and perform gauge sweep. See **SCAN TOOL** under SELF-DIAGNOSTIC SYSTEM. If coolant temperature gauge responds as commanded, problem is intermittent, go to INTERMITTENT TROUBLE CODE DETERMINATION in BODY CONTROL MODULES - CORVETTE article. If coolant temperature gauge does not respond as commanded, go to next step.
3. Replace IPC. See **INSTRUMENT PANEL CLUSTER** under REMOVAL & INSTALLATION. After repairs, go to next step.
4. Recheck system operation to verify the repair. If system operates properly, repair is complete. If system does not operate properly, go to step 2 .

TEST F: ENGINE OIL PRESSURE GAUGE INACCURATE OR INOPERATIVE

1. If IPC diagnostic system check was performed, go to next step. If IPC diagnostic system check was not performed, go to **INSTRUMENT PANEL CLUSTER DIAGNOSTIC SYSTEM CHECK** under SELF-DIAGNOSTIC SYSTEM. After performing IPC diagnostic system check, go to next step.
2. Using scan tool, select IPC SPECIAL FUNCTIONS and perform gauge sweep. See **SCAN TOOL** under SELF-DIAGNOSTIC SYSTEM. If oil pressure gauge responds as commanded, problem is intermittent, go to INTERMITTENT TROUBLE CODE DETERMINATION in BODY CONTROL MODULES - CORVETTE article. If oil pressure gauge does not respond as commanded, go to next step.
3. Replace IPC. See **INSTRUMENT PANEL CLUSTER** under REMOVAL & INSTALLATION. After repairs, go to next step.
4. Recheck system operation to verify the repair. If system operates properly, repair is complete. If system does not operate properly, go to step 2 .

TEST G: ENGINE OIL TEMPERATURE GAUGE INOPERATIVE

1. If IPC diagnostic system check was performed, go to next step. If IPC diagnostic system check was not performed, go to **INSTRUMENT PANEL CLUSTER DIAGNOSTIC SYSTEM CHECK** under SELF-DIAGNOSTIC SYSTEM. After performing IPC diagnostic system check, go to next step.
2. Using scan tool, select IPC data list and monitor OIL TEMP parameter. If correct oil temperature is displayed, go to next step. If correct oil temperature is not displayed, go to step 4 .
3. Compare scan tool IPC data parameters for engine oil temperature and Driver's Information Center (DIC) oil temperature display. If readings are within 10°F (-12°C), system is operating okay at this time. If readings are not within 10°F (-12°C), go to step 5 .
4. Replace oil temperature sensor. Oil temperature sensor is located above oil filer. See **Fig. 15** . After repairs, go to step 6 .
5. Replace IPC. See **INSTRUMENT PANEL CLUSTER** under REMOVAL & INSTALLATION. After repairs, go to next step.
6. Recheck system operation to verify the repair. If system operates properly, repair is complete. If system does not operate properly, go to step 2 .

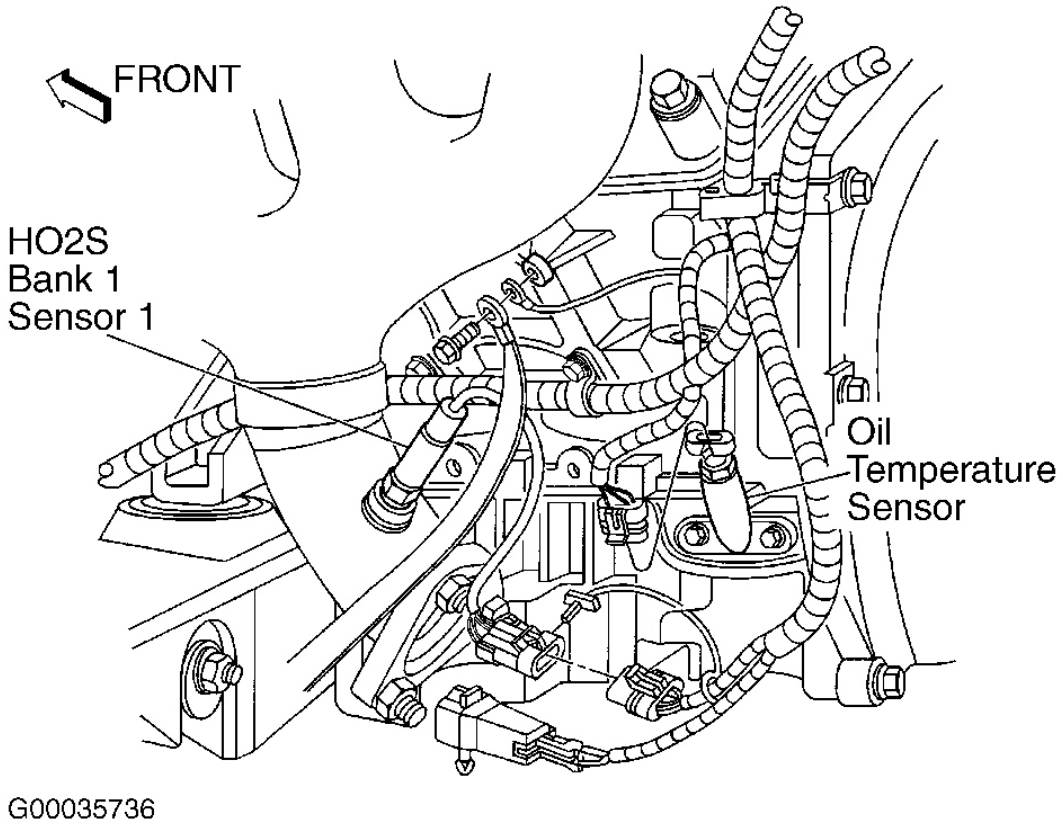

Fig. 15: Locating Engine Oil Temperature Sensor
Courtesy of GENERAL MOTORS CORP.

TEST H: FUEL GAUGE INACCURATE OR INOPERATIVE

1. If IPC diagnostic system check was performed, go to next step. If IPC diagnostic system check was not performed, go to **INSTRUMENT PANEL CLUSTER DIAGNOSTIC SYSTEM CHECK** under SELF-DIAGNOSTIC SYSTEM. After performing IPC diagnostic system check, go to next step.
2. Raise and support vehicle. Disconnect left (driver's) and right (passenger's) fuel level sensor connectors. Connect jumper wires between left fuel level sensor connector terminal "C" (Dark Blue wire) and right fuel level sensor connector terminal "C" (Light Blue wire). Connect Signal Generator And Instrument Panel Tester (J 33431-C) between left fuel level sensor connector terminals "B" (Gray wire) and "C" (Dark Blue wire). Vary resistance on signal generator and instrument panel tester 40-250 ohms. See **FUEL GAUGE RESISTANCE** table to aid in testing. If fuel gauge displays proper level at corresponding resistance, go to step 4 . If fuel gauge does not display proper level at corresponding

resistance, go to next step.

3. Turn ignition on and select PCM ENHANCED EVAP data list and monitor FUEL TANK LEVEL REMAINING percent. Vary resistance on signal generator and instrument panel tester 40-250 ohms. Turn ignition off momentarily between resistance settings to update scan tool display. If scan tool displays proper level at corresponding resistance, go to step 11 . If scan tool does not display proper level at corresponding resistance, go to step 5 .
4. Check for poor connection at fuel level sensor, high resistance in signal or low reference circuit for fuel level sensor, a misaligned fuel level sensor or deformed fuel tank. When checking for a deformed or warped fuel tank, measure resistance of suspect fuel level sensor at empty, with sensor in fuel tank, and again with sensor removed from fuel tank. Measured resistance values should be same at empty. If measured resistance values are not the same, replace fuel tank. Repair as necessary. After repairs, go to step 13 . If components are okay, go to step 7 .
5. Check for high resistance in Dark Blue wire between left fuel level sensor connector terminal "C" and PCM connector C2 terminal No. 54. See **Fig. 8** . Check for high resistance in Light Blue wire between right fuel level sensor connector terminal "C" and PCM connector C2 terminal No. 73. Repair as necessary. After repairs, go to step 13 . If circuit is okay, go to next step.
6. Check for high resistance in Gray wire between left fuel level sensor connector terminal "B", right fuel level sensor connector terminal "B", and PCM connector C1 terminal No. 23. Repair as necessary. After repairs, go to step 13 . If circuit is okay, go to step 9 .
7. Turn ignition off. Remove left and right fuel tank sending units. See **FUEL TANK SENDING UNITS** under REMOVAL & INSTALLATION. Check for stuck float arm or interference with pump body. Check for ice or other foreign particles. Repair as necessary. After repairs, go to step 13 . If fuel tank sending unit is okay, go to next step.
8. Using DVOM, measure resistance between both fuel level sensor connector terminals "B" and "C" (component side). Move fuel level sensor float arm from empty to full position, noting any fluctuations in resistance through out float arm range. At empty position, 250 ohms (+/- 2.4 ohms) should be measured. At full position, 40 ohms (+/- one ohm) should be measured. If resistance changes smoothly, ensure fuel level is in same range as customer concern or problem may be intermittent. To diagnose intermittent, go to INTERMITTENT TROUBLE CODE DETERMINATION in BODY CONTROL MODULES - CORVETTE article. If resistance does not change smoothly, go to step 10 .
9. Check for poor connections at PCM. Repair as necessary. After repairs, go to step 13 . If connections are okay, go to step .12
10. Replace faulty fuel tank sending unit. After repairs, go to step 13 .
11. Replace IPC. See **INSTRUMENT PANEL CLUSTER** under REMOVAL & INSTALLATION. After repairs, go to step 13 .

12. Replace PCM. See **POWERTRAIN CONTROL MODULE** under REMOVAL & INSTALLATION. After repairs, go to next step.
13. Recheck system operation to verify the repair. If system operates properly, repair is complete. If system does not operate properly, go to step 2 .

FUEL GAUGE RESISTANCE

Fuel Gauge Display	Resistance (ohms) (1)	Fuel Level (%)
E	24	4
1/4	43	30
1/2	57	64
3/4	95	74
F	125	96
Reserve Fuel Indicator On	30	17

(1) Resistance values only reflect specified fuel level when signal circuits for both primary (left) and secondary (right) fuel level senders are jumpered together.

TEST J: SPEEDOMETER AND/OR ODOMETER INACCURATE OR INOPERATIVE

1. If IPC diagnostic system check was performed, go to next step. If IPC diagnostic system check was not performed, go to **INSTRUMENT PANEL CLUSTER DIAGNOSTIC SYSTEM CHECK** under SELF-DIAGNOSTIC SYSTEM. After performing IPC diagnostic system check, go to next step.
2. Raise and support vehicle's drive wheels. Start engine and allow to idle. Place transmission into Drive (A/T) or 3rd gear (M/T). Using scan tool, select PCM ENGINE DATA 1 data list and monitor VEHICLE SPEED. If scan tool matches speedometer display, go to next step. If scan tool does not match speedometer display, go to step 4 .
3. If odometer operates properly, problem may be intermittent. To diagnose intermittent, go to INTERMITTENT TROUBLE CODE DETERMINATION in BODY CONTROL MODULES - CORVETTE article. If odometer does not operate properly, go to step 8 .
4. Turn ignition off. Locate and disconnect PCM connectors. See **Fig. 7** . Turn ignition on. Using DVOM, measure voltage between ground and PCM connector C2 terminal No. 50 (Dark Green/White wire). See **Fig. 8** . If voltage is more than 9.6 volts, go to step 6 . If voltage is less than 9.6 volts, go to next step.
5. Check for open, short to ground or high resistance in Dark Green/White wire between IPC connector C1 terminal A7 and PCM connector C2 terminal No. 50. See **Fig. 6** and **Fig. 8** . Repair as necessary. After repairs, go to step 10 . If circuit is okay, go to step 7 .
6. Check for poor connections at IPC connector. Repair as necessary. After repairs, go to step

10 . If connections are okay, go to step 8 .

7. Check for poor connections at PCM connectors. Repair as necessary. After repairs, go to step 10 . If connections are okay, go to step 9 .
8. Replace IPC. See **INSTRUMENT PANEL CLUSTER** under REMOVAL & INSTALLATION. After repairs, go to step 10 .
9. Replace PCM. See **POWERTRAIN CONTROL MODULE** under REMOVAL & INSTALLATION. After repairs, go to next step.
10. Recheck system operation to verify the repair. If system operates properly, repair is complete. If system does not operate properly, go to step 2 .

TEST K: TACHOMETER INACCURATE OR INOPERATIVE

1. If IPC diagnostic system check was performed, go to next step. If IPC diagnostic system check was not performed, go to **INSTRUMENT PANEL CLUSTER DIAGNOSTIC SYSTEM CHECK** under SELF-DIAGNOSTIC SYSTEM. After performing IPC diagnostic system check, go to next step.
2. Set parking brake and connect scan tool. Start engine and allow to idle. Using scan tool, select PCM Engine Data 1 data list and monitor ENGINE SPEED. If scan tool matches tachometer display, problem may be intermittent. To diagnose intermittent, go to INTERMITTENT TROUBLE CODE DETERMINATION in BODY CONTROL MODULES - CORVETTE article. If scan tool does not match tachometer display, go to next step.
3. Replace IPC. See **INSTRUMENT PANEL CLUSTER** under REMOVAL & INSTALLATION. After repairs, go to next step.
4. Recheck system operation to verify the repair. If system operates properly, repair is complete. If system does not operate properly, go to step 2 .

TEST L: TIRE PRESSURE GAUGE INOPERATIVE

1. If IPC diagnostic system check was performed, go to next step. If IPC diagnostic system check was not performed, go to **INSTRUMENT PANEL CLUSTER DIAGNOSTIC SYSTEM CHECK** under SELF-DIAGNOSTIC SYSTEM. After performing IPC diagnostic system check, go to next step.
2. Connect scan tool to Data Link Connector (DLC). Test drive vehicle greater than 25 MPH for 20 minutes or until tire pressure data is received. Using scan tool, select RFA data list and monitor TIRE PRESSURE. Scan tool will display 148 psi (1020 kPa) until tire pressure data is received. After tire pressure is received, tire pressure should be 0-62 psi (0-427 kPa). If tire pressure is as specified, go to next step. If tire pressure is not as specified, go to TIRE PRESSURE MONITORING DIAGNOSTIC SYSTEM CHECK in BODY

CONTROL MODULES - CORVETTE article.

3. Compare readings on scan tool with readings displayed on Driver's Information Center (DIC). If scan tool and DIC are within 5 psi (34 kPa), system is okay at this time. If scan tool and DIC are not within 5 psi (34 kPa), go to next step.
4. Replace IPC. See **INSTRUMENT PANEL CLUSTER** under REMOVAL & INSTALLATION. After repairs, go to next step.
5. Recheck system operation to verify the repair. If system operates properly, repair is complete. If system does not operate properly, go to step 2 .

TEST M: TRANSMISSION FLUID TEMPERATURE GAUGE INACCURATE OR INOPE INOPERATIVE

1. If IPC diagnostic system check was performed, go to next step. If IPC diagnostic system check was not performed, go to **INSTRUMENT PANEL CLUSTER DIAGNOSTIC SYSTEM CHECK** under SELF-DIAGNOSTIC SYSTEM. After performing IPC diagnostic system check, go to next step.
2. Turn ignition on. Using scan tool, select IPC data 1 list and monitor TRANS FLUID TEMP. If scan tool indicates transmission fluid temperature is -40 to 419°F (-40 to 215°C), go to next step. If scan tool indicates transmission fluid temperature is -40 to 419°F (-40 to 215°C), go to step 4 .
3. Monitor TRANS FLUID TEMP on scan tool and compare to transmission fluid temperature on Driver's Information Center (DIC). If scan tool and DIC readings are within 10°F (-12° C), go to next step. If scan tool and DIC readings are not within 10°F (-12°C), go to step 6 .
4. Check for poor connections at PCM. Repair as necessary. After repairs, go to step 7 . If connections are okay, go to next step.
5. Replace PCM. See **POWERTRAIN CONTROL MODULE** under REMOVAL & INSTALLATION. After repairs, go to step 7 .
6. Replace IPC. See **INSTRUMENT PANEL CLUSTER** under REMOVAL & INSTALLATION. After repairs, go to next step.
7. Recheck system operation to verify the repair. If system operates properly, repair is complete. If system does not operate properly, go to step 2 .

TEST N: VOLT GAUGE INOPERATIVE

1. If IPC diagnostic system check was performed, go to next step. If IPC diagnostic system check was not performed, go to **INSTRUMENT PANEL CLUSTER DIAGNOSTIC SYSTEM CHECK** under SELF-DIAGNOSTIC SYSTEM. After performing IPC diagnostic system check, go to next step.

2. Using scan tool, select IPC SPECIAL FUNCTIONS and perform gauge sweep. See **SCAN TOOL** under SELF-DIAGNOSTIC SYSTEM. If volt gauge responds as commanded, problem is intermittent, go to next step. If volt gauge does not respond as commanded, go to step 6 .
3. Select IPC DATA LIST and monitor IGNITION 1 parameter on scan tool. If ignition 1 is 8-16 volts, go to next step. If ignition 1 is not 8-16 volts, go to step 5 .
4. Compare IGNITION 1 display and instrument panel cluster voltage gauge. If readings are within 0.5 volt, system is operating okay at this time. If readings are not within 0.5 volt, go to step 6 .
5. Check for open or short to ground in Pink wire between IPC connector terminal A13 and IPC fuse No. 19 (10-amp) located in instrument panel fuse block. See **Fig. 6** . Repair as necessary. After repairs, go to step 7 . If circuit is okay, go to next step.
6. Replace IPC. See **INSTRUMENT PANEL CLUSTER** under REMOVAL & INSTALLATION. After repairs, go to next step.
7. Recheck system operation to verify the repair. If system operates properly, repair is complete. If system does not operate properly, go to step 2 .

TEST O: HEAD-UP DISPLAY IMAGE ADJUSTMENT INOPERATIVE

1. If IPC diagnostic system check was performed, go to next step. If IPC diagnostic system check was not performed, go to **INSTRUMENT PANEL CLUSTER DIAGNOSTIC SYSTEM CHECK** under SELF-DIAGNOSTIC SYSTEM. After performing IPC diagnostic system check, go to next step.
2. Operate HUD DISPLAY button upward and downward to move image up and down on windshield. If display does not move up and down, go to next step. If display moves up and down, problem may be intermittent. To diagnose intermittent, go to INTERMITTENT TROUBLE CODE DETERMINATION in BODY CONTROL MODULES - CORVETTE article.
3. Turn ignition off. Disconnect HUD display connector. See **HEAD-UP DISPLAY UNIT** under REMOVAL & INSTALLATION. Connect test light between HUD display connector terminals No. 2 (Gray wire) and No. 7 (Black wire). Turn ignition on. Operate HUD DISPLAY button upward. If test light illuminates, go to next step. If test light does not illuminate, go to step 5 .
4. Connect test light between HUD display connector terminals No. 1 (Orange wire) and No. 7 (Black wire). Turn ignition on. Operate HUD DISPLAY button downward. If test light illuminates, go to step 9 . If test light does not illuminate, go to step 6 .
5. Check for open or high resistance in Gray wire between HUD display and IPC. Check for open or high resistance in Gray wire between HUD switch and IPC. Repair as necessary.

After repairs, go to step 12 . If circuits are okay, go to step 7 .

6. Check for open or high resistance in Orange wire between HUD display and IPC. Check for open or high resistance in Orange wire between HUD switch and IPC. Repair as necessary. After repairs, go to step 12 . If circuits are okay, go to next step.
7. Check for poor connections at HUD switch. Repair as necessary. After repairs, go to step 12 . If connections are okay, go to next step.
8. Replace HUD switch. See **DRIVER INFORMATION CENTER & HEAD-UP DISPLAY CONTROL SWITCHES** under REMOVAL & INSTALLATION. After repairs, go to step 12 .
9. Check for poor connections at HUD display. Repair as necessary. After repairs, go to step 12 . If connections are okay, go to next step.
10. Replace HUD display. See **HEAD-UP DISPLAY UNIT** under REMOVAL & INSTALLATION. After repairs, go to step 12 .
11. Replace IPC. See **INSTRUMENT PANEL CLUSTER** under REMOVAL & INSTALLATION. After repairs, go to next step.
12. Recheck system operation to verify the repair. If system operates properly, repair is complete. If system does not operate properly, go to step 2 .

TEST P: HEAD-UP DISPLAY INOPERATIVE

1. If IPC diagnostic system check was performed, go to next step. If IPC diagnostic system check was not performed, go to **INSTRUMENT PANEL CLUSTER DIAGNOSTIC SYSTEM CHECK** under SELF-DIAGNOSTIC SYSTEM. After performing IPC diagnostic system check, go to next step.
2. Turn ignition off. Move HUD display dimmer switch to maximum position. See **Fig. 2** . Turn ignition on. If all segments of HUD display on windshield come on and turn off in 3.5 seconds, system is operating properly at this time. If HUD does not operate as specified, go to next step.
3. If HUD displays 2 dashes only, go to next step. If HUD does not display 2 dashes, go to step 5 .
4. Disconnect HUD display connector. See **HEAD-UP DISPLAY UNIT** under REMOVAL & INSTALLATION. Disconnect IPC. See **INSTRUMENT PANEL CLUSTER** under REMOVAL & INSTALLATION. Check for open or short to ground in Black wire (clock circuit) between IPC connector terminal No. 4 and HUD display connector terminal No. 5. Repair as necessary. After repairs, go to step 18 . If circuit is okay, go to step 6 .
5. Check for open or short to voltage in Black wire (ground circuit) between IPC connector terminal No. 1 and HUD display connector terminal No. 8. Repair as necessary. After

repairs, go to step 18 . If circuit is okay, go to step 8 .

6. Check for open or short to ground in Black wire (data circuit) between IPC connector terminal No. 5 and HUD display connector terminal No. 4. Repair as necessary. After repairs, go to step 18 . If circuit is okay, go to next step.
7. Check for open or short to ground in Black wire (strobe circuit) between IPC connector terminal No. 6 and HUD display connector terminal No. 3. Repair as necessary. After repairs, go to step 18 . If circuit is okay, go to step 13 .
8. Check for open or short to ground in Black wire (ignition 1 circuit) between IPC connector terminal No. 2 and HUD display connector terminal No. 7. Repair as necessary. After repairs, go to step 18 . If circuit is okay, go to next step.
9. Check for open in Black wire (HUD dimmer signal circuit) between IPC connector terminal No. 3 and HUD display connector terminal No. 6. Repair as necessary. After repairs, go to step 18 . If circuit is okay, go to next step.
10. Disconnect HUD switch. See **DRIVER INFORMATION CENTER & HEAD-UP DISPLAY CONTROL SWITCHES** under REMOVAL & INSTALLATION. Check for open in Black wire between IPC connector terminal No. 3 and HUD switch connector terminal No. 1. Repair as necessary. After repairs, go to step 18 . If circuit is okay, go to next step.
11. Check for open in Purple wire between IPC connector terminal No. 10 and HUD switch connector terminal No. 10. Repair as necessary. After repairs, go to step 18 . If circuit is okay, go to next step.
12. Check for open in Light Blue wire between IPC connector terminal No. 11 and HUD switch connector terminal No. 11. Repair as necessary. After repairs, go to step 18 . If circuit is okay, go to next step.
13. Check for poor connections at HUD switch and IPC connectors. Repair as necessary. After repairs, go to step 18 . If connections are okay, go to next step.
14. Check for poor connections at HUD display and IPC connectors. Repair as necessary. After repairs, go to step 18 . If connections are okay, go to next step.
15. Replace HUD switch. See **DRIVER INFORMATION CENTER & HEAD-UP DISPLAY CONTROL SWITCHES** under REMOVAL & INSTALLATION. If HUD operates properly, go to step 18 . If HUD does not operate properly, go to next step.
16. Replace HUD display. See **HEAD-UP DISPLAY UNIT** under REMOVAL & INSTALLATION. If HUD operates properly, go to step 18 . If HUD does not operate properly, go to next step.
17. Replace IPC. See **INSTRUMENT PANEL CLUSTER** under REMOVAL & INSTALLATION. After repairs, go to next step.
18. Recheck system operation to verify the repair. If system operates properly, repair is

complete. If system does not operate properly, go to step 2 .

TEST Q: HEAD-UP DISPLAY INTENSITY DOES NOT CHANGE

1. If IPC diagnostic system check was performed, go to next step. If IPC diagnostic system check was not performed, go to **INSTRUMENT PANEL CLUSTER DIAGNOSTIC SYSTEM CHECK** under SELF-DIAGNOSTIC SYSTEM. After performing IPC diagnostic system check, go to next step.
2. Turn ignition on. Move HUD display dimmer switch to maximum position then back to dim. See **Fig. 2** . If HUD display dims properly, problem may be intermittent. To diagnose intermittent, go to INTERMITTENT TROUBLE CODE DETERMINATION in BODY CONTROL MODULES - CORVETTE article. If HUD does not dim properly, go to next step.
3. Turn ignition off. Disconnect HUD display connector. See **HEAD-UP DISPLAY UNIT** under REMOVAL & INSTALLATION. Turn ignition on. Connect test light between HUD display connector terminals No. 6 (Black wire) and No. 7 (Black wire). Move HUD display dimmer switch to maximum position then back to dim. If test light dims properly with switch, go to step 6 . If test light does not dim properly with switch, go to next step.
4. Check for short to ground in Black wire between HUD display connector terminal No. 6 and IPC connector terminal No. 3. Repair as necessary. After repairs, go to step 8 . If circuit is okay, go to next step.
5. Replace HUD switch. See **DRIVER INFORMATION CENTER & HEAD-UP DISPLAY CONTROL SWITCHES** under REMOVAL & INSTALLATION. If HUD operates properly, go to step 8 . If HUD does not operate properly, go to next step.
6. Replace HUD display. See **HEAD-UP DISPLAY UNIT** under REMOVAL & INSTALLATION. If HUD operates properly, go to step 8 . If HUD does not operate properly, go to next step.
7. Replace IPC. See **INSTRUMENT PANEL CLUSTER** under REMOVAL & INSTALLATION. After repairs, go to next step.
8. Recheck system operation to verify the repair. If system operates properly, repair is complete. If system does not operate properly, go to step 2 .

TEST R: HEAD-UP DISPLAY HAZARD INDICATORS INOPERATIVE

1. If IPC diagnostic system check was performed, go to next step. If IPC diagnostic system check was not performed, go to **INSTRUMENT PANEL CLUSTER DIAGNOSTIC SYSTEM CHECK** under SELF-DIAGNOSTIC SYSTEM. After performing IPC diagnostic system check, go to next step.

2. Check operation of IPC hazard indicators. If IPC hazard indicators are operating properly, problem may be intermittent. To diagnose intermittent, go to INTERMITTENT TROUBLE CODE DETERMINATION in BODY CONTROL MODULES - CORVETTE article. If HUD does not dim properly, go to next step. If IPC hazard indicators are not operating properly, go to next step.
3. Turn ignition off. Disconnect IPC connectors. See **INSTRUMENT PANEL CLUSTER** under REMOVAL & INSTALLATION. Turn ignition on. Turn hazard switch on. Connect test light between ground and IPC connector terminal B6 (Gray/Black wire). See **Fig. 6** . If test light illuminates, go to next step. If test light does not illuminate, go to step 5 .
4. Replace IPC. See **INSTRUMENT PANEL CLUSTER** under REMOVAL & INSTALLATION. After repairs, go to step 7 .
5. Disconnect hazard warning switch connector. See **HAZARD WARNING SWITCH** under REMOVAL & INSTALLATION. Check for open in Gray/Black wire between IPC connector terminal B6 and hazard warning switch connector terminal "E". Repair as necessary. After repairs, go to step 7 . If circuit is okay, go to next step.
6. Replace hazard warning switch. After repairs, go to next step.
7. Recheck system operation to verify the repair. If system operates properly, repair is complete. If system does not operate properly, go to step 3 .

TEST S: CHANGE OIL INDICATOR ALWAYS ON

1. If IPC diagnostic system check was performed, go to next step. If IPC diagnostic system check was not performed, go to **INSTRUMENT PANEL CLUSTER DIAGNOSTIC SYSTEM CHECK** under SELF-DIAGNOSTIC SYSTEM. After performing IPC diagnostic system check, go to next step.
2. Turn ignition on. Using scan tool, select PCM 3 data list and monitor ENGINE OIL LIFE PERCENT. If scan tool displays zero percent with change engine oil message on, go to next step. If scan tool does not display zero percent with change engine oil message on, go to step 4 .
3. Reset engine oil life index. See **OIL LIFE INDEX RESET** under PROGRAMMING. After completing reset procedure, go to step 5 .
4. Replace IPC. See **INSTRUMENT PANEL CLUSTER** under REMOVAL & INSTALLATION. After repairs, go to next step.
5. Turn ignition on. Using scan tool, select PCM 3 data list and monitor ENGINE OIL LIFE PERCENT. If scan tool displays 100 percent with change engine oil message off, system is okay. If scan tool does not displays 100 percent with change engine oil message off, go to POWERTRAIN DIAGNOSTIC SYSTEM CHECK under DIAGNOSTIC SYSTEM CHECKS in SELF-DIAGNOSTICS - 5.7L CORVETTE article in ENGINE

PERFORMANCE.

TEST T: CHANGE OIL INDICATOR INOPERATIVE

1. If IPC diagnostic system check was performed, go to next step. If IPC diagnostic system check was not performed, go to **INSTRUMENT PANEL CLUSTER DIAGNOSTIC SYSTEM CHECK** under SELF-DIAGNOSTIC SYSTEM. After performing IPC diagnostic system check, go to next step.
2. Turn ignition on. Using scan tool, select PCM 3 data list and monitor ENGINE OIL LIFE PERCENT. If scan tool displays zero percent with change engine oil message inoperative, go to next step. If scan tool does not display zero percent with change engine oil message inoperative, system is okay at this time.
3. Replace IPC. See **INSTRUMENT PANEL CLUSTER** under REMOVAL & INSTALLATION. After repairs, go to next step.
4. Recheck system operation to verify the repair. If system operates properly, repair is complete. If system does not operate properly, go to step 2 .

TEST U: CHECK GAUGES INDICATOR INOPERATIVE

1. If IPC diagnostic system check was performed, go to next step. If IPC diagnostic system check was not performed, go to **INSTRUMENT PANEL CLUSTER DIAGNOSTIC SYSTEM CHECK** under SELF-DIAGNOSTIC SYSTEM. After performing IPC diagnostic system check, go to next step.
2. Start engine and observe check gauges indicator. If check gauges indicator illuminates during bulb check, problem may be intermittent. To diagnose intermittent, go to INTERMITTENT TROUBLE CODE DETERMINATION in BODY CONTROL MODULES - CORVETTE article. If check gauges indicator does not illuminate during bulb check, go to next step.
3. Connect scan tool to DLC. Turn ignition on. Select IPC special functions on scan tool. Command IPC indicators on. If CHECK GAUGES indicator turns on, go to POWERTRAIN DIAGNOSTIC SYSTEM CHECK under DIAGNOSTIC SYSTEM CHECKS in SELF-DIAGNOSTICS - 5.7L CORVETTE article in ENGINE PERFORMANCE. If CHECK GAUGES indicator does not turn on, go to next step.
4. Replace IPC. See **INSTRUMENT PANEL CLUSTER** under REMOVAL & INSTALLATION. After repairs, go to next step.
5. Recheck system operation to verify the repair. If system operates properly, repair is complete. If system does not operate properly, go to step 3 .

TEST V: DOOR AJAR INDICATOR INOPERATIVE

1. If power door systems diagnostic system check has been performed, go to next step. If power door systems diagnostic system check has been performed, go to POWER DOOR SYSTEMS DIAGNOSTIC SYSTEM CHECK under SELF-DIAGNOSTIC SYSTEM in BODY CONTROL MODULES - CORVETTE article. After performing power door systems diagnostic system check, go to next step.
2. Verify operation of door ajar indicator by opening each door separately while engine is running. If door ajar message is present, problem may be intermittent. To diagnose intermittent, go to INTERMITTENT TROUBLE CODE DETERMINATION in BODY CONTROL MODULES - CORVETTE article. If door ajar message is not present, go to next step.
3. Turn ignition off. Disconnect suspect door latch 4-pin connector C2. For driver's door, connect a fused jumper wire between suspect door latch connector C2 terminal "B" (Gray/Black wire) and ground. See **Fig. 16** . For passenger's door, connect a fused jumper wire between suspect door latch connector C2 terminal "C" (Black/White wire) and ground. On all applications, turn ignition on. If door ajar indicator illuminates, go to next step. If door ajar indicator does not illuminate, go to step 5 .
4. Turn ignition off. For driver's door, connect a fused jumper wire between suspect door latch connector C2 terminals "B" (Gray/Black wire) and "D" (Black wire). For passenger's door, connect a fused jumper wire between suspect door latch connector C2 terminals "A" (Black wire) and "C" (Black/White wire). On all applications, turn ignition on. If door ajar indicator illuminates, go to step 8 . If door ajar indicator does not illuminate, go to step 10 .
5. Check for open in Gray/Black or Black/White wire between suspect door latch, suspect Door Control Module (DCM) and Body Control Module (BCM). See WIRING DIAGRAMS in ANTI-THEFT SYSTEMS - CORVETTE article. Repair as necessary. After repairs, go to step 14 . If circuit is okay, go to next step.
6. Reconnect door latch connector C2. Connect scan tool to Data Link Connector (DLC). Turn ignition on. Select BODY CONTROL MODULE INPUT DATA 2 data list and monitor suspect door ajar switch. Open suspect door. If scan tool indicates CLOSED, go to step 8 . If scan tool does not indicate CLOSED, go to step 9 .
7. Check for poor connections at suspect door latch. Repair as necessary. After repairs, go to step 14 . If circuit is okay, go to step 11 .
8. Check for poor connections at BCM connectors. BCM is located under passenger's toe board. See **Fig. 17** . Repair as necessary. After repairs, go to step 14 . If circuit is okay, go to step 12 .
9. Check for poor connections at IPC connectors. Repair as necessary. After repairs, go to step 14 . If circuit is okay, go to step 13 .
10. Repair open in Black wire between suspect door latch and ground. See WIRING DIAGRAMS in ANTI-THEFT SYSTEMS - CORVETTE article. After repairs, go to step

14 .

11. Replace suspect door latch. See DOOR LATCH under REMOVAL & INSTALLATION in POWER DOOR LOCKS - CORVETTE article. After repairs, go to step 14 .
12. Replace BCM. See BODY CONTROL MODULE under REMOVAL & INSTALLATION in BODY CONTROL MODULES - CORVETTE article. After repairs, go to step 14 .
13. Replace IPC. See **INSTRUMENT PANEL CLUSTER** under REMOVAL & INSTALLATION. After repairs, go to next step.
14. Recheck system operation to verify the repair. If system operates properly, repair is complete. If system does not operate properly, go to step 2 .

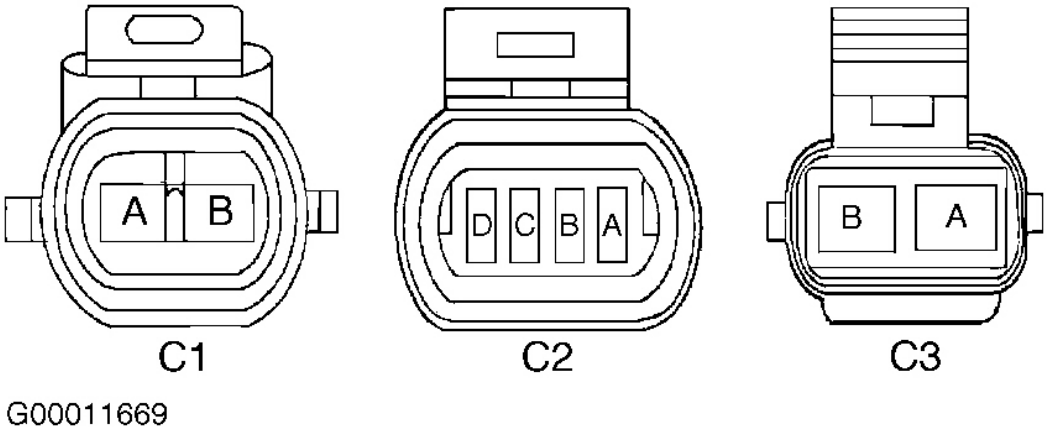

Fig. 16: Identifying Door Latch Connector Terminals
Courtesy of GENERAL MOTORS CORP.

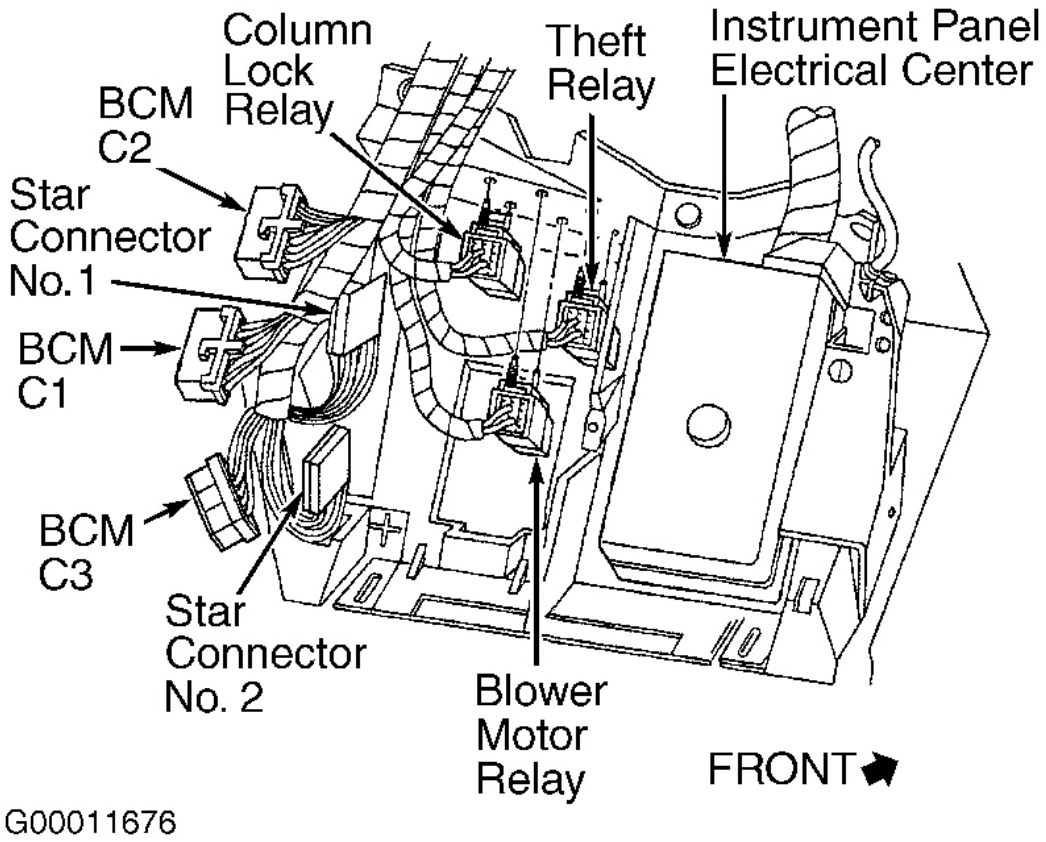

Fig. 17: Locating Body Control Module (BCM) & Star Connectors
Courtesy of GENERAL MOTORS CORP.

TEST W: ENGINE OIL TEMPERATURE INDICATOR ALWAYS ON

1. If IPC diagnostic system check was performed, go to next step. If IPC diagnostic system check was not performed, go to **INSTRUMENT PANEL CLUSTER DIAGNOSTIC SYSTEM CHECK** under SELF-DIAGNOSTIC SYSTEM. After performing IPC diagnostic system check, go to next step.
2. Verify high oil temperature message is present on Driver's Information Center (DIC). If high oil temperature message is not present, problem may be intermittent. To diagnose intermittent, go to INTERMITTENT TROUBLE CODE DETERMINATION in BODY CONTROL MODULES - CORVETTE article. If high oil temperature message is present, go to next step.
3. Connect scan tool to Data Link Connector (DLC). Turn ignition on. Select IPC DATA 1

data list and monitor OIL TEMP. If oil temperature is less than 320°F (160°C), go to next step. If oil temperature is more than 320°F (160°C), go to step 5 .

4. Replace IPC. See **INSTRUMENT PANEL CLUSTER** under REMOVAL & INSTALLATION. After repairs, go to step 7 .
5. Turn ignition off. Disconnect IPC connector. See **INSTRUMENT PANEL CLUSTER** under REMOVAL & INSTALLATION. Check for high resistance in Dark Gray/White wire between IPC connector terminal A10 and engine oil temperature sensor. See **Fig. 6** and **Fig. 15** . Repair as necessary. After repairs, go to step 7 . If circuit is okay, go to next step.
6. Replace engine oil temperature sensor. After repairs, go to next step.
7. Recheck system operation to verify the repair. If system operates properly, repair is complete. If system does not operate properly, go to step 3 .

TEST X: FOGLIGHT INDICATOR INOPERATIVE

NOTE: For circuit identification, see EXTERIOR LIGHTS article.

1. If lighting system diagnostic system check has been performed, go to next step. If lighting system diagnostic system check has not been performed, see LIGHTING SYSTEM DIAGNOSTIC SYSTEM CHECK under SELF-DIAGNOSTIC SYSTEM in BODY CONTROL MODULES - CORVETTE article. After performing lighting system diagnostic system check, go to next step.
2. Turn ignition on. Turn parking lights on. Turn foglights on by depressing button on foglight/release switch. If foglight indicator operates properly, problem may be intermittent. To diagnose intermittent, go to INTERMITTENT TROUBLE CODE DETERMINATION in BODY CONTROL MODULES - CORVETTE article. If foglight indicator does not operate properly, go to next step.
3. With foglights on, using test light connected to ground, backprobe underhood fuse block connector C2 terminal D1 (Purple wire). See **Fig. 9** and **Fig. 10** . If test light illuminates, go to next step. If test light does not illuminate, go to step 7 .
4. Remove foglight/release switch. See **FOGLIGHT/REAR HATCH SWITCH** under REMOVAL & INSTALLATION. With foglights on, backprobe foglight/release switch connector terminal No. 5 (Purple wire). If test light illuminates, go to step 6 . If test light does not illuminate, go to next step.
5. Repair poor connection or open in Purple wire between foglight/release switch and underhood fuse block. After repairs, go to step 8 .
6. Replace foglight/release switch. After repairs, go to step 8 .
7. Replace underhood fuse block. After repairs, go to next step.

8. Recheck system operation to verify the repair. If system operates properly, repair is complete. If system does not operate properly, go to step 3 .

TEST Y: HIGH BEAM INDICATOR INOPERATIVE

NOTE: For circuit identification, see HEADLIGHT SYSTEMS & DAYTIME RUNNING LIGHTS article.

1. If lighting system diagnostic system check has been performed, go to next step. If lighting system diagnostic system check has not been performed, see LIGHTING SYSTEM DIAGNOSTIC SYSTEM CHECK under SELF-DIAGNOSTIC SYSTEM in BODY CONTROL MODULES - CORVETTE article. After performing lighting system diagnostic system check, go to next step.
2. Turn headlights on. Turn ignition on. Select high beams by pulling back on turn signal lever. If high beam indicator comes on, problem may be intermittent. To diagnose intermittent, go to INTERMITTENT TROUBLE CODE DETERMINATION in BODY CONTROL MODULES - CORVETTE article. If high beam indicator does not come on, go to next step.
3. Turn headlights off. Turn ignition off. Locate 23-pin connector C209. C209 is located on left side of steering column, attached to lower instrument panel bar. Using a test light connected to ground, backprobe connector C209 terminal "K" (Light Green wire). Turn headlights on. Turn ignition on. Select high beams. If test light illuminates, go to next step. If test light does not illuminate, go to step 5 .
4. Check for poor connections at IPC. Repair as necessary. After repairs, go to step 7 . If connections are okay, go to step 6 .
5. Repair poor connection or open in Light Green wire between connector C209 and IPC connector terminal A2. See **Fig. 6** . After repairs, go to step 7 .
6. Replace IPC. See **INSTRUMENT PANEL CLUSTER** under REMOVAL & INSTALLATION. After repairs, go to next step.
7. Recheck system operation to verify the repair. If system operates properly, repair is complete. If system does not operate properly, go to step 2 .

TEST Z: LOW ENGINE OIL LEVEL INDICATOR ALWAYS ON

1. If IPC diagnostic system check was performed, go to next step. If IPC diagnostic system check was not performed, go to **INSTRUMENT PANEL CLUSTER DIAGNOSTIC SYSTEM CHECK** under SELF-DIAGNOSTIC SYSTEM. After performing IPC diagnostic system check, go to next step.

2. Verify low oil level message is present on Driver's Information Center (DIC). If low oil level message is not present, problem may be intermittent. To diagnose intermittent, go to INTERMITTENT TROUBLE CODE DETERMINATION in BODY CONTROL MODULES - CORVETTE article. If low oil level message is present, go to next step.
3. Connect scan tool to Data Link Connector (DLC). Turn ignition on. Select IPC DATA 2 data list and monitor LOW OIL LEVEL. If low oil level is NO, go to next step. If low oil level is not NO, go to step 5 .
4. Replace IPC. See **INSTRUMENT PANEL CLUSTER** under REMOVAL & INSTALLATION. After repairs, go to step 10 .
5. Turn ignition off. Locate PCM and disconnect connectors. See **Fig. 7** . Turn ignition on. Connect test light between ground and PCM connector C1 terminal No. 70 (Brown wire). See **Fig. 8** . If test light illuminates, go to next step. If test light does not illuminate, go to step 7 .
6. Observe test light. Locate engine oil level sensor and disconnect. Engine oil level sensor is located on right side of oil pan. If test light is illuminated, go to step 8 . If test light is not illuminated, go to step 9 .
7. Replace PCM. See **POWERTRAIN CONTROL MODULE** under REMOVAL & INSTALLATION. After repairs, go to step 10 .
8. Repair short to ground in Brown wire between PCM connector C1 terminal No. 70 and engine oil level sensor. See **Fig. 8** . After repairs, go to step 10 .
9. Replace engine oil level sensor. After repairs, go to next step.
10. Recheck system operation to verify the repair. If system operates properly, repair is complete. If system does not operate properly, go to step 3 .

TEST AA: MPH (KM/H) INDICATOR INOPERATIVE

1. If IPC diagnostic system check was performed, go to next step. If IPC diagnostic system check was not performed, go to **INSTRUMENT PANEL CLUSTER DIAGNOSTIC SYSTEM CHECK** under SELF-DIAGNOSTIC SYSTEM. After performing IPC diagnostic system check, go to next step.
2. Turn ignition off and back on. If MPH or Km/h indicator illuminate during bulb check, problem may be intermittent. To diagnose intermittent, go to INTERMITTENT TROUBLE CODE DETERMINATION in BODY CONTROL MODULES - CORVETTE article. If MPH or Km/h indicator do not illuminate during bulb check, go to next step.
3. Replace IPC. See **INSTRUMENT PANEL CLUSTER** under REMOVAL & INSTALLATION. After repairs, go to next step.
4. Recheck system operation to verify the repair. If system operates properly, repair is

complete. If system does not operate properly, go to step 2 .

TEST AB: SEAT BELT INDICATOR INOPERATIVE

1. Check operation of seat belts. If seat belts operate properly, go to next step. If seat belts do not operate properly, diagnose and repair as necessary.
2. Turn ignition on. Monitor fasten seat belt indicator on IPC while buckling and unbuckling seat belt. If fasten seat belt indicator turns on and off as seat belt is buckled and unbuckled, problem may be intermittent. To diagnose intermittent, go to INTERMITTENT TROUBLE CODE DETERMINATION in BODY CONTROL MODULES - CORVETTE article. If fasten seat belt indicator does not turn on and off as seat belt is buckled and unbuckled, go to next step.
3. Disconnect driver's seat belt switch at base of seat belt buckle. Turn ignition on. If fasten seat belt indicator is illuminated, go to step 7 . If fasten seat belt indicator is not illuminated, go to next step.
4. Connect 3-amp fused jumper between seat belt switch connector terminals. Turn ignition on. If fasten seat belt indicator is illuminated, go to step 8 . If fasten seat belt indicator is not illuminated, go to next step.
5. Check for open or high resistance in Black/White wire between seat belt switch connector and IPC connector terminal B2. See **Fig. 6** . Repair as necessary. After repairs, go to step 10 . If circuit is okay, go to next step.
6. Check for open or high resistance in Black wire between seat belt switch connector and ground connection located above left rear wheel, inside vehicle. Repair as necessary. After repairs, go to step 10 . If circuit is okay, go to step 9 .
7. Check for short to ground in Black/White wire between seat belt switch connector and IPC connector terminal B2. See **Fig. 6** . Repair as necessary. After repairs, go to step 10 . If circuit is okay, go to step 9 .
8. Replace driver's seat belt buckle. After repairs, go to step 10 .
9. Replace IPC. See **INSTRUMENT PANEL CLUSTER** under REMOVAL & INSTALLATION. After repairs, go to next step.
10. Recheck system operation to verify the repair. If system operates properly, repair is complete. If system does not operate properly, go to step 3 .

TEST AC: TURN SIGNAL INDICATORS AND/OR LIGHTS INOPERATIVE

NOTE: Turn signal switch is also referred to as multifunction switch.

1. If lighting system diagnostic system check has been performed, go to next step. If lighting

system diagnostic system check has not been performed, see LIGHTING SYSTEM DIAGNOSTIC SYSTEM CHECK under SELF-DIAGNOSTIC SYSTEM in BODY CONTROL MODULES - CORVETTE article. After performing lighting system diagnostic system check, go to next step.

2. Turn ignition on. Place turn signal lever in left and right turn signal positions while monitoring IPC turn signal indicators and exterior lights. If IPC turn signal indicators and exterior lights flash, problem may be intermittent. To diagnose intermittent, go to INTERMITTENT TROUBLE CODE DETERMINATION in BODY CONTROL MODULES - CORVETTE article. If IPC turn signal indicators and exterior lights do not flash, go to next step.
3. If only IPC turn signal indicators are inoperative, go to step 5 . If not only IPC turn signal indicators are inoperative, go to next step.
4. If all exterior lights are inoperative, go to step 6 . If not all exterior lights are inoperative, go to step 13 .
5. Ensure turn signal lever is at inoperative position. Using test light connected to ground, backprobe IPC connector terminal for inoperative indicator. For left turn signal indicator, probe IPC connector terminal A15 (Light Blue wire). For right turn signal indicator, probe IPC connector terminal A16 (Dark Blue wire). See **Fig. 6** . If test light flashes, go to step 8 . If test light does not flash, go to step 11 .
6. Locate and disconnect 10-pin connector C215. C215 is located behind hazard warning switch. Using a test light connected to ground, probe connector C215 terminal "C" (Pink wire). Turn ignition on. If test light illuminates, go to next step. If test light does not illuminate, go to step 12 .
7. Turn ignition off. Using a test light, probe between C215 terminals "C" (Pink wire) and "H" (Purple wire). Turn ignition on. If test light illuminates, go to step 9 . If test light does not illuminate, go to step 10 .
8. Check for poor connections at IPC. Repair as necessary. After repairs, go to step 17 . If connections are okay, go to step 14 .
9. Check for poor connections at hazard warning switch. Repair as necessary. After repairs, go to step 17 . If connections are okay, go to step 15 .
10. Check for poor connections at turn signal switch. Repair as necessary. After repairs, go to step 17 . If connections are okay, go to step 16 .
11. Repair open or high resistance in Light Blue or Dark Blue wire. After repairs, go to step 17 .
12. Repair open or high resistance in battery positive voltage feed circuit to HAZT/SG fuse No. 15 (20-amp) located in instrument panel fuse block. After repairs, go to step 17 .
13. Repair open or high resistance in inoperative turn signal light power supply or ground

circuit. See appropriate wiring diagram in EXTERIOR LIGHTS article. After repairs, go to step 17 .

14. Replace IPC. See **INSTRUMENT PANEL CLUSTER** under REMOVAL & INSTALLATION. After repairs, go to step 17 .
15. Replace hazard warning switch. After repairs, go to step 17 .
16. Replace turn signal switch. See MULTIFUNCTION SWITCH under REMOVAL & INSTALLATION in STEERING COLUMN SWITCHES - CORVETTE article. After repairs, go to next step.
17. Recheck system operation to verify the repair. If system operates properly, repair is complete. If system does not operate properly, go to step 3 .

REMOVAL & INSTALLATION

WARNING: Deactivate air bag system before performing any service operation. See appropriate AIR BAG RESTRAINT SYSTEMS article. DO NOT apply electrical power to any component on steering column without first deactivating air bag system. Air bag may deploy.

NOTE: When battery is disconnected, Remote Keyless Entry (RKE) transmitters will need to be reprogrammed. See REMOTE KEYLESS ENTRY SYSTEMS - CORVETTE article for programming procedures.

CENTER CONSOLE

Removal & Installation

1. Open console door. Pull up on rear of Traction Control Switch (TCS) switch to release it from retaining clips (if switch does not release from trip plate, use screwdriver in recess at rear of switch). Disconnect TCS connector. Remove TCS switch.
2. Using small flat-blade screwdriver, carefully remove console retaining nut covers. Remove front and rear console nuts. Remove instrument panel accessory trim plate nuts. Lift rear of console slightly and pull rearward to release front of console.
3. Disconnect electrical accessory plug connector. Unscrew electrical accessory plug retainer from housing. Remove electrical accessory plug housing from console. Disconnect fuel door release switch connector. Remove fuel door release switch. Turn console over. Using small flat-blade screwdriver, carefully release switch tabs. Remove console from vehicle. See **Fig. 18** .

4. To install, reverse removal procedure. Tighten console retaining nuts to 89 INCH lbs. (10 N.m).

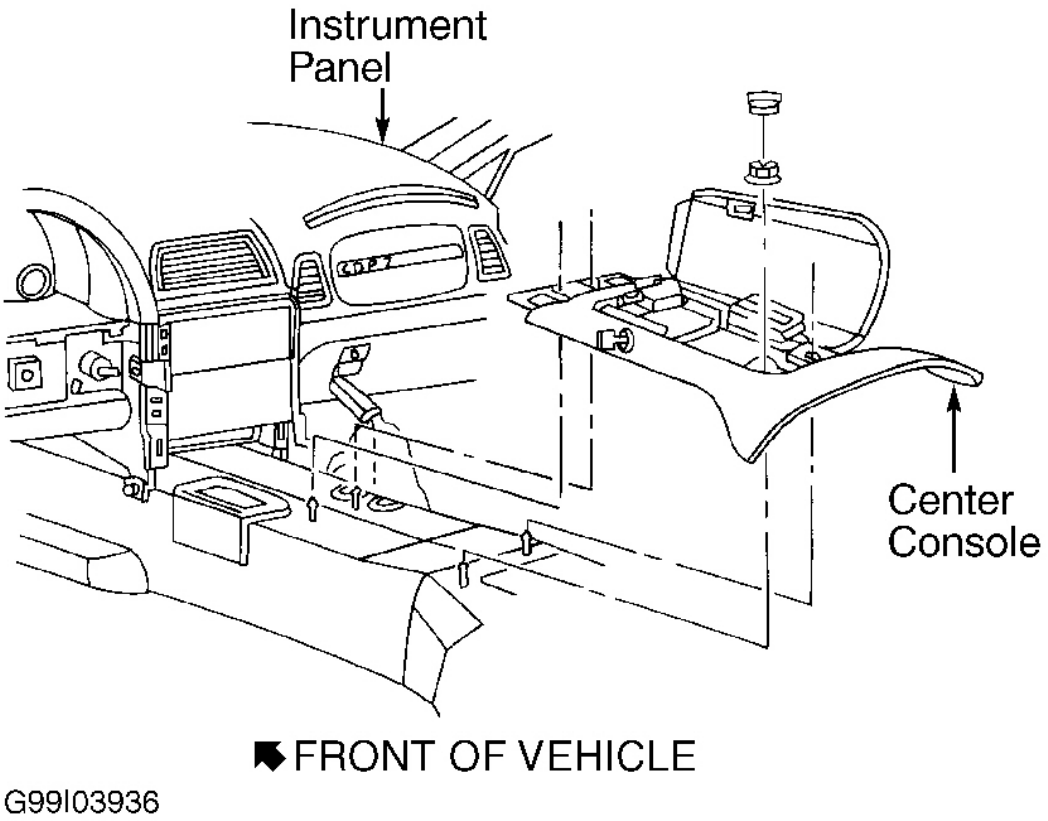

Fig. 18: Removing Center Console
Courtesy of GENERAL MOTORS CORP.

DOOR LATCH ASSEMBLY

Removal & Installation

1. Open door and pull out on inside door handle to access release tabs for bezel. Use a small, flat-bladed screwdriver to release front locking tabs. Then release rear tabs by pulling on bezel. Carefully use screwdriver to remove screw cover from behind inside door panel pull handle. Remove screws behind cover.
2. Carefully pry at rear of door panel using appropriate trim panel to release retainers. These retainers are plastic and very easy to break. Continue working around door until all clips are released. Pull door panel upward to remove from door. Disconnect electrical connectors

and set door panel aside.

3. Remove power switch assembly from door panel. Remove water deflector from door. Reconnect power switch assembly to door harness and raise window to access lock/latch assembly. After raising window, disconnect switch assembly.
4. Disconnect lock rod from outside door handle. See **Fig. 19** . Disconnect electrical connectors from lock/latch assembly. Remove outside door handle opening rod from lock/latch assembly using a long, thin screwdriver to pry open retaining clip or by cutting rear of retaining clip and unscrewing clip from rod. See **Fig. 20** .
5. Remove screws attaching lock/latch assembly to door. Remove screws attaching inside door handle to door. Disconnect rods from inside door handle and remove anti-rattle clip from lock rods. Remove lock/latch assembly from door with inside lock rods attached. Remove lock rods from lock/latch assembly. To install, reverse removal procedure.

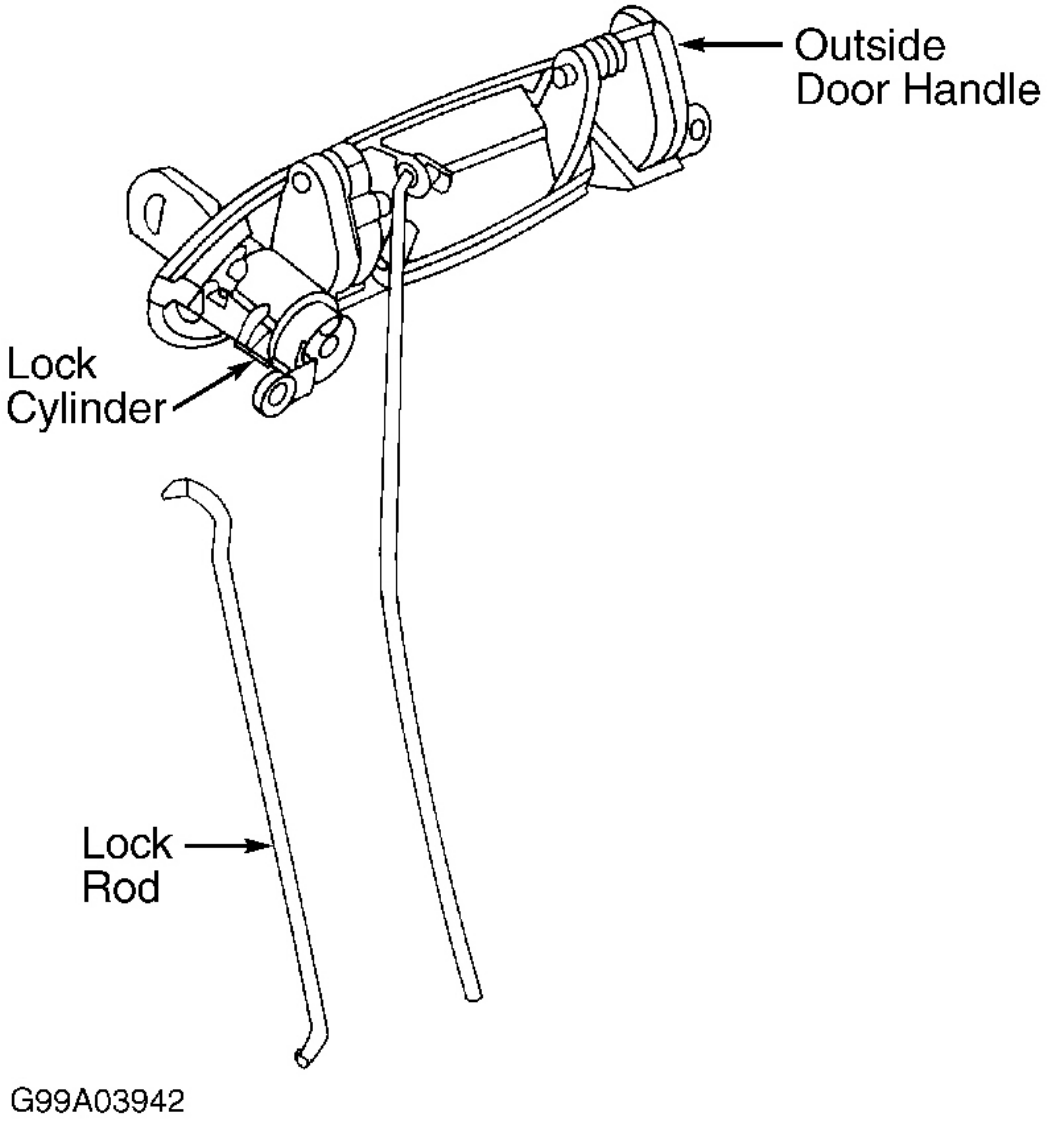

Fig. 19: Disconnecting Lock Rods From Outside Door Handle
Courtesy of GENERAL MOTORS CORP.

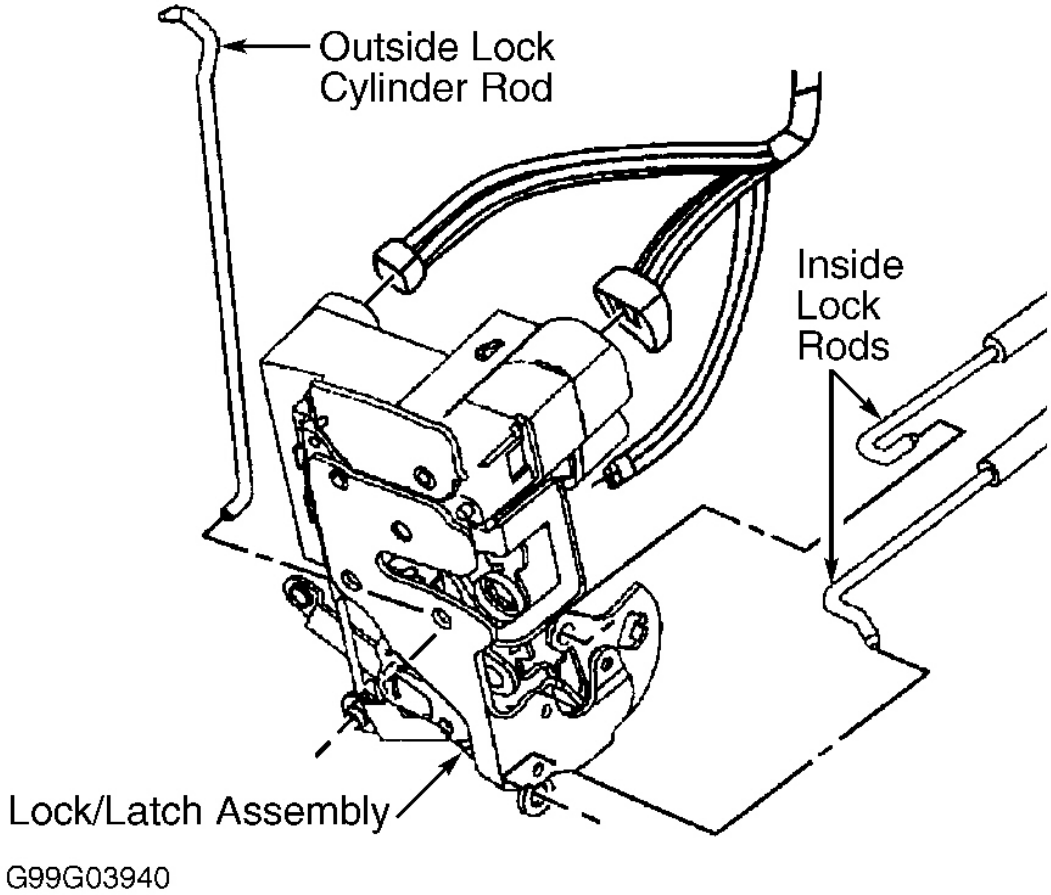

Fig. 20: Removing Lock/Latch Assembly
Courtesy of GENERAL MOTORS CORP.

DRIVER INFORMATION CENTER & HEAD-UP DISPLAY CONTROL SWITCHES

CAUTION: When IPC is removed from vehicle, DO NOT set IPC on its face for more than 15 minutes, or fluid-filled air core gauges may be damaged.

Removal & Installation

1. Remove IPC. See **INSTRUMENT PANEL CLUSTER** . Disconnect instrument panel dimmer switch connector. Disconnect DIC switch connector. Remove IPC bezel retaining screws, and remove bezel. See **Fig. 21** . Remove screws and DIC switch. Remove HUD switch in same manner.

2. To install, reverse removal procedure. Tighten switch screws to 13 INCH lbs. (1.5 N.m). Tighten IPC bezel retaining screws to 13 INCH lbs. (1.5 N.m).

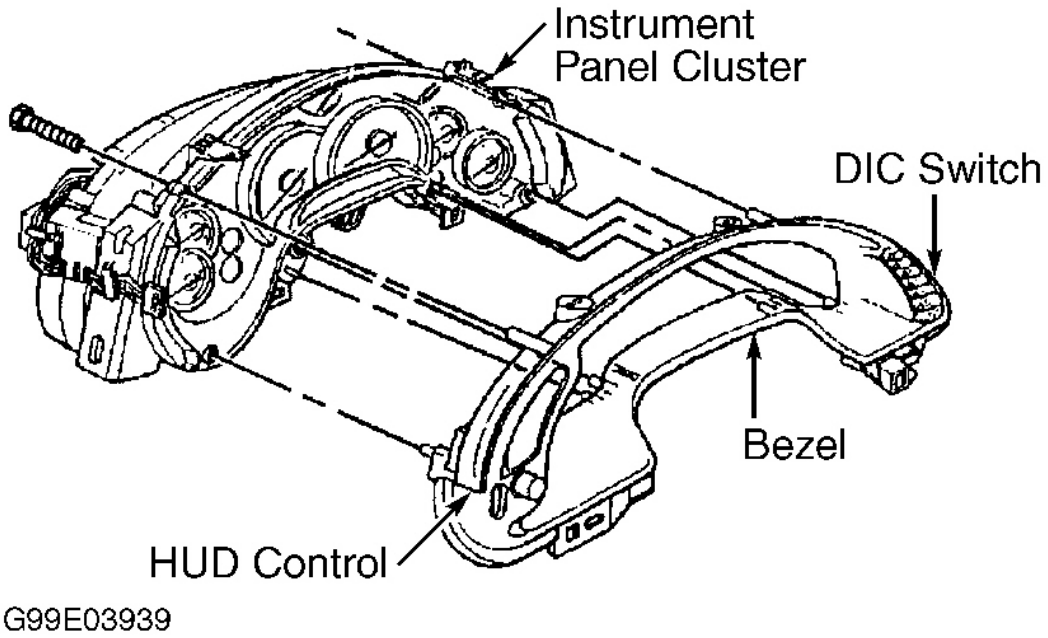

Fig. 21: Removing Instrument Panel Cluster Bezel
Courtesy of GENERAL MOTORS CORP.

ENGINE OIL PRESSURE SENSOR

Removal & Installation

Remove intake manifold. See 5.7L V8 article in ENGINES. Remove Engine Oil Pressure (EOP) sensor electrical connector. Clean area around EOP sensor before removal. Remove EOP sensor. To install, reverse removal procedure. Tighten EOP sensor to 15 ft. lbs. (20 N.m).

FUEL TANK SENDING UNITS

Removal

1. Disconnect negative battery cable. Relieve fuel system pressure. Loosen fuel filler cap to relieve fuel tank vapor pressure. Remove left fuel rail cover. Connect Fuel Pressure Gauge (J 34730-1A) to fuel pressure connection. Wrap a shop towel around fitting while connecting gauge to avoid fuel spillage. Install bleed hose of gauge into an approved

container. Open valve on gauge to bleed system pressure.

2. Raise and support vehicle. Remove rear wheels. Clean all fuel connections and surrounding areas before disconnecting. Drain fuel tanks. Attach a length of flexible fuel hose to an air operated pump device. Position an approved drain container under left tank. Wrap a shop towel around left tank fuel feed rear pipe. See **Fig. 22** . Disconnect fuel feed rear pipe at left tank fuel tank sending unit using Fuel Line Quick-Connect Separator (J 37088-A). Attach flexible fuel hose from pump device to fuel feed pipe nipple using a screw type clamp. Drain left fuel tank until no fuel comes out. Disconnect pump device from left tank fuel feed pipe nipple. Cap fuel feed pipe nipple and fuel feed rear pipe.
3. Position container under right tank. Wrap a shop towel around auxiliary fuel return rear pipe that connects jet pump to left tank at right fuel tank sending unit. Disconnect auxiliary fuel return rear pipe that connects jet pump to left tank at right tank fuel tank sending unit using fuel line quick-connect separator. See **Fig. 22** . Attach flexible fuel hose from pump device to auxiliary fuel return rear pipe nipple using a screw type clamp. Drain right tank until no fuel comes out. Disconnect pump device from right tank fuel tank sending unit nipple. Cap auxiliary fuel return rear pipe nipple and auxiliary fuel return rear pipe. Remove fuel tank shield. Mark each fuel pipe to aid in installation. Disconnect quick-connect fittings from fuel tank sending unit. Plug all fuel pipes and lines.
4. Disconnect fuel tank sending unit electrical connector. Remove fuel tank strap and support fuel tank. Remove fuel tank sending unit break-away head attaching bolts using a 5/16" open-end wrench. Discard fuel tank sending unit attaching bolts. Remove float arm retaining clip and float arm for left fuel tank sending unit only. Carefully remove fuel tank sending unit with gasket. Discard gasket.

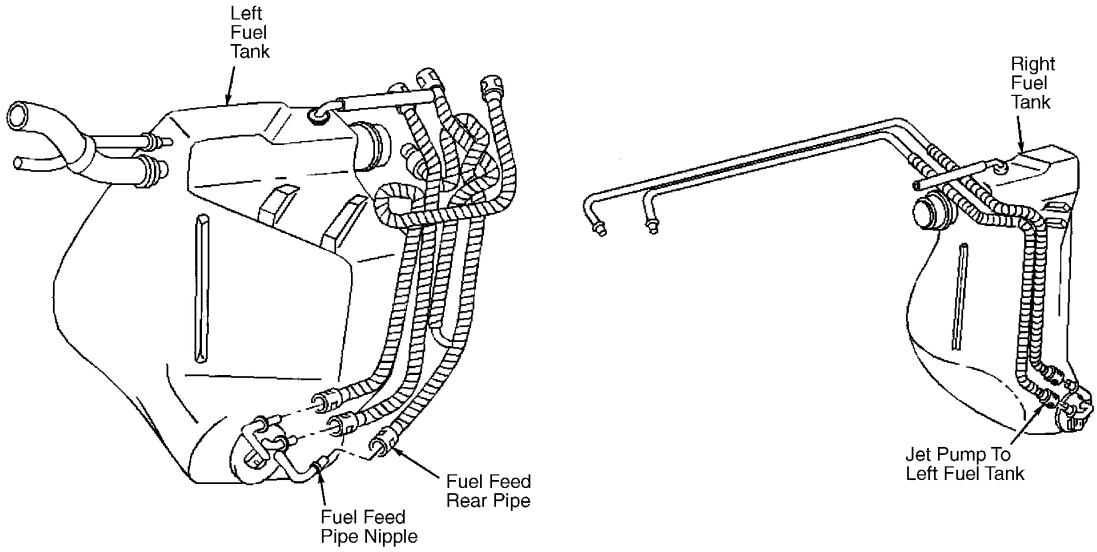

G00035803

Fig. 22: Identifying Fuel Tank Components To Drain Fuel Tanks
Courtesy of GENERAL MOTORS CORP.

Installation (Left Tank)

NOTE: Always install a new fuel pump strainer before reinstalling left fuel tank sending unit.

1. Install a new fuel pump strainer in same position as noted during disassembly. Push on outer edge of strainer ferrule until strainer is fully seated. Install new fuel tank sending unit gasket. Fold strainer 3 times so space that strainer occupies is approximately the diameter of fuel tank sending unit reservoir. Hold strainer in folded position.
2. Insert fuel tank sending unit through fuel tank opening and release strainer once strainer is in fuel tank. Look through fuel tank opening to ensure long side of strainer is visible. If strainer is not visible, rotate fuel tank sending unit clockwise and counterclockwise approximately 90 degrees. Rotating fuel tank sending unit will free up strainer. Strainer should be visible at tank opening. Do not bend or twist float arm. Insert float and float arm into the fuel tank opening and install float arm retaining clip.

   NOTE: Upper hex head portion of fuel tank sending unit bolts are designed to shear off of lower section when proper torque is reached. Do not tighten bolts after bolt heads have sheared off.

3. Align fuel tank sending unit gasket tab with fuel tank sending unit cover mark. Align fuel tank sending unit cover mark with fuel tank mark. Manually tighten NEW break-away head fuel tank sending unit attaching bolts finger-tight. Tighten break-away head bolts until upper hex head portion of bolts shear off.
4. Reconnect all fuel feed pipes in original positions. To complete installation, reverse removal procedure. Tighten fuel tank strap bolts to 18 ft. lbs. (25 N.m). Tighten fuel tank shield mount bolt to 18 ft. lbs. (25 N.m). Tighten fuel tank shield mount nut to 106 INCH lbs. (12 N.m).

Installation (Right Tank)

NOTE: Always install a new fuel pump strainer before reinstalling right fuel tank sending unit.

1. Install new fuel tank sending unit gasket. Fold long strainer in half over itself and hold strainer in this position. Pinch both strainers upward toward each other. Do not bend or twist float arm. Insert float arm through fuel tank opening followed by folded strainers.

Release strainers once strainers are in fuel tank.

2. Look through fuel tank opening to ensure long strainer is visible. If strainer is not visible, rotate fuel tank sending unit clockwise and counterclockwise approximately 90 degrees. Rotating fuel tank sending unit will free up strainer. Strainer should become visible at tank opening.

NOTE: Upper hex head portion of fuel tank sending unit bolts are designed to shear off of lower section when proper torque is reached. Do not tighten bolts after bolt heads have sheared off.

3. Align fuel tank sending unit gasket tab with fuel tank sending unit cover mark. Align fuel tank sending unit cover mark with fuel tank mark. Manually tighten NEW break-away head fuel tank sending unit attaching bolts finger-tight. Tighten break-away head bolts until upper hex head portion of bolts shear off.
4. Reconnect all fuel feed pipes in original positions. To complete installation, reverse removal procedure. Tighten fuel tank strap bolts to 18 ft. lbs. (25 N.m). Tighten fuel tank shield mount bolt to 18 ft. lbs. (25 N.m). Tighten fuel tank shield mount nut to 106 INCH lbs. (12 N.m).

FOGLIGHT/REAR HATCH SWITCH

Removal & Installation

Carefully pry the lower edge of the foglight/rear hatch switch to release locking tab. See **Fig. 23** . Disconnect electrical connectors and remove switch. To install, reverse removal procedure.

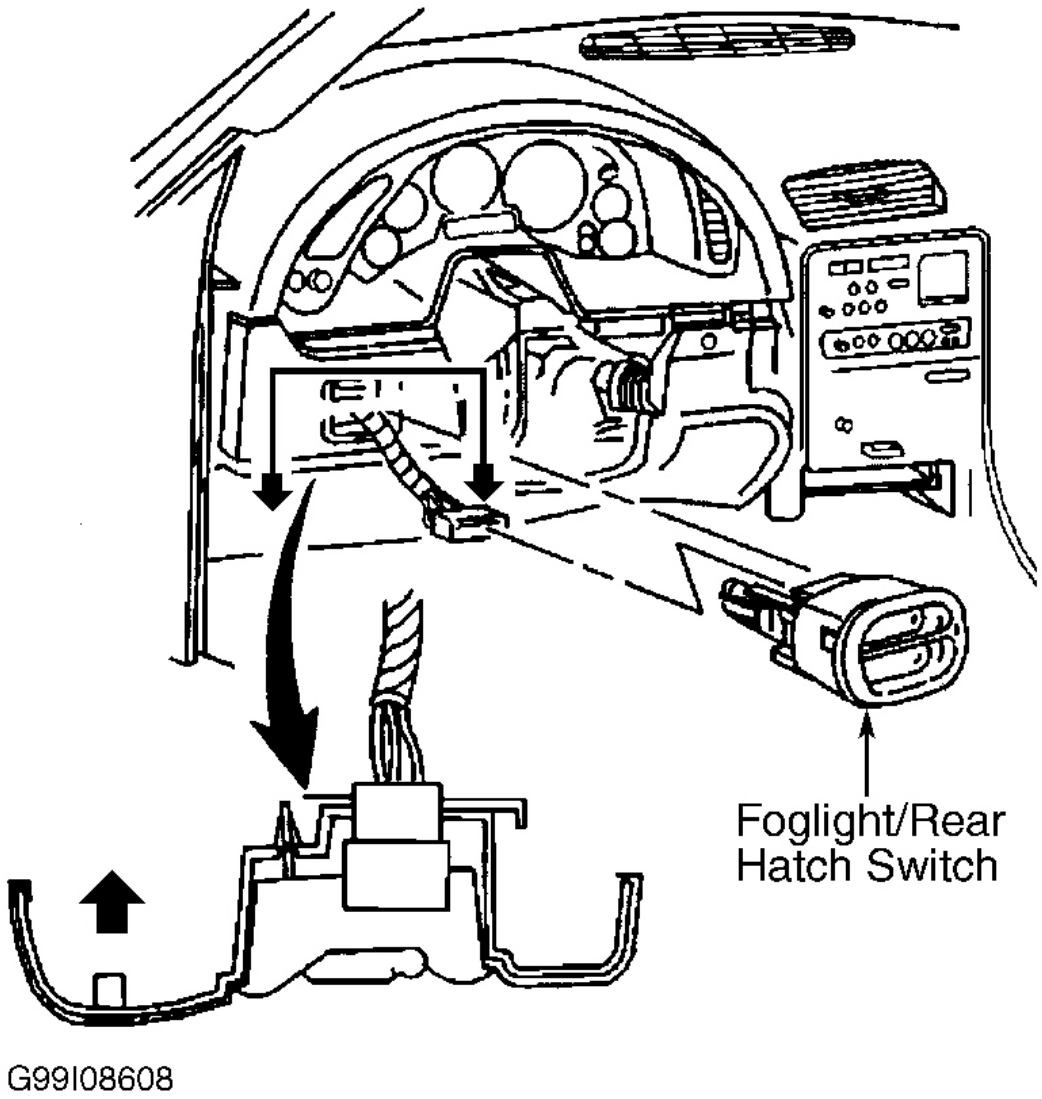

Fig. 23: Removing Foglight/Rear Hatch Switch
Courtesy of GENERAL MOTORS CORP.

HAZARD WARNING SWITCH

Removal & Installation

Remove instrument panel upper trim pad. See **INSTRUMENT PANEL UPPER TRIM PAD** . Turn trim pad over. Use care not to scratch trim pad. Remove hazard warning switch from trim pad. To install, reverse removal procedure.

HEAD-UP DISPLAY UNIT

Removal & Installation

1. Disconnect negative battery cable. Remove instrument panel upper trim pad. See **INSTRUMENT PANEL UPPER TRIM PAD** . Note position and routing of HUD wiring harness. Carefully lift the HUD wiring harness from between the IPC and the HUD. Disconnect the HUD electrical connector at IPC.
2. Remove IPC steering column bracket retaining screws. Raise rear of IPC to release locator tabs. Move IPC as to access HUD-to-steering column support bracket retaining screw.
3. Loosen the HUD-to-steering column support bracket retaining screw. Remove HUD retaining nuts and remove HUD from vehicle. See **Fig. 24** . To install, reverse removal procedure. Carefully place HUD wiring harness in original position.

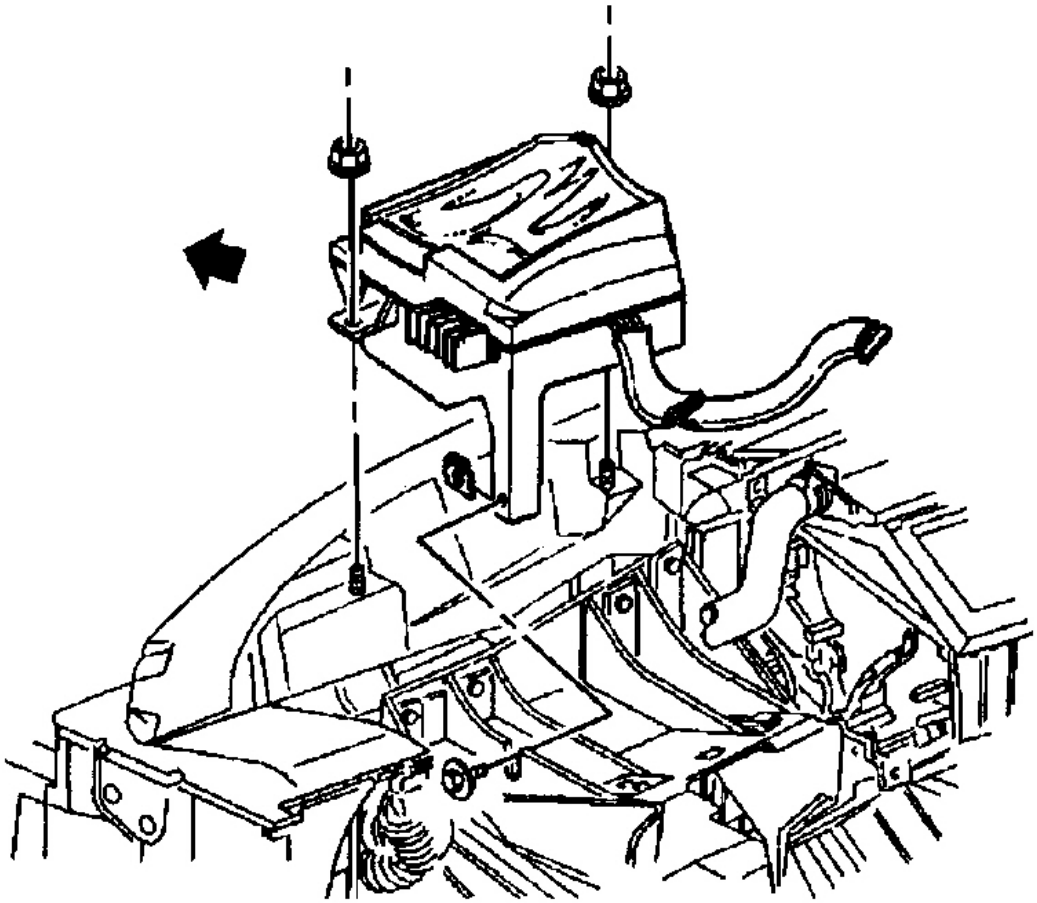

Fig. 24: Removing Head-Up Display From Instrument Panel
Courtesy of GENERAL MOTORS CORP.

IGNITION LOCK CYLINDER

Removal

1. Disconnect negative battery cable. Set parking brake. Remove instrument panel accessory trim plate and knee bolster panel. See **INSTRUMENT PANEL ACCESSORY TRIM PLATE & KNEE BOLSTER PANEL** . Remove lock cylinder connector from retaining tab on ignition switch. Disconnect lock cylinder connector.
2. Insert key into ignition switch. Turn ignition switch to RUN position. Using a flat-blade screwdriver, depress and hold ignition lock cylinder retaining tab located on lower right

side of ignition switch. Remove ignition lock cylinder. See **Fig. 25** . Note how ignition switch lock cylinder wiring is wrapped around base of ignition switch bezel for installation reference. Remove ignition switch bezel.

Installation

1. Install ignition switch bezel to lock cylinder. Insert ignition lock cylinder with key into ignition switch, and press into position until retaining tab produces an audible click. Pull on lock cylinder to ensure it is fully engaged. Turn ignition switch to LOCK position, and remove key.
2. To complete installation, reverse removal procedure. Insert key into ignition switch and check freedom of movement in various positions. Attempt to remove key with ignition switch in each position. Key should only be removable when ignition switch is in LOCK position.

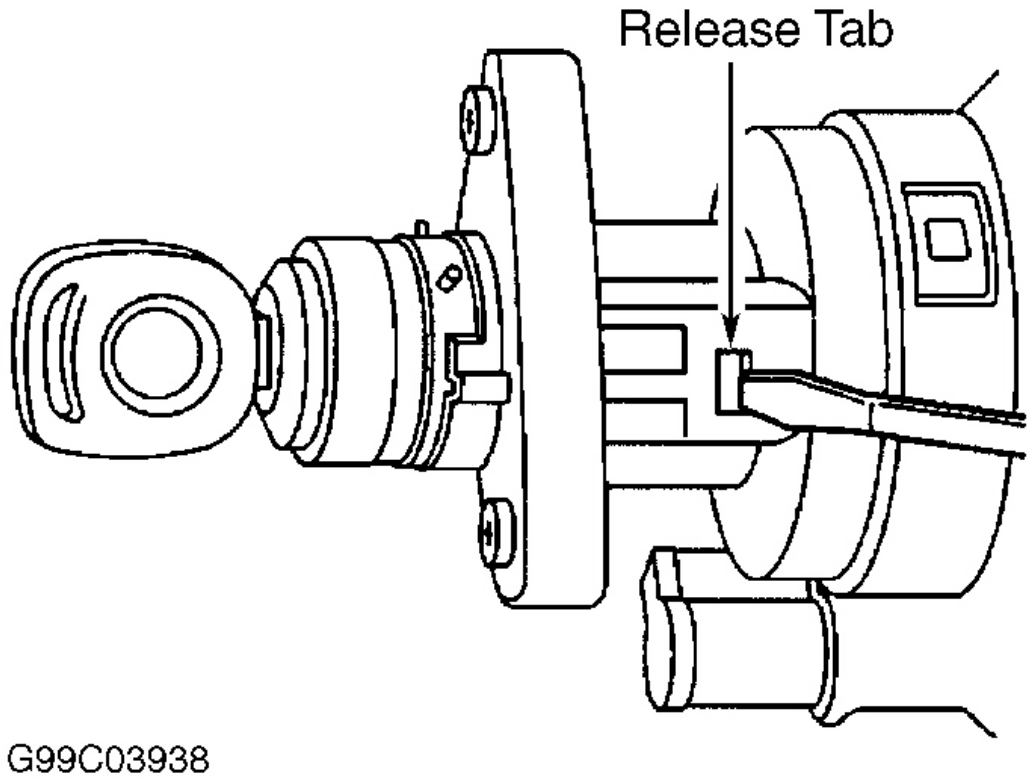

Fig. 25: Removing Ignition Lock Cylinder
Courtesy of GENERAL MOTORS CORP.

IGNITION SWITCH

Removal & Installation

1. Disconnect negative battery cable. Set parking brake. Remove instrument panel accessory trim plate and knee bolster panel. See **INSTRUMENT PANEL ACCESSORY TRIM PLATE & KNEE BOLSTER PANEL** . Remove lock cylinder connector from retaining tab on ignition switch. Disconnect lock cylinder connector.

NOTE: Note how ignition switch lock cylinder wiring is wrapped around base of ignition switch bezel for installation reference.

2. Remove ignition switch bezel. Disconnect hazard warning switch wiring harness from ignition switch retainer. Disconnect ignition switch connectors.
3. On A/T models, insert key into ignition switch. Turn ignition switch to RUN position. Using flat-blade screwdriver, depress park/lock cable retaining tab (located on bottom of switch near base of cable). Disconnect park/lock cable from ignition switch.
4. On all models, remove bolts and remove ignition switch. To install, reverse removal procedure. Tighten ignition switch retaining bolts to 49 INCH lbs. (5.5 N.m). Program PASS-Key(R) system See **PROGRAMMING** in BODY CONTROL MODULES - CORVETTE article.

INSTRUMENT PANEL ACCESSORY TRIM PLATE & KNEE BOLSTER PANEL

Removal & Installation

1. Remove console. See **CENTER CONSOLE** . Set parking brake. Shift transmission into 2nd gear (A/T models) or 4th gear (M/T models). On M/T models, grasp shift control boot, apply light pressure in toward shift control lever, and release shift boot retaining tabs from instrument panel accessory trim plate.
2. On all models, remove ashtray. Remove instrument panel accessory trim plate grille. Remove trim plate screws next to cigarette lighter and behind ashtray. Remove trim plate screw in grille opening. Holding sides of trim plate near curve at base, pull trim plate rearward to release locking tabs. Disconnect electrical connector.
3. On M/T models, rotate shift control boot until one end is down in shifter opening in trim plate. On all models, remove instrument panel accessory trim plate. See **Fig. 26** .
4. Prying at lower edge of switch, release locking tab and remove foglight/rear compartment lid release switch. Disconnect electrical connector. Remove driver's knee bolster trim panel screws. Holding trim panel at sides, pull rearward firmly to release locking tabs. Remove knee bolster trim panel. To install, reverse removal procedure.

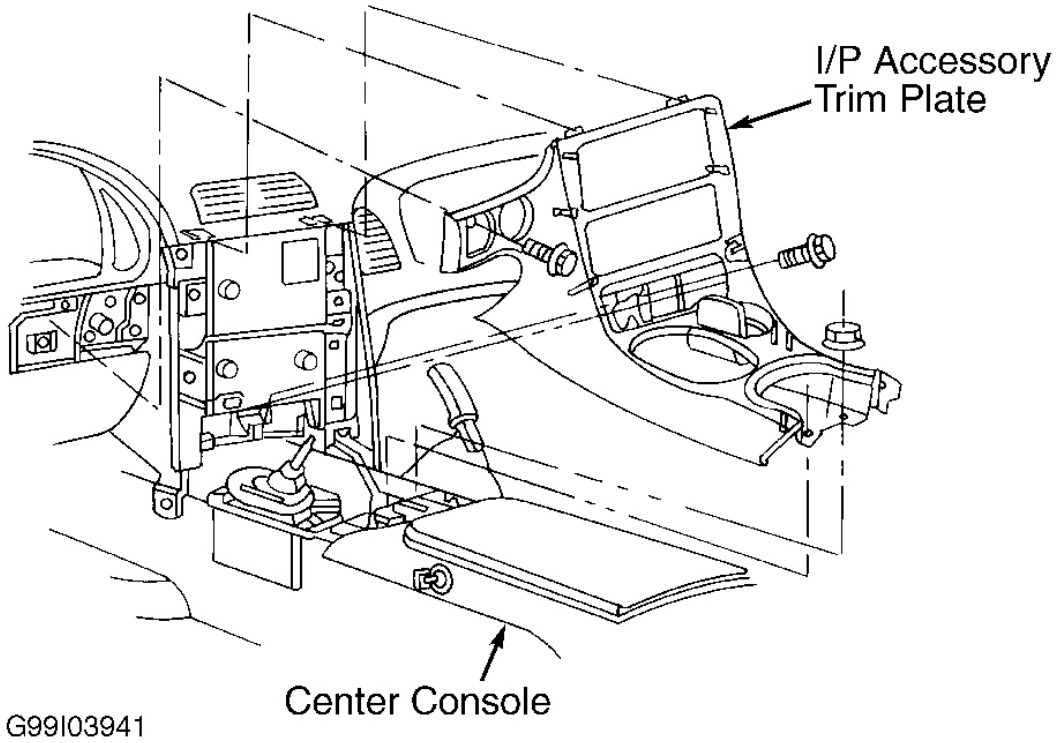

Fig. 26: Removing Instrument Panel Accessory Trim Plate
Courtesy of GENERAL MOTORS CORP.

INSTRUMENT PANEL CLUSTER

CAUTION: When IPC is removed from vehicle, DO NOT set IPC on its face for more than 15 minutes, or fluid-filled air core gauges may be damaged.

Removal & Installation

1. Disconnect negative battery cable. Remove instrument panel upper trim pad. See **INSTRUMENT PANEL UPPER TRIM PAD** . Remove IPC-to-steering column bracket retaining screws.
2. Lift rear of IPC slightly to release locator tab. Lift IPC and disconnect electrical connector. Remove IPC. See **Fig. 27** . To install, reverse removal procedure. Tighten IPC-to-steering column bracket screws to 31 INCH lbs. (3.5 N.m).

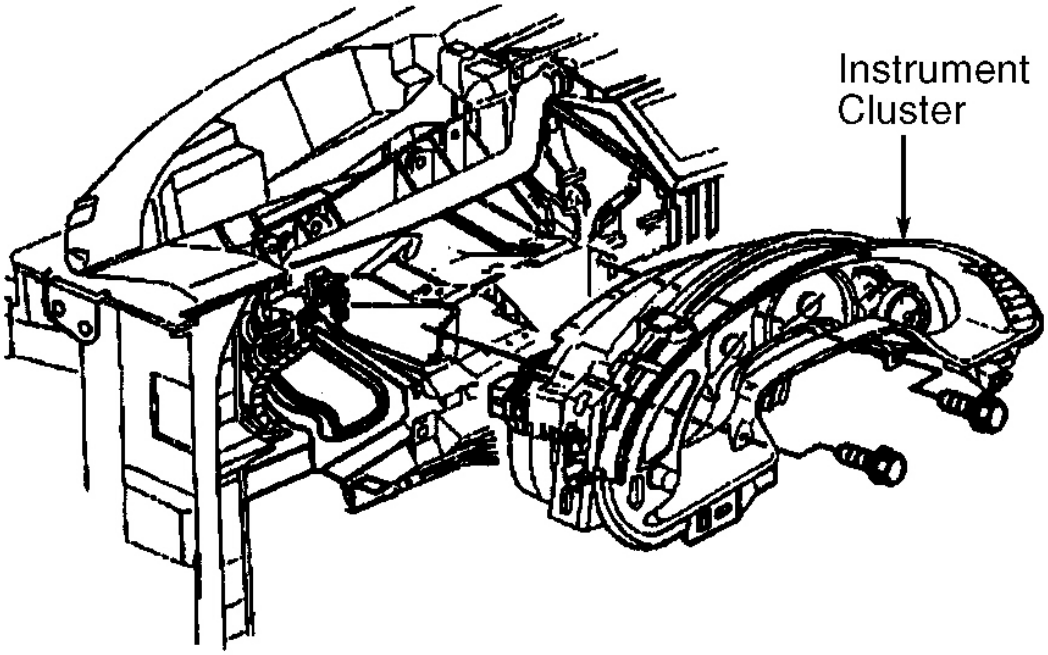

G98B00449

Fig. 27: Removing Instrument Panel Cluster
Courtesy of GENERAL MOTORS CORP.

INSTRUMENT PANEL CLUSTER BULBS

CAUTION: When IPC is removed from vehicle, DO NOT set IPC on its face for more than 15 minutes, or fluid-filled air core gauges may be damaged.

Removal & Installation

1. Remove IPC. See **INSTRUMENT PANEL CLUSTER (IPC)** . Unsnap and remove Ultra-Violet (UV) inverter wiring covers (1). See **Fig. 28** . Disconnect UV inverter electrical connectors. Remove UV inverter mounting screws and remove UV inverter (2).
2. Disconnect electrical connectors from IPC printed circuit board. Remove IPC rear cover retaining screws. Unsnap and remove rear cover from IPC.
3. Disconnect remaining electrical connectors from IPC printed circuit board. Remove the circuit board retaining screws. Tilt circuit board up slightly and unsnap circuit board retaining tabs. Disconnect chime connector from circuit board. Move circuit board out of

the way ensuring flat wires do not become kinked or loose. See **Fig. 28** .

4. Twist to remove appropriate bulb/socket from the IPC. To install, reverse removal procedure. Tighten IPC rear cover retaining screws to 6 INCH lbs. (0.7 N.m).

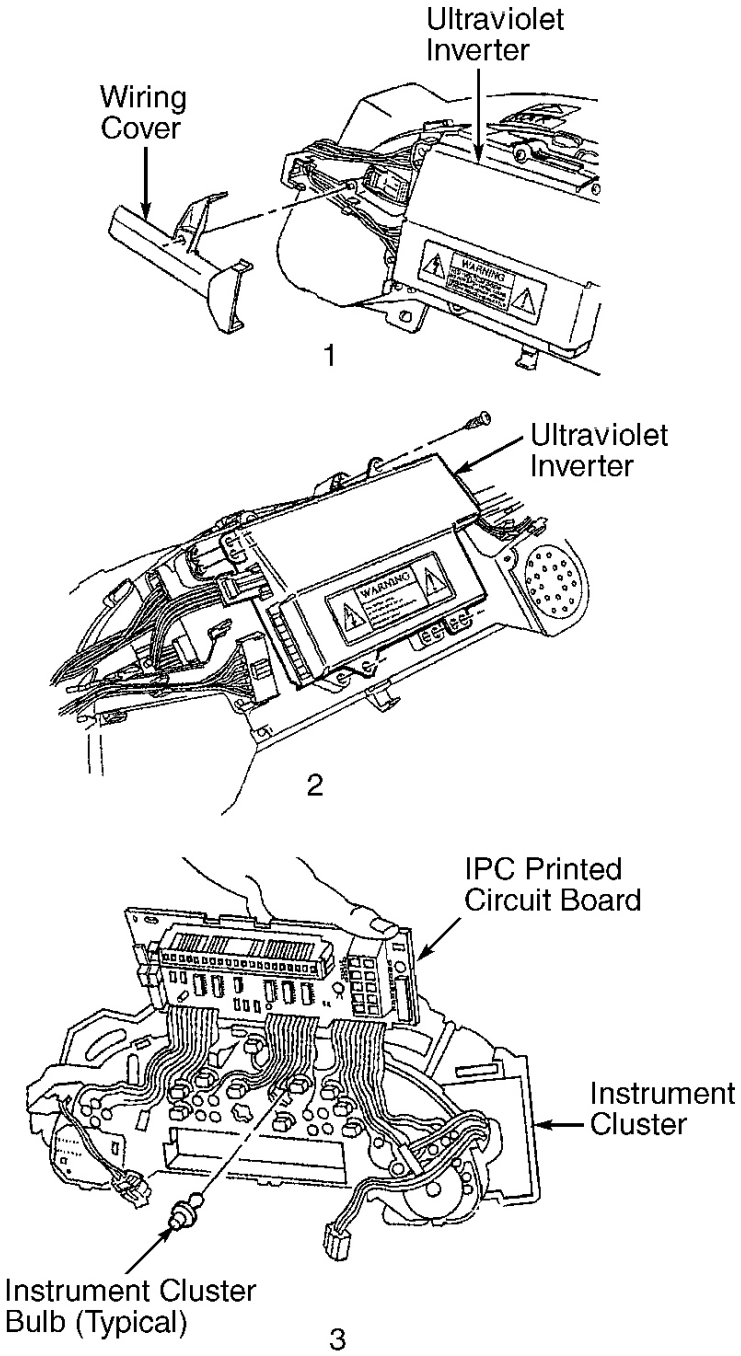

G00011677

Fig. 28: Accessing & Removing Instrument Panel Cluster Indicator Bulbs
Courtesy of GENERAL MOTORS CORP.

INSTRUMENT PANEL UPPER TRIM PAD

Removal

1. Remove instrument panel accessory trim plate and knee bolster panel. See **INSTRUMENT PANEL ACCESSORY TRIM PLATE & KNEE BOLSTER PANEL** . Open glove box door, and disconnect glove box light switch connector. Reach behind glove box door, and push out trim plugs. Remove lower glove box bolts. Remove side and upper glove box screws. Remove glove box.
2. Remove windshield defroster grille. Move Daytime Running Lights (DRL) sensor and sunload sensor (if equipped) into defroster duct to provide additional clearance. Remove windshield side garnish moldings. Remove upper trim pad-to-defroster duct screws. Remove screws retaining upper trim pad to left and right hinge pillars.
3. Remove IPC bezel to upper trim pad. Remove screws retaining upper trim pad to driver's knee bolster outer bracket and center support bracket. Remove upper trim pad-to-passenger's air bag bracket.
4. Tilt steering wheel to lowest position. Lift rear edge of upper trim pad about 2" to clear air distribution duct. Slowly pull upper trim pad out while guiding tabs on sides of trim pad past hinge pillars. Disconnect hazard warning switch connector. Remove upper trim pad. See **Fig. 29** .

Installation

To install, reverse removal procedure. Tighten lower glove box bolts and upper trim pad-to-hinge pillar screws to 22 INCH lbs. (2.5 N.m). Tighten all other screws to 17 INCH lbs. (1.9 N.m).

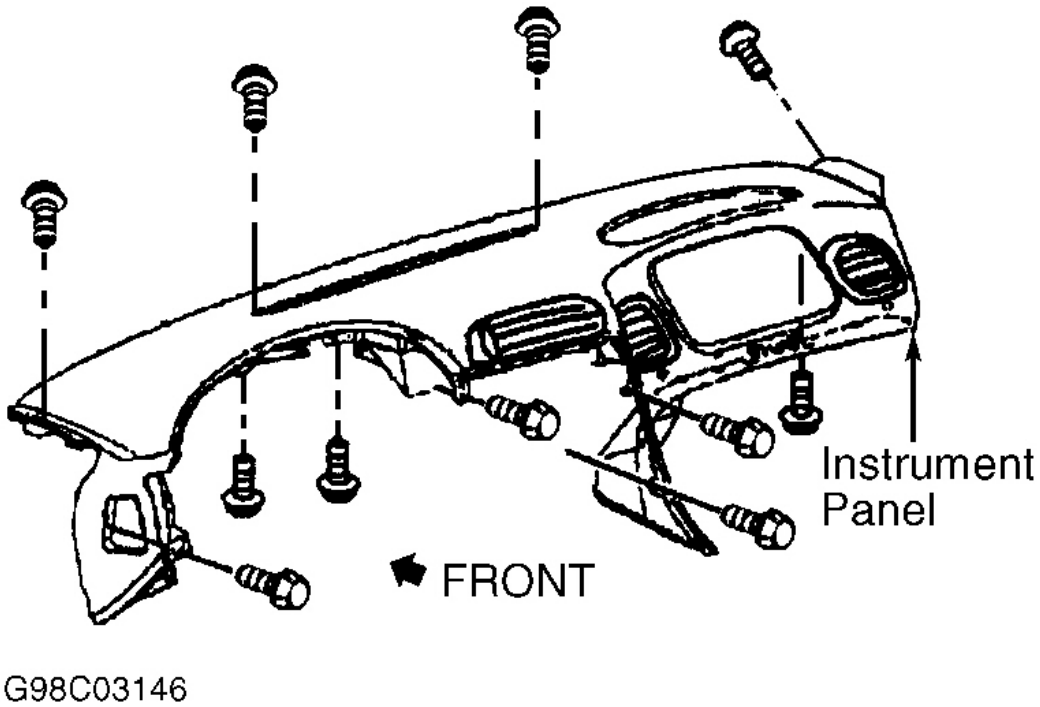

Fig. 29: Removing Instrument Panel Upper Trim Pad
Courtesy of GENERAL MOTORS CORP.

POWERTRAIN CONTROL MODULE

NOTE: To prevent internal PCM damage, ignition must be off when power to the PCM is disconnected or reconnected.

Removal & Installation

1. Remove inner wheel well panel. See **Fig. 7** . Remove TAC module. See **Fig. 30** . Disconnect PCM electrical connectors. Loosen but do not remove PCM rear bolt.
2. Use rear bolt as an anchor for outer bracket. Remove front bolt from PCM. Reposition PCM outer bracket. Remove PCM from bracket and vehicle.
3. To install, reverse removal procedure. Tighten PCM bolts to 17 INCH lbs. (2.0 N.m). Reconnect electrical connectors and torque to 70 INCH lbs. (8 N.m). If new PCM is being installed, program PCM. See **POWERTRAIN CONTROL MODULE** under PROGRAMMING.

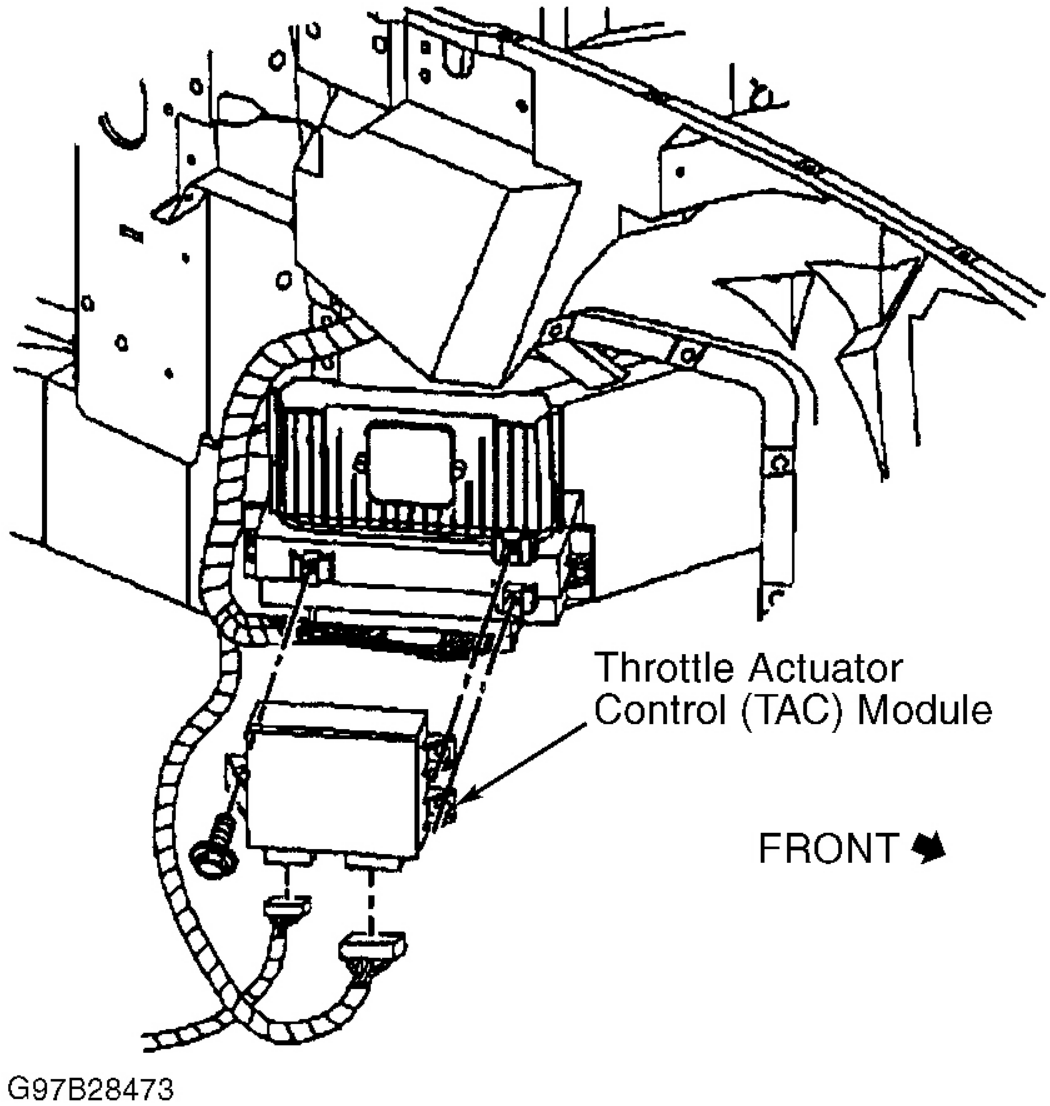

Fig. 30: Removing Throttle Actuator Control Module
Courtesy of GENERAL MOTORS CORP.

WIRING DIAGRAMS

2001 Chevrolet Corvette

2001 ACCESSORIES & EQUIPMENT Analog Instrument Panels - Corvette

Fig. 31: Analog Instrument Panel Wiring Diagram (Corvette)