2010 V C

V C - utomatic - SRX

SPEC C T ONS

FASTENER TIGHTENING SPECIFICATIONS

Application	Specification	
	Metric	English
Temperature Valve Actuator Screw	1.5 N.m	13 lb in
Heater and Blower and Air-conditioning Control Module Screw	1.5 N.m	13 lb in
Air Inlet Valve Actuator Screw	1.5 N.m	13 lb in
Mode Control Cam Actuator Screw	1.5 N.m	13 lb in
Inside Air Valve Actuator Screw	1.5 N.m	13 lb in

SC E T C ND RO T N D R S

HVAC SCHEMATICS

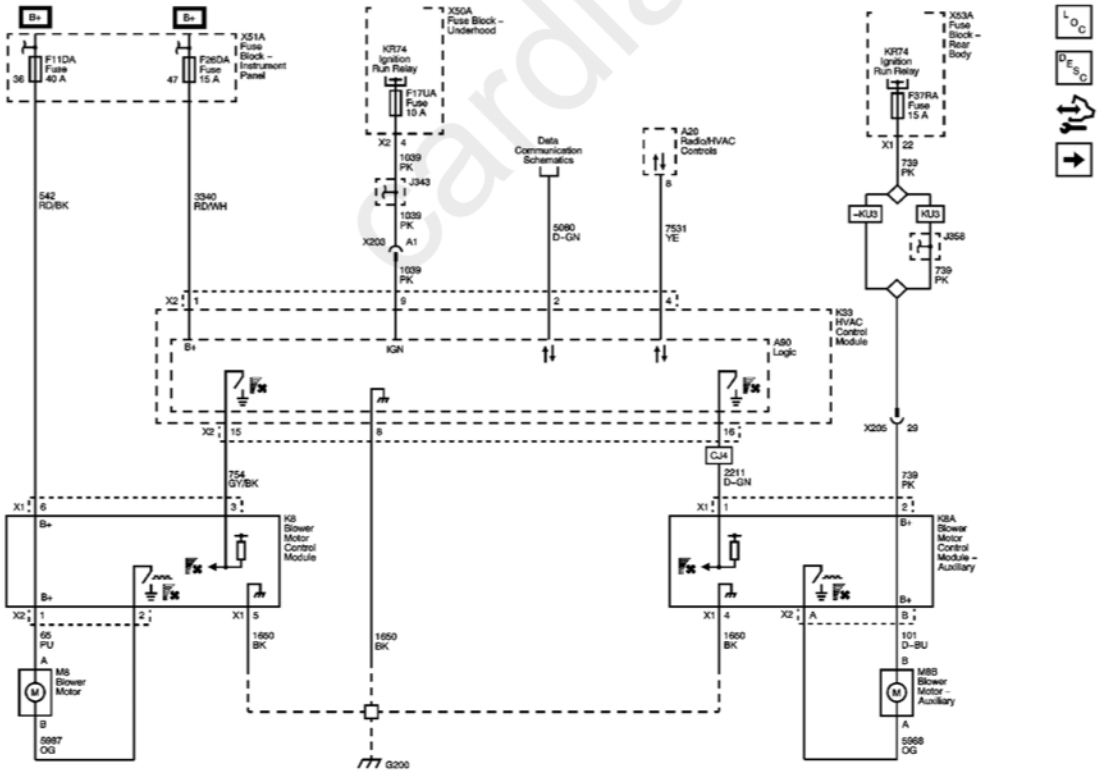

Fig. 1: Power, Ground, Data Communications & Blower Controls Circuit Schematic

cardiagn.com

Courtesy of GENERAL MOTORS CORP.

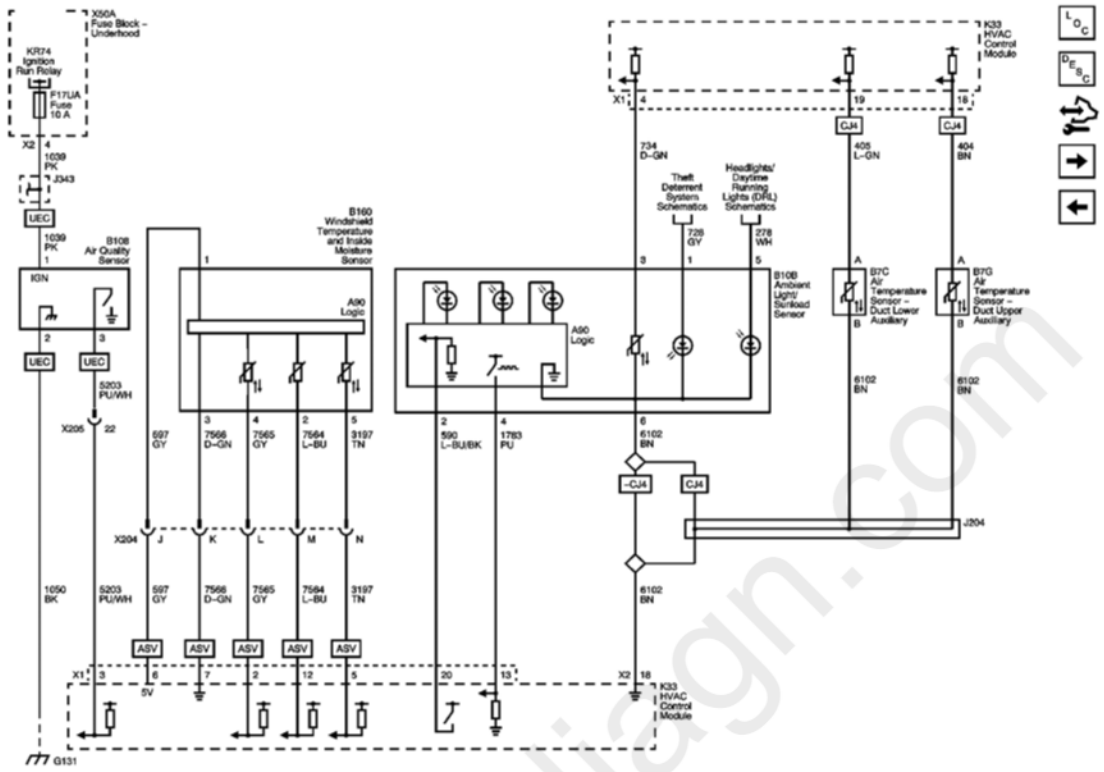

Fig. 2: HVAC Sensors Circuit Schematic
Courtesy of GENERAL MOTORS CORP.

cardiagn.com

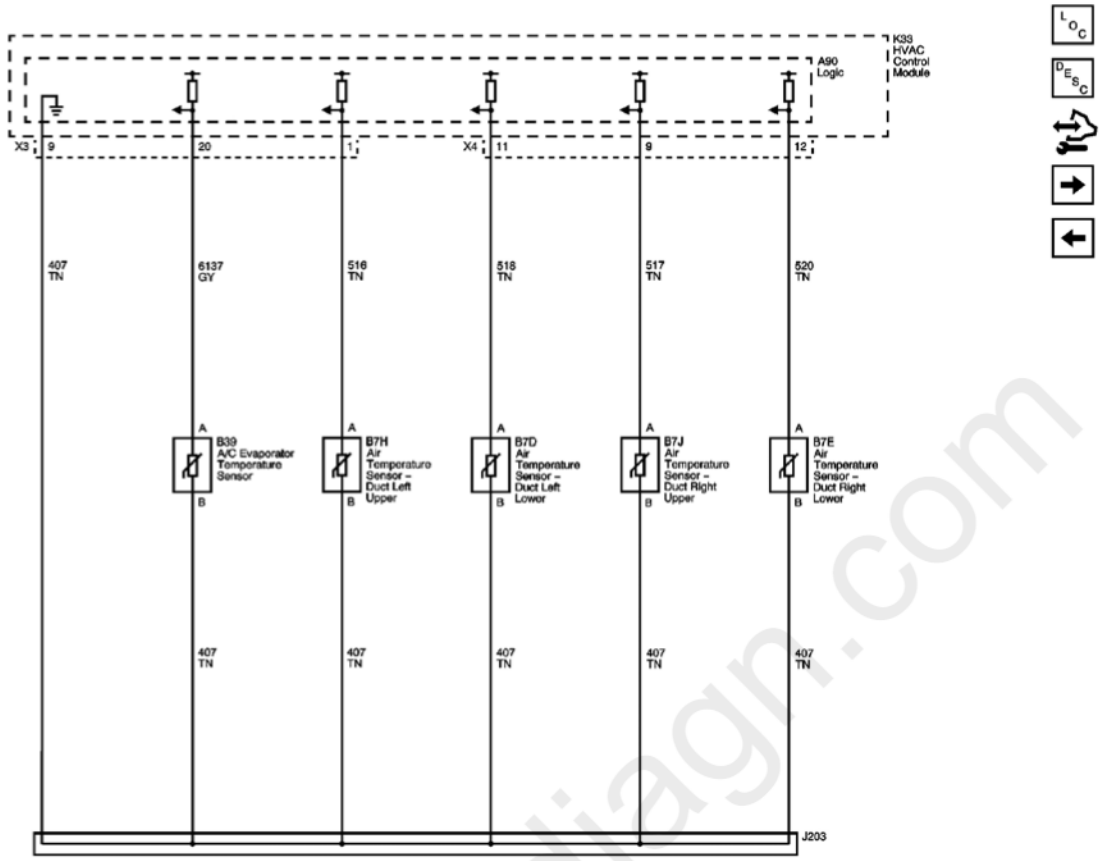

Fig. 3: Temperature Sensors Circuit Schematic
Courtesy of GENERAL MOTORS CORP.

cardiagn.com

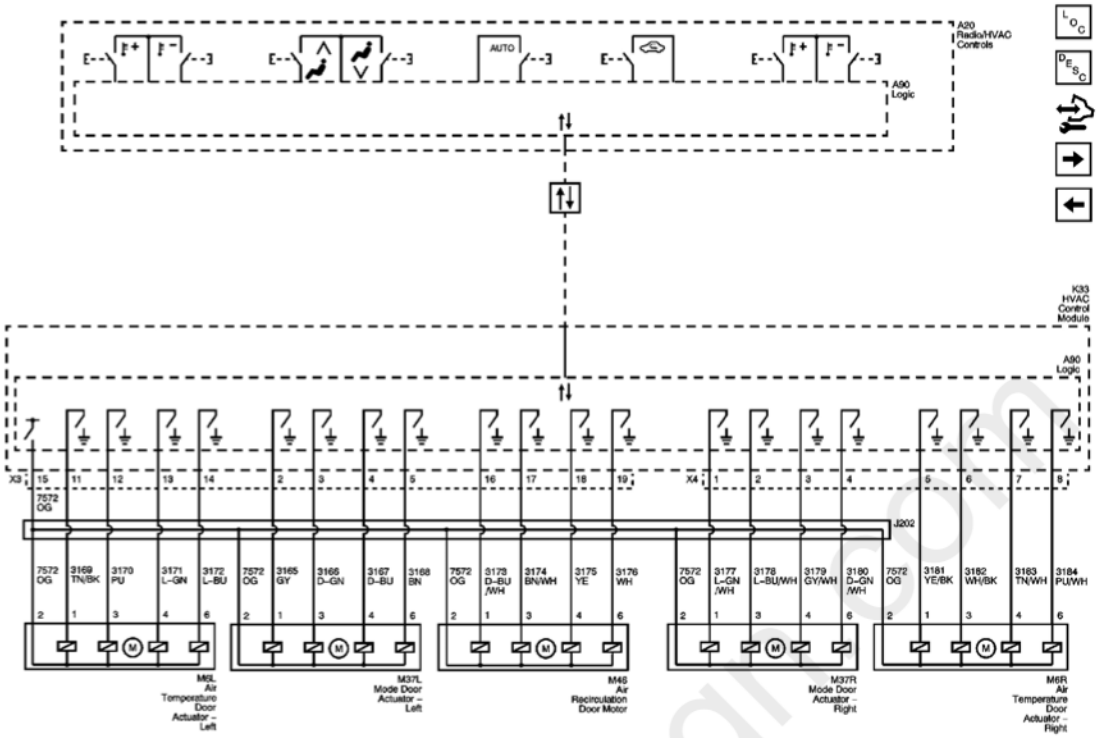

Fig. 4: Mode & Temperature Controls Front Circuit Schematic
Courtesy of GENERAL MOTORS CORP.

cardiagn.com

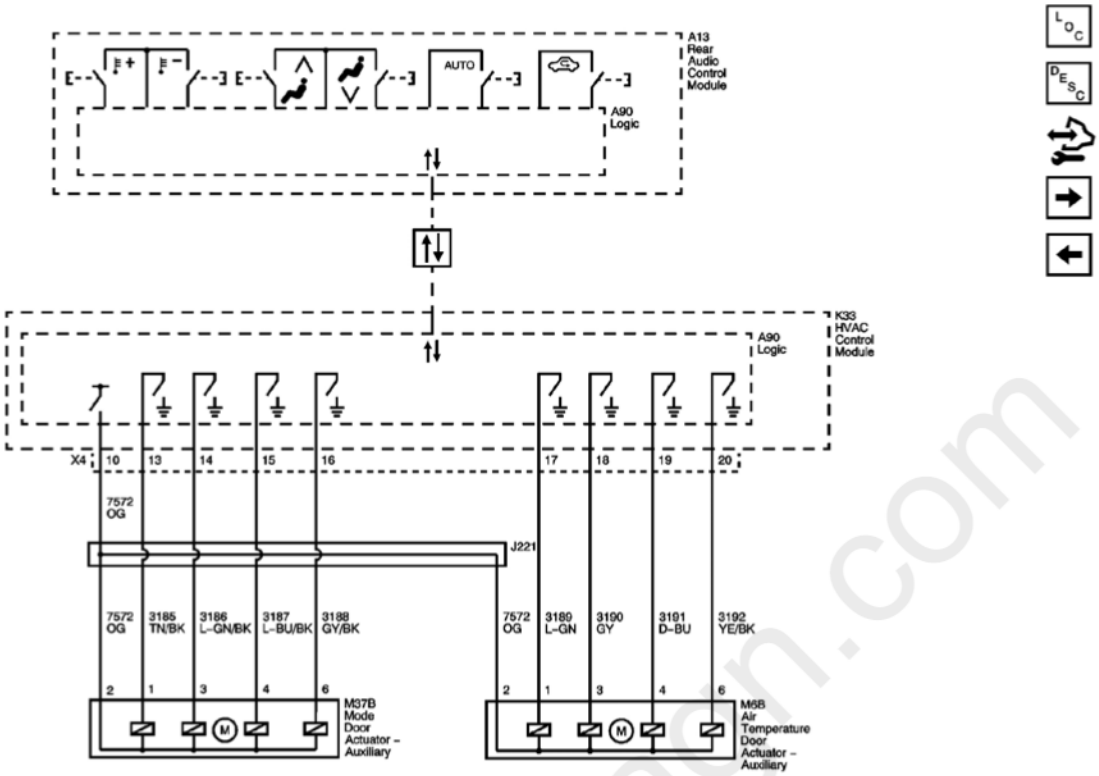

Fig. 5: Mode & Temperature Controls Rear Circuit Schematic
Courtesy of GENERAL MOTORS CORP.

cardiagn.com

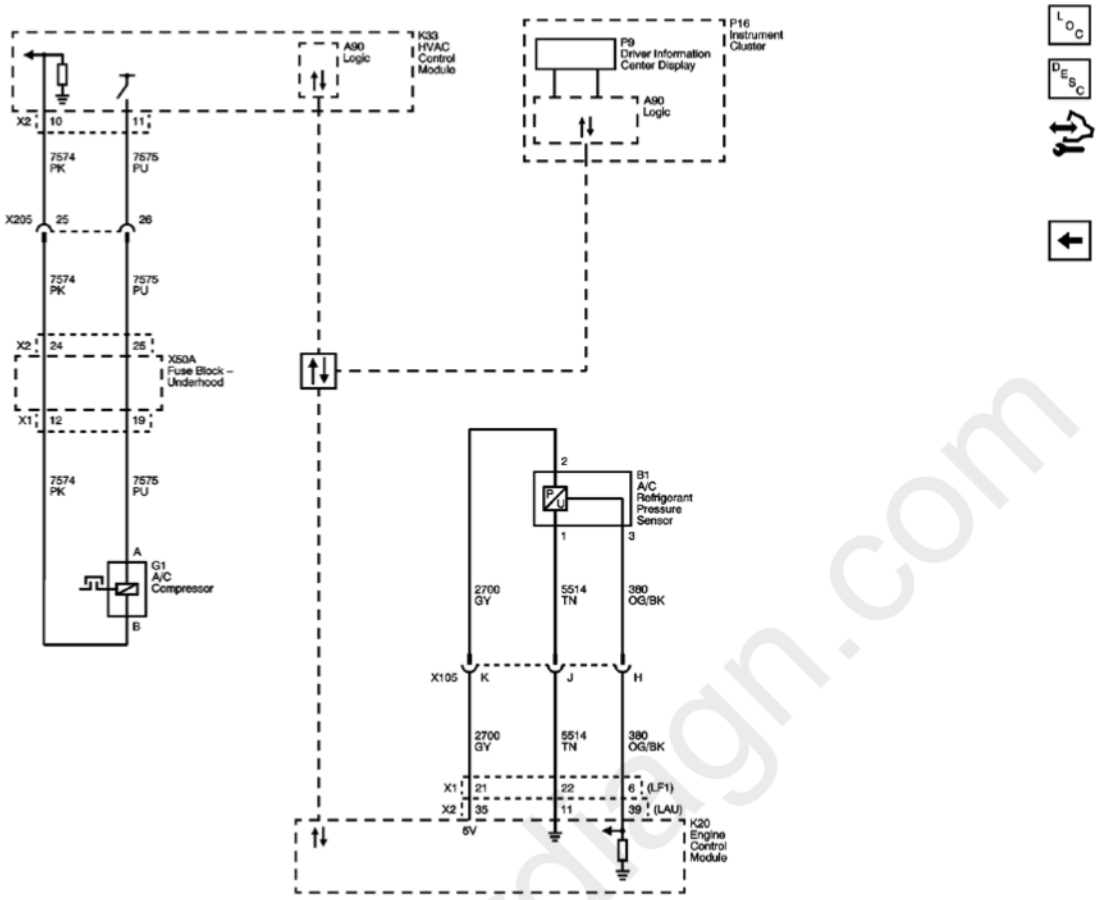

Fig 6 A/C Compressor Controls Circuit Schematic
Courtesy of E ERAL MOTORS CORP

D NOST C N OR T ON ND PROCED RES

DIA OSTIC CODE I DE

DIA OSTIC CODE I DE

DTC	Description
DTC B0163, B0183, or B1405	B0163 02: Passenger Compartment Temperature Sensor Circuit Short to Ground B0163 05: Passenger Compartment Temperature Sensor Circuit High Voltage/Open B0183 02: Solar Load Sensor Circuit Short to Ground B0183 05: Solar Load Sensor Circuit High Voltage/Open B1405 02: Control Module Voltage Reference Output 2 Circuit Short to Ground B1405 05: Control Module Voltage Reference Output 2 Circuit High Voltage/Open
DTC B0173, B0178, B0509,	B0173 02: Upper Left Duct Air Temperature Sensor Circuit Short to

cardiagn.com

B0514, B0519, B3583, or B3933	Ground B0173 05: Upper Left Duct Air Temperature Sensor Circuit High Voltage/Open B0178 02: Lower Left Duct Air Temperature Sensor Circuit Short to Ground B0178 05: Lower Left Duct Air Temperature Sensor Circuit High Voltage/Open B0509 02: Upper Right Duct Air Temperature Sensor Circuit Short to Ground B0509 05: Upper Right Duct Air Temperature Sensor Circuit High Voltage/Open B0514 02: Lower Right Duct Air Temperature Sensor Circuit Short to Ground B0514 05: Lower Right Duct Air Temperature Sensor Circuit High Voltage/Open B0519 02: Rear Upper Duct Air Temperature Sensor Circuit Short to Ground B0519 05: Rear Upper Duct Air Temperature Sensor Circuit High Voltage/Open B3583 02: Rear Lower Duct Air Temperature Sensor Circuit Short to Ground B3583 05: Rear Lower Duct Air Temperature Sensor Circuit High Voltage/Open B3933 02: Air Conditioning Evaporator Temperature Sensor Circuit Short to Ground B3933 05: Air Conditioning Evaporator Temperature Sensor Circuit High Voltage/Open
DTC B018A, B048C, B048F, or B1395	B018A 02: Windshield Temperature Sensor Circuit Short to Ground B018A 05: Windshield Temperature Sensor Circuit High Voltage/Open B048C 02: Humidity Sensor Humidity Circuit Short to Ground B048C 05: Humidity Sensor Humidity Circuit High Voltage/Open B048F 02: Humidity Sensor Temperature Circuit Short to Ground B048F 05: Humidity Sensor Temperature Circuit High Voltage/Open B1395 03: Control Module Voltage Reference Output Circuit Low Voltage B1395 07: Control Module Voltage Reference Output Circuit High Voltage
DTC B0193	B0193 01: Front Blower Motor Speed Circuit Short to Battery B0193 06: Front Blower Motor Speed Circuit Low Voltage/Open
DTC B0208	B0208 01: Rear Blower Motor Speed Circuit Short to Battery B0208 06: Rear Blower Motor Speed Circuit Low Voltage/Open
DTC B0223, B022A, B0233, B023A, B0408, B0418, B0428, or B3531	B0223 01: Recirculate Position Command 1 Circuit Short to Battery B0223 06: Recirculate Position Command 1 Circuit Low Voltage/Open B022A 01: Recirculate Position Command 2 Circuit Short to Battery B022A 06: Recirculate Position Command 2 Circuit Low Voltage/Open B0233 01: Air Flow Control Circuit Short to Battery B0233 06: Air Flow Control Circuit Low Voltage/Open

cardiagn.com

	B023A 02: HVAC Actuators Supply Voltage Short to Ground B0408 01: Main Temperature Control Circuit Short to Battery B0408 06: Main Temperature Control Circuit Low Voltage/Open B0418 01: Right Temperature Control Circuit Short to Battery B0418 06: Right Temperature Control Circuit Low Voltage/Open B0428 01: Rear Temperature Control Circuit Short to Battery B0428 06: Rear Temperature Control Circuit Low Voltage/Open B3531 01: Rear Air Flow Control Circuit Short to Battery B3531 06: Rear Air Flow Control Circuit Low Voltage/Open
DTC B048D or B048E	B048D 01: Au iliary Heater Temperature Command Circuit Short to Battery B048D 06: Au iliary Heater Temperature Command Circuit Low Voltage/Open B048E 00: Au iliary Heater System Malfunction
DTC B3843	B3843 02: Outside Air Quality Sensor Circuit Short to Ground B3843 05: Outside Air Quality Sensor Circuit High Voltage/Open B3843 08: Outside Air Quality Sensor Circuit Performance - Signal Invalid
DTC B393B	B393B 04: Air Conditioning Compressor Valve Control Circuit Open B393B 0B: Air Conditioning Compressor Valve Control Circuit High Current
DTC P0532 or P0533	P0532 00: Air Conditioning (A/C) Refrigerant Pressure Sensor Circuit Low Voltage P0533 00: Air Conditioning (A/C) Refrigerant Pressure Sensor Circuit High Voltage

HVAC COMPO E T REPLACEME T REFERE CE

Scan Tool ame	Component Code / Schematic ame	Ser ice ame	Repair Instruction ame
Passenger Compartment Humidity, Passenger Compartment Humidity Sensor Temperature, Windshield Temperature	B8 Air Temperature Sensor Assembly-Inside	Humidity/Windshield Temperature SensorSensor	Inside Air Moisture and Windshield Temperature Sensor Replacement **Inside Air Moisture and Windshield Temperature Sensor Replacement**
Air Inlet Door	M4 Air Inlet Actuator	Air Inlet Actuator	Air Inlet Valve Actuator Replacement - Left Side **Air Inlet Val e Actuator Replacement - Left Side**
Air Recirculation Door	M46 Air Recirculation Door	Air Recirculation Door	Air Inlet Valve Actuator Replacement - Right Side **Air Inlet Val e Actuator Replacement -**

cardiagn.com

			Right Side
Right Temperature Door	M6R Air Temperature Actuator-Right	Right Air Temperature Actuator	Temperature Valve Actuator Replacement - Right Side **Temperature Val e Actuator Replacement - Right Side**
Left Temperature Door	M6L Air Temperature Actuator-Left	Left Air Temperature Actuator	Temperature Valve Actuator Replacement - Left Side **Temperature Val e Actuator Replacement - Left Side**
Mode Door	M37 Mode Door Actuator	Mode Door Actuator	Mode Control Cam Actuator Replacement **Mode Control Cam Actuator Replacement**
Rear Mode Door	M37B Mode Door Actuator-Au iliary	Au iliary Mode Door Actuator	Au iliary Mode Valve Actuator Replacement **Au iliary Mode Val e Actuator Replacement**
Rear Temperature Door	M6B Air Temperature Actuator-Au iliary	Au iliary Air Temperature Actuator	Au iliary Temperature Valve Actuator Replacement **Au iliary Temperature Val e Actuator Replacement**
Air Temperature Sensor-Upper Au iliary	B7G Air Temperature Sensor-Upper Au iliary	Duct Air Temperature Sensor-Upper Au iliary	-
Air Temperature Sensor-Lower Au iliary	B7C Air Temperature Sensor-Lower Au iliary	Duct Air Temperature Sensor-Lower Au iliary	-
Upper Left Duct Air Temperature Sensor	B7H Air Temperature Sensor-Upper Left	Duct Air Temperature Sensor-Upper Left	Duct Air Temperature Sensor Replacement - Upper Left Side **Duct Air Temperature Sensor Replacement - Upper Left Side**
Lower Left Duct Air Temperature Sensor	B7D Air Temperature Sensor-Lower Left	Duct Air Temperature Sensor-Lower Left	Duct Air Temperature Sensor Replacement - Lower Left Side **Duct Air Temperature Sensor Replacement - Lower Left Side**
Upper Right Duct Air Temperature Sensor	B7 Air Temperature Sensor-Upper Right	Duct Air Temperature Sensor-Upper Right	Duct Air Temperature Sensor Replacement - Upper Right Side **Duct Air Temperature Sensor Replacement -**

cardiagn.com

			Upper Right Side
Lower Right Duct Air Temperature Sensor	B7E Air Temperature Sensor-Lower Right	Duct Air Temperature Sensor-Lower Right	Duct Air Temperature Sensor Replacement - Lower Right Side **Duct Air Temperature Sensor Replacement - Lower Right Side**
A/C Evaporator Temperature Sensor	B39 Evaporator Temperature Sensor	Evaporator Temperature Sensor	Evaporator Air Temperature Sensor Replacement **E aporator Air Temperature Sensor Replacement**
Passenger Compartment Air Temperature Sensor,	B10B Ambient Light / Sunload Sensor	Inside Air Temperature, Ambient Light and Sun Load sensor	Sun Load Temperature and Daytime Running Lamp Ambient Light Sensor Replacement **Sun Load Temperature and Daytime Running Lamp Ambient Light Sensor Replacement**
Air Quality Sensor	B108 Air Quality Sensor	Air Quality Sensor	Ambient Air Quality Sensor Replacement **Ambient Air uality Sensor Replacement**
Blower Motor Control Module	K8 Blower Motor Control Module	Blower Motor Control Module	Heater and Blower and Air Conditioning Control Module Replacement **Heater and Blower and Air Conditioning Control Module Replacement**
Blower Motor	M8 Blower Motor	Blower Motor	Blower Motor Replacement **Blower Motor Replacement**
Blower Motor Control Module-Au iliary	K8A Blower Motor Control Module-Au iliary	Au iliary Blower Motor Control Module	Au iliary Heater and Air Conditioning Control Module Replacement **Au iliary Heater and Air Conditioning Control Module Replacement**
Blower motor Au iliary	M8B Blower motor Au iliary	Blower motor Au iliary	Au iliary Blower Motor Replacement **Au iliary Blower Motor Replacement**

cardiagn.com

A/C High Side Pressure Sensor	B1 A/C Refrigerant Pressure Sensor	A/C Refrigerant Pressure Sensor	Air Conditioning (A/C) Refrigerant Pressure Sensor Replacement (LF1),Air Conditioning (A/C) Refrigerant Pressure Sensor Replacement (LAU) **Air Conditioning (A/C) Refrigerant Pressure Sensor Replacement (LF1)** or **Air Conditioning (A/C) Refrigerant Pressure Sensor Replacement (LAU)**
A/C Compressor Refrigerant Solenoid Valve	Q2 A/C Compressor Clutch	A/C Compressor Valve	Air Conditioning Compressor Replacement (LF1),Air Conditioning Compressor Replacement (LAU) **Air Conditioning Compressor Replacement (LF1)** or **Air Conditioning Compressor Replacement (LAU)**
Radio/HVAC Control	A20 Radio/HVAC Control	Radio/HVAC Control	Radio Control Assembly Replacement **Radio Control Assembly Replacement**
Remote Heater and Air Conditioning Control Module	K33 HVAC Control Module	HVAC Control Module	Heater and Air Conditioning Control Replacement **Control Module References**

DTC B0163, B0183, OR B1405

Diagnostic Instructions

- Perform the **Diagnostic System Check - Vehicle** prior to using this diagnostic procedure.
- Review **Strategy Based Diagnosis** for an overview of the diagnostic approach.
- **Diagnostic Procedure Instructions** provides an overview of each diagnostic category.

DTC Descriptor

DTC B0163 02

Passenger Compartment Temperature Sensor Circuit Short to Ground

cardiagn.com

DTC B0163 05

Passenger Compartment Temperature Sensor Circuit High Voltage/Open

DTC B0183 02

Solar Load Sensor Circuit Short to Ground

DTC B0183 05

Solar Load Sensor Circuit High Voltage/Open

DTC B1405 02

Control Module Voltage Reference Output 2 Circuit Short to Ground

DTC B1405 05

Control Module Voltage Reference Output 2 Circuit High Voltage/Open

Circuit/System Description

The ambient light/sunload sensor includes the sunload sensor and passenger compartment temperature sensor.

This sensor assembly provides information about:

- Sun heat intensity
- Elevation
- Azimuth
- Passenger compartment temperature

The sunload sensor is connected to ground and to a 12 V clocked power supply through the HVAC control module. This clocked power supply is to power the sensor electronics and to work as a clock generator to the sunload sensor micro controller. The sensor uses a pulse signal for data identification and transferring the sun intensity measurement. At each positive transition from the clocked supply input, the sunload sensor micro controller will shift channels enabling new intensity measurement on the signal output to the HVAC control module. The signal voltage varies between 0-4 V.

The passenger compartment temperature sensor is a negative temperature co-efficient thermistor. A signal and low reference circuit enables the sensor to operate. As the air temperature increases, the sensor resistance decreases. The sensor signal varies between 0-5 V.

Bright or high intensity light causes the vehicles interior temperature to increase. The HVAC system compensates for the increased temperature by diverting additional cool air into the vehicle.

Conditions for Running the DTC

cardiagn.com

- Ignition ON.
- The HVAC control module is ON.

Conditions for Setting the DTC

B0163 02 or B0163 05

The HVAC control module detects the sensor signal out of range. The signal voltage is less than 0.1 V or greater than 4.9 V for more than 50 ms.

B0183 02

The 5 V identification pulse is not received.

B0183 05

The input signal is static and greater than 4.8 V.

B1405 02

Clocked supply for multi zone sensor is shorted to ground.

B1405 05

Clocked supply for multi zone sensor is shorted to voltage or open.

Action Taken When the DTC Sets

- The system will use the last valid values as default.
- If no value is read at the time of fault, the HVAC Control Module uses 0 W/m^2 as intensity, 45° for elevation and -75° for azimuth.

Conditions for Clearing the DTC

B0163 02 or B0163 05

The sensor signal is within specified range between 0.1-4.9 V.

B0183 02

The 5 V identification pulse will be received.

B0183 05

The correct pulse signal succession will be received.

B1405 02 or B1405 05

cardiagn.com

The condition for setting the DTC is no longer present.

Reference Information

Schematic Reference

HVAC Schematics

Connector End View Reference

Component Connector End Views

Description and Operation

Automatic HVAC Description and Operation

Electrical Information Reference

- **Circuit Testing**
- **Connector Repairs**
- **Testing for Intermittent Conditions and Poor Connections**
- **Wiring Repairs**

Scan Tool Reference

Control Module References for scan tool information

Circuit/System Verification

1. Verify that DTC B1405 02 or B1405 05 is not set.
   - If DTC is present, refer to Ambient Light/Sunload Sensor Power Supply Malfunction below.
2. Verify that DTC B0163 02 or B0163 05 is not set.
   - If DTC is present, refer to Passenger Compartment Temperature Sensor Circuit Malfunction below.
3. Verify that DTC B0183 02 or B0183 05 is not set.
   - If DTC is present, refer to Sunload Sensor Circuit Malfunction below.
4. Measure actual inside air temperature using a thermometer. Compare this value to the scan tool Passenger Compartment Air Temperature parameter. The measured temperature should be within 5°C (9°F) difference of parameter value.
   - If not within the specified range, replace the B10B Ambient Light/Sunload Sensor.

Circuit/System Testing

Ambient Light/Sunload Sensor Power Supply Malfunction

1. Ignition OFF, disconnect the harness connector at the B10B Ambient Light/Sunload Sensor.

cardiagn.com

2. Test for less than 10 ohms between the B10B Ambient Light/Sunload Sensor ground circuit terminal 6 and ground.
   - If greater than the specified range, test the ground circuit for an open/high resistance. If the circuit tests normal, replace the K33 HVAC Control Module.
3. Ignition ON, test for battery voltage between the reference voltage circuit terminal 2 and ground.
   - If greater than the specified range, test the reference voltage circuit for an open or short to ground. If the circuit tests normal, replace the K33 HVAC Control Module.
4. If all circuits test normal, replace the B10B Ambient Light/Sunload Sensor.

Passenger Compartment Temperature Sensor Circuit Malfunction

1. Ignition OFF, disconnect the harness connector at the B10B Ambient Light/Sunload Sensor.
2. Ignition ON, test for 4.8-5.2 V between the signal circuit terminal 3 and ground.
   - If less than the specified range, test the signal circuit terminal for a short to ground or open/high resistance. If the circuit tests normal, replace the K33 HVAC Control Module.
   - If greater than the specified range, test the signal circuit terminal for a short to battery. If the circuit tests normal, replace the K33 HVAC Control Module.
3. If all circuits test normal, replace the B10B Ambient Light/Sunload Sensor.

Sunload Sensor Circuit Malfunction

1. Ignition OFF, disconnect the harness connector at the B10B Ambient Light/Sunload Sensor.
2. Ignition ON, test for 4.8-5.2 V between the signal circuit terminal 4 and ground.
   - If less than the specified range, test the signal circuit terminal for a short to ground or open/high resistance. If the circuit tests normal, replace the K33 HVAC Control Module.
   - If greater than the specified range, test the signal circuit terminal for a short to battery. If the circuit tests normal, replace the K33 HVAC Control Module.
3. If all circuits test normal, replace the B10B Ambient Light/Sunload Sensor.

Repair Procedures

Perform the **Diagnostic Repair Verification** after completing the diagnostic procedure.

- **HVAC Component Replacement Reference**
- **Control Module References** for HVAC control module replacement, setup, and programming

DTC B0173, B0178, B0509, B0514, B0519, B3583, OR B3933

Diagnostic Instructions

- Perform the **Diagnostic System Check - Vehicle** prior to using this diagnostic procedure.
- Review **Strategy Based Diagnosis** for an overview of the diagnostic approach.
- **Diagnostic Procedure Instructions** provides an overview of each diagnostic category.

cardiagn.com

DTC Descriptors

DTC B0173 02

pper Left Duct Air Temperature Sensor Circuit Short to Ground

DTC B0173 05

pper Left Duct Air Temperature Sensor Circuit High Voltage/Open

DTC B0178 02

Lower Left Duct Air Temperature Sensor Circuit Short to Ground

DTC B0178 05

Lower Left Duct Air Temperature Sensor Circuit High Voltage/Open

DTC B0509 02

pper Right Duct Air Temperature Sensor Circuit Short to Ground

DTC B0509 05

pper Right Duct Air Temperature Sensor Circuit High Voltage/Open

DTC B0514 02

Lower Right Duct Air Temperature Sensor Circuit Short to Ground

DTC B0514 05

Lower Right Duct Air Temperature Sensor Circuit High Voltage/Open

DTC B0519 02

Rear pper Duct Air Temperature Sensor Circuit Short to Ground

DTC B0519 05

Rear pper Duct Air Temperature Sensor Circuit High Voltage/Open

DTC B3583 02

Rear Lower Duct Air Temperature Sensor Circuit Short to Ground

DTC B3583 05

cardiagn.com

Rear Lower Duct Air Temperature Sensor Circuit High Voltage/Open

DTC B3933 02

Air Conditioning vaporator Temperature Sensor Circuit Short to Ground

DTC B3933 05

Air Conditioning vaporator Temperature Sensor Circuit High Voltage/Open

Circuit/System Description

The air temperature sensors are a 2-wire negative temperature co-efficient thermistor. The vehicle uses the following air temperature sensors

- Air temperature sensor - left upper
- Air temperature sensor - left lower
- Air temperature sensor - right upper
- Air temperature sensor - right lower
- Air temperature sensor - rear upper (only with C 4)
- Air temperature sensor - rear lower (only with C 4)
- A/C evaporator temperature sensor

A signal and low reference circuit enables the sensor to operate. As the air temperature surrounding the sensor increases, the sensor resistance decreases. The sensor signal voltage decreases as the resistance decreases. The sensor operates within a temperature range between -40 to +85°C (-40 to +185°F). The sensor signal varies between 0-5 V. The HVAC control module converts the signal to a range between 0-255 counts. As the air temperature increases the count value will decrease. If the HVAC control module detects a malfunctioning sensor, then the control module software will use a default air temperature value. The default action ensures that the HVAC system can ad ust the inside air temperature near the desired temperature until the condition is corrected.

Conditions for Running the DTC

- Ignition ON.
- The HVAC control module is ON.

Conditions for Setting the DTC

The HVAC control module detects the sensor signal out of range. The signal voltage is less than 0.1 V or greater than 4.9 V for more than 50 ms.

Action Taken When the DTC Sets

The system operates using a default value.

Conditions for Clearing the DTC

The sensor signal is within specified range between 0.1-4.9 V.

Reference Information

Schematic Reference

HVAC Schematics

Connector End View Reference

Component Connector End Views

Description and Operation

Automatic HVAC Description and Operation

Electrical Information Reference

- **Circuit Testing**
- **Connector Repairs**
- **Testing for Intermittent Conditions and Poor Connections**
- **Wiring Repairs**

Scan Tool Reference

Control Module References for scan tool information

Circuit/System Verification

Measure actual temperature using a thermometer at each of the duct temperature sensors. Compare this value to the appropriate scan tool Duct Actual parameter. The measured temperature should be within 5°C (9°F) difference of appropriate Duct Actual parameter value.

Circuit/System Testing

1. Ignition OFF, disconnect the harness connector at the appropriate temperature sensor.
2. Test for less than 10 ohms between the temperature sensor ground circuit terminal B and ground.
   - If greater than the specified value, test the ground circuit for an open/high resistance. If the circuit tests normal, replace the K33 HVAC Control Module.
3. Ignition ON, test for 4.8-5.2 V between the signal circuit terminal A and ground.
   - If less than the specified range, test the signal circuit for a short to ground or open/high resistance. If the circuit tests normal, replace the K33 HVAC Control Module.
   - If greater than the specified range, test the signal circuit for a short to voltage. If the circuit tests normal, replace the K33 HVAC Control Module.

cardiagn.com

4. If all circuits test normal, replace the temperature sensor.

Repair Procedures

Perform the **Diagnostic Repair Verification** after completing the diagnostic procedure.

- **HVAC Component Replacement Reference**
- **Control Module References**

DTC B018A, B048C, B048F, OR B1395

Diagnostic Instructions

- Perform the **Diagnostic System Check - Vehicle** prior to using this diagnostic procedure.
- Review **Strategy Based Diagnosis** for an overview of the diagnostic approach.
- **Diagnostic Procedure Instructions** provides an overview of each diagnostic category.

DTC Descriptors

DTC B018A 02

Windshield Temperature Sensor Circuit Short to Ground

DTC B018A 05

Windshield Temperature Sensor Circuit High Voltage/Open

DTC B048C 02

Humidity Sensor Humidity Circuit Short to Ground

DTC B048C 05

Humidity Sensor Humidity Circuit High Voltage/Open

DTC B048F 02

Humidity Sensor Temperature Circuit Short to Ground

DTC B048F 05

Humidity Sensor Temperature Circuit High Voltage/Open

DTC B1395 03

Control Module Voltage Reference Output Circuit Low Voltage

cardiagn.com

DTC B1395 07

Control Module Voltage Reference Output Circuit High Voltage

Circuit/System Description

The windshield temperature and inside moisture sensor includes the relative humidity sensor, windshield temperature sensor and humidity sensing element temperature sensor.

This sensor assembly provides information about

- Relative humidity level at windshield inside
- Temperature of the windshield inside
- Temperature of the humidity sensor element

The relative humidity sensor measures the relative humidity of the compartment side of the windshield. It also detects the temperature of the windshield surface on the compartment side. Both values are used as control inputs for the HVAC control module application to calculate the fog ris on windshield compartment side and ability to reduce fuel consumption by decreasing A/C compressor power to a minimum without causing any fog. The sensor will also enable partial recirculation mode in order to improve heat-up performance of the passenger compartment under cold ambient temperature conditions without the ris of mist build-up on the windshield. The humidity sensor element temperature sensor supplies the temperature of the humidity sensor element. It is only needed if the thermal contact between the humidity sensing element and the inside windshield surface is not sufficient.

Conditions for Running the DTC

- Ignition ON.
- The HVAC control module is ON.

Conditions for Setting the DTC

B018A 02, B048C 02, B048C 02 or B1395 03

The HVAC control module detects the sensor signal out of range. The signal voltage is less than 0.1 V for more than 50 ms.

B018A 05, B048C 05, B048C 05 or B1395 07

The HVAC control module detects the sensor signal out of range. The signal voltage is greater than 4.9 V for more than 50 ms.

Action Taken When the DTC Sets

- The system will use the last valid values as default.
- If no value is read at the time of fault, the HVAC control module uses 60 for humidity.

cardiagn.com

Conditions for Clearing the DTC

The condition for setting the DTC is no longer present.

Reference Information

Schematic Reference

HVAC Schematics

Connector End View Reference

Component Connector End Views

Description and Operation

Automatic HVAC Description and Operation

Electrical Information Reference

- **Circuit Testing**
- **Connector Repairs**
- **Testing for Intermittent Conditions and Poor Connections**
- **Wiring Repairs**

Scan Tool Reference

Control Module References

Circuit/System Verification

1. Verify that DTC B1395 03 or B1395 07 is not present.
   - If DTC is present, refer to Windshield Temperature And Inside Moisture Sensor Power Supply Malfunction below.
2. Verify that DTC B048C 02 or B048C 05 is not present.
   - If DTC is present, refer to Humidity Sensor Humidity Circuit Malfunction below.
3. Verify that DTC B048F 02 or B048F 05 is not present.
   - If DTC is present, refer to Humidity Sensor Temperature Circuit Malfunction below.
4. Verify that DTC B018A 02 or B018A 05 is not present.
   - If DTC is present, refer to Windshield Temperature Sensor Circuit Malfunction below.
5. Measure actual temperature using a thermometer at the windshield temperature and inside moisture sensor. Compare this value to the scan tool Passenger Compartment Humidity Sensor Temperature parameter. The measured temperature should be within 5°C (9°F) difference of parameter value.
   - If not within the specified range, replace the B160 Windshield Temperature and Inside Moisture Sensor.

cardiagn.com

6. Measure actual temperature using a thermometer at the windshield temperature and inside moisture sensor. Compare this value to the scan tool Windshield Temperature parameter. The measured temperature should be within 5°C (9°F) difference of parameter value.
    - If not within the specified range, replace the B160 Windshield Temperature and Inside Moisture Sensor.

Circuit/System Testing

Windshield Temperature and Inside Moisture Sensor Power Supply Malfunction

1. Ignition OFF, disconnect the harness connector at the B160 Windshield Temperature and Inside Moisture Sensor.
2. Test for less than 10 ohms between the ground circuit terminal 3 and ground.
    - If greater than the specified range, test the ground circuit for an open/high resistance.
3. Ignition ON, test for 4.8-5.2 V between the ground circuit terminal 3 and the reference voltage circuit terminal 1.
    - If less than the specified range, test the reference voltage circuit for a short to ground or open/high resistance. If the circuit tests normal, replace the K33 HVAC Control Module.
    - If greater than the specified range, test the reference voltage circuit for a short to voltage. If the circuit tests normal, replace the K33 HVAC Control Module.
4. If all circuits test normal, replace the B160 Windshield Temperature and Inside Moisture Sensor.

Humidity Sensor Humidity Circuit Malfunction

1. Ignition OFF, disconnect the harness connector at the B160 Windshield Temperature and Inside Moisture Sensor.
2. Test for 4.8-5.2 V between the signal circuit terminal 2 and ground.
    - If less than the specified range, test the signal circuit terminal for a short to ground or open/high resistance. If the circuit tests normal, replace the K33 HVAC Control Module.
    - If greater than the specified range, test the signal circuit terminal for a short to battery. If the circuit tests normal, replace the K33 HVAC Control Module.
3. If all circuits test normal, replace the B160 Windshield Temperature and Inside Moisture Sensor.

Humidity Sensor Temperature Circuit Malfunction

1. Ignition OFF, disconnect the harness connector at the B160 Windshield Temperature and Inside Moisture Sensor.
2. Ignition ON, test for 4.8-5.2 V between the signal circuit terminal 5 and ground.
    - If less than the specified range, test the signal circuit terminal for a short to ground or open/high resistance. If the circuit tests normal, replace the K33 HVAC Control Module.
    - If greater than the specified range, test the signal circuit terminal for a short to battery. If the circuit tests normal, replace the K33 HVAC Control Module.
3. If all circuits test normal, replace the B160 Windshield Temperature and Inside Moisture Sensor and verify the DTC does not reset.

cardiagn.com

Windshield Temperature Sensor Circuit Malfunction

1. Ignition OFF, disconnect the harness connector at the B160 Windshield Temperature and Inside Moisture Sensor.
2. Ignition ON, test for 4.8-5.2 V between the signal circuit terminal 4 and ground.
   - If less than the specified range, test the signal circuit terminal for a short to ground or open/high resistance. If the circuit tests normal, replace the K33 HVAC Control Module.
   - If greater than the specified range, test the signal circuit terminal for a short to battery. If the circuit tests normal, replace the K33 HVAC Control Module.
3. If all circuits test normal, replace the B160 Windshield Temperature and Inside Moisture Sensor and verify the DTC does not reset.

Repair Procedures

Perform the **Diagnostic Repair Verification** after completing the diagnostic procedure.

- **HVAC Component Replacement Reference**
- **Control Module References** for HVAC control module replacement, setup, and programming

DTC B0193

Diagnostic Instructions

- Perform the **Diagnostic System Check - Vehicle** prior to using this diagnostic procedure.
- Review **Strategy Based Diagnosis** for an overview of the diagnostic approach.
- **Diagnostic Procedure Instructions** provides an overview of each diagnostic category.

DTC Descriptors

DTC B0193 01

Front Blower Motor Speed Circuit Short to Battery

DTC B0193 06

Front Blower Motor Speed Circuit Low Voltage/Open

Circuit/System Description

The blower motor control module is an interface between the HVAC control module and the blower motor. The blower motor speed control from the HVAC control module, battery positive and ground circuits enable the blower motor control module to operate. The HVAC control module provides a pulse width modulation (PWM) signal to the blower motor control module in order to command the blower motor speed. The blower motor control module transfers the PWM signal into a corresponding blower motor voltage. The voltage resides between 2-13 V and changes linear to the height of the PWM signal.

cardiagn.com

Conditions for Running the DTC

- Ignition ON.
- The HVAC control module is ON.

Conditions for Setting the DTC

B0193 01

The voltage at the HVAC control module output to the blower motor control module is always high.

B0193 06

The voltage at the HVAC control module output to the blower motor control module is always low or floating.

Action Taken When the DTC Sets

The blower motor is inoperative.

Conditions for Clearing the DTC

The condition for setting the DTC is no longer present.

Reference Information

Schematic Reference

HVAC Schematics

Connector End View Reference

Component Connector End Views

Description and Operation

Automatic HVAC Description and Operation

Electrical Information Reference

- **Circuit Testing**
- **Connector Repairs**
- **Testing for Intermittent Conditions and Poor Connections**
- **Wiring Repairs**

Scan Tool Reference

Control Module References for scan tool information

cardiagn.com

Circuit/System Testing

1. Ignition OFF, disconnect the X1 harness connector at the K8 Blower Motor Control Module.
2. Test for less than 5 ohms between the ground circuit X1 terminal 5 and ground.
   - If greater than the specified range, test the ground circuit for an open/high resistance.
3. Ignition ON, verify that a test lamp illuminates between the B+ circuit X1 terminal 6 and ground.
   - If the test lamp does not illuminate, test the B+ circuit for a short to ground or an open/high resistance.
4. Connect a DMM between the control circuit X1 terminal 3 and B+.
5. Cycle the blower motor from OFF to HIGH. The voltage should increase while changing between the commanded states.
   - If voltage remains greater than 11.5 V while changing between the commanded states, test the control circuit for a short to voltage. If the circuit test normal, replace the K33 HVAC Control Module.
   - If voltage remains less than 1.0 V while changing between the commanded states, test the control circuit for a short to ground or an open/high resistance. If the circuit tests normal, replace the K33 HVAC Control Module.
   - If voltage is between 1.0-11.5 V and does not increase when changing between the commanded states, replace the K33 HVAC Control Module.
6. Ignition OFF, connect the X1 harness connector at the K8 Blower Motor Control Module and disconnect the harness connector at the M8 Blower Motor.
7. Ignition ON, verify that a test lamp illuminates between the B+ circuit terminal 2 and ground.
   - If the test lamp does not illuminate, test the B+ circuit for a short to ground or an open/high resistance. If the circuit tests normal, replace the K8 Blower Motor Control Module.
8. Connect a test lamp between the B+ circuit terminal 2 and the control circuit terminal 1.
9. Turn the blower motor on high speed then to low speed. The test lamp intensity should be bright when in high speed and very dim or off when the blower is on low speed.
   - If the test lamp intensity does not vary, test the control circuit for a short to voltage, short to ground, or an open/high resistance. If the circuit tests normal, replace the K8 Blower Motor Control Module.
10. If all circuits test normal, replace the M8 Blower Motor.

Repair Procedures

Perform the **Diagnostic Repair Verification** after completing the diagnostic procedure.

- **HVAC Component Replacement Reference**
- **Control Module References** for HVAC control module replacement, setup, and programming

DTC B0208

Diagnostic Instructions

cardiagn.com

- Perform the **Diagnostic System Check - Vehicle** prior to using this diagnostic procedure.
- Review **Strategy Based Diagnosis** for an overview of the diagnostic approach.
- **Diagnostic Procedure Instructions** provides an overview of each diagnostic category.

DTC Descriptor

DTC B0208 01

Rear Blower Motor Speed Circuit Short to Battery

DTC B0208 06

Rear Blower Motor Speed Circuit Low Voltage/Open

Circuit/System Description

The blower motor control module - auxiliary is an interface between the HVAC control module and the blower motor. The blower motor speed control from the HVAC control module, battery positive and ground circuits enable the blower motor control module - auxiliary to operate. The HVAC control module provides a pulse width modulation (PWM) signal to the blower motor control module - auxiliary in order to command the blower motor speed. The blower motor control module - auxiliary transfers the PWM signal into a corresponding blower motor voltage. The voltage resides between 2-13 V and changes linear to the height of the PWM signal.

Conditions for Running the DTC

- Ignition ON.
- The HVAC control module is ON.

Conditions for Setting the DTC

B0208 01

The voltage at the HVAC control module output to the blower motor control module - auxiliary is always high.

B0208 06

The voltage at the HVAC control module output to the blower motor control module - auxiliary is always low or floating.

Action Taken When the DTC Sets

The blower motor is inoperative.

Conditions for Clearing the DTC

The condition for setting the DTC is no longer present.

cardiagn.com

Reference Information

Schematic Reference

HVAC Schematics

Connector End View Reference

Component Connector End Views

Description and Operation

Automatic HVAC Description and Operation

Electrical Information Reference

- **Circuit Testing**
- **Connector Repairs**
- **Testing for Intermittent Conditions and Poor Connections**
- **Wiring Repairs**

Scan Tool Reference

Control Module References for scan tool information

Circuit/System Testing

1. Ignition OFF, disconnect the X1 harness connector at the K8A Blower Motor Control Module.
2. Test for less than 5 ohms between the ground circuit X1 terminal 4 and ground.
   - If greater than the specified range, test the ground circuit for an open/high resistance.
3. Ignition ON, verify that a test lamp illuminates between the B+ circuit X1 terminal 2 and ground.
   - If the test lamp does not illuminate, test the B+ circuit for a short to ground or an open/high resistance.
4. Connect a DMM between the control circuit X1 terminal 1 and B+.
5. Cycle the blower motor from OFF to HIGH. The voltage should increase while changing between the commanded states.
   - If voltage remains greater than 11.5 V while changing between the commanded states, test the control circuit for a short to voltage. If the circuit test normal, replace the K33 HVAC Control Module.
   - If voltage remains less than 1.0 V while changing between the commanded states, test the control circuit for a short to ground or an open/high resistance. If the circuit tests normal, replace the K33 HVAC Control Module.
   - If voltage is between 1.0-11.5 V and does not increase when changing between the commanded states, replace the K33 HVAC Control Module.

cardiagn.com

6. Ignition OFF, connect the X1 harness connector at the K8A Blower Motor Control Module and disconnect the harness connector at the M8A Blower Motor.
7. Ignition ON, verify that a test lamp illuminates between the B+ circuit terminal B and ground.
   - If the test lamp does not illuminate, test the B+ circuit for a short to ground or an open/high resistance. If the circuit tests normal, replace the K8A Blower Motor Control Module.
8. Connect a test lamp between the B+ circuit terminal B and the control circuit terminal A.
. Turn the blower motor on high speed then to low speed. The test lamp intensity should be bright when in high speed and very dim or off when the blower is on low speed.
   - If the test lamp intensity does not vary, test the control circuit for a short to voltage, short to ground, or an open/high resistance. If the circuit tests normal, replace the K8A Blower Motor Control Module.
10. If all circuits test normal, replace the M8A Blower Motor.

Repair Procedures

Perform the **Diagnostic Repair Verification** after completing the diagnostic procedure.

- **HVAC Component Replacement Reference**
- **Control Module References** for HVAC control module replacement, setup, and programming

DTC B0223, B022A, B0233, B023A, B0408, B0418, B0428, OR B3531

Diagnostic Instructions

- Perform the **Diagnostic System Check - Vehicle** prior to using this diagnostic procedure.
- Review **Strategy Based Diagnosis** for an overview of the diagnostic approach.
- **Diagnostic Procedure Instructions** provides an overview of each diagnostic category.

DTC Descriptor

DTC B0223 01

Recirculate Position Command 1 Circuit Short to Battery

DTC B0223 06

Recirculate Position Command 1 Circuit Low Voltage/Open

DTC B022A 01

Recirculate Position Command 2 Circuit Short to Battery

DTC B022A 06

Recirculate Position Command 2 Circuit Low Voltage/Open

cardiagn.com

DTC B0233 01

Air Flow Control Circuit Short to Battery

DTC B0233 06

Air Flow Control Circuit Low Voltage/Open

DTC B023A 02

HVAC Actuators Supply Voltage Short to Ground

DTC B0408 01

Main Temperature Control Circuit Short to Battery

DTC B0408 06

Main Temperature Control Circuit Low Voltage/Open

DTC B0418 01

Right Temperature Control Circuit Short to Battery

DTC B0418 06

Right Temperature Control Circuit Low Voltage/Open

DTC B0428 01

Rear Temperature Control Circuit Short to Battery

DTC B0428 06

Rear Temperature Control Circuit Low Voltage/Open

DTC B3531 01

Rear Air Flow Control Circuit Short to Battery

DTC B3531 06

Rear Air Flow Control Circuit Low Voltage/Open

Circuit/System Description

Stepper motors are used for temperature regulation, air distribution control and recirculation door control.

cardiagn.com

With the appropriate switches at the Radio/HVAC control, the desired air temperature door position, air distribution door position and recirculation door position can be put in. The selected values are passed to the HVAC control module via the LIN-Bus. The HVAC control module supplies a 12 V reference voltage to the stepper motors and energi es the 4 stepper motor coils with a pulsed ground signal. The stepper motors put the appropriate door into the calculated position, in order to reach the put in temperature/position.

Conditions for Running the DTC

- Ignition ON.
- The HVAC control module is ON.

Conditions for Setting the DTC

B023A 02

The stepper motors supply output is shorted to ground.

B0223 01, B022A 01, B0233 01, B0408 01, B0418 01, B0428 01 or B3531 01

At least one control output (of four possible outputs) of the appropriate stepper motor is shorted to voltage when motor starts moving. Faults are not detected when motor is already running or target position is already reached.

B0223 06, B022A 06, B0233 06, B0408 06, B0418 06, B0428 06 or B3531 06

At least one control output (of four possible outputs) of the appropriate stepper motor is shorted to ground or open when motor starts moving. Faults are not detected when motor is already running or target position is already reached.

Action Taken When the DTC Sets

B023A 02

- The affected output will be switched off for hardware protection.
- All stepper motors are deactivated.

B0223, B022A, B0233, B0408, B0418, B0428 or B3531

- The affected output will be switched off for hardware protection.
- The affected stepper motor is deactivated.

Conditions for Clearing the DTC

The condition for setting the DTC is no longer present.

Reference Information

Schematic Reference

cardiagn.com

HVAC Schematics

Connector End View Reference

Component Connector End Views

Description and Operation

Automatic HVAC Description and Operation

Electrical Information Reference

- Circuit Testing
- Connector Repairs
- Testing for Intermittent Conditions and Poor Connections
- Wiring Repairs

Scan Tool Reference

Control Module References for scan tool information

Circuit/System Verification

1. Verify that DTC B023A 02 is not present.
   - If DTC is present, refer to Actuator Power Supply Malfunction below.
2. Verify that DTC B0223, B022A, B0233, B0408 or B0418 is not set.
   - If DTC is present, refer to Actuator Malfunction below.

Circuit/System Testing

Actuator Power Supply Malfunction

1. Ignition OFF, disconnect the harness connector at the appropriate actuator.
2. Ignition ON, verify that a test lamp illuminates between the 12 volt reference circuit terminal 2 and ground.
   - If the test lamp does not illuminate, test the 12 volt reference circuit for a short to ground or an open/high resistance. If the circuit tests normal test or replace the K33 HVAC control module.

Actuator Malfunction

1. Ignition OFF, disconnect the X3 and X4 harness connector at the K33 HVAC Control Module.
2. Ignition ON, test for 80-200 ohms between the 12 V reference voltage circuit terminal 15 X3 and each control circuit terminal of the appropriate actuator.
   - If less than the specified range, test for the 12 V reference voltage circuit and the control circuit for a short circuit. If the circuits test normal, replace the appropriate actuator.

cardiagn.com

- If greater than the specified range, test the 12 V reference voltage circuit and the control circuit for an open/high resistance. If the circuits test normal, replace the appropriate actuator.

3. If all circuits test normal, replace the K33 HVAC Control Module

Repair Procedures

Perform the **Diagnostic Repair Verification** after completing the diagnostic procedure.

- **HVAC Component Replacement Reference**
- **Control Module References** for HVAC control module replacement, setup, and programming

DTC B048D OR B048E

Diagnostic Instructions

- Perform the **Diagnostic System Check - Vehicle** prior to using this diagnostic procedure.
- Review **Strategy Based Diagnosis** for an overview of the diagnostic approach.
- **Diagnostic Procedure Instructions** provides an overview of each diagnostic category.

DTC Descriptors

DTC B048D 01

Auxiliary Heater Temperature Command Circuit Short to Battery

DTC B048D 06

Auxiliary Heater Temperature Command Circuit Low Voltage/Open

DTC B048E 00

Auxiliary Heater System Malfunction

Circuit/System Description

The HVAC control module sends a pulse width modulation (PWM) signal to the electrical auxiliary heater, if the interior temperature is too low and additional heat is requested. The request signal from the HVAC control module, battery positive, ignition and ground circuits enable the electrical auxiliary heater to operate. Through the signal circuit the electrical auxiliary heater sends via a PWM signal the current status to the HVAC control module.

Conditions for Running the DTC

- Ignition ON.
- The HVAC control module is ON.
- The electrical auxiliary heater is ON.

cardiagn.com

Conditions for Setting the DTC

B048D 01

The voltage at the HVAC control module output to the electrical auxiliary heater is always high.

B048D 06

The voltage at the HVAC control module output to the electrical auxiliary heater is always low or floating.

B048E 00

The feedback signal of the electrical auxiliary heater does not correspond with the requested PWM signal.

Action Taken When the DTC Sets

The electrical auxiliary heater is inoperative.

Conditions for Clearing the DTC

The feedback signal of the electrical auxiliary heater corresponds with the requested PWM signal.

Reference Information

Schematic Reference

HVAC Schematics

Connector End View Reference

Component Connector End Views

Description and Operation

Automatic HVAC Description and Operation

Electrical Information Reference

- **Circuit Testing**
- **Connector Repairs**
- **Testing for Intermittent Conditions and Poor Connections**
- **Wiring Repairs**

Scan Tool Reference

Control Module References for scan tool information

cardiagn.com

Circuit/System Verification

1. Verify that DTC B048D 01 or B048D 06 is not set.
   - If DTC is present, refer to Electrical Auxiliary Heater Control Circuit Malfunction below.
2. Verify that DTC B048E 00 is not set.
   - If DTC is present, refer to Electrical Auxiliary Heater Signal Circuit Malfunction below.

Circuit/System Testing

Electrical Au iliary Heater Control Circuit Malfunction

1. Ignition OFF, disconnect the X2 harness connector at the K33 HVAC Control Module and the X1 harness connector at the E40 Electrical Auxiliary Heater.
2. Ignition ON, verify that a test lamp illuminates between the ignition circuit terminal 2 X1 and ground.
   - If the test lamp does not illuminate, test the ignition circuit for a short to ground or an open/high resistance.
3. Test for less than 0.3 V between the control circuit terminal 7 X2 at the K33 HVAC Control Module harness connector and ground.
   - If greater than the specified range, test the control circuit for a short to voltage.
4. Ignition OFF, test for infinite resistance between the control circuit terminal 7 X2 at the K33 HVAC Control Module harness connector and ground.
   - If less than the specified value, test the control circuit for a short to ground.
5. Test for less than 5 ohms between the K33 HVAC Control Module control circuit terminal 7 X2 and control circuit terminal 1 X1 at the E40 Electrical Auxiliary Heater harness connector.
   - If greater than the specified value, test the control circuit for an open/high resistance.
6. If all circuits test normal, replace the E40 Electrical Auxiliary Heater and verify the DTC does not reset.

Electrical Au iliary Heater Signal Circuit Malfunction

1. Ignition OFF, disconnect the X2 harness connector at the K33 HVAC Control Module and the harness connectors at the E40 Electrical Auxiliary Heater.
2. Ignition ON, verify that a test lamp illuminates between the B+ circuit terminal 1 X2 at the E40 Electrical Auxiliary Heater harness connector and ground.
   - If the test lamp does not illuminate, test the B+ circuit for a short to ground or an open/high resistance.
3. Verify that a test lamp illuminates between the B+ circuit terminal 1 X2 and ground circuit terminal 1 X3.
   - If the test lamp does not illuminate, test the ground circuit for an open/high resistance.
4. Verify that a test lamp illuminates between the ignition circuit terminal 2 X1 and ground circuit terminal 1 X3.
   - If the test lamp does not illuminate, test the ignition circuit for a short to ground or an open/high resistance.
5. Test for less than 0.3 V between the signal circuit terminal 5 X2 at the K33 HVAC Control Module harness connector and ground.

cardiagn.com

- If greater than the specified range, test the signal circuit for a short to voltage.

6. Ignition OFF, test for infinite resistance between the signal circuit terminal 5 X2 at the K33 HVAC Control Module harness connector and ground.
   - If less than the specified value, test the signal circuit for a short to ground.
7. Test for less than 5 ohms between the K33 HVAC Control Module signal circuit terminal 5 X2 and signal circuit terminal 4 X1 at the E40 Electrical Auxiliary Heater harness connector.
   - If greater than the specified value, test the circuit for an open/high resistance.
8. If all circuits test normal, replace the E40 Electrical Auxiliary Heater and verify the DTC does not reset.

Repair Procedures

Perform the **Diagnostic Repair Verification** after completing the diagnostic procedure.

Control Module References for HVAC control module replacement, setup, and programming

DTC B3843

Diagnostic Instructions

- Perform the **Diagnostic System Check - Vehicle** prior to using this diagnostic procedure.
- Review **Strategy Based Diagnosis** for an overview of the diagnostic approach.
- **Diagnostic Procedure Instructions** provides an overview of each diagnostic category.

DTC Descriptor

DTC B3843 02

Outside Air Quality Sensor Circuit Short to Ground

DTC B3843 05

Outside Air Quality Sensor Circuit High Voltage/Open

DTC B3843 08

Outside Air Quality Sensor Circuit Performance - Signal Invalid

Circuit/System Description

The HVAC control module detects exhaust gas by an air quality sensor. The air quality sensor is a 3-wire sensor with an ignition voltage circuit, a ground circuit and a signal circuit.

The information is pulse width modulation (PWM) signal generated on the output pin.

The HVAC control module evaluates the information of the air quality sensor and closes the recirculation door while in the automatic mode as soon as the concentration of pollutants exceeds a preset value.

cardiagn.com

Conditions for Running the DTC

- Ignition ON.
- The HVAC control module is ON.

Conditions for Setting the DTC

B3843 02

No PWM is detected and the signal is low.

B3843 05

No PWM is detected and the signal is high.

B3843 08

The Sensor sends a 5% PWM signal indicating an internal sensor short circuit or open circuit.

Action Taken When the DTC Sets

The automatic recirculation mode is disabled.

Conditions for Clearing the DTC

The condition for setting the DTC is no longer present.

Reference Information

Schematic Reference

HVAC Schematics

Connector End View Reference

Component Connector End Views

Description and Operation

Automatic HVAC Description and Operation

Electrical Information Reference

- **Circuit Testing**
- **Connector Repairs**
- **Testing for Intermittent Conditions and Poor Connections**
- **Wiring Repairs**

cardiagn.com

Scan Tool Reference

Control Module References for scan tool information

Circuit/System Testing

1. Ignition OFF, disconnect the harness connector at the B108 Air uality Sensor.
2. Test for less than 10 ohms between the ground circuit terminal 2 and ground.
   - If greater than the specified range, test the ground circuit for an open/high resistance. If the circuit tests normal, replace the K33 HVAC Control Module.
3. Ignition ON, verify that a test lamp illuminates between the ignition circuit terminal 1 and ground.
   - If the test lamp does not illuminate, test the ignition circuit for a short to ground or a open/high resistance. If the circuit tests normal, replace the K33 HVAC Control Module.
4. Verify the scan tool Odor Sensor parameter is greater than 95%.
   - If less than the specified range, test the signal circuit for a short to ground. If the circuit tests normal, replace the K33 HVAC Control Module.
5. Install a 3 A fused jumper wire between the following signal circuit terminal 3 and the ground circuit terminal 2. Verify the scan tool Odor Sensor parameter is less than 5%.
   - If greater than the specified range, test the signal circuit for a short to voltage or open/high resistance. If the circuit tests normal, replace the K33 HVAC Control Module.
6. If all circuits test normal, replace the B108 Air uality Sensor.

Repair Procedures

Perform the **Diagnostic Repair Verification** after completing the diagnostic procedure.

- **HVAC Component Replacement Reference**
- **Control Module References** for HVAC Control Module replacement, setup, and programming

DTC B393B

Diagnostic Instructions

- Perform the **Diagnostic System Check - Vehicle** prior to using this diagnostic procedure.
- Review **Strategy Based Diagnosis** for an overview of the diagnostic approach.
- **Diagnostic Procedure Instructions** provides an overview of each diagnostic category.

DTC Descriptor

DTC B393B 04

Air Conditioning Compressor Valve Control Circuit Open

DTC B393B 0B

cardiagn.com

Air Conditioning Compressor Valve Control Circuit High Current

Circuit/System Description

The HVAC control module supplies battery voltage to the A/C compressor. When the A/C switch is pressed, the HVAC control module provides a pulse width modulation (PWM) signal to the A/C compressor in order to command the performance of the A/C compressor. The performance of the A/C compressor is regulated according to adjusted interior temperature on the basis of characteristic lines. Therefore the HVAC control module grounds the A/C compressor with the PWM signal.

Conditions for Running the DTC

- Ignition ON.
- The HVAC control module is ON.

Conditions for Setting the DTC

B393B 04

A PWM greater than 10% is send out but no current is read back.

B393B 0B

Measured current is above threshold of 815 mA.

Action Taken When the DTC Sets

B393B 04

The A/C compressor is disabled.

B393B 0B

- The A/C compressor is disabled.
- Output will be switched off for hardware protection.

Conditions for Clearing the DTC

The condition for setting the DTC is no longer present.

Reference Information

Schematic Reference

HVAC Schematics

Connector End View Reference

cardiagn.com

Component Connector End Views

Description and Operation

Automatic HVAC Description and Operation

Electrical Information Reference

- **Circuit Testing**
- **Connector Repairs**
- **Testing for Intermittent Conditions and Poor Connections**
- **Wiring Repairs**

Scan Tool Reference

Control Module References for scan tool information

Circuit/System Testing

1. Ignition OFF, disconnect the harness connector at the 46 Air Conditioning Compressor Valve.
2. Ignition ON, verify that a test lamp illuminates between the B circuit terminal 2 and ground.
   - If the test lamp does not illuminate, test the B circuit for a short to ground or an open/high resistance. If the circuit tests normal and the FRT HVAC Fuse circuit open, test or replace the 46 Air Conditioning Compressor Valve.
3. Verify that a test lamp does not illuminate between the B circuit terminal 2 and the control circuit terminal 1.
   - If the test lamp illuminates, test the control circuit for a short to ground. If the circuit tests normal, replace the K33 HVAC Control Module.
4. Remove the test lamp.
5. Command the A/C compressor ON with a scan tool. Verify the scan tool A/C Compressor Refrigerant Solenoid Valve Command parameter is 100%.
   - If not the specified value, test the control circuit for a short to voltage. If the circuit tests normal, replace the K33 HVAC Control Module.
6. If all circuits test normal, test or replace the 46 Air Conditioning Compressor Valve.

Component Testing

Static Test

1. Ignition OFF, disconnect the harness connector at the 46 Air Conditioning Compressor Valve.
2. Test for 7-15 ohms between B circuit terminal 2 and control circuit terminal 1.
   - If not within the specified range, replace the 46 Air Conditioning Compressor Valve.
3. Test for infinite resistance between each terminal and the 46 Air Conditioning Compressor Valve housing/case.

cardiagn.com

- If not the specified value, replace the 46 Air Conditioning Compressor Valve.

Repair Procedures

Perform the **Diagnostic Repair Verification** after completing the diagnostic procedure.

- **HVAC Component Replacement Reference**
- **Control Module References** for HVAC control module replacement, setup, and programming

DTC P0532 OR P0533

Diagnostic Instructions

- Perform the **Diagnostic System Check - Vehicle** prior to using this diagnostic procedure.
- Review **Strategy Based Diagnosis** for an overview of the diagnostic approach.
- **Diagnostic Procedure Instructions** provides an overview of each diagnostic category.

DTC Descriptors

DTC P0532 00

Air Conditioning (A/C) Refrigerant Pressure Sensor Circuit Low Voltage

DTC P0533 00

Air Conditioning (A/C) Refrigerant Pressure Sensor Circuit High Voltage

Circuit/System Description

The engine control module (ECM) monitors the high side refrigerant pressure through the A/C refrigerant pressure sensor. The ECM supplies a 5 V reference and a low reference to the sensor. Changes in the A/C refrigerant pressure cause the sensor signal to the ECM to vary. When the pressure is high, the signal voltage is high. When the pressure is low, the signal voltage is low. When pressure is high, the ECM commands the cooling fans on. When pressure is too high or too low, the ECM will not allow the activation of the A/C compressor.

Conditions for Running the DTC

Engine is running.

Conditions for Setting the DTC

P0532 00

The ECM detects a short to ground or open at the A/C pressure sensor signal circuit.

P0533 00

cardiagn.com

The ECM detects a short to voltage at the A/C pressure sensor signal circuit.

Action Taken When the DTC Sets

- The A/C compressor is disabled.
- The ECM will illuminate the malfunction indicator lamp (MIL).

Conditions for Clearing the DTC

The condition for setting the DTC is no longer present.

Reference Information

Schematic Reference

HVAC Schematics

Connector End View Reference

Component Connector End Views

Description and Operation

Automatic HVAC Description and Operation

Electrical Information Reference

- **Circuit Testing**
- **Connector Repairs**
- **Testing for Intermittent Conditions and Poor Connections**
- **Wiring Repairs**

Scan Tool Reference

Control Module References for scan tool information

Circuit/System Testing

1. Ignition OFF, disconnect the harness connector at the B1 A/C Refrigerant Pressure Sensor.
2. Ignition ON, test for 4.8-5.2V between the 5V reference circuit terminal 2 and ground.
   - If less than the specified range, test the 5V reference circuit for a short to ground or an open/high resistance. If the circuit tests normal, replace K20 Engine Control Module.
   - If greater than the specified range, test the 5V reference circuit for a short to voltage. If the circuit tests normal, replace the K20 Engine Control Module.
3. Test for 4.8-5.2V between the 5V reference circuit terminal 2 and the low reference circuit terminal 1.

cardiagn.com

- If less than the specified range, test the low reference circuit for an open/high resistance. If the circuit tests normal, replace K20 Engine Control Module.
- If greater than the specified range, test the low reference circuit for a short to voltage. If the circuit tests normal, replace the K20 Engine Control Module.

4. Verify the scan tool A/C High Side Pressure Sensor parameter is less than 0.3V.
   - If greater than the specified range, test the signal circuit for a short to voltage. If the circuit tests normal, replace the K20 Engine Control Module.
5. Install a 3A fused jumper wire between the following signal circuit terminal 3 and the 5V reference circuit terminal 2. Verify the scan tool A/C high side pressure sensor parameter is greater than 4.8V.
   - If less than the specified range, test the signal circuit for a short to ground or open/high resistance. If the circuit tests normal, replace the K20 Engine Control Module.
6. If all circuits test normal, replace the B1 A/C Refrigerant Pressure Sensor.

Repair Procedures

Perform the **Diagnostic Repair Verification** after completing the diagnostic procedure.

- **HVAC Component Replacement Reference**
- **Control Module References**

SYMPTOMS - HVAC SYSTEMS - AUTOMATIC

NOTE:

1. **Perform the Diagnostic System Check - Vehicle before using the Symptom Tables in order to verify that all of the following conditions are true:**
   - **There are no DTCs set.**
   - **The control modules can communicate via the serial data link.**
2. **Review the system operation in order to familiarize yourself with the system functions. Refer to Steering Wheel Controls Description and Operation .**

Visual/Physical Inspection

- Inspect for aftermarket devices which may affect the operation of the Steering Wheel Controls System. Refer to **Checking Aftermarket Accessories** .
- Inspect for easily accessible or visible system components for obvious damage or conditions which may cause the symptom.

Intermittent

Faulty electrical connections or wiring may be the cause of intermittent conditions. Refer to **Testing for Intermittent Conditions and Poor Connections** .

Symptom List

cardiagn.com

Refer to **HVAC System Malfunction** in order to diagnose the symptom.

HVAC SYSTEM MALFUNCTION

Diagnostic Instructions

- Perform the **Diagnostic System Check - Vehicle** Diagnostic System Check - Vehicle prior to using this diagnostic procedure.
- Review **Strategy Based Diagnosis** Strategy Based Diagnosis for an overview of the diagnostic approach.
- **Diagnostic Procedure Instructions** Diagnostic Procedure Instructions provides an overview of each diagnostic category.

Diagnostic Aids

Check the following mechanical fault sources:

- Air distribution box
- Air distribution hoses/air distribution ducts

Reference Information

Schematic Reference

HVAC SchematicsHVAC Schematics

Connector End View Reference

Component Connector End Views Component Connector End Views

Description and Operation

Automatic HVAC Description and Operation Automatic HVAC Description and Operation

Electrical Information Reference

- **Circuit Testing** Circuit Testing
- **Connector Repairs** Connector Repairs
- **Testing for Intermittent Conditions and Poor Connections** Testing for Intermittent Conditions and Poor Connections
- **Wiring Repairs** Wiring Repairs

Scan Tool Reference

Control Module References Control Module References for scan tool information

Circuit/System Verification

cardiagn.com

NOTE: Check for bulletins before proceeding.

1. Ignition ON, place the blower motor switch in each speed position. Verify that the blower motor operates properly in each position.
   - If the blower motor does not operate properly in all speeds, refer to **DTC B0193**.
2. Ignition ON, place the auxiliary blower motor switch in each speed position. Verify that the auxiliary blower motor operates properly in each position.
   - If the auxiliary blower motor does not operate properly in all speeds, refer to **DTC B0208**.
3. Using the scan tool observe the mode, temperature, air inlet and recirculation door positions. Verify the actual and commanded door positions are within 4 counts of each other.
   - If not within the specified range, refer to Circuit/System Testing **DTC B0223, B022A, B0233, B023A, B0408, B0418, B0428, or B3531**
4. Engine ON, A/C ON, place the temperature control in the coldest position. Verify that cool air flows from the ducts in the vehicle.
   - If the air is not cool, refer to **Air Conditioning (A/C) System Performance Test (LF1)** or **Air Conditioning (A/C) System Performance Test (LAU)**
5. Turn the A/C OFF and place the temperature control in the warmest position.
   - If the air is insufficiently heated refer to **Heating Performance Diagnostic** .
6. Engine OFF, ignition ON, cover the sunload sensor assembly with a shop towel or other suitable item. Verify the scan tool Sunload Sensor parameter changes.
   - If it does not change, refer to Circuit/System Testing **DTC B0163, B0183, or B1405**.
7. Measure actual inside air temperature using a thermometer. Compare this value to the scan tool Inside Passenger Compartment Air Temp. Sensor parameter. The measured temperature should be within 5 degrees of parameter.
   - If not within the specified range, refer to Circuit/System Testing **DTC B0163, B0183, or B1405**.
8. Measure actual temperature using a thermometer at each of the duct temperature sensors. Compare this value to the appropriate scan tool Duct parameter. The measured temperature should be within 5 degrees of appropriate Duct Temperature Sensor parameter.
   - If not within the specified range, refer to Circuit/System Testing **DTC B0173, B0178, B0509, B0514, B0519, B3583, or B3933**.
9. Ignition ON, observe the scan tool A/C Evaporator Temperature Sensor parameter. The reading should be between -39°F (-35°C) and 185°F (85°C) and change with evaporator air temperature changes.
   - If not within the specified range, refer to Circuit/System Testing **DTC B0173, B0178, B0509, B0514, B0519, B3583, or B3933**.

Repair Procedures

Perform the **Diagnostic Repair Verification** Diagnostic Repair Verification after completing the diagnostic procedure.

- **HVAC Component Replacement Reference**
- **Control Module References** Control Module References for HVAC control module replacement, setup, and programming

cardiagn.com

AIR CONDITIONING COMPRESSOR MALFUNCTION

Diagnostic Instructions

- Perform the **Diagnostic System Check - Vehicle** prior to using this diagnostic procedure.
- Review **Strategy Based Diagnosis** for an overview of the diagnostic approach.
- **Diagnostic Procedure Instructions** provides an overview of each diagnostic category.

Circuit/System Description

The HVAC control module supplies battery voltage to the A/C compressor. When the A/C switch is pressed, the HVAC control module provides a pulse width modulation (PWM) signal to the A/C compressor in order to command the performance of the A/C compressor. The performance of the A/C compressor is regulated according to adjusted interior temperature on the basis of characteristic lines. Therefore the HVAC control module grounds the A/C compressor with the PWM signal.

Diagnostic Aids

The following conditions must be met in order for the HVAC control module to turn on the A/C compressor:

- Battery voltage is between 9-18 V
- Engine coolant temperature is less than 124°C (255°F)
- Engine speed is greater than 600 RPM
- Engine speed is less than 5 500 RPM
- A/C high side pressure is between 269-2 929 kPa (39-425 PSI)
- Throttle position is less than 100%
- Evaporator temperature is greater than 3°C (38°F)
- ECM does not detect immoderate torque load
- ECM does not detect insufficient idle quality
- The ambient temperature is above 1°C (34°F)

Reference Information

Schematic Reference

HVAC Schematics

Connector End View Reference

Component Connector End Views

Description and Operation

Automatic HVAC Description and Operation

cardiagn.com

Electrical Information Reference

- **Circuit Testing**
- **Connector Repairs**
- **Testing for Intermittent Conditions and Poor Connections**
- **Wiring Repairs**

Scan Tool Reference

Control Module References for scan tool information

Circuit/System Testing

NOTE: efore e ecuting Circuit/System Testing all conditions sho n in Diagnostic Aids must be met.

1. Ignition O press and release the OWER switch. Verify the scan tool Front HVAC System Status parameter changes between Off and On.
   - If not the specified value replace the A2 Radio/HVAC Control.
2. Ignition O press and release the A/C Switch. Verify the scan tool A/C Switch parameter changes between Active and Inactive.
   - If not the specified value replace the A2 Radio/HVAC Control.
. ress and release the AUTO Switch. Verify the scan tool Auto HVAC utton parameter changes between Active and Inactive.
   - If not the specified value replace the A2 Radio/HVAC Control.
. If all circuits test normal replace the HVAC Control Module and verify the Q Air Conditioning Compressor Valve can be activated and deactivated. If the Q Air Conditioning Compressor Valve cannot be activated or deactivated replace the Q Air Conditioning Compressor Valve.

Repair Procedures

erform the **Diagnostic Repair Verification** after completing the diagnostic procedure.

- **HVAC Component Replacement Reference**
- **Control Module References** for HVAC Control Module replacement setup and programming

AIR TEMPERATURE MALFUNCTION

Diagnostic Instructions

- erform the **Diagnostic System Check - Vehicle** prior to using this diagnostic procedure.
- Review **Strategy Based Diagnosis** for an overview of the diagnostic approach.
- **Diagnostic Procedure Instructions** provides an overview of each diagnostic category.

cardiagn.com

Circuit/System Description

With the temperature switches at the Radio/HVAC control the air temperature position. The selected values are sent to the HVAC control module via LI - us. The HVAC control module supplies a 12 V reference voltage to the stepper motors and energi es the stepper motor coils with a pulsed ground signal. The stepper motors put the mixed air doors into the calculated position in order to reach the put in temperature.

Diagnostic Aids

Chec the following mechanical fault sources:

- Air distribution box
- Air distribution hoses/air distribution ducts

Reference Information

Schematic Reference

HVAC Schematics

Connector End View Reference

Component Connector End Views

Description and Operation

Automatic HVAC Description and Operation

Electrical Information Reference

- **Circuit Testing**
- **Connector Repairs**
- **Testing for Intermittent Conditions and Poor Connections**
- **Wiring Repairs**

Scan Tool Reference

Control Module References for scan tool information

Circuit/System Verification

1. Ignition O press and release the OWER switch. Verify the scan tool Front HVAC System Status parameter changes between Off and On.
    - If not the specified value replace the A2 Radio/HVAC Control.
2. Ignition O measure actual inside air temperature using a thermometer. Compare this value to the scan tool assenger Compartment Air Temperature parameter. The measured temperature should be within

cardiagn.com

C (F) difference of parameter value.

- If not within the specified range refer to **DTC B0163, B0183, or B1405**.

. Measure actual temperature using a thermometer at each of the duct temperature sensors. Compare this value to the appropriate scan tool Duct Actual parameter. The measured temperature should be within C (F) difference of appropriate Duct Actual parameter value.

- If not within the specified range refer to **DTC B0173, B0178, B0509, B0514, B0519, B3583, or B3933**.

. Measure actual evaporator temperature using a thermometer. Compare this value to the scan tool A/C Evaporator Temperature Sensor parameter. The measured temperature should be within C (F) difference of parameter value.

- If not within the specified range refer to **DTC B0173, B0178, B0509, B0514, B0519, B3583, or B3933**.

. Observe the scan tool Sunload parameter. The reading should be between -1 1 W/m^2 and change with sunlight intensity.

- If not within the specified range or not change refer to **DTC B0163, B0183, or B1405**.

. Engine is running activate and deactivate the A/C switch. Verify the A/C compressor can be activated and deactivated.

- If the A/C compressor cannot be activated or deactivated refer to **Air Conditioning Compressor Malfunction**.

. Verify the engine reaches its operating temperature.

Circuit/System Testing

1. Ignition O press and release the driver side temperature increase switch. Verify the scan tool Left Temperature Switch parameter changes between Up and Inactive.
   - If not the specified value replace the A2 Radio/HVAC Control
2. ress and release the driver side temperature decrease switch. Verify the scan tool Left Temperature Switch parameter changes between Down and Inactive.
   - If not the specified value replace the A2 Radio/HVAC Control.

. ress and release the passenger side temperature increase switch. Verify the scan tool Right Temperature Switch parameter changes between Up and Inactive.

- If not the specified value replace the A2 Radio/HVAC Control.

. ress and release the passenger side temperature decrease switch. Verify the scan tool Right Temperature Switch parameter changes between Down and Inactive.

- If not the specified value replace the A2 Radio/HVAC Control.

. ress and release the AUTO Switch. Verify the scan tool Auto HVAC utton parameter changes between Active and Inactive.

- If not the specified value replace the A2 Radio/HVAC Control.

. ress and release the O E Switch. Verify the scan tool MULTI- O E Switch parameter changes between Active and Inactive.

- If not the specified value replace the A2 Radio/HVAC Control.

. Verify the M L Air Temperature Door Actuator - Left can be put into all positions.

cardiagn.com

Repair Procedures

erform the **Diagnostic Repair Verification** after completing the diagnostic procedure.

- **HVAC Component Replacement Reference**
- **Control Module References** for HVAC control module replacement setup and programming

AFTERBLOW ENABLING

The afterblow mode can be enabled using the scan tool. The afterblow mode allows the blower motor to operate after the engine has been turned off. This operation of the blower motor dries the evaporator core which reduces the amount of microbial growth which can create undesirable odors.

Use the following procedure in order to enable the afterblow mode:

1. Connect the Scan Tool.
2. Turn O the ignition with the engine OFF.
. uild the vehicle with the scan tool.
. Select Module Diagnosis.
. Select Remote Heater and Air Conditioning Control Module.
. Select Configuration/Reset Functions.
. Select HVAC Afterblow Configuration.

When afterblow has been enabled by the scan tool the blower motor will operate at blower speed for 2 min s to min after the engine has been in ey OFF for min.

The following conditions must be met for the HVAC module to operate the afterblow:

- The outside air temperature must be at least 21 C (F).
- The A/C compressor must have operated during the latest ey cycle.
- The engine must be turned off for at least min.
- The system voltage must be at least 12 V.

ACTUATOR RECALIBRATION

NOTE: Do not ad ust any controls on the HVAC control module hile the HVAC control module is self calibrating. If interrupted improper HVAC performance ill result.

When replacing the HVAC control module it will be necessary to allow the HVAC control module to perform a calibration process. When installing the HVAC control module be sure to perform the following:

1. lace the ignition switch to the OFF position.
2. Disconnect the scan tool.

cardiagn.com

. Install the HVAC control module.
. Connect all previously disconnected components.
. Ignition O .
. Wait s for the HVAC control module to self-calibrate.
. Verify that no DTCs have set as current DTCs.

When replacing the HVAC actuator it will be necessary to allow the HVAC control module to perform a calibration process. When installing the HVAC actuator be sure to perform one of the following:

Preferred Method (with Scan Tool)

NOTE: Do not ad ust any controls on the HVAC control module hile the HVAC control module is self calibrating. If interrupted improper HVAC performance ill result.

1. Clear all DTCs.
2. lace the ignition switch in the OFF position.
. Install the HVAC actuator.
. Connect all previously disconnected components.
. Start the vehicle.
. With the scan tool initiate the HVAC Actuators re-calibration feature of the Remote Heater and Air Conditioning Control Module Special Functions menu.
. Verify that no DTCs have set as current DTCs.

Alternate Method (without Scan Tool)

NOTE: Do not ad ust any controls on the HVAC control module hile the HVAC control module is self calibrating. If interrupted improper HVAC performance ill result.

1. Clear all DTCs.
2. lace the ignition switch to the OFF position.
. Install the HVAC actuator.
. Connect all previously disconnected components.
. Remove the HVAC control module fuse for a minimum of 1 s.
. Install the HVAC control module fuse.
. Ignition O .
. Wait s for the HVAC control module to self-calibrate.
. Verify that no DTCs have set as current DTCs.

RE AIR INSTRUCTIONS

carolagn.com

HEATER AND AIR CONDITIONING CONTROL REPLACEMENT

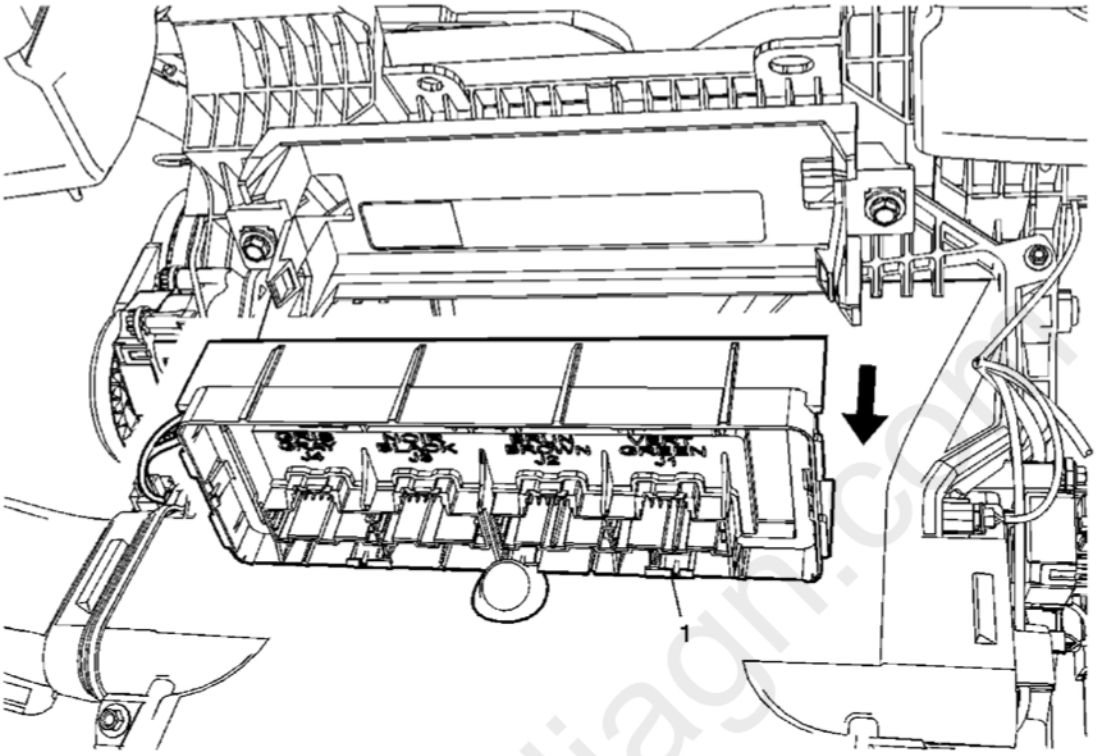

Fig. : Identifying Heater & Air Conditioning Control
Courtesy of GENERAL MOTORS CORP.

Callout	Component Name
Preliminary Procedure: Remove the radio control. Refer to **Radio Control Assembly Replacement**	
1	Heater and Air Conditioning Remote Control **Procedure** 1. Disconnect the control harness connectors. 2. Release the retainers in order to remove the control. . rogram the control module. Refer to **Control Module References** .

HEATER AND BLO ER AND AIR CONDITIONING CONTROL MODULE REPLACEMENT

cardiagn.com

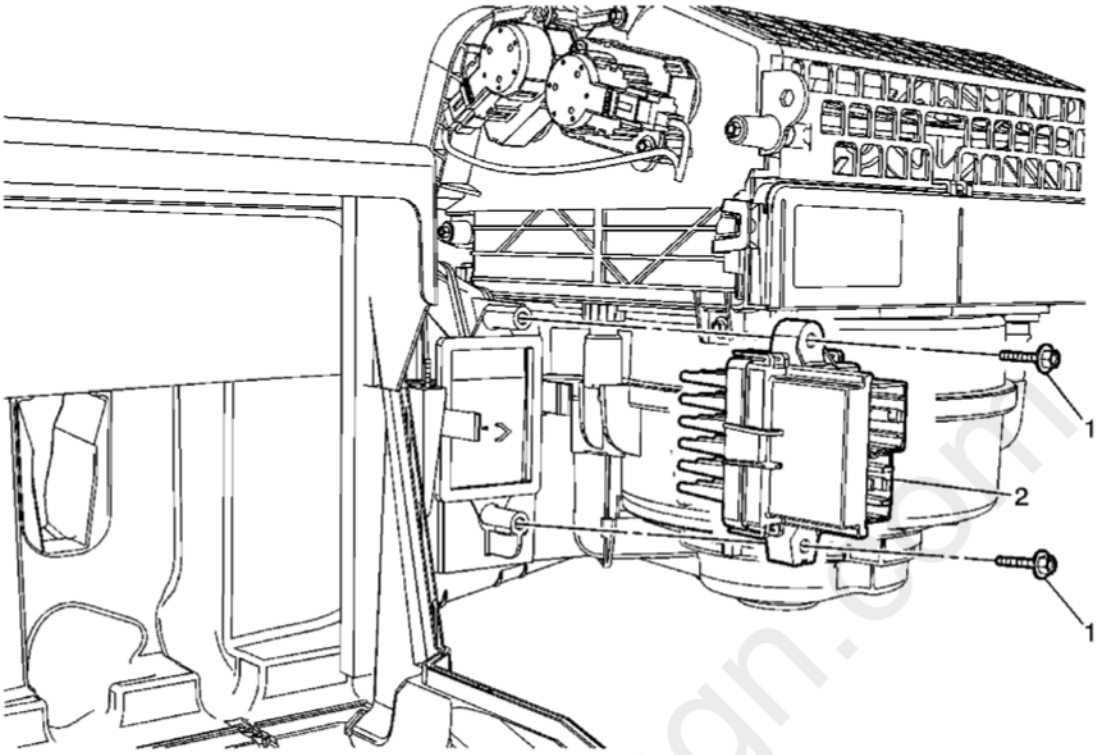

Fig. : Identifying Heater & Blower & Air Conditioning Control Module & Bolts
Courtesy of GENERAL MOTORS CORP.

Callout	Component Name
Preliminary Procedure 1. Remove the instrument panel compartment. Refer to **Instrument Panel Compartment Replacement** . 2. Disconnect the heater and blower and air conditioning control module electrical connectors.	
1	Heater and lower and Air Conditioning Control Module Screws (Qty: 2) **CAUTION:** **Refer to Fastener Caution .** **Tighten:** 1. .m (1 lb in)
2	Heater and lower and Air Conditioning Control Module

AU ILIAR HEATER AND AIR CONDITIONING CONTROL MODULE REPLACEMENT

cardiagn.com

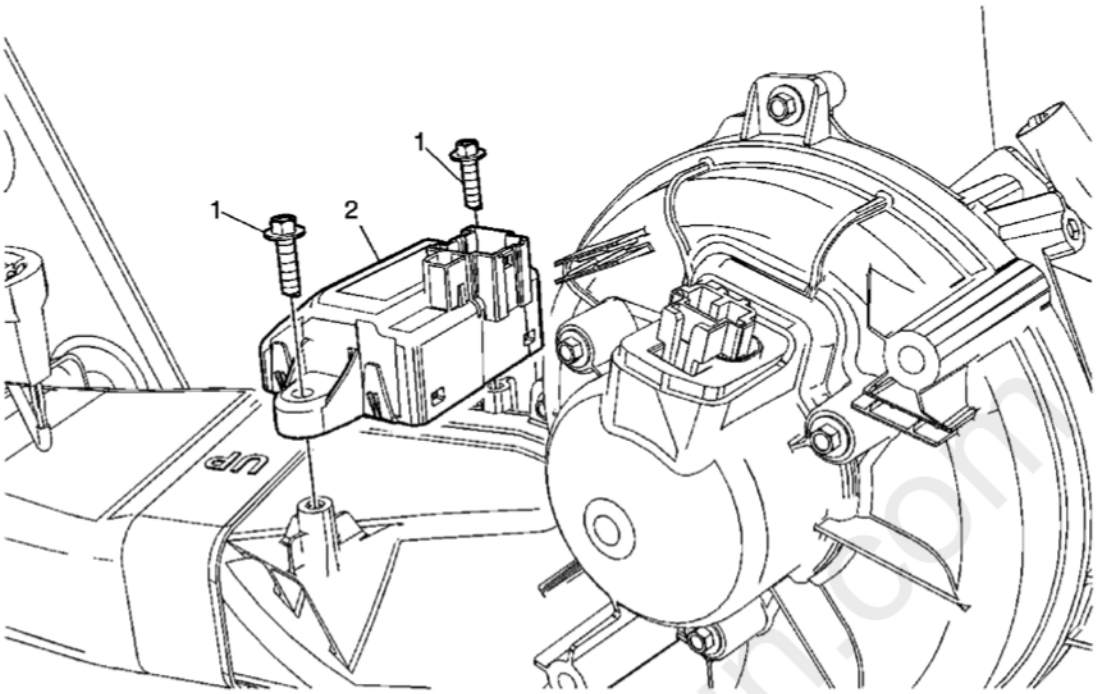

Fig. : View Of Au iliary Heater & Air Conditioning Control Module
Courtesy of GENERAL MOTORS CORP.

Callout	Component Name
Preliminary Procedure 1. Remove the floor console. Refer to **Front Floor Console Replacement** . 2. Disconnect the auxiliary heater and blower and air conditioning control module electrical connectors.	
1	Auxiliary Heater and lower and Air Conditioning Control Module Screws (Qty: 2) **CAUTION:** **Refer to Fastener Caution .** **Tighten:** 1. .m (1 lb in)
2	Auxiliary Heater and lower and Air Conditioning Control Module

AIR INLET VALVE ACTUATOR REPLACEMENT - LEFT SIDE

cardiagn.com

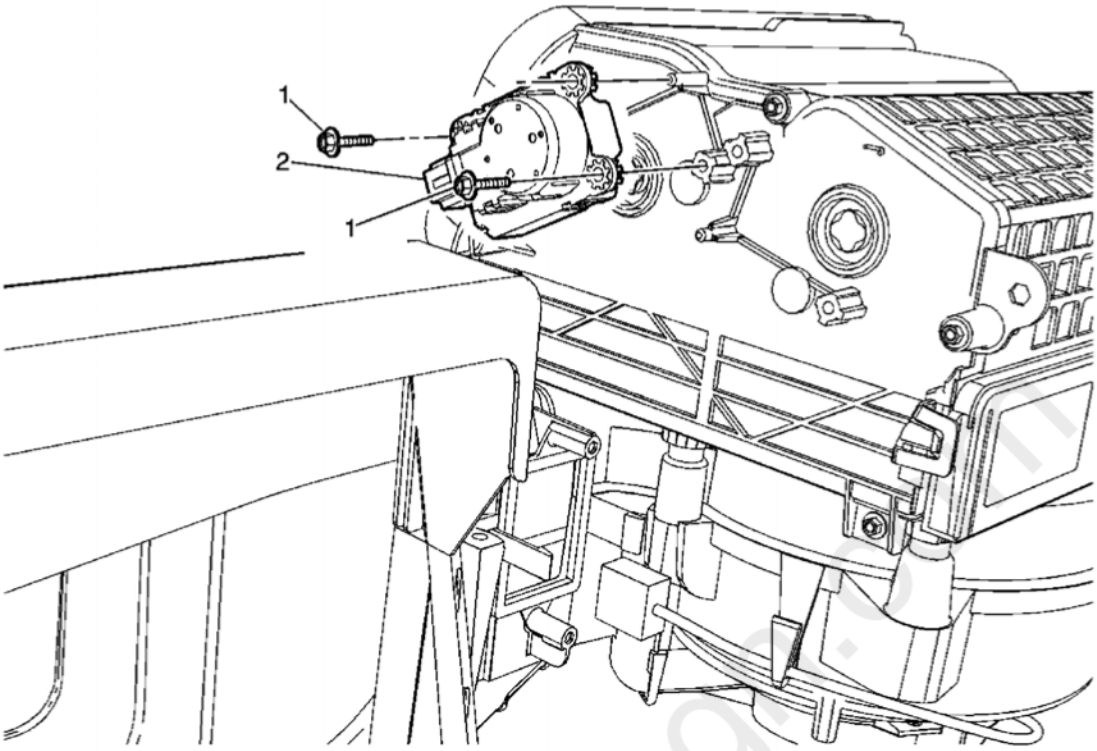

Fig. 1 : View Of Air Inlet Valve Actuator - Left Side
Courtesy of GENERAL MOTORS CORP.

Callout	Component Name
Preliminary Procedures 1. Disconnect the negative battery cable. Refer to **Battery Negative Cable Disconnection and Connection** . 2. Remove the Instrument anel Assembly. Refer to **Instrument Panel Assembly Removal** . . Remove the inside air inlet actuator- Left. Refer to **Air Inlet Valve Actuator Replacement - Left Side**.	
1	Air Inlet Valve Actuator Screw (Qty: 2) **CAUTION:** **Refer to Fastener Caution .** **Tighten:** 1. .m (1 lb in)
2	Air Inlet Valve Actuator **Procedure:** Disconnect the air inlet valve actuator electrical connector. **Tip:** Actuator is self-calibrating when connecting the battery.

AIR INLET VALVE ACTUATOR REPLACEMENT - RIGHT SIDE

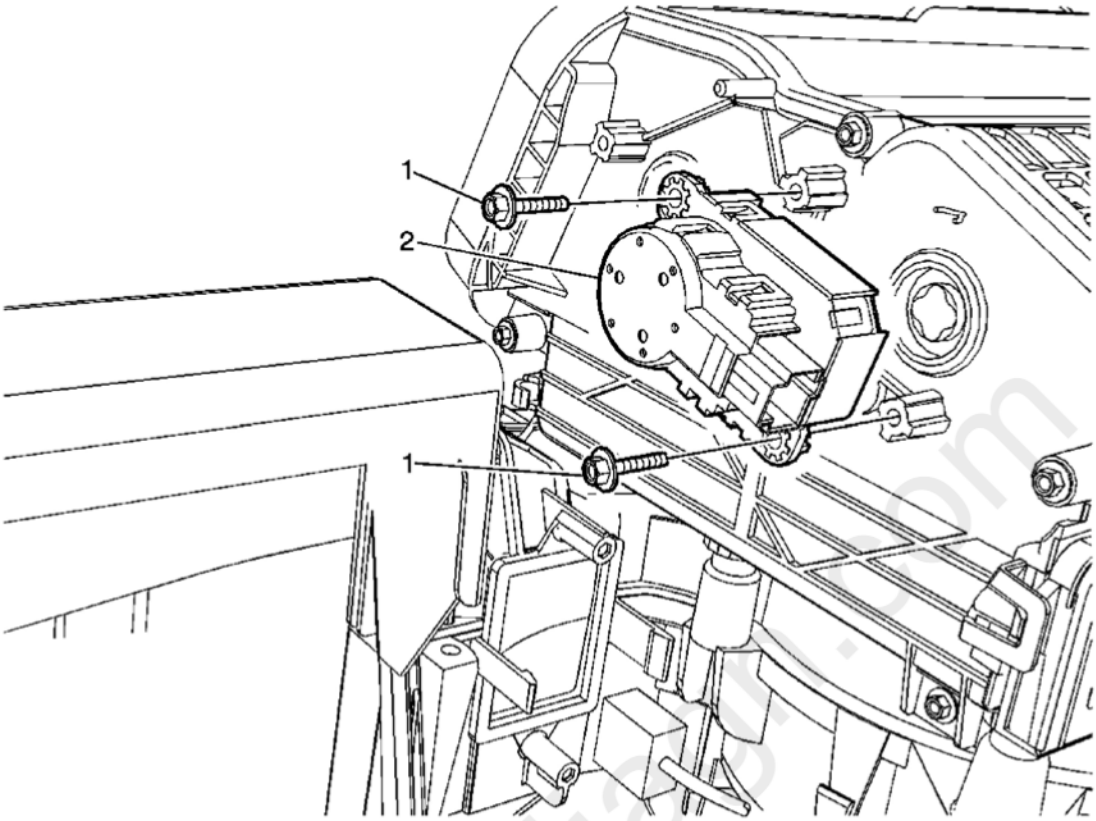

Fig. 11: View Of Air Inlet Valve Actuator - Right Side
Courtesy of GENERAL MOTORS CORP.

Callout	Component Name
Preliminary Procedures 1. Disconnect the negative battery cable. Refer to **Battery Negative Cable Disconnection and Connection** . 2. Remove the Instrument panel assembly. Refer to **Instrument Panel Assembly Removal** . . Remove the inside air inlet actuator- Left. Refer to **Air Inlet Valve Actuator Replacement - Left Side**.	
1	Air Inlet Valve Actuator Screw (Qty: 2) **CAUTION:** **Refer to Fastener Caution .** **Tighten:** 1. .m (1 lb in)
2	Air Inlet Valve Actuator **Procedure:** Disconnect the air inlet valve actuator electrical connector. **Tip:** Actuator is self-calibrating when connecting the battery.

cardiagn.com

MODE CONTROL CAM ACTUATOR REPLACEMENT

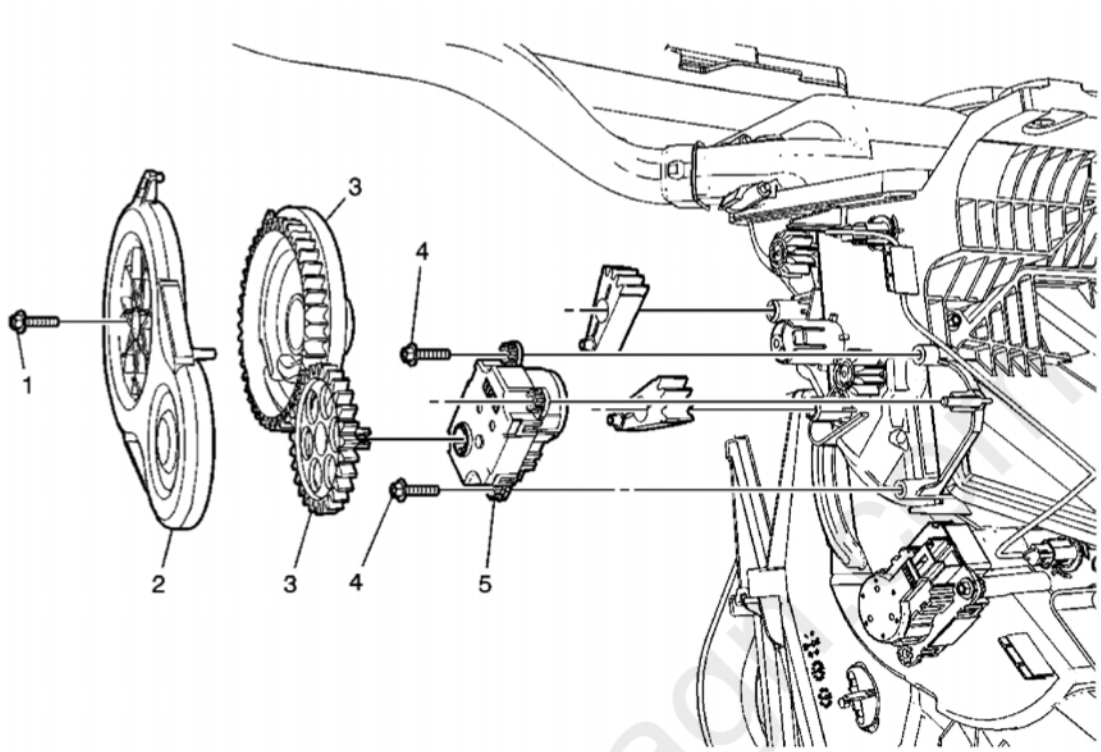

Fig. 12: Identifying Mode Control Cam Actuator
Courtesy of GENERAL MOTORS CORP.

Callout	Component Name
Preliminary Procedures 1. Disconnect the negative battery cable. Refer to **Battery Negative Cable Disconnection and Connection** . 2. Remove the heater and air conditioning evaporator module. Refer to **Floor Air Outlet Duct Replacement - Left Side** .	
1	Mode Cam Actuator Cover Screw (Qty: 1) **CAUTION:** **Refer to Fastener Caution .** **Procedure:** Disconnect the mode actuator electrical connector. **Tighten:** 1.5 N.m (13 lb in)
2	Mode Cam Actuator Cover.
3	Mode Cam Actuator Gears

4	Mode Cam Actuator Screw (Qty: 2) **Tighten:** 1.5 N.m (13 lb in)
5	Mode Cam Actuator **Tip:** Actuator is self-calibrating when connecting the battery.

MODE CONTROL CAM ALIGNMENT

Removal Procedure

NOTE: **The HVAC module must be removed to accurately set the cam gear timing. Failure to do so may result in poor HVAC performance and/or damage to the HVAC module.**

1. Remove the HVAC module from the vehicle.

cardiagn.com

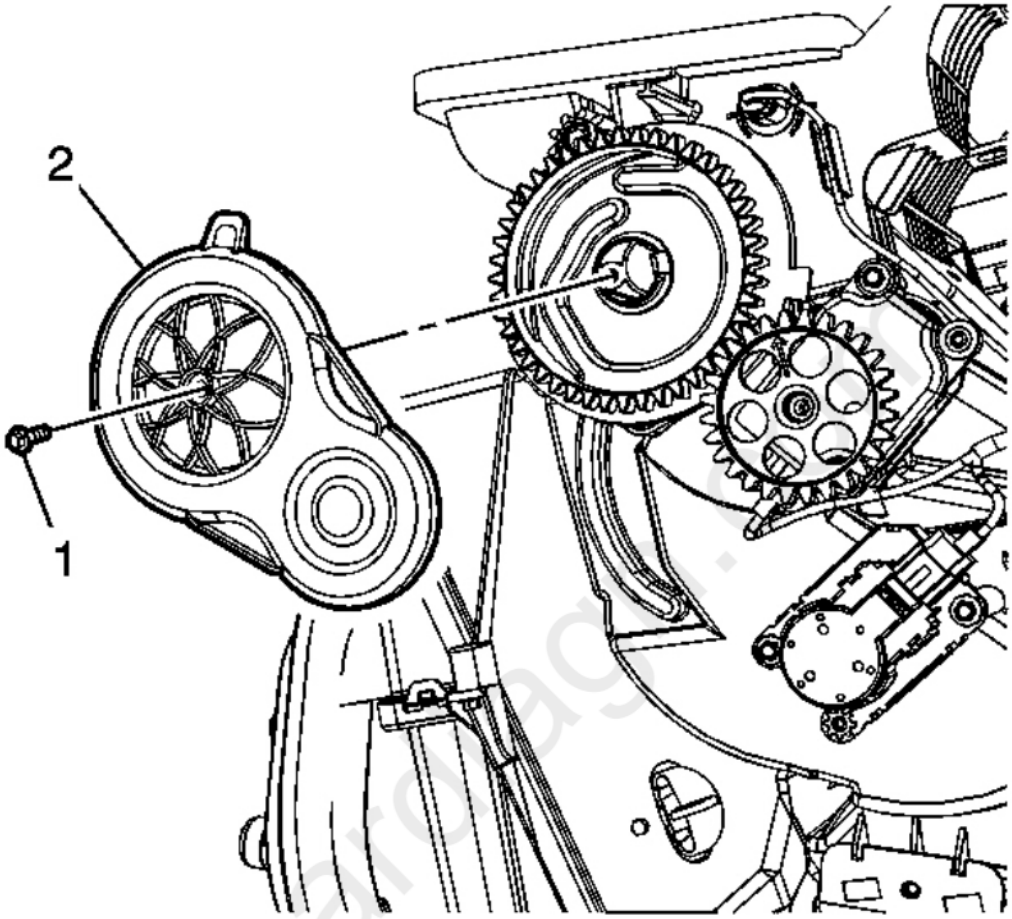

Fig. 13: Identifying Mode Cam Gear Cover Screw & Cover
Courtesy of GENERAL MOTORS CORP.

2. Remove the mode cam gear cover screw (1) and cover (2).

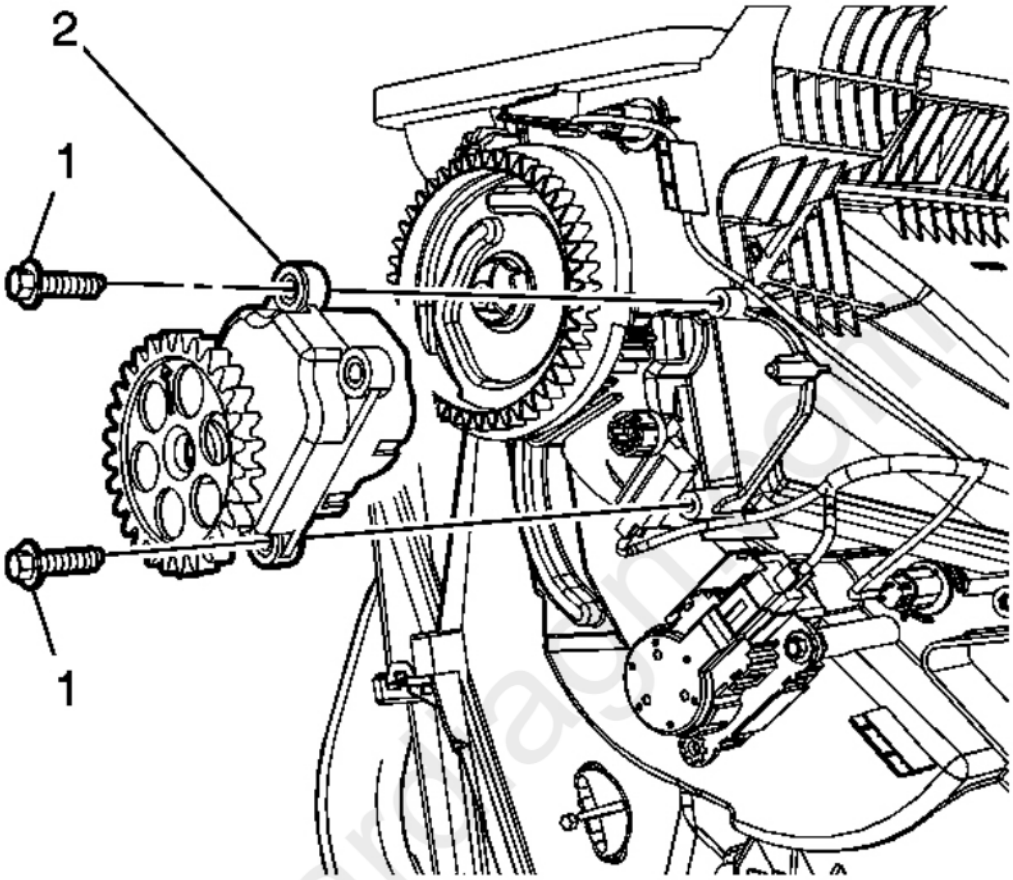

Fig. 14: View Of Mode Cam Gear Actuator, Screws & HVAC Module
Courtesy of GENERAL MOTORS CORP.

3. Remove the mode cam gear actuator screws (1) and separate the actuator (2) from the HVAC module.
4. Disconnect the mode cam gear actuator electrical connector.

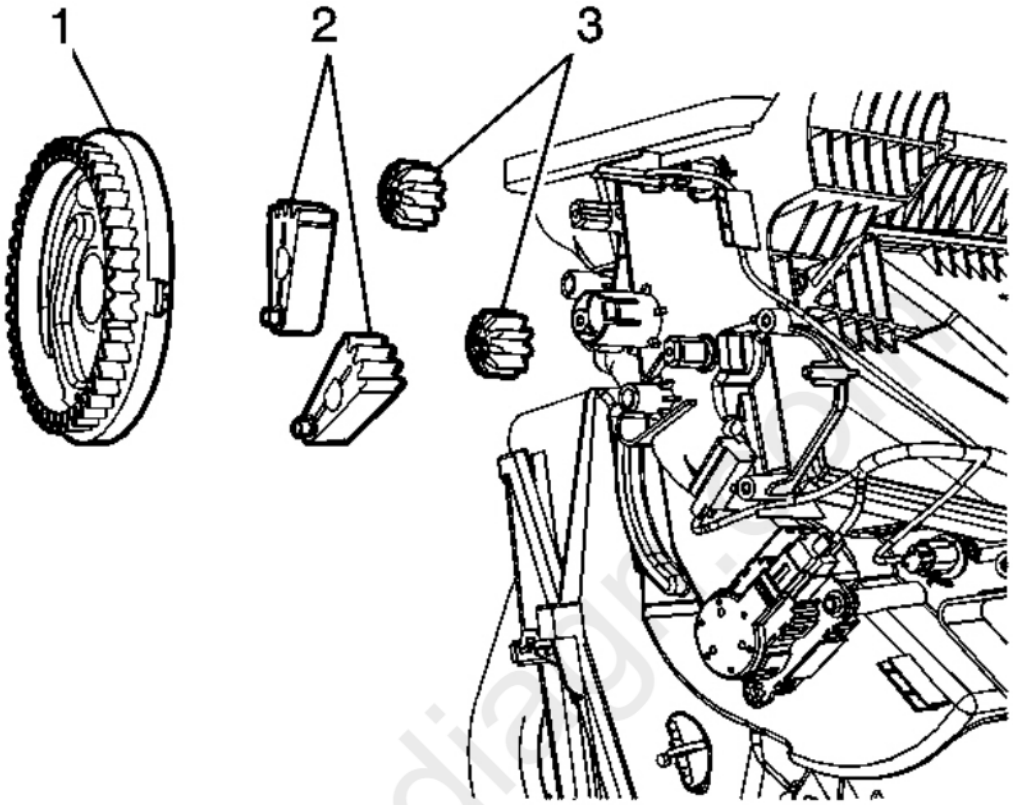

Fig. 15: View Of Mode Cam Gear
Courtesy of GENERAL MOTORS CORP.

5. Remove the mode cam gear (1) from the HVAC module.
6. For alignment purposes, remove both cam gear levers (2).
7. If the valve gears (3) are damaged, remove them from the HVAC module and discard.

Installation Procedure

NOTE: **Do not use casting marks behind the cam gear levers for aligning the cam levers to the cam gear. Doing so may result in poor HVAC performance and/or damage to the HVAC module.**

1. If the valve gears were removed or replaced, install them onto the HVAC module.

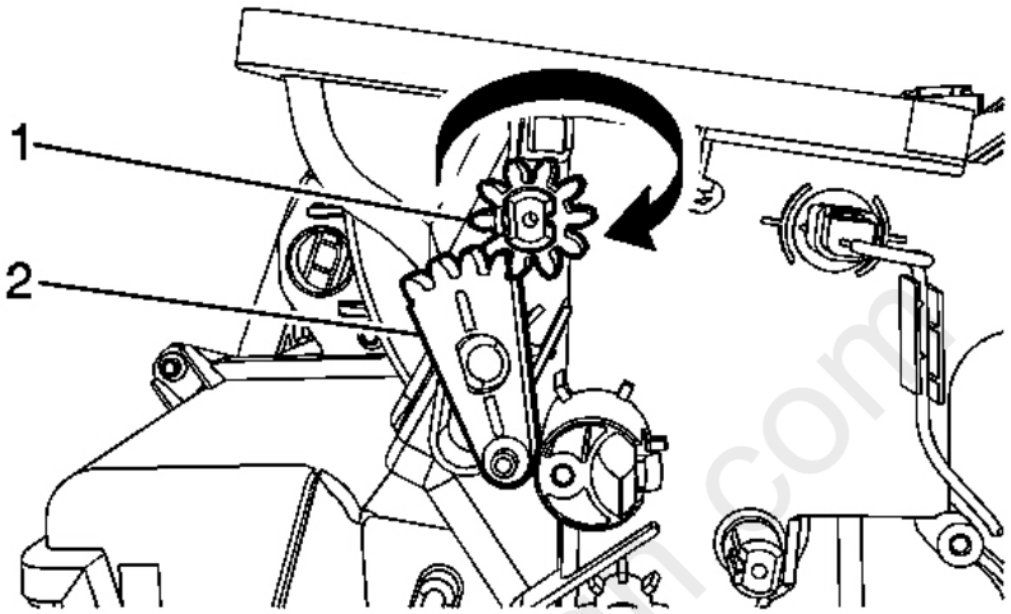

Fig. 1 : Rotating defroster gear cloc wise
Courtesy of GENERAL MOTORS CORP.

2. Rotate the defroster gear clockwise (1) as far as it will go, and install the lever by engaging a gear tooth into the rightmost lever gap (2).

cardiagn.com

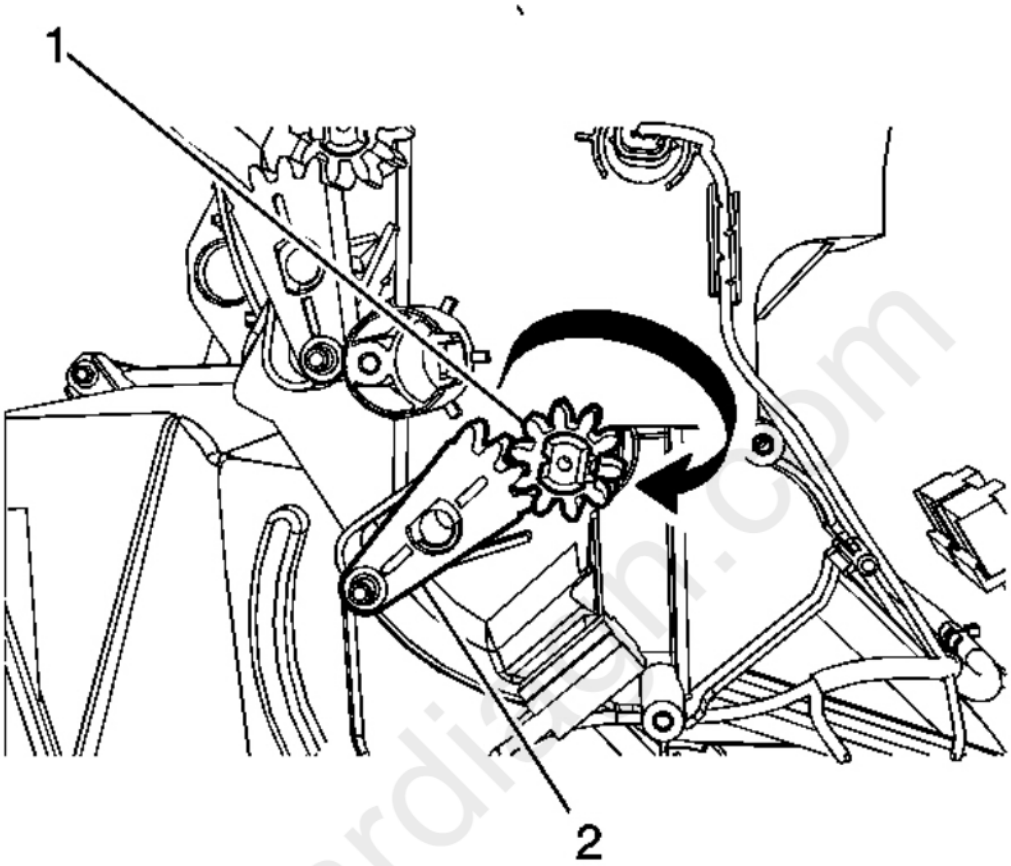

Fig. 1 : Rotating Heater Door Gear Cloc wise
Courtesy of GENERAL MOTORS CORP.

3. Rotate the heater door gear clockwise (1) as far as it will go, and install the lever by engaging a gear tooth into the rightmost lever gap (2).

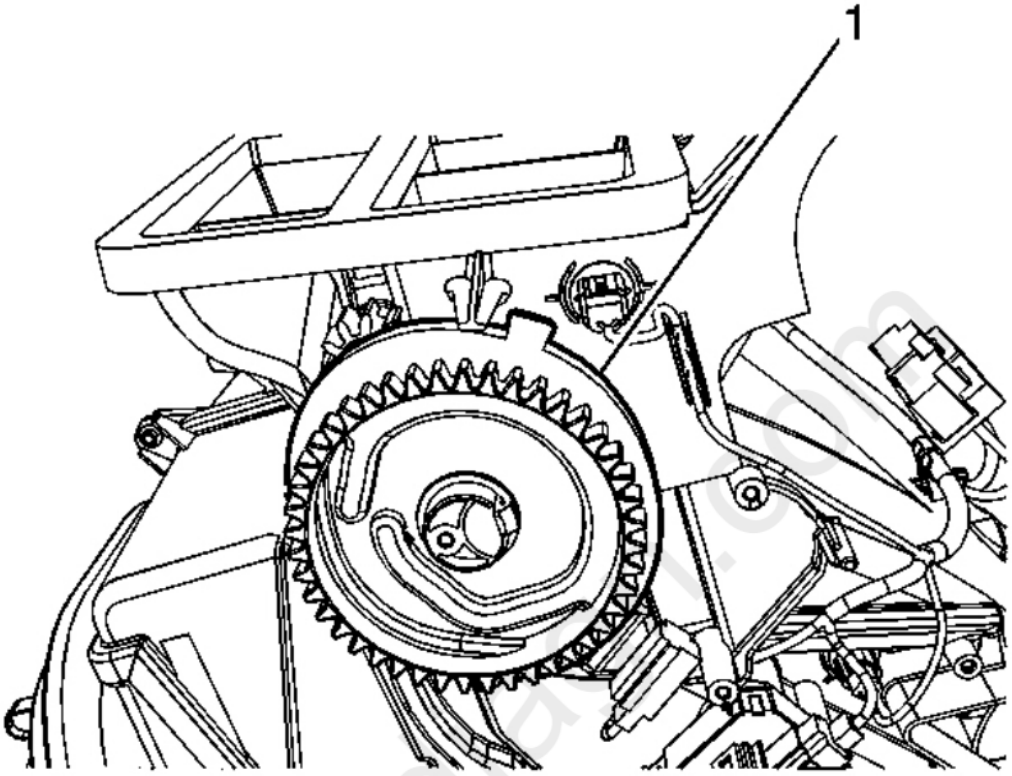

Fig. 1 : View Of Mode Cam
Courtesy of GENERAL MOTORS CORP.

4. Install the mode cam into position on the levers.
5. Continue to push the mode cam onto the case and rotate left and/or right until an audible click is heard locking the mode cam in place.
6. Rotate the mode cam from stop to stop (1). It should rotate completely without binding. If the mode does not rotate from stop to stop, then remove the mode came and levers and repeat steps 2-6.
7. Place the mode cam actuator and gear assembly (2) on the HVAC module and install the screws (1) and tighten to 1.7 N.m (5 lb in).
8. Connect the mode cam actuator electrical connector.

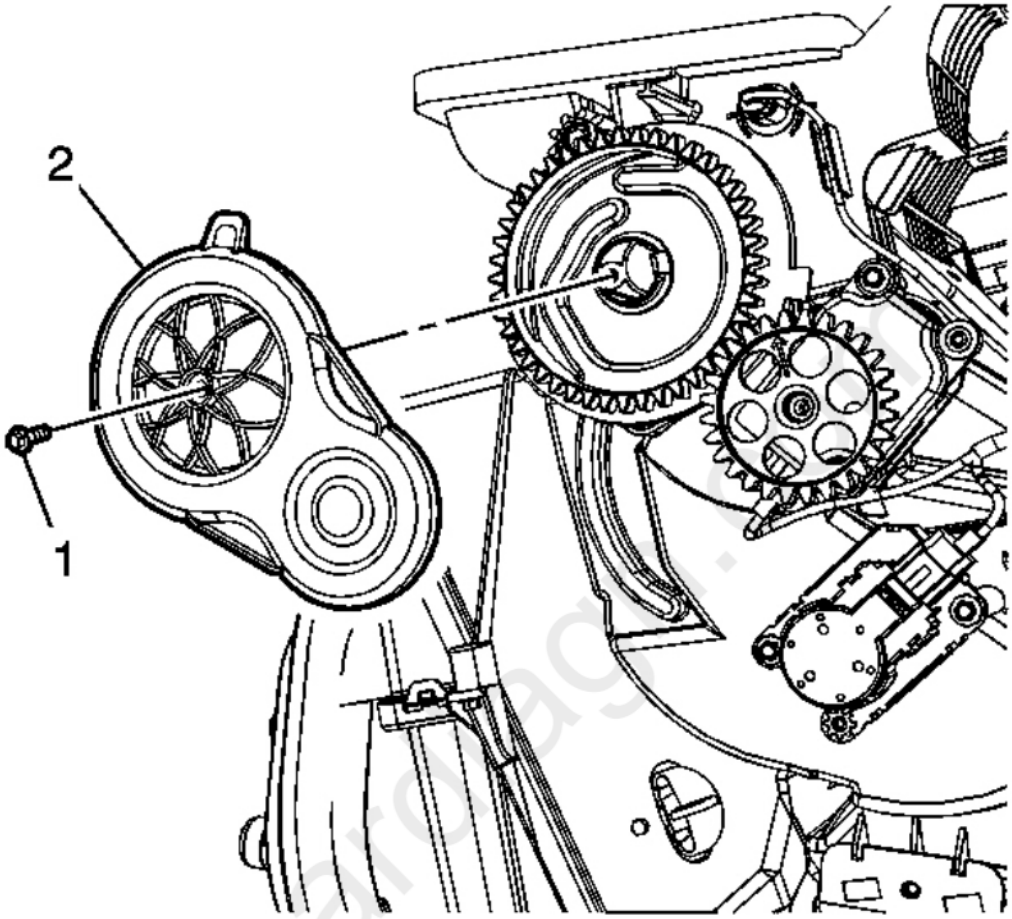

Fig. 1 : Identifying Mode Cam Gear Cover Screw Cover
Courtesy of GENERAL MOTORS CORP.

9. Install the cam gear cover (1) and screw (2).
10. Install the HVAC module.

TEMPERATURE VALVE ACTUATOR REPLACEMENT - RIGHT SIDE

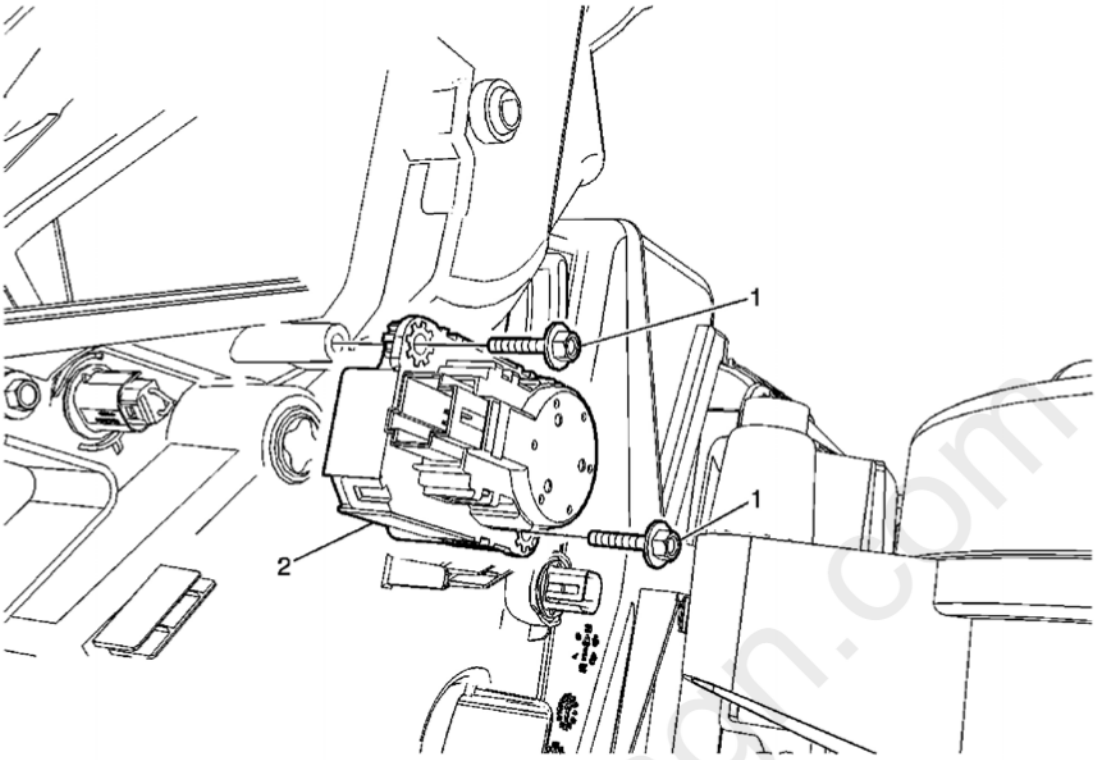

Fig. 2 : Identifying Temperature Valve Actuator - Right Side
Courtesy of GENERAL MOTORS CORP.

Callout	Component Name
Preliminary Procedures 1. Disconnect the negative battery cable. Refer to **Battery Negative Cable Disconnection and Connection** . 2. Remove the instrument panel lower trim panel. Refer to **Instrument Panel Lower Trim Panel Replacement - Right Side** .	
1	Temperature Valve Actuator Screw (Qty: 2) **CAUTION:** **Refer to Fastener Caution .** **Tighten:** 1.5 N.m (13 lb in)
2	Temperature Valve Actuator **Procedure:** Disconnect the temperature actuator electrical connector. **Tip:** Actuator is self-calibrating when connecting the battery.

TEMPERATURE VALVE ACTUATOR REPLACEMENT - LEFT SIDE

cardiagn.com

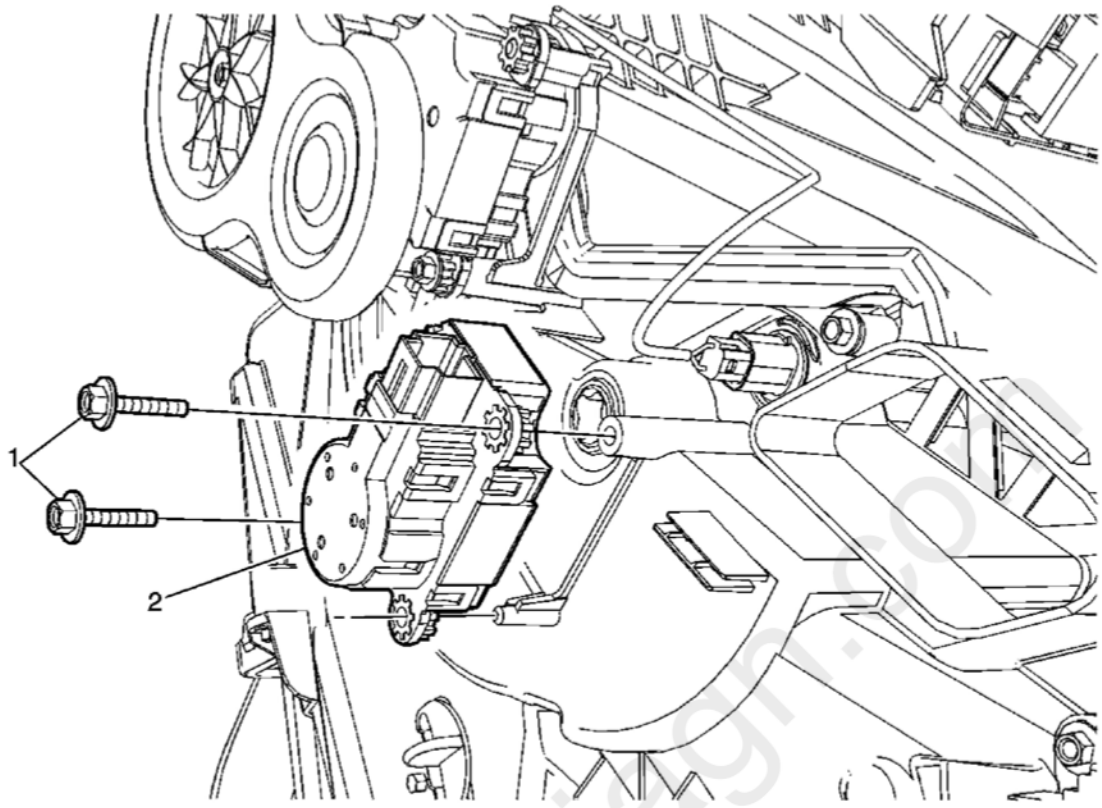

Fig. 21: Identifying Temperature Valve Actuator - Left Side
Courtesy of GENERAL MOTORS CORP.

Callout	Component Name
Preliminary Procedures 1. Disconnect the negative battery cable. Refer to **Battery Negative Cable Disconnection and Connection** . 2. Remove the instrument panel lower trim panel. Refer to **Instrument Panel Lower Trim Panel Replacement - Left Side** .	
1	Temperature Valve Actuator Screw (Qty:) **CAUTION:** **Refer to Fastener Caution .** **Tighten:** 1. .m (1 lb in)
2	Temperature Valve Actuator **Procedure:** Disconnect the temperature actuator electrical connector. **Tip:** Actuator is self-calibrating when connecting the battery.

AUXILIARY TEMPERATURE VALVE ACTUATOR REPLACEMENT

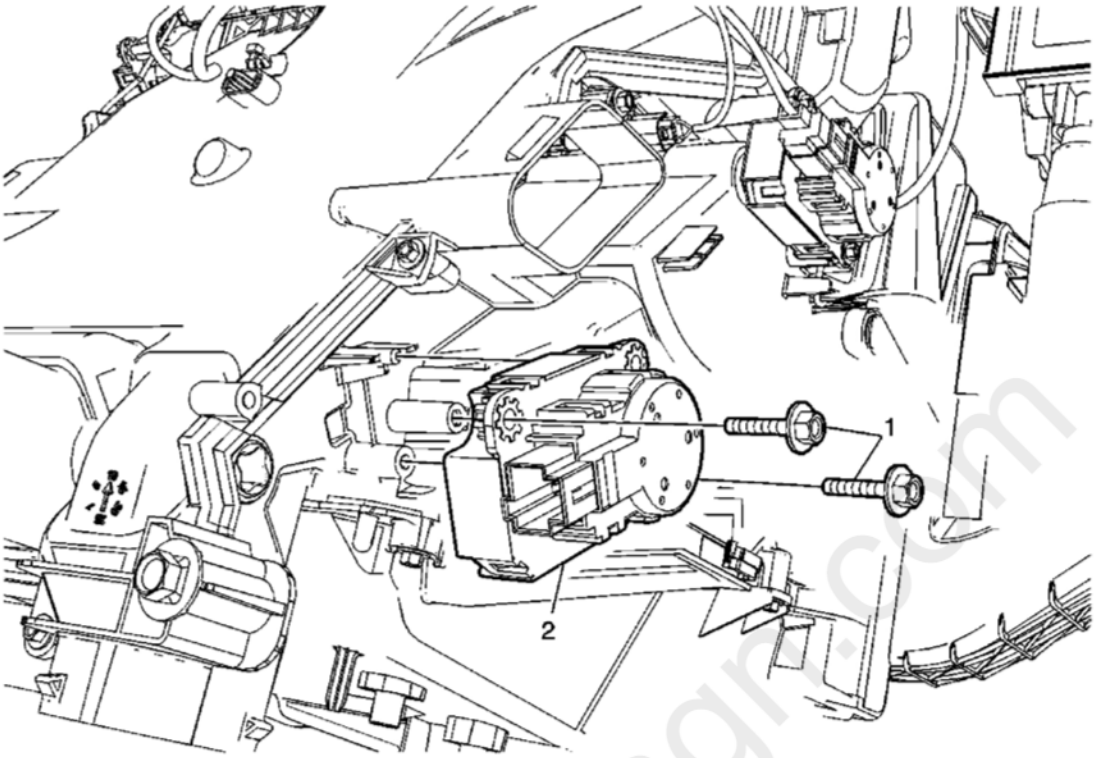

Fig. 22: Identifying Auxiliary Temperature Valve Actuator
Courtesy of GENERAL MOTORS CORP.

Callout	Component Name
Preliminary Procedures 1. Disconnect the negative battery cable. Refer to **Battery Negative Cable Disconnection and Connection** . 2. Remove front floor console extension. Refer to **Front Floor Console Extension Replacement**	
1	Auxiliary Temperature Valve Actuator Screw (Qty: 2) **CAUTION:** **Refer to Fastener Caution .** **Tighten:** 1. .m (1 lb in)
2	Auxiliary Temperature Valve Actuator **Procedure:** Disconnect the temperature actuator electrical connector. **Tip:** Actuator is self-calibrating when connecting the battery.

AUXILIARY MODE VALVE ACTUATOR REPLACEMENT

cardiagn.com

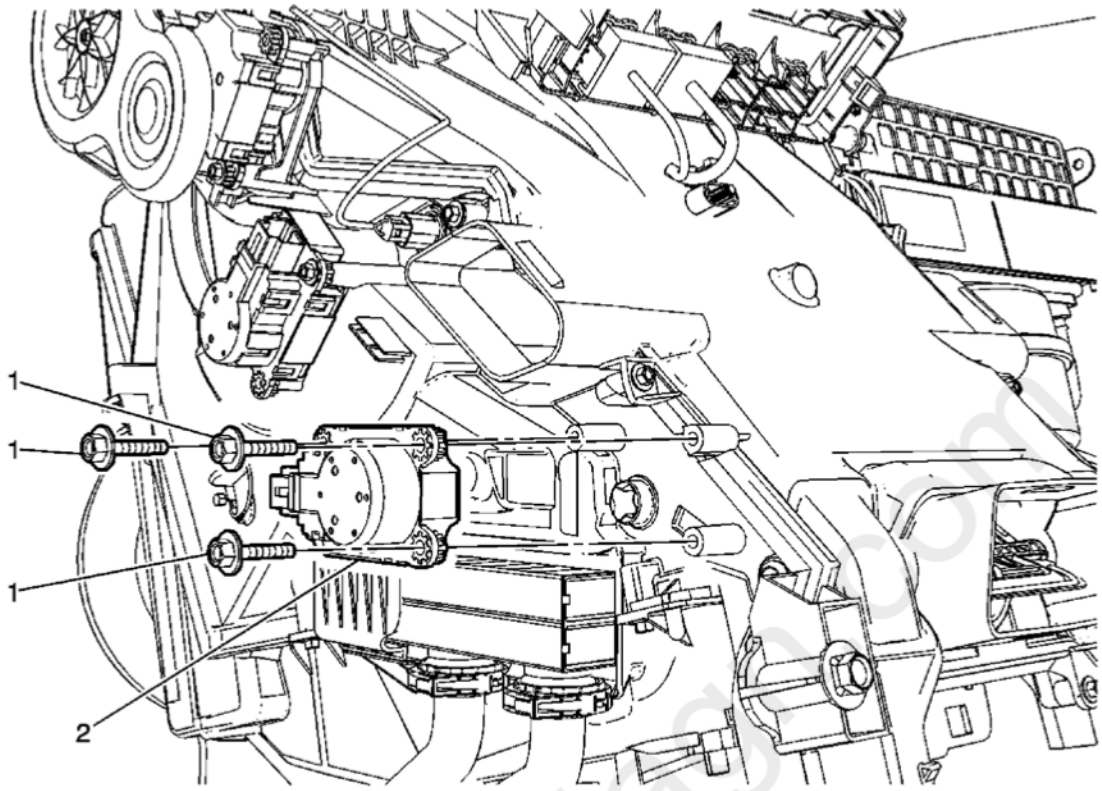

Fig. 23: Identifying Auxiliary Mode Valve Actuator
Courtesy of GENERAL MOTORS CORP.

Callout	Component Name
Preliminary Procedures 1. Disconnect the negative battery cable. Refer to **Battery Negative Cable Disconnection and Connection** . 2. Remove front floor console extension. Refer to **Front Floor Console Extension Replacement**	
1	Inside Air Valve Actuator Screw (Qty:) **CAUTION:** **Refer to Fastener Caution .** **Tighten:** 1. .m (1 lb in)
2	Inside Air Valve Actuator **Procedure:** Disconnect the recirculation actuator electrical connector. **Tip:** Actuator is self-calibrating when connecting the battery.

DUCT AIR TEMPERATURE SENSOR REPLACEMENT - UPPER RIGHT SIDE

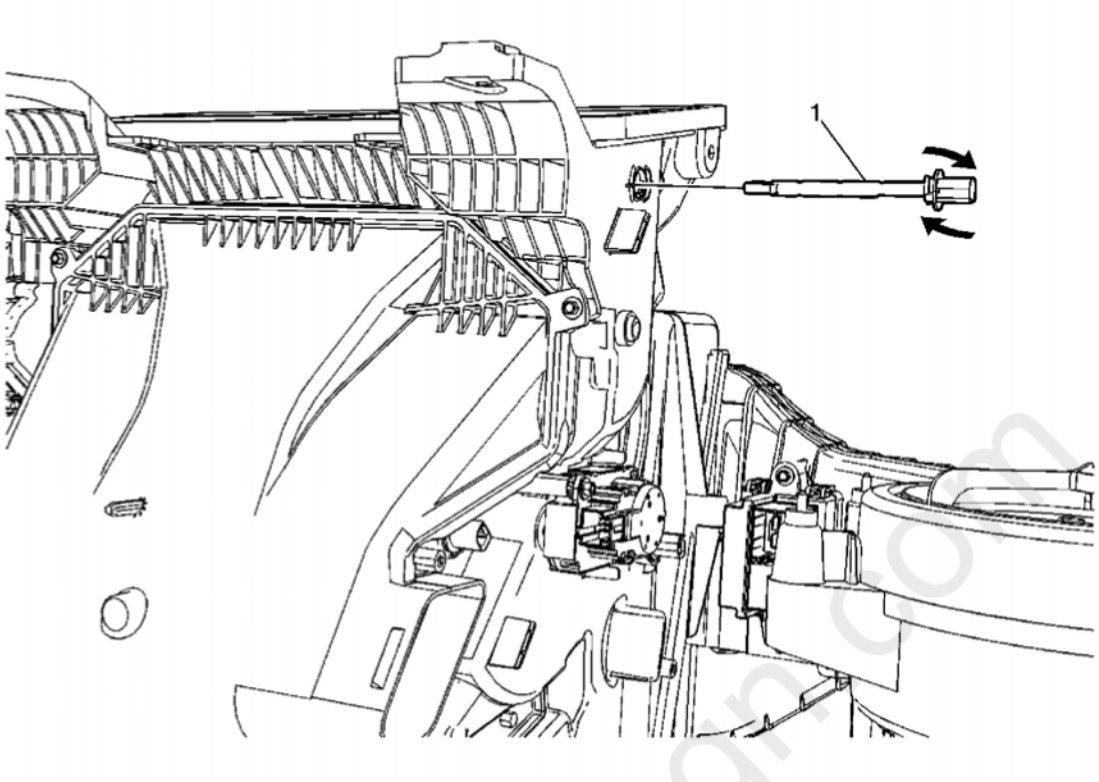

Fig. 24: Identifying Duct Air Temperature Sensor - Upper Right Side
Courtesy of GENERAL MOTORS CORP.

Callout	Component Name
Preliminary Procedures 1. Disconnect the negative battery cable. Refer to **Battery Negative Cable Disconnection and Connection** . 2. Remove the instrument panel assembly. Refer to **Instrument Panel Assembly Removal** .	
1	Duct Air Temperature Sensor - Upper Right Side **Procedure** 1. Disconnect the air temperature sensor electrical connector. 2. Twist and pull the upper air temperature sensor from the HVAC module assembly.

DUCT AIR TEMPERATURE SENSOR REPLACEMENT - UPPER LEFT SIDE

cardiagn.com

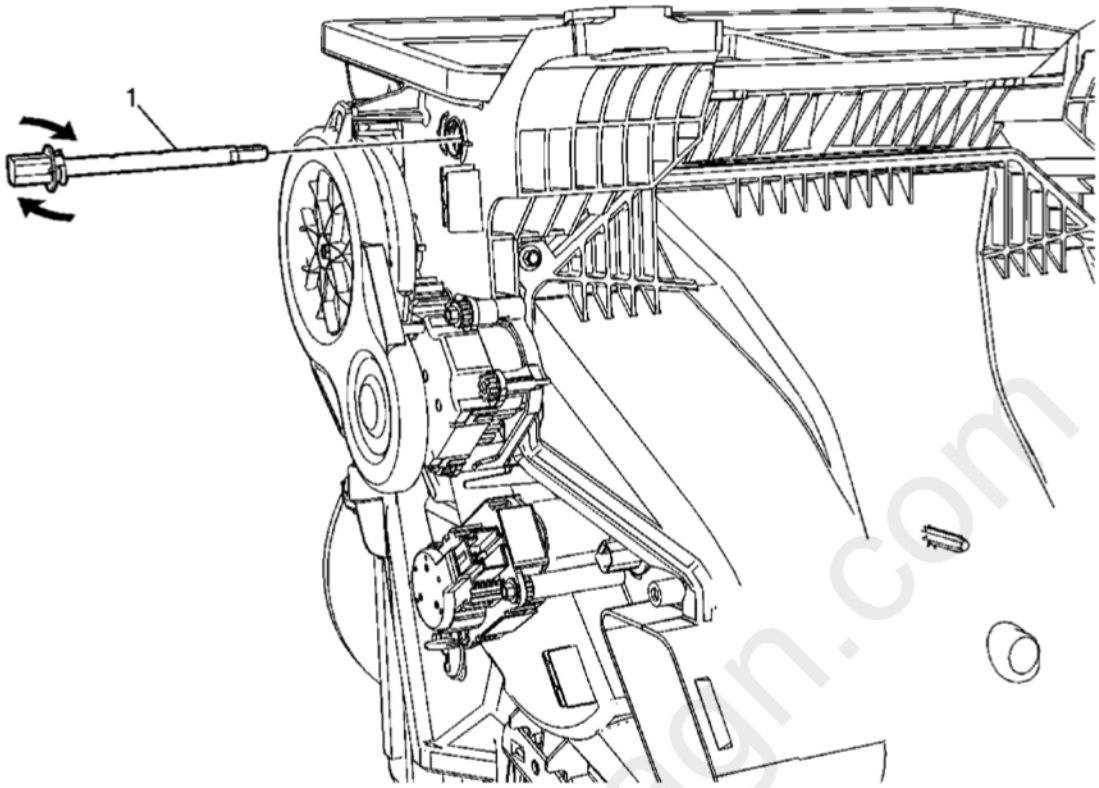

Fig. 25: Identifying Duct Air Temperature Sensor - Upper Left Side
Courtesy of GENERAL MOTORS CORP.

Callout	Component Name
Preliminary Procedure: Remove the instrument panel assembly. Refer to **Instrument Panel Assembly Removal** .	
1	Duct Air Temperature Sensor Replacement - Upper Left Side **Procedure** 1. Disconnect the air temperature sensor electrical connector. 2. Twist and pull the lower air temperature sensor from the HVAC module assembly.

DUCT AIR TEMPERATURE SENSOR REPLACEMENT - LOWER LEFT SIDE

cardiagn.com

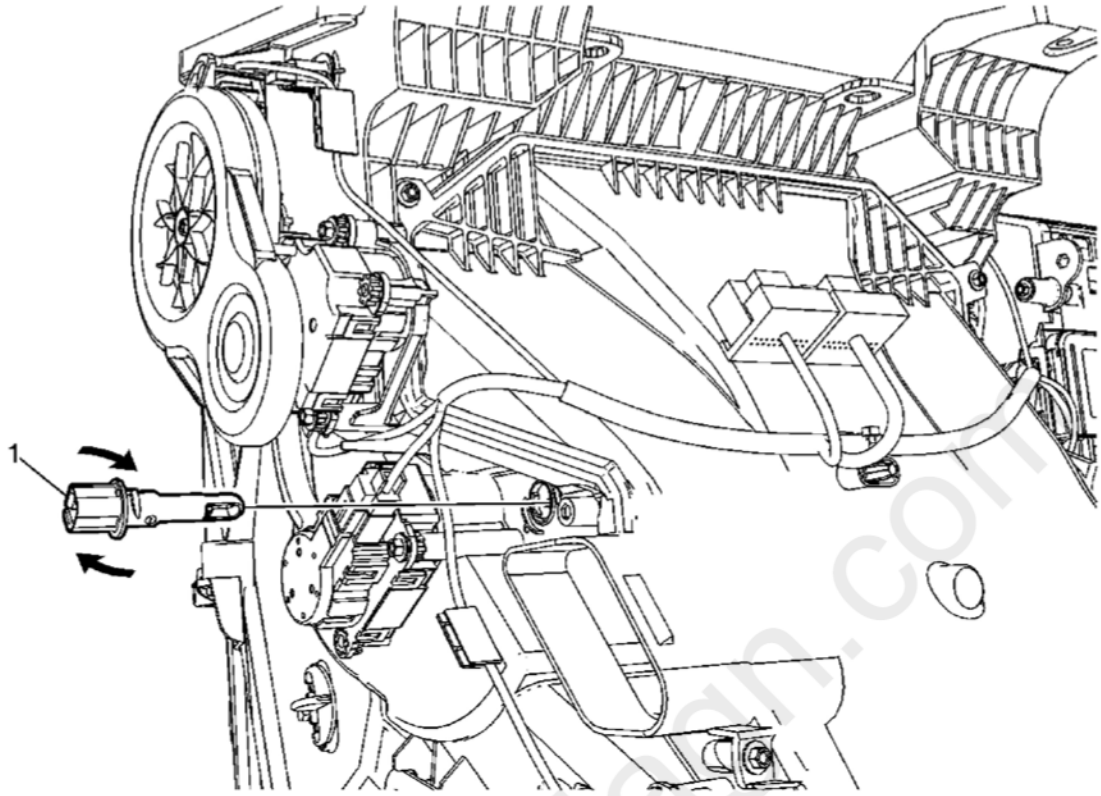

Fig Identifying Duct Air Temperature Sensor - Lower Left Side
Courtesy of E ERAL MOTORS CORP

Callout	Component ame
Preliminary Procedure Remove instrument panel insulator panel- left side. Refer to **Instrument Panel Insulator Panel Replacement - Left Side** .	
1	Duct Air Temperature Sensor - Lower Left Side **Procedure** 1. Disconnect the air temperature sensor electrical connector. 2. Twist and pull the lower duct air temperature sensor from the HVAC module assembly.

D CT AIR TEMPERAT RE SE SOR REPLACEME T - LOWER RI HT SIDE

cardiagn.com

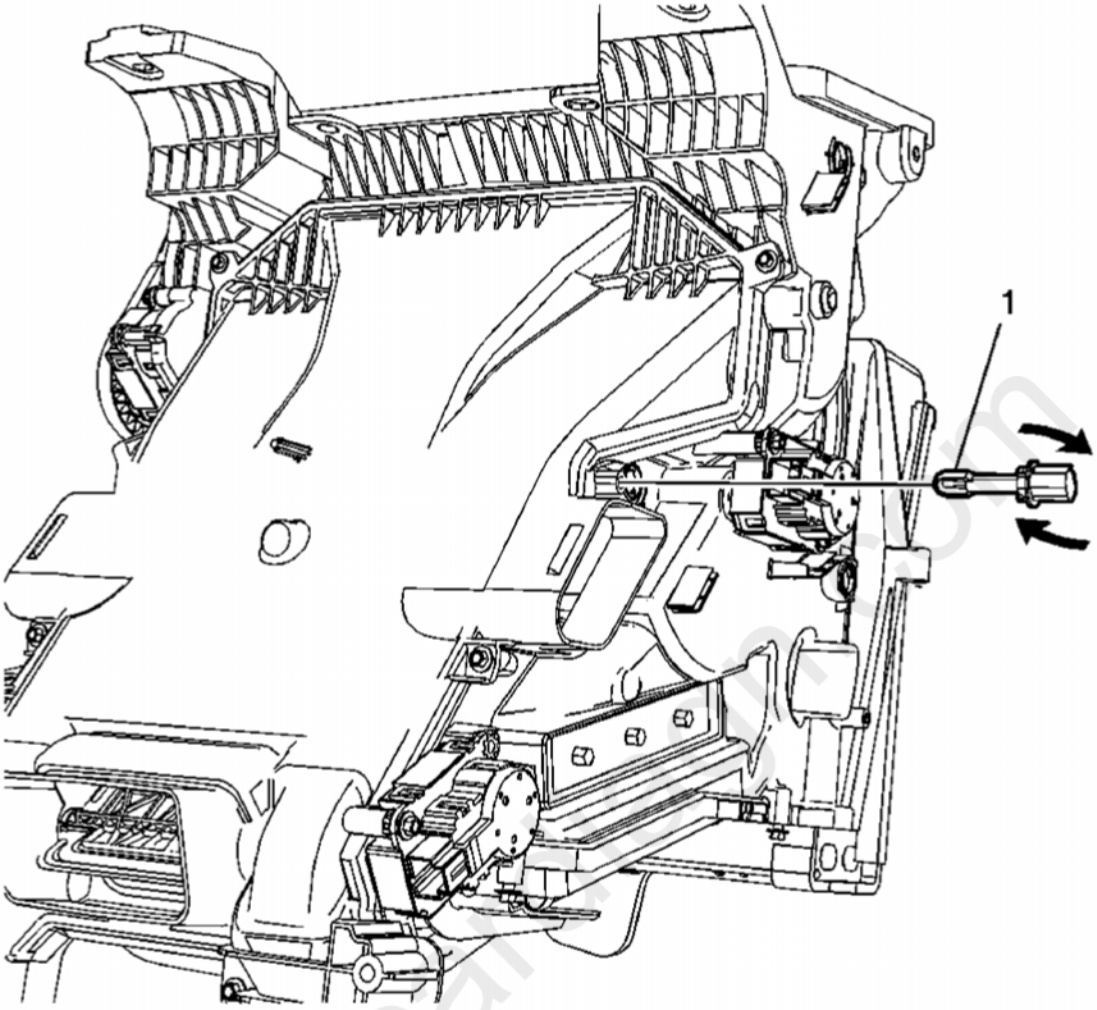

Fig Identifying Duct Air Temperature Sensor - pper Right Side
Courtesy of E ERAL MOTORS CORP

Callout	Component ame
Preliminary Procedure Remove the instrument panel compartment. Refer to **Instrument Panel Compartment Replacement** .	
1	Duct Air Temperature Sensor Replacement - Lower Right Side **Procedure** 1. Disconnect the duct air temperature sensor electrical connector. 2. Twist and pull the duct air temperature sensor from the HVAC module assembly.

AMBIE T AIR ALIT SE SOR REPLACEME T

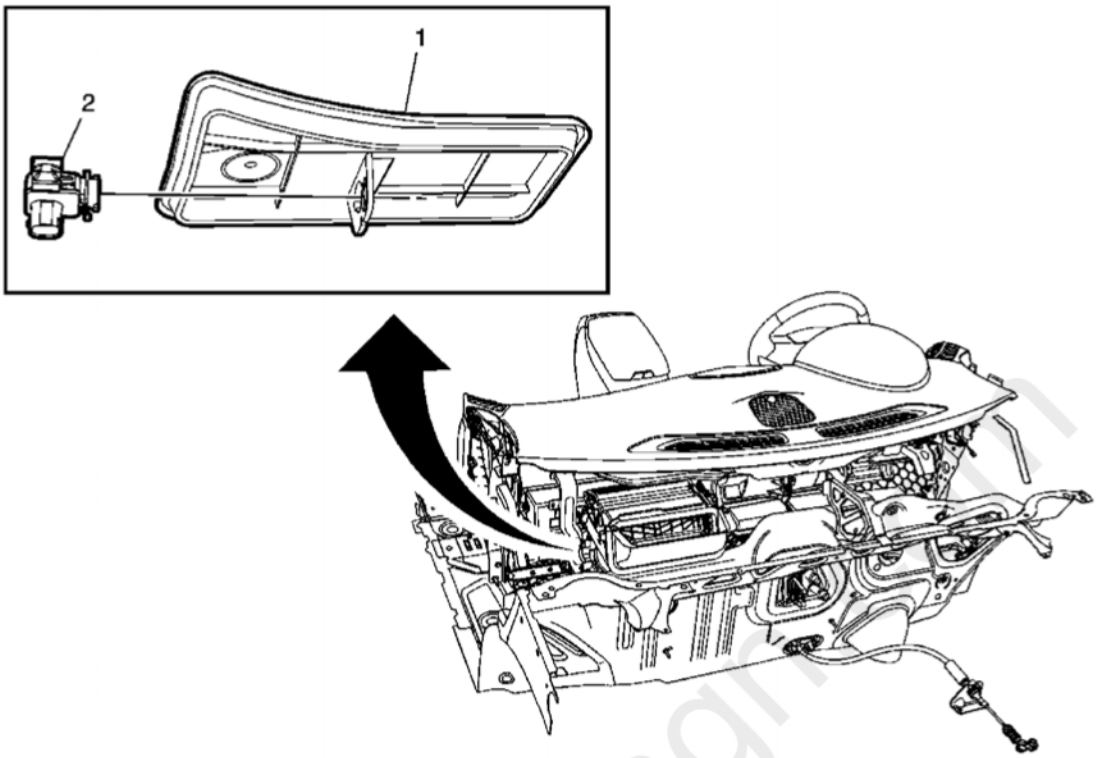

Fig Identifying Ambient Air uality Sensor
Courtesy of E ERAL MOTORS CORP

Callout	Component ame
Preliminary Procedure Remove the air inlet grille panel. Refer to **Air Inlet rille Panel Replacement** .	
1	Ambient Air Quality Sensor **Procedures** 1. Unsnap the ambient air quality sensor and move it forward. 2. Disconnect the electrical connector.

I SIDE AIR TEMPERAT RE SE SOR REPLACEME T

cardiagn.com

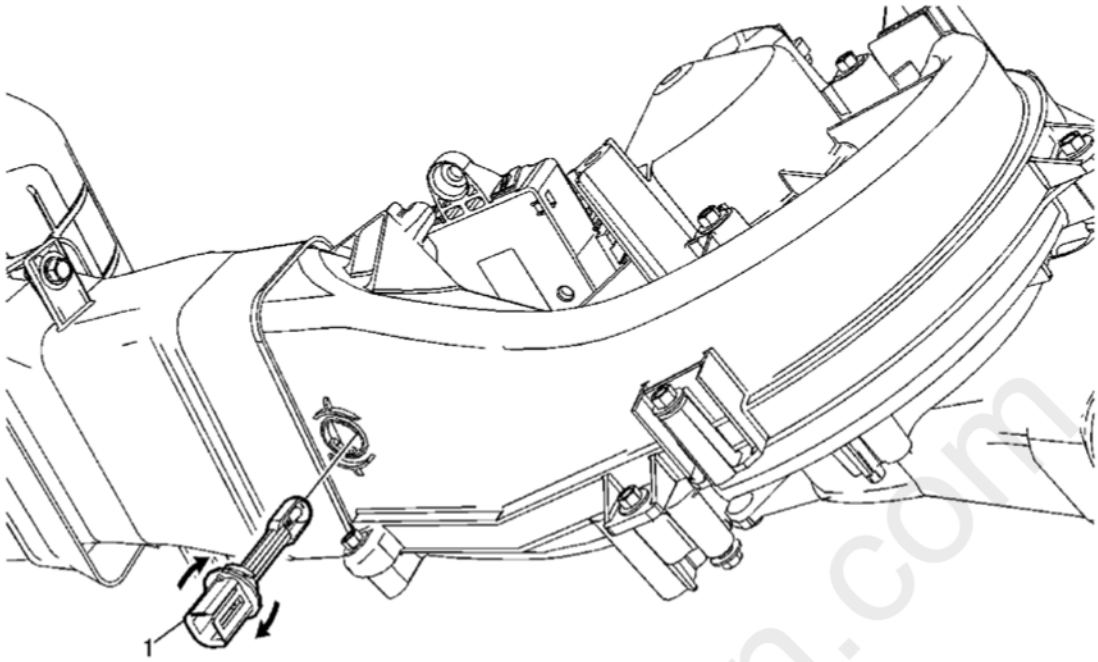

Fig Identifying Inside Air Temperature Sensor
Courtesy of E ERAL MOTORS CORP

Callout	Component ame
Preliminary Procedure 1. Remove auxiliary blower motor. Refer to **Auxiliary Blower Motor Replacement** . 2. Disconnect the inside air temperature sensor electrical connectors.	
1	Inside Air Temperature Sensor **Procedure** 1. Disconnect the duct air temperature sensor electrical connector. 2. Twist and pull the duct air temperature sensor from the HVAC module assembly.

I SIDE AIR MOIST RE A D WI DSHIELD TEMPERAT RE SE SOR REPLACEME T

cardiagn.com

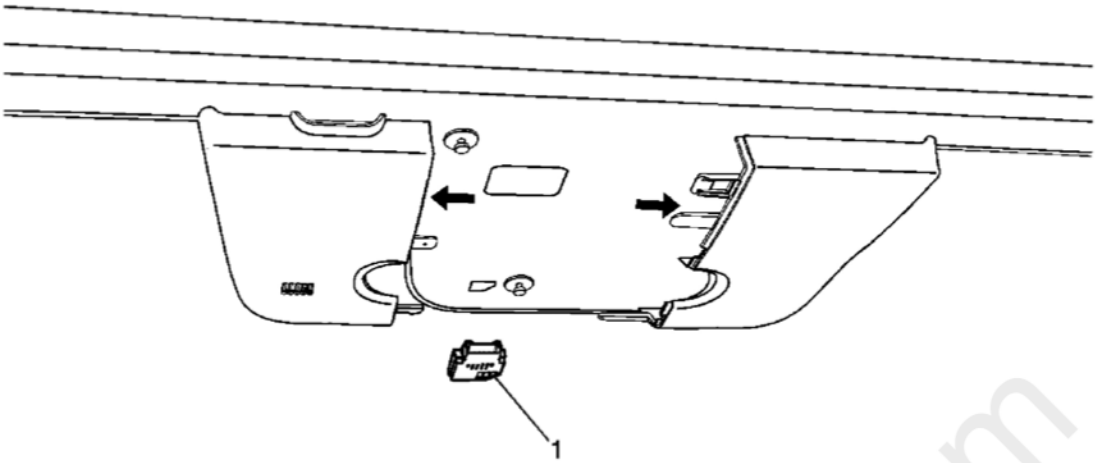

Fig Identifying Inside Air Moisture Windshield Temperature Sensor
Courtesy of E ERAL MOTORS CORP

Callout	Component ame
Preliminary Procedure Remove the inside rearview mirror mount cover**Inside Rearview Mirror Replacement** .	
1	Inside Air Moisture and Windshield Temperature Sensor Retainer **Procedure** 1. Disconnect the electrical connector 2. Release the inside air moisture and windshield temperature sensor retainer.

DESCR PT ON ND OPER T ON

A TOMATIC HVAC DESCRIPTIO A D OPERATIO

The air temperature and the air delivery description and operation are divided into eight areas:

- HVAC Control Components
- Air Speed (Front)
- Air Speed (Rear)
- Air Delivery (Front)
- Air Delivery (Rear)
- Heating and A/C Operation
- Recirculation Operation
- Automatic Operation
- Engine Coolant
- A/C Cycle

cardiagn.com

HVAC Control Components

Radio/HVAC Control

The Radio/HVAC control contains all switches, which are required to control the functions of HVAC and serve as interface between the operator and the HVAC control module. The selected values are passed to the HVAC control module via LIN-Bus.

Radio/HVAC Control - Auxiliary (only CJ4)

The Radio/HVAC control - auxiliary contains all switches, which are required to control the functions of rear HVAC and serve as interface between the operator and the HVAC control module. The selected values are passed to the HVAC control module via LIN-Bus.

HVAC Control Module

The HVAC control module is a MLAN device that interfaces between the operator and the HVAC system to maintain and control desired air temperature and air distribution settings. The battery positive voltage circuit provides power that the HVAC control module uses for keep alive memory. If the battery positive voltage circuit loses power, all HVAC DTCs and settings will be erased from keep alive memory. The body control module (BCM), which is the vehicle mode master, provides a device ON-Signal. The HVAC control module provides blower, air delivery mode and air temperature settings.

The HVAC control module supports the following features:

Feature	Availability
Afterblow	Available if reprogrammed by the technician
Purge	es
Personalization	es
Actuator Calibration	es

Mode Actuator (Front and Rear)

The mode actuator is a 5-wire stepper motor. The HVAC control module supplies a 12 V reference voltage to the stepper motor and energizes the 4 stepper motor coils with a pulsed ground signal. The stepper motor puts the mode flap into the calculated position in order to reach the selected position. The null point of the stepper motor will be calibrated, if the stepper motor is new. When the stepper motor is calibrated, the HVAC control module can drive the applicable coil to reach exactly the desired position of the flap.

Air Temperature Actuators (Front)

The interior temperature can be selected separately for the driver and passenger. For this purpose, two stepper motors are used that regulates two mixed air flaps independently of each other. The air temperature actuators are 5-wire stepper motors. The HVAC control module supplies a 12 V reference voltage to each stepper motor and energizes the 4 stepper motor coils with a pulsed ground signal. The left air temperature actuator moves the left mixed air flap into the calculated position, in order to reach the selected temperature of the left temperature switch. The right air temperature actuator puts the right mixed air flap into the calculated position, in order to reach the selected temperature of the right temperature switch. The null point of the stepper motor will be

cardiagn.com

calibrated, if the stepper motor is new. When the stepper motor is calibrated, the HVAC control module can drive the applicable coil to reach exactly the desired position of the flap.

Air Temperature Actuator (Rear)

The interior temperature can be selected separately for the rear passengers. The air temperature door actuator - auxiliary is a 5-wire stepper motor. The HVAC control module supplies a 12 V reference voltage to the stepper motor and energizes the 4 stepper motor coils with a pulsed ground signal. The air temperature door actuator - auxiliary moves the rear mixed air flap into the calculated position, in order to reach the selected temperature of the rear temperature switches. The null point of the stepper motor will be calibrated, if the stepper motor is new. When the stepper motor is calibrated, the HVAC control module can drive the applicable coil to reach exactly the desired position of the flap.

Recirculation Actuator

The recirculation actuator is a 5-wire stepper motor. The HVAC control module supplies a 12 V reference voltage to the stepper motor and energizes the 4 stepper motor coils with a pulsed ground signal. The stepper motor puts the recirculation flap into the calculated position in order to reach the desired position. The null point of the stepper motor will be calibrated, if the stepper motor is new. When the stepper motor is calibrated, the HVAC control module can drive the applicable coil to reach exactly the desired position of the flap.

Air Inlet Actuator

The air inlet actuator is a 5-wire stepper motor. The HVAC control module supplies a 12 V reference voltage to the stepper motor and energizes the 4 stepper motor coils with a pulsed ground signal. The stepper motor moves the air inlet flap into the calculated position, in order to reach the selected position. The null point of the stepper motor will be calibrated, if the stepper motor is new. When the stepper motor is calibrated, the HVAC control module can drive the applicable coil to reach exactly the desired position of the flap.

Blower Motor Control Processor (Front and Rear)

The blower motor control processor controls the speed of the blower motor by increasing or decreasing the voltage drop on the ground side of the blower motor. The HVAC control module provides a low side pulse width modulation (PWM) signal to the blower motor control processor via the blower motor speed control circuit. As the requested blower speed increases, the HVAC control module increases the amount of time that the speed signal is modulated to ground. As the requested blower speed decreases, the HVAC control module decreases the amount of time that the signal is modulated to ground.

Duct Temperature Sensors

The air temperature sensors are 2-wire negative temperature co-efficient thermistors. The sensors operate within a temperature range of -40 to 85°C (-40 to 185°F). The sensors are installed in the air distribution ducts and measure the temperature of the air that streams from the ducts. The HVAC control module uses these values to calculate the mixed air flap position.

Evaporator Temperature Sensor

The evaporator temperature sensor is a 2-wire negative temperature co-efficient thermistor. The sensor operates within a temperature range of -40 to 85°C (-40 to 185°F). The sensor is installed at the evaporator and

carmagn.com

measures its temperature. If the temperature drops under 3°C (38°F), the compressor will be switched off in order to prevent a frozen evaporator.

A/C Refrigerant Pressure Sensor

The A/C refrigerant pressure sensor is a 3-wire piezoelectric pressure transducer. A 5 V reference voltage, low reference, and signal circuits enable the sensor to operate. The A/C pressure signal can be between 0.2-4.8 V. When the A/C refrigerant pressure is low, the signal value is near 0 V. When the A/C refrigerant pressure is high, the signal value is near 5 V. The engine control module (ECM) converts the voltage signal to a pressure value. When pressure is too high or too low, the ECM will not allow the A/C compressor clutch to engage.

A/C Compressor

The A/C compressor is constantly belt driven. The performance of the A/C compressor is regulated per a lifting magnet in the A/C compressor. The HVAC control module supplies battery voltage to the A/C compressor. When the A/C switch is pressed, the HVAC control module provides a pulse width modulation (PWM) signal to the A/C compressor in order to command the performance of the A/C compressor. The performance of the A/C compressor is regulated according to adjusted interior temperature on the basis of characteristic lines. Therefore the HVAC control module grounds the A/C compressor with the PWM signal.

Windshield Temperature and Inside Moisture Sensor

The windshield temperature and inside moisture sensor includes the relative humidity sensor, windshield temperature sensor and humidity sensing element temperature sensor.

This sensor assembly provides information about:

- Relative humidity level at windshield (compartment side)
- Temperature of the windshield inside (compartment side)
- Temperature of the humidity sensor element

The relative humidity sensor measures the relative humidity of the compartment side of the windshield. It also detects the temperature of the windshield surface on the passenger compartment side. Both values are used as control inputs for the HVAC control module application to calculate the fog risk on windshield compartment side and ability to reduce fuel consumption by decreasing A/C compressor power to a minimum without causing any fog. The sensor will also enable partial recirculation mode in order to improve heat-up performance of the passenger compartment under cold ambient temperature conditions without the risk of mist build-up on the windshield. The humidity sensor element temperature sensor supplies the temperature of the humidity sensor element. It is only needed if the thermal contact between the humidity sensing element and the inside windshield surface is not sufficient.

Ambient Light/Sunload Sensor

The ambient light/sunload sensor includes the sunload sensor and passenger compartment temperature sensor.

This sensor assembly provides information about:

- Sun heat intensity

cardiagn.com

- Elevation
- Azimuth
- Passenger compartment temperature

The sunload sensor is connected to ground and to a 12 V clocked power supply through the HVAC control module. This clocked power supply is to power the sensor electronics and to work as a clock generator to the sunload sensor micro controller. The sensor uses a pulse signal for data identification and transferring the sun intensity measurement. At each positive transition from the clocked supply input, the sunload sensor micro controller will shift channels enabling new intensity measurement on the signal output to the HVAC control module. The signal voltage varies between 0-4 V.

The passenger compartment temperature sensor is a negative temperature co-efficient thermistor. A signal and low reference circuit enables the sensor to operate. As the air temperature increases, the sensor resistance decreases. The sensor signal varies between 0-5 V.

Bright or high intensity light causes the vehicles interior temperature to increase. The HVAC system compensates for the increased temperature by diverting additional cool air into the vehicle.

Air Speed (Front)

The blower control switch is part of the Radio/HVAC control. The selected value of the blower switch position is sent to the HVAC control module via LIN-Bus.

The blower motor control module is an interface between HVAC control module and blower motor. The blower motor control module regulates supply voltage and ground circuits to blower motor. The HVAC control module provides a PWM signal to the blower motor control module in order to command the desired blower motor speed. The blower motor control module supplies battery voltage to the blower motor and uses the blower motor ground as a low side control to adjust the blower motor speed. The voltage amounts between 2-13 V and changes linear to the height of the PWM signal.

Air Speed (Rear)

The blower control switches are part of the Radio/HVAC control - auxiliary. The selected value of the rear blower switches position is sent to the HVAC control module via LIN-Bus.

The blower motor control module - auxiliary is an interface between HVAC control module and blower motor - auxiliary. The blower motor control module - auxiliary regulates supply voltage and ground circuits to blower motor - auxiliary. The HVAC control module provides a PWM signal to the blower motor control module - auxiliary in order to command the desired blower motor speed. The blower motor control module - auxiliary supplies battery voltage to the blower motor - auxiliary and uses the blower motor - auxiliary ground as a low side control to adjust the blower motor speed. The voltage amounts between 2-13 V and changes linear to the height of the PWM signal.

Air Delivery (Front)

The HVAC control module controls the distribution of air by the use of recirculation and mode door actuator. The modes that may be selected are:

cartiagn.com

- Defrost
- Defog
- Panel
- Floor

The desired air distribution mode can be selected with the air distribution switches at the Radio/HVAC control. The Radio/HVAC control delivers the values to the HVAC control module via LIN-Bus. The HVAC control module controls the mode door actuator so that it drives the flap to the calculated position. Depending on the position of the flap, air is distributed through various ducts leading to the outlets in the dash. Turning the mode flap to the defrost position, the HVAC control module will move the recirculation actuator to outside air, reducing window fogging. When defrost is selected, the blower motor will be activated, regardless of the coolant temperature. The HVAC control module enables a high volume of air delivered to the front defrost vents. A/C is available in all modes.

The rear window defogger does not affect the HVAC system.

Air Delivery (Rear)

The HVAC control module controls the distribution of air by the mode door actuator - auxiliary. The modes that may be selected are:

- AUTO
- Floor
- Bi-Level
- Vent

The desired rear air distribution mode can be selected with the Mode switch at the Radio/HVAC control - auxiliary. The Radio/HVAC control - auxiliary delivers the values to the HVAC control module via LIN-Bus. The HVAC control module controls the mode door actuator - auxiliary so that it drives the flap to the calculated position. Depending on the position of the flap, air is distributed through various ducts.

Heating and A/C Operation

The purpose of the heating and A/C system is to provide heated and cooled air to the interior of the vehicle. The A/C system will also remove humidity from the interior and reduce windshield fogging. Regardless of the temperature setting, the following can affect the rate that the HVAC system can achieve the desired temperature:

- Recirculation actuator setting
- Difference between inside and desired temperature
- Blower motor speed setting
- Mode setting

When the A/C switch or the AUTO switch is pressed, the Radio/HVAC control sends a signal to the HVAC control module via LIN-Bus. The HVAC control module evaluates this signal and sends an A/C request signal

cardiagn.com

to the ECM via CAN-Bus. The ECM checks all preconditions before releasing and if all conditions are met sends a release signal back to the HVAC control module. The A/C compressor is activated by the HVAC control module. The HVAC control module supplies battery voltage to the A/C compressor. When the A/C switch is pressed, the HVAC control module provides a pulse width modulation (PWM) signal to the A/C compressor in order to command the performance of the A/C compressor. The performance of the A/C compressor is regulated according to adjusted interior temperature on the basis of characteristic lines. Therefore the HVAC control module grounds the A/C compressor with the PWM signal.

The following conditions must be met in order to activate the A/C compressor:

- Battery voltage is between 9-18 V
- Engine coolant temperature is less than 124°C (255°F)
- Engine speed is greater than 600 RPM
- Engine speed is less than 5 500 RPM
- A/C high side pressure is between 269-2 929 kPa (39-425 PSI)
- Throttle position is less than 100%
- Evaporator temperature is greater than 3°C (38°F)
- ECM does not detect immoderate torque load
- ECM does not detect insufficient idle quality
- The ambient temperature is above 1°C (34°F)

The sensor information is used by the ECM to determine the following:

- The A/C high side pressure
- An A/C system load on the engine
- An immoderate A/C high side pressure
- The heat load at the A/C condenser

The air streams into the passenger compartment through the heater core and the evaporator core. The air temperature actuator drives the mixed air flap to induce the airflow. If the interior temperature should be increased, the mixed air flap is put into the position in which more air streams through the heater core. If the interior temperature should be decreased, the mixed air flap is put into the position in which more air streams through the evaporator core.

Recirculation Operation

The recirculation switch is integrated into the Radio/HVAC control. The selected recirculation switch position is sent to the HVAC control module via LIN-Bus. The HVAC control module controls the air intake through the air inlet actuator and recirculation actuator. In the recirculation mode the air inlet flap closes and the recirculation flap opens in order to circulate the air within the vehicle. In fresh air mode the air inlet flap opens and the recirculation flap is closed again in order to route outside air into the vehicle. Recirculation is only available if the defrost mode is not active. When the defrost mode is active, the recirculation actuator opens the recirculation flap and the air inlet actuator opens the air inlet flap and outside air is circulated to the windshield to reduce fogging.

cardiagn.com

In automatic mode the values of the windshield temperature and inside moisture sensor are used as control inputs for the HVAC control module application to calculate the fog risk on passenger compartment side of the windshield compartment side. The A/C compressor and the defrost mode are activated to prevent or remove fog on the passenger compartment side of the windshield.

Automatic Operation

In automatic operation, the HVAC control module maintains the comfort level inside of the vehicle by controlling the A/C compressor clutch, the blower motor, the air temperature actuators, mode actuator and recirculation actuator.

To put the HVAC system in automatic mode, the following is required:

1. The auto switch must be activated.
2. The air temperature switches must be in any other position than full hot or full cold position.

Once the desired temperature is reached, the blower motor, mode, recirculation and temperature actuators automatically adjust to maintain the temperature selected. The HVAC control module performs the following functions to maintain the desired air temperature:

- Monitors the following sensors:
  - Ambient air temperature sensor
  - Lower left air temperature sensor
  - Lower right air temperature sensor
  - Lower rear air temperature sensor (only CJ4)
  - Upper left air temperature sensor
  - Upper right air temperature sensor
  - Upper rear air temperature sensor (only CJ4)
  - Windshield temperature and inside moisture sensor
  - Ambient light/sunload sensor
- Regulate the blower motor speed
- Regulate the rear blower motor speed (only CJ4)
- Position the air temperature actuators
- Position the rear air temperature actuators (only CJ4)
- Position the mode door actuator
- Position the rear mode door actuator (only CJ4)
- Position the recirculation actuator
- Position the air inlet actuator
- Request A/C operation
- Control of the A/C compressor

When the warmest position is selected in automatic operation the blower speed will increase gradually until the

cardiagn.com

vehicle reaches normal operating temperature. When normal operating temperature is reached the blower stays on high speed and the air temperature actuators stays in the full heat position.

When the coldest position is selected in automatic operation the blower stays on high and the air temperature actuators stay in full cold position. The mode actuator remains in the panel position and the recirculation actuator will remain in the recirculation position.

Under cold ambient temperatures, the automatic HVAC system provides heat in the most efficient manner. The operator can select an extreme temperature setting but the system will not warm the vehicle any faster. Under warm ambient temperatures, the automatic HVAC system also provides air conditioning in the most efficient manner. Selecting an extreme cool temperature will not cool the vehicle any faster.

In automatic mode the values of the windshield temperature and inside moisture sensor are used as control inputs for the HVAC control module application to calculate the fog risk on the passenger compartment side of the windshield and ability to reduce fuel consumption by decreasing A/C compressor power to a minimum without causing any fog. The A/C compressor and the defrost mode are activated to prevent or remove fog on the passenger compartment side of the windshield. The sensor will also enable partial recirculation mode in order to improve heat-up performance of the passenger compartment under cold ambient temperature conditions without the risk of mist build-up on the windshield.

Engine Coolant

Engine coolant is the essential element of the heating system. The thermostat controls the normal engine operating coolant temperature. The thermostat also creates a restriction for the cooling system that promotes a positive coolant flow and helps prevent cavitation.

Coolant enters the heater core through the inlet heater hose, in a pressurized state. The heater core is located inside the HVAC control module. The ambient air drawn through the HVAC control module absorbs the heat of the coolant flowing through the heater core. Heated air is distributed to the passenger compartment, through the HVAC control module, for passenger comfort. Opening or closing the air temperature flap controls the amount of heat delivered to the passenger compartment. The coolant exits the heater core through the return heater hose and recirculates back to the engine cooling system.

A/C Cycle

Refrigerant is the key element in an air conditioning system. R-134a is presently the only Environmental Protection Agency approved refrigerant for automotive use. R-134a is a very low temperature gas that can transfer the undesirable heat and moisture from the passenger compartment to the outside air.

The compressor builds pressure on the vapor refrigerant. Compressing the refrigerant also adds heat to the refrigerant. The refrigerant is discharged from the compressor, through the discharge hose, and forced to flow to the condenser and then through the balance of the A/C system. The A/C system is mechanically protected with the use of a high pressure relief valve. If the A/C refrigerant pressure sensor fails or if the refrigerant system becomes restricted and refrigerant pressure continued to rise, the high pressure relief will pop open and release refrigerant from the system.

Compressed refrigerant enters the condenser in a high temperature, high pressure vapor state. As the refrigerant flows through the condenser, the heat of the refrigerant is transferred to the ambient air passing through the

condenser. Cooling the refrigerant causes the refrigerant to condense and change from a vapor to a liquid state.

The condenser is located in front of the radiator for maximum heat transfer. The condenser is made of aluminum tubing and aluminum cooling fins, which allows rapid heat transfer for the refrigerant. The semi-cooled liquid refrigerant exits the condenser and flows to the Receiver/Dehydrator(R/D).

The R/D contains desiccant that absorbs moisture that may be in the refrigerant system. The R/D also acts as a storage vessel to ensure that a steady flow of liquid reaches the thermal expansion valve. The refrigerant exits the R/D and flows through the liquid line to the thermal expansion valve.

The thermal expansion valve is located at the front of dash and attaches to the evaporator inlet and outlet pipes. The thermal expansion valve is the dividing point for the high and the low pressure sides of the A/C system. As the refrigerant passes through the thermal expansion valve, the pressure on the refrigerant is lowered. The thermal expansion valve also meters the amount of liquid refrigerant that can flow into the evaporator.

Refrigerant exiting the thermal expansion valve flows into the evaporator core in a low pressure, liquid state. Ambient air is drawn through the HVAC control module and passes through the evaporator core. Warm and moist air will cause the liquid refrigerant boil inside of the evaporator core. The boiling refrigerant absorbs heat from the ambient air and draws moisture onto the evaporator. The refrigerant exits the evaporator through the suction line and back to the A/C compressor, in a vapor state, and completing the A/C cycle of heat removal. At the A/C compressor, the refrigerant is compressed again and the cycle of heat removal is repeated.

The conditioned air is distributed through the HVAC control module for passenger comfort. The heat and moisture removed from the passenger compartment will also change form, or condense, and is discharged from the HVAC control module as water.

cardiag.com