This document is copyright. Copying for private or commercial purposes, in part or in whole, is not permitted unless authorised by AUDI AG. AUDI AG does not guarantee or accept any liability with respect to the correctness of information in this document. Copyright by AUDI AG.

Workshop Manual

Audi A1 2011 ➤ , Audi A2 2001 ➤ , Audi A3 2004 ➤ , Audi A4 2001 ➤ , Audi A4 2008 ➤ , Audi A4 Cabriolet 2003 ➤ , Audi A5 Cabriolet 2009 ➤ , Audi A5 Coupé 2008 ➤ , Audi A6 1998 ➤ , Audi A6 2005 ➤ , Audi A7 Sportback 2011 ➤ , Audi A8 2003 ➤ , Audi A8 2010 ➤ , Audi Q5 2008 ➤ , Audi Q7 2007 ➤ , Audi R8 2007 ➤ , Audi TT 1999 ➤ , Audi TT 2007 ➤

Electrical system; General information

Edition 10.2010

cardiagn.com

List of Workshop Manual Repair GroupsList of Workshop Manual Repair GroupsList of Workshop Manual Repair Groups

Protected by copyright. Copying for private or commercial purposes, in part or in whole, is not permitted unless authorized by AUDI AG. AUDI AG does not guarantee or accept any liability with respect to the correctness of information in this document. Copyright by AUDI AG.

Repair Group

27 - Starter, current supply, CCS

92 - Windscreen wash/wipe system

94 - Lights, bulbs, switches - exterior

96 - Lights, bulbs, switches - interior

97 - Wiring

cardiagn.com

Technical information should always be available to the foremen and mechanics, because their careful and constant adherence to the instructions is essential to ensure vehicle road-worthiness and safety. In addition, the normal basic safety precautions for working on motor vehicles must, as a matter of course, be observed.

All rights reserved.
No reproduction without prior agreement from publisher.

Copyright © 2010 Audi AG, Ingolstadt

Contents

27 - Starter, current supply, CCS . . . 1

1 Battery - general notes . . . 1
1.1 Safety measures and procedures to be followed . . . 1
1.2 Warnings and safety procedures when handling lead-acid batteries . . . 1

2 Non maintenance-free batteries (without „magic eye“) . . . 5
2.1 Central gas venting system . . . 5
2.2 Battery terminal screw connection . . . 5
2.3 Checking non maintenance-free batteries . . . 6
2.4 Visual inspection of battery . . . 6
2.5 Checking electrolyte level in battery . . . 7
2.6 Measuring relative density of electrolyte in all battery cells . . . 7

3 Maintenance-free batteries . . . 11
3.1 Battery with „magic eye“ . . . 11
3.2 Checking battery with „magic eye“ . . . 11
3.3 Valve-regulated lead acid (VRLA) or absorbent glass mat (AGM) battery without „magic eye“ . . . 12
3.4 Checking valve-regulated lead acid or AGM battery . . . 12
3.5 Central gas venting system . . . 13
3.6 Battery terminal screw connection . . . 13
3.7 Visual inspection of battery . . . 13
3.8 Checking colour indicator (electrolyte level in battery) - batteries with „magic eye“ . . . 15
3.9 Checking electrolyte level in battery . . . 15

4 Checking battery - vehicles without battery monitor control unit J367 or energy management control unit J644 . . . 17
4.1 Checking battery using battery tester with printer VAS 6161 . . . 17
4.2 Checking battery using battery tester with printer VAS 5097A . . . 21
4.3 Measuring no-load voltage - vehicles without battery monitor control unit J367 or energy management control unit J644 . . . 25
4.4 Checking battery by measuring current draw - vehicles without battery monitor control unit J367 or energy management control unit J644 . . . 26

5 Checking battery - vehicles with battery monitor control unit J367 or energy management control unit J644 . . . 29
5.1 Checking battery using vehicle diagnostic tester . . . 29
5.2 Checking battery by measuring current draw - vehicles with battery monitor control unit J367 or energy management control unit J644 . . . 30
5.3 Measuring no-load voltage - vehicles with battery monitor control unit J367 or energy management control unit J644 „transport mode not active“ . . . 32
5.4 Measuring no-load voltage - vehicles with battery monitor control unit J367 or energy management control unit J644 „transport mode active“ . . . 33

6 Charging battery . . . 35
6.1 Charging battery with battery charger VAS 5095A , VAS 5900 , VAS 5903 , VAS 5904 or VAS 5906 . . . 35
6.2 Totally discharged battery . . . 38
6.3 Rapid-charging battery - vehicles without battery monitor control unit J367 or energy management control unit J644 . . . 39
6.4 Back-up power supply of battery via battery charger VAS 5095A , VAS 5900 , VAS 5903 , VAS 5904 or VAS 5906 . . . 40
6.5 Maintaining battery charge with solar panel VAS 6102 A . . . 42

7 Checking and servicing alternator . . . 44
7.1 Checking alternator . . . 44
7.2 Bosch alternator up to 2000 - exploded view . . . 44
7.3 Bosch alternator from 2001 onwards - exploded view . . . 45
7.4 Removing and installing voltage regulator - Bosch alternator from 2001 onwards . . . 46
7.5 Bosch alternator from 2007 onwards - exploded view . . . 47

Protected by copyright. Copying for private or commercial purposes, in part or in whole, is not permitted unless authorised by AUDI AG. AUDI AG does not guarantee or accept any liability with respect to the correctness of information in this document. Copyright by AUDI AG.

cardiagn.com

7.6 Removing and installing voltage regulator - Bosch alternator from 2007 onwards 48
7.7 Checking carbon brushes - all types of Bosch alternators from 2001 onwards 48
7.8 Valeo alternator up to 2000 - exploded view 49
7.9 Valeo alternator from 2001 onwards - exploded view 50
7.10 Removing and installing voltage regulator - Valeo alternator from 2001 onwards 51
7.11 Checking carbon brushes - Valeo alternator from 2001 onwards 51
7.12 Removing and installing voltage regulator - Valeo alternator from 2007 onwards 52
7.13 Checking carbon brushes - Valeo alternator from 2007 onwards 52
7.14 Removing and installing poly V-belt pulley without free-wheel 53
7.15 Removing and installing poly V-belt pulley with free-wheel 54
8 Cruise control system - vehicles with electronic throttle 56

92 - Windscreen wash/wipe system 57

1 Washer fluid hoses 57
1.1 Disconnecting and connecting washer fluid hose connectors 57
1.2 Servicing a smooth washer fluid pipe 58
1.3 Servicing a washer fluid hose with corrugated tube 59

94 - Lights, bulbs, switches - exterior 61

1 Safety precautions when handling gas discharge bulbs 61

96 - Lights, bulbs, switches - interior 63

1 Immobilizer for vehicles without entry and start authorisation switch E415 (mechanical ignition lock) 63
1.1 General notes 63
1.2 Defective transponder or loss of key 63
1.3 Renewing reader coil 63
1.4 Procedure for renewing lock set 63
2 Immobilizer for vehicles with entry and start authorisation switch E415 (electronic ignition lock) 64
3 Heated steering wheel 65
4 Towing bracket 66
4.1 Removing and installing socket for towing bracket - version 1 66
4.2 Removing and installing socket for towing bracket - version 2 67
4.3 Removing and installing socket for towing bracket - version 3 69
4.4 Pin assignment at socket for towing bracket 71

97 - Wiring 72

1 Repairing wiring harnesses and electrical connectors 72
1.1 General information on repairs to the vehicle electrical system 72
1.2 ESD (electrostatic discharge) workplace VAS 6613 73
1.3 Notes on repairing wiring harnesses and electrical connectors 74
1.4 Repairing wiring for pyrotechnic components 74
1.5 Repairing CAN bus wiring 75
1.6 Repairing FlexRay wiring 76
1.7 Repairing an 0.25 mm2 wire with a single crimp connector 76
1.8 Repairing a wire of 0.35 mm2 section or thicker with a single crimp connector 78
1.9 Repairing an 0.25 mm2 wire by connecting in an additional wire 80
1.10 Repairing a wire of 0.35 mm2 section or thicker by connecting in an additional wire 83
2 Repairing connector housings and electrical connectors 86
2.1 Notes on repairing connector housings and electrical connectors 86
2.2 Repairing contacts in connector housings 86
2.3 Fitting seals for individual wires 87
2.4 Repairing connector housings with insulation displacement technology (IDC) 88
3 Releasing and dismantling connector housings 89

Protected by copyright. Copying for private or commercial purposes, in part or in whole, is not permitted unless authorised by AUDI AG. AUDI AG does not guarantee or accept any liability with respect to the correctness of information in this document. Copyright by AUDI AG.
cardiagn.com

3.1 Notes on releasing and dismantling connector housings . . . 89
3.2 Secondary locking device . . . 89
3.3 Primary locking device . . . 90
3.4 Primary locking device with round connector systems . . . 91
3.5 Primary locking device with flat connector systems . . . 91
3.6 Primary locking device with special connector systems . . . 93
4 Cleaning contact surfaces with contact surface cleaning set VAS 6410 . . . 96
4.1 Servicing wiring lugs . . . 96
4.2 Servicing screw connections . . . 97
4.3 Cleaning battery terminal clamps and battery terminals . . . 98
4.4 Corrosion protection . . . 99
5 Repairing aerial wires . . . 101
6 Fibre optic cables . . . 103
6.1 Repairing fibre optic cables . . . 103
6.2 Separating fibre optic cable from wiring harness connector . . . 107
7 Vehicle diagnostic, testing and information systems . . . 109
7.1 Notes on operation and safety . . . 109
7.2 Connecting vehicle diagnostic tester . . . 110

Protected by copyright. Copying for private or commercial purposes, in part or in whole, is not permitted unless authorised by AUDI AG. AUDI AG does not guarantee or accept any liability with respect to the correctness of information in this document. Copyright by AUDI AG.

cardiagn.com

Protected by copyright. Copying for private or commercial purposes, in part or in whole, is not permitted unless authorised by AUDI AG. AUDI AG does not guarantee or accept any liability with respect to the correctness of information in this document. Copyright by AUDI AG.

cardiagn.com

27 – Starter, current supply, CCS

1 Battery - general notes

WARNING

Risk of injury.

- *Observe warnings and safety regulations ⇒ page 1 .*

Caution

Risk of damage to battery or vehicle.

- *Vehicles with batteries that are not maintenance-free: Observe notes ⇒ „2.4 Visual inspection of battery“, page 6 .*
- *Vehicles with maintenance-free batteries: Observe notes ⇒ „3.7 Visual inspection of battery“, page 13 .*

- To ensure a long service life, the battery must be checked, serviced and maintained according to the instructions in this Workshop Manual.
- Apart from starting the engine, the battery also acts as an electrical buffer and supplies power to all parts of the vehicle's electrical system.

Note

Additional information ⇒ Self-study programme No. 234 ; Vehicle batteries

1.1 Safety measures and procedures to be followed

Before starting work, employees must be informed of the possible hazards involved with handling batteries.

Caution

Non-qualified personnel such as trainees and junior staff must only be allowed to perform work on vehicle batteries under the supervision of skilled workers such as qualified vehicle mechanics or electricians.

1.2 Warnings and safety procedures when handling lead-acid batteries

This copy for private use only. Copying for private or commercial purposes, in part or in whole, is not permitted unless authorised by AUDI AG. AUDI AG does not guarantee or accept any liability with respect to the correctness of information in this document. Copyright by AUDI AG.

Knowing and avoiding dangers

Handling batteries is dangerous. Such dangers can be avoided by paying attention to the warnings on the battery, in the Owner's Manual and in the Workshop Manual.

cardiagn.com

Explanatory notes on battery symbols

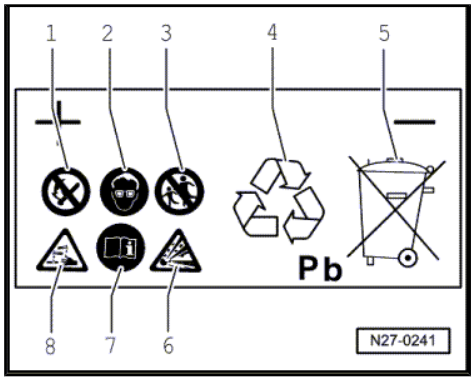

1 - Fires, sparks, naked flames and smoking are prohibited when handling batteries. Avoid sparks and static discharge when handling wires and electrical equipment. To avoid short circuits, never place tools on the battery.

2 - Wear eye protection when working on the battery.

3 - Keep children away from acid and batteries.

4 - Disposal: Old batteries are hazardous waste. They are only to be disposed of at an official collection point; all legal requirements must be observed.

5 - Do not dispose of old batteries with household waste.

6 - There is a risk of explosion when handling batteries. A highly explosive gas mixture is given off when batteries are under charge.

7 - Observe the instructions on the battery, in the Workshop Manual „Electrical system; General information“ and in the Owner's Manual.

8 - Danger of acid burns: Electrolyte is highly corrosive; protective gloves and eye protection should therefore always be worn when working on the battery. Do NOT tilt the battery as electrolyte can leak out of the gas vents.

WARNING

Risk of injury due to electrolyte.

- *Can cause severe injury to the eyes, skin and mucous membranes.*
- *Inhalation can damage the respiratory system.*
- *Swallowing is harmful to the digestive system.*
- *First aid: Rinse eyes and immediately consult first aid station or inform doctor.*
- *Never tilt battery. Acid can leak out of the gas vents.*
- *Soak up spilt electrolyte with binding agent and neutralise any residual electrolyte. Use e.g. soap solution for neutralising.*
- *Never allow electrolyte to come into contact with hands.*
- *Avoid contact with skin.*
- *Never touch mouth, nose or eyes with soiled hands.*
- *Immediately change any clothing affected by electrolyte and place in water if necessary.*
- *Do not eat, drink or store foodstuffs at workplace.*
- *Wash thoroughly before breaks and on completion of work.*

Protected by copyright. Copying for private or commercial purposes, in part or in whole, is not permitted unless authorised by AUDI AG. AUDI AG does not guarantee or accept any liability with respect to the correctness of information in this document. Copyright by AUDI AG.

cardiagn.com

WARNING

Wear eye protection and protective clothing to reduce the risk of injury.

- *Wear safety goggles and an acid-resistant apron or alternatively electrolyte-proof overalls.*
- *Wear electrolyte-proof gloves.*

WARNING

Risk of explosion due to gas produced when charging battery.

- *The gas given off during charging and sometimes emitted by the battery at rest even after charging is explosive. In the worst case, improper handling of the battery can lead to explosion caused by escaping gas.*
- *Smoking, naked flames and sparks (caused by grinding, welding or cutting) are prohibited when working in the vicinity of the battery.*
- *Take care to avoid short circuits when handling wires and electrical equipment. Never place tools on the battery.*
- *To avoid sparks as a result of electrostatic discharge, always touch the vehicle body before handling the battery.*

WARNING

Avoid explosion risks.

- *If the display is colourless or light yellow on batteries with „magic eye", do not check or charge the battery. Do NOT boost start the vehicle. There is a risk of explosion when checking or charging the battery or boost starting the vehicle. The battery must be renewed.*
- *Old batteries (in use for 6 months or more) must be treated with an anti-static spray (currently „Neostatic Antistatikum HB 155") prior to handling.*
- *Sealing plugs of batteries which are not maintenance-free must be firmly screwed in when charging.*
- *Charging of batteries removed from the vehicle is only permitted in vented cubicles with extraction system.*
- *After charging, the battery must be left in the charging area with extraction system for an appropriate length of time.*
- *Only work on batteries in suitable, well ventilated areas.*
- *Batteries must always be transported in conductive metal containers.*
- *Do not use electrostatically chargeable materials for securing purposes.*

Protected by copyright. Copying for private or commercial purposes, in part or in whole, is not permitted unless authorised by AUDI AG. AUDI AG does not guarantee or accept any liability with respect to the correctness of information in this document. Copyright by AUDI AG.

cardiagn.com

WARNING

Risk of damage to vehicle.

- *Escaping electrolyte could cause acid corrosion and damage to safety-relevant vehicle components.*

WARNING

Risk of environmental pollution.

- *Old batteries are hazardous waste. They contain toxic lead (Pb) and sulphuric acid.*
- *Observe disposal regulations. Old batteries should only be disposed of in appropriate containers at an official collection point.*

Protected by copyright. Copying for private or commercial purposes, in part or in whole, is not permitted unless authorised by AUDI AG. AUDI AG does not guarantee or accept any liability with respect to the correctness of information in this document. Copyright by AUDI AG.

cardiagn.com

2 Non maintenance-free batteries (without „magic eye“)

Lead-acid batteries which are not maintenance-free are filled with liquid electrolyte (wet battery). They are fitted with sealing plugs.

WARNING

Risk of injury when handling electrolyte.

- *Observe warnings and safety regulations ⇒ page 2 .*

Risk of explosion due to gas produced when charging battery.

- *Observe warnings and safety regulations ⇒ page 3 .*

2.1 Central gas venting system

To prevent the gas produced when charging the battery from causing damage or becoming a health hazard, the gas is discharged through a central opening in the top of the battery cover.

Protected by copyright. Copying for private or commercial purposes, in part or in whole, is not permitted unless authorised by AUDI AG. AUDI AG does not guarantee or accept any liability with respect to the correctness of information in this document. Copyright by AUDI AG.

– Make sure that the central gas venting system hose or pipe is always attached to the battery.

– Make sure the central gas venting system hose or pipe is not obstructed. Only then is the battery able to vent freely.

Note

More modern batteries are equipped with a fine-mesh flame trap at the central gas venting outlet. This circular glass-fibre mesh with a diameter of approx. 15 mm and a thickness of 2 mm operates like a valve. It allows the gas given off during battery charging to escape and at the same time prevents ignition of the explosive gas in the battery.

2.2 Battery terminal screw connection

Observe the following to avoid damaging the battery terminals and battery housing:

- Battery terminal posts must not be greased.
- Only connect battery terminal clamps -arrows- by hand without exerting force.
- Fit battery terminal clamps in such a way that the battery terminal post is flush with the terminal clamp or protrudes from it.
- Tightening torque for battery terminal clamps and additional clamps ⇒ Electrical system; Rep. gr. 27 .
- Never re-tighten screw connections after tightening battery terminal clamps to specified torque.

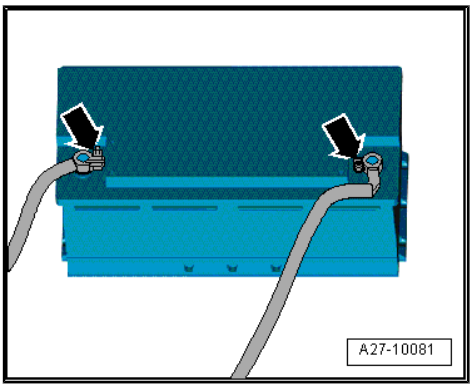

cardiagn.com

2.3 Checking non maintenance-free batteries

WARNING

Risk of injury and explosion.

- *Observe warnings and safety regulations ⇒ page 1 .*

Perform tests in the following order:

1. Visual inspection ⇒ page 6
2. Checking electrolyte level ⇒ page 7
3. Checking battery using battery tester with printer -VAS 6161- ⇒ page 17 or using battery tester with printer -VAS 5097A- ⇒ page 21 or measuring relative density of electrolyte ⇒ page 7 .
4. Further procedure depending on result of battery check using battery tester.

2.4 Visual inspection of battery

– Visually inspect battery before performing comprehensive measurements:

- External condition of battery
- Battery connections
- Secure fit of battery

Caution

Risk of explosion, poor crash safety, risk of corrosion, shortened service life.

Copyright by AUDI AG. Copying for private or commercial purposes, in part or in whole, is not permitted unless authorised by AUDI AG. AUDI AG does not guarantee or accept any liability with respect to the correctness of information in this document.

- *If the retainer plate is loose, this may damage the battery housing and allow electrolyte to escape.*
- *If not properly secured, the battery may be subject to vibration damage and the plates in the battery will be damaged.*
- *Tighten bolt for retainer plate; for tightening torque refer to ⇒ Electrical system; Rep. gr. 27 .*

Risk of malfunctions in electrical system or cable fire.

- *The wiring connections may not make proper contact if the battery terminals are damaged or the battery terminal clamps are loose. Check condition of battery terminals; for tightening torques for battery terminal clamps and additional clamps refer to ⇒ Electrical system; Rep. gr. 27 .*
- *Risk of corrosion due to escaping electrolyte.*
- *The battery openings must be fitted with the correct type of genuine sealing plugs to ensure proper sealing of the battery cover (different types). Only use genuine sealing plugs of the same type when renewing missing or damaged sealing plugs.*
- *The plugs must be fitted with an O-ring.*

cardiagn.com

2.5 Checking electrolyte level in battery

Procedure

The correct electrolyte level is an important factor in ensuring long battery service life.

> **WARNING**
>
> *Risk of injury when handling electrolyte.*
>
> - *Observe safety instructions when handling battery electrolyte* ⇒ page 2 .
> - *Wear eye protection and protective clothing* ⇒ page 3 .
>
> *Risk of explosion due to naked flames, fires and smoking.*
>
> - *Use only an electric hand torch to illuminate the inside of the battery housing.*
> - *Never illuminate the inside of the battery housing with a naked flame.*
> - *Never bring a naked flame or a burning cigarette into the vicinity of the battery.*

– If the „min“ and „max“ marks are visible on the outside of the battery, only perform an external visual inspection.

Protected by copyright. Copying for private or commercial purposes, in part or in whole, is not permitted unless authorised by AUDI AG. AUDI AG does not guarantee or accept any liability with respect to the correctness of information in this document. Copyright by AUDI AG.

- The electrolyte level must be above the „min“ mark, but may not exceed the „max“ mark.

– If it is difficult to detect the „min“ and „max“ marks on the outside of the battery or they cannot be seen through the battery housing , unscrew the sealing plugs.

– Check the electrolyte level by making a visual inspection of the inside of the battery.

- The electrolyte level must coincide with the internal level mark (plastic moulding). This corresponds to the „max“ marking on the outside.

> **Caution**
>
> *Risk of corrosion due to escaping electrolyte.*
>
> - *The battery openings must be fitted with the correct type of genuine sealing plugs to ensure proper sealing of the battery cover (different types). Only use genuine sealing plugs of the same type when renewing missing or damaged sealing plugs.*
> - *The plugs must be fitted with an O-ring.*
> - *If the electrolyte level is too low, the battery must be renewed. Do not top up with distilled water.*

– Screw sealing plugs of battery cells back in again.

2.6 Measuring relative density of electrolyte in all battery cells

Special tools and workshop equipment required

cardiagn.com

- Refractometer -T10007- or

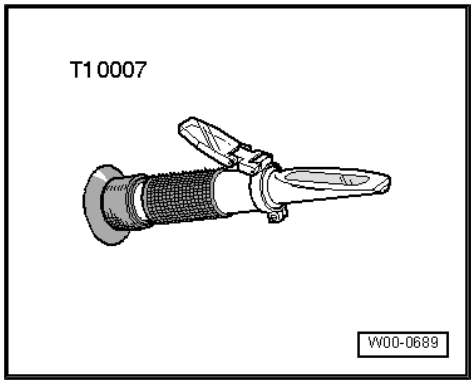

- Hydrometer (commercially available)

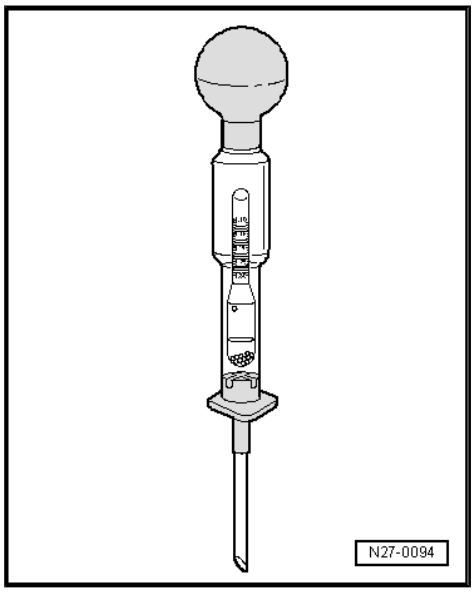

Protected by copyright. Copying for private or commercial purposes, in part or in whole, is not permitted unless authorised by AUDI AG. AUDI AG does not guarantee or accept any liability with respect to the correctness of information in this document. Copyright by AUDI AG.

Procedure

In conjunction with the battery check using the battery tester with printer -VAS 6161- ⇒ page 17 or using the battery tester with printer -VAS 5097A- ⇒ page 21 , the relative density test provides information on the charge state of the battery.

- The temperature of the battery electrolyte must be at least +10 °C.

WARNING

Risk of injury when handling electrolyte.

- *Observe safety instructions when handling battery electrolyte* *⇒ page 2* *.*
- *Wear eye protection and protective clothing* *⇒ page 3* *.*

Note

The relative density of the electrolyte can be checked immediately after charging the battery.

– Unscrew all battery cell sealing plugs.

cardiagn.com

– Dip hydrometer into battery cell and draw in electrolyte until the float is floating freely in the electrolyte.

♦ The greater the relative density of the electrolyte drawn in, the higher the float will ride.

♦ The relative density in kg/dm^3 (specific density of electrolyte) can be read off the hydrometer scale.

– Take reading on hydrometer and compare it to values given in table:

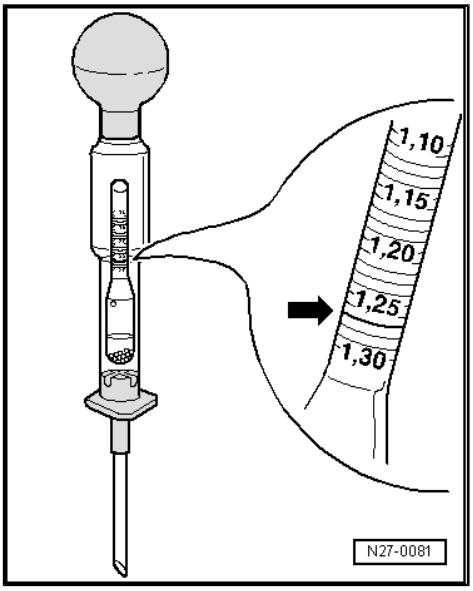

Charge state	Relative density of electrolyte in kg/dm^3	
	In normal climatic zones	In tropical countries
discharged	1.12	1.08
half charged	1.20	1.16
well charged	1.28	1.23

The relative density in normal climatic zones must be at least 1.24 kg/dm^3. If relative density is too low in all battery cells:

– Charge battery and then repeat electrolyte relative density test.

Example 1						
Battery cell	1	2	3	4	5	6
Relative density per battery cell in kg/dm^3	1.24	1.25	1.25	1.10 [1)]	1.24	1.25
• [1)] Relative density in battery cell 4 is too low (difference greater than 0.03 kg/dm^3).						

Example 2						
Battery cell	1	2	3	4	5	6
Relative density per battery cell in kg/dm^3	1.26	1.26	1.25	1.14 [1)]	1.18 [1)]	1.24
• [1)] Relative density in battery cells 4 and 5 is too low (difference greater than 0.03 kg/dm^3).						

Protected by copyright. Copying for private or commercial purposes, in part or in whole, is not permitted unless authorized by AUDI AG. AUDI AG does not guarantee or accept any liability with respect to the correctness of information in this document. Copyright by AUDI AG.

– Renew the battery if the specified values are not attained.

Note

The battery must be renewed if the relative density of the electrolyte measured in the individual battery cells varies by more than 0.03 kg/dm^3.

cardiagn.com

Caution

Danger from escaping electrolyte.

- *The battery openings must be fitted with the correct type of genuine sealing plugs to ensure proper sealing of the battery cover (different types). Only use genuine sealing plugs of the same type when renewing missing or damaged sealing plugs.*
- *The plugs must be fitted with an O-ring.*

– If specified values have been attained, screw sealing plugs of battery cells back in.

Note

Observe disposal regulations if battery has to be renewed *⇒ page 4* .

Protected by copyright. Copying for private or commercial purposes, in part or in whole, is not permitted unless authorised by AUDI AG. AUDI AG does not guarantee or accept any liability with respect to the correctness of information in this document. Copyright by AUDI AG.

cardiagn.com

3 Maintenance-free batteries

Only install maintenance-free batteries with the specifications „TL82506“ (from December 1997 onwards) and „VW75073“ (from August 2001 onwards).

WARNING

Risk of injury when handling electrolyte.

- *Observe warnings and safety regulations ⇒ page 2 .*

Risk of explosion due to gas produced when charging battery.

- *Observe warnings and safety regulations ⇒ page 3 .*

3.1 Battery with „magic eye“

Lead-acid batteries with „magic eye“ are filled with liquid electrolyte (wet battery). They are not fitted with sealing plugs for topping up with distilled water.

Note

- *If batteries with „magic eye“ are fitted with sealing plugs for production reasons, these are covered with plastic foil.*
- *Do not remove plastic foil and do not top up with distilled water.*
- *Only perform visual inspections.*

The „magic eye“ -arrow- provides information on the electrolyte level and battery charge via a colour indicator. Possible indicator colours ⇒ page 11 .

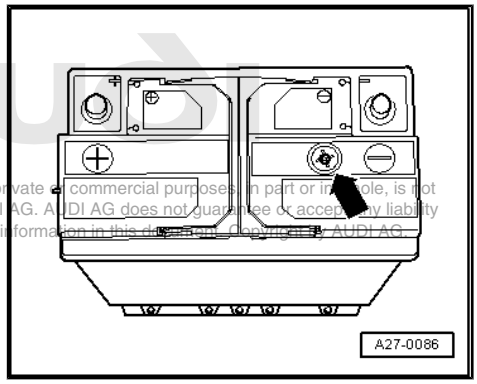

WARNING

Risk of explosion due to a discharged battery with „magic eye“.

- *The battery must NOT be checked or charged if the indicator of the „magic eye“ is colourless or yellow. Do NOT boost start the vehicle. There is a risk of explosion when checking or charging the battery or boost starting the vehicle. The battery must be renewed.*

Protected by copyright. Copying for private or commercial purposes, in part or in whole, is not permitted unless authorised by AUDI AG. AUDI AG does not guarantee or accept any liability with respect to the correctness of information in this document. Copyright by AUDI AG.

cardiagn.com

3.2 Checking battery with „magic eye“

WARNING

Risk of injury and explosion.

- *Observe warnings and safety regulations ⇒ page 1 .*

Perform tests in the following order:

1. Visual inspection ⇒ page 6
2. Checking colour indicator of „magic eye“ ⇒ page 15
3. Checking electrolyte level ⇒ page 15
4. Checking battery
   ⇒ „4 Checking battery - vehicles without battery monitor

control unit J367 or energy management control unit J644 “, page 17 or
⇒ „5.2 Checking battery by measuring current draw - vehicles with battery monitor control unit J367 or energy management control unit J644 “, page 30 .

5. Further procedure depending on result of battery check using battery tester.

3.3 Valve-regulated lead acid (VRLA) or absorbent glass mat (AGM) battery without „magic eye“

- VLRA or AGM batteries are deep-cycle resistant and leak-proof.
- VRLA or AGM batteries are filled with electrolyte which is held in place in an „A“bsorbent „G“lass „M“at. The battery is sealed and equipped with valves.
- As the electrolyte is absorbed in the mat, these batteries cannot have a „magic eye“. Absorbent glass mat batteries are marked with „AGM“ on the battery.

Note

- *VLRA or AGM batteries cannot and must not be opened and must not be topped up with distilled water.*
- *Only perform visual inspections.*

Caution

Fitting a wrong battery will result in poor crash safety.

- *If a vehicle was originally equipped with a VRLA or AGM battery, only replace the battery with another VRLA or AGM battery.*

3.4 Checking valve-regulated lead acid or AGM battery

WARNING

Risk of injury and explosion.

- *Observe warnings and safety regulations ⇒ page 1 .*

Perform tests in the following order:

1. Visual inspection ⇒ page 6
2. Checking battery
⇒ „4 Checking battery - vehicles without battery monitor control unit J367 or energy management control unit J644 “, page 17 or
⇒ „5.2 Checking battery by measuring current draw - vehicles with battery monitor control unit J367 or energy management control unit J644 “, page 30 .
3. Further procedure depending on result of battery check using battery tester.

Protected by copyright. Copying for private or commercial purposes, in part or in whole, is not permitted unless authorised by AUDI AG. AUDI AG does not guarantee or accept any liability with respect to the correctness of information in this document. Copyright by AUDI AG.

cardiagn.com

3.5 Central gas venting system

To prevent the gas produced when charging the battery from causing damage or becoming a health hazard in the engine or passenger compartment, the gas is discharged through a central opening in the top of the battery cover.

– Make sure that the central gas venting system hose or pipe is always attached to the battery.

– Make sure the central gas venting system hose or pipe is not obstructed. Only then is the battery able to vent freely.

Note

More modern batteries are equipped with a fine-mesh flame trap at the central gas venting outlet. This circular glass-fibre mesh with a diameter of approx. 15 mm and a thickness of 2 mm operates like a valve. It allows the gas given off during battery charging to escape and at the same time prevents ignition of the explosive gas in the battery.

3.6 Battery terminal screw connection

Observe the following to avoid damaging the battery terminals and battery housing:

- Battery terminal posts must not be greased.
- Only connect battery terminal clamps -arrows- by hand without exerting force.
- Fit battery terminal clamps in such a way that the battery terminal post is flush with the terminal clamp or protrudes from it.
- Tightening torque for battery terminal clamps and additional clamps ⇒ Electrical system; Rep. gr. 27 .
- Never re-tighten screw connections after tightening battery terminal clamps to specified torque.

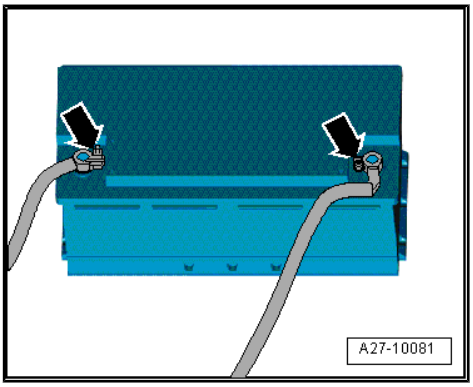

3.7 Visual inspection of battery

– Visually inspect battery before performing comprehensive measurements:

- External condition of battery
- Battery connections
- Secure fit of battery

Protected by copyright. Copying for private or commercial purposes, in part or in whole, is not permitted unless authorised by AUDI AG. AUDI AG does not guarantee or accept any liability with respect to the correctness of information in this document. Copyright by AUDI AG.

cardiagn.com

Caution

Risk of explosion, poor crash safety, risk of corrosion, shortened service life.

- *If the retainer plate is loose, this may damage the battery housing and allow electrolyte to escape.*
- *If not properly secured, the battery may be subject to vibration damage and the plates in the battery will be damaged.*
- *Tighten bolt for retainer plate; for tightening torque refer to ⇒ Electrical system; Rep. gr. 27 .*

Risk of malfunctions in electrical system or cable fire.

- *The wiring connections may not make proper contact if the battery terminals are damaged or the battery terminal clamps are loose. Check condition of battery terminals; for tightening torques for battery terminal clamps and additional clamps refer to ⇒ Electrical system; Rep. gr. 27 .*

Protected by copyright. Copying for private or commercial purposes, in part or in whole, is not permitted unless authorised by AUDI AG. AUDI AG does not guarantee or accept any liability with respect to the correctness of information in this document. Copyright by AUDI AG.

cardiagn.com

3.8 Checking colour indicator (electrolyte level in battery) - batteries with „magic eye“

Procedure

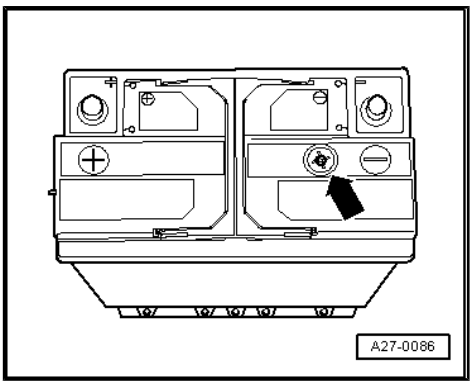

Note

As the „magic eye“ is only located in one battery cell, the electrolyte level is only checked for this battery cell.

– Prior to visual inspection, use a screwdriver handle to tap gently and carefully on the magic eye -arrow-.

Note

When charging the battery and while driving, air bubbles may form under the „magic eye“ and falsify the colour indicator. Tapping on the „magic eye“ will disperse the air bubbles underneath.

– Read off electrolyte level in battery from colour indicator. Two different displays are possible:

Colour indicator	Battery charge state
Black or green	• Electrolyte level in battery OK
Colourless or light yellow	• Electrolyte level in battery too low. Risk of explosion; do not check or charge battery.

WARNING

Risk of explosion due to a discharged battery with „magic eye“.

- ***The battery must NOT be checked or charged if the indicator of the „magic eye“ is colourless or yellow. Do NOT boost start the vehicle. There is a risk of explosion when checking or charging the battery or boost starting the vehicle. The battery must be renewed.***

Note

Observe disposal regulations if battery has to be renewed *⇒ page 4* .

3.9 Checking electrolyte level in battery

Procedure

The correct electrolyte level is an important factor in ensuring long battery service life.

Protected by copyright. Copying for private or commercial purposes, in part or in whole, is not permitted unless authorised by AUDI AG. AUDI AG does not guarantee or accept any liability with respect to the correctness of information in this document. Copyright by AUDI AG.

cardiagn.com

WARNING

Danger of injury when handling electrolyte.

- *Observe safety instructions when handling battery electrolyte ⇒ page 2 .*
- *Wear eye protection and protective clothing ⇒ page 3 .*
- *If the electrolyte level is too low, the battery must be renewed. Do not open battery and do not top up with distilled water.*

Risk of explosion due to naked flames, fires and smoking.

- *Never bring a naked flame or a burning cigarette into the vicinity of the battery.*

Protected by copyright. Copying for private or commercial purposes, in part or in whole, is not permitted unless authorised by AUDI AG. AUDI AG does not guarantee or accept any liability with respect to the correctness of information in this document. Copyright by AUDI AG.

– If the „min“ and „max“ marks are visible on the outside of the battery, perform an external visual inspection.

• The electrolyte level must be above the „min“ mark, but may not exceed the „max“ mark.

cardiagn.com

4 Checking battery - vehicles without battery monitor control unit -J367- or energy management control unit -J644-

Do not open maintenance-free batteries; this would invalidate the warranty.

4.1 Checking battery using battery tester with printer -VAS 6161-

- When checking the battery using battery tester with printer -VAS 6161- it is not necessary to disconnect the battery earth cable.
- The battery tester with printer -VAS 6161- no longer puts the battery under load, but works by measuring the dynamic conductivity. For this reason it is possible to perform several measurements without re-charging the battery.
- No-load voltage measurement can be performed without delay.
- All types of battery are stored in the tester and they can be updated.
- The battery bar code can be read off directly with the optionally available 2D scanner.
- The integrated temperature sensor improves the quality of measurements.
- Data can be stored on an SD card.

Note

For information on battery tester with printer, refer to ⇒ Instruction Manual for -VAS 6161- .

Special tools and workshop equipment required

- Battery tester with printer -VAS 6161-

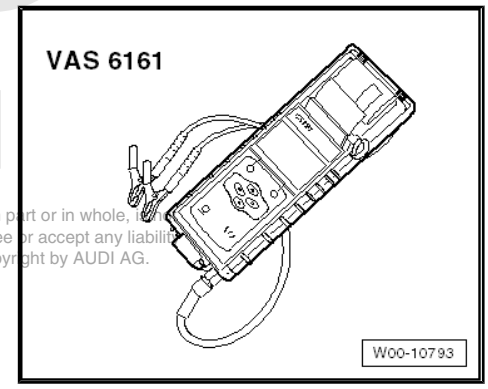

Protected by copyright. Copying for private or commercial purposes, in part or in whole, is not permitted unless authorised by AUDI AG. AUDI AG does not guarantee or accept any liability with respect to the correctness of information in this document. Copyright by AUDI AG.

Note

For information on how to use the battery tester, refer to ⇒ Instruction Manual for -VAS 6161- .

Procedure

- Battery temperature must be at least +10 °C.

cardiagn.com

WARNING

Risk of injury due to electrolyte.

- *Observe safety instructions when handling battery electrolyte ⇒ page 2 .*
- *Wear eye protection and protective clothing ⇒ page 3 .*
- *Sealing plugs of batteries which are not maintenance-free must be firmly screwed in when measuring voltage under load.*

Risk of explosion due to a discharged battery with „magic eye".

- *The battery must NOT be checked or charged if the indicator of the „magic eye" is colourless or yellow. Do NOT boost start the vehicle. There is a risk of explosion when checking or charging the battery or boost starting the vehicle. The battery must be renewed.*

– Switch off ignition and all electrical equipment.

– Check colour indicator of batteries with „magic eye" ⇒ page 15 .

– Switch on battery tester with printer -VAS 6161- .

– Connect red test clamp „+" of battery tester to positive battery terminal or jump start terminal in engine compartment.

– Connect black test clamp „–" of battery tester to negative terminal of battery or jump start terminal in engine compartment.

Protected by copyright. Copying for private or commercial purposes, in part or in whole, is not permitted unless authorised by AUDI AG. AUDI AG does not guarantee or accept any liability with respect to the correctness of information in this document. Copyright by AUDI AG.

Note

Make sure the test clamps make proper contact.

– Select one of the following functions:

- Maintenance test
- Service test
- Warranty test

Maintenance test

– Select „maintenance test" from the menu.

– Connect scanner and scan in vehicle identification number.

– Select connection point: „at battery post" or „at jump start post".

– Select vehicle model.

– Scan in battery bar code.

– Determine temperature by holding temperature sensor at a distance of approx. 5 cm over battery or jump start post until a constant temperature is displayed.

– Start test.

– If required, print out test log.

Service test

– Select „service test" from the menu.

– Select vehicle model.

cardiagn.com

- Determine temperature by holding temperature sensor at a distance of approx. 5 cm over battery until a constant temperature is displayed.
- Select type of battery: „regular“, „AGM“, „2*6V“ or „Gel“.
- Select rating units: „CCA“, „JIS“, „DIN“, „SAE“, „IEC“ or „EN“.
- Start test.
- If required, print out test log.

Warranty test

- Select „warranty test“ from the menu.
- Select fitting location: „in vehicle“ or „out of vehicle“.
- Select vehicle model.
- Determine temperature by holding temperature sensor at a distance of approx. 5 cm over battery until a constant temperature is displayed.
- Select type of battery: „regular“, „AGM“, „2*6V“ or „Gel“.
- Select corresponding rating using arrow buttons.
- Start test.
- If required, print out test log.

Note

The test log is required for warranty processing.

- Switch off battery tester.
- Detach test clamps.

Protected by copyright. Copying for private or commercial purposes, in part or in whole, is not permitted unless authorised by AUDI AG. AUDI AG does not guarantee or accept any liability with respect to the correctness of information in this document. Copyright by AUDI AG.

cardiagn.com

Test result on printout:

1 - Test mode

2 - Test result

3 - Voltage measured

4 - Nominal value of battery measured

5 - Nominal value of battery as set on tester

6 - Temperature measured above battery

7 - Fitting location of battery

8 - Position of battery clamp as set on tester

9 - Type of battery set

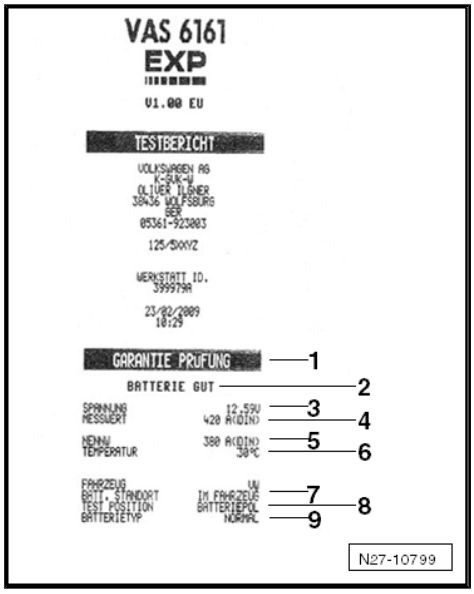

Test result of maintenance test	Measures
Good battery	Battery OK
Charge battery immediately	Charge battery ⇒ page 35 and test again. Faults can occur if battery is not fully charged and tested again
Mark as defective	Mark as „defective“ and remove from vehicle
Check tester connection	Disconnect battery and test again. Poor contact of the cables can be responsible for the result „Check tester connection“
Check connection	Cable must be connected directly to battery and not to jump start post

Test result of service test and warranty test	Measures
Good battery	Battery OK
Good battery - recharge	Charge battery ⇒ page 35 , trace cause of fault responsible for discharging, if necessary
Perform current draw test	Perform current draw test ⇒ page 26 . Charge battery ⇒ page 35 and test again
Replace battery	Disconnect battery and test again. Poor contact of the cables can be responsible for the result "Replace battery"
Bad cell - replace	Replace battery
Frozen battery	Thaw battery and test again
Check connection	Cable must be connected directly to battery and not to jump start post

Protected by copyright. Copying for private or commercial purposes, in part or in whole, is not permitted unless authorised by AUDI AG. AUDI AG does not make any guarantee or accept any liability with respect to the correctness of information in this document. Copyright by AUDI AG.

cardiagn.com

Note

Observe disposal regulations if battery has to be renewed ⇒ page 4 .

4.2 Checking battery using battery tester with printer -VAS 5097A-

- Measuring voltage under load simulates starting engine at low temperatures. During the test, a high current flows through the battery, causing the voltage to drop. The amount of the voltage drop will depend on the state of charge of the battery. The voltage must not fall below the minimum value specified by the battery tester.
- After the test, the voltage will remain at a low level for a long time, rising only slowly.
- If the battery is defective or only weakly charged, the battery voltage will drop very rapidly below the specified minimum voltage level.
- The battery must be renewed if the voltage drops below the specified minimum level.
- Only perform the test once. Repeating the test would falsify the result.
- The battery tester must be allowed to cool down for approximately 30 minutes before checking another battery.

The battery tester with printer -VAS 5097 A- can be used to check 12 V batteries with the following low temperature test currents:

Low temperature test current in A (Ampere)		
According to DIN [1) 2)]	According to EN / SAE [3)]	According to IEC [4)]
80 – 104	136 – 177	95 – 124
105 – 129	178 – 219	125 – 154
130 – 154	220 – 261	155 – 184
155 – 179	262 – 303	185 – 214
180 – 204	304 – 345	215 – 244
204 – 229	346 – 387	245 – 274
230 – 254	388 – 429	275 – 304
255 – 279	430 – 471	305 – 334
280 – 304	472 – 513	335 – 364
305 –329	514 – 555	365 – 394
330 – 354	556 – 597	395 – 424
355 – 379	598 – 639	425 – 454
380 – 389	640 – 657	455 – 464
390 – 399	658 – 675	465 – 474
400 – 409	676 – 693	475 – 484
410 – 419	694 – 711	485 – 494
420 – 429	712 – 729	495 – 504
430 – 439	730 – 747	505 – 514
440 – 449	748 – 765	515 – 524
450 – 459	766 – 783	525 – 534
460 – 469	784 – 801	535 – 544
470 – 479	802 – 819	545 – 554
480 – 489	820 – 837	555 – 564
490 – 499 [4)]	838 – 855	565 – 574

Protected by copyright. Copying for private or commercial purposes, in part or in whole, is not permitted unless authorised by AUDI AG. AUDI AG does not guarantee or assume any liability with respect to the correctness of information in this document. Copyright by AUDI AG.

cardiagn.com

Low temperature test current in A (Ampere)		
According to DIN 1) 2)	According to EN / SAE 3)	According to IEC 4)

- 1) DIN = Deutsche Industrie Norm (German industrial standard).
- 2) Batteries with a low temperature test current of 520 A according to DIN can be checked with the setting for 499 A according to DIN.
- 3) EN / SAE = European standard / Society of Automotive Engineers.
- 4) IEC = International Engineering Consortium.

Note

For information on battery tester with printer, refer to ⇒ Operating instructions for the -VAS 5097A- or sticker ⇒ Brief operating instructions for battery tester with printer -VAS 5097 A- on unit.

Special tools and workshop equipment required

♦ Battery tester with printer -VAS 5097A-

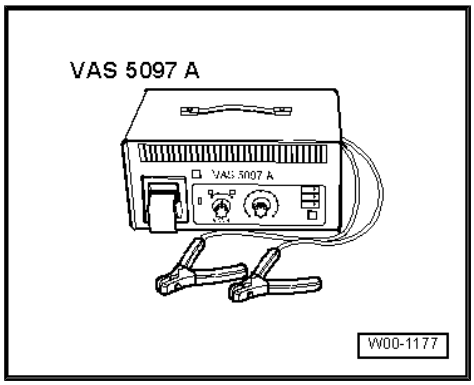

Note

For information on how to use the battery tester, refer to ⇒ Operating instructions for -VAS 5097A- .

Protected by copyright. Copying for private or commercial purposes, in part or in whole, is not permitted unless authorised by AUDI AG. AUDI AG does not guarantee or accept any liability with respect to the correctness of information in this document. Copyright by AUDI AG.

Procedure

- Battery temperature must be at least +10 °C.

cardiagn.com

WARNING

Risk of injury due to electrolyte.

- *Observe safety instructions when handling battery electrolyte ⇒ page 2 .*
- *Wear eye protection and protective clothing ⇒ page 3 .*
- *Sealing plugs of batteries which are not maintenance-free must be firmly screwed in when measuring voltage under load.*

Risk of explosion due to a discharged battery with „magic eye".

- *The battery must NOT be checked or charged if the indicator of the „magic eye" is colourless or yellow. Do NOT boost start the vehicle. There is a risk of explosion when checking or charging the battery or boost starting the vehicle. The battery must be renewed.*

– Switch off ignition before disconnecting earth wire at battery ⇒ Electrical system; Rep. gr. 27 .

– Check colour indicator of batteries with „magic eye" ⇒ page 15 .

– Determine the low temperature test current in amps (A) according to DIN from the data on the battery and use the table ⇒ page 21 to read off the setting range for the battery tester with printer -VAS 5097 A- .

Powered by Cardiagn. Copying for private or commercial purposes, in part or in whole, is not permitted unless authorised by AUDI AG. AUDI AG does not guarantee or accept any liability with respect to the correctness of information in this document. Copyright by AUDI AG.

– Set the low temperature test current with the selector switch -5-.

– Set the measuring range, 80 - 379 A or 380 - 499 A, with the ON/OFF switch -6-.

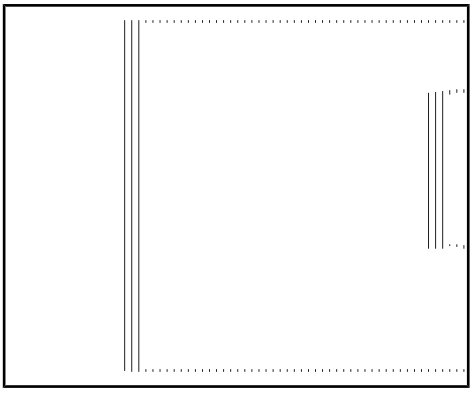

Note

Batteries with a low temperature test current of 520 A according to DIN can be checked with the setting for 499 A according to DIN.

– Connect red test clamp „+" of battery tester to positive battery terminal.

– Connect black test clamp „–" of battery tester to negative battery terminal.

Note

- *Make sure the test clamps make proper contact.*
- *Please note the TPI 2012182 on the battery tester with printer -VAS 5097 A- .*

cardiagn.com

– Use the sliding switch -7- to select the connection point for the test clamps.

1 - Direct connection to battery

2 - Connection to external test points in engine compartment

– Check whether the low temperature test current indicated on the battery matches the value set on the battery tester.

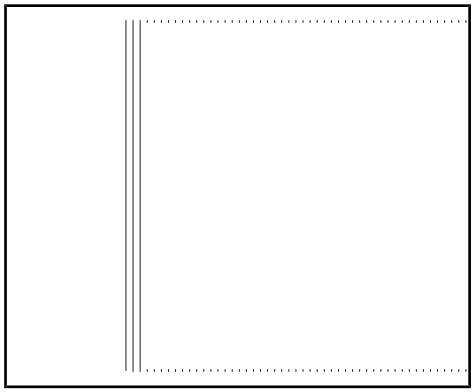

– Press start button -4-.

• Green LED -1- lights up.

• The test program runs through automatically.

• The printer -9- will print out the test result after 20 seconds.

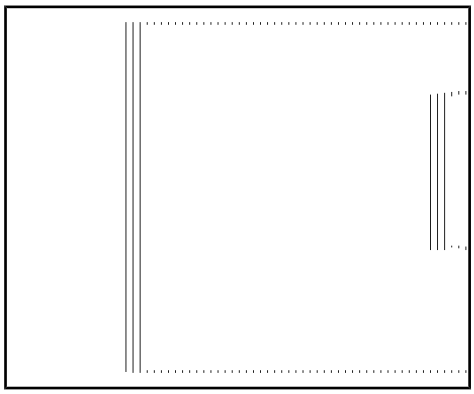

Note

♦ *If battery tester does not start up (no LED lights, no printout), battery must be charged* *⇒ page 35* *.*

♦ *If red LED -2- lights up, battery tester has been connected with reverse polarity.*

♦ *If red LED -3- lights up, battery is not suitable for testing. Renew battery.*

– Switch off battery tester with ON/OFF switch -6-.

– Detach test clamps.

Protected by copyright. Copying for private or commercial purposes, in part or in whole, is not permitted unless authorised by AUDI AG. AUDI AG does not guarantee or accept any liability with respect to the correctness of information in this document. Copyright by AUDI AG.

cardiagn.com

Test result on printout:

1 - Measuring range set on battery tester

2 - Diagram (-arrow- indicates battery status)

3 - Test result

4 - Battery voltage during load test

5 - Vehicle data and date must be entered by mechanic

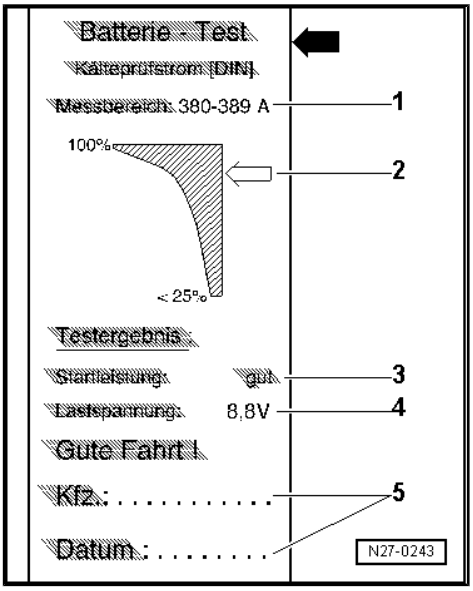

Battery tester printout	Measures
Battery Very Good	Battery OK
Battery Good	Battery OK
Battery Sufficient	Measure current draw ⇒ page 26
Battery Not Good	Measure current draw ⇒ page 26
Battery Faulty	Measure current draw ⇒ page 26
Cannot be tested	Charge battery ⇒ page 35 and test again

Note

Observe disposal regulations if battery has to be renewed ⇒ page 4 .

Protected by copyright. Copying for private or commercial purposes, in part or in whole, is not permitted unless authorised by AUDI AG. AUDI AG does not guarantee or accept any liability with respect to the correctness of information in this document. Copyright by AUDI AG.

4.3 Measuring no-load voltage - vehicles without battery monitor control unit -J367- or energy management control unit -J644-

Note

By measuring no-load voltage, for example as part of the specified care and maintenance work for vehicles not in use or in storage, it can be determined if the battery needs re-charging ⇒ Maintenance tables .

Special tools and workshop equipment required

♦ Hand-held multimeter -V.A.G 1526E-

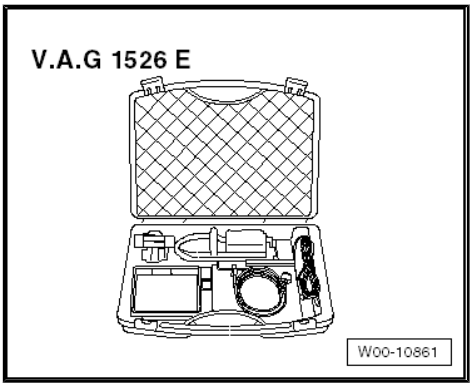

Procedure

Observe the following points to ensure correct measurement.

cardiagn.com

- Battery must NOT be subjected to electrical load within the next 2 hours prior to measurement.
- After the battery has been charged or the engine has been running, wait for 12 hours before performing measurements.
- Battery temperature must be at least –10 °C.

After a waiting time of at least 12 hours:

– Measure voltage between battery terminal clamps.

- Specification: 12.5 V or above = battery is OK

– If battery no-load voltage is below 12.5 V, battery must be re-charged ⇒ page 35 .

– Current draw must be measured after a charging period of 5 minutes ⇒ page 26 .

– If battery no-load voltage is 11.6 V or less, battery is totally discharged ⇒ page 38 .

4.4 Checking battery by measuring current draw - vehicles without battery monitor control unit -J367- or energy management control unit -J644-

Protected by copyright. Copying for private or commercial purposes, in part or in whole, is not permitted unless authorised by AUDI AG. AUDI AG does not guarantee or accept any liability with respect to the correctness of information in this document. Copyright by AUDI AG.

Checking the current draw capacity of a battery during charging allows you to assess quickly whether a partially or totally discharged battery ⇒ page 38 can be made serviceable again by re-charging or whether the battery has to be renewed.

Special tools and workshop equipment required

♦ Battery charger -VAS 5095A- and trigger clamp, 100A -VAS 5051B/7- or

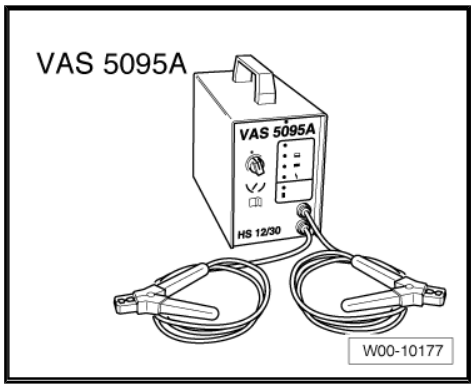

♦ Battery charger -VAS 5900- or

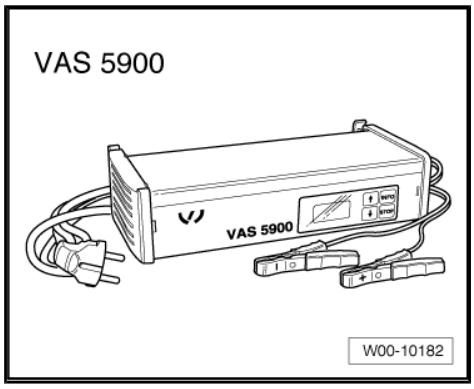

cardiagn.com

- Battery charger -VAS 5903-

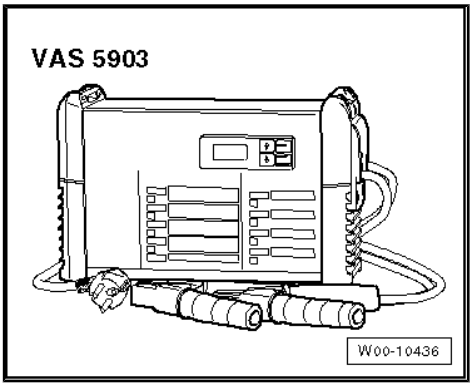

- Battery charger -VAS 5904-

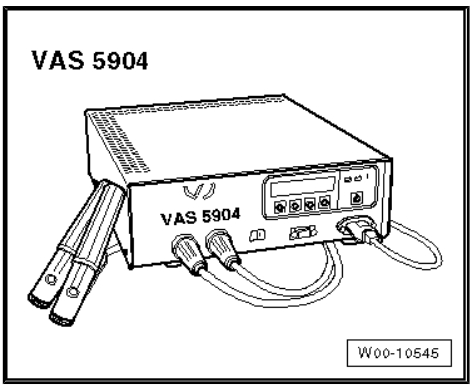

- Battery charger -VAS 5906-

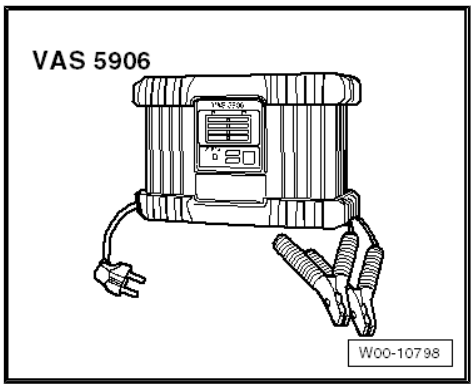

Note

- *When charging with battery charger -VAS 5095A- , the current draw of the battery must be measured using e.g. trigger clamp, 100A -VAS 5051B/7- . Battery chargers -VAS 5900- , -VAS 5903- , -VAS 5904- and -VAS 5906- indicate the current draw on the unit.*
- *Information on battery chargers ⇒ Operating instructions for appropriate battery charger.*

Procedure

- Battery temperature must be at least +10 °C.
- The battery charger must be capable of supplying a charging current of at least 30 A, as is the case for example with the battery chargers -VAS 5095A- , -VAS 5900- , -VAS 5903- , -VAS 5904- and -VAS 5906- .
- Battery charger connected and switched on

Protected by copyright. Copying for private or commercial purposes, in part or in whole, is not permitted unless authorised by AUDI AG. AUDI AG does not guarantee or accept any liability with respect to the correctness of information in this document. Copyright by AUDI AG.

cardiagn.com

– Measure battery charging current after a charging period of 5 minutes.

• Specification: Charging current must be greater than 10 % of rated capacity.

• Example: Charging current for a 60 Ah battery after 5 minute charging period: greater than 6 A.

– If reading matches specification, continue with charging process until battery is fully charged.

– Then check battery using the battery tester:

♦ Using battery tester with printer -VAS 6161- (no waiting time) ⇒ page 17 .

♦ Using battery tester with printer -VAS 5097A- (after charging, wait for 12 hours) ⇒ page 21 .

– If reading is below specification, renew battery ⇒ Electrical system; Rep. gr. 27 .

Note

Observe disposal regulations if battery has to be renewed *⇒ page 4* *.*

Protected by copyright. Copying for private or commercial purposes, in part or in whole, is not permitted unless authorised by AUDI AG. AUDI AG does not guarantee or accept any liability with respect to the correctness of information in this document. Copyright by AUDI AG.

cardiagn.com

5 Checking battery - vehicles with battery monitor control unit -J367- or energy management control unit -J644-

- On some models, the electrical system is monitored by the energy management control unit -J644- or the battery monitor control unit -J367- in connection with the data bus diagnostic interface -J533- (allocation ⇒ Current flow diagrams, Electrical fault finding and Fitting locations). The battery test for these vehicles is performed via „Guided Fault Finding“.
- If is not possible to check the battery in the „Guided Fault Finding“ because of a partially or totally discharged battery, the charge status of the battery can be assessed quickly via „Checking battery by measuring current draw“.
- Do not open maintenance-free batteries; this would invalidate the warranty.

5.1 Checking battery using vehicle diagnostic tester

Special tools and workshop equipment required

- Vehicle diagnostic tester

Procedure

- Battery charger must not be connected during battery test and engine must not be running.
- Battery temperature must be at least –10 °C.
- Temperature of diagnostic system must be between +5 and 45 °C.

– Connect vehicle diagnostic tester ⇒ page 110 .

Note

If a fault message appears on the display, refer to ⇒ Operating instructions for vehicle diagnostic tester .

– Select `Guided Functions` from menu.

Protected by copyright. Copying for private or commercial purposes, in part or in whole, is not permitted unless authorised by AUDI AG. AUDI AG does not guarantee or accept any liability with respect to the correctness of information in this document. Copyright by AUDI AG.

cardiagn.com

Display (example):

– Enter vehicle identification by touching the appropriate message line -1- in accordance with the selection prompt -A-.

– Select function or path:

Vehicle brand			
	Engine code		
		61 - Battery control or 19 - Data bus diagnostic interface or Service work	
			A - Battery, Testing (Repair group 27)

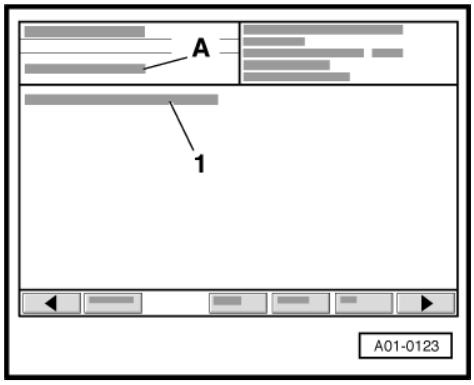

– Continue to follow the instructions on the display of the vehicle diagnostic tester; the following messages can be displayed:

- Battery OK.
- Re-charge battery.
- Renew battery.

After performing battery test:

– Press Go to button.

– Select „End“ function in list.

– Switch off ignition and separate diagnostic connection.

– If necessary, re-charge ⇒ page 35 or renew battery ⇒ Electrical system; Rep. gr. 27 .

Note

Observe disposal regulations if battery has to be renewed *⇒ page 4* .

5.2 Checking battery by measuring current draw - vehicles with battery monitor control unit -J367- or energy management control unit -J644-

Checking the current draw capacity of a battery during charging allows you to assess quickly whether a partially or totally discharged battery ⇒ page 38 can be made serviceable again by re-charging or whether the battery has to be renewed.

Special tools and workshop equipment required

♦ Battery charger -VAS 5095A- and trigger clamp, 100A -VAS 5051B/7- or

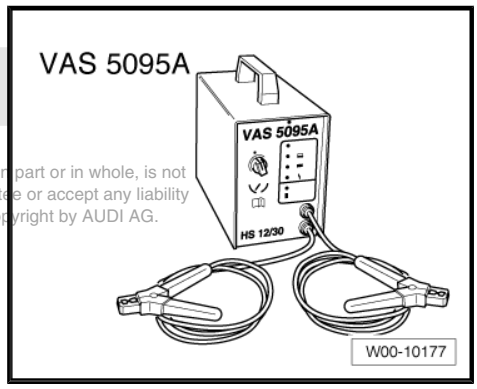

Protected by copyright. Copying for private or commercial purposes, in part or in whole, is not permitted unless authorised by AUDI AG. AUDI AG does not guarantee or accept any liability with respect to the correctness of information in this document. Copyright by AUDI AG.

cardiagn.com

- Battery charger -VAS 5900- or

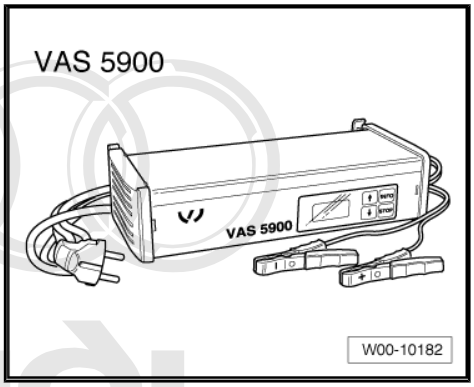

- Battery charger -VAS 5903-

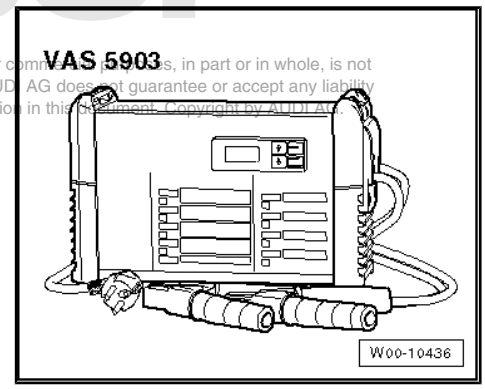

Protected by copyright. Copying for private or commercial purposes, in part or in whole, is not permitted unless authorised by AUDI AG. AUDI AG does not guarantee or accept any liability with respect to the correctness of information in this document. Copyright by AUDI AG.

- Battery charger -VAS 5904-

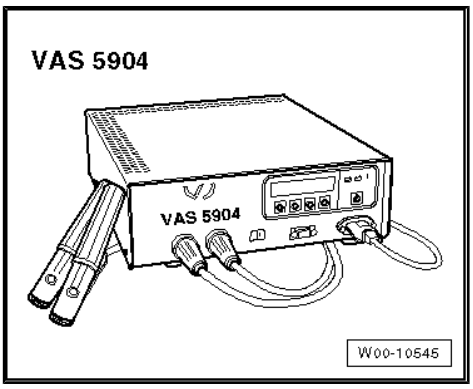

- Battery charger -VAS 5906-

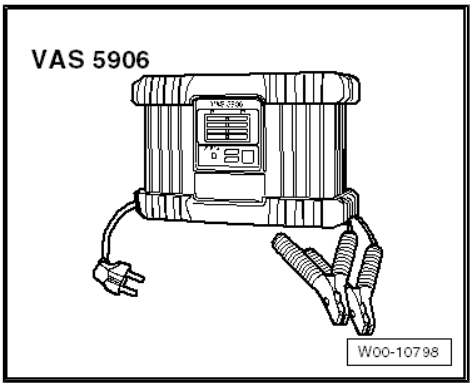

cardiagn.com

Note

- *When charging with battery charger -VAS 5095A- , current draw of battery must be measured using e.g. trigger clamp, 100A -VAS 5051B/7- . Battery chargers -VAS 5900- , -VAS 5903- , -VAS 5904- and -VAS 5906- indicate the current draw on the unit.*
- *Information on battery chargers ⇒ Operating instructions for appropriate battery charger.*

Procedure

- Battery temperature must be at least +10 °C.
- The battery charger must be capable of supplying a charging current of at least 30 A, as is the case for example with the battery chargers -VAS 5095A- , -VAS 5900- , -VAS 5903- , -VAS 5904- and -VAS 5906- .
- Battery charger connected and switched on

– Measure battery charging current after a charging period of 5 minutes.

- Specification: Charging current must be greater than 10 % of rated capacity.
- Example: Charging current for a 60 Ah battery after 5 minute charging period: greater than 6 A.

– If reading matches specification, continue with charging process until battery is fully charged.

– Then check battery using vehicle diagnostic tester ⇒ page 29 .

– If reading is below specification, renew battery ⇒ Electrical system; Rep. gr. 27 .

Note

Observe disposal regulations if battery has to be renewed *⇒ page 4* *.*

5.3 Measuring no-load voltage - vehicles with battery monitor control unit -J367- or energy management control unit -J644- „transport mode not active“

Note

No-load voltage measurement for assessment of battery condition is only advisable if it is not possible to test the battery with a vehicle diagnostic tester and if transport mode is not active in battery monitor control unit -J367- or energy management control unit -J644- .

Special tools and workshop equipment required

Protected by copyright. Copying for private or commercial purposes, in part or in whole, is not permitted unless authorised by AUDI AG. AUDI AG does not guarantee or accept any liability with respect to the correctness of information in this document. Copyright by AUDI AG.

cardiagn.com

♦ Hand-held multimeter -V.A.G 1526E-

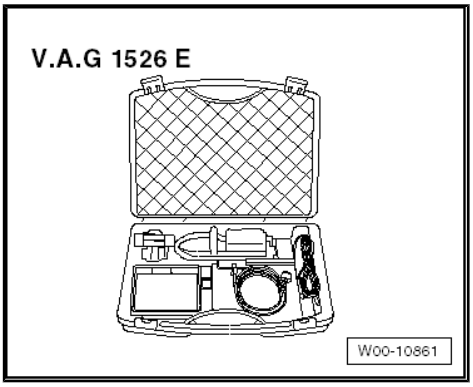

Procedure

– Always observe the following; otherwise correct measurement is not guaranteed.

- Leave battery in vehicle; do not disconnect earth cable.
- Open bonnet or rear lid and fix lock in „Locked“ position to stop luggage compartment light coming on.
- Use central locking system to lock vehicle.
- Battery must NOT be subjected to electrical load within the next 2 hours prior to measurement.
- Battery must NOT be charged in the 12 hours prior to measurement.
- Battery temperature must be at least –10 °C.

– Perform preparations for no-load voltage measurement ⇒ Electrical system; Rep. gr. 27 .

After a waiting time of at least 2 hours:

– Connect hand-held multimeter -V.A.G 1526E- between battery terminal clamps or to remote positive terminal „+“ and to remote earth terminal „–“.

– Measure voltage between battery terminal clamps.

- Specification: 12.5 V or above = battery is OK

– If battery no-load voltage is below 12.5 V, battery must be recharged ⇒ page 35 .

Protected by copyright. Copying for private or commercial purposes, in part or in whole, is not permitted unless authorised by AUDI AG. AUDI AG does not guarantee or accept any liability with respect to the correctness of information in this document. Copyright by AUDI AG.

– Current draw must be measured after a charging period of 5 minutes ⇒ page 30 .

– If battery no-load voltage is 11.6 V or less, battery is totally discharged ⇒ page 38 .

5.4 Measuring no-load voltage - vehicles with battery monitor control unit -J367- or energy management control unit -J644- „transport mode active“

Note

As part of the specified care and maintenance work for vehicles not in use or in storage, the state of charge in % (SOC) can be read off the trip recorder with the transport mode active. This shows whether the battery needs charging ⇒ Maintenance tables .

cardiagn.com

Procedure

The following test can only be performed if the transport mode is activated in the battery monitor control unit -J367- or the energy management control unit -J644- . If the transport mode is activated later, for example when storing used vehicles, the SOC can only be determined after the systems have switched to „data bus rest mode“ once.

– Open driver's door.

– Switch on ignition.

– Read SOC in % off trip recorder.

Note

Depending on version, the value can be preceded by „TRA“.

• Specification: 50 % or above, charge state of battery is OK.

– If charge state of battery is below 50 %, battery must be charged ⇒ page 35 .

– Current draw must be measured after a charging period of 5 minutes ⇒ page 30 .

– If charge state of battery is 0 %, battery is totally discharged ⇒ page 38 .

Protected by copyright. Copying for private or commercial purposes, in part or in whole, is not permitted unless authorised by AUDI AG. AUDI AG does not guarantee or accept any liability with respect to the correctness of information in this document. Copyright by AUDI AG.

cardiagn.com

6 Charging battery

6.1 Charging battery with battery charger -VAS 5095A- , -VAS 5900- , -VAS 5903- , -VAS 5904- or -VAS 5906-

Protected by copyright. Copying for private or commercial purposes, in part or in whole, is not permitted unless authorised by AUDI AG. AUDI AG does not guarantee or accept any liability with respect to the correctness of information in this document. Copyright by AUDI AG.

Special tools and workshop equipment required

- Battery charger -VAS 5095A- or

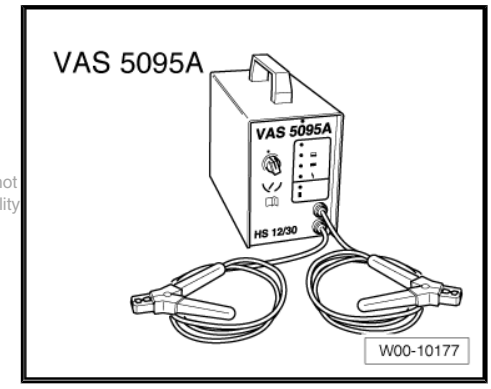

- Battery charger -VAS 5900- or

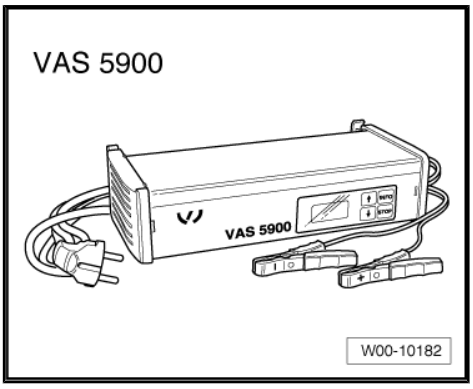

- Battery charger -VAS 5903-

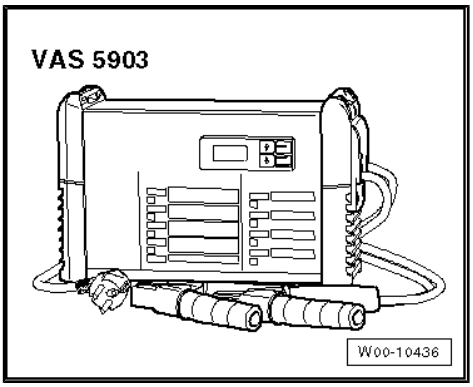

cardiagn.com

- Battery charger -VAS 5904-

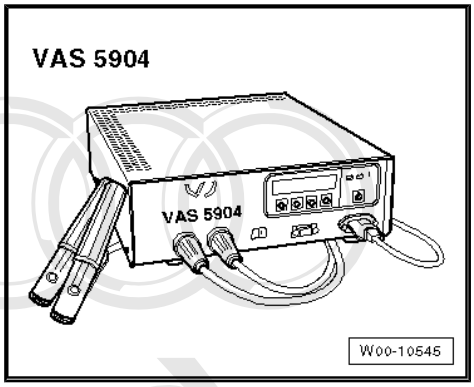

- Battery charger -VAS 5906-

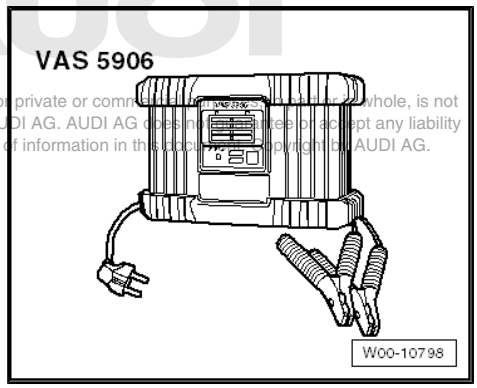

Protected by copyright. Copying for private or commercial purposes, in part or in whole, is not permitted unless authorised by AUDI AG. AUDI AG does not guarantee or accept any liability with respect to the correctness of information in this document. Copyright by AUDI AG.

Note

- *Battery chargers -VAS 5095A- , -VAS 5900- , -VAS 5903- , -VAS 5904- and -VAS 5906- charge without current and voltage peaks. Batteries can therefore also be charged when installed. Safety precautions must be observed when doing so. The chargers have a back-up function enabling them to supply power to on-board circuits.*
- *If electrical equipment has to be switched on periodically when performing work on the electrical system and for the „Guided Fault Finding“ mode, the battery must be charged using a charger with back-up function so as not to damage the battery* *⇒ page 40* .
- *Information on battery chargers ⇒ Operating instructions for appropriate battery charger.*

Procedure

- Battery temperature must be at least +10 °C.

cardiagn.com

WARNING

Risk of explosion due to naked flames, fires and smoking.

- *Sealing plugs of batteries which are not maintenance-free must be firmly screwed in.*
- *Ensure good ventilation.*
- *A highly inflammable gas is given off when batteries are charged. Smoking and naked lights are consequently not allowed in rooms in which batteries are being charged.*
- *Observe safety regulations of manufacturers of battery charger and battery.*
- *Rapid-charging of battery* *⇒ page 39* *.*

Risk of explosion due to a discharged battery with „magic eye".

- *The battery must NOT be checked or charged if the indicator of the „magic eye" is colourless or yellow. Do NOT boost start the vehicle. There is a risk of explosion when checking or charging the battery or boost starting the vehicle. The battery must be renewed.*

Caution

Protected by copyright. Copying for private or commercial purposes, in part or in whole, is not permitted unless authorised by AUDI AG. AUDI AG does not guarantee or accept any liability with respect to the correctness of information in this document. Copyright by AUDI AG.

Risk of damage to valve-regulated lead acid or AGM batteries.

- *Valve-regulated lead acid or AGM batteries may only be charged up to a limited voltage.*

– Switch off ignition and take out ignition key.
– Switch off all electrical equipment.
– Perform preparations for charging battery ⇒ Electrical system; Rep. gr. 27 .

Note

- *On vehicles without battery monitor control unit -J367- or energy management control unit -J644- , clamps of battery charger can be connected to battery terminals or remote positive terminal and remote earth terminal in engine compartment.*
- *On vehicles with battery monitor control unit -J367- or energy management control unit -J644- , black clamp „–" must not be connected to negative battery terminal, but to remote earth terminal in engine compartment or to earth stud of energy management control unit -J644- .*

– After connecting charging clamps, plug in mains connector of battery charger.
– Switch on battery charger.
– If necessary, set charging current at battery charger according to battery capacity.
• The charging current should be around 10 % of the battery capacity (so for a 60 Ah battery around 6 A).

cardiagn.com

– Once battery has been fully charged ⇒ Battery charger operating instructions , disconnect charging clamps „+“ and „–“ of battery charger from battery.

– Unplug mains connector of battery charger.

6.2 Totally discharged battery

- Batteries that have not been used for an extended period of time, e.g. in vehicles that have been stored, self-discharge.
- A battery is considered to be totally discharged if the no-load voltage has dropped below 11.6 V. Initial battery damage can occur below 12.2 V (if vehicle has been stored for a longer period).
- On vehicles without battery monitor control unit -J367- or energy management control unit -J644- , measure no-load voltage ⇒ page 25 .
- On vehicles with battery monitor control unit -J367- or energy management control unit -J644- , perform battery test using vehicle diagnostic tester ⇒ page 29 .
- In a totally discharged battery the electrolyte (sulphuric acid/ water mixture) is reduced to almost all water, as the sulphuric acid content is heavily reduced.
- Totally discharged batteries become sulphated, i.e. the entire battery plate surfaces harden. The electrolyte has a slightly milky appearance (instead of being clear).
- If discharged batteries are charged directly after being discharged, the sulphation dissipates.
- If this is not done, the plates become even harder and the battery's ability to absorb charge is impaired. This results in reduced power output.

Procedure

Protected by copyright. Copying for private or commercial purposes, in part or in whole, is not permitted unless authorised by AUDI AG. AUDI AG does not guarantee or accept any liability with respect to the correctness of information in this document. Copyright by AUDI AG.

- Battery temperature must be at least +10 °C.

WARNING

Risk of explosion due to a discharged battery with „magic eye“.

- *The battery must NOT be checked or charged if the indicator of the „magic eye“ is colourless or yellow. Do NOT boost start the vehicle. There is a risk of explosion when checking or charging the battery or boost starting the vehicle. The battery must be renewed.*

Caution

Totally discharged batteries: Danger of freezing.

- *Totally discharged batteries may freeze even at temperatures only slightly below zero, causing the housing to burst.*
- *Never re-use frozen batteries.*

Totally discharged batteries (that are also sulphated) must be charged as follows using a low charging current:

– Set charging current to approx. 5 % of battery capacity, i.e. for a 60 Ah battery charging current is approx. 3 A.

cardiagn.com

Note

- *Battery voltage must be at least 0.6 V.*
- *Battery chargers -VAS 5095A- , -VAS 5900- , -VAS 5903- , -VAS 5904- and -VAS 5906- detect totally discharged batteries automatically and start the charging process gently at a low charging current. Charging current is adapted automatically to battery charge.*

Protected by copyright. Copying for private or commercial purposes, in part or in whole, is not permitted unless authorised by AUDI AG. AUDI AG does not guarantee or accept any liability with respect to the correctness of information in this document. Copyright by AUDI AG.

Caution

Danger of damage to totally discharged batteries.

- *Do NOT attempt to rapid-charge totally discharged batteries.*

– Charge battery ⇒ page 35 .

• Charging voltage must not exceed 14.4 V.

Note

Observe disposal regulations if battery has to be renewed *⇒ page 4* .

6.3 Rapid-charging battery - vehicles without battery monitor control unit -J367- or energy management control unit -J644-

Procedure

• Battery temperature must be at least +10 °C.

WARNING

Risk of explosion due to naked flames, fires and smoking.

- *Sealing plugs of batteries which are not maintenance-free must be firmly screwed in.*
- *Ensure good ventilation.*
- *A highly inflammable gas is given off when batteries are charged. Smoking and naked lights are consequently not allowed in rooms in which batteries are being charged.*
- *Observe safety regulations of manufacturers of battery charger and battery.*

Risk of explosion due to a discharged battery with „magic eye“.

- *The battery must NOT be checked or charged if the indicator of the „magic eye“ is colourless or yellow. Do NOT boost start the vehicle. There is a risk of explosion when checking or charging the battery or boost starting the vehicle. The battery must be renewed.*

cardiagn.com

Caution

Risk of damage to battery and electronic vehicle components.

- *Valve-regulated lead acid or AGM batteries must NOT be rapid-charged.*
- *Do not rapid-charge batteries in vehicles with battery monitor control unit -J367- or energy management control unit -J644- .*
- *Do NOT attempt to rapid-charge totally discharged batteries.*
- *Rapid-charging of batteries should only be performed in exceptional circumstances (e.g. if necessary to start the engine) as rapid-charging may cause damage.*
- *Battery must not be connected to vehicle electrical system when performing rapid-charging. Disconnect earth cable and positive wires ⇒ Electrical system; Rep. gr. 27 .*
- *Charging voltage must not exceed 14.8 V.*

Note

Observe disposal regulations if battery has to be renewed *⇒ page 4* .

6.4 Back-up power supply of battery via battery charger -VAS 5095A- , -VAS 5900- , -VAS 5903- , -VAS 5904- or -VAS 5906-

Back-up power supply of battery is required for example at the workshop for Fault Finding or when renewing battery.

Special tools and workshop equipment required

- Battery charger -VAS 5095A- or

Protected by copyright. Copying for private or commercial purposes, in part or in whole, is not permitted unless authorised by AUDI AG. AUDI AG does not guarantee or accept any liability with respect to the correctness of information in this document. Copyright by AUDI AG.

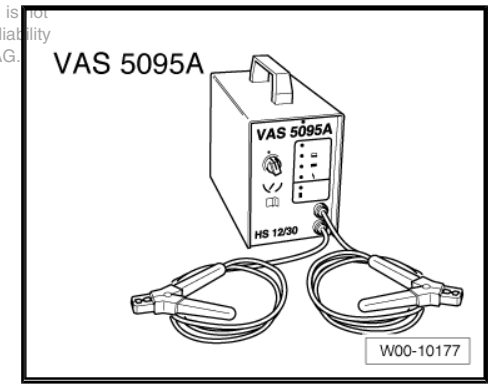

cardiagn.com

- Battery charger -VAS 5900- or

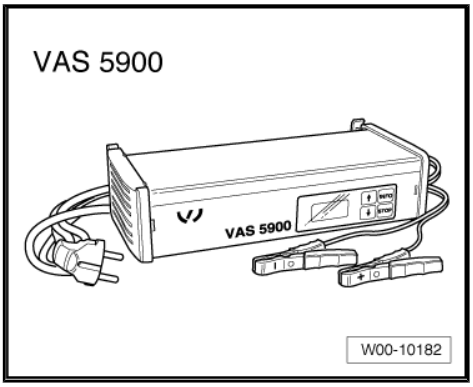

- Battery charger -VAS 5903-

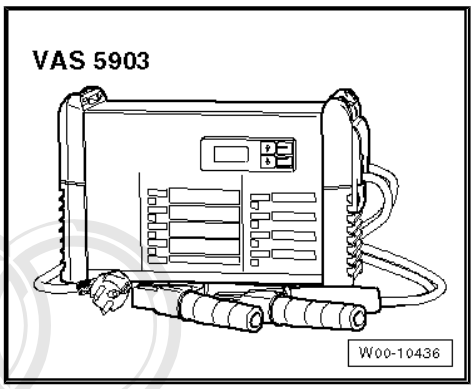

- Battery charger -VAS 5904-

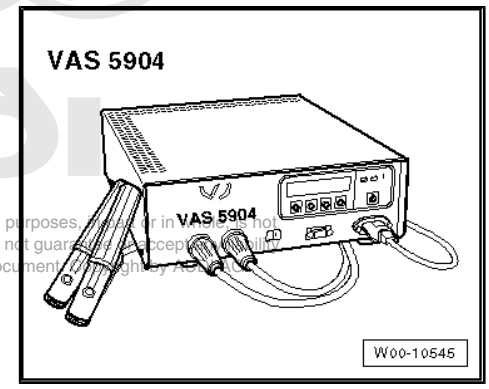

- Battery charger -VAS 5906-

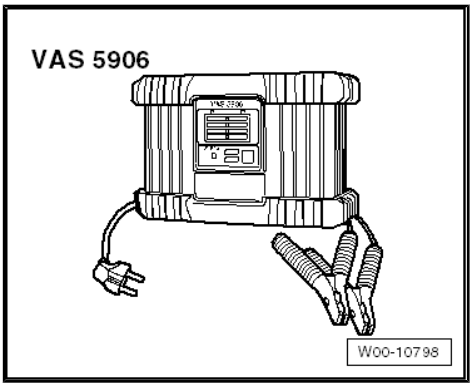

Protected by copyright. Copying for private or commercial purposes, in part or in whole is not permitted unless authorised by AUDI AG. AUDI AG does not guarantee or accept any liability with respect to the correctness of information in this document. Copyright by AUDI AG.
cardiagn.com

Procedure

Note

- *Information on battery chargers ⇒ Operating instructions for appropriate battery charger.*
- *The following instructions describe the back-up power supply mode with battery charger -VAS 5900- .*

– Switch off ignition and take out ignition key.

– Switch off all electrical equipment.

– Plug in mains connector of battery charger -VAS 5900- .

• The display shows the last mode selected.

– Press and hold Start/Stop button for approx. 5 seconds.

• Menu option „charging totally discharged batteries/back-up supply“ is activated.

– Press button ↑ or ↓ to select vehicle voltage.

Note

The battery charger -VAS 5900- returns to the main menu if no button is pressed within 5 seconds.

– Press Start/Stop button to confirm selected battery voltage.

– Perform preparation for back-up power supply of battery ⇒ Electrical system; Rep. gr. 27 .

• Battery charger will check correct polarity of clamps.

Caution

Risk of damage to battery charger -VAS 5900- and electronic vehicle components.

- ***Start/Stop button must not be pressed if the battery terminal clamps are not connected correctly.***

Protected by copyright. Copying for private or commercial purposes, in part or in whole, is not permitted without the consent of AUDI AG. AUDI AG does not guarantee or accept any liability with respect to the correctness of information in this document. Copyright by AUDI AG.

– Press Start/Stop button to confirm correct connection of clamps.

• Battery charger -VAS 5900- will start back-up power supply.

– Press Start/Stop button to end back-up power supply.

– Unplug mains connector of battery charger.

6.5 Maintaining battery charge with solar panel -VAS 6102 A-

- The solar panel -VAS 6102 A- supports the vehicle's electrical system and prevents self-discharge of the battery.
- All rechargeable batteries may be charged with the solar panel.
- The solar panel must be connected to the diagnostic connection in the vehicle. Battery chargers must not be connected to the diagnostic connection.

cardiagn.com

Special tools and workshop equipment required

- Solar panel -VAS 6102 A-

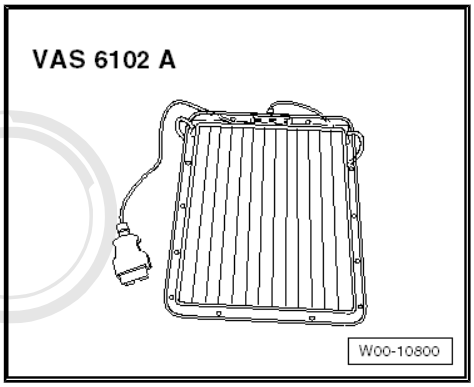

Procedure

Note

For information on solar panel -VAS 6102 A- ⇒ Operating instructions for -VAS 6102 A- .

Protected by copyright. Copying for private or commercial purposes, in part or in whole, is not permitted unless authorised by AUDI AG. AUDI AG does not guarantee or accept any liability with respect to the correctness of information in this document. Copyright by AUDI AG.

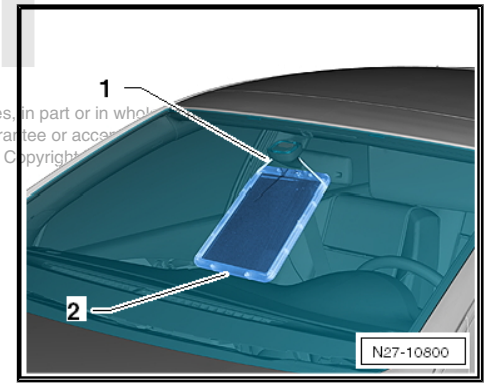

– Secure solar panel -VAS 6102 A- to interior mirror -1-.

– Place underside of solar panel on dash panel -2-.

Note

Do not allow the complete solar panel -VAS 6102 A- to make contact with the dash panel; only place down the lower edge to provide support. Placing down the whole panel can result in colour change of the dash panel.

– Pull securing cable together until solar panel is close to windscreen.

– Connect solar panel -arrow- to diagnostic connection of vehicle.

- The green LED in the solar panel frame indicates the function: the brighter this LED lights up, the higher is the charging current; however, the integrated electronics prevent overcharging the battery.

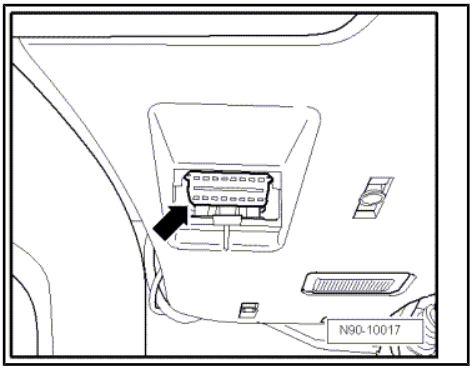

cardiagn.com

7 Checking and servicing alternator

7.1 Checking alternator

– The alternator is checked in „Guided Fault Finding“ function under „Body/electrical system / 27 - Starter, current supply/ electrical components / C- Alternator, checking“ ⇒ Vehicle diagnostic, testing and information system VAS 5051.

7.2 Bosch alternator up to 2000 - exploded view

1 - Bolts

- ❑ 1 Nm

2 - Cover

- ❑ With three retaining tabs

3 - Bolts

- ❑ 2 Nm

4 - Voltage regulator

- ❑ Removing:
  - – Unscrew bolts -item 1- and detach protective cap -item 2-
  - – Unscrew bolts -item 3- and detach voltage regulator
- ❑ Carbon brush wear limit: 5 mm

5 - Alternator

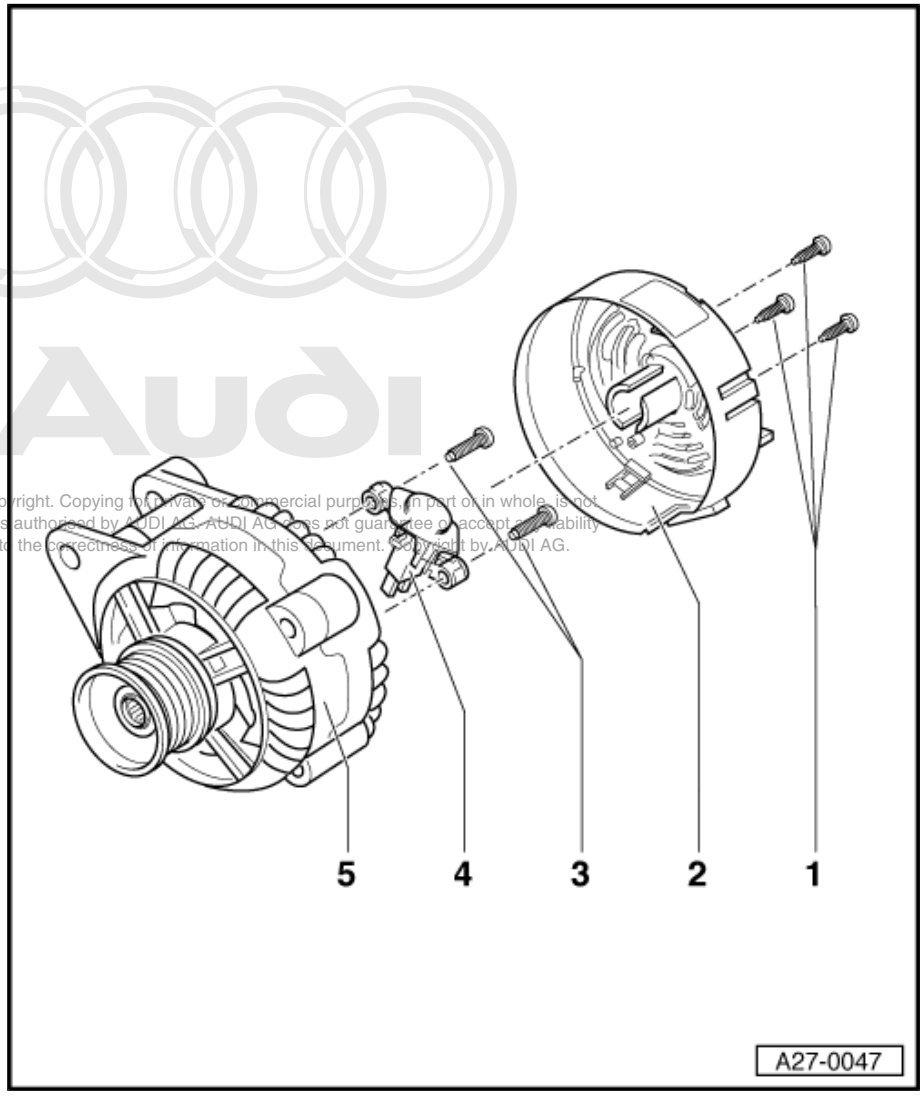

Protected by copyright. Copying for private or commercial purposes, in part or in whole, is not permitted unless authorised by AUDI AG. AUDI AG does not guarantee or accept any liability with respect to the correctness of information in this document. Copyright by AUDI AG.

cardiagn.com

7.3 Bosch alternator from 2001 onwards - exploded view

Note

The alternators were introduced gradually.

1 - Alternator

2 - Voltage regulator
- Removing and installing ⇒ page 46
- Checking carbon brushes ⇒ page 48

3 - Bolt
- 2.5 Nm

4 - Cover

5 - Nut
- 12 Nm

6 - Nut
- 30 Nm

7 - Bolt
- 3 Nm

8 - Bolt
- 1.5 Nm

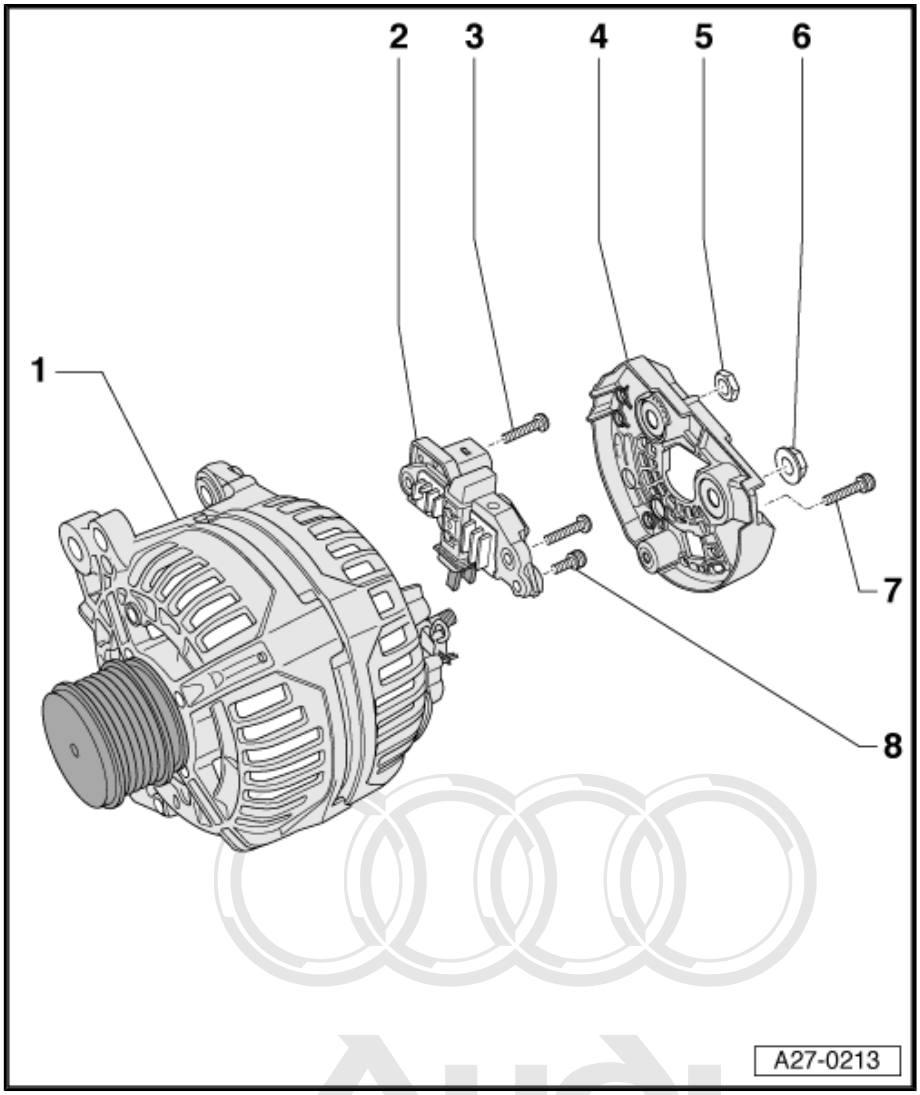

Protected by copyright. Copying for private or commercial purposes, in part or in whole, is not permitted unless authorised by AUDI AG. AUDI AG does not guarantee or accept any liability with respect to the correctness of information in this document. Copyright by AUDI AG.

cardiagn.com

7.4 Removing and installing voltage regulator - Bosch alternator from 2001 onwards

Removing

– Remove alternator ⇒ Electrical system; Rep. gr. 27 .

– Unscrew bolt -1- and nuts -3- and -4-.

– Detach cover -2- from rear of alternator.

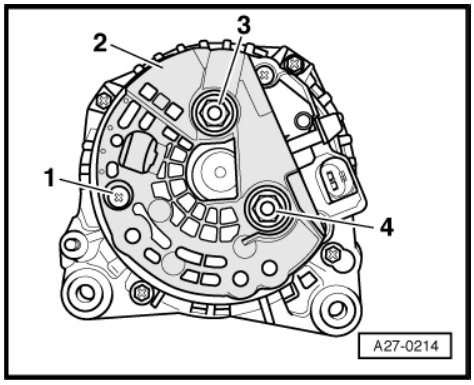

– Unscrew bolts -arrows-.

– Remove voltage regulator.

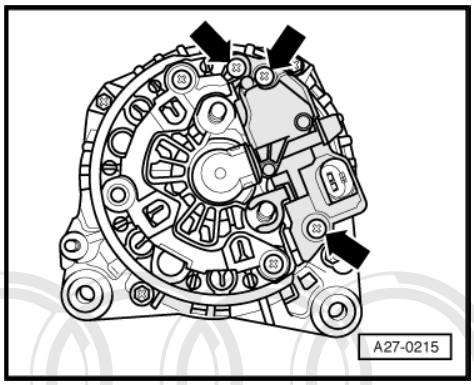

Installing

– When positioning voltage regulator, ensure carbon brushes are positioned correctly on contact surfaces.

Further installation is carried out in the reverse order; note the following:

– Install alternator ⇒ Electrical system; Rep. gr. 27 .

• Tightening torque ⇒ page 45

cardiagn.com

Protected by copyright. Copying for private or commercial purposes, in part or in whole, is not permitted unless authorised by AUDI AG. AUDI AG does not guarantee or accept any liability with respect to the correctness of information in this document. Copyright by AUDI AG.

7.5 Bosch alternator from 2007 onwards - exploded view

Note

The new alternators were introduced gradually.

1 - Nut
- ❑ 65 Nm

2 - Poly V-belt pulley

3 - Alternator

4 - Voltage regulator
- ❑ Removing and installing ⇒ page 48
- ❑ Checking carbon brushes ⇒ page 48

5 - Bolt
- ❑ 1.5 Nm

6 - Cover

7 - Bolt
- ❑ 3 Nm

8 - Bolt
- ❑ 2.5 Nm

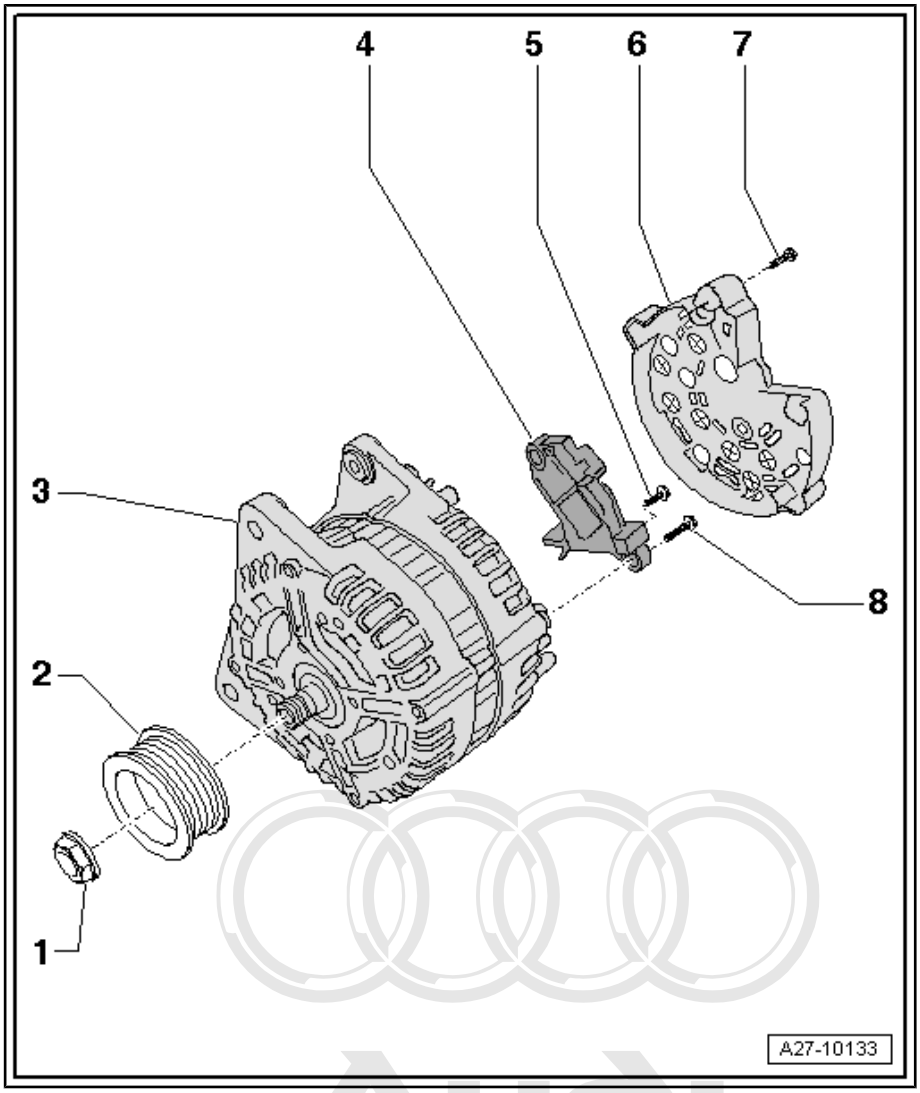

cardiagn.com

Protected by copyright. Copying for private or commercial purposes, in part or in whole, is not permitted unless authorised by AUDI AG. AUDI AG does not guarantee or accept any liability with respect to the correctness of information in this document. Copyright by AUDI AG.

7.6 Removing and installing voltage regulator - Bosch alternator from 2007 onwards

Removing

– Remove alternator ⇒ Electrical system; Rep. gr. 27 .

– Unscrew bolts -arrows-.

– Detach cover -1- from rear of alternator.

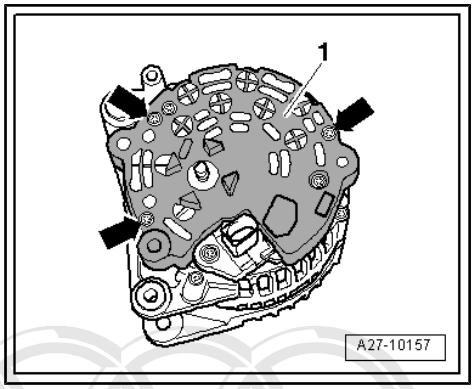

– Unscrew bolts -arrows-.

– Detach voltage regulator -1-.

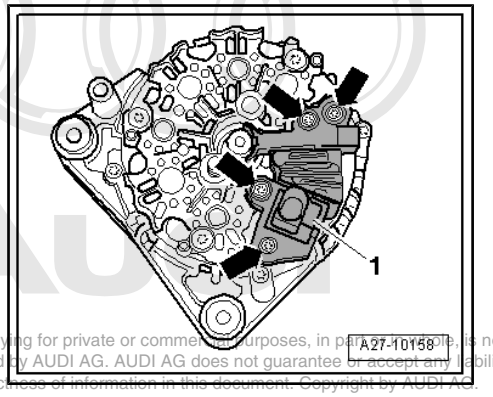

Installing

– When positioning voltage regulator, ensure carbon brushes are positioned correctly on contact surfaces.

Further installation is carried out in the reverse order; note the following:

– Install alternator ⇒ Electrical system; Rep. gr. 27 .

• Tightening torque ⇒ page 45

Protected by copyright. Copying for private or commercial purposes, in part or in whole, is not permitted unless authorised by AUDI AG. AUDI AG does not guarantee or accept any liability with respect to the correctness of information in this document. Copyright by AUDI AG.

7.7 Checking carbon brushes - all types of Bosch alternators from 2001 onwards

Procedure

– Remove voltage regulator: Up to 2007 ⇒ page 46 ; from 2007 onwards ⇒ page 48 .

– Check length -a- of carbon brushes.

• Wear limit: -a- = 5 mm.

– Install voltage regulator: Up to 2007 ⇒ page 46 ; from 2007 onwards ⇒ page 48 .

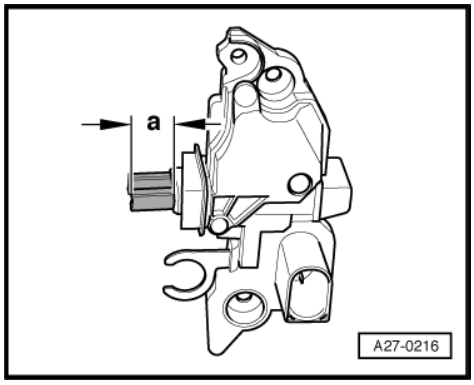

cardiagn.com

7.8 Valeo alternator up to 2000 - exploded view

1 - Alternator

2 - Voltage regulator

- ❑ Removing:
- – Remove nuts -item 5- and detach cover -item 4-
- – Unscrew bolt -item 6- and nuts -item 7- and detach voltage regulator
- ❑ Carbon brush wear limit: 5 mm

3 - Protective cap

4 - Cover

5 - Nut

- ❑ 2 Nm

6 - Bolt

- ❑ 2 Nm

7 - Nut

- ❑ 2x
- ❑ 3.5 Nm

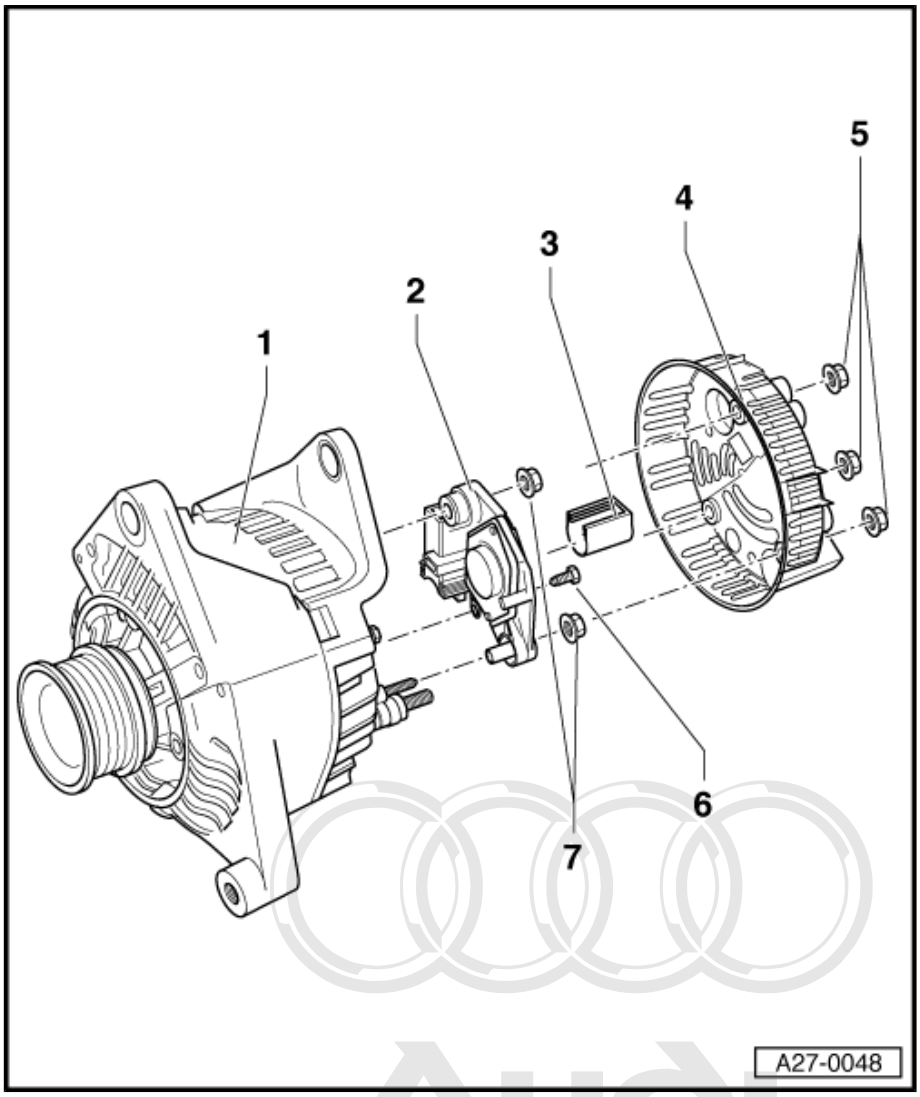

cardiagn.com

Protected by copyright. Copying for private or commercial purposes, in part or in whole, is not permitted unless authorised by AUDI AG. AUDI AG does not guarantee or accept any liability with respect to the correctness of information in this document. Copyright by AUDI AG.

7.9 Valeo alternator from 2001 onwards - exploded view

Note

The alternators were introduced gradually.

1 - Alternator

2 - Voltage regulator

- ❑ Removing and installing: Up to 2007 ⇒ page 51 ; from 2007 onwards ⇒ page 52
- ❑ Checking carbon brushes: Up to 2007 ⇒ page 51 ; from 2007 onwards ⇒ page 52

3 - Bolt

- ❑ 2 Nm

4 - Cover

5 - Protective cap

6 - Bolt

- ❑ 2 Nm

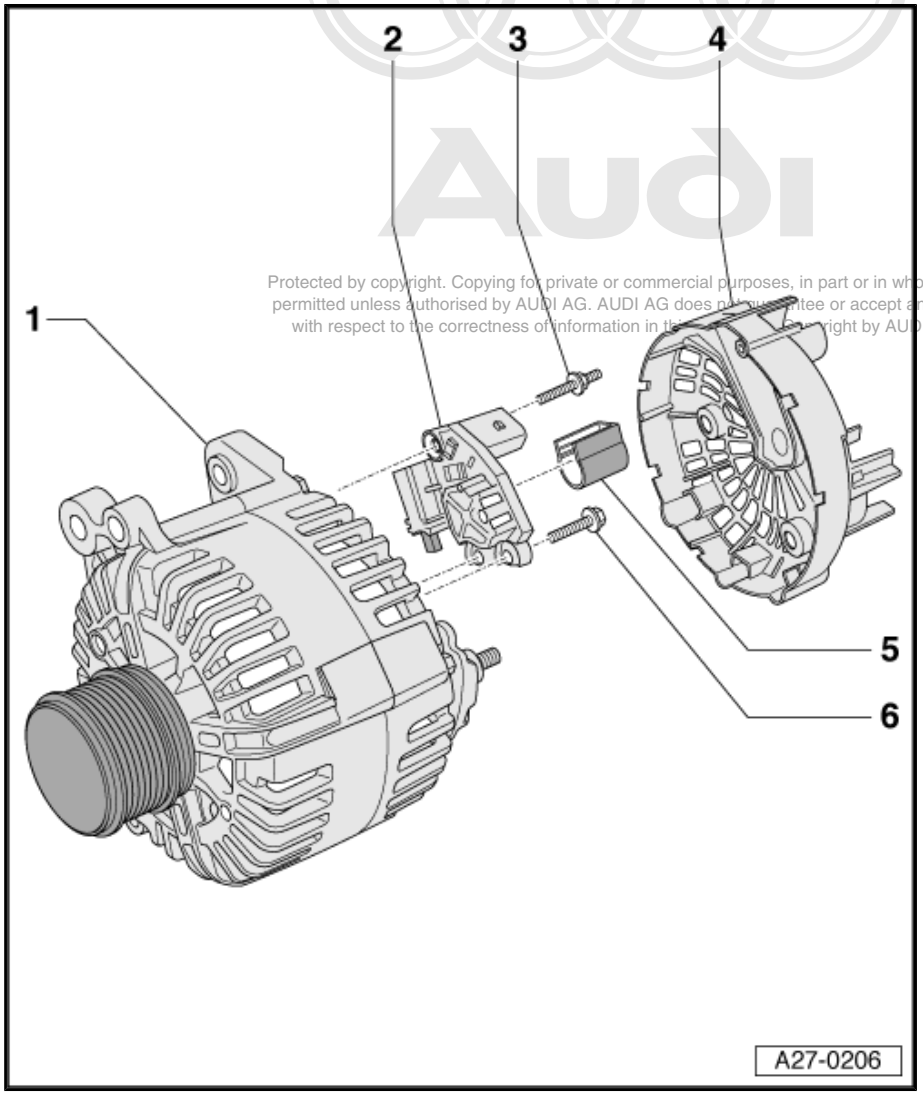

Protected by copyright. Copying for private or commercial purposes, in part or in whole, is not permitted unless authorised by AUDI AG. AUDI AG does not guarantee or accept any liability with respect to the correctness of information in this document. Copyright by AUDI AG.

cardiagn.com

7.10 Removing and installing voltage regulator - Valeo alternator from 2001 onwards

Removing

– Remove alternator ⇒ Electrical system; Rep. gr. 27 .

– Press cover on rear of alternator off studs -arrows-.

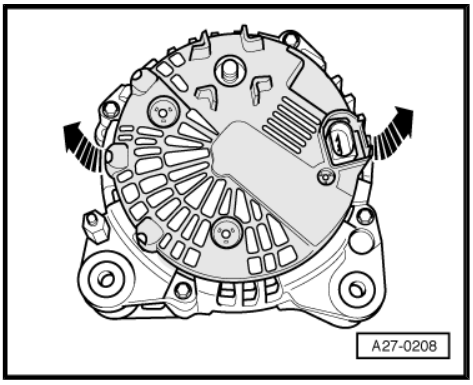

– Unscrew bolts -1- and centre hex stud -2-.

– Remove voltage regulator.

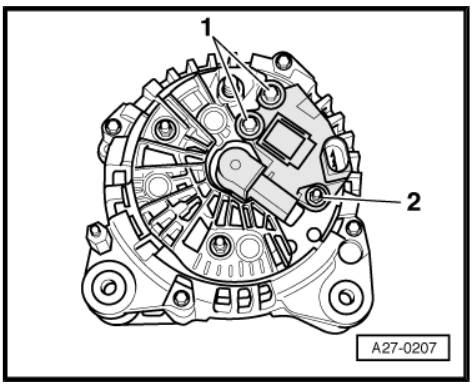

Protected by copyright. Copying for private or commercial purposes, in part or in whole, is not permitted unless authorised by AUDI AG. AUDI AG does not guarantee or accept any liability with respect to the correctness of information in this document. Copyright by AUDI AG.

Installing

– Press protective cap -2- off voltage regulator -1- in direction of -arrow-.

– When positioning voltage regulator, ensure carbon brushes are positioned correctly on contact surfaces.

– Refit protective cap when voltage regulator has been installed.

Further installation is carried out in the reverse order; note the following:

– Install alternator ⇒ Electrical system; Rep. gr. 27 .

• Tightening torque ⇒ page 50

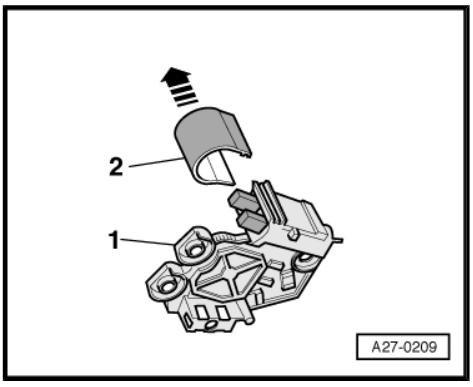

7.11 Checking carbon brushes - Valeo alternator from 2001 onwards

Procedure

– Remove voltage regulator ⇒ page 51 .

– Check length -a- of carbon brushes.

• Wear limit: -a- = 5 mm.

– Install voltage regulator ⇒ page 51 .

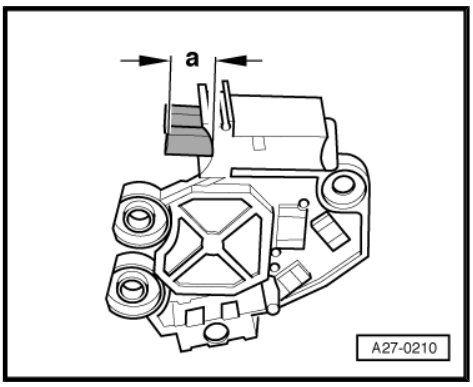

cardiagn.com

7.12 Removing and installing voltage regulator - Valeo alternator from 2007 onwards

Special tools and workshop equipment required

- ♦ Feeler gauge, 0.3 mm

Removing

- – Remove alternator ⇒ Electrical system; Rep. gr. 27 .
- – Press cover on rear of alternator off studs -arrows-.

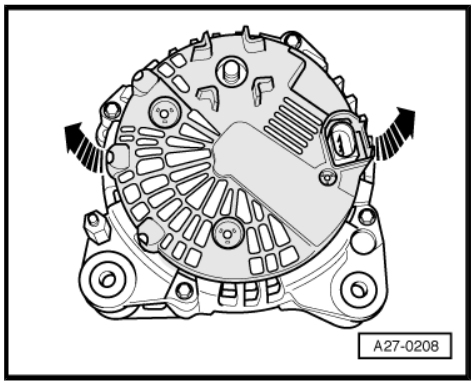

- – Unscrew bolts -1- and centre hex stud -2-.
- – Remove voltage regulator.

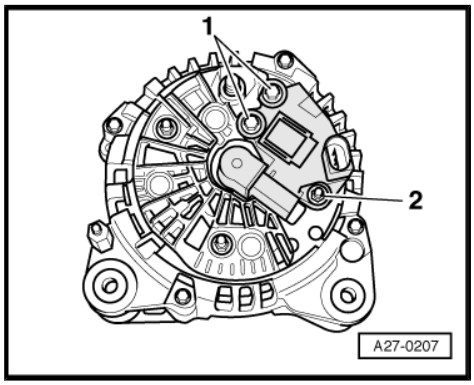

Protected by copyright. Copying for private or commercial purposes, in part or in whole, is not permitted unless authorised by AUDI AG. AUDI AG does not guarantee or accept any liability with respect to the correctness of information in this document. Copyright by AUDI AG.

Installing

- – Insert 0.3 mm feeler gauge -item 4- between protective cap -2- and carbon brushes -3-.
- – Pull protective cap off only as far as point where projection on protective cap keeps carbon brushes pressed down.
- – After installing voltage regulator, press protective cap on as far as stop.

Further installation is carried out in the reverse order; note the following:

- – Install alternator ⇒ Electrical system; Rep. gr. 27 .
- • Tightening torque ⇒ page 50

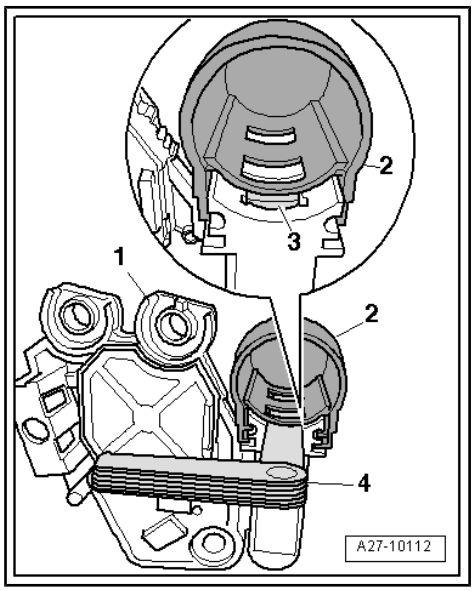

7.13 Checking carbon brushes - Valeo alternator from 2007 onwards

Special tools and workshop equipment required

- ♦ Feeler gauge, 0.3 mm

cardiagn.com

Procedure

– Remove voltage regulator ⇒ page 52 .

– Insert 0.3 mm feeler gauge -item 3- between protective cap -2- and carbon brushes.

– Pull protective cover off voltage regulator -1- -arrow-.

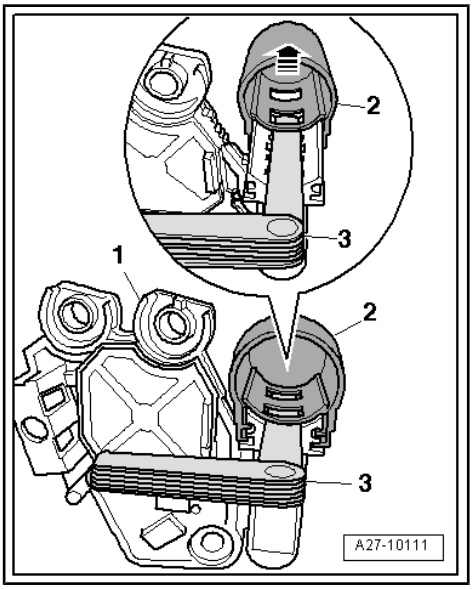

– Check length -a- of carbon brushes.

• Wear limit: -a- = 5 mm.

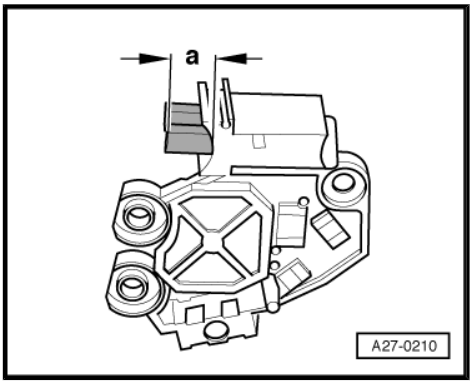

– With protective cap -2- in position, press down carbon brushes -3- with feeler gauge -4-.

– Slide protective cap on in direction of -arrow- until projection on protective cap keeps carbon brushes pressed down.

– Install voltage regulator ⇒ page 52 .

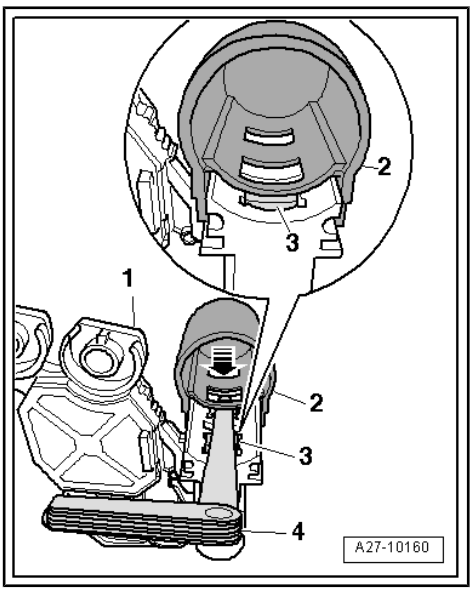

7.14 Removing and installing poly V-belt pulley without free-wheel

Protected by copyright. Copying for private or commercial purposes, in part or in whole, is not permitted unless authorised by AUDI AG. AUDI AG does not guarantee or accept any liability with respect to the correctness of information in this document. Copyright by AUDI AG.

Special tools and workshop equipment required

cardiagn.com

♦ Socket -3310-

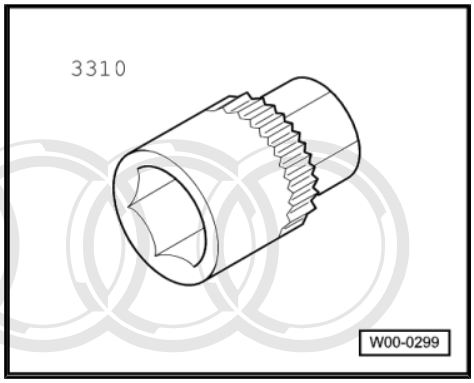

♦ 8 mm hexagon socket or TORX T50 socket

Removing

– Remove alternator ⇒ Electrical system; Rep. gr. 27 .

– If fitted, press off protective cap on alternator pulley.

– Counterhold on securing nut using socket -3310- and turn alternator shaft clockwise to loosen.

– Detach poly V-belt pulley.

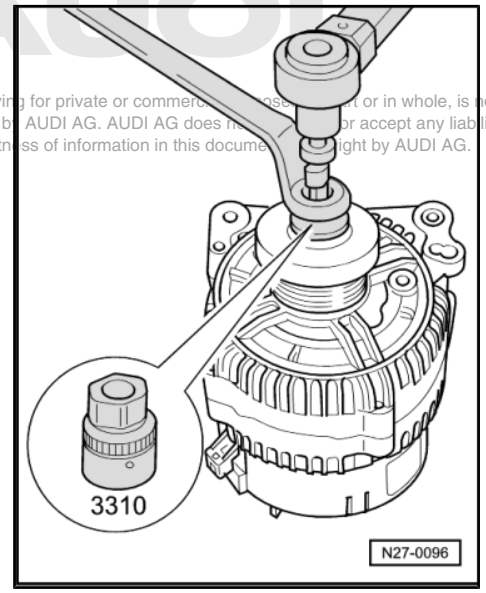

Protected by copyright. Copying for private or commercial purposes, in part or in whole, is not permitted unless authorised by AUDI AG. AUDI AG does not guarantee or accept any liability with respect to the correctness of information in this document. Copyright by AUDI AG.

Installing

Installation is carried out in the reverse order; note the following:

– Turn alternator shaft anti-clockwise to tighten.

– Clip protective cap onto alternator pulley.

Tightening torque

Component	Nm
Poly V-belt pulley to alternator	65

7.15 Removing and installing poly V-belt pulley with free-wheel

Special tools and workshop equipment required

♦ Adapter -3400-

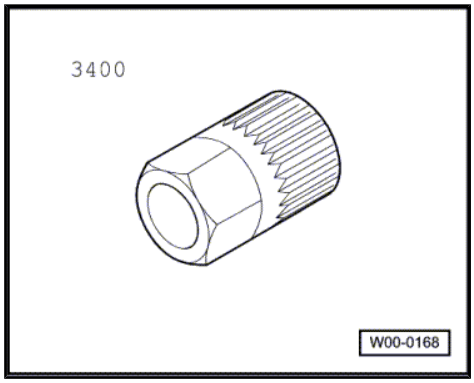

♦ 8 mm hexagon socket or TORX T50 socket

cardiagn.com

Removing

- Remove alternator ⇒ Electrical system; Rep. gr. 27 .
- If fitted, press off protective cap on alternator pulley.
- Counterhold on belt pulley using adapter -3400- and turn alternator shaft clockwise to loosen.

Installing

Installation is carried out in the reverse order; note the following:

- Turn alternator shaft anti-clockwise to tighten.
- Clip protective cap onto alternator pulley.

Tightening torque

Component	Nm
Poly V-belt pulley with free-wheel to alternator	80

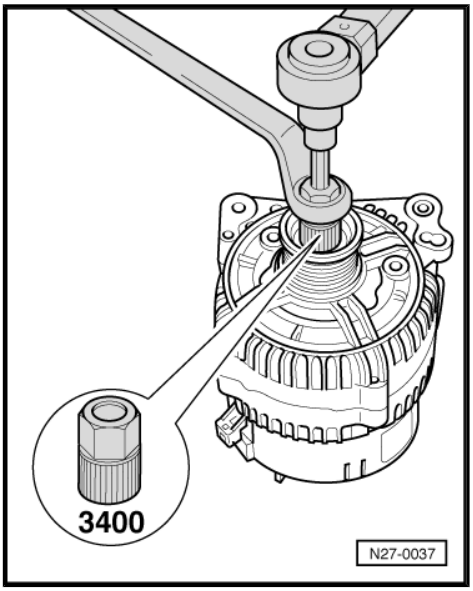

cardiagn.com

Protected by copyright. Copying for private or commercial purposes, in part or in whole, is not permitted unless authorised by AUDI AG. AUDI AG does not guarantee or accept any liability with respect to the correctness of information in this document. Copyright by AUDI AG.

8 Cruise control system - vehicles with electronic throttle

- ♦ On vehicles with electronic throttle, the cruise control system functions are controlled by the engine control unit.
- ♦ Faults in the cruise control system are output via the engine control unit.
- – Use a vehicle diagnostic tester in „Guided Fault Finding“ mode to identify faults.

cardiagn.com

Protected by copyright. Copying for private or commercial purposes, in part or in whole, is not permitted unless authorised by AUDI AG. AUDI AG does not guarantee or accept any liability with respect to the correctness of information in this document. Copyright by AUDI AG.

92 – Windscreen wash/wipe system

1 Washer fluid hoses

1.1 Disconnecting and connecting washer fluid hose connectors

Different types of hose couplings are used to connect hoses to washer fluid pumps and washer jets or as disconnection points.

Non-secured hose coupling

– Pull the two coupling elements apart to separate connection.

– To connect, press the two coupling elements firmly together until they engage audibly and palpably.

Protected by copyright. Copying or distribution of this material purposes, in part or in whole, is not permitted unless authorised by AUDI AG. AUDI AG does not guarantee or accept any liability with respect to the correctness of information in this document. Copyright by AUDI AG.

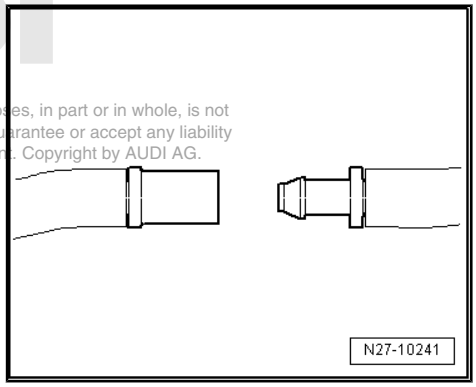

Secured hose coupling with retaining ring

– To separate connection, turn retaining ring -1- 90° -arrow- and detach hose connection.

– To connect, push on hose connection and turn retaining ring -1- -arrow- until it engages.

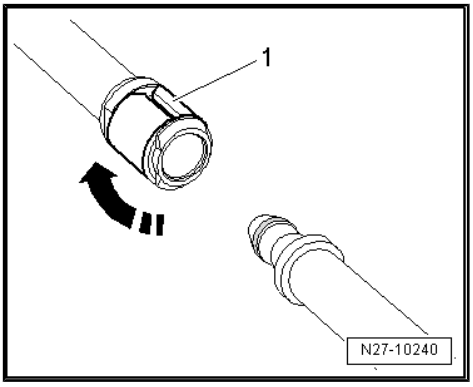

Secured hose coupling with retaining clip version 1

– To separate connection, lift retaining clip -1- by approx. 1 mm -arrow- and detach hose connection.

– To connect, push on hose connection and press in retaining clip until it engages.

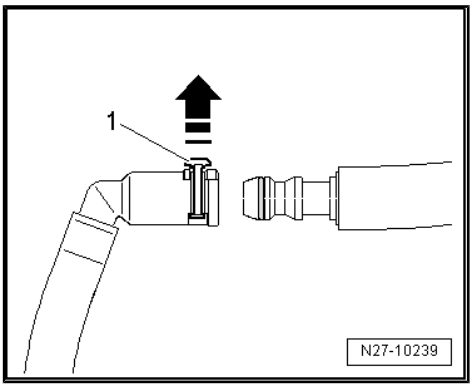

cardiagn.com

Secured hose coupling with retaining clip version 2

– To separate connection, lift retaining clip -1- -arrow- and detach hose connection.

– To connect, push on hose connection and press in retaining clip until it engages.

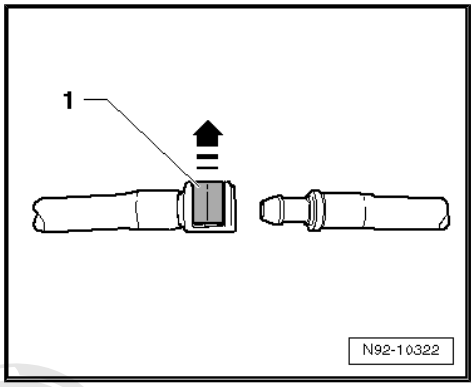

Hose coupling for headlight washer system with retaining clip

– To separate connection, press retaining clip -1- -arrow- and detach hose connection.

– To connect, press and hold retaining clip -arrow- and push on hose connection.

– Check whether connection is properly engaged by pulling on hose without pressing retaining clip.

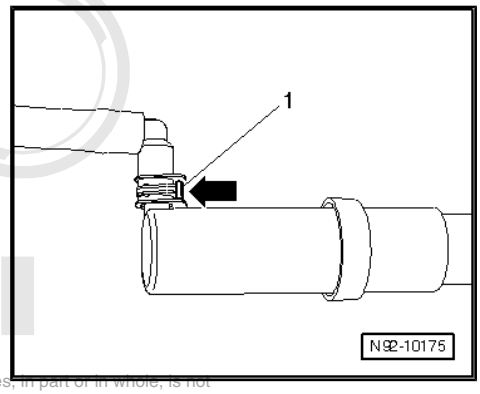

Protected by copyright. Copying for private or commercial purposes, in part or in whole, is not permitted unless authorised by AUDI AG. AUDI AG does not guarantee or accept any liability with respect to the correctness of information in this document. Copyright by AUDI AG.

Hose coupling for headlight washer system with O-type clip

– To separate connection, use side-cutting pliers to sever O-type clip -1- and detach hose connection.

– To connect, slip a new O-type clip onto hose, attach hose connection and secure O-type clip using hose clip pliers -V.A.G 1275- .

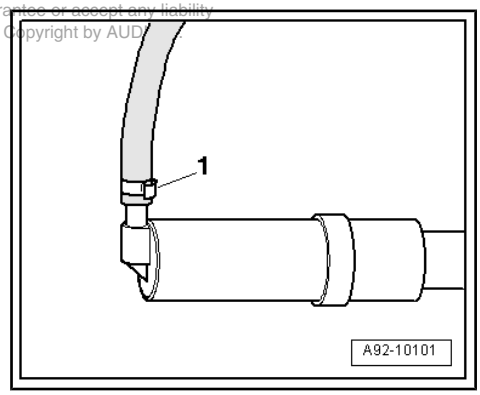

Hose coupling for headlight washer system with spring clip

– To separate connection, open spring clip -1- using hose clip pliers -V.A.G 1921- and detach hose connection.

– To connect, open spring clip using hose clip pliers -V.A.G 1921- and attach hose connection.

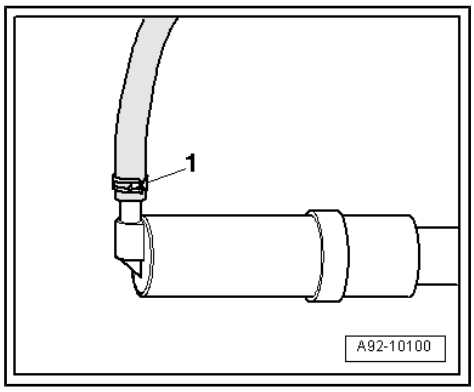

1.2 Servicing a smooth washer fluid pipe

Note

Smooth pipes with a diameter of 5x1 mm or 6x1 mm can be serviced using an EPDM hose (Ethylene Propylene Diene Monomer)
⇒ Electronic parts catalogue .

cardiagn.com

– Cut the damaged section out of the smooth pipe to be repaired, making the cuts at right-angles to the pipe.
– Choose an appropriate EPDM hose -2- and cable tie ⇒ Electronic parts catalogue .
– Cut the EPDM hose -2- to length such that the ends of the smooth pipe -1- and -3- can both be slipped roughly 10 mm into the EPDM hose -2-.

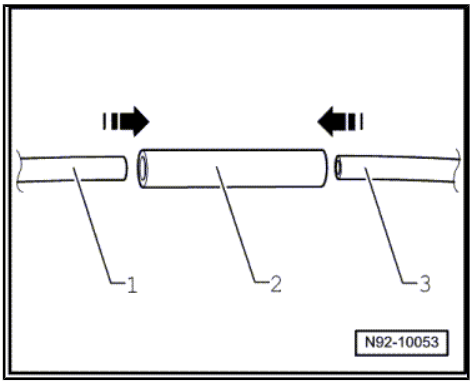

– Secure the repair joint with cable ties -1-.
– Check operation and test for leaks.

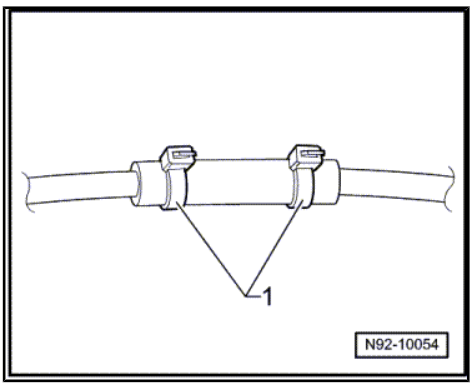

1.3 Servicing a washer fluid hose with corrugated tube

Note

Corrugated tubes can be serviced using a shrink hose ⇒ Electronic parts catalogue .

Copyright. Copying for private or commercial purposes, in part or in whole, is not permitted unless authorised by AUDI AG. AUDI AG does not guarantee or accept any liability with respect to the correctness of information in this document. Copyright by AUDI AG.

Special tools and workshop equipment required

♦ Hot air blower -VAS 1978/14A- from wiring harness repair set -VAS 1978 B-

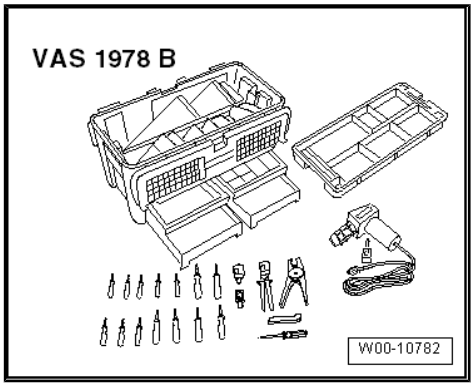

cardiagn.com

- Cutting pliers -VAS 6228-

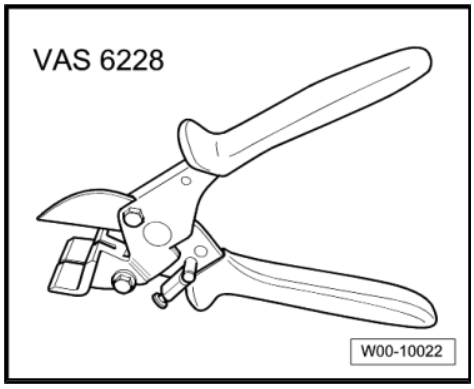

- Connection piece -1J0 955 875 R-
- Connection piece -1J0 955 875-

Procedure

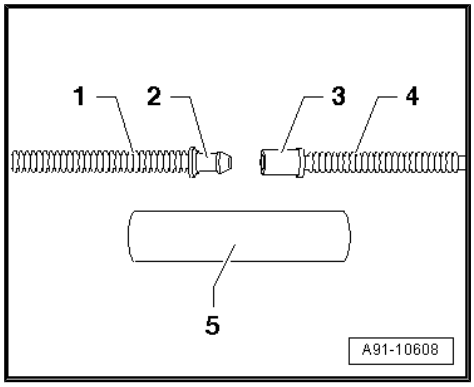

– Cut washer fluid hose at point of damage using cutting pliers -VAS 6228- .
– Join the severed ends -1 and 4- of the washer fluid hose using connection pieces -2 and 3-.
– Push shrink hose -5- over one end of washer fluid hose and fit connection pieces together.
– Push shrink hose over connection pieces on washer fluid hose.
– After pushing on the shrink hose, shrink-fit it using hot air blower -VAS 1978/14A- .
• The shrink hose must be heated starting from the centre and working outwards until it is sealed tight.
• Set hot air blower to appropriate temperature as indicated in operating instructions.
• When shrink-fitting, ensure no other wires, plastic components or insulating materials are damaged by the hot nozzle.
– Check operation and test for leaks.

cardiagn.com

Protected by copyright. Copying for private or commercial purposes, in part or in whole, is not permitted unless authorised by AUDI AG. AUDI AG does not guarantee or accept any liability with respect to the correctness of information in this document. Copyright by AUDI AG.

94 – Lights, bulbs, switches - exterior

1 Safety precautions when handling gas discharge bulbs

Never renew bulbs if you are not familiar with the necessary procedure, safety precautions and tools required.

Protected by copyright. Copying for private or commercial purposes, in part or in whole, is not permitted unless authorised by AUDI AG. AUDI AG does not guarantee or accept any liability with respect to the correctness of information in this document. Copyright by AUDI AG.

WARNING

High voltage! Danger to life!

- *Always disconnect the battery earth cable before working on parts of the gas discharge headlights marked with yellow high-voltage warning symbols.*
- *Then switch dipped beam on and off again to dissipate any remaining voltage.*
- *Switch off ignition and all electrical equipment and remove ignition key.*
- *Never operate the gas discharge bulb control unit without a gas discharge bulb.*
- *The gas discharge bulb may only be operated in the headlight housing because of the high voltages (above 28,000 V when the gas discharge bulb is ignited).*

WARNING

Risk of injury from burns, UV radiation, dazzling and explosion.

- *The gas discharge bulb may only be operated in the headlight housing because of the high temperatures, the absorption of UV radiation and to avoid dazzling.*
- *Never look into the light beam as this could disturb the eye sight for an extended period of time.*
- *Gas discharge bulbs are pressurised and can burst when they are renewed.*
- *Always wear safety goggles and gloves when removing and installing gas discharge bulbs.*

WARNING

Observe environmental requirements.

- *Gas discharge bulbs are hazardous waste. They contain metallic mercury (Hg) and traces of thallium.*
- *Never break off gas discharge bulbs and do not touch broken glass part of bulb.*
- *Observe disposal regulations. Gas discharge bulbs should only be disposed of in the appropriate containers at an official collection point.*

cardiagn.com

Caution

- *Do not touch the glass part of the gas discharge bulb with bare hands. The remaining fingerprint would be evaporated by the heat of the bulb when it is switched on, become deposited on the reflector and thus impair the brightness of the headlight. Wear clean fabric gloves when fitting the gas discharge bulb.*
- *Only replace defective gas discharge bulbs with gas discharge bulbs of the same type. The type can be found on the base of the bulb or on the glass part of the bulb.*
- *When installing, make sure connectors engage properly and are securely attached.*

Protected by copyright. Copying for private or commercial purposes, in part or in whole, is not permitted unless authorised by AUDI AG. AUDI AG does not guarantee or accept any liability with respect to the correctness of information in this document. Copyright by AUDI AG.

cardiagn.com

96 – Lights, bulbs, switches - interior

1 Immobilizer for vehicles without entry and start authorisation switch -E415- (mechanical ignition lock)

1.1 General notes

The immobilizer control unit is integrated into the instrument cluster, i.e. the immobilizer control unit can only be renewed together with instrument cluster ⇒ Electrical system; Rep. gr. 90 .

– If the control unit is renewed, select „Replacement“ for the appropriate control unit in the „Guided Functions“ mode ⇒ Vehicle diagnostic, testing and information system VAS 5051.

1.2 Defective transponder or loss of key

- The transponder is integrated into the ignition key and cannot be renewed separately.
- The complete ignition key must be replaced if the transponder is defective.

Audi AG copyright. Copying for private or commercial purposes, in part or in whole, is not permitted unless authorised by AUDI AG. AUDI AG does not guarantee or accept any liability with respect to the correctness of information in this document. Copyright by AUDI AG.

– Order a new replacement key with vehicle-specific lock number from your importer (or distribution centre), quoting vehicle identification number.

– Match all ignition keys in the „Guided Functions“ mode ⇒ Vehicle diagnostic, testing and information system VAS 5051.

1.3 Renewing reader coil

- The reader coil is integrated into the lock cylinder and cannot be renewed separately.
- The complete lock cylinder must be renewed if the reader coil is defective.

– Order a new lock cylinder with vehicle-specific lock number from your importer (or distribution centre), quoting vehicle identification number.

1.4 Procedure for renewing lock set

The ignition keys can only be matched in the „Guided Functions“ mode ⇒ Vehicle diagnostic, testing and information system VAS 5051.

cardiagn.com

2 Immobilizer for vehicles with entry and start authorisation switch -E415- (electronic ignition lock)

The immobilizer control system is either located in the convenience system central control unit -J393- or in the entry and start authorisation control unit -J518- . Fitting location: ⇒ Current flow diagrams, Electrical fault finding and Fitting locations.

The following components also form part of the immobilizer:

- Ignition key with built-in transponder.
- Reader coil in entry and start authorisation switch -E415- (electronic ignition lock).
- Engine control unit.
- Gearbox control unit.

When renewing control unit, select appropriate control unit in „Guided Functions“ ⇒ Vehicle diagnostic, testing and information system VAS 5051.

Protected by copyright. Copying for private or commercial purposes, in part or in whole, is not permitted unless authorised by AUDI AG. AUDI AG does not guarantee or accept any liability with respect to the correctness of information in this document. Copyright by AUDI AG.

cardiagn.com

3 Heated steering wheel

– For fault finding, remove airbag unit ⇒ Rep. gr. 69 .

– Remove steering wheel ⇒ Rep. gr. 48 .

– Check wiring ⇒ Current flow diagrams, Electrical fault finding and Fitting locations.

Note

The steering wheel must be renewed if the heated steering wheel is defective.

Protected by copyright. Copying for private or commercial purposes, in part or in whole, is not permitted unless authorised by AUDI AG. AUDI AG does not guarantee or accept any liability with respect to the correctness of information in this document. Copyright by AUDI AG.

cardiagn.com

4 Towing bracket

4.1 Removing and installing socket for towing bracket - version 1

Protected by copyright. Copying for private or commercial purposes, in part or in whole, is not permitted unless authorised by AUDI AG. AUDI AG does not guarantee or accept any liability with respect to the correctness of information. Copyright by AUDI AG.

Removing

– Switch off ignition and take out ignition key.

– Unscrew bolts -arrows-.

– Detach socket from retaining plate.

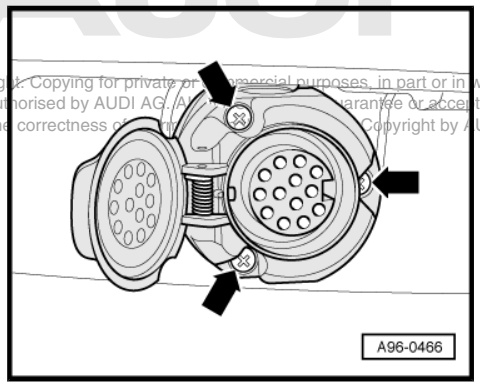

Socket with rear fog light cut-out contact switch -F216- :

– Unplug connector -2- for rear fog light cut-out contact switch -F216- and press connector -1- out of trailer socket -U10- .

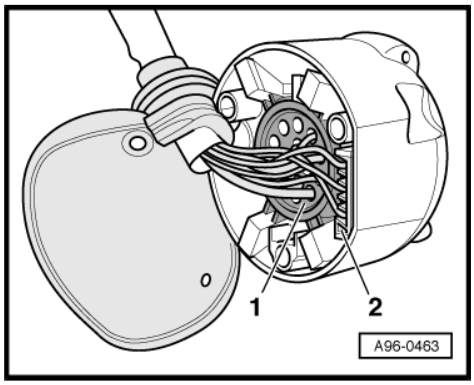

Socket without rear fog light cut-out contact switch -F216- :

– Press multi-pin connector -1- out of socket -2- in direction of -arrow-.

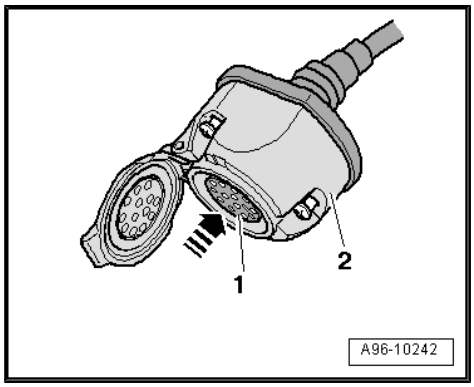

Version 1:

– Release retaining tabs -arrows- and then release the clips -1- and -3 ... 5-.

– Remove frame from connectors -2-.

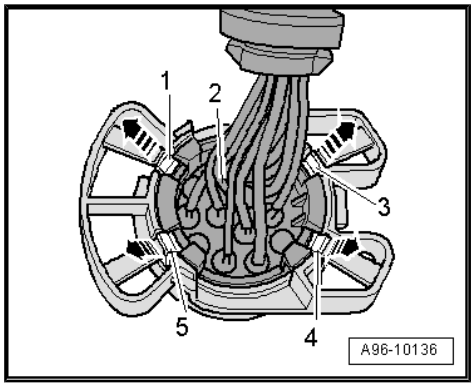

cardiagn.com

Version 2:

– Release retaining tabs -arrows- and then release clips -1, 2, 3, 4, 6, 7-.
– Remove frame from multi-pin connector -5-.

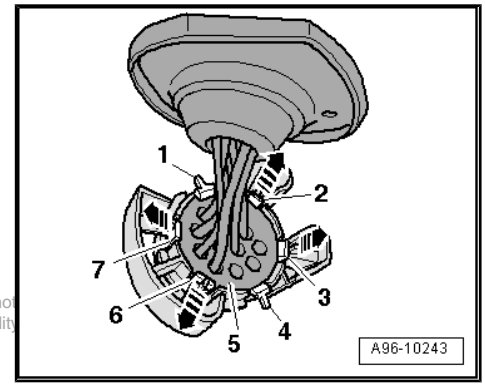

Protected by copyright. Copying for private or commercial purposes, in part or in whole, is not permitted unless authorised by AUDI AG. AUDI AG does not guarantee or accept any liability with respect to the correctness of information in this document. Copyright by AUDI AG.

Installing

Installation is carried out in the reverse order; note the following:

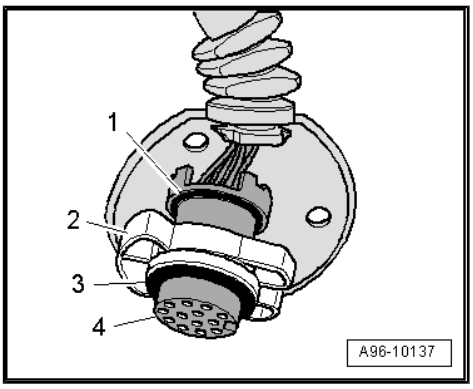

Note

Make sure that seals -1- and -3- are not damaged.

– Insert connectors -4- into frame -2- until they audibly engage.

4.2 Removing and installing socket for towing bracket - version 2

Removing

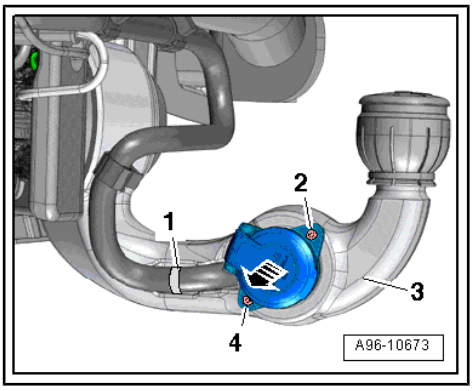

Note

Refit cable ties at the same locations when reinstalling.

– Switch off ignition and take out ignition key.
– Open out towing bracket and engage.
– Cut open cable tie -1- and remove bolts -2- and -4-.
– Press socket out of towing bracket -3- in direction of -arrow-.

cardiagn.com

– Turn cover cap -1- anti-clockwise -arrow- and detach from socket -3-.
– Detach rubber cover -2-.

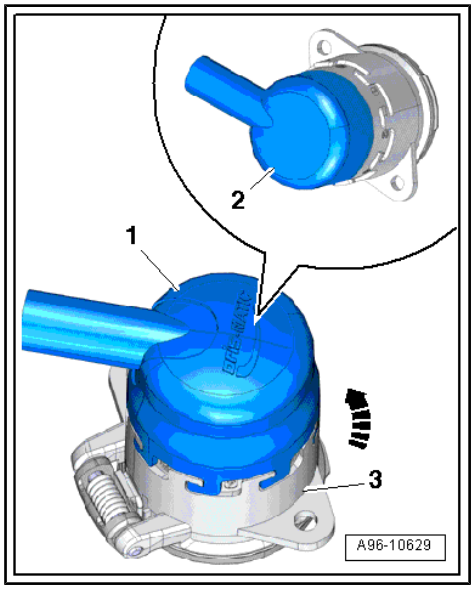

– Release clips -arrows- and press multi-pin connector -2- out of socket -1-.

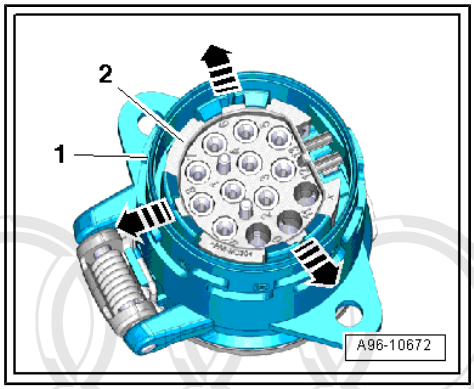

– Release clips -arrows- and detach frame -1- from multi-pin connector -3-.

Note

Pull frame off carefully so that contacts -2- of multi-pin connector are not separated from wiring harness.

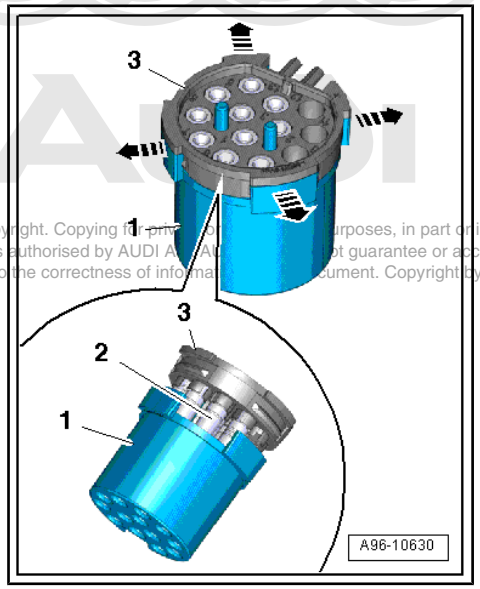

Protected by copyright. Copying for private or commercial purposes, in part or in whole, is not permitted unless authorised by AUDI AG. AUDI AG does not guarantee or accept any liability with respect to the correctness of information in this document. Copyright by AUDI AG.
cardiagn.com

Installing

Installation is carried out in the reverse order; note the following:

– Frame -1- can only be fitted onto multi-pin connector -3- in one position.

• Guide pins -4- can be inserted in frame in one position only (the contacts -2- must be in the frame).

– Slide frame into multi-pin connector until it engages audibly.

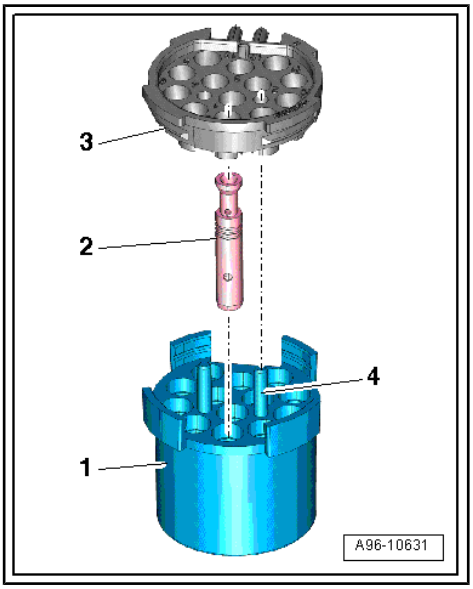

4.3 Removing and installing socket for towing bracket - version 3

Removing

– Open out towing bracket with electric control and engage in position ⇒ Owner's Manual for the specific vehicle.

– Switch off ignition and remove ignition key.

– Remove bolts -arrows-.

– Detach socket from retaining plate.

– Detach rubber cover from socket.

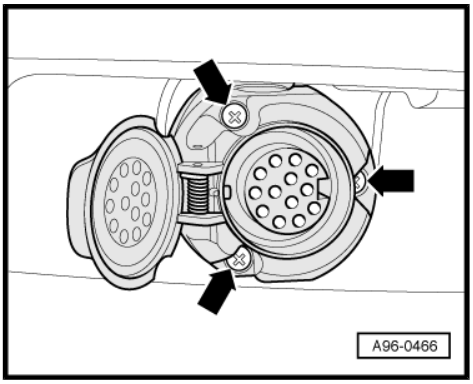

– Release retaining clips -arrows- and press multi-pin connector -2- out of socket -1-.

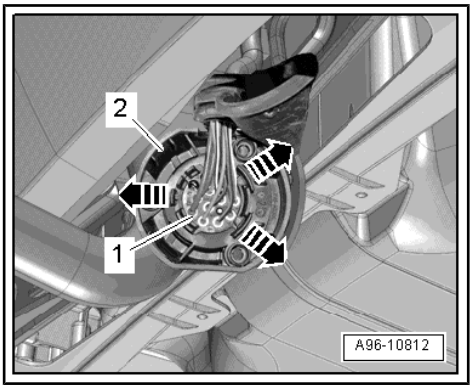

Protected by copyright. Copying for private or commercial purposes, in part or in whole, is not permitted unless authorised by AUDI AG. AUDI AG does not guarantee or accept any liability with respect to the correctness of information in this document. Copyright by AUDI AG.

cardiagn.com

– Release clips -arrows- and detach frame -2- from multi-pin connector -3-.

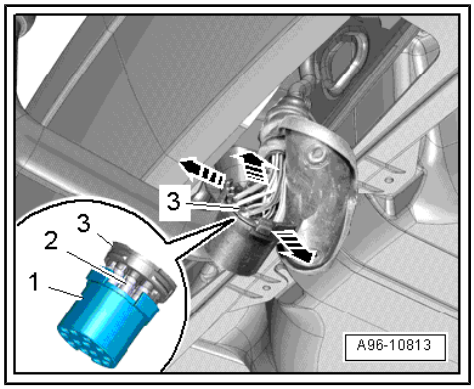

Note

Pull frame off carefully so that contacts -2- of multi-pin connector are not separated from wiring harness.

Installing

Installation is carried out in the reverse order; note the following:

– Frame -1- can only be fitted onto multi-pin connector -3- in one position.

• Guide pins -4- can be inserted in frame in one position only (the contacts -2- must be in the frame).

– Slide frame into multi-pin connector until it engages audibly.

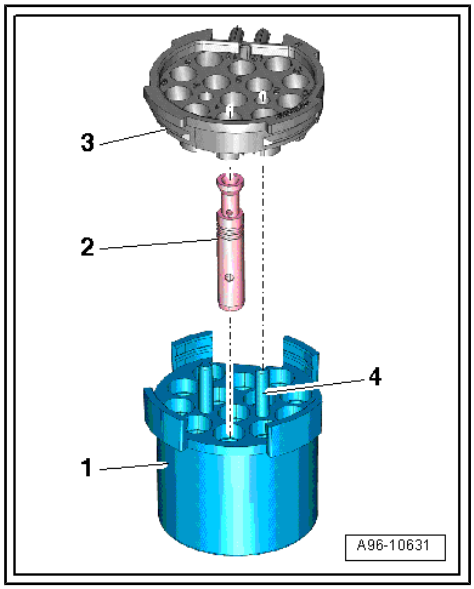

cardiagn.com

Protected by copyright. Copying for private or commercial purposes, in part or in whole, is not permitted unless authorised by AUDI AG. AUDI AG does not guarantee or accept any liability with respect to the correctness of information in this document. Copyright by AUDI AG.

4.4 Pin assignment at socket for towing bracket

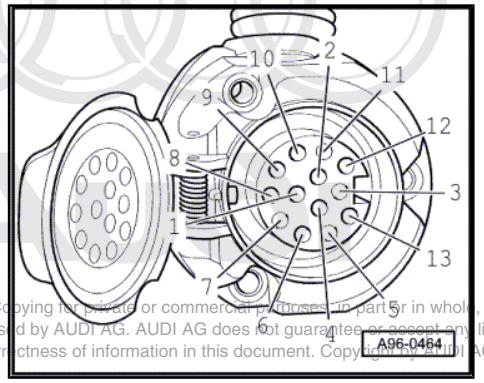

Protected by copyright. Copying for private or commercial purposes, in part or in whole, is not permitted unless authorised by AUDI AG. AUDI AG does not guarantee or accept any liability with respect to the correctness of information in this document. Copyright by AUDI AG.

Socket for towing bracket, 13-pin (country-specific version)

1 - Terminal BL - turn signal (left-side)

2 - Terminal NSL - rear fog light

3 - Terminal 31 - earth

4 - Terminal BR - turn signal (right-side)

5 - Terminal 58 R - tail light (right-side)

6 - Terminal 54 - brake light

7 - Terminal 58 L - tail light (left-side)

8 - Terminal RF - reversing light

9 - ⇒ Current flow diagrams, Electrical fault finding and Fitting locations

10 - ⇒ Current flow diagrams, Electrical fault finding and Fitting locations

11 - ⇒ Current flow diagrams, Electrical fault finding and Fitting locations

12 - ⇒ Current flow diagrams, Electrical fault finding and Fitting locations

13 - ⇒ Current flow diagrams, Electrical fault finding and Fitting locations

Socket with rear fog light cut-out contact switch -F216- :

Pin assignment at rear fog light cut-out contact switch -F216-
⇒ Current flow diagrams, Electrical fault finding and Fitting locations

cardiagn.com

97 – Wiring

1 Repairing wiring harnesses and electrical connectors

Special tools and workshop equipment required

- Wiring harness repair set -VAS 1978 B-

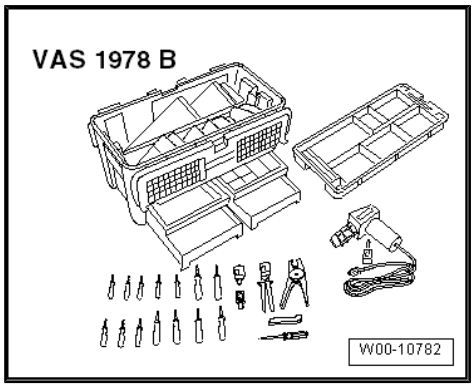

Caution

- *Wiring harness and connector repairs are only to be performed using wiring harness repair set -VAS 1978 B- .*
- *Pay attention to the relevant regulations in the individual countries.*

Note

- *Information on how to use the wiring harness repair set -VAS 1978 B- is given in the enclosed instructions.*
- *Examples are also given showing how to repair open circuits in wiring and defective connectors.*

Protected by copyright. Copying for private or commercial purposes, in part or in whole, is not permitted unless authorised by AUDI AG. AUDI AG does not guarantee or accept any liability with respect to the correctness of information in this document. Copyright by AUDI AG.

1.1 General information on repairs to the vehicle electrical system

WARNING

Risk of injury.

- *Pay attention to stickers on vehicle pointing out components with high voltage. Remaining voltage must be dissipated before commencing repair work.*
- *Certain tools are equipped with a guard. This is placed over the end of the tool after use to prevent injury to employees and to protect the tip of the tool against damage.*

cardiagn.com

Caution

- *Pay attention to the relevant regulations in the individual countries.*
- *Disconnecting the battery earth cable prevents accidents when working on the vehicle electrical system. Switch off ignition before disconnecting earth wire at battery ⇒ Electrical system; Rep. gr. 27 .*
- *Before commencing repair work, always eliminate cause of damage, e.g. sharp body edges, defective electrical components, corrosion etc.*

Note

- *Do not loosen earth straps on body if this can be avoided (danger of corrosion).*
- *Further information, for example about removal and installation of individual components, can be found in the appropriate Workshop Manual.*

1.2 ESD (electrostatic discharge) workplace -VAS 6613-

- The ESD (electrostatic discharge) workplace -VAS 6613- is designed for preventing damage to electronic components due to static discharge.
- Therefore it is possible to perform repairs on extremely sensitive electronic components and open printed circuit boards.
- Details on repairs which must be performed on the ESD (electrostatic discharge) workplace -VAS 6613- can be found in the relevant chapter of the appropriate Workshop Manual "Electrical system".

Reproduction or duplication of this document or any part thereof for commercial purposes, in part or in whole, is not permitted. Liability claims regarding damage caused by the use of any information or parts thereof is excluded. AUDI AG does not guarantee or accept any liability with respect to the correctness of information in this document. Copyright by AUDI AG.

– For setting up the ESD (electrostatic discharge) workplace, place the ESD table mat -3- from -VAS 6613- on a dry and clean table.
– Connect earthing module -2- to one of the snap fasteners on ESD table mat.
– Then proceed by plugging in connector adapter -1- of earthing module with adapting connector to an electrical mains socket equipped with earthing contact or attach crocodile clip to building earth strap or water pipe.
– Connect wrist strap -4- to one of the snap fasteners on mat.
– Put on wrist strap directly on wrist – never on sleeve of shirt or jacket.

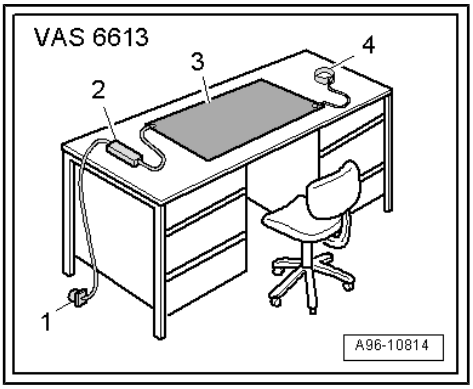

Caution

For repairs on extremely sensitive electronic components and open printed circuit boards always use nonmagnetic tools, e.g. socket wrench -T10072- .

cardiagn.com

1.3 Notes on repairing wiring harnesses and electrical connectors

Note

- *Observe general information on repairs to the vehicle electrical system* *⇒ page 72* *.*
- *Not all wiring cross sections found in the vehicle are contained in the wiring harness repair set -VAS 1978 B-. If the wiring cross section required is not contained, use the next largest cross section.*
- *Soldering is not permitted when repairing the vehicle electrical system.*
- *Never repair crimp connectors. Route a new wire along the defective wire if necessary.*
- *After crimping, hot air blower must be used to shrink-fit crimp connectors to prevent moisture from ingressing.*
- *Screened wires, e.g. on speed senders and knock sensors, must NOT be repaired. These wires must be renewed completely if damaged.*
- *Only use yellow wires for repairs to wiring.*
- *Repaired wiring harnesses must not to be re-incorporated into the wrapping of the original vehicle wiring harness.*
- *Mark location of repair with yellow insulating tape.*
- *Yellow wiring and locations with yellow insulating tape on wiring harness designate a previous repair.*
- *Always check operation after completing repair work. It may be necessary to interrogate and erase the event memories and/or reset the systems to basic setting.*

1.4 Repairing wiring for pyrotechnic components

Note

- *Observe general information on repairs to the vehicle electrical system* *⇒ page 72* *.*
- *Observe notes on repairing wiring harnesses and connectors* *⇒ page 74* *including marking repair locations.*

cardiagn.com

WARNING

Carrying out repair work to wiring for pyrotechnic components incorrectly (for example on airbags, belt tensioners) will cause a malfunction in passenger protection systems.

- *To maintain the repair standards required by the Audi factory, repairs to wiring for pyrotechnic components may only be performed on the in-vehicle wiring using wiring harness repair set -VAS 1978 B- and genuine replacement parts (connector housings, contacts, wiring).*
- *Wires on the individual airbag units must NOT be repaired.*
- *If wires or connectors on airbag units are damaged, the corresponding airbag units must be renewed for safety reasons.*

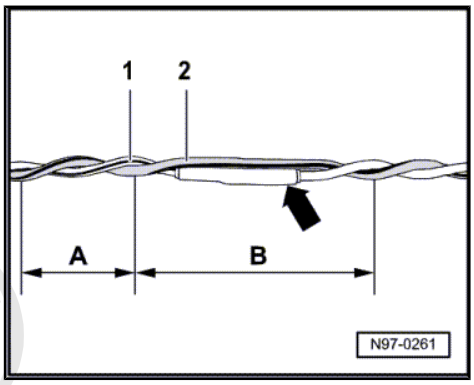

- Do not repair wiring for pyrotechnic components at more than two repair locations. Repair locations increase the resistance in wiring and can be the cause of faults in the system's self-diagnosis.
- Repairs in the area around pyrotechnic components should not be performed more than 30 cm from the nearest connector housing. This procedure and the marking with the yellow adhesive tape ensure that previous repairs can be easily identified.
- The two wires going to the airbag igniters have a twist length specification of 20 ± 5 mm. This twist length must always be observed when repairing twisted wires.
- When performing repair work, both wires to the airbag igniters must be of the same length. When twisting the wires -1 and 2-, the twist length specification -A- = 20 mm must be met.
- When making repairs, there must be no untwisted section of wire which is longer than -B- = 100 mm, e.g. in the vicinity of crimp connectors -arrow-.
- Repair operations must be recorded in the Audi Service Schedule under „Workshop entries“ with a brief outline of the repair work completed, company stamp and signature.
- Any warranty claims made under the AUDI AG factory warranty are invalid if airbag wiring harness repairs have not been performed using genuine replacement parts and wiring harness repair set -VAS 1978 B- .

Printed in Germany. Copyright © Audi Aktiengesellschaft. Any reproduction or distribution of this document, in part or in whole, is not permitted unless authorised by AUDI AG. AUDI AG does not guarantee or accept any liability with respect to the correctness of information in this document. Copyright by AUDI AG.

1.5 Repairing CAN bus wiring

Note

- *Observe general information on repairs to the vehicle electrical system* *⇒ page 72* *.*
- *Observe notes on repairing wiring harnesses and connectors* *⇒ page 74* *including marking repair locations.*

cardiagn.com

Use an unscreened two-wire line -1 and 2- (cross-section 0.35 mm^2 or 0.5 mm^2) as CAN bus wire.

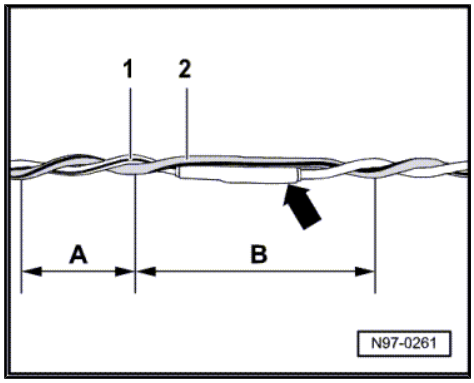

- The CAN bus wires are colour-coded as follows:

CAN bus wire High (powertrain)	Orange/black
CAN bus wire High (convenience)	Orange/green
CAN bus wire High (infotainment)	Orange/purple
CAN bus wire Low (all)	Orange/brown

- Both CAN bus wires must be of the same length when repairing.
- When twisting the wires -1 and 2-, the twist length specification -A- = 20 mm must be met.
- When making repairs, there must be no untwisted section of wire which is longer than -B- = 50 mm, e.g. in the vicinity of crimp connectors -arrow-.

Protected by copyright. Copying for private or commercial purposes, in part or in whole, is not permitted unless authorised by AUDI AG. AUDI AG does not guarantee or assume any liability with respect to the correctness of information in this document. Copyright by AUDI AG.

1.6 Repairing FlexRay wiring

Note

- *Observe general information on repairs to the vehicle electrical system* *⇒ page 72* *.*
- *Observe notes on repairing wiring harnesses and connectors* *⇒ page 74* *including marking repair locations.*

FlexRay wiring consists of a sheathed pair of wires -1 and 2- with a cross-section of 0.35 mm^2.

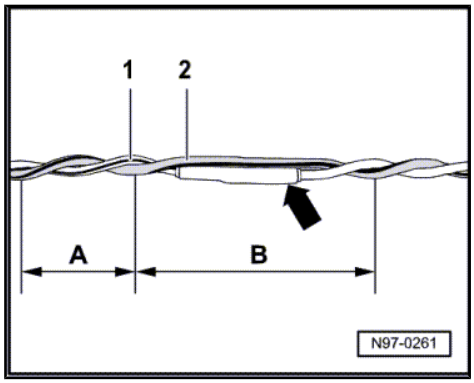

- Both wires must be of exactly the same length when repairing.
- When twisting the wires -1 and 2-, the twist length specification -A- = 30 mm must be met.
- When making repairs, there must be no untwisted section of wire which is longer than -B- = 30 mm, e.g. in the vicinity of crimp connectors -arrow-.
- Maximum stripped length of wire = 100 mm.
- Protect repair location against environmental effects with suitable measures. This requires a crimp connector with shrink hose, internal bonding material over untwisted repair joint and water-tight insulating tape around stripped wire.

1.7 Repairing an 0.25 mm^2 wire with a single crimp connector

Procedure

– Release a length of approx. 20 cm of the defective wire on both sides of the repair joint.

Caution

Risk of damage to electrical wiring.

- *Take care when releasing wiring from wrapped wiring harnesses.*

cardiagn.com

– If necessary, use a knife to remove wrapping of wiring harness.

– Use wire stripper -VAS 1978/3- to cut out damaged section of wiring.

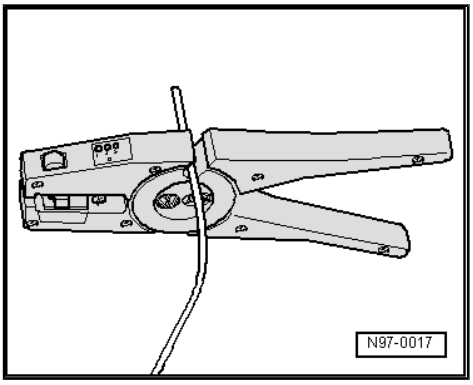

Note

If cutting out the damaged section of wiring makes the two ends of the original vehicle wire too short for repair with a single crimp connector, insert a corresponding length of repair wire with two crimp connectors ⇒ page 80 .

– Set adjustable stop in jaws of wire stripper -VAS 1978/3- to 12 ... 14 mm (length to be stripped).

– Working from the front, insert end of wire into jaws of wire stripper as far as it will go press stripper together completely.

– Open wire stripper again and take out stripped end of wire.

– Fold back half of the stripped wire ends.

– To repair an 0.25 mm^2 wire, take a small yellow crimp connector out of the wiring harness repair set -VAS 1978 B- .

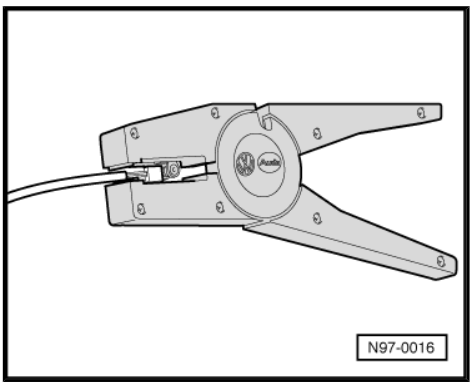

– To fit crimp connector, use crimping pliers (base tool) -VAS 1978/1-2- with head adapter 0.35 mm² - 2.5 mm² -VAS 1978/1-1- .

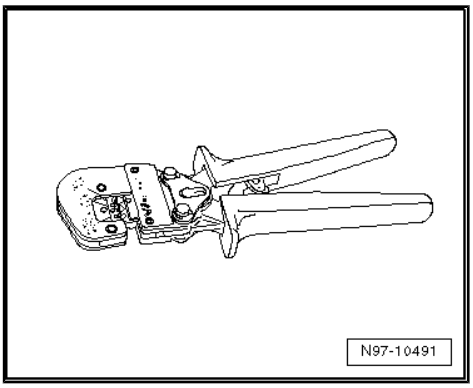

– Slide small yellow crimp connector over two stripped and folded back ends of original vehicle wire and fasten with crimping pliers.

Note

Take care not to crimp insulation of wire.

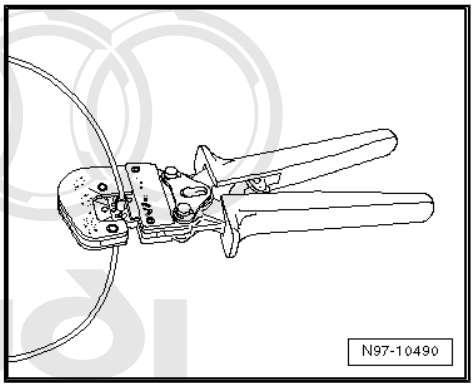

Protected by copyright. Copying for private or commercial purposes, in part or in whole, is not permitted unless authorised by AUDI AG. AUDI AG does not guarantee or accept any liability with respect to the correctness of information in this document. Copyright by AUDI AG.

cardiagn.com

After crimping, hot air blower must be used to shrink-fit crimp connector to prevent moisture from ingressing.

– Attach shrink element for hot air blower -VAS 1978/15A- to hot air blower, 220 V/ 50 Hz -VAS 1978/14A- .

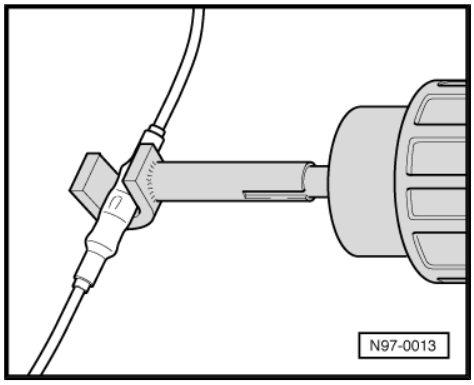

Caution

Risk of damage to surrounding components.

- *When shrinking crimp connectors, take care not to damage any other pipes/wires, plastic parts or insulating material with hot nozzle of the hot air blower.*
- *Always observe operating instructions for hot air blower.*

– Working from centre outwards, use hot air blower to heat crimp connector in longitudinal direction until it is completely sealed and adhesive emerges at ends.

• A wire repaired using a single crimp connector must look as shown in illustration.

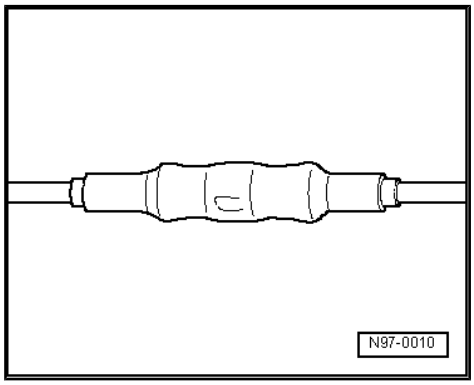

Protected by copyright. Copying for private or commercial purposes, in part or in whole, is not permitted unless authorised by AUDI AG. AUDI AG does not guarantee or accept any liability with respect to the correctness of information in this document. Copyright by AUDI AG.

Note

- *If several wires have to be repaired, make sure crimp connectors are not directly adjacent to one another. Offset the crimp connectors slightly to restrict the size of the wiring harness.*
- *If the repair location was previously wrapped, yellow adhesive tape must be wrapped around this location again on completion of repair.*
- *If necessary, secure the repaired wiring harness with a cable tie to prevent rattling noises when the vehicle is driven.*

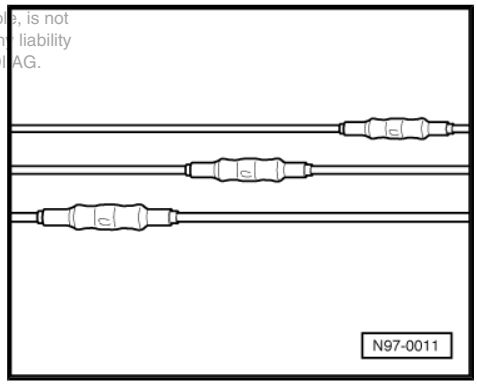

1.8 Repairing a wire of 0.35 mm² section or thicker with a single crimp connector

Procedure

– Release a length of approx. 20 cm of the defective wire on both sides of the repair joint.

Caution

Risk of damage to electrical wiring.

- *Take care when releasing wiring from wrapped wiring harnesses.*

– If necessary, use a knife to remove wrapping of wiring harness.

cardiagn.com

– Use wire stripper -VAS 1978/3- to cut out damaged section of wiring.

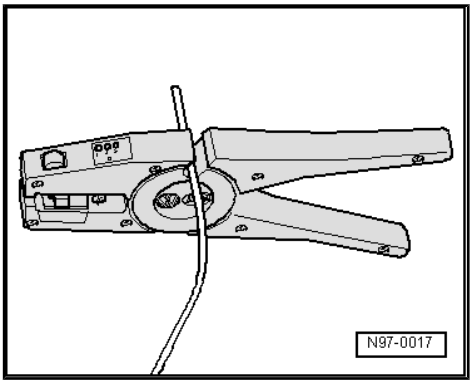

Note

If cutting out the damaged section of wiring makes the two ends of the original vehicle wire too short for repair with a single crimp connector, insert a corresponding length of repair wire with two crimp connectors ⇒ page 83 *.*

Protected by copyright. Copying for private or commercial purposes, in part or in whole, is not permitted unless authorised by AUDI AG. AUDI AG does not guarantee or accept any liability with respect to the correctness of information in this document. Copyright by AUDI AG.

– Set adjustable stop in jaws of wire stripper -VAS 1978/3- to 6 ... 7 mm (length to be stripped).

– Working from the front, insert end of wire into jaws of wire stripper as far as it will go press stripper together completely.

– Open wire stripper again and take out stripped end of wire.

– For repair, take a suitable crimp connector out of the wiring harness repair set -VAS 1978 B- .

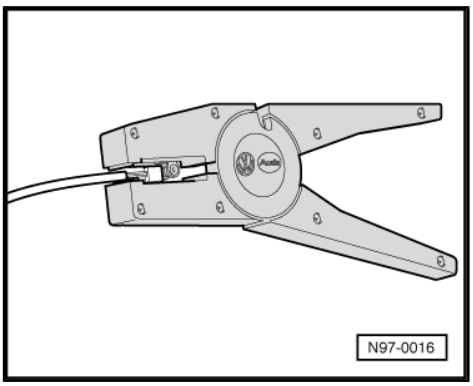

– Use crimping pliers (base tool) -VAS 1978/1-2- for fitting crimp connectors.

The following head adapters are available for the crimping pliers (base tool) -VAS 1978/1-2- :

- ♦ Head adapter 0.35 mm² - 2.5 mm² -VAS 1978/1-1-
- ♦ Head adapter 4.0 - 6.0 mm² -VAS 1978/2 A-

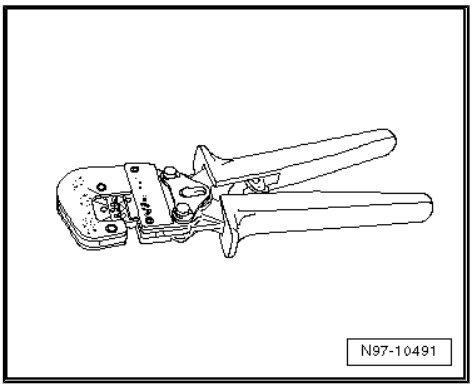

– Slide crimp connector over two stripped ends of original vehicle wire and fasten with crimping pliers.

Note

Take care not to crimp insulation of wire.

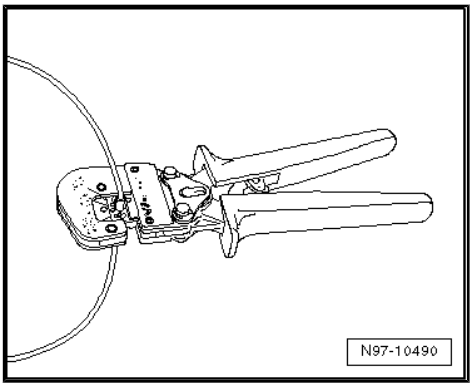

cardiagn.com

After crimping, hot air blower must be used to shrink-fit crimp connector to prevent moisture from ingressing.

– Attach shrink element for hot air blower -VAS 1978/15A- to hot air blower, 220 V/ 50 Hz -VAS 1978/14A- .

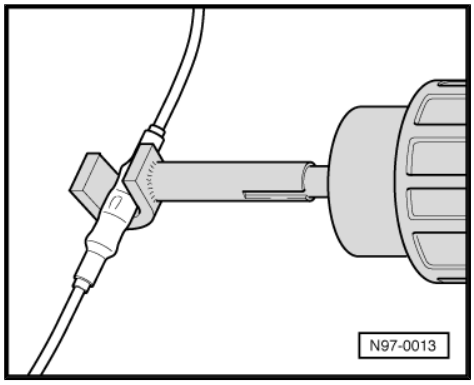

Caution

Risk of damage to surrounding components.

- *When shrinking crimp connectors, take care not to damage any other pipes/wires, plastic parts or insulating material with hot nozzle of the hot air blower.*
- *Always observe operating instructions for hot air blower.*

– Working from centre outwards, use hot air blower to heat crimp connector in longitudinal direction until it is completely sealed and adhesive emerges at ends.

Protected by copyright. Copying for private or commercial purposes, in part or in whole, is not permitted unless authorised by AUDI AG. AUDI AG does not guarantee or accept any liability with respect to the correctness of information in this document. Copyright by AUDI AG.

- A wire repaired using a single crimp connector must look as shown in illustration.

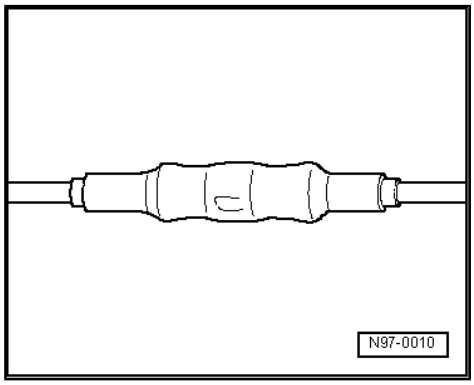

Note

- *If several wires have to be repaired, make sure crimp connectors are not directly adjacent to one another. Offset the crimp connectors slightly to restrict the size of the wiring harness.*
- *If the repair location was previously wrapped, yellow adhesive tape must be wrapped around this location again on completion of repair.*
- *If necessary, secure the repaired wiring harness with a cable tie to prevent rattling noises when the vehicle is driven.*

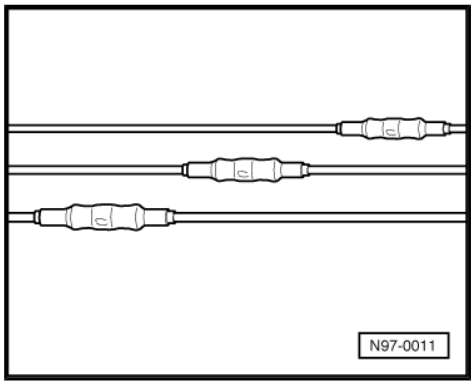

1.9 Repairing an 0.25 mm² wire by connecting in an additional wire

Note

For repairing an 0.25 mm² wire only 0.5 mm² repair wires are available.

Procedure

– Release a length of approx. 20 cm of the defective wire at two points on both sides of the repair joint.

cardiagn.com

Caution

Risk of damage to electrical wiring.

- *Take care when releasing wiring from wrapped wiring harnesses.*

– If necessary, use a knife to remove wrapping of wiring harness.

– Lay yellow repair wire next to damaged wiring harness and use wire stripper -VAS 1978/3- to cut repair wire to required length.

– Cut damaged section out of original vehicle wire.

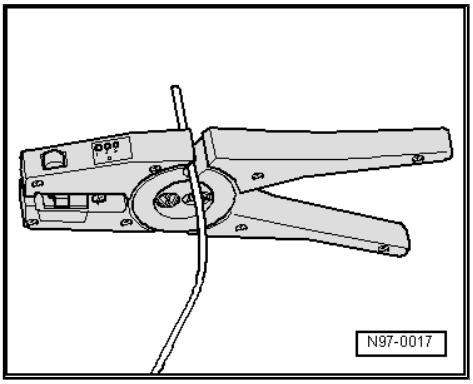

– Set adjustable stop in jaws of wire stripper -VAS 1978/3- to 12 ... 14 mm (length to be stripped).

– Working from the front, insert end of original vehicle wire into jaws of wire stripper as far as it will go and press wire stripper together completely.

– Open wire stripper again and take out stripped end of wire.

– Fold back half of the stripped wire ends.

– Repeat procedure at other end of original vehicle wire.

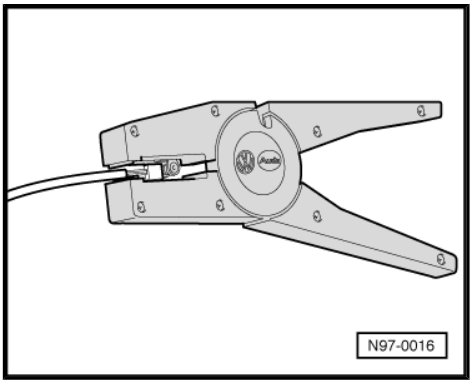

– Set adjustable stop in jaws of wire stripper -VAS 1978/3- to 6 ... 7 mm (length to be stripped).

– Working from the front, insert end of the yellow repair wire into jaws of wire stripper as far as it will go and press wire stripper together completely.

– Open wire stripper again and take out stripped end of wire.

– Repeat procedure at other end of repair wire.

– To repair an 0.25 mm^2 wire, take a small yellow crimp connector out of the wiring harness repair set -VAS 1978 B- .

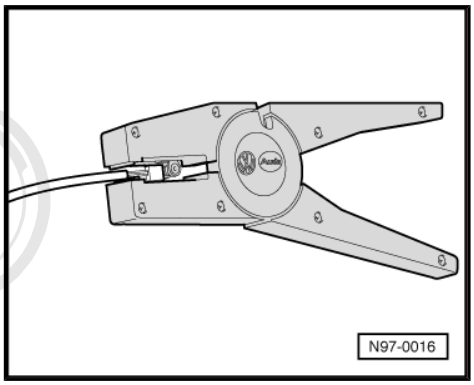

cardiagn.com

Protected by copyright. Copying for private or commercial purposes, in part or in whole, is not permitted unless authorised by AUDI AG. AUDI AG does not guarantee or accept any liability with respect to the correctness of information in this document. Copyright by AUDI AG.

– To fit crimp connectors from wiring harness repair set -VAS 1978 B- , use crimping pliers (base tool) -VAS 1978/1-2- with head adapter 0.35 mm² - 2.5 mm² -VAS 1978/1-1- .
– Slide small yellow crimp connector over original vehicle wire on one side and over repair wire on the other.

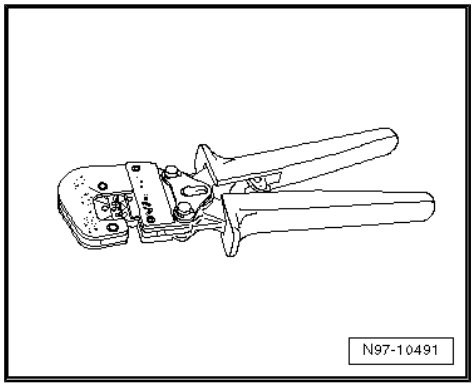

– Use crimping pliers to fasten crimp connector to both wire ends.
– Repeat procedure at other end of repair wire.

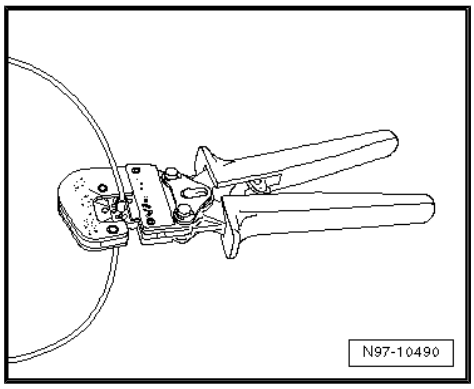

Note

Take care not to crimp insulation of wire.

After crimping, hot air blower must be used to shrink-fit crimp connector to prevent moisture from ingressing.

– Attach shrink element for hot air blower -VAS 1978/15A- to hot air blower, 220 V/ 50 Hz -VAS 1978/14A- .

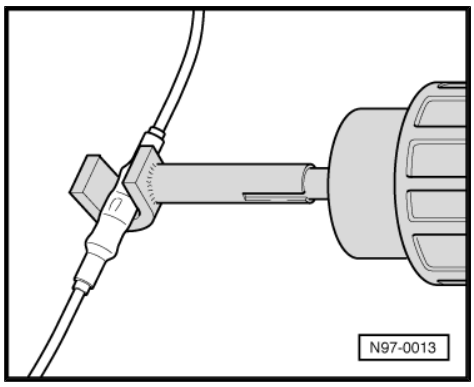

Caution

Risk of damage to surrounding components.

- ***When shrinking crimp connectors, take care not to damage any other pipes/wires, plastic parts or insulating material with hot nozzle of the hot air blower.***
- ***Always observe operating instructions for hot air blower.***

– Working from centre outwards, use hot air blower to heat crimp connector in longitudinal direction until it is completely sealed and adhesive emerges at ends.

• A wire repaired using inserted repair wire and two crimp connectors must look as shown in illustration.

Protected by copyright. Copying for private or commercial purposes, in part or in whole, is not permitted unless authorised by AUDI AG. AUDI AG does not guarantee or accept any liability with respect to the correctness of information in this document. Copyright by AUDI AG.

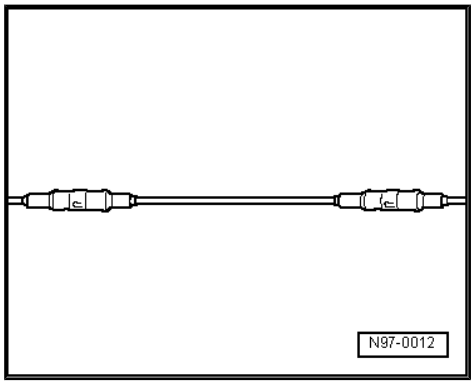

cardiagn.com

Note

- *If several wires have to be repaired, make sure crimp connectors are not directly adjacent to one another. Offset the crimp connectors slightly to restrict the size of the wiring harness.*
- *If the repair location was previously wrapped, yellow adhesive tape must be wrapped around this location again on completion of repair.*
- *If necessary, secure the repaired wiring harness with a cable tie to prevent rattling noises when the vehicle is driven.*

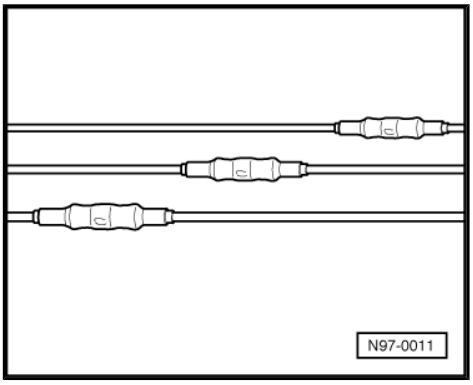

1.10 Repairing a wire of 0.35 mm² section or thicker by connecting in an additional wire

Note

For repairing an 0.35 mm² wire only 0.5 mm² repair wires are available.

Procedure

– Release a length of approx. 20 cm of the defective wire at two points on both sides of the repair joint.

Caution

Risk of damage to electrical wiring.

- *Take care when releasing wiring from wrapped wiring harnesses.*

– If necessary, use a knife to remove wrapping of wiring harness.

Protected by copyright. Copying for private or commercial purposes, in part or in whole, is not permitted unless authorised by AUDI AG. AUDI AG does not guarantee or accept any liability with respect to the correctness of information. Copyright by AUDI AG.

– Lay yellow repair wire next to damaged wiring harness and use wire stripper -VAS 1978/3- to cut repair wire to required length.

– Cut damaged section out of original vehicle wire.

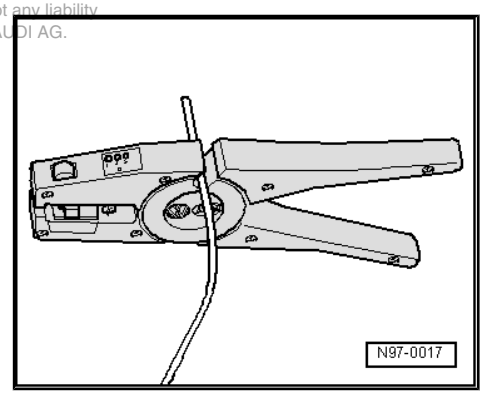

cardiagn.com

– Set adjustable stop in jaws of wire stripper -VAS 1978/3- to 6 ... 7 mm (length to be stripped).
– Working from the front, insert end of original vehicle wire into jaws of wire stripper as far as it will go and press wire stripper together completely.
– Open wire stripper again and take out stripped end of wire.
– Repeat procedure at other end of original vehicle wire.
– For repair, take two suitable crimp connectors out of wiring harness repair set -VAS 1978 B- .

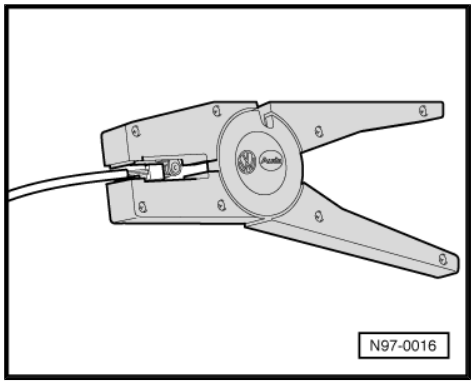

– Use crimping pliers (base tool) -VAS 1978/1-2- for fitting crimp connectors.

The following head adapters are available for the crimping pliers (base tool) -VAS 1978/1-2- :

♦ Head adapter 0.35 mm² - 2.5 mm² -VAS 1978/1-1-
♦ Head adapter 4.0 - 6.0 mm² -VAS 1978/2 A-

– Slide crimp connector over original vehicle wire on one side and over repair wire on the other.

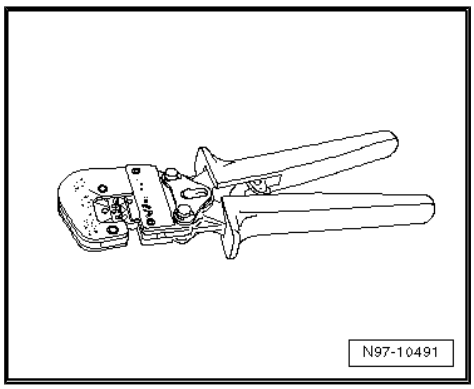

Protected by copyright. Copying for private or commercial purposes, in part or in whole, is not permitted unless authorised by AUDI AG. AUDI AG does not guarantee or accept any liability with respect to the correctness of information in this document. Copyright by AUDI AG.

– Use crimping pliers to fasten crimp connector to both wire ends.
– Repeat procedure at other wire ends.

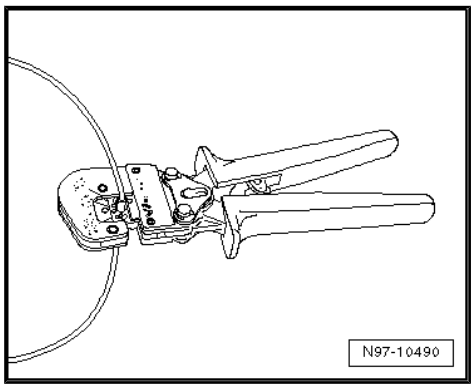

Note

Take care not to crimp insulation of wire.

After crimping, hot air blower must be used to shrink-fit crimp connector to prevent moisture from ingressing.

– Attach shrink element for hot air blower -VAS 1978/15A- to hot air blower, 220 V/ 50 Hz -VAS 1978/14A- .

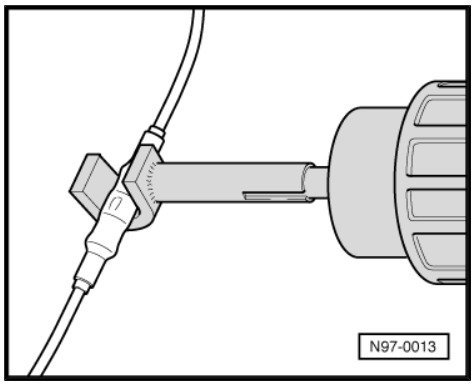

Caution

Risk of damage to surrounding components.

♦ ***When shrinking crimp connectors, take care not to damage any other pipes/wires, plastic parts or insulating material with hot nozzle of the hot air blower.***
♦ ***Always observe operating instructions for hot air blower.***

cardiagn.com

– Working from centre outwards, use hot air blower to heat crimp connector in longitudinal direction until it is completely sealed and adhesive emerges at ends.

• A wire repaired using inserted repair wire and two crimp connectors must look as shown in illustration.

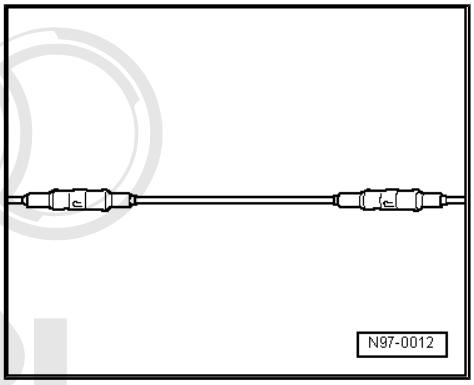

Note

Protected by copyright. Copying for private or commercial purposes, in part or in whole, is not permitted unless authorised by AUDI AG. AUDI AG does not guarantee or accept any liability with respect to the correctness of information in this document. Copyright by AUDI AG.

♦ *If several wires have to be repaired, make sure crimp connectors are not directly adjacent to one another. Offset the crimp connectors slightly to restrict the size of the wiring harness.*

♦ *If the repair location was previously wrapped, yellow adhesive tape must be wrapped around this location again on completion of repair.*

♦ *If necessary, secure the repaired wiring harness with a cable tie to prevent rattling noises when the vehicle is driven.*

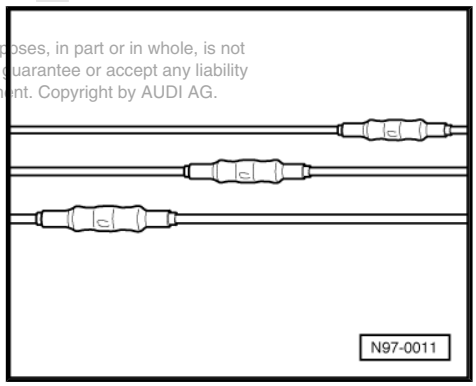

cardiagn.com

2 Repairing connector housings and electrical connectors

2.1 Notes on repairing connector housings and electrical connectors

Note

- *Observe general information on repairs to vehicle electrical system* ⇒ page 72 .
- *The appropriate crimp contacts are assigned to the connector housings on the basis of the part number stamped on the connector housing. For part numbers of connector housings in conjunction with appropriate crimp contacts, refer to ⇒ Electronic parts catalogue; Special catalogue „Electrical connecting elements"; Electrical equipment; Sub-group 70 from chart 970-00 onwards .*
- *Always renew damaged connector housings.*

2.2 Repairing contacts in connector housings

Procedure

– If applicable, start by opening or releasing secondary locking device on connector housing ⇒ page 89 .

– Use appropriate release tool -A- to release connector (primary locking device) ⇒ page 89 .

– Take hold of wire and pull connector towards rear and out of connector housing (if applicable with wire seal) -arrow-.

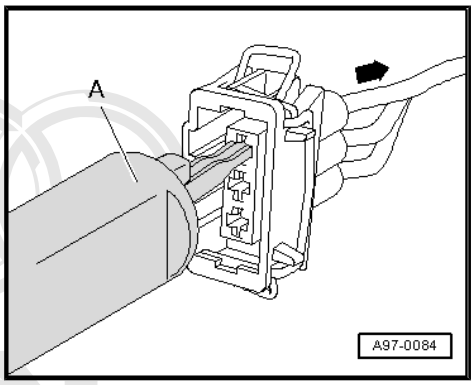

– Cut old connector off original vehicle wiring harness (if applicable with wire seal).

– Take yellow repair wire with correct connector out of wiring harness repair set -VAS 1978 B-.

– Release a length of approx. 20 cm of the defective wire on both sides of the repair joint.

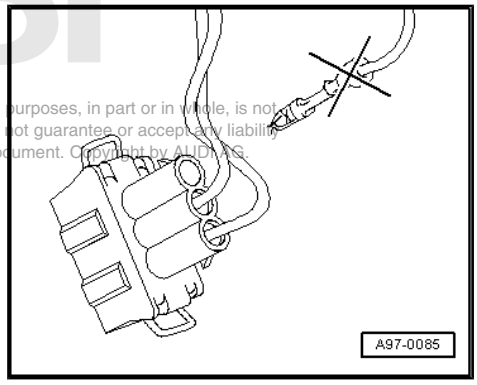

Caution

Risk of damage to electrical wiring.

- ***Take care when releasing wiring from wrapped wiring harnesses.***

– If necessary, use a knife to remove wrapping of wiring harness.

Protected by copyright. Copying for private or commercial purposes, in part or in whole, is not permitted unless authorised by AUDI AG. AUDI AG does not guarantee or accept any liability with respect to the correctness of information in this document. Copyright by AUDI AG.

cardiagn.com

– Slide connector of new repair wire into corresponding connector housing slot until it engages.
– If applicable, attach wire seal to repair wire ⇒ page 87 .

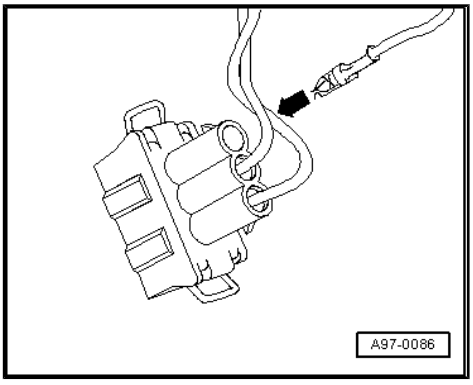

– Use wire stripper -VAS 1978/3- to shorten repair wire and wire of original vehicle wiring harness as required.
– Strip ends of repair wire and original vehicle wire and crimp stripped ends of repair wire and wire of original vehicle wiring harness using crimping pliers and a crimp connector
⇒ „1.7 Repairing an 0.25 mm2 wire with a single crimp connector“, page 76 or
⇒ „1.10 Repairing a wire of 0.35 mm2 section or thicker by connecting in an additional wire“, page 83 .

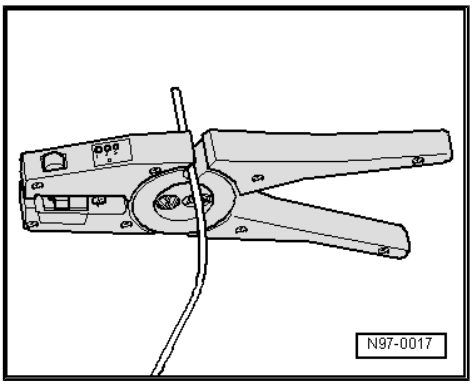

2.3 Fitting seals for individual wires

Procedure

Note

- *Wire seals prevent water and dirt from ingressing into the connector housing. They are fitted e.g. in the engine compartment and must always be re-installed after completing a repair.*
- *As a standard, wire seal is crimped to wire together with connector. This is not the case with repair wires. Wire seal must be slipped onto wire before crimping repair wire.*
- *Wire seals must always match the wire cross section of the repair wire used. The outer diameter of the wire seal depends on the diameter of the connector housing slot. Always use the appropriate assembly tool when fitting.*

– Attach wire seal -A- to free end of repair wire.
• The small diameter of the wire seal must face the connector housing.

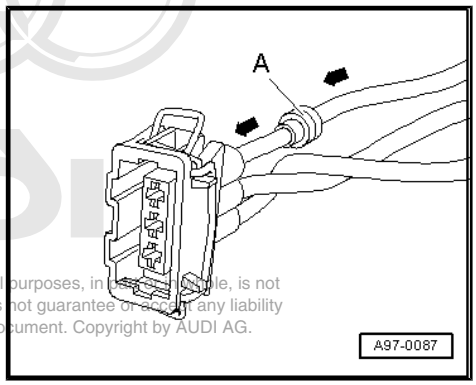

Protected by copyright. Copying for private or commercial purposes, in part or in whole, is not permitted unless authorised by AUDI AG. AUDI AG does not guarantee or accept any liability with respect to the correctness of information in this document. Copyright by AUDI AG.

cardiagn.com

– Slide wire seal -A- over repair wire as far as connector housing and then as far as it will go into connector housing using an appropriate fitting tool -B-.

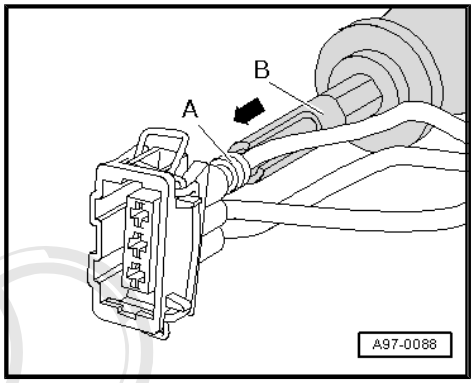

2.4 Repairing connector housings with insulation displacement technology (IDC)

Note

- *For technical reasons, connector housings with insulation displacement technology can only be supplied with the connectors inserted.*
- *If these connectors are not required, they can be removed in the same manner as for any other connector housing.*
- *Repair wires which are already fitted with the corresponding crimped-on connectors are available ⇒ Electronic parts catalogue .*

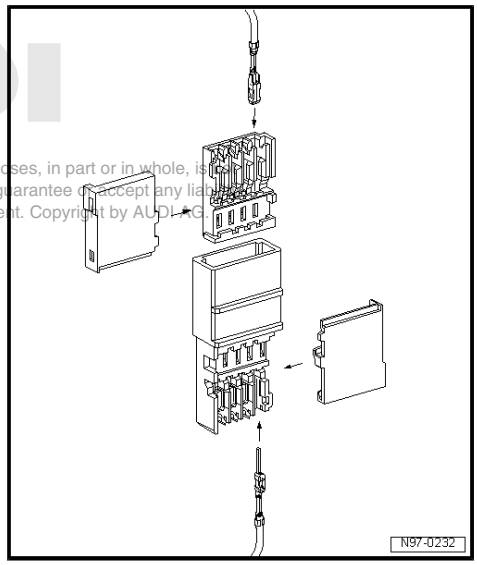

Protected by copyright. Copying for private or commercial purposes, in part or in whole, is not permitted unless authorised by AUDI AG. AUDI AG does not guarantee or accept any liability with respect to the correctness of information in this document. Copyright by AUDI AG.

cardiagn.com

3 Releasing and dismantling connector housings

3.1 Notes on releasing and dismantling connector housings

WARNING

Risk of injury.

- ***Certain tools are equipped with a guard. This is placed over the end of the tool after use to prevent injury to employees and to protect the tip of the tool against damage.***

Note

- *Observe general information on repairs to vehicle electrical system* *⇒ page 72* *.*
- *Always use the release tools intended for this purpose. Never force connectors out of connector housings.*
- *Always renew damaged connector housings.*
- *Small screwdrivers can be used to help release secondary locking devices.*
- *The pin assignment may be stamped on the secondary locking device or on the back of the connector housing.*
- *For further information on fitting locations of connectors, refer to ⇒ Current flow diagrams, Electrical fault finding and Fitting locations.*
- *For correct release tools for corresponding locking devices, refer to ⇒ Operating instructions for -VAS 1978/35- .*

3.2 Secondary locking device

- The secondary locking device is a securing element designed to secure all the wires in a connector housing. If a connector housing is fitted with a secondary locking device, this must always be opened or removed using the specified tool before releasing and extracting individual crimp connectors.
- The secondary locking device is of a different colour to the rest of the connector housing to aid identification and show how it works.
- The types of connector housing shown here are only a selection designed to illustrate examples of the various operating principles of the secondary locking devices.

Protected by copyright. Copying for private or commercial purposes, in part or in whole, is not permitted unless authorised by AUDI AG. AUDI AG does not guarantee or accept any liability with respect to the correctness of information in this document. Copyright by AUDI AG.

cardiagn.com

Example 1:

– Release the housing securing element by removing the „comb“ -arrow-.

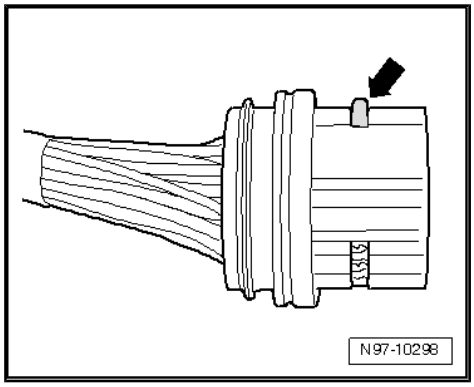

Example 2:

– Release the housing securing element by opening the „flap“ -arrow-.

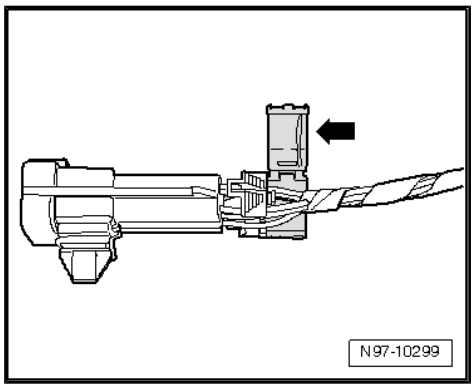

Example 3:

– Release the housing securing element by disengaging a „slide“ -arrow-.

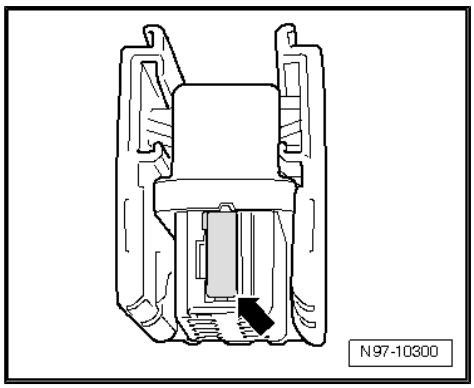

3.3 Primary locking device

- The primary locking device engages an individual crimp connector in the connector housing.
- If housing securing elements (secondary locking devices) are fitted, they must be released or removed using the specified tool before releasing the contacts ⇒ page 89 .
- The types of primary locking device shown here are only a selection designed to illustrate examples of the various operating principles of the primary locking devices.
- For correct release tool for corresponding locking device, refer to ⇒ Operating instructions for -VAS 1978/35- .

Protected by copyright. Copying for private or commercial purposes, in part or in whole, is not permitted unless authorised by AUDI AG. AUDI AG does not guarantee or accept any liability with respect to the correctness of information in this document. Copyright by AUDI AG.

cardiagn.com

3.4 Primary locking device with round connector systems

Procedure

Note

If housing securing elements (secondary locking devices) are fitted, they must be released or removed using the specified tool before releasing the contacts *⇒ page 89* *.*

– Insert appropriate release tool for connector housing in release slot at connector housing.

– Take hold of connector at wire and press it slightly into connector housing -left arrow-.

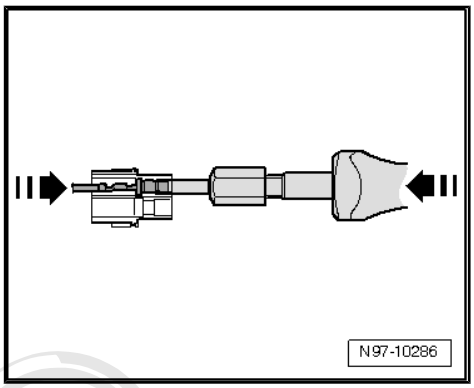

Note

Pressing connector towards connector housing causes retaining tabs of connector to be lifted off housing shoulder, enabling them to be released with release tool.

– At the same time, press release tool towards connector housing -right arrow- and pull released connector out of connector housing.

– After removing connector, pull release tool out of connector housing.

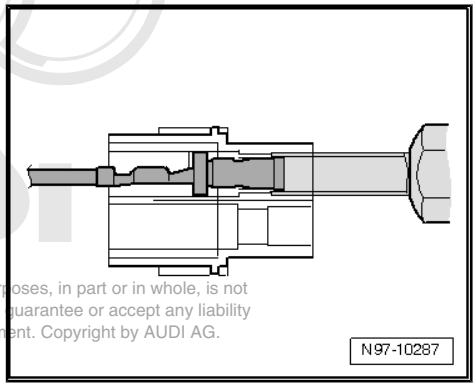

Protected by copyright. Copying for private or commercial purposes, in part or in whole, is not permitted unless authorised by AUDI AG. AUDI AG does not guarantee or accept any liability with respect to the correctness of information in this document. Copyright by AUDI AG.

cardiagn.com

3.5 Primary locking device with flat connector systems

Procedure

Note

If housing securing elements (secondary locking devices) are fitted, they must be released or removed using the specified tool before releasing the contacts *⇒ page 89* *.*

Flat connector system with one retaining tab:

– Insert appropriate release tool for connector housing in release slot at connector housing.

– Take hold of connector at wire and press it slightly into connector housing -arrow-.

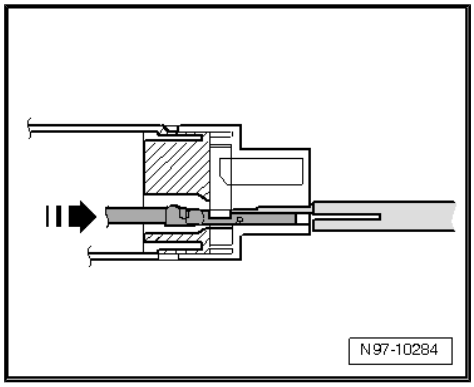

Note

Pressing connector towards connector housing causes retaining tab of connector to be lifted off housing shoulder, enabling it to be released with release tool.

– At the same time, press release tool towards connector housing and pull released connector out of connector housing -arrow-.

– After removing connector, pull release tool out of connector housing.

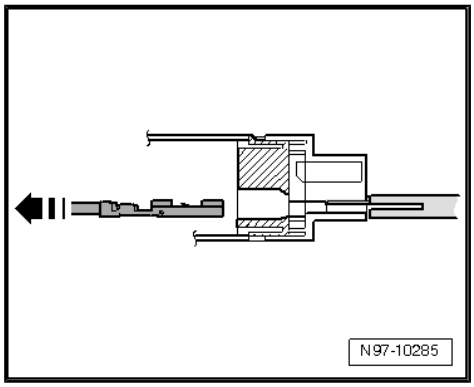

Protected by copyright. Copying for private or commercial purposes, in part or in whole, is not permitted unless authorised by AUDI AG. AUDI AG does not guarantee or accept any liability with respect to the correctness of information in this document. Copyright by AUDI AG.

Flat connector system with two retaining tabs:

– Insert appropriate release tool for connector housing in release slot at connector housing.

– Take hold of connector at wire and press it into connector housing -arrow- as far as stop.

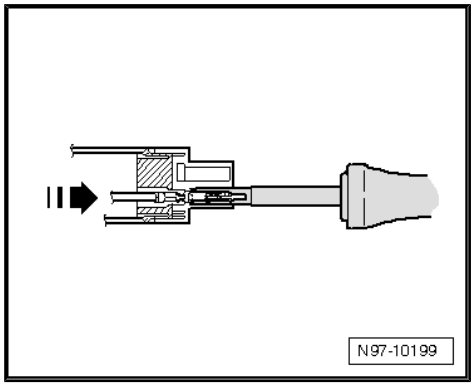

Note

Pressing connector towards connector housing causes retaining tabs of connector to be lifted off housing shoulder, enabling them to be released with release tool.

– At the same time, press release tool towards connector housing and pull released connector out of connector housing -arrow-.

– After removing connector, pull release tool out of connector housing.

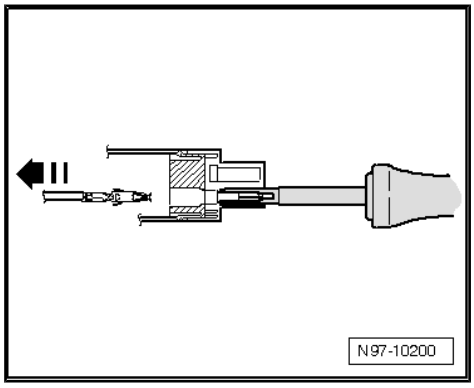

cardiagn.com

Asymmetrical:

– Insert appropriate release tool for connector housing in release slot at connector housing.

– Take hold of connector at wire and press it slightly into connector housing -arrow-.

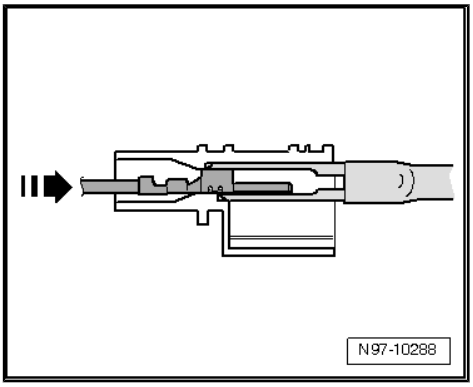

Note

Pressing connector towards connector housing causes retaining tabs of connector to be lifted off housing shoulder, enabling them to be released with release tool.

– At the same time, press release tool towards connector housing and pull released connector out of connector housing -arrow-.

– After removing connector, pull release tool out of connector housing.

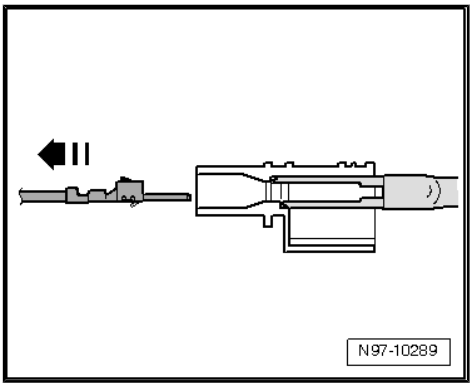

3.6 Primary locking device with special connector systems

Procedure

Note

If housing securing elements (secondary locking devices) are fitted, they must be released or removed using the specified tool before releasing the contacts *⇒ page 89* *.*

Fast-on contacts:

– Insert appropriate release tool for connector housing in release slot at connector housing -arrow-.

– Take hold of connector at wire and press it slightly into connector housing.

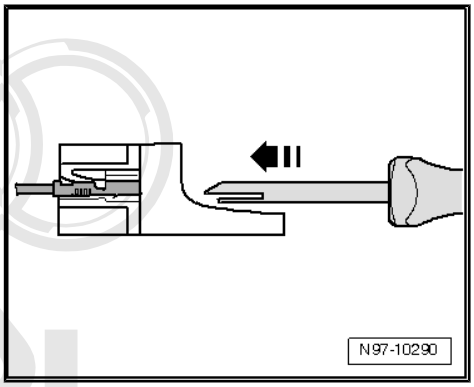

Note

Pressing connector towards connector housing causes retaining tabs of connector to be lifted off housing shoulder, enabling them to be released with release tool.

Protected by copyright. Copying for private or commercial purposes, in part or in whole, is not permitted unless authorised by AUDI AG. AUDI AG does not guarantee or accept any liability with respect to the correctness of information in this document. Copyright by AUDI AG.

cardiagn.com

– At the same time, press release tool towards connector housing and pull released connector out of connector housing -arrow-.
– After removing connector, pull release tool out of connector housing.

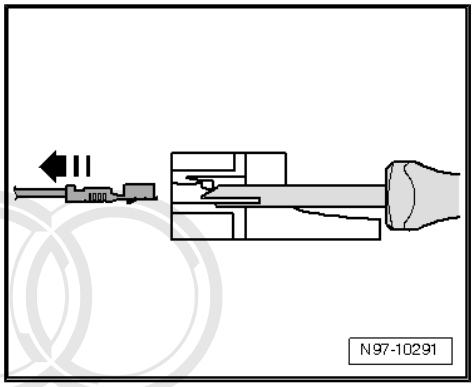

GT 150/280 connectors:

– Insert appropriate release tool for connector housing beneath retaining tab into connector housing.
– Press tool -arrow- in connector housing as far as it will go.

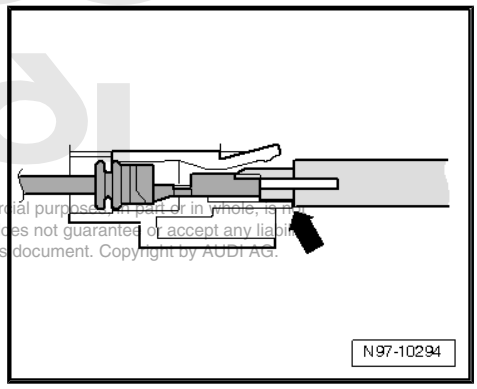

Protected by copyright. Copying for private or commercial purposes, in part or in whole, is not permitted unless authorised by AUDI AG. AUDI AG does not guarantee or accept any liability with respect to the correctness of information in this document. Copyright by AUDI AG.

• Connector is ejected from connector housing.
– After connector has been ejected, pull release tool out of connector housing.

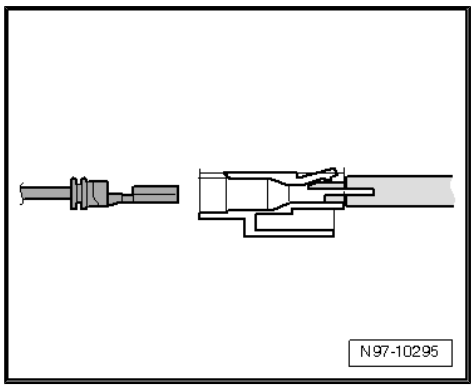

Contacts without retaining tabs:

– Insert release tool beneath retaining tab on connector housing.
– Lifting it slightly -arrow-, press release tool as far as stop.

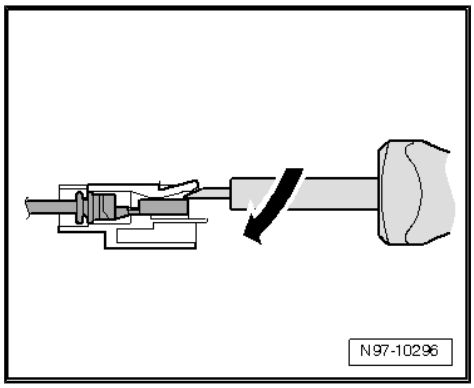

cardiagn.com

- Connector is ejected from connector housing.

– After removing connector, pull release tool out of connector housing.

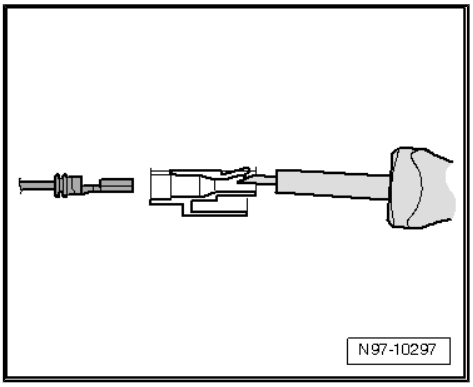

Protected by copyright. Copying for private or commercial purposes, in part or in whole, is not permitted unless authorised by AUDI AG. AUDI AG does not guarantee or accept any liability with respect to the correctness of information in this document. Copyright by AUDI AG.

cardiagn.com

4 Cleaning contact surfaces with contact surface cleaning set -VAS 6410-

Special tools and workshop equipment required

- Contact surface cleaning set -VAS 6410-

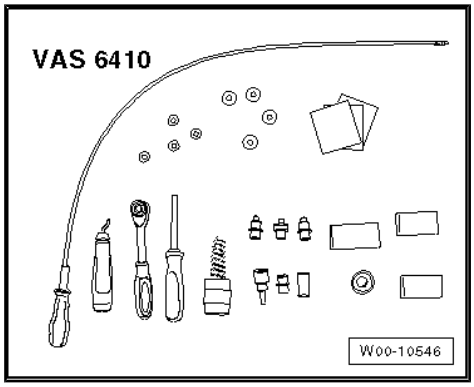

Note

- *The contact surface cleaning set -VAS 6410- can be used to service the areas around the connectors on wiring harnesses for screw connections in high current circuits (starting and charging current).*
- *The grey sanding pads can be used for slight impurities and "soft surfaces". The red sanding pads can be used for more severe impurities and "hard surfaces".*

4.1 Servicing wiring lugs

Note

To prevent the screw connection from cracking when the tightening torque has been exceeded due to a lack of friction in the thread, do not apply rust remover, contact spray or grease to the wiring lugs.

WARNING

Risk of injury.

- ***Observe warnings and safety regulations ⇒ page 1 .***

– Disconnect battery ⇒ Electrical system; Rep. gr. 27 .

Protected by copyright. Copying for private or commercial purposes, in part or in whole, is not permitted unless authorised by AUDI AG. AUDI AG does not guarantee or accept any liability with respect to the correctness of information in this document. Copyright by AUDI AG.

cardiagn.com

– Loosen cap nut and remove wiring lug from screw connection.
– Check wiring lug for corrosion, dirt, etc.
– Select appropriate adapter and corresponding sanding pad.

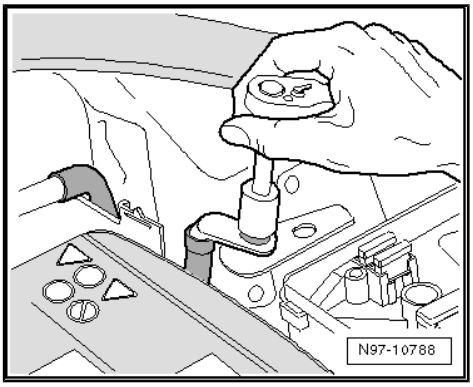

Note

As an alternative you can also use the sanding block.

Caution

Increased corrosion due to exposed copper layer.

- ***Do not sand away the tin plating to such an extent that the copper layer underneath becomes visible. Galvanic effects can cause increased corrosion.***

Note

As the thickness of the tin coating varies, it is necessary to clean the wiring lug in several stages and check it in between.

– Apply adapter to wiring lug and sand corrosion and dirt off by rotating adapter.
– Check wiring lug and if necessary re-sand.
– If necessary, remove sanding residue at wiring lug using deburrer.
– Screw wiring lug back on to specified torque.

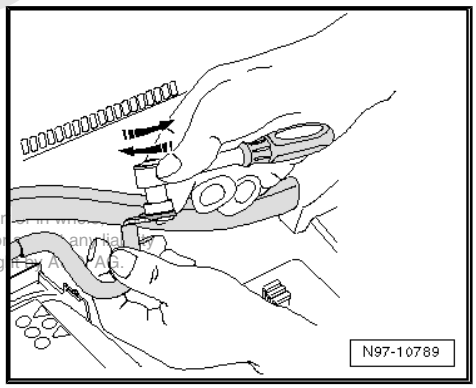

Protected by copyright. Copying for private or commercial purposes, in part or in whole, is not permitted unless authorised by AUDI AG. AUDI AG does not guarantee or assume any liability with respect to the correctness of information in this document. Copyright by AUDI AG.

Note

To ensure optimum contact, tighten all screw-type connections to specified torque after cleaning.

– Protect connection from corrosion by applying corresponding anti-corrosion agent ⇒ page 99 .
– Re-connect battery ⇒ Electrical system; Rep. gr. 27 .

4.2 Servicing screw connections

Note

To prevent the screw connection from cracking when the tightening torque has been exceeded due to a lack of friction in the thread, do not apply rust remover, contact spray or grease to the screw connections.

WARNING

Risk of injury.

- ***Observe warnings and safety regulations*** ***⇒ page 1*** ***.***

cardiagn.com

– Disconnect battery ⇒ Electrical system; Rep. gr. 27 .
– Loosen cap nut and remove wiring lug from screw connection.
– Check screw connection for corrosion, dirt, etc.
– Select appropriate adapter and corresponding sanding pad for screw connection.

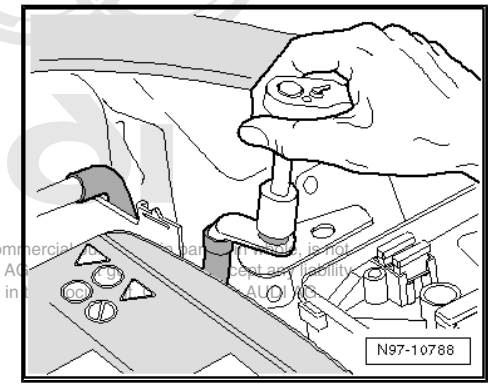

Caution

Increased corrosion due to exposed copper layer.

- *Do not sand away the tin plating to such an extent that the copper layer underneath becomes visible. Galvanic effects can cause increased corrosion.*

Protected by copyright. Copying for private or commercial purposes, in part or in whole, is not permitted unless authorised by AUDI AG. AUDI AG does not make any representation or warranty with respect to the correctness of information in this document. ©AUDI AG

Note

As the thickness of the tin coating varies, it is necessary to clean the screw connection in several stages and check it in between.

– Apply adapter to screw connection and sand corrosion and dirt off by rotating adapter.
– Check screw connection and if necessary re-sand.
– Bolt screw connection together with locating element (if fitted) and tighten to specified torque.

Note

To ensure optimum contact, tighten all screw-type connections to specified torque after cleaning.

– Protect connection from corrosion by applying corresponding anti-corrosion agent ⇒ page 99 .
– Re-connect battery ⇒ Electrical system; Rep. gr. 27 .

4.3 Cleaning battery terminal clamps and battery terminals

Note

To prevent the screw connection from breaking if the tightening torque is exceeded due to a lack of friction in the thread, do not apply rust remover, contact spray or grease to the battery terminal clamps.

WARNING

Risk of injury.

- *Observe warnings and safety regulations* ⇒ page 1 .

– Disconnect battery ⇒ Electrical system; Rep. gr. 27 .
– Check battery terminal clamp and battery terminal for corrosion or dirt.

cardiagn.com

– Clean battery terminal clamp with wire brush of battery terminal cleaner (rotary motion -arrows-).

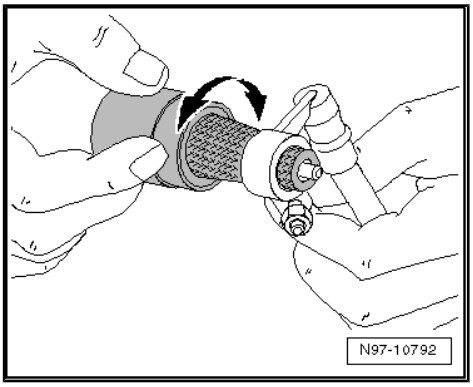

– Clean battery terminal using bottom end of battery terminal cleaner (rotary motion -arrows-)
– Re-connect battery ⇒ Electrical system; Rep. gr. 27 (observe specified torque for battery terminal clamps).

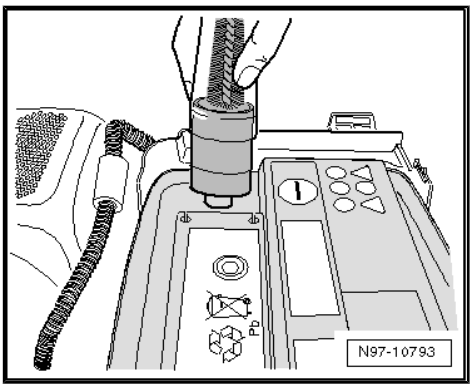

Note

To ensure optimum contact, tighten all screw-type connections to specified torque after cleaning.

4.4 Corrosion protection

Caution

Risk of corrosion.

- ***A lack of corrosion protection will ultimately cause damage to the vehicle's electrical system.***

Note

- *All screw connections must be tightened to the specified torque.*
- *To protect from corrosion, use hose attached to can of anti-corrosion agent.*
- *Use anti-corrosion wax for cold sections and cavity sealing agents for hot sections.*
- *Capillary attraction causes anti-corrosion agent to be drawn to the affected areas automatically.*

Protected by copyright. Copying for private or commercial purposes, in part or in whole, is not permitted unless authorised by AUDI AG. AUDI AG does not guarantee or accept any liability with respect to the correctness of information in this document. Copyright by AUDI AG.

cardiagn.com

– Hold injector underneath wiring lug and spray all around terminal.
– Hold injector above wiring lug and spray terminal and wiring lug (all around).

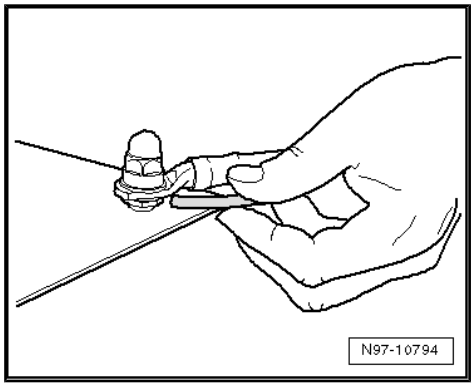

cardiagn.com

Protected by copyright. Copying for private or commercial purposes, in part or in whole, is not permitted unless authorised by AUDI AG. AUDI AG does not guarantee or accept any liability with respect to the correctness of information in this document. Copyright by AUDI AG.

5 Repairing aerial wires

A repair method has been developed for repairing aerial wires. Instead of a complete aerial wire, connecting wires of different lengths and various adapter wires are now available as replacement parts.

Replacement parts ⇒ Electronic parts catalogue; Special catalogue „Electrical connecting elements"; Accessories; Sub-group 35 from chart 035-20 onwards .

Note

- *Do not repair aerial wires. The wiring must be renewed using connecting wires and adapter wires (available as genuine replacement parts).*
- *These genuine replacement parts are suitable for all wire cross-sections and aerial wires which have to be renewed.*
- *It is not possible to renew individual aerial connectors during repair work.*
- *The replacement wires can be used for all previously fitted wiring cross-sections on all Audi models.*
- *All adapter wires and connecting wires are suitable for all transmission and reception signals.*
- *The repair method can also be used for testing and service installation purposes (e.g. retrofitting).*

Protected by copyright. Copying for private or commercial purposes, in part or in whole, is not permitted unless authorised by AUDI AG. AUDI AG does not guarantee or accept any liability with respect to the correctness of information in this document. Copyright by AUDI AG.

Special tools and workshop equipment required

- -1- Adapter wire for connection to radio; length: approx. 30 cm

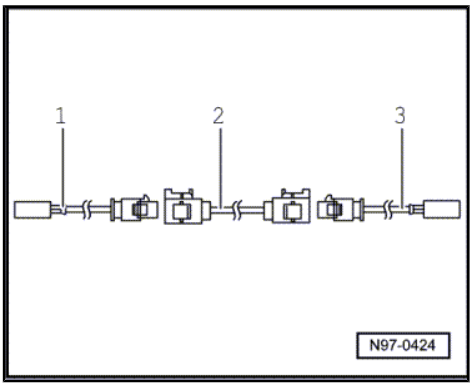

- -2- Connecting wire; various lengths available
- -3- Adapter wire for connection to aerial; length: approx. 30 cm

Procedure

Example: Aerial wire from radio to aerial defective

– Unplug connectors of defective aerial wire from units.

– Determine routing of defective aerial wire in vehicle and measure out overall length of aerial connection to be replaced in vehicle.

cardiagn.com

- Total length of aerial connection = length of required adapter wires -1 and 3- plus connecting wire -2-.

– Subtract 60 cm from total length of aerial connection measured to calculate required length of connecting wire needed.

– Obtain necessary adapter wires and connecting wire (with calculated length) as genuine replacement parts ⇒ Electronic parts catalogue .

– Cut connectors off defective aerial wire.

- Leave rest of defective aerial wire in vehicle.

– Connect adapter wires to units in vehicle.

– Fit connectors with a piece of foam sheathing to prevent rattling noise.

– Lay and secure connecting wire parallel to old aerial wire.

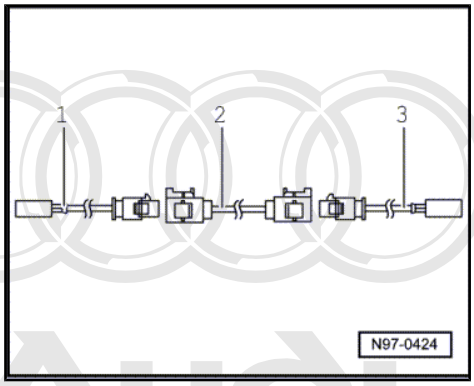

Protected by copyright. Copying for private or commercial purposes, in part or in whole, is not permitted unless authorised by AUDI AG. AUDI AG does not guarantee or accept any liability with respect to the correctness of information in this document. Copyright by AUDI AG.

Note

Aerial wires must not be kinked or bent excessively. Bending radius must not be less than 50 mm.

– Attach connecting wire to adapter wires.

– To prevent rattling noise, apply a suitable piece of foam sheathing to aerial connectors.

– Check operation.

cardiagn.com

6 Fibre optic cables

Caution

Fibre optic cables must not be kinked or excessively bent (minimum bending radius 25 mm).

6.1 Repairing fibre optic cables

Special tools and workshop equipment required

- Repair set for fibre optic cables -VAS 6223-

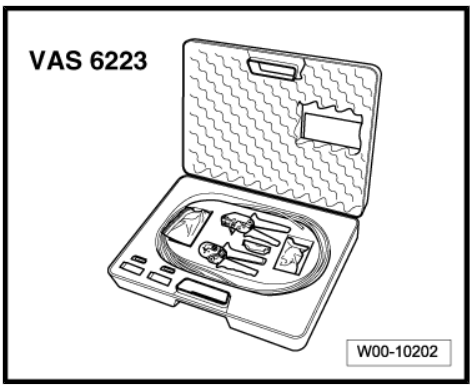

- Cutting pliers -VAS 6228-

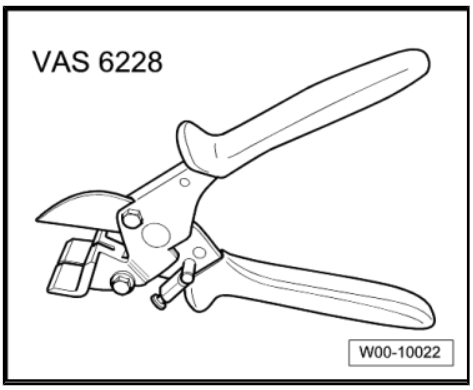

Checking remaining cut indicator

– Start by checking remaining cut indicator:

- Cutting unit of pliers for fibre optic cable -VAS 6223/1- can be used for approx. 1,260 cuts. The cutter is turned for each further cut.
- The remaining cut indicator -arrow- shows the last 150 cuts available.
- Once no further cuts are available the cutting unit is blocked. It must then be renewed ⇒ Operating instructions for pliers for fibre optic cable -VAS 6223/1- .

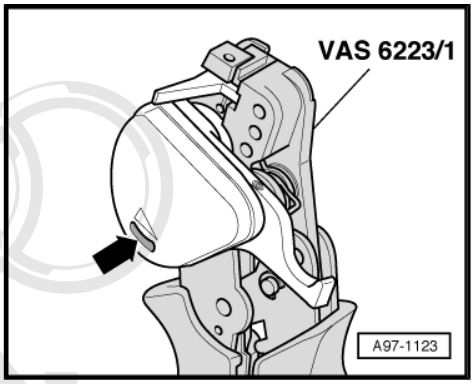

Protected by copyright. Copying for private or commercial purposes, in part or in whole, is not permitted unless authorised by AUDI AG. AUDI AG does not guarantee or accept any liability with respect to the correctness of information in this document. Copyright by AUDI AG.

cardiagn.com

Preparing pliers for fibre optic cable -VAS 6223/1- for use

– Release transport safeguard on cutter by slackening off hexagon socket head bolt -arrow-.

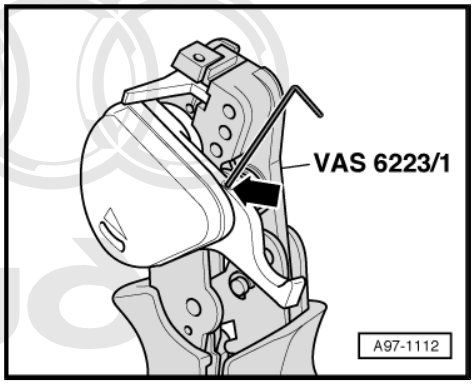

Protected by copyright. Copying for private or commercial purposes, in part or in whole, is not permitted unless authorised by AUDI AG. AUDI AG does not guarantee or accept any liability with respect to the correctness of information in this document. Copyright by AUDI AG.

Cutting fibre optic cable to length

– Establish length of fibre optic cable required.

– Open pliers for fibre optic cable -VAS 6223/1- and insert fibre optic cable -1- in cutting point.

– Close cutting pliers to cut fibre optic cable to length.

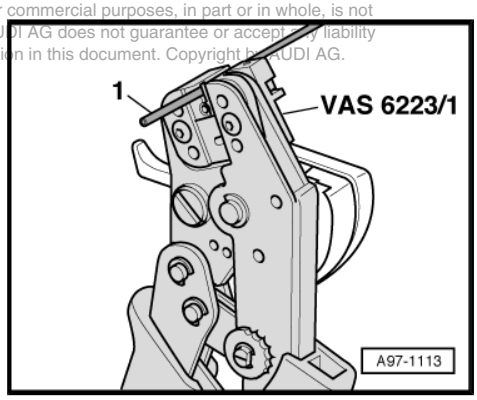

Stripping

– Open pliers for fibre optic cable -VAS 6223/1- .

• Stripping lever must be in lower position -arrow-.

– Insert fibre optic cable -1- in stripper unit.

• Fibre optic cable must be flush with back of cutting pliers.

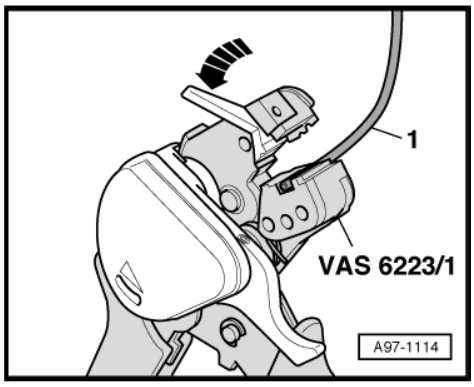

– Close pliers for fibre optic cables -VAS 6223/1- as far as fixed stop and keep closed.

– Swivel up stripping lever -arrow-.

– Open cutting pliers and take out fibre optic cable -1-.

– Detach separated section of insulation from fibre optic cable.

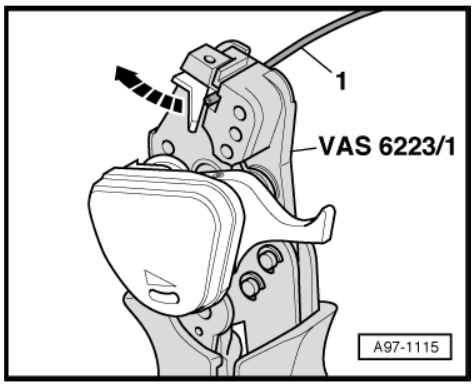

cardiagn.com

Precision cutting (cutting end face of fibre optic cable)

– Insert fibre optic cable -1- in cutting point.

• Insulation must make contact with cutting point stop -arrow-.

– Close pliers for fibre optic cable -VAS 6223/1- .

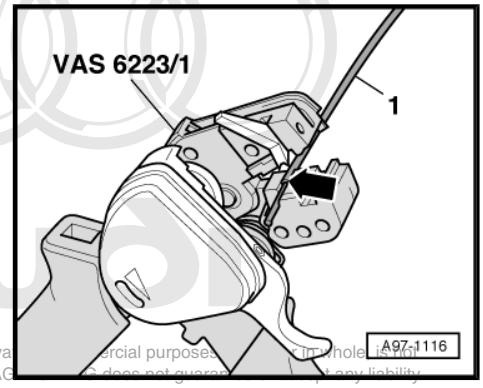

Protected by copyright. Copying for priva ercial purposes in whole or in part is not permitted unless authorised by AUDI AG. AUDI AG does not guarantee or assume any liability with respect to the correctness of information in this document. Copyright by AUDI AG.

– Press down cutting unit -arrow-.

– Open pliers for fibre optic cable -VAS 6223/1- and take out fibre optic cable -1-.

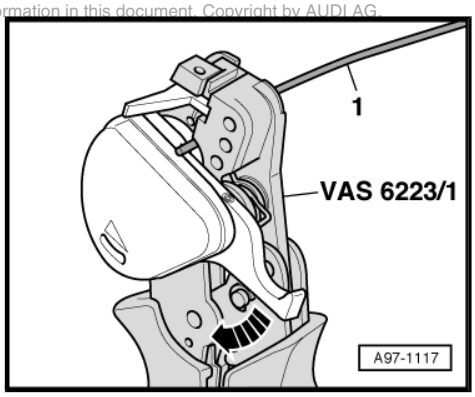

Note

Fibre optic cable should only be placed on an absolutely clean surface.

Activating transport safeguard

– Close pliers for fibre optic cable -VAS 6223/1- .

– Secure hexagon socket head bolt -arrow- for transportation safeguard at cutter.

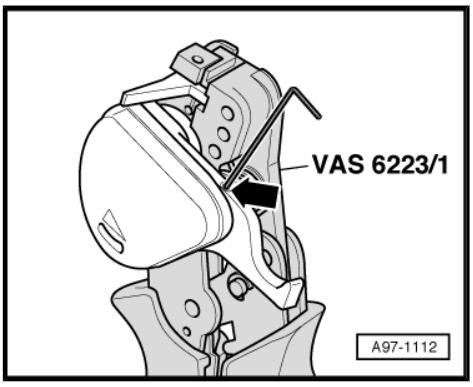

Attaching brass pin contact to fibre optic cable

– Open locking lever on pliers for fibre optic cable -VAS 6223/2- -arrow 1- and -arrow 2-.

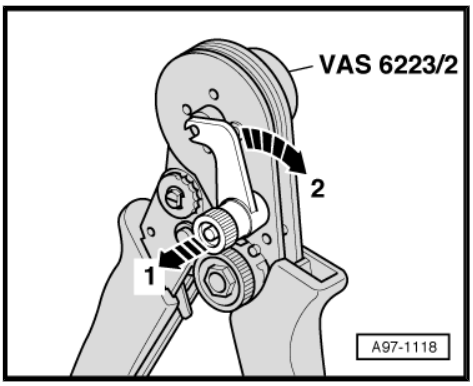

cardiagn.com

– Insert brass pin contact -1- in mounting.
– Close locking lever on pliers for fibre optic cable -VAS 6223/2- -arrow-.

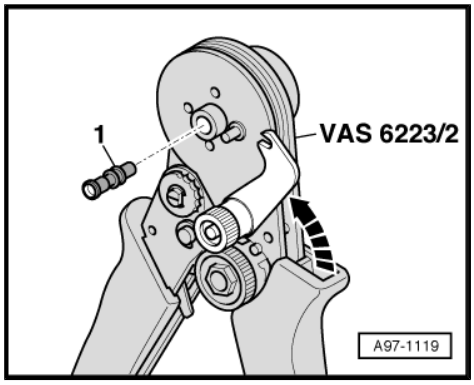

– Slide fibre optic cable -2- into brass pin contact -1- as far as spring-loaded stop.
– Push in fibre optic cable further as far as fixed stop and close pliers for fibre optic cable -VAS 6223/2- .
– Open pliers for fibre optic cable and take out fibre optic cable with brass pin contact.

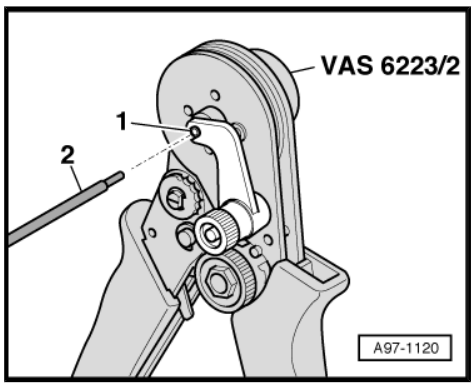

Caution

Fibre optic cables must not be kinked or excessively bent (minimum bending radius 25 mm).

– Check proper attachment of brass pin contact -2- to fibre optic cable -1-.
- There must be 4 crimping points visible on brass pin.
- It should not be possible to detach brass pin contact from fibre optic cable by hand.
- End face of fibre optic cable is located 0.01 ... 0.1 mm behind brass pin contact (visual inspection).

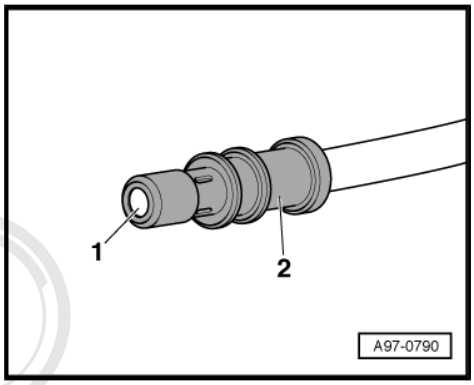

Note

◆ *Plug-in couplings are available for connection of fibre optic cable ⇒ Electronic parts catalogue .*

◆ *For fitting new fibre optic cable in wiring harness connector, refer to ⇒ page 107 .*

Protected by copyright. Copying for private or commercial purposes, in part or in whole, is not permitted unless authorised by AUDI AG. AUDI AG does not guarantee or accept any liability with respect to the correctness of information in this document. Copyright by AUDI AG.

cardiagn.com

Fitting corrugated tube onto fibre optic cable

– Cut corrugated tube to appropriate length.

- Use cutting pliers -VAS 6228- or a sharp knife for cutting.
- Do NOT use side-cutters to cut through the corrugated tube.
- The corrugated tube must be cut at the top of the corrugation -arrow- and not at the bottom.

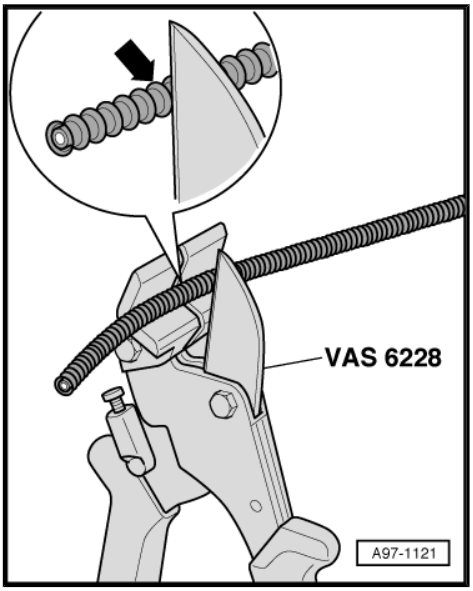

– Insert fibre optic cable in pliers for corrugated tube installation -VAS 6223/10- as shown.

– Apply pliers for corrugated tube installation at slot in corrugated tube.

– Slide pliers for corrugated tube installation along slot on circumference of corrugated tube. This will insert the fibre optic cable into the corrugated tube.

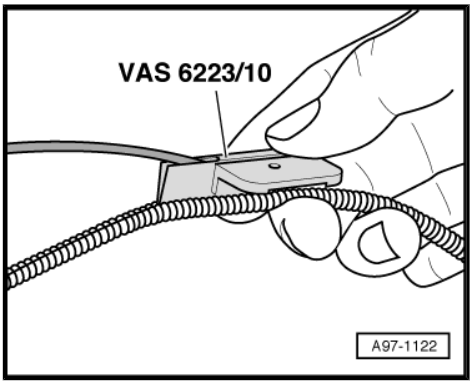

6.2 Separating fibre optic cable from wiring harness connector

Removing

– Unplug connector for fibre optic cable from appropriate control unit.

– Release catch in connector for fibre optic cable -arrow-.

Protected by copyright. Copying for private or commercial purposes, in part or in whole, is not permitted unless authorised by AUDI AG. AUDI AG does not guarantee or accept any liability with respect to the correctness of information in this document. Copyright by AUDI AG.

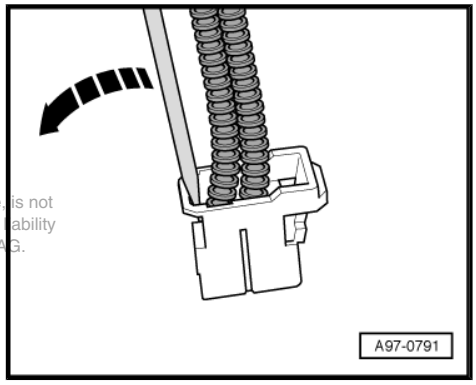

cardiagn.com

– Pull basic module -2- for fibre optic cable out of connector housing -1-.

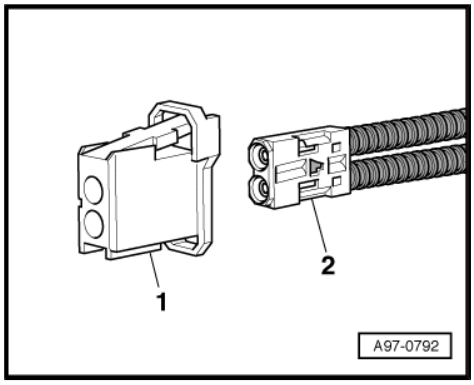

Caution

- *Mark assignment of fibre optic cable -5- to corresponding sockets in module -1- with coloured dots.*
- *Pay attention to arrows -3- on basic module for „IN“ and „OUT“ assignment.*

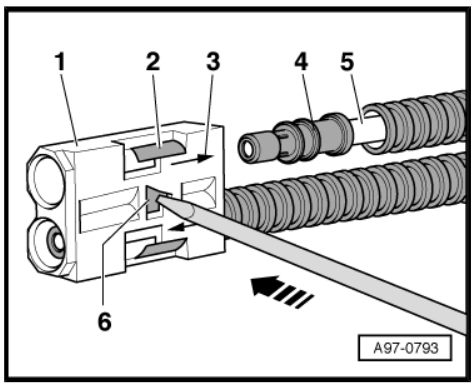

– Release secondary catch -6- (blue pin) using a small screwdriver -arrow-.

– Release retaining tab -2- and pull fibre optic cable -5- with brass pin -4- out of module -1-.

Installing

Installation is carried out in the reverse order; note the following:

– Fit fibre optic cable in accordance with markings.

Note

- *Seal off open connector plug -2- for fibre optic cable with protective cap for cable connector -VAS 6223/9- -item 1-.*
- *Protective cap prevents contamination of or mechanical damage to end face of fibre optic cable which would impair light transmission.*

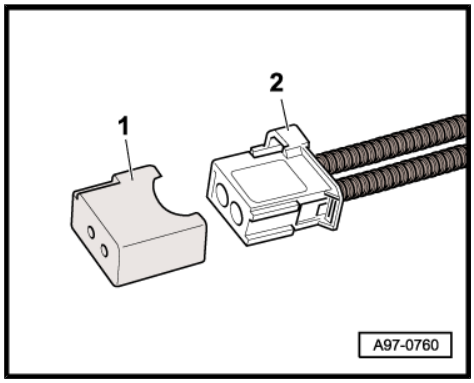

Protected by copyright. Copying for private or commercial purposes, in part or in whole, is not permitted unless authorised by AUDI AG. AUDI AG does not guarantee or accept any liability with respect to the correctness of information in this document. Copyright by AUDI AG.

cardiagn.com

7 Vehicle diagnostic, testing and information systems

7.1 Notes on operation and safety

Audi A1, Audi A2, Audi A3, Audi A4, Audi A4 Cabriolet, Audi A5, Audi A6, Audi A7, Audi A8, Audi Q5, Audi Q7

WARNING

Risk of accident due to driver distraction and if test equipment is not secured safely.

Risk of injury if front passenger's airbag is triggered in an accident.

- *Operating test equipment when driving causes a distraction.*
- *High risk of injury if test equipment is not secured safely.*
- ♦ *Always secure test equipment to rear seat with a strap; it must be operated from there by a second person.*

copyright. Copying for private or commercial purposes, in part or in whole, is not permitted unless authorised by AUDI AG. AUDI AG does not guarantee or accept any liability with respect to the correctness of information in this document. Copyright by AUDI AG.

Audi TT and Audi R8

WARNING

Risk of accident due to driver distraction and if test equipment is not secured safely.

Risk of injury if front passenger's airbag is triggered in an accident.

- *Operating test equipment when driving causes a distraction.*
- *High risk of injury if test equipment is not secured safely.*
- ♦ *Move front passenger's seat back as far as possible.*
- ♦ *Only use the vehicle diagnostic and service information system -VAS 5052 A- or the diagnosis system -VAS 5053- .*
- ♦ *The test equipment -1- must be placed flat on the front passenger's lap as shown and operated by this person.*

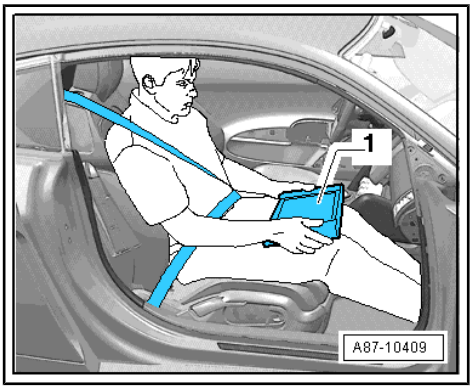

Note

- ♦ *All adaption and coding procedures etc. can be performed with a vehicle diagnostic tester.*
- ♦ *The necessary work instructions can be accessed via „Guided Fault Finding“ and „Guided Functions“.*

cardiagn.com

7.2 Connecting vehicle diagnostic tester

Note

Observe current operating instructions for vehicle diagnostic tester (displayed after selecting `Administration` *and* `User handbook`*).*

Special tools and workshop equipment required

- ♦ Vehicle diagnostic tester with corresponding diagnostic cable

Procedure

- Apply parking brake or operate electromechanical parking brake.
- Shift gear lever to neutral position or selector lever to position „P“ or „N“.
- Connect vehicle diagnostic tester to diagnostic connection -arrow- with diagnostic cable (ignition switched off).
- When using remote diagnosis head -VAS 5054 A- or diagnosis interface -VAS 5055- refer to ⇒ User handbook (installing and operating) .
- Switch on ignition.
- Switch off all electrical equipment.

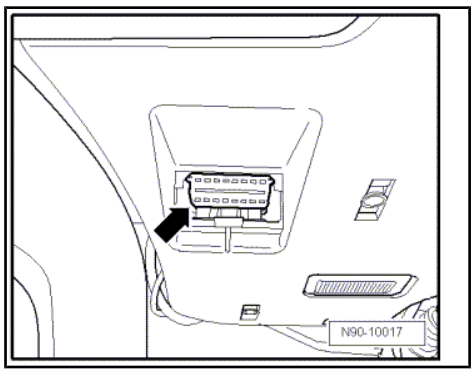

Note

If a fault message appears on the screen of the vehicle diagnostic tester, refer to ⇒ Operating instructions for the appropriate vehicle diagnostic tester.

cardiagn.com

Protected by copyright. Copying for private or commercial purposes, in part or in whole, is not permitted unless authorised by AUDI AG. AUDI AG does not guarantee or accept any liability with respect to the correctness of information in this document. Copyright by AUDI AG.