2000-01 ENGINE COOLING

Cooling System Specifications & Drive Belt Routing - All Models

MODEL IDENTIFICATION

MODEL IDENTIFICATION - CARS

Body Code (1)	Model
"C"	Park Avenue
"E"	Eldorado
"F"	Camaro & Firebird
"G"	Aurora & Riviera
"H"	Bonneville, & LeSabre
"J"	Cavalier & Sunfire
"K"	DeVille & Seville
"M"	Metro
"N"	Alero, Grand Am & Malibu
"S"	Prizm
"V"	Catera
"W"	Century, Grand Prix, Impala, Intrigue, Lumina, Monte Carlo & Regal
"Y"	Corvette
"Z"	Saturn
(1) Vehicle body code is fourth character of VIN.	

MODEL IDENTIFICATION - TRUCKS

Series (1)	Model
"A"	2WD Aztek
"B"	4WD Aztek
"C"	2WD Pickup, Sierra, Silverado, Suburban, Tahoe & Yukon
"E"	2WD Tracker
"G"	Cutaway, Express, G-Van & Savana
"J"	4WD Tracker
"K"	4WD Pickup, Sierra, Silverado, Suburban, Tahoe, Yukon & AWD Escalade
"L"	AWD Astro & Safari

"M"	2WD Astro & Safari
"S"	2WD Blazer, Envoy, Jimmy, Pickup & Sonoma
"T"	4WD Blazer, Bravada, Envoy, Jimmy, Pickup & Sonoma
"U"	Montana, Silhouette, Trans Sport & Venture
(1) Vehicle series is fifth character of VIN.	

SPECIFICATIONS

CAUTION: When battery is disconnected, vehicle computer and memory systems may lose memory data. Driveability problems may exist until computer systems have completed a relearn cycle. See COMPUTER RELEARN PROCEDURES article in GENERAL INFORMATION before disconnecting battery.

BELT ADJUSTMENT

BELT ADJUSTMENT - CARS

Application	Specification
Serpentine Belt	(1) 30-50 Lbs. (13.6-22.7 kg.)
	Deflection @ 22 Lbs. (10.0 kg.)
Except Serpentine Belt	
Metro	
A/C Compressor & Power Steering Pump	.28-.35" (7.0-9.0 mm)
Generator	.24-.31" (6-8 mm)
(1) Serpentine belt is automatically adjusted by tensioner. Tension is checked with belt tension gauge. If tension is not as specified, check belt length and tensioner operating range. Replace belt or tensioner as necessary.	

BELT ADJUSTMENT - TRUCKS

Application	(1) Lbs. (kg)
All Models	(1)
(1) Serpentine belt tension is maintained automatically by a spring-tensioned idler pulley. No adjustment is necessary.	

COOLING SYSTEM SPECIFICATIONS

COOLING SYSTEM SPECIFICATIONS - CARS

Application	Specification
Coolant Replacement Interval	
Except Metro & Prizm	60 Months Or 150,000 Miles
Metro	30 Months Or 30,000 Miles
Prizm	24 Months Or 30,000 Miles
Coolant Capacity (1)	
1.0L	3.9 Qts. (4.1L)
1.3L	
M/T	4.9 Qts. (4.4L)
A/T	5.0 Qts. (4.7L)
1.8L	
Prizm	
A/T	6.0 Qts. (5.7L)
M/T	6.1 Qts. (5.8L)
1.9L	7.0 Qts. (6.6L)
2.2L	
"J" Body	9.6 Qts. (9.1L)
"Z" Body	7.4 Qts. (7.0L)
2.4L	
"J" Body	9.9 Qts. (9.4L)
"N" Body	11.3 Qts. (10.7L)
3.0L	
Except "Z" Body	10.0 Qts. (9.5L)
"Z" Body	7.8 Qts. (7.3L)
3.1L	
"N" Body	13.1 Qts. (12.4L)
"W" Body	11.0 Qts. (10.4L)
3.4L	13.6 Qts. (12.9L)
3.5L	10.0 Qts. (9.5L)
3.8L Except "F", "H" & "W" Bodies	13.0 Qts. (12.3L)
"F" Body	
A/T	12.3 Qts. (11.6L)

M/T	12.5 Qts. (11.8L)
"H" Body	10 Qts. (9.5L)
"W" Body	5.3 Qts. (5.0L)
4.0L	13.0 Qts. (12.3L)
4.6L Except "E" & "K" Body	10.7 Qts. (10.0L)
"E" & "K" Bodies	12.5 Qts. (11.8L)
5.7L	
"F" Body	
A/T	15.1 Qts. (14.3L)
M/T	15.3 Qts. (14.5L)
"Y" Body	
A/T	12.3 Qts. (11.6L)
M/T	12.6 Qts. (11.9L)
Pressure Cap	
"F" Body	18 psi
Metro	13 psi
Prizm	13 psi
Saturn	15 psi
All Others	(2) 15 psi
Thermostat	
Metro	
Starts To Open	190-197°F (88-92°C)
Fully Opens	212-221°F (100-105°C)
Prizm	
Starts To Open	176-183°F (80-84°C)
Fully Opens	203°F (95°C)
Saturn	
Starts To Open	182-190°F (83-88°C)
Fully Open	212-222°F (100-106°C)
All Others	
Starts To Open	189°F (87°C)
Fully Opens	207°F (97°C)

(1) Specification is approximate and includes heater capacity.

(2) Or specification stamped on cap.

COOLING SYSTEM SPECIFICATIONS - TRUCKS

Application	Specification
Coolant Replacement Interval	
Except Tracker	60 Months Or 150,000 Miles
Tracker	30 Months Or 30,000 Miles
Pressure Cap	
Except Tracker	15 psi
Tracker	13 psi
Thermostat Opens	
Except Tracker	
Starts	188°F (87°C)
Fully Open	206°F (97°C)
Tracker	
Starts	179°F (82°C)
Fully Open	203°F (95°C)
Coolant Capacity (1)	
1.6L	6.9 Qts. (6.5L)
2.0L	5.8 Qts. (5.5L)
2.2L	
A/T	9.7 Qts. (9.2L)
M/T	9.9 Qts. (9.4L)
2.5L	8.5 Qts. (8.0L)
3.4L	
Standard	
With Rear Heater	11.9 Qts. (11.3L)
Without Rear Heater	9.6 Qts. (9.0L)
Heavy Duty	
With Rear Heater	13.2 Qts. (12.5L)
Without Rear Heater	10.5 Qts. (9.9L)
4.3L	
"C" & "K" Series	
A/T	12.7 Qts. (12.0L)
M/T	13.0 Qts. (12.3L)
"G" Series	

With Rear Heater	14.0 Qts. (13.2L)
Without Rear Heater	11.0 Qts. (10.5L)
"L" & "M" Series	
With Rear Heater	16.5 Qts. (15.5L)
Without Rear Heater	14.3 Qts. (12.8L)
"S" & "T" Series	
A/T	11.7 Qts. (11.1L)
M/T	11.9 Qts. (11.3L)
4.8L	
A/T	13.4 Qts. (12.7L)
M/T	13.7 Qts. (13.0L)
5.0L	
With A/C	20.0 Qts. (18.9L)
Without A/C	17.0 Qts. (16.0L)
5.3L	
With A/C	14.9 Qts. (14.1L)
With Rear A/C	15.8 Qts. (15.0L)
Without A/C	13.4 Qts. (12.7L)
5.7L	
Standard	
With A/C	20.0 Qts. (19.0L)
Without A/C	17.5 Qts. (16.6L)
Heavy Duty	
With A/C	27.0 Qts. (25.5L)
Without A/C	26.4 Qts. (25.0L)
6.0L	
A/T	
With Oil Cooler	14.4 Qts. (13.6L)
Without Oil Cooler	14.8 Qts. (14.0L)
M/T	
With Oil Cooler	14.8 Qts. (14.0L)
Without Oil Cooler	15.2 Qts. (14.4L)
6.5L	27.5 Qts. (26.0L)
6.6L	

A/T	20.3 Qts (19.2L)
M/T	20.7 Qts. (19.6L)
7.4L	
Standard	
With A/C	27.5 Qts. (26.0L)
Without A/C	25.0 Qts. (23.7L)
Heavy Duty	
With A/C	28.5 Qts. (27.0L)
Without A/C	26.4 Qts. (25.0L)
8.1L	
A/T	20.7 Qts. (19.6L)
M/T	21.1 Qts. (20.0L)
(1) Specification is approximate and includes heater capacity.	

SERPENTINE BELT ROUTING & ALIGNMENT

NOTE: For serpentine belt routing, see underhood label or refer to appropriate illustrations. See Fig. 1 -Fig. 24 .

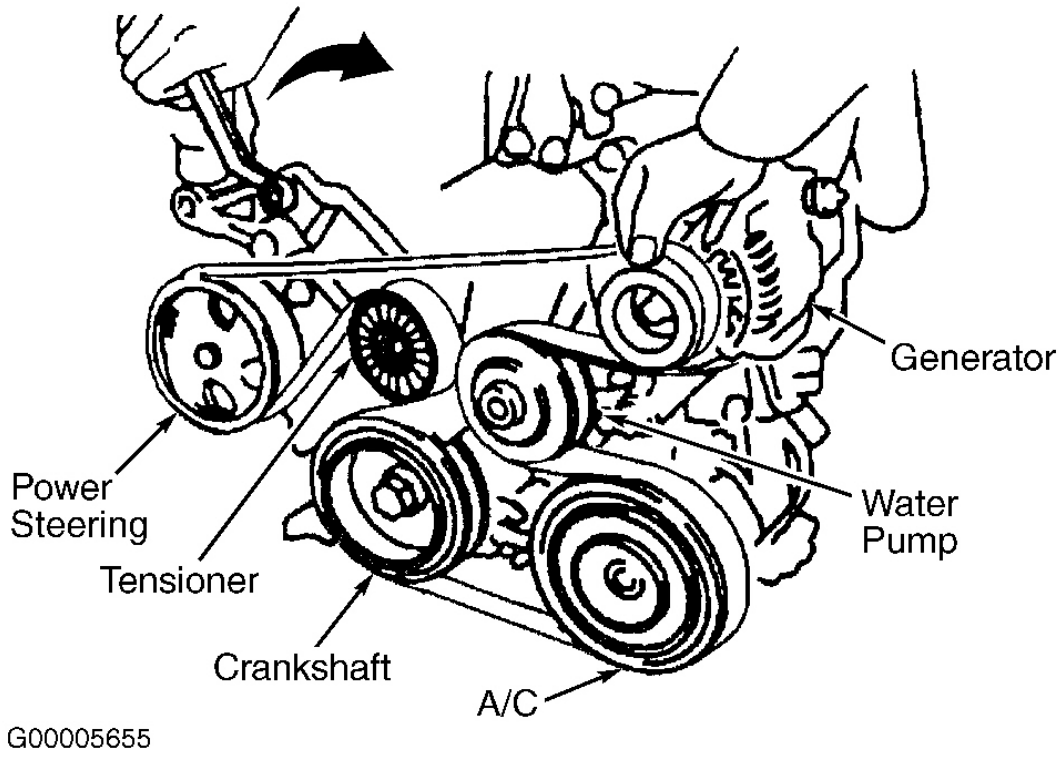

Fig. 1: Serpentine Belt Routing (1.8L Prizm)
Courtesy of GENERAL MOTORS CORP.

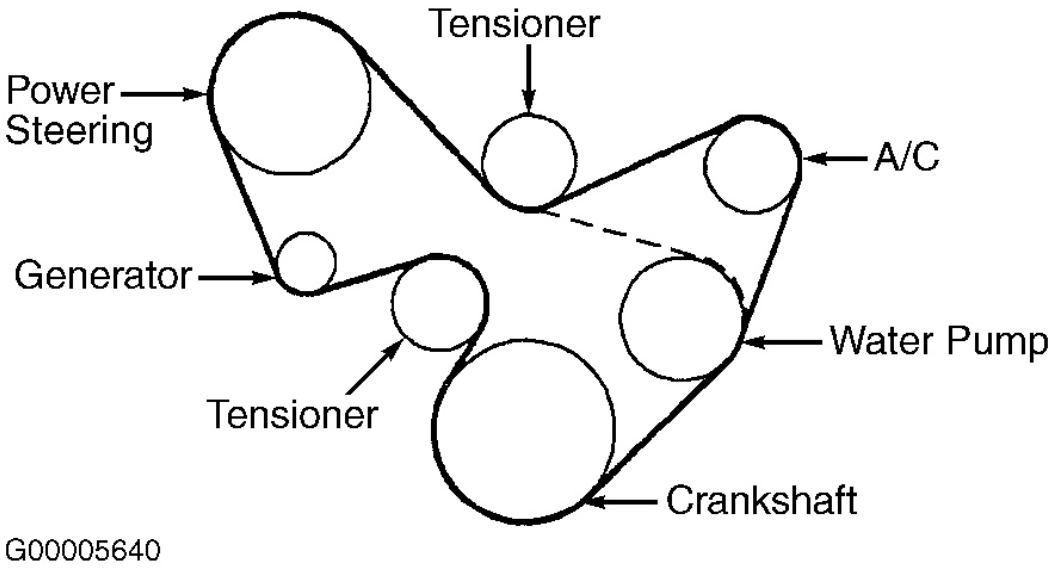

Fig. 2: Serpentine Belt Routing (1.9L Saturn DOHC)
Courtesy of GENERAL MOTORS CORP.

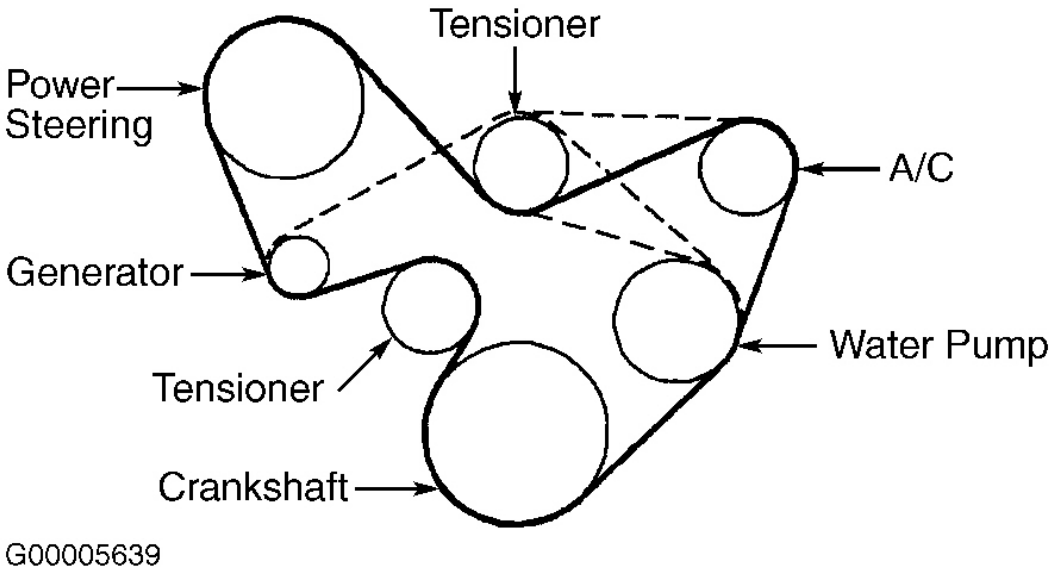

Fig. 3: Serpentine Belt Routing (1.9L Saturn SOHC)
Courtesy of GENERAL MOTORS CORP.

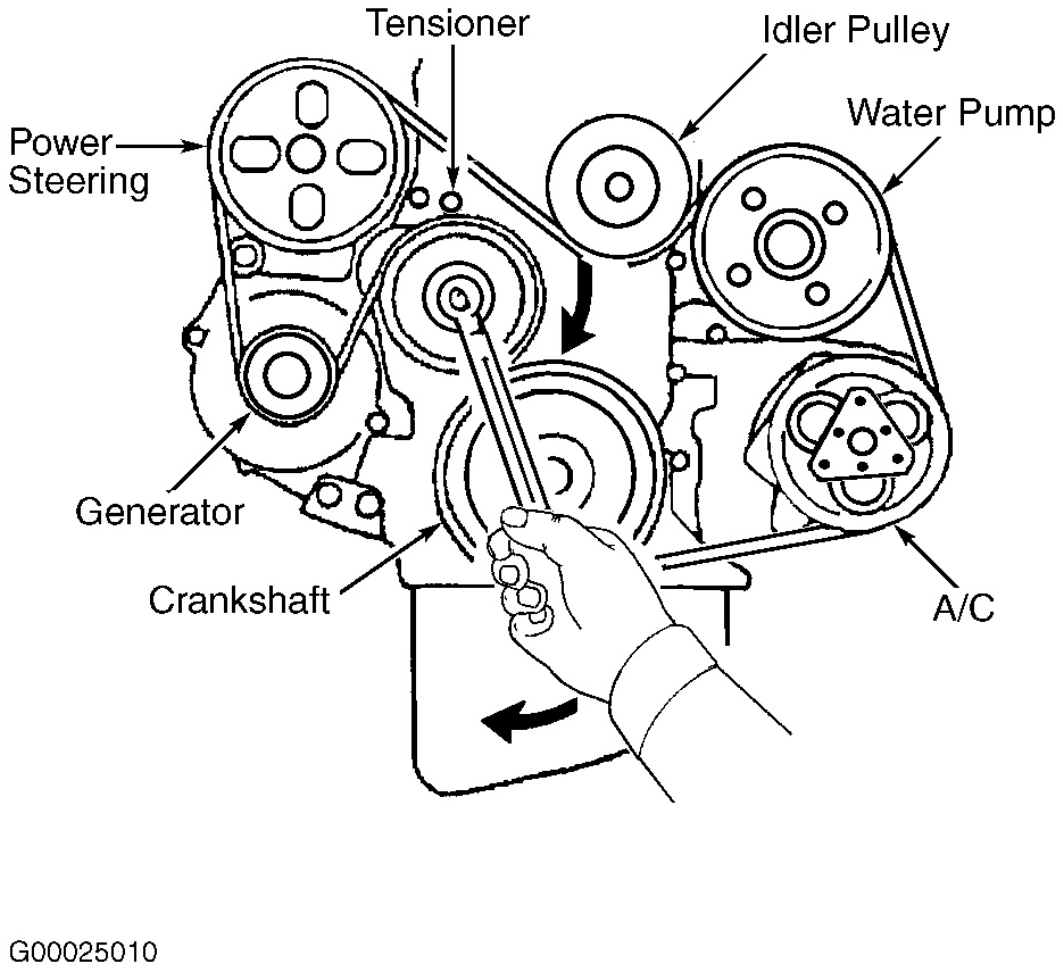

Fig. 4: Serpentine Belt Routing (2.0L Tracker)
Courtesy of GENERAL MOTORS CORP.

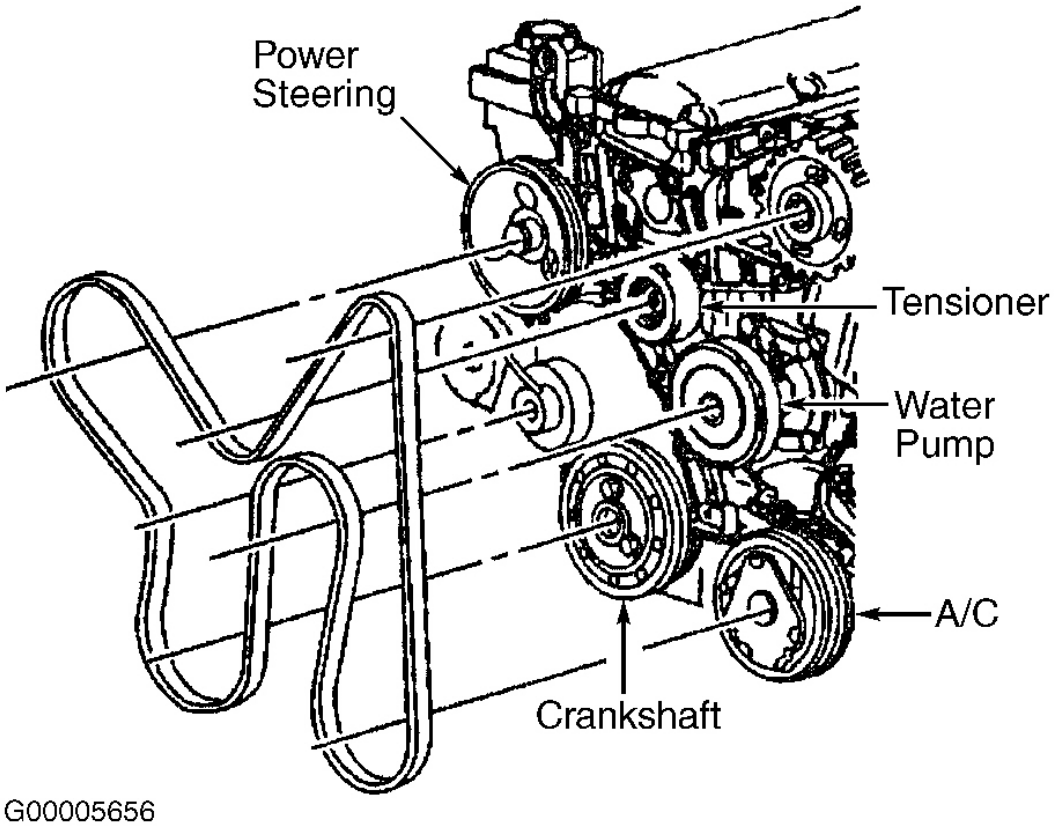

Fig. 5: Serpentine Belt Routing (2.2L "J" Body - With A/C)
Courtesy of GENERAL MOTORS CORP.

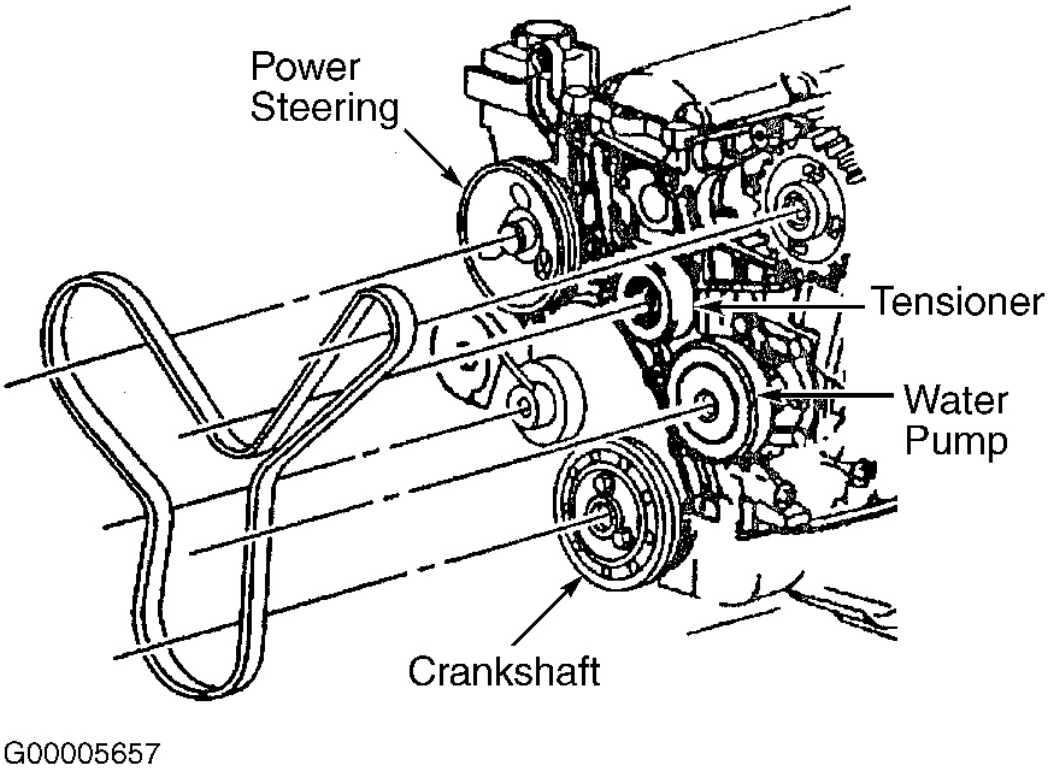

Fig. 6: Serpentine Belt Routing (2.2L "J" Body - Without A/C)
Courtesy of GENERAL MOTORS CORP.

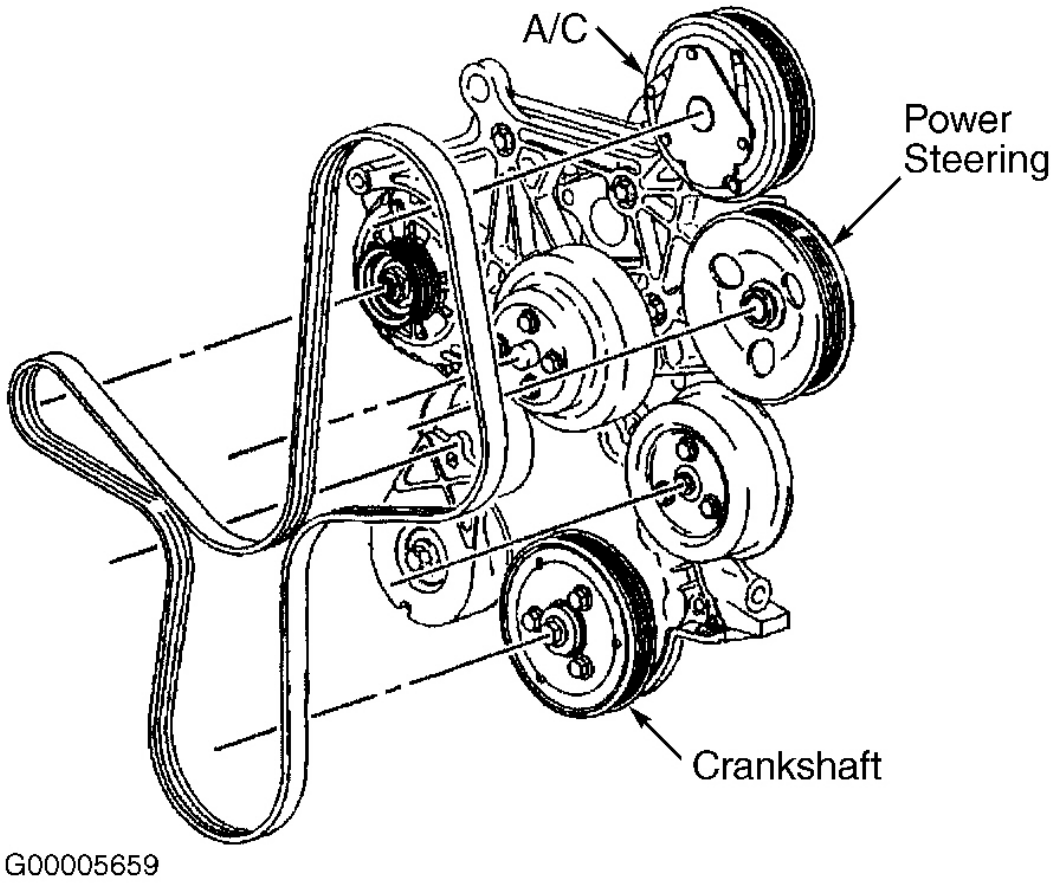

Fig. 7: Serpentine Belt Routing (2.2L "S" Series)
Courtesy of GENERAL MOTORS CORP.

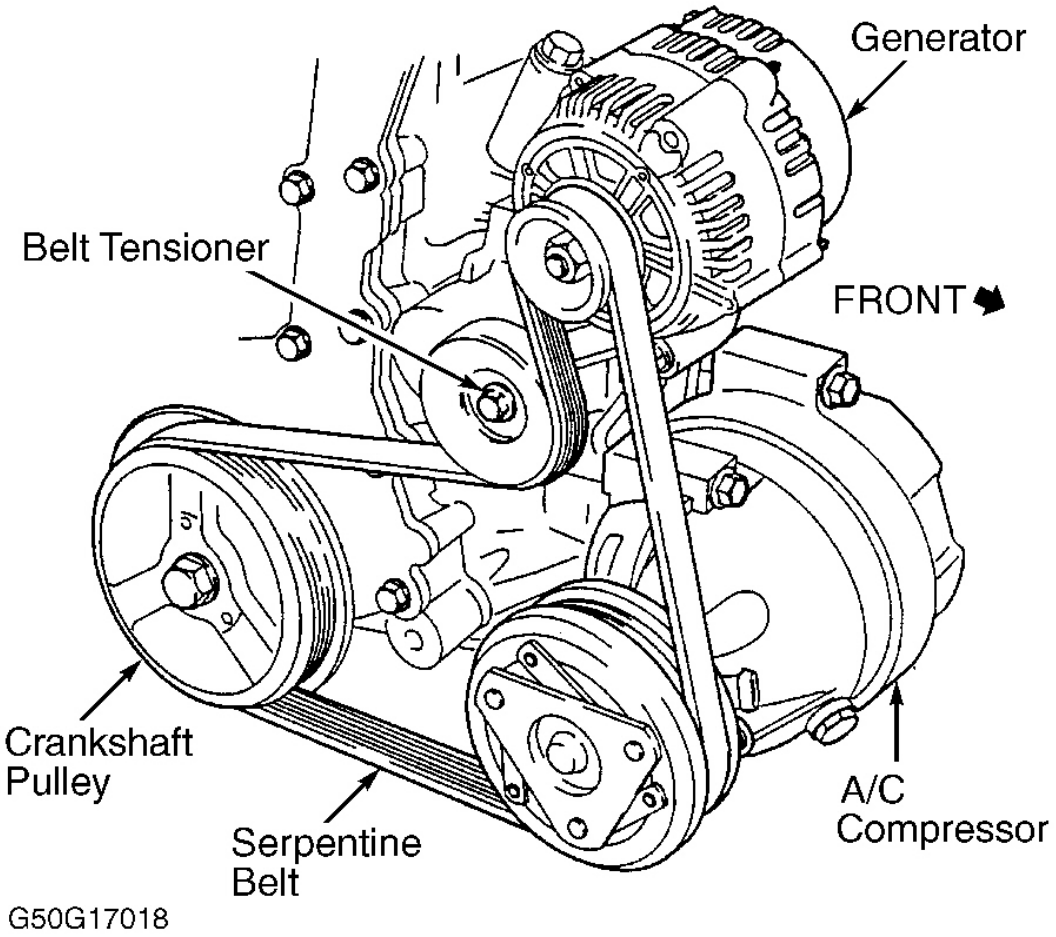

Fig. 8: Serpentine Belt Routing (2.4L "J" & "N" Bodies)
Courtesy of GENERAL MOTORS CORP.

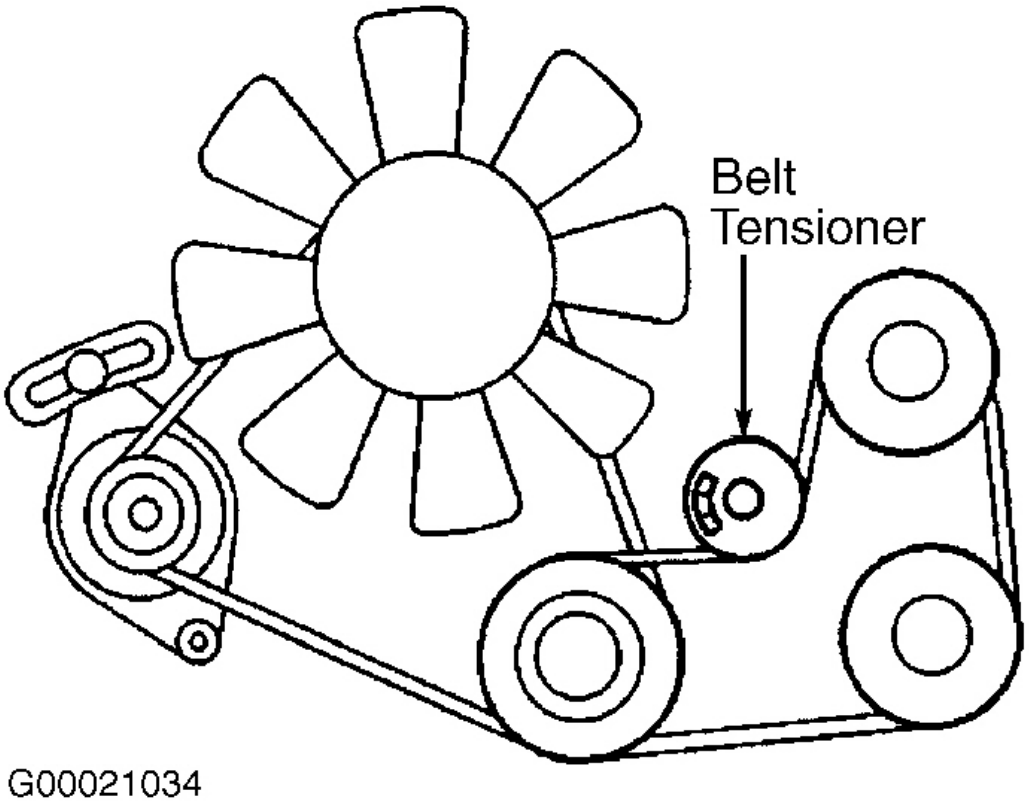

Fig. 9: Serpentine Belt Routing (2.5L Tracker)
Courtesy of GENERAL MOTORS CORP.

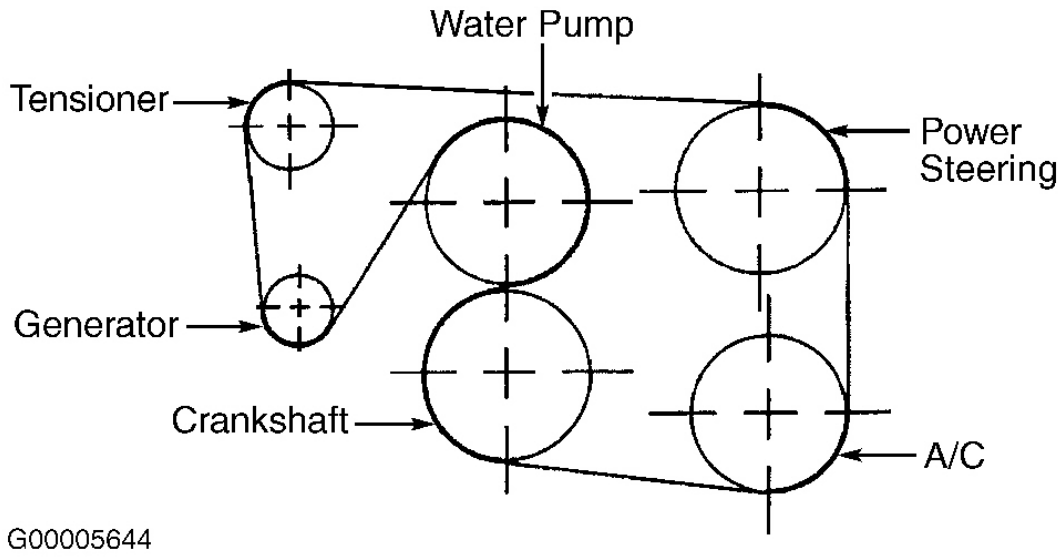

Fig. 10: Serpentine Belt Routing (3.0L "V" Body)
Courtesy of GENERAL MOTORS CORP.

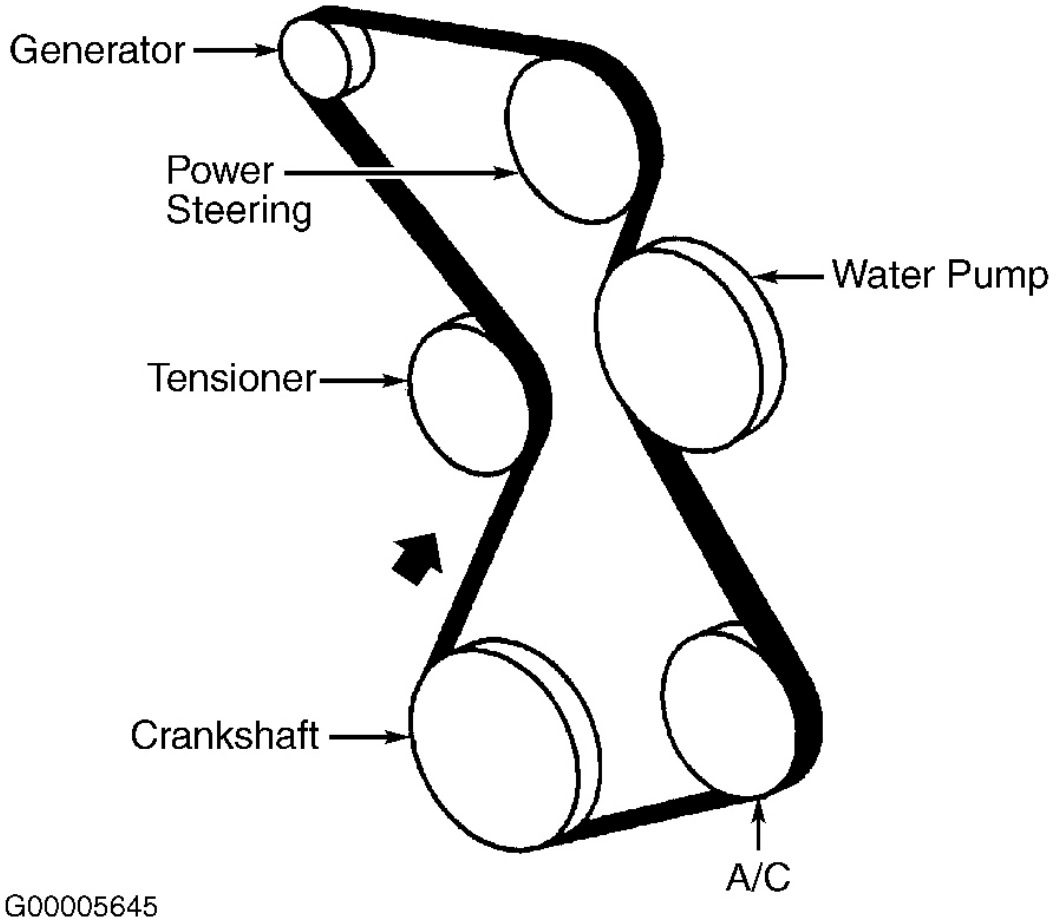

Fig. 11: Serpentine Belt Routing (3.1 "N" & "W" Bodies)
Courtesy of GENERAL MOTORS CORP.

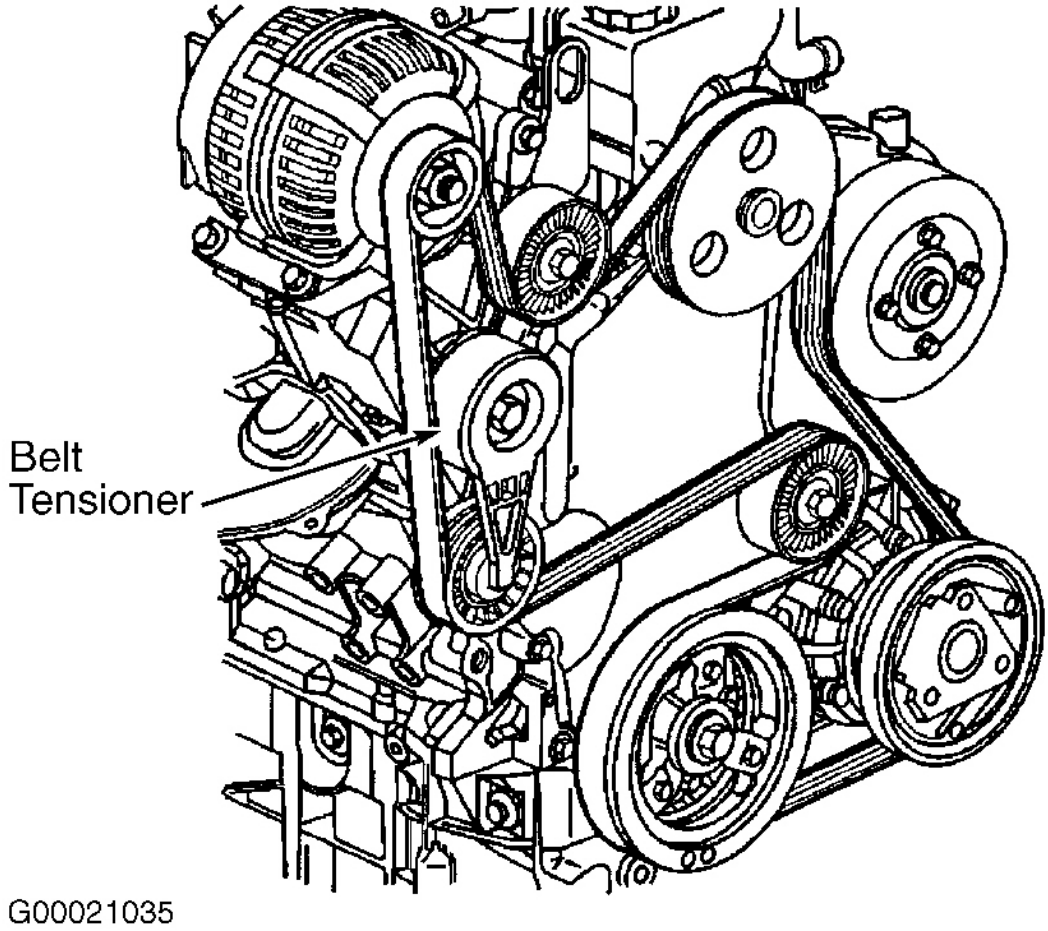

Fig. 12: Serpentine Belt Routing (3.4L "N", "W" & "Z" Bodies, & "A", "B" & "U" Series)
Courtesy of GENERAL MOTORS CORP.

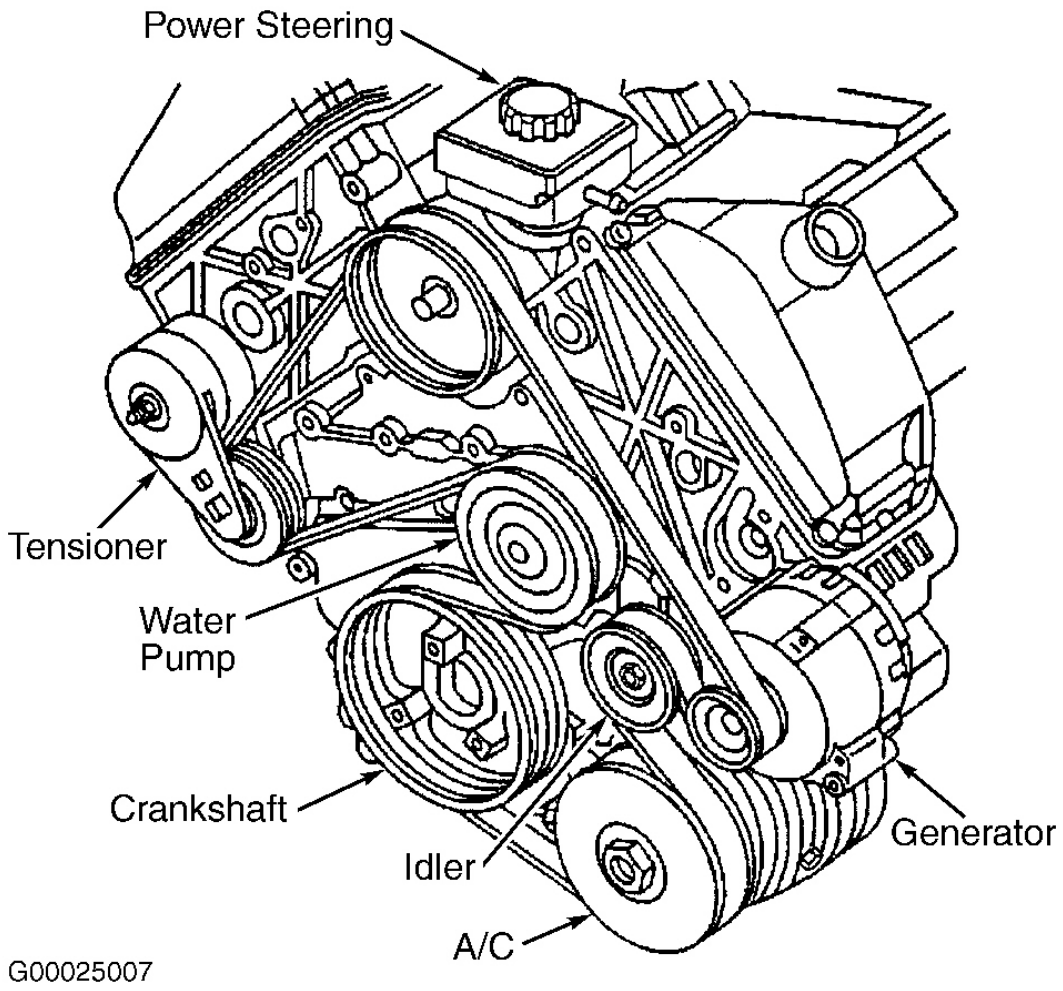

Fig. 13: Serpentine Belt Routing (3.5L "N" & "W" Bodies)
Courtesy of GENERAL MOTORS CORP.

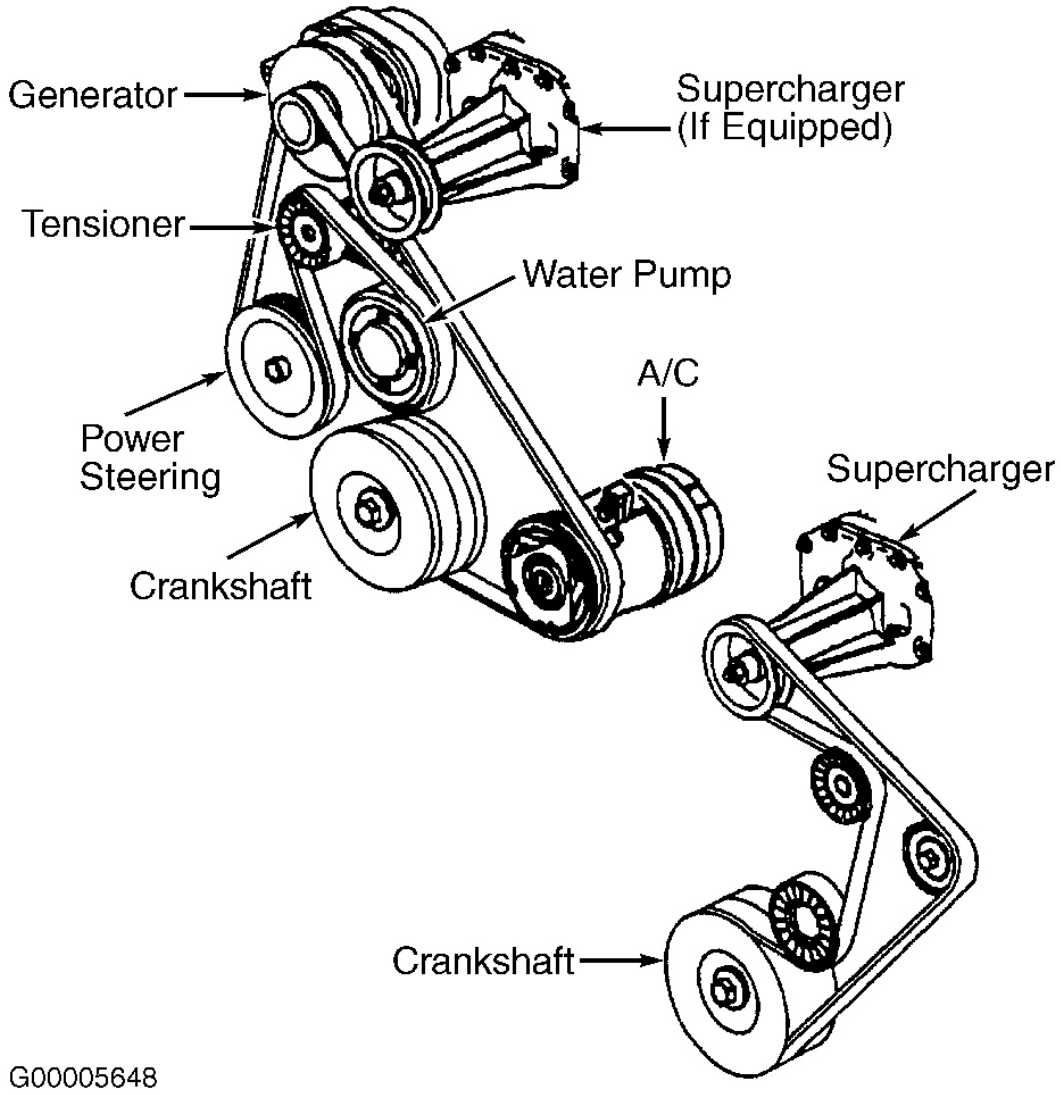

Fig. 14: Serpentine Belt Routing (3.8L "C", "G", "H" & "W" Bodies)
Courtesy of GENERAL MOTORS CORP.

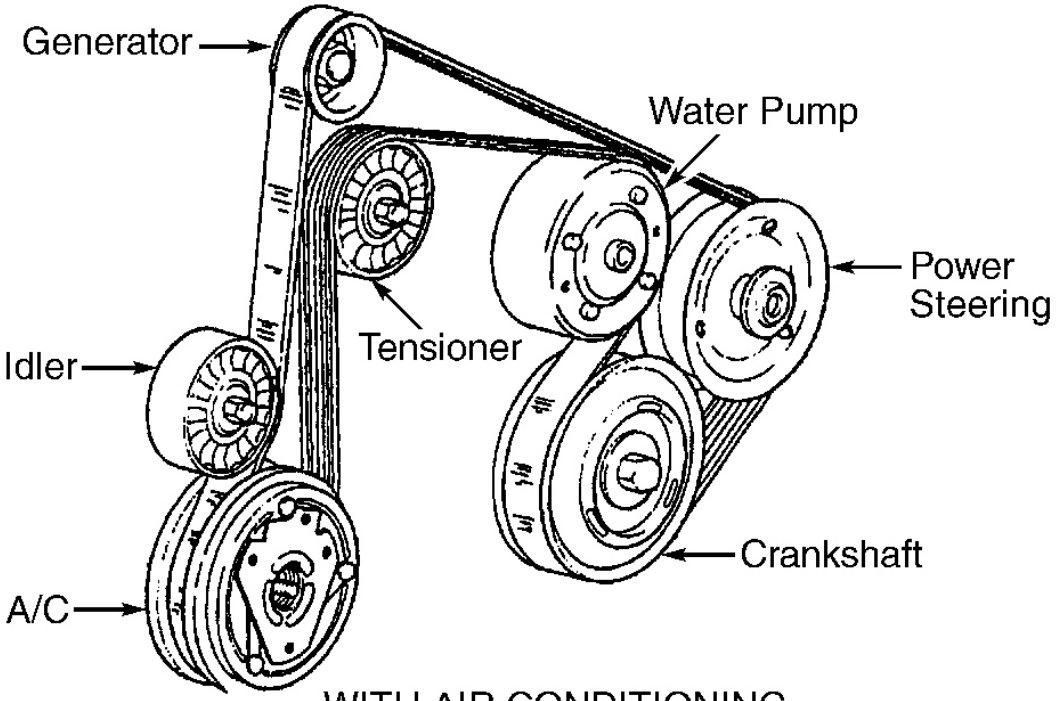

WITH AIR CONDITIONING

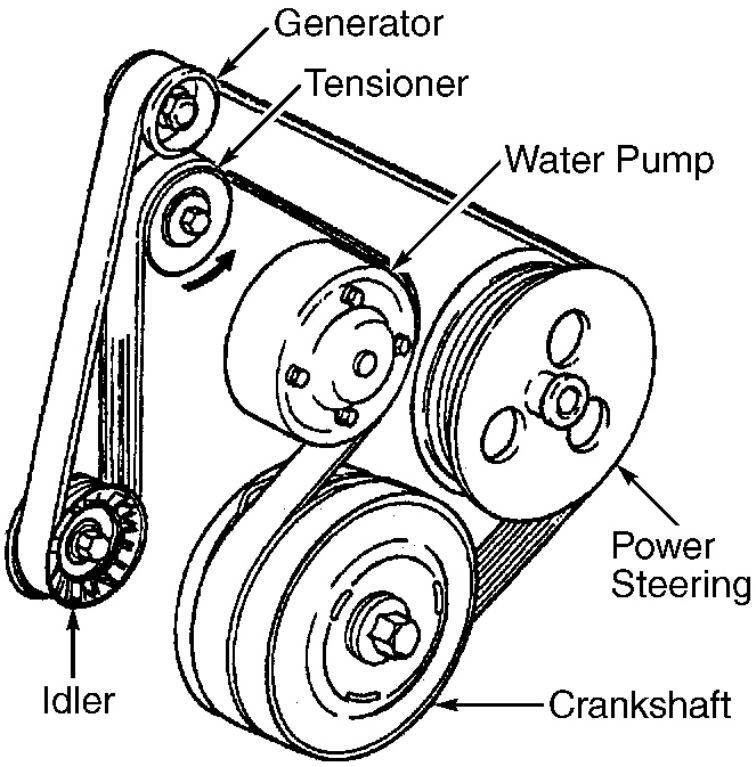

WITHOUT AIR CONDITIONING

G00005649

Fig. 15: Serpentine Belt Routing (3.8L "F" Body)
Courtesy of GENERAL MOTORS CORP.

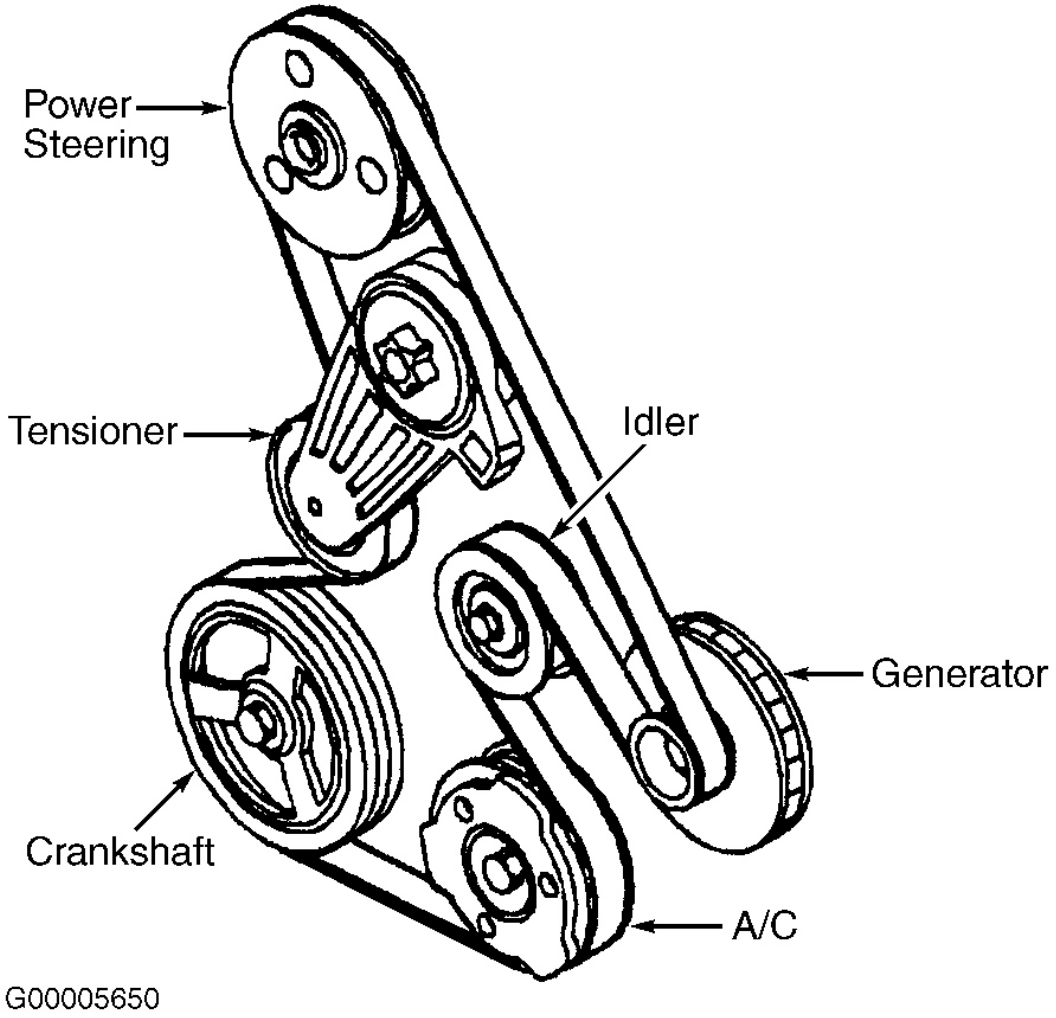

Fig. 16: Serpentine Belt Routing (4.0L "G" Body & 4.6L "E" & "K" Bodies)
Courtesy of GENERAL MOTORS CORP.

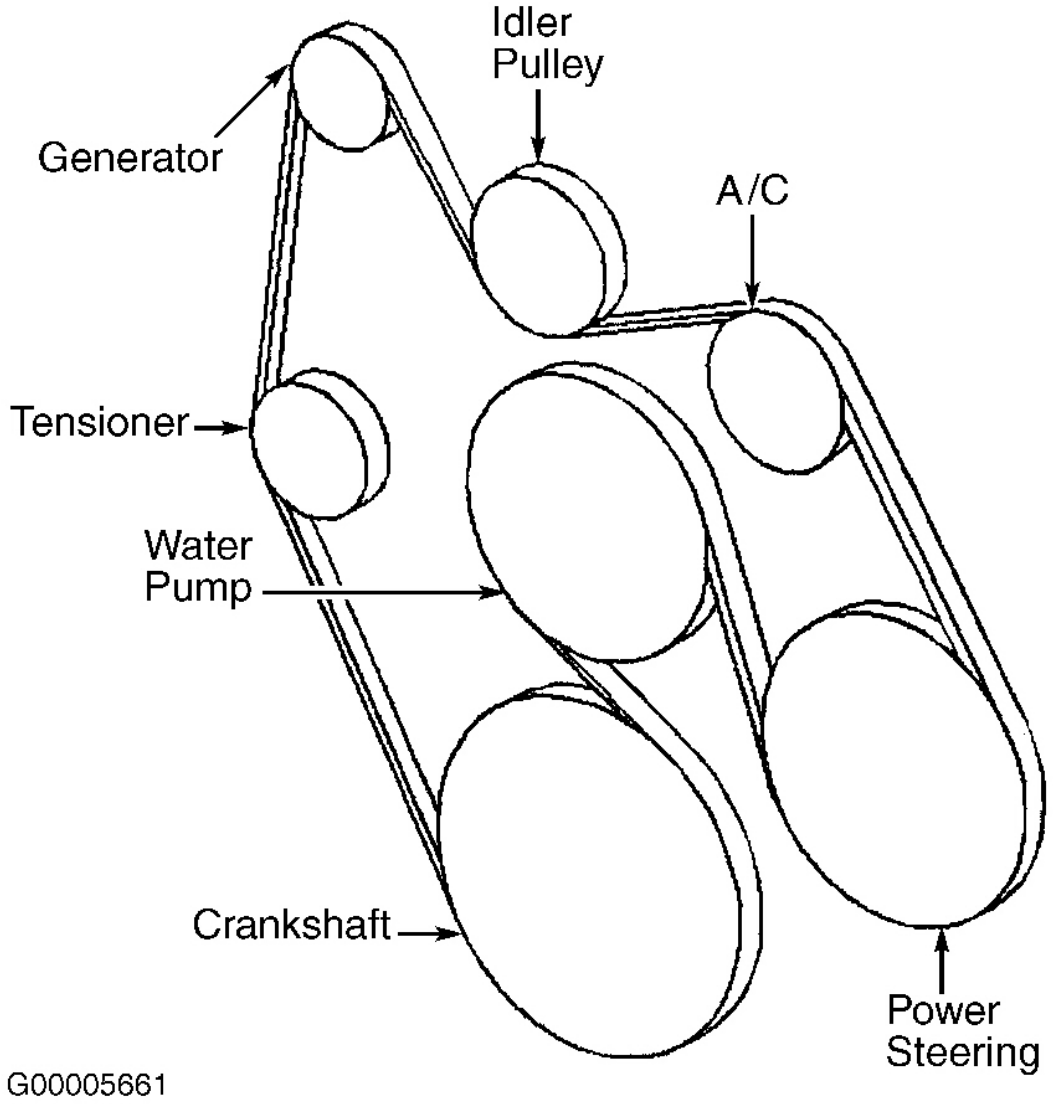

Fig. 17: Serpentine Belt Routing (4.3L, 5.0L, 5.7L & 7.4L, "S" & "T" Series)
Courtesy of GENERAL MOTORS CORP.

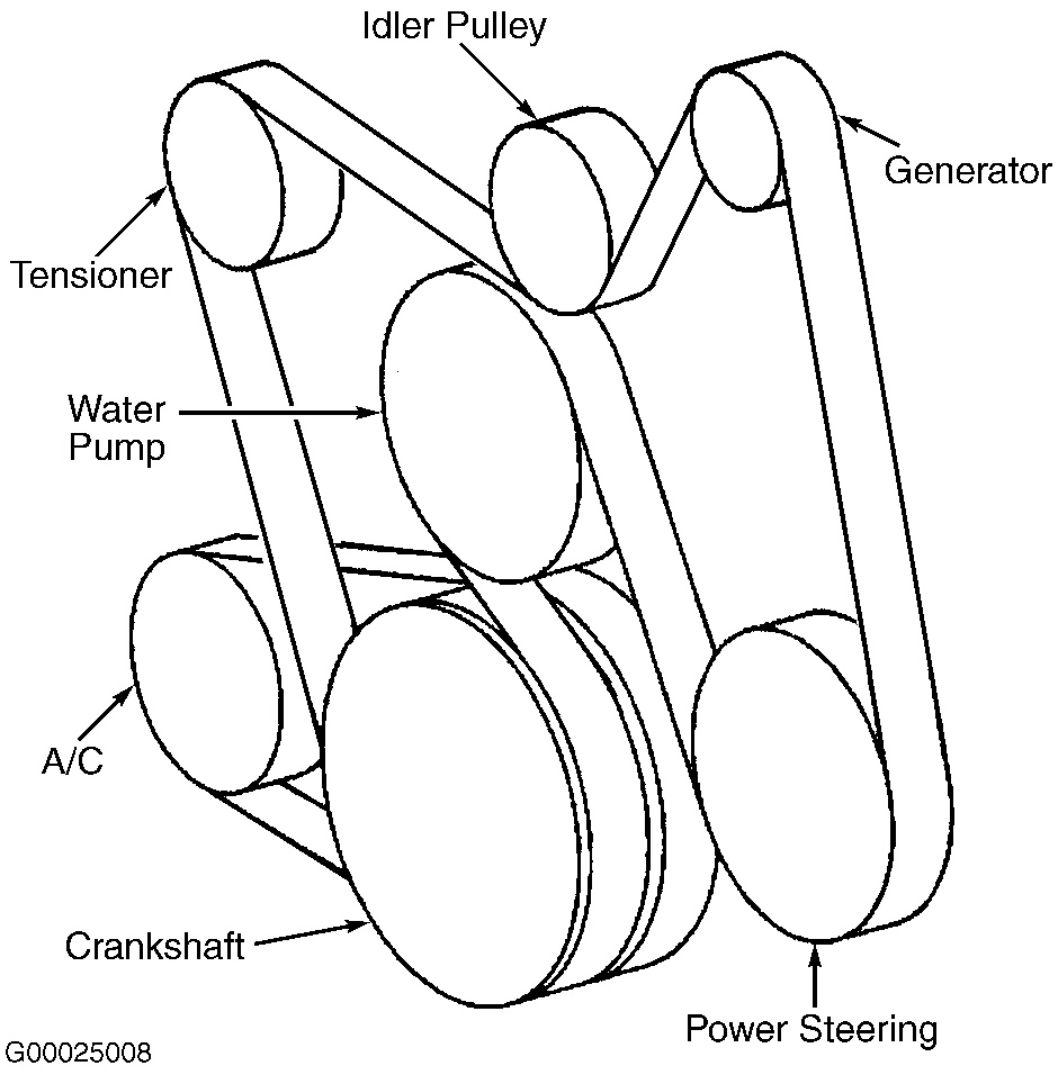

Fig. 18: Serpentine Belt Routing (4.8L, 5.3L & 6.0L "C" & "K" Series)
Courtesy of GENERAL MOTORS CORP.

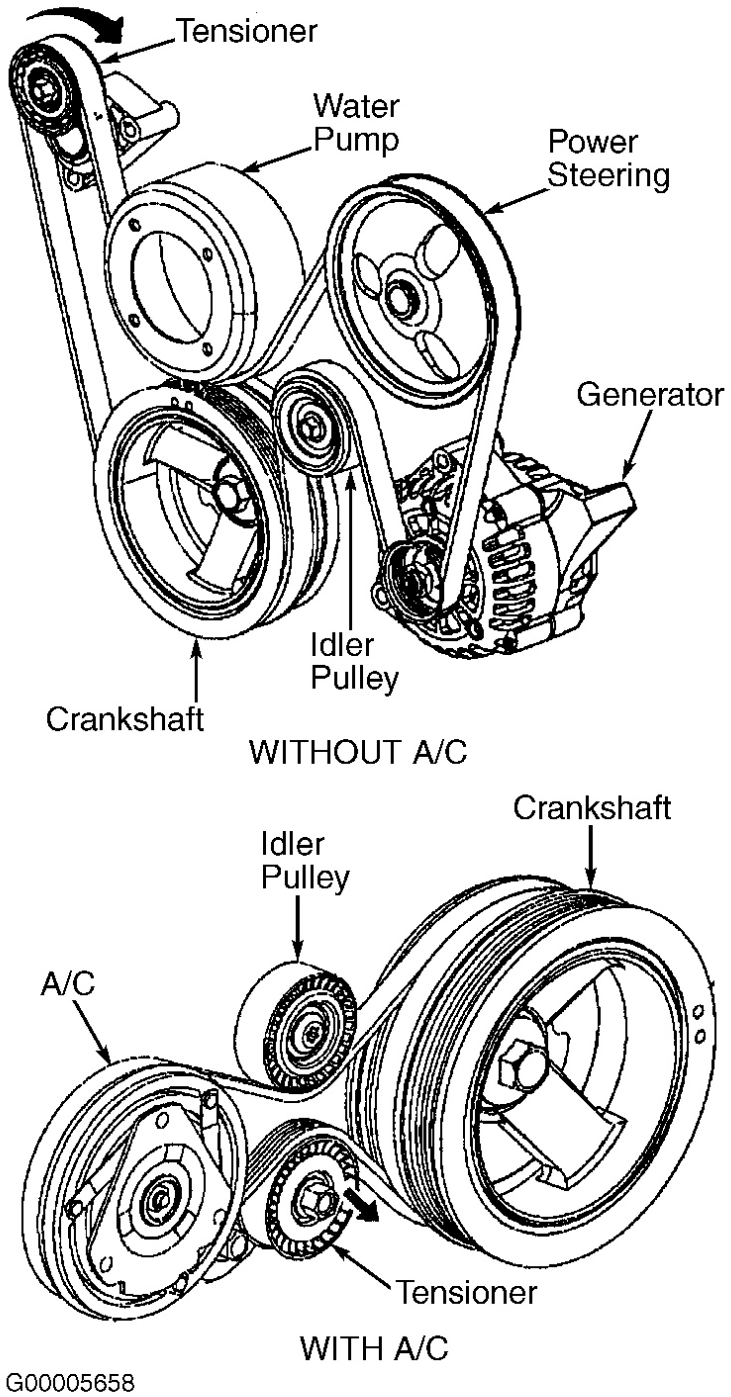

Fig. 19: Serpentine Belt Routing (5.7L "F" Body)
Courtesy of GENERAL MOTORS CORP.

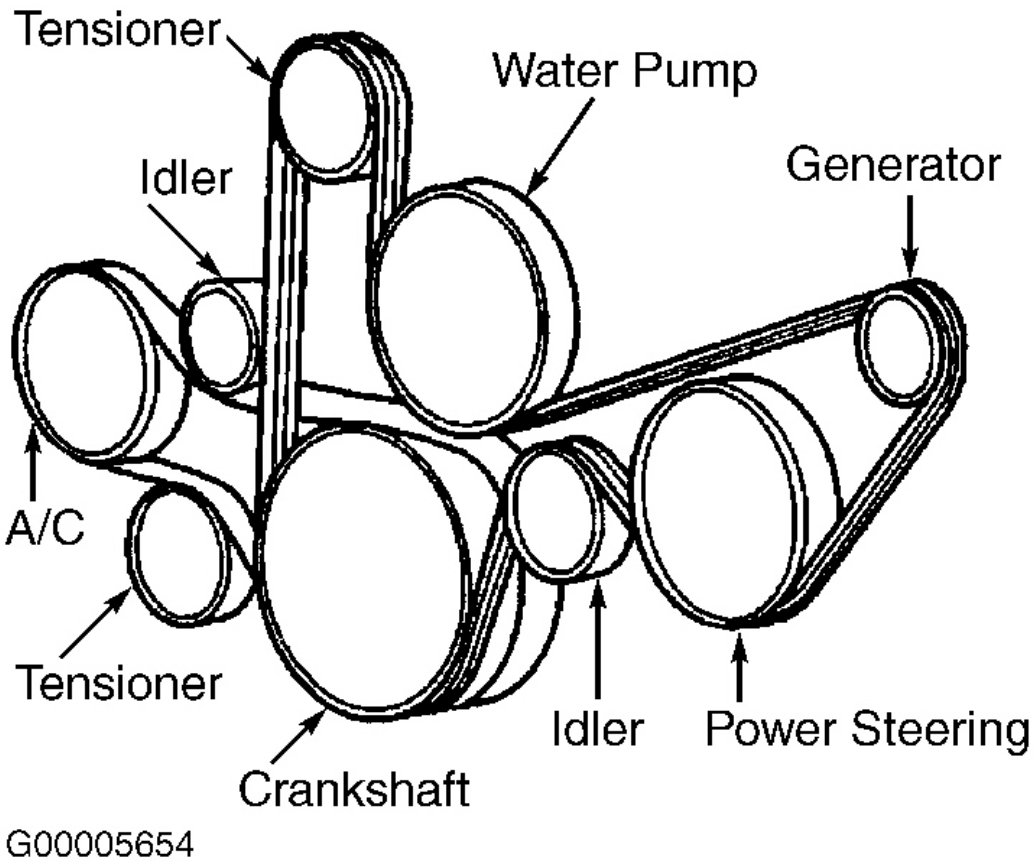

Fig. 20: Serpentine Belt Routing (5.7L "Y" Body)
Courtesy of GENERAL MOTORS CORP.

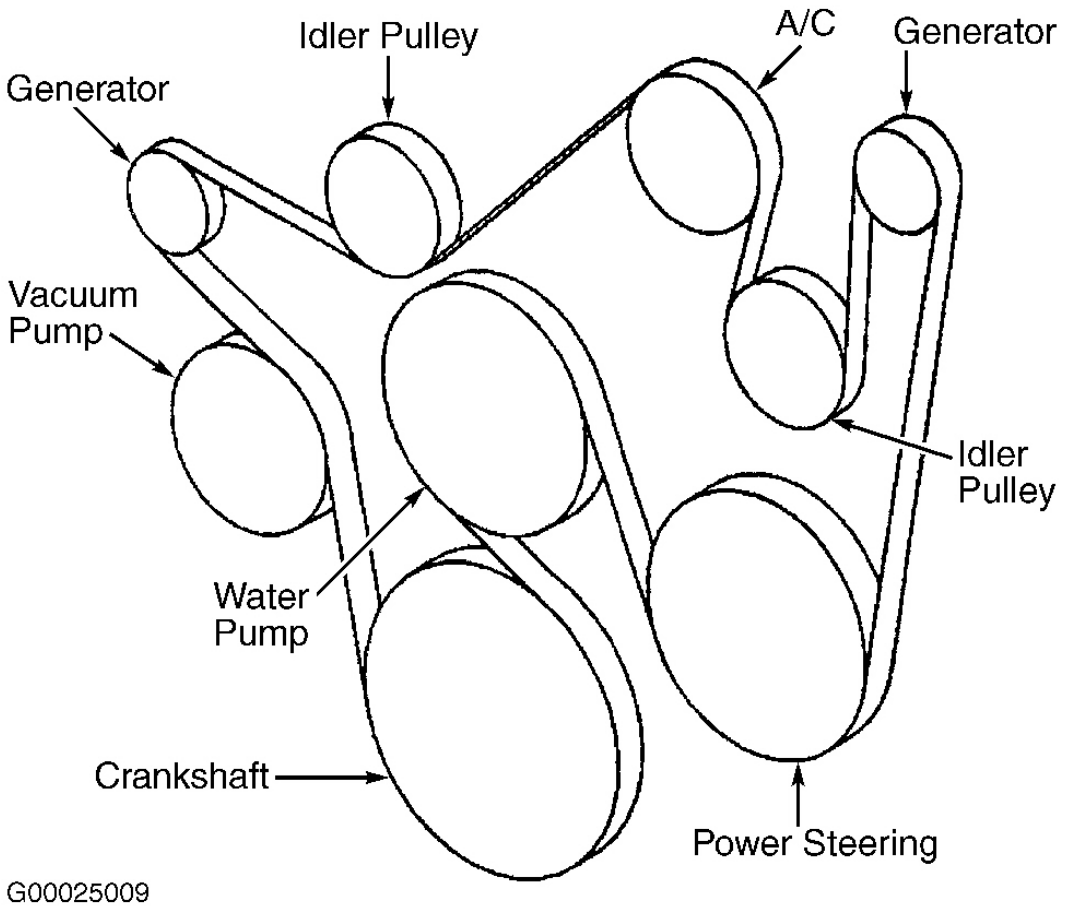

Fig. 21: Serpentine Belt Routing (6.5L Turbo-Diesel "C", "G" & "K" Series With Dual Generators)
Courtesy of GENERAL MOTORS CORP.

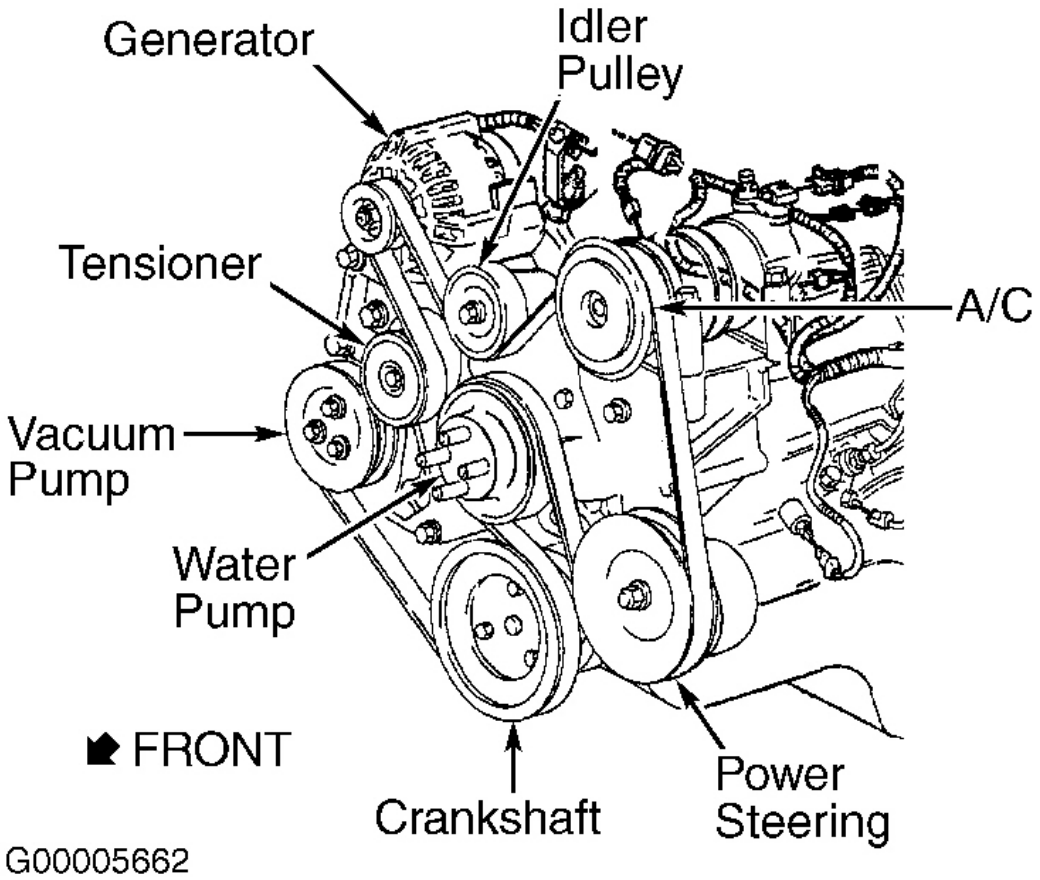

Fig. 22: Serpentine Belt Routing (6.5L Turbo-Diesel "C", "G" & "K" Series Without Dual Generators)
Courtesy of GENERAL MOTORS CORP.

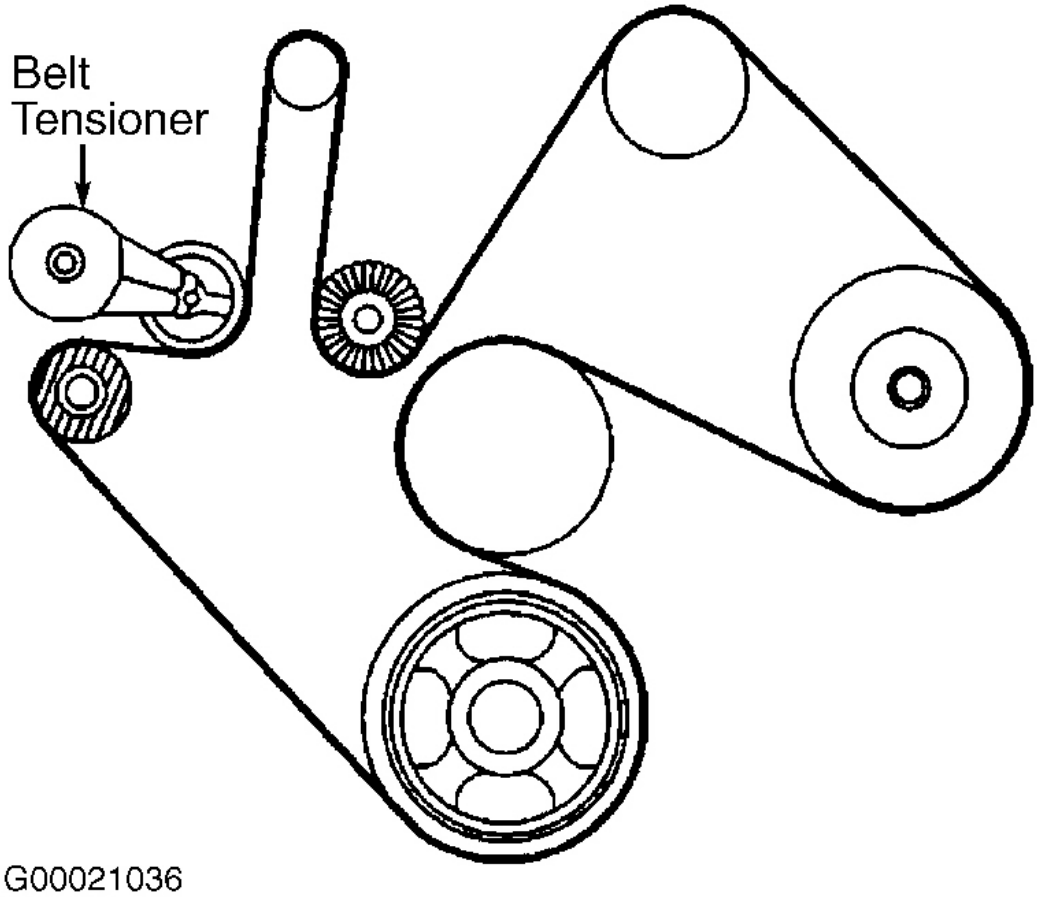

Fig. 23: Serpentine Belt Routing (6.6L Turbo-Diesel "C" & "K" Series)
Courtesy of GENERAL MOTORS CORP.

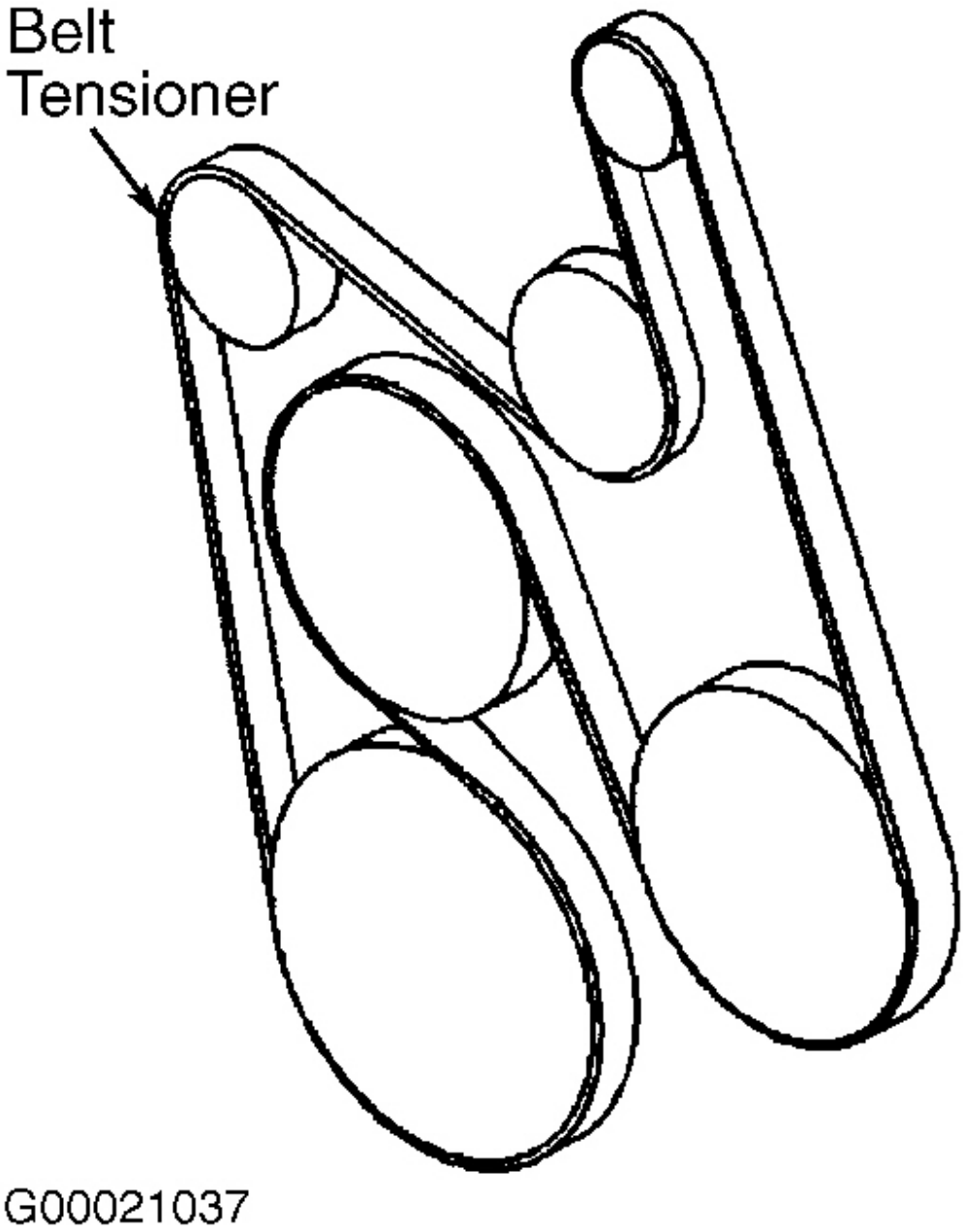

Fig. 24: Serpentine Belt Routing (8.1L "C", "G" &"K" Series)
Courtesy of GENERAL MOTORS CORP.