HVAC

HVAC - Automatic - Escalade, Suburban, Tahoe, Yukon

SPECIFICATIONS

FASTENER SPECIFICATIONS

Application	Specification	
	Metric	English
Auxiliary Heater and Air Conditioning Control Fastener	1.7 N.m	15 lb in
Auxiliary Mode Valve Actuator Fastener	1.7 N.m	15 lb in
Auxiliary Temperature Valve Actuator Fastener	1.7 N.m	15 lb in
Mode Control Cam Actuator Mounting Plate Bolt	2.5 N.m	22 lb in
Mode Valve Actuator Motor Fastener	1.7 N.m	15 lb in
Temperature Valve Actuator Fastener	1.7 N.m	15 lb in

SCHEMATIC WIRING DIAGRAMS

HVAC WIRING SCHEMATICS

Power, Ground, Serial Data and Front Blower Controls (X88 or Z88)

cardiagn.com

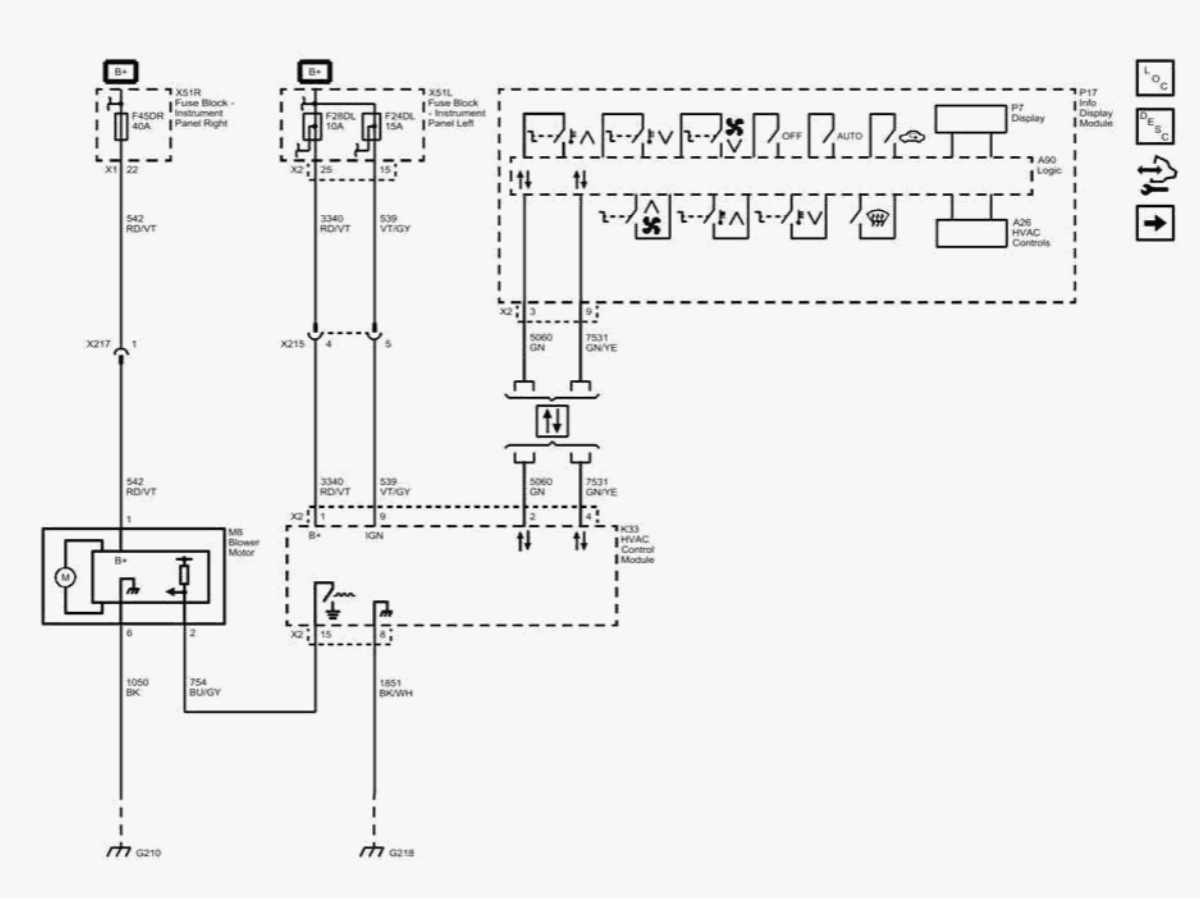

Fig. 1: Power, Ground, Serial Data and Front Blower Controls (X88 or Z88)
Courtesy of GENERAL MOTORS COMPANY

Power, Ground, Serial Data and Front Blower Controls (Z75)

cardiagn.com

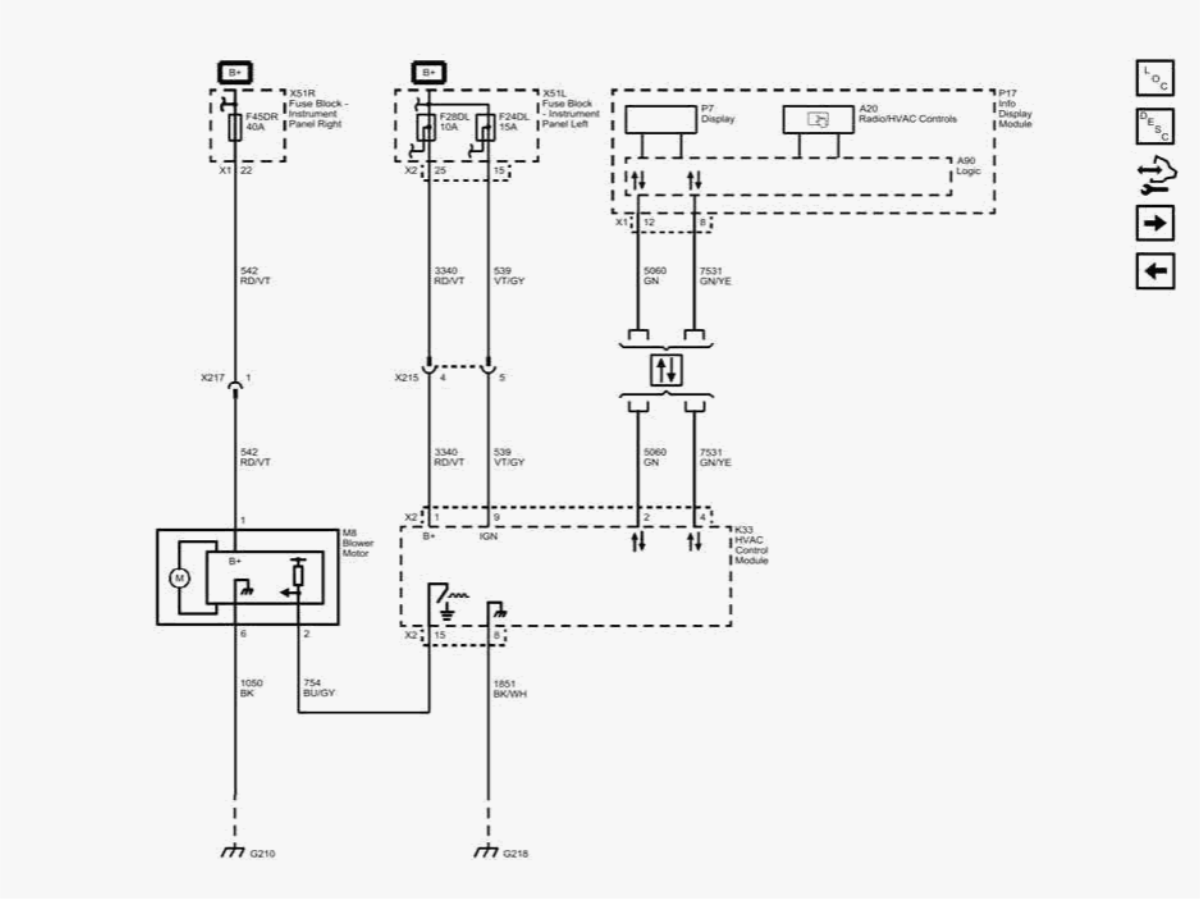

Fig. 2: Power, Ground, Serial Data and Front Blower Controls (Z75)
Courtesy of GENERAL MOTORS COMPANY

Auxiliary Blower Controls (X88 or Z88)

cardiagn.com

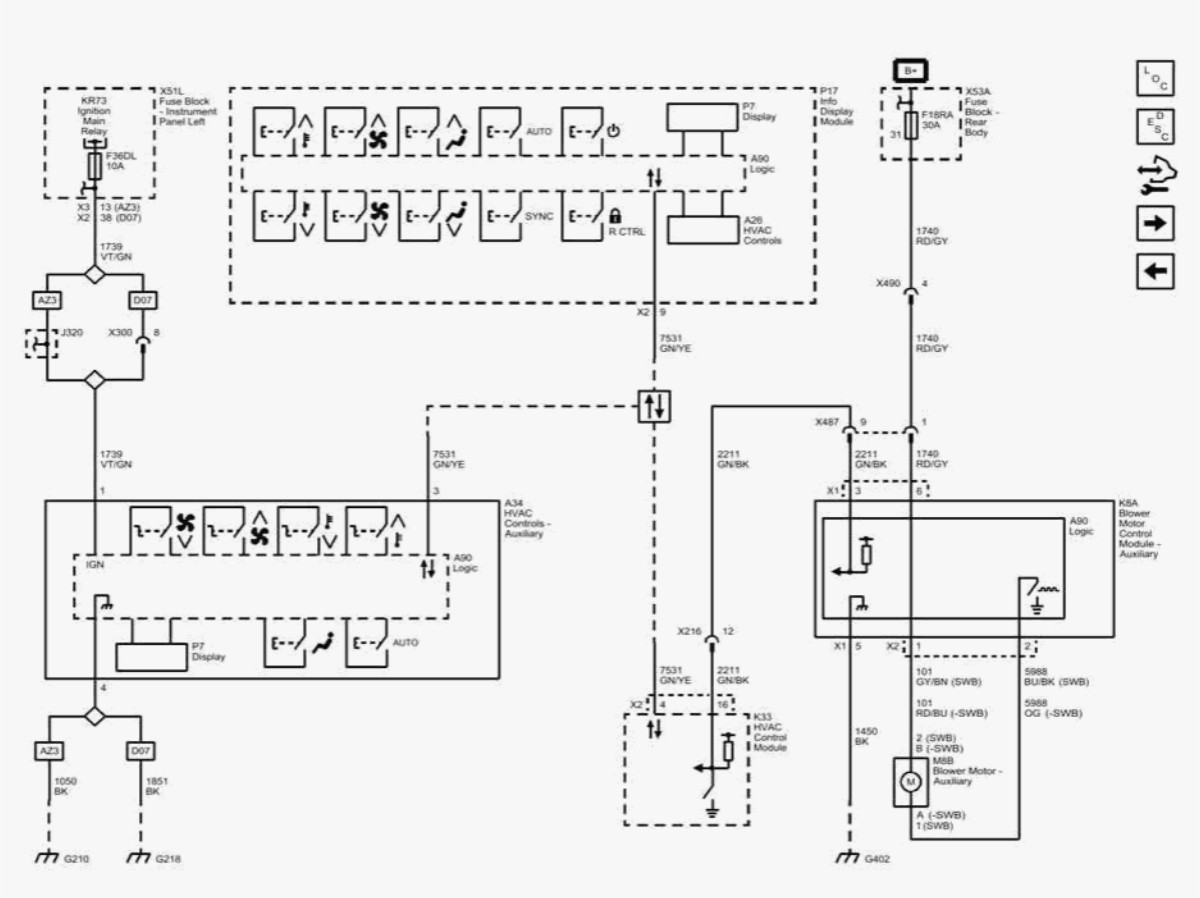

Fig. 3: Auxiliary Blower Controls (X88 or Z88)
Courtesy of GENERAL MOTORS COMPANY

Auxiliary Blower Controls (Z75)

cardiagn.com

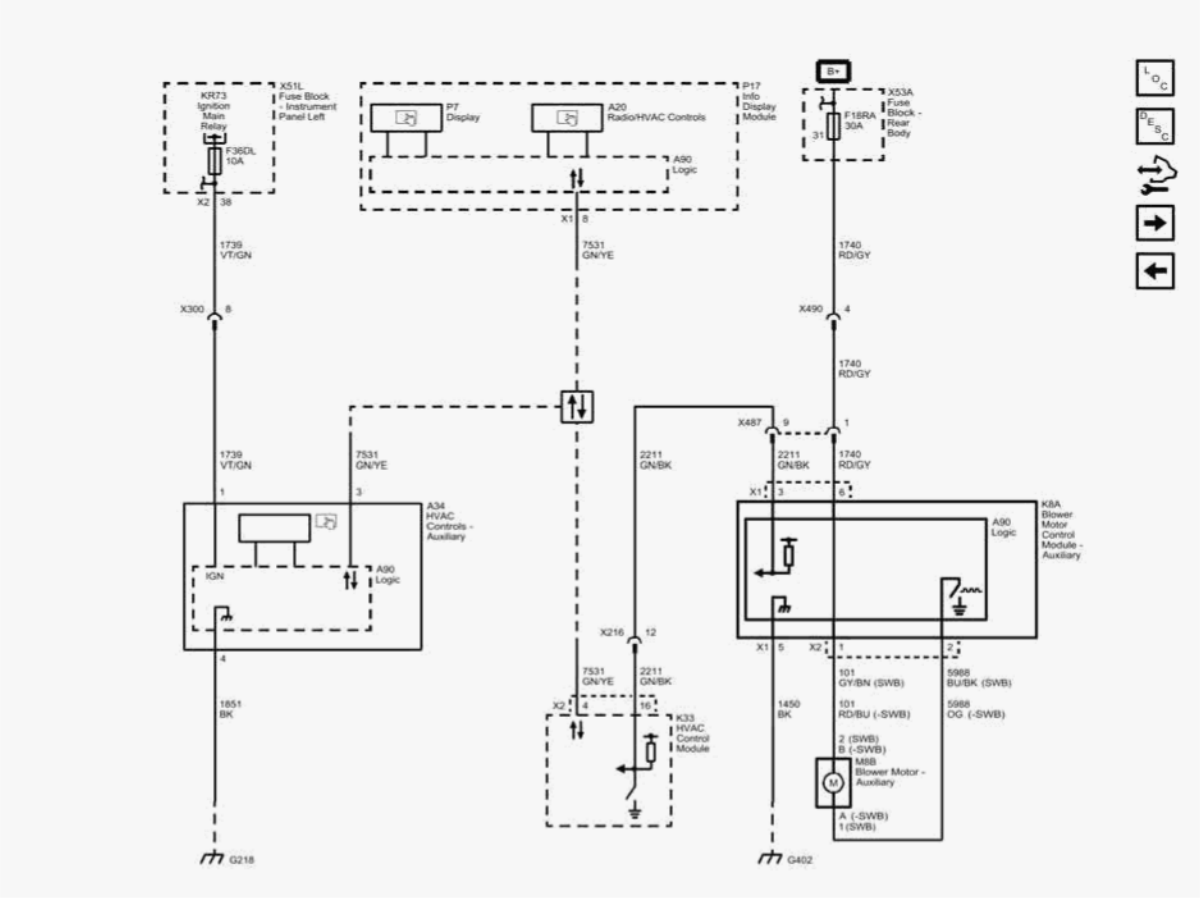

Fig. 4: Auxiliary Blower Controls (Z75)
Courtesy of GENERAL MOTORS COMPANY

Ambient Light/Sunload Sensor and Mode Doors

cardiagn.com

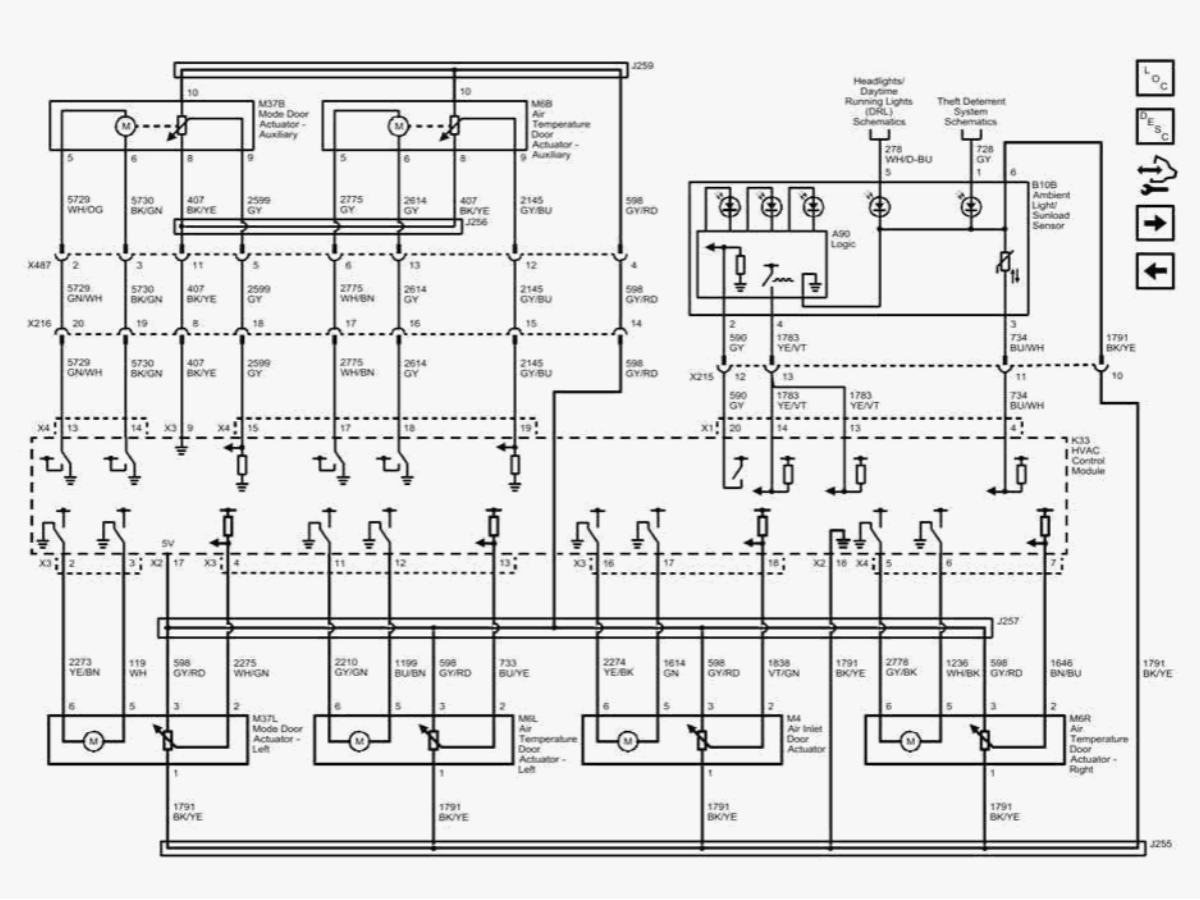

Fig. 5: Ambient Light/Sunload Sensor and Mode Doors
Courtesy of GENERAL MOTORS COMPANY

Temperature Sensors

cardiagn.com

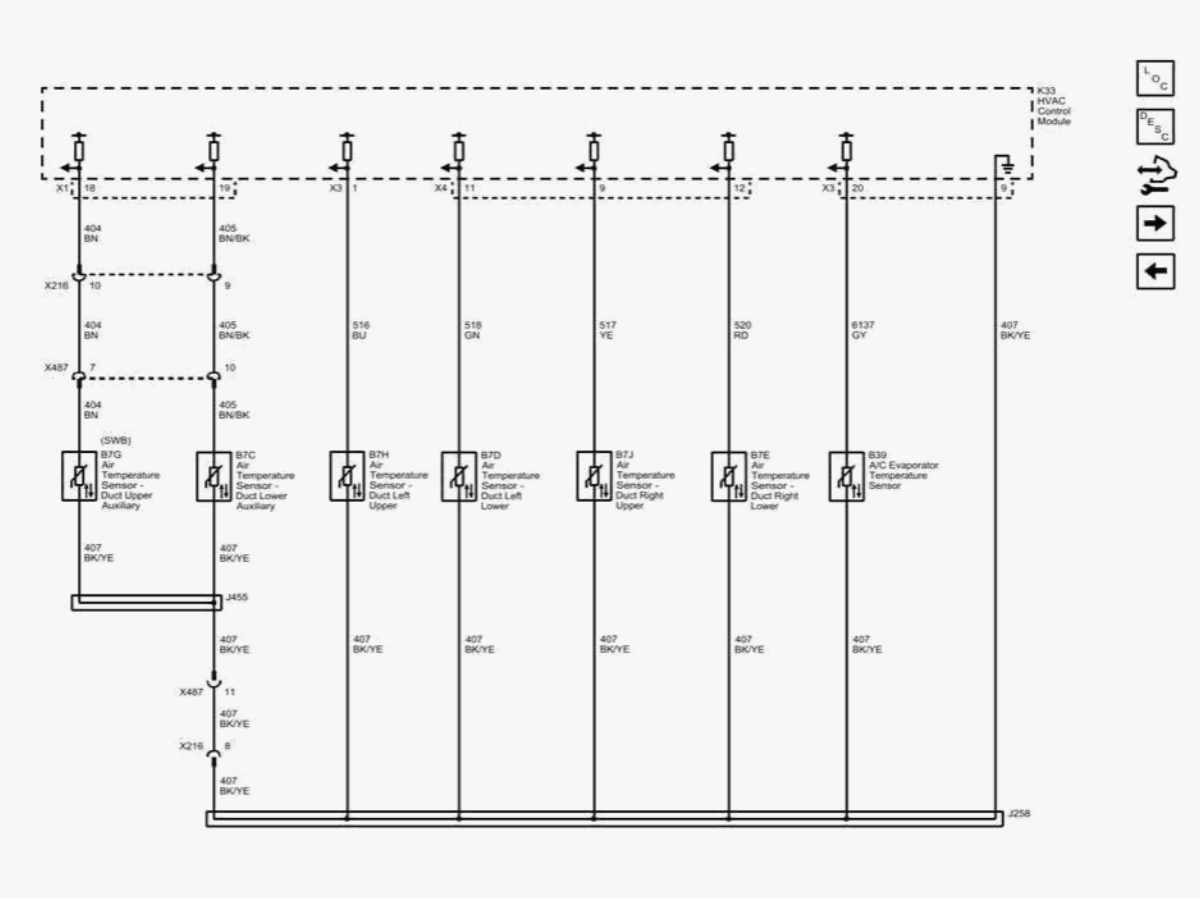

Fig. 6: Temperature Sensors
Courtesy of GENERAL MOTORS COMPANY

A/C Compressor Controls

cardiagn.com

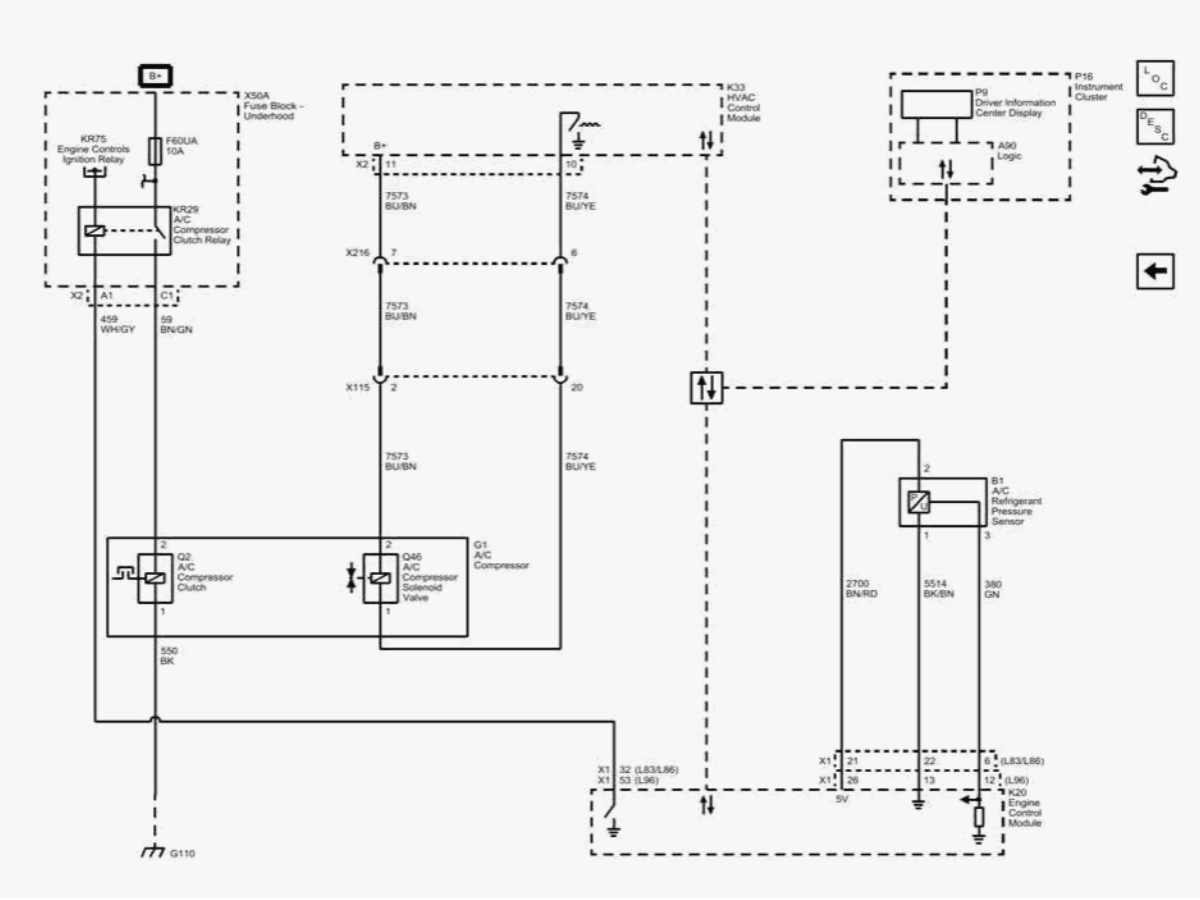

Fig. 7: A/C Compressor Controls
Courtesy of GENERAL MOTORS COMPANY

DIAGNOSTIC INFORMATION AND PROCEDURES

HVAC COMPONENT REPLACEMENT REFERENCE

Component	Repair Instruction
A26 HVAC Controls	Heater and Air Conditioning Control Replacement (Utility)
A34 HVAC Controls - Auxiliary	Auxiliary Heater and Air Conditioning Control Replacement (Utilities)Auxiliary Heater and Air Conditioning Control Replacement (With Out D07)Auxiliary Heater and Air Conditioning Control Replacement (Z75)

cardiagn.com

Component	Repair Instruction
B1 A/C Refrigerant Pressure Sensor	Air Conditioning (A/C) Refrigerant Pressure Sensor Replacement (L96) Air Conditioning (A/C) Refrigerant Pressure Sensor Replacement (L83 L86)
B10B Ambient Light/Sunload Sensor	Sun Load Temperature and Headlamp Automatic Control Ambient Light Sensor ReplacementSun Load Temperature and Headlamp Automatic Control Ambient Light Sensor Replacement (Z75)
B39 A/C Evaporator Temperature Sensor	Evaporator Air Temperature Sensor Replacement (Utilities)Evaporator Air Temperature Sensor Replacement (Z75)
B7C Air Temperature Sensor - Duct Lower Auxiliary	Auxiliary Duct Air Temperature Sensor Replacement (LWB Utilities)
B7D Air Temperature Sensor - Duct Left Lower	Floor Air Temperature Sensor Replacement - Left Side
B7E Air Temperature Sensor - Duct Right Lower	Floor Air Temperature Sensor Replacement - Right Side
B7G Air Temperature Sensor - Duct Upper Auxiliary	Air Temperature Sensor Replacement - Upper Auxiliary (SWB)
B7H Air Temperature Sensor - Duct Left Upper	Duct Air Temperature Sensor Replacement - Upper Left Side (Utilities)
B7J Air Temperature Sensor - Duct Right Upper	Duct Air Temperature Sensor Replacement - Upper Right Side (Utilities)
K33 HVAC Control Module	Heater and Air Conditioning Remote Control Replacement (Utilities)Heater and Air Conditioning Remote Control Replacement (Z75)
K8A Blower Motor Control Module - Auxiliary	Blower Motor Control Module Replacement (LWB Auxiliary) Blower Motor Control Module Replacement (SWB)
M37L Mode Door Actuator - Left	Mode Valve Actuator ReplacementMode Valve Actuator Replacement (Z75)
M37B Mode Door Actuator - Auxiliary	Auxiliary Mode Valve Actuator Replacement (LWB)Auxiliary Mode Valve Actuator Replacement (SWB)
M4 Air Inlet Door Actuator	Air Inlet Valve Actuator Replacement (Utilities)
M6B Air Temperature Door Actuator - Auxiliary	Auxiliary Temperature Valve Actuator Replacement (LWB)Auxiliary Temperature Valve Actuator Replacement (SWB)
M6L Air Temperature Door Actuator - Left	Temperature Valve Actuator Replacement - Left Side
M6R Air Temperature Door Actuator - Right	Temperature Valve Actuator Replacement - Right Side

cardiagn.com

Component	Repair Instruction
M8 Blower Motor	Blower Assembly Replacement Blower Assembly Replacement (Z75)
M8B Blower Motor - Auxiliary	Auxiliary Blower Motor Replacement (LWB) Auxiliary Blower Motor Replacement (SWB)
Q2 A/C Compressor Clutch	Air Conditioning Clutch Assembly Replacement (L83 L86) Air Conditioning Clutch Assembly Replacement (L96)
Q46 A/C Compressor Solenoid Valve	Air Conditioning Compressor Replacement (L83 L86) Air Conditioning Compressor Replacement (L96)

DTC B0163, B0183, OR B1405: PASSENGER COMPARTMENT TEMPERATURE SENSOR/SOLAR LOAD SENSOR/CONTROL MODULE VOLTAGE REFERENCE OUTPUT 2

Diagnostic Instructions

- Perform the Diagnostic System Check - Vehicle prior to using this diagnostic procedure.
- Review Strategy Based Diagnosis for an overview of the diagnostic approach.
- Diagnostic Procedure Instructions provides an overview of each diagnostic category.

DTC Descriptors

DTC B0163

Passenger Compartment Temperature Sensor Circuit

DTC B0183

Solar Load Sensor Circuit

DTC B1405

Control Module Voltage Reference Output 2 Circuit

For symptom byte information, refer to Symptom Byte List .

Diagnostic Fault Information

Circuit	Short to Ground	Open/High Resistance	Short to Voltage	Signal Performance

cardiagn.com

Circuit	Short to Ground	Open/High Resistance	Short to Voltage	Signal Performance
Temperature Signal	B0163 02	B0163 05	B0163 05	1
Sunload Signal	B0183 02	B0183 05	B0183 05	1
Clock Signal	B1405 02	B1405 05	B1405 05	1
Low Reference	-	B0163 05, B0183 05	-	-
1. HVAC Malfunction				

Circuit/System Description

The ambient light/sunload sensor integrates the sunload and passenger compartment temperature functions within a single assembly.

The solar sensor uses 4 unique circuits as detailed below:

- Low reference circuit - This is a common ground for the ambient light/sunload sensor assembly.
- Temperature signal circuit - This is the signal circuit for the temperature sensor.
- Clock signal circuit - This has 2 functions, via a high side PWM signal, the HVAC control module supplies power to the sensor as well as a clock input for the sensor microprocessor.
- Sunload signal circuit - This is used as an output from the solar sensor to the HVAC control module to transmit sun heat (IR) intensity, elevation, and azimuth data.

The passenger compartment temperature sensor is a negative temperature coefficient thermistor. As the air temperature increases, the sensor resistance decreases. The sensor signal varies between 0-5 V.

Bright or high intensity light causes the vehicles interior temperature to increase. The automatic HVAC system compensates for the increased temperature by diverting additional cool air into the vehicle.

Conditions for Running the DTC

- Ignition ON
- The HVAC control module is ON.

Conditions for Setting the DTC

B0163 02

cardiagn.com

The input signal is out of range. The HVAC control module detects voltage less than 0.1 V on the temperature signal circuit.

B0163 05

The input signal is out of range. The HVAC control module detects voltage greater than 4.9 V on the temperature signal circuit.

B0183 02

The input signal is out of range. The HVAC control module detects voltage less than 0.1 V on the solar sensor signal circuit.

B0183 05

The input signal is out of range. The HVAC control module detects voltage greater than 4.9 V on the solar sensor signal circuit.

B1405 02

The input signal is out of range. The HVAC control module detects voltage less than 10 V on the clock/power supply circuit.

B1405 05

The input signal is out of range. The HVAC control module detects a short to voltage or an open the clock/power supply circuit.

Action Taken When the DTC Sets

B0163 02, B0163 05, B0183 02, B0183 05

The system will use the last valid values as a default.

B1405 02, B1405 05

If no value is read at the time of fault, the HVAC control module uses 0 W/m^2 as intensity.

Conditions for Clearing the DTC

The condition for setting the DTC is no longer present.

Reference Information

Schematic Reference

cardiagn.com

HVAC Schematics

Connector End View Reference

COMPONENT CONNECTOR END VIEWS - INDEX

Description and Operation

Automatic HVAC Description and Operation

Electrical Information Reference

- **Circuit Testing**
- **Connector Repairs**
- **Testing for Intermittent Conditions and Poor Connections**
- **Wiring Repairs**

Scan Tool Reference

Control Module References for scan tool information

Circuit/System Verification

1. Verify DTCs B0163, B0183, or B1405 are not set.
   - **If any of the DTCs are set**

     Refer to Circuit System Testing.

   - **If none of the DTCs are set**
2. Verify the actual inside air temperature, using a thermometer, is less than a 3Â°C (5Â°F) difference from the scan tool Inside Passenger Compartment Air Temp. Sensor parameter
   - **If greater than a 3Â°C (5Â°F) difference**

     Refer to Circuit System Testing.

   - **If less than a 3Â°C (5Â°F) difference**
3. Verify the scan tool Sunload parameter changes while covering the B10B Ambient Light/Sunload Sensor with a shop towel and changes when

cardiagn.com

shining a bright light on it

- **If the Sunload parameter does not change**

  Refer to Circuit System Testing.

- **If the Sunload parameter changes**

4. All OK.

Circuit/System Testing

1. Ignition OFF and all vehicle systems OFF, disconnect the harness connector at the B10B Ambient Light/Sunload Sensor. It may take up to 10 min for all vehicle systems to power down.

NOTE: **The scan tool must be disconnected from the vehicle before performing the next test.**

2. Test for less than 10 Ω between the low reference circuit terminal 6 and ground.
   - **If 10 Ω or greater**
   1. Ignition OFF, disconnect the harness connector at the K33 HVAC Control Module.
   2. Test for less than 2 Ω in the low reference circuit end to end.
      - If 2 Ω or greater, repair the open/high resistance in the circuit.
      - If less than 2 Ω, replace the K33 HVAC Control Module.
   - **If less than 10 Ω**
3. Ignition ON, test for 4.8-5.2 V between the signal circuit terminal 3 and ground.
   - **If less than 4.8 V**
   1. Ignition OFF, disconnect the harness connector at the K33 HVAC Control Module.
   2. Test for infinite resistance between the signal circuit and ground.
      - If less than infinite resistance, repair the short to ground on the circuit.
      - If infinite resistance
   3. Test for less than 2 Ω in the signal circuit end to end.
      - If 2 Ω or greater, repair the open/high resistance in the circuit.
      - If less than 2 Ω, replace the K33 HVAC Control Module.
   - **If greater than for 5.2 V**

cardiagn.com

1. Ignition OFF, disconnect the harness connector at the K33 HVAC Control Module, ignition ON.
2. Test for less than 1 V between the signal circuit and ground.
    - If 1 V or greater, repair the short to voltage on the circuit.
    - If less than 1 V, replace the K33 HVAC Control Module.

- **If between 4.8-5.2 V**

4. Test for 4.8-5.2 V between the signal circuit terminal 4 and ground.

- **If less than 4.8 V**

1. Ignition OFF, disconnect the harness connector at the K33 HVAC Control Module.
2. Test for infinite resistance between the signal circuit and ground.
    - If less than infinite resistance, repair the short to ground on the circuit.
    - If infinite resistance
3. Test for less than 2 Ω in the signal circuit end to end.
    - If 2 Ω or greater, repair the open/high resistance in the circuit.
    - If less than 2 Ω, replace the K33 HVAC Control Module.

- **If greater than for 5.2 V**

1. Ignition OFF, disconnect the harness connector at the K33 HVAC Control Module, ignition ON.
2. Test for less than 1 V between the signal circuit and ground.
    - If 1 V or greater, repair the short to voltage on the circuit.
    - If less than 1 V, replace the K33 HVAC Control Module.

- **If between 4.8-5.2 V**

5. Verify a test lamp does not illuminate between the signal circuit terminal 2 and ground.

- **If the test lamp illuminates**

1. Ignition OFF, remove the test lamp and disconnect the harness connector at the K33 HVAC Control Module. Ignition ON.
2. Test for less than 1 V between signal circuit and ground.
    - If 1 V or greater, repair the short to voltage on the circuit.
    - If less than 1 V, replace the K33 HVAC Control Module.

- **If the test lamp does not illuminate**

6. Test for greater than 10 V between signal circuit terminal 2 and ground.

- **If less than 10 V**

cardiagn.com

1. Ignition OFF, disconnect the harness connector at the K33 HVAC Control Module.
2. Test for infinite resistance between signal circuit terminal 2 and ground.
    - If less than infinite resistance, repair the short to ground on the circuit.
    - If infinite resistance
3. Test for less than 2 Ω in the signal circuit end to end.
    - If 2 Ω or greater, repair the open/high resistance in the circuit.
    - If less than 2 Ω, replace the K33 HVAC Control Module.

7. Test or replace the B10B Ambient Light/Sunload Sensor.

Repair Instructions

Perform the **Diagnostic Repair Verification** after completing the repair.

- **HVAC Component Replacement Reference**
- **Control Module References** for control module replacement, programming and setup

DTC B0173, B0178, B0509, B0514, B0519, B3583, OR B3933: AIR TEMPERATURE SENSOR

Diagnostic Instructions

- Perform the **Diagnostic System Check - Vehicle** prior to using this diagnostic procedure.
- Review **Strategy Based Diagnosis** for an overview of the diagnostic approach.
- **Diagnostic Procedure Instructions** provides an overview of each diagnostic category.

DTC Descriptors

DTC B0173

Upper Left Duct Air Temperature Sensor Circuit

DTC B0178

Lower Left Duct Air Temperature Sensor Circuit

DTC B0509

cardiagn.com

Upper Right Duct Air Temperature Sensor Circuit

DTC B0514

Lower Right Duct Air Temperature Sensor Circuit

DTC B0519

Rear Upper Duct Air Temperature Sensor Circuit

DTC B3583

Rear Lower Duct Air Temperature Sensor Circuit

DTC B3933

Air Conditioning Evaporator Temperature Sensor Circuit

For symptom byte information, refer to **Symptom Byte List** .

Diagnostic Fault Information

Circuit	Short to Ground	Open/High Resistance	Short to Voltage	Signal Performance
Upper Left Duct Air Temperature Sensor Signal	B0173 02	B0173 05	B0173 05	-
Lower Left Duct Air Temperature Sensor Signal	B0178 02	B0178 05	B0178 05	-
Upper Right Duct Air Temperature Sensor Signal	B0509 02	B0509 05	B0509 05	-
Lower Right Duct Air Temperature Sensor Signal	B0514 02	B0514 05	B0514 05	-
Upper Rear Duct Air Temperature Sensor	B0519 02	B0519 05	B0519 05	-
Lower Rear Duct Air Temperature Sensor	B3583 02	B3583 05	B3583 05	-
Air Conditioning Evaporator Temperature Sensor Signal	B3933 02	B3933 05	B3933 05	-
Low Reference	-	B0173 05, B0178 05, B0509 05, B0514 05, B0519 05, B3583 05, B3933 05	-	-

cardiagn.com

Circuit/System Description

The air temperature sensors are a 2-wire negative temperature coefficient thermistor. The vehicle uses the following inside air temperature sensors:

- Air temperature sensor - left upper
- Air temperature sensor - left lower
- Air temperature sensor - right upper
- Air temperature sensor - right lower
- Air temperature sensor - auxiliary lower
- Air temperature sensor - auxiliary upper
- A/C evaporator temperature sensor

This sensor operates using signal and low reference circuits. As the air temperature surrounding the sensor increases, the sensor resistance decreases. The sensor is capable of reading temperatures ranging from -40 to +80Â°C (-40 to +176Â°F), with a signal voltage between 0-5 V. If the HVAC control module detects a malfunctioning sensor the software uses a default air temperature value. The default action ensures that the HVAC system can adjust the inside air temperature near the desired temperature until the condition is corrected.

Conditions for Running the DTC

- Ignition ON.
- The HVAC control module is ON.

Conditions for Setting the DTC

B0173 02, B0178 02, B0509 02, B0514 02, B0519 02, B3583 02, B3933 02

The input signal is out of range. The HVAC control module detects voltage less than 0.1 V on the temperature signal circuit.

B0173 05, B0178 05, B0509 05, B0514 05, B0519 05, B3583 05, B3933 05

The input signal is out of range. The HVAC control module detects voltage greater than 4.9 V on the temperature signal circuit.

Action Taken When the DTC Sets

The system operates using a default value.

Conditions for Clearing the DTC

cardiagn.com

The sensor signal is within specified range of between 0.1-4.9 V.

Reference Information

Schematic Reference

HVAC Schematics

Connector End View Reference

COMPONENT CONNECTOR END VIEWS - INDEX

Description and Operation

Automatic HVAC Description and Operation

Electrical Information Reference

- **Circuit Testing**
- **Connector Repairs**
- **Testing for Intermittent Conditions and Poor Connections**
- **Wiring Repairs**

Scan Tool Reference

Control Module References for scan tool information

Circuit/System Verification

1. Ignition ON.
2. Verify DTC B3933 is not set.
    - **If DTC B3933 is set**

      Refer to Circuit/System Testing - Without Scan Tool Support.

    - **If DTC B3933 is not set**
3. Verify the appropriate temperature sensor has a working parameter displayed in HVAC scan tool information.

cardiagn.com

- **If there is not a working scan tool parameter**

  Refer to Circuit/System Testing - Without Scan Tool Support.

- **If there is a working scan tool parameter**

4. Refer to Circuit/System Testing - With Scan Tool Support

Circuit/System Testing

With Scan Tool Support

1. Ignition OFF, cut both temperature sensor wires approximately 8 cm (3 in) from the appropriate temperature sensor.

NOTE:
- **Use the appropriate schematic to determine which color wire to test.**
- **All testing is done at the K33 HVAC Control Module harness side of the wire.**

2. Ignition OFF and all vehicle systems OFF. It may take up to 10 min for all vehicle systems to power down.

NOTE: **The scan tool must be disconnected from the vehicle before performing the next test.**

3. Test for less than 10 Ω between the low reference circuit and ground.
   - **If 10 Ω or greater**
   1. Ignition OFF, disconnect the harness connectors at the K33 HVAC Control Module.
   2. Test for less than 2 Ω in the low reference circuit end to end.
      - If 2 Ω or greater, repair the open/high resistance in the circuit.
      - If less than 2 Ω, replace the K33 HVAC Control Module.
   - **If less than 10 Ω**
4. Ignition ON.
5. Verify the appropriate scan tool temperature sensor parameter is less than -37Â°C (-35Â°F).
   - **If greater than -37Â°C (-35Â°F)**
   1. Ignition OFF, disconnect the harness connectors at the K33 HVAC Control Module.
   2. Test for infinite resistance between the signal circuit and ground.
      - If less than infinite resistance, repair the short to ground on the circuit.

cardiagn.com

- If infinite resistance, replace the K33 HVAC Control Module.

- **If -37Â°C (-35Â°F) or less**

6. Install a 3 A fused jumper wire between the signal circuit and the low reference circuit.
7. Verify the scan tool temperature sensor parameter is greater than 77Â°C (170Â°F).
   - **If less than 77Â°C (170Â°F)**
   1. Ignition OFF, remove the jumper wire and disconnect the harness connector at the K33 HVAC Control Module, ignition ON.
   2. Test for less than 1 V between the signal circuit and ground.
      - If 1 V or greater, repair the short to voltage on the circuit.
      - If less than 1 V
   3. Ignition OFF
   4. Test for less than 2 Ω in the signal circuit end to end.
      - If 2 Ω or greater, repair the open/high resistance in the circuit.
      - If less than 2 Ω, replace the K33 HVAC Control Module.
   - **If 77Â°C (170Â°F) or greater**
8. Test or replace the temperature sensor.

Without Scan Tool Support

1. Ignition OFF, cut both temperature sensor wires approximately 8 cm (3 in) from the appropriate temperature sensor.

NOTE:
- **Use the appropriate schematic to determine which color wire to test.**
- **All testing is done at the K33 HVAC Control Module harness side of the wire.**

2. Ignition OFF and all vehicle systems OFF. It may take up to 10 min for all vehicle systems to power down.

NOTE: **The scan tool must be disconnected from the vehicle before performing the next test.**

3. Test for less than 10 Ω between the low reference circuit and ground.
   - **If 10 Ω or greater**
   1. Ignition OFF, disconnect the harness connectors at the K33 HVAC Control Module.
   2. Test for less than 2 Ω in the low reference circuit end to end.

cardiagn.com

- If 2 Ω or greater, repair the open/high resistance in the circuit.
- If less than 2 Ω, replace the K33 HVAC Control Module.

- **If less than 10 Ω**

4. Test for 4.8-5.2 V between the signal circuit and ground.
   - **If less than 4.8 V**
   1. Ignition OFF, disconnect the harness connectors at the K33 HVAC Control Module.
   2. Test for infinite resistance between the signal circuit and ground.
      - If less than infinite resistance, repair the short to ground on the circuit.
      - If infinite resistance
   3. Test for less than 2 Ω in the signal circuit end to end.
      - If 2 Ω or greater, repair the open/high resistance in the circuit.
      - If less than 2 Ω, replace the K33 HVAC Control Module.
   - **If greater than 5.2 V**
   1. Ignition OFF, disconnect the harness connectors at the K33 HVAC Control Module, ignition ON.
   2. Test for less than 1 V between the signal circuit and ground.
      - If 1 V or greater, repair the short to voltage on the circuit.
      - If less than 1 V, replace the K33 HVAC Control Module.
   - **If between 4.8-5.2 V**
5. Test or replace the temperature sensor.
6. Operate the vehicle within the Conditions for Running the DTC. You may also operate the vehicle within the conditions that you observed from the Freeze Frame/Failure Records data.
7. Verify the DTC does not set.
   - **If the DTC sets**

     Replace the K33 HVAC Control Module.

   - **If the DTC does not set**
8. All OK.

Repair Instructions

cardiagn.com

Perform the **Diagnostic Repair Verification** after completing the repair.

- **HVAC Component Replacement Reference**
- **Control Module References** for HVAC control module replacement, programming and setup

DTC B0193: FRONT BLOWER MOTOR SPEED CIRCUIT

Diagnostic Instructions

- Perform the **Diagnostic System Check - Vehicle** prior to using this diagnostic procedure.
- Review **Strategy Based Diagnosis** for an overview of the diagnostic approach.
- **Diagnostic Procedure Instructions** provides an overview of each diagnostic category.

DTC Descriptors

DTC B0193

Front Blower Motor Speed Circuit

For symptom byte information, refer to **Symptom Byte List** .

Diagnostic Fault Information

Circuit	Short to Ground	Open/High Resistance	Short to Voltage	Signal Performance
B+	B0193 06	B0193 06	-	-
Control	B0193 06	B0193 06	B0193 01	1
Ground	-	B0193 01	-	-
1. HVAC Malfunction				

Circuit/System Description

The blower motor speed control signal from the HVAC control module, battery positive and ground circuits enable the blower motor to operate. The blower motor control circuitry is integrated within the blower motor assembly. The HVAC control module provides a ground pulse width modulation (PWM) signal to the blower motor to request a specific motor speed. The blower motor translates the PWM signal and drives the motor accordingly.

Conditions for Running the DTC

cardiagn.com

- Ignition ON.
- The HVAC control module is ON.

Conditions for Setting the DTC

B0193 01

The voltage at the HVAC control module output to the blower motor control module is always high.

B0193 06

The voltage at the HVAC control module output to the blower motor control module is always low or fluctuating.

Action Taken When the DTC Sets

The blower motor is inoperative.

Conditions for Clearing the DTC

The condition for setting the DTC is no longer present.

Diagnostic Aids

The design of this motor does not allow for bench testing. The motor will not operate by simply applying power and ground.

Inspect the motor shaft for rust or other foreign material which may prohibit proper motor operation.

Check for Preliminary Information or Technical Service Bulletins.

Reference Information

Schematic Reference

HVAC Schematics

Connector End View Reference

COMPONENT CONNECTOR END VIEWS - INDEX

Description and Operation

cardiagn.com

Automatic HVAC Description and Operation

Electrical Information Reference

- Circuit Testing
- Connector Repairs
- Testing for Intermittent Conditions and Poor Connections
- Wiring Repairs

Scan Tool Reference

Control Module References for scan tool information

Circuit/System Testing

1. Ignition OFF and all vehicle systems OFF, disconnect the harness connector at the M8 Blower Motor. It may take up to 10 min for all vehicle systems to power down.
2. Test for less than 10 Ω between the ground circuit terminal 6 and ground.
   - **If 10 Ω or greater**
   1. Ignition OFF.
   2. Test for less than 2 Ω in the ground circuit end to end.
      - If 2 Ω or greater, repair the open/high resistance in the circuit.
      - If less than 2 Ω, repair the open/high resistance in the ground connection.
   - **If less than 10 Ω**
3. Verify a test lamp illuminates between the B+ circuit terminal 1 and ground.
   - **If the test lamp does not illuminate and the circuit fuse is good**
   1. Ignition OFF, remove the test lamp.
   2. Test for less than 2 Ω in the B+ circuit end to end.
      - If 2 Ω or greater, repair the open/high resistance in the circuit.
      - If less than 2 Ω, verify the fuse is not open and there is voltage at the fuse.
   - **If the test lamp does not illuminate and the circuit fuse is open**
   1. Ignition OFF, remove the test lamp.

cardiagn.com

2. Test for infinite resistance between the B+ circuit and ground.
    - If less than infinite resistance, repair the short to ground on the circuit.
    - If infinite resistance, replace the M8 Blower Motor.
- **If the test lamp illuminates**

4. Remove the test lamp.
5. Ignition ON. Test for less than 1 V between the control circuit terminal 2 and ground.
    - **If 1 V or greater**

    1. Ignition OFF, disconnect the X2 harness connector at the K33 HVAC Control Module. Ignition ON.
    2. Test for less than 1 V between the control circuit and ground.
        - If 1 V or greater, repair the short to voltage on the circuit.
        - If less than 1 V, replace the K33 HVAC Control Module
    - **If less than 1 V**
6. Ignition OFF. It may take up to 10 min for all vehicle systems to power down.
7. Test for infinite resistance between the control circuit terminal 2 and ground.
    - **If less than infinite resistance**

    1. Disconnect the X2 harness connector at the K33 HVAC Control Module.
    2. Test for infinite resistance between the control circuit and ground.
        - If less than infinite resistance, repair the short to ground on the circuit.
        - If infinite resistance, replace the K33 HVAC Control Module
    - **If infinite resistance**

NOTE: **Verify the ignition is OFF before connecting the blower motor or incorrect test results may occur.**

8. Ignition OFF, connect the harness connector at the M8 Blower Motor. Ignition ON.
9. While backprobing terminal 2 at the M8 Blower Motor, test for greater than 1 V between control circuit and ground.
    - **If less than 1 V**

      Replace the M8 Blower Motor.

    - **If 1 V or greater**
10. Verify the voltage decreases and increases while using the controls to change the blower speed selection.

cardiagn.com

- **If the voltage does not decrease and increase as the blower speed selection is changed**

1. Ignition OFF, disconnect the X2 harness connector at the K33 HVAC Control Module.
2. Test for less than 2 Ω in the control circuit end to end.
    - If 2 Ω or greater, repair the open/high resistance in the circuit.
    - If less than 2 Ω, replace the K33 HVAC Control Module.

- **If the voltage decreases and increases as the blower speed selection is changed**

11. Replace the M8 Blower Motor.

Repair Instructions

Perform the **Diagnostic Repair Verification** after completing the repair.

- **HVAC Component Replacement Reference**
- **Control Module References** for control module replacement, programming and setup

DTC B0208: FRONT BLOWER MOTOR SPEED CIRCUIT

Diagnostic Instructions

- Perform the **Diagnostic System Check - Vehicle** prior to using this diagnostic procedure.
- Review **Strategy Based Diagnosis** for an overview of the diagnostic approach.
- **Diagnostic Procedure Instructions** provides an overview of each diagnostic category.

DTC Descriptors

DTC B0208

Front Blower Motor Speed Circuit

For symptom byte information, refer to **Symptom Byte List** .

Diagnostic Fault Information

Circuit	Short to Ground	Open/High Resistance	Short to Voltage	Signal Performance
B+	B0208 06	B0208 06	-	-

cardiagn.com

Circuit	Short to Ground	Open/High Resistance	Short to Voltage	Signal Performance
Control	B0208 06	B0208 06	B0208 01	-
Ground	-	B0208 06	-	-

Circuit/System Description

The auxiliary blower motor control module is an interface between the HVAC control module and the auxiliary blower motor. The auxiliary blower motor control module has 4 circuits: a B+ input, a signal input from the HVAC control module, a B+ output to the auxiliary blower motor, and a low side pulse width modulation (PWM) output. The HVAC control module provides a low side (PWM) signal to the auxiliary blower motor control module in order to request the auxilary blower motor speed. The auxilary blower motor control module grounds the auxilary blower motor using a low side PWM signal in order to vary the auxilary blower motor speed.

Conditions for Running the DTC

- Ignition ON.
- The HVAC control module is ON.

Conditions for Setting the DTC

B0208 01

The voltage at the HVAC control module output to the auxiliary blower motor control module is always high.

B0208 06

The voltage at the HVAC control module output to the auxiliary blower motor control module is always low or fluctuating.

Action Taken When the DTC Sets

The blower motor is inoperative.

Conditions for Clearing the DTC

The condition for setting the DTC is no longer present.

Diagnostic Aids

Inspect the motor shaft for rust or other foreign material which may prohibit proper motor operation.

cardiagn.com

If the motor operates properly please reinstall it and check for Preliminary Information or Technical Service Bulletins.

Reference Information

Schematic Reference

HVAC Schematics

Connector End View Reference

COMPONENT CONNECTOR END VIEWS - INDEX

Description and Operation

Automatic HVAC Description and Operation

Electrical Information Reference

- **Circuit Testing**
- **Connector Repairs**
- **Testing for Intermittent Conditions and Poor Connections**
- **Wiring Repairs**

Scan Tool Reference

Control Module References for scan tool information

Circuit/System Testing

1. Ignition OFF and all vehicle systems OFF, disconnect the X1 harness connector at the K8A Blower Motor Control Module - Auxiliary. It may take up to 10 min for all vehicle systems to power down.
2. Test for less than 10 Ω between the ground circuit terminal 5 and ground.
    - **If 10 Ω or greater**
    1. Test for less than 2 Ω in the ground circuit end to end.
        - If 2 Ω or greater, repair the open/high resistance in the circuit.
        - If less than 2 Ω, repair the open/high resistance in the ground connection.

cardiagn.com

- **If less than 10 Ω**

3. Ignition ON.
4. Verify a test lamp illuminates between the B+ circuit terminal 6 and ground.
    - **If the test lamp does not illuminate and the circuit fuse is good**
    1. Ignition OFF, remove the test lamp.
    2. Test for less than 2 Ω in the B+ circuit end to end.
        - If 2 Ω or greater, repair the open/high resistance in the circuit.
        - If less than 2 Ω, verify the fuse is not open and there is voltage at the fuse.
    - **If the test lamp does not illuminate and the circuit fuse is open**
    1. Ignition OFF, remove the test lamp.
    2. Test for infinite resistance between the B+ circuit terminal 6 and ground.
        - If less than infinite resistance, repair the short to ground on the circuit.
        - If infinite resistance
    3. Disconnect the X2 harness connector at the K8A Blower Motor Control Module - Auxiliary and disconnect the harness connector at the M8B Blower Motor - Auxiliary.
    4. Test for infinite resistance between the M8B Blower Motor - Auxiliary control circuit terminal B and ground.
        - If less than infinite resistance, repair the short to ground on the circuit.
        - If infinite resistance, test or replace the M8B Blower Motor - Auxiliary.
    - **If the test lamp illuminates**
5. Ignition OFF, remove the test lamp and disconnect the X2 harness connector at the K33 HVAC Control Module, ignition ON.
6. Test for less than 1 V between the K8A Blower Motor Control Module - Auxiliary control circuit terminal 3 X1 and ground.
    - **If 1 V or greater**

      Repair the short to voltage on the circuit.

    - **If less than 1 V**
7. Ignition OFF.
8. Test for infinite resistance between the control circuit and ground.
    - **If less than infinite resistance**

cardiagn.com

Repair the short to ground on the circuit.

- **If infinite resistance**

9. Test for less than 2 Ω in the control circuit end to end.
   - **If 2 Ω or greater**

     Repair the open/high resistance in the circuit.

   - **If less than 2 Ω**
10. Connect the harness connectors at the K8A Blower Motor Control Module - Auxiliary and the K33 HVAC Control Module, and disconnect the harness connector at the M8B Blower Motor - Auxiliary, ignition ON and blower ON.
11. Verify a test lamp illuminates between the B+ circuit terminal B and ground.
    - **If the test lamp does not illuminate**
    1. Ignition OFF, disconnect the X2 harness connector at the K8A Blower Motor Control Module - Auxiliary.
    2. Test for less than 2 Ω in the B+ circuit end to end.
       - If 2 Ω or greater, repair the open/high resistance in the circuit.
       - If less than 2 Ω replace the K8A Blower Motor Control Module - Auxiliary.
    - **If the test lamp illuminates**
12. Connect a test lamp between the control circuit terminal A and the B+ circuit terminal B.
13. Verify the test lamp becomes progressively brighter as the blower speed is increased and progressively dimmer as the blower speed is decreased.
    - **If the test lamp does not illuminate**
    1. Ignition OFF, disconnect the X2 harness connector at the K8A Blower Motor Control Module - Auxiliary, ignition ON.
    2. Test for less than 1 V between the M8B Blower Motor - Auxiliary control circuit terminal A and ground.
       - If 1 V or greater, repair the short to voltage on the circuit.
       - If less than 1 V
    3. Test for less than 2 Ω in the control circuit end to end.
       - If 2 Ω or greater, repair the open/high resistance in the circuit.
       - If less than 2 Ω
    4. Replace the K8A Blower Motor Control Module - Auxiliary.
    5. Verify the symptom or DTC was corrected.

cardiagn.com

- If the symptom or DTC was not corrected, replace the K33 HVAC Control Module.
- If the symptom or DTC was corrected

6. All OK.

- **If the test lamp illuminates, but does not change in brightness**

1. Ignition OFF, disconnect the X2 harness connector at the K8A Blower Motor Control Module - Auxiliary.
2. Test for infinite resistance between the control circuit and ground.
    - If less than infinite resistance, repair the short to ground on the circuit.
    - If infinite resistance, replace the K8A Blower Motor Control Module - Auxiliary.

- **If the test lamp changes in brightness as the blower speed is changed**

14. Test or replace the M8B Blower Motor - Auxiliary.

Repair Instructions

Perform the **Diagnostic Repair Verification** after completing the repair.

- **HVAC Component Replacement Reference**
- **Control Module References** for HVAC control module replacement, programming and setup

DTC B0223, B0228, B0233, B0408, B0413, B0418, B0423, B0428, B0433, B1395, B3531, B374A, OR B3782: RECIRCULATION CONTROL/TEMPERATURE CONTROL /MAIN TEMPERATURE CONTROL/AIR FLOW CONTROL CIRCUIT

Diagnostic Instructions

- Perform the **Diagnostic System Check - Vehicle** prior to using this diagnostic procedure.
- Review **Strategy Based Diagnosis** for an overview of the diagnostic approach.
- **Diagnostic Procedure Instructions** provides an overview of each diagnostic category.

DTC Descriptors

DTC B0223

Recirculation Control Circuit

DTC B0228

cardiagn.com

Recirculation Position Feedback Circuit

DTC B0233

Air Flow Control Circuit

DTC B0408

Main Temperature Control Circuit

DTC B0413

Main Temperature Position Feedback Circuit

DTC B0418

Right Temperature Control Circuit

DTC B0423

Right Temperature Position Feedback Circuit

DTC B0428

Rear Temperature Control Circuit

DTC B0433

Rear Temperature Position Feedback Circuit

DTC B1395

Control Module Voltage Reference Output Circuit

DTC B3531

Rear Air Flow Control Circuit

DTC B374A

cardiagn.com

Air Flow Control Position Feedback Circuit

DTC B3782

Rear Air Flow Position Feedback Circuit

For symptom byte information refer to **Symptom Byte List** .

Diagnostic Fault Information

Circuit	Short to Ground	Open/High Resistance	Short to Voltage	Signal Performance
5V Reference	B1395 03	B1395 07	B1395 07	-
Recirculation Actuator Position Signal	B0228 02	B0228 05	B0228 05	1
Main Temperature Actuator Position Signal	B0413 02	B0413 05	B0413 05	2
Right Temperature Actuator Position Signal	B0423 02	B0423 05	B0423 05	3
Rear Temperature Actuator Position Signal	B0433 02	B0433 05	B0433 05	6
Mode Actuator Position Signal	B374A 02	B374A 05	B374A 05	4
Rear Mode Actuator Position Signal	B3782 02	B3782 05	B3782 05	5
Recirculation Actuator Control 1	B0223 02	B0223 04	B0223 01	1
Recirculation Actuator Control 2	B0223 02	B0223 04	B0223 01	1
Main Temperature Actuator Control 1	B0408 02	B0408 04	B0408 01	2
Main Temperature Actuator Control 2	B0408 02	B0408 04	B0408 01	2
Right Temperature Actuator Control 1	B0418 02	B0418 04	B0418 01	3
Right Temperature Actuator Control 2	B0418 02	B0418 04	B0418 01	3
Rear Temperature Actuator Control 1	B0428 02	B0428 04	B0428 01	6
Rear Temperature Actuator Control 2	B0428 02	B0428 04	B0428 01	6
Rear Mode Actuator Control 1	B3531 02	B3531 04	B3531 01	5
Rear Mode Actuator Control 2	B3531 02	B3531 04	B3531 01	5
Mode Actuator Control 1	B0233 02	B0233 04	B0233 01	4
Mode Actuator Control 2	B0233 02	B0233 04	B0233 01	4
Low Reference	-	B0228 05	-	-

1. Air Recirculation Malfunction

cardiagn.com

Circuit	Short to Ground	Open/High Resistance	Short to Voltage	Signal Performance
2. Main Temperature Malfunction				
3. Right Temperature Malfunction				
4. Air Distribution Malfunction				
5. Rear Air Distribution Malfunction				
6. Rear Temperature Distribution Malfunction				

Circuit/System Description

Doors in the HVAC case assembly are used to control air flow. The HVAC control module operates the doors through the use of actuators, with one actuator being used for each door. The system has the following air control doors and associated actuators: mode, left and right temperature, and recirculation. When equipped with auxiliary HVAC controls (CJ4) 2 additional actuators are added for auxiliary (rear) mode and temperature.

Each actuator used in the system is a 5-wire bi-directional electric motor that incorporate a feedback potentiometer. The five circuits are, low reference, 5 V reference, actuator position signal, and two control circuits. The control circuits use either a ground or 12 V value to coordinate the actuator movement. In order to move the actuator, the HVAC control module grounds one of the control circuits while providing the other with 12 V. The HVAC control module reverses the polarity of the control circuits to move the actuator in the opposite direction.

When the actuator shaft rotates, the potentiometer's sliding contact changes the door position signal between 0-5 V. The HVAC control module converts the voltage signal to counts. The total range of the counts is 0-1024, with an operating range between 20-1000. The actual operating range of an actuator is determined during calibration. During calibration, the actuator is moved though its full range of travel and the module stores the minimum and maximum value. Based on the desired system operation, the module sets a commanded, or targeted, value for the actuators. The control circuits are operated to move the door to the required position, and the changing position signal is sent to the module. Once the actual position signal and the commanded value are the same, the module ceases operating the control circuits and the actuator (and door) remain in the desired position.

Conditions for Running the DTC

- Ignition ON.
- The HVAC control module is ON.

Conditions for Setting the DTC

B0223 01, B0233 01, B0408 01, B0418 01, B0428 01, or B3531 01

cardiagn.com

The HVAC control module detects a short to voltage on one of the control circuits.

B0223 02, B0233 02, B0408 02, B0418 02, B0428 02, or B3531 02

The HVAC control module detects a short to ground on one of the control circuits.

B0223 04, B0233 04, B0408 04, B0418 04, B0428 04, or B3531 04

The HVAC control module detects an open on one of the control circuits.

B0228 02, B0413 02, B0423 02, B0433 02, B374A 02, or B3782 02

The HVAC control module detects the sensor signal out of range. The signal voltage is less than 0.1 V for more than 50 ms.

B0228 05, B0413 05, B0423 05, B0433 05, B374A 05, or B3782 05

The HVAC control module detects the sensor signal out of range. The signal voltage is greater than 4.9 V for more than 50 ms.

B0228 61, B0413 61, B0423 61, B0433 61, B374A 61, or B3782 61

The HVAC control module has commanded the actuator to move, and the sensor signal is not changing or has not moved to the commanded position.

B1395 03

The HVAC control module detects the sensor reference voltage out of range. The reference voltage is less than 0.1 V for more than 50 ms.

B1395 07

The HVAC control module detects the sensor reference voltage out of range. The reference voltage is greater than 4.9 V for more than 50 ms.

Action Taken When the DTC Sets

B1395

- The affected output will be switched off for hardware protection.
- All actuators are deactivated.

B0223, B0228, B0233, B0408, B0413, B0418, B0423, B0428, B0433, B3531, B374A, or B3782

cardiagn.com

- The affected output will be switched off for hardware protection.
- The affected actuator is deactivated.

Conditions for Clearing the DTC

The condition for setting the DTC is no longer present.

Diagnostic Aids

During diagnosis, it is important to verify that the air control door and any associated components (linkage, cams, gears, etc.) operate properly. Inspect for any conditions that may limit or prevent the air control door from moving smoothly or moving through its full range of travel. Any mechanical issues should be corrected first, before proceeding with electrical diagnosis.

Reference Information

Schematic Reference

HVAC Schematics

Connector End View Reference

COMPONENT CONNECTOR END VIEWS - INDEX

Description and Operation

Automatic HVAC Description and Operation

Electrical Information Reference

- **Circuit Testing**
- **Connector Repairs**
- **Testing for Intermittent Conditions and Poor Connections**
- **Wiring Repairs**

Scan Tool Reference

Control Module References for scan tool information

cardiagn.com

Circuit/System Verification

1. Perform the **Actuator Recalibration** procedure.
2. Verify the concern or DTC has been corrected.
   - **If the concern or DTC has not been corrected**
   1. Verify DTC B1395 is not set.
      - If DTC B1395 is set, refer to Circuit/System Testing - DTC B1395.
      - If DTC B1395 is not set, refer to Circuit/System Testing - DTC B0223, B0228, B0233, B0408, B0413, B0418, B0423, B0428, B0433, B3531, B374A, or B3782.
   - **If the concern or DTC has been corrected**
3. All OK.

Circuit/System Testing

DTC B1395

1. Ignition OFF and all vehicle systems OFF, disconnect the harness connector at the components listed below. It may take up to 10 min for all vehicle systems to power down.
   - M37 Mode Door Actuator
   - M46 Air Recirculation Door Actuator
   - M6L Air Temperature Door Actuator - Left
   - M6R Air Temperature Door Actuator - Right
   - M37B Mode Door Actuator - Auxiliary
   - M6B Air Temperature Door Actuator - Auxiliary
2. Disconnect the harness connectors at the K33 HVAC Control Module.
3. Test for infinite resistance between the K33 HVAC Control Module 5 V reference circuit terminal 17 X2 and ground.
   - **If less than infinite resistance**

     Repair the short to ground on the circuit.

   - **If infinite resistance**
4. Ignition ON.
5. Test for less than 1 V between the K33 HVAC Control Module 5 V reference terminal 17 X2 and ground.

cardiagn.com

- **If 1 V or greater**

  Repair the short to voltage on the circuit.

- **If less than 1 V**

6. Clear all DTCs.
7. Ignition OFF, connect the harness connectors at the K33 HVAC Control Module, ignition ON.
8. Verify DTC B1395 is not set.
   - **If the DTC is set.**

     Replace the K33 HVAC Control Module.

   - **If the DTC is not set.**
9. Verify DTC B1395 does not set after connecting each of the components listed below one at a time and operating them through their full range.
   - M37 Mode Door Actuator
   - M46 Air Recirculation Door Actuator
   - M6L Air Temperature Door Actuator - Left
   - M6R Air Temperature Door Actuator - Right
   - M37B Mode Door Actuator - Auxiliary
   - M6B Air Temperature Door Actuator - Auxiliary
   - **If the DTC sets after connecting one of the components**

     Replace the actuator that was connected immediately before the DTC set.

   - **If the DTC does not set**
10. All OK.

DTC B0223, B0228, B0233, B0408, B0413, B0418, B0423, B0428, B0433, B3531, B374A, or B3782

1. Ignition OFF and all vehicle systems OFF, disconnect the harness connector at the appropriate door actuator. It may take up to 10 min for all vehicle systems to power down.
2. Test for less than 10 Ω between the appropriate low reference circuit terminal and ground:
   - M37 Mode Door Actuator terminal 1

cardiagn.com

- M46 Air Recirculation Door Actuator terminal 1
- M6L Air Temperature Door Actuator - Left terminal 1
- M6R Air Temperature Door Actuator - Right terminal 1
- M37B Mode Door Actuator - Auxiliary terminal 4
- M6B Air Temperature Door Actuator - Auxiliary terminal 4
- **If 10 Ω or greater**

1. Ignition OFF, disconnect the harness connectors at the K33 HVAC Control Module.
2. Test for less than 2 Ω in the low reference circuit end to end.
    - If 2 Ω or greater, repair the open/high resistance in the circuit.
    - If less than 2 Ω, replace the K33 HVAC Control Module.

- **If less than 10 Ω**

3. Ignition ON.
4. Test for 4.8-5.2 V between the appropriate 5 V reference circuit terminal listed below and ground:
    - M37 Mode Door Actuator terminal 3
    - M46 Air Recirculation Door Actuator terminal 3
    - M6L Air Temperature Door Actuator - Left terminal 3
    - M6R Air Temperature Door Actuator - Right terminal 3
    - M37B Mode Door Actuator - Auxiliary terminal 6
    - M6B Air Temperature Door Actuator - Auxiliary terminal 6
    - **If less than 4.8 V**

1. Ignition OFF, disconnect the harness connectors at the K33 HVAC Control Module.
2. Test for infinite resistance between the 5 V reference circuit and ground.
    - If less than infinite resistance, repair the short to ground on the circuit.
    - If infinite resistance
3. Test for less than 2 Ω in the 5 V reference circuit end to end.
    - If 2 Ω or greater, repair the open/high resistance in the circuit.
    - If less than 2 Ω, replace the K33 HVAC Control Module.

- **If greater than 5.2 V**

1. Ignition OFF, disconnect the harness connectors at the K33 HVAC Control Module, ignition ON.

cardiagn.com

2. Test for less than 1 V between the 5 V reference circuit and ground.
    - If 1 V or greater, repair the short to voltage on the circuit.
    - If less than 1 V, replace the K33 HVAC Control Module.
- **If between 4.8-5.2 V**

5. Test for 4.8-5.2 V between the appropriate signal circuit terminal listed below and ground:
    - M37 Mode Door Actuator terminal 2
    - M46 Air Recirculation Door Actuator terminal 2
    - M6L Air Temperature Door Actuator - Left terminal 2
    - M6R Air Temperature Door Actuator - Right terminal 2
    - M37B Mode Door Actuator - Auxiliary terminal 5
    - M6B Air Temperature Door Actuator - Auxiliary terminal 5
    - **If less than 4.8 V**
    1. Ignition OFF, disconnect the harness connectors at the K33 HVAC Control Module.
    2. Test for infinite resistance between the signal circuit and ground.
        - If less than infinite resistance, repair the short to ground on the circuit.
        - If infinite resistance
    3. Test for less than 2 Ω in the signal circuit end to end.
        - If 2 Ω or greater, repair the open/high resistance in the circuit.
        - If less than 2 Ω, replace the K33 HVAC Control Module.
    - **If greater than 5.2 V**
    1. Ignition OFF, disconnect the harness connectors at the K33 HVAC Control Module, ignition ON.
    2. Test for less than 1 V between the signal circuit and ground.
        - If 1 V or greater, repair the short to voltage on the circuit.
        - If less than 1 V, replace the K33 HVAC Control Module.
    - **If between 4.8-5.2 V**
6. Ignition OFF, disconnect the harness connectors at the K33 HVAC Control Module, ignition ON.
7. Test for less than 1 V between the appropriate control circuit terminals listed below and ground:
    - M37 Mode Door Actuator terminals 5 and 6
    - M46 Air Recirculation Door Actuator terminals 5 and 6

cardiagn.com

- M6L Air Temperature Door Actuator - Left terminals 5 and 6
- M6R Air Temperature Door Actuator - Right terminals 5 and 6
- M37B Mode Door Actuator - Auxiliary terminals 1 and 2
- M6B Air Temperature Door Actuator - Auxiliary terminals 1 and 2
- **If 1 V or greater**

  Repair the short to voltage on the circuit.

- **If less than 1 V**

8. Ignition OFF.
9. Test for infinite resistance between the appropriate control circuit terminals listed below and ground:
   - M37 Mode Door Actuator terminals 5 and 6
   - M46 Air Recirculation Door Actuator terminals 5 and 6
   - M6L Air Temperature Door Actuator - Left terminals 5 and 6
   - M6R Air Temperature Door Actuator - Right terminals 5 and 6
   - M37B Mode Door Actuator - Auxiliary terminals 1 and 2
   - M6B Air Temperature Door Actuator - Auxiliary terminals 1 and 2
   - **If less than infinite resistance**

     Repair the short to ground on the circuit.

   - **If infinite resistance**
10. Test for less than 2 Ω in each control circuit end to end.
    - **If 2 Ω or greater**

      Repair the open/high resistance in the circuit.

    - **If less than 2 Ω**

NOTE: **Before replacing an actuator, verify that there are no mechanical issues with the air control door and any associated components.**

11. Test or replace the actuator.

cardiagn.com

12. Verify the DTC or symptom is corrected while operating the HVAC system under the Conditions for Running the DTC.
    - **If the DTC or symptom is not corrected**

      Replace the K33 HVAC Control Module.

    - **If the DTC or symptom is corrected**
13. All OK.

Repair Instructions

Perform the **Diagnostic Repair Verification** after completing the repair.

- **HVAC Component Replacement Reference**
- **Control Module References** for HVAC control module replacement, programming and setup

DTC B1020: AUXILIARY ELECTRONIC CONTROL UNIT (ECU) INTERNAL MALFUNCTION

Diagnostic Instructions

- Perform the **Diagnostic System Check - Vehicle** prior to using this diagnostic procedure.
- Review **Strategy Based Diagnosis** for an overview of the diagnostic approach.
- **Diagnostic Procedure Instructions** provides an overview of each diagnostic category.

DTC Descriptor

DTC B1020 39

Auxiliary Electronic Control Unit (ECU) Internal Malfunction

Circuit/System Description

The HVAC control module and the HVAC control module - auxiliary communicates with each other via serial data. This DTC indicates a fault in the HVAC control module - auxiliary. No external circuits are involved. The HVAC system may continue to respond normally to faceplate functions when this DTC is set.

Conditions for Running the DTC

- Ignition is ON or in the ACC position.

cardiagn.com

- The system voltage is at least 9.5 V and no more than 15.5 V.
- All the above conditions are present for greater than 10 s.

Conditions for Setting the DTC

The HVAC control module receives an improper status response indicating an internal ECU fault in the HVAC control module - auxiliary.

Action Taken when the DTC Sets

No action is taken.

Conditions for Clearing the DTC

- A current DTC clears when the HVAC control module receives a proper status response message back from the HVAC control module - auxiliary assembly.
- A history DTC clears after 50 malfunction-free ignition cycles.

Diagnostic Aids

- This DTC may be stored as a history DTC without affecting the operation of the HVAC control module - auxiliary.
- If stored only as a history DTC and not retrieved as a current DTC, do not replace the HVAC control module - auxiliary.
- If this DTC is retrieved as both a current and history DTC, replace the HVAC control module - auxiliary.

Reference Information

Schematic Reference

HVAC Schematics

Connector End View Reference

COMPONENT CONNECTOR END VIEWS - INDEX

Description and Operation

Automatic HVAC Description and Operation

Electrical Information Reference

cardiagn.com

- Circuit Testing
- Connector Repairs
- Testing for Intermittent Conditions and Poor Connections
- Wiring Repairs

Scan Tool Reference

Control Module References for scan tool information

Circuit/System Verification

1. Ignition ON.
2. Verify DTC B1020 is not set.
   - **If the DTC is set**

     Replace the K33A HVAC Control Module - Auxiliary.

   - **If the DTC is not set**
3. All OK.

Repair Instructions

Perform the Diagnostic Repair Verification after completing the repair.

Control Module References for HVAC control module - auxiliary replacement, programming and setup

DTC B393B: AIR CONDITIONING COMPRESSOR VALVE CONTROL CIRCUIT

Diagnostic Instructions

- Perform the Diagnostic System Check - Vehicle prior to using this diagnostic procedure.
- Review Strategy Based Diagnosis for an overview of the diagnostic approach.
- Diagnostic Procedure Instructions provides an overview of each diagnostic category.

DTC Descriptor

DTC B393B

cardiagn.com

Air Conditioning Compressor Valve Control Circuit

For symptom byte information, refer to **Symptom Byte List** .

Diagnostic Fault Information

Circuit	Short to Ground	Open/High Resistance	Short to Voltage	Signal Performance
B+	B393B 0B	B393B 04	-	-
Control	B393B 04	B393B 04	B393B 0B	-

Circuit/System Description

This A/C system uses a conventional clutch to engage and mechanically turn the compressor and a variable displacement solenoid valve to alter the amount of displacement created by the turning of the compressor. The HVAC control module provides both switched battery voltage and a pulse width modulated ground to the variable displacement solenoid valve. When the A/C switch is pressed, the HVAC control module grounds the variable displacement solenoid using a (PWM) signal in order to determine the amount of compressor displacement. The performance of the A/C compressor is based on adjusted interior temperature and engine load.

Conditions for Running the DTC

- Ignition ON.
- The HVAC control module is ON.

Conditions for Setting the DTC

B393B 04

A PWM greater than 10% is sent but no current is read back.

B393B 0B

Measured current is above threshold of 815 mA.

Action Taken When the DTC Sets

B393B 04

The A/C compressor is disabled.

cardiagn.com

B393B 0B

- The A/C compressor is disabled.
- Output will be switched off for hardware protection.

Conditions for Clearing the DTC

The condition for setting the DTC is no longer present.

Reference Information

Schematic Reference

HVAC Schematics

Connector End View Reference

COMPONENT CONNECTOR END VIEWS - INDEX

Description and Operation

Automatic HVAC Description and Operation

Electrical Information Reference

- **Circuit Testing**
- **Connector Repairs**
- **Testing for Intermittent Conditions and Poor Connections**
- **Wiring Repairs**

Scan Tool Reference

Control Module References for scan tool information

Circuit/System Testing

1. Ignition OFF, disconnect the harness connector at the Q46 A/C Compressor Solenoid Valve. Connect a test light between terminals 1 and 2 of the harness connector. Ignition ON.

cardiagn.com

2. Verify the test light turns on and off when commanding the Q46 A/C Compressor Solenoid Valve ON and OFF with the scan tool.
   - **If the test light does not turn ON and OFF**
   1. Ignition OFF, disconnect the X2 harness connector at the K33 HVAC Control Module, ignition ON.
   2. Test for less than 1 V between ground and each control circuit terminal listed below:
      - terminal 10
      - terminal 11
      - If 1 V or greater, repair the short to voltage on the circuit.
      - If less than 1 V
   3. Ignition OFF.
   4. Test for infinite resistance between ground and each control circuit terminal listed below:
      - terminal 10
      - terminal 11
      - If less than infinite resistance, repair the short to ground on the circuit.
      - If infinite resistance
   5. Test for less than 2 Ω in each of the control circuits end to end listed below:
      - Q46 A/C Compressor Solenoid Valve terminal 1 and K33 HVAC Control Module terminal 10
      - Q46 A/C Compressor Solenoid Valve terminal 2 and K33 HVAC Control Module terminal 11
      - If 2 Ω or greater, repair the open/high resistance in the circuit.
      - If less than 2 Ω, replace the K33 HVAC Control Module.
   - **If the test light turns ON and OFF**
3. Test the Q46 A/C Compressor Solenoid Valve or replace the G1 A/C Compressor.

Component Testing

A/C Compressor Solenoid Valve Test

1. Ignition OFF, disconnect the harness connector at the Q46 A/C Compressor Solenoid Valve.
2. Test for 7-15 Ω between B+ terminal 2 and control terminal 1.
   - **If less than 7 Ω or greater than 15 Ω**

     Replace the G1 A/C Compressor.

cardiagn.com

- **If between 7-15 Ω**

3. Test for infinite resistance between each terminal and the Q46 A/C Compressor Solenoid Valve housing/case.
   - **If less than infinite resistance**

     Replace the G1 A/C Compressor.

   - **If infinite resistance**
4. All OK.

Repair Instructions

Perform the **Diagnostic Repair Verification** after completing the repair.

- **HVAC Component Replacement Reference**
- **Control Module References** for control module replacement, programming and setup

DTC P0532 OR P0533: AIR CONDITIONING (A/C) REFRIGERANT PRESSURE SENSOR

Diagnostic Instructions

- Perform the **Diagnostic System Check - Vehicle** prior to using this diagnostic procedure.
- Review **Strategy Based Diagnosis** for an overview of the diagnostic approach.
- **Diagnostic Procedure Instructions** provides an overview of the diagnostic category.

DTC Descriptors

DTC P0532

Air Conditioning (A/C) Refrigerant Pressure Sensor Circuit Low Voltage

DTC P0533

Air Conditioning (A/C) Refrigerant Pressure Sensor Circuit High Voltage

Diagnostic Fault Information

Circuit	Short to Ground	Open/High Resistance	Short to Voltage	Signal Performance

cardiagn.com

Circuit	Short to Ground	Open/High Resistance	Short to Voltage	Signal Performance
5 V Reference	P0532, P0641	P0532	P0533	-
Signal	P0532	P0532	P0533	-
Low Reference	-	P0533	-	-

Circuit/System Description

The engine control module (ECM) monitors the high side refrigerant pressure through the A/C refrigerant pressure sensor. The ECM supplies a 5 V reference and a low reference to the sensor. Changes in the A/C refrigerant pressure cause the sensor signal to the ECM to vary. When the pressure is high, the signal voltage is high. When the pressure is low, the signal voltage is low. The ECM may use this information to turn the cooling fans on as well as to monitor clutch engagement. The HVAC module will receive the A/C refrigerant pressure information from the ECM via serial data.

Conditions for Running the DTC

- Engine is running.
- Any of the conditions for setting the DTC are met for 15 s.
- Battery voltage is between 11-18 V.

Conditions for Setting the DTC

P0532

The ECM detects that the A/C pressure is less than 1 psi (0.25 V).

P0533

The ECM detects that the A/C pressure is more than 428 psi (4.92 V).

Action Taken When the DTC Sets

- DTCs P0532 and P0533 are Type B DTCs
- The A/C compressor is disabled.
- The ECM will illuminate the malfunction indicator lamp (MIL).

Conditions for Clearing the DTC

cardiagn.com

The condition for setting the DTC is no longer present.

Diagnostic Aids

A malfunction within the refrigerant system causing high pressure can cause this DTC to set.

Reference Information

Schematic Reference

HVAC Schematics

Connector End View Reference

COMPONENT CONNECTOR END VIEWS - INDEX

Description and Operation

Automatic HVAC Description and Operation

Electrical Information Reference

- **Circuit Testing**
- **Connector Repairs**
- **Testing for Intermittent Conditions and Poor Connections**
- **Wiring Repairs**

DTC Type Reference

Powertrain Diagnostic Trouble Code (DTC) Type Definitions

Scan Tool Reference

Control Module References for scan tool information

Circuit/System Verification

1. Ignition ON

cardiagn.com

2. Verify the scan tool engine control module A/C High Side Pressure Sensor parameter is between 6.8 kPa (1 psi) and 2950 kPa (428 psi).
   - **If not between 6.8 kPa (1 psi) and 2950 kPa (428 psi)**

     Refer to Circuit/System Testing

   - **If between 6.8 kPa (1 psi) and 2950 kPa (428 psi)**
3. All OK

Circuit/System Testing

1. Ignition OFF and all vehicle systems OFF, disconnect the harness connector at the B1 A/C Refrigerant Pressure Sensor. It may take up to 2 min for all vehicle systems to power down.
2. Test for less than 10 Ω between the low reference circuit terminal 1 and ground.
   - **If 10 Ω or greater**
   1. Ignition OFF, disconnect the harness connector at the K20 Engine Control Module.
   2. Test for less than 2 Ω in the low reference circuit end to end.
      - If 2 Ω or greater, repair the open/high resistance in the circuit.
      - If less than 2 Ω, replace the K20 Engine Control Module.
   - **If less than 10 Ω**
3. Ignition ON.
4. Test for 4.8-5.2 V between the 5 V reference circuit terminal 2 and ground.
   - **If less than 4.8 V**
   1. Ignition OFF, disconnect the harness connector at the K20 Engine Control Module.
   2. Test for infinite resistance between the 5 V reference circuit and ground.
      - If less than infinite resistance, repair the short to ground on the circuit.
      - If infinite resistance
   3. Test for less than 2 Ω in the 5 V reference circuit end to end.
      - If 2 Ω or greater, repair the open/high resistance in the circuit.
      - If less than 2 Ω, replace the K20 Engine Control Module.
   - **If greater than 5.2 V**
   1. Ignition OFF, disconnect the harness connector at the K20 Engine Control Module, ignition ON.

cardiagn.com

2. Test for less than 1 V between the 5 V reference circuit and ground.
    - If 1 V or greater, repair the short to voltage on the circuit.
    - If less than 1 V, replace the K20 Engine Control Module.
- **If between 4.8-5.2 V**

5. Verify the scan tool A/C High Side Pressure Sensor parameter is less than.25 V.
    - **If.25 V or greater**
    1. Ignition OFF, disconnect the harness connector at the K20 Engine Control Module, ignition ON.
    2. Test for less than 1 V between the signal circuit terminal 3 and ground.
        - If 1 V or greater, repair the short to voltage on the circuit.
        - If less than 1 V, replace the K20 Engine Control Module.
    - **If less than.25 V**
6. Install a 3 A fused jumper wire between the signal circuit terminal 3 and the 5 V reference circuit terminal 2.
7. Verify the scan tool A/C High Side Pressure Sensor parameter is greater than 4.8 V.
    - **If 4.8 V or less**
    1. Ignition OFF, remove the jumper wire, disconnect the harness connector at the K20 Engine Control Module.
    2. Test for infinite resistance between the signal circuit terminal 3 and ground.
        - If less than infinite resistance, repair the short to ground on the circuit.
        - If infinite resistance
    3. Test for less than 2 Ω in the signal circuit end to end.
        - If 2 Ω or greater, repair the open/high resistance in the circuit.
        - If less than 2 Ω, replace the K20 Engine Control Module.
    - **If greater than 4.8 V**
8. Test or replace the B1 A/C Refrigerant Pressure Sensor.

Repair Instructions

Perform the **Diagnostic Repair Verification** after completing the repair.

- **HVAC Component Replacement Reference**
- **Control Module References** for engine control module replacement, programming and setup

cardiagn.com

DTC P0645, P0646, OR P0647: AIR CONDITIONING (A/C) COMPRESSOR CLUTCH RELAY CONTROL

Diagnostic Instructions

- Perform the **Diagnostic System Check - Vehicle** prior to using this diagnostic procedure.
- Review **Strategy Based Diagnosis** for an overview of the diagnostic approach.
- **Diagnostic Procedure Instructions** provides an overview of each diagnostic category.

DTC Descriptors

DTC P0645

Air Conditioning (A/C) Compressor Clutch Relay Control Circuit

DTC P0646

Air Conditioning (A/C) Compressor Clutch Relay Control Circuit Low Voltage

DTC P0647

Air Conditioning (A/C) Compressor Clutch Relay Control Circuit High Voltage

Diagnostic Fault Information

Circuit	Short to Ground	Open/High Resistance	Short to Voltage	Signal Performance
A/C Clutch Relay Coil Ignition	1	P0645	-	-
A/C Clutch Relay Switch B+	1	1	-	-
A/C Clutch Relay Coil Control	P0646	P0645	P0647	-
A/C Clutch Relay Switch Control	1	1	2	-
Component Ground	-	1	-	-

1. A/C Compressor Inoperative
2. A/C Compressor Stuck ON

Circuit/System Description

cardiagn.com

When the A/C switch is pressed, the HVAC control module sends a serial data message to the engine control module (ECM) indicating the A/C request. In response to this message, the ECM grounds the A/C compressor clutch relay control circuit energizing the A/C compressor clutch relay. With the relay contacts closed, battery voltage is applied through the A/C compressor clutch control circuit activating the A/C compressor clutch.

Conditions for Running the DTC

- The ignition voltage is between 11-18 volts.
- The engine speed is greater than 600 RPM.
- An A/C request is made.

Conditions for Setting the DTC

P0645 or P0646

The ECM detects a short to ground or an open at the A/C compressor clutch relay control circuit.

P0647

The ECM detects a short to voltage at the A/C compressor clutch relay control circuit.

Action Taken When the DTC Sets

P0645 or P0646

The A/C compressor is inoperative or always active.

P0647

The A/C compressor is inoperative.

Conditions for Clearing the DTC

A history DTC clears after 40 consecutive warm-up cycles have occurred without a malfunction.

Reference Information

Schematic Reference

HVAC Schematics

cardiagn.com

Connector End View Reference

COMPONENT CONNECTOR END VIEWS - INDEX

Description and Operation

Automatic HVAC Description and Operation

Electrical Information Reference

- **Circuit Testing**
- **Connector Repairs**
- **Testing for Intermittent Conditions and Poor Connections**
- **Wiring Repairs**

DTC Type Reference

Powertrain Diagnostic Trouble Code (DTC) Type Definitions

Scan Tool Reference

Control Module References for scan tool information

Circuit/System Testing

1. Ignition OFF and all vehicle systems OFF, disconnect the harness connector at the Q2 A/C Compressor Clutch. It may take up to 10 min for all vehicle systems to power down.
2. Test for less than 10 Ω between the Q2 A/C Compressor Clutch ground circuit terminal 1 and ground.
    - **If 10 Ω or greater**
    1. Ignition OFF.
    2. Test for less than 2 Ω in the ground circuit end to end.
        - If 2 Ω or greater, repair the open/high resistance in the circuit.
        - If less than 2 Ω, repair the open/high resistance in the ground connection.
    - **If less than 10 Ω**
3. Connect a test lamp between the control circuit terminal 2 and ground, ignition ON.

cardiagn.com

4. Verify the test lamp does not turn ON and OFF when commanding the Q2 A/C Compressor Clutch On and Off with a scan tool.
   - **If the test lamp turns ON and OFF**

     Test or replace the Q2 A/C Compressor Clutch.

   - **If the test lamp does not turn ON and OFF**
5. Ignition OFF, remove the test lamp and connect the harness connector at the Q2 A/C Compressor Clutch. Disconnect the X2 harness connector at the X50A Fuse Block - Underhood, ignition ON.
6. Verify the Q2 A/C Compressor Clutch is not activated.
   - **If the Q2 A/C Compressor Clutch is activated**
   1. Ignition OFF, disconnect the harness connector at the Q2 A/C Compressor Clutch, ignition ON.
   2. Test for less than 1 V between the control circuit terminal 2 and ground.
      - If 1 V or greater, repair the short to voltage on the circuit.
      - If less than 1 V, test or replace the Q2 A/C Compressor Clutch.
   - **If the Q2 A/C Compressor Clutch is not activated**
7. Connect a 10 A fused jumper wire between the control circuit terminal C1 and B+.
8. Verify the Q2 A/C Compressor Clutch activates.
   - **If the Q2 A/C Compressor Clutch does not activate**
   1. Ignition OFF, remove the jumper wire, disconnect the harness connector at the Q2 A/C Compressor Clutch, ignition ON.
   2. Test for infinite resistance between the control circuit and ground.
      - If less than infinite resistance, repair the short to ground on the circuit.
      - If infinite resistance
   3. Test for less than 2 Ω in the control circuit end to end.
      - If 2 Ω or greater, repair the open/high resistance in the circuit.
      - If less than 2 Ω, test or replace the Q2 A/C Compressor Clutch.
   - **If the Q2 A/C Compressor Clutch activates**
9. Ignition OFF, connect the X2 harness connector at the X50A Fuse Block - Underhood and disconnect the harness connector at the K20 Engine Control Module, ignition ON.
10. Verify the Q2 A/C Compressor Clutch is not activated.
    - **If the Q2 A/C Compressor Clutch is activated**

cardiagn.com

1. Ignition OFF, disconnect the X2 harness connector at the X50A Fuse Block - Underhood.
2. Test for infinite resistance between the X2 X50A Fuse Block - Underhood control circuit terminal A1 and ground.
   - If less than Infinite resistance, repair the short to ground on the circuit.
   - If infinite resistance, test or replace the X50A Fuse Block - Underhood.

- **If the Q2 A/C Compressor Clutch is not activated**

11. Connect a 3 A fused jumper wire between the K20 Engine Control Module control circuit terminal for the KR29 A/C Compressor Clutch Relay and ground.
12. Verify the Q2 A/C Compressor Clutch activates.

- **If the Q2 A/C Compressor Clutch does not activate**

1. Ignition OFF, remove the jumper wire, disconnect the X2 harness connector at the X50A Fuse Block - Underhood, ignition ON.
2. Test for less than 1 V between the X2 X50A Fuse Block - Underhood control circuit terminal A1 and ground.
   - If 1 V or greater, repair the short to voltage on the circuit.
   - If less than 1 V
3. Test for less than 2 Ω in the control circuit end to end.
   - If 2 Ω or greater, repair the open/high resistance in the circuit.
   - If less than 2 Ω, test or replace the X50A Fuse Block - Underhood.

- **If the Q2 A/C Compressor Clutch activates**

13. Replace the K20 Engine Control Module.

Component Testing

Compressor Clutch Test

1. Ignition OFF, disconnect the Q2 A/C Compressor Clutch.
2. Test for 3.9 - 4.3 Ω between terminals 1 and 2.

   - **If not between 3.9 - 4.3 Ω**

     Replace the Q2 A/C Compressor Clutch.

   - **If between 3.9 - 4.3 Ω**

3. All OK.

cardiagn.com

Repair Instructions

Perform the **Diagnostic Repair Verification** after completing the repair.

- **HVAC Component Replacement Reference**
- **Control Module References** for engine control module replacement, programming and setup

SYMPTOMS - HVAC SYSTEMS - AUTOMATIC

NOTE: **The following steps must be completed before using the symptom tables:**

1. Perform the **Diagnostic System Check - Vehicle** before using the HVAC System Malfunction procedure in order to verify that all of the following are true:
   - There are no DTCs set.
   - The control modules can communicate via the serial data link.
2. Review the system operation in order to familiarize yourself with the system functions. Refer to **Automatic HVAC Description and Operation**.

Visual/Physical Inspection

NOTE: **Shutting one or more outlets may adversely affect the Automatic HVAC system by producing erroneous duct air temperature sensor readings in the duct connecting to the closed outlet. Where possible, always operate the Automatic HVAC system with all outlets open.**

- Inspect for aftermarket devices which may affect the operation of the HVAC System. Refer to **Checking Aftermarket Accessories** .
- Inspect the easily accessible or visible system components for obvious damage or conditions which may cause the symptom.
- Verify the A/C compressor turns freely and is not seized.
- Verify that the customer is using the correct key to enable personalization and is not inadvertently activating auxiliary HVAC controls.
- The A/C compressor will not operate in cold outside air temperatures.
- The following conditions may cause window fogging:
  - Wet carpet or mats
  - High humidity
  - Interior water leak
  - Blocked A/C evaporator drain tube

cardiagn.com

    - Maximum passenger capacity
    - Blocked body pressure relief valves
- Inspect the air distribution system for causes of reduced air flow:
    - Obstructed or dirty passenger compartment air filter, if equipped
    - Blocked or damaged air inlet or outlet vents

Intermittent

Faulty electrical connections or wiring may be the cause of intermittent conditions. Refer to **Testing for Intermittent Conditions and Poor Connections** .

Symptom List

Refer to **HVAC System Malfunction** in order to diagnose the symptom.

HVAC SYSTEM MALFUNCTION

Diagnostic Instructions

- Perform the **Diagnostic System Check - Vehicle** prior to using this diagnostic procedure.
- Review **Strategy Based Diagnosis** for an overview of the diagnostic approach.
- **Diagnostic Procedure Instructions** provides an overview of each diagnostic category.

Diagnostic Aids

Check the following mechanical fault sources:

- Air distribution box
- Air distribution hoses/air distribution ducts

Reference Information

Schematic Reference

HVAC Schematics

Connector End View Reference

cardiagn.com

COMPONENT CONNECTOR END VIEWS - INDEX

Description and Operation

Automatic HVAC Description and Operation

Electrical Information Reference

- **Circuit Testing**
- **Connector Repairs**
- **Testing for Intermittent Conditions and Poor Connections**
- **Wiring Repairs**

Scan Tool Reference

Control Module References for scan tool information

Special Tools

- R-134a - **J43600** ACR Air Conditioning Service Center
- R-1234yf - **GE-50300** ACR Air Conditioning Service Center

Circuit/System Verification

NOTE: **Check for bulletins before proceeding.**

1. Ignition ON.
2. Verify every applicable scan tool Switch parameter changes when pressing the appropriate switch on the A26 HVAC Controls.
   - **If any parameter does not change**

     Replace the A26 HVAC Controls.

   - **If all parameters change**
3. Verify every applicable scan tool Switch parameter changes when pressing the appropriate switch on the A34 HVAC Controls - Auxiliary.
   - **If any parameter does not change**

cardiagn.com

Replace the A34 HVAC Controls - Auxiliary.

- **If all parameters change**

4. Verify the front blower motor operates properly with the blower motor switch in each speed position.
   - **If the front blower motor does not operate properly in each speed position**

     Refer to **DTC B0193**.

   - **If the front blower motor operates properly in each speed position**
5. Verify the rear blower motor operates properly with the blower motor switch in each speed position.
   - **If the rear blower motor does not operate properly in each speed position**

     Refer to **DTC B0208**.

   - **If the rear blower motor operates properly in each speed position**
6. Verify every HVAC door moves correctly when pressing the appropriate switch.
   - **If any HVAC door does not move correctly**

     Refer to **DTC B0223, B0228, B0233, B0408, B0413, B0418, B0423, B0428, B0433, B1395, B3531, B374A, or B3782**.

   - **If all HVAC doors move correctly**

NOTE: **The refrigerant in this vehicle could be either R-134a or R-1234yf. This will determine the correct special tool to use in step 7.**

- **R-134a - J43600 ACR Air Conditioning Recharge Service Center**
- **R-1234yf - GE-50300 ACR Air Conditioning Recharge Service Center**

7. Install the appropriate ACR Air Conditioning Recharge Service Center.
8. Verify the high side pressure reading on the Air Conditioning Service Center is within 10% of the scan tool ECM A/C High Side Pressure Sensor parameter.
   - **If the reading is not within 10%**

     Refer to **DTC P0532 or P0533**.

cardiagn.com

- **If the reading is within 10%**

9. Verify the A/C High Side Pressure Sensor parameter is between 269-2929 kPa (39-425 PSI).
   - **If the reading is not between 269-2929 kPa (39-425 PSI)**

     Refer to **Air Conditioning (A/C) System Performance Test (R-134a - SWB)** **Air Conditioning (A/C) System Performance Test (R-1234yf)** **Air Conditioning (A/C) System Performance Test (R-134a - LWB)** .

   - **If the reading is between 269-2929 kPa (39-425 PSI)**
10. Verify the scan tool parameters listed below are within 10% of ambient temperature.
    - Lower Left Duct Air Temperature Sensor
    - Upper Left Duct Air Temperature Sensor
    - Lower Right Duct Air Temperature Sensor
    - Upper Right Duct Air Temperature Sensor
    - A/C Evaporator Temperature Sensor
    - Lower Auxiliary Duct Air Temperature Sensor
    - Upper Auxiliary Duct Air Temperature Sensor
    - **If not within 10% of ambient temperature**

      Refer to **DTC B0173, B0178, B0509, B0514, B0519, B3583, or B3933**.

    - **If within 10% of ambient temperature**
11. Verify the scan tool Sunload parameter changes while covering the B10B Ambient Light/Sunload Sensor with a shop towel and changes when shining a bright light on it.
    - **If the Sunload parameter does not change**

      Refer to **DTC B0163, B0183, or B1405**.

    - **If the Sunload parameter changes**
12. Verify the actual inside air temperature, using a thermometer, is less than 3Â°C (5Â°F) difference from the scan tool Inside Passenger Compartment Air Temp. Sensor parameter.
    - **If greater than a 3Â°C (5Â°F) difference**

      Refer to **DTC B0163, B0183, or B1405**.

cardiagn.com

- **If less than a 3Â°C (5Â°F) difference**

13. Engine ON, A/C system ON.
14. Verify cool air flows from the ducts with the temperature control in the coldest position.
    - **If the air is not cool**
    1. Verify the Q2 A/C Compressor Clutch is engaged.
        - If the Q2 A/C Compressor Clutch is not engaged, refer to **Air Conditioning Compressor Malfunction**.
        - If the Q2 A/C Compressor Clutch is engaged, refer to **Air Conditioning (A/C) System Performance Test (R-134a - SWB)** **Air Conditioning (A/C) System Performance Test (R-1234yf)** **Air Conditioning (A/C) System Performance Test (R-134a - LWB)** , and **DTC B393B**.
    - **If the air is cool**
15. Verify warm air flows from the ducts with the temperature control in the warmest position.
    - **If the air is not warm**

      Refer to **Heating Performance Diagnostic** .

    - **If the air is warm**
16. All OK.

Repair Instructions

Perform the **Diagnostic Repair Verification** after completing the repair.

- **HVAC Component Replacement Reference**
- **Control Module References** for HVAC control module replacement, programming and setup

AIR CONDITIONING COMPRESSOR MALFUNCTION

Diagnostic Instructions

- Perform the **Diagnostic System Check - Vehicle** prior to using this diagnostic procedure.
- Review **Strategy Based Diagnosis** for an overview of the diagnostic approach.
- **Diagnostic Procedure Instructions** provides an overview of each diagnostic category.

Circuit/System Description

cardiagn.com

The A/C compressor uses a conventional belt driven magnetic clutch to engage and mechanically turn the compressor. When the A/C switch is pressed, the HVAC control module sends an A/C request message to the ECM via serial data. If specific criteria is met, the ECM then grounds the A/C compressor clutch relay control circuit, which will switch the A/C compressor clutch relay. With the relay contacts closed, battery voltage is supplied to the permanently grounded A/C compressor clutch. The A/C compressor clutch will then be activated.

This A/C system utilizes a variable displacement solenoid valve to alter the amount of displacement created by the turning of the compressor. The HVAC control module provides both battery voltage and a pulse width modulated ground to the variable displacement solenoid valve. When the A/C switch is pressed, the HVAC control module grounds the variable displacement solenoid using a (PWM) signal in order to determine the amount of compressor displacement. The performance of the A/C compressor is regulated based on the adjusted interior temperature.

Diagnostic Aids

The following conditions must be met in order to turn on the A/C compressor:

- Battery voltage is between 9-18 V.
- Engine coolant temperature is less than 124Â°C (255Â°F).
- Engine speed is greater than 600 RPM.
- Engine speed is less than 5 500 RPM.
- A/C high side pressure is between 269-2 929 kPa (39-425 PSI).
- Throttle position is less than 100%.
- Evaporator temperature is greater than 3Â°C (38Â°F).
- ECM does not detect excessive torque load.
- ECM does not detect insufficient idle quality.
- The ambient temperature sensor senses above 1Â°C (34Â°F).
- Blower motor is ON.

Reference Information

Schematic Reference

HVAC Schematics

Connector End View Reference

COMPONENT CONNECTOR END VIEWS - INDEX

cardiagn.com

Description and Operation

Automatic HVAC Description and Operation

Electrical Information Reference

- **Circuit Testing**
- **Connector Repairs**
- **Testing for Intermittent Conditions and Poor Connections**
- **Wiring Repairs**

Scan Tool Reference

Control Module References for scan tool information

Circuit/System Verification

NOTE: **Refer to HVAC System Malfunction before performing this procedure.**

1. Ignition ON, press and release the A/C Switch.
2. Verify the HVAC control module scan tool A/C Switch parameter changes between Active and Inactive.
   - **If the parameter does not change**

     Replace the A26 HVAC Controls.

   - **If the parameter changes**
3. Set A/C system to coolest setting with blower ON.
4. Press and release the A/C switch several times.
5. Verify the ECM scan tool A/C Request Signal parameter changes between Active and Inactive.
   - **If the parameter does not change**

     Replace the K33 HVAC Control Module.

   - **If the parameter changes**
6. Verify the A/C compressor clutch engages and disengages when commanding the ECM A/C Relay output function On and Off with a scan

cardiagn.com

tool.

- **If the A/C compressor clutch does not engage or disengage as commanded**

  Refer to **DTC P0645, P0646, or P0647**

- **If the A/C compressor clutch engages and disengages as commanded**

7. Engine ON.
8. Verify the HVAC control module scan tool A/C Compressor Refrigerant Solenoid Valve Command parameter changes with varying cooling loads.
   - **If the parameter does not change**

     Refer to **DTC B393B**

   - **If the parameter does change**
9. All OK.

Repair Instructions

Perform the **Diagnostic Repair Verification** after completing the repair.

- **HVAC Component Replacement Reference**
- **Control Module References** for HVAC control module replacement, programming and setup

AFTERBLOW ENABLING

Afterblow is a feature that dries the evaporator core by operating the blower motor after the engine is turned off. This aids in reducing microbial growth that can create undesirable odors.

The vehicle does not come equipped with the afterblow feature turned on. If the afterblow feature is required due to an odor concern, it must be enabled by using the scan tool via the HVAC special functions menu.

Use the following procedure to enable the afterblow feature:

1. Connect the Scan Tool.
2. Turn ON the ignition, with the engine OFF.
3. Build the vehicle with the scan tool.

cardiagn.com

4. Select Module Diagnosis.
5. Select Remote Heater and Air Conditioning Control Module.
6. Select Configuration/Reset Functions.
7. Select HVAC Afterblow Configuration.

When afterblow has been enabled, the following conditions must be met for the HVAC control module to operate afterblow:

- The engine must be turned OFF.
- The outside air temperature must be at least 11Â°C (52Â°F) when the compressor was last operating before the engine was turned OFF.
- The A/C compressor must have operated for more than 2 minutes before the engine was turned OFF.
- The system voltage must be above 12 V.

Once the above conditions have been met, the blower motor will operate at a low blower speed, following the sequence below up to 5 times:

1. The blower motor will be OFF for 7-11 minutes.
2. The blower motor will operate for 20-60 seconds.

ACTUATOR RECALIBRATION

HVAC Control Module Replacement

When replacing or disconnecting the HVAC control module, it will be necessary to perform a recalibration process. When installing or reconnecting the HVAC control module, be sure to perform the following:

Preferred Method (with Scan Tool)

NOTE: **Do not adjust any controls on the HVAC control module while the HVAC control module is self-calibrating. If interrupted, improper HVAC performance will result.**

1. Ignition OFF.
2. Disconnect the scan tool.
3. Install/connect the HVAC control module.
4. Connect all previously disconnected components.
5. Start the vehicle.
6. With the scan tool, initiate the HVAC Actuators Learn feature of the HVAC control module Special Functions menu.

cardiagn.com

7. Operate system and verify that no DTCs have set as current DTCs.
8. If DTC B101E 4B is set after attempting the actuator recalibration procedure, perform the following:
    1. Verify which actuator does not have a scan tool learn status parameter status of complete.
    2. Verify the unlearned actuator is physically rotating - A common cause of DTC B101E 4B is an actuator that is electrically OK but fails to physically rotate (e.g. stripped gears).
    3. If the unlearned actuator is not physically rotating, replace the actuator, otherwise replace the HVAC control module.

Alternate Method (without Scan Tool)

NOTE: **Do not adjust any controls on the HVAC control module while the HVAC control module is self-calibrating. If interrupted, improper HVAC performance will result.**

1. Clear all DTCs.
2. Ignition OFF.
3. Install/connect the HVAC control module.
4. Connect all previously disconnected components.
5. Remove the HVAC control module fuse for a minimum of 10 s.
6. Install the HVAC control module fuse.
7. Start the vehicle.
8. Wait 40 s for the HVAC control module to self-calibrate.

Actuator Replacement

When replacing an HVAC actuator it will be necessary to allow the HVAC control module to perform a recalibration process. When installing an HVAC actuator be sure to perform one of the following:

Preferred Method (with Scan Tool)

NOTE: **Do not adjust any controls on the HVAC control module while the HVAC control module is self-calibrating. If interrupted, improper HVAC performance will result.**

1. Clear all DTCs.
2. Ignition OFF.
3. Install the HVAC actuator.

cardiagn.com

4. Connect all previously disconnected components.
5. Start the vehicle.
6. With the scan tool, initiate the HVAC Actuators Relearn feature of the HVAC control module Special Functions menu.
7. Operate system and verify that no DTCs have set as current DTCs.
8. If DTC B101E 4B is set after attempting the actuator recalibration procedure, perform the following:
    1. Verify which actuator does not have a scan tool learn status parameter status of complete.
    2. Verify the unlearned actuator is physically rotating - A common cause of DTC B101E 4B is an actuator that is electrically OK but fails to physically rotate (e.g. stripped gears).
    3. If the unlearned actuator is not physically rotating, replace the actuator, otherwise replace the HVAC control module.

Alternate Method (without Scan Tool)

NOTE: **Do not adjust any controls on the HVAC control module while the HVAC control module is self-calibrating. If interrupted, improper HVAC performance will result.**

1. Clear all DTCs.
2. Ignition OFF.
3. Install the HVAC actuator.
4. Connect all previously disconnected components.
5. Remove the HVAC control module fuse for a minimum of 10 s.
6. Install the HVAC control module fuse.
7. Start the vehicle.
8. Wait 40 s for the HVAC control module to self-calibrate.

REPAIR INSTRUCTIONS

WIRE TO WIRE REPAIR - HVAC

Special Tools

- **EL-38125-10** Splice Sleeve Crimping Tool (non GMNA)
- **J-38125-5A** Ultra Torch Special Tool

cardiagn.com

- **J-38125-8** Splice Sleeve Crimping Tool (GMNA)

For equivalent regional tools, refer to **Special Tools** .

WARNING: **In order to reduce the risk of personal injury, loss of high voltage isolation to ground and higher system impedance, do not attempt to repair any HV wiring, connector, or terminal that is damaged. High voltage coaxial type cables are not repairable. Never attempt to repair a coaxial type cable. The entire cable/harness or component must be replaced. In order to maintain system integrity and personal safety, never attempt to repair any high voltage wiring, cables, or terminals. Performing this procedure on high voltage circuits may result in serious injury or death.**

NOTE: **If the wiring harness internal to the transmission is damaged, the wiring harness must be replaced. The use of splice sleeves in an attempt to repair the internal transmission wires, connectors, or terminals could result in performance issues.**

NOTE: **Do not splice wires in Door Harness Grommets.**

NOTE: **The DuraSeal splice sleeves have the following 2 critical features:**

- **A special heat shrink sleeve environmentally seals the splice. The heat shrink sleeve contains a sealing adhesive inside.**
- **A cross hatched (knurled) core crimp provides the necessary low resistance contact integrity for these sensitive, low energy circuits.**

Use only DuraSeal splice sleeves to form a one-to-one splice on all types of insulation except high voltage and specialty cables. Use DuraSeal splice sleeves where there are special requirements such as moisture sealing. Follow the instructions below in order to splice copper wire using DuraSeal splice sleeves.

Splice Sleeve Selection

Splice Sleeve Color	Crimp Tool Nest Color		Wire Gauge mm^2 / (AWG)
	3 Crimp Nests	4 Crimp Nests	
Salmon (Yellow-Pink) 19300089	Red (1) or Red/Green (1)	Red (2)	0.22-0.8/(18-26)
Blue 19168447	Blue (2)	Blue (3)	1.0-2.0/(14-16)

cardiagn.com

Splice Sleeve Color	Crimp Tool Nest Color		Wire Gauge mm^2 / (AWG)
	3 Crimp Nests	4 Crimp Nests	
Yellow 19168448	Yellow (3)	Yellow (4)	3.0-5.0/(10-12)

NOTE: **You must perform the following procedures in the listed order. Repeat the procedure if any wire strands are damaged. You must obtain a clean strip with all of the wire strands intact.**

1. Open the harness by removing any tape:
   - Use a sewing seam ripper, available from sewing supply stores, in order to cut open the harness in order to avoid wire insulation damage.
   - Use the DuraSeal splice sleeves on all types of insulation except Tefzel and coaxial.
   - Do not use the crimp and DuraSeal splice sleeve to form a splice with more than 2 wires coming together.
2. Cut as little wire off the harness as possible. You may need the extra length of wire in order to change the location of a splice.

   Adjust splice locations so that each splice is at least 40 mm (1.5 in) away from the other splices, harness branches, or connectors.

3. Strip the insulation:
   - When adding a length of wire to the existing harness, use the same size wire as the original wire.
   - Perform one of the following items in order to find the correct wire size:
     - Find the wire on the schematic and convert to regional wiring gauge size.
     - If you are unsure of the wire size, begin with the largest opening in the wire stripper and work down until achieving a clean strip of the insulation.
   - Strip approximately 5.0 mm (0.20 in) of insulation from each wire to be spliced.
   - Do not nick or cut any of the strands. Inspect the stripped wire for nicks or cut strands.
   - If the wire is damaged, repeat this procedure after removing the damaged section.
4. For high temperature wiring, slide a section of high temperature SCT1 shrink tubing down the length of wire to be spliced. Ensure that the shrink tubing will not interfere with the splice procedure.
5. Select the proper DuraSeal splice sleeve according to the wire size. Refer to the above table at the beginning of the repair procedure for the color coding of the DuraSeal splice sleeves and the crimp tool nests.

cardiagn.com

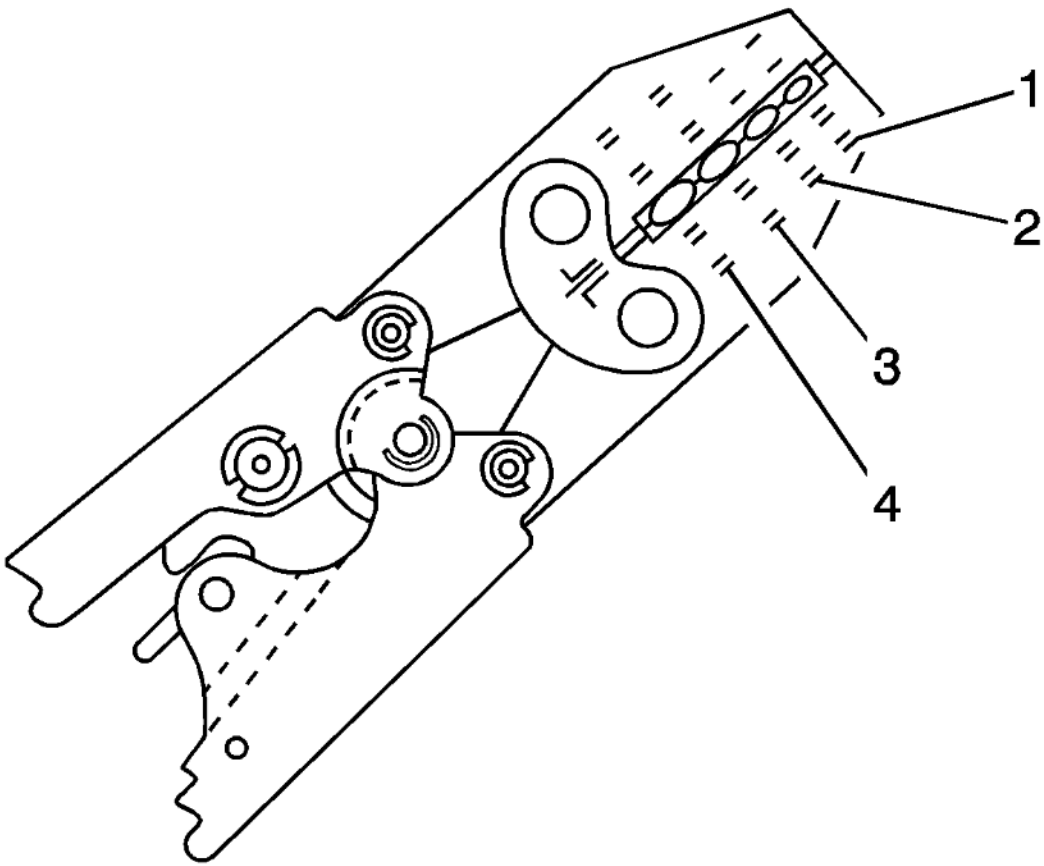

Fig. 8: Splice Sleeve Crimping Tool With 4 Crimp Nests
Courtesy of GENERAL MOTORS COMPANY

6. The **EL-38125-10** splice sleeve crimping tool has four crimp nests. The largest crimp nest (4) is used for crimping 10 and 12 gauge wires. The second largest crimp nest (3) is used for crimping 14 and 16 gauge wires. The third largest crimp nest (2) is used for crimping 18 and 20 gauge wires. The smallest crimp nest (1) is used for crimping 22 to 26 gauge wires. The crimp nests are referenced in the table (farther above) under the crimp tool nest color.

cardiagn.com

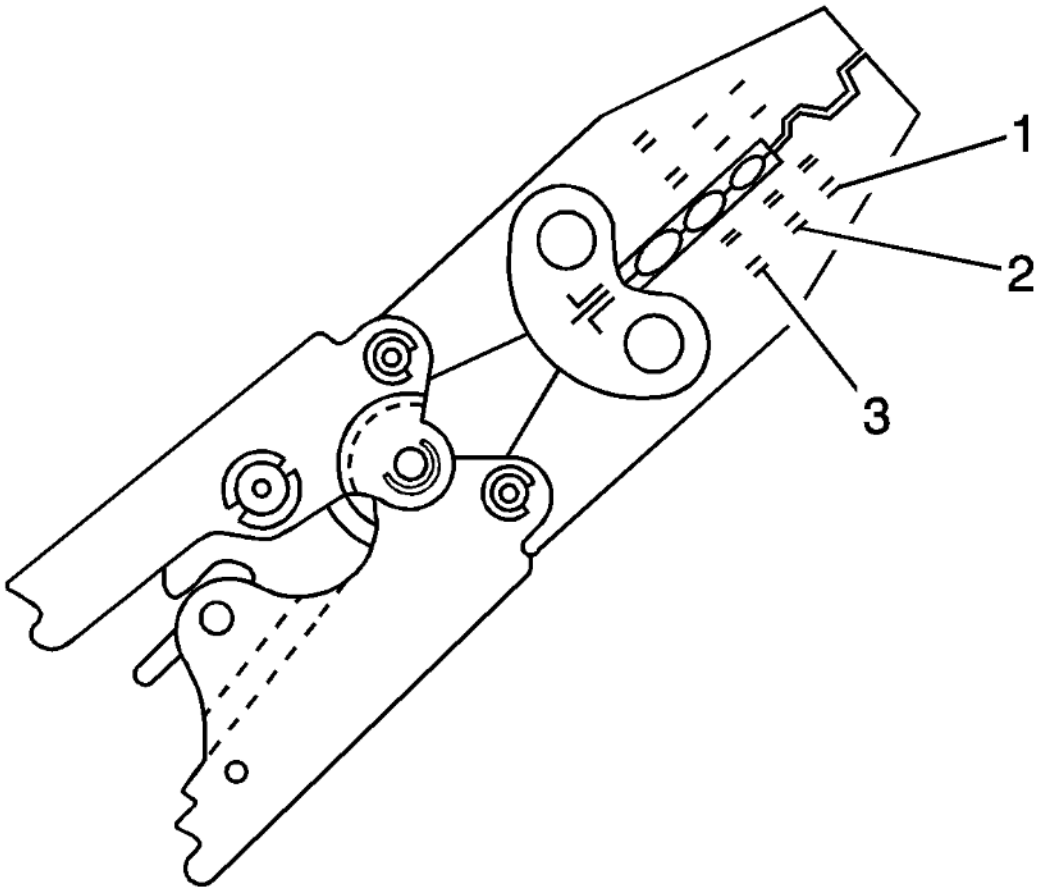

Fig. 9: Splice Sleeve Crimping Tool With 3 Crimp Nests
Courtesy of GENERAL MOTORS COMPANY

7. The **J-38125-8** splice sleeve crimping tool has three crimp nests. The largest crimp nest (3) is used for crimping 10 and 12 gauge wires. The second largest crimp nest (2) is used for crimping 14 and 16 gauge wires. The smallest crimp nest (1) is used for crimping 18 to 20 gauge wires. The crimp nests are referenced in the table (farther above) under the crimp tool nest color.
8. Use the splice sleeve crimp tool in order to position the DuraSeal splice sleeve in the proper color nest of the splice sleeve crimp tool. For the four crimp nest tool, use the three largest crimp nests to crimp the splice sleeves. For the three crimp nest tool, use all three crimp nests to

cardiagn.com

crimp the splice sleeves. Use the four and three crimp tool diagrams (above) and the table (farther above) to match the splice sleeve with the correct crimp nest. The crimp tool diagram callout numbers match the numbers in the table (under crimp tool nest color).

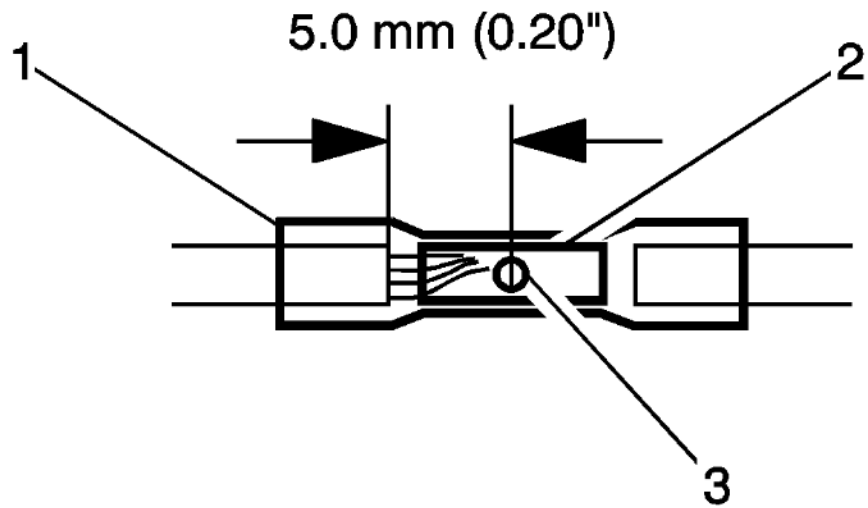

Fig. 10: Identifying Duraseal Splice Sleeve
Courtesy of GENERAL MOTORS COMPANY

9. Place the DuraSeal splice sleeve in the nest. Ensure that the crimp falls midway between the end of the barrel and the stop. The sleeve has a stop (3) in the middle of the barrel (2) in order to prevent the wire (1) from going further. Close the hand crimper handles slightly in order to

cardiagn.com

firmly hold the DuraSeal splice sleeve in the proper nest.

Fig. 11: Crimped Duraseal Splice Sleeve
Courtesy of GENERAL MOTORS COMPANY

cardiagn.com

10. Insert the wire into the splice sleeve barrel until the wire hits the barrel stop. Refer to **Folded-Over Wire Repair** for splicing wires of 0.35 mm or less (22, 24, 26 gauge sizes) and for splicing wires of different gauges.
11. Tightly close the handles of the crimp tool until the crimper handles open when released.

    The crimper handles will not open until you apply the proper amount of pressure to the DuraSeal splice sleeve. Repeat steps 4 and 6 for the opposite end of the splice.

cardiagn.com

Fig. 12: Crimped Duraseal Splice Sleeve
Courtesy of GENERAL MOTORS COMPANY

12. Using the heat torch, apply heat to the crimped area of the barrel.
13. Start in the middle and gradually move the heat barrel to the open ends of the tubing:

cardiagn.com

- The tubing will shrink completely as the heat is moved along the insulation.
- A small amount of sealant will come out of the end of the tubing when sufficient shrinkage is achieved.

Weatherpack™ Wiring Repair

NOTE: **Some replacement pigtail connectors may be delivered without the terminated leads installed into the connector. For Weatherpack™ connectors, all terminated leads included in the package should to be installed into the connector. If the connector end view shows that a terminal is not occupied, the extra terminated lead(s) need to be installed and the end(s) sealed using a DuraSeal splice sleeve and taped back into the harness.**

1. Insert the wire into the splice sleeve barrel until the wire hits the barrel stop. Refer to **Folded-Over Wire Repair** for splicing wires of 0.35 mm or less (22, 24, 26 gauge sizes) and for splicing wires of different gauges.

cardiagn.com

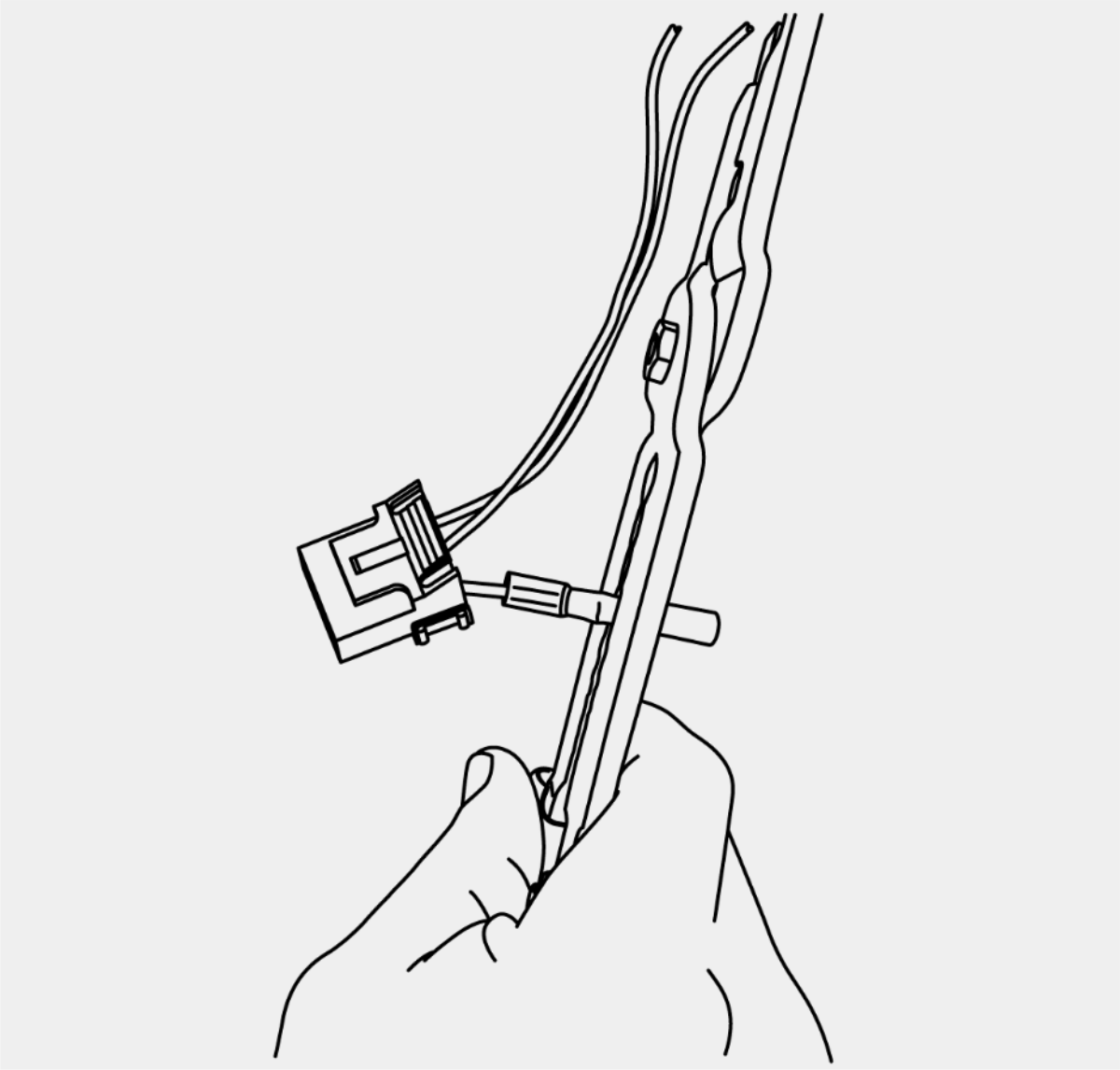

Fig. 13: Tightly Close Handles Of Crimp Tool
Courtesy of GENERAL MOTORS COMPANY

2. Tightly close the handles of the crimp tool until the crimper handles open when released.

   The crimper handles will not open until you apply the proper amount of pressure to the DuraSeal splice sleeve. Holding the DuraSEAL with

cardiagn.com

one hand gently tug on the wire to ensure it is crimped in the DuraSeal.

3. Using the heat torch, apply heat to the crimped area of the barrel.

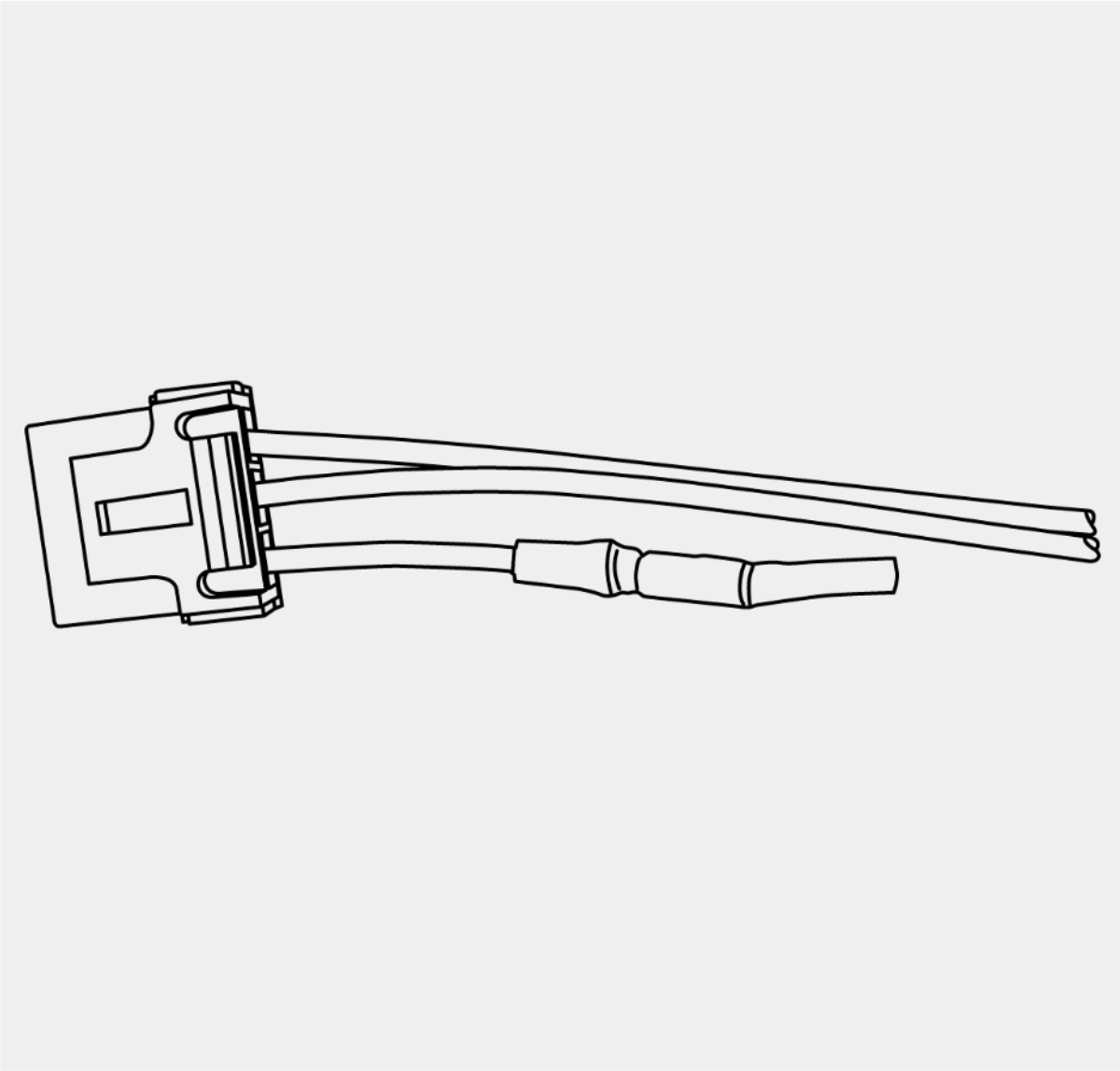

Fig. 14: Applying Heat To Crimped Area Of Barrel
Courtesy of GENERAL MOTORS COMPANY

cardiagn.com

4. Start in the middle and gradually move the heat barrel to the open ends of the tubing:
    - The tubing will shrink completely as the heat is moved along the insulation.
    - A small amount of sealant will come out of the end of the tubing when sufficient shrinkage is achieved.

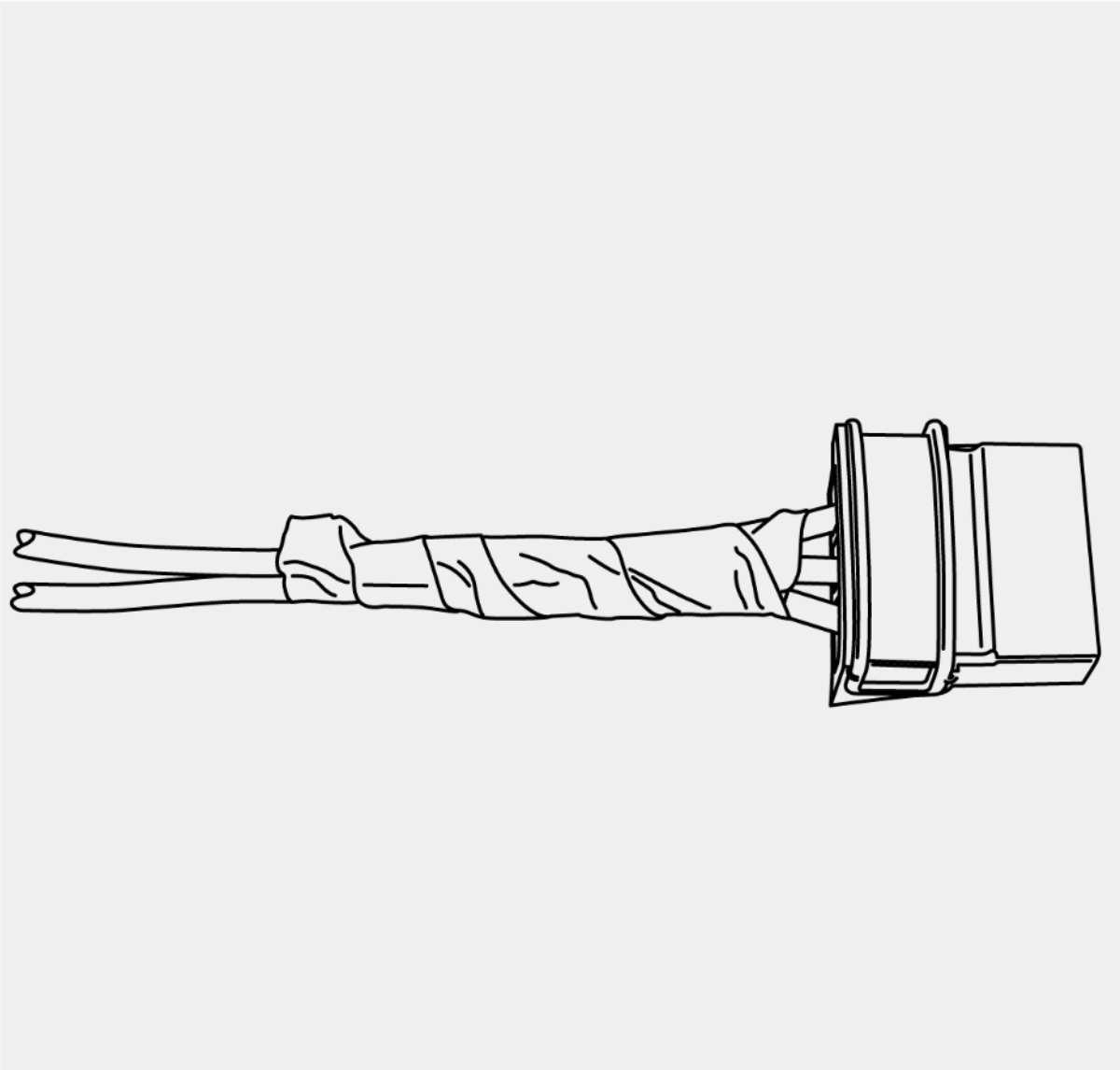

Fig. 15: Taping Extra Terminated Leads Back Into Harness
Courtesy of GENERAL MOTORS COMPANY

cardiagn.com

5. Tape the extra terminated lead(s) back into the harness.

High Temperature Wiring Repairs

Use the following procedures to perform high temperature wiring repairs:

1. Center the high temperature SCT1 shrink tube over the DuraSeal splice sleeve.
2. Using the heat torch, apply heat to the high temperature heat shrink tubing.
3. Gradually move the heat from the center to the open end of the tubing:
    - The tubing will shrink completely as the heat is moved along the insulation.
    - A small amount of sealant will come out of the end of the tubing when sufficient shrinkage is achieved.
4. Replace any reflective tape and clips that may have been removed during the repair.

CONNECTOR RECONNECTION - HVAC

Special Tools

EL-35616 Terminal Test Probe Kit

For equivalent regional tools, refer to **Special Tools** .

When the condition is not currently present, but is indicated in DTC history, the cause may be intermittent. An intermittent may also be the cause when there is a customer complaint, but the symptom cannot be duplicated. Refer to the Symptom Table of the system that is suspect of causing the condition before trying to locate an intermittent condition.

Most intermittent conditions are caused by faulty electrical connections or wiring. Inspect for the following items:

- Wiring broken inside the insulation
- Poor connection between the male and female terminal at a connector
- A terminal not seated all the way into the connector body
- Poor terminal to wire connection - Some conditions which fall under this description are poor crimps, poor solder joints, crimping over the wire insulation rather than the wire itself, and corrosion in the wire to terminal contact area, etc.
- Pierced or damaged insulation can allow moisture to enter the wiring causing corrosion. The conductor can corrode inside the insulation, with little visible evidence. Look for swollen and stiff sections of wire in the suspect circuits.
- Wiring which has been pinched, cut, or its insulation rubbed through may cause an intermittent open or short as the bare area touches other

cardiagn.com

wiring or parts of the vehicle.

- Wiring that comes in contact with hot or exhaust components
- Refer to **Inducing Intermittent Fault Conditions** in order to duplicate the conditions required, in order to verify the customer concern.
- Refer to **Testing for Electrical Intermittents** for test procedures to detect intermittent open, high resistance, short to ground, and short to voltage conditions.
- Refer to **Scan Tool Snapshot Procedure** for advanced intermittent diagnosis and Vehicle Data Recorder operation.

Testing for Terminal Fretting

Some intermittent conditions can be caused by wire terminal fretting corrosion. Fretting corrosion is a build-up of insulating, oxidized wear debris that can form when there is a small motion between electrical contacts. The oxidized wear debris can pile up enough at the electrical contact spots that the electrical resistance across the connection increases. Movement between the contacting surfaces as small as 10 to 100 microns can cause fretting. To put this in perspective, a sheet of paper is about 100 microns thick, so fretting motion is small and hard to see. Vibration and thermal expansion/contraction are the main sources that create fretting motion. Since vehicles vibrate and can experience large temperature swings, they are a good source for fretting motion. Tin, copper, nickel, and iron surfaces are all susceptible to fretting corrosion. Fretting corrosion can be difficult to see but it looks like small, dark smudges on the terminals contact surface.

To correct a fretting condition disconnect the suspect connector and add dielectric grease / lubricant (Nyogel 760G or equivalent, meeting GM specification 9986087) to both sides of the connector terminals. Then reconnect the connector and wipe away any excess lubricant. This will correct the additional terminal contact resistance due to the terminal fretting corrosion.

Testing for Proper Terminal Contact

It is important to test terminal contact at the component and any inline connectors before replacing a suspect component. Mating terminals must be inspected to ensure good terminal contact. A poor connection between the male and female terminal at a connector may be the result of contamination or deformation.

Contamination may be caused by the connector halves being improperly connected. A missing or damaged connector seal, damage to the connector itself, or exposing the terminals to moisture and dirt can also cause contamination. Contamination, usually in the underhood or underbody connectors, leads to terminal corrosion, causing an open circuit or intermittently open circuit.

Deformation is caused by probing the mating side of a connector terminal without the proper adapter. Always use the **EL-35616** kit when probing connectors. Other causes of terminal deformation are improperly joining the connector halves, or repeatedly separating and joining the connector halves. Deformation, usually to the female terminal contact tang, can result in poor terminal contact causing an open or intermittently open circuit.

Testing for Proper Terminal Contact in Bussed Electrical Centers

cardiagn.com

It is very important to use the correct test adapter when testing for proper terminal contact of fuses and relays in a bussed electrical center. Use the **EL-35616** kit to test for proper terminal contact. Failure to use the **EL-35616** kit can result in improper diagnosis of the bussed electrical center.

Follow the procedure below in order to test terminal contact:

1. Separate the connector halves.
2. Visually inspect the connector halves for contamination. Contamination may result in a white or green build-up within the connector body or between terminals. This causes high terminal resistance, intermittent contact, or an open circuit. An underhood or underbody connector that shows signs of contamination should be replaced in its entirety: terminals, seals, and connector body.
3. Using an equivalent male terminal/terminated lead, verify that the retention force is significantly different between a known good terminal and the suspect terminal. Replace the female terminal in question.

Flat Wire Connectors

There are no serviceable parts for flat wire connectors on the harness side or the component side.

Follow the procedure below in order to test terminal contact:

1. Remove the component in question.
2. Visually inspect each side of the connector for signs of contamination. Avoid touching either side of the connector as oil from your skin may be a source of contamination as well.
3. Visually inspect the terminal bearing surfaces of the flat wire circuits for splits, cracks, or other imperfections that could cause poor terminal contact. Visually inspect the component side connector to ensure that all of the terminals are uniform and free of damage or deformation.
4. Insert the appropriate adapter into the flat wire harness connector in order to test the circuit in question.

Control Module/Component Voltage and Grounds

Poor voltage or ground connections can cause widely varying symptoms.

- Test all control module voltage supply circuits. Many vehicles have multiple circuits supplying voltage to a control module. Other components in the system may have separate voltage supply circuits that may also need to be tested. Inspect connections at the module/component connectors, fuses, and any intermediate connections between the voltage source and the module/component. A test lamp or a DMM may indicate that voltage is present, but neither tests the ability of the circuit to carry sufficient current. Operate the component to test the ability of the circuit to carry sufficient current. Refer to **Circuit Testing** , and **Power Distribution Schematics** .
- Test all control module ground and system ground circuits. The control module may have multiple ground circuits. Other components in the system may have separate grounds that may also need to be tested. Inspect grounds for clean and tight connections at the grounding point.

cardiagn.com

Inspect the connections at the component and in splice packs, where applicable. Operate the component to test the ability of the circuit to carry sufficient current. Refer to **Circuit Testing** , and **Ground Distribution Schematics** .

Temperature Sensitivity

- An intermittent condition may occur when a component/connection reaches normal operating temperature. The condition may occur only when the component/connection is cold, or only when the component/connection is hot.
- Freeze Frame, Failure Records, Snapshot, or Vehicle Data Recorder data may help with this type of intermittent condition, where applicable.
- If the intermittent is related to heat, review the data for a relationship with the following:
  - High ambient temperatures
  - Underhood/engine generated heat
  - Circuit generated heat due to a poor connection, or high electrical load
  - Higher than normal load conditions, towing, etc.
- If the intermittent is related to cold, review the data for the following:
  - Low ambient temperatures - In extremely low temperatures, ice may form in a connection or component. Inspect for water intrusion.
  - The condition only occurs on a cold start.
  - The condition goes away when the vehicle warms up.
- Information from the customer may help to determine if the trouble follows a pattern that is temperature related.
- If temperature is suspected of causing an intermittent fault condition, attempt to duplicate the condition. Refer to **Inducing Intermittent Fault Conditions** in order to duplicate the conditions required.

Electromagnetic Interference and Electrical Noise

Some electrical components/circuits are sensitive to electromagnetic interference or other types of electrical noise. Inspect for the following conditions:

- A mis-routed harness that is too close to high voltage/high current devices such as secondary ignition components, motors, generator etc. - These components may induce electrical noise on a circuit that could interfere with normal circuit operation.
- Electrical system interference caused by a malfunctioning relay, or a control module driven solenoid or switch - These conditions can cause a sharp electrical surge. Normally, the condition will occur when the malfunctioning component is operating.
- Installation of non-factory or aftermarket add on accessories such as lights, 2-way radios, amplifiers, electric motors, remote starters, alarm systems, cell phones, etc. - These accessories may create interference in other circuits while operating and the interference would disappear when the accessory is not operating. Refer to **Checking Aftermarket Accessories** .

cardiagn.com

- Test for an open diode across the A/C compressor clutch and for other open diodes. Some relays may contain a clamping diode.
- The generator may be allowing AC noise into the electrical system.

Incorrect Control Module

- There are only a few situations where reprogramming a control module is appropriate:
  - A new service control module is installed.
  - A control module from another vehicle is installed.
  - Revised software/calibration files have been released for this vehicle.

NOTE: **DO NOT re-program the control module with the SAME software/calibration files that are already present in the control module. This is not an effective repair for any type of concern.**

- Verify that the control module contains the correct software/calibration. If incorrect programming is found, reprogram the control module with the most current software/calibration. Refer to **Control Module References** for replacement, setup, and programming.

HEATER AND AIR CONDITIONING CONTROL REPLACEMENT (UTILITY)

cardiagn.com

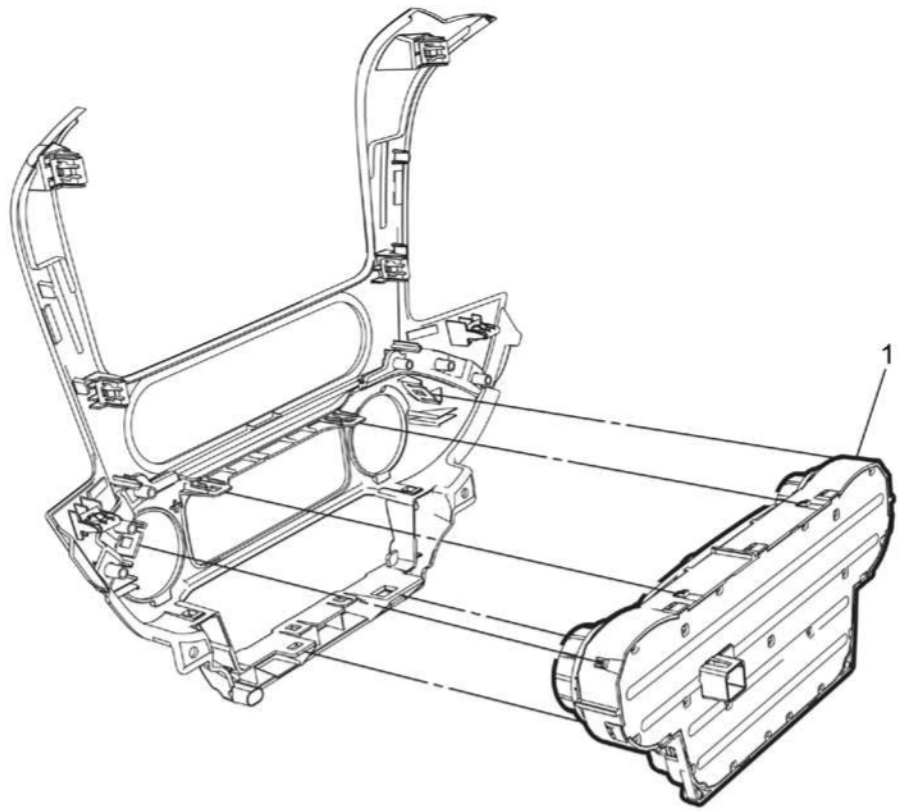

Fig. 16: Heater and Air Conditioning Control
Courtesy of GENERAL MOTORS COMPANY

Call out	Component Name
Preliminary Procedure Remove the instrument panel accessory center trim plate. Refer to **Instrument Panel Accessory Center Trim Plate Replacement (Chevrolet / GMC)** **Instrument Panel Accessory Center Trim Plate Replacement (Cadillac)** .	
1	Heater and Air Conditioning Control Assembly **Procedures** 1. Un-clip the ignition lock key transmitter antenna from the instrument panel accessory center trim plate. 2. Un-clip the heater and air conditioning control assembly from the instrument panel accessory center trim plate to remove.

cardiagn.com

HEATER AND AIR CONDITIONING REMOTE CONTROL REPLACEMENT (UTILITIES)

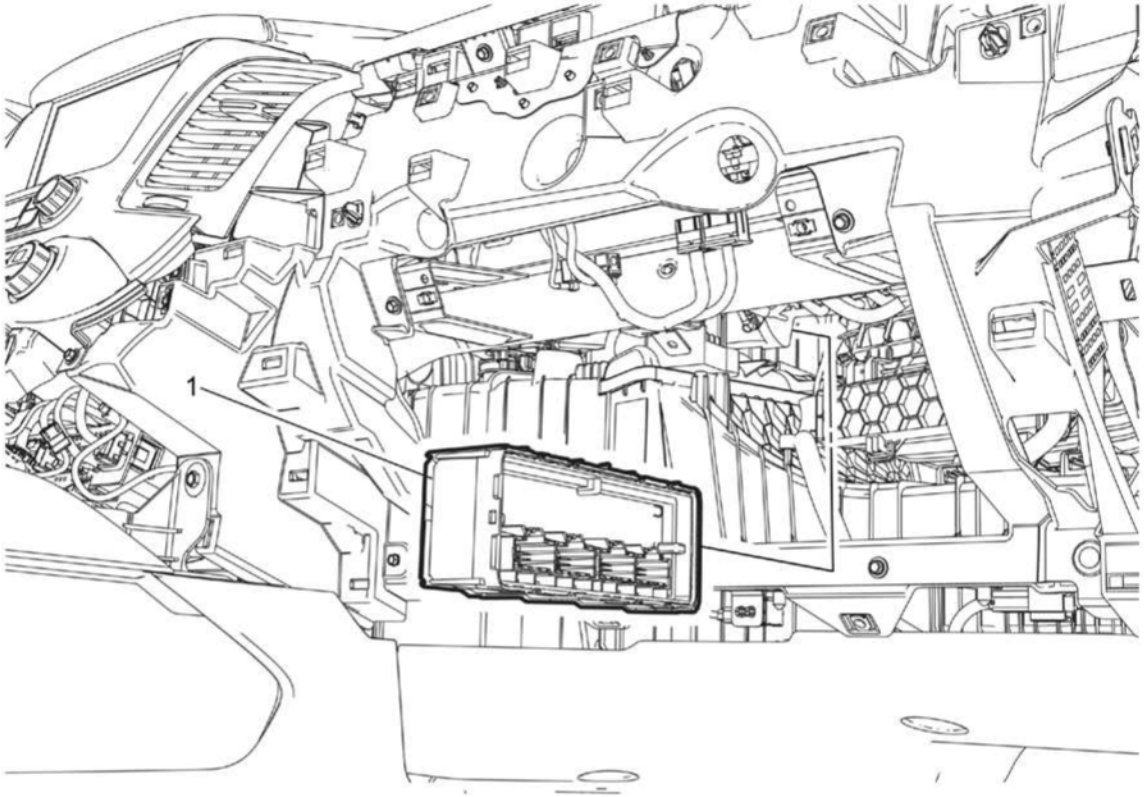

Fig. 17: Heater and Air Conditioning Remote Control
Courtesy of GENERAL MOTORS COMPANY

Callout	Component Name
Preliminary Procedure Human Machine Interface Control Module Bracket Replacement (Chevrolet / GMC) Human Machine Interface Control Module Bracket Replacement (Cadillac) **NOTE:** If the vehicle battery has NOT been	

cardiagn.com

Callout	Component Name
disconnected, when reinstalling, replacing or reconnecting the HVAC remote control module, the BROWN J2 connector must be connected last. Once all the parts are all in place, check and clear all DTCs in the HVAC module.	
1	Heater and Air Conditioning Remote Control **Procedures** 1. Unclip the heater and air conditioning remote control retainer from the heater cover. 2. Maneuver the heater and air conditioning remote control out and down from behind the instrument panel assembly. 3. Disconnect the heater and air conditioning remote control electrical connectors. 4. Perform the necessary programming and setup procedure:**Control Module References** 5. Clear the DTCs from the heater and air conditioning remote control module. 6. Perform the actuator calibration procedure. **Actuator Recalibration**

HEATER AND AIR CONDITIONING REMOTE CONTROL REPLACEMENT (Z75)

cardiagn.com

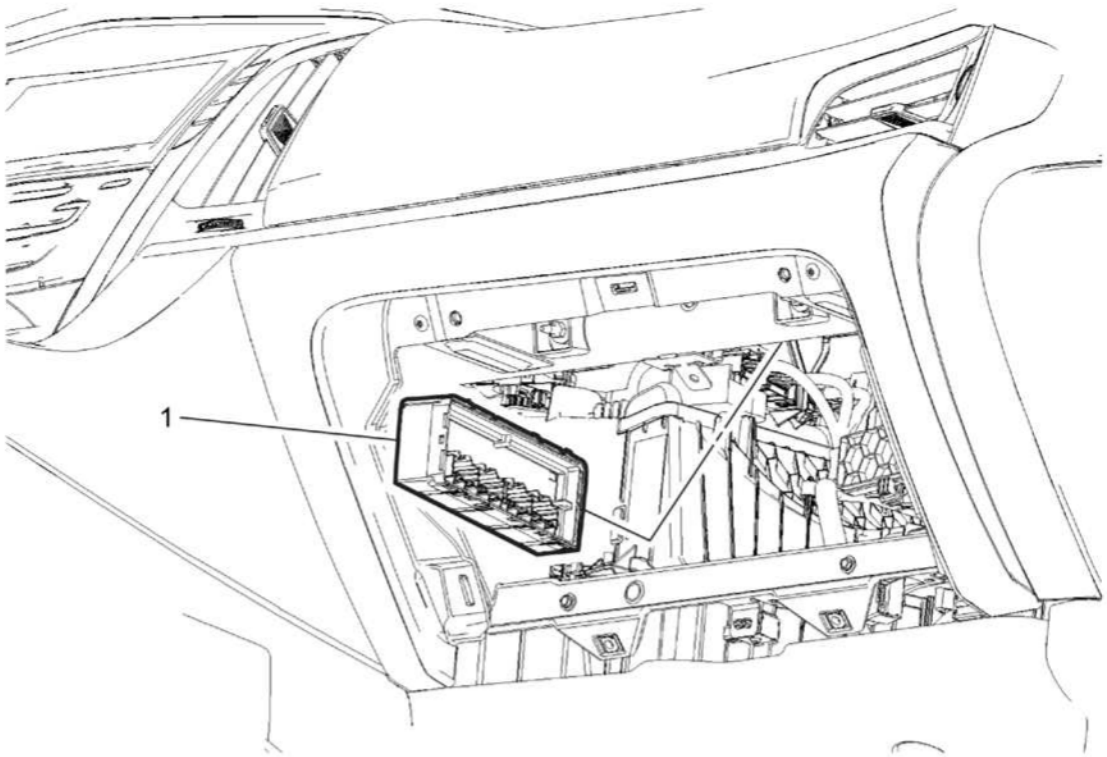

Fig. 18: Heater and Air Conditioning Remote Control (Z75)
Courtesy of GENERAL MOTORS COMPANY

Callout	Component Name
Preliminary Procedure Human Machine Interface Control Module Bracket Replacement (Chevrolet / GMC) Human Machine Interface Control Module Bracket Replacement (Cadillac) **NOTE:** If the vehicle battery has NOT been disconnected, when	

cardiagn.com

Callout	Component Name
reinstalling, replacing or reconnecting the HVAC remote control module, the BROWN J2 connector must be connected last. Once all the parts are all in place, check and clear all DTCs in the HVAC module.	
1	Heater and Air Conditioning Remote Control **Procedures** 1. Unclip the heater and air conditioning remote control retainer from the heater cover. 2. Maneuver the heater and air conditioning remote control out and down from behind the instrument panel assembly. 3. Disconnect the heater and air conditioning remote control electrical connectors. 4. Perform the necessary programming and setup procedure:**Control Module References** 5. Clear the DTCs from the heater and air conditioning remote control module. 6. Perform the actuator calibration procedure. **Actuator Recalibration**

AUXILIARY HEATER AND AIR CONDITIONING CONTROL REPLACEMENT (UTILITIES)

cardiagn.com

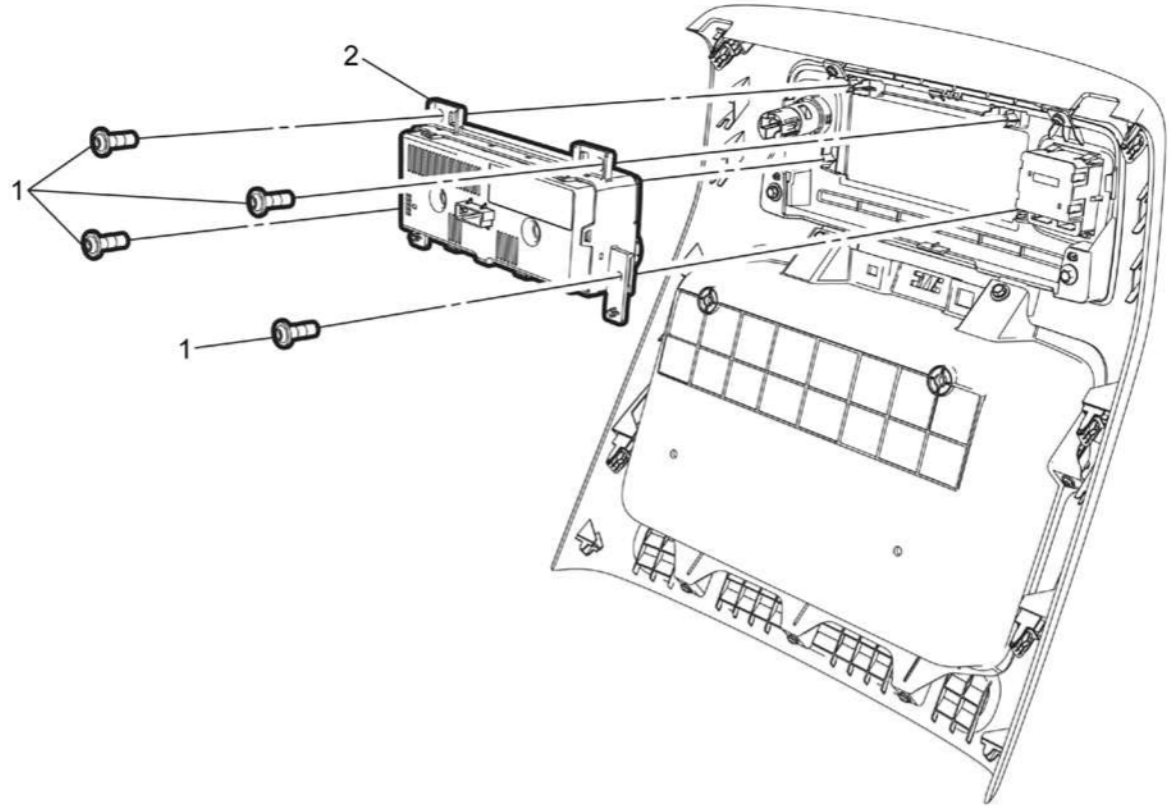

Fig. 19: Auxiliary Heater and Air Conditioning Control
Courtesy of GENERAL MOTORS COMPANY

Call out	Component Name
Preliminary Procedure Remove the front floor console rear trim panel. Refer to **Front Floor Console Rear Trim Panel Replacement (Chevrolet / GMC)** **Front Floor Console Rear Trim Panel Replacement (Cadillac)** **Front Floor Console Rear Trim Panel Replacement (Storage Structure)** .	
1	Auxiliary Heater and Air Conditioning Control Fastener (Qty: 4) **CAUTION:** **Refer to** **Fastener** **Caution** .

cardiagn.com

Call out	Component Name
	Tighten 1.7 N.m (15 lb in)
2	Auxiliary Heater and Air Conditioning Control

AUXILIARY HEATER AND AIR CONDITIONING CONTROL REPLACEMENT (WITH OUT D07)

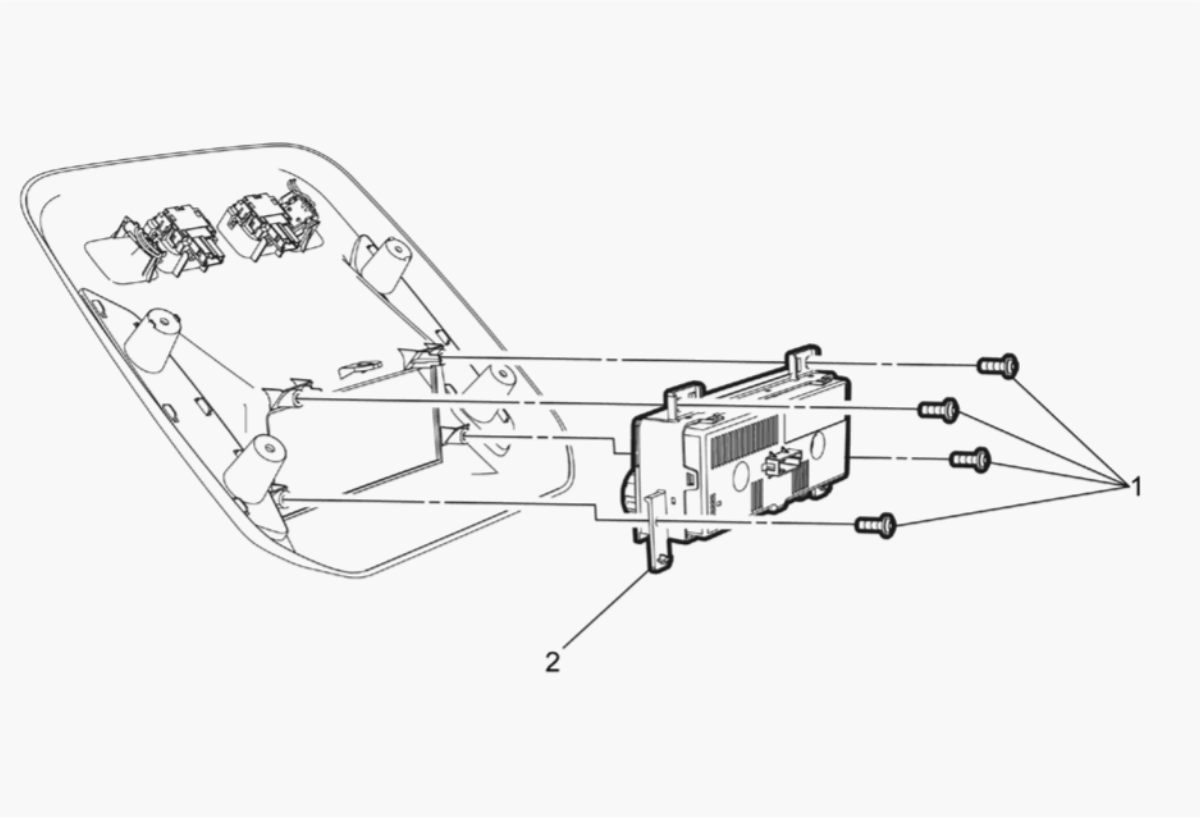

Fig. 20: Auxiliary Heater and Air Conditioning Control
Courtesy of GENERAL MOTORS COMPANY

Call out	Component Name
Preliminary Procedure Remove the roof rear console. Refer to **Roof Rear Console Replacement (Chevrolet / GMC)** .	

cardiagn.com

Call out	Component Name
1	Auxiliary Heater and Air Conditioning Control Fastener (Qty: 4) **CAUTION:** **Refer to** **Fastener Caution** . **Tighten** 1.7 N.m (15 lb in)
2	Auxiliary Heater and Air Conditioning Control

AUXILIARY HEATER AND AIR CONDITIONING CONTROL REPLACEMENT (Z75)

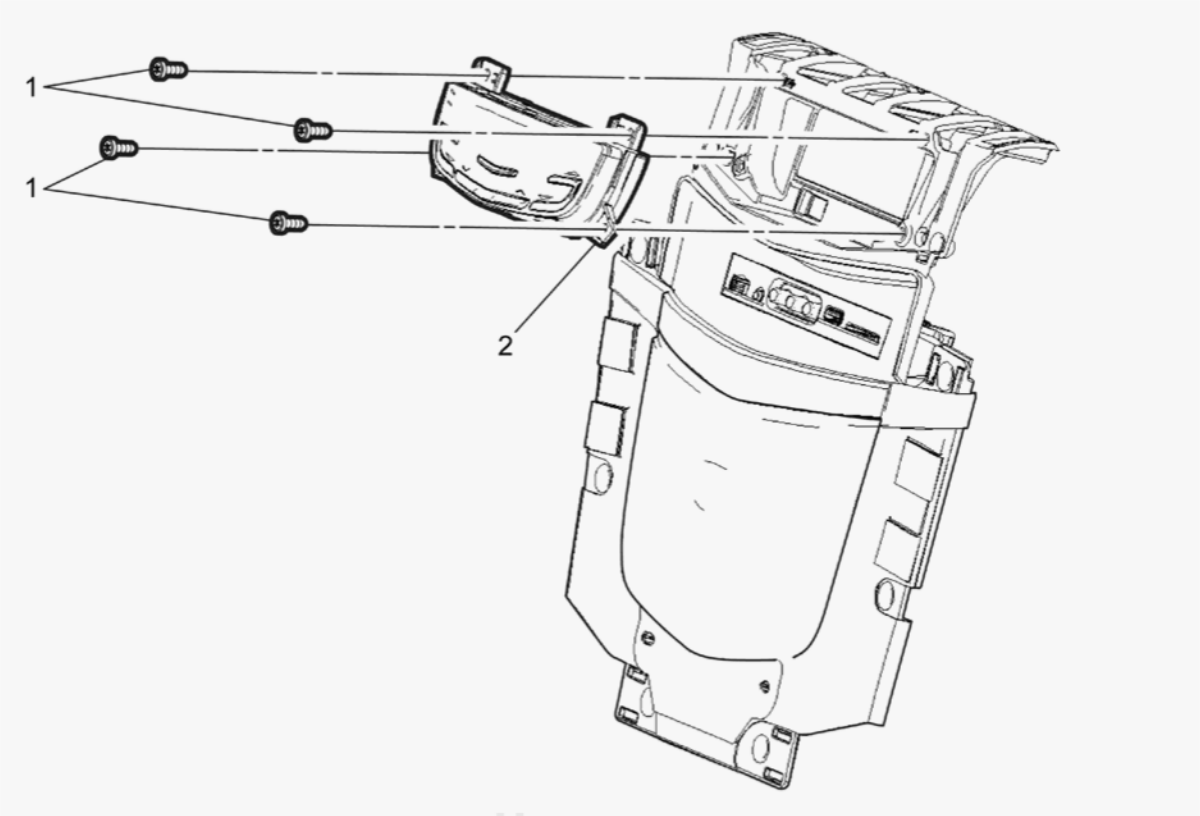

cardiagn.com

Fig. 21: Auxiliary Heater and Air Conditioning Control (Z75)
Courtesy of GENERAL MOTORS COMPANY

Call out	Component Name
Preliminary Procedure Remove the front floor console rear trim panel storage structure. Refer to **Front Floor Console Rear Trim Panel Replacement (Chevrolet / GMC)** **Front Floor Console Rear Trim Panel Replacement (Cadillac)** **Front Floor Console Rear Trim Panel Replacement (Storage Structure)** .	
1	Auxiliary Heater and Air Conditioning Control Fastener (Qty: 4) **CAUTION:** **Refer to** **Fastener Caution** . **Tighten** 1.7 N.m (15 lb in)
2	Auxiliary Heater and Air Conditioning Control

AIR INLET VALVE ACTUATOR REPLACEMENT (UTILITIES)

cardiagn.com

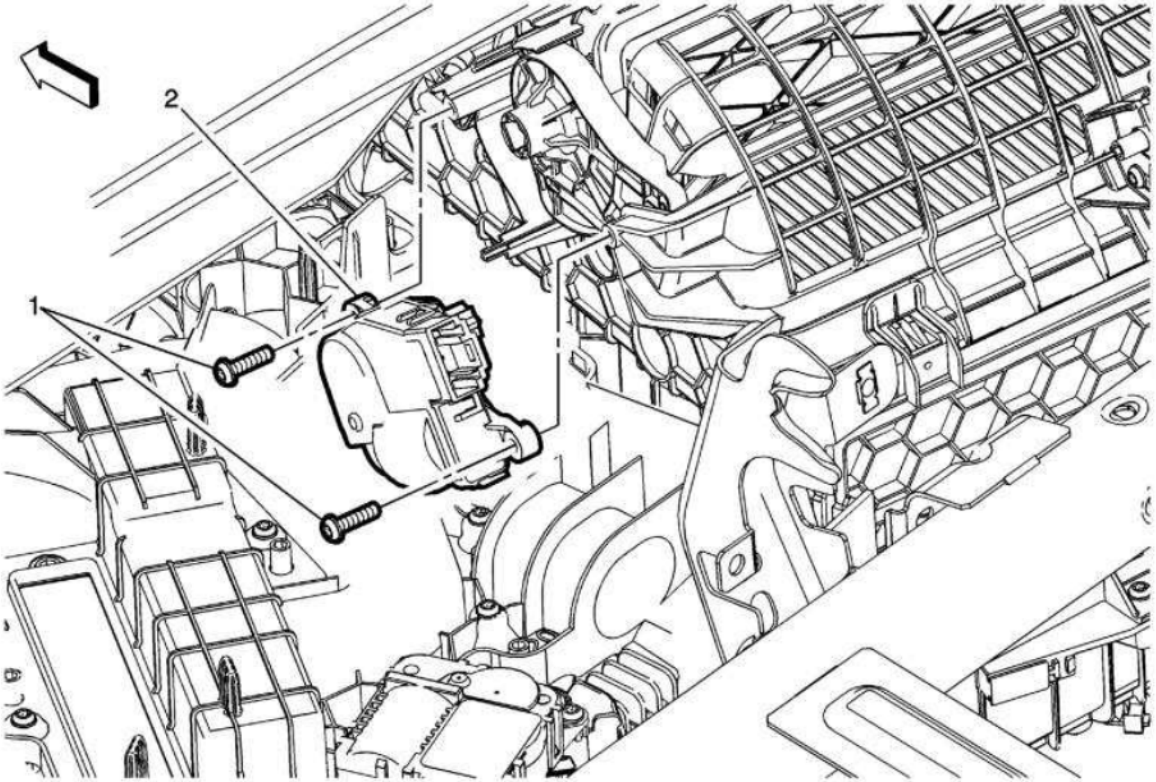

Fig. 22: Air Inlet Valve Actuator
Courtesy of GENERAL MOTORS COMPANY

Call out	Component Name
CAUTION: In order to avoid actuator damage, DO NOT apply power to the actuator when it is not installed	

cardiagn.com

Call out	Component Name
in the HVAC module. **Preliminary Procedures** 1. Air Distributor Front Duct Replacement 2. Human Machine Interface Control Module Bracket Replacement (Chevrolet / GMC) Human Machine Interface Control Module Bracket Replacement (Cadillac) 3. Reposition the heater and air conditioning remote control out of the way. Refer to Heater and Air Conditioning Remote Control Replacement (Utilities).	
1	Air Inlet Valve Actuator Fastener (Qty: 2) **CAUTION:** **Refer to Fastener Caution .**
2	Air Inlet Valve Actuator **Procedures** 1. Disconnect the air inlet valve actuator electrical connector. 2. Actuator Recalibration

MODE VALVE ACTUATOR REPLACEMENT

cardiagn.com

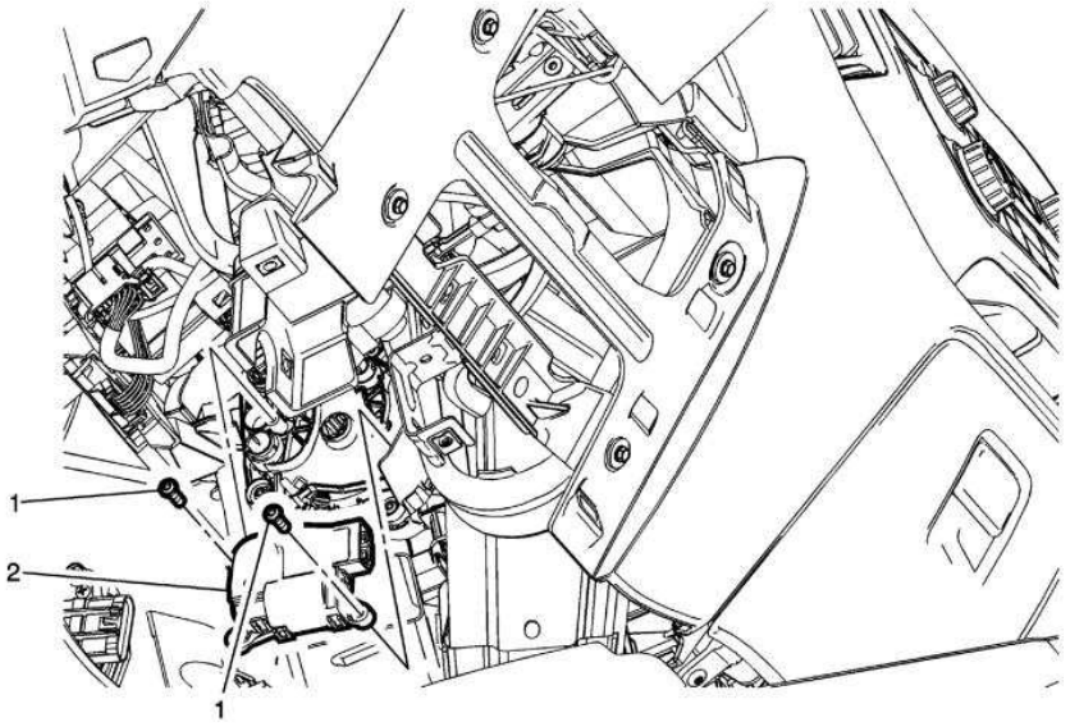

Fig. 23: Mode Valve Actuator
Courtesy of GENERAL MOTORS COMPANY

Call out	Component Name
CAUTION: In order to avoid actuator damage, DO NOT apply power to the actuator when it is not installed	

cardiagn.com

Call out	Component Name
in the HVAC module. **Preliminary Procedures** 1. Floor Front Air Outlet Duct Replacement - Left Side (Utilities) 2. Accessory AC and DC Power Control Module Replacement	
1	Mode Valve Actuator Motor Fastener (Qty: 2) **CAUTION:** **Refer to Fastener Caution .**
2	Mode Valve Actuator **Procedures** 1. Disconnect the mode valve actuator electrical connector. 2. Actuator Recalibration

MODE VALVE ACTUATOR REPLACEMENT (Z75)

cardiagn.com

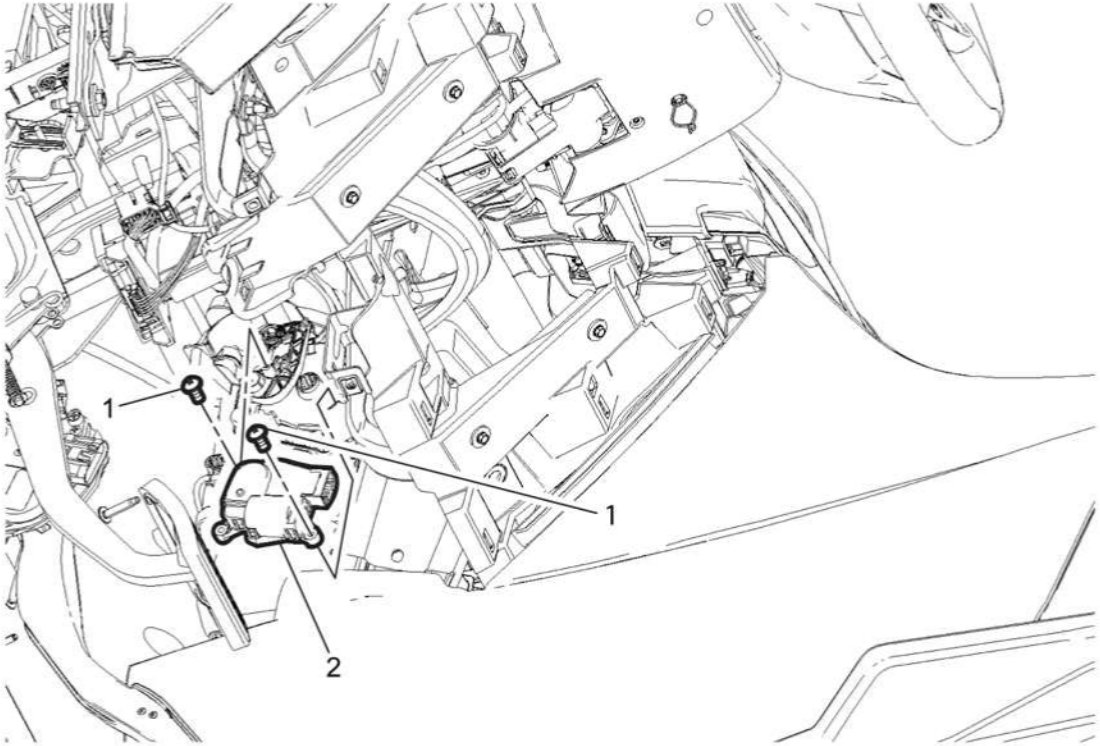

Fig. 24: Mode Valve Actuator (Z75)
Courtesy of GENERAL MOTORS COMPANY

Callout	Component Name
CAUTION: In order to avoid actuator damage, DO NOT apply power to the actuator when it is not installed	

cardiagn.com

Callout	Component Name
in the HVAC module. **Preliminary Procedures** 1. **Floor Front Air Outlet Duct Replacement - Left Side (Z75)** 2. Remove the accessory AC and DC power control module if equipped. Refer to **Accessory AC and DC Power Control Module Replacement** .	
1	Mode Valve Actuator Motor Fastener (Qty: 2) **CAUTION:** **Refer to Fastener Caution .** **Tighten** 1.7 N.m (15 lb in)
2	Mode Valve Actuator **Procedure** 1. Disconnect the mode valve actuator electrical connector. 2. **Actuator Recalibration**

MODE CONTROL CAM REPLACEMENT

Removal Procedure

1. With the ignition key in the on position, select the heater and air conditioning control to the vent mode position.
2. Turn the ignition key to the off position.

cardiagn.com

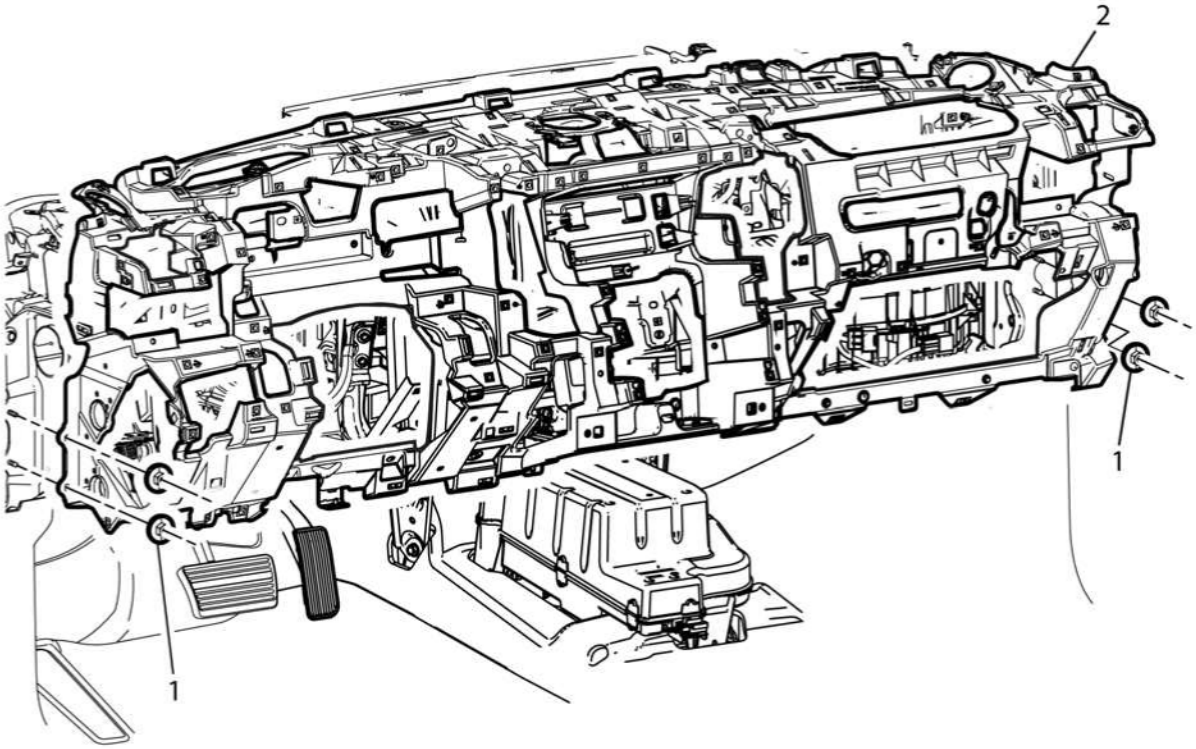

Fig. 25: Instrument Panel Carrier Nut
Courtesy of GENERAL MOTORS COMPANY

3. Remove Instrument Panel Carrier Assembly (2) **Instrument Carrier Replacement (Chevrolet / GMC)** **Instrument Carrier Replacement (Cadillac)**
4. Remove Mode Valve Actuator. **Mode Valve Actuator ReplacementMode Valve Actuator Replacement (Z75)**

cardiagn.com

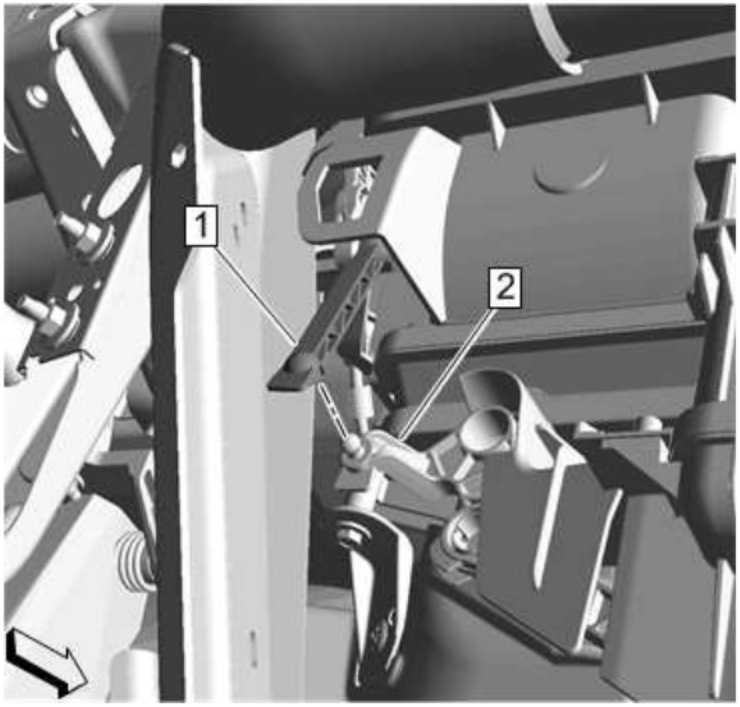

Fig. 26: Vent Valve Link And Floor Air Valve Lever
Courtesy of GENERAL MOTORS COMPANY

5. Un-snap the vent valve link (1) from the floor air valve lever (2).

cardiagn.com

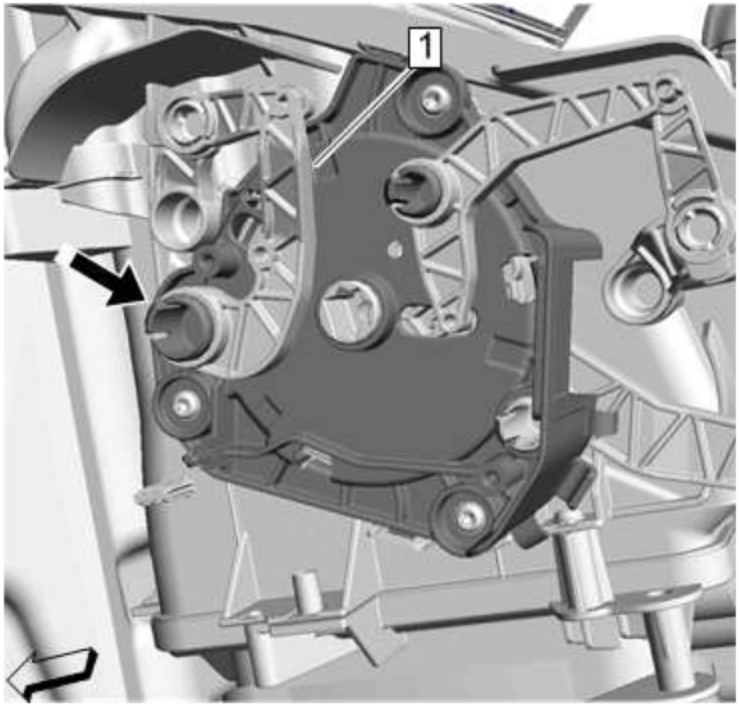

Fig. 27: Defroster Control Lever
Courtesy of GENERAL MOTORS COMPANY

NOTE: **The instrument tie bar has been removed for clarity.**

6. Depress the de-tent indicated by the arrow, and remove the heater and defroster control lever (1) from the mode control cam actuator mounting plate.

cardiagn.com

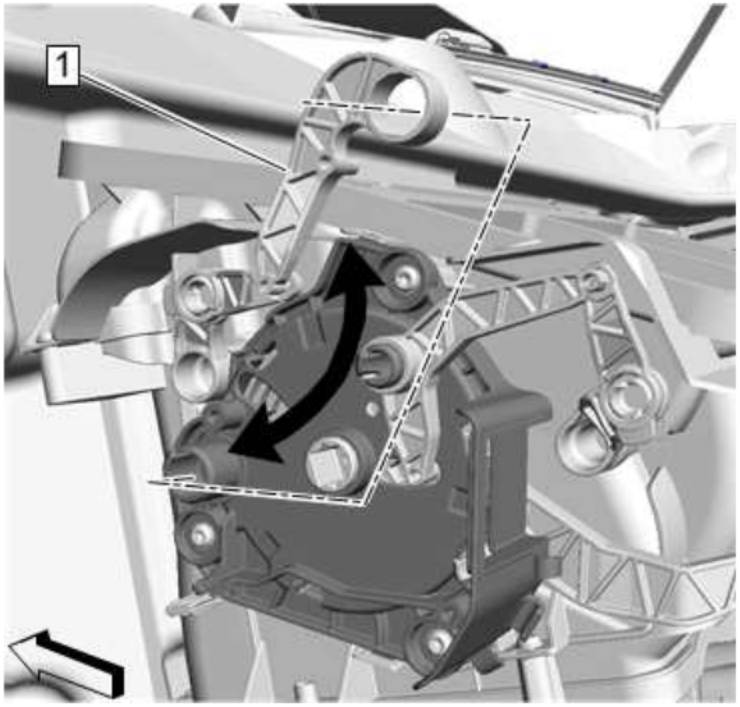

Fig. 28: Defroster Control Lever
Courtesy of GENERAL MOTORS COMPANY

7. Rotate the heater and defroster control lever (1) up and out of the way.

cardiagn.com

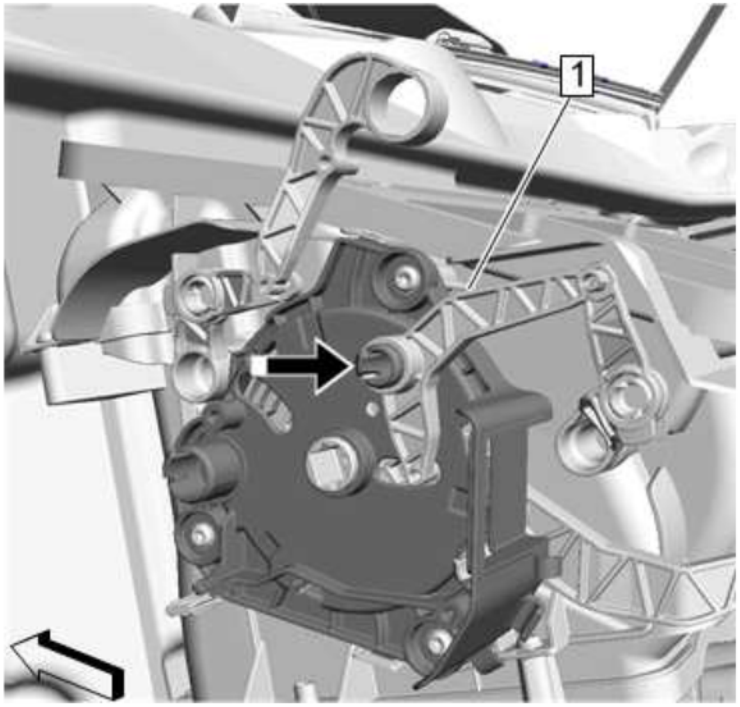

Fig. 29: Vent Valve Lever
Courtesy of GENERAL MOTORS COMPANY

8. Depress the de-tent indicated by the arrow, and remove the vent valve lever (1) from the mode control cam actuator mounting plate.

cardiagn.com

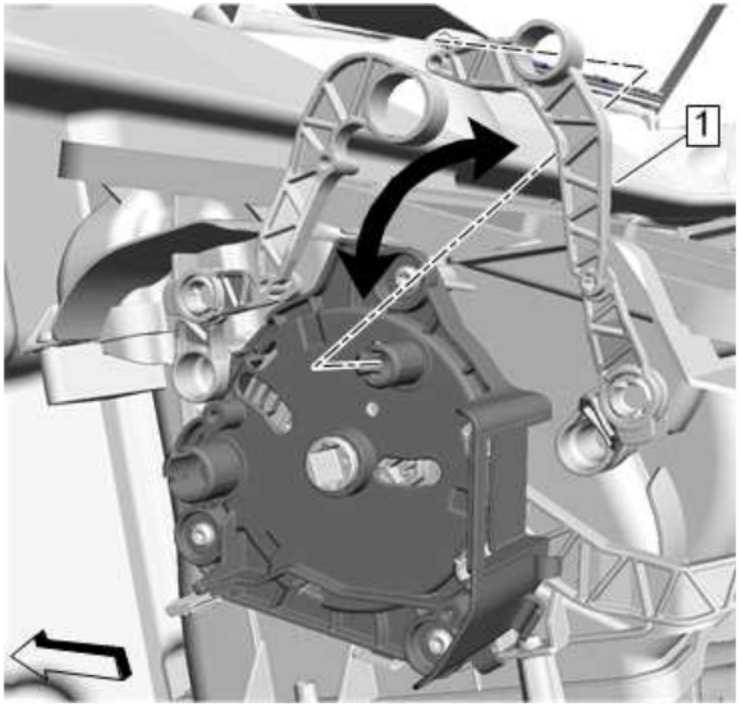

Fig. 30: Vent Valve Lever
Courtesy of GENERAL MOTORS COMPANY

9. Rotate the vent valve lever (1) up and out of the way.

cardiagn.com

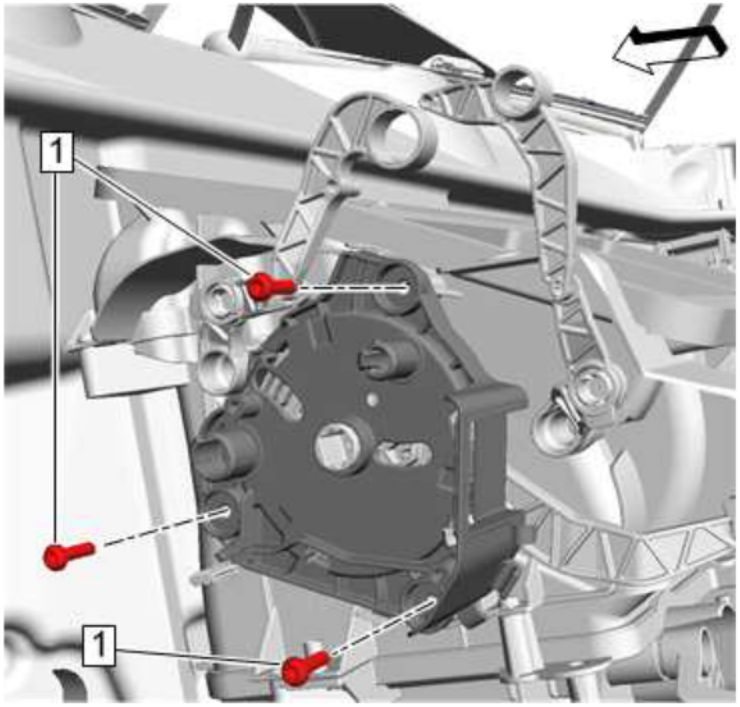

Fig. 31: Mode Control Cam Actuator Mounting Plate Bolt
Courtesy of GENERAL MOTORS COMPANY

10. Remove Mode Control Cam Actuator Mounting Plate Bolt (1) @Mode Control Cam Actuator Mounting Plate

cardiagn.com

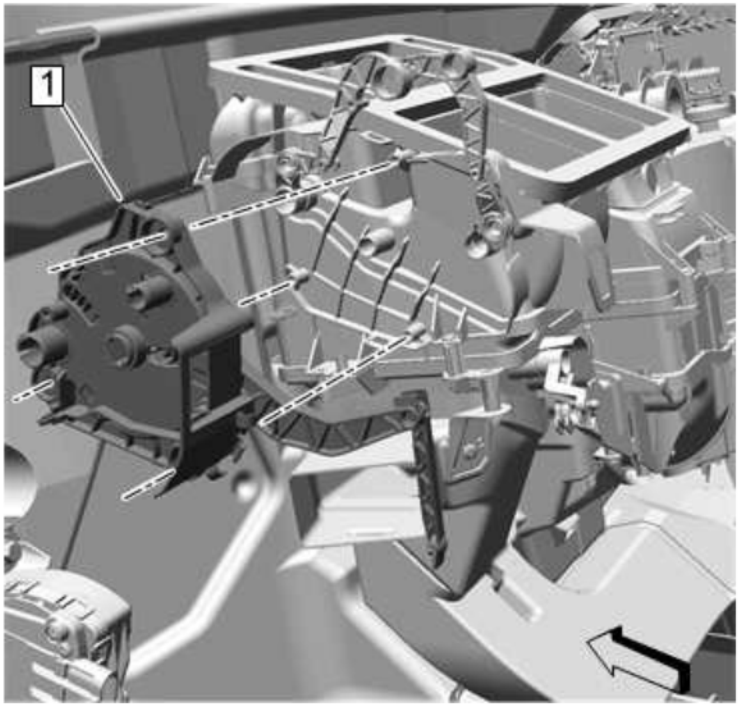

Fig. 32: Mode Control Cam
Courtesy of GENERAL MOTORS COMPANY

11. Remove Mode Control Cam (1).

Installation Procedure

cardiagn.com

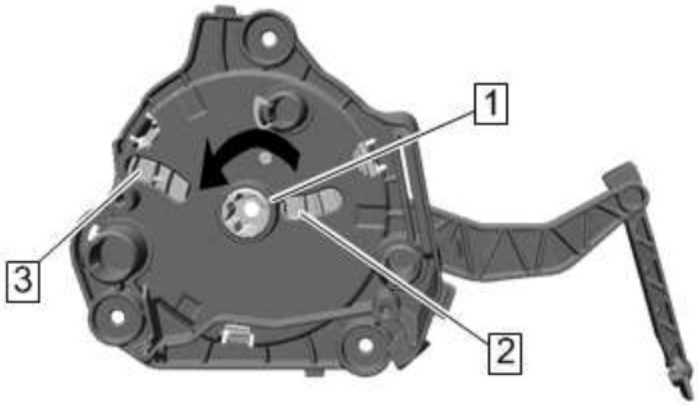

Fig. 33: Mode Control Cam Channel
Courtesy of GENERAL MOTORS COMPANY

1. Remove the vent valve lever and heater and defroster control lever from the replacement mode control cam assembly.
2. Insert a 3/8 allen wrench into the actuator mode control cam interface drive gear (1), and rotate the mode control cam to the maximum counter clockwise travel position to set to the vent mode.

cardiagn.com

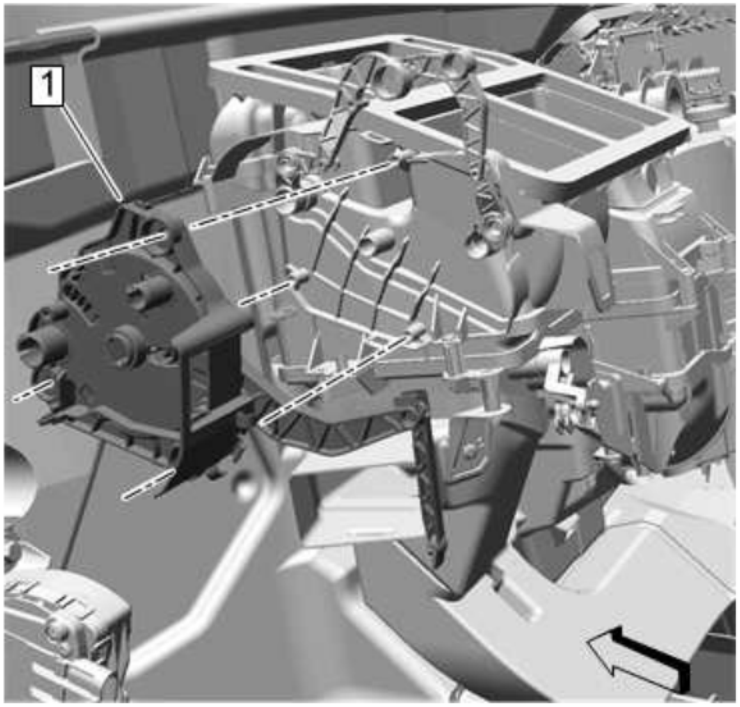

Fig. 34: Mode Control Cam
Courtesy of GENERAL MOTORS COMPANY

3. Install Mode Control Cam (1).

cardiagn.com

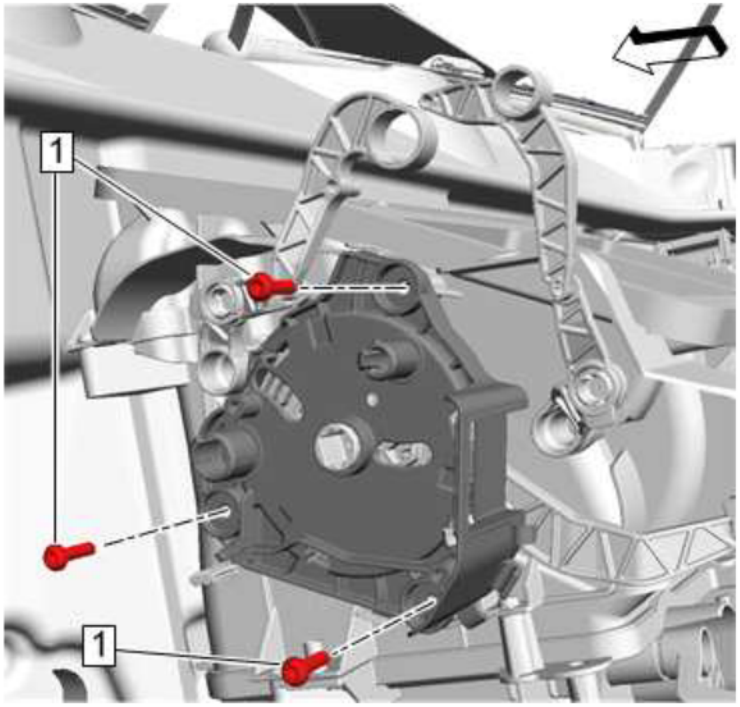

Fig. 35: Mode Control Cam Actuator Mounting Plate Bolt
Courtesy of GENERAL MOTORS COMPANY

CAUTION: **Refer to Fastener Caution .**

4. Install Mode Control Cam Actuator Mounting Plate Bolt (1) @Mode Control Cam Actuator Mounting Plate and tighten 2.5 N.m (22 lb in)

cardiagn.com

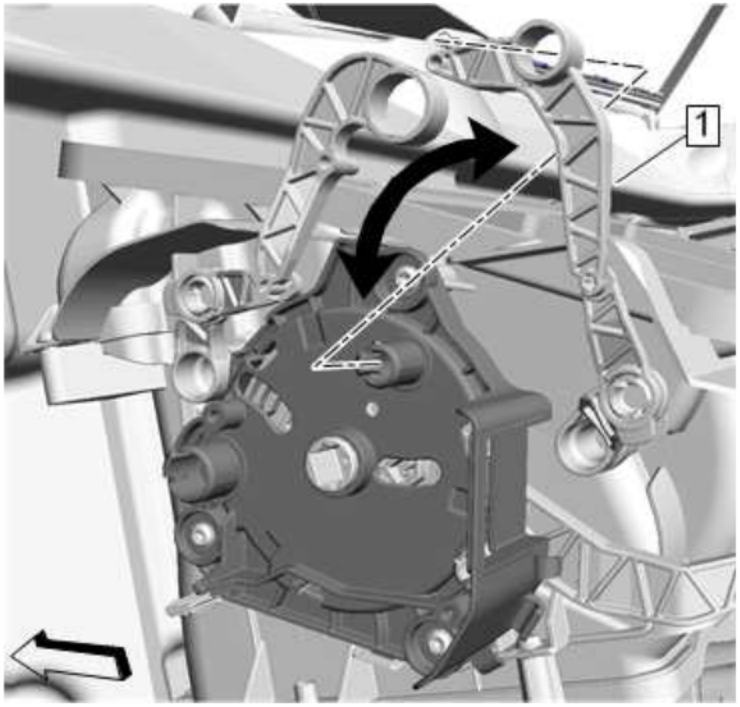

Fig. 36: Vent Valve Lever
Courtesy of GENERAL MOTORS COMPANY

5. Rotate the vent valve lever (1) back to vent valve lever proper position.

cardiagn.com

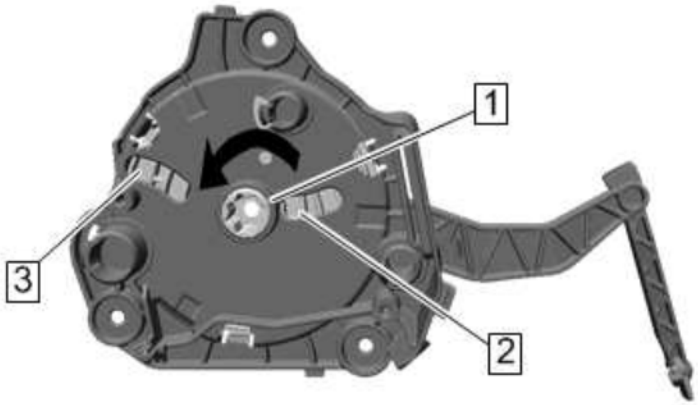

Fig. 37: Mode Control Cam Channel
Courtesy of GENERAL MOTORS COMPANY

6. Upon installation of the vent valve lever, insert the vent valve lever pin into mode control cam channel (2).

cardiagn.com

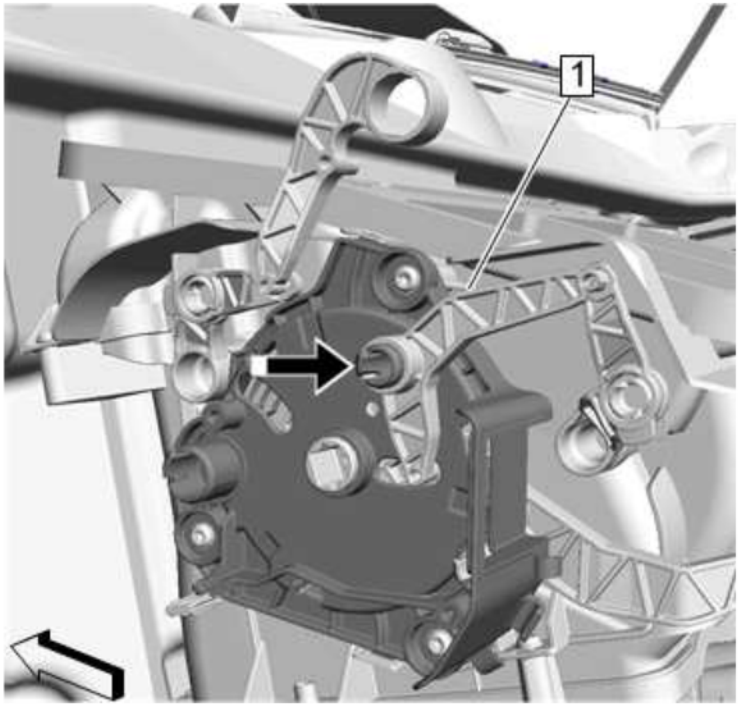

Fig. 38: Vent Valve Lever
Courtesy of GENERAL MOTORS COMPANY

7. Install the vent valve lever (1) onto the mode control cam actuator mounting plate.

cardiagn.com

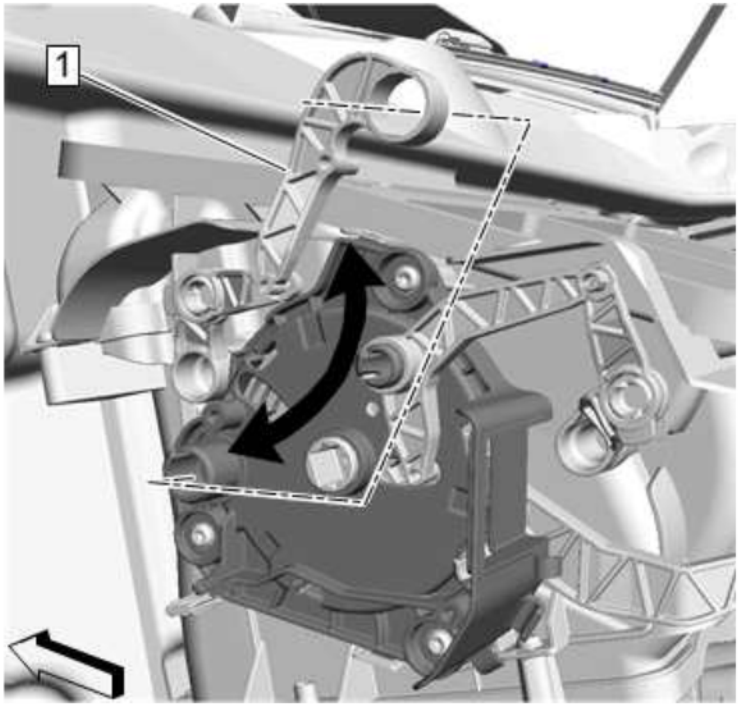

Fig. 39: Defroster Control Lever
Courtesy of GENERAL MOTORS COMPANY

8. Rotate the heater and defroster control lever (1) back to heater and defroster control lever proper position.

cardiagn.com

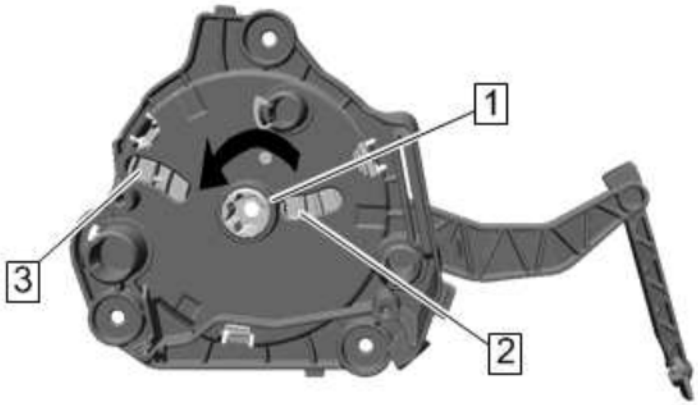

Fig. 40: Mode Control Cam Channel
Courtesy of GENERAL MOTORS COMPANY

9. Upon installation of the heater and defroster control lever, insert the heater and defroster control lever pin into mode control cam channel (3).

cardiagn.com

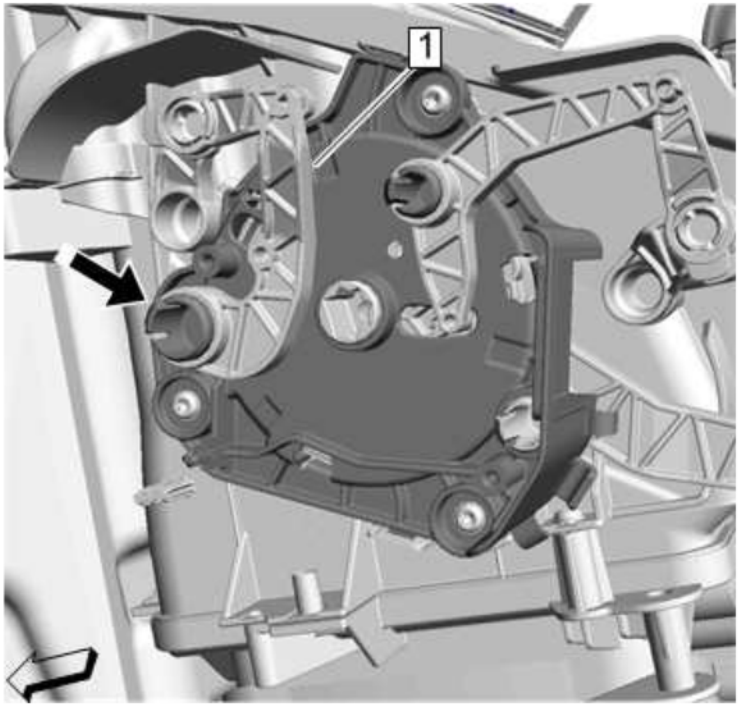

Fig. 41: Defroster Control Lever
Courtesy of GENERAL MOTORS COMPANY

10. Install the heater and defroster control lever (1) onto the mode control cam actuator mounting plate.

cardiagn.com

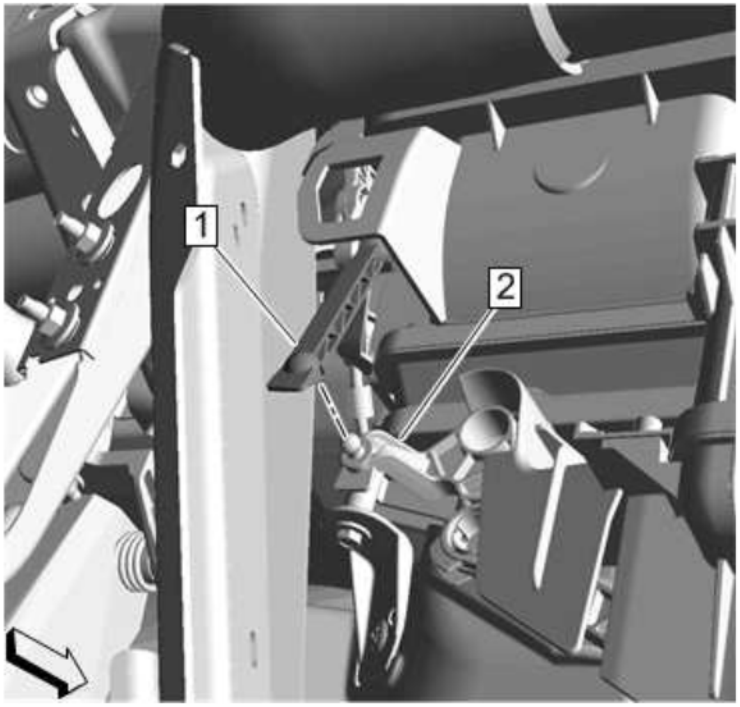

Fig. 42: Vent Valve Link And Floor Air Valve Lever
Courtesy of GENERAL MOTORS COMPANY

11. Snap the vent valve link (1) onto the floor air valve lever (2).
12. Install Mode Valve Actuator. **Mode Valve Actuator ReplacementMode Valve Actuator Replacement (Z75)**

cardiagn.com

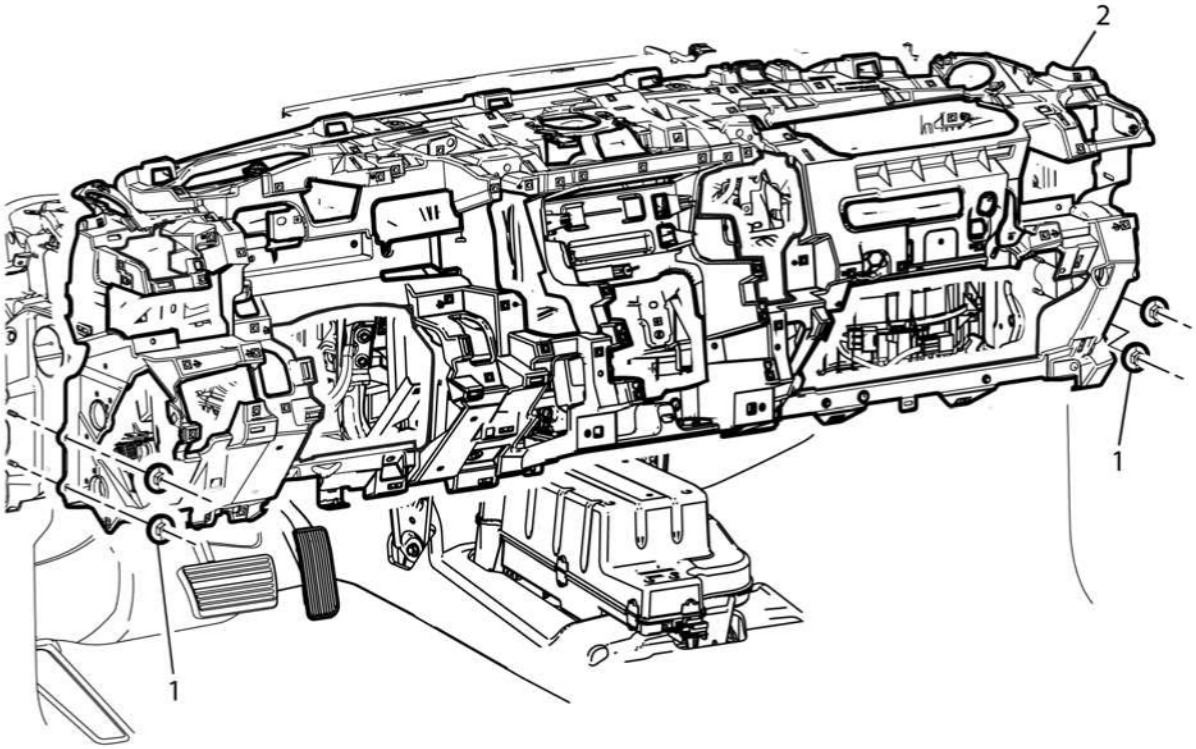

Fig. 43: Instrument Panel Carrier Nut
Courtesy of GENERAL MOTORS COMPANY

13. Install Instrument Panel Carrier Assembly (2). **Instrument Carrier Replacement (Chevrolet / GMC)** **Instrument Carrier Replacement (Cadillac)**
14. Clear the DTCs from the heater and air conditioning remote control module.
15. Perform the actuator calibration procedure. **Actuator Recalibration**

TEMPERATURE VALVE ACTUATOR REPLACEMENT - RIGHT SIDE

cardiagn.com

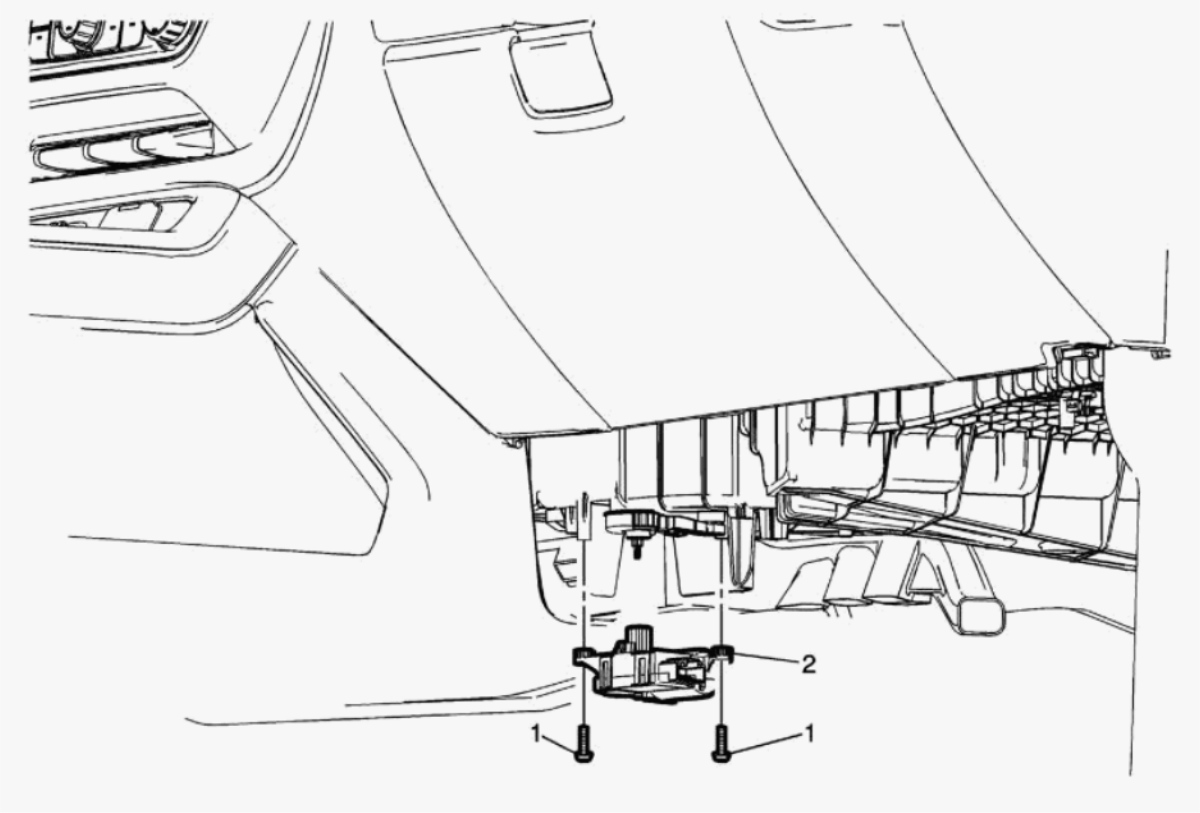

Fig. 44: Temperature Valve Actuator - Right Side
Courtesy of GENERAL MOTORS COMPANY

Call out	Component Name
CAUTION: In order to avoid actuator damage, DO NOT apply power to the actuator when it is not installed	

cardiagn.com

Call out	Component Name
in the HVAC module. **Preliminary Procedure** **Instrument Panel Insulator Replacement (Chevrolet / GMC)** **Instrument Panel Insulator Replacement (Cadillac)**	
1	Temperature Valve Actuator Fastener (Qty: 2) **CAUTION:** **Refer to** **Fastener** **Caution** .
2	Temperature Valve Actuator - Right Side **Procedures** 1. Disconnect the right side temperature valve actuator electrical connector. 2. **Actuator Recalibration**

TEMPERATURE VALVE ACTUATOR REPLACEMENT - LEFT SIDE

cardiagn.com

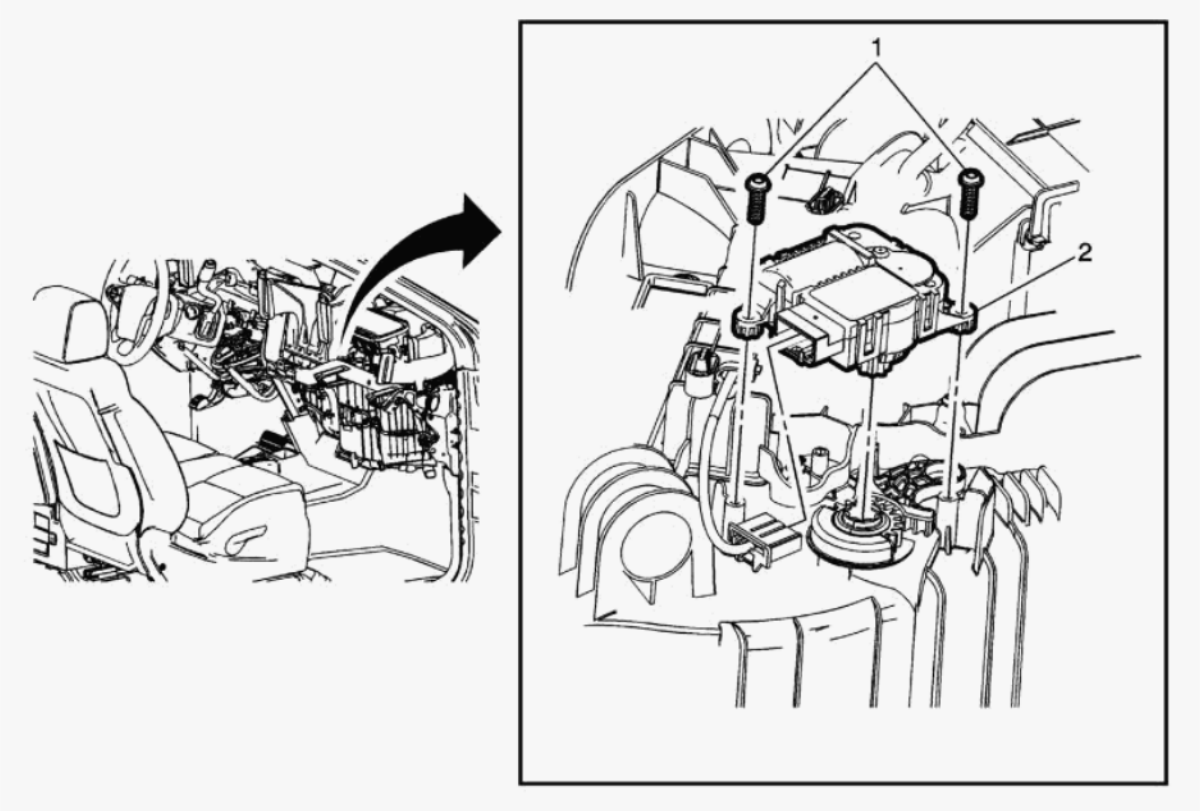

Fig. 45: Temperature Valve Actuator - Right Side
Courtesy of GENERAL MOTORS COMPANY

Callout	Component Name
CAUTION: In order to avoid actuator damage, DO NOT apply power to the actuator when it is not installed	

cardiagn.com

Callout	Component Name
in the HVAC module. **Preliminary Procedure** **Instrument Carrier Replacement (Chevrolet / GMC)** **Instrument Carrier Replacement (Cadillac)**	
1	Temperature Valve Actuator Fastener (Qty: 2) **CAUTION:** **Refer to Fastener Caution .** **Tighten** 1.7 N.m (15 lb in)
2	Temperature Valve Actuator **Procedure** 1. Disconnect the temperature valve actuator electrical connector. 2. **Actuator Recalibration**

AUXILIARY TEMPERATURE VALVE ACTUATOR REPLACEMENT (LWB)

cardiagn.com

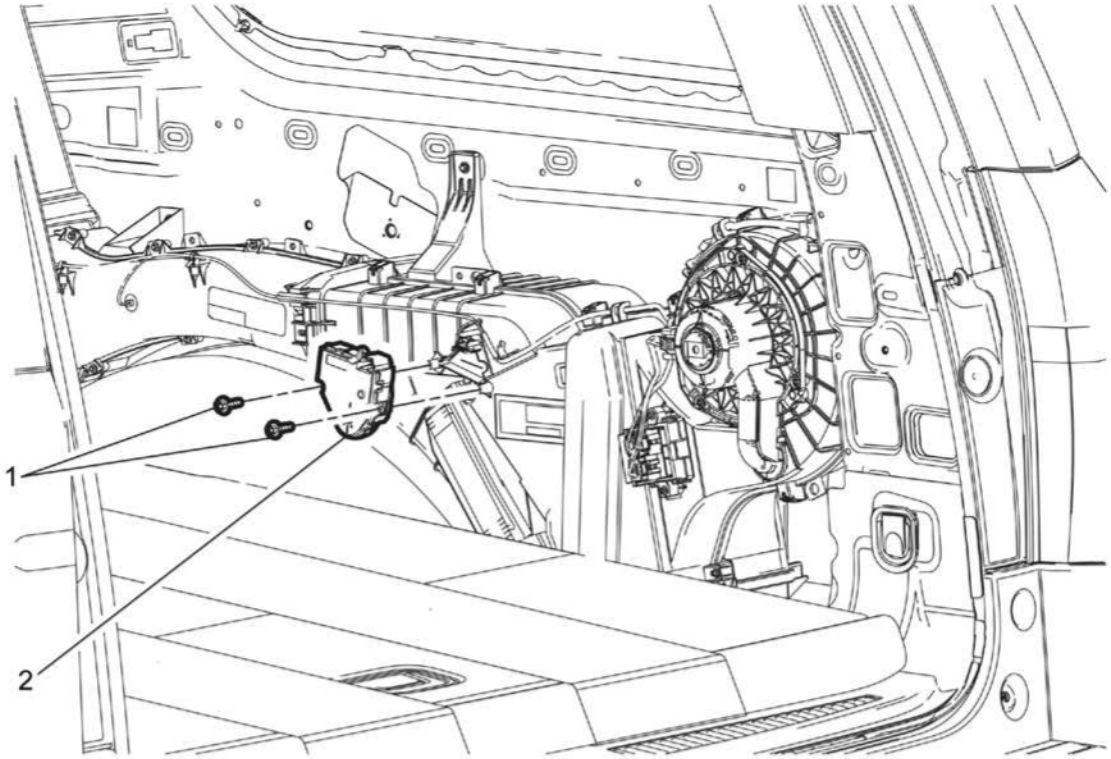

Fig. 46: Auxiliary Temperature Valve Actuator
Courtesy of GENERAL MOTORS COMPANY

Call out	Component Name
CAUTION: In order to avoid actuator damage, DO NOT apply power to the actuator when it is not installed	

cardiagn.com

Call out	Component Name
in the HVAC module. **Preliminary Procedure** **Quarter Lower Rear Trim Panel Replacement (Left Side, Extended Wheelbase)** **Quarter Lower Rear Trim Panel Replacement (Right Side, Extended Wheelbase)**	
1	Auxiliary Temperature Valve Actuator Fastener (Qty: 2) **CAUTION:** **Refer to** **Fastener Caution** . Tighten 1.7 N.m (15 lb in)
2	Auxiliary Temperature Valve Actuator **Procedures** 1. Disconnect the auxiliary temperature valve actuator electrical connector. 2. **Actuator Recalibration**

AUXILIARY TEMPERATURE VALVE ACTUATOR REPLACEMENT (SWB)

cardiagn.com

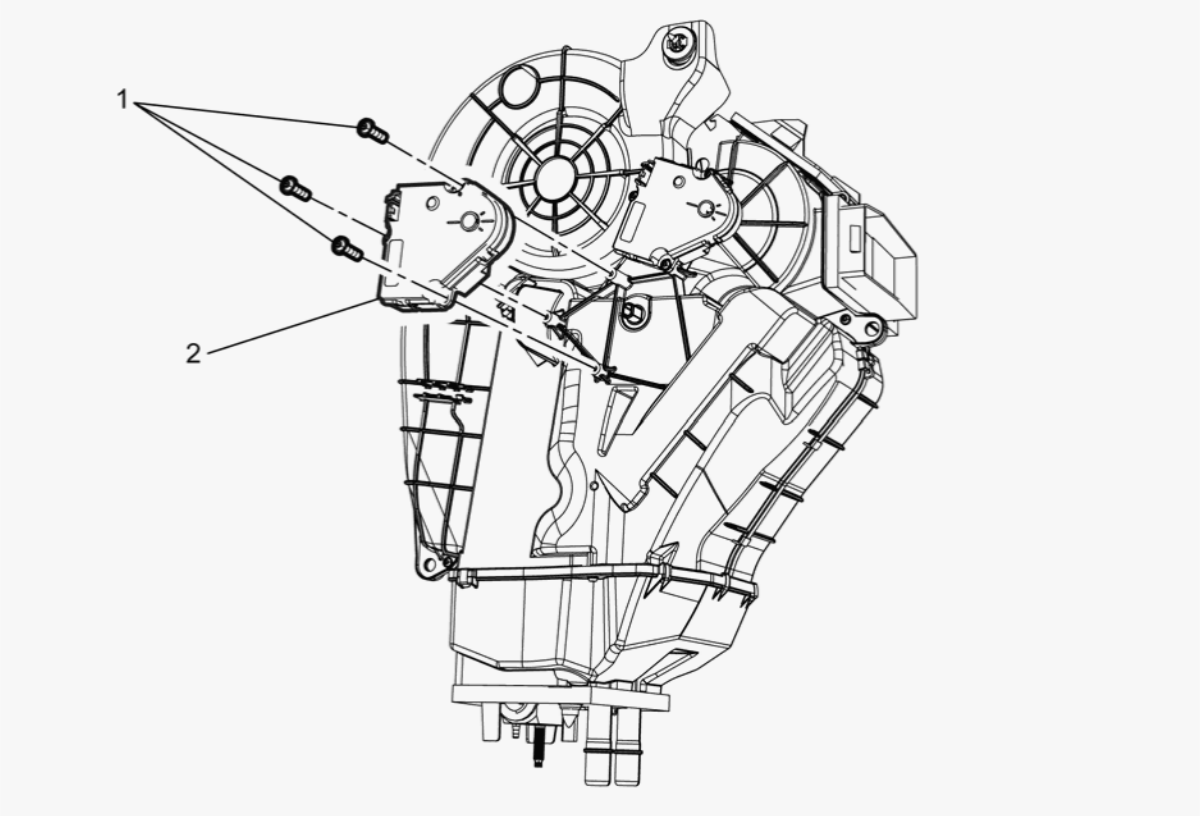

Fig. 47: Auxiliary Temperature Valve Actuator
Courtesy of GENERAL MOTORS COMPANY

Callout	Component Name
CAUTION: In order to avoid actuator damage, DO NOT apply power to the actuator when it is not installed	

cardiagn.com

Callout	Component Name
in the HVAC module. **Preliminary Procedure** **Auxiliary Air Conditioning (A/C) Evaporator and Blower Module Assembly Removal and Installation (SWB)**	
1	Temperature Valve Actuator Fastener (Qty: 3) **CAUTION:** **Refer to Fastener Caution .** **Tighten** 1.7 N.m (15 lb in)
2	Auxiliary Temperature Valve Actuator **Procedure** 1. Mark each of the actuator connectors for proper reconnecting to the actuators. 2. Disconnect the auxiliary temperature valve actuator electrical connector. 3. **Actuator Recalibration**

AUXILIARY MODE VALVE ACTUATOR REPLACEMENT (LWB)

cardiagn.com

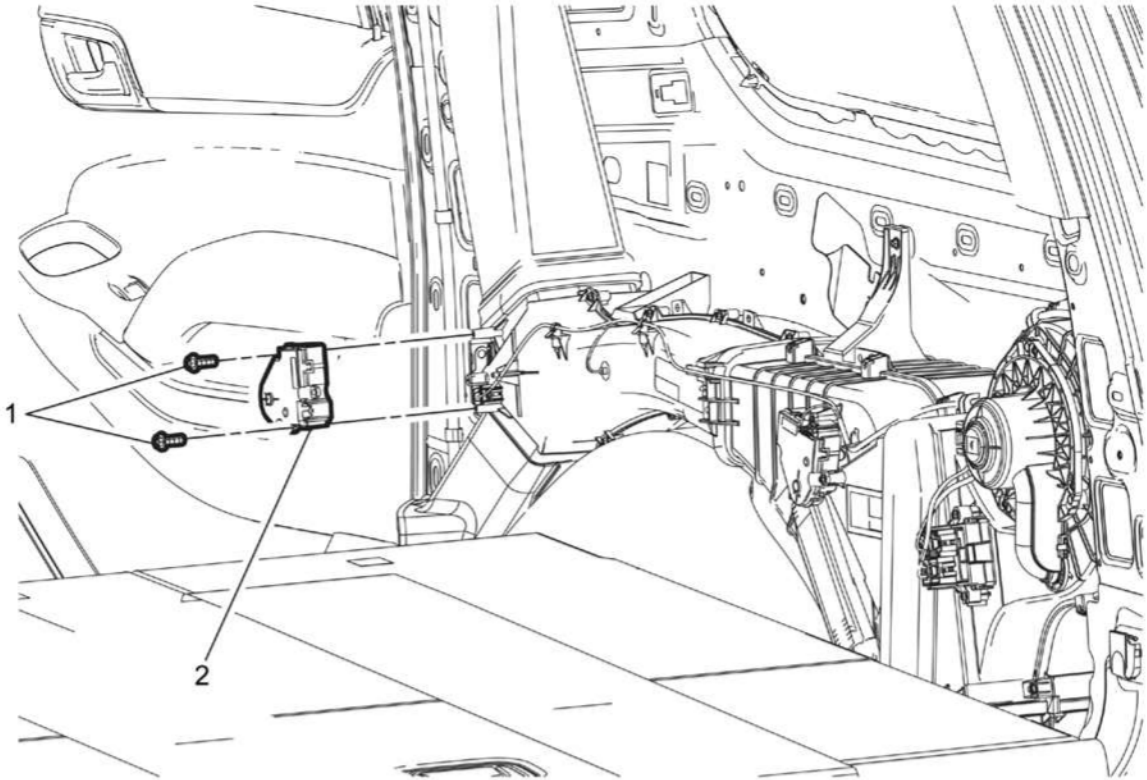

Fig. 48: Auxiliary Mode Valve Actuator (LWB)
Courtesy of GENERAL MOTORS COMPANY

Callout	Component Name
CAUTION: In order to avoid actuator damage, DO NOT apply power to the actuator when it is not installed	

cardiagn.com

Callout	Component Name
in the HVAC module. **Preliminary Procedure** **Quarter Lower Rear Trim Panel Replacement (Left Side, Extended Wheelbase)** **Quarter Lower Rear Trim Panel Replacement (Right Side, Extended Wheelbase)**	
1	Auxiliary Mode Valve Actuator Fastener (Qty: 2) **CAUTION:** **Refer to** **Fastener Caution** . **Tighten** 1.7 N.m (15 lb in)
2	Auxiliary Mode Valve Actuator **Procedure** 1. Disconnect the auxiliary mode valve actuator electrical connector. 2. **Actuator Recalibration**

AUXILIARY MODE VALVE ACTUATOR REPLACEMENT (SWB)

cardiagn.com

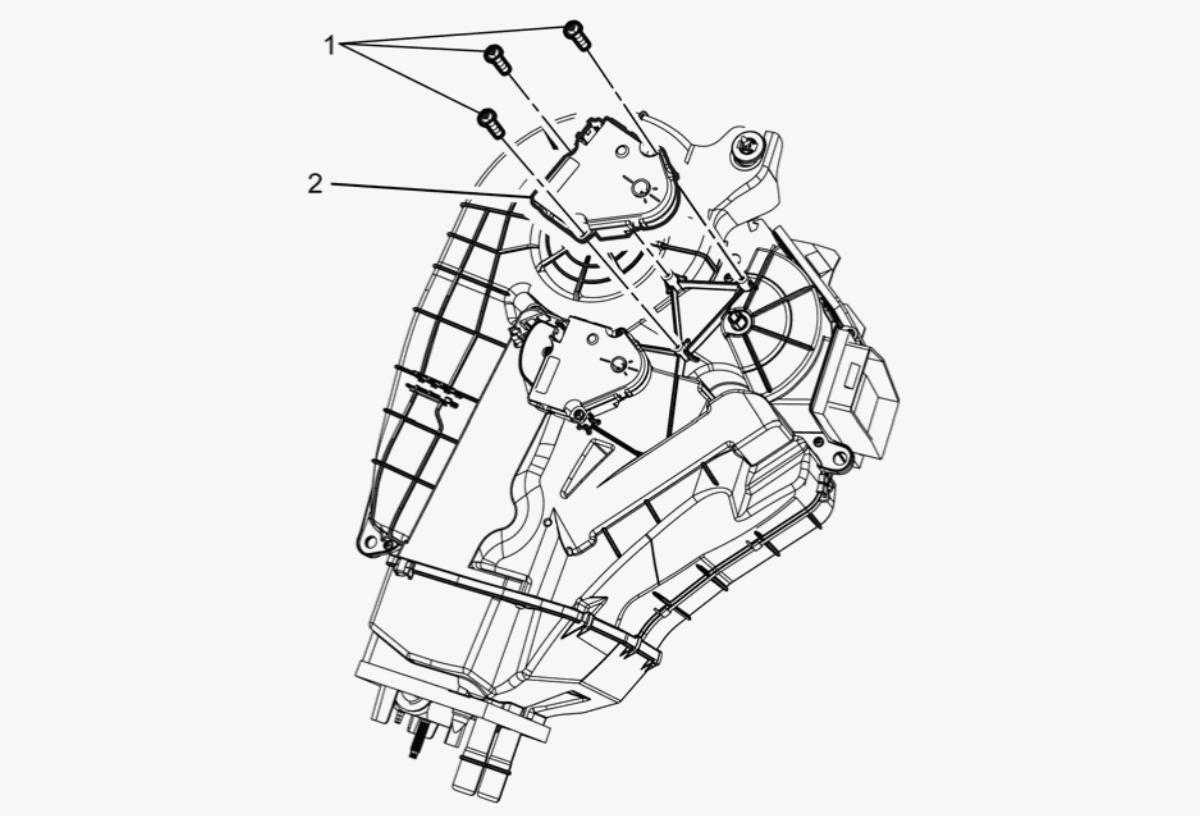

Fig. 49: Auxiliary Mode Valve Actuator (SWB)
Courtesy of GENERAL MOTORS COMPANY

Callout	Component Name
CAUTION: In order to avoid actuator damage, DO NOT apply power to the actuator when it is not installed	

cardiagn.com

Callout	Component Name
in the HVAC module. **Preliminary Procedure** **Auxiliary Air Conditioning (A/C) Evaporator and Blower Module Assembly Removal and Installation (SWB)**	
1	Mode Valve Actuator Motor Fastener (Qty: 3) **CAUTION:** **Refer to Fastener Caution .** **Tighten** 1.7 N.m (15 lb in)
2	Auxiliary Mode Valve Actuator **Procedure** 1. Mark each of the actuator connectors for proper reconnecting to the actuators. 2. Disconnect the auxiliary mode valve actuator electrical connector. 3. **Actuator Recalibration**

TEMPERATURE VALVE REPLACEMENT (LWB UTILITIES AUXILIARY)

cardiagn.com

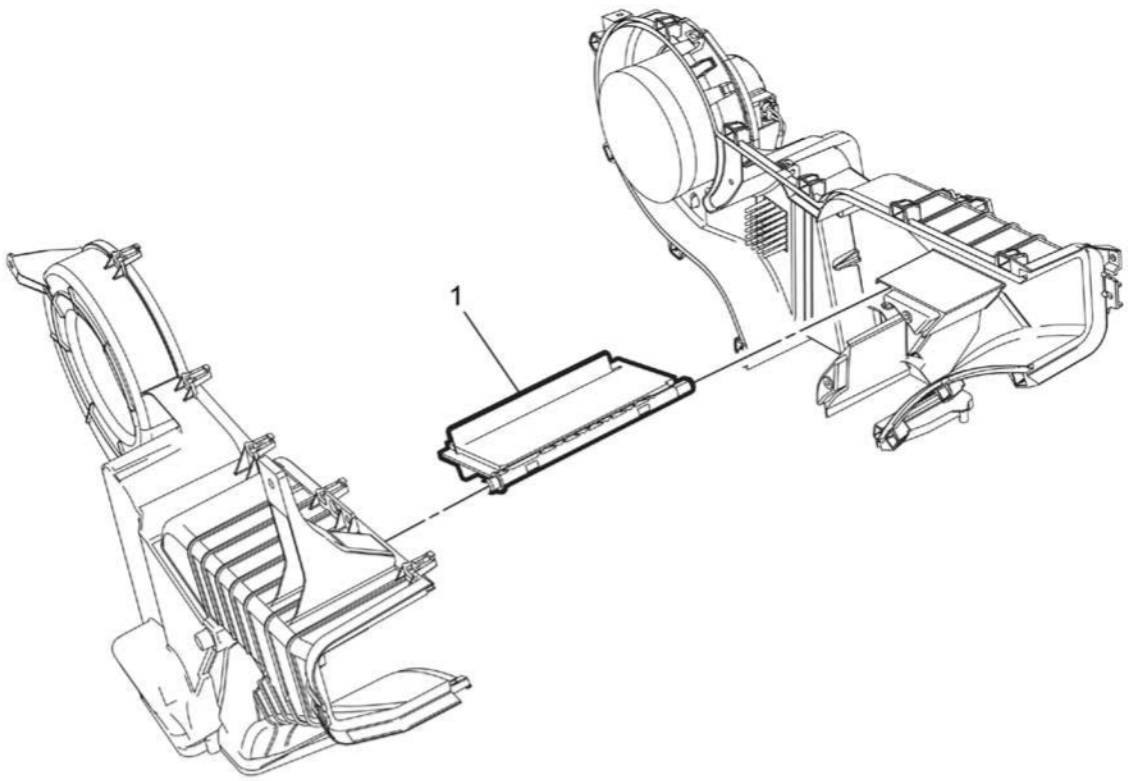

Fig. 50: Temperature Valve (LWB Utilities Auxiliary)
Courtesy of GENERAL MOTORS COMPANY

Call out	Component Name
Preliminary Procedure Remove the auxiliary outboard air conditioning evaporator and blower case. Refer to **Auxiliary Air Conditioning Evaporator and Blower Case Replacement - Outboard (LWB Utilities)** .	
1	Temperature Valve - Auxiliary

DUCT AIR TEMPERATURE SENSOR REPLACEMENT - UPPER RIGHT SIDE (UTILITIES)

cardiagn.com

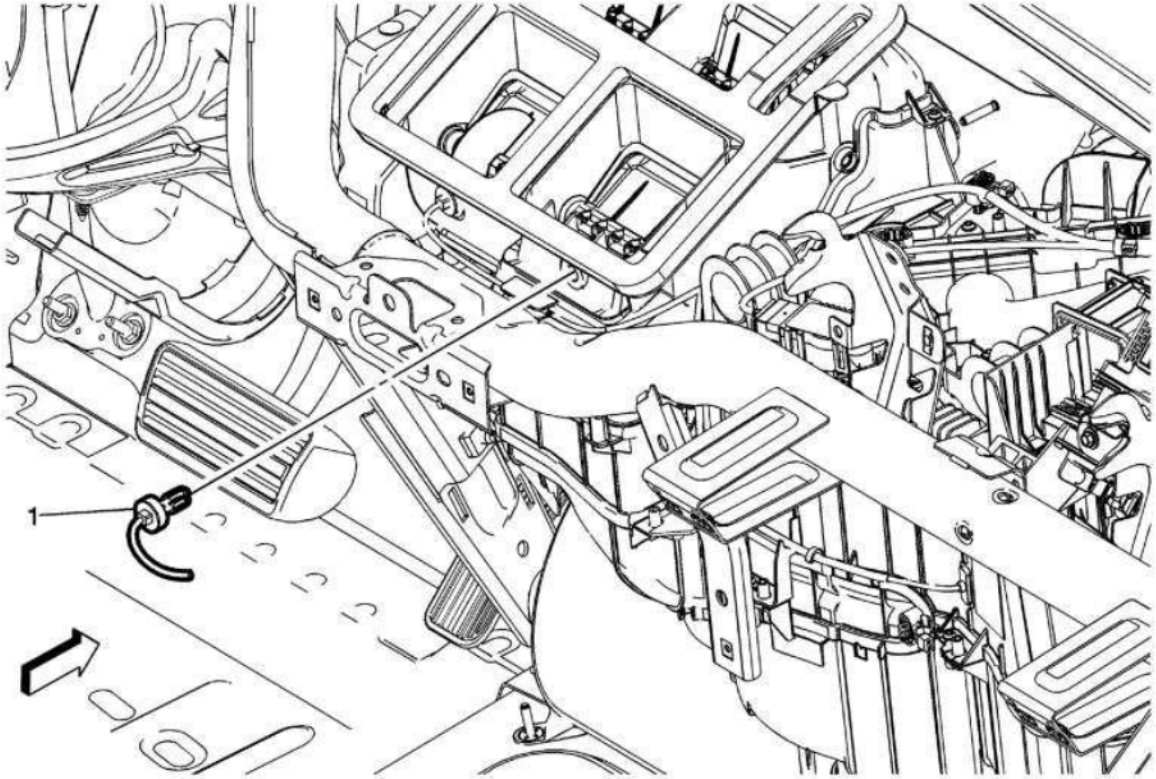

Fig. 51: Duct Air Temperature Sensor - Upper Right Side
Courtesy of GENERAL MOTORS COMPANY

Call out	Component Name
Preliminary Procedure Remove the instrument panel carrier. Refer to **Instrument Carrier Replacement (Chevrolet / GMC)** **Instrument Carrier Replacement (Cadillac)** .	
1	Duct Air Temperature Sensor - Upper Right Side **Procedure** Twist and pull out the right side upper duct air temperature sensor to remove. **NOTE:** **The upper right side**

cardiagn.com

Call out	Component Name
	duct air temperature sensor kit comes with a partial harness. Refer to Wire to Wire Repair .

DUCT AIR TEMPERATURE SENSOR REPLACEMENT - UPPER LEFT SIDE (UTILITIES)

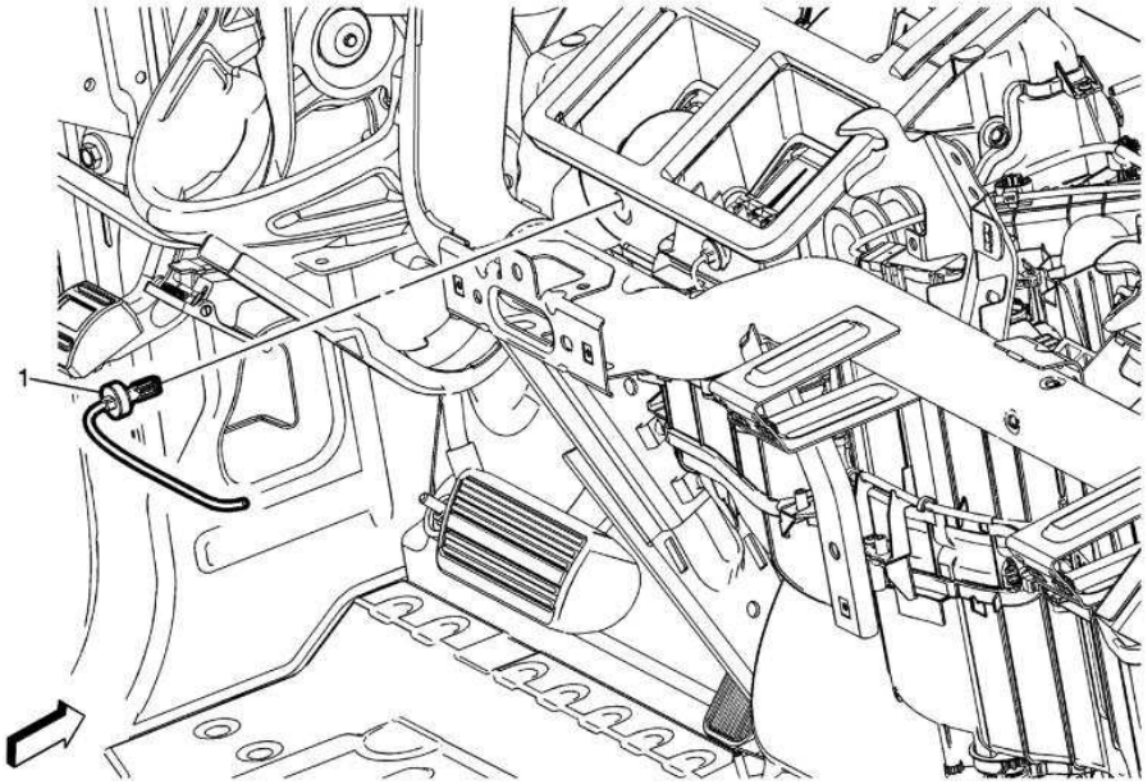

Fig. 52: Duct Air Temperature Sensor - Upper Left Side

cardiagn.com

Courtesy of GENERAL MOTORS COMPANY

Call out	Component Name
Preliminary Procedure Remove the instrument panel carrier. Refer to **Instrument Carrier Replacement (Chevrolet / GMC)** **Instrument Carrier Replacement (Cadillac)** .	
1	Duct Air Temperature Sensor - Upper Left Side **Procedure** Twist and pull out the left side upper duct air temperature sensor to remove. **NOTE:** **The upper left side duct air temperature sensor kit comes with a partial harness. Refer to Wire to Wire Repair .**

AUXILIARY DUCT AIR TEMPERATURE SENSOR REPLACEMENT (LWB UTILITIES)

cardiagn.com

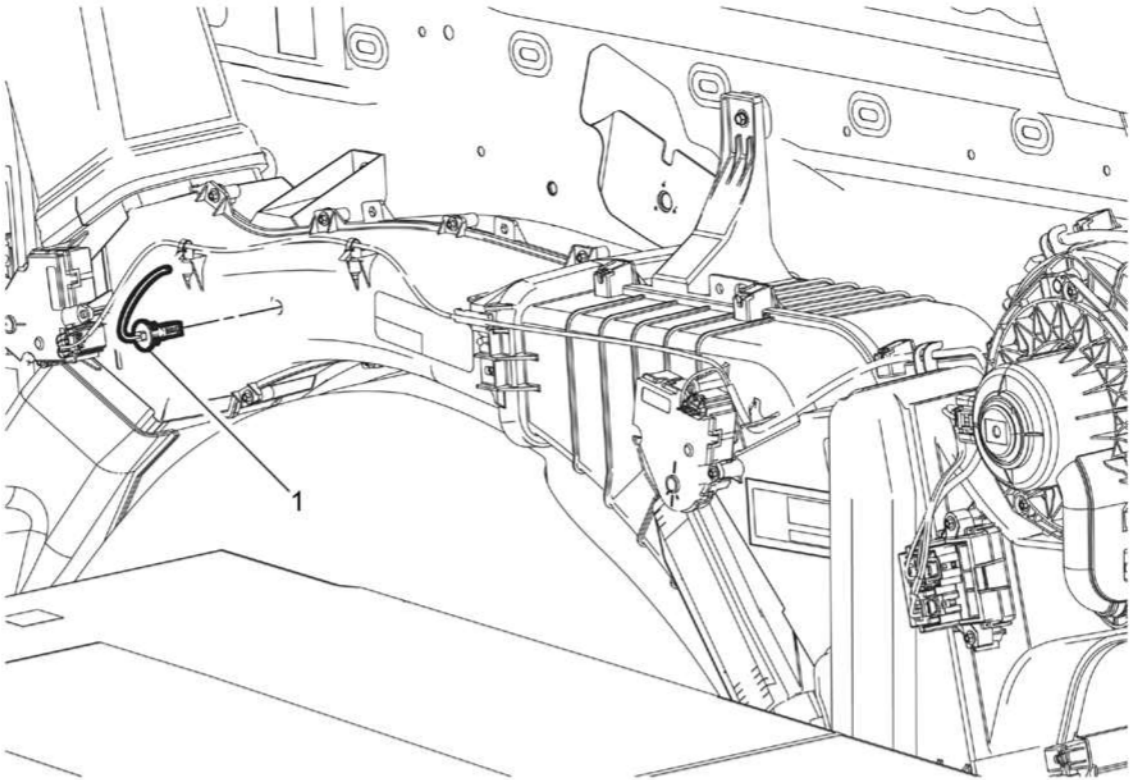

Fig. 53: Auxiliary Duct Air Temperature Sensor (LWB Utilities)
Courtesy of GENERAL MOTORS COMPANY

Call out	Component Name
Preliminary Procedure Remove the right rear quarter lower rear trim panel. Refer to **Quarter Lower Rear Trim Panel Replacement (Left Side, Extended Wheelbase)** **Quarter Lower Rear Trim Panel Replacement (Right Side, Extended Wheelbase)** .	
1	Duct Air Temperature Sensor - Auxiliary **Procedure** Twist and pull out the auxiliary duct air temperature sensor to remove. **NOTE:** **The auxiliary duct air**

cardiagn.com

Call out	Component Name
	temperature sensor kit comes with a partial harness. Refer to Wire to Wire Repair .

FLOOR AIR TEMPERATURE SENSOR REPLACEMENT - LEFT SIDE

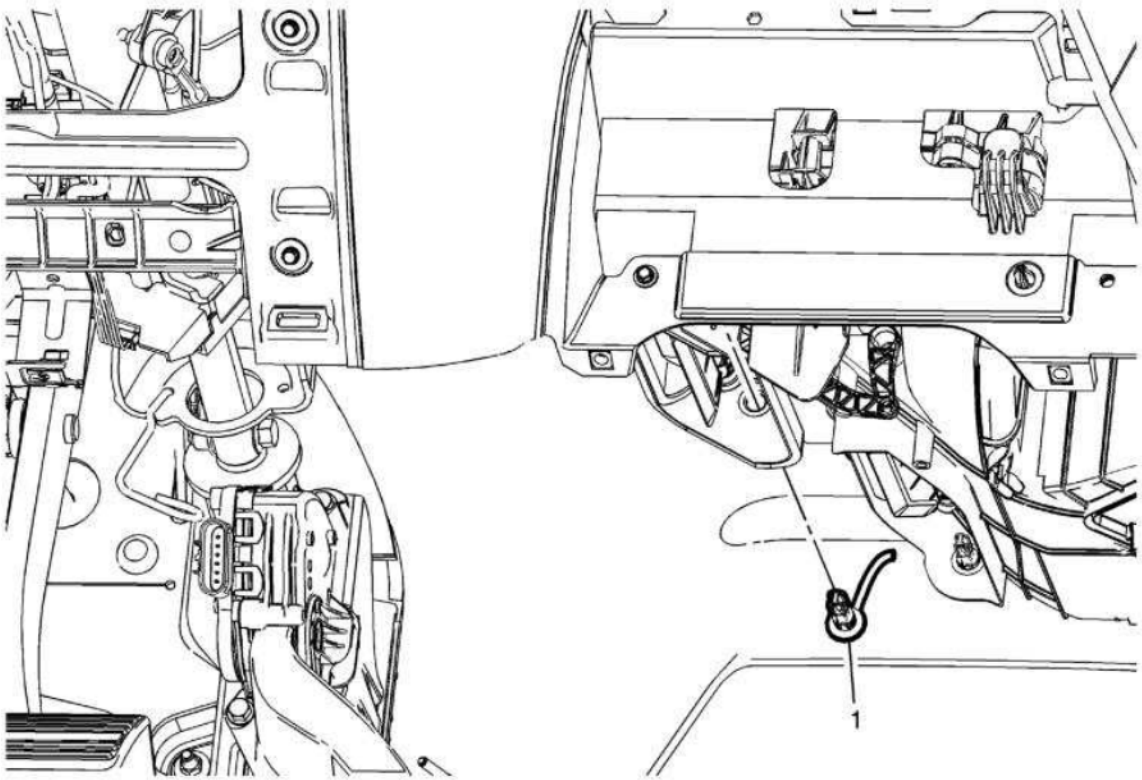

Fig. 54: Floor Air Temperature Sensor - Left Side
Courtesy of GENERAL MOTORS COMPANY

cardiagn.com

Callout	Component Name
Preliminary Procedure Remove the center floor duct. Refer to **Floor Air Outlet Duct Replacement - Center** .	
1	Floor Air Temperature Sensor - Left Side **Procedures** 1. From within the left side lower heater and air conditioning evaporator and blower lower case outlet, twist and push out the left side floor duct air temperature sensor to remove. 2. Maneuver the left side floor duct air temperature sensor out from behind the heater and air conditioning evaporator and blower lower case. **NOTE:** **The left side floor duct air temperature sensor kit comes with a partial harness. Refer to Wire to Wire Repair .**

FLOOR AIR TEMPERATURE SENSOR REPLACEMENT - RIGHT SIDE

cardiagn.com

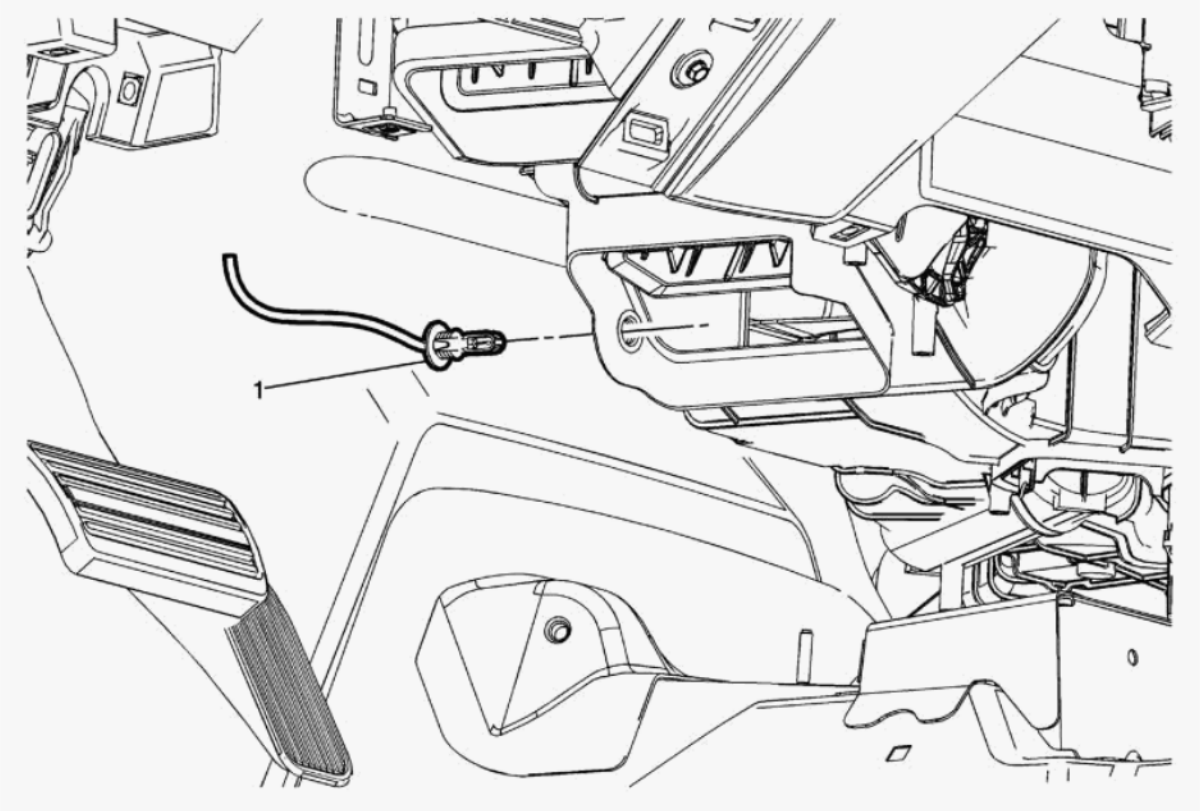

Fig. 55: Floor Air Temperature Sensor - Right Side
Courtesy of GENERAL MOTORS COMPANY

Callout	Component Name
Preliminary Procedure Remove the center floor duct. Refer to **Floor Air Outlet Duct Replacement - Center** .	
1	Floor Air Temperature Sensor - Right Side **Procedures** 1. From within the right side lower heater and air conditioning evaporator and blower lower case outlet, twist and push out the right side floor duct air temperature sensor to remove. 2. Maneuver the right side floor duct air temperature sensor out from behind the heater and air conditioning evaporator and blower lower case.

cardiagn.com

Callout	Component Name
	NOTE: The right side floor duct air temperature sensor kit comes with a partial harness. Refer to Wire to Wire Repair .

AIR TEMPERATURE SENSOR REPLACEMENT - UPPER AUXILIARY (SWB)

cardiagn.com

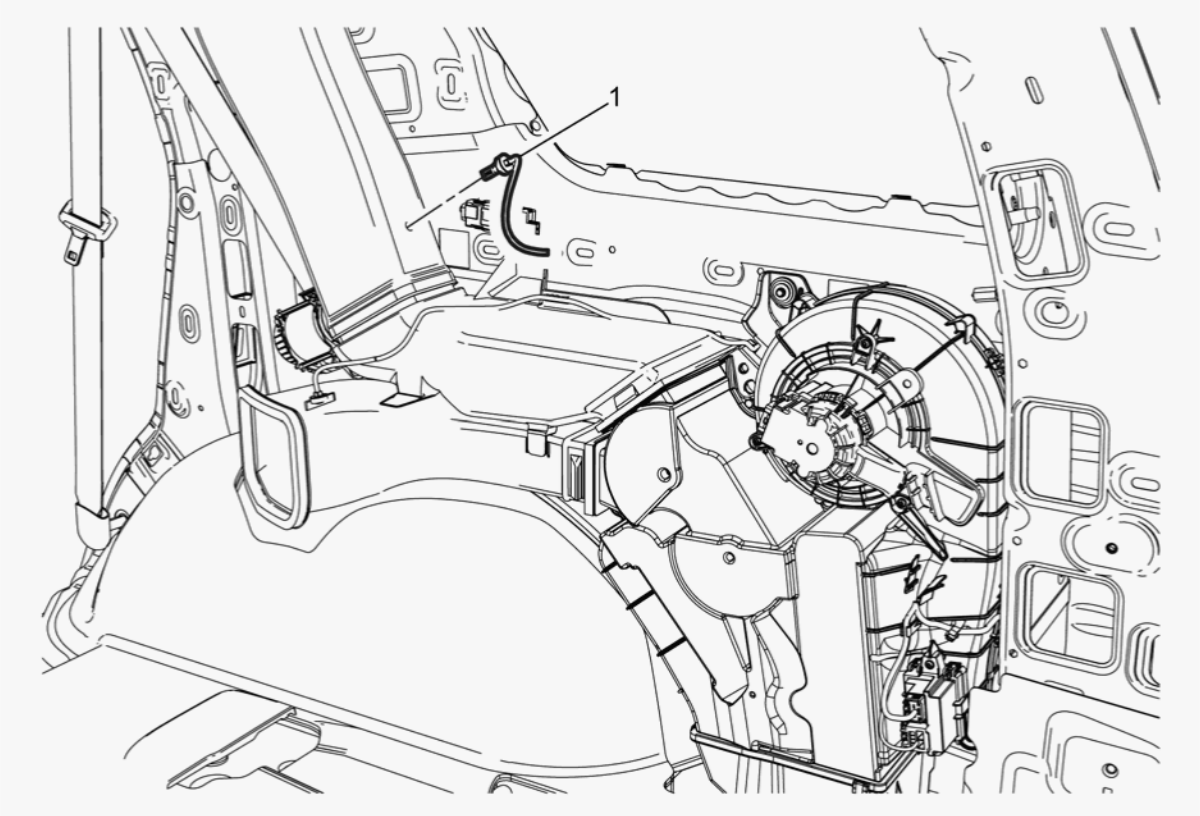

Fig. 56: Air Temperature Sensor - Upper Auxiliary (SWB)
Courtesy of GENERAL MOTORS COMPANY

Call out	Component Name
Preliminary Procedure Remove the right rear quarter lower rear trim panel. Refer to **Quarter Lower Rear Trim Panel Replacement (Left Side, Standard Wheelbase)** **Quarter Lower Rear Trim Panel Replacement (Right Side, Standard Wheelbase)** .	
1	Air Temperature Sensor - Upper Auxiliary **Procedure** Twist and pull out the upper auxiliary air temperature sensor to remove. **NOTE:** **The upper auxiliary air**

cardiagn.com

Call out	Component Name
	temperature sensor kit comes with a partial harness. Refer to Wire to Wire Repair .

AIR TEMPERATURE SENSOR REPLACEMENT - LOWER AUXILIARY (SWB)

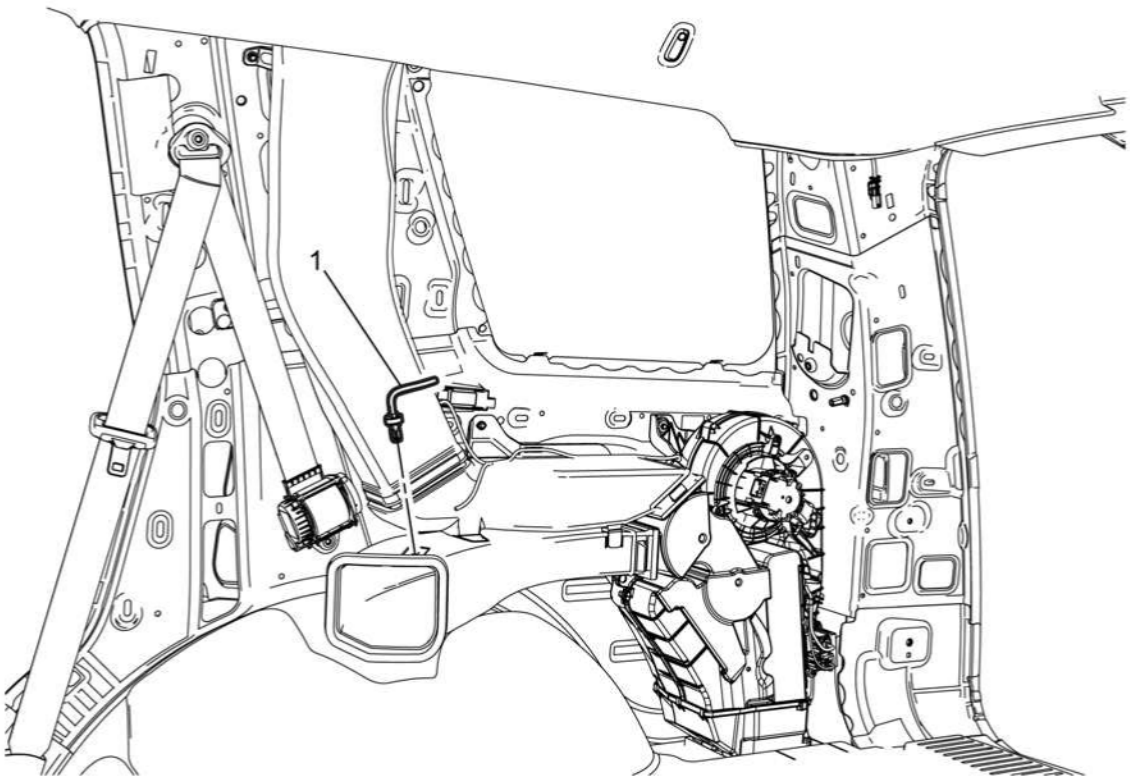

Fig. 57: Air Temperature Sensor - Lower Auxiliary (SWB)
Courtesy of GENERAL MOTORS COMPANY

cardiagn.com

Call out	Component Name
Preliminary Procedure Remove the right rear quarter lower rear trim panel. Refer to **Quarter Lower Rear Trim Panel Replacement (Left Side, Standard Wheelbase)** **Quarter Lower Rear Trim Panel Replacement (Right Side, Standard Wheelbase)** .	
1	Air Temperature Sensor - Lower Auxiliary **Procedure** Twist and pull out the lower auxiliary air temperature sensor to remove. **NOTE:** **The lower auxiliary air temperature sensor kit comes with a partial harness. Refer to Wire to Wire Repair .**

EVAPORATOR AIR TEMPERATURE SENSOR REPLACEMENT (UTILITIES)

cardiagn.com

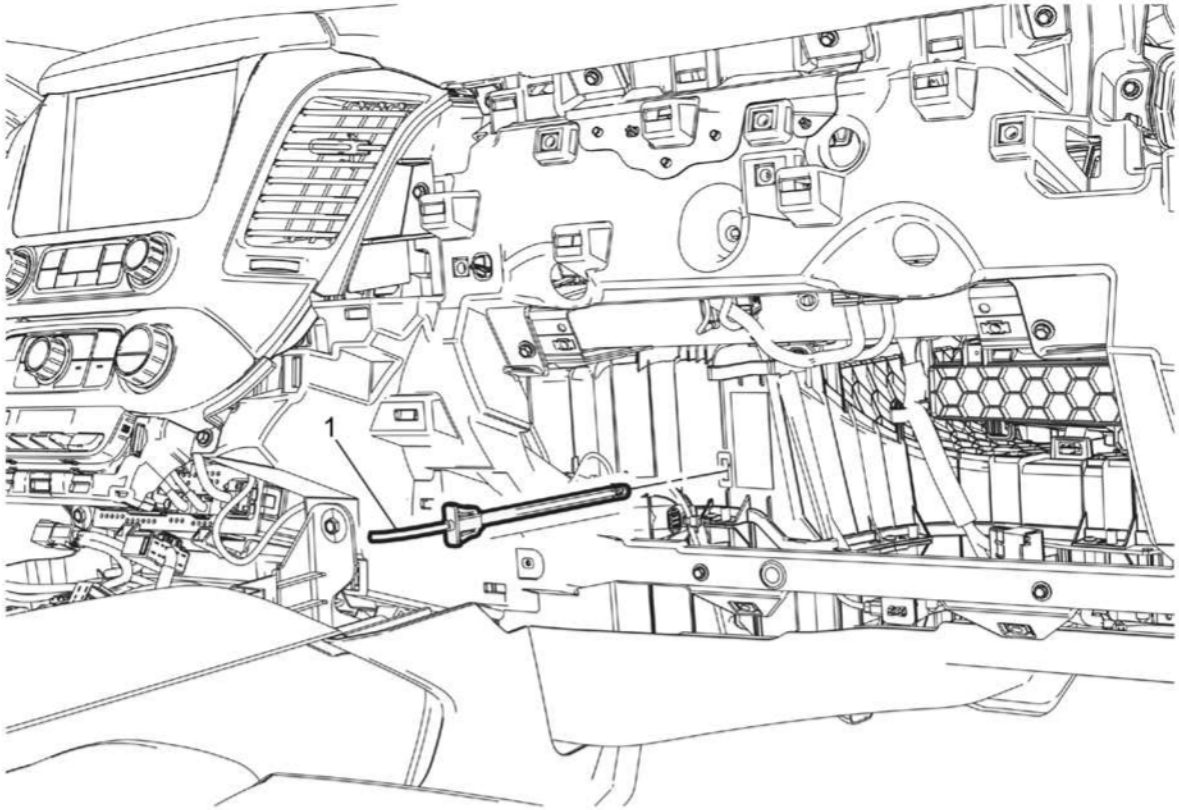

Fig. 58: Evaporator Air Temperature Sensor (Utilities)
Courtesy of GENERAL MOTORS COMPANY

Call out	Component Name
Preliminary Procedure Remove the instrument panel compartment assembly. Refer to **Instrument Panel Compartment Replacement (Chevrolet / GMC)** **Instrument Panel Compartment Replacement (Cadillac)** .	
1	Air Conditioning Evaporator Air Temperature Sensor **NOTE:** **The evaporator air temperature**

cardiagn.com

Call out	Component Name
	sensor kit comes with a partial harness. Refer to Wire to Wire Repair .

EVAPORATOR AIR TEMPERATURE SENSOR REPLACEMENT (Z75)

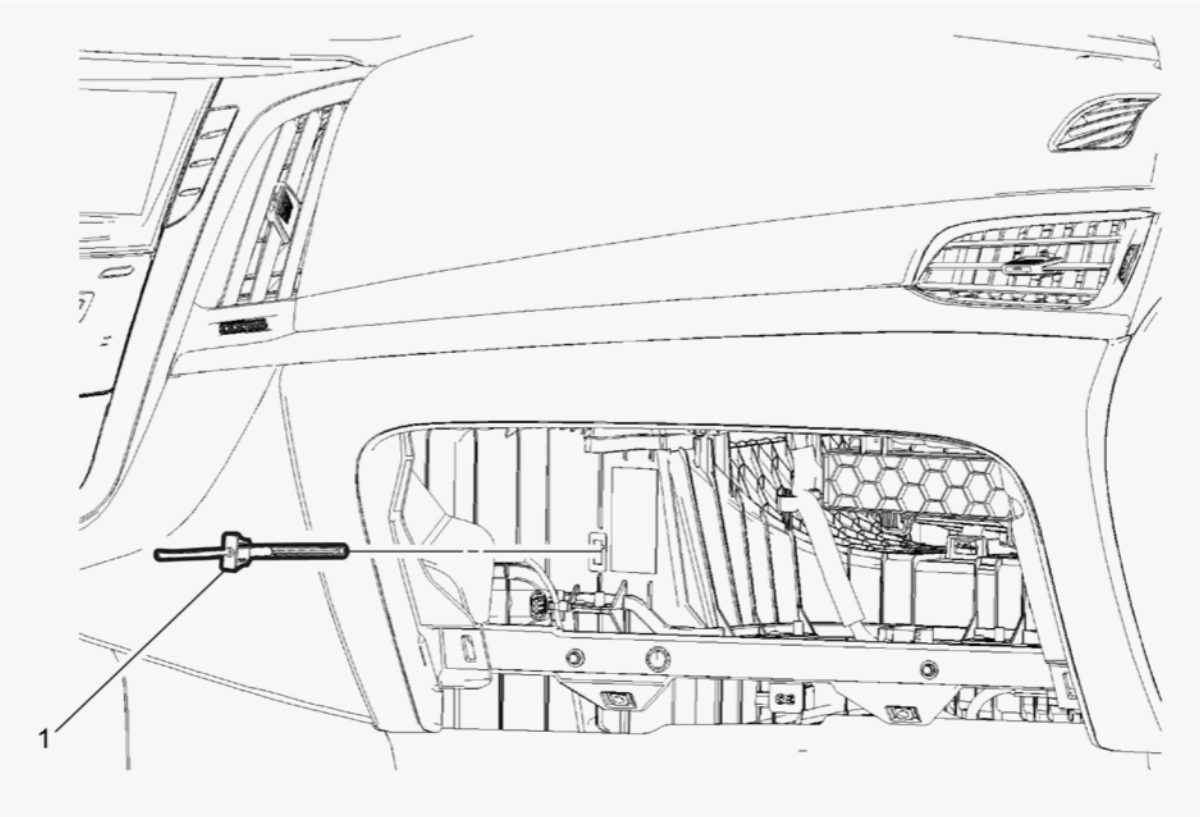

Fig. 59: Evaporator Air Temperature Sensor (Z75)
Courtesy of GENERAL MOTORS COMPANY

cardiagn.com

Call out	Component Name
Preliminary Procedure Remove the instrument panel compartment assembly. Refer to **Instrument Panel Compartment Replacement (Chevrolet / GMC)** **Instrument Panel Compartment Replacement (Cadillac)** .	
1	Air Conditioning Evaporator Air Temperature Sensor **NOTE:** **The air conditioning evaporator air temperature sensor kit comes with a partial harness. Refer to Wire to Wire Repair .**

SUN LOAD TEMPERATURE AND HEADLAMP AUTOMATIC CONTROL AMBIENT LIGHT SENSOR REPLACEMENT

cardiagn.com

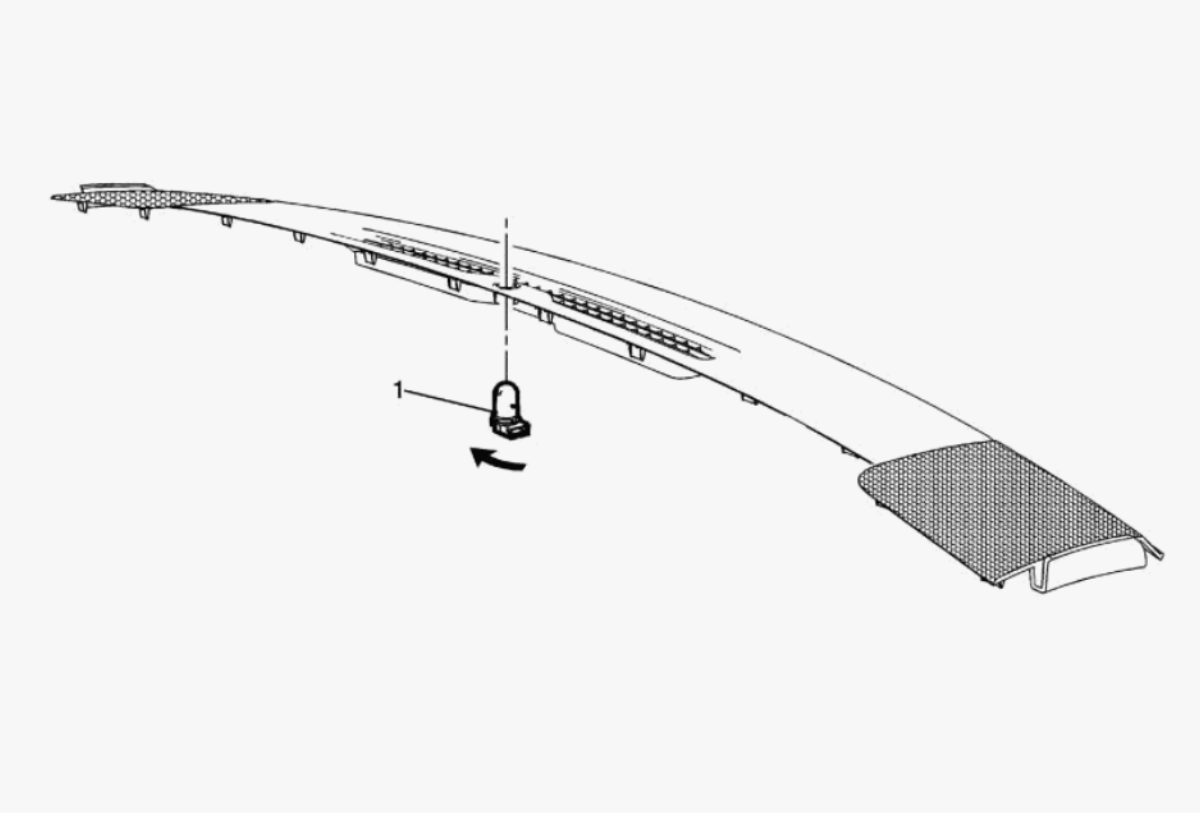

Fig. 60: Sun Load Temperature and Headlamp Automatic Control Ambient Light Sensor
Courtesy of GENERAL MOTORS COMPANY

Callout	Component Name
Preliminary Procedure Remove the instrument panel extension assembly. Refer to **Instrument Panel Extension Replacement (Cadillac)** .	
1	Sun Load Temperature and Headlamp Automatic Control and Ambient Light Sensor **Procedures** 1. Disconnect the sun load temperature and headlamp automatic control and ambient light sensor electrical connector. 2. Turn the sun load temperature and headlamp automatic control and ambient light sensor a quarter of a turn counter clockwise to remove.

cardiagn.com

SUN LOAD TEMPERATURE AND HEADLAMP AUTOMATIC CONTROL AMBIENT LIGHT SENSOR REPLACEMENT (Z75)

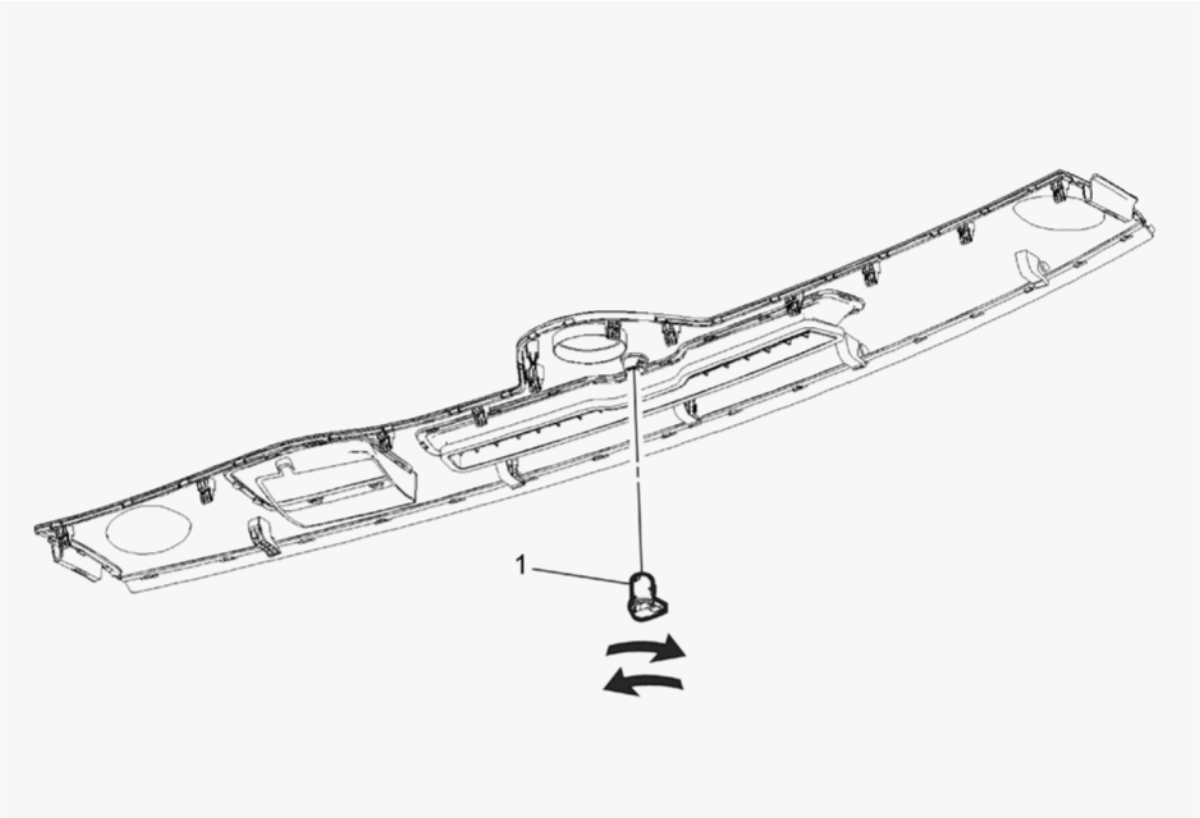

Fig. 61: Sun Load Temperature and Headlamp Automatic Control Ambient Light Sensor
Courtesy of GENERAL MOTORS COMPANY

Call out	Component Name
Preliminary Procedure **Instrument Panel Extension Replacement (Cadillac)**	
1	Sun Load Temperature and Headlamp Automatic Control Ambient Light Sensor **Procedures** 1. Disconnect the sun load temperature and headlamp automatic control and ambient light sensor electrical connector. 2. Turn the sun load temperature and headlamp automatic control and ambient light sensor a quarter of a turn to remove.

cardiagn.com

DESCRIPTION AND OPERATION

AUTOMATIC HVAC DESCRIPTION AND OPERATION

The air temperature and the air delivery description and operation are divided into eight areas:

- HVAC Control Components
- Air Speed (Front)
- Air Speed (Rear)
- Air Delivery (Front)
- Air Delivery (Rear)
- Heating and A/C Operation
- Recirculation Operation
- Automatic Operation
- Engine Coolant
- A/C Cycle

HVAC Control Components

HVAC Control

The HVAC control contains all switches, buttons, and dials which are required to control the functions of the HVAC system and serve as interface between the operator and the HVAC control module. The selected values are passed to the HVAC control module via LIN-Bus.

HVAC Control Module

The HVAC control module is a GMLAN device that interfaces between the operator and the HVAC system to maintain and control desired air temperature and air distribution settings. The battery positive voltage circuit provides power that the HVAC control module uses for keep alive memory. If the battery positive voltage circuit loses power, all HVAC DTCs and settings will be erased from keep alive memory. The body control module (BCM), which is the vehicle mode master, provides a device ON-Signal. The HVAC control module provides blower, air delivery mode and air temperature settings.

The HVAC control module supports the following features:

Feature	Availability

cardiagn.com

Feature	Availability
Afterblow	Available if reprogrammed by the technician
Purge	Yes
Personalization	Yes
Actuator Calibration	Yes

Actuators

Doors in the HVAC case assembly are used to control air flow. The HVAC control module operates the doors through the use of actuators, with one actuator being used for each door. The system has the following air control doors and associated actuators: mode, left and right temperature, and recirculation.

Each actuator used in the system is a 5-wire bi-directional electric motor that incorporate a feedback potentiometer. The five circuits are, low reference, 5 V reference, actuator position signal, and two control circuits. The control circuits use either a ground or 12 V value to coordinate the actuator movement. In order to move the actuator, the HVAC control module grounds one of the control circuits while providing the other with 12 V. The HVAC control module reverses the polarity of the control circuits to move the actuator in the opposite direction.

When the actuator shaft rotates, the potentiometer's sliding contact changes the door position signal between 0-5 V. The HVAC control module converts the voltage signal to counts. The total range of the counts is 0-1024, with an operating range between 20-1000. The actual operating range of an actuator is determined during calibration. During calibration, the actuator is moved though its full range of travel and the module stores the minimum and maximum value. Based on the desired system operation, the module sets a commanded, or targeted, value for the actuators. The control circuits are operated to move the door to the required position, and the changing position signal is sent to the module. Once the actual position signal and the commanded value are the same, the module ceases operating the control circuits and the actuator (and door) remain in the desired position.

Blower Motor

The blower motor control module is an interface between the HVAC control module and the blower motor. The blower motor speed control from the HVAC control module, battery positive and ground circuits enable the blower motor control module to operate. The HVAC control module provides a pulse width modulation (PWM) signal to the blower motor control module in order to command the blower motor speed. The blower motor control module transfers the PWM signal into a corresponding blower motor voltage.

Duct Temperature Sensors

The air temperature sensors are 2-wire negative temperature co-efficient thermistors. The sensors operate within a temperature range of -40 to +85Â°C (-40 to +185Â°F). The sensors are installed in the air distribution ducts and measure the temperature of the air that streams from the ducts.

cardiagn.com

The HVAC control module uses these values to adjust the mixed air flap position according to the requested temperature.

Evaporator Temperature Sensor

The evaporator temperature sensor is a 2-wire negative temperature co-efficient thermistor. The sensor operates within a temperature range of -40 to +85Â°C (-40 to +185Â°F). The sensor is installed at the evaporator and measures its temperature. If the temperature drops under 3Â°C (38Â°F), the compressor will be switched off in order to prevent evaporator icing.

A/C Refrigerant Pressure Sensor

The A/C refrigerant pressure sensor is a 3-wire piezoelectric pressure transducer. A 5 V reference voltage, low reference, and signal circuits enable the sensor to operate. The A/C pressure signal can be between 0.2-4.8 V. When the A/C refrigerant pressure is low, the signal value is near 0 V. When the A/C refrigerant pressure is high, the signal value is near 5 V. The engine control module (ECM) converts the voltage signal to a pressure value. When pressure is too high or too low, the ECM will not allow the A/C compressor clutch to engage.

A/C Compressor

The A/C compressor uses a conventional belt driven magnetic clutch to engage and mechanically turn the compressor. When the A/C switch is pressed, the HVAC control module sends an A/C request message to the ECM via serial data. If specific criteria is met, the ECM then grounds the A/C compressor clutch relay control circuit, which will switch the A/C compressor clutch relay. With the relay contacts closed, battery voltage is supplied to the permanently grounded A/C compressor clutch. The A/C compressor clutch will then be activated.

This A/C system utilizes a variable displacement solenoid valve to alter the amount of displacement created by the turning of the compressor. The HVAC control module provides both battery voltage and a pulse width modulated ground to the variable displacement solenoid valve. When the A/C switch is pressed, the HVAC control module grounds the variable displacement solenoid using a (PWM) signal in order to determine the amount of compressor displacement. The performance of the A/C compressor is regulated based on cooling load.

Ambient Light/Sunload Sensor

The sunload sensor is connected to ground and to a 12 V clocked power supply through the HVAC control module. This clocked power supply is to power the sensor electronics and to work as a clock generator to the sunload sensor micro controller. The sensor uses a pulse signal for data identification and transferring the sun intensity measurement. At each positive transition from the clocked supply input, the sunload sensor micro controller will shift channels enabling new intensity measurement on the signal output to the HVAC control module. The signal voltage varies between 0-4 V.

The passenger compartment temperature sensor is a negative temperature co-efficient thermistor. A signal and low reference circuit enables the sensor to operate. As the air temperature increases, the sensor resistance decreases. The sensor signal varies between 0-5 V.

cardiagn.com

Bright or high intensity light causes the vehicles interior temperature to increase. The HVAC system compensates for the increased temperature by diverting additional cool air into the vehicle.

Air Speed

The blower control switch is part of the HVAC controls. The selected value of the blower switch position is sent to the HVAC control module via LIN-Bus. The blower motor control circuitry is integrated within the blower motor assembly. The HVAC control module provides a low side pulse width modulation (PWM) signal to the blower motor to request a specific motor speed. The blower motor translates the PWM signal and drives the motor accordingly.

Afterblow

Afterblow is a feature that dries the evaporator core by operating the blower motor after the engine is turned OFF. This reduces the amount of microbial growth that can create undesirable odors. The vehicle does not come equipped with the afterblow feature turned ON. If the afterblow feature is required due to an odor concern, it must be enabled using the scan tool Afterblow configuration function.

After the HVAC control module has been programmed for afterblow, the following conditions must be met for afterblow to operate:

- The engine has been turned OFF for at least 30 minutes.
- The ambient air temperature is at least 21Â°C (70Â°F).
- The A/C compressor operated for more than 2 minutes before shut down.
- The system voltage is at least 12 volts.

Once the above conditions have been met, the blower motor will perform the following sequence up to 5 times. This could last up to an hour:

1. The blower motor will be OFF for 7-11 minutes.
2. The blower motor will RUN for 25-30 seconds.

Air Delivery

The HVAC control module controls the distribution of air by the use of recirculation and mode door actuator. The modes that may be selected are:

- Defrost
- Defog
- Panel
- Floor

cardiagn.com

The desired air distribution mode can be selected with the air distribution switches at the HVAC control. The HVAC control delivers the values to the HVAC control module via LIN-Bus. The HVAC control module controls the mode door actuator so that it drives the flap to the calculated position. Depending on the position of the flap, air is distributed through various ducts leading to the outlets in the dash. Turning the mode flap to the defrost position, the HVAC control module will move the recirculation actuator to outside air, reducing window fogging. When defrost is selected, the blower motor will be activated, regardless of the coolant temperature. The HVAC control module enables a high volume of air delivered to the front defrost vents. A/C is available in all modes.

The rear window defogger does not affect the HVAC system.

Heating and A/C Operation

The purpose of the heating and A/C system is to provide heated and cooled air to the interior of the vehicle. The A/C system will also remove humidity from the interior and reduce windshield fogging. Regardless of the temperature setting, the following can affect the rate that the HVAC system can achieve the desired temperature:

- Recirculation actuator setting
- Difference between inside and desired temperature
- Blower motor speed setting
- Mode setting

When the A/C switch is pressed, the HVAC controls sends a signal to the HVAC control module via LIN-Bus. The HVAC control module evaluates this signal and sends an A/C request signal to the ECM via CAN-Bus. The ECM checks all preconditions before releasing and if all conditions are met sends a release signal back to the HVAC control module. The ECM will provide a ground for the A/C compressor relay enabling it to close its internal contacts to send battery voltage to the A/C compressor clutch coil. The A/C compressor clutch will be activated. The performance of the A/C compressor is regulated via a variable A/C compressor solenoid valve. The HVAC control module supplies battery voltage to the A/C compressor. When the A/C switch is pressed, the HVAC control module provides a pulse width modulation (PWM) signal to the A/C compressor solenoid valve in order to command the performance of the A/C compressor.

The following conditions must be met in order to activate the A/C compressor:

- Battery voltage is between 9-18 V
- Engine coolant temperature is less than 124Â°C (255Â°F)
- Engine speed is greater than 600 RPM
- Engine speed is less than 5, 500 RPM
- A/C high side pressure is between 269-2 929 kPa (39-425 PSI)

cardiagn.com

- Throttle position is less than 100%
- Evaporator temperature is greater than 3Â°C (38Â°F)
- ECM does not detect immoderate torque load
- ECM does not detect insufficient idle quality
- The ambient temperature is above 1Â°C (34Â°F)

The sensor information is used by the ECM to determine the following:

- The A/C high side pressure
- An A/C system load on the engine
- An immoderate A/C high side pressure
- The heat load at the A/C condenser

The air streams into the passenger compartment through the heater core and the evaporator core. The air temperature actuator drives the mixed air flap to direct the airflow. If the interior temperature should be increased, the mixed air flap is put into the position in which more air streams through the heater core. If the interior temperature should be decreased, the mixed air flap is put into the position in which more air streams through the evaporator core.

Recirculation Operation

The recirculation switch is integrated into the HVAC control. The selected recirculation switch position is sent to the HVAC control module via LIN-Bus. The HVAC control module controls the air intake using the recirculation actuator. In recirculation mode the recirculation flap opens in order to circulate the air within the vehicle. In fresh air mode the recirculation flap is closed in order to route outside air into the vehicle.

Automatic Operation

In automatic operation, the HVAC control module maintains the comfort level inside of the vehicle by controlling the A/C compressor clutch, the blower motor, the air temperature actuators, mode actuator and recirculation actuator.

To put the HVAC system in automatic mode, the following is required:

1. The auto switch must be activated.
2. The air temperature switch must not be in either the full hot or full cold position.

Once the desired temperature is reached, the blower motor, mode, recirculation and temperature actuators automatically adjust to maintain the temperature selected. The HVAC control module performs the following functions to maintain the desired air temperature:

cardiagn.com

- Monitors the following sensors:
  - Ambient air temperature sensor
  - Lower left duct air temperature sensor
  - Lower right duct air temperature sensor
  - Upper left duct air temperature sensor
  - Upper right duct air temperature sensor
  - Ambient light/sunload sensor
- Regulate the blower motor speed
- Position the air temperature actuators
- Position the mode door actuator
- Position the recirculation actuator
- Request A/C operation
- Control of the A/C compressor

When the warmest position is selected in automatic operation the blower speed will increase gradually until the vehicle reaches normal operating temperature. When normal operating temperature is reached the blower stays on high speed and the air temperature actuators stays in the full heat position.

When the coldest position is selected in automatic operation the blower stays on high and the air temperature actuators stay in full cold position. The mode actuator remains in the panel position and the recirculation actuator will remain in the recirculation position.

Under cold ambient temperatures, the automatic HVAC system provides heat in the most efficient manner. The operator can select an extreme temperature setting but the system will not warm the vehicle any faster. Under warm ambient temperatures, the automatic HVAC system also provides air conditioning in the most efficient manner. Selecting an extreme cool temperature will not cool the vehicle any faster.

Engine Coolant

Engine coolant is the essential element of the heating system. The thermostat controls the normal engine operating coolant temperature. The thermostat also creates a restriction for the cooling system that promotes a positive coolant flow and helps prevent cavitation.

Coolant enters the heater core through the inlet heater hose, in a pressurized state. The heater core is located inside the HVAC control module. The ambient air drawn through the HVAC control module absorbs the heat of the coolant flowing through the heater core. Heated air is distributed to the passenger compartment, through the HVAC control module, for passenger comfort. Opening or closing the air temperature flap controls the amount of heat delivered to the passenger compartment. The coolant exits the heater core through the return heater hose and recirculates back to the engine

cardiagn.com

cooling system.

A/C Cycle

Refrigerant is the key element in an air conditioning system. There are currently two approved Environmental Protection Agency refrigerants. They are R134a and R-1234yf, and either one could be used in this vehicle. R-1234yf is a newly EPA approved refrigerant, and it will require the use of an updated Air Conditioning Refrigerant Recovery/Recharge Cart/System. Refer to **Refrigerant Recovery and Recharging (R134A)** **Refrigerant Recovery and Recharging (R1234yf)** for correct tool usage. Both refrigerants are very low temperature gases that can transfer the undesirable heat and moisture from the passenger compartment to the outside air.

The compressor builds pressure on the vapor refrigerant. Compressing the refrigerant also adds heat to the refrigerant. The refrigerant is discharged from the compressor, through the discharge hose, and forced to flow to the condenser and then through the balance of the A/C system. The A/C system is mechanically protected with the use of a high pressure relief valve. If the A/C refrigerant pressure sensor fails or if the refrigerant system becomes restricted and refrigerant pressure continued to rise, the high pressure relief will pop open and release refrigerant from the system.

Compressed refrigerant enters the condenser in a high temperature, high pressure vapor state. As the refrigerant flows through the condenser, the heat of the refrigerant is transferred to the ambient air passing through the condenser. Cooling the refrigerant causes the refrigerant to condense and change from a vapor to a liquid state.

The condenser is located in front of the radiator for maximum heat transfer. The condenser is made of aluminum tubing and aluminum cooling fins, which allows rapid heat transfer for the refrigerant. The semi-cooled liquid refrigerant exits the condenser and flows to the Receiver/Dehydrator(R/D).

The R/D contains desiccant that absorbs moisture that may be in the refrigerant system. The R/D also acts as a storage vessel to ensure that a steady flow of liquid reaches the thermal expansion valve. The refrigerant exits the R/D and flows through the liquid line to the thermal expansion valve.

The thermal expansion valve is located at the front of dash and attaches to the evaporator inlet and outlet pipes. The thermal expansion valve is the dividing point for the high and the low pressure sides of the A/C system. As the refrigerant passes through the thermal expansion valve, the pressure on the refrigerant is lowered. The thermal expansion valve also meters the amount of liquid refrigerant that can flow into the evaporator.

Refrigerant exiting the thermal expansion valve flows into the evaporator core in a low pressure, liquid state. Ambient air is drawn through the HVAC control module and passes through the evaporator core. Warm and moist air will cause the liquid refrigerant boil inside of the evaporator core. The boiling refrigerant absorbs heat from the ambient air and draws moisture onto the evaporator. The refrigerant exits the evaporator through the suction line and back to the A/C compressor, in a vapor state, and completing the A/C cycle of heat removal. At the A/C compressor, the refrigerant is compressed again and the cycle of heat removal is repeated.

The conditioned air is distributed through the HVAC control module for passenger comfort. The heat and moisture removed from the passenger

cardiagn.com

compartment will also change form, or condense, and is discharged from the HVAC control module as water.

---

cardiagn.com