# Workshop Manual

## Audi A4 2015 ➤
## Audi A4 Avant 2015 ➤
## Audi A5 2016 ➤
## Audi Q5 2017 ➤

## 8-speed automatic gearbox 0D5

Edition 07.2018

Protected by copyright. Copying for private or commercial purposes, in part or in whole, is not permitted unless authorised by AUDI AG. AUDI AG does not guarantee or accept any liability with respect to the correctness of information in this document. Copyright by AUDI AG.

# List of Workshop Manual Repair Groups

**Repair Group**

00 - Technical data
32 - Torque converter
37 - Controls, housing
38 - Gears, control
39 - Final drive - front differential

Protected by copyright. Copying for private or commercial purposes, in part or in whole, is not permitted unless authorised by AUDI AG. AUDI AG does not guarantee or accept any liability with respect to the correctness of information in this document. Copyright by AUDI AG.

Technical information should always be available to the foremen and mechanics, because their careful and constant adherence to the instructions is essential to ensure vehicle road-worthiness and safety. In addition, the normal basic safety precautions for working on motor vehicles must, as a matter of course, be observed.

All rights reserved.
No reproduction without prior agreement from publisher.

Copyright © 2018 Audi AG, Ingolstadt

D4B8058D921

# Contents

**00 - Technical data** . . . . . 1
- **1 Identification** . . . . . 1
- 1.1 Gearbox identification . . . . . 1
- **2 Safety precautions** . . . . . 2
- 2.1 Safety precautions when working on vehicle . . . . . 2
- 2.2 Safety precautions when working on vehicles with start/stop system . . . . . 2
- 2.3 Safety precautions when using testers and measuring instruments during a road test . . . . . 2
- 2.4 Safety precautions when tow-starting and towing . . . . . 3
- **3 Repair instructions** . . . . . 4
- 3.1 Rules for cleanliness . . . . . 4
- 3.2 General notes . . . . . 4
- 3.3 General repair instructions . . . . . 5
- 3.4 Contact corrosion . . . . . 7
- **4 Technical data** . . . . . 8
- 4.1 Capacities . . . . . 8
- 4.2 Oil distribution . . . . . 9
- **5 Transmission layout** . . . . . 11

**32 - Torque converter** . . . . . 12
- **1 Torque converter** . . . . . 12

**37 - Controls, housing** . . . . . 13
- **1 Selector mechanism** . . . . . 13
- 1.1 Exploded view - selector mechanism . . . . . 13
- 1.2 Exploded view - manual release mechanism for parking lock . . . . . 15
- 1.3 Checking selector mechanism . . . . . 16
- 1.4 Manual release from position P . . . . . 20
- 1.5 Removing and installing selector lever handle . . . . . 22
- 1.6 Detaching and attaching selector lever boot on selector lever handle . . . . . 24
- 1.7 Removing and installing selector mechanism . . . . . 24
- 1.8 Removing and installing manual release cable for parking lock . . . . . 25
- 1.9 Renewing seal for parking lock shaft . . . . . 29
- **2 Removing and installing gearbox** . . . . . 32
- 2.1 Removing gearbox . . . . . 32
- 2.2 Installing gearbox . . . . . 62
- 2.3 Tightening torques for gearbox . . . . . 68
- **3 Assembly mountings** . . . . . 70
- 3.1 Exploded view - assembly mountings . . . . . 70
- 3.2 Removing and installing tunnel cross member . . . . . 71
- **4 Transporting gearbox** . . . . . 75
- **5 Securing to engine and gearbox support** . . . . . 76
- **6 ATF circuit** . . . . . 77
- 6.1 Exploded view - ATF circuit . . . . . 77
- 6.2 Removing and installing ATF cooler . . . . . 79
- 6.3 Removing and installing ATF lines . . . . . 80
- **7 ATF** . . . . . 82
- 7.1 Overview of fitting locations - drain and inspection plugs . . . . . 82
- 7.2 Tools for filling ATF . . . . . 82
- 7.3 Checking ATF level . . . . . 84
- 7.4 Draining and filling ATF . . . . . 87

Protected by copyright. Copying for private or commercial purposes, in part or in whole, is not permitted unless authorised by AUDI AG. AUDI AG does not guarantee or accept any liability with respect to the correctness of information in this document. Copyright by AUDI AG.

**38 - Gears, control** . . . . . 89
**1 ATF system** . . . . . 89
1.1 Removing and installing oil pan . . . . . 89
**2 Mechatronic unit** . . . . . 91

**39 - Final drive - front differential** . . . . . 92
**1 Final drive** . . . . . 92
1.1 Exploded view - final drive . . . . . 92
1.2 Removing and installing O-ring on cover for front final drive . . . . . 94
**2 Gear oil** . . . . . 96
2.1 Checking gear oil level . . . . . 96
2.2 Draining and filling gear oil . . . . . 102
**3 Gear oil cooler and pipes** . . . . . 113
3.1 Removing and installing gear oil cooler . . . . . 113
**4 Oil seals** . . . . . 115
4.1 Renewing oil seal (left-side) . . . . . 115
4.2 Renewing oil seal (right-side) . . . . . 117
**5 Differential** . . . . . 119
5.1 Removing and installing flange shaft (left-side) . . . . . 119
5.2 Removing and installing flange shaft (right-side) . . . . . 121
**6 Centre differential** . . . . . 124
**7 Gearbox control system** . . . . . 125
7.1 Overview of fitting locations - gearbox control system . . . . . 125

Protected by copyright. Copying for private or commercial purposes, in part or in whole, is not permitted unless authorised by AUDI AG. AUDI AG does not guarantee or accept any liability with respect to the correctness of information in this document. Copyright by AUDI AG.

# 00 – Technical data

## 1 Identification

(ARL005927; Edition 07.2018)

⇒ “1.1 Gearbox identification”, page 1

### 1.1 Gearbox identification

**Location of code letters on gearbox**

- The gearbox code letters are located on the identification plate on the underside of the gearbox. Fitting location of identification plate -arrow-.

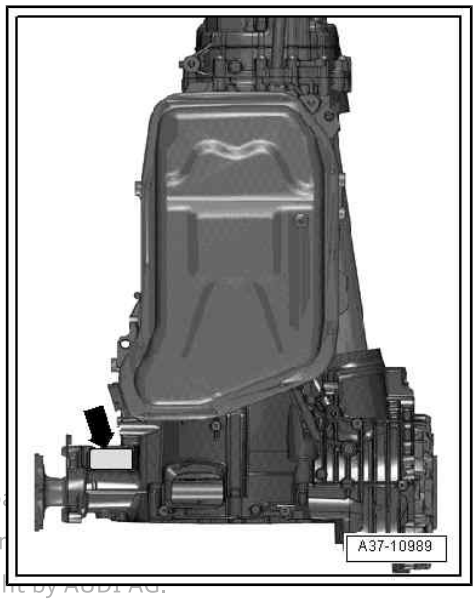


Protected by copyright. Copying for private or commercial purposes, in pa
permitted unless authorised by AUDI AG. AUDI AG does not guarantee or
with respect to the correctness of information in this document. Copyright by AUDI AG.

**Code letters and gearbox serial number**

Example:

1 - Serial number of gearbox

2 - Model number

3 - Manufacturer's gearbox designation: 8HP-55

4 - Gearbox code, in this example: MXV

- The code letters for the gearbox are also given on the vehicle data stickers.

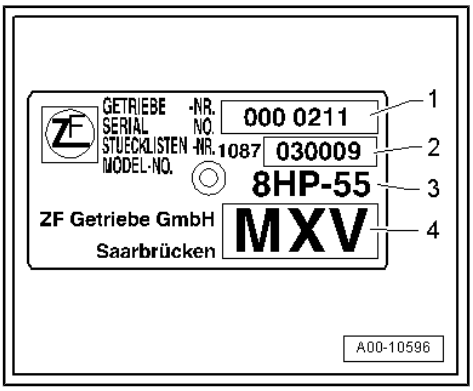

# 2 Safety precautions

⇒ “2.1 Safety precautions when working on vehicle”, page 2

⇒ “2.2 Safety precautions when working on vehicles with start/stop system”, page 2

⇒ “2.3 Safety precautions when using testers and measuring instruments during a road test”, page 2

⇒ “2.4 Safety precautions when tow-starting and towing”, page 3

## 2.1 Safety precautions when working on vehicle

**Accident risk; vehicle may start to move**

If you select a gear while the engine is running, the vehicle may start to move.

– Move selector lever to position “P”.

– Apply parking brake.

Protected by copyright. Copying for private or commercial purposes, in part or in whole, is not permitted unless authorised by AUDI AG. AUDI AG does not guarantee or accept any liability with respect to the correctness of information in this document. Copyright by AUDI AG.

**Risk of irreparable damage to electronic components**

When disconnecting the battery there is a risk of irreparable damage to electronic components.

– Always switch off the ignition before disconnecting the battery.

♦ Switch off ignition before disconnecting and connecting test equipment.

– Disconnect battery ⇒ Electrical system; Rep. gr. 27 ; Battery; Disconnecting and connecting battery .

## 2.2 Safety precautions when working on vehicles with start/stop system

**Risk of injury - engine may start unexpectedly**

The engine can start unexpectedly if the vehicle's start/stop system is activated. A message in the instrument cluster indicates whether the start/stop system is activated.

– To deactivate the start/stop system, switch off the ignition.

## 2.3 Safety precautions when using testers and measuring instruments during a road test

**Risk of injury if test equipment is not secured**

If an accident occurs and the front passenger's airbag is triggered, test equipment which is not secured adequately may be catapulted through the vehicle with potentially serious consequences.

– Secure test equipment on the rear seat with a strap.

Or:

– Have a second mechanic operate test equipment on the rear seat.

Protected by copyright. Copying for private or commercial purposes, in part or in whole, is not permitted unless authorised by AUDI AG. AUDI AG does not guarantee or accept any liability with respect to the correctness of information in this document. Copyright by AUDI AG.

## 2.4 Safety precautions when tow-starting and towing

**Risk of damage to gearbox**

Incorrect towing of the vehicle may result in damage to the gearbox.

– Move selector lever into position “N” before towing the vehicle.

– Do not exceed a speed of 50 km/h or a distance of 50 km when towing the vehicle.

# 3 Repair instructions

⇒ “3.1 Rules for cleanliness”, page 4

⇒ “3.2 General notes”, page 4

⇒ “3.3 General repair instructions”, page 5

⇒ “3.4 Contact corrosion”, page 7

## 3.1 Rules for cleanliness

- Thoroughly clean all joints and connections and the surrounding areas before disconnecting.
- Use cleaning fluid - D 009 401 04- to clean the gearbox and its components.
- Use lint-free cloths for cleaning, such as the “X70” cloth from Kimberly-Clark Professional.
- Seal off open lines and connections immediately with clean plugs or sealing caps from engine bung set - VAS 6122- immediately.
- After removal, place parts on a clean surface and cover them. Use sheeting or lint-free cloths.
- Carefully cover or seal open components if repairs cannot be carried out immediately.
- Only install clean components; replacement parts should only be unpacked immediately prior to installation.
- Protect unplugged electrical connectors against dirt and moisture and make sure connections are dry when attaching.

## 3.2 General notes

### Gearbox

- The 8-speed automatic gearbox 0D5 has eight hydraulically actuated forward gears. When the torque converter lock-up clutch closes, these forward gears act as mechanically driven gears since the slippage in the torque converter is prevented.
- A special feature of the 0D5 gearbox is the location of the front final drive (front differential with flange shafts) in front of the torque converter. This allows for a more even weight distribution between the front and rear axles on the vehicle.

Reproduction or copying for private or commercial purposes, in part or in whole, is not permitted unless authorised by AUDI AG. AUDI AG does not guarantee or accept any liability with respect to the correctness of information in this document. Copyright by AUDI AG.

### Torque converter

The torque converter is equipped with a lock-up clutch allowing controlled slip. Due to the new construction in this gearbox the torque converter is located behind the front final drive.

### Mechatronic unit

The mechatronic unit incorporates the following components as a complete synchronised unit:

- Hydraulic control system, automatic gearbox control unit - J217-
- Sensors and actuators

The mechatronic unit is installed inside the gearbox in the ATF oil pan.

### Automatic gearbox control unit - J217-

The control unit is part of the mechatronic unit in the gearbox.

The gear change points are calculated automatically (depending on the driving situation and the resistance to motion).

Advantages:

- Gear change points controlled for enhanced fuel economy
- Maximum engine output is always available
- Gear-change points are adapted individually in all driving situations
- Gear-change points are infinitely variable

**Variation of gear-change points for gradients**

An additional gear change map automatically selects gear changes for gradients. The gear changes are selected according to accelerator pedal position and road speed.

Protected by copyright. Copying for private or commercial purposes, in part or in whole, is not permitted unless authorised by AUDI AG. AUDI AG does not guarantee or accept any liability with respect to the correctness of information in this document. Copyright by AUDI AG.

- Gear change map for extreme uphill gradients is matched to engine output.
- Gear change map for extreme downhill gradients is matched to the braking effect of the engine.
- The driver can achieve an increased engine braking effect by directly selecting a specific gear via the tiptronic function, e.g. when towing a trailer on downhill gradients.

**Selector mechanism**

- With the “shift-by-wire” concept there is no mechanical connection between the selector lever and the gearbox.
- The gearbox is operated entirely according to the detected driver inputs, and there are no further mechanical controls.
- The selector lever no longer follows a selector gate as it is moved from one gear to the next, but always returns to its original position, much like a joystick. That means that the selector lever position is no longer identical with the currently engaged gear or selected function.
- The actuation of the parking lock is electro-hydraulic; a manual release mechanism is provided so that the vehicle can be moved in the event of malfunction or failure ⇒ page 20 .

## 3.3 General repair instructions

Proper tools and the maximum possible care and cleanliness are essential for satisfactory repairs to the transmission units. The usual basic safety precautions also naturally apply when carrying out repair work.

To avoid repetition, a number of generally applicable instructions for the various repair procedures are summarised here. They apply to the work described in this Manual.

**Guided Fault Finding, Vehicle self-diagnosis and Test Instruments**

- Before servicing the gearbox, use `Diagnosis` mode to identify the cause of damage as precisely as possible ⇒ Vehicle diagnostic tester.

**Environmental and waste disposal regulations for oil**

- ATF, gear oil and any other type of oil must be handled with care.
- Dispose of drained oil properly.
- Always adhere to statutory environmental and waste disposal regulations.

- Observe the information shown on the packaging of the oil.

### Special tools

For a complete list of special tools used in this Workshop Manual
⇒ Workshop equipment and special tools

### Gearbox

- Observe rules for cleanliness when working on gearbox ⇒ page 4 .
- The engine must not be run and the vehicle must not be towed if the centre differential housing has been removed or if there is no ATF in the gearbox.
- After installing, the following fluid levels must be checked and topped up if necessary: ATF in gearbox ⇒ page 84 and gear oil in gearbox ⇒ page 96 . Capacities ⇒ page 8 , specifications ⇒ Electronic parts catalogue .
- The manual release mechanism for the parking lock must be checked after removing and installing the gearbox, or if work has been carried out on the manual release mechanism ⇒ page 20 .

### O-rings, seals, oil seals and gaskets

- Always renew O-rings, seals, oil seals and gaskets.
- After removing gaskets and seals, always inspect the contact surface on the housing or shaft for burrs resulting from removal or for other signs of damage.
- Thoroughly clean housing joint surfaces before assembling.
- Lightly lubricate the outer circumference and sealing lip of seals with ATF before installing.
- Lightly lubricate O-rings with ATF before installation to prevent them from being crushed during assembly.
- Use only ATF for parts running in ATF. Other lubricants will cause malfunction of the gearbox hydraulics.
- The open side of the oil seals faces toward the side with fluid filling.
- When installing a new oil seal, position the seal in the housing so that the sealing lip does not contact the shaft in the same place as the old seal (make use of installation depth tolerances).
- After installing, the following fluid levels must be checked and topped up if necessary: ATF in gearbox ⇒ page 84 and gear oil in gearbox ⇒ page 96 . Capacities ⇒ page 8 , specifications ⇒ Electronic parts catalogue .

Protected by copyright. Copying for private or commercial purposes, in part or in whole, is not permitted unless authorised by AUDI AG. AUDI AG does not guarantee or accept any liability with respect to the correctness of information in this document. Copyright by AUDI AG.

### Nuts, bolts

- Loosen bolts in reverse sequence to the specified tightening sequence.
- Bolts and nuts used to secure covers and housings must be tightened in steps according to the specified tightening sequence and method.
- Bolts and nuts which secure covers and housings should be loosened and tightened in diagonal sequence and in stages if no tightening sequence is specified.
- Renew self-locking nuts and bolts.
- Use a wire brush to clean the threads of bolts which are secured with locking fluid. Then apply locking fluid - AMV 185 101 A1- to bolt threads before installing.

- Threaded holes which take self-locking bolts or bolts coated with locking fluid must be cleaned (using a tap or similar). Otherwise there is a danger of the bolts shearing off the next time they are removed.
- The tightening torques stated apply to non-oiled nuts and bolts.

**Locking elements**

- Do not over-stretch circlips.
- Renew circlips which have been damaged or over-tensioned.
- Circlips must be properly seated in the base of the groove.

**Bearings**

- Install needle bearings so the lettering (side with thicker metal) faces towards the installing tool.
- Lubricate bearings with gear oil or ATF, depending on fitting location.
- Do not interchange inner or outer races of bearings of the same size.
- Always renew the tapered roller bearings on one shaft together and use new bearings from a single manufacturer.

**Shims**

- Use a micrometer to measure the shims at several points. Different shim thicknesses make it possible to obtain the exact shim thickness required; if necessary, fit 2 shims.
- Check for burrs and damage. Install only shims which are in perfect condition.

## 3.4 Contact corrosion

Contact corrosion can occur if unsuitable fasteners are used (e.g. bolts, nuts, washers, etc.).

For this reason, only fasteners with a special surface coating are fitted.

In addition, rubber components, plastic components and adhesives are made of non-conductive material.

If you are not sure whether used parts can be re-installed, always fit new parts ⇒ Electronic parts catalogue .

Protected by copyright. Copying for private or commercial purposes, in part or in whole, is not permitted unless authorised by AUDI AG. AUDI AG does not guarantee or accept any liability with respect to the correctness of information in this document. Copyright by AUDI AG.

**Please note:**

- We recommend only genuine spare parts: these have been fully tested.
- We recommend the use of accessories approved by Audi.
- Damage caused by contact corrosion is not covered by warranty.

# 4 Technical data

⇒ “4.1 Capacities”, page 8

⇒ “4.2 Oil distribution”, page 9

## 4.1 Capacities

⇒ “4.1.1 Capacities - ATF section in gearbox”, page 8

⇒ “4.1.2 Capacities - front final drive”, page 8

⇒ “4.1.3 Capacities - transfer box”, page 8

### 4.1.1 Capacities - ATF section in gearbox

| Capacities | Automatic gearbox 0D5 |
|---|---|
| Initial filling by manufacturer | Approx. 8.6 ltr. |
| Fluid filling after gearbox has been drained in workshop | 3.6 to 4.0 ltr.<br>Fluid change capacity can vary according to engine version |
| Fluid change | ◆ No change required<br>◆ Life filling; change only after repair, e.g. if ATF oil pan has been removed |
| Lubricant | ATF specifications for automatic gearbox 0D5<br>⇒ Electronic parts catalogue |

- Use only the ATF supplied as a replacement part for automatic gearbox 0D5 ⇒ Electronic parts catalogue .
- ⇒ “7.3 Checking ATF level”, page 84
- ⇒ “7.4 Draining and filling ATF”, page 87

### 4.1.2 Capacities - front final drive

| Capacities | Automatic gearbox 0D5 |
|---|---|
| Initial filling | 1.0 ltr |
| Fluid filling after gearbox has been drained in workshop | Approx. 0.9 ltr. |
| Fluid change | ◆ No change required<br>◆ Lifetime filling; change only after repairs, e.g. if cover for front final drive has been removed |
| Lubricant | Gear oil for automatic gearbox 0D5<br>⇒ Electronic parts catalogue |

Protected by copyright. Copying for private or commercial purposes, in part or in whole, is not permitted unless authorised by AUDI AG. AUDI AG does not guarantee or accept any liability with respect to the correctness of information in this document. Copyright by AUDI AG.

- ⇒ “2.1.1 Checking gear oil level - front final drive, gearbox with separate oil systems”, page 96
- ⇒ “2.2.1 Draining and filling gear oil - front final drive, gearbox with separate oil systems”, page 102

### 4.1.3 Capacities - transfer box

| Capacities | Automatic gearbox 0D5 |
|---|---|
| Initial filling | 1.0 ltr |
| Fluid filling after gearbox has been drained in workshop | Approx. 0.8 ltr. |

| Capacities | Automatic gearbox 0D5 |
|---|---|
| Fluid change | ♦ No change required<br>♦ Lifetime filling; change only after repairs, e.g. if centre differential housing has been removed |
| Lubricant | Gear oil for automatic gearbox 0D5<br>⇒ Electronic parts catalogue |

♦ ⇒ “2.1.2 Checking gear oil level - transfer box, gearbox with separate oil systems”, page 97

♦ ⇒ “2.2.2 Draining and filling gear oil - transfer box, gearbox with separate oil systems”, page 104

## 4.2 Oil distribution

### Gearbox with separate oil systems

There are two different ways in which the final drive and centre differential are lubricated.

On gearboxes with common oil systems, the oil chambers in the front final drive -3- and the transfer box -1- are interconnected by means of the protective tube -2-.

The side shaft runs in gear oil in the protective tube -2-.

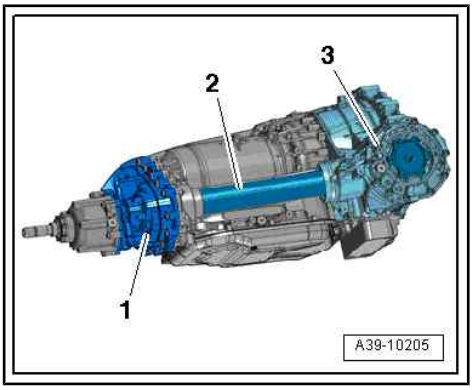


Gearboxes with common oil systems do not have an oil escape hole -arrow-.

Protected by copyright. Copying for private or commercial purposes
permitted unless authorised by AUDI AG. AUDI AG does not guaran
with respect to the correctness of information in this document. Co

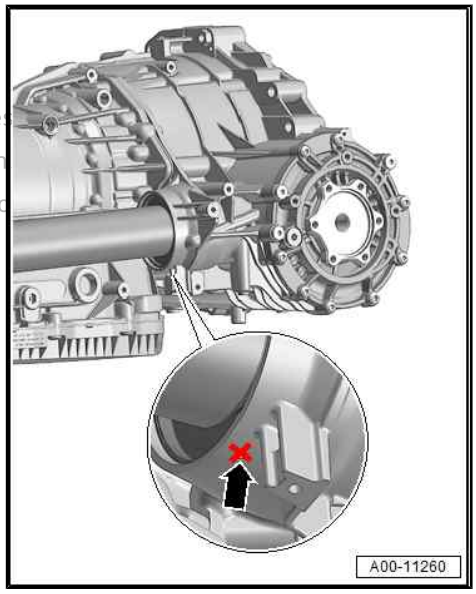

Gearboxes with separate oil systems can be identified by the presence of an oil escape hole -arrow-.

On gearboxes with separate oil systems, there is no oil in the protective tube; the transfer box and front final drive are each separated from the side shaft by an oil seal.

It is essential to follow the different instructions for checking and filling.

- ⇒ “2 Gear oil”, page 96

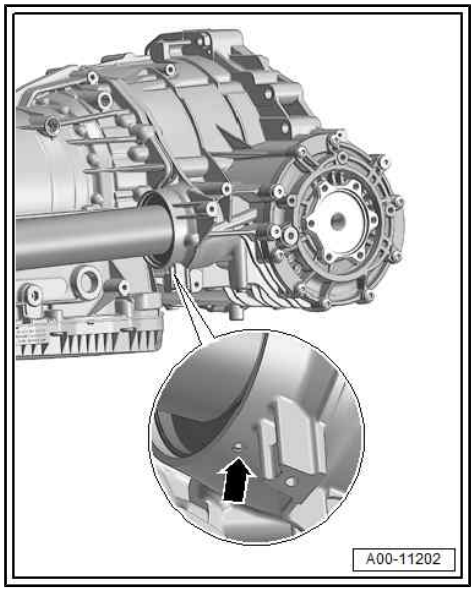


Protected by copyright. Copying for private or commercial purposes, in part or in whole, is not permitted unless authorised by AUDI AG. AUDI AG does not guarantee or accept any liability with respect to the correctness of information in this document. Copyright by AUDI AG.

# 5 Transmission layout

**1 - Rear final drive**

- ❑ Removing and installing ⇒ Rear final drive; Rep. gr. 39 ; Final drive; Removing and installing final drive

**2 - Propshaft**

- ❑ Removing and installing ⇒ Rear final drive; Rep. gr. 39 ; Propshaft; Removing and installing propshaft

**3 - 8-speed automatic gearbox 0D5**

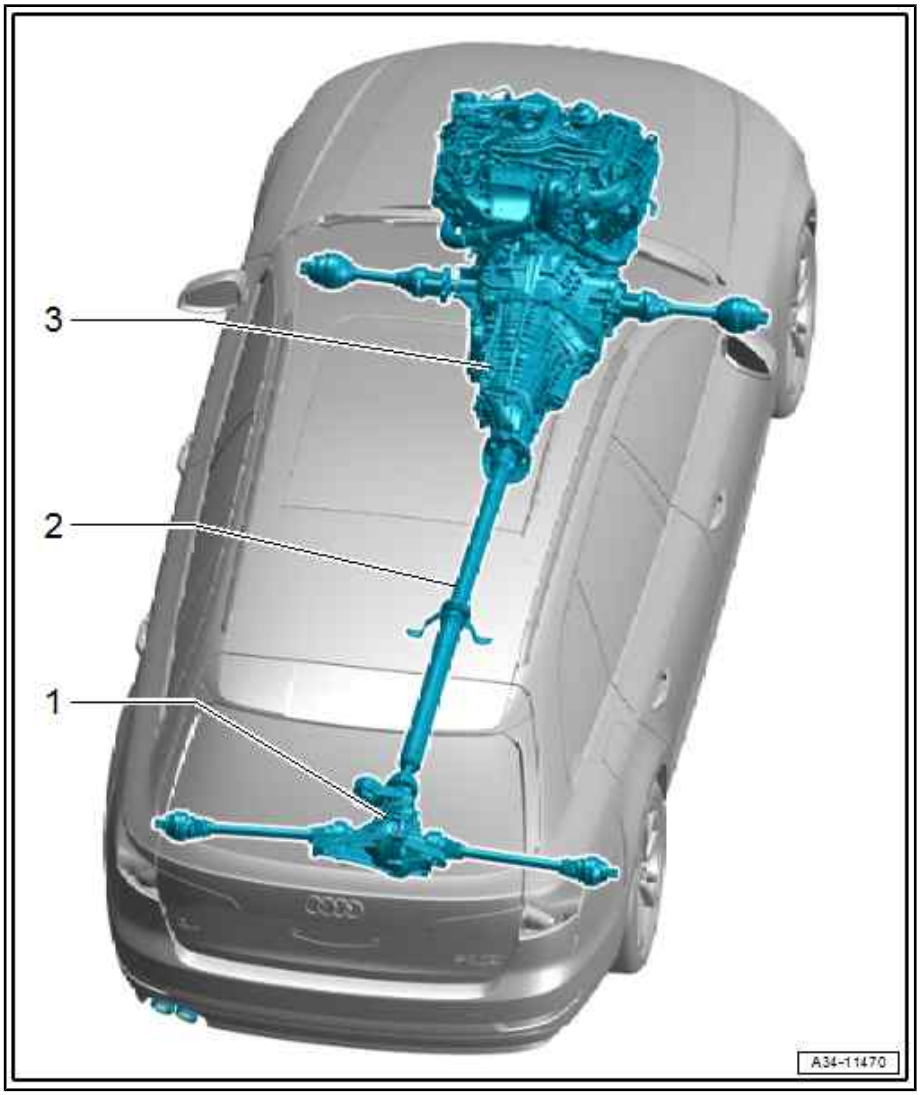


Protected by copyright. Copying for private or commercial purposes, in part or in whole, is not permitted unless authorised by AUDI AG. AUDI AG does not guarantee or accept any liability with respect to the correctness of information in this document. Copyright by AUDI AG.

# 32 – Torque converter

## 1 Torque converter

**For all torque converter procedures, refer to ⇒ Servicing 8-speed automatic gearbox; Rep. gr. 32 ; Torque converter**

Protected by copyright. Copying for private or commercial purposes, in part or in whole, is not permitted unless authorised by AUDI AG. AUDI AG does not guarantee or accept any liability with respect to the correctness of information in this document. Copyright by AUDI AG.

# 37 – Controls, housing

## 1 Selector mechanism

⇒ "1.1 Exploded view - selector mechanism", page 13

⇒ "1.2 Exploded view - manual release mechanism for parking lock", page 15

⇒ "1.3 Checking selector mechanism", page 16

⇒ "1.4 Manual release from position P", page 20

⇒ "1.5 Removing and installing selector lever handle", page 22

⇒ "1.6 Detaching and attaching selector lever boot on selector lever handle", page 24

⇒ "1.7 Removing and installing selector mechanism", page 24

⇒ "1.8 Removing and installing manual release cable for parking lock", page 25

⇒ "1.9 Renewing seal for parking lock shaft", page 29

### 1.1 Exploded view - selector mechanism

**1 - Selector mechanism**

- ❑ Combined as one unit with the following components:
- ♦ Selector lever - E313-
- ♦ Selector lever position sender - G727-
- ♦ Sender for lateral selector lever lock - G868-
- ♦ Selector lever sensors control unit - J587-
- ♦ Selector lever lock solenoid - N110-
- ♦ Motor for lateral selector lever lock - V577-
- ❑ Components cannot be renewed separately if defective
- ❑ Removing and installing ⇒ page 24

**2 - Selected range display - Y5-**

- ❑ Removing and installing ⇒ Electrical system; Rep. gr. 96 ; Lights; Overview of fitting locations - lights in centre console

**3 - Selector lever handle, top section**

- ❑ Removing and installing ⇒ page 22

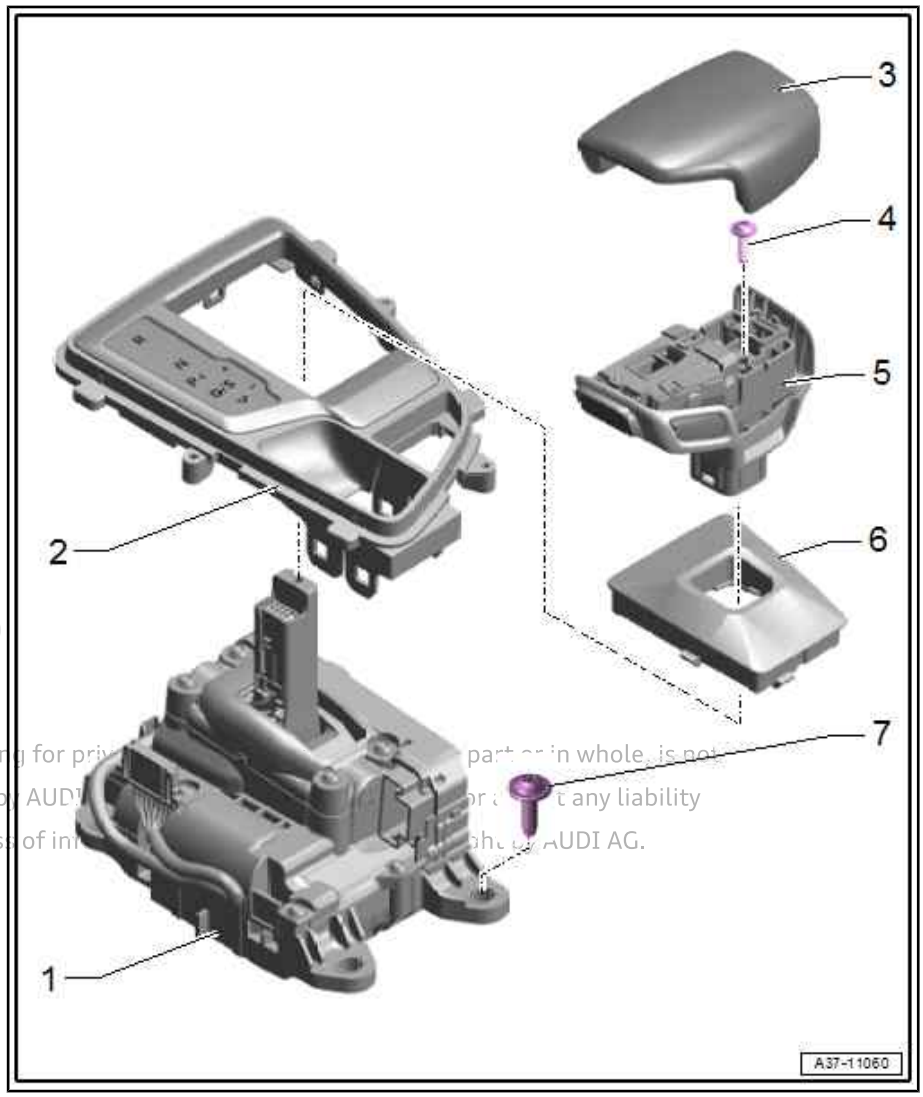


Protected by copyright. Copying for priv... part or in whole, is not permitted unless authorised by AUDI ... or ... any liability with respect to the correctness of inf... AUDI AG.

**4 - Bolt**

- ❑ Cannot be ordered separately
- ❑ 3.2 Nm

**5 - Selector lever handle, bottom section**

- ❑ Combined as one unit with the following components:

- ♦ Button for selector lever release - E681-
- ♦ Parking lock button - E816-

- ❑ Components cannot be renewed separately if defective
- ❑ Removing and installing ⇒ page 22

**6 - Selector lever boot**

- ❑ Removing and installing ⇒ page 24

**7 - Bolt**

- ❑ 8 Nm

Protected by copyright. Copying for private or commercial purposes, in part or in whole, is not permitted unless authorised by AUDI AG. AUDI AG does not guarantee or accept any liability with respect to the correctness of information in this document. Copyright by AUDI AG.

## 1.2 Exploded view - manual release mechanism for parking lock

⇒ "1.2.1 Exploded view - manual release mechanism for parking lock, A4/A5", page 15

⇒ "1.2.2 Exploded view - manual release mechanism for parking lock, Q5", page 16

### 1.2.1 Exploded view - manual release mechanism for parking lock, A4/A5

**1 - Bolt**
- ❑ 2x
- ❑ 9 Nm

**2 - Manual release cable**
- ❑ For parking lock
- ❑ Do not bend or kink
- ❑ Removing and installing ⇒ page 25

**3 - Nut**
- ❑ 4x
- ❑ 4 Nm

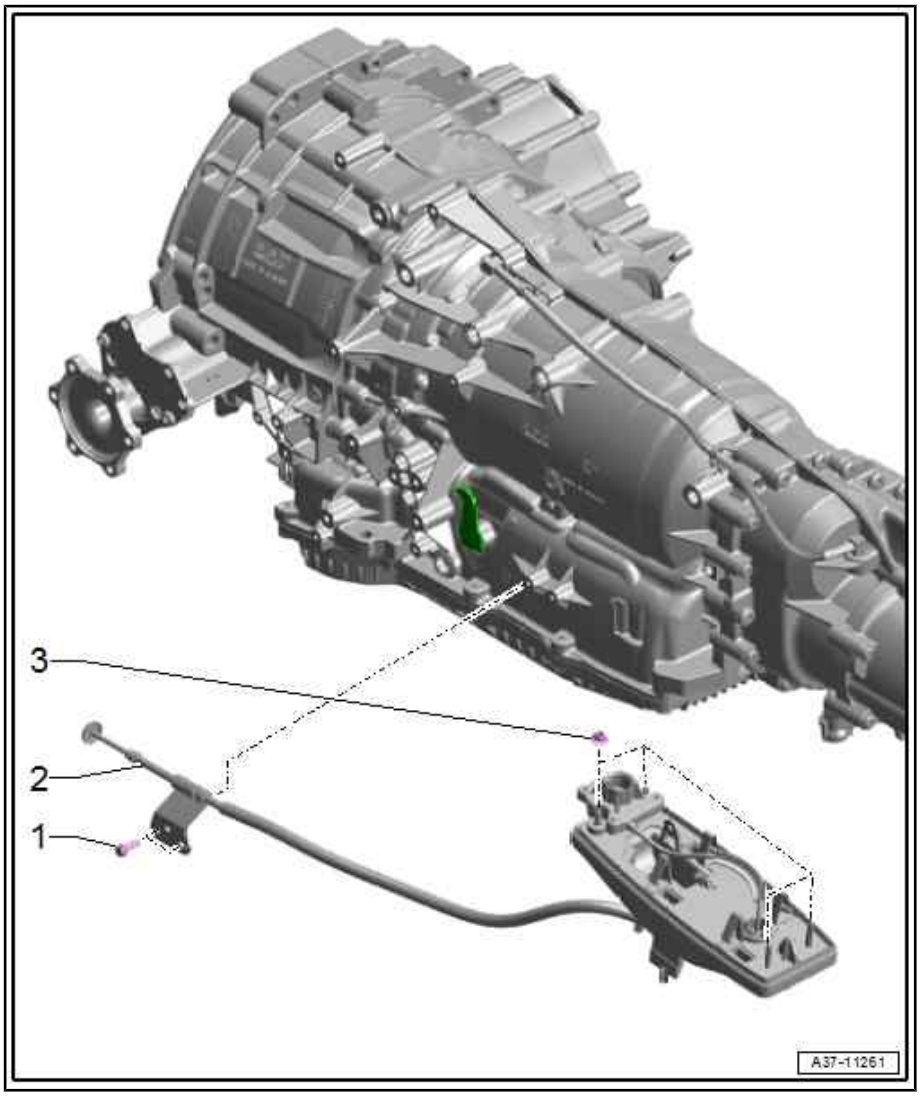


Protected by copyright. Copying for private or commercial purposes, in part or in whole, is not permitted unless authorised by AUDI AG. AUDI AG does not guarantee or accept any liability with respect to the correctness of information in this document. Copyright by AUDI AG.

## 1.2.2 Exploded view - manual release mechanism for parking lock, Q5

**1 - Manual release cable (rear)**
- ❑ For parking lock
- ❑ Do not bend or kink
- ❑ Removing and installing ⇒ page 28

**2 - Nut**
- ❑ 2x
- ❑ 4 Nm

**3 - Frame (bottom section)**

**4 - Frame (top section)**

**5 - Cover**

**6 - Bolt**
- ❑ 9 Nm

**7 - Manual release cable (front)**
- ❑ For parking lock
- ❑ Do not bend or kink
- ❑ Removing and installing ⇒ page 26

**8 - Nut**
- ❑ 8 Nm

**9 - Bracket**
- ❑ For manual release mechanism

**10 - O-ring**
- ❑ Renew after removing

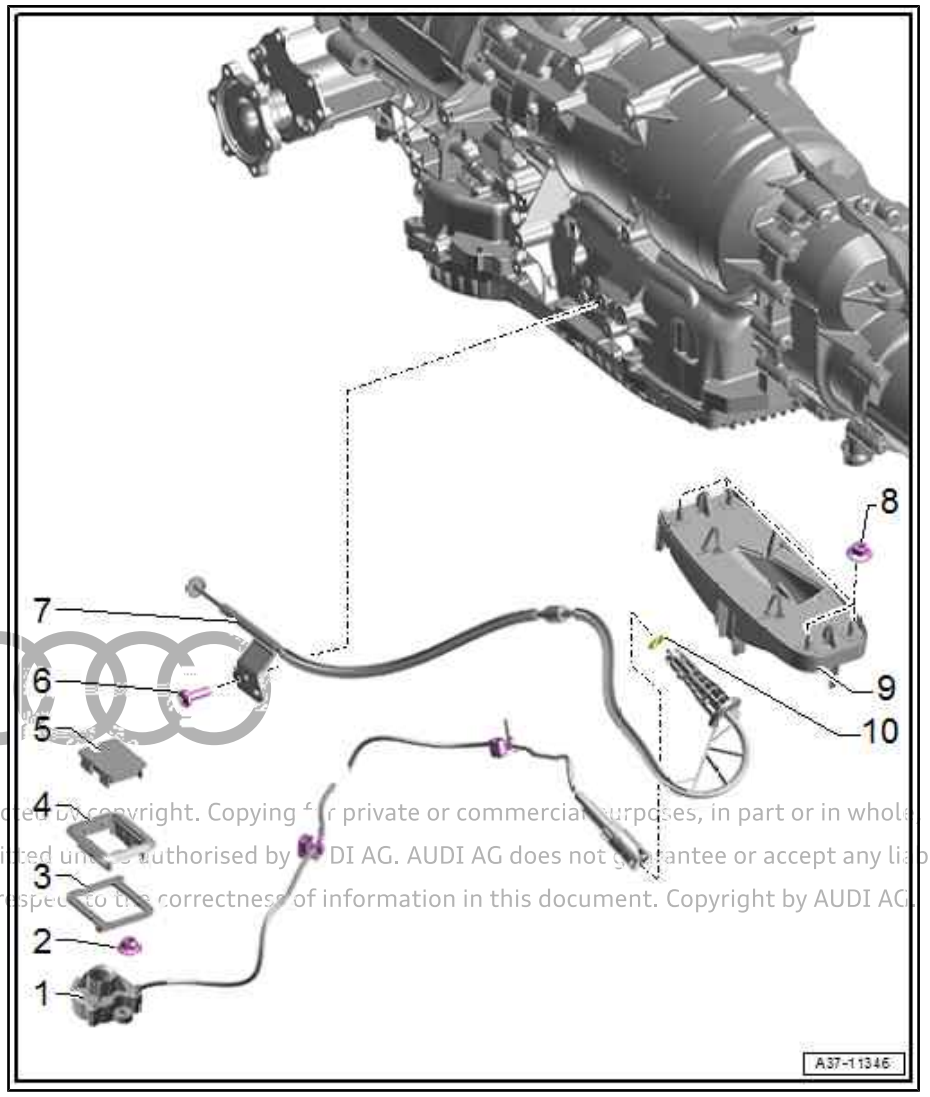


Protected by copyright. Copying for private or commercial purposes, in part or in whole, is not permitted unless authorised by AUDI AG. AUDI AG does not guarantee or accept any liability with respect to the correctness of information in this document. Copyright by AUDI AG.

## 1.3 Checking selector mechanism

**Test requirements:**

- ♦ Pull parking brake button up to apply the electromechanical parking brake.
- ♦ Selector lever is in position “P”.

**Overview:**

- ♦ 1. Checking locking functions/function of button ⇒ page 17
- ♦ 2. Checking operation of selector mechanism ⇒ page 18
- ♦ 3. Checking gear indicator ⇒ page 19
- ♦ 4. Checking display in instrument cluster ⇒ page 20
- ♦ 5. Checking parking lock ⇒ page 20

If the specified results are not obtained, check whether the selector lever is installed correctly ⇒ page 22 or perform “diagnosis” ⇒ Vehicle diagnostic tester.

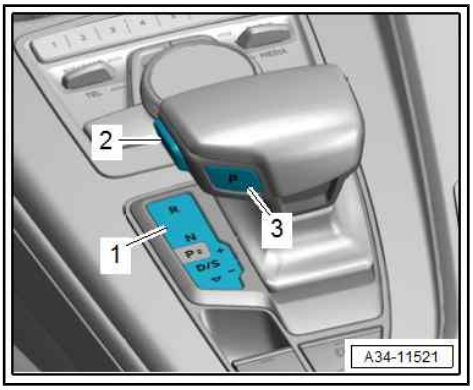


**1. Checking locking functions/function of button**

Step 1.1

- Engine running, gearbox in position “P” and brake pedal not pressed.

– Press interlock button -2- and pull selector lever towards rear:

  The gearbox should remain in position “P”.

Step 1.2

- Engine running, gearbox in position “P” and interlock button -2- not pressed.

– Press brake pedal and pull selector lever towards rear:

  The gearbox should remain in position "P".

Step 1.3

- Engine running, gearbox in position “P”, brake pedal and interlock button -2- pressed.

– Shift gearbox into position "D":

  Position “D” should be displayed on the selected range display - Y5- -item 1- and in the instrument cluster.

Step 1.4

- Engine running, gearbox in position “D” and interlock button -2- not pressed.

Protected by copyright. Copying for private or commercial purposes, in part or in whole, is not permitted unless authorised by AUDI AG. AUDI AG does not guarantee or accept any liability with respect to the correctness of information in this document. Copyright by AUDI AG.

– Push selector lever forwards towards position “N”:

  It should not be possible to move selector lever, and gearbox should remain in position “D”.

Step 1.5

- Engine running, gearbox in position “D” and interlock button -2- pressed.

– Shift gearbox into position "N":

  Position “N” should be displayed on the selected range display - Y5- -item 1- and in the instrument cluster.

Step 1.6

- Engine running, gearbox in position “D”.

– Move selector lever towards rear:

  The gearbox should shift to “S”, and the display in the instrument cluster should change from “D” to “S”. Move selector lever towards rear again; gearbox position “D” should be selected and displayed again.

Step 1.7

- Engine running.

– Move selector lever to “P”, “R” or “N”.

– Move selector lever into tiptronic gate:

  It should only be possible to shift to the tiptronic gate from “D” or “S”.

**2. Checking operation of selector mechanism (shiftlock)**

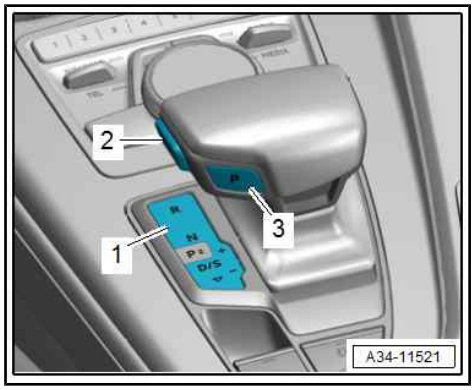


Step 2.1

- Engine running, gearbox in position “D” and vehicle moving at a speed above 3 km/h.

– Shift gearbox into position “N”. Then select “D” without pressing interlock button -2- or brake pedal.

  This operation should be possible.

Step 2.2

- Engine running, gearbox in position “D” and vehicle moving at a speed below 3 km/h.

– Select position “N” and wait for at least 1 second (do not press brake pedal); press interlock button -2-:

  It should not be possible to select position “R” or “D”.

Step 2.3

- Engine running, gearbox in position “N” and vehicle moving at a speed below 3 km/h.

– Press brake pedal; do not press interlock button -2-:

  It should not be possible to select position “R”.

  It should be possible to select position “D”.

Step 2.4

- Engine running, gearbox in position “M”.

– Press "P" button on selector lever handle and move selector lever to “P”:

  “P” should now be selected and displayed in instrument cluster and on "P" button on selector lever handle. In addition, the "P" symbol between position “N” and “D/S” should light up on selected range display - Y5- -item 1-.

  The selector lever should spring back automatically into the automatic gate.

Step 2.5

- Engine running, gearbox in position “M”.

– Move selector lever towards “+” and “–”:

  When the vehicle is driven, the gear indicator in the instrument cluster should change up or down a gear accordingly (where engine speed permits).

Protected by copyright. Copying for private or commercial purposes, in part or in whole, is not permitted unless authorised by AUDI AG. AUDI AG does not guarantee or accept any liability with respect to the correctness of information in this document. Copyright by AUDI AG.

### 3. Checking gear indicator

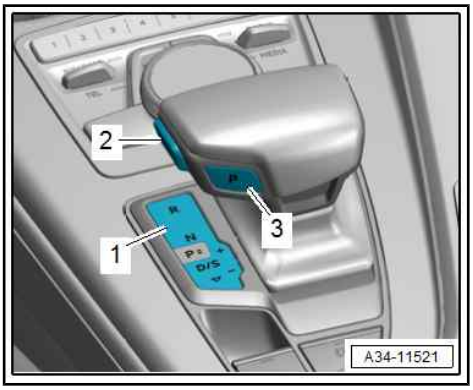


Step 3.1

- Engine running.

– Move selector lever to positions “P”, “R”, “N”, “D/S” and “+/–” one after another:

  The symbol corresponding to the selected gearbox position should light up much brighter that the other symbols.

Step 3.2

- Engine running.

– Press button -3- and move selector lever to “P”:

  The "P" symbol on the button on the selector lever handle should light up as a white function indicator lamp.

  The "P" symbol in the selected range display - Y5- -item 1- should light up as a red function indicator lamp.

  None of the symbols for other gearbox positions should be lit.

Protected by copyright. Copying for private or commercial purposes, in part or in whole, is not permitted unless authorised by AUDI AG. AUDI AG does not guarantee or accept any liability with respect to the correctness of information in this document. Copyright by AUDI AG.

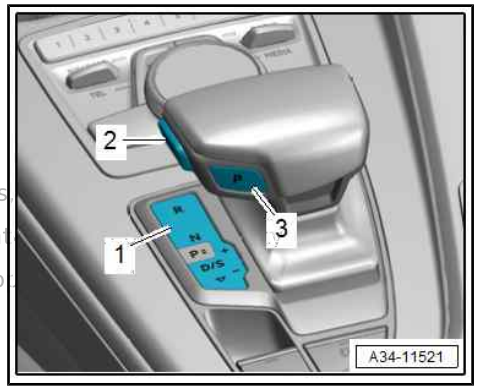


**4. Checking display in instrument cluster**

Step 4.1

- Engine running, gearbox in position “P” and brake pedal not pressed.

– Press interlock button -2- and pull selector lever towards “D” or “R”:

  The following message should appear in the instrument cluster: “To select a gear please press brake pedal and interlock button on gear selector lever”.

Protected by copyright. Copying for private or commercial purposes, permitted unless authorised by AUDI AG. AUDI AG does not guarant with respect to the correctness of information in this document. Co

Step 4.2

- Engine running, gearbox in position “P” and brake pedal pressed.

– Pull selector lever towards “D” or “R” without pressing interlock button -2-:

  The following message should appear in the instrument cluster: “To select a gear please press brake pedal and interlock button on gear selector lever”.

Step 4.3

- Engine running, gearbox in position “M”.

– Press interlock button and at the same time hold selector lever in “M” (not in "+" or "-") for at least 20 seconds:

  The following message should appear in the instrument cluster: “Move selector lever into automatic position”. A warning tone should also sound.

**5. Checking parking lock**

Step 5.1

- Engine running, gearbox in position “D”, “S”, “R”, “M” and vehicle stationary.

– Switch off engine:

  Gearbox position “P” should be selected automatically.

Step 5.2

- Engine running, gearbox in position “N” and vehicle stationary.

– Switch off engine and open driver's door.

  The following message should appear in the instrument cluster: “Shift to P before leaving car, otherwise vehicle can roll away”. A warning tone should also sound.

## 1.4 Manual release from position P

⇒ “1.4.1 Manual release from position P - A4/A5”, page 20

⇒ “1.4.2 Manual release from position P - Q5”, page 21

### 1.4.1 Manual release from position P - A4/A5

- The manual release mechanism for the parking lock must be checked after removing and installing the gearbox, or if work has been carried out on the manual release mechanism.

– Pull up parking brake button to apply electromechanical parking brake.

**Releasing**

– Remove lining from cup holder in centre console.

– Take release tool -2- out of vehicle tool kit.

– Insert release tool into mounting -1- for manual release mechanism, as shown.

• Release tool should be perpendicular to direction of travel.

– Turn release tool 90° -arrow A- and at the same time, press it down -arrow B- until it engages.

• Parking lock is now released.

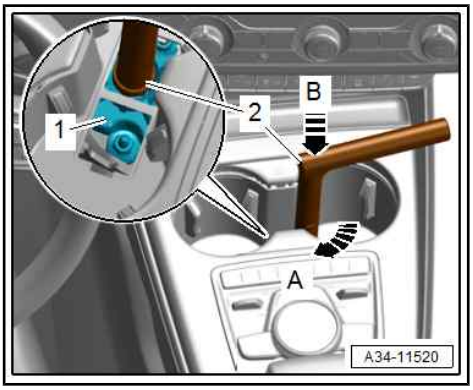


**Note**

♦ When the manual release mechanism for the parking lock has been operated, position “N” will be indicated in the instrument cluster.

♦ The following message will also appear in the instrument cluster: “Vehicle may roll away! P cannot be selected. Please apply parking brake.”

**Reactivating parking lock**

– To engage parking lock, pull release tool upwards out of manual release mounting.

• When the parking lock is engaged, the instrument cluster and the selected range display - Y5- should show the position “P”.

## 1.4.2 Manual release from position P - Q5

Protected by copyright. Copying for private or commercial purposes, in part or in whole, is not permitted without the express consent of AUDI AG. AUDI AG does not guarantee or accept any liability with respect to the correctness of information in this document. Copyright by AUDI AG.

• The manual release mechanism for the parking lock must be checked after removing and installing the gearbox, or if work has been carried out on the manual release mechanism.

– Pull up parking brake button to apply electromechanical parking brake.

**Releasing**

– Remove floor mat (driver side).

– Pull off cover -1- for manual release mechanism -arrows-.

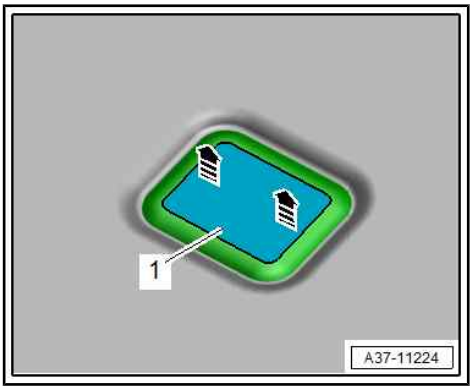

– Take release tool -1- out of vehicle tool kit.

– Insert release tool into mounting -2- for manual release mechanism, as shown in illustration.

– Turn release tool 90° -arrow A- and at the same time, press it down -arrow B- until it engages.

• Parking lock is now released.

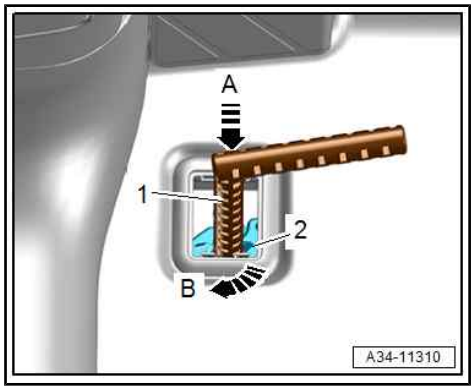


**Note**

♦ When the manual release mechanism for the parking lock has been operated, position “N” will be indicated in the instrument cluster.

♦ The following message will also appear in the instrument cluster: “Vehicle may roll away! P cannot be selected. Please apply parking brake.”

**Reactivating parking lock**

• The following steps are required in order to reduce the release force and facilitate operation:

– Press brake pedal, start engine and move selector lever through N > D > N.

– Switch off engine, grip wrench with both hands and pull upwards.

– Press brake pedal, start engine and move selector lever through N > D > N.

• When the parking lock is engaged, the instrument cluster and the selected range display - Y5- should show the position “P”.

## 1.5 Removing and installing selector lever handle

• The selector lever handle is removed together with the selector lever boot.

**Special tools and workshop equipment required**

♦ Removal wedge - 3409-

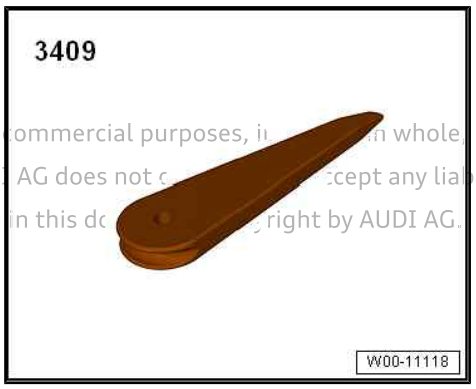


Protected by copyright. Copying for private or commercial purposes, in whole, is not permitted unless authorised by AUDI AG. AUDI AG does not accept any liability with respect to the correctness of information in this document. Copyright by AUDI AG.

♦ Torque wrench - V.A.G 1410-

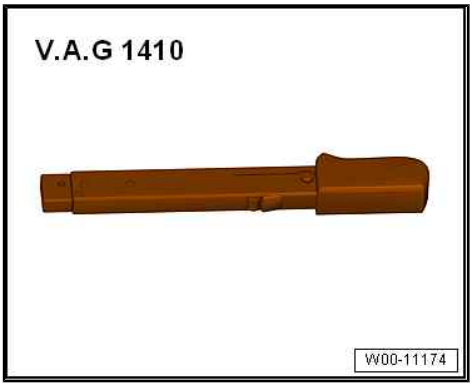


## Removing

- Ignition switched off.

– Pull off selector lever handle (top section) -1- upwards -arrows-.

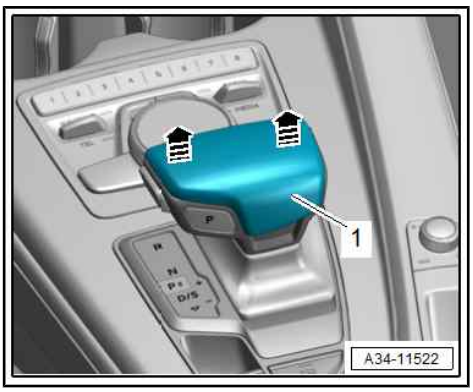


– Carefully pry out selector lever boot at the sides in direction of -arrow- using removal wedge - 3409- .

– Remove bolt -2-.

– Pull off selector lever handle (bottom section) -1- upwards.

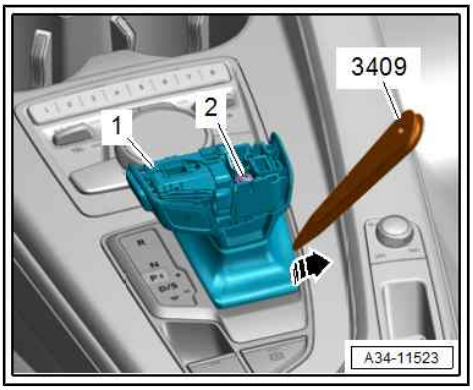


## Installing

Installation is carried out in reverse order; note the following:

– Check that retaining clips -arrows- on underside of selector lever handle (top section) -1- are correctly seated; press down further if necessary.

– Press selector lever handle (top section) onto selector lever handle (bottom section).

– Clip selector lever boot onto selected range display - Y5- .

– Check selector mechanism ⇒ page 16 .

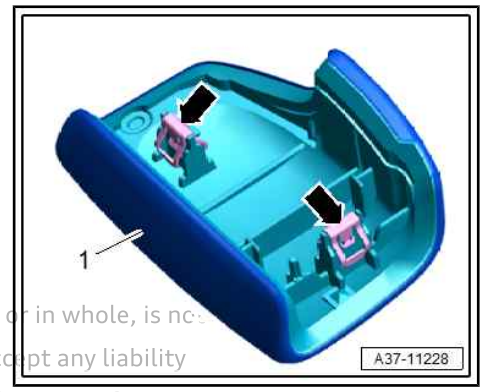


Protected by copyright. Copying for private or commercial purposes, in part or in whole, is not permitted unless authorised by AUDI AG. AUDI AG does not guarantee or accept any liability with respect to the correctness of information in this document. Copyright by AUDI AG.

## Tightening torques

♦ ⇒ "1.1 Exploded view - selector mechanism", page 13

## 1.6 Detaching and attaching selector lever boot on selector lever handle

Protected by copyright. Copying for private or commercial purposes, in part or in whole, is not permitted unless authorised by AUDI AG. AUDI AG does not [illegible] any liability with respect to the correctness of information in this [illegible] AG.

### Disconnecting

– Remove selector lever handle ⇒ page 22 .

– Release catches -arrows- and detach selector lever boot -1- from selector lever handle.

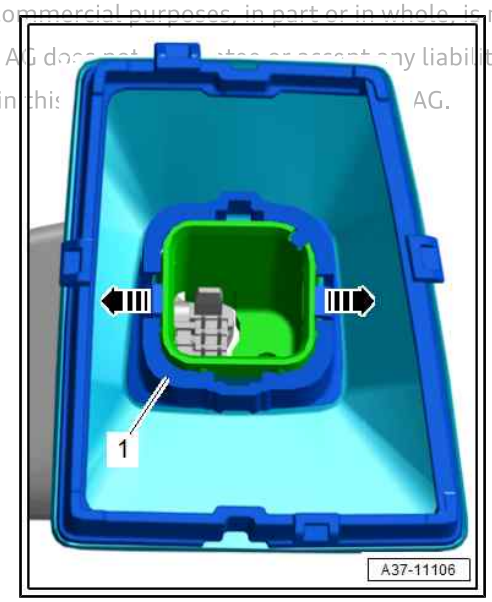


### Attaching

– Press selector lever boot onto selector lever handle until you hear it engage.

• Lug -2- on selector lever boot must engage in notch -1- on selector lever handle -arrow-.

– Install selector lever handle ⇒ page 22 .

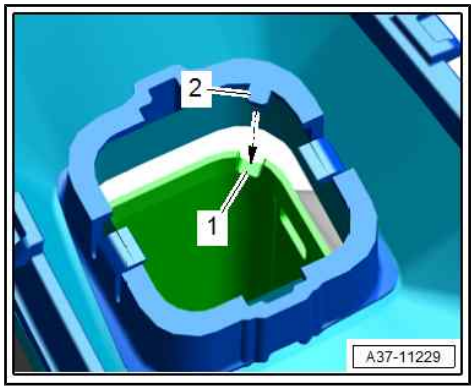


## 1.7 Removing and installing selector mechanism

### Special tools and workshop equipment required

♦ Torque wrench - V.A.G 1410-

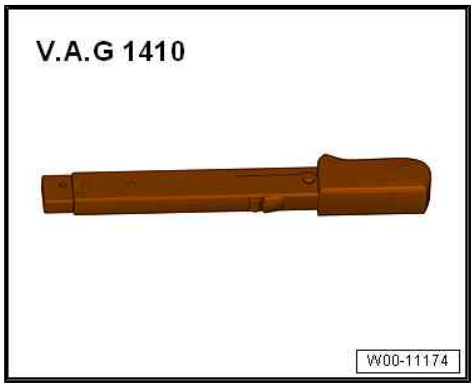


### Removing

– Remove selector lever handle ⇒ page 22 .

– Remove centre console insert ⇒ General body repairs, interior; Rep. gr. 68 ; Centre console; Removing and installing centre console insert .

– Unplug electrical connector -1-.

– Unscrew bolts -arrows- and remove selector mechanism -2-.

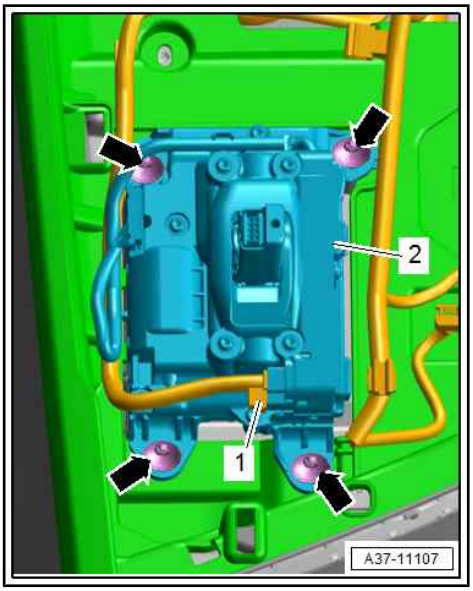


**Installing**

Installation is carried out in reverse order; note the following:

– Install centre console insert ⇒ General body repairs, interior; Rep. gr. 68 ; Centre console; Removing and installing centre console insert .

– Install selector lever handle ⇒ page 22 .

– Check selector mechanism ⇒ page 16 .

**Tightening torques**

♦ ⇒ “1.1 Exploded view - selector mechanism”, page 13

## 1.8 Removing and installing manual release cable for parking lock

⇒ “1.8.1 Removing and installing manual release cable for parking lock - A4/A5”, page 25

⇒ “1.8.2 Removing and installing manual release cable for parking lock (front) - Q5”, page 26

⇒ “1.8.3 Removing and installing manual release cable for parking lock (rear) - Q5”, page 28

Protected by copyright. Copying for private or commercial purposes, in part or in whole, is not permitted unless authorised by AUDI AG. AUDI AG does not guarantee or accept any liability with respect to the correctness of information in this document. Copyright by AUDI AG.

### 1.8.1 Removing and installing manual release cable for parking lock - A4/A5

**Removing**

– Pull up parking brake button to apply electromechanical parking brake.

– Remove selector mechanism ⇒ page 24 .

– Remove insulation.

– Remove nuts -1, 3- and move mounting -2- for manual release mechanism clear.

– Release catches -arrows- and lower manual release retainer -4-.

– Remove noise insulation (rear) ⇒ General body repairs, exterior; Rep. gr. 66 ; Noise insulation; Removing and installing noise insulation .

– Remove heat shield for tunnel ⇒ General body repairs, exterior; Rep. gr. 66 ; Strips / trim panels / extensions; Exploded view - heat shield .

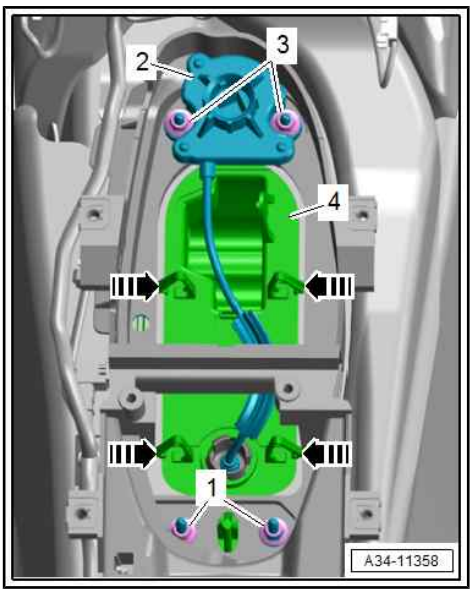

– Unscrew bolts -arrows-, detach parking lock manual release cable -1- and move cable clear.

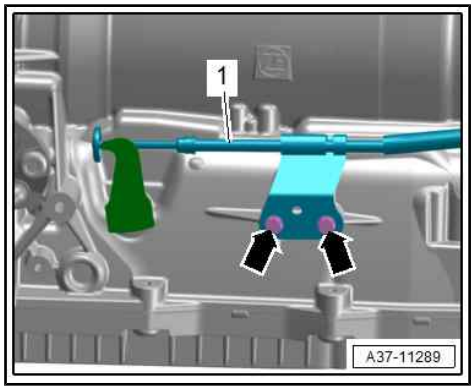


### Installing

Installation is carried out in reverse order; note the following:

- Manual release cable -2- should not be in contact with parking lock lever -1- to avoid transmission of mechanical vibration.
- Manual release cable -2- should therefore be aligned so that there is a small clearance of dimension -a- and -b-.

– Check manual release mechanism for parking lock ⇒ page 20 .

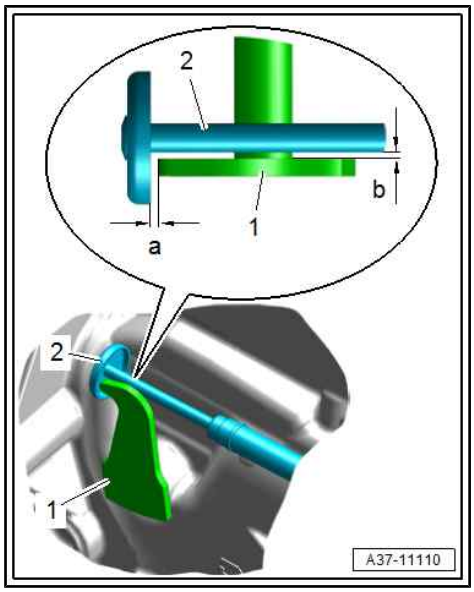


### Tightening torques

- ⇒ “1.2.1 Exploded view - manual release mechanism for parking lock, A4/A5”, page 15
- ⇒ General body repairs, exterior; Rep. gr. 66 ; Strips / trim panels / extensions; Exploded view - heat shield
- ⇒ General body repairs, exterior; Rep. gr. 66 ; Noise insulation; Exploded view - noise insulation

## 1.8.2 Removing and installing manual release cable for parking lock (front) - Q5

### Removing

– Pull up parking brake button to apply electromechanical parking brake.

– Remove centre console ⇒ General body repairs, interior; Rep. gr. 68 ; Centre console; Removing and installing centre console .

– Remove insulation.

Protected by copyright. Copying for private or commercial purposes, in part or in whole, is not permitted unless authorised by AUDI AG. AUDI AG does not guarantee or accept any liability with respect to the correctness of information in this document. Copyright by AUDI AG.

– Release catches -arrows A- and move sleeve -1- on manual release cable in direction of -arrow B-.
– Disengage manual release cable (rear) from manual release cable (front) -arrow C-.

Protected by copyright. Copying for private or commercial purposes, in part or in w[illegible] not permitted unless authorised by AUDI AG. AUDI AG does not guarantee or accept a[illegible]ity with respect to the correctness of information in this document. Copyright by AU[illegible]

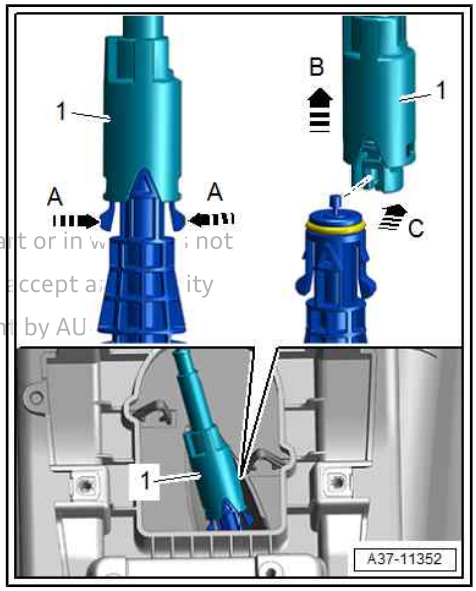


– Remove nuts -3-.
– Release catches -arrows- and lower manual release retainer -2-.
– Remove noise insulation (centre and rear) ⇒ General body repairs, exterior; Rep. gr. 66 ; Noise insulation; Removing and installing noise insulation .
– Remove heat shield for tunnel and place down on propshaft ⇒ General body repairs, exterior; Rep. gr. 66 ; Strips / trim panels / extensions; Exploded view - heat shield .

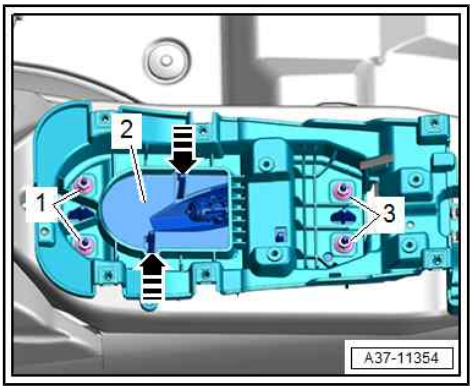


– Unscrew bolts -arrows-, detach parking lock manual release cable -1- and move cable clear.

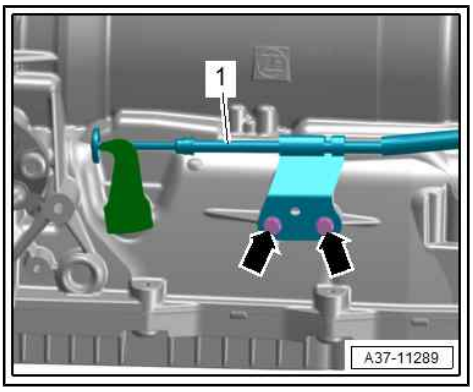

### Installing

Installation is carried out in reverse order; note the following:

- ♦ Manual release cable -2- should not be in contact with parking lock lever -1- to avoid transmission of mechanical vibration.
- ♦ Manual release cable -2- should therefore be aligned so that there is a small clearance of dimension -a- and -b-.

– Install centre console ⇒ General body repairs, interior; Rep. gr. 68 ; Centre console; Removing and installing centre console .

– Check manual release mechanism for parking lock ⇒ page 20 .

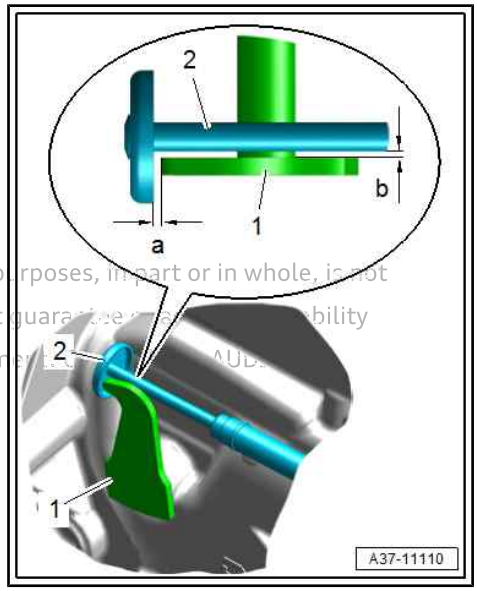


### Tightening torques

- ♦ ⇒ “1.2.2 Exploded view - manual release mechanism for parking lock, Q5”, page 16
- ♦ ⇒ General body repairs, exterior; Rep. gr. 66 ; Strips / trim panels / extensions; Exploded view - heat shield
- ♦ ⇒ General body repairs, exterior; Rep. gr. 66 ; Noise insulation; Exploded view - noise insulation

## 1.8.3 Removing and installing manual release cable for parking lock (rear) - Q5

### Removing

– Pull up parking brake button to apply electromechanical parking brake.

– Remove driver’s seat ⇒ General body repairs, interior; Rep. gr. 72 ; Front seats; Removing and installing front seat .

– Remove footwell cover (driver side) ⇒ General body repairs, interior; Rep. gr. 68 ; Storage compartments/covers/trim panels; Removing and installing dash panel cover (driver side) .

– Remove foot rest ⇒ General body repairs, interior; Rep. gr. 70 ; Passenger compartment trim panels; Removing and installing foot rest .

– Remove sill panel trim (driver side) ⇒ General body repairs, interior; Rep. gr. 70 ; Passenger compartment trim panels; Removing and installing sill panel trim .

– Remove centre console ⇒ General body repairs, interior; Rep. gr. 68 ; Centre console; Removing and installing centre console .

– Remove insulation.

– Release catches -arrows A- and move sleeve -1- on manual release cable in direction of -arrow B-.

– Disengage manual release cable (rear) from manual release cable (front) -arrow C-.

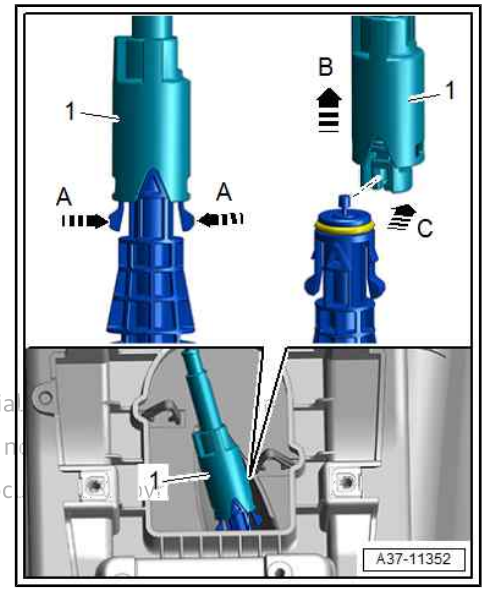


Protected by copyright. Copying for private or commercial
permitted unless authorised by AUDI AG. AUDI AG does n
with respect to the correctness of information in this doc

– Push floor covering in driver's footwell to one side.

– Remove nuts -arrows-.

– Move parking lock manual release cable (rear) -1- clear and detach.

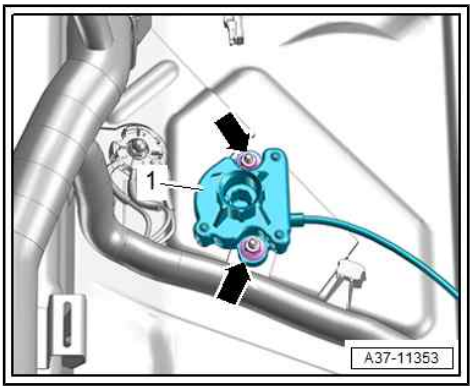


### Installing

Installation is carried out in reverse order; note the following:

– Install centre console ⇒ General body repairs, interior; Rep. gr. 68 ; Centre console; Removing and installing centre console .

– Install sill panel trim (driver side) ⇒ General body repairs, interior; Rep. gr. 70 ; Passenger compartment trim panels; Removing and installing sill panel trim .

– Install foot rest ⇒ General body repairs, interior; Rep. gr. 70 ; Passenger compartment trim panels; Removing and installing foot rest .

– Install footwell cover (driver side) ⇒ General body repairs, interior; Rep. gr. 68 ; Storage compartments/covers/trim panels; Removing and installing dash panel cover (driver side) .

– Install driver's seat ⇒ General body repairs, interior; Rep. gr. 72 ; Front seats; Removing and installing front seat .

– Check manual release mechanism for parking lock ⇒ page 20 .

### Tightening torques

♦ ⇒ "1.2.2 Exploded view - manual release mechanism for parking lock, Q5", page 16

♦ ⇒ General body repairs, exterior; Rep. gr. 66 ; Noise insulation; Exploded view - noise insulation

## 1.9 Renewing seal for parking lock shaft

### Procedure

– Remove mechatronic unit ⇒ Servicing 8-speed automatic gearbox; Rep. gr. 38 ; Mechatronic unit; Removing and installing mechatronic unit .

– Remove cable tie -arrow- from parking lock lever -3-.

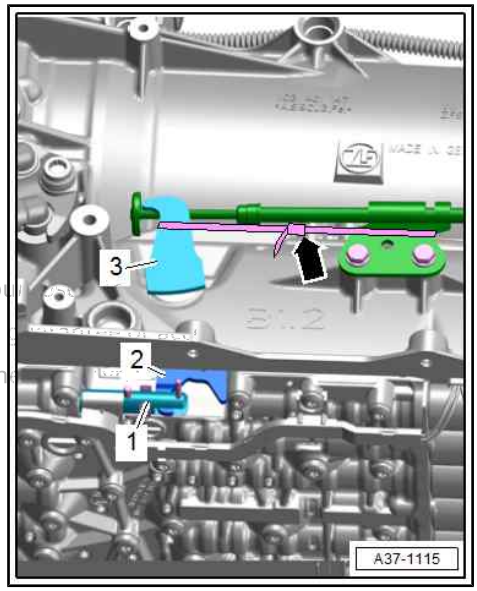


Note

- ♦ The parking lock must not be engaged during the next steps. Turn the propshaft to check whether the parking lock is engaged.
- ♦ Turn the rear splined shaft so that the parking lock is not engaged (operate manual release mechanism if necessary). Do not turn the propshaft from this point onwards.

Protected by copyright. Copying for private or commercial pu
permitted unless authorised by AUDI AG. AUDI AG does not
with respect to the correctness of information in this docum

– Knock roll pin -2- out of shaft of parking lock lever using a suitable punch -1-.

- ♦ The return spring is slackened when the parking lock lever is removed.

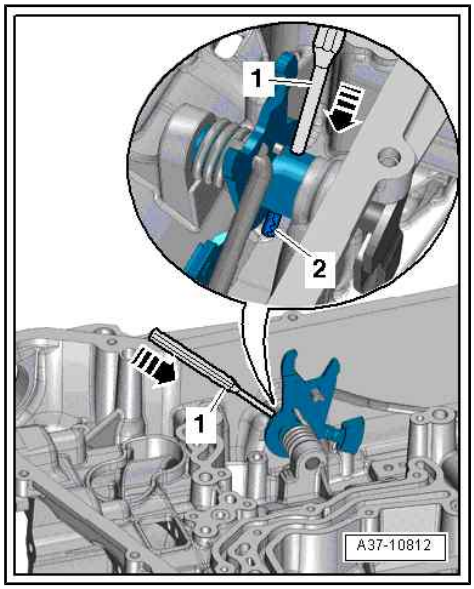


– Pull off parking lock lever -1- with shaft -arrow-.

– Pry out oil seal with small screwdriver.

– Lubricate outer circumference and space between sealing lips of new oil seal with ATF.

• Installation position: open side of oil seal points towards gearbox

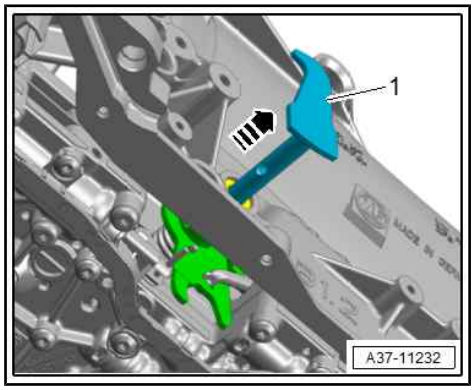

– Fit oil seal on gearbox housing and press in as far as stop -arrow- using a suitable socket.

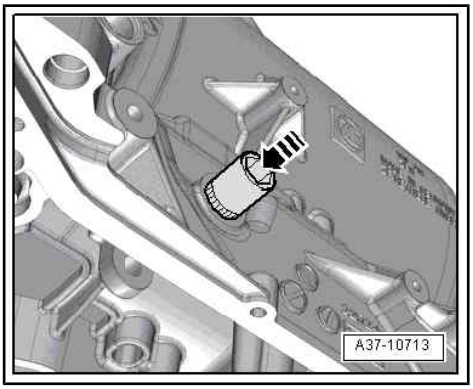


– Insert parking lock lever with shaft and at the same time engage return spring on stop lever and on gearbox housing -arrows-.

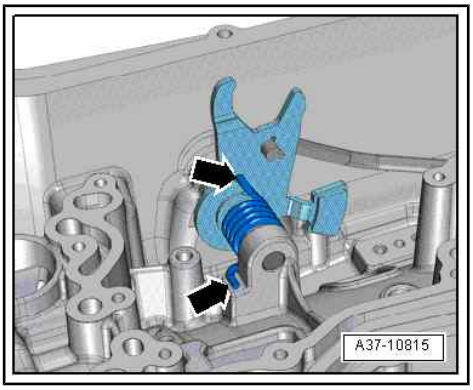


**Note**

♦ If the operating rod for the locking pawl has slipped too far towards the rear, it can only be pulled forward again -arrow 1- if the locking pawl is pressed at the same time -arrow 2-.

Protected by copyright. Copying for private or commercial purposes, in part or in whole, is not permitted unless authorised by AUDI AG. AUDI AG does not guarantee or assume any liability with respect to the correctness of information in this document. Copyright by AUDI AG.

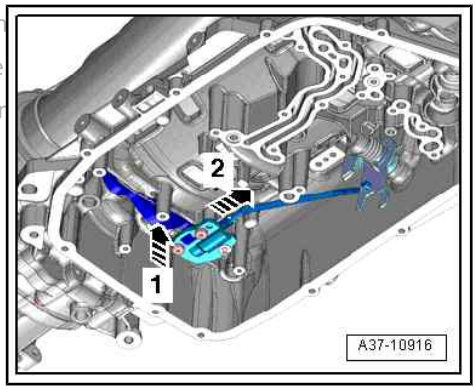


– Drive roll pin -2- into shaft of parking lock lever using a suitable punch -1- (pay attention to installation position) ⇒ page 94 .

– Install mechatronic unit ⇒ Servicing 8-speed automatic gearbox; Rep. gr. 38 ; Mechatronic unit; Removing and installing mechatronic unit .

– Fill up with ATF ⇒ page 84 .

– Check manual release mechanism for parking lock ⇒ page 20 .

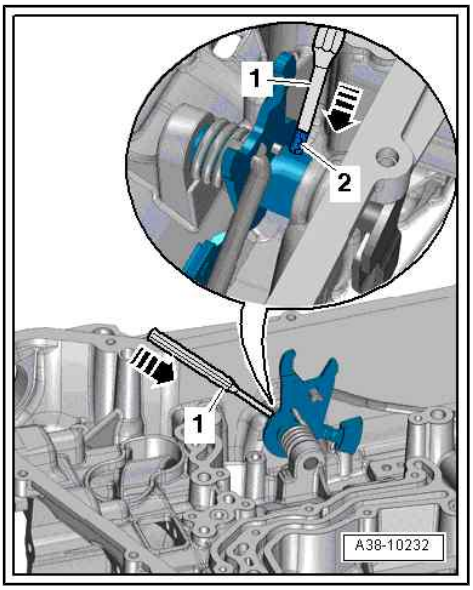

# 2 Removing and installing gearbox

⇒ “2.1 Removing gearbox”, page 32

⇒ “2.2 Installing gearbox”, page 62

⇒ “2.3 Tightening torques for gearbox”, page 68

## 2.1 Removing gearbox

⇒ “2.1.1 Removing gearbox, A4/A5 with 2.9/3.0 ltr. TFSI engine”, page 32

⇒ “2.1.2 Removing gearbox, Q5 with 3.0 ltr. TFSI engine”, page 37

⇒ “2.1.3 Removing gearbox, A4/A5 with 3.0 ltr. TDI engine (generation I)”, page 43

⇒ “2.1.4 Removing gearbox, A4/A5 with 3.0 ltr. TDI engine (generation II)”, page 49

⇒ “2.1.5 Removing gearbox, Q5 with 3.0 ltr. TDI engine (generation II)”, page 55

Protected by copyright. Copying for private or commercial purposes, in part or in whole, is not permitted unless authorised by AUDI AG. AUDI AG does not guarantee or accept any liability with respect to the correctness of information in this document. Copyright by AUDI AG.

### 2.1.1 Removing gearbox, A4/A5 with 2.9/3.0 ltr. TFSI engine

**Special tools and workshop equipment required**

- Hose clamps up to 25 mm - 3094-

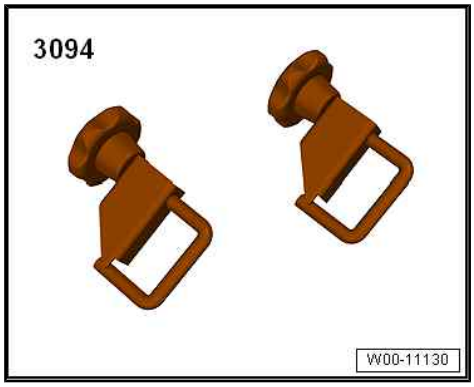


- Ring spanner insert AF 16 - V.A.G 1332/14-

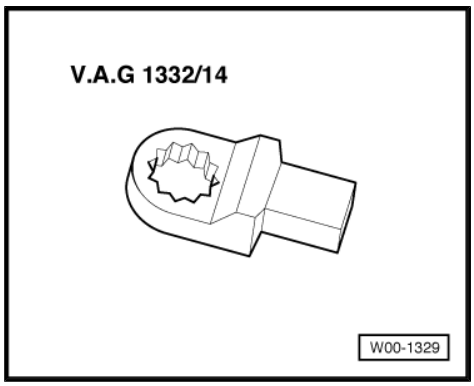

- Engine and gearbox jack - VAS 6931-

- Adapter - VAS 6948-

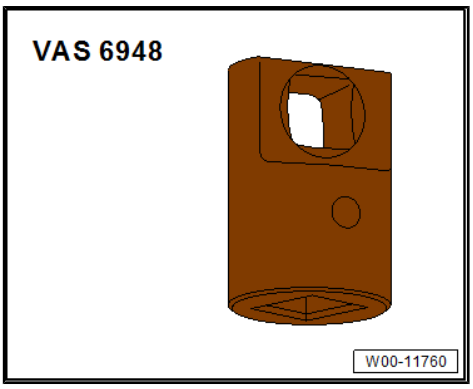


- Gearbox support - T40173-

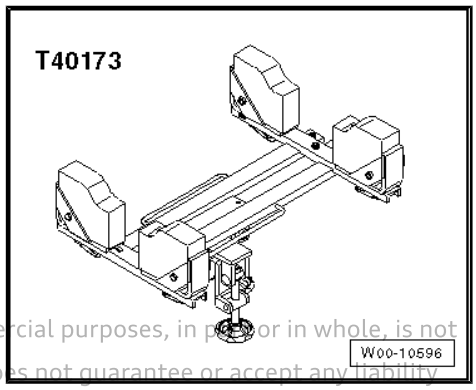


Protected by copyright. Copying for private or commercial purposes, in part or in whole, is not permitted unless authorised by AUDI AG. AUDI AG does not guarantee or accept any liability with respect to the correctness of information in this document. Copyright by AUDI AG.

- Wrench 21 mm - T40263-

♦ Adapter -T40314-

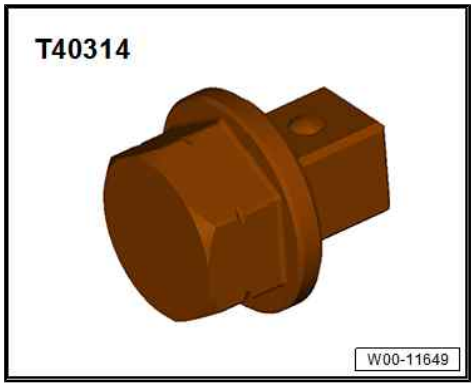


♦ Tensioning strap - T10038-

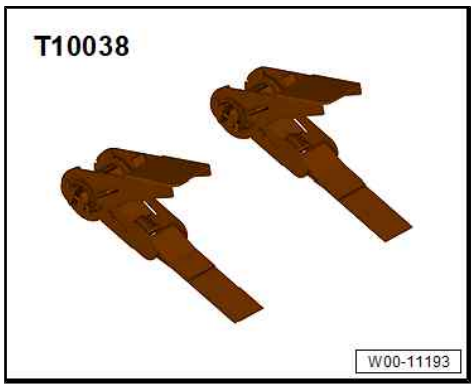


♦ Brace -T40335- (not illustrated)

**Preparing gearbox support - T40173- :**

– Mounting block -arrow- must be rotated so that the longer side faces upwards, as shown in illustration.

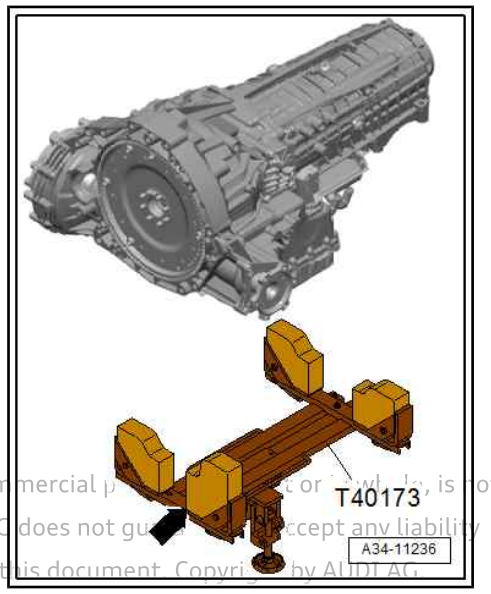


**Procedure**

– Bring front wheels into straight-ahead position.

– Switch off ignition.

– Disconnect earth wire from battery terminal ⇒ Electrical system; Rep. gr. 27 ; Battery; Disconnecting and connecting battery .

– Remove front silencer on both sides ⇒ Engine; Rep. gr. 26 ; Exhaust pipes/silencers; Removing and installing front silencers .

– Remove catalytic converter ⇒ Engine; Rep. gr. 26 ; Emission control system; Removing and installing catalytic converter .

Protected by copyright. Copying for private or commercial purposes, in part or in whole, is not permitted unless authorised by AUDI AG. AUDI AG does not guarantee or accept any liability with respect to the correctness of information in this document. Copyright by AUDI AG.

– Remove bolts -2 … 5- securing gearbox to engine (accessible from above).

– Support engine in installation position ⇒ Engine; Rep. gr. 10 ; Assembly mountings; Supporting engine in installation position .

– Remove front wheels ⇒ Running gear, axles, steering; Rep. gr. 44 ; Wheels, tyres .

– Drain coolant ⇒ Engine; Rep. gr. 19 ; Cooling system/coolant; Draining and filling cooling system .

– Remove propshaft ⇒ Rear final drive; Rep. gr. 39 ; Propshaft; Removing and installing propshaft .

– Remove subframe cross brace ⇒ Running gear, axles, steering; Rep. gr. 40 ; Subframe; Removing and installing subframe cross brace .

– Detach intermediate steering shaft from steering rack and slide together ⇒ Running gear, axles, steering; Rep. gr. 48 ; Steering column; Removing and installing intermediate steering shaft .

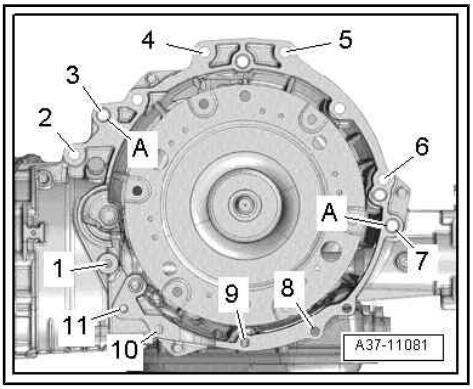


– Remove bolts -arrows- and push ATF cooler slightly to one side with hoses -1, 2, 4- attached.

Protected by copyright. Copying for private or commercial purposes, in
permitted unless authorised by AUDI AG. AUDI AG does not guarantee
with respect to the correctness of information in this document. Copyri

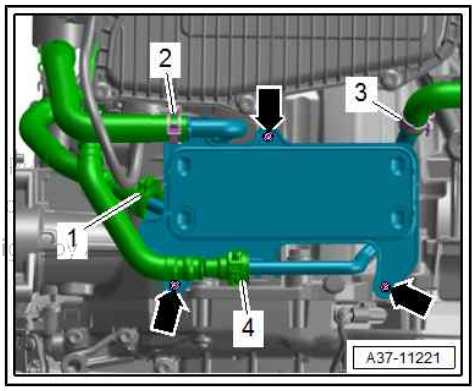


– Unscrew bolts -arrows- and move parking lock manual release cable -1- clear.

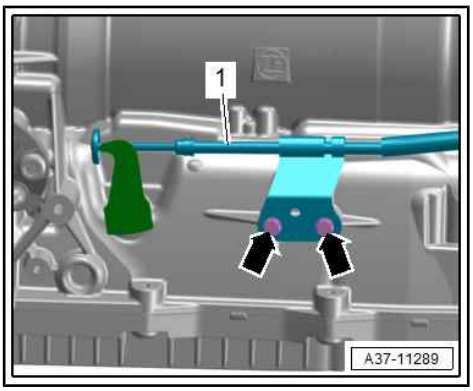


– Remove nuts -1, 3- on both sides and detach cover -2- for drive shaft.

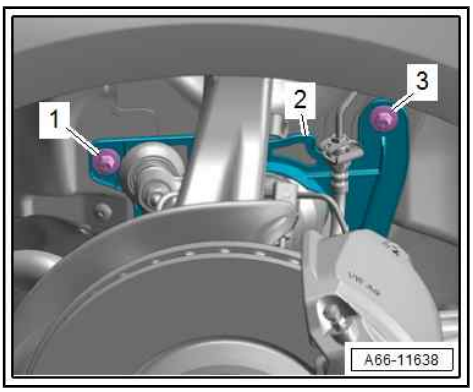

– Detach bottom cover -1- from gearbox -arrow-.

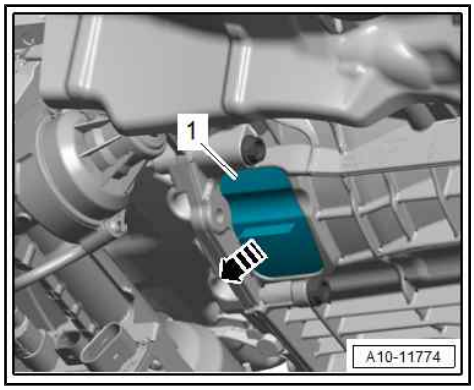


NOTICE

**Risk of engine damage if valve gear drive slips**

– **Only turn engine in normal direction of rotation.**

– Turn crankshaft in direction of -arrow- using wrench 21 mm -T40263- and adapter -T40314- .

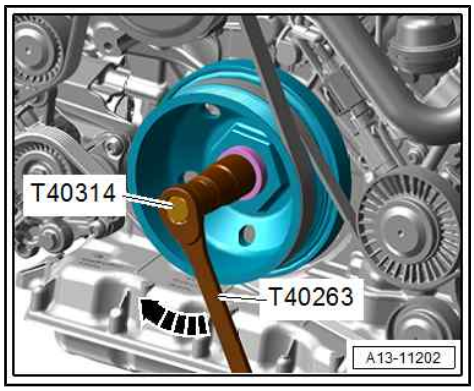


– Remove 6 bolts -arrow- for torque converter -1- (turn crankshaft 60° in direction of engine rotation each time).

– Remove heat shield for drive shaft on both sides ⇒ Running gear, axles, steering; Rep. gr. 40 ; Drive shaft; Removing and installing heat shield for drive shaft

– Unbolt drive shafts (left and right) from flange shafts of gearbox ⇒ Running gear, axles, steering; Rep. gr. 40 ; Drive shaft; Removing and installing drive shaft .

**Vehicles with 2.9 ltr. TFSI engine**

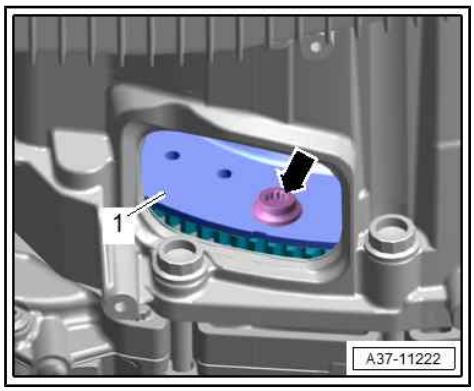


– Release hose clip -arrow- and detach coolant hose.

**All vehicles**

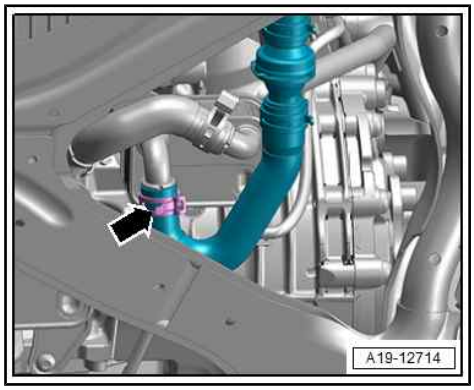


Protected by copyright. Copying for private or commercial purposes, in part or in whole, is not permitted unless authorised by AUDI AG. AUDI AG does not guarantee or accept any liability with respect to the correctness of information in this document. Copyright by AUDI AG.

– Move electrical wiring harness clear.

**NOTICE**

**Risk of irreparable damage due to electrostatic discharge.**

– **Do not touch connector contacts with your hands.**
– **Touch the lifting platform or other earthed object to discharge static electricity.**

– Turn fastener anti-clockwise -arrow- and unplug electrical connector -1- on gearbox.

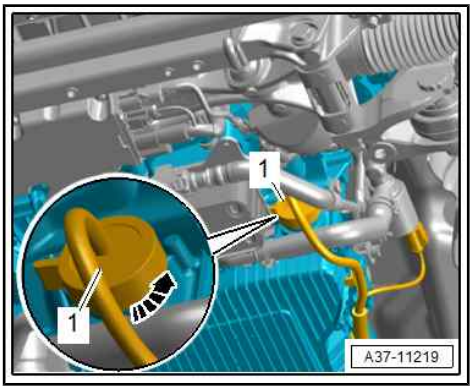


– Unscrew bolt -1- using ring spanner insert, 16 mm - V.A.G 1332/14- and adapter - VAS 6948- .
– Remove remaining engine/gearbox securing bolts -6 … 10-.

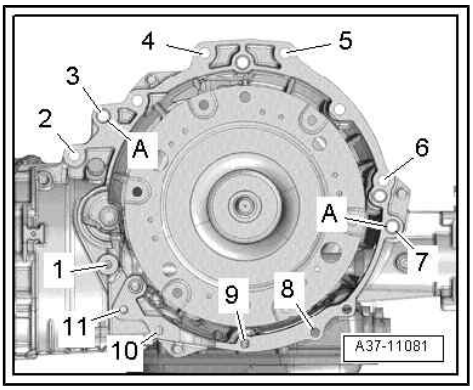


**NOTICE**

**Risk of leaks if ATF oil pan is damaged.**

– **Do not apply gearbox support - T40173- at ATF oil pan.**

– Position engine and gearbox jack - VAS 6931- with prepared gearbox support - T40173- underneath gearbox and secure with tensioning strap -1-.

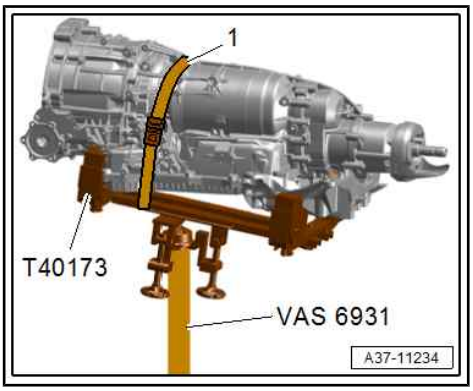


– Remove bolts -arrows- for tunnel cross member.

- For illustration purposes, the gearbox support - T40173- is not shown.

– Press gearbox off engine. To do so, fully remove bolt for starter.
– Carefully lower engine and gearbox jack - VAS 6931- , paying attention to electrical wiring.

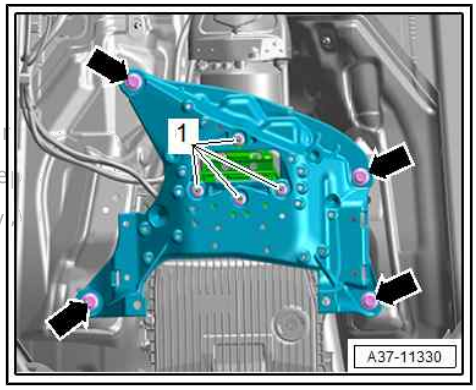


Protected by copyright. Copying for private or commercial purposes, in part or
permitted unless authorised by AUDI AG. AUDI AG does not guarantee or acce
with respect to the correctness of information in this document. Copyright by

## 2.1.2 Removing gearbox, Q5 with 3.0 ltr. TFSI engine

**Special tools and workshop equipment required**

- Hose clamps up to 25 mm - 3094-

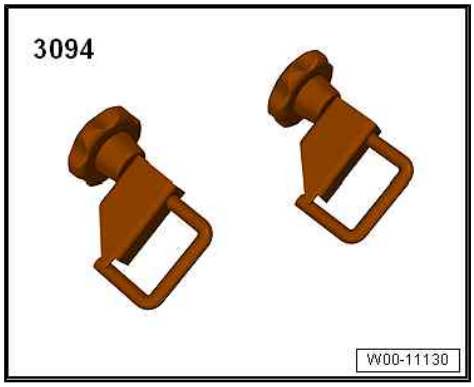


- Ring spanner insert AF 16 - V.A.G 1332/14-

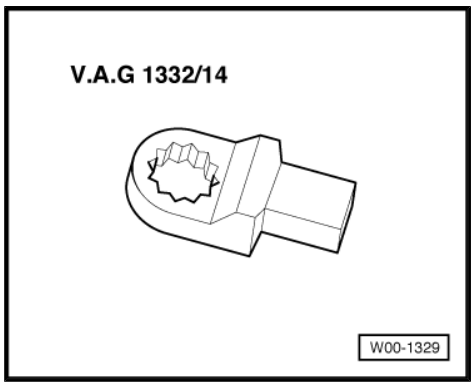


- Engine and gearbox jack - VAS 6931-

Protected by copyright. Copying for private or commercial purposes, in part or in whole, is not permitted unless authorised by AUDI AG. AUDI AG does not guarantee or accept any liability with respect to the correctness of information in this document. Copyright by AUDI AG.

- Adapter - VAS 6948-

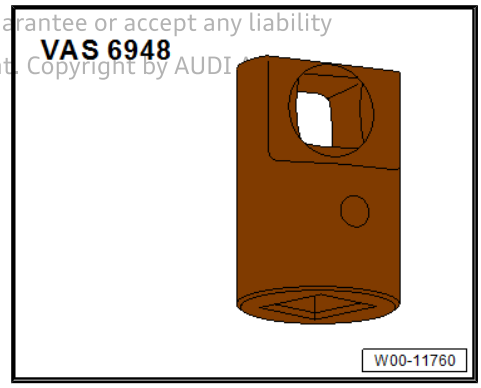

- Tensioning strap - T10038-

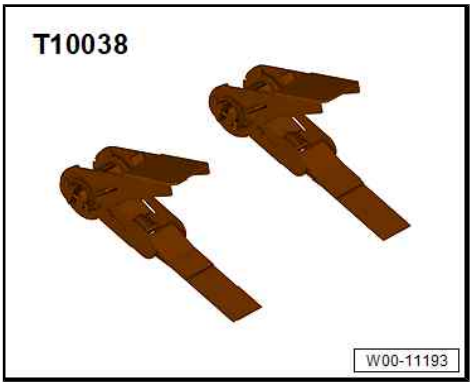


- Gearbox support - T40173-

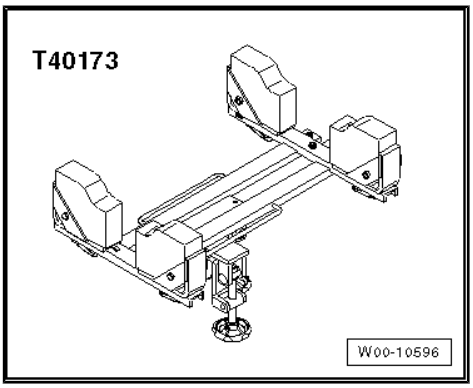


- Wrench 21 mm - T40263-

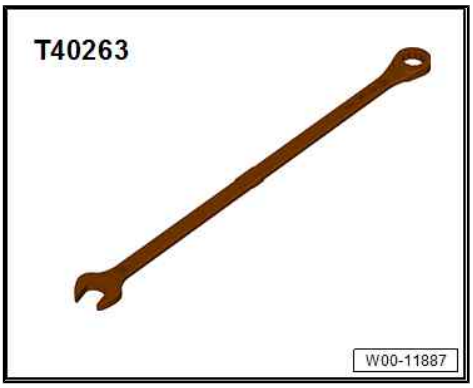


- Adapter -T40314-

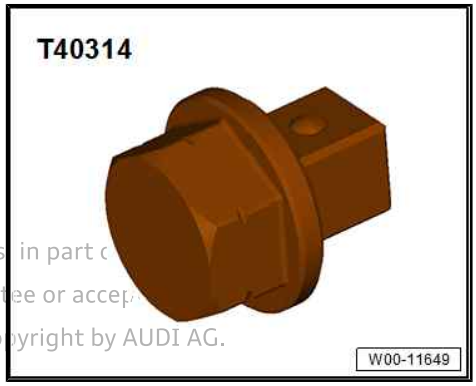


Protected by copyright. Copying for private or commercial purposes, in part o
permitted unless authorised by AUDI AG. AUDI AG does not guarantee or accep
with respect to the correctness of information in this document. Copyright by AUDI AG.

- Brace -T40335- (not illustrated)

**Preparing gearbox support - T40173- :**

– Mounting block -arrow- must be rotated so that the longer side faces upwards, as shown in illustration.

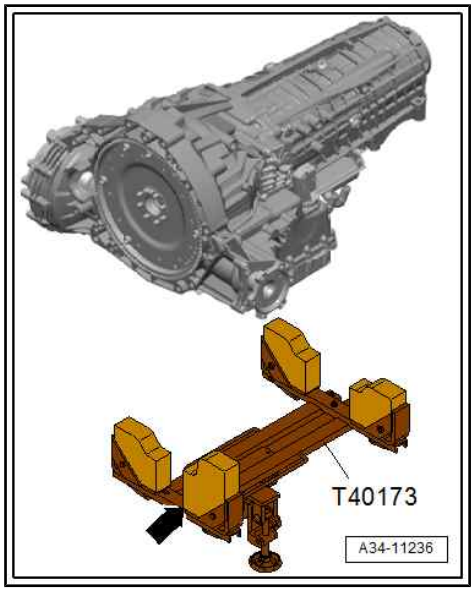


**Procedure**

– Bring front wheels into straight-ahead position.

– Switch off ignition.

– Disconnect earth wire from battery terminal ⇒ Electrical system; Rep. gr. 27 ; Battery; Disconnecting and connecting battery .

– Remove front silencer on both sides ⇒ Engine; Rep. gr. 26 ; Exhaust pipes/silencers; Removing and installing front silencers .

– Remove catalytic converter ⇒ Engine; Rep. gr. 26 ; Emission control system; Removing and installing catalytic converter .

– Remove bolts -2 … 5- securing gearbox to engine (accessible from above).

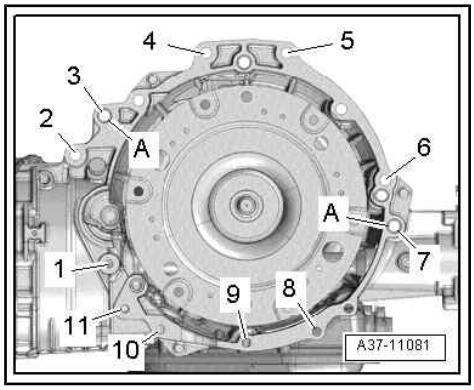


– Support engine in installation position ⇒ Engine; Rep. gr. 10 ; Assembly mountings; Supporting engine in installation position .

– Remove front wheels ⇒ Running gear, axles, steering; Rep. gr. 44 ; Wheels, tyres .

– Drain coolant ⇒ Engine; Rep. gr. 19 ; Cooling system/coolant; Draining and filling cooling system .

– Remove propshaft ⇒ Rear final drive; Rep. gr. 39 ; Propshaft; Removing and installing propshaft .

– Remove subframe cross brace ⇒ Running gear, axles, steering; Rep. gr. 40 ; Subframe; Removing and installing subframe cross brace .

– Detach intermediate steering shaft from steering rack and slide together ⇒ Running gear, axles, steering; Rep. gr. 48 ; Steering column; Removing and installing intermediate steering shaft .

– Remove bolts -arrows- and push ATF cooler slightly to one side with hoses -1, 2, 4- attached.

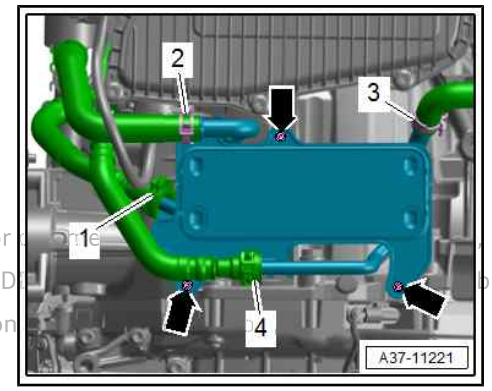


Protected by copyright. Copying for private or [illegible] is not permitted unless authorised by AUDI AG. AUD[illegible]bility with respect to the correctness of information[illegible]

– Unscrew bolts -arrows- and move parking lock manual release cable -1- clear.

– Remove drive shaft cover on both sides ⇒ General body repairs, exterior; Rep. gr. 66 ; Wheel housing liners; Exploded view - wheel housing liner (front) .

Protected by copyright. Copying for private or commercial purposes, in part or in
permitted unless authorised by AUDI AG. AUDI AG does not guarantee or accept
with respect to the correctness of information in this document. Copyright by AU

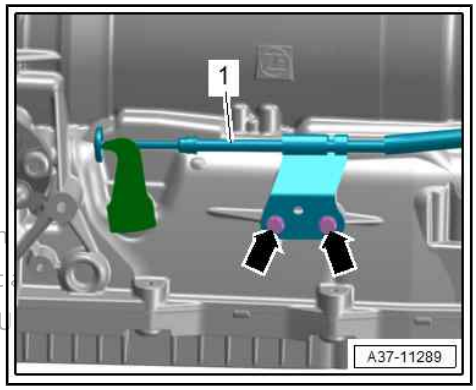


– Detach bottom cover -1- from gearbox -arrow-.

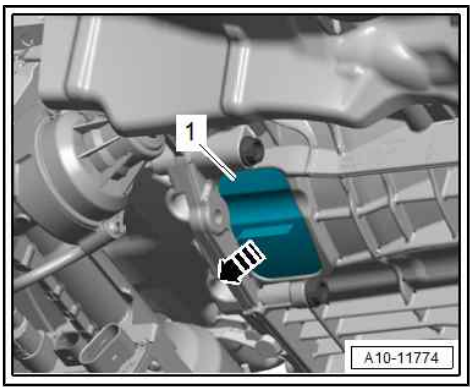


**NOTICE**

**Risk of engine damage if valve gear drive slips**

– **Only turn engine in normal direction of rotation.**

– Turn crankshaft in direction of -arrow- using wrench 21 mm -T40263- and adapter -T40314- .

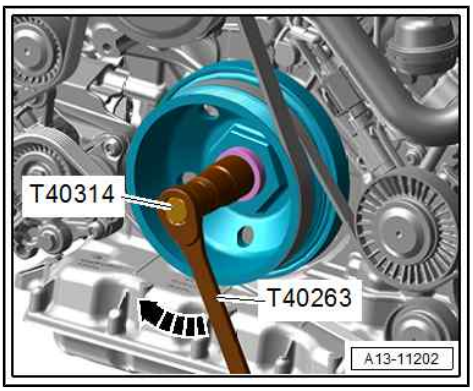


– Remove 6 bolts -arrow- for torque converter -1- (turn crankshaft 60° in direction of engine rotation each time).

– Remove heat shield for drive shaft on both sides ⇒ Running gear, axles, steering; Rep. gr. 40 ; Drive shaft; Removing and installing heat shield for drive shaft

– Unbolt drive shafts (left and right) from flange shafts of gearbox ⇒ Running gear, axles, steering; Rep. gr. 40 ; Drive shaft; Removing and installing drive shaft .

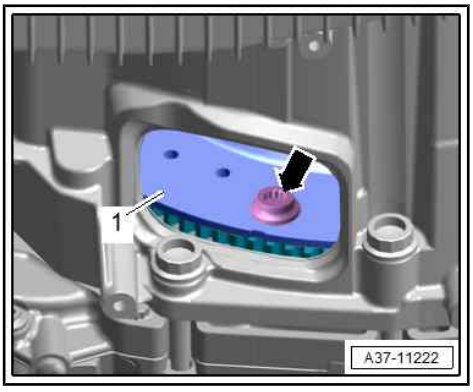

– Move electrical wiring harness clear.

– Release hose clip -arrow- and detach coolant hose.

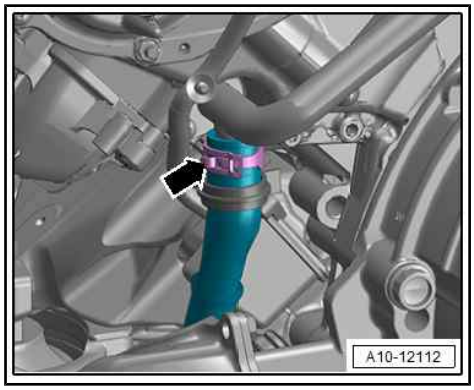


**NOTICE**

**Risk of irreparable damage due to electrostatic discharge.**

- **Do not touch connector contacts with your hands.**
- **Touch the lifting platform or other earthed object to discharge static electricity.**

– Turn fastener anti-clockwise -arrow- and unplug electrical connector -1- on gearbox.

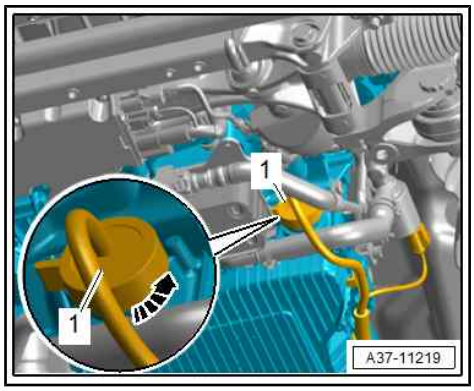


– Unscrew bolt -1- using ring spanner insert, 16 mm - V.A.G 1332/14- and adapter - VAS 6948- .

– Remove remaining engine/gearbox securing bolts -6 … 10-.

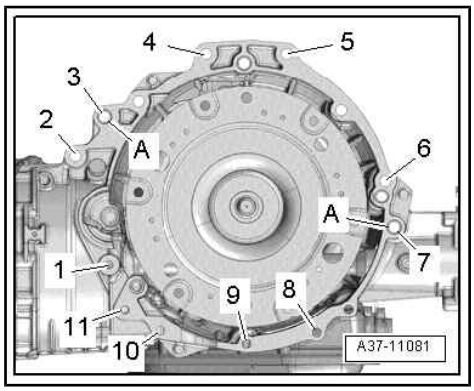


**NOTICE**

**Risk of leaks if ATF oil pan is damaged.**

- **Do not apply gearbox support - T40173- at ATF oil pan.**

– Position engine and gearbox jack - VAS 6931- with prepared gearbox support - T40173- underneath gearbox and secure with tensioning strap -1-.

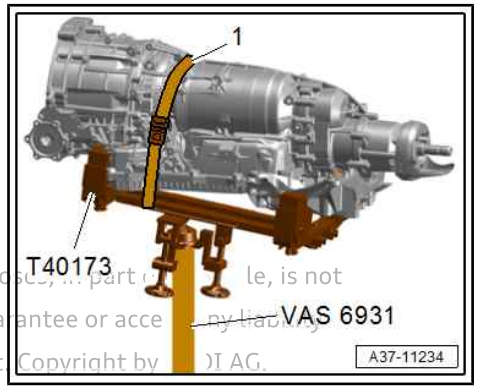


Protected by copyright. Copying for private or commercial purposes, in part or in whole, is not permitted unless authorised by AUDI AG. AUDI AG does not guarantee or accept any liability with respect to the correctness of information in this document. Copyright by AUDI AG.

– Remove bolts -arrows- for tunnel cross member.

• For illustration purposes, the gearbox support - T40173- is not shown.

– Press gearbox off engine. To do so, fully remove bolt for starter.

– Carefully lower engine and gearbox jack - VAS 6931- , paying attention to electrical wiring.

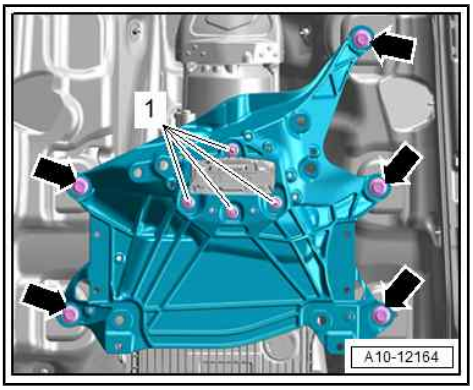


## 2.1.3 Removing gearbox, A4/A5 with 3.0 ltr. TDI engine (generation I)

**Special tools and workshop equipment required**

♦ Hose clamps up to 25 mm - 3094-

Protected by copyright. Copying for private or commercial purpose [illegible] in wh[illegible] permitted unless authorised by AUDI AG. AUDI AG does not guara[illegible]r [illegible]ept any liability with respect to the correctness of information in this docu[illegible]ent. Co[illegible] by AUDI AG.

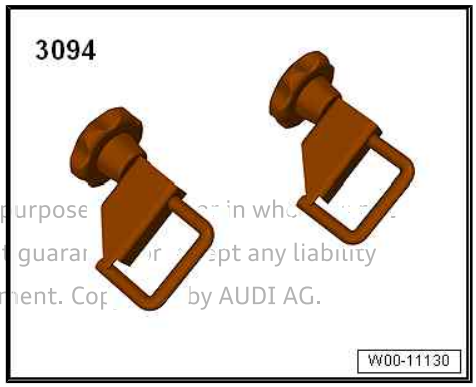


♦ Ring spanner insert AF 16 - V.A.G 1332/14-

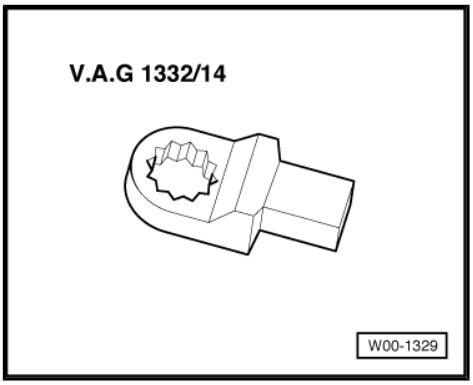


♦ Engine and gearbox jack - VAS 6931-

- Tensioning strap - T10038-

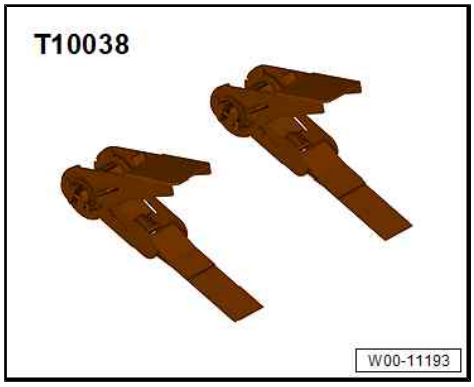


- Gearbox support - T40173-

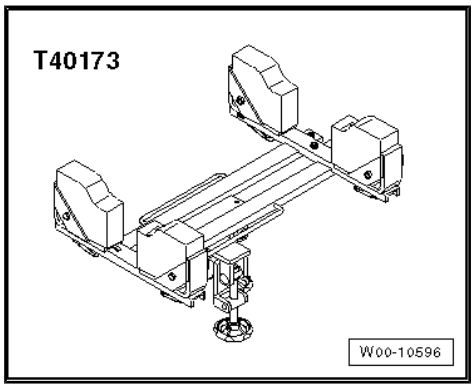


- Wrench 21 mm - T40263-

Protected by copyright. Copying for private or commercial purposes, in part or in whole, is not permitted unless authorised by AUDI AG. AUDI AG does not guarantee or accept any liability with respect to the correctness of information in this document. Copyright by AUDI AG.

- Adapter -T40314-

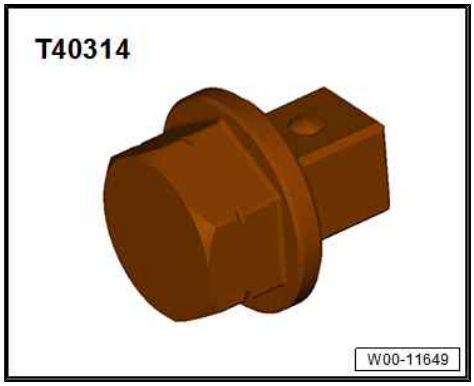


- Brace -T40335- (not illustrated)

**Preparing gearbox support - T40173- :**

– Mounting block -arrow- must be rotated so that the longer side faces upwards, as shown in illustration.

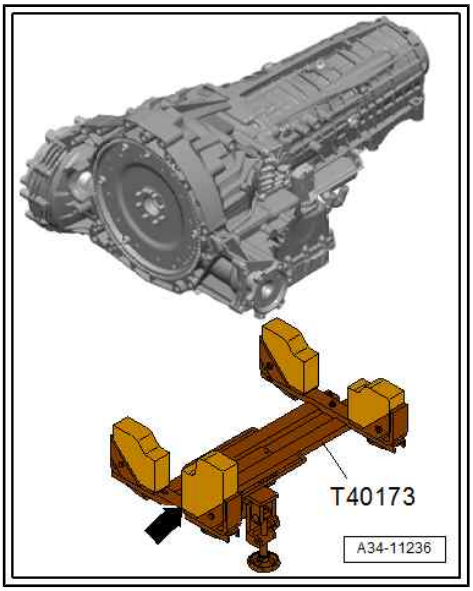


**Procedure**

– Bring front wheels into straight-ahead position.

– Switch off ignition.

– Disconnect earth wire from battery terminal ⇒ Electrical system; Rep. gr. 27 ; Battery; Disconnecting and connecting battery .

– Remove front exhaust pipe ⇒ Engine; Rep. gr. 26 ; Exhaust pipes/silencers; Removing and installing front exhaust pipe .

– Remove emission control module ⇒ Engine; Rep. gr. 26 ; Emission control system; Removing and installing emission control module .

– Remove propshaft ⇒ Rear final drive; Rep. gr. 39 ; Propshaft; Removing and installing propshaft .

– Remove subframe cross brace ⇒ Running gear, axles, steering; Rep. gr. 40 ; Subframe; Removing and installing subframe cross brace .

– Detach intermediate steering shaft from steering rack and slide together ⇒ Running gear, axles, steering; Rep. gr. 48 ; Steering column; Removing and installing intermediate steering shaft .

– Remove ATF cooler ⇒ page 79 .

– Unscrew bolts -arrows- and move parking lock manual release cable -1- clear.

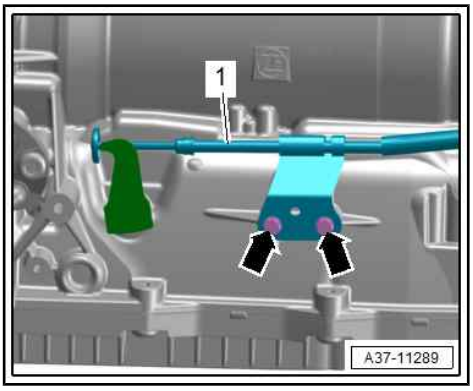


– Remove bolts -2 … 5- securing gearbox to engine (accessible from above).

– Support engine in installation position ⇒ Engine; Rep. gr. 10 ; Assembly mountings; Supporting engine in installation position .

– Remove front wheels ⇒ Running gear, axles, steering; Rep. gr. 44 ; Wheels, tyres .

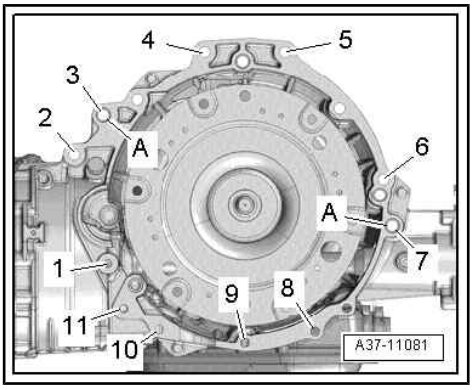


Protected by copyright. Copying for private or commercial purposes, in part or in whole, is not permitted unless authorised by AUDI AG. AUDI AG does not guarantee or accept any liability with respect to the correctness of information in this document. Copyright by AUDI AG.

– Remove nuts -1, 3- on both sides and detach cover -2- for drive shaft.

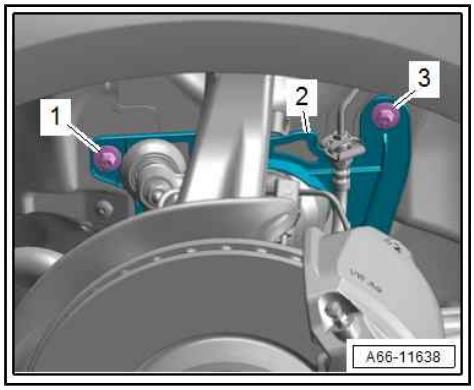


– Detach bottom cover -1- from gearbox -arrow-.

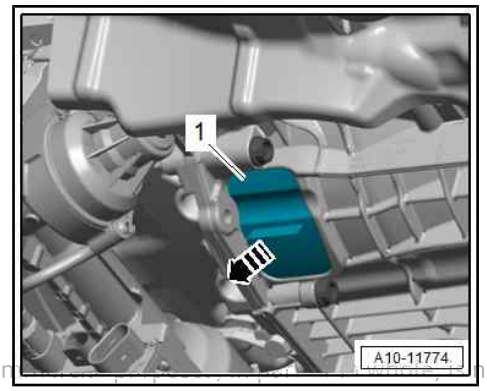


Protected by copyright. Copying for private or com
permitted unless authorised by AUDI AG. AUDI AG
on in

**NOTICE**

**Risk of engine damage if valve gear drive slips**

– **Only turn engine in normal direction of rotation.**

– Turn crankshaft in direction of -arrow- using wrench 21 mm -T40263- and adapter -T40314- .

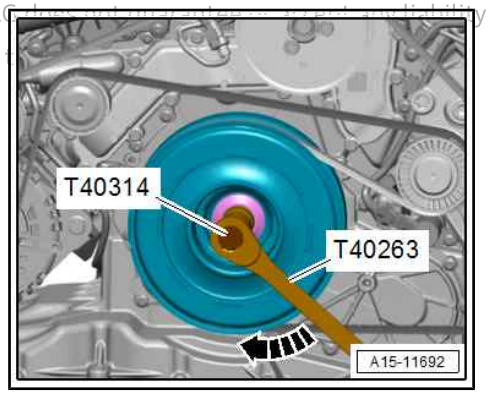


– Remove 6 bolts -arrow- for torque converter -1- (turn crankshaft 60° in direction of engine rotation each time).

– Remove heat shield for drive shaft on both sides ⇒ Running gear, axles, steering; Rep. gr. 40 ; Drive shaft; Removing and installing heat shield for drive shaft

– Unbolt drive shafts (left and right) from flange shafts of gearbox ⇒ Running gear, axles, steering; Rep. gr. 40 ; Drive shaft; Removing and installing drive shaft .

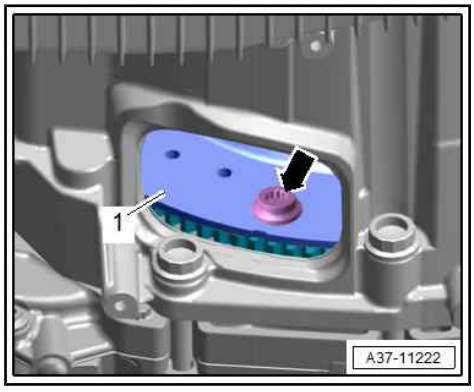

– Remove bolt -arrow- and move coolant hose to side.

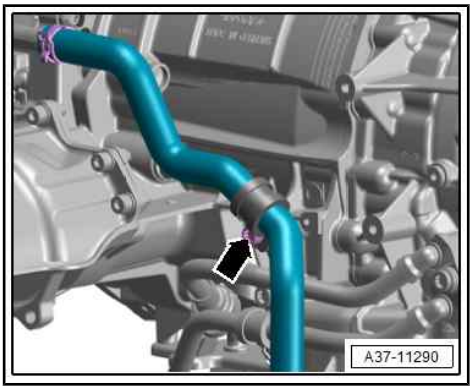


– Remove bolts -arrows- and press coolant pipe (right-side) to side.

Protected by copyright. Copying for private or comm
permitted unless authorised by AUDI AG. AUDI AG d
with respect to the correctness of information in this

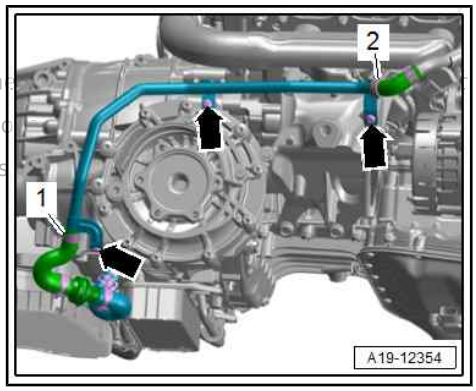


**NOTICE**

**Risk of irreparable damage due to electrostatic discharge.**

- **Do not touch connector contacts with your hands.**
- **Touch the lifting platform or other earthed object to discharge static electricity.**

– Turn fastener anti-clockwise -arrow- and unplug electrical connector -1- on gearbox.

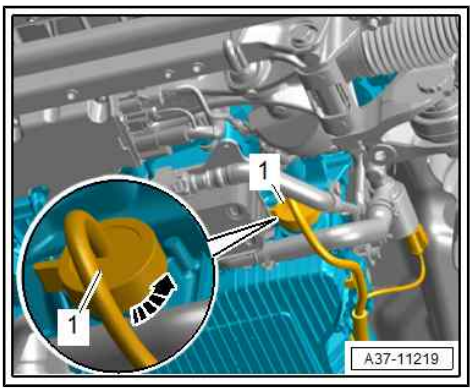


– Unplug electrical connectors -3, 4- from power steering control unit - J500- (to do so, release retainer and press down release catch).

– Move wiring duct -2- for electrical wiring on steering rack -1- clear.

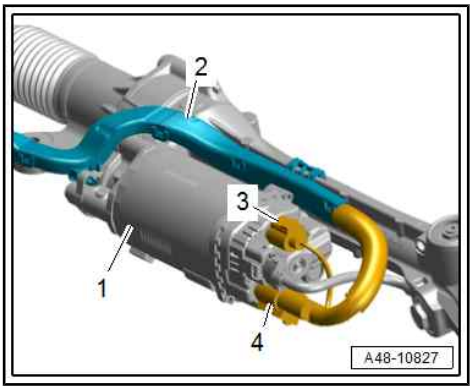

– Insert brace -T40335- in subframe on both sides. If necessary, adjust brace at knurled handle -1-.

– Secure brace with a split pin -arrow- on both sides.

♦ -T40334- can be disregarded.

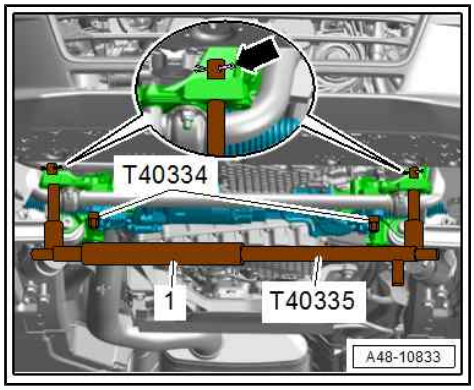


NOTICE

**Risk of damage to boots.**

– **Do not hold onto the boots of the steering rack when removing it.**

– Support steering rack -2- with engine and gearbox jack - VAS 6931- (place a suitable piece of foam -1- between steering rack and jack).

– Unscrew locating pins -T40334- on left and right.

– Lower steering rack and press forwards slightly.

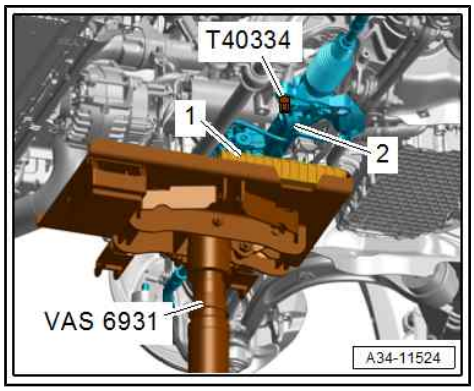


– Remove bolts -1- and -11-.

– Pull starter off gearbox slightly but do not remove starter.

– Bring steering rack back into its installation position and secure with locating pins -T40334- .

– Remove remaining engine/gearbox securing bolts -6 … 10-.

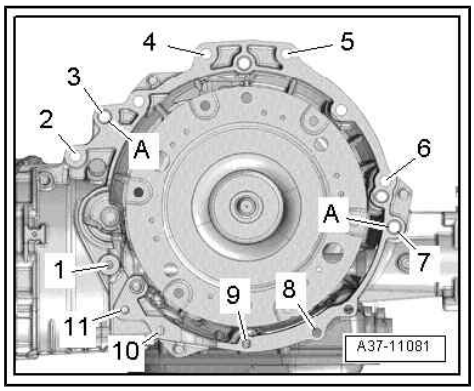


NOTICE

**Risk of leaks if ATF oil pan is damaged.**

– **Do not apply gearbox support - T40173- at ATF oil pan.**

– Position engine and gearbox jack - VAS 6931- with prepared gearbox support - T40173- underneath gearbox and secure with tensioning strap -1-.

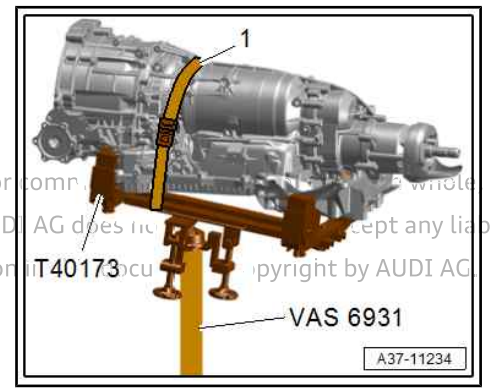


Protected by copyright. Copying for private or comm... whole is not permitted unless authorised by AUDI AG. AUDI AG does no... cept any liability with respect to the correctness of information in this docu... pyright by AUDI AG.

– Remove bolts -arrows- for tunnel cross member.

• For illustration purposes, the gearbox support - T40173- is not shown.

– Detach gearbox from engine and lower carefully using engine and gearbox jack - VAS 6931- (pay attention to electrical wiring and SCR line when doing so).

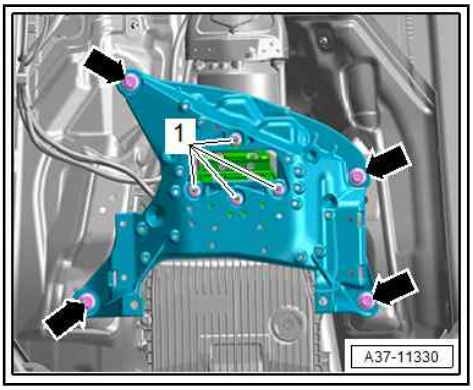


## 2.1.4 Removing gearbox, A4/A5 with 3.0 ltr. TDI engine (generation II)

**Special tools and workshop equipment required**

♦ Hose clamps up to 25 mm - 3094-

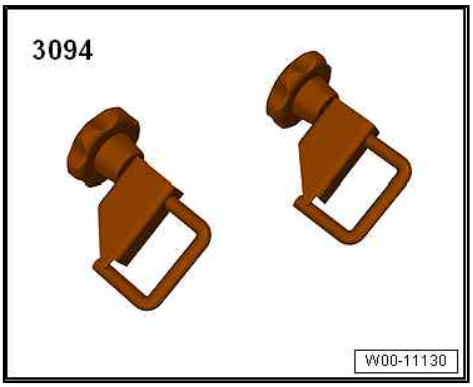


♦ Ring spanner insert AF 16 - V.A.G 1332/14-

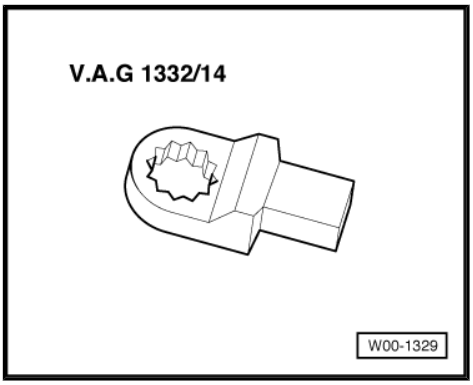


♦ Engine and gearbox jack - VAS 6931-

Protected by copyright. Copying for private or commercial purposes, in part or in whole, is not permitted unless authorised by AUDI AG. AUDI AG does not guarantee or accept any liability with respect to the correctness of information in this document. Copyright by AUDI AG.

- Tensioning strap - T10038-

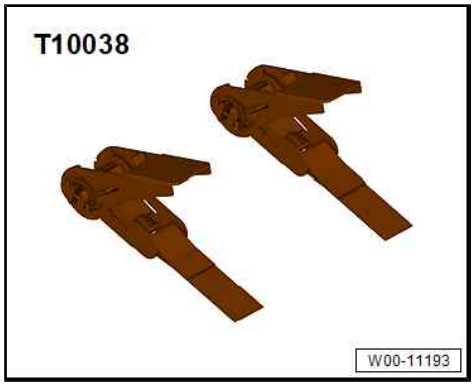


- Gearbox support - T40173-

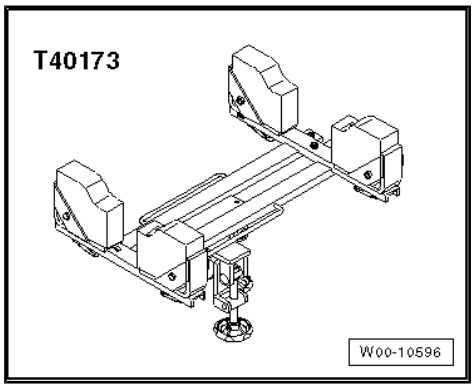


- Wrench 21 mm - T40263-

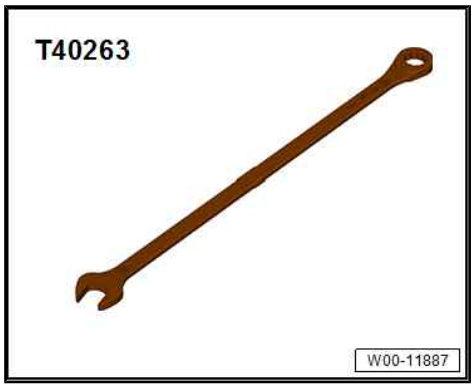


- Adapter -T40314-

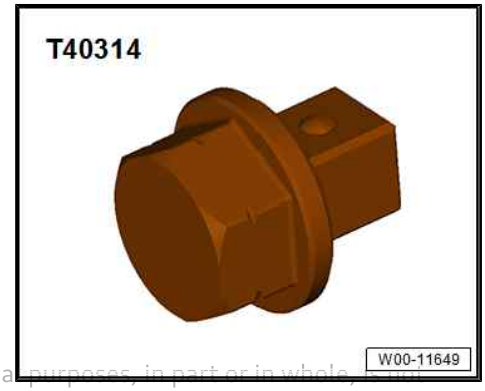


Protected by copyright. Copying for private or commercial purposes, in part or in whole, is not permitted unless authorised by AUDI AG. AUDI AG does not guarantee or accept any liability with respect to the correctness of information in this document. Copyright by AUDI AG.

- Brace -T40335- (not illustrated)

**Preparing gearbox support - T40173- :**

– Mounting block -arrow- must be rotated so that the longer side faces upwards, as shown in illustration.

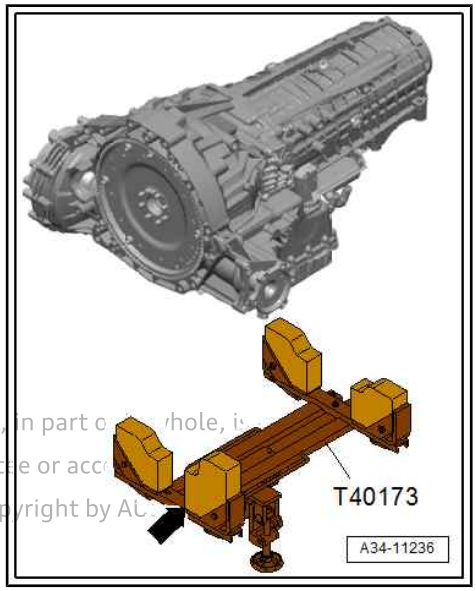


**Procedure**

– Bring front wheels into straight-ahead position.

– Switch off ignition.

– Disconnect earth wire from battery terminal ⇒ Electrical system; Rep. gr. 27 ; Battery; Disconnecting and connecting battery .

– Remove front exhaust pipe ⇒ Engine; Rep. gr. 26 ; Exhaust pipes/silencers; Removing and installing front exhaust pipe .

– Remove emission control module ⇒ Engine; Rep. gr. 26 ; Emission control system; Removing and installing emission control module .

Protected by copyright. Copying for private or commercial purposes, in part or whole, is not permitted unless authorised by AUDI AG. AUDI AG does not guarantee or accept any liability with respect to the correctness of information in this document. Copyright by AUDI AG.

– Remove bolts -arrows-.

– Release screw-type clip -1- and detach exhaust gas recirculation pipe -2-.

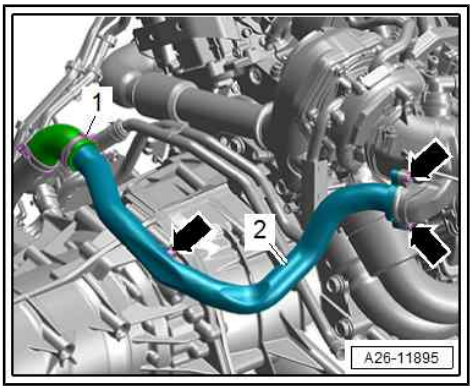


– Unplug electrical connector -1-.

– Remove bolt -2- and move pressure differential sender 2 - G524- clear.

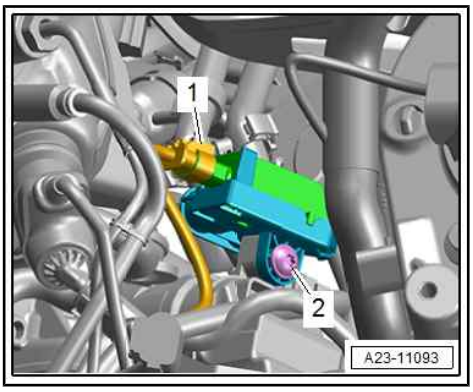


– Unplug electrical connectors and move electrical wiring clear.

1 - Continued coolant circulation pump - V51-

2 - Exhaust gas recirculation control motor 2 - V339-

– Remove coolant pipes (rear) ⇒ 6-cylinder TDI engine, 3.0 ltr. 4-valve common rail; Rep. gr. 19 ; Coolant pipes; Removing and installing coolant pipes .

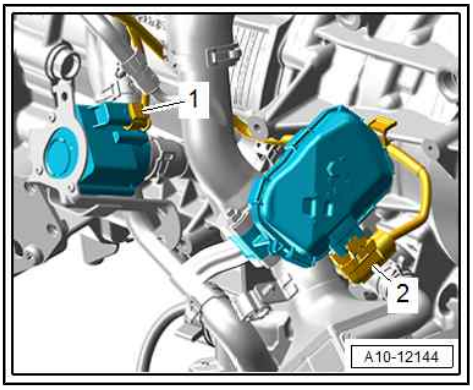

– Remove bolts -2 … 5- securing gearbox to engine (accessible from above).

– Support engine in installation position ⇒ Engine; Rep. gr. 10 ; Assembly mountings; Supporting engine in installation position .

– Remove front wheels ⇒ Running gear, axles, steering; Rep. gr. 44 ; Wheels, tyres .

– Remove propshaft ⇒ Rear final drive; Rep. gr. 39 ; Propshaft; Removing and installing propshaft .

– Remove subframe cross brace ⇒ Running gear, axles, steering; Rep. gr. 40 ; Subframe; Removing and installing subframe cross brace .

– Remove subframe shield on left and right ⇒ Running gear, axles, steering; Rep. gr. 40 ; Subframe; Removing and installing subframe shield .

– Detach intermediate steering shaft from steering rack and slide together ⇒ Running gear, axles, steering; Rep. gr. 48 ; Steering column; Removing and installing intermediate steering shaft .

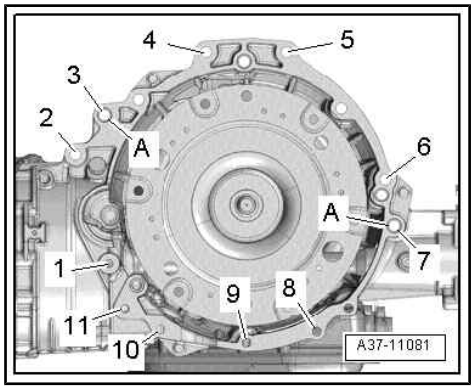


– Unscrew bolts -arrows- and move parking lock manual release cable -1- clear.

Protected by copyright. Copying for private or commercial purpo
permitted unless authorised by AUDI AG. AUDI AG does not gua
with respect to the correctness of information in this document.

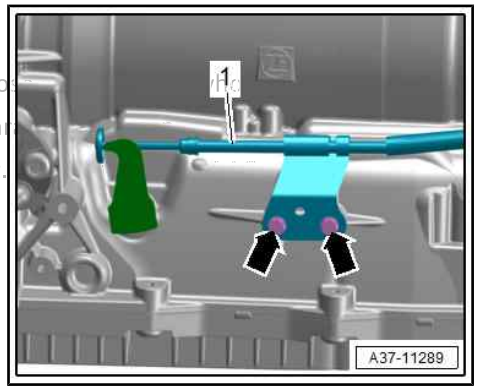


– Release hose clip -arrow- and detach coolant hose.

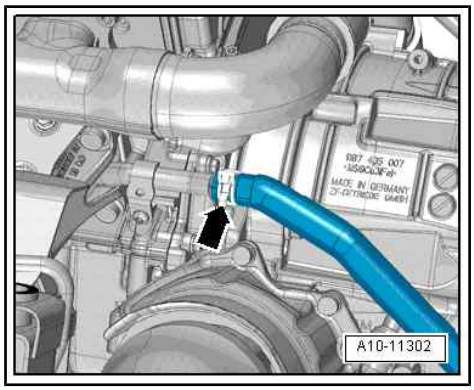


– Remove nuts -1, 3- on both sides and detach cover -2- for drive shaft.

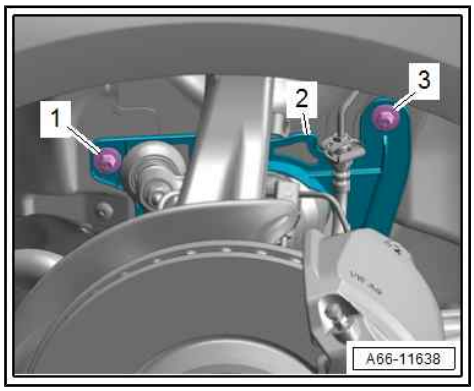

– Remove bolts -arrows- and push ATF cooler slightly to one side with hoses -1, 2, 4- attached.

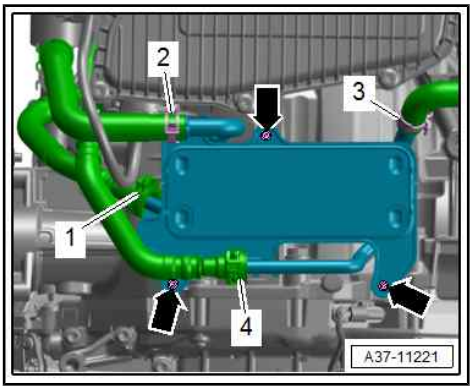


– Detach bottom cover -1- from gearbox -arrow-.

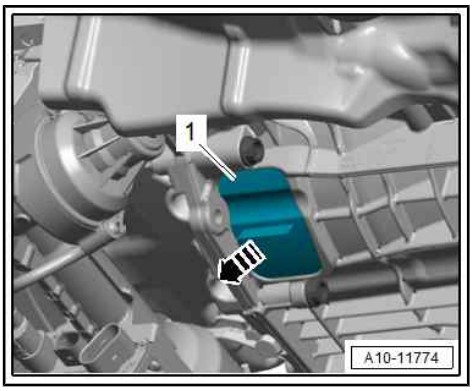


**NOTICE**

**Risk of engine damage if valve gear drive slips**

– **Only turn engine in normal direction of rotation.**

– Turn crankshaft in direction of -arrow- using wrench 21 mm -T40263- and adapter -T40314- .

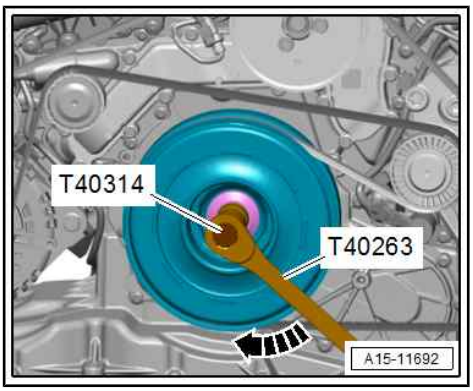


– Remove 6 bolts -arrow- for torque converter -1- (turn crankshaft 60° in direction of engine rotation each time).

– Remove heat shield (right-side) for drive shaft ⇒ Running gear, axles, steering; Rep. gr. 40 ; Drive shaft; Removing and installing heat shield for drive shaft .

– Unbolt drive shafts (left and right) from flange shafts of gearbox ⇒ Running gear, axles, steering; Rep. gr. 40 ; Drive shaft; Removing and installing drive shaft .

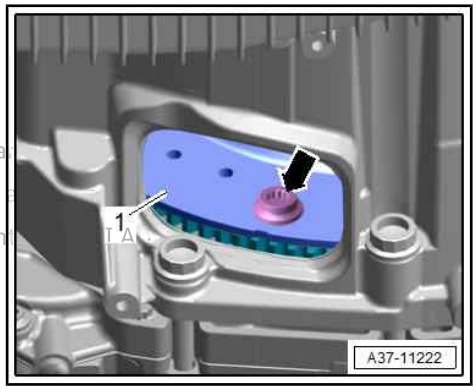


Protected by copyright. Copying for private or commercial purposes, in pa
permission of AUDI AG. AUDI AG does not guarantee or
with respect to the correctness of information in this document. Copyrigh

– Remove bolts -arrows- and press coolant pipe (right-side) to side.

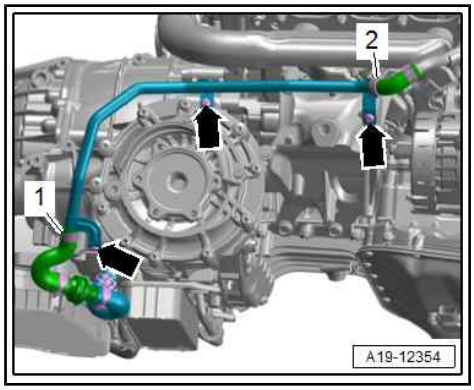


**NOTICE**

**Risk of irreparable damage due to electrostatic discharge.**

- **Do not touch connector contacts with your hands.**
- **Touch the lifting platform or other earthed object to discharge static electricity.**

– Turn fastener anti-clockwise -arrow- and unplug electrical connector -1- on gearbox.

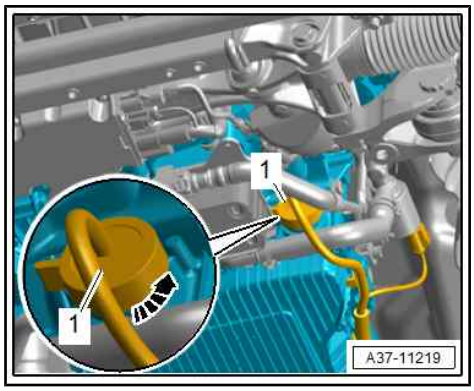


– Unplug electrical connectors -3, 4- from power steering control unit - J500- (to do so, release retainer and press down release catch).

– Move wiring duct -2- for electrical wiring on steering rack -1- clear.

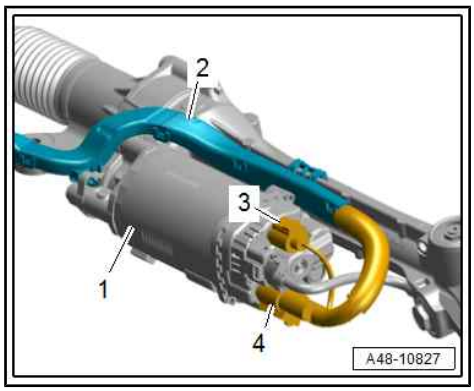


– Insert brace -T40335- in subframe on both sides. If necessary, adjust brace at knurled handle -1-.

– Secure brace with a split pin -arrow- on both sides.

◆ -T40334- can be disregarded.

Protected by copyright. Copying for private or commercial purpos
permitted unless authorised by AUDI AG. AUDI AG does not guara
ent. (

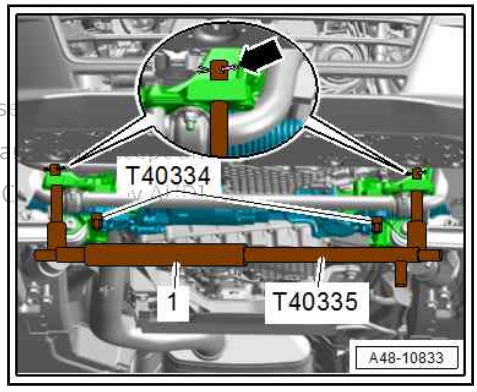


**NOTICE**

**Risk of damage to boots.**

- **Do not hold onto the boots of the steering rack when removing it.**

– Support steering rack -2- with engine and gearbox jack - VAS 6931- (place a suitable piece of foam -1- between steering rack and jack).
– Unscrew locating pins -T40334- on left and right.
– Lower steering rack and press forwards slightly.

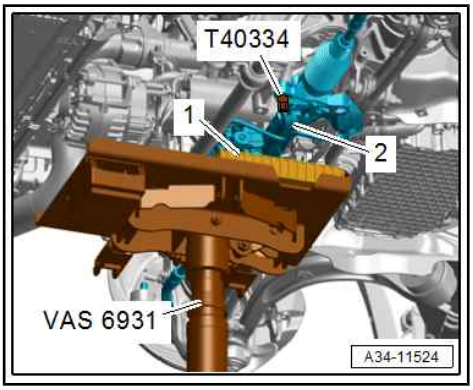


– Remove bolts -1- and -11-.
– Pull starter off gearbox slightly but do not remove starter.
– Bring steering rack back into its installation position and secure with locating pins -T40334- .
– Remove remaining engine/gearbox securing bolts -6 … 10-.

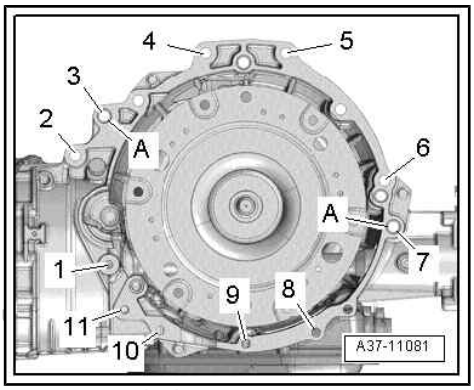


Protected by copyright. Copying for private or commercial p
permitted unless authorised by AUDI AG. AUDI AG does not
with respect to the correctness of information in this document. Copyright by AUDI AG.

**NOTICE**

**Risk of leaks if ATF oil pan is damaged.**
– **Do not apply gearbox support - T40173- at ATF oil pan.**

– Position engine and gearbox jack - VAS 6931- with prepared gearbox support - T40173- underneath gearbox and secure with tensioning strap -1-.

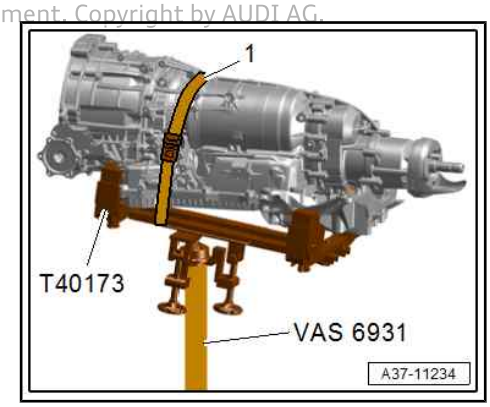


– Remove bolts -arrows- for tunnel cross member.
• For illustration purposes, the gearbox support - T40173- is not shown.
– Detach gearbox from engine and lower carefully using engine and gearbox jack - VAS 6931- (pay attention to electrical wiring and SCR line when doing so).

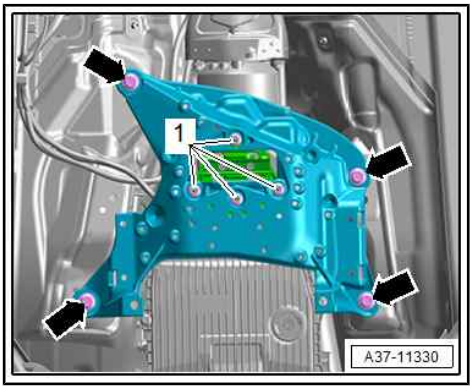


## 2.1.5 Removing gearbox, Q5 with 3.0 ltr. TDI engine (generation II)

**Special tools and workshop equipment required**

- Hose clamps up to 25 mm - 3094-

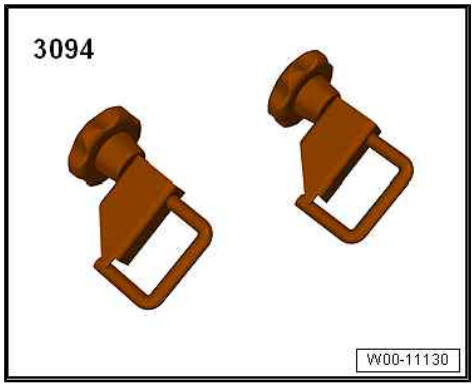


- Ring spanner insert AF 16 - V.A.G 1332/14-

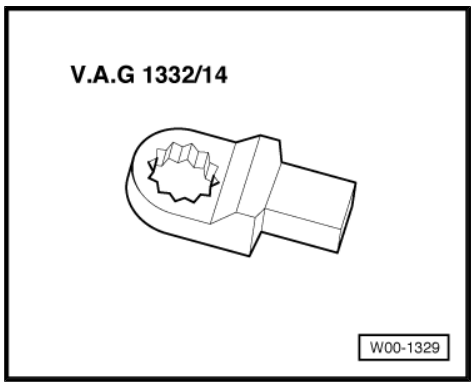


- Engine and gearbox jack - VAS 6931-

Protected by copyright. Copying for private or commercial purposes, in part or in whole is not permitted unless authorised by AUDI AG. AUDI AG does not guarantee or accept any liability with respect to the correctness of information in this document. Copyright by AUDI AG.

- Tensioning strap - T10038-

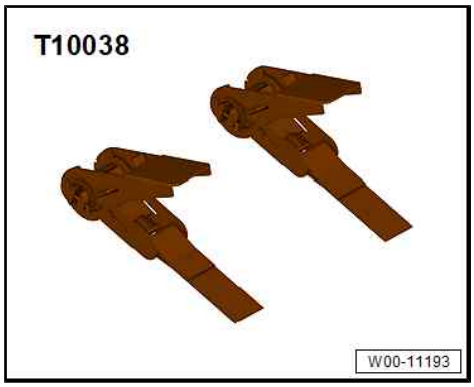

- Gearbox support - T40173-

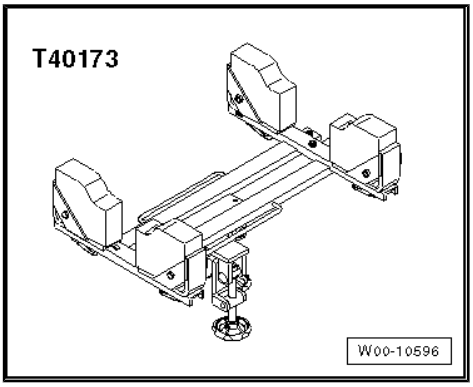


- Wrench 21 mm - T40263-

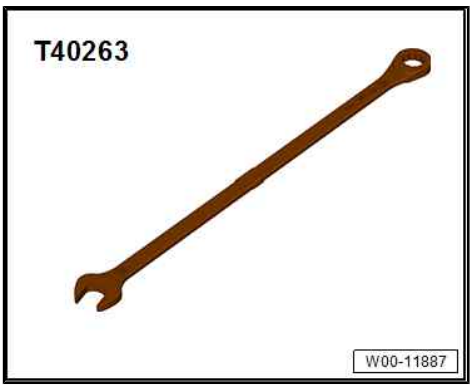


- Adapter -T40314-

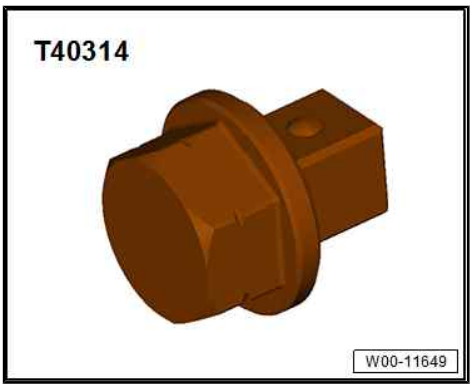


- Brace -T40335- (not illustrated)

Protected by copyright. Copying for private or commercial purposes, in part or in whole, is not permitted unless authorised by AUDI AG. AUDI AG does not guarantee or accept any liability with respect to the correctness of information in this document. Copyright by AUDI AG.

**Preparing gearbox support - T40173- :**

– Mounting block -arrow- must be rotated so that the longer side faces upwards, as shown in illustration.

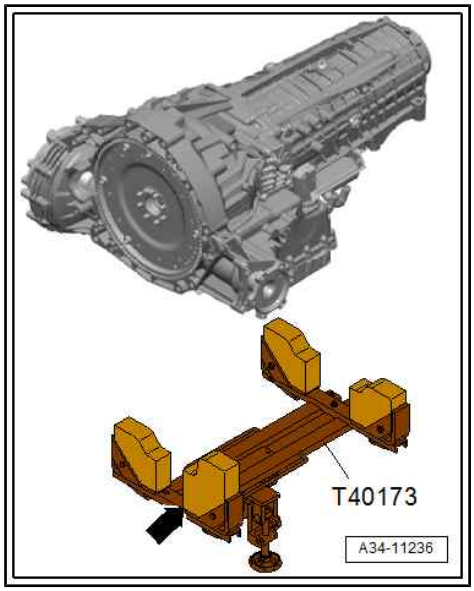


**Procedure**

– Bring front wheels into straight-ahead position.

– Switch off ignition.

– Disconnect earth wire from battery terminal ⇒ Electrical system; Rep. gr. 27 ; Battery; Disconnecting and connecting battery .

– Remove front exhaust pipe ⇒ Engine; Rep. gr. 26 ; Exhaust pipes/silencers; Removing and installing front exhaust pipe .

– Remove emission control module ⇒ Engine; Rep. gr. 26 ; Emission control system; Removing and installing emission control module .

– Remove bolts -arrows-.

– Release screw-type clip -1- and detach exhaust gas recirculation pipe -2-.

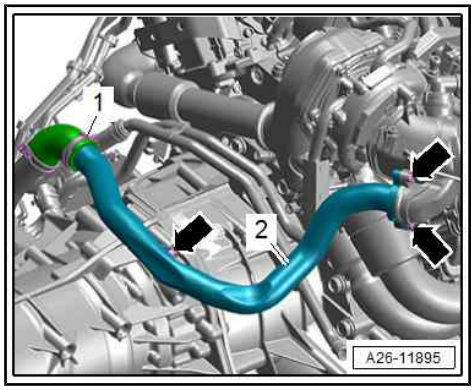


Protected by copyright. Copying for private or commercial purposes, in part or in whole, is not permitted unless authorised by AUDI AG. AUDI AG does not guarantee or accept any liability with respect to the correctness of information in this document.

– Unplug electrical connector -1-.

– Remove bolt -2- and move pressure differential sender 2 - G524- clear.

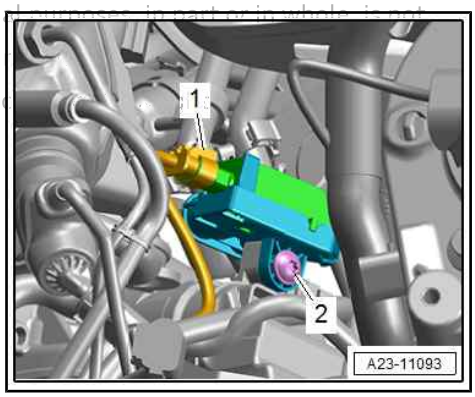


– Unplug electrical connectors and move electrical wiring clear.

1 - Continued coolant circulation pump - V51-

2 - Exhaust gas recirculation control motor 2 - V339-

– Remove coolant pipes (rear) ⇒ Engine; Rep. gr. 19 ; Coolant pipes; Removing and installing coolant pipes .

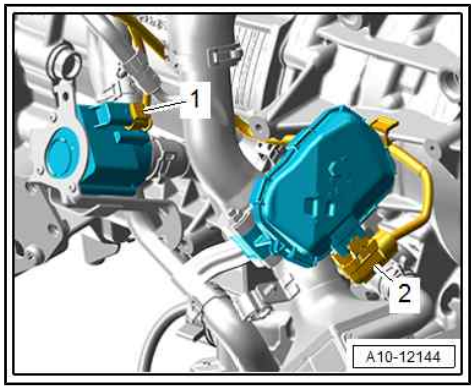

– Remove bolts -2 … 5- securing gearbox to engine (accessible from above).

– Install body brace (front) ⇒ Running gear, axles, steering; Rep. gr. 40 ; Suspension strut, upper links; Removing and installing body brace .

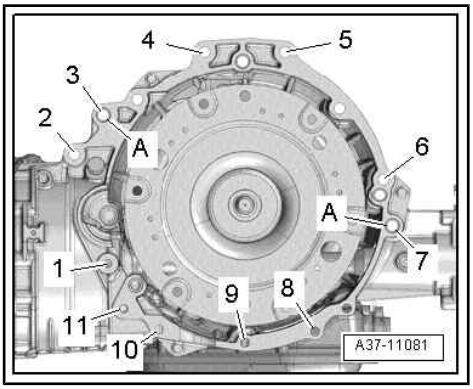


– Use tensioning strap - T10038- to secure engine as shown.

– Remove front wheels ⇒ Running gear, axles, steering; Rep. gr. 44 ; Wheels, tyres .

– Remove propshaft ⇒ Rear final drive; Rep. gr. 39 ; Propshaft; Removing and installing propshaft .

– Remove subframe cross brace ⇒ Running gear, axles, steering; Rep. gr. 40 ; Subframe; Removing and installing subframe cross brace .

– Remove subframe shield on left and right ⇒ Running gear, axles, steering; Rep. gr. 40 ; Subframe; Removing and installing subframe shield .

– Detach intermediate steering shaft from steering rack and slide together ⇒ Running gear, axles, steering; Rep. gr. 48 ; Steering column; Removing and installing intermediate steering shaft .

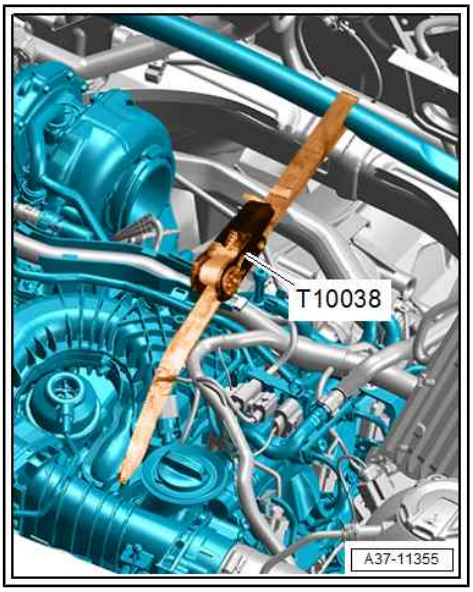


– Unscrew bolts -arrows- and move parking lock manual release cable -1- clear.

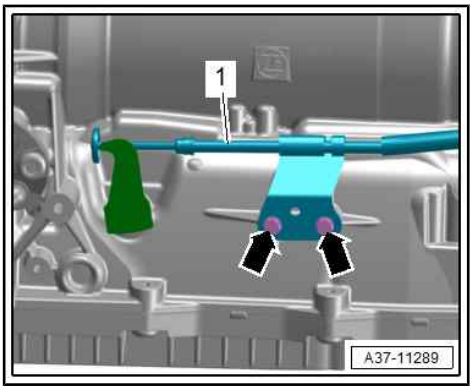


– Release hose clip -arrow- and detach coolant hose.

– Remove drive shaft cover on both sides ⇒ General body repairs, exterior; Rep. gr. 66 ; Wheel housing liners; Exploded view - wheel housing liner (front) .

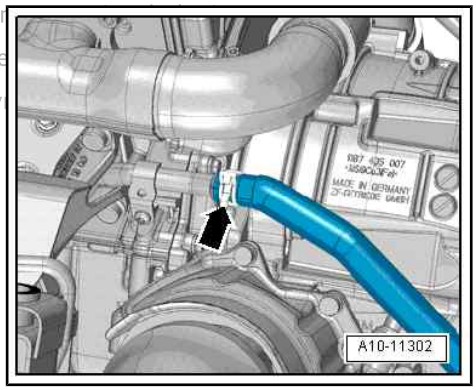


Protected by copyright. Copying for private or commercial purposes, in part or in whole, is not permitted unless authorised by AUDI AG. AUDI AG does not guarantee or assume any liability with respect to the correctness of information in this document. Copyright by AUDI AG.

– Remove bolts -arrows- and push ATF cooler slightly to one side with hoses -1, 2, 4- attached.

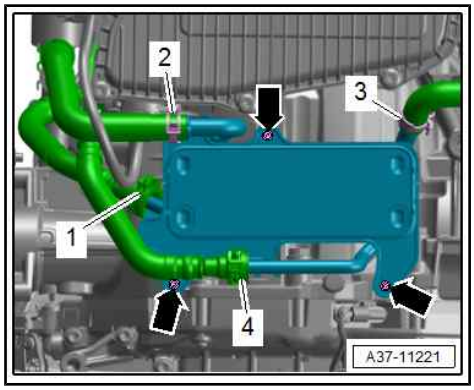


– Detach bottom cover -1- from gearbox -arrow-.

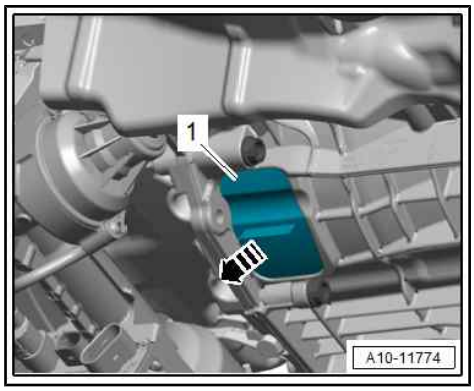


**NOTICE**

**Risk of engine damage if valve gear drive slips**

– **Only turn engine in normal direction of rotation.**

– Turn crankshaft in direction of -arrow- using wrench 21 mm - T40263- and adapter -T40314- .

Protected by copyright. Copying for private or comme
permitted unless authorised by AUDI AG. AUDI AG do
with respect to the correctness of information in this

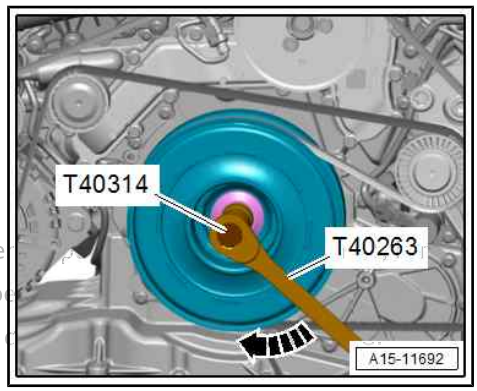


– Remove 6 bolts -arrow- for torque converter -1- (turn crankshaft 60° in direction of engine rotation each time).

– Remove heat shield (right-side) for drive shaft ⇒ Running gear, axles, steering; Rep. gr. 40 ; Drive shaft; Removing and installing heat shield for drive shaft .

– Unbolt drive shafts (left and right) from flange shafts of gearbox ⇒ Running gear, axles, steering; Rep. gr. 40 ; Drive shaft; Removing and installing drive shaft .

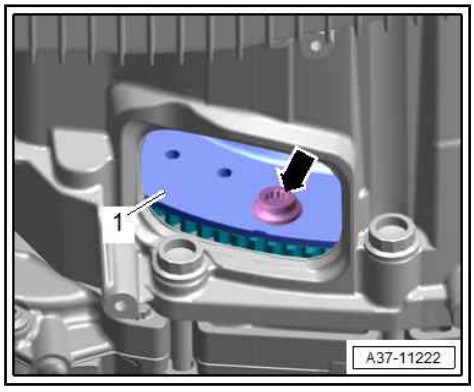

– Remove bolts -arrows- and press coolant pipe (right-side) to side.

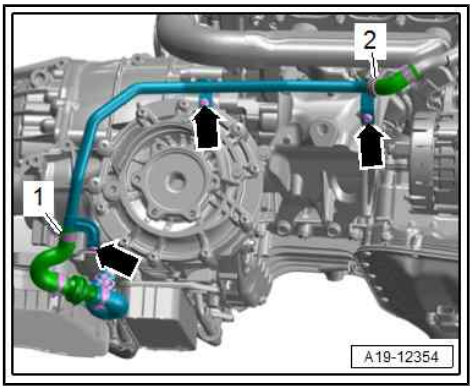


**NOTICE**

**Risk of irreparable damage due to electrostatic discharge.**

- **Do not touch connector contacts with your hands.**
- **Touch the lifting platform or other earthed object to discharge static electricity.**

Reproduction prohibited. Copying for private or commercial purposes, in part or in whole, is not permitted unless authorized by AUDI AG. AUDI AG does not guarantee or assume any liability with respect to the correctness of information in this document. Copyright by AUDI AG.

– Turn fastener anti-clockwise -arrow- and unplug electrical connector -1- on gearbox.

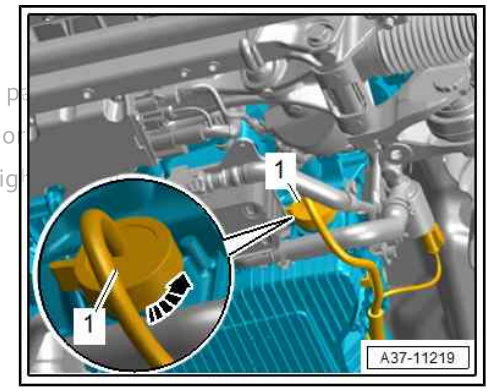


– Remove bolts -6 ... 11- securing gearbox to engine.

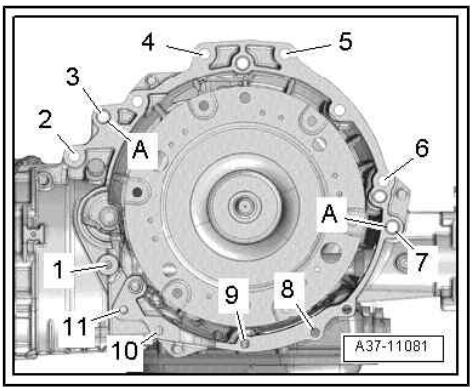


**NOTICE**

**Risk of leaks if ATF oil pan is damaged.**

- **Do not apply gearbox support - T40173- at ATF oil pan.**

– Position engine and gearbox jack - VAS 6931- with prepared gearbox support - T40173- underneath gearbox and secure with tensioning strap -1-.

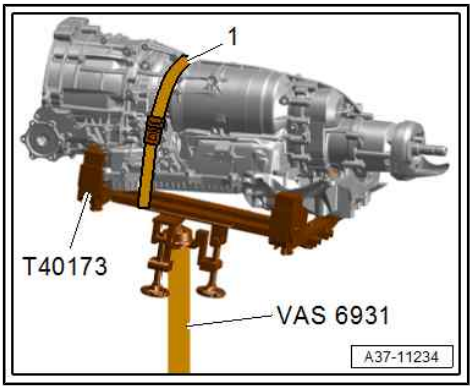

– Remove bolts -arrows- for tunnel cross member.

• For illustration purposes, the gearbox support - T40173- is not shown.

– Working in stages, gradually unscrew last bolt securing starter to gearbox, pressing gearbox further off engine each time.

– Lower gearbox carefully using engine and gearbox jack - VAS 6931- (pay attention to electrical wiring and SCR line when doing so).

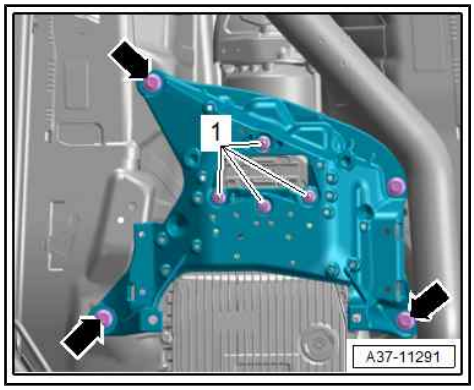


## 2.2 Installing gearbox

**Special tools and workshop equipment required**

♦ Transportation lock - T40170-

Protected by copyright. Copying for private or commercial purposes, in part or in whole, is not permitted unless authorised by AUDI AG. AUDI AG does not guarantee or accept any liability with respect to the correctness of information in this document. Copyright by AUDI AG.

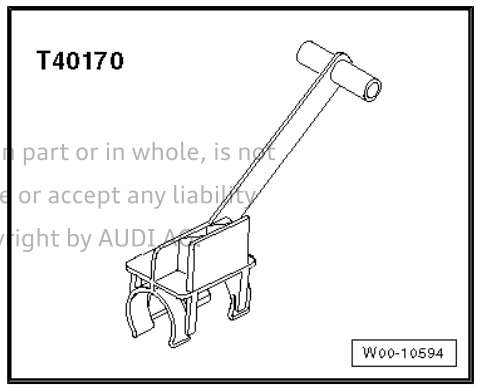


♦ All special tools specified in removal procedure

**Procedure**

♦ Renew bolts which are tightened by turning through a specified angle.

♦ Renew self-locking nuts and bolts, as well as O-rings, seals and gaskets.

♦ Secure hose connections with the correct hose clips (as original equipment); refer to ⇒ Electronic parts catalogue .

♦ Re-attach all cable ties at the same locations when re-installing.

**Tightening torques for installing gearbox** ⇒ page 68

– Before fitting a replacement gearbox, always blow through the ATF cooler and ATF lines with compressed air (not more than 10 bar) ⇒ page 81 .

– Before installing, it is important to clean any residue from threads in cylinder block using a tap.

– When fitting a replacement gearbox: attach gearbox support, gearbox mounting and tunnel cross member to new gearbox ⇒ page 70 .

**NOTICE**

**Risk of leaks if ATF oil pan is damaged.**

– **Do not apply gearbox support - T40173- at ATF oil pan.**

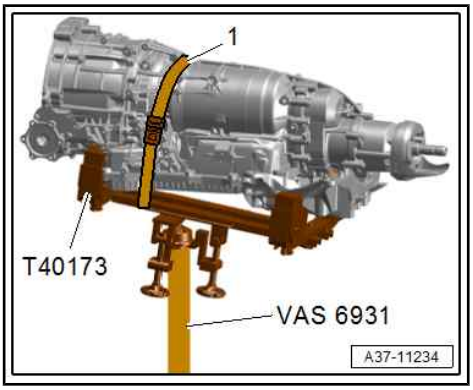


– Position gearbox on gearbox support - T40173- and secure with tensioning strap -1- of engine and gearbox jack, as shown in illustration.

– Before installing gearbox, check installation dimension of torque converter ⇒ Servicing 8-speed automatic gearbox; Rep. gr. 32 ; Torque converter; Removing and installing torque converter .

– The following preparations must be made before joining the engine and gearbox:

– Turn torque converter until hole is visible next to notch -arrow- in recess in bottom of gearbox housing, as shown in illustration.

• There is only one notch on the circumference; turn the torque converter accordingly.

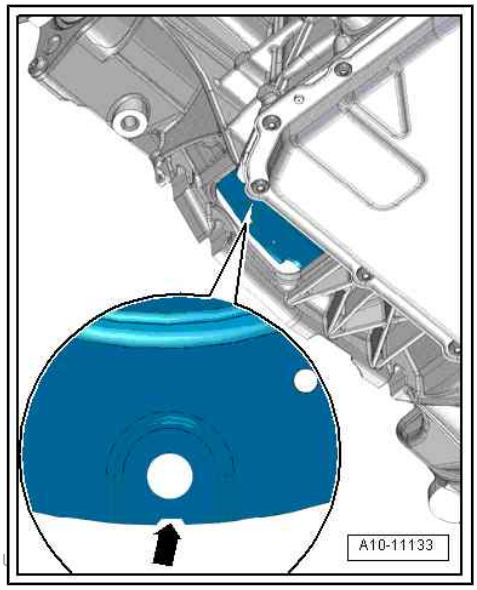


Protected by copyright. Copying for private or commercial pu
permitted unless authorised by AUDI AG. AUDI AG does not guarantee or accept any liability
with respect to the correctness of information in this docum

– Insert transportation lock - T40170- into gearbox housing from below and clamp onto flange shaft -1-.

– Check whether aluminium bolts securing engine to gearbox can be reused; if so, apply marking ⇒ page 69 .

– Before installing gearbox, it is important to clean any residue from threads for engine/gearbox connection in cylinder block using a tap.

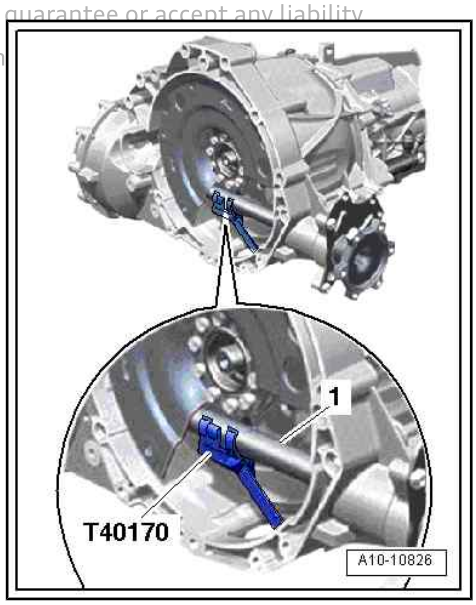

**Vehicles with sealing element:**

– Clean contact surface -1- on timing chain cover (bottom) and sealing element -2- with cleaning solution - D 009 401 04- .

– Bond sealing element to timing chain cover (bottom).

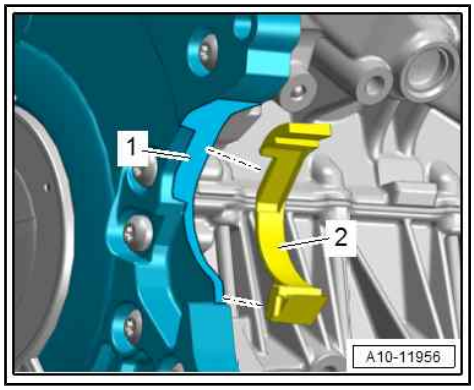


**All vehicles:**

– Move starter into installation position.

– Check that dowel sleeves -A- for centralising engine/gearbox are fitted in the cylinder block.

• When joining engine and gearbox, ensure that end seal is seated correctly.

– Position gearbox against engine; to do so, guide starter into position and at the same time screw in bolt -1- for starter.

– Install tunnel cross member ⇒ page 71 .

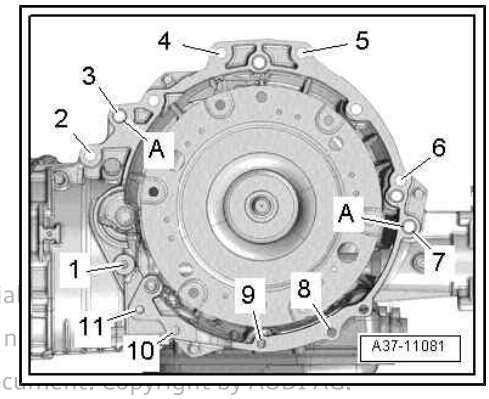


Protected by copyright. Copying for private or commercial purposes, in part, is not permitted unless authorised by AUDI AG. AUDI AG does not make any representation or warranty with respect to the correctness of information in this document. Copyright by AUDI AG.

**A4/A5/Q5 with 3.0 ltr. TFSI engine:**

– Tighten bolts -1 ... 11-.

– Turn crankshaft at vibration damper 360° further in direction of engine rotation -arrow-.

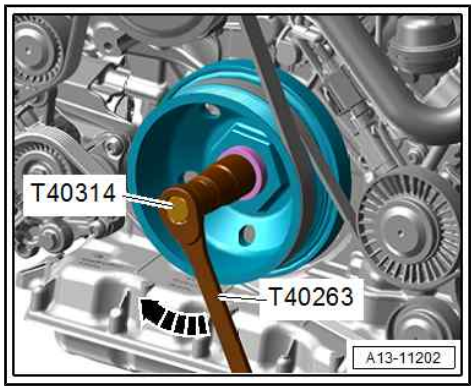


**A4/A5 with 3.0 ltr. TDI engine:**

– Support steering rack -2- with engine and gearbox jack - VAS 6931- (place a suitable piece of foam -1- between steering rack and jack).

– Unscrew locating pins -T40334- on left and right.

– Lower steering rack and press forwards slightly.

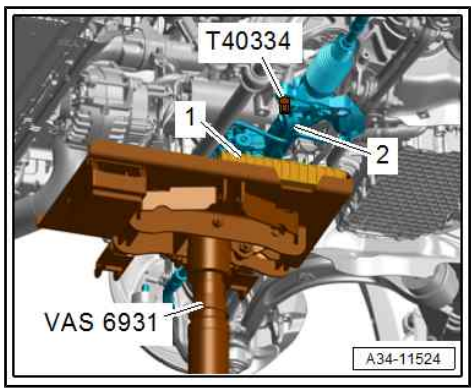

– Tighten bolts -1- and -11-.
– Bring steering rack back into its installation position and secure with locating pins -T40334- .
– Remove support bracket ⇒ Engine; Rep. gr. 10 ; Assembly mountings; Supporting engine in installation position .
– Tighten bolts -2 ... 10-.

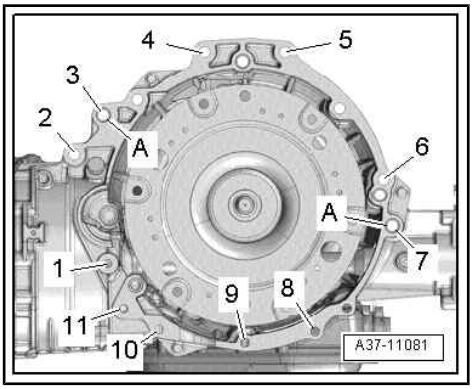


– Turn crankshaft at vibration damper 360° further in direction of engine rotation -arrow-.

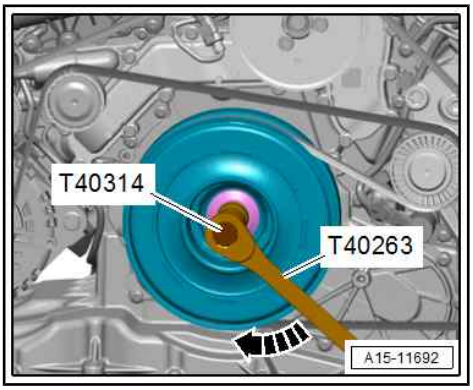


**Q5 with 3.0 ltr. TDI engine:**

– Detach tensioning strap - T10038- .
– Tighten bolts -1 ... 10-.

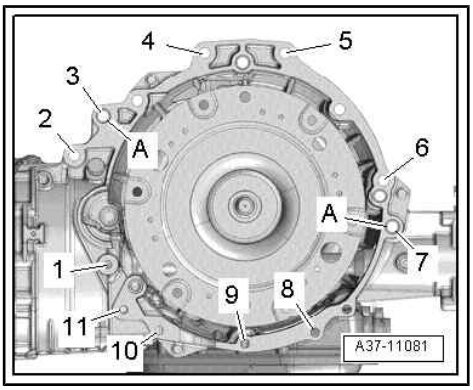


– Turn crankshaft at vibration damper 360° further in direction of engine rotation -arrow-.

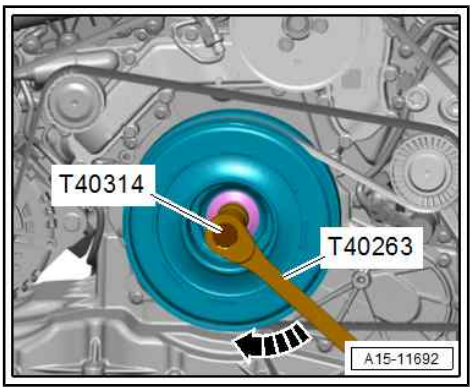


Protected by copyright. Copying for private or commercial purposes, in part or in whole, is not permitted unless authorised by AUDI AG. AUDI AG does not guarantee or accept any liability with respect to the correctness of information in this document. Copyright by AUDI AG.

**All vehicles:**

– Remove transportation lock - T40170- .

• The following step is necessary to ensure that the torque converter makes even and proper contact on the drive plate and does not cant.

– Press torque converter -2- slightly against drive plate -3- in direction of -arrow- using lever -1-.

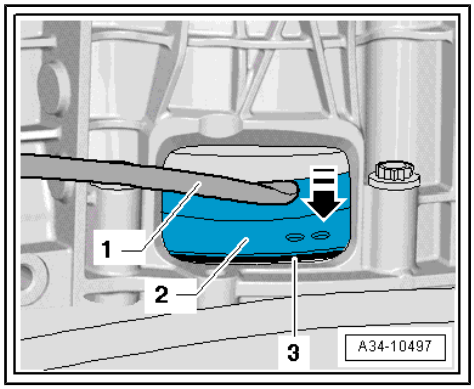


– Secure torque converter -1- to drive plate as follows -arrow-:

• Use ring spanner insert, 16 mm - V.A.G 1332/14- , to tighten bolts.

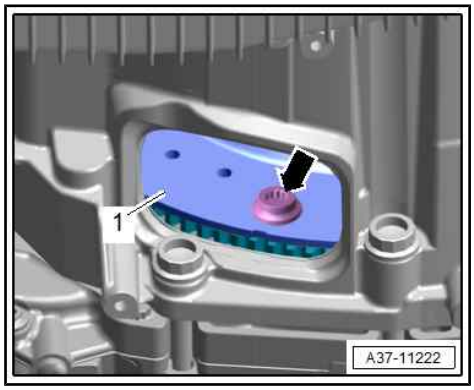


– Tighten first bolt -1- to 10 Nm and loosen again; then tighten to 2 Nm (hand-tight).

– Turn crankshaft via vibration damper 180° further in direction of engine rotation, screw in bolt -4- and tighten ⇒ Servicing 8-speed automatic gearbox; Rep. gr. 32 ; Torque converter .

– Turn crankshaft 60° further in direction of engine rotation (for each bolt), screw in bolts -5- and -6- and tighten.

– Turn crankshaft 60° further in direction of engine rotation and tighten bolt -1-.

– Turn crankshaft 60° further in direction of engine rotation (for each bolt), screw in bolts -2- and -3- and tighten.

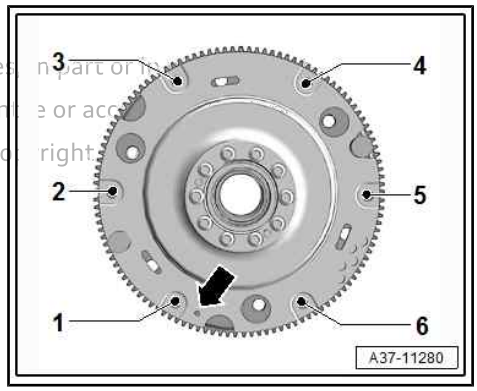


Protected by copyright. Copying for private or commercial purposes, in part or in
permitted unless authorised by AUDI AG. AUDI AG does not guarantee or acc
with respect to the correctness of information in this document. Copyright

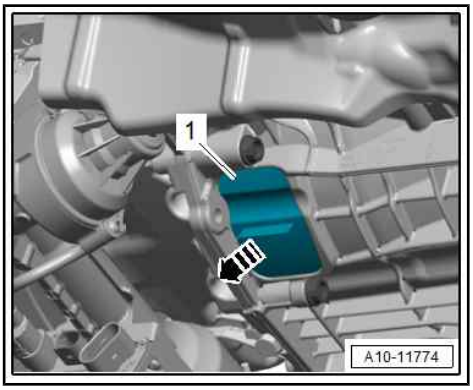


– Install cover -1-.

Perform remaining installation steps in reverse sequence; observe the following:

– Install ATF cooler ⇒ page 79 .

– Install subframe shield ⇒ Running gear, axles, steering; Rep. gr. 40 ; Subframe; Removing and installing subframe shield .

– Install subframe cross brace ⇒ Running gear, axles, steering; Rep. gr. 40 ; Subframe; Removing and installing subframe cross brace .

– Electrical connections and routing ⇒ Current flow diagrams, Electrical fault finding and Fitting locations.

– Secure drive shafts ⇒ Running gear, axles, steering; Rep. gr. 40 ; Drive shaft; Exploded view - drive shaft .

– Install heat shield for drive shaft ⇒ Running gear, axles, steering; Rep. gr. 40 ; Drive shaft; Removing and installing heat shield for drive shaft .

– Install cover for drive shaft ⇒ General body repairs, exterior; Rep. gr. 66 ; Wheel housing liners; Exploded view - wheel housing liner (front) .

Protected copyright. Copying for private or commercial purposes, in part or in whole, is not permitted unless authorised by AUDI AG. AUDI AG does not guarantee or accept any liability with respect to the correctness of information in this document. Copyright by AUDI AG.

– Fit front wheels ⇒ Running gear, axles, steering; Rep. gr. 44 ; Wheels, tyres .

– Install manual release cable for parking lock ⇒ page 25 .

– Install coolant pipes ⇒ Engine; Rep. gr. 19 ; Coolant pipes; Exploded view - coolant pipes .

– Install intermediate steering shaft ⇒ Running gear, axles, steering; Rep. gr. 48 ; Steering column; Removing and installing intermediate steering shaft .

– Install propshaft ⇒ Rear final drive; Rep. gr. 39 ; Propshaft; Removing and installing propshaft .

– Install catalytic converter ⇒ TFSI engine; Rep. gr. 26 ; Emission control system; Removing and installing catalytic converter . Alternatively, install emission control module ⇒ TDI engine; Rep. gr. 26 ; Emission control system; Removing and installing emission control module .

– Install front silencers ⇒ Engine; Rep. gr. 26 ; Exhaust pipes/silencers; Removing and installing front silencers . Or, install front exhaust pipe ⇒ Engine; Rep. gr. 26 ; Exhaust pipes/silencers; Removing and installing front exhaust pipe .

– Fill up with coolant ⇒ Engine; Rep. gr. 19 ; Cooling system/coolant; Draining and filling cooling system .

– Observe measures required after connecting battery ⇒ Electrical system; Rep. gr. 27 ; Battery; Disconnecting and connecting battery .

– Check ATF level and top up as required ⇒ page 84 .

• It is not necessary to check the ATF level if a brand new gearbox is being installed.

• If renewing the gearbox, run the function “Replace control unit” in ⇒ Vehicle diagnostic tester.

**Procedure**

– Connect vehicle diagnostic tester .

– Select `Diagnosis` mode and begin diagnosis.

– Select `Test plan` tab.

– Choose `Select own test` and select following options one after the other:

- Drive system
- 8-speed automatic gearbox 0D5
- 01 - Self-diagnosis compatible systems
- 02 - Gearbox electronics 0D5
- 02 - Gearbox electronics, functions
- 02 - Replace control unit ⇒ Complete gearbox

– Start the selected program and follow the instructions on the display of the vehicle diagnostic tester.

Reproduction prohibited. Copyright. Copying for private or commercial purposes, in part or in whole, is not permitted unless authorised by AUDI AG. AUDI AG does not guarantee or accept any liability with respect to the correctness of information in this document. Copyright by AUDI AG.

## 2.3 Tightening torques for gearbox

- Tightening torques apply only to lightly greased, oiled, phosphated or black-finished nuts and bolts.
- Additional lubricants such as engine or gear oil may be used, but do not use lubricants containing graphite.
- Do not use degreased parts.
- Tolerance for tightening torques: ± 15 %

Other tightening torques:

| Component | | Nm |
|---|---|---|
| Bolts/nuts | M6 | 9 |
| | M7 | 15 |
| | M8 | 20 |
| | M10 | 40 |
| | M12 | 65 |

- Torque converter to drive plate ⇒ Servicing 8-speed automatic gearbox; Rep. gr. 32 ; Torque converter; Exploded view - torque converter
- Assembly mountings ⇒ page 70

**Engine/gearbox attachment (6 cyl. engine)**

| Item | Bolt | Nm |
|---|---|---|
| 1 | M10x50 [1] | 65 |
| 2 ... 6 | M12x100 [2] | 30 + 90° |
| 7 | M12x125 | 30 + 90° |
| 8, 11 | M10x60 [2] | 15 + 90° |
| 9 | M10x75 [2] | 15 + 90° |
| 10 | M10x95 [2] | 15 + 90° |
| A | Dowel sleeves for centralising | |

- [1] Secures starter to gearbox. Property class 10.9. The steel bolt can be re-used any number of times.
- [2] Aluminium bolts must not be used more than twice ⇒ page 69 .

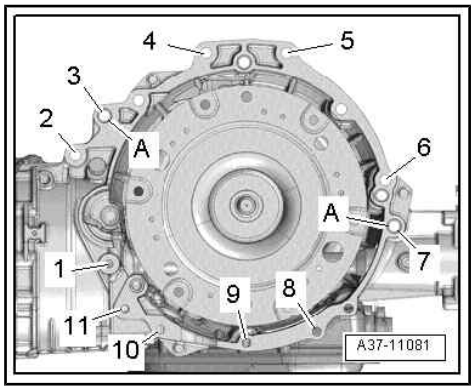

- The aluminium bolts -2 … 11- may only be used twice. After first use, bolts must therefore be identified with an “X” made by two chisel marks -arrow-.
- To avoid damaging the bolts when making this mark, do not clamp them directly in a vice. Clamp a 14 mm socket with 1/2" drive in the vice instead, and insert the bolt into the socket, as shown in illustration.
- Bolts already marked with an “X” must not be used again.

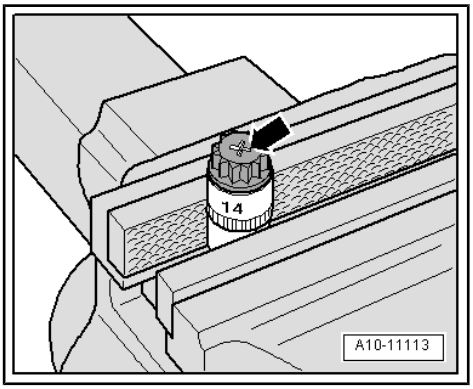


Protected by copyright. Copying for private or commercial purposes, in part or in whole, is not permitted unless authorised by AUDI AG. AUDI AG does not guarantee or accept any liability with respect to the correctness of information in this document. Copyright by AUDI AG.

# 3 Assembly mountings

⇒ “3.1 Exploded view - assembly mountings”, page 70

⇒ “3.2 Removing and installing tunnel cross member”, page 71

## 3.1 Exploded view - assembly mountings

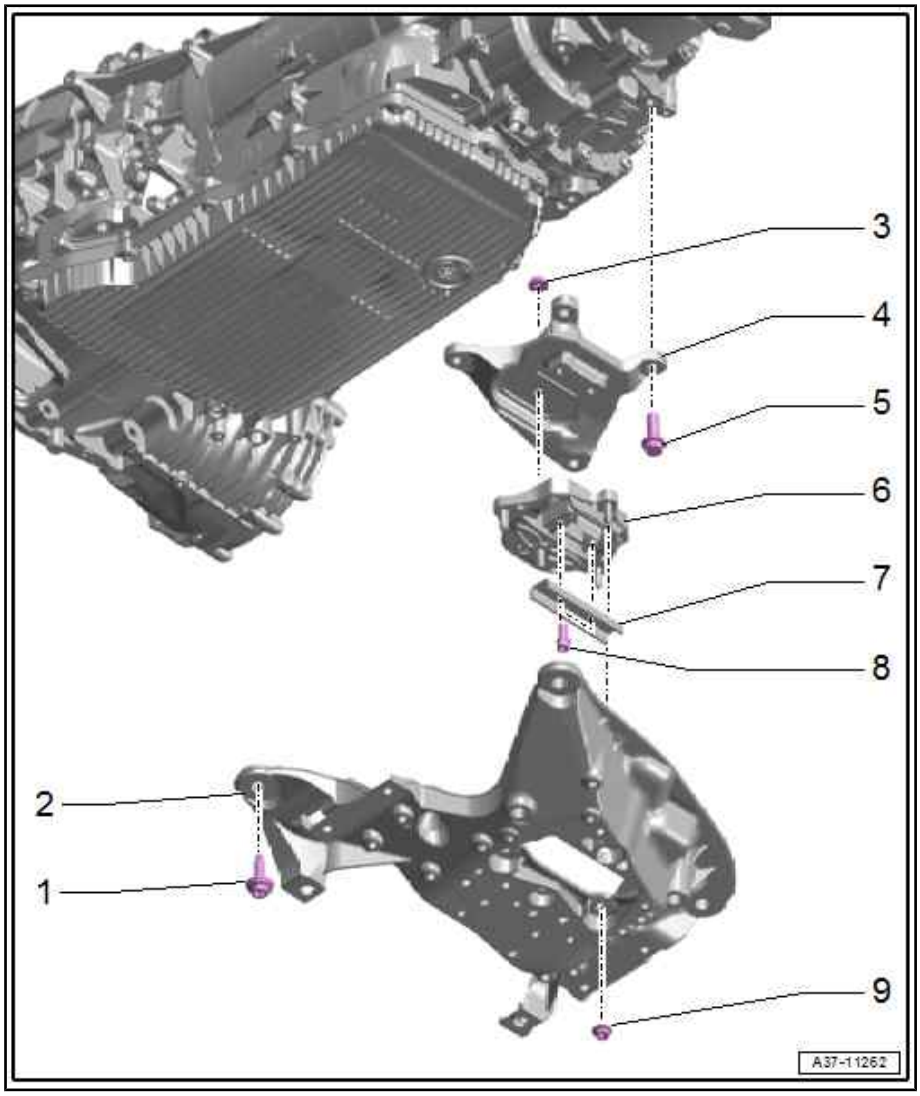


**1 - Bolt**

- ❑ 55 Nm

**2 - Tunnel cross member**

- ❑ Different versions depending on model
- ❑ Removing and installing ⇒ page 71

**3 - Nut**

- ❑ Only remove if gearbox mounting has to be detached from gearbox support
- ❑ 20 Nm

**4 - Gearbox support**

- ❑ Removing and installing ⇒ Engine; Rep. gr. 10 ; Assembly mountings; Removing and installing gearbox mounting

**5 - Bolt**

- ❑ 40 Nm

**6 - Gearbox mounting**

- ❑ Removing and installing ⇒ Engine; Rep. gr. 10 ; Assembly mountings; Removing and installing gearbox mounting

**7 - Stop**

- ❑ For gearbox mounting

**8 - Bolt**

- ❑ Only remove if gearbox mounting has to be detached from gearbox support
- ❑ Renew
- ❑ 20 Nm +90°

**9 - Nut**

- ❑ 20 Nm

Protected by copyright. Copying for private or commercial purposes, in part or in whole, is not permitted unless authorised by AUDI AG. AUDI AG does not guarantee or accept any liability with respect to the correctness of information in this document. Copyright by AUDI AG.

## 3.2 Removing and installing tunnel cross member

⇒ "3.2.1 Removing and installing tunnel cross member, A4/A5", page 71

⇒ "3.2.2 Removing and installing tunnel cross member, Q5", page 72

### 3.2.1 Removing and installing tunnel cross member, A4/A5

**Special tools and workshop equipment required**

- Engine and gearbox jack - 6931-

- Gearbox support - T10337-

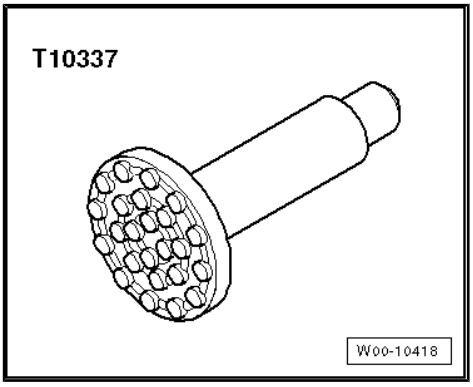


**Removing**

– Remove noise insulation (rear) ⇒ General body repairs, exterior; Rep. gr. 66 ; Noise insulation; Removing and installing noise insulation .

– Set up gearbox support - T10337- on engine and gearbox jack - VAS 6931- and position underneath gearbox.

• To prevent damage to propshaft heat shield, place a suitable block of wood -arrow- underneath, as shown in illustration.

– Raise gearbox slightly.

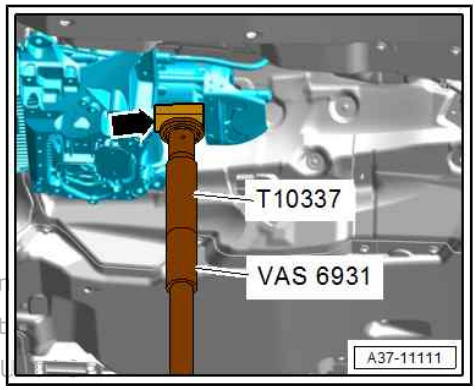


**CAUTION**

**Risk of accident due to loose parts.**

**– Engine and gearbox jack - VAS 6931- must remain in position when work is being carried out and must not be left unattended under the vehicle.**

Protected by copyright. Copying for private or commercial purposes, in part or in
permitted unless authorised by AUDI AG. AUDI AG does not guarantee or accept
with respect to the correctness of information in this document. Copyright by AU

– Unscrew bolts -arrows- and nuts -1- and remove tunnel cross member.

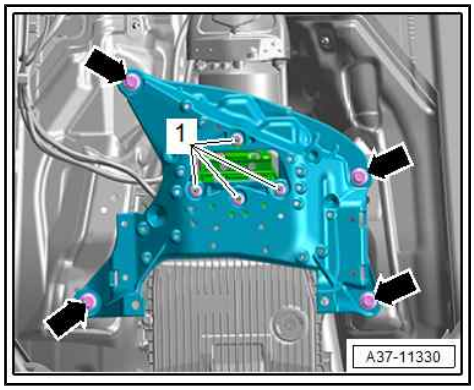


**Installing**

Installation is carried out in reverse sequence.

**Tightening torques**

- ⇒ “3.1 Exploded view - assembly mountings”, page 70
- ⇒ General body repairs, exterior; Rep. gr. 66 ; Noise insulation; Exploded view - noise insulation

## 3.2.2 Removing and installing tunnel cross member, Q5

**Special tools and workshop equipment required**

- Engine and gearbox jack - 6931-

- Tensioning strap - T10038-

Protected by copyright. Copying for private or commercial purposes, in part [illegible] is not permitted unless authorised by AUDI AG. AUDI AG does not guarantee or accept a[illegible] ty with respect to the correctness of information in this document. Copyright by AUDI AG.

- Gearbox support - T10337-

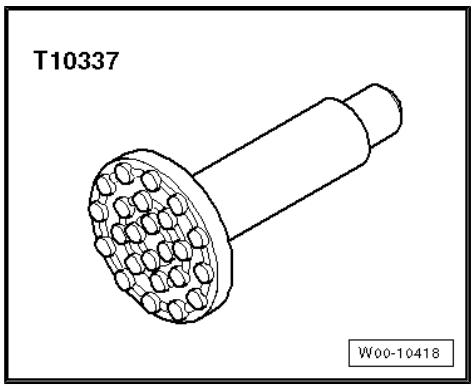

## Removing

– Remove noise insulation (centre and rear) ⇒ General body repairs, exterior; Rep. gr. 66 ; Noise insulation; Removing and installing noise insulation .

– Set up gearbox support - T10337- on engine and gearbox jack - VAS 6931- and position underneath gearbox.

• To prevent damage to propshaft heat shield, place a suitable block of wood -arrow- underneath, as shown in illustration.

– Raise gearbox slightly.

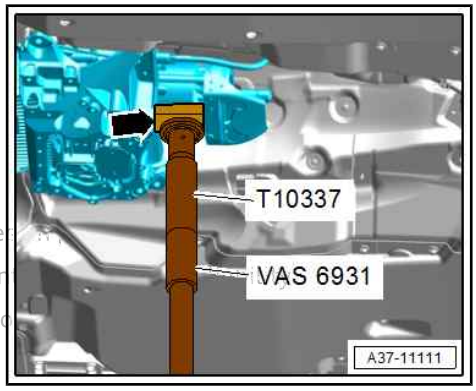


**CAUTION**

**Risk of accident due to loose parts.**

**– Engine and gearbox jack - VAS 6931- must remain in position when work is being carried out and must not be left unattended under the vehicle.**

provided unless authorised by AUDI AG. AUDI AG does not guaran
with respect to the correctness of information in this document. Co

– Remove bolts -arrows- (left and right) for front silencer/front exhaust pipe/exhaust gas recirculation pipe.

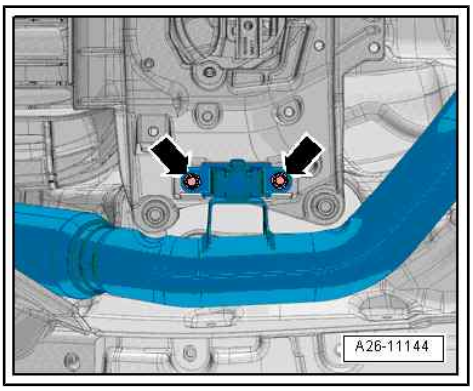


– Release clamp -arrow- on left and right.

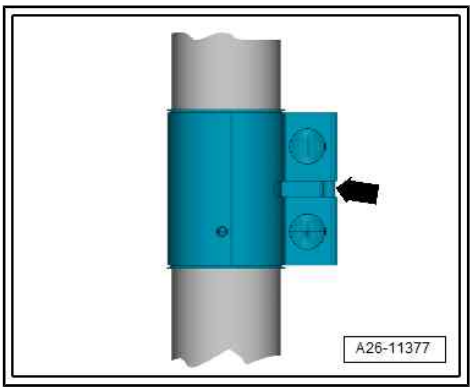


**NOTICE**

**Risk of damage to flexible joint if handled incorrectly.**

**– Do not bend flexible joint more than 10°.**

**– Install flexible joint so that it is not under tension.**

– Push clamps towards rear, lower front silencers slightly and tie up with tensioning strap - T10038- , as shown.

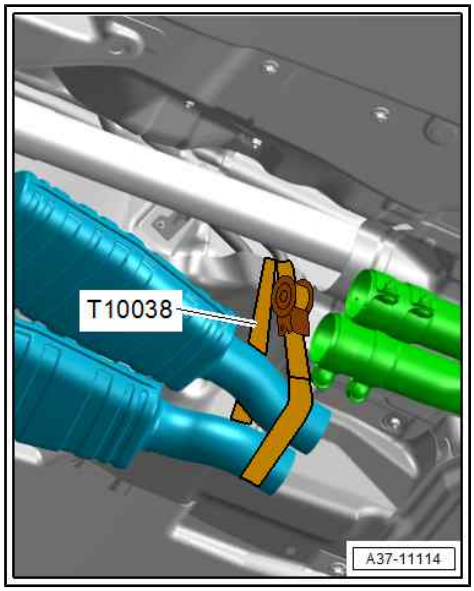


– Unscrew bolts -arrows- and remove tunnel cross member.

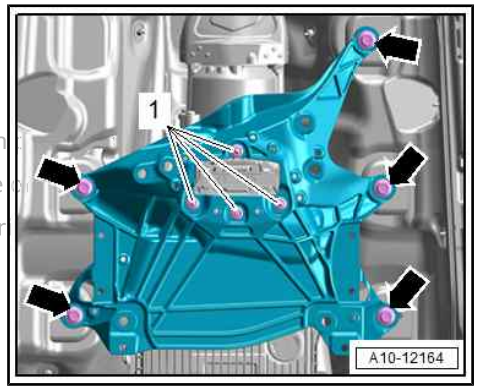


**Installing**

Installation is carried out in reverse sequence.

Protected by copyright. Copying for private or commercial purposes, in
permitted unless authorised by AUDI AG. AUDI AG does not guarantee
with respect to the correctness of information in this document. Copyr

**Tightening torques**

- ⇒ “3.1 Exploded view - assembly mountings”, page 70
- ⇒ General body repairs, exterior; Rep. gr. 66 ; Noise insulation; Exploded view - noise insulation

# 4 Transporting gearbox

**Special tools and workshop equipment required**

- Hook and support tool - 3311- with bolt -3311/1-

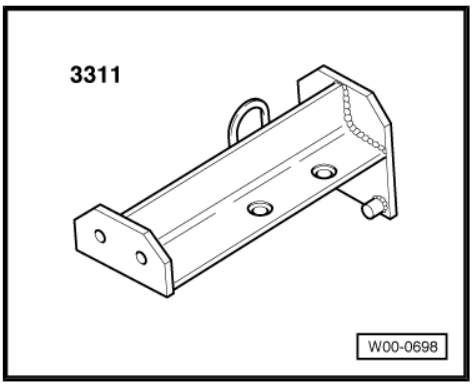


- Workshop hoist - VAS 6100-

**Procedure**

- Gearbox removed ⇒ page 32 .

**NOTICE**

**Risk of leaks if ATF oil pan is damaged.**

– **The gearbox must not be placed down on the ATF cooler or ATF oil pan.**

Protected by copyright. Copying for private or commercial purposes, in part or in whole, is not permitted unless authorised by AUDI AG. AUDI AG does not guarantee or accept any liability with respect to the correctness of information in this document.

**CAUTION**

**Risk of accident if gearbox is not secured sufficiently.**

– **Replace bolt of hook and support tool - 3311- with new, longer bolt -3311/1- .**

– Secure gearbox to hook and support tool - 3311- (using new, longer bolt -3311/1- ).

– The workshop hoist - VAS 6100- can be used to lift and move the gearbox.

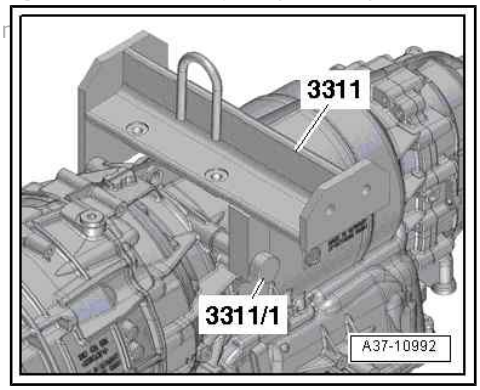

# 5 Securing to engine and gearbox support

## Special tools and workshop equipment required

♦ Support plate - VW 309-

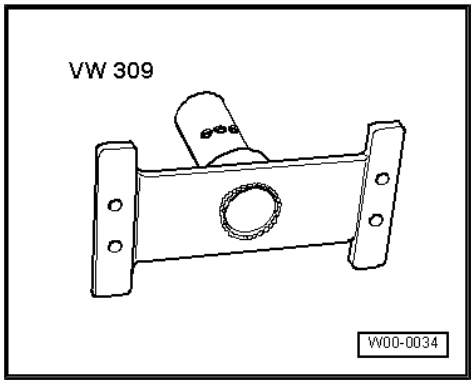


♦ Engine and gearbox support - VAS 6095A-

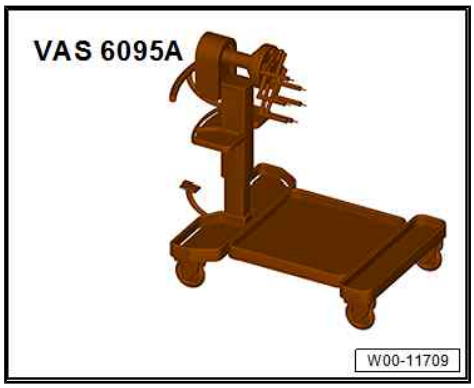


## Procedure

- Gearbox is on workshop hoist - VAS 6100- ⇒ page 75 .
- – Secure support plate - VW 309- to hook and support tool - 3311- .
- – Using workshop hoist - VAS 6100- , insert gearbox into engine and gearbox support - VAS 6095A- .
- If the filled gearbox with ATF oil pan is to be turned upside-down on the engine and gearbox support, the breathers for the gearbox housing and final drive must be sealed.

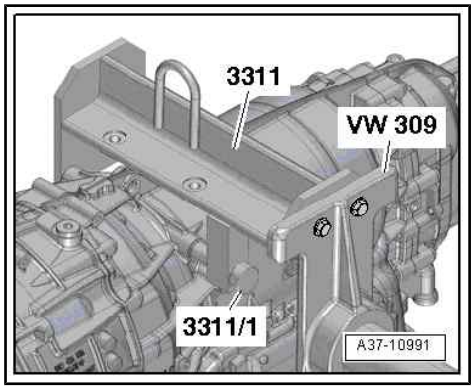


Protected by copyright. Copying for private or commercial purposes, in part or in whole, is not permitted unless authorised by AUDI AG. AUDI AG does not guarantee or accept any liability with respect to the correctness of information in this document. Copyright by AUDI AG.

# 6 ATF circuit

⇒ "6.1 Exploded view - ATF circuit", page 77

⇒ "6.2 Removing and installing ATF cooler", page 79

⇒ "6.3 Removing and installing ATF lines", page 80

## 6.1 Exploded view - ATF circuit

⇒ "6.1.1 Exploded view - ATF circuit, version 1", page 77

⇒ "6.1.2 Exploded view - ATF circuit, version 2", page 78

### 6.1.1 Exploded view - ATF circuit, version 1

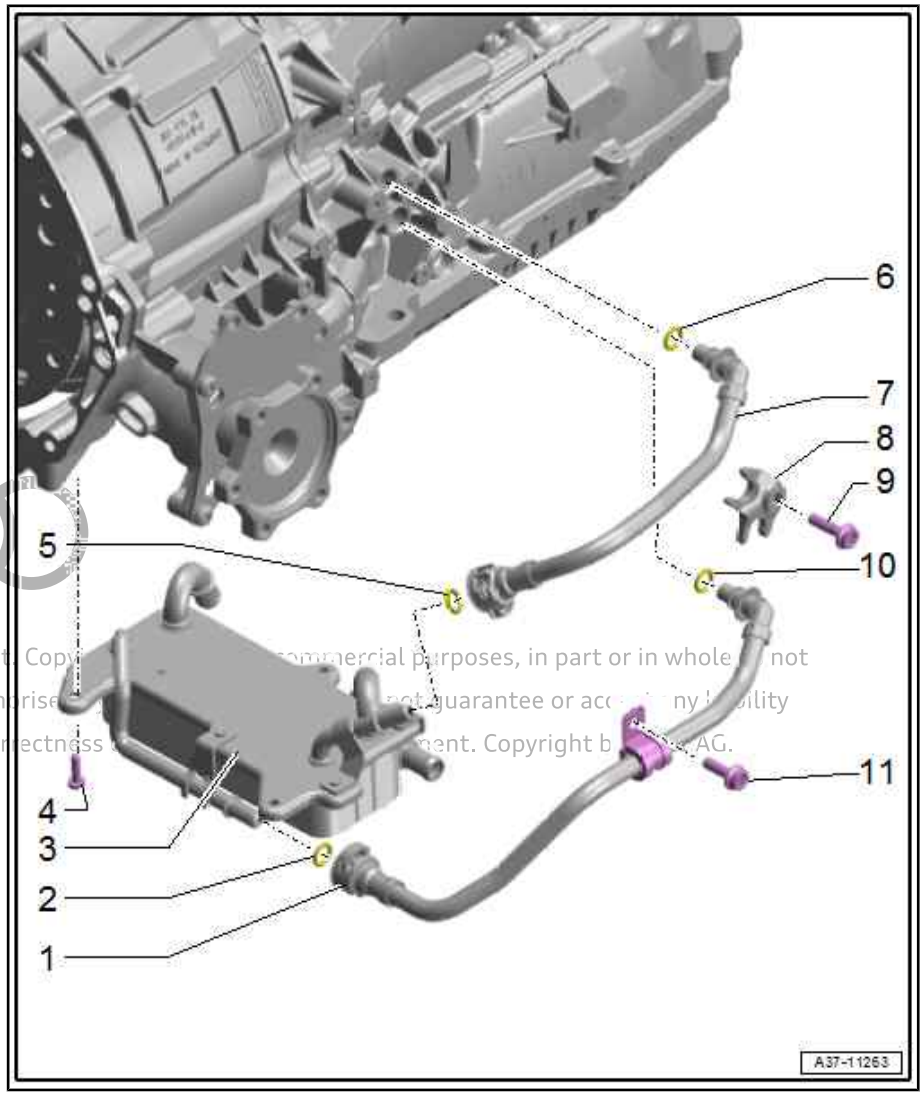


**1 - ATF line**
- ❑ Cleaning ⇒ page 81
- ❑ Push in by hand with new O-ring as far as stop

**2 - O-ring**
- ❑ Renew ATF line if it leaks
- ❑ Lightly lubricate with ATF before inserting

**3 - ATF cooler**
- ❑ Removing and installing ⇒ page 79

**4 - Bolt**
- ❑ 8 Nm

**5 - O-ring**
- ❑ Renew ATF line if it leaks
- ❑ Lightly lubricate with ATF before inserting

**6 - O-ring**
- ❑ Renew ATF line if it leaks
- ❑ Lightly lubricate with ATF before inserting

**7 - ATF line**
- ❑ Cleaning ⇒ page 81
- ❑ Push in by hand with new O-ring as far as stop

**8 - Bracket**

**9 - Bolt**
- ❑ 20 Nm

**10 - O-ring**
- ❑ Renew ATF line if it leaks
- ❑ Lightly lubricate with ATF before inserting

**11 - Bolt**
- ❑ 20 Nm

Protected by copyright. Copy... commercial purposes, in part or in whole ... not permitted unless authorise... not guarantee or acc... ny liability with respect to the correctness ... ment. Copyright b... AG.

**Disconnecting ATF line**

– Release retainer -1- -arrows B- on plug-in connector -2- and lift -arrow A-.

– Disconnect plug-in connector.

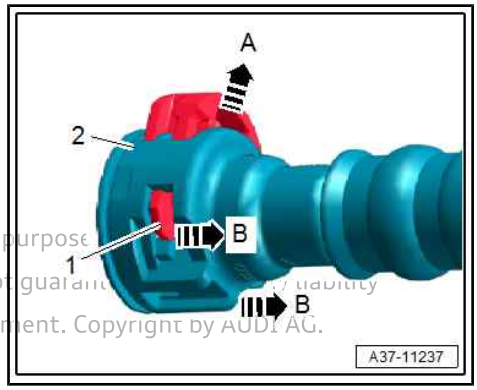


Protected by copyright. Copying for private or commercial purpose is not permitted unless authorised by AUDI AG. AUDI AG does not guarantee or assume liability with respect to the correctness of information in this document. Copyright by AUDI AG.

## 6.1.2 Exploded view - ATF circuit, version 2

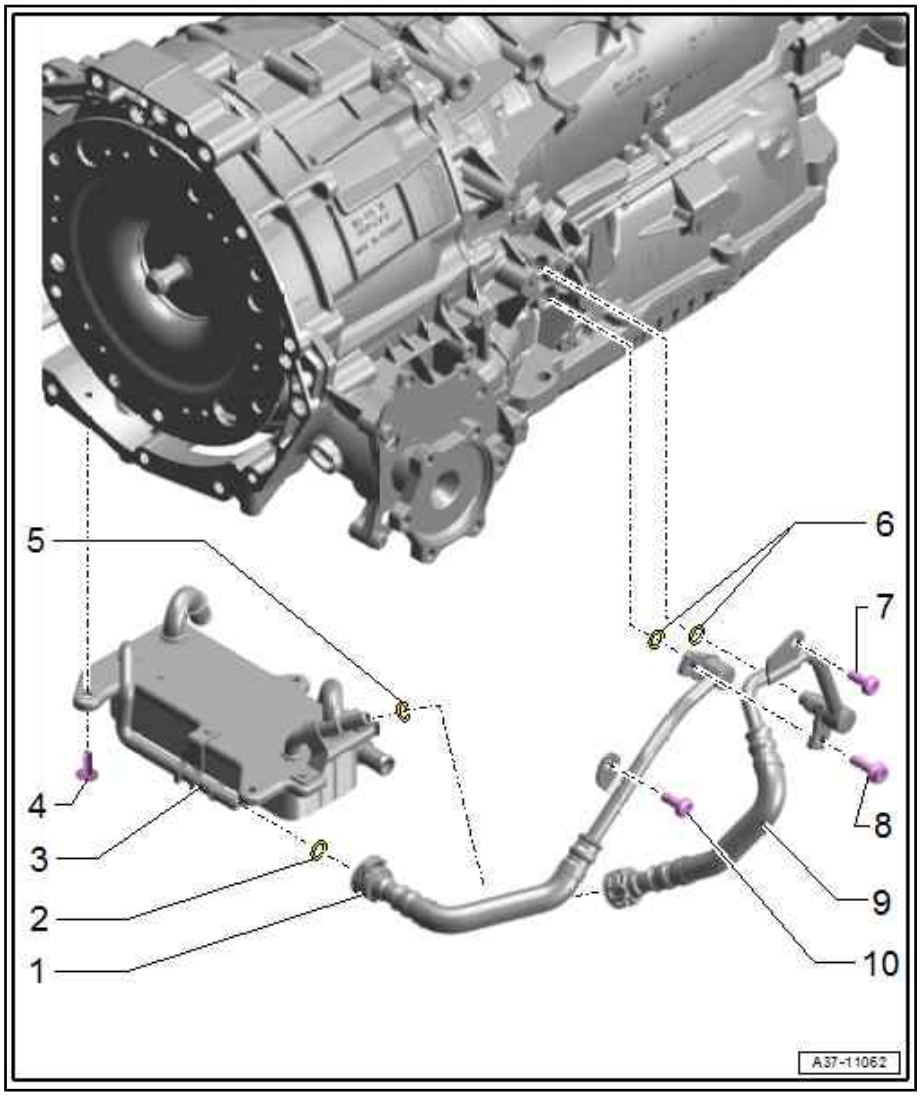


**1 - ATF pipe/hose assembly**

- ❑ Cleaning ⇒ page 81
- ❑ Push in by hand with new O-ring as far as stop

**2 - O-ring**

- ❑ Renew ATF hose if it leaks
- ❑ Lightly lubricate with ATF before inserting

**3 - ATF cooler**

- ❑ Removing and installing ⇒ page 79

**4 - Bolt**

- ❑ 8 Nm

**5 - O-ring**

- ❑ Renew ATF hose if it leaks
- ❑ Lightly lubricate with ATF before inserting

**6 - O-rings**

- ❑ Renew
- ❑ Lightly lubricate with ATF before inserting

**7 - Not fitted**

**8 - Bolt**

- ❑ First push in ATF lines with new O-rings by hand as far as stop
- ❑ Retaining tab on bottom ATF line should rest on thread of gearbox
- ❑ Retaining tab on top ATF line should rest on retaining tab on bottom ATF line
- ❑ 20 Nm

**9 - ATF pipe/hose assembly**

- ❑ Cleaning ⇒ page 81
- ❑ Push in by hand with new O-ring as far as stop

**10 - Bolt**

❑ 8 Nm

**Disconnecting ATF line**

– Release retainer -1- -arrows B- on plug-in connector -2- and lift -arrow A-.

– Disconnect plug-in connector.

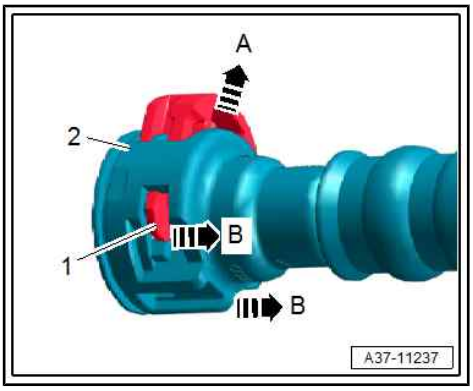


## 6.2 Removing and installing ATF cooler

**Special tools and workshop equipment required**

♦ Hose clamps up to 25 mm - 3094-

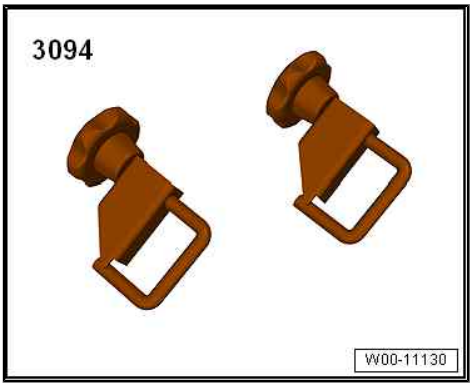


♦ Hose clip pliers - VAS 6362-

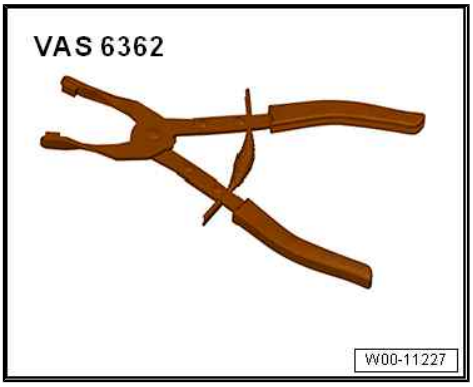


♦ Used oil collection and extraction unit - VAS 6622A-

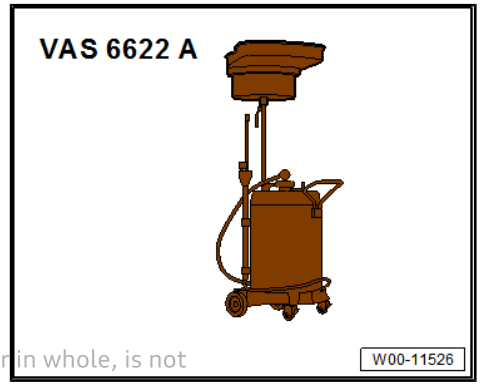


Protected by copyright. Copying for private or commercial purposes, in part or in whole, is not permitted unless authorised by AUDI AG. AUDI AG does not guarantee or accept any liability with respect to the correctness of information in this document. Copyright by AUDI AG.

### Removing

– Remove noise insulation ⇒ General body repairs, exterior; Rep. gr. 66 ; Noise insulation; Removing and installing noise insulation :

♦ A4/A5: noise insulation (rear)

♦ Q5: noise insulation (centre)

– Place used oil collection and extraction unit - VAS 6622A- below gearbox.

– Disconnect ATF lines -1, 4- ⇒ page 78 .

– Place a cloth below the connection to catch escaping coolant.

– Clamp off coolant hoses using hose clamps up to 25 mm - 3094- and disconnect hoses (release hose clips -2, 3-).

– Remove bolts -arrows- and detach ATF cooler.

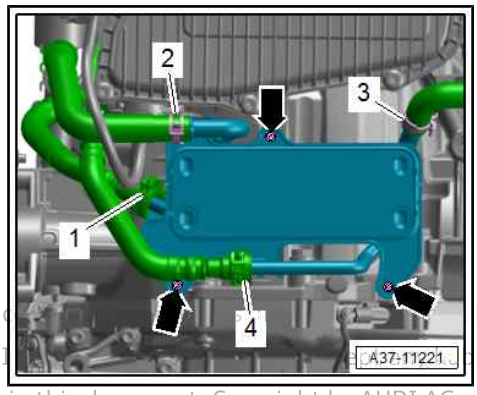


### Installing

Installation is carried out in reverse order; note the following:

♦ Secure all hose connections with the correct hose clips (as original equipment); refer to ⇒ Electronic parts catalogue .

– Push on ATF lines as far as stop and secure with retaining clips.

• Leaking ATF lines must be renewed.

• Renew retaining clips which have been bent or over-stretched.

• The retaining clips must be fitted securely.

– Check ATF level ⇒ page 84 .

### Tightening torques

♦ ⇒ “6.1 Exploded view - ATF circuit”, page 77

♦ ⇒ General body repairs, exterior; Rep. gr. 66 ; Noise insulation; Exploded view - noise insulation

Protected by copyright. Copying for private or commercial purposes, in part or in whole, is not permitted unless authorised by AUDI AG. AUDI AG does not make any representation or warranty regarding the correctness of information in this document. Copyright by AUDI AG.

## 6.3 Removing and installing ATF lines

### Special tools and workshop equipment required

♦ Used oil collection and extraction unit - VAS 6622A-

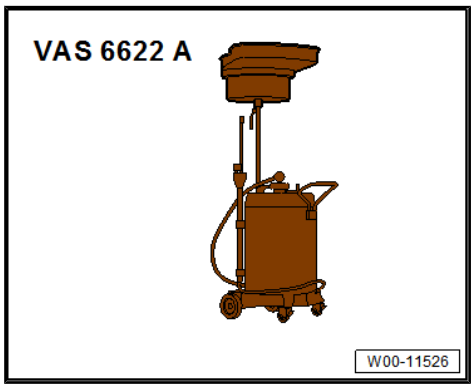


♦ Hose, approx. 18 mm dia.

♦ Compressed-air gun (commercially available)

♦ Safety goggles

### Requirements

♦ General repair instructions ⇒ page 5 .

- Rules for cleanliness ⇒ page 4 .
- Seal off open lines and connections with clean plugs from engine bung set - VAS 6122- .
- Renew O-rings after removal.
- Check ATF level after removing and installing ATF lines ⇒ page 84 .

### Removing and installing

– Remove noise insulation ⇒ General body repairs, exterior; Rep. gr. 66 ; Noise insulation; Removing and installing noise insulation :

- A4/A5: noise insulation (rear)
- Q5: noise insulation (centre)

– Disconnect ATF lines -arrows- ⇒ page 78 .

Protected by copyright. Copying for private or commerc
permitted unless authorised by AUDI AG. AUDI AG does
with respect to the correctness of information in this do

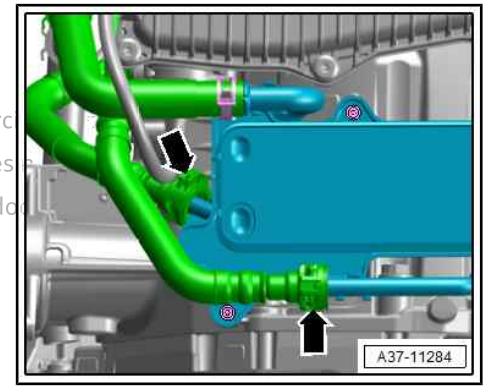


– Unscrew bolts -arrows- and detach ATF lines from gearbox. (Different versions.)

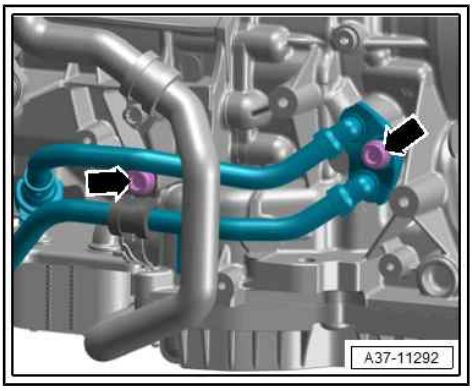


### Cleaning

- Observe rules for cleanliness ⇒ page 4 .

– Before fitting a replacement gearbox, always blow through the ATF cooler and ATF lines with compressed air (not more than 10 bar).

– Place used oil collection and extraction unit - VAS 6622A- below gearbox.

- If the ATF which emerges during cleaning is very dirty, the ATF lines and ATF cooler must additionally be flushed out with clean ATF.

### Tightening torques

- ⇒ Engine; Rep. gr. 19 ; Coolant pump/thermostat assembly; Exploded view - electric coolant pump
- ⇒ General body repairs, exterior; Rep. gr. 66 ; Noise insulation; Exploded view - noise insulation

# 7 ATF

⇒ “7.1 Overview of fitting locations - drain and inspection plugs”, page 82

⇒ “7.2 Tools for filling ATF”, page 82

⇒ “7.3 Checking ATF level”, page 84

⇒ “7.4 Draining and filling ATF”, page 87

## 7.1 Overview of fitting locations - drain and inspection plugs

**1 - ATF drain plug**
- ❑ Tighten as far as stop

**2 - O-ring**
- ❑ Renew after removing

**3 - Drain plug**
- ❑ For gear oil in transfer box
- ❑ Renew after removing
- ❑ 12 Nm

**4 - Plug**
- ❑ For inspection and filler hole for gear oil in transfer box
- ❑ Renew after removing
- ❑ 27 Nm

**5 - Plug**
- ❑ For ATF inspection and filler hole
- ❑ Renew
- ❑ 30 Nm

**6 - Plug**
- ❑ For inspection and filler hole for gear oil in front final drive
- ❑ 27 Nm

**7 - Drain plug**
- ❑ For gear oil in front final drive
- ❑ 10 Nm

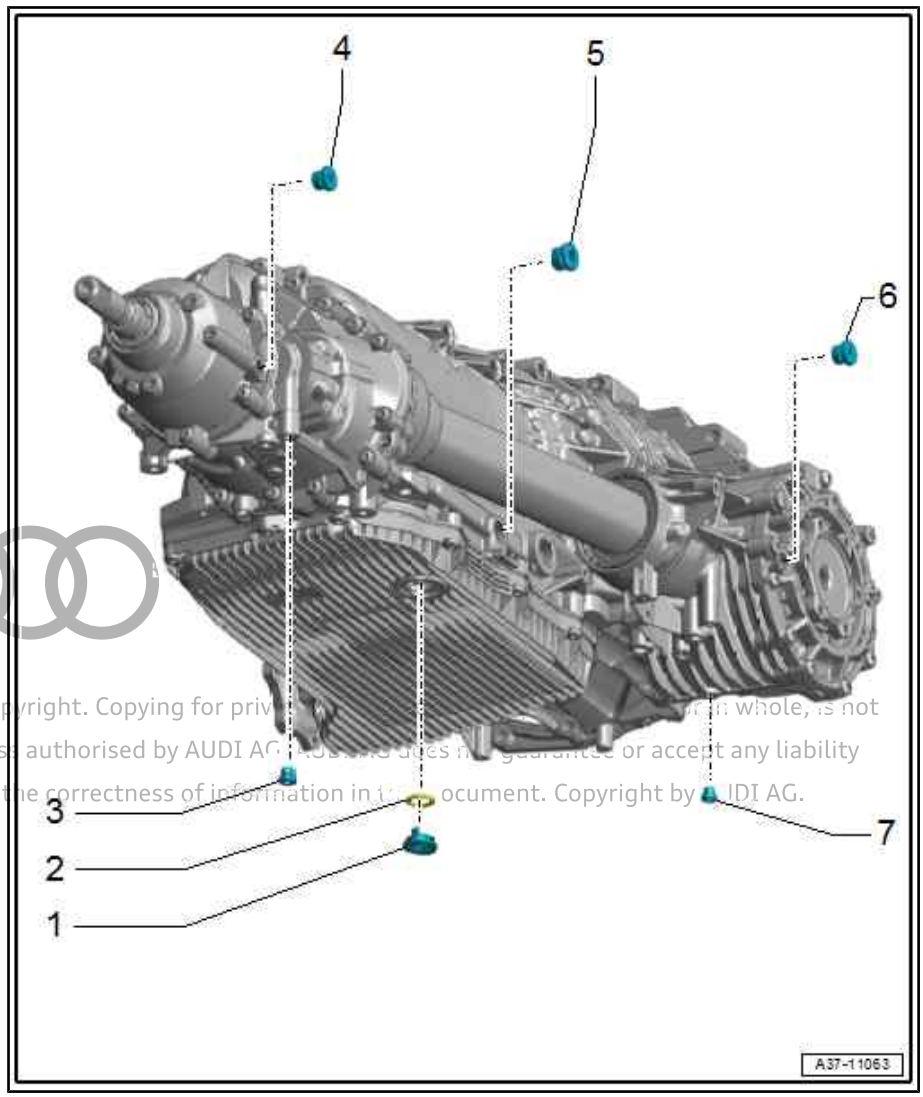


Protected by copyright. Copying for priv whole, is not permitted unles authorised by AUDI AG. AUDI AG does not guarantee or accept any liability with respect to the correctness of information in this document. Copyright by AUDI AG.

## 7.2 Tools for filling ATF

**Special tools and workshop equipment required**

- ♦ Vehicle diagnostic tester

- Adapter for oil filling - VAS 6262 A-

Protected by copyright. Copying for private or commercial purposes, in part or in whole, is not permitted unless authorised by AUDI AG. AUDI AG does not guarantee or accept any liability with respect to the correctness of information in this document. Copyright by AUDI AG

- Flexible hose adapter - VAS 6262/5-
- If necessary, adapter - VAS 6262/6-

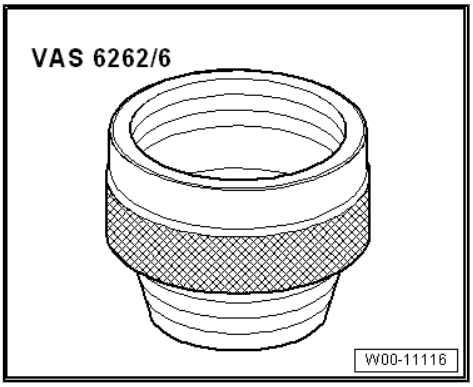


- Used oil collection and extraction unit - VAS 6622A-

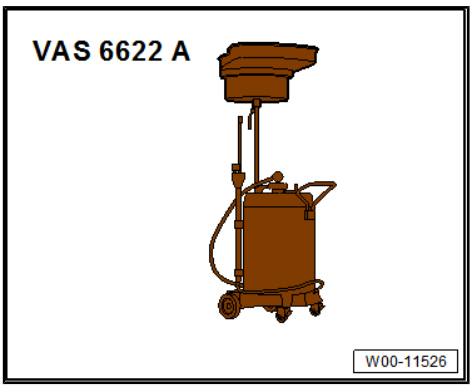


- 1 litre ATF container (genuine part)
- Safety goggles
- Protective gloves (acid resistant)

**Measure length of breather pipe on adapter for oil filling - VAS 6262 A- and shorten if necessary.**

To ensure that breather pipe of adapter for oil filling -VAS 6262 A- does not make contact with bottom of oil container, breather pipe must be shortened to dimension -a-.

- Dimension -a- = 210 mm
- Dimension -a- is measured from stem (green area in magnified view) of adapter for oil filling -VAS 6262 A- .

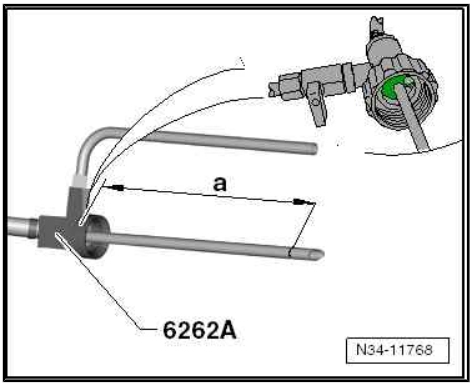

– Mark length on breather pipe and shorten breather pipe using pipe cutter -6056/2- .

– Clean adapter for oil filling - VAS 6262 A- .

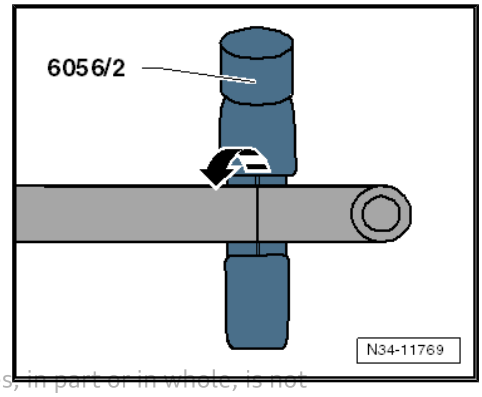


Protected by copyright. Copying for private or commercial purposes, in part or in whole, is not permitted unless authorized by AUDI AG. AUDI AG does not guarantee or accept any liability with respect to the correctness of information in this document. Copyright by AUDI AG.

## 7.3 Checking ATF level

### Special tools and workshop equipment required

- ⇒ “7.2 Tools for filling ATF”, page 82
- 1 litre ATF container (genuine part)
- Safety goggles
- Protective gloves (acid resistant)

### Test conditions

- Gearbox must not be in emergency running (backup) mode.
- Vehicle must be absolutely horizontal (on a four-pillar lifting platform or over an inspection pit).
- Parking brake button must be pulled up to apply the electro-mechanical parking brake.
- Extraction hose(s) of an exhaust gas extractor (switched on) must be connected.
- Air conditioner and heating switched off.
- Vehicle diagnostic tester is connected.
- The ATF temperature must not be higher than 30 °C at the beginning of the test. If the temperature is higher, allow the gearbox to cool down before proceeding.

### Note

- The ATF temperature is taken from the reading on the vehicle diagnostic tester .
- ATF level will change depending on ATF temperature.
- If ATF level is checked when ATF temperature is too low, this will lead to overfilling.
- If ATF level is checked when ATF temperature is too high, this will lead to underfilling.
- Both overfilling and underfilling will impair the function of the gearbox.

### Determining ATF temperature

– Connect vehicle diagnostic tester .

– Switch on ignition.

– Select `Guided functions`.

– Choose `Select own test` and select following options one after the other:

- Drive system

- ♦ 0D5-Gearbox
- ♦ 01 - Self-diagnosis compatible systems
- ♦ 02 - Gearbox electronics
- ♦ 02 - Gearbox electronics, functions
- ♦ 02 - Measured values
- – Select the value for “Gearbox oil temperature” (ATF) from the menu.
- – Read off ATF temperature.
- • Specification: maximum 30 °C.

**Checking and correcting ATF level**

- ♦ The ATF level can be checked at the ATF inspection and filler hole.
- ♦ The ATF level is correct if a small amount of fluid comes out at the ATF inspection and filler hole when the ATF is at a temperature up to 40 °C (the fluid level rises due to expansion as it warms up).
- ♦ Renew plug for ATF inspection and filler hole.

**Note**

- ♦ The adapter for filling ATF oil must be clean and the ATF must not be mixed with other types of ATF!
- – Attach ATF container with adapter for oil filling - VAS 6262 A- as high as possible on vehicle; for ATF specification refer to ⇒ Electronic parts catalogue .
- – Remove noise insulation ⇒ General body repairs, exterior; Rep. gr. 66 ; Noise insulation; Removing and installing noise insulation :
- ♦ A4/A5: noise insulation (rear)
- ♦ Q5: noise insulation (centre)
- – Start engine with selector lever in position “P”.
- – Switch off ESP.
- – To fill up torque converter, keep engine running at 2000 rpm for 30 seconds with selector lever in position “P”.
- – With engine idling and brake pedal pressed, move selector lever to “P” and “D/S” (leave selector for 10 seconds in each position).
- – Shift gearbox into position “P”.
- – Allow engine to continue running at idling speed.
- – Place used oil collection and extraction unit - VAS 6622A- below gearbox.

**⚠ CAUTION**

**Risk of injury to eyes caused by escaping oil.**

**– Put on safety goggles.**

Protected by copyright. Copying for private or commercial purposes, in part or in whole, is not permitted unless authorised by AUDI AG. AUDI AG does not guarantee or accept any liability with respect to the correctness of information in this document. Copyright by AUDI AG.

– Unscrew plug for ATF inspection and filler hole -arrow B-; drain off any excess ATF if necessary.

- If ATF comes out of the ATF inspection and filler hole -arrow B- before the ATF has reached 40 °C, the ATF level is OK.
- If no ATF comes out of the ATF inspection and filler hole before the ATF has reached 40 °C, top up ATF ⇒ page 86 .
- The ATF inspection and filler hole must be closed again before the ATF reaches a temperature of 40 °C.

– Tighten new plug for ATF inspection and filler hole. The ATF level check is now completed.

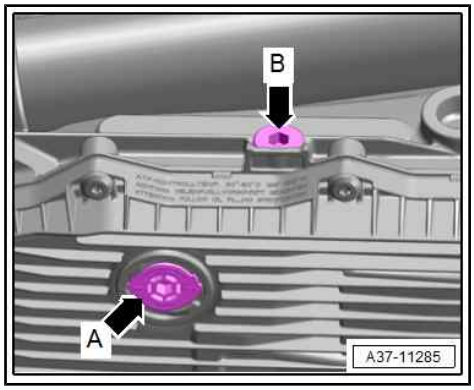


### Topping up ATF

- If no fluid comes out of the ATF inspection and filler hole -arrow B- when the temperature reaches 40 °C:
- Plug for ATF inspection and filler hole must be screwed in again before temperature reaches 45 °C. If necessary, switch off engine, allow gearbox to cool down and repeat the test.

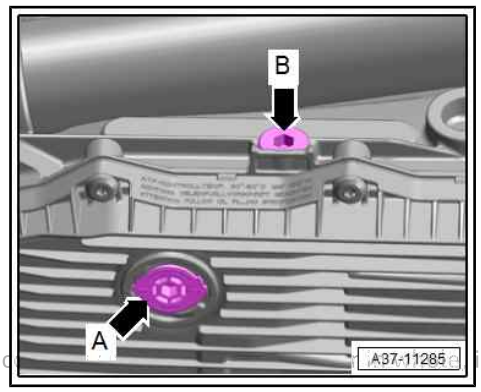


Protected by copyright. Copying for private or commercial purposes, in part, is not permitted unless authorised by AUDI AG. AUDI AG does not guarantee or accept any liability with respect to the correctness of information

– Insert adapter for filling ATF oil - VAS 6262/5- into ATF inspection and filler hole -arrow-.

– Fill up with ATF via adapter until ATF comes out of inspection and filler hole.

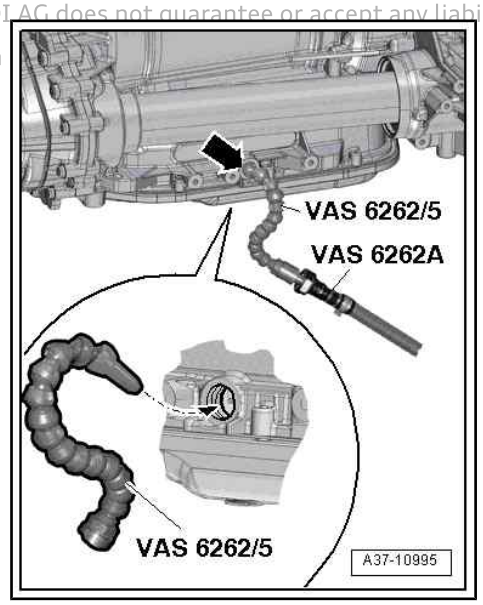


– Tighten new plug for ATF inspection and filler hole -arrow B-. The ATF level check is now completed.

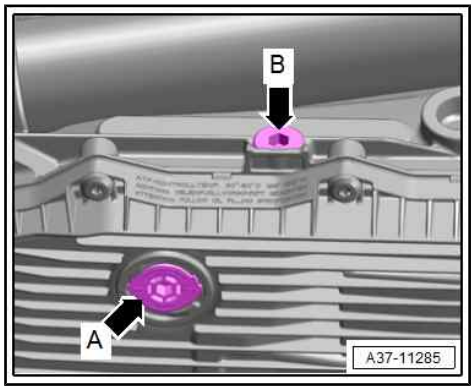


### Tightening torques

- ♦ Drain plugs and screw plugs ⇒ page 82
- ♦ ⇒ General body repairs, exterior; Rep. gr. 66 ; Noise insulation; Exploded view - noise insulation

## 7.4 Draining and filling ATF

### Special tools and workshop equipment required

- ⇒ “7.2 Tools for filling ATF”, page 82
- 1 litre ATF container (genuine part)
- Safety goggles
- Protective gloves (acid resistant)

### Requirements

- Always observe the relevant environmental regulations for disposal.
- Engine not running.
- Vehicle must be absolutely horizontal (on a four-pillar lifting platform or over an inspection pit).
- Gearbox is in position “P”.
- Parking brake button must be pulled up to apply the electro-mechanical parking brake.
- When draining the ATF the gearbox should be warm (operating temperature). However, the engine must not be started when there is no ATF in the gearbox or if the level is too low.

### Draining

– Remove noise insulation ⇒ General body repairs, exterior; Rep. gr. 66 ; Noise insulation; Removing and installing noise insulation :

- A4/A5: noise insulation (rear)
- Q5: noise insulation (centre)

– Place used oil collection and extraction unit - VAS 6622A- below gearbox.

**⚠ CAUTION**

**Risk of injury to eyes caused by escaping oil.**

**– Put on safety goggles.**

– Remove ATF drain plug -arrow A- and allow ATF to drain off.

– Tighten new drain plug -arrow A- as far as stop.

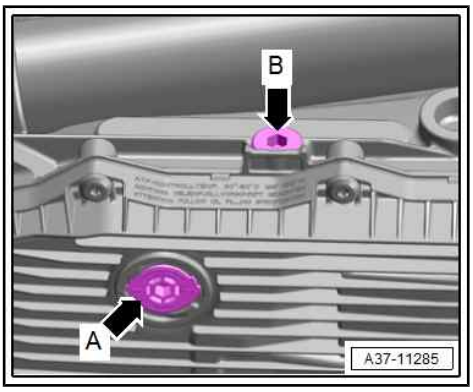


### Filling up ATF

- The adapter for filling ATF oil must be clean and the ATF must not be mixed with other types of ATF!

– Attach ATF container with adapter for oil filling - VAS 6262 A- as high as possible on vehicle; for ATF specification refer to ⇒ Electronic parts catalogue .

Protected by copyright. Copying for private or commercial purposes, in part or in whole, is not permitted unless authorised by AUDI AG. AUDI AG does not guarantee or accept any liability with respect to the correctness of information in this document. Copyright by AUDI AG.

– Unscrew plug for ATF inspection and filler hole -arrow B-.

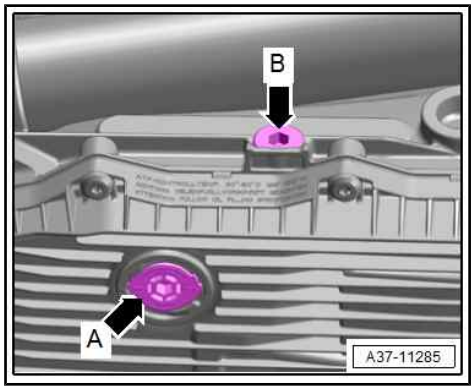


– Insert adapter for filling ATF oil - VAS 6262/5- into ATF inspection and filler hole -arrow-.
– Fill up with ATF via adapter until ATF comes out of inspection and filler hole.
– Start engine with selector lever in position “P”.
– Continue filling with ATF via adapter until ATF comes out of inspection and filler hole again.
– Hand-tighten old plug for ATF inspection and filler hole.
– Check ATF level and top up as required ⇒ page 84 .
• Observe all notes and test requirements for “Checking and correcting ATF level”.

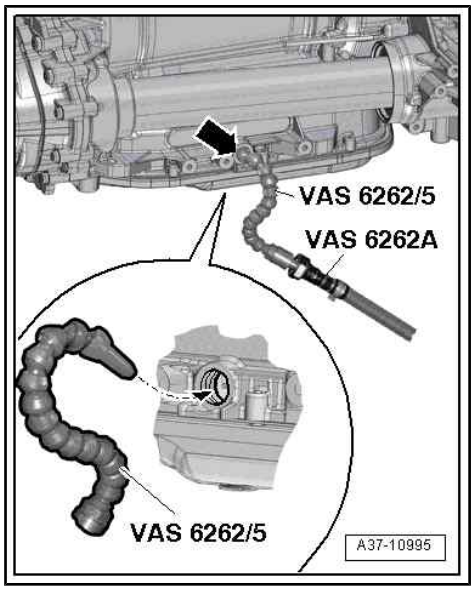


### Tightening torques

♦ Drain plugs and screw plugs ⇒ page 82

Protected by copyright. Copying for private or commercial purposes, in part or in whole, is not permitted unless authorised by AUDI AG. AUDI AG does not guarantee or accept any liability with respect to the correctness of information in this document. Copyright by AUDI AG.

# 38 – Gears, control

Protected by copyright. Copying for private or commercial purposes, in part or in whole, is not permitted unless authorised by AUDI AG. AUDI AG does not guarantee or accept any liability with respect to the correctness of information in this document. Copyright by AUDI AG.

## 1 ATF system

⇒ "1.1 Removing and installing oil pan", page 89

**For all further ATF system procedures, refer to ⇒ Servicing 8-speed automatic gearbox; Rep. gr. 38 ; ATF system**

### 1.1 Removing and installing oil pan

- General repair instructions ⇒ page 5 .
- Rules for cleanliness ⇒ page 4 .

**Removing**

- Lower subframe cross brace by a maximum of 150 mm (do not press joint pin of guide link out of tapered seat) ⇒ Running gear, axles, steering; Rep. gr. 40 ; Subframe; Removing and installing subframe cross brace .
- Remove gearbox support with gearbox mounting ⇒ Engine; Rep. gr. 10 ; Assembly mountings; Removing and installing gearbox mounting .
- Drain ATF ⇒ page 87 .
- Move electrical wiring clear.
- Remove bolts for ATF oil pan in the sequence -12 ... 1-.
- Remove ATF oil pan.

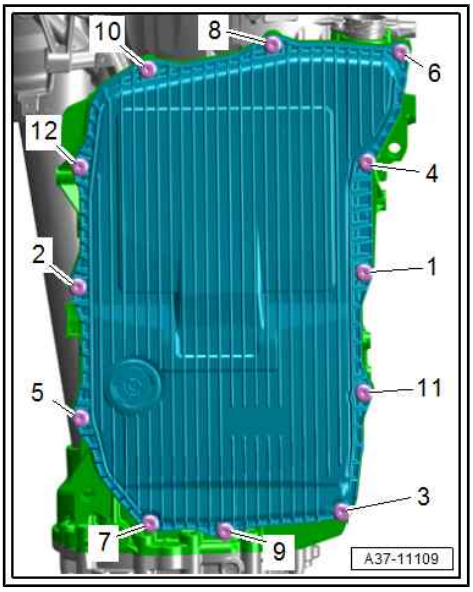


**Installing**

Installation is carried out in reverse order; note the following:

- When installing, use all components provided in repair set.
- Clean magnets -arrows-.
- Clean sealing surface thoroughly.

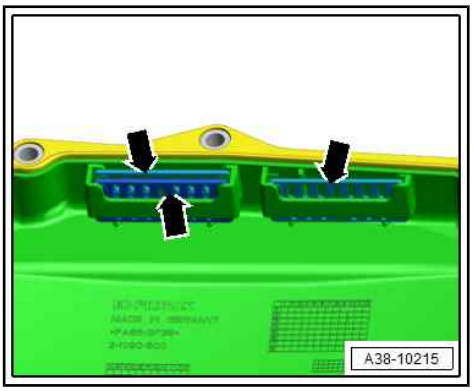

Protected by copyright. Copying for private or commercial purposes, in part or in whole, is not permitted unless authorised by AUDI AG. AUDI AG does not guarantee or accept any liability with respect to the correctness of information in this document. Copyright by AUDI AG.

– Screw in bolts -1, 2- by hand until bolt heads make contact.

– Tighten bolts in specified sequence.

– Fill up with ATF ⇒ page 87 .

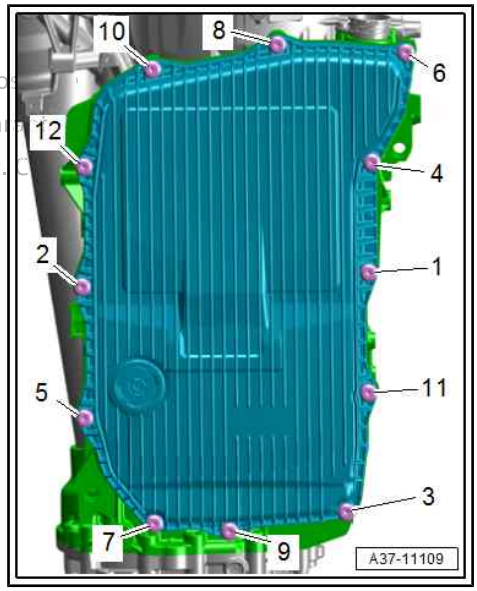


**Tightening torques**

- ⇒ Servicing 8-speed automatic gearbox; Rep. gr. 38 ; ATF system
- ⇒ Engine; Rep. gr. 10 ; Assembly mountings; Exploded view - assembly mountings
- ⇒ Running gear, axles, steering; Rep. gr. 40 ; Subframe; Exploded view - subframe

# 2 Mechatronic unit

**For all mechatronic unit procedures, refer to ⇒ Servicing 8-speed automatic gearbox; Rep. gr. 38 ; ATF system**

Protected by copyright. Copying for private or commercial purposes, in part or in whole, is not permitted unless authorised by AUDI AG. AUDI AG does not guarantee or accept any liability with respect to the correctness of information in this document. Copyright by AUDI AG.

# 39 – Final drive - front differential

## 1 Final drive

⇒ "1.1 Exploded view - final drive", page 92

⇒ "1.2 Removing and installing O-ring on cover for front final drive", page 94

### 1.1 Exploded view - final drive

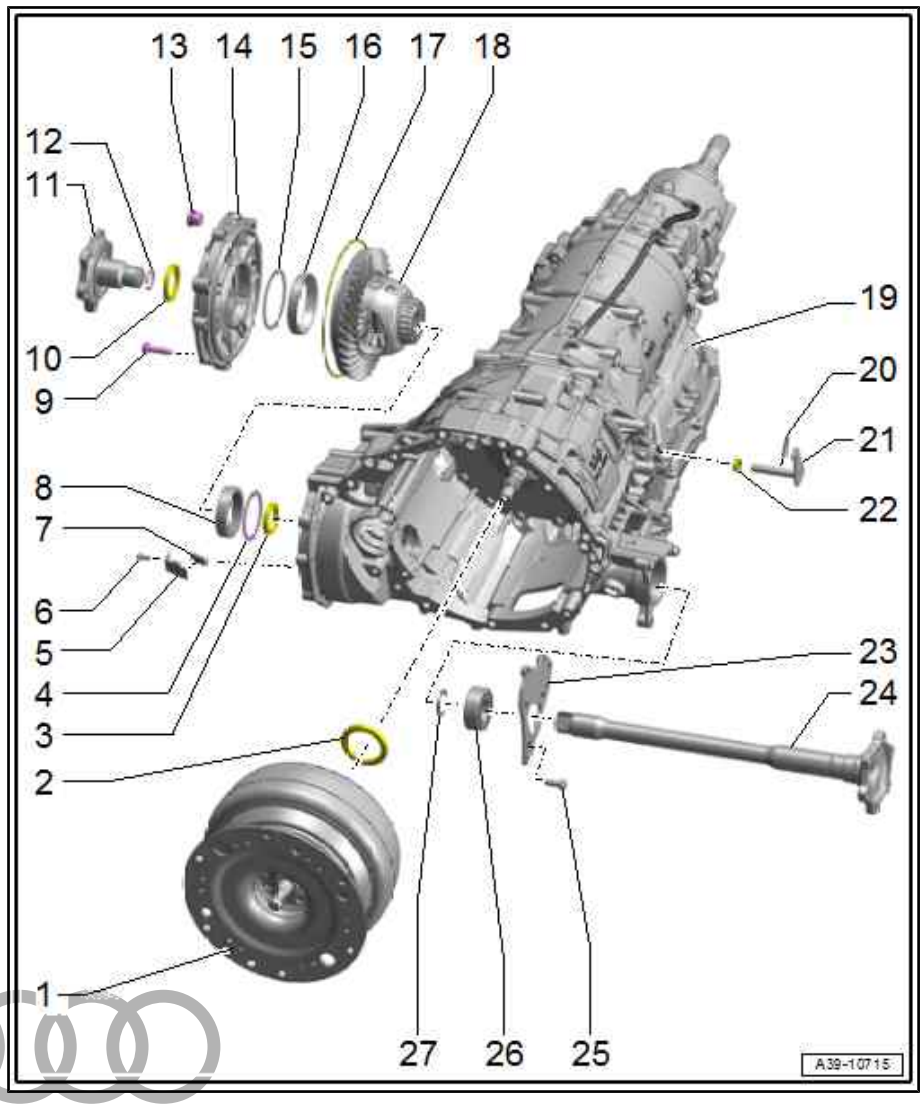


**1 - Torque converter**

- ❑ Exploded view ⇒ Servicing 8-speed automatic gearbox; Rep. gr. 32 ; Torque converter; Exploded view - torque converter

**2 - Seal**

- ❑ For torque converter
- ❑ Removing and installing ⇒ Servicing 8-speed automatic gearbox; Rep. gr. 32 ; Torque converter; Removing and installing oil seal for torque converter

**3 - Oil seal**

- ❑ For flange shaft (left-side)
- ❑ Between final drive and gearbox housing
- ❑ Renewing ⇒ page 115

**4 - Shim**

- ❑ Behind tapered roller bearing outer race

**5 - Bracket**

- ❑ For magnet

**6 - Bolt**

- ❑ 6 Nm

**7 - Magnet**

- ❑ Clean if necessary

**8 - Tapered roller bearing outer race**

**9 - Bolt**

- ❑ Different versions available; for correct version refer to ⇒ Electronic parts catalogue
- ❑ Tightening torque and sequence ⇒ page 94

**10 - Seal**

- ❑ For flange shaft (right-side)
- ❑ Renewing ⇒ page 117

**11 - Flange shaft (right-side)**

- ❑ Removing and installing ⇒ page 121

Protected by copyright. Copying for private or commercial purposes, in part or in whole, is not permitted unless authorised by AUDI AG. AUDI AG does not guarantee or accept any liability with respect to the correctness of information in this document. Copyright by AUDI AG.

**12 - Circlip**
- ❑ Renew

**13 - Plug**
- ❑ For inspection and filler hole
- ❑ For gear oil in front final drive
- ❑ Tightening torque ⇒ page 82

**14 - Cover**
- ❑ For front final drive
- ❑ Pay attention to dowel sleeves

**15 - Shim**
- ❑ Behind tapered roller bearing outer race

**16 - Tapered roller bearing outer race**

**17 - O-ring**
- ❑ On cover for front final drive
- ❑ Removing and installing ⇒ page 94

**18 - Differential**

**19 - Gearbox**

**20 - Pin**
- ❑ Renew after removing
- ❑ Removing and installing ⇒ “1.9 Renewing seal for parking lock shaft”, page 29
- ❑ Installation position ⇒ page 94

**21 - Lever for parking lock**
- ❑ Removing and installing ⇒ “1.9 Renewing seal for parking lock shaft”, page 29

**22 - Seal**
- ❑ For parking lock shaft
- ❑ Renewing ⇒ page 29

**23 - Bearing plate**
- ❑ Secured to flange shaft (left-side) together with bearing ⇒ Item 26 (page 93) and retaining clip ⇒ Item 27 (page 93)
- ❑ This assembly is referred to as mounting bracket for flange shaft (left-side)

**24 - Flange shaft (left-side)**
- ❑ Removing and installing ⇒ page 119

**25 - Bolt**
- ❑ Renew
- ❑ 9 Nm +60°

**26 - Bearing**
- ❑ For flange shaft (left-side)

**27 - Retaining clip**
- ❑ For bearing for flange shaft (left-side)

Protected by copyright. Copying for private or commercial purposes, in part or in whole, is not permitted unless authorised by AUDI AG. AUDI AG does not guarantee or accept any liability with respect to the correctness of information in this document. Copyright by AUDI AG.

**Cover for front final drive - tightening torque and sequence**

– Tighten bolts in stages in the sequence described:

| Stage | Bolts | Tightening torque |
|---|---|---|
| 1. | -1, 2- | 5 Nm |
| 2. | -3, 4, 6- | 35 Nm |
| 3. | -1, 7, 2, 8- | 35 Nm |
| 4. | -9, 10, 11- | 47 Nm |

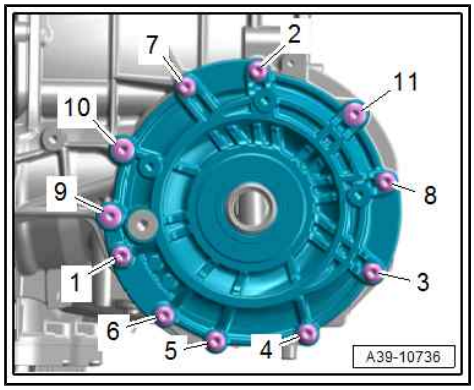


**Radiator for front final drive - tightening torque**

– Tighten bolts -3- to 9 Nm.

Protected by copyright. Copying for private or com ot
permitted unless authorised by AUDI AG. AUDI AG
with respect to the correctness of information in t

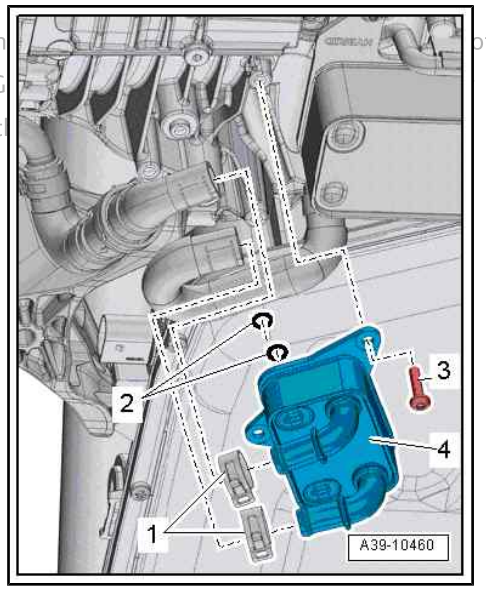


**Installation position of roll pin**

– Drive in new roll pin -1- narrow end first -arrow- until flush.

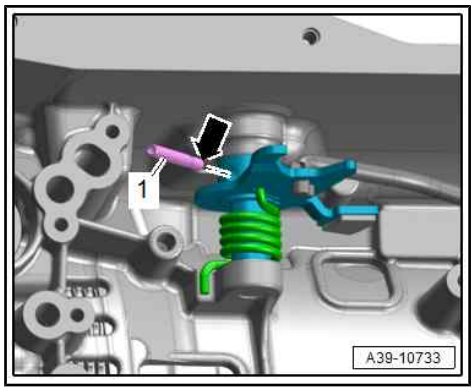


## 1.2 Removing and installing O-ring on cover for front final drive

♦ General repair instructions ⇒ page 5 .

♦ Rules for cleanliness ⇒ page 4 .

**Procedure**

– Drain off gear oil in front final drive ⇒ page 102 .

– Remove flange shaft (right-side) ⇒ page 121 .

– Remove bolts securing cover for front final drive in the sequence -11 ... 1-.

– Remove cover for front final drive together with outer race for tapered roller bearing and shim.

• Thickness of shim has been measured to fit; the shim must not be replaced with another shim of different thickness.

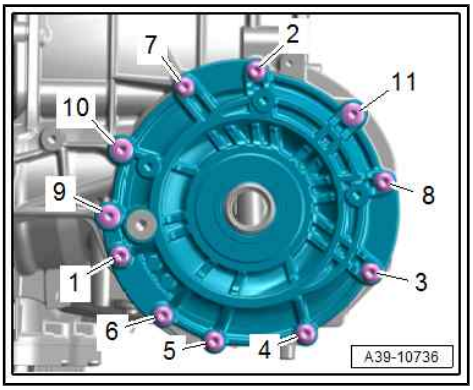


– Renew O-ring -arrow-.

– Install differential in gearbox housing.

Note the following if the outer race for tapered roller bearing and the shim have dropped out of the front final drive cover:

– Lubricate shim and outer race for tapered roller bearing with gear oil and insert in front final drive cover as far as the stop.

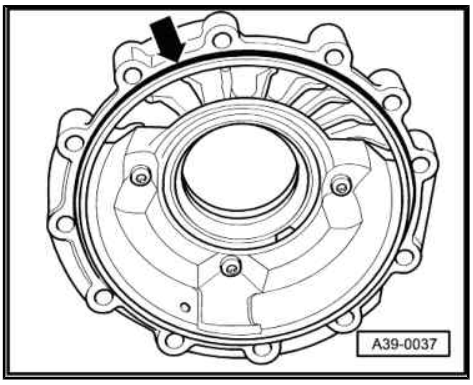


– Tighten bolts for front final drive cover.

– Install flange shaft (right-side) ⇒ page 121 .

– Fill up gear oil in gearbox after repairs ⇒ page 102 .

**Tightening torques**

♦ ⇒ Fig. ""Cover for front final drive - tightening torque and sequence"" , page 94

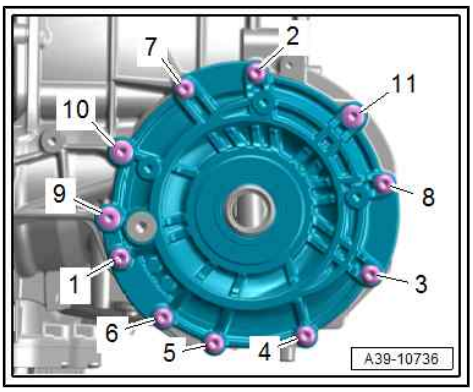


Protected by copyright. Copying for private or commercial purposes, in part or in whole, is not permitted unless authorised by AUDI AG. AUDI AG does not guarantee or accept any liability with respect to the correctness of information in this document. Copyright by AUDI AG.

# 2 Gear oil

⇒ “2.1 Checking gear oil level”, page 96

⇒ “2.2 Draining and filling gear oil”, page 102

## 2.1 Checking gear oil level

⇒ “2.1.1 Checking gear oil level - front final drive, gearbox with separate oil systems”, page 96

⇒ “2.1.2 Checking gear oil level - transfer box, gearbox with separate oil systems”, page 97

⇒ “2.1.3 Checking gear oil level - gearbox with common oil system”, page 99

### 2.1.1 Checking gear oil level - front final drive, gearbox with separate oil systems

Distinguishing oil systems ⇒ “4.2 Oil distribution”, page 9

Special tools and workshop equipment required

- Used oil collection and extraction unit - VAS 6622A-

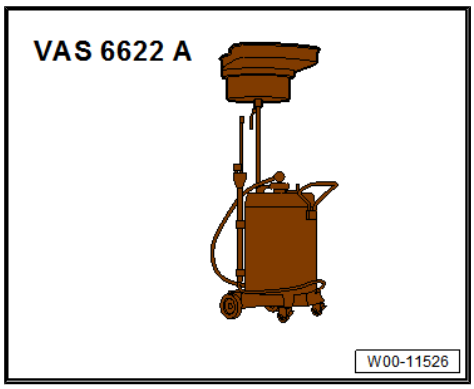


- Hand pump for filling gearbox - VAS 6617-

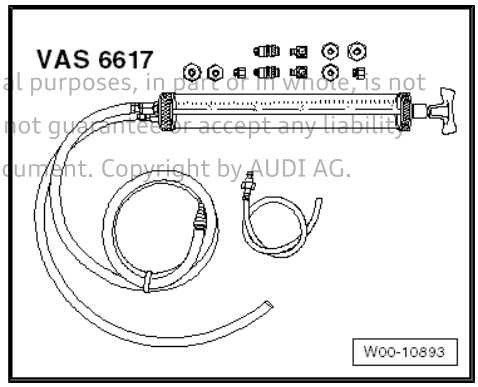


Protected by copyright. Copying for private or commercial purposes, in part or in whole, is not permitted unless authorised by AUDI AG. AUDI AG does not guarantee or accept any liability with respect to the correctness of information in this document. Copyright by AUDI AG.

- Safety goggles

Requirements

- General repair instructions ⇒ page 5 .
- Rules for cleanliness ⇒ page 4 .
- The prescribed oil level must be adhered to exactly; the gearbox reacts very sensitively to overfilling.
- Renew plug for inspection and filler hole.
- Gear oil about 20 °C (room temperature)
- Vehicle must be absolutely horizontal (on a four-pillar lifting platform or over an inspection pit).

- Gearbox is in position “P”.
- Parking brake button must be pulled up to apply the electro-mechanical parking brake.

**Procedure**

– Remove noise insulation ⇒ General body repairs, exterior; Rep. gr. 66 ; Noise insulation; Removing and installing noise insulation :

♦ A4/A5: noise insulation (rear)

♦ Q5: noise insulation (centre)

– Place used oil collection and extraction unit - VAS 6622A- below gearbox.

– Place several cloths on subframe cross brace to catch escaping gear oil.

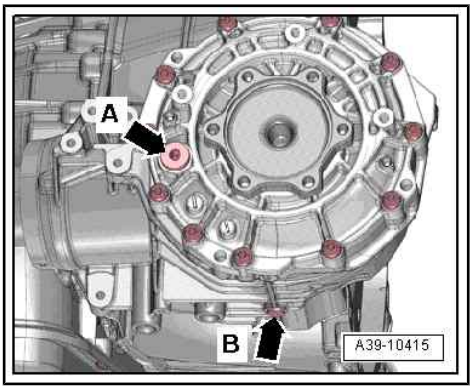


**CAUTION**

**Risk of injury to eyes caused by escaping oil.**

**– Put on safety goggles.**

– Unscrew plug for inspection and filler hole -arrow A- on front final drive.

- Specification: The oil level is correct when the front final drive is filled up to the bottom lip of the inspection and filler hole.

– Allow excess gear oil to drain off.

**If oil level in front final drive is not up to bottom lip of filler hole:**

– Screw adapter -VAS 6617/6- with adapter -VAS 6617/2- hand-tight into inspection and filler hole for front final drive.

– Connect hand pump for filling gearbox - VAS 6617- and fill up front final drive with gear oil.

- Gear oil specifications ⇒ Electronic parts catalogue

– Then detach -VAS 6617/6- from gearbox and allow excess gear oil to drain off.

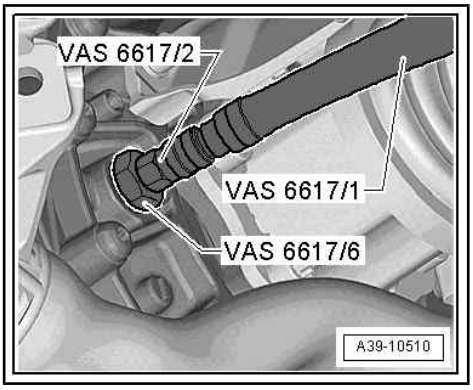


Protected by copyright. Copying for private or commercial purposes, in part or in whole, is not permitted unless authorised by AUDI AG. AUDI AG does not with respect to the correctness of information in this docu

– Tighten new plug -arrow A- on front final drive.

– Remove cloths from subframe cross brace.

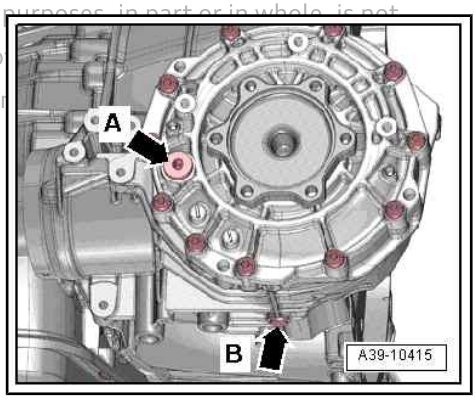


**Tightening torques**

♦ Drain plugs and screw plugs ⇒ page 82

♦ ⇒ General body repairs, exterior; Rep. gr. 66 ; Noise insulation; Exploded view - noise insulation

## 2.1.2 Checking gear oil level - transfer box, gearbox with separate oil systems

**Distinguishing oil systems** ⇒ “4.2 Oil distribution”, page 9

**Special tools and workshop equipment required**

- Used oil collection and extraction unit - VAS 6622A-

Protected by copyright. Copying for private or commercial purposes, in part or in whole, is not permitted unless authorised by AUDI AG. AUDI AG does not guarantee or accept any liability with respect to the correctness of information in this document. Copyright by AUDI AG.

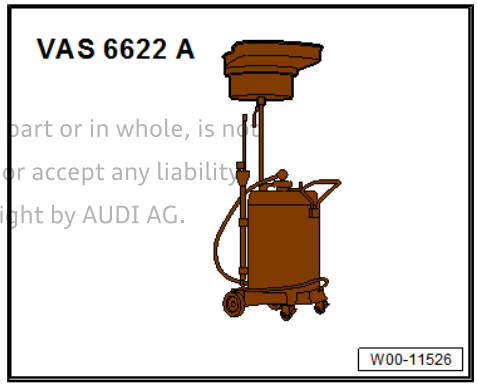


- Hand pump for filling gearbox - VAS 6617-

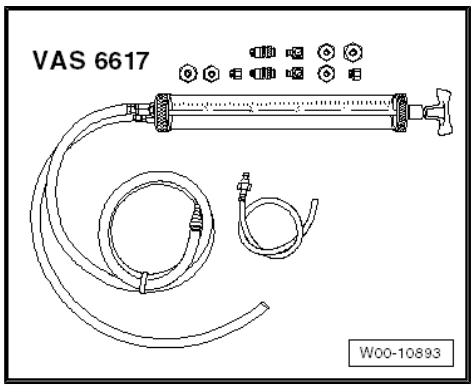


- Safety goggles

**Requirements**

- General repair instructions ⇒ page 5 .
- Rules for cleanliness ⇒ page 4 .
- Renew plug for inspection and filler hole.
- Gear oil about 20 °C (room temperature)
- Vehicle must be absolutely horizontal (on a four-pillar lifting platform or over an inspection pit).
- Gearbox is in position “P”.
- Parking brake button must be pulled up to apply the electro-mechanical parking brake.
- The vehicle must be stationary with the engine switched off for at least 15 minutes to allow the oil level to stabilise.

**Procedure**

– Place used oil collection and extraction unit - VAS 6622A- below gearbox.

– Place several cloths on tunnel cross member to catch escaping gear oil.

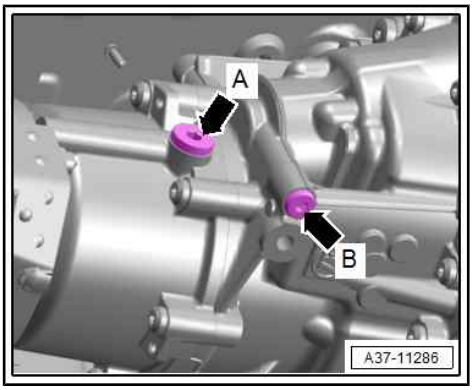


**CAUTION**

**Risk of injury to eyes caused by escaping oil.**

**– Put on safety goggles.**

– Unscrew plug for inspection and filler hole -arrow A- on centre differential housing.

• Specification: Oil level is correct when oil in transfer box is up to lower edge of inspection and filler hole.

– Allow excess gear oil to drain off.

**If oil level in transfer box is not up to bottom lip of filler hole:**

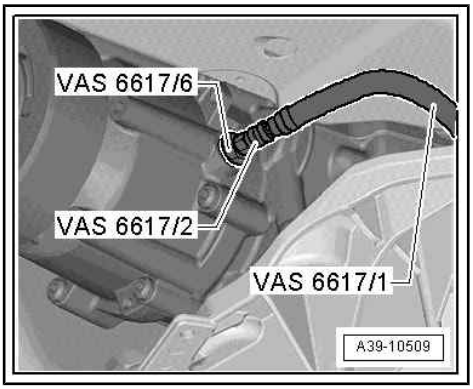


– Screw adapter -VAS 6617/6- with adapter -VAS 6617/2- hand-tight into inspection and filler hole for transfer box.

– Connect hand pump for filling gearbox - VAS 6617- and fill up transfer box with gear oil.

• Gear oil specifications ⇒ Electronic parts catalogue

– Wait for 5 minutes.

**Note**

♦ The transfer box incorporates a number of internal oil chambers. These must be filled evenly.

♦ It is necessary to wait for at least 5 minutes to allow the internal oil level to balance out between the centre differential and the baffle chamber.

– Then detach -VAS 6617/6- from gearbox and allow excess gear oil to drain off.

– Tighten new plug -arrow A- on housing for centre differential.

– Remove cloth from tunnel cross member.

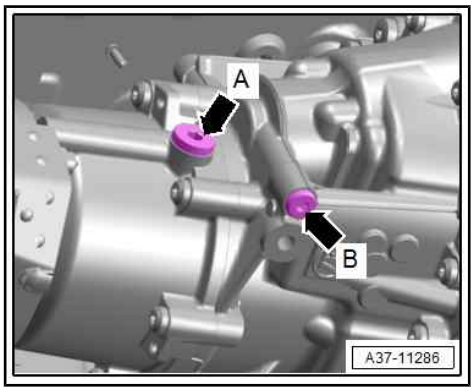


**Tightening torques**

♦ Drain plugs and screw plugs ⇒ page 82

## 2.1.3 Checking gear oil level - gearbox with common oil system

**Distinguishing oil systems** ⇒ "4.2 Oil distribution", page 9

**Special tools and workshop equipment required**

Protected by copyright. Copying for private or commercial purposes, in part or in whole, is not permitted unless authorised by AUDI AG. AUDI AG does not guarantee or accept any liability with respect to the correctness of information in this document. Copyright by AUDI AG.

- Hand pump for filling gearbox - VAS 6617-

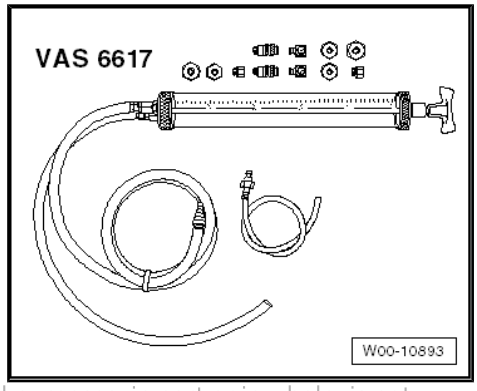


Protected by copyright. Copying for private or commercial purposes, in part or in whole, is not permitted unless authorised by AUDI AG. AUDI AG does not guarantee or accept any liability with respect to the correctness of information in this document. Copyright by AUDI AG.

- Used oil collection and extraction unit - VAS 6622-

- Safety goggles

**Requirements**

- Refer to general repair instructions ⇒ page 5 .
- Note rules for cleanliness when working on automatic gearbox ⇒ page 4 .
- Always adhere to waste disposal regulations.
- Renew drain plug with seal.
- Renew plug for inspection and filler hole.
- Gear oil about 20 °C (room temperature)
- Engine must be switched off while work is being performed.
- Vehicle must be absolutely horizontal (on a four-pillar lifting platform or over an inspection pit).
- The vehicle must be stationary with the engine switched off for at least 15 minutes to allow the oil level to stabilise.
- Gearbox is in position “P”.
- Parking brake button must be pulled up to apply the electro-mechanical parking brake.

**Procedure**

– Place used oil collection and extraction unit - VAS 6622- below gearbox.

**⚠ CAUTION**

**Risk of injury to eyes caused by escaping oil.**

**– Put on safety goggles.**

– A cloth should be placed on the tunnel cross member to prevent gear oil from running into the casting pockets on the tunnel cross member.

– Unscrew plug for inspection and filler hole -arrow A- on front final drive.

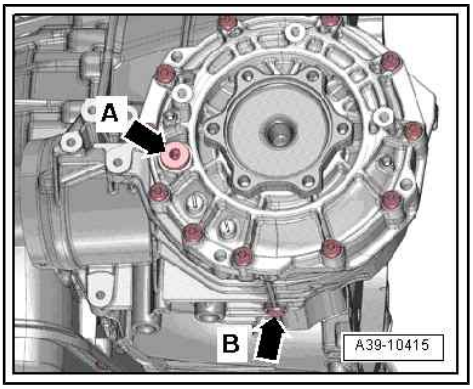


– Unscrew plug for inspection and filler hole -arrow A- on centre differential housing.

• Specification: The oil level is correct when the final drive (at front) and the transfer box (at rear) are filled up to the bottom lip of the filler hole.

If oil level is not up to bottom lip of filler hole:

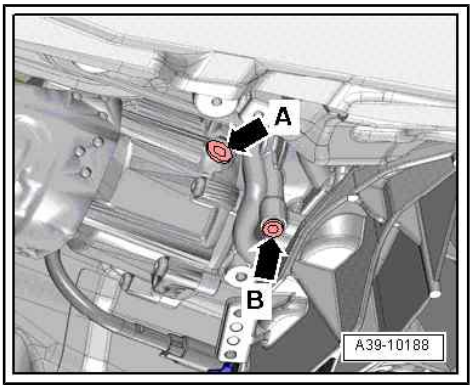


– Screw adapter - VAS 6617/6- hand-tight into inspection hole for transfer box -arrow A- together with adapter - VAS 6617/2- and fill up to bottom lip of inspection hole with gear oil. Do not close inspection hole yet. Gear oil specifications ⇒ Electronic parts catalogue

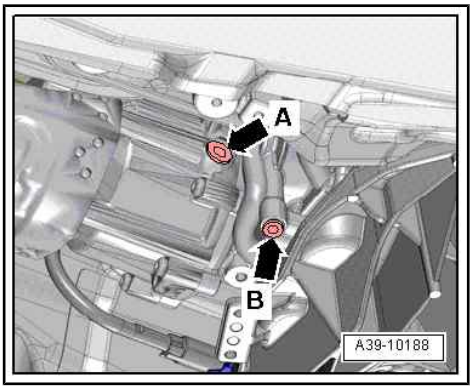


– Screw adapter - VAS 6617/6- hand-tight into inspection hole for front final drive together with adapter - VAS 6617/2- and fill up to bottom lip of inspection hole with gear oil.

– Then overfill with approx. 1 ltr. gear oil at front.

– Wait to allow an equalisation period until gear oil emerges from inspection hole for transfer box (at rear).

– Seal inspection hole for transfer box (at rear) as soon as oil emerges.

• By overfilling, the oil flows from the front final drive to the rear of the transfer box as part of the internal oil level balancing system.

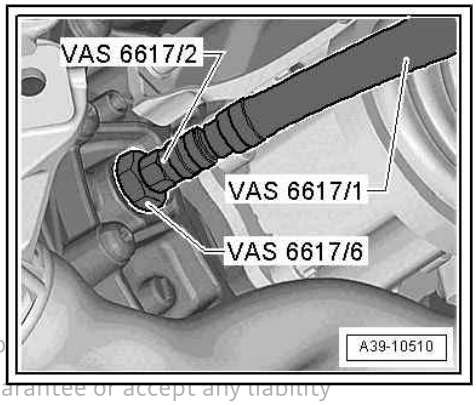


– Then detach adapter - VAS 6617/6- from gearbox and allow excess gear oil to drain off at front of final drive.

– Tighten both inspection plugs ⇒ page 82 .

Protected by copyright. Copying for private or commercial purpo
permitted unless authorised by AUDI AG. AUDI AG does not guarantee or accept any liability
with respect to the correctness of information in this document. Copyright by AUDI AG.

## 2.2 Draining and filling gear oil

Distinguishing oil systems ⇒ “4.2 Oil distribution”, page 9

⇒ “2.2.1 Draining and filling gear oil - front final drive, gearbox with separate oil systems”, page 102

⇒ “2.2.2 Draining and filling gear oil - transfer box, gearbox with separate oil systems”, page 104

⇒ “2.2.3 Draining and filling gear oil - gearbox with common oil system”, page 109

### 2.2.1 Draining and filling gear oil - front final drive, gearbox with separate oil systems

Special tools and workshop equipment required

- Used oil collection and extraction unit - VAS 6622A-

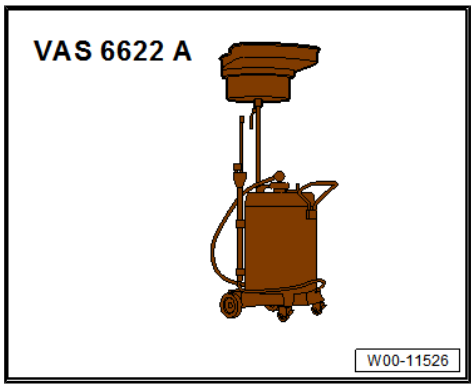


- Hand pump for filling gearbox - VAS 6617-

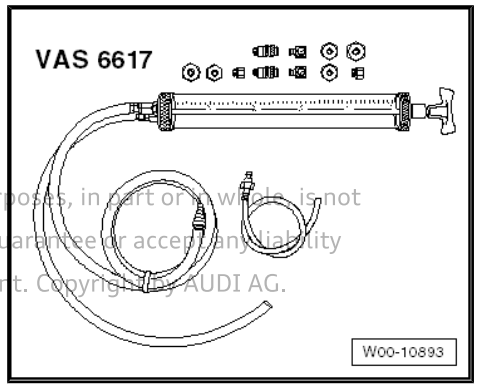


Protected by copyright. Copying for private or commercial purposes, in part or in whole, is not permitted unless authorised by AUDI AG. AUDI AG does not guarantee or accept any liability with respect to the correctness of information in this document. Copyright by AUDI AG.

- Safety goggles

Requirements

- General repair instructions ⇒ page 5 .
- Rules for cleanliness ⇒ page 4 .
- Always observe the relevant environmental regulations for disposal.
- Renew drain plug with seal.
- Renew plug for inspection and filler hole.
- Engine not running.
- Vehicle must be absolutely horizontal (on a four-pillar lifting platform or over an inspection pit).
- Gearbox is in position “P”.
- Parking brake button must be pulled up to apply the electro-mechanical parking brake.

### Draining

– Remove noise insulation ⇒ General body repairs, exterior; Rep. gr. 66 ; Noise insulation; Removing and installing noise insulation :

♦ A4/A5: noise insulation (rear)

♦ Q5: noise insulation (centre)

– Place used oil collection and extraction unit - VAS 6622A- below gearbox.

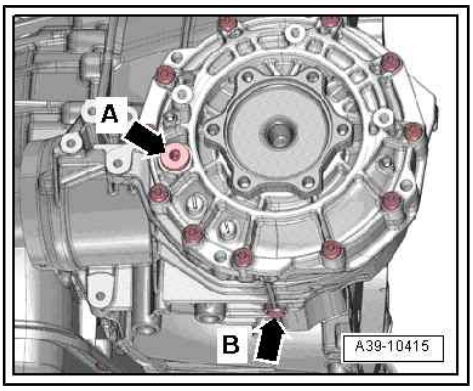


**CAUTION**

**Risk of injury to eyes caused by escaping oil.**

**– Put on safety goggles.**

– Unscrew drain plug -arrow B- on front final drive and drain off gear oil.

– Tighten new drain plug -arrow B- on front final drive.

### Filling up and adjusting oil level

• Gear oil about 20 °C (room temperature)

– Place used oil collection and extraction unit - VAS 6622A- below gearbox.

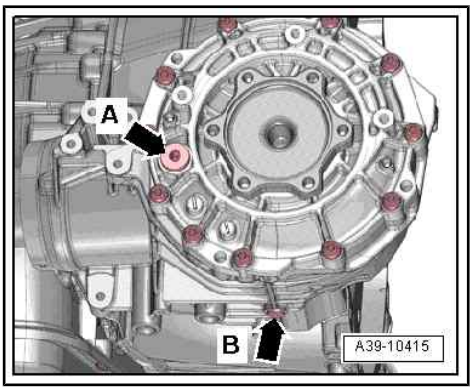


**CAUTION**

**Risk of injury to eyes caused by escaping oil.**

**– Put on safety goggles.**

– Unscrew plug for inspection and filler hole -arrow A- on front final drive.

– Screw adapter -VAS 6617/6- with adapter -VAS 6617/2- hand-tight into inspection and filler hole for front final drive.

– Connect hand pump for filling gearbox - VAS 6617- and fill up front final drive with approx. 1.0 ltr. of gear oil.

• Gear oil specifications ⇒ Electronic parts catalogue

– Wait for 5 minutes.

• It is necessary to wait for at least 5 minutes to allow the internal oil level to balance out between the differential and the baffle chamber.

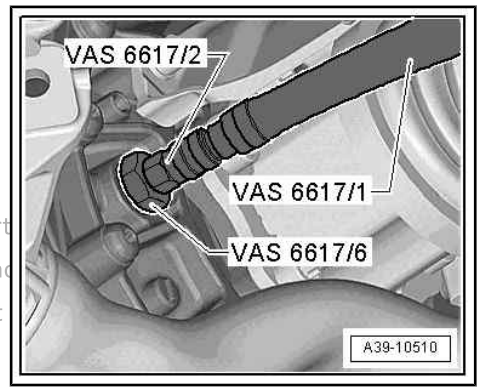


– Then detach -VAS 6617/6- from gearbox and allow excess gear oil to drain off.

Protected by copyright. Copying for private or commercial purposes, in part
permitted unless authorised by AUDI AG. Audi AG does not guarantee or ac
with respect to the correctness of information in this document. Copyright

– Tighten new plug -arrow A- on front final drive.

• The level does not need to be re-checked after this step.

– Clean subframe cross brace thoroughly.

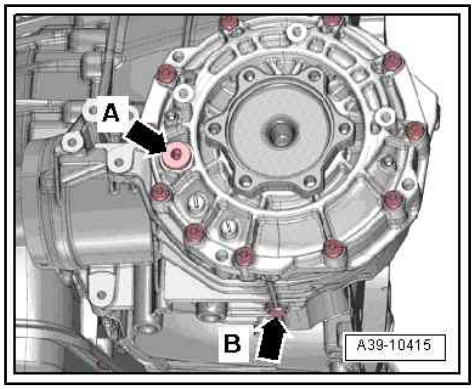


**Tightening torques**

♦ Drain plugs and screw plugs ⇒ page 82

♦ ⇒ General body repairs, exterior; Rep. gr. 66 ; Noise insulation; Exploded view - noise insulation

## 2.2.2 Draining and filling gear oil - transfer box, gearbox with separate oil systems

**Special tools and workshop equipment required**

♦ Tapered mounting pins - VAS 6131/10-3- from support set for Audi - VAS 6131/10-

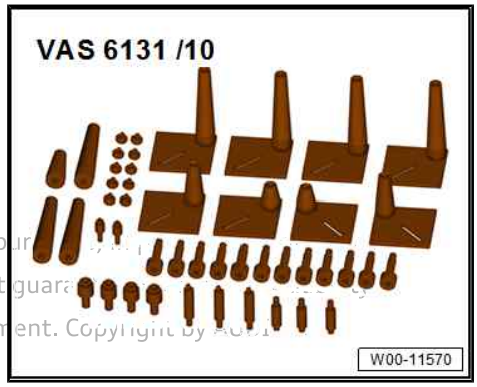


Protected by copyright. Copying for private or commercial pur
permitted unless authorised by AUDI AG. AUDI AG does not guara
with respect to the correctness of information in this docum ent. Copyright by

♦ Adapter - VAS 6131/12- from support set, Audi A6 >2005 - VAS 6131/12-1- (not illustrated)

♦ Used oil collection and extraction unit - VAS 6622A-

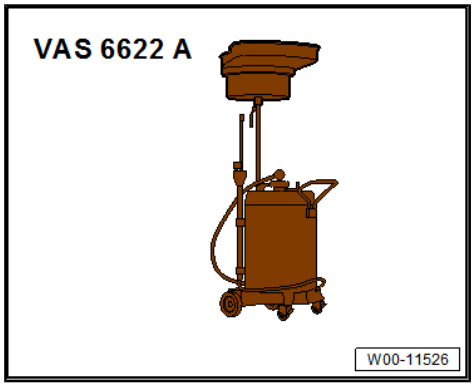


♦ Hand pump for filling gearbox - VAS 6617-

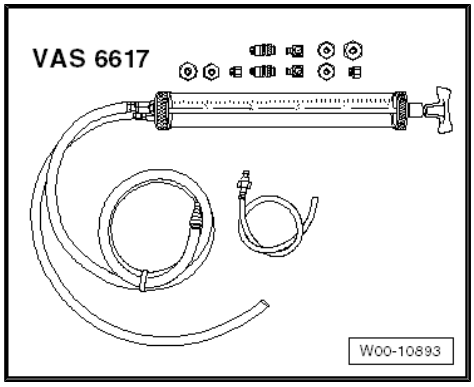

- Engine and gearbox jack - VAS 6931-

- Tensioning strap - T10038- for Q5

Protected by copyright. Copying for private or commercial purposes, in part or in whole, is not permitted unless authorised by AUDI AG. AUDI AG does not guarantee or accep with respect to the correctness of information in this document. Copyright by AU

- Gearbox support - T10337-

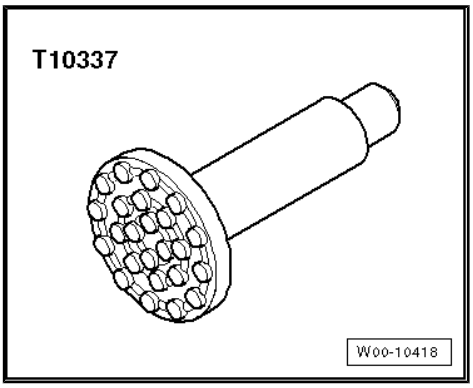


- Safety goggles

**Preparing gearbox support - T10337-**

– Remove rubber overlay -1- from gearbox support - T10337- .

– Make a hole ∅ 10.2 mm in centre -arrow- (if there is not already a hole present).

– Cut an M12 thread in the hole.

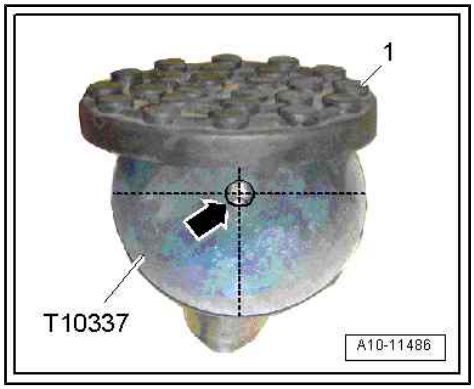


**Requirements**

♦ General repair instructions ⇒ page 5 .

♦ Rules for cleanliness ⇒ page 4 .

♦ Always observe the relevant environmental regulations for disposal.

♦ Renew drain plug with seal.

♦ Renew plug for inspection and filler hole.

• Engine not running.

• Vehicle must be absolutely horizontal (on a four-pillar lifting platform or over an inspection pit).

• Gearbox is in position “P”.

• Parking brake button must be pulled up to apply the electro-mechanical parking brake.

**Draining**

– Remove noise insulation ⇒ General body repairs, exterior; Rep. gr. 66 ; Noise insulation; Removing and installing noise insulation :

♦ A4/A5: noise insulation (rear)

♦ Q5: noise insulation (centre and rear)

**⚠ CAUTION**

**Risk of accident due to loose parts.**

**– Engine and gearbox jack - VAS 6931- must remain in position when work is being carried out and must not be left unattended under the vehicle.**

– Secure tapered mounting pin - VAS 6131/10-3- to gearbox support - T10337- .

– Apply engine and gearbox support - VAS 6931- at gearbox mounting as shown.

– Lift gearbox slightly using engine and gearbox jack.

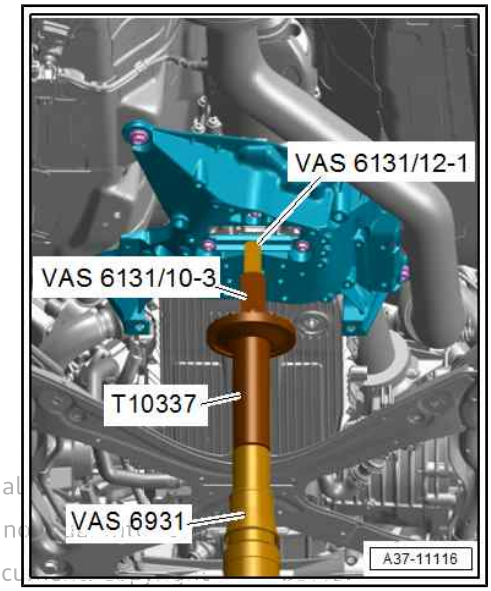


Protected by copyright. Copying for private or commercial
permitted unless authorised by AUDI AG. AUDI AG does n
with respect to the correctness of information in this docu

A4/A5:

– Unscrew bolts -arrows- and nuts -1- and place tunnel cross member on gearbox support - T10337- .

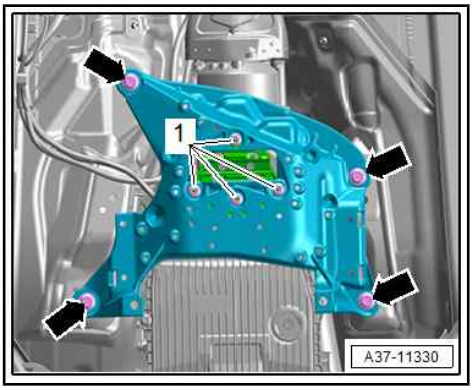


Q5:

– Remove bolts -arrows- (left and right) for front silencer/front exhaust pipe/exhaust gas recirculation pipe.

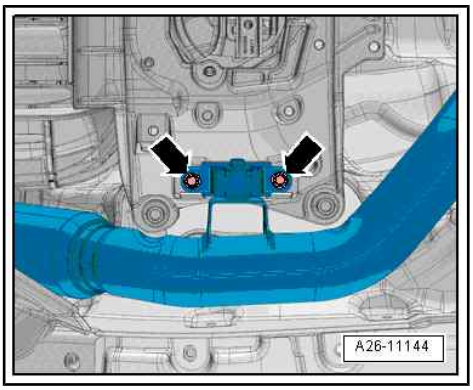


– Loosen clamp -arrow- (left and right) and slide towards rear.

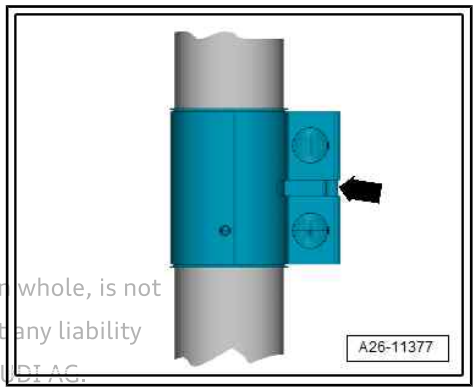


NOTICE

**Risk of damage to flexible joint if handled incorrectly.**

- **Do not bend flexible joint more than 10°.**
- **Install flexible joint so that it is not under tension.**

Protected by copyright. Copying for private or commercial purposes, in part or in whole, is not permitted unless authorised by AUDI AG. AUDI AG does not guarantee or accept any liability with respect to the correctness of information in this document. Copyright by AUDI AG.

– Push clamps towards rear, lower front silencers slightly and tie up with tensioning strap - T10038- , as shown.

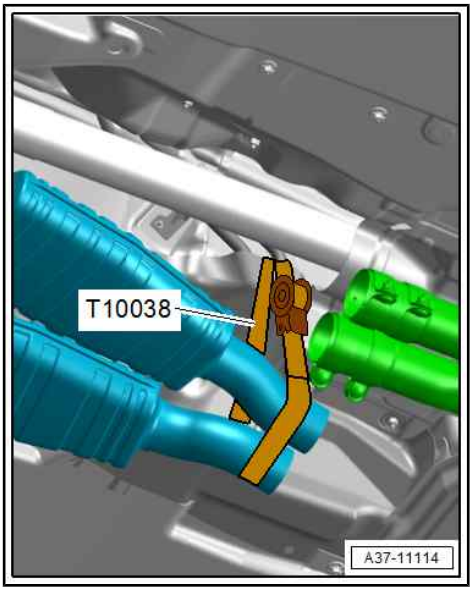

– Unscrew bolts -arrows- and place tunnel cross member on gearbox support - T10337- .

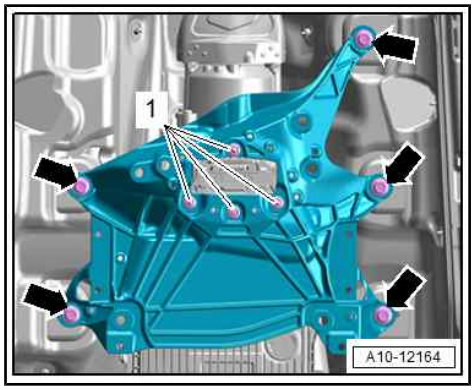


**All vehicles:**

– Place used oil collection and extraction unit - VAS 6622A- below gearbox.

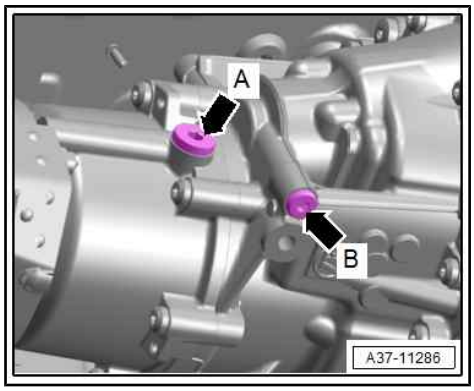


**CAUTION**

**Risk of injury to eyes caused by escaping oil.**
**– Put on safety goggles.**

– Remove drain plug -arrow B- and allow gear oil to drain off.

– Tighten new drain plug -arrow B-.

– Install tunnel cross member ⇒ page 71 .

– Install manual release cable for parking lock ⇒ page 25 .

**Filling up and adjusting oil level**

• Gear oil about 20 °C (room temperature)

– Place used oil collection and extraction unit - VAS 6622A- below gearbox.

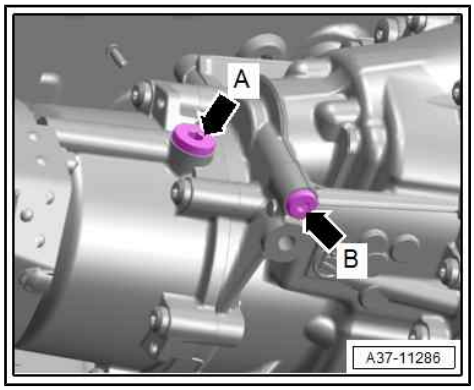


**CAUTION**

**Risk of injury to eyes caused by escaping oil.**
**– Put on safety goggles.**

– Unscrew plug for inspection and filler hole -arrow A- on centre differential housing.

Protected by copyright. Copying for private or commercial purposes, in part or in whole, is not permitted unless authorised by AUDI AG. AUDI AG does not guarantee or accept any liability with respect to the correctness of information in this document. Copyright by AUDI AG.

– Screw adapter -VAS 6617/6- with adapter -VAS 6617/2- hand-tight into inspection and filler hole for transfer box.

– Connect hand pump for filling gearbox - VAS 6617- and fill up transfer box with approx. 1.0 ltr. of gear oil.

• Gear oil specifications ⇒ Electronic parts catalogue

– Wait for 5 minutes.

• The transfer box incorporates a number of internal oil chambers. These must be filled evenly.

• It is necessary to wait for at least 5 minutes to allow the internal oil level to balance out between the centre differential and the baffle chamber.

– Then detach -VAS 6617/6- from gearbox and allow excess gear oil to drain off.

• Specification: Oil level is correct when oil in transfer box is up to lower edge of filler hole. Top up with gear oil once again if necessary.

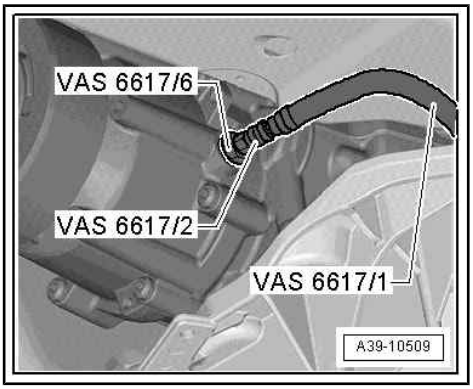


– Tighten new plug -arrow A- on housing for centre differential.

• The level does not need to be re-checked after this step.

**Tightening torques**

♦ Drain plugs and screw plugs ⇒ page 82

♦ ⇒ General body repairs, exterior; Rep. gr. 66 ; Noise insulation; Exploded view - noise insulation

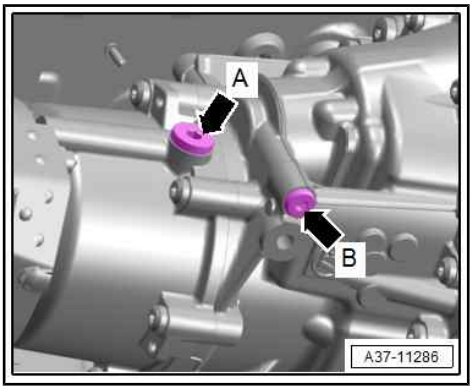


## 2.2.3 Draining and filling gear oil - gearbox with common oil system

**Special tools and workshop equipment required**

♦ Hand pump for filling gearbox - VAS 6617-

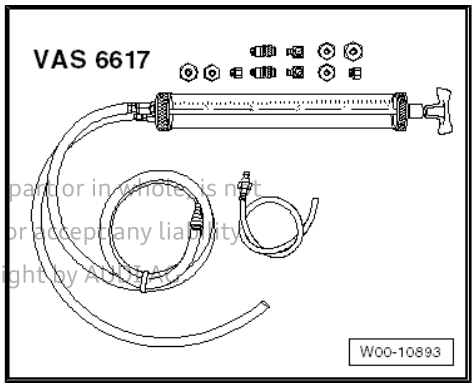


Protected by copyright. Copying for private or commercial purposes, in part or in whole, is not permitted unless authorised by AUDI AG. AUDI AG does not guarantee or accept any liability with respect to the correctness of information in this document. Copyright by AUDI AG.

- Used oil collection and extraction unit - VAS 6622-

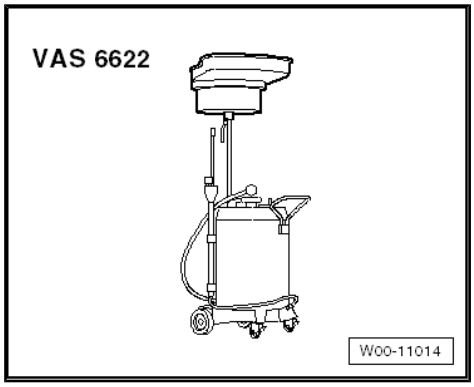


- Safety goggles

**Requirements**

- Refer to general repair instructions ⇒ page 5 .
- Note rules for cleanliness when working on automatic gearbox ⇒ page 4 .
- Always adhere to waste disposal regulations.
- Renew drain plug with seal.
- Renew plug for inspection and filler hole.

**Test conditions**

- Gear oil about 20 °C (room temperature)
- Engine must be switched off while work is being performed.
- Vehicle must be absolutely horizontal (on a four-pillar lifting platform or over an inspection pit).
- The vehicle must be stationary with the engine switched off for at least 15 minutes to allow the oil level to stabilise.
- Gearbox is in position “P”.
- Parking brake button must be pulled up to apply the electro-mechanical parking brake.

Protected by copyright. Copying for private or commercial purposes, in part or in whole, is not permitted unless authorised by AUDI AG. AUDI AG does not guarantee or accept any liability with respect to the accuracy of information in this document. Copyright by AUDI AG.

**Draining**

– Place used oil collection and extraction unit - VAS 6622- below gearbox.

| ⚠ CAUTION |
| --- |
| **Risk of injury to eyes caused by escaping oil.**<br>**– Put on safety goggles.** |

– A cloth should be placed on the tunnel cross member to prevent gear oil from running into the casting pockets on the tunnel cross member.

Protected by copyright. Copying for private or commercial purposes, in pa
permitted unless authorised by AUDI AG. AUDI AG does not guarantee or
with respect to the correctness of information in this document. Copyrigh

– Unscrew drain plug -arrow B- on front final drive and drain off gear oil.

– Tighten new drain plug on front final drive -arrow B-.

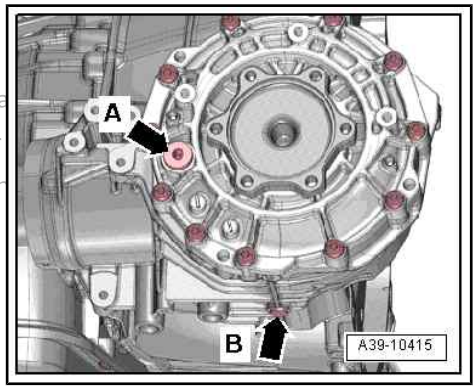


– Unscrew drain plug -arrow B- on centre differential housing and drain off gear oil.

– Tighten new drain plug on centre differential housing -arrow B-.

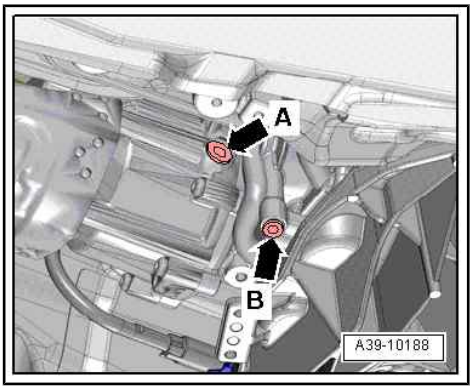


**Filling up and adjusting oil level**

• Gear oil about 20 °C (room temperature)

– Place used oil collection and extraction unit - V.A.G 1782- below gearbox.

– Remove plug -arrow A- on front final drive.

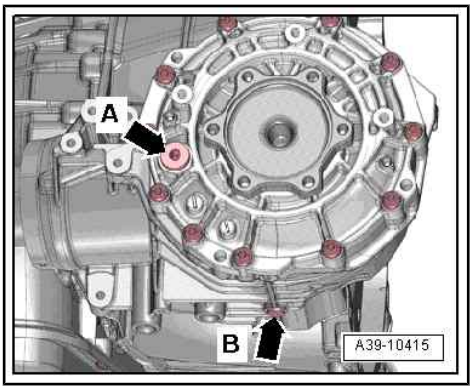


– Screw adapter - VAS 6617/6- hand-tight into inspection hole for front final drive together with adapter - VAS 6617/2- and fill up front final drive with approx. 1.0 litre of gear oil.

• Gear oil specifications ⇒ Electronic parts catalogue

– Wait for 5 minutes.

• It is necessary to wait for at least 5 minutes to allow the internal oil level to balance out between the differential and the baffle chamber.

– Then detach -VAS 6617/6- from gearbox and allow excess gear oil to drain off.

– Re-install used screw plug.

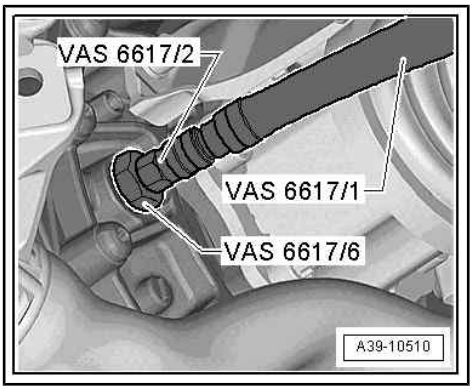

– Remove plug -arrow A- on housing for centre differential.

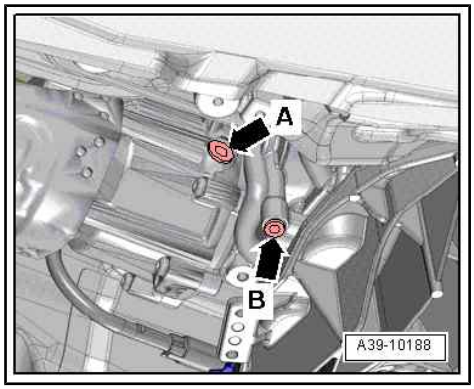


– Screw adapter - VAS 6617/6- hand-tight into inspection hole for transfer box -arrow A- together with adapter - VAS 6617/2- and fill up transfer box with approx. 1.0 litre of gear oil.

• Gear oil specifications ⇒ Electronic parts catalogue

– Wait for 5 minutes.

• The transfer box incorporates a number of internal oil chambers. These must be filled evenly.

• It is necessary to wait for at least 5 minutes to allow the internal oil level to balance out between the centre differential and the baffle chamber.

– Then detach -VAS 6617/6- from gearbox and allow excess gear oil to drain off.

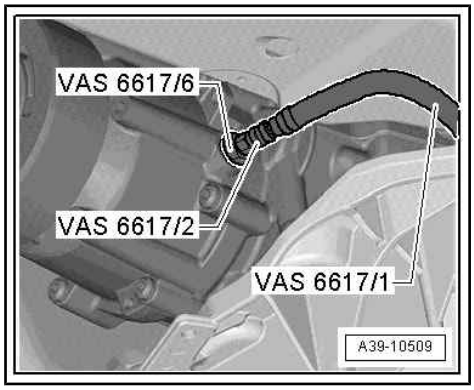


– Re-install used screw plug.

– Road test vehicle for 10 to 15 minutes.

• The oil filling will be distributed evenly when the vehicle is driven.

– Check gear oil level and top up as required ⇒ page 99 .

Protected by copyright. Copying for private or commercial purposes, in part or in whole, is not permitted unless authorised by AUDI AG. AUDI AG does not guarantee or accept any liability with respect to the correctness of information in this document. Copyright by AUDI AG.

# 3 Gear oil cooler and pipes

⇒ “3.1 Removing and installing gear oil cooler”, page 113

## 3.1 Removing and installing gear oil cooler

**Special tools and workshop equipment required**

- Hose clamps up to 25 mm - 3094-

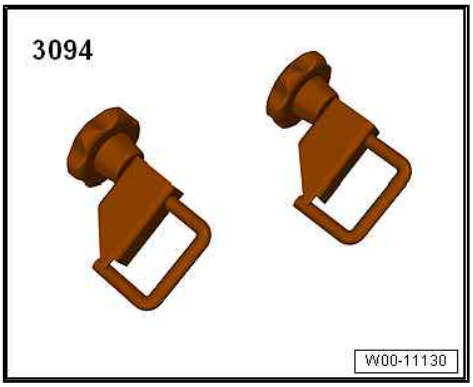


- Hose clip pliers - VAS 6362-

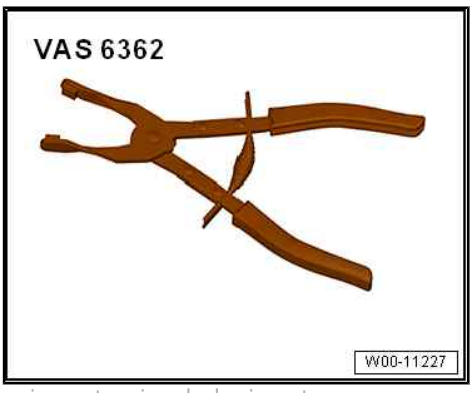


Protected by copyright. Copying for private or commercial purposes, in part or in whole, is not permitted unless authorised by AUDI AG. AUDI AG does not guarantee or accept any liability with respect to the correctness of information in this document. Copyright by AUDI AG

- Used oil collection and extraction unit - VAS 6622A-

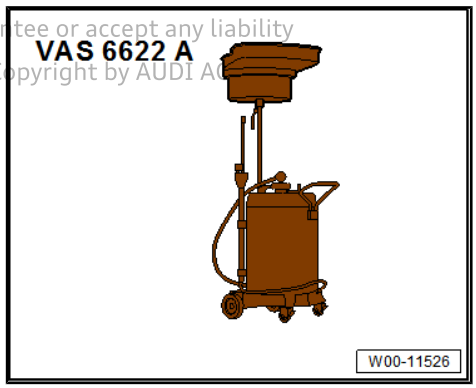

### Removing

– Remove rear noise insulation -2- ⇒ General body repairs, exterior; Rep. gr. 66 ; Noise insulation; Removing and installing noise insulation .

Protected by copyright. Copying for private or comm
permitted unless authorised by AUDI AG. AUDI AG d
with respect to the correctness of information in this

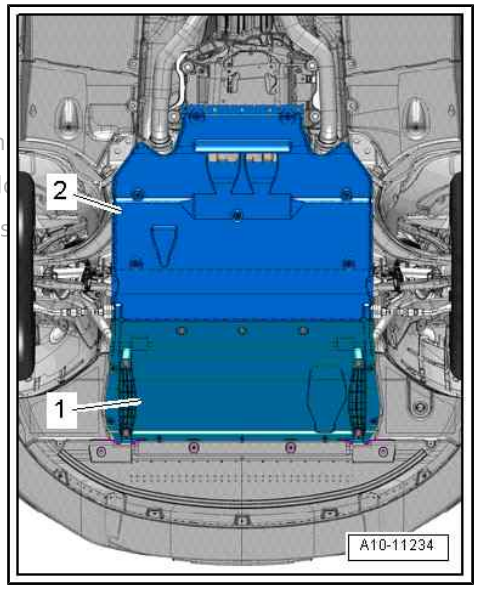


– Place a cloth underneath to catch escaping coolant.

– Clamp off coolant hoses with hose clamps -3094- .

– Release hose clips -1- and detach coolant hoses.

– Place used oil collection and extraction unit - VAS 6622A- below gearbox.

– Remove bolts -3- and detach radiator -4- for front final drive.

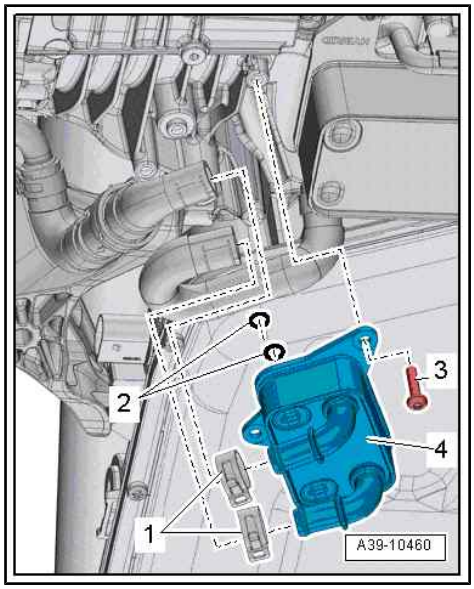


### Installing

Installation is carried out in reverse order; note the following:

♦ Renew O-rings -2-.

– Check gear oil level in front final drive ⇒ page 102 .

### Tightening torques

♦ ⇒ Fig. ""Radiator for front final drive - tightening torque"" , page 94

# 4 Oil seals

⇒ “4.1 Renewing oil seal (left-side)”, page 115

⇒ “4.2 Renewing oil seal (right-side)”, page 117

## 4.1 Renewing oil seal (left-side)

- A defective seal allows gear oil to enter the gearbox bellhousing.

**Special tools and workshop equipment required**

- Oil seal extractor - 3240-

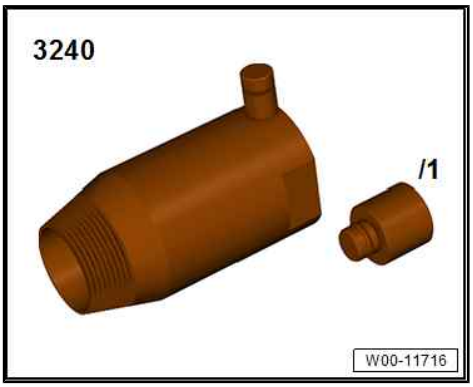


- Thrust piece - T10139-

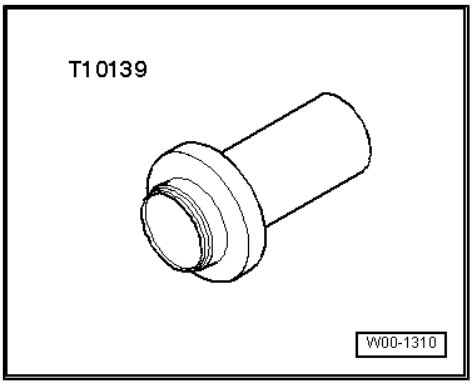


**Requirements**

- General repair instructions ⇒ page 5 .
- Rules for cleanliness ⇒ page 4 .

**Procedure**

– Drain off gear oil
⇒ “2.2.1 Draining and filling gear oil - front final drive, gearbox with separate oil systems”, page 102 .

– Remove flange shaft (right-side) ⇒ page 121 .

Protected by copyright. Copying for private or commercial purposes, in part or in whole, is not permitted unless authorised by AUDI AG. AUDI AG does not guarantee or accept any liability with respect to the correctness of information in this document. Copyright by AUDI AG.

– Remove bolts securing cover for front final drive in the sequence -11 ... 1-.

– Remove cover for front final drive together with outer race for tapered roller bearing and shim.

• Thickness of shim has been measured to fit; the shim must not be replaced with another shim of different thickness.

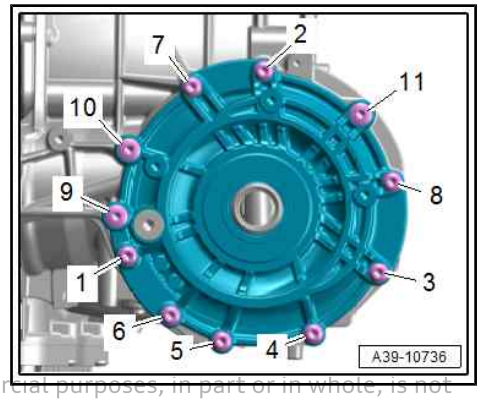


Protected by copyright. Copying for private or commercial purposes, in part or in whole, is not permitted unless authorised by AUDI AG. AUDI AG does not guarantee or accept any liability with respect to the correctness of information in this document. Copyright by AUDI AG.

– Remove differential -arrow-.

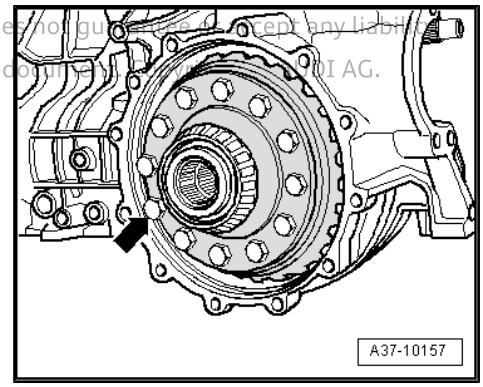


– Remove tapered roller bearing outer race -1- for differential and shim -2- (behind outer race) from gearbox housing by hand.

• Thickness of shim has been measured to fit; the shim must not be replaced with another shim of different thickness.

– Detach flange shaft (left-side) slightly from gearbox, but do not remove it ⇒ page 119 .

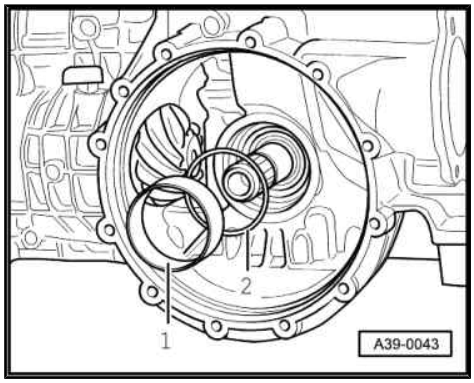


– Adjust inner part of oil seal extractor -3240- so that it is flush with outer part and secure inner part with knurled screw -arrow-.

– Lubricate threaded head of oil seal extractor, put it in position and screw into oil seal (apply firm pressure) until oil seal turns along with it.

– Continue turning and simultaneously pulling oil seal extractor until oil seal is pulled out.

– Clamp flat surfaces of oil seal extractor in a vice and remove oil seal with pliers.

– Check seal seat in gearbox housing for damage and rework if necessary.

– Clean contact surface and sealing surface.

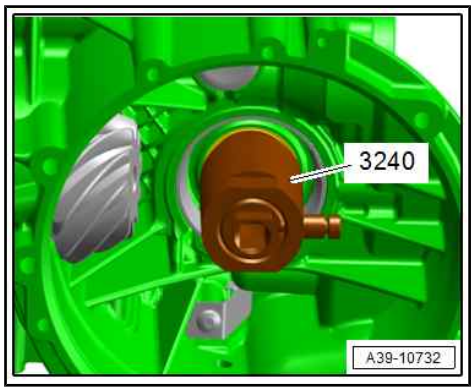

– Lightly lubricate outer circumference and sealing lip of oil seal with gear oil.

• Push seal onto thrust piece with the protruding sealing lip on the seal facing towards the tool.

– Drive in new seal as far as stop.

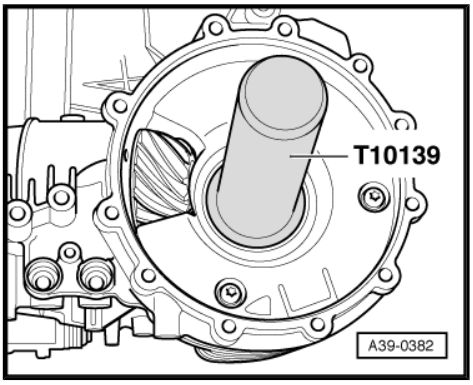


– Insert shim -2- and tapered roller bearing outer race -1- for differential onto stop in gearbox housing by hand.

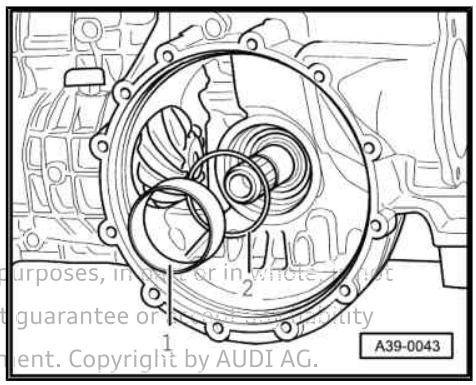


Protected by copyright. Copying for private or commercial purposes, in part or in whole, is not permitted unless authorised by AUDI AG. AUDI AG does not guarantee or assume any liability with respect to the correctness of information in this document. Copyright by AUDI AG.

– Renew O-ring -arrow-.

– Install differential in gearbox housing.

Note the following if the outer race for tapered roller bearing and the shim have dropped out of the front final drive cover:

– Lubricate shim and outer race for tapered roller bearing with gear oil and insert in front final drive cover as far as the stop.

– Install flange shaft (left-side) ⇒ page 119 .

– Tighten bolts for front final drive cover ⇒ page 94 .

– Install flange shaft (right-side) ⇒ page 121 .

– Top up gear oil and check oil level ⇒ page 102 .

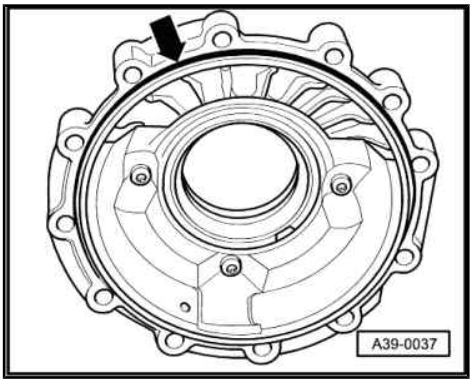


## 4.2 Renewing oil seal (right-side)

**Special tools and workshop equipment required**

♦ Thrust piece - T40163-

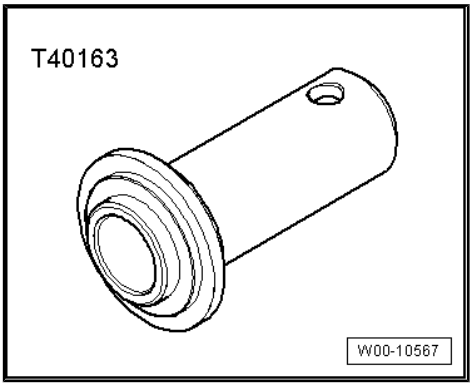


♦ Sealing grease - G 052 128 A1-

### Removing

- Gearbox in vehicle
- Remove flange shaft (right-side) ⇒ page 121 .
- Lever out flange shaft oil seal.

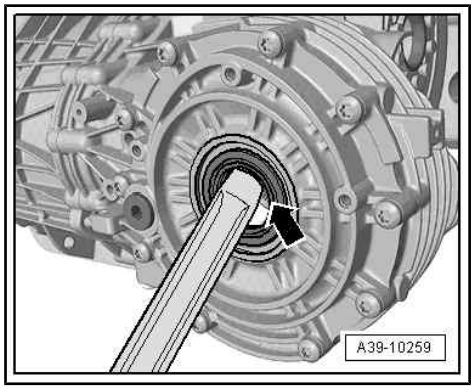


### Installing

Installation is carried out in reverse order; note the following:

- Lightly oil outer circumference of new oil seal.
- Drive in oil seal onto stop using thrust piece - T40163- . Take care to keep seal straight when installing.
- Pack space between sealing lip and dust lip half-full with sealing grease - G 052 128 A1- .
- Install flange shaft (right-side) ⇒ page 121 .

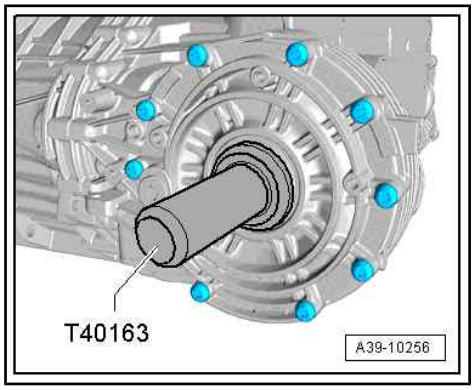


Protected by copyright. Copying for private or commercial purposes, in part or in whole, is not permitted unless authorised by AUDI AG. AUDI AG does not guarantee or accept any liability with respect to the correctness of information in this document. Copyright by AUDI AG.

# 5 Differential

⇒ “5.1 Removing and installing flange shaft (left-side)”, page 119

⇒ “5.2 Removing and installing flange shaft (right-side)”, page 121

## 5.1 Removing and installing flange shaft (left-side)

**Special tools and workshop equipment required**

- Sealing grease ⇒ Electronic parts catalogue

Protected by copyright. Copying for private or commercial purposes, in part or in whole, is not permitted unless authorised by AUDI AG. AUDI AG does not guarantee or accept any liability with respect to the correctness of information in this document. Copyright by AUDI AG.

**Removing**

- Gearbox in vehicle

– Drain off gear oil
⇒ “2.2.1 Draining and filling gear oil - front final drive, gearbox with separate oil systems”, page 102 .

– Remove drive shaft (left-side) ⇒ Running gear, axles, steering; Rep. gr. 40 ; Drive shaft; Removing and installing drive shaft .

– Vehicles with inflexible ATF lines: Remove ATF cooler
⇒ page 79 .

– Vehicles with ATF hoses: Unbolt ATF cooler and press it to one side ⇒ page 79 .

– Remove shock absorber fork (left-side) ⇒ Running gear, axles, steering; Rep. gr. 40 ; Suspension strut, upper links; Removing and installing shock absorber fork .

– Unscrew bolts -arrows- on mounting bracket for flange shaft.

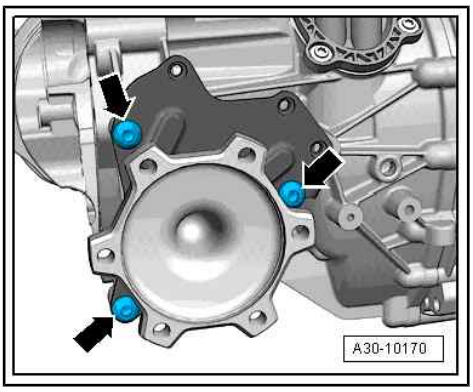


– Pull cover -arrow- (bottom) out of gearbox.

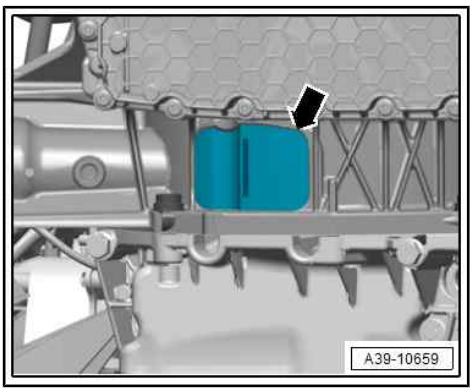

– To avoid damaging oil seal, support flange shaft -arrow- and guide it out through opening in gearbox.

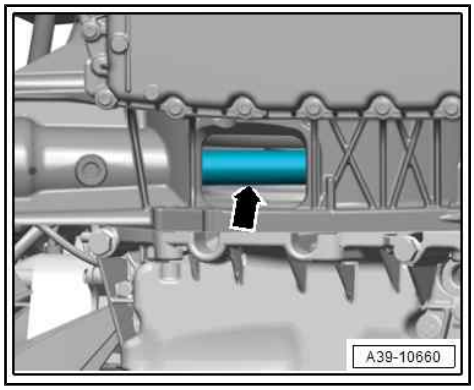


– Remove flange shaft (left-side) -2- from gearbox in direction of -arrow A-.

• Take care not to damage oil seal -arrow 3-.

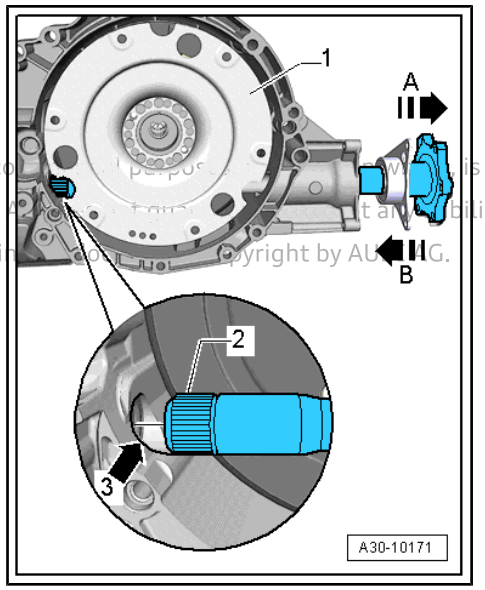


**Installing**

Installation is carried out in reverse order; note the following:

Protected by copyright. Copying for private or co[illegible] is not permitted unless authorised by AUDI AG. AUDI A[illegible] liability with respect to the correctness of information i[illegible] Copyright by AU[illegible]G.

♦ After removal, renew bolts which are tightened by turning through a specified angle.

– To avoid damaging oil seal, support flange shaft -arrow- and guide it in through opening in gearbox.

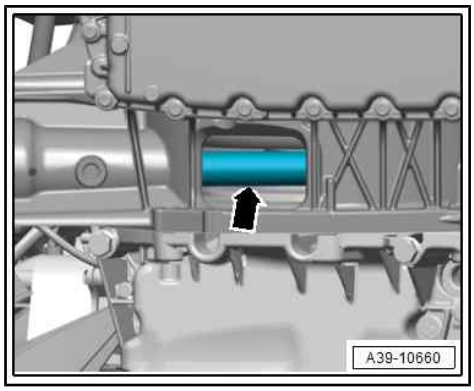

Protected by copyright. Copying for private or commercial purposes, in part or in
permitted. Also no liability for AUDI AG, AUDI AG does not guarantee or accept any liability
with respect to the correctness of information in this document. Copyright by A

– Slide flange-shaft (left-side) -2- into gearbox in direction of -arrow B- (keep end of shaft centred while guiding it into oil seal on front final drive -arrow 3-).

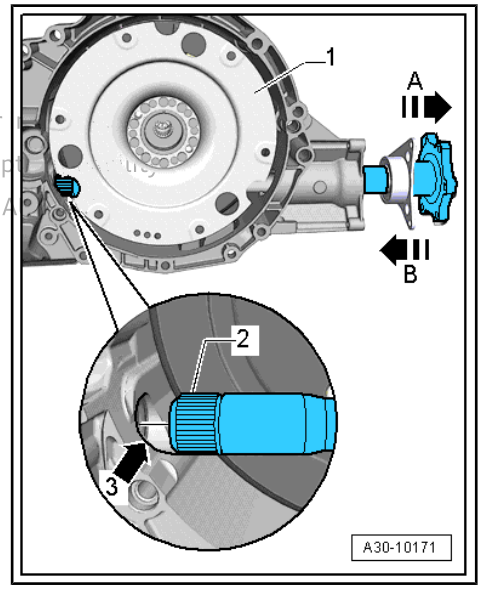


- Take care not to damage oil seal -arrow 3-.

– Install shock absorber fork ⇒ Running gear, axles, steering; Rep. gr. 40 ; Suspension strut, upper links; Removing and installing shock absorber fork .

– Install ATF cooler ⇒ page 79 .

**Tightening torque**

- ⇒ "1.1 Exploded view - final drive", page 92
- ⇒ Running gear, axles, steering; Rep. gr. 40 ; Drive shaft; Exploded view - drive shaft
- ⇒ Running gear, axles, steering; Rep. gr. 40 ; Drive shaft; Removing and installing heat shield for drive shaft

## 5.2 Removing and installing flange shaft (right-side)

**Special tools and workshop equipment required**

- Circlip pliers - VAS 5503A-

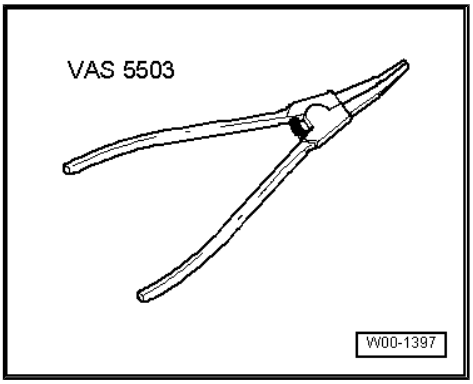


- Used oil collection and extraction unit - VAS 6622A-

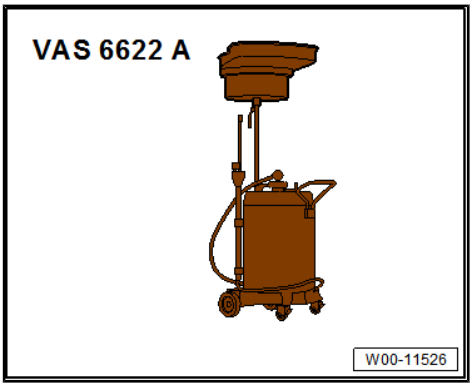

- Multi-purpose tool - VW 771- with -VW 771/43- (and -VW 771/45- for M14 thread)

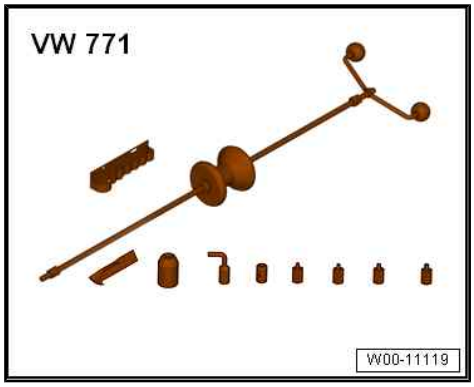


- Sealing grease - G 052 128 A1-

**Removing**

– Remove drive shaft (right-side) ⇒ Running gear, axles, steering; Rep. gr. 40 ; Drive shaft; Removing and installing drive shaft .

– Remove heat shield for drive shaft (right-side) ⇒ Running gear, axles, steering; Rep. gr. 40 ; Drive shaft; Removing and installing heat shield for drive shaft .

– Place used oil collection and extraction unit - VAS 6622A- below gearbox.

– Version with M12 thread: Apply multi-purpose tool - VW 771- with -VW 771/43- to flange shaft, as shown in illustration.

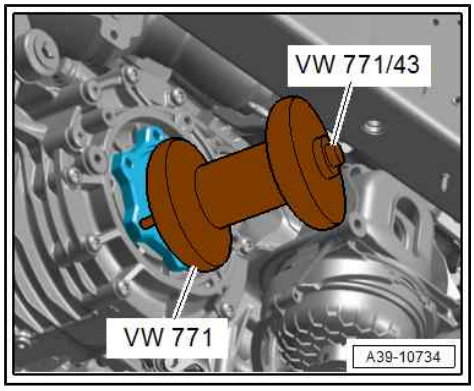


– Version with M14 thread: Apply multi-purpose tool - VW 771- with -VW 771/43- and -VW 771/45- to flange shaft, as shown in illustration.

– Detach flange shaft.

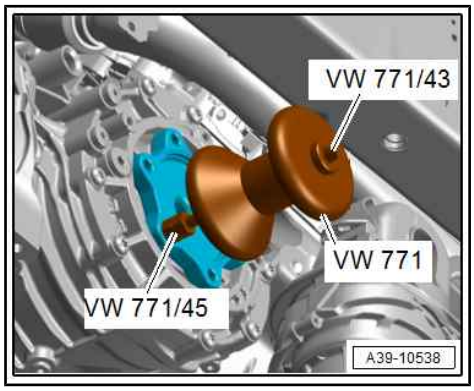


Protected by copyright. Copying for private or commercial purposes, in part or in whole, is not permitted unless authorised by AUDI AG. AUDI AG does not guarantee or accept any liability with respect to the correctness of information in this document. Copyright by AUDI AG.

### Installing

Installation is carried out in reverse order; note the following:

- Renew circlip after removal

– Insert circlip -1- with circlip pliers - VAS 5503A- .

– Check flange shaft oil seal (right-side) for damage and renew if necessary ⇒ page 117 .

– Pack space between sealing lip and dust lip half-full with sealing grease - G 052 128 A1- .

– Fit flange shaft (right-side).

– Top up gear oil and check oil level
⇒ “2.2.1 Draining and filling gear oil - front final drive, gearbox with separate oil systems”, page 102 .

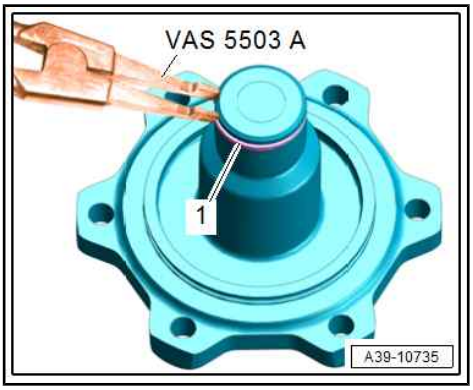


### Tightening torques

◆ ⇒ “1.1 Exploded view - final drive”, page 92

◆ ⇒ Running gear, axles, steering; Rep. gr. 40 ; Drive shaft; Exploded view - drive shaft

◆ ⇒ Running gear, axles, steering; Rep. gr. 40 ; Drive shaft; Removing and installing heat shield for drive shaft

Protected by copyright. Copying for private or commercial purposes, in part or in whole, is not permitted unless authorised by AUDI AG. AUDI AG does not guarantee or accept any liability with respect to the correctness of information in this document. Copyright by AUDI AG.

# 6 Centre differential

**For all centre differential procedures, refer to ⇒ Servicing 8-speed automatic gearbox; Rep. gr. 39 ; Centre differential .**

Protected by copyright. Copying for private or commercial purposes, in part or in whole, is not permitted unless authorised by AUDI AG. AUDI AG does not guarantee or accept any liability with respect to the correctness of information in this document. Copyright by AUDI AG.

# 7 Gearbox control system

⇒ "7.1 Overview of fitting locations - gearbox control system", page 125

## 7.1 Overview of fitting locations - gearbox control system

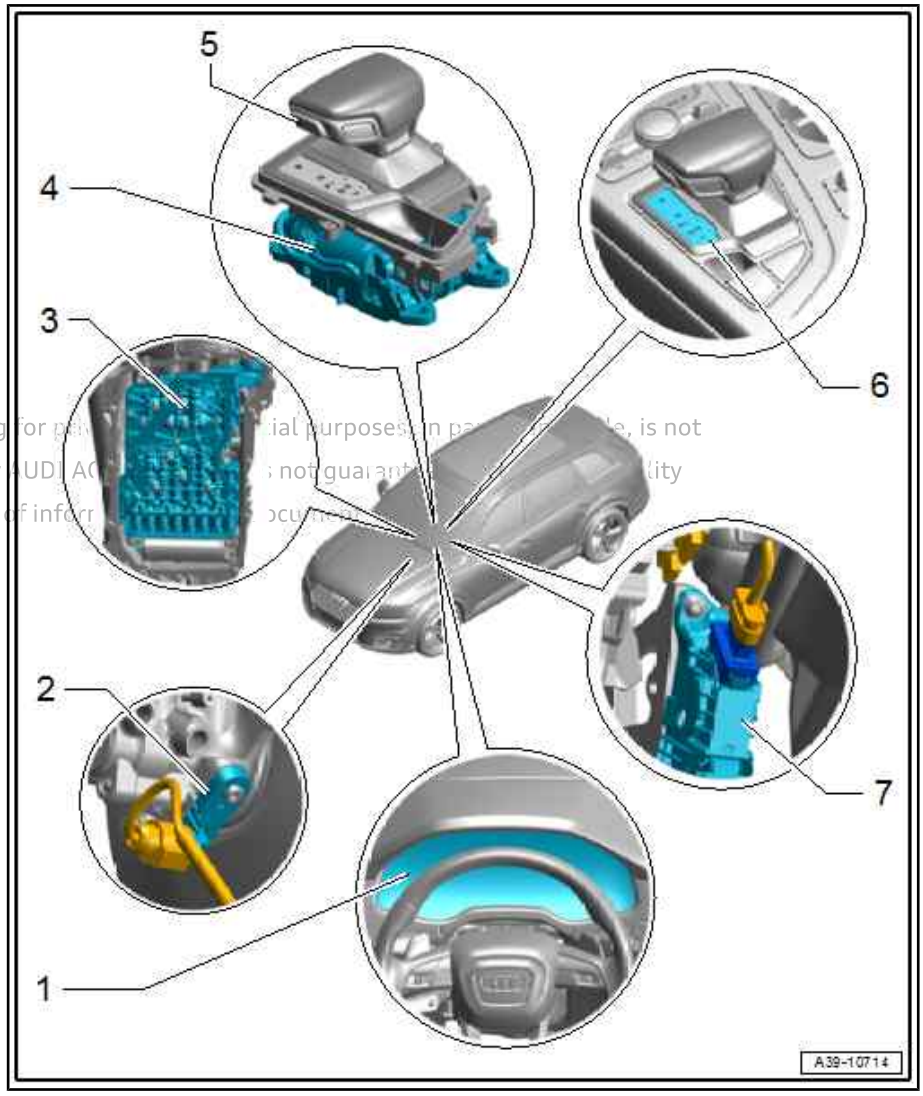


**1 - Dash panel insert**

- ❑ With control unit in dash panel insert - J285-
- ❑ Exploded view ⇒ Electrical system; Rep. gr. 90 ; Dash panel insert; Exploded view - dash panel insert

**2 - Brake light switch - F-**

- ❑ Exploded view ⇒ Brake system; Rep. gr. 47 ; Brake servo/brake master cylinder; Exploded view - brake servo/ brake master cylinder

Protected by copyright. Copying for pr... ial purposes in pa... le, is not permitted unless authorised by AUDI AG... not guarant... lity with respect to the correctness of inform... ocument.

**3 - Mechatronic unit**

- ❑ With hydraulic pulse accumulator
- ❑ The following components are integrated in the mechatronic unit:

- ♦ Automatic gearbox control unit - J217-
- ♦ Solenoid valve 1 - N88-
- ♦ Automatic gearbox pressure regulating valve 1 - N215-
- ♦ Automatic gearbox pressure regulating valve 2 - N216-
- ♦ Automatic gearbox pressure regulating valve 3 - N217-
- ♦ Automatic gearbox pressure regulating valve 4 - N218-
- ♦ Automatic gearbox pressure regulating valve 5 - N233-
- ♦ Automatic gearbox pressure regulating valve 6 - N371-
- ♦ Automatic gearbox pressure regulating valve 7 - N443-
- ♦ Accumulator solenoid - N485-
- ♦ Parking lock solenoid - N486-
- ♦ Gearbox oil temperature sender - G93-
- ♦ Gearbox input speed sender - G182-
- ♦ Gearbox output speed sender - G195-
- ♦ Temperature sender in control unit - G510-
- ♦ Parking lock sender - G747-

- ❑ Components cannot be renewed separately if defective
- ❑ All components are checked via self-diagnosis
- ❑ Exploded view ⇒ Servicing 8-speed automatic gearbox; Rep. gr. 38 ; Mechatronic unit; Exploded view - mechatronic unit

**4 - Selector mechanism**

- ❑ The following components are integrated in the selector mechanism:

- ♦ Selector lever - E313-
- ♦ Selector lever position sender - G727-
- ♦ Sender for lateral selector lever lock - G868-
- ♦ Selector lever sensors control unit - J587-
- ♦ Selector lever lock solenoid - N110-
- ♦ Motor for lateral selector lever lock - V577-

- ❑ Components cannot be renewed separately if defective
- ❑ Exploded view ⇒ page 13

**5 - Selector lever handle**

- ❑ The following components are integrated in the selector mechanism:

- ♦ Button for selector lever release - E681-
- ♦ Parking lock button - E816-

- ❑ Components cannot be renewed separately if defective
- ❑ Exploded view ⇒ page 13

**6 - Selected range display - Y5-**

- ❑ Removing and installing ⇒ Electrical system; Rep. gr. 96 ; Lights; Overview of fitting locations - lights in centre console

**7 - Kickdown switch**

- ❑ A specific value for the accelerator pedal module with accelerator position sender - G79- / accelerator position sender 2 - G185- is stored in the engine control unit
- ❑ Removing and installing accelerator pedal module ⇒ Fuel supply system; Rep. gr. 20 ; Accelerator mechanism; Removing and installing accelerator pedal module with accelerator position sender -G79-/-G185-

Protected by copyright. Copying for private or commercial purposes, in part or in whole, is not permitted unless authorised by AUDI AG. AUDI AG does not guarantee or accept any liability with respect to the correctness of information in this document. Copyright by AUDI AG.