ELECTRICAL

Wiring Systems and Power Management - Component Locator - Electrical Center Identification Views - Escalade, Suburban, Tahoe, Yukon

ELECTRICAL CENTER IDENTIFICATION VIEWS

X50A FUSE BLOCK - UNDERHOOD LABEL

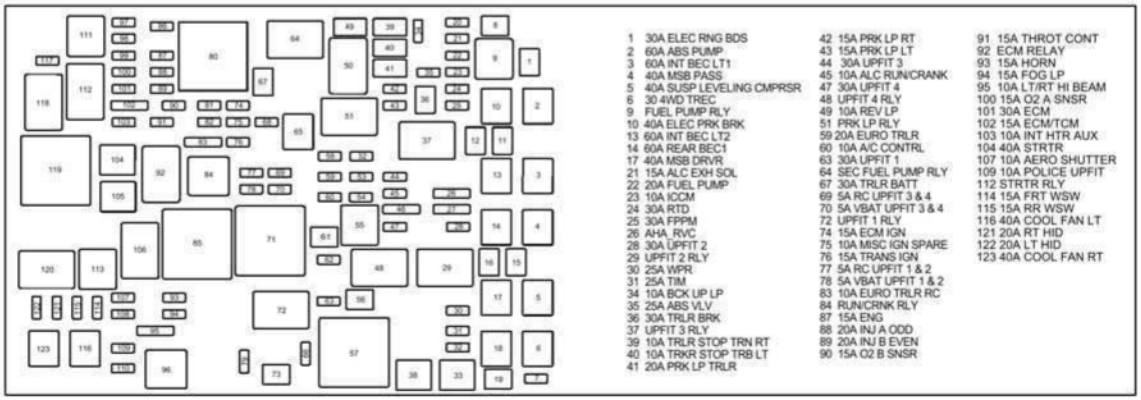

Fig. 1: X50A Fuse Block - Underhood Label
Courtesy of GENERAL MOTORS COMPANY

X50A FUSE BLOCK - UNDERHOOD TOP VIEW

cardiagn.com

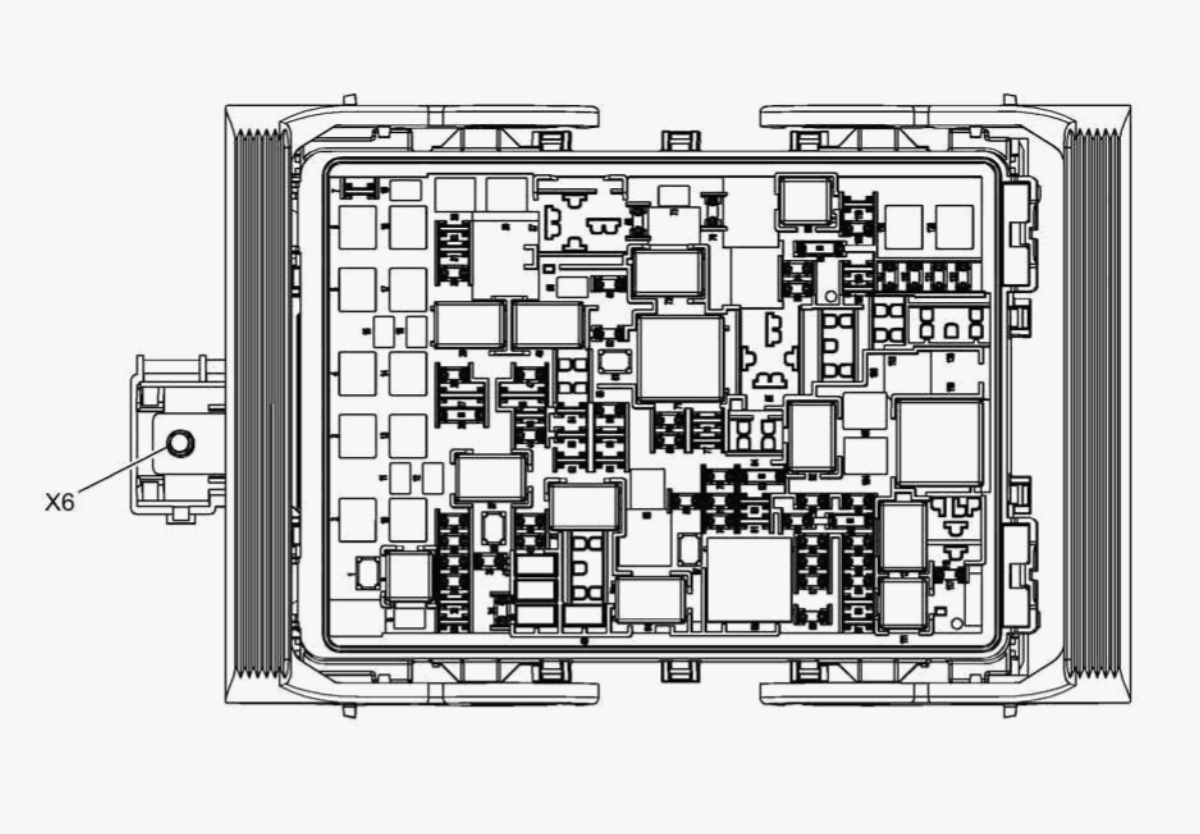

Fig. 2: X50A Fuse Block - Underhood Top View
Courtesy of GENERAL MOTORS COMPANY

X50A Fuse Block - Underhood Usage

No.	Device Label Name	Fuse And Relay Description	Rating	Circuits
Fuses				
1	ELEC RNG BDS	F1UA	30A	K4 Assist Step Control Module
2	ABS PUMP	F2UA	60A	K17 Electronic Brake Control Module
3	INT BEC LT1	F3UA	60A	X51L Fuse Block - Instrument Panel Left
4	MSB PASS	F4UA	40A	M101R Seat Belt Retractor Motor Module - Right (AX7)
5	SUSP LEVELING CMPRSR	F5UA	40A	KR98 Vehicle Level Control Compressor Relay (Z85 or Z95)

cardiagn.com

No.	Device Label Name	Fuse And Relay Description	Rating	Circuits
6	4WD TREC	F6UA	30A	A16 Transfer Case Motor (NP0 or NQH), K69 Transfer Case Control Module (NP0 or NQH)
7	-	F7UA	-	Not Used
8	-	F8UA	-	Not Used
10	ELEC PRK BRK	F10UA	40A	K83 Parking Brake Control Module (J71)
11	-	F11UA	-	Not Used
12	-	F12UA	-	Not Used
13	INT BEC LT2	F13UA	60A	X51L Fuse Block - Instrument Panel Left
14	REAR BEC1	F14UA	60A	X53A Fuse Block - Rear Body
15	-	F15UA	-	Not Used
16	-	F16UA	-	Not Used
17	MSB DRVR	F17UA	40A	M101L Seat Belt Retractor Motor Module - Left (AX7)
18	-	F18UA	-	Not Used
19	-	F19UA	-	Not Used
20	-	F20UA	-	Not Used
21	ALC EXH SOL	F21UA	15A	Q4 Vehicle Level Control Solenoid Valve (Z85)
22	FUEL PUMP	F22UA	20A	KR23A Fuel Pump Relay (L96), A7 Fuel Pump and Level Sensor Assembly (L96)
23	ICCM	F23UA	10A	K38 Chassis Control Module (JL1 or Z85)
24	RTD	F24UA	30A	K19 Suspension Control Module (Z95)
25	FPPM	F25UA	30A	K111 Fuel Pump Driver Control Module (L83 or L86)
26	AHA_RVC	F26UA	5A	K9 Body Control Module
27	-	F27UA	-	Not Used
28	UPFIT 2	F28UA	30A	W9 Blunt Cut - Police Provision (5W4 or 9C1)
30	WPR	F30UA	25A	KR12B Windshield Wiper Relay, KR12C Windshield Wiper Speed Control Relay
31	TIM	F31UA	25A	K101 Trailer Interface Control Module (VQ9)
32	-	F32UA	-	Not Used
33	-	F33UA	-	Not Used

cardiagn.com

No.	Device Label Name	Fuse And Relay Description	Rating	Circuits
34	BCK UP LP	F34UA	10A	A10 Inside Rearview Mirror (DD8), B87 Rearview Camera (DD8 without UVH), E5A Backup Lamp - Left, E5B Backup Lamp - Right
35	ABS VLV	F35UA	25A	K17 Electronic Brake Control Module
36	TRLR BRK	F36UA	30A	K67 Trailer Brake Control Module (JL1), W24 Blunt Cut Trailer Brakes Provision (without JL1)
38	-	F38UA	-	Not Used
39	TRLR STOP TRN RT	F39UA	10A	X88 Trailer Connector
40	TRLR STOP TRN LT	F40UA	10A	X88 Trailer Connector
41	PRK LP TRLR	F41UA	20A	X88 Trailer Connector
42	PRK LP RT	F42UA	15A	E2RF Side Marker Lamp - Right Front (X88 or Z88), E4K Park Lamp - Right Front (without Y91 or Z75), E5F Tail Lamp - Right (Z75 or Z88), E13RA Headlamp Assembly - Right (Z75), E42R Tail Lamp Assembly - Right (X88), E69R Multifunction Lamp Assembly - Front Fascia Right (Z75)
43	PRK LP LT	F43UA	15A	E2LF Side Marker Lamp - Left Front (X88 or Z88), E4J Park Lamp - Left Front (without Y91 or Z75), E5E Tail Lamp - Left (Z75 or Z88), E13LA Headlamp Assembly - Left (Z75), E42L Tail Lamp Assembly - Left (X88), E69L Multifunction Lamp Assembly - Front Fascia Left (Z75)
44	UPFIT 3	F44UA	30A	W9 Blunt Cut - Police Provision (5W4 or 9C1)
45	ALC RUN/CRANK	F45UA	10A	KR98 Vehicle Level Control Compressor Relay (Z85)
46	-	F46UA	-	Not Used
47	UPFIT 4	F47UA	30A	W9 Blunt Cut - Police Provision (5W4 or 9C1)
49	REV LP	F49UA	10A	X88 Trailer Connector
52	-	F52UA	-	Not Used
53	-	F53UA	-	Not Used
54	-	F54UA	-	Not Used
56	-	F56UA	-	Not Used
58	-	F58UA	-	Not Used

cardiagn.com

No.	Device Label Name	Fuse And Relay Description	Rating	Circuits
59	EURO TRLR	F59UA	20A	W8 Blunt Cut - Trailer Provision (VQ9)
60	A/C CONTRL	F60UA	10A	KR29 A/C Compressor Clutch Relay
61	-	F61UA	-	Not Used
62	-	F62UA	-	Not Used
63	UPFIT 1	F63UA	30A	W9 Blunt Cut - Police Provision (5W4 or 9C1)
65	-	F65UA	-	Not Used
66	-	F66UA	-	Not Used
67	TRLR BATT	F67UA	30A	X88 Trailer Connector
68	SEC FUEL PUMP	F68UA	20A	KR23B Fuel Pump Relay - Secondary (L96), A6D Fuel Pump and Level Sensor Assembly - Secondary (L96)
69	RC UPFIT 3 & 4	F69UA	5A	KR161C Configurable Provision Relay 3 (5W4 or 9C1), KR161D Configurable Provision Relay 4 (5W4 or 9C1)
70	VBAT UPFIT 3 & 4	F70UA	5A	KR161C Configurable Provision Relay 3 (5W4 or 9C1), KR161D Configurable Provision Relay 4 (5W4 or 9C1)
73	-	F73UA	-	Not Used
74	ECM IGN	F74UA	15A	K20 Engine Control Module, K38 Chassis Control Module, K111 Fuel Pump Control Module (L83 or L86)
75	MISC IGN SPARE	F75UA	10A	W9 Blunt Cut - Police Provision (5W4 or 9C1)
76	TRANS IGN	F76UA	15A	K71 Transmission Control Module, Front Axle Engagement Actuator (NP0 or NQH)
77	RC UPFIT 1 & 2	F77UA	5A	KR161A Configurable Provision Relay 1 (5W4 or 9C1), KR161B Configurable Provision Relay 2 (5W4 or 9C1)
78	VBAT UPFIT 1 & 2	F78UA	5A	KR161A Configurable Provision Relay 1 (5W4 or 9C1), KR161B Configurable Provision Relay 2 (5W4 or 9C1)
79	-	F79UA	-	Not Used
81	-	F81UA	-	Not Used
82	-	F82UA	-	Not Used
83	EURO TRLR RC	F83UA	10A	K101 Trailer Interface Control Module (VQ9)
86	-	F86UA	-	Not Used

cardiagn.com

No.	Device Label Name	Fuse And Relay Description	Rating	Circuits
87	ENG	F87UA	15A	B75C Multifunction Intake Air Sensor, B198 Fuel Composition Sensor (without L96 or Z75)
88	INJ A ODD	F88UA	20A	K20 Engine Control Module (L83 or L86), Q17A Fuel Injector 1 (L96), Q17C Fuel Injector 3 (L96), Q17E Fuel Injector 5 (L96), Q17G Fuel Injector 7 (L96), T8A Ignition Coil 1, T8C Ignition Coil 3, T8E Ignition Coil 5, T8G Ignition Coil 7
89	INJ B EVEN	F89UA	20A	K20 Engine Control Module (L83 or L86), Q17B Fuel Injector 2 (L96), Q17D Fuel Injector 4 (L96), Q17F Fuel Injector 6 (L96), Q17H Fuel Injector 8 (L96), T8B Ignition Coil 2, T8D Ignition Coil 4, T8F Ignition Coil 6, T8H Ignition Coil 8
90	O2 B SNSR	F90UA	15A	B52D Heated Oxygen Sensor - Bank 1 Sensor 2, B52F Heated Oxygen Sensor - Bank 2 Sensor 2
91	THROT CONT	F91UA	15A	K20 Engine Control Module (L96), M60A Active Grille Air Shutter 1 Motor Module (Z75), M60B Active Grille Air Shutter 2 Motor Module (Z75)
93	HORN	F93UA	15A	P12 Horn
94	FOG LP	F94UA	15A	E29LF Fog Lamp - Left Front (T3U), E29RF Fog Lamp - Right Front (T3U)
95	LT/RT HI BEAM	F95UA	10A	E4E Headlamp - Left High Beam (X88 or Z88), E4F Headlamp - Right High Beam (X88 or Z88), E13LA Headlamp Assembly - Left (Z75), E13RA Headlamp Assembly - Right (Z75)
97	-	F97UA	-	Not Used
98	-	F98UA	-	Not Used
99	-	F99UA	-	Not Used
100	O2 A SNSR	F100UA	15A	B52C Heated Oxygen Sensor - Bank 1 Sensor 1, B52E Heated Oxygen Sensor - Bank 2 Sensor 1, Q12 Evaporative Emission Purge Solenoid Valve, Q43 Valve Lifter Oil Manifold Assembly (L83 or L86), Q44 Engine Oil Pressure Control Solenoid Valve (L83 or L86)

cardiagn.com

No.	Device Label Name	Fuse And Relay Description	Rating	Circuits
101	ECM	F101UA	30A	K20 Engine Control Module (L83 or L86)
102	ECM/TCM	F102UA	15A	K20 Engine Control Module, K71 Transmission Control Module
103	INT HTR AUX	F103UA	10A	KR79 Auxiliary Battery Relay 2 (5W4 or 9C1), KR81 Auxiliary Battery Relay 1 (5W4 or 9C1)
104	STRTR	F104UA	40A	KR27 Starter Relay
105	-	F105UA	-	Not Used
107	AERO SHUTTER	F107UA	10A	Not Used
108	-	F108UA	-	Not Used
109	POLICE UPFIT	F109UA	10A	X122 Forward Lamp Harness to Forward Lamp Harness (6J7)
110	-	F110UA	-	Not Used
114	FRT WSW	F114UA	15A	G24 Windshield Washer Pump
115	RR WSW	F115UA	15A	G19 Rear Window Washer Pump
116	COOL FAN LT	F116UA	40A	G10L Cooling Fan Motor - Left
117	-	F117UA	-	Not Used
121	RT HID	F121UA	20A	T7R Headlamp Ballast - Right (T4F)
122	LT HID	F122UA	20A	T7L Headlamp Ballast - Left (T4F)
123	COOL FAN RT	F123UA	40A	G10R Cooling Fan Motor - Right
Relays				
9	FUEL PUMP RLY	KR23A Fuel Pump Relay	-	A7 Fuel Pump and Level Sensor Assembly (L96)
29	UPFIT 2 RLY	KR161B Configurable Provision Relay 2	-	F28UA
37	UPFIT 3 RLY	KR161C Configurable Provision Relay 3	-	F44UA
48	UPFIT 4 RLY	KR161D Configurable Provision Relay 4	-	F47UA
50	-	-	-	Not Used
51	PRK LP RLY	KR53 Park Lamps Relay	-	F41UA, F42UA, F43UA

cardiagn.com

No.	Device Label Name	Fuse And Relay Description	Rating	Circuits
55	-	-	-	Not Used
57	-	-	-	Not Used
64	SEC FUEL PUMP RLY	KR23B Fuel Pump Relay - Secondary	-	A6D Fuel Pump and Level Sensor Assembly - Secondary (L96)
71	-	-	-	Not Used
72	UPFIT 1 RLY	KR161A Configurable Provision Relay 1	-	F63UA
80	-	-	-	Not Used
84	RUN/CRNK RLY	KR73 Ignition Main Relay	-	F45UA (Z85), F69UA, F74UA, F76UA, F77UA, F107UA
85	-	-	-	Not Used
92	ECM RLY	KR75 Engine Controls Ignition Relay	-	F87UA, F88UA, F89UA, F90UA, F100UA, F101UA, KR29 A/C Compressor Clutch Relay
96	-	-	-	Not Used
106	-	-	-	Not Used
111	-	-	-	Not Used
112	STRTR RLY	KR27 Starter Relay	-	M64 Starter Motor
113	-	-	-	Not Used
118	-	-	-	Not Used
119	-	-	-	Not Used
120	-	-	-	Not Used
Important: Relays listed below are non-serviceable Printed Circuit Board (PCB) relays and are internal to the block				
-	-	KR3 Horn Relay	-	F93UA
-	-	KR6 Rear Window Washer Pump Relay	-	F115UA
-	-	KR11 Windshield Washer Pump Relay	-	F114UA
-	-	KR12B Windshield Wiper Relay	-	KR12C Windshield Wiper Speed Control Relay

cardiagn.com

No.	Device Label Name	Fuse And Relay Description	Rating	Circuits
-	-	KR12C Windshield Wiper Speed Control Relay	-	M75 Windshiled Wiper Motor
-	-	KR29 A/C Compressor Clutch Relay	-	Q2 A/C Compressor Clutch
-	-	KR46 Front Fog Lamp Relay	-	F94UA (T3U)
-	-	KR48 Headlamp High Beam Relay	-	F95UA
-	-	KR49 Headlamp Low Beam Relay	-	F121UA (T4F), F122UA (T4F)
-	-	KR61 Trailer Backup Lamps Relay	-	F34UA, F49UA
-	-	KR63L Trailer Stop/Turn Signal Lamp Relay - Left	-	F40UA
-	-	KR63R Trailer Stop/Turn Signal Lamp Relay - Right	-	F39UA
Note: Items listed below are diagnostic testing points				
TP1	-	TP1	-	KR29 A/C Compressor Clutch Relay
TP2	-	TP2	-	KR12C Windshield Wiper Speed Control Relay

X50A FUSE BLOCK - UNDERHOOD BOTTOM VIEW

cardiagn.com

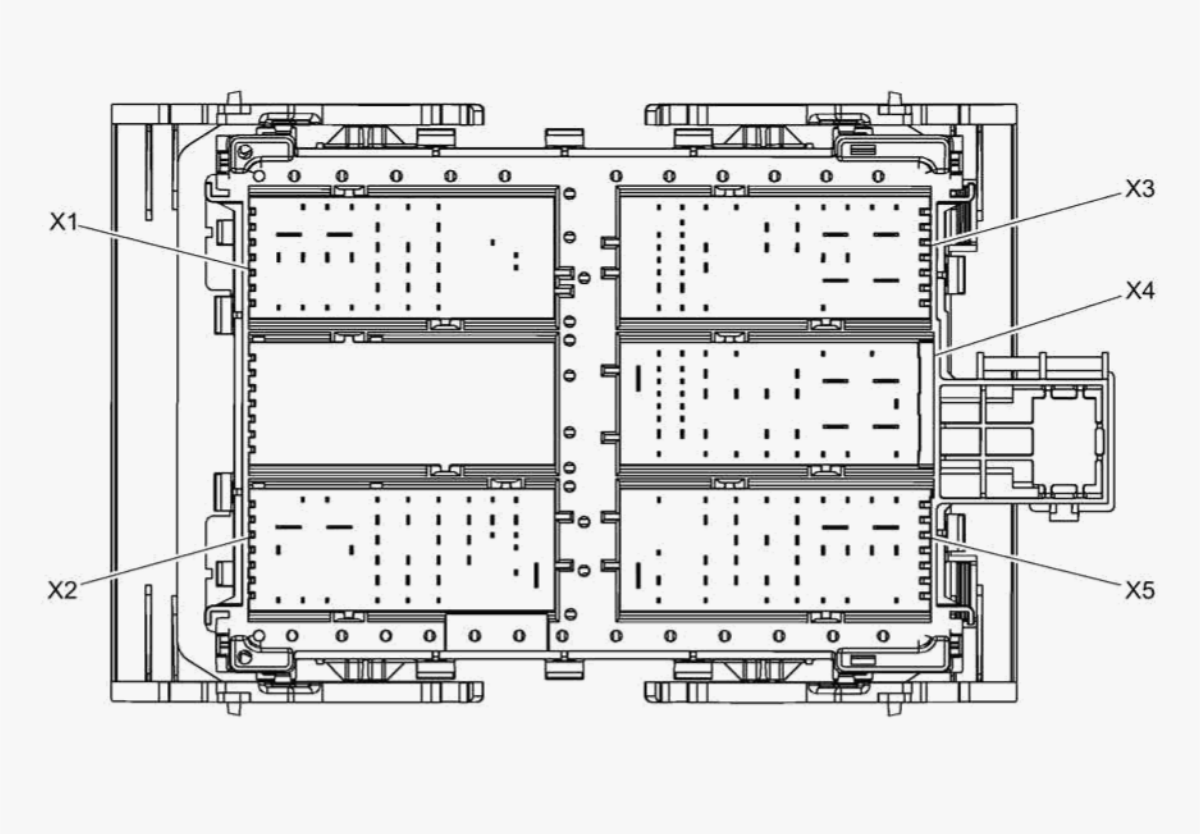

Fig. 3: X50A Fuse Block - Underhood Bottom View
Courtesy of GENERAL MOTORS COMPANY

X50A FUSE BLOCK - UNDERHOOD X1

cardiagn.com

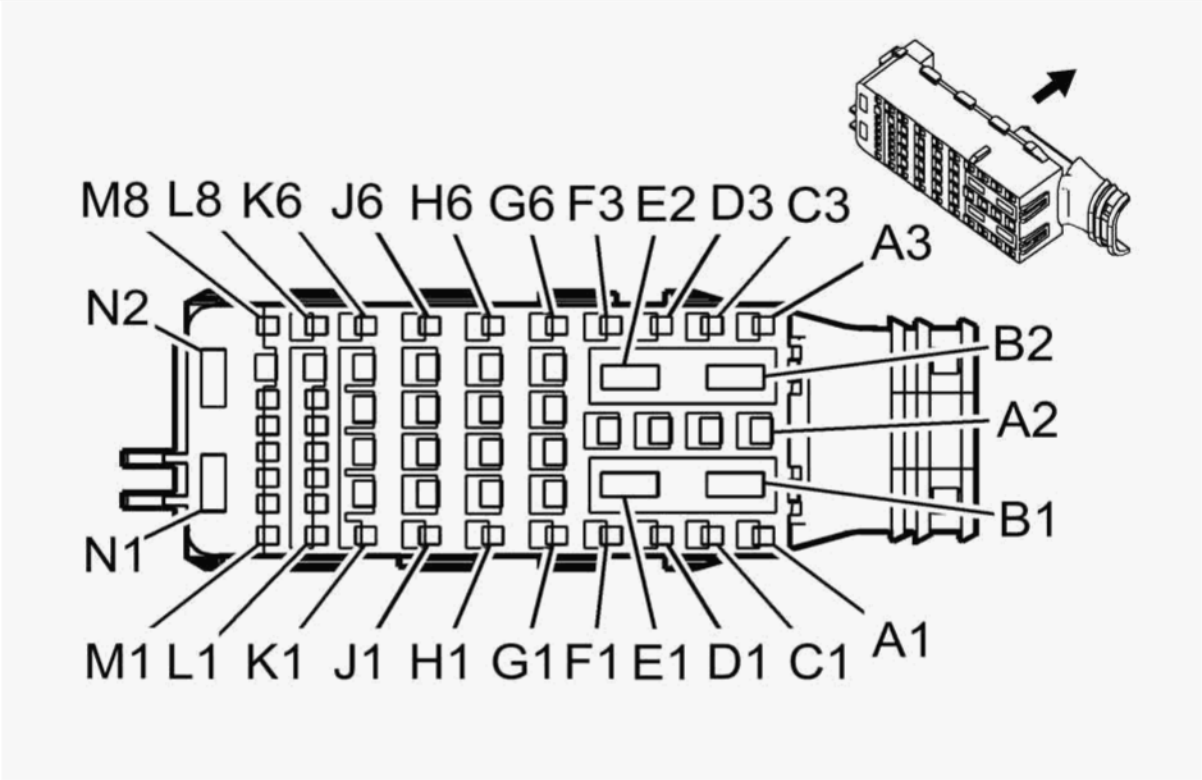

Connector Part Information

- Harness Type: Forward Lamp
- OEM Connector: 33116190
- Service Connector: 19329923
- Description: 58-Way F 1.5, 2.8, 800 Metri-Pack Series (BN)

Terminal Part Information

Terminal Type ID	Terminated Lead	Diagnostic Test Probe	Terminal Removal Tool	Service Terminal	Tray	Core Crimp	Insulation Crimp
I	13575544	J-35616-35 (VT)	J-38125-12A	1326030-6	12	E	C
II	13575718	J-35616-44 (YE)	J-38125-558	12110127	2	F	G
III	19301761	J-35616-35 (VT)	J-38125-12A	Not Available	Not Available	Not Available	Not Available
III	19301761	J-35616-35 (VT)	J-38125-12A	Not Available	Not Available	Not Available	Not Available

cardiagn.com

Terminal Type ID	Terminated Lead	Diagnostic Test Probe	Terminal Removal Tool	Service Terminal	Tray	Core Crimp	Insulation Crimp
IV	19301767	J-35616-2A (GY)	J-38125-560	Not Available	Not Available	Not Available	Not Available
IV	19301767	J-35616-2A (GY)	J-38125-560	Not Available	Not Available	Not Available	Not Available

Pin	Size	Color	Circuit	Function	Terminal Type ID	Option
A1	-	-	-	Not Occupied	-	-
A2	0.75	YE	712	Left Headlamp Low Beam Control	III	-
A3 - B1	-	-	-	Not Occupied	-	-
B2	4	RD/GY	642	Battery Positive Voltage	II	-
C1	-	-	-	Not Occupied	-	-
C2	0.75	YE	312	Right Headlamp Low Beam Control	III	-
C3	-	-	-	Not Occupied	-	-
D1	0.75	YE	712	Left Headlamp Low Beam Control	IV	-
D2	0.75	D-BU/VT	392	Rear Window Washer Pump Control	III	-
D3	0.75 0.75	L-GN/VT L-GN/PU	1315 1315	Right Front Turn Signal Lamp Control	IV	- -
E1	-	-	-	Not Occupied	-	-
E2	4	RD/WH	342	Battery Positive Voltage	II	-
F1	0.5	GY/BN	309	Right Park Lamp Control	IV	-
F2	0.75	GY/VT	228	Windshield Washer Pump Control	III	-
F3	0.75	D-BU/WH	1314	Left Front Turn Signal Lamp Control	IV	-
G1	0.5	VT/GY	709	Left Park Lamp Control	IV	-
G2 - G3	-	-	-	Not Occupied	-	-
G4	0.75	BK	150	Ground	III	-
G5	0.75	RD/D-BU	3940	Battery Positive Voltage	I	-
G6	-	-	-	Not Occupied	-	-
H1	0.5	YE/GY	57	Left Cornering Lamp Control	IV	-
H2	0.75	GY/D-BU	7538	Left Front DRL Control	III	-
H3	0.75	D-BU/BN	7539	Right Front DRL Control	III	-

cardiagn.com

Pin	Size	Color	Circuit	Function	Terminal Type ID	Option
H4	0.5 0.75	WH WH	311 311	Right Headlamp High Beam Control	III I	- -
H5	-	-	-	Not Occupied	-	-
H6	0.75	D-BU/BN	7539	Right Front DRL Control	IV	-
J1	0.5	YE/WH	58	Right Cornering Lamp Control	IV	-
J2	0.75	BN/GY	29	Horn Control	III	-
J3	0.5	BN/VT	2234	Front Fog Lamp Control	III	-
J4	0.5 0.75	WH WH	711 711	Left Headlamp High Beam Control	III I	- -
J5	0.75	YE	312	Right Headlamp Low Beam Control	III	-
J6	0.75	GY/D-BU	7538	Left Front DRL Control	IV	-
K1 - M3	-	-	-	Not Occupied	-	-
M4	0.5	WH/D-BU	3203	Right Headlamp Bulb Outage Signal	IV	-
M5	0.5	D-BU/VT	3204	Left Headlamp Bulb Outage Signal	IV	-
M6 - N2	-	-	-	Not Occupied	-	-

X50A FUSE BLOCK - UNDERHOOD X2

cardiagn.com

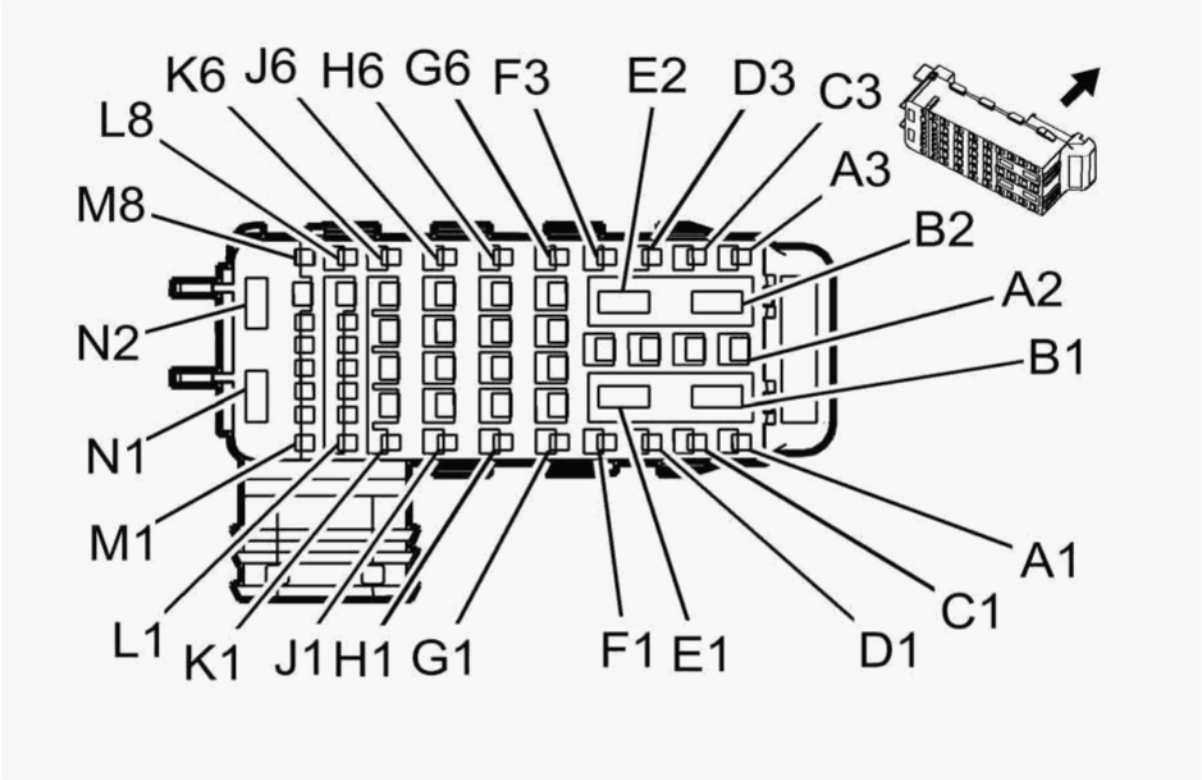

Connector Part Information

- Harness Type: Engine
- OEM Connector: 33116191
- Service Connector: 19332891
- Description: 58-Way F 1.5, 2.8, 800 Metri-Pack Series (GN)

Terminal Part Information

Terminal Type ID	Terminated Lead	Diagnostic Test Probe	Terminal Removal Tool	Service Terminal	Tray	Core Crimp	Insulation Crimp
I	13575718	J-35616-44 (YE)	J-38125-558	12110127	2	F	G
II	19301761	J-35616-35 (VT)	J-38125-12A	Not Available	Not Available	Not Available	Not Available
II	19301761	J-35616-35 (VT)	J-38125-12A	Not Available	Not Available	Not Available	Not Available
II	19301761	J-35616-35 (VT)	J-38125-12A	Not Available	Not Available	Not Available	Not Available

cardiagn.com

Terminal Type ID	Terminated Lead	Diagnostic Test Probe	Terminal Removal Tool	Service Terminal	Tray	Core Crimp	Insulation Crimp
III	19301767	J-35616-2A (GY)	J-38125-560	Not Available	Not Available	Not Available	Not Available
III	19301767	J-35616-2A (GY)	J-38125-560	Not Available	Not Available	Not Available	Not Available

Pin	Size	Color	Circuit	Function	Terminal Type ID	Option
A1	0.5	WH/GY	459	A/C Compressor Clutch Relay Control	III	-
A2 - B2	-	-	-	Not Occupied	-	-
C1	0.75	BN/L-GN	59	A/C Compressor Clutch Control	III	-
C2 - D2	-	-	-	Not Occupied	-	-
D3	0.5	YE/BK	625	Starter Enable Relay Control	III	-
E1	-	-	-	Not Occupied	-	-
E2	4	YE	6	Starter Solenoid Crank Ignition Voltage	I	-
F1	-	-	-	Not Occupied	-	-
F2	2.5	BK	550	Ground	II	-
F3 - G2	-	-	-	Not Occupied	-	-
G3	0.5	VT/D-BU	5293	Powertrain Main Relay Fused Supply (4)	II	-
G4	2.5	VT/D-BU	5290	Powertrain Main Relay Fused Supply (1)	II	-
G5	0.75	RD/L-GN	1840	Battery Positive Voltage	II	-
G6	0.5	RD/WH	3440	Battery Positive Voltage	III	-
H1	-	-	-	Not Occupied	-	-
H2	0.75	VT/D-BU	5291	Powertrain Main Relay Fused Supply (2)	II	-
H3	0.75	VT/D-BU	5293	Powertrain Main Relay Fused Supply (4)	II	-
H4	-	-	-	Not Occupied	-	-
H5	0.5	RD/BN	440	Battery Positive Voltage	II	-
H6	0.5	YE	5991	Powertrain Relay Coil Control	III	-
J1	-	-	-	Not Occupied	-	-
J2	0.5	VT/D-BU	5294	Powertrain Main Relay Fused Supply (5)	II	-
J3	0.75	VT/D-BU	5291	Powertrain Main Relay Fused Supply (2)	II	-
J4	0.75	VT/D-BU	5292	Powertrain Main Relay Fused Supply (3)	II	-
J5	0.5	VT/D-BU	5294	Powertrain Main Relay Fused Supply (5)	II	-

cardiagn.com

Pin	Size	Color	Circuit	Function	Terminal Type ID	Option
J6	0.75	VT/D-BU	5290	Powertrain Main Relay Fused Supply (1)	III	-
K1 - K2	-	-	-	Not Occupied	-	-
K3	0.75	VT/D-BU	5291	Powertrain Main Relay Fused Supply (2)	II	-
K4	0.75	VT/D-BU	5292	Powertrain Main Relay Fused Supply (3)	II	-
K5	0.75	VT/D-BU	5292	Powertrain Main Relay Fused Supply (3)	II	-
K6 - L6	-	-	-	Not Occupied	-	-
L7	0.5	VT/BK	2139	Run/Crank Ignition 1 Voltage	II	-
L8 - M4	-	-	-	Not Occupied	-	-
M5	0.5	GY	5660	Fuel Pump Controller Data Out Signal	III	-
M6	0.75	BK/WH	451	Signal Ground	III	-
M7	0.5	VT/L-GN	439	Run/Crank Ignition 1 Voltage	II	-
M8 - N2	-	-	-	Not Occupied	-	-

X50A FUSE BLOCK - UNDERHOOD X3

cardiagn.com

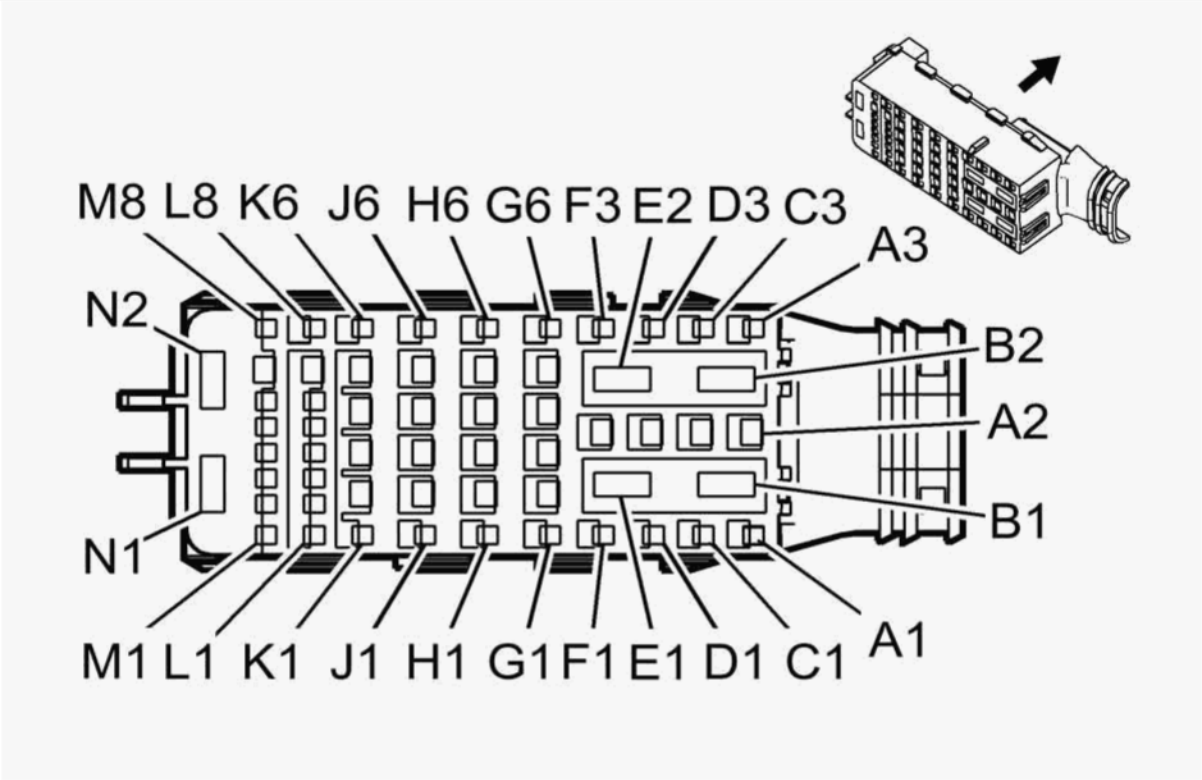

Connector Part Information

- Harness Type: Body
- OEM Connector: 33116188
- Service Connector: 19332892
- Description: 58-Way F 1.5, 2.8, 800 Metri-Pack Series (GY)

Terminal Part Information

Terminal Type ID	Terminated Lead	Diagnostic Test Probe	Terminal Removal Tool	Service Terminal	Tray	Core Crimp	Insulation Crimp
I	13575718	J-35616-44 (YE)	J-38125-558	12092445	16	G	G
II	13575718	J-35616-44 (YE)	J-38125-558	12110127	2	F	G
II	13575718	J-35616-44 (YE)	J-38125-558	12110127	2	F	G
III	19301761	J-35616-35 (VT)	J-38125-12A	Not Available	Not Available	Not Available	Not Available

cardiagn.com

Terminal Type ID	Terminated Lead	Diagnostic Test Probe	Terminal Removal Tool	Service Terminal	Tray	Core Crimp	Insulation Crimp
III	19301761	J-35616-35 (VT)	J-38125-12A	Not Available	Not Available	Not Available	Not Available
III	19301761	J-35616-35 (VT)	J-38125-12A	Not Available	Not Available	Not Available	Not Available
IV	19301767	J-35616-2A (GY)	J-38125-560	Not Available	Not Available	Not Available	Not Available
IV	19301767	J-35616-2A (GY)	J-38125-560	Not Available	Not Available	Not Available	Not Available

Pin	Size	Color	Circuit	Function	Terminal Type ID	Option
A1	0.5	YE/D-BU	18	Left Rear Stop/Turn Lamp Control	IV	-
A2 - A3	-	-	-	Not Occupied	-	-
B1	4	RD/GY	1342	Battery Positive Voltage	I	-
B2	2.5	RD/D-BU	1842	Battery Positive Voltage	II	-
C1	0.5	BN/L-GN	19	Right Rear Stop/Turn Lamp Control	IV	-
C2 - C3	-	-	-	Not Occupied	-	-
D1	0.75	L-GN/VT	1315	Right Front Turn Signal Lamp Control	IV	-
D2	0.5	WH/D-BU	3203	Right Headlamp Bulb Outage Signal	III	-
D3 - E1	-	-	-	Not Occupied	-	-
E2	4	RD/WH	4042	Battery Positive Voltage	II	-
F1	0.75	D-BU/WH	1314	Left Front Turn Signal Lamp Control	IV	-
F2	0.5	D-BU/VT	3204	Left Headlamp Bulb Outage Signal	III	-
F3	0.5	YE/WH	962	-	IV	-
G1	0.75	D-BU/BN	7539	Right Front DRL Control	IV	-
G2 - H1	-	-	-	Not Occupied	-	-
H2	1	BK	550	Ground	III	-
H3 - H6	-	-	-	Not Occupied	-	-
J1	0.35	WH/VT	860	Front Windshield Wiper Switch High Signal	IV	-
J2 - K2	-	-	-	Not Occupied	-	-
K3	1	YE/BN	95	Windshield Wiper Motor Low Speed Control	III	-
K4	1	WH	92	Windshield Wiper Motor High Speed Control	III	-
K5	-	-	-	Not Occupied	-	-
K6	0.35	BN/GY	2268	Windshield Washer Relay Control	IV	-

cardiagn.com

Pin	Size	Color	Circuit	Function	Terminal Type ID	Option
L1	0.75	GY/D-BU	7538	Left Front DRL Control	IV	-
L2	0.35	BN/VT	1969	Headlamp High Beam Relay Control	IV	-
L3	0.35	L-GN/WH	2270	Rear Window Washer Relay Control	IV	-
L4	0.35	GY	91	Windshield Wiper Motor Relay Coil Control	IV	-
L5	0.5	BN	1317	Fog Lamp Relay Control	IV	-
L6	0.35	BN/WH	28	Horn Relay Control	IV	-
L7	-	-	-	Not Occupied	-	-
L8	0.5	YE/GY	57	Left Cornering Lamp Control	IV	-
M1	0.75	YE	312	Right Headlamp Low Beam Control	IV	-
M2	-	-	-	Not Occupied	-	-
M3	0.5	YE/WH	58	Right Cornering Lamp Control	IV	-
M4	0.75	D-BU/BN	7539	Right Front DRL Control	IV	-
M5	0.5	RD/WH	961	-	IV	-
M6	-	-	-	Not Occupied	-	-
M7	2.5	D-BU	965	-	III	-
M8	0.35	VT/WH	239	Run/Crank Ignition 1 Voltage	IV	-
N1 - N2	-	-	-	Not Occupied	-	-

X50A FUSE BLOCK - UNDERHOOD X4

cardiagn.com

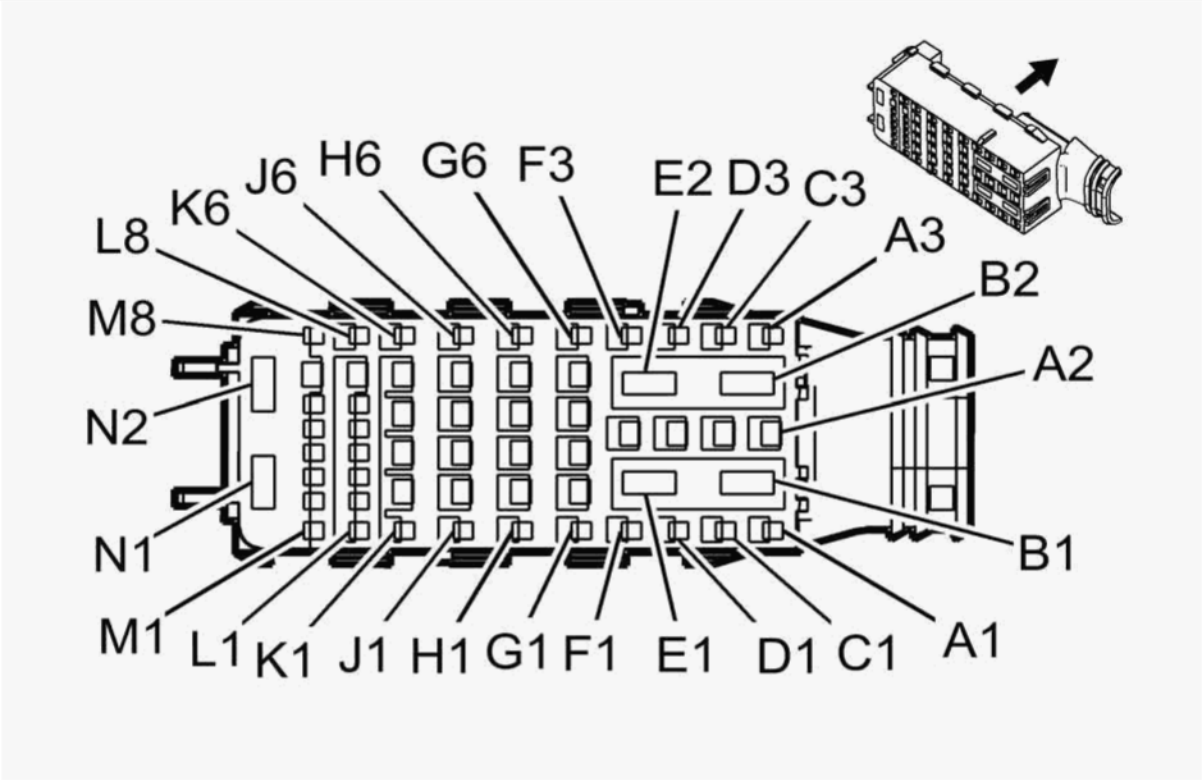

Connector Part Information

- Harness Type: Body
- OEM Connector: 33116186
- Service Connector: 19332893
- Description: 58-Way F 1.5, 2.8, 800 Metri-Pack Series (BK)

Terminal Part Information

Terminal Type ID	Terminated Lead	Diagnostic Test Probe	Terminal Removal Tool	Service Terminal	Tray	Core Crimp	Insulation Crimp
I	13575718	J-35616-44 (YE)	J-38125-558	12110127	2	F	G
II	13575718	J-35616-44 (YE)	J-38125-558	Not Available	Not Available	Not Available	Not Available
III	19301761	J-35616-35 (VT)	J-38125-12A	Not Available	Not Available	Not Available	Not Available
III	19301761	J-35616-35 (VT)	J-38125-12A	Not Available	Not Available	Not Available	Not Available

cardiagn.com

Terminal Type ID	Terminated Lead	Diagnostic Test Probe	Terminal Removal Tool	Service Terminal	Tray	Core Crimp	Insulation Crimp
III	19301761	J-35616-35 (VT)	J-38125-12A	Not Available	Not Available	Not Available	Not Available
IV	19301767	J-35616-2A (GY)	J-38125-560	Not Available	Not Available	Not Available	Not Available
IV	19301767	J-35616-2A (GY)	J-38125-560	Not Available	Not Available	Not Available	Not Available

Pin	Size	Color	Circuit	Function	Terminal Type ID	Option
A1	-	-	-	Not Occupied	-	-
A2	0.75	GY/YE	7542	Left Rear Stop Lamp Control	III	-
A3	0.35 0.5	L-GN/WH L-GN/WH	24 24	Backup Lamp Control	IV	- -
B1	4	RD/GY	1042	Battery Positive Voltage	I	-
B2	5	RD/VT	842	Battery Positive Voltage	I	-
C1	0.75	WH/YE	7541	Right Rear Stop Lamp Control	IV	-
C2 - D3	-	-	-	Not Occupied	-	-
E1	6	RD/WH	942	-	II	-
E2	5	RD/D-BU	42	Battery Positive Voltage	I	-
F1 - G1	-	-	-	Not Occupied	-	-
G2	2.5	GY/BK	966	-	III	-
G3 - G5	-	-	-	Not Occupied	-	-
G6	0.5	YE/BK	5356	Left Tail Lamp Outage Detection Signal	IV	-
H1 - H4	-	-	-	Not Occupied	-	-
H5	2.5	RD/L-GN	242	Battery Positive Voltage	III	-
H6	0.5	VT/YE	5357	Right Tail Lamp Outage Detection Signal	IV	-
J1	0.75	GY/D-BU	7538	Left Front DRL Control	IV	-
J2 - J5	-	-	-	Not Occupied	-	-
J6	0.75	BK/WH	451	Signal Ground	IV	-
K1	0.75	YE	712	Left Headlamp Low Beam Control	IV	-
K2	2.5	RD/L-GN	968	-	III	-
K3 - K4	-	-	-	Not Occupied	-	-
K5	2.5	YE/BN	967	-	III	-

cardiagn.com

Pin	Size	Color	Circuit	Function	Terminal Type ID	Option
K6	-	-	-	Not Occupied	-	-
L1	0.5	WH/D-BU	964	-	IV	-
L2	0.35	YE/GY	5187	Right Trailer Turn Signal Lamp Control	IV	-
L3	0.35	D-BU/BN	38	Backup Lamp Relay Control	IV	-
L4	0.35	D-BU/WH	5186	Left Trailer Turn Signal Lamp Control	IV	-
L5	0.35	D-BU	45	Park Lamp Relay Control	IV	-
L6	0.5	L-GN/GY	963	-	IV	-
L7 - L8	-	-	-	Not Occupied	-	-
M1	0.75	RD/YE	2340	Battery Positive Voltage	IV	-
M2	-	-	-	Not Occupied	-	-
M3	0.35	BN/YE	1970	Headlamp Low Beam Relay Control	IV	-
M4	-	-	-	Not Occupied	-	-
M5	0.35	L-GN/VT	5199	Run/Crank Relay Coil Control	IV	-
M6 - N2	-	-	-	Not Occupied	-	-

X50A FUSE BLOCK - UNDERHOOD X5

cardiagn.com

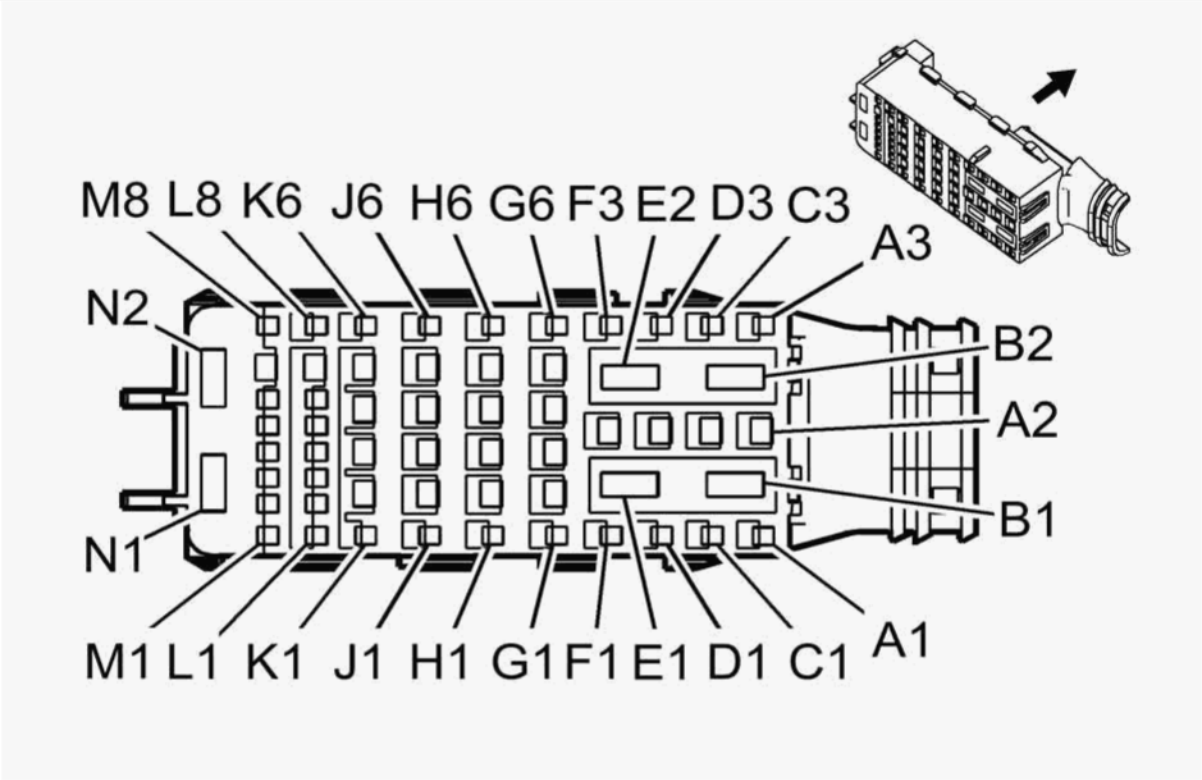

Connector Part Information

- Harness Type: Chassis
- OEM Connector: 33116189
- Service Connector: 19332894
- Description: 58-Way F 1.5, 2.8, 800 Metri-Pack Series (NA)

Terminal Part Information

Terminal Type ID	Terminated Lead	Diagnostic Test Probe	Terminal Removal Tool	Service Terminal	Tray	Core Crimp	Insulation Crimp
I	13575718	J-35616-44 (YE)	J-38125-558	12110127	2	F	G
II	13575832	J-35616-35 (VT)	J-38125-11A	7116-4112-02	14	C	D
III	19300635	J-35616-2A (GY)	J-38125-217	Not Available	Not Available	Not Available	Not Available
IV	19301761	J-35616-35 (VT)	J-38125-12A	Not Available	Not Available	Not Available	Not Available

cardiagn.com

Terminal Type ID	Terminated Lead	Diagnostic Test Probe	Terminal Removal Tool	Service Terminal	Tray	Core Crimp	Insulation Crimp
IV	19301761	J-35616-35 (VT)	J-38125-12A	Not Available	Not Available	Not Available	Not Available
IV	19301761	J-35616-35 (VT)	J-38125-12A	Not Available	Not Available	Not Available	Not Available
V	19301767	J-35616-2A (GY)	J-38125-560	Not Available	Not Available	Not Available	Not Available
V	19301767	J-35616-2A (GY)	J-38125-560	Not Available	Not Available	Not Available	Not Available

Pin	Size	Color	Circuit	Function	Terminal Type ID	Option
A1	0.75	GY/YE	7542	Left Rear Stop Lamp Control	V	-
A2	0.5 0.5	YE/L-GN YE/D-BU	18 18	Left Rear Stop/Turn Lamp Control	IV	- -
A3	0.5	BN/L-GN	19	Right Rear Stop/Turn Lamp Control	V	-
B1	5	RD/YE	442	Battery Positive Voltage	I	-
B2	-	-	-	Not Occupied	-	-
C1	0.75 0.75	L-GN/WH L-GN	24 24	Backup Lamp Control	V	- -
C2	2.5	RD/YE	1142	Battery Positive Voltage	IV	-
C3 - D1	-	-	-	Not Occupied	-	-
D2	1.5	GY	120	Fuel Pump Control	IV	-
D3	0.75	WH/YE	7541	Right Rear Stop Lamp Control	V	-
E1	4	RD/WH	1642	Battery Positive Voltage	I	-
E2 - F3	-	-	-	Not Occupied	-	-
G1	0.5	YE/BK	5356	Left Tail Lamp Outage Detection Signal	V	-
G2	2.5	RD/VT	1940	Battery Positive Voltage	IV	-
G3	3	RD/L-GN	2440	Battery Positive Voltage	II	-
G4	0.75	RD/WH	2040	Battery Positive Voltage	IV	-
G5	-	-	-	Not Occupied	-	-
G6	0.75	RD/L-GN	2440	Battery Positive Voltage	V	-
H1	0.5	VT/YE	5357	Right Tail Lamp Outage Detection Signal	V	-
H2	-	-	-	Not Occupied	-	-
H3	0.5	RD/L-GN	1840	Battery Positive Voltage	IV	-

cardiagn.com

Pin	Size	Color	Circuit	Function	Terminal Type ID	Option
H4 - J1	-	-	-	Not Occupied	-	-
J2	2.5	RD/L-GN	242	Battery Positive Voltage	IV	-
J3	1.5	GY/BN	2109	Trailer Park Lamp Control	IV	-
J4	2.5	RD/VT	1640	Battery Positive Voltage	IV	-
J5	0.5 0.75	VT/L-GN PU/L-GN	439 439	Run/Crank Ignition 1 Voltage	IV	- -
J6	-	-	-	Not Occupied	-	-
K1	0.5	VT/BK	739	Run/Crank Ignition 1 Voltage	V	-
K2	0.5	VT/GY	709	Left Park Lamp Control	IV	-
K3	-	-	-	Not Occupied	-	-
K4	0.5	GY/BN	309	Right Park Lamp Control	IV	-
K5	0.75	YE/GY	1618	Left Rear Trailer Stop/Turn Lamp Control	IV	-
K6	0.75	L-GN/VT	1619	Right Rear Trailer Stop/Turn Lamp Control	V	-
L1 - L6	-	-	-	Not Occupied	-	-
L7	2.5	GY	120	Fuel Pump Control	IV	-
L8 - M4	-	-	-	Not Occupied	-	-
M5	0.5	GY	5660	Fuel Pump Controller Data Out Signal	III	-
M6	-	-	-	Not Occupied	-	-
M7	0.5	VT/D-BU	5294	Powertrain Main Relay Fused Supply (5)	IV	-
M8	0.75	WH/L-GN	1624	Trailer Backup Lamp Control	V	-
N1	-	-	-	Not Occupied	-	-
N2	4	RD/L-GN	742	Battery Positive Voltage	I	-

X50A FUSE BLOCK - UNDERHOOD X6

-

Connector Part Information

- Harness Type: Fuse Block - Battery
- OEM Connector: 13585650

cardiagn.com

- Service Connector: Service by Cable Assembly - See Part Catalog
- Description: Ring Terminal

Terminal Part Information

Terminal Type ID	Terminated Lead	Diagnostic Test Probe	Terminal Removal Tool	Service Terminal	Tray	Core Crimp	Insulation Crimp
I	Not Available	No Tool Required	Not Available	Not Available	Not Available	Not Available	Not Available

Pin	Size	Color	Circuit	Function	Terminal Type ID	Option
A	25	RD/GN	242	Battery Positive Voltage	I	-

X50D FUSE BLOCK - BATTERY TOP VIEW

cardiagn.com

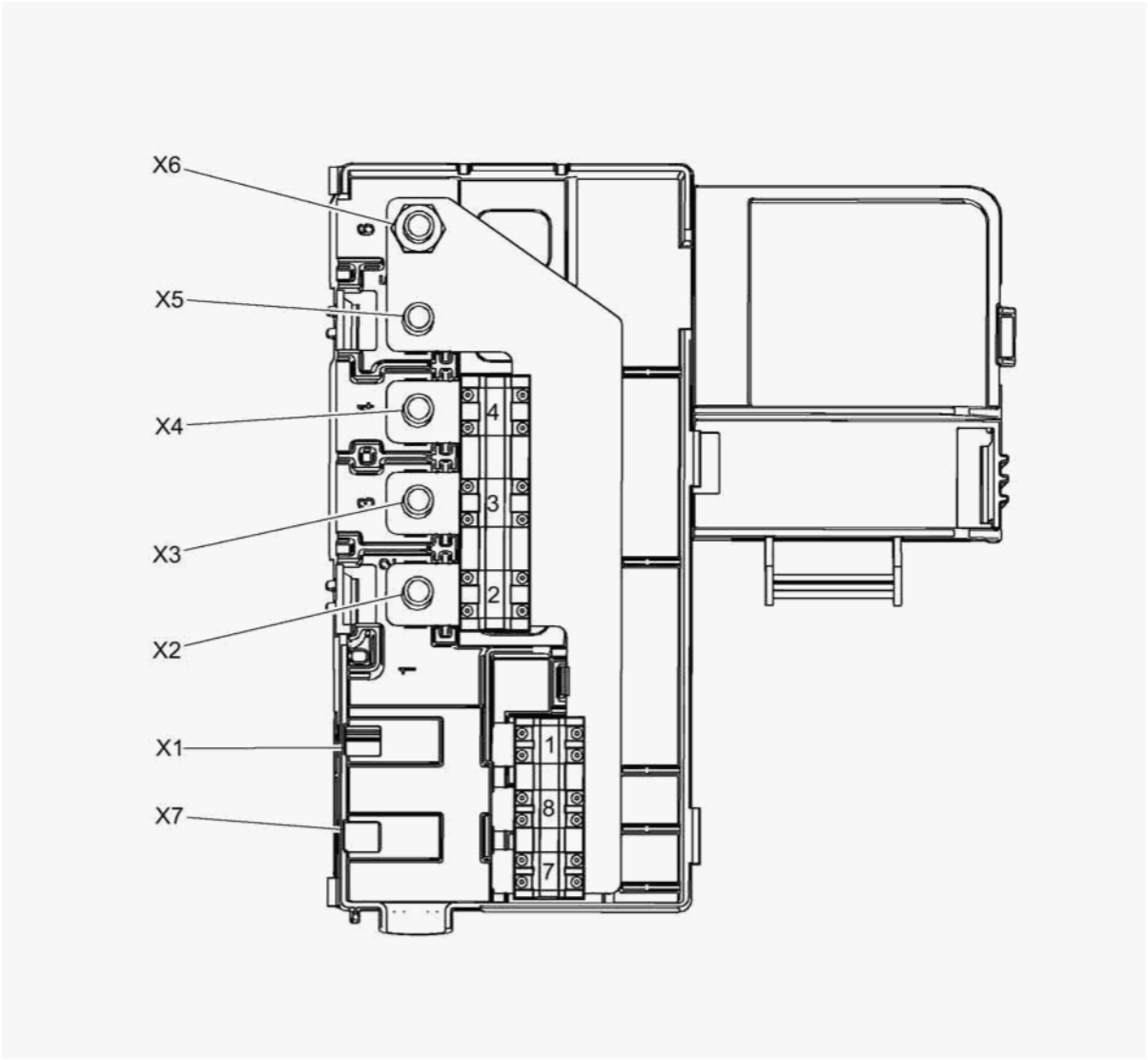

Fig. 4: X50D Fuse Block - Battery Top View
Courtesy of GENERAL MOTORS COMPANY

X50D Fuse Block - Battery Usage

No.	Device Label Name	Device Assigned Name	Rating	Description
1	-	F1UD	100A	KR79 Auxiliary Battery Relay 2 (5W4 or 9C1)

cardiagn.com

No.	Device Label Name	Device Assigned Name	Rating	Description
2	-	F2UD	175A (L83 or L86) 250A (L96)	G13 Generator, X50A Fuse Block - Underhood
3	-	F3UD	-	Not Occupied
4	-	F4UD	175A	K43 Power Steering Control Module (L83 or L86)
5	-	F7UD	60A	X51R Fuse Block - Instrument Panel Right
6	-	F8UD	60A	X51R Fuse Block - Instrument Panel Right

X50D FUSE BLOCK - BATTERY X1 (5W4 OR 9C1)

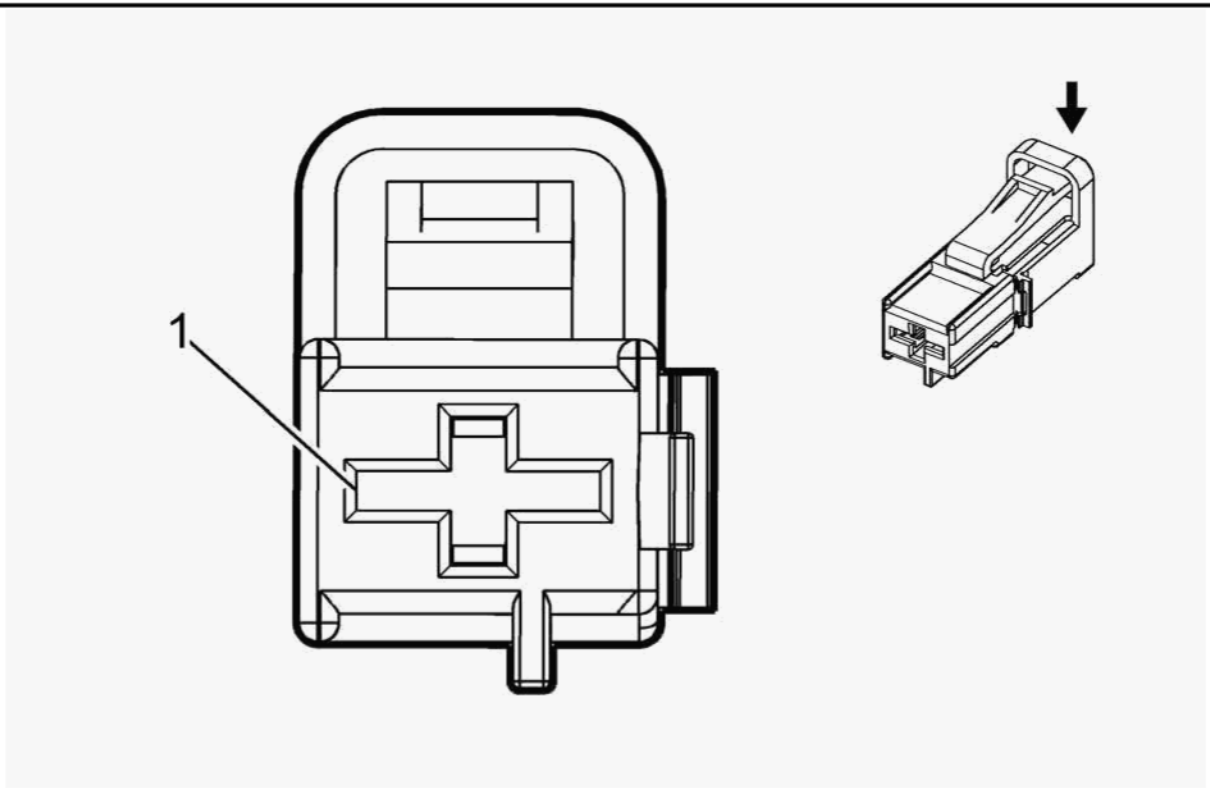

Connector Part Information

- Harness Type: Battery - Auxiliary
- OEM Connector: 13629098

cardiagn.com

- Service Connector: 19329825
- Description: 1-Way F 8.0 Series (BU)

Terminal Part Information

Terminal Type ID	Terminated Lead	Diagnostic Test Probe	Terminal Removal Tool	Service Terminal	Tray	Core Crimp	Insulation Crimp
I	Not Available	J-35616-44 (YE)	Not Available	Not Available	Not Available	Not Available	Not Available

Pin	Size	Color	Circuit	Function	Terminal Type ID	Option
A	10	RD/VT	842	Battery Positive Voltage	I	-

X50D FUSE BLOCK - BATTERY X4

-

Connector Part Information

- Harness Type: Battery Cable
- OEM Connector: 13584018
- Service Connector: Service by Cable Assembly - See Part Catalog
- Description: Ring Terminal

Terminal Part Information

Terminal Type ID	Terminated Lead	Diagnostic Test Probe	Terminal Removal Tool	Service Terminal	Tray	Core Crimp	Insulation Crimp
I	Not Available	No Tool Required	Not Available	Not Available	Not Available	Not Available	Not Available

Pin	Size	Color	Circuit	Function	Terminal Type ID	Option
A	25 25	RD/YE RD/GN	2 242	Battery Positive Voltage Battery Positive Voltage	I	- -

cardiagn.com

X50D FUSE BLOCK - BATTERY X2

-

Connector Part Information

- Harness Type: Battery Cable Jumper
- OEM Connector: 13584017
- Service Connector: Service by Cable Assembly - See Part Catalog
- Description: Ring Terminal

Terminal Part Information

Terminal Type ID	Terminated Lead	Diagnostic Test Probe	Terminal Removal Tool	Service Terminal	Tray	Core Crimp	Insulation Crimp
I	Not Available	No Tool Required	Not Available	Not Available	Not Available	Not Available	Not Available

Pin	Size	Color	Circuit	Function	Terminal Type ID	Option
A	25	RD/VT	842	Battery Positive Voltage	I	-

X50D FUSE BLOCK - BATTERY X5

-

Connector Part Information

- Harness Type: Fuse Block - Starter Motor
- OEM Connector: 13584016
- Service Connector: Service by Cable Assembly - See Part Catalog
- Description: Ring Terminal

Terminal Part Information

Terminal Type ID	Terminated Lead	Diagnostic Test Probe	Terminal Removal Tool	Service Terminal	Tray	Core Crimp	Insulation Crimp

cardiagn.com

Terminal Type ID	Terminated Lead	Diagnostic Test Probe	Terminal Removal Tool	Service Terminal	Tray	Core Crimp	Insulation Crimp
I	Not Available	No Tool Required	Not Available	Not Available	Not Available	Not Available	Not Available

Pin	Size	Color	Circuit	Function	Terminal Type ID	Option
A	35	RD/YE	2	Unfused Battery Positive Voltage	I	-

X50D FUSE BLOCK - BATTERY X6

-

Connector Part Information

- Harness Type: Fuse Block - Battery
- OEM Connector: 22806489
- Service Connector: Service by Cable Assembly - See Part Catalog
- Description: Ring Terminal

Terminal Part Information

Terminal Type ID	Terminated Lead	Diagnostic Test Probe	Terminal Removal Tool	Service Terminal	Tray	Core Crimp	Insulation Crimp
I	Not Available	No Tool Required	Not Available	Not Available	Not Available	Not Available	Not Available

Pin	Size	Color	Circuit	Function	Terminal Type ID	Option
A	35	RD	1	Unfused Battery Positive Voltage	I	-

X50D FUSE BLOCK - BATTERY X7

cardiagn.com

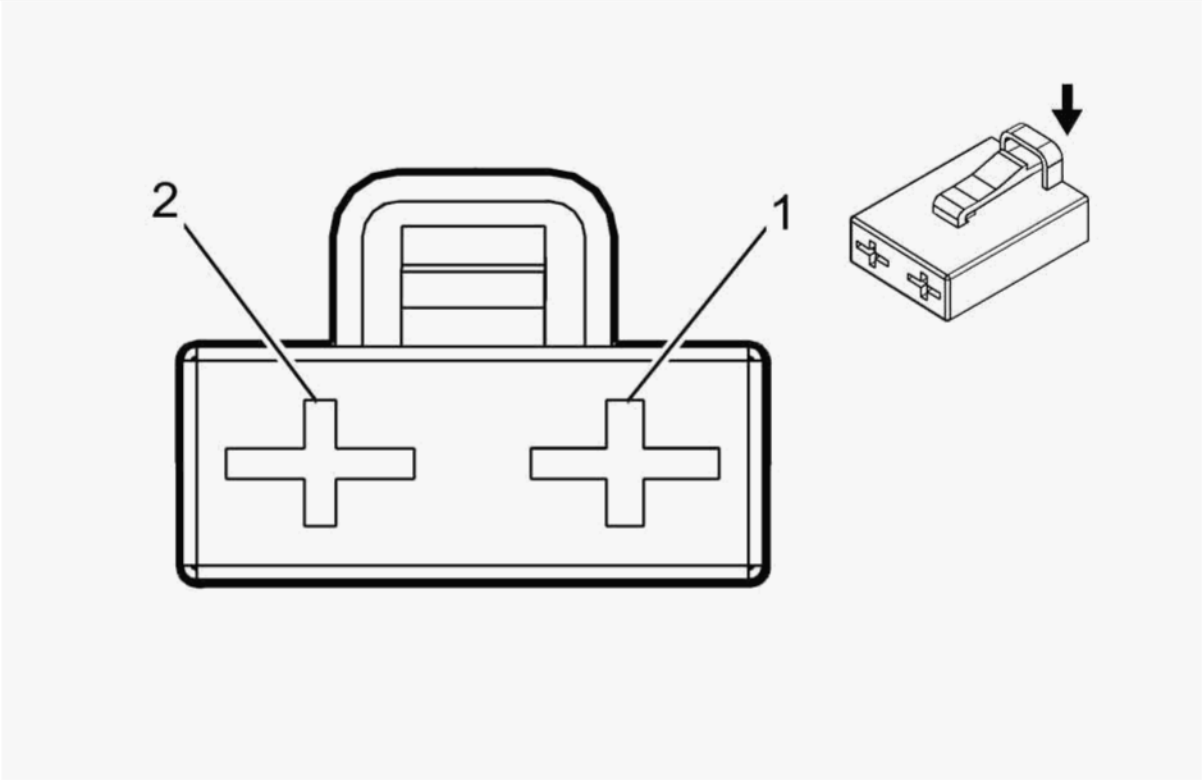

Connector Part Information

- Harness Type: Body
- OEM Connector: 13627842
- Service Connector: 19329484
- Description: 2-Way F 8.0 Series (BU)

Terminal Part Information

Terminal Type ID	Terminated Lead	Diagnostic Test Probe	Terminal Removal Tool	Service Terminal	Tray Name	Core Crimp	Insulation Crimp
I	Not Required	J-35616-44 (YE)	Not Required	Not Required	Not Required	Not Required	Not Required

Pin	Size	Color	Circuit	Function	Terminal Type ID	Option

cardiagn.com

Pin	Size	Color	Circuit	Function	Terminal Type ID	Option
1	6	RD/GY	142	Battery Positive Voltage	I	-
2	6	RD/L-GN	242	Battery Positive Voltage	I	-

X50E FUSE BLOCK - BATTERY AUXILIARY TOP VIEW (5W4 OR 9C1)

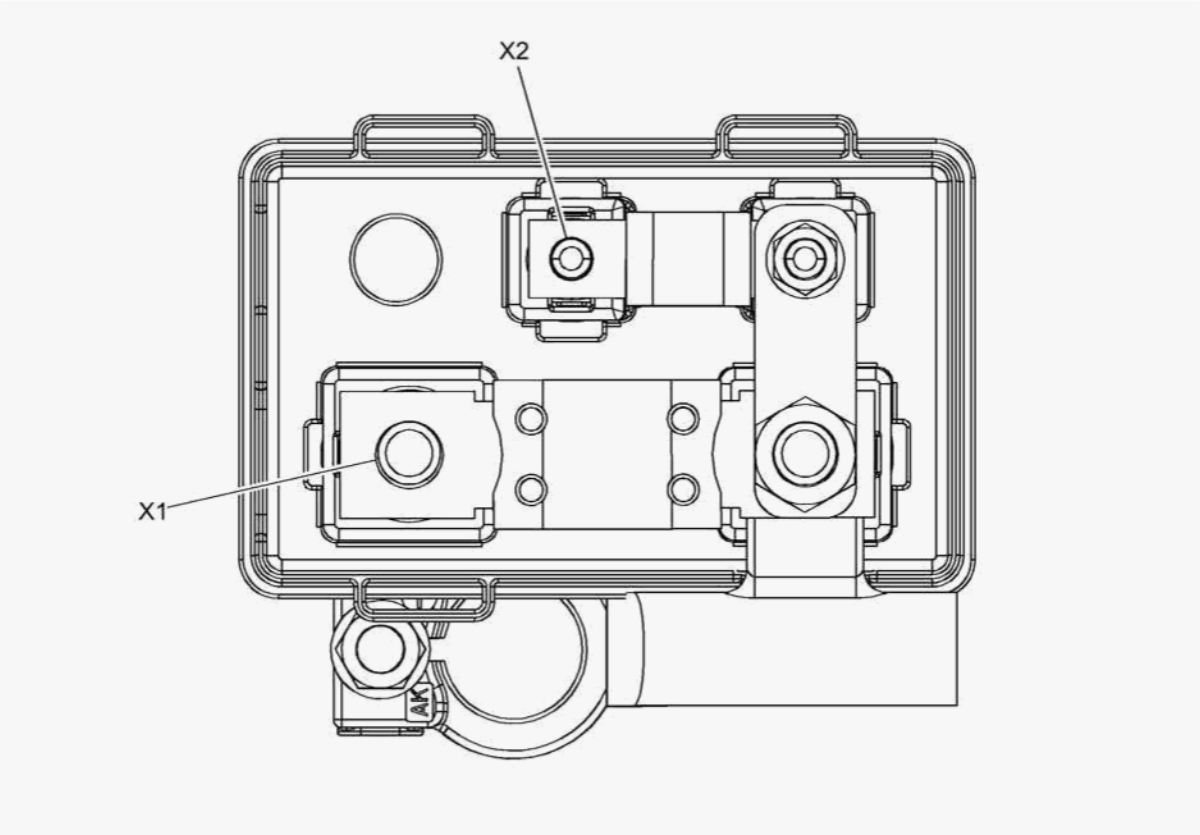

Fig. 5: X50E Fuse Block -- Battery Auxiliary Top View (5W4) or (9C1)
Courtesy of GENERAL MOTORS COMPANY

X50E Fuse Block - Battery Auxiliary Usage

No.	Device Label Name	Device Assigned Name	Rating	Description
1	-	F1UE	100A	KR81 Auxiliary Battery Relay 1, X53A Fuse Block - Rear

cardiagn.com

No.	Device Label Name	Device Assigned Name	Rating	Description
				Body
2	-	F2UE	50A	W9 Blunt Cut - Police Provision

X50E FUSE BLOCK - AUXILIARY BATTERY X1 (5W4 AND 9C1)

-

Connector Part Information

- Harness Type: Body
- OEM Connector: 13609633
- Service Connector: Not Available
- Description: Ring Terminal

Terminal Part Information

Terminal Type ID	Terminated Lead	Diagnostic Test Probe	Terminal Removal Tool	Service Terminal	Tray	Core Crimp	Insulation Crimp
I	Not Available	No Tool Required	Not Available	Not Available	Not Available	Not Available	Not Available

Pin	Size	Color	Circuit	Function	Terminal Type ID	Option
A	10 10	RD/GN YE/BU	742 5442	Battery Positive Voltage Battery Positive Voltage	I	- -

X50E FUSE BLOCK - AUXILIARY BATTERY X2 (5W4 AND 9C1)

-

Connector Part Information

- Harness Type: Body
- OEM Connector: 12103517
- Service Connector: Not Available
- Description: Ring Terminal

cardiagn.com

Terminal Part Information

Terminal Type ID	Terminated Lead	Diagnostic Test Probe	Terminal Removal Tool	Service Terminal	Tray	Core Crimp	Insulation Crimp
I	Not Available	No Tool Required	Not Available	Not Available	Not Available	Not Available	Not Available

Pin	Size	Color	Circuit	Function	Terminal Type ID	Option
A	4	YE/VT	5542	Battery Positive Voltage	I	-

X51L FUSE BLOCK - INSTRUMENT PANEL LEFT LABEL

cardiagn.com

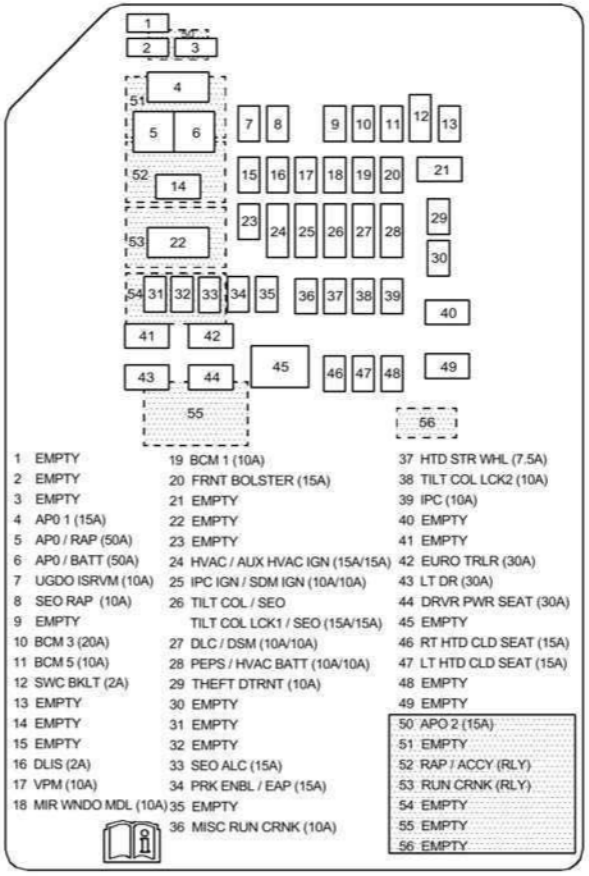

Fig. 6: X51L Fuse Block -- Instrument Panel Left Label (Late)
Courtesy of GENERAL MOTORS COMPANY

X51L FUSE BLOCK - INSTRUMENT PANEL LEFT TOP VIEW

cardiagn.com

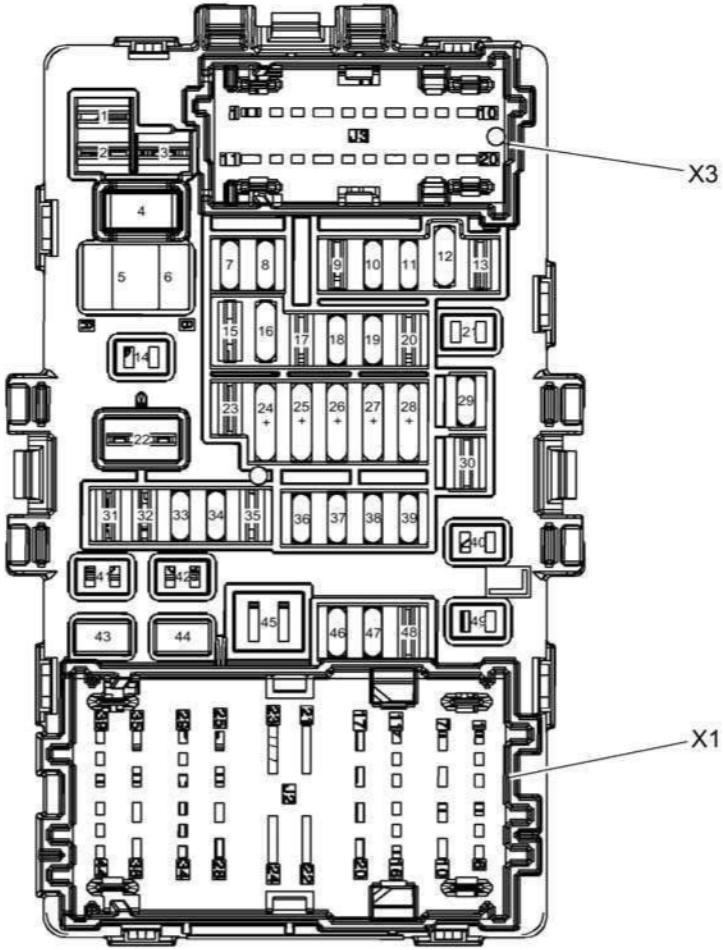

Fig. 7: X51L Fuse Block -- Instrument Panel Left Top View
Courtesy of GENERAL MOTORS COMPANY

X50L Fuse Block - Instrument Panel Left Usage

No.	Device Label Name	Device Assigned Name	Rating	Description
Fuses				

cardiagn.com

No.	Device Label Name	Device Assigned Name	Rating	Description
1	EMPTY	F1DL	-	Not Used
2	EMPTY	F2DL	-	Not Used
3	EMPTY	F3DL	-	Not Used
4	APO 1 (15A)	F4DL	15A	E32 Cigarette Lighter Receptacle (DT4), X80G Accessory Power Receptacle - Instrument Panel (D07 without DT4)
5	APO/RAP (50A)	F5DL	50A	F4DL, F50DL
6	APO/BATT (50A)	F6DL	50A	F4DL, F50DL
7	UGDO ISRVM (10A)	F7DL	10A	S25 Garage Door Opener (UG1), S63 Roof Beacon Switch (TRW)
8	SEO RAP (10A)	F8DL	10A	KR103 DVD Relay (AYE), M69 Sunroof Motor (CF5), T22 Mobile Device Wireless Charger Module (K4C), W9 Blunt Cut - Police Provision (5W4 or 9C1)
9	EMPTY	F9DL	-	Not Used
10	BCM 3 (20A)	F10DL	20A	E4H Headlamp - Right Low Beam (X88 or Z88), E4LF Turn Signal Lamp - Left Front (X88 or Z75), E4Y Turn Signal Repeater Lamp - Left (DL3 or DR4), E5R Stop Lamp - Right Rear (X88 with T89), K9 Body Control Module, KR57 Rear Fog Lamp Relay (T79), K166L Multifunction LED Control Module - Left Headlamp (X88 with TB8, Z88 or Z75), K166R Multifunction LED Control Module - Right Headlamp (Z75), K167L Multifunction LED Control Module - Front Fascia Left (Z75), K174R Multifunction LED Control Module - Right Tail Lamp (Z88 or Z75)
11	BCM 5 (10A)	F11DL	10A	A23C Liftgate latch Assembly (TB4), A23LR Door Latch Assembly - Left Rear, A23RR Door Latch Assembly - Right Rear, B10B Ambient Light/Sunload Sensor, B55 Hood Ajar Switch, B174W Frontview Camera - Windshield (UFL or UGN with Z75), E1A Accent Lamp - Driver Seat, E1AA Floor Accent Lamp - Left Front, E1AB Floor Accent Lamp - Right Front, E1B Accent Lamp - Passenger Seat, E1C Accent Lamp - Driver Door Handle, E1D Accent Lamp - Driver Door (Z75), E1E Accent Lamp - Left Rear Door Handle, E1F

cardiagn.com

No.	Device Label Name	Device Assigned Name	Rating	Description
				Accent Lamp - Right Rear Door Handle, E1LR Accent Lamp - Left Rear Door (Z75), E1M Accent Lamp - Passenger Door Handle, E1P Accent Lamp - Passenger Door (Z75), E1RR Accent Lamp - Right Rear Door (Z75), E38 Flood Lamp - Center Console, E55LR Flood Lamp - Left Rear Door Pocket (Z75), E55RR Flood Lamp - Right Rear Door Pocket (Z75), E63D Flood Lamp - Driver Door Handle (Z75), E63P Flood Lamp - Passenger Door Handle (Z75), KR6 Rear Window Washer Pump Relay, K9 Body Control Module, K14 Distance Sensing Cruise Control Module (K59), K17 Electronic Brake Control Module, K19 Suspension Control Module (Z95), K33 HVAC Control Module, K36 Inflatable Restraint Sensing and Diagnostic Module, K43 Power Steering Control Module, KR61 Trailer Backup Lamps Relay, K73 Telematics Communication Interface Control Module (UE1), K74 Human Machine Interface Control Module (IO5 or IO6), KR76A Retained Accessory Power Relay 1, KR76B Retained Accessory Power Relay 2, K83 Park Brake Control Module (J71), KR95A Liftgate Unlatch Relay (TB4), K124 Active Saftey Control Module (UGN with Z75), KR162 Liftgate Window Unlatch Relay, M4 Air Inlet Door Actuator, M6B Air Temperature Door Actuator - Auxiliary, M6L Air Temperature Door Actuator - Left, M6R Air Temperature Door Actuator - Right, M33 Liftgate Window Latch Assembly, M37B Mode Door Actuator - Auxiliary, M37L Mode Door Actuator - Left, M101L Seat Belt Retractor Motor Module - Left (AX7), M101R Seat Belt Retractor Motor Module - Right (AX7), P22A Video Display - 2nd Row (U42), P22B Video Display - 3rd Row (DNU), S13D Door Lock Switch - Driver, S13P Door Lock Switch - Passenger, S30 Headlamp Switch, S46B Liftgate Unlatch Switch (TB4), S78 Turn Signal/Multifunction Switch, S79D Window Switch - Driver, S141 Liftgate Window Unlatch Switch

cardiagn.com

No.	Device Label Name	Device Assigned Name	Rating	Description
12	SWC BKLT (2A)	F12DL	2A	S70L Steering Wheel Controls Switch - Left
13	EMPTY	F13DL	-	Not Used
14	EMPTY	F14DL	-	Not Used
15	EMPTY	F15DL	-	Not Used
16	DLIS (2A)	F16DL	2A	S39 Ignition Switch (without BTM)
17	VPM (10A)	F17DL	10A	K157 Video Processing Control Module (UVH)
18	MIR WNDO MDL (10A)	F18DL	10A	S52 Outside Rearview Mirror Switch, S79D Window Switch - Driver
19	BCM 1 (10A)	F19DL	10A	E6 Center High Mounted Stop Lamp, E7L License Plate Lamp - Left, E7R License Plate Lamp - Right, E8A Door Sill Plate Lamp - Driver (Z75), E8Q Door Sill Plate Lamp - Left Rear (Z75), E8B Door Sill Plate Lamp - Passenger (Z75), E8R Door Sill Plate Lamp - Right Rear (Z75), E28 Center Console Compartment Lamp (D07 without DCK), E31L Sunshade Mirror Lamp - Left, E31R Sunshade Mirror Lamp - Right, E36AH Dome Lamp (LWB), E37H Dome/Reading Lamps - Left Roof Rail (AZ3), E37J Dome/Reading Lamps - Right Roof Rail (AZ3), E37B Dome/Reading Lamps - 2nd Row (without U42), E37C Dome/Reading Lamps - 3rd Row (without DNU), E37EL Dome/Reading Lamps - Front Overhead Console Left, E37ER Dome/Reading Lamps - Front Overhead Console Right, K9 Body Control Module, K101 Trailer Interface Control Module (VQ9), P22A Video Display - 2nd Row (U42), P22B Video Display - 3rd Row (DNU), S5 Center Console Compartment Lamp Switch (D07 without DCK), S30 Headlamp Switch, S33 Horn Switch
20	FRT BLSTR (15A)	F20DL	15A	K134D Seat Bolster Memory Control Module - Driver (ULT), K134P Seat Bolster Memory Control Module - Passenger (ULT), S64D Seat Adjuster Switch - Driver (ULT), S64P Seat Adjuster Switch - Passenger (ULT)
21	EMPTY	F21DL	-	Not Used
22	EMPTY	F22DL	-	Not Used

cardiagn.com

No.	Device Label Name	Device Assigned Name	Rating	Description
23	EMPTY	F23DL	-	Not Used
24	HVAC/AUX HVAC IGN (15A/15A)	F24DL	15A	K33 HVAC Control Module, K175 Center Console Compartment Cooler Control Module (DCK)
25	IPC IGN/SDM IGN (10A/10A)	F25DL	10A	P14 Passenger Air Bag Disabled Indicator, P16 Instrument Cluster, P43 Collision Alert Indicators (UEU without UVC)
26	TILT COL/SEO TILT COL LCK1/SEO (15A/15A)	F26DL	15A	E35L Exterior Spot Lamp - Left (7X6 or 7X7), E35R Exterior Spot Lamp - Right (7X7), K60 Steering Column Lock Module (BTM), K99 Steering Column Position Control Module (N38)
27	DLC/DSM (10A/10A)	F27DL	10A	K40D Seat Memory Control Module - Driver (A45), K40P Seat Memory Control Module - Passenger (AG2), X84 Data Link Connector
28	PEPS/HVAC BATT (10A/10A)	F28DL	10A	K33 HVAC Control Module, K84 Keyless Entry Control Module (BTM)
29	THEFT DTRNT (10A)	F29DL	10A	B165 Content Theft Deterrent Sensor Module (UTU or UTV), P4 Security Siren (UTR)
30	EMPTY	F30DL	-	Not Used
31	EMPTY	F31DL	-	Not Used
32	EMPTY	F32DL	-	Not Used
33	SEO ALC (15A)	F33DL	15A	W9 Blunt Cut - Police Provision (5W4 or 9C1)
34	PRK ENBL/EAP (15A)	F34DL	10A	KR16B Park Brake Relay, KR1F Adjustable Pedal Relay - Forward, KR1R Adjustable Pedal Relay - Rearward, M5 Adjustable Pedal Motor (JF4 without A45)
35	EMPTY	F35DL	-	Not Used
36	MISC RUN CRNK (10A)	F36DL	10A	A10 Inside Rear View Mirror (AZ3 or DD8), A34 HVAC Controls - Auxiliary (AZ3 or DD8), B87 Rearview Camera (UVC), K69 Transfer Case Control Module (NQH or NP0)
37	HTD STR WHL (7.5A)	F37DL	7.5A	K32 Steering Wheel Heating Control Module (UVD)
38	TILT COL LCK2 (10A)	F38DL	10A	K60 Steering Column Lock Module (BTM)
39	IPC (10A)	F39DL	10A	K78 Head-Up Display Module (UV6), P16 Instrument Cluster, P17 Info Display Module, S31D Seat Heating and

cardiagn.com

No.	Device Label Name	Device Assigned Name	Rating	Description
				Cooling Switch - Driver (KB6 without Z75), S31P Seat Heating and Cooling Switch - Passenger (KB6 without Z75)
40	EMPTY	F40DL	-	Not Used
41	EMPTY	F41DL	-	Not Used
42	EURO TRLR	F42DL	30A	Blunt Cut - Trailer Provision (VQ9)
43	LT DR (30A)	F43DL	30A	M74D Window Motor - Driver, S79LR Window Switch - Left Rear
44	DRVR PWR SEAT (30A)	F44DL	30A	K40D Seat Memory Control Module - Driver (A45), S64D Seat Adjuster Switch - Driver (without A45)
45	EMPTY	F45DL	-	Not Used
46	RT HTD CLD SEAT (15A)	F46DL	15A	K53P Seat Blower Assembly - Passenger Back (KB6), K55P Seat Blower Assembly - Passenger Cushion (KB6)
47	LT HTD CLD SEAT (15A)	F47DL	15A	K53D Seat Blower Assembly - Driver Back (KB6), K55P Seat Blower Assembly - Driver Cushion (KB6)
48	EMPTY	F48DL	-	Not Used
49	EMPTY	F49DL	-	Not Used

X51L FUSE BLOCK - INSTRUMENT PANEL LEFT BOTTOM VIEW

cardiagn.com

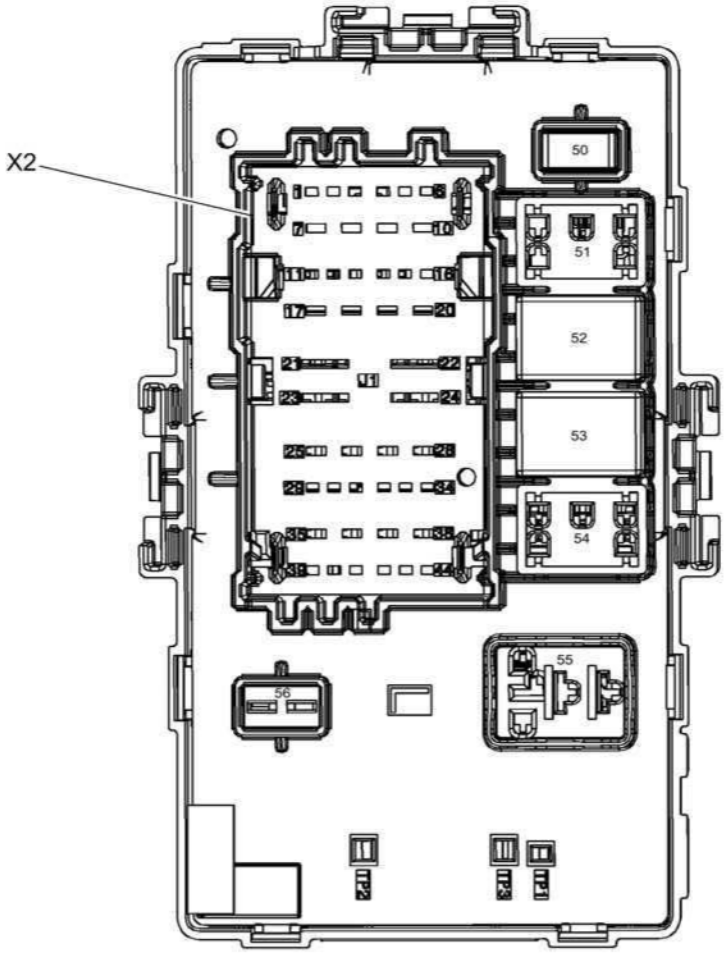

Fig. 8: X51L Fuse Block -- Instrument Panel Left Bottom View
Courtesy of GENERAL MOTORS COMPANY

X50L Fuse Block - Instrument Panel Left Usage

No.	Device Label Name	Fuse And Relay Description	Rating	Circuits
Fuses				

cardiagn.com

No.	Device Label Name	Fuse And Relay Description	Rating	Circuits
50	APO 2 (15A)	F50DL	15A	X80G Accessory Power Receptacle - Instrument Panel (AZ3 without DT4)
56	EMPTY	F56DL	-	Not Used
Relays				
51	EMPTY	-	-	Not Used
52	RAP/ACCY (RLY)	KR76A Retained Accessory Power Relay 1	-	F8DL, F5DL
53	RUN CRNK (RLY)	KR73 Ignition Main Relay	-	F24DL, F25DL, F33DL, F36DL, F37DL, F38DL
54	EMPTY	-	-	Not Used
55	EMPTY	-	-	Not Used
Important: Relays listed below are non-serviceable Printed Circuit Board (PCB) relays and are internal to the block				
-	-	KR87 Transmission Park Position Relay	-	KR1F Adjustable Pedal Relay - Forward (JF4 without A45), KR1R Adjustable Pedal Relay - Rearward (JF4 without A45), S143L Folding Seat Control Switch - 2nd Row Left (ATN or ATT), S143R Folding Seat Control Switch - 2nd Row Right (ATN or ATT), S144A Folding Seat Control Switch - Rear Compartment 2nd Row (ATN or ATT), S144B Folding Seat Control Switch - Rear Compartment 3rd Row (ATN or ATT)
-	-	KR1F Adjustable Pedal Relay - Forward	-	M5 Adjustable Pedal Motor (JF4 without A45)
-	-	KR1R Adjustable Pedal Relay - Rearward	-	M5 Adjustable Pedal Motor (JF4 without A45)

X51L FUSE BLOCK - INSTRUMENT PANEL LEFT X1

cardiagn.com

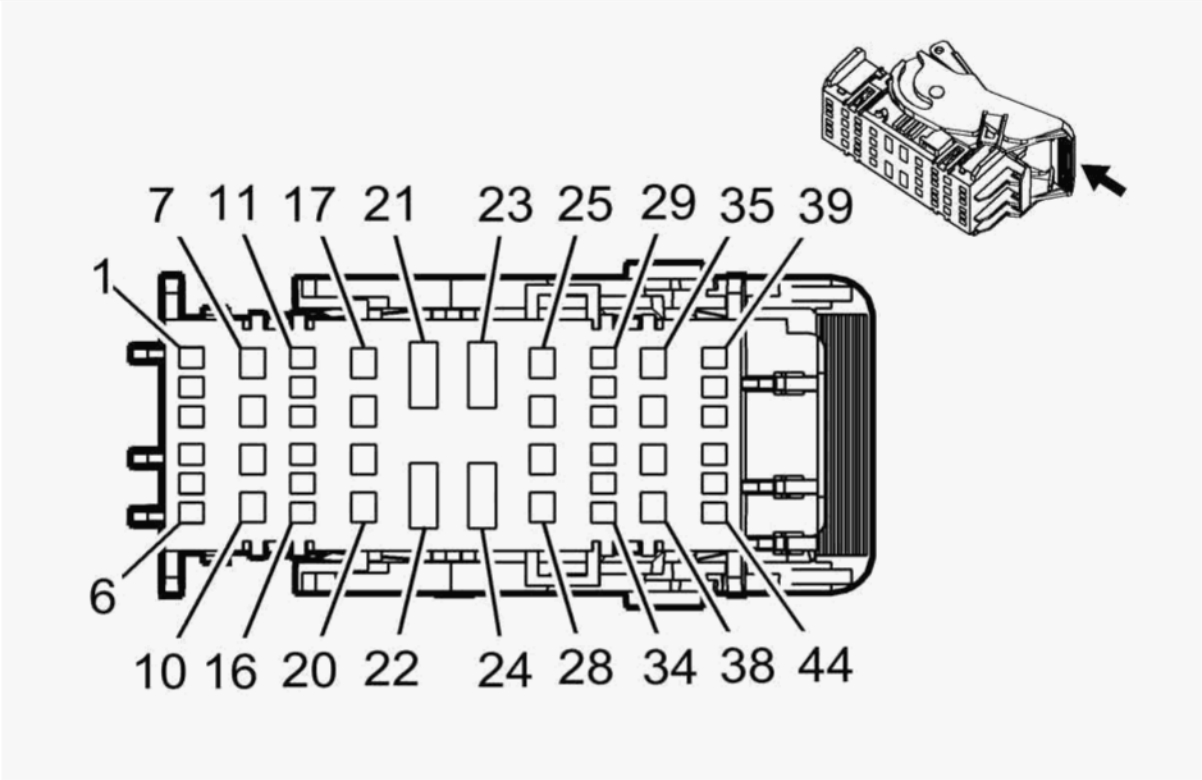

Connector Part Information

- Harness Type: Body
- OEM Connector: 13967687
- Service Connector: 19329455
- Description: 44-Way F 1.5, 2.8, 800 Metri-Pack Series (BK)

Terminal Part Information

Terminal Type ID	Terminated Lead	Diagnostic Test Probe	Terminal Removal Tool	Service Terminal	Tray	Core Crimp	Insulation Crimp
I	13575718	J-35616-44 (YE)	J-38125-558	12110127	2	F	G
II	13575838	J-35616-35 (VT)	J-38125-11A	7116-4111-02	13	E	A
III	13578891	J-35616-2A (GY)	J-38125-11A	Not Available	Not Available	Not Available	Not Available
IV	19301761	J-35616-35 (VT)	J-38125-12A	Not Available	Not Available	Not Available	Not Available

cardiagn.com

Terminal Type ID	Terminated Lead	Diagnostic Test Probe	Terminal Removal Tool	Service Terminal	Tray	Core Crimp	Insulation Crimp
IV	19301761	J-35616-35 (VT)	J-38125-12A	Not Available	Not Available	Not Available	Not Available
IV	19301761	J-35616-35 (VT)	J-38125-12A	Not Available	Not Available	Not Available	Not Available
V	19301767	J-35616-2A (GY)	J-38125-560	Not Available	Not Available	Not Available	Not Available
V	19301767	J-35616-2A (GY)	J-38125-560	Not Available	Not Available	Not Available	Not Available

Pin	Size	Color	Circuit	Function	Terminal Type ID	Option
1	0.5	RD/BN	2240	Battery Positive Voltage	V	-
2	0.5	RD/D-BU	4540	Battery Positive Voltage	V	-
3	0.5	RD/VT	1640	Battery Positive Voltage	III	-
4	-	-	-	Not Occupied	-	-
5	0.5	RD/BN	1140	Battery Positive Voltage	V	-
6 - 13	-	-	-	Not Occupied	-	-
14	0.5	RD/YE	4340	Battery Positive Voltage	V	-
15	0.35	L-GN/GY	5286	Adjustable Pedal Switch Forward Signal	V	-
16	0.5	RD/VT	1940	Battery Positive Voltage	V	-
17	0.75	RD/L-GN	6140	Battery Positive Voltage	IV	-
18	0.75 0.75	RD/L-GN RD/L-GN	5140 5140	Battery Positive Voltage	IV II	- -
19	-	-	-	Not Occupied	-	-
20	0.75	L-GN/VT	5130	Adjustable Pedal Actuator Forward Control	IV	-
21	5	RD/VT	842	Battery Positive Voltage	I	-
22	-	-	-	Not Occupied	-	-
23	5	RD/D-BU	42	Battery Positive Voltage	I	-
24 - 26	-	-	-	Not Occupied	-	-
27	2.5	RD/YE	5040	Battery Positive Voltage	IV	-
28	0.75	YE	5129	Adjustable Pedal Actuator Rearward Control	IV	-
29	-	-	-	Not Occupied	-	-
30	0.5	VT/WH	1939	Run/Crank Ignition 1 Voltage	V	-
31	-	-	-	Not Occupied	-	-

cardiagn.com

Pin	Size	Color	Circuit	Function	Terminal Type ID	Option
32	0.5	VT/L-GN	1739	Run/Crank Ignition 1 Voltage	V	-
33	0.35	WH/GY	5285	Adjustable Pedal Switch Rearward Signal	V	-
34	0.5	YE/BK	5813	Park Enable Control	V	-
35	-	-	-	Not Occupied	-	-
36	2.5	RD/D-BU	1842	Battery Positive Voltage	IV	-
37	2.5	RD/D-BU	1842	Battery Positive Voltage	IV	-
38 - 41	-	-	-	Not Occupied	-	-
42	0.35	L-GN/VT	5199	Run/Crank Relay Coil Control	V	-
43	0.35 0.35	GY/L-GN GY/VT	4083 755	RAP Relay 2 Coil Control RAP Relay Coil Control	V	- -
44	0.35	VT/YE	43	Accessory Ignition Voltage	V	-

X51L FUSE BLOCK - INSTRUMENT PANEL LEFT X2

cardiagn.com

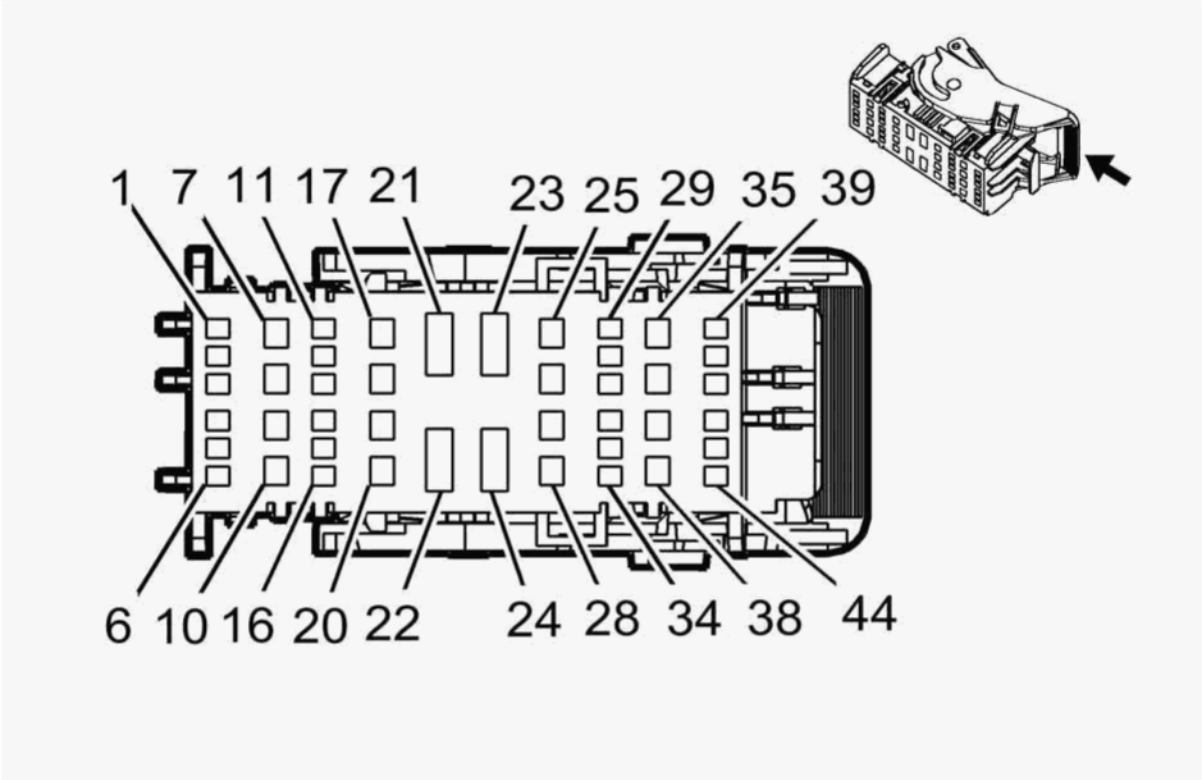

Connector Part Information

- Harness Type: Instrument Panel
- OEM Connector: 13967688
- Service Connector: 19329456
- Description: 44-Way F 1.5, 2.8, 800 Metri-Pack Series (GY)

Terminal Part Information

Terminal Type ID	Terminated Lead	Diagnostic Test Probe	Terminal Removal Tool	Service Terminal	Tray	Core Crimp	Insulation Crimp
I	19301761	J-35616-35 (VT)	J-38125-12A	Not Available	Not Available	Not Available	Not Available
I	19301761	J-35616-35 (VT)	J-38125-12A	Not Available	Not Available	Not Available	Not Available
I	19301761	J-35616-35 (VT)	J-38125-12A	Not Available	Not Available	Not Available	Not Available
II	19301767	J-35616-2A (GY)	J-38125-560	Not Available	Not Available	Not Available	Not Available

cardiagn.com

Terminal Type ID	Terminated Lead	Diagnostic Test Probe	Terminal Removal Tool	Service Terminal	Tray	Core Crimp	Insulation Crimp
II	19301767	J-35616-2A (GY)	J-38125-560	Not Available	Not Available	Not Available	Not Available

Pin	Size	Color	Circuit	Function	Terminal Type ID	Option
1 - 2	-	-	-	Not Occupied	-	-
3	0.5	YE	6817	LED Backlight Dimming Control	II	-
4	0.35	BN	6136	Control	II	-
5	0.5	RD/D-BU	540	Battery Positive Voltage	II	-
6	-	-	-	Not Occupied	-	-
7	0.5	RD/BN	2940	Battery Positive Voltage	I	-
8	1	RD/GY	2140	Battery Positive Voltage	I	-
9	-	-	-	Not Occupied	-	-
10	1.5	RD/BN	4240	Battery Positive Voltage	I	-
11 - 13	-	-	-	Not Occupied	-	-
14	0.5 0.75	RD/GY RD/GY	4140 4140	Battery Positive Voltage	II	- -
15	0.5	VT/GY	539	Run/Crank Ignition 1 Voltage	II	-
16 - 17	-	-	-	Not Occupied	-	-
18	0.5	RD/WH	2740	Battery Positive Voltage	I	-
19	-	-	-	Not Occupied	-	-
20	1.5	RD/WH	1040	Battery Positive Voltage	I	-
21 - 24	-	-	-	Not Occupied	-	-
25	0.5	RD/VT	3340	Battery Positive Voltage	I	-
26	0.5	RD/WH	640	Battery Positive Voltage	I	-
27	0.5 1.5	RD/VT RD/VT	4640 4640	Battery Positive Voltage	I	- -
28	0.5	VT/BK	1639	Run/Crank Ignition 1 Voltage	I	-
29 - 33	-	-	-	Not Occupied	-	-
34	0.5	VT/BK	739	Run/Crank Ignition 1 Voltage	II	-
35	0.5	RD/GY	2840	Battery Positive Voltage	I	-

cardiagn.com

Pin	Size	Color	Circuit	Function	Terminal Type ID	Option
36	0.75	D-BU/VT	807	OFF /Accessory Ignition Voltage	I	-
37	0.5	VT/WH	1139	Run/Crank Ignition 1 Voltage	I	-
38	0.35	VT/L-GN	1739	Run/Crank Ignition 1 Voltage	I	-
39 - 42	-	-	-	Not Occupied	-	-
43	0.35	YE	6812	Out of Park Signal	II	-
44	0.75	BK	1850	Ground	II	-

X51L FUSE BLOCK - INSTRUMENT PANEL LEFT X3

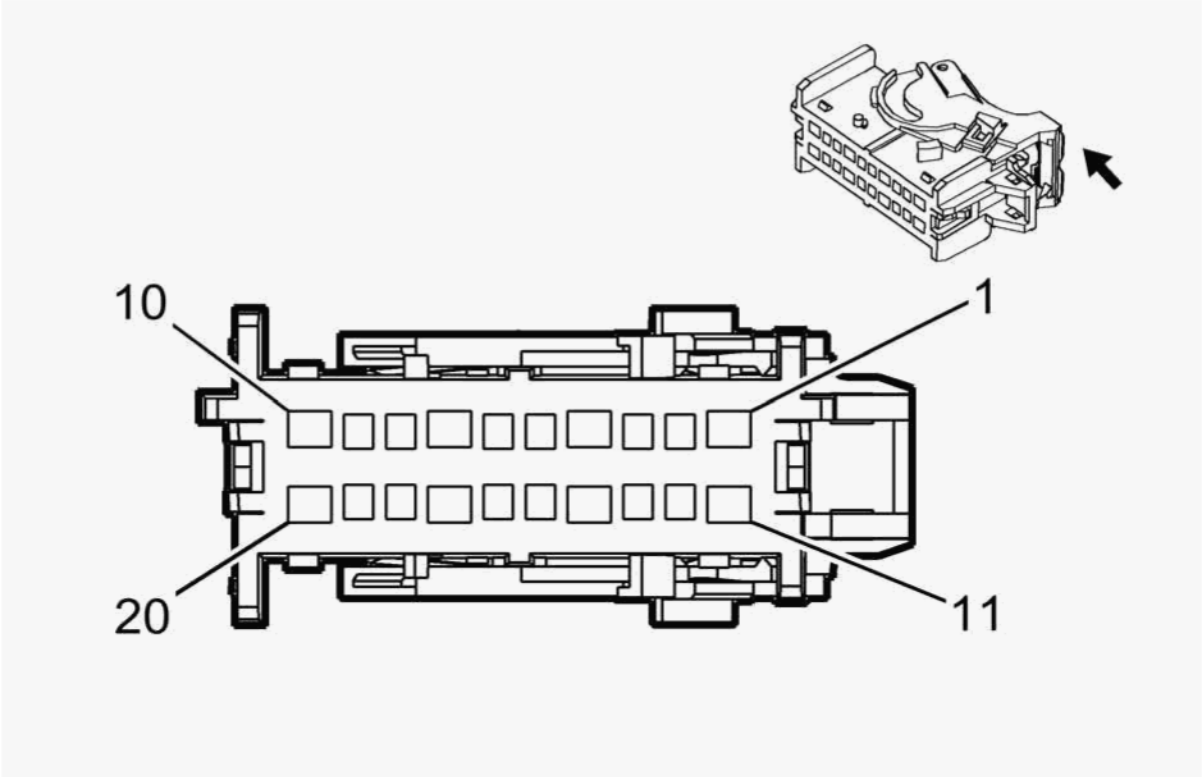

Connector Part Information

- Harness Type: Headliner
- OEM Connector: 15547106

cardiagn.com

- Service Connector: 13597270
- Description: 20-Way F 1.5, 2.8 OCS Series (BK)

Terminal Part Information

Terminal Type ID	Terminated Lead	Diagnostic Test Probe	Terminal Removal Tool	Service Terminal	Tray	Core Crimp	Insulation Crimp
I	19301761	J-35616-35 (VT)	J-38125-12A	Not Available	Not Available	Not Available	Not Available
II	19301767	J-35616-2A (GY)	J-38125-560	Not Available	Not Available	Not Available	Not Available

Pin	Size	Color	Circuit	Function	Terminal Type ID	Option
1 - 10	-	-	-	Not Occupied	-	-
11	0.35	VT/YE	43	Accessory Ignition Voltage	I	-
12	0.5	RD/YE	240	Battery Positive Voltage	II	-
13	0.35	VT/L-GN	1739	Run/Crank Ignition 1 Voltage	II	-
14	0.35	VT/BK	1139	Run/Crank Ignition 1 Voltage	I	-
15 - 20	-	-	-	Not Occupied	-	-

X51R FUSE BLOCK - INSTRUMENT PANEL RIGHT LABEL

cardiagn.com

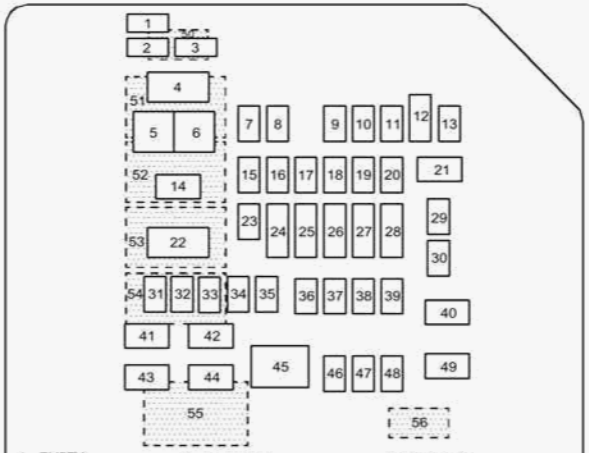

Fig. 9: X51L Fuse Block -- Instrument Panel Right Label
Courtesy of GENERAL MOTORS COMPANY

cardiagn.com

ELECTRICAL

Wiring Systems and Power Management - Diagnostic Information and Procedures - Escalade, Suburban, Tahoe, Yukon

DIAGNOSTIC INFORMATION AND PROCEDURES

DTC B0005: IN PARK SWITCH CIRCUIT

Diagnostic Instructions

- Perform the **Diagnostic System Check - Vehicle** prior to using this diagnostic procedure.
- Review **Strategy Based Diagnosis** for an overview of the diagnostic approach.
- Refer to **Diagnostic Procedure Instructions** to provide an overview of each diagnostic category.

DTC Descriptors

DTC B0005

In Park Switch Circuit

For symptom byte information refer to **Symptom Byte List**

Diagnostic Fault Information

Circuit	Short to Ground	Open/High Resistance	Short to Voltage	Signal Performance
Relay coil control	B0005 02	B0005 04	B0005 01	-

Circuit/System Description

The body control module (BCM) controls the transmission park relay by providing ground to the in park switch coil control circuit. The transmission park relay is and a PCB relay that when energized, disconnects battery voltage from the ignition circuit. The transmission park relay is energized when the ignition is in the ACCESSORY or the ON position and when the transmission shift selector is not in PARK. When the vehicle is in PARK, the relay is de-energized providing battery voltage to the appropriate devices.

Conditions for Running the DTC

cardiagn.com

- The system voltage is between 9-16 V.

Conditions for Setting the DTC

The DTC will set only when the module requests the output and there is a short to ground in the ignition voltage circuit.

B0005 01

The ignition output is not active and a short to battery is detected 3 consecutive times on the coil control circuit.

B0005 02

A short to ground is detected on the coil control circuit.

B0005 04

The ignition output is not active and an open is detected 20 consecutive times on the coil control circuit.

Action Taken When the DTC Sets

B0005 01, B0005 02, B0005 04

No action taken.

Conditions for Clearing the DTC

- The current DTC will clear when the malfunction is no longer present.
- A history DTC clears when the module ignition cycle counter reaches the reset threshold of 50, without a repeat of the malfunction.

Reference Information

Schematic Reference

- **Adjustable Pedal Schematics**
- **Rear Seat Schematics**

Connector End View Reference

COMPONENT CONNECTOR END VIEWS - INDEX

cardiagn.com

Description and Operation

Power Mode Description and Operation (With BTM) **Power Mode Description and Operation (Without BTM)**

Electrical Information Reference

- **Circuit Testing**
- **Connector Repairs**
- **Testing for Intermittent Conditions and Poor Connections**
- **Wiring Repairs**

Scan Tool Reference

Control Module References for scan tool information

Circuit/System Verification

1. Ignition ON.
2. Verify the scan tool Body Control Module In Park Switch Status parameter changes between On and Off when shifting in and out of PARK.
   - **If the parameter does not change**

     Refer to **Ignition Can/Cannot Be Turned Off with Transmission in Any Gear**

   - **If the parameter changes**
3. Verify the KR87 Transmission Park Relay clicks ON and OFF when shifting in and out of PARK.
   - **If the KR87 Transmission Park Relay does not click ON and OFF**

     Refer to Circuit/System Testing.

   - **If the KR87 Transmission Park Relay clicks ON and OFF**
4. All OK.

Circuit/System Testing

1. Ignition OFF, disconnect the X5 harness connector at the K9 Body Control Module, ignition ON.
2. Verify a test lamp illuminates between the control circuit terminal 23 and ground.

cardiagn.com

- **If the test lamp does not illuminate and the circuit fuse is good**

1. Ignition OFF, disconnect the X2 harness connector at the X51L Fuse Block - Instrument Panel Left.
2. Test for infinite resistance between the control circuit terminal and ground.
    - If less than infinite resistance, repair the short to ground on the circuit.
    - If infinite resistance
3. Test for less than 2 Ω in the control circuit end to end.
    - If 2 Ω or greater, repair the open/high resistance in the circuit.
    - If less than 2 Ω.
4. Ignition OFF, remove the PARK ENABLE EAP fuse F34DL. Ignition ON.
5. Test for less than 1 V between the control circuit terminal and ground.
    - If 1 V or greater, repair the short to voltage on the circuit.
    - If less than 1 V, replace the X51L Fuse Block - Instrument Panel Left.

- **If the test lamp does not illuminate and the circuit fuse is open**

1. Ignition OFF, disconnect the X1 harness connector at the X51L Fuse Block - Instrument Panel Left.
2. Test for infinite resistance between the ignition circuit terminal 34 and ground.
    - If less than infinite resistance, repair the short to ground on the circuit.
    - If infinite resistance, replace the X51L Fuse Block - Instrument Panel Left

- **If the test lamp illuminates**

3. Replace the K9 Body Control Module.

Repair Instructions

Perform the **Diagnostic Repair Verification** after completing the repair.

- Refer to **Instrument Panel Wiring Harness Junction Block Replacement**
- Refer to **Control Module References** for body control module replacement, programming and setup.

DTC B097B: POWER MODE START SWITCH CIRCUIT

Diagnostic Instructions

- Perform the **Diagnostic System Check - Vehicle** prior to using this diagnostic procedure.

cardiagn.com

- Review **Strategy Based Diagnosis** for an overview of the diagnostic approach.
- Refer to **Diagnostic Procedure Instructions** to provide an overview of each diagnostic category.

DTC Descriptors

DTC B097B

Power Mode Start Switch Circuit

For symptom byte information refer to **Symptom Byte List**

Diagnostic Fault Information

Circuit	Short to Ground	Open/High Resistance	Short to Voltage	Signal Performance
Signal - Terminal 3	B097B 02*	B097B 05*	B097B 05*, B097B 08*	-
Signal - Terminal 6	B097B 02	B097B 04	B097B 04	-
Low Reference	-	B097B 05*, B097B 08*	-	-
Ground	-	B097B 04	-	-
* DTC set in keyless entry control module				

Circuit/System Description

The ignition mode switch has two LEDs that indicate the vehicle power mode. When the vehicle is in the off mode, both LEDs will be off. Pressing the ignition mode switch button once (without the brake pedal applied), the vehicle enters the accessory mode and the amber LED (Accessory) will illuminate. The accessory mode has a 10 min time-out to reduce battery drain. Pressing and holding the push button start switch (without the brake pedal applied) for 5 s will place the vehicle in run/start mode (without the vehicle running) and the green LED (Run/Start) will illuminate. With the ignition off (with the brake pedal applied), pressing the ignition mode switch button once, the vehicle will enter run/start mode and the green LED (run/start) will illuminate. This will start the engine. Both LEDs have the voltage supplied from the body control module. The ignition mode switch sends the ignition mode switch status to the keyless entry control module and to the body control module. The keyless entry control module sends a redundant signal to the body control module with the ignition mode switch status.

The ignition mode switch contains two individual switches that provide redundant switch inputs to both the body control module and the keyless entry control module. The body control module supplies the ignition mode switch a constant B+ signal. The body control module monitors this signal to determine if the switch is released or pressed. When the ignition mode switch is not pressed, voltage on the signal circuit is pulled down through

cardiagn.com

two resistors in the switch. When the ignition mode switch is pressed, voltage on the signal circuit is pulled down through only one resistor, changing the voltage seen at the body control module and indicating that the ignition mode switch is pressed. The keyless entry control module monitors voltage on the switch in the same manner as the body control module, but monitors the other individual switch in the ignition mode switch.

Conditions for Running the DTC

Control module voltage is 9-16 V.

Conditions for Setting the DTC

B097B 00

- The voltage seen at the BCM monitored switch does not match the voltage seen at the keyless entry control module monitored switch.
- The above condition exists for more than 1 s.

B097B 02

- The control module detects a short to ground in the ignition mode switch signal circuit.
- The above condition exists for more than 1 s.

B097B 04

- The control module detects a open in the ignition mode switch signal circuit.
- The above condition exists for more than 1 s.

B097B 05

- The control module detects an open in the ignition mode switch signal circuit.
- The above condition exists for more than 1 s.

B097B 08

- The control module detects a change in the ignition mode without observing a switch press.
- The above condition occurs 4 consecutive times.

B097B 61

- The control module detects a continuously closed ignition mode switch.

cardiagn.com

- The above condition exists for more than 1 min.

Action Taken When the DTC Sets

B097B 00, B097B 04, B097B 05, B097B 08, B097B 61

No action is taken.

B097B 02

The module output driver will be shut down and not supply voltage to the circuit.

Conditions for Clearing the DTC

- A current DTC clears when the malfunction is no longer present.
- A history DTC clears after 40 consecutive module ignition cycles without a repeat of the malfunction.

Reference Information

Schematic Reference

- **Power Moding Schematics**
- **Power Distribution Schematics**

Connector End View Reference

COMPONENT CONNECTOR END VIEWS - INDEX

Description and Operation

Power Mode Description and Operation (With BTM) **Power Mode Description and Operation (Without BTM)**

Electrical Information Reference

- **Circuit Testing**
- **Connector Repairs**
- **Testing for Intermittent Conditions and Poor Connections**
- **Wiring Repairs**

cardiagn.com

Scan Tool Reference

Control Module References for scan tool information

Circuit/System Verification

1. Verify DTC B097B 61 is not set.
   - **If DTC B097B 61 is set**

     Test or replace the S38 Ignition Mode Switch.

   - **If DTC B097B 61 is not set**
2. Refer to Circuit/System Testing.

Circuit/System Testing

1. Ignition OFF and all systems OFF, disconnect the harness connector at the S38 Ignition Mode Switch. It may take up to 2 min for all vehicle systems to power down.
2. Test for less than 10 Ω between the ground circuit terminal 4 and ground.
   - **If 10 Ω or greater**
   1. Test for less than 2 Ω in the ground circuit end to end.
      - If 2 Ω or greater, repair the open/high resistance in the circuit.
      - If less than 2 Ω, repair the open/high resistance in the ground connection.
   - **If less than 10 Ω**
3. Test for less than 10 Ω between the low reference circuit terminal 7 and ground.
   - **If 10 Ω or greater**
   1. Test for less than 2 Ω in the ground circuit end to end.
      - If 2 Ω or greater, repair the open/high resistance in the circuit.
      - If less than 2 Ω, replace the K84 Keyless Entry Control Module.
   - **If less than 10 Ω**
4. Connect the S38 Ignition Mode Switch, ignition ON.
5. Disconnect the S38 Ignition Mode Switch.
6. Verify the scan tool Body Control Module Push Button Ignition Switch Voltage parameter is greater than 11 V.

cardiagn.com

- **If 11 V or less**

1. Connect the S38 Ignition Mode Switch.
2. Ignition OFF, disconnect the harness connector at the K9 Body Control Module and S38 Ignition Mode Switch.
3. Test for infinite resistance between the signal circuit terminal 6 and ground.
    - If less than infinite resistance, repair the short to ground on the circuit.
    - If infinite resistance, replace the K9 Body Control Module.

- **If greater than 11 V**

7. Install a 3 A fused jumper wire between the signal circuit terminal 6 and ground.
8. Verify the scan tool Body Control Module Push Button Ignition Switch Voltage parameter is less than 1 V.

- **If 1 V or greater**

1. Disconnect the harness connector at the K9 Body Control Module.
2. Test for less than 1 V between the signal circuit and ground.
    - If 1 V or greater, repair the short to voltage on the circuit.
    - If less than 1 V
3. Test for less than 2 Ω in signal circuit end to end.
    - If 2 Ω or greater, repair the open/high resistance in the circuit.
    - If less than 2 Ω, replace the K9 Body Control Module.

- **If less than 1 V**

9. Connect the harness connector at the S38 Ignition Mode Switch.
10. Verify the scan tool Body Control Module Push Button Ignition Switch Voltage parameter is 8-10 V, with the S38 Ignition Mode Switch released.

- **If not between 8-10 V**

  Test or replace the S38 Ignition Mode Switch.

- **If between 8-10 V**

11. Verify the scan tool Body Control Module Push Button Ignition Switch Voltage parameter is 4-7 V, with the S38 Ignition Mode Switch pressed.

- **If not between 4-7 V**

  Test or replace the S38 Ignition Mode Switch.

cardiagn.com

- **If between 4-7 V**

12. Disconnect the X1 harness connector at the K84 Keyless Entry Control Module.
13. Test for infinite resistance between the signal circuit terminal 11 and ground.
    - **If less than infinite resistance**

      Repair the short to ground on the circuit.

    - **If infinite resistance**
14. Ignition ON.
15. Test for less than 1 V between the signal circuit terminal 11 and ground.
    - **If 1 V or greater**

      Repair the short to voltage on the circuit.

    - **If less than 1 V**
16. Test for 4.5-5.5 kΩ between the signal circuit terminal 11 and the low reference circuit terminal 12, with the S38 Ignition Mode Switch released.
    - **If not between 4.5-5.5 kΩ**
    1. Ignition OFF, disconnect the harness connector at the S38 Ignition Mode Switch.
    2. Test for less than 2 Ω in signal circuit end to end.
        - If 2 Ω or greater, repair the open/high resistance in the circuit.
        - If less than 2 Ω, test or replace the S38 Ignition Mode Switch.
    - **If between 4.5-5.5 kΩ**
17. Test for 1-1.5 kΩ between the signal circuit terminal 11 and the low reference circuit terminal 12, with the S38 Ignition Mode Switch pressed.
    - **If not between 1-1.5 kΩ**

      Test or replace the S38 Ignition Mode Switch.

    - **If between 1-1.5 kΩ**
18. Replace the K84 Keyless Entry Control Module.

Component Testing

cardiagn.com

1. Ignition OFF, disconnect the harness connector at the S38 Ignition Mode Switch.
2. Test for 4.5-5.5 kΩ between the terminals listed below with the S38 Ignition Mode Switch released,
   - Signal terminal 6 and ground terminal 4
   - Signal terminal 3 and low reference terminal 7
   - **If not between 4.5-5.5 kΩ**

     Replace the S38 Ignition Mode Switch.

   - **If between 4.5-5.5 kΩ**
3. Test for 1-1.5 kΩ between the terminals listed below with the S38 Ignition Mode Switch pressed.
   - Signal terminal 6 and ground terminal 4
   - Signal terminal 3 and low reference terminal 7
   - **If not between 1-1.5 kΩ**

     Replace the S38 Ignition Mode Switch.

   - **If between 1-1.5 kΩ**
4. All OK.

Repair Instructions

Perform the **Diagnostic Repair Verification** after completing the repair.

- Refer to **Control Module References** for control module replacement, programming and setup.

DTC B097C: POWER MODE RUN/START INDICATOR CIRCUIT

Diagnostic Instructions

- Perform the **Diagnostic System Check - Vehicle** prior to using this diagnostic procedure.
- Review **Strategy Based Diagnosis** for an overview of the diagnostic approach.
- Refer to **Diagnostic Procedure Instructions** to provide an overview of each diagnostic category.

DTC Descriptors

DTC B097C

cardiagn.com

Power Mode Run/Start Indicator Circuit

For symptom byte information refer to **Symptom Byte List**

Diagnostic Fault Information

Circuit	Short to Ground	Open/High Resistance	Short to Voltage	Signal Performance
Control	B097C 02	B097C 04	B097C 01	-
Ground	-	B097C 04	-	-

Circuit/System Description

The ignition mode switch has two LEDs that indicate the vehicle power mode. When the vehicle is in the off mode, both LEDs will be off. Pressing the ignition mode switch button once (without the brake pedal applied), the vehicle enters the accessory mode and the amber LED (Accessory) will illuminate. The accessory mode has a 10 min time-out to reduce battery drain. Pressing and holding the push button start switch (without the brake pedal applied) for 5 s will place the vehicle in run/start mode (without the vehicle running) and the green LED (Run/Start) will illuminate. With the ignition off (with the brake pedal applied), pressing the ignition mode switch button once, the vehicle will enter run/start mode and the green LED (run/start) will illuminate. This will start the engine. Both LEDs have the voltage supplied from the body control module.

Conditions for Running the DTC

Control module voltage is 9-16 V

Conditions for Setting the DTC

B097C 01

- The BCM detects a short to voltage in the control circuit.
- The above condition exists for more than 1 min.

B097C 02

- The BCM detects a short to ground in the control circuit.
- The above condition exists for more than 1 min.

B097C 04

cardiagn.com

- The BCM detects an open in the respective circuit, when the output is inactive.
- The above condition exists for more than 1 min.

Action Taken When the DTC Sets

The BCM disables the control output.

Conditions for Clearing the DTC

- A current DTC clears when the malfunction is no longer present.
- A history DTC clears when the module power mode cycle counter reaches 40, without a repeat of the malfunction.

Reference Information

Schematic Reference

Power Moding Schematics

Connector End View Reference

COMPONENT CONNECTOR END VIEWS - INDEX

Description and Operation

Power Mode Description and Operation (With BTM) **Power Mode Description and Operation (Without BTM)**

Electrical Information Reference

- **Circuit Testing**
- **Connector Repairs**
- **Testing for Intermittent Conditions and Poor Connections**
- **Wiring Repairs**

Scan Tool Reference

Control Module References for scan tool information

Circuit/System Verification

cardiagn.com

1. Ignition ON.
2. Verify the green LED turns ON and OFF when commanding the Run/Start Power Mode Indicator On and Off with the scan tool.
   - **If the green LED does not turn ON and OFF**

     Refer to Circuit/System Testing.

   - **If the green LED turns ON and OFF**
3. All OK.

Circuit/System Testing

1. Ignition OFF and all vehicle systems OFF, disconnect the harness connector at the S38 Ignition Mode Switch. It may take up to 2 min for all vehicle systems to power down.
2. Test for less than 10 Ω between the ground circuit terminal 4 and ground.
   - **If 10 Ω or greater**
   1. Ignition OFF.
   2. Test for less than 2 Ω in the ground circuit end to end.
      - If 2 Ω or greater, repair the open/high resistance in the circuit.
      - If less than 2 Ω, repair the open/high resistance in the ground connections.
   - **If less than 10 Ω**
3. Connect the harness connector at the S38 Ignition Mode Switch.
4. Ignition ON, disconnect the harness connector at the S38 Ignition Mode Switch.
5. Connect a test lamp between the control circuit terminal 5 and ground.
6. Verify the test lamp stays OFF when commanding Run/Start Power Mode Indicator Off with the scan tool.
   - **If the test lamp is always ON**
   1. Connect the harness connector at the S38 Ignition Mode Switch.
   2. Ignition OFF, remove the test lamp, disconnect the harness connector at the K9 Body Control Module.
   3. Ignition ON, disconnect the harness connector at the S38 Ignition Mode Switch.
   4. Test for less than 1 V between the control circuit and ground.
      - If 1 V or greater, repair the short to voltage on the circuit.
      - If less than 1 V, replace the K9 Body Control Module.

cardiagn.com

- **If the test lamp is always OFF**

7. Test for greater than 3 V between the control circuit terminal 5 and ground while commanding Run/Start Power Mode Indicator On with the scan tool.
   - **If 3 V or less**
   1. Ignition OFF, disconnect the harness connector at the K9 Body Control Module.
   2. Test for infinite resistance between the control circuit and ground.
      - If less than infinite resistance, repair the short to ground on the circuit.
      - If infinite resistance
   3. Test for less than 2 Ω in the control circuit end to end.
      - If 2 Ω or greater, repair the open/high resistance in the circuit.
      - If less than 2 Ω, replace the K9 Body Control Module.
   - **If 3 V or greater**
8. Test or replace the S38 Ignition Mode Switch.

Component Testing

1. Ignition OFF, disconnect the harness at the S38 Ignition Mode Switch.
2. Connect a jumper wire between the S38 Ignition Mode Switch terminal 4 and ground.
3. Connect a 3 A fused jumper wire between the S38 Ignition Mode Switch terminal 5 and B+.
4. Verify the green LED illuminates.
   - **If the LED does not illuminate**

     Replace the S38 Ignition Mode Switch.

   - **If the LED illuminates**
5. Connect a 3 A fused jumper wire between the S38 Ignition Mode Switch terminal 2 and B+.
6. Verify the amber LED illuminates.
   - **If the LED does not illuminate**

     Replace the S38 Ignition Mode Switch.

   - **If the LED illuminates**

cardiagn.com

7. All OK.

Repair Instructions

Perform the **Diagnostic Repair Verification** after completing the repair.

- Refer to **Ignition and Start Switch Replacement (Without BTM)** **Ignition and Start Switch Replacement (Chevrolet / GMC With BTM)** **Ignition and Start Switch Replacement (Cadillac With BTM)**
- Refer to **Control Module References** for body control module replacement, programming and setup.

DTC B1370: CONTROL MODULE IGNITION ON AND START CIRCUIT (INSTRUMENT CLUSTER)

Diagnostic Instructions

- Perform the **Diagnostic System Check - Vehicle** prior to using this diagnostic procedure.
- Review **Strategy Based Diagnosis** for an overview of the diagnostic approach.
- Refer to **Diagnostic Procedure Instructions** to provide an overview of each diagnostic category.

DTC Descriptors

DTC B1370

Control Module Ignition On and Start Circuit

For symptom byte information refer to **Symptom Byte List**

Diagnostic Fault Information

Circuit	Short to Ground	Open/High Resistance	Short to Voltage	Signal Performance
Instrument Cluster Ignition (Instrument Cluster terminal 8)	B1370 06	B1370 06	B1370 01	-

Circuit/System Description

The vehicle power mode master is the body control module (BCM). The BCM monitors switch inputs and will activate relays and other direct outputs of the power mode master as needed according to the calculated power mode.

cardiagn.com

The instrument cluster has a switched voltage input and may operate in a default mode if the power mode master serial data message does not match what the individual module can see from its own connections.

Conditions for Running the DTC

B1370 01

Ignition is in the Accessory position.

B1370 06

Ignition is in the Accessory, Run, or Crank positions.

Conditions for Setting the DTC

B1370 01

Ignition circuit is shorted to voltage.

B1370 06

- Ignition circuit is open.
- Ignition circuit is shorted to ground.

Action Taken When the DTC Sets

The instrument cluster still functions except check engine light is always off.

Conditions for Clearing the DTC

- The condition responsible for setting the DTC no longer exists.
- A history DTC will clear once 50 consecutive malfunction-free ignition cycles have occurred.

Reference Information

Schematic Reference

Instrument Cluster Schematics

cardiagn.com

Connector End View Reference

COMPONENT CONNECTOR END VIEWS - INDEX

Description and Operation

- **Instrument Cluster Description and Operation**
- **Power Mode Description and Operation (With BTM)** **Power Mode Description and Operation (Without BTM)**

Electrical Information Reference

- **Circuit Testing**
- **Connector Repairs**
- **Testing for Intermittent Conditions and Poor Connections**
- **Wiring Repairs**

Scan Tool Reference

Control Module References for scan tool information

Circuit/System Verification

1. Verify that DTC B144B or B1380 is not set.
    - **If DTC B144B or B1380 is set**

      Refer to **Diagnostic Trouble Code (DTC) List - Vehicle** .

    - **If DTC B144B or B1380 is not set**
2. Refer to Circuit/System Testing.

Circuit/System Testing

1. Ignition OFF, disconnect the harness connector at the P16 Instrument Cluster.
2. Verify that a test lamp does not illuminate between the ignition circuit terminal 8 and ground.
    - **If the test lamp illuminates**

      Repair the short to voltage on the ignition circuit.

cardiagn.com

- **If the test lamp does not illuminate**

3. Ignition ON.
4. Verify that a test lamp illuminates between the ignition terminal 8 and ground.
    - **If the test lamp does not illuminate and the Ignition fuse is good**
    1. Ignition OFF, remove the test lamp.
    2. Test for less than 2 Ω in the ignition circuit end to end.
        - If 2 Ω or greater, repair the open/high resistance in the circuit.
        - If less than 2 Ω, refer to **Power Mode Mismatch (With BTM)Power Mode Mismatch (Without BTM)**.
    - **If the test lamp does not illuminate and the Ignition fuse is open**
    1. Ignition OFF, remove the test lamp.
    2. Test for infinite resistance between the ignition circuit and ground.
        - If less than infinite resistance, repair the short to ground on the circuit.
        - If infinite resistance, replace the P16 Instrument Cluster.
    - **If the test lamp illuminates**
5. Replace the P16 Instrument Cluster.

Repair Instructions

Perform the **Diagnostic Repair Verification** after completing the repair.

- Refer to **Control Module References** for control module replacement, programming and setup.

DTC B1370, B1380, OR B1441: CONTROL MODULE IGNITION ON AND START CIRCUIT/CONTROL MODULE IGNITION ACCESSORY CIRCUIT/CONTROL MODULE IGNITION OFF, RUN, AND START CIRCUIT

Diagnostic Instructions

- Perform the **Diagnostic System Check - Vehicle** prior to using this diagnostic procedure.
- Review **Strategy Based Diagnosis** for an overview of the diagnostic approach.
- Refer to **Diagnostic Procedure Instructions** to provide an overview of each diagnostic category.

DTC Descriptors

DTC B1370

cardiagn.com

Control Module Ignition ON and Start Circuit

DTC B1380

Control Module Ignition Accessory Circuit

DTC B1441

Control Module Ignition OFF, Run, and Start Circuit

For symptom byte information refer to **Symptom Byte List**

Diagnostic Fault Information

Circuit	Short to Ground	Open/High Resistance	Short to Voltage	Signal Performance
B+	B1370 04, B1380 04	B1370 04, B1380 04	-	-
Ignition Terminal 2	B1370 04, B1380 04	B1370 04, B1380 04	B1370 01	-
Ignition Terminal 3	B1370 04, B1380 04	B1380 04	B1380 01	-
Ignition Terminal 5	B1370 04, B1380 04, B1441 04	B1441 04	B1441 04	-
5 V Reference	-	1	-	-
1. Power Mode Mismatch				

Circuit/System Description

The vehicle power mode master is the body control module (BCM). The ignition switch is a low current switch with multiple discrete circuits to the BCM. The BCM logic uses the ignition switch positions to identify the operator's desired power mode and activate specific discrete signals, and serial data messages for the operation of different subsystems as necessary. Other modules which have switched voltage inputs may operate in a default mode if the power mode master serial data message does not match what the individual module can detect from its own connections.

The power mode master will activate relays and other direct outputs of the power mode master as needed according to the calculated power mode. Some relays controlled by the BCM are switched ignition voltage outputs that are pass through circuits within the BCM directly from the ignition switch. If these circuits short to ground, the B+ circuit fuse to the ignition switch will open.

Conditions for Running the DTC

cardiagn.com

B1370 01, B1370 04

Ignition switch is in the RUN or CRANK positions.

B1380 01, B1380 04

Ignition switch is in the RUN or ACCESSORY positions.

B1441 01, B1441 04

Ignition switch is in the CRANK position.

Conditions for Setting the DTC

B1370 01

Ignition circuit is shorted to voltage.

B1370 04

- Ignition circuit is open.
- Ignition, accessory, or off/run/crank circuit shorted to ground.
- B+ circuit of the ignition switch is open or shorted to ground.
- Ignition relay control circuit open, including relay coil and ground.

B1380 01

Ignition, accessory circuit is shorted to voltage.

B1380 04

- Ignition, accessory circuit is open.
- Ignition, accessory, or off/run/crank circuit shorted to ground.
- B+ circuit of the ignition switch is open or shorted to ground.

B1441 01

Ignition, off/run/crank signal circuit is shorted to voltage.

cardiagn.com

B1441 04

Ignition, off/run/crank signal circuit is open.

Actions Taken When the DTC Sets

- The BCM operates in a fail-safe power mode dependent on the last valid power mode detected and the state of the engine run flag data on the serial data communications circuits.
- The other modules on the vehicle operate in a fail-safe power mode dependent on the last valid power mode transmitted by the BCM and the state of the engine run flag on the serial data communications circuits.

Conditions for Clearing the DTC

- The condition responsible for setting the DTC no longer exists.
- A history DTC will clear once 50 consecutive malfunction-free ignition cycles have occurred.

Reference Information

Schematic Reference

Power Distribution Schematics

Connector End View Reference

COMPONENT CONNECTOR END VIEWS - INDEX

Description and Operation

Power Mode Description and Operation (With BTM) **Power Mode Description and Operation (Without BTM)**

Electrical Information Reference

- **Circuit Testing**
- **Connector Repairs**
- **Testing for Intermittent Conditions and Poor Connections**
- **Wiring Repairs**

Scan Tool Reference

cardiagn.com

Control Module References for scan tool information

Circuit/System Verification

1. Verify DTC U1814 is not set.
   - **If DTC is set**

     Refer to **Diagnostic Trouble Code (DTC) List - Vehicle** .

   - **If DTC is not set**
2. Ignition ON.
3. Verify the scan tool power mode parameters change when cycling the S39 Ignition Switch between OFF, Accessory, ON, and Start.
   - **If the power mode parameters do not change**

     Refer to Circuit/System Testing.

   - **If the power mode parameters change**
4. All OK.

Circuit/System Testing

1. Ignition OFF, disconnect the S39 Ignition Switch.
2. Verify a test lamp illuminates between the B+ circuit terminal 4 and ground.
   - **If the test lamp does not illuminate and the circuit fuse is good**

     1. Remove the test lamp.
     2. Test for less than 2 Ω in the B+ circuit end to end.
        - If 2 Ω or greater, repair the open/high resistance in the circuit.
        - If less than 2 Ω, verify the fuse is good and there is voltage at the fuse.
   - **If the test lamp does not illuminate and the circuit fuse is open**

     1. Remove the test lamp.
     2. Test for infinite resistance between the B+ circuit and ground.
        - If less than infinite resistance, repair the short to ground on one of the following circuits listed below:

NOTE: **To help isolate a short to ground, it may be necessary to disconnect modules that are**

cardiagn.com

connected to the following circuits:

-
- B+ circuit terminal 4
- Ignition circuit terminal 2
- Ignition circuit terminal 3
- Ignition circuit terminal 5

- **If the test lamp illuminates**

3. Connect the S39 Ignition Switch.
4. Ignition ON, disconnect the harness connector at the S39 Ignition Switch while the ignition is ON.
5. Test for 4.8-5.2 V between the 5 V reference circuit terminal 6 and ground.
   - **If less than 4.8 V**
   1. Connect the S39 Ignition Switch.
   2. Ignition OFF, disconnect the X3 harness connector at the K9 Body Control Module and S39 Ignition Switch.
   3. Test for infinite resistance between the 5 V reference circuit and ground.
      - If less than infinite resistance, repair the short to ground on the circuit.
      - If infinite resistance
   4. Test for less than 2 Ω in the 5 V reference circuit end to end.
      - If 2 Ω or greater, repair the open/high resistance in the circuit.
      - If less than 2 Ω, replace the K9 Body Control Module.
   - **If greater than 5.2 V**
   1. Connect the S39 Ignition Switch.
   2. Ignition OFF, disconnect the X3 harness connector at the K9 Body Control Module.
   3. Ignition ON, disconnect the harness connector at the S39 Ignition Switch while the ignition is ON.
   4. Test for less than 1 V between the 5 V reference circuit and ground.
      - If 1 V or greater, repair the short to voltage on the circuit.
      - If less than 1 V, replace the K9 Body Control Module.
   - **If between 4.8-5.2 V**
6. Connect the S39 Ignition Switch.

cardiagn.com

7. Ignition OFF.
8. Disconnect the X3 harness connector at the K9 Body Control Module, ignition ON.
9. Verify a test lamp illuminates between each of the ignition circuits listed below and ground:
    - Ignition circuit terminal 5
    - Ignition circuit terminal 6
    - **If the test lamp does not illuminate and the circuit fuse is good**
    1. Ignition OFF remove the test lamp.
    2. Test for less than 2 Ω in the ignition circuit end to end.
        - If 2 Ω or greater, repair the open/high resistance in the circuit.
        - If less than 2 Ω, verify the fuse is good and there is voltage at the fuse.
    - **If the test lamp does not illuminate and the circuit fuse is open**
    1. Ignition OFF remove the test lamp.
    2. Test for infinite resistance between the ignition circuit and ground.
        - If less than infinite resistance, repair the short to ground on the circuit.
        - If infinite resistance, replace the K9 Body Control Module.
    - **If the test lamp illuminates**
10. Ignition OFF with the key in.
11. Verify a test lamp illuminates between ignition circuit terminal 15 and ground.
    - **If the test lamp does not illuminate and the circuit fuse is good**
    1. Ignition OFF with the key out, remove the test lamp.
    2. Test for less than 2 Ω in the ignition circuit end to end.
        - If 2 Ω or greater, repair the open/high resistance in the circuit.
        - If less than 2 Ω, verify the fuse is good and there is voltage at the fuse.
    - **If the test lamp does not illuminate and the circuit fuse is open**
    1. Ignition OFF with the key out remove the test lamp.
    2. Test for infinite resistance between the ignition circuit terminal 15 and ground.
        - If less than infinite resistance, repair the short to ground on the circuit.
        - If infinite resistance, replace the K9 Body Control Module.
    - **If the test lamp illuminates**

cardiagn.com

12. Connect the X3 harness connector at the K9 Body Control Module, ignition ON.
13. Disconnect the S39 Ignition Switch.
14. Test for less than 1 V between each of the ignition circuits listed below and ground.
    - Ignition circuit terminal 2
    - Ignition circuit terminal 3
    - Ignition circuit terminal 5
    - **If 1 V or greater**

      Repair the short to voltage on the circuit.

    - **If less than 1 V**
15. Test or replace the S39 Ignition Switch.

Component Testing

1. Ignition OFF, disconnect the harness connector at the S39 Ignition Switch.
2. Using the Resistance Test below, verify the resistance between the terminals listed below match for each S39 Ignition Switch position.
    - **If any reading is other than specified**

      Replace the S39 Ignition Switch.

    - **If the readings match**
3. All OK.

Resistance Test

Ignition Switch Position	Terminals 6 and 5	Terminals 6 and 4	Terminals 4 and 5	Terminals 2 and 4	Terminals 3 and 4
OFF Key Out	Infinite	Infinite	Infinite	Infinite	Infinite
OFF Key In	Infinite	Infinite	<5.0 Ω	Infinite	Infinite
Accessory	Infinite	Infinite	Infinite	Infinite	<5.0 Ω
Run	<5.0 Ω	Infinite	Infinite	<5.0 Ω	<5.0 Ω
Start	1275-1325 Ω	Infinite	Infinite	<5.0 Ω	Infinite

Repair Instructions

cardiagn.com

Perform the **Diagnostic Repair Verification** after completing the repair.

- Refer to **Ignition and Start Switch Replacement (Without BTM)** **Ignition and Start Switch Replacement (Chevrolet / GMC With BTM)** **Ignition and Start Switch Replacement (Cadillac With BTM)**
- Refer to **Control Module References** for the appropriate control module replacement, programming and setup.

DTC B1445: CONTROL MODULE VOLTAGE OUTPUT CIRCUIT

Diagnostic Instructions

- Perform the **Diagnostic System Check - Vehicle** prior to using this diagnostic procedure.
- Review **Strategy Based Diagnosis** for an overview of the diagnostic approach.
- Refer to **Diagnostic Procedure Instructions** to provide an overview of each diagnostic category.

DTC Descriptor

DTC B1445

Control Module Voltage Output Circuit

For symptom byte information refer to **Symptom Byte List**

Diagnostic Fault Information

Circuit	Short to Ground	Open/High Resistance	Short to Voltage	Signal Performance
BCM Fuse B+ (BCM 6)	1	1	-	Â
Relay Coil Control	B1445 02	B1445 04	1	-
Ground	-	B1445 04	-	Â
1. Retained accessory power malfunction				

Circuit/System Description

The body control module (BCM) controls the retained accessory power relay 1 and retained accessory power relay 2 through their control circuits by applying voltage to the retained accessory power relay coil control circuit. The retained accessory power relay 1 and retained accessory power relay 2 are energized when the ignition switch is in the ACCESSORY or the ON position.

Conditions for Running the DTC

cardiagn.com

- The system voltage is between 9-16 V.
- The DTC can only set when the output is actively being requested by the module.

Conditions for Setting the DTC

B1445 02

The DTC will set only when the module requests the output and there is a short to ground in the ignition voltage circuit.

B1445 04

The ignition output is not active and an open is detected 20 consecutive times on the ignition voltage circuit.

Action Taken When the DTC Sets

B1445 02

The module output driver will be shut down and not supply voltage to the circuit.

B1445 04

No action is taken.

Conditions for Clearing the DTC

- The current DTC will clear when the malfunction is no longer present.
- A history DTC clears when the module ignition cycle counter reaches the reset threshold of 50, without a repeat of the malfunction.

Reference Information

Schematic Reference

Power Distribution Schematics

Connector End View Reference

COMPONENT CONNECTOR END VIEWS - INDEX

Description and Operation

cardiagn.com

Retained Accessory Power Description and Operation (Without BTM) **Retained Accessory Power Description and Operation (With BTM)**

Electrical Information Reference

- **Circuit Testing**
- **Connector Repairs**
- **Relay Replacement (Attached to Wire Harness)** **Relay Replacement (Within an Electrical Center)**
- **Testing for Intermittent Conditions and Poor Connections**
- **Wiring Repairs**

Scan Tool Reference

Control Module References for scan tool information

Circuit/System Verification

1. Ignition ON.
2. Verify the KR76A Retained Accessory Power Relay 1 and KR76B Retained Accessory Power Relay 2 turn ON and OFF when commanding the Accessory/Retained Accessory Power Relay On and Off with a scan tool.
   - **If the KR76A Retained Accessory Power Relay 1 and KR76B Retained Accessory Power Relay 2 do not turn ON and OFF**

     Refer to Circuit/System Testing.

   - **If the KR76A Retained Accessory Power Relay 1 and KR76B Retained Accessory Power Relay 2 turn ON and OFF**
3. All OK.

Circuit/System Testing

1. Ignition OFF, disconnect the X5 harness connector at the K9 Body Control Module, ignition ON.
2. Verify a test lamp illuminates between the B+ circuit terminal 4 and ground.
   - **If the test lamp does not illuminate and the circuit fuse is good**
   1. Ignition OFF, remove the test lamp.
   2. Test for less than 2 Ω in the B+ circuit end to end.
      - If 2 Ω or greater, repair the open/high resistance in the circuit.
      - If less than 2 Ω, verify the fuse is not open and there is voltage at the fuse.

cardiagn.com

- **If the test lamp does not illuminate and the circuit fuse is open**

1. Ignition OFF, remove the test lamp.
2. Test for infinite resistance between the B+ circuit and ground.
    - If less than infinite resistance, repair the short to ground on the circuit.
    - If infinite resistance, replace the K9 Body Control Module

- **If the test lamp illuminates**

3. Ignition OFF, Connect the X5 harness connector at the K9 Body Control Module.
4. Ignition OFF and all vehicle systems OFF, disconnect the KR76A Retained Accessory Power Relay 1 and KR76B Retained Accessory Power Relay 2. It may take up to 2 min for all vehicle systems to power down.
5. Test for less than 10 Ω between the ground circuits listed below and ground.
    - KR76A Retained Accessory Power Relay 1 - Ground circuit terminal 85
    - KR76B Retained Accessory Power Relay 2 - Ground circuit terminal 85
    - **If 10 Ω or greater**

    1. Ignition OFF.
    2. Test for less than 2 Ω in the ground circuit end to end.
        - If 2 Ω or greater, repair the open/high resistance in the circuit.
        - If less than 2 Ω, repair the open/high resistance in the ground connection.

    - **If less than 10 Ω**

6. Ignition ON, connect a test lamp between the control circuits listed below and ground.
    - KR76A Retained Accessory Power Relay 1 - Control circuit terminal 86
    - KR76B Retained Accessory Power Relay 2 - Control circuit terminal 86
7. Verify the test lamp turns ON and OFF when commanding the Accessory/Retained Accessory Power Relay On and Off with a scan tool.
    - **If the test lamp is always OFF**

    1. Ignition OFF, remove the test lamp, disconnect the harness connector at the K9 Body Control Module.
    2. Test for infinite resistance between the control circuit and ground.
        - If less than infinite resistance, repair the short to ground on the circuit.
        - If infinite resistance
    3. Test for less than 2 Ω in the control circuit end to end.
        - If 2 Ω or greater, repair the open/high resistance in the circuit.

cardiagn.com

- If less than 2 Ω, replace the K9 Body Control Module.

- **If the test lamp is always ON**

1. Ignition OFF, remove the test lamp, disconnect the harness connector at the K9 Body Control Module, ignition ON.
2. Test for less than 1 V between the control circuit and ground.
    - If 1 V or greater, repair the short to voltage on the circuit.
    - If less than 1 V, replace the K9 Body Control Module.

- **If the test lamp turns ON and OFF**

8. Test or replace the appropriate KR76A Retained Accessory Power Relay 1 or the KR76B Retained Accessory Power Relay 2.

Repair Instructions

Perform the **Diagnostic Repair Verification** after completing the repair.

- Refer to **Control Module References** for control module replacement, programming and setup.

DTC B144A: RUN POWER RELAY CIRCUIT

Diagnostic Instructions

- Perform the **Diagnostic System Check - Vehicle** prior to using this diagnostic procedure.
- Review **Strategy Based Diagnosis** for an overview of the diagnostic approach.
- Refer to **Diagnostic Procedure Instructions** to provide an overview of each diagnostic category.

DTC Descriptor

DTC B144A

Run Power Relay Circuit

For symptom byte information refer to **Symptom Byte List**

Diagnostic Fault Information

Circuit	Short to Ground	Open/High Resistance	Short to Voltage	Signal Performance
Relay Coil Control	B144A 02	B144A 01, B144A 04	B144A 01, B144A	-

cardiagn.com

Circuit	Short to Ground	Open/High Resistance	Short to Voltage	Signal Performance
			04	

Circuit/System Description

The body control module (BCM) feeds the ignition circuit by applying voltage when the ignition is in the ON position.

Conditions for Running the DTC

- The system voltage is between 9-16 V.
- The DTC can only run when the output is activated.

Conditions for Setting the DTC

B144A 01

The ignition output is not active and a short to battery is detected 3 consecutive times on the ignition voltage circuit.

B144A 02

A short to ground is detected on the ignition run relay coil control circuit.

B144A 04

The ignition output is not active and an open is detected 20 consecutive times on the ignition voltage circuit.

Action Taken When the DTC Sets

B144A 01, B144A 04

No action is taken.

B144A 02

The module output driver will be shut down and not supply voltage to the ignition run relay control circuit.

Conditions for Clearing the DTC

cardiagn.com

- The current DTC will clear when the module request for the output is removed or the malfunction is no longer present.
- A history DTC clears when the module ignition cycle counter reaches the reset threshold of 50, without a repeat of the malfunction.

Reference Information

Schematic Reference

- **Transfer Case Control Schematics**
- **Cigar Lighter/Power Outlet Schematics**

Connector End View Reference

COMPONENT CONNECTOR END VIEWS - INDEX

Description and Operation

Power Mode Description and Operation (With BTM) **Power Mode Description and Operation (Without BTM)**

Electrical Information Reference

- **Circuit Testing**
- **Connector Repairs**
- **Relay Replacement (Attached to Wire Harness)** **Relay Replacement (Within an Electrical Center)**
- **Testing for Intermittent Conditions and Poor Connections**
- **Wiring Repairs**

Scan Tool Reference

Control Module References for scan tool information

Circuit/System Testing

NOTE: **The vehicle may not be equipped with all components as listed below.**

1. Ignition OFF, disconnect the harness connector at the S77 Transfer Case Control Switch, X81 Accessory Power Receptacle - 110V AC, X81B Accessory Power Receptacle - 220V AC, or KR81 Auxiliary Battery Relay 1.
2. Connect a test lamp between the ignition circuits listed below and ground.

cardiagn.com

- S77 Transfer Case Control Switch - Ignition circuit terminal 2
- X81 Accessory Power Receptacle - 110V AC - Ignition circuit terminal 1 X1
- X81B Accessory Power Receptacle - 220V AC - Ignition circuit terminal 1 X1
- KR81 Auxiliary Battery Relay 1 - Ignition circuit terminal 86

3. Verify the test lamp turns ON and OFF when cycling the ignition between ON and OFF.
   - **If the test lamp is always OFF**
   1. Ignition OFF, remove the test lamp, disconnect the harness connector at the K9 Body Control Module.
   2. Test for infinite resistance between the ignition circuit and ground.
      - If less than infinite resistance, repair the short to ground on the circuit.
      - If infinite resistance
   3. Test for less than 2 Ω in the ignition circuit end to end.
      - If 2 Ω or greater, repair the open/high resistance in the circuit.
      - If less than 2 Ω, replace the K9 Body Control Module.
   - **If the test lamp is always ON**
   1. Ignition OFF, disconnect the harness connector at the K9 Body Control Module, ignition ON.
   2. Test for less than 1 V between the ignition circuit and ground.
      - If 1 V or greater, repair the short to voltage on the circuit.
      - If less than 1 V, replace the K9 Body Control Module.
   - **If the test lamp turns ON and OFF**
4. Test or replace the appropriate S77 Transfer Case Control Switch, X81 Accessory Power Receptacle - 110V AC, X81B Accessory Power Receptacle - 220V AC, or KR81 Auxiliary Battery Relay 1.

Repair Instructions

Perform the **Diagnostic Repair Verification** after completing the repair.

- Refer to **Transfer Case Selector Switch Replacement (Chevrolet / GMC)** **Transfer Case Selector Switch Replacement (Cadillac)**
- Refer to **120-Volt Accessory Power Receptacle Replacement (Chevrolet / GMC)** **120-Volt Accessory Power Receptacle Replacement (Cadillac)**
- Refer to **Control Module References** for control module replacement, programming and setup.

cardiagn.com

DTC B144B: RUN/CRANK POWER RELAY CIRCUIT

Diagnostic Instructions

- Perform the **Diagnostic System Check - Vehicle** prior to using this diagnostic procedure.
- Review **Strategy Based Diagnosis** for an overview of the diagnostic approach.
- Refer to **Diagnostic Procedure Instructions** to provide an overview of each diagnostic category.

DTC Descriptors

DTC B144B

Run/Crank Power Relay Circuit

For symptom byte information refer to **Symptom Byte List**

Diagnostic Fault Information

Circuit	Short to Ground	Open/High Resistance	Short to Voltage	Signal Performance
Ignition	B144B 02*	B144B 05*	B144B 01*	-
Control	B144B 02**	1	2	-
1. No Start 2. Engine will continue to run after the ignition is turned OFF * DTC set in keyless entry control module ** DTC Set in BCM				

Circuit/System Description

The body control module (BCM) controls the ignition main relay (underhood) and the ignition main relay (instrument panel left) through their control circuits by applying voltage to the ignition run/crank relay coil control circuit. The ignition main relay (underhood) and ignition main relay (instrument panel left) are energized when the ignition switch is in the RUN or the CRANK position, or when a remote start is requested

The keyless entry control module controls the backup power for the ignition main relays through the control circuit by applying voltage to the ignition circuit. This circuit is a pass-thru in the BCM and will energize the ignition circuit when the vehicle is in the ON, CRANK positions or when a remote start is requested.

Conditions for Running the DTC

cardiagn.com

System voltage greater than 9 V.

Conditions for Setting the DTC

B144B 01

The ignition output is not active and a short to battery is detected 3 consecutive times on the ignition voltage circuit.

B144B 02

A short to ground is detected on the ignition run/crank relay coil control circuit.

B144B 05

The ignition output is not active and an open is detected 20 consecutive times on the ignition voltage circuit.

Action Taken When the DTC Sets

B144B 01, B144B 05

No action is taken.

B144B 02

The ignition main relay (underhood) and the ignition main relay (instrument panel left) are deactivated when the fault is set. After 100 ms, the ignition main relay (underhood) and the ignition main relay (instrument panel left) will be activated. If the fault is still set, the relays will be deactivated. The ignition main relay (underhood) and the ignition main relay (instrument panel left) will again be activated after 100 ms. If this also results in a fault, the ignition main relay (underhood) and the ignition main relay (instrument panel left) will be deactivated until a new ignition request is received.

Conditions for Clearing the DTC

- The current DTC will clear when the malfunction is no longer present and an ignition request is received.
- A history DTC will clear after 50 malfunction-free ignition cycles.

Diagnostic Aids

A short to voltage on the ignition run/crank relay coil control will cause the engine to remain running after the ignition mode is changed to OFF.

cardiagn.com

Reference Information

Schematic Reference

Power Moding Schematics

Connector End View Reference

COMPONENT CONNECTOR END VIEWS - INDEX

Description and Operation

Power Mode Description and Operation (With BTM) **Power Mode Description and Operation (Without BTM)**

Electrical Information Reference

- **Circuit Testing**
- **Connector Repairs**
- **Testing for Intermittent Conditions and Poor Connections**
- **Wiring Repairs**

Scan Tool Reference

Control Module References for scan tool information

Circuit/System Verification

1. Ignition ON.
2. Verify the KR73 Ignition Main Relay (underhood) and the KR73 Ignition Main Relay (instrument panel left) click ON and OFF when commanding the Run/Crank relay On and Off with a scan tool.
    - **If the KR73 Ignition Main Relay (underhood) or the KR73 Ignition Main Relay (instrument panel left) do not click ON and OFF**

      Refer to Circuit/System Testing.

    - **If the KR73 Ignition Main Relay (underhood) and the KR73 Ignition Main Relay (instrument panel left) click ON and OFF**
3. All OK.

Circuit/System Testing

cardiagn.com

Without BTM

1. Ignition OFF, disconnect the KR73 Ignition Main Relay (underhood) and the KR73 Ignition Main Relay (instrument panel left). It may take up to 2 min for all vehicle systems to power down.
2. Test for less than 10 Ω between the ground circuits listed below and ground.
   - KR73 Ignition Main Relay (underhood) - Ground circuit terminal 86
   - KR73 Ignition Main Relay (instrument panel left) - Ground circuit terminal 86
   - **If 10 Ω or greater**
   1. Ignition OFF.
   2. Test for less than 2 Ω in the ground circuit end to end.
      - If 2 Ω or greater, repair the open/high resistance in the circuit.
      - If less than 2 Ω, repair the open/high resistance in the ground connection.
   - **If less than 10 Ω**
3. Ignition ON, connect a test lamp between the control circuits listed below and ground.
   - KR73 Ignition Main Relay (underhood) - Control circuit terminal 85
   - KR73 Ignition Main Relay (instrument panel left) - Control circuit terminal 85
4. Verify the test lamp turns ON and OFF when commanding the Run/Crank relay On and Off with a scan tool.
   - **If the test lamp is always OFF**
   1. Ignition OFF, remove the test lamp, disconnect the harness connector at the K9 Body Control Module.
   2. Test for infinite resistance between the control circuit and ground.
      - If less than infinite resistance, repair the short to ground on the circuit.
      - If infinite resistance
   3. Test for less than 2 Ω in the control circuit end to end.
      - If 2 Ω or greater, repair the open/high resistance in the circuit.
      - If less than 2 Ω, replace the K9 Body Control Module.
   - **If the test lamp is always ON**
   1. Ignition OFF, remove the test lamp, disconnect the harness connector at the K9 Body Control Module, ignition ON.
   2. Test for less than 1 V between the control circuit and ground.
      - If 1 V or greater, repair the short to voltage on the circuit.

cardiagn.com

- If less than 1 V, replace the K9 Body Control Module.
- **If the test lamp turns ON and OFF**

5. Test or replace the appropriate KR73 Ignition Main Relay (underhood) or the KR73 Ignition Main Relay (instrument panel left).

With BTM

1. Ignition OFF, disconnect the X3 harness connector at the K9 Body Control Module.
2. Test for less than 1 V between the ignition circuit terminal 6 and ground.
   - **If 1 V or greater**

     Repair the short to voltage on the circuit.

   - **If less than 1 V**
3. Ignition ON.
4. Verify a test lamp illuminates between the ignition circuit terminal 6 and ground.
   - **If the test lamp does not illuminate**
   1. Ignition OFF, remove the test lamp.
   2. Test for infinite resistance between the ignition circuit and ground.
      - If less than infinite resistance, repair the short to ground on the circuit.
      - If infinite resistance.
   3. Test for less than 2 Ω in the ignition circuit end to end.
      - If 2 Ω or greater, repair the open/high resistance in the circuit.
      - If less than 2 Ω, replace the K84 Keyless Entry Control Module.
   - **If the test lamp illuminates**
5. Ignition OFF, remove the test lamp, connect the X3 harness connector at the K9 Body Control Module.
6. Ignition OFF, disconnect the KR73 Ignition Main Relay (underhood) and the KR73 Ignition Main Relay (instrument panel left). It may take up to 2 min for all vehicle systems to power down.
7. Test for less than 10 Ω between the ground circuits listed below and ground.
   - KR73 Ignition Main Relay (underhood) - Ground circuit terminal 86
   - KR73 Ignition Main Relay (instrument panel left) - Ground circuit terminal 86
   - **If 10 Ω or greater**

cardiagn.com

1. Ignition OFF.
2. Test for less than 2 Ω in the ground circuit end to end.
    - If 2 Ω or greater, repair the open/high resistance in the circuit.
    - If less than 2 Ω, repair the open/high resistance in the ground connection.

- **If less than 10 Ω**

8. Ignition ON, connect a test lamp between the control circuits listed below and ground.
    - KR73 Ignition Main Relay (underhood) - Control circuit terminal 85
    - KR73 Ignition Main Relay (instrument panel left) - Control circuit terminal 85
9. Verify the test lamp turns ON and OFF when commanding the Run/Crank relay On and Off with a scan tool.
    - **If the test lamp is always OFF**

    1. Ignition OFF, remove the test lamp, disconnect the harness connector at the K9 Body Control Module.
    2. Test for infinite resistance between the control circuit and ground.
        - If less than infinite resistance, repair the short to ground on the circuit.
        - If infinite resistance
    3. Test for less than 2 Ω in the control circuit end to end.
        - If 2 Ω or greater, repair the open/high resistance in the circuit.
        - If less than 2 Ω, replace the K9 Body Control Module.

    - **If the test lamp is always ON**

    1. Ignition OFF, remove the test lamp, disconnect the harness connector at the K9 Body Control Module, ignition ON.
    2. Test for less than 1 V between the control circuit and ground.
        - If 1 V or greater, repair the short to voltage on the circuit.
        - If less than 1 V, replace the K9 Body Control Module.

    - **If the test lamp turns ON and OFF**
10. Test or replace the KR73 Ignition Main Relay (underhood) or the KR73 Ignition Main Relay (instrument panel left).

Repair Instructions

Perform the **Diagnostic Repair Verification** after completing the repair.

- Refer to **Relay Replacement (Attached to Wire Harness)** **Relay Replacement (Within an Electrical Center)**

cardiagn.com

- Refer to **Control Module References** for body control module or keyless entry control module replacement, programming and setup.

DTC B1451: ACCESSORY POWER CIRCUIT

Diagnostic Instructions

- Perform the **Diagnostic System Check - Vehicle** prior to using this diagnostic procedure.
- Review **Strategy Based Diagnosis** for an overview of the diagnostic approach.
- Refer to **Diagnostic Procedure Instructions** to provide an overview of each diagnostic category.

DTC Descriptors

DTC B1451

Accessory Power Circuit

For symptom byte information refer to **Symptom Byte List**

Diagnostic Fault Information

Circuit	Short to Ground	Open/High Resistance	Short to Voltage	Signal Performance
Ignition	B1451 02	B1451 04	B1451 01	-

Circuit/System Description

The keyless entry control module provides as a backup control for the ignition power circuit, by applying voltage to the ignition power circuit. The ignition power circuit is energized when the vehicle power mode is in ACCESSORY mode or Ignition ON mode.

Conditions for Running the DTC

B1451 01, B1451 04

- Vehicle power mode is Ignition OFF
- Module is awake
- DTC B1451 not already set
- System voltage between 6 and 16 V

cardiagn.com

B1451 02

- Vehicle power mode is ACCESSORY or Ignition ON mode
- Module is awake
- The DTC is only run when the output is active
- DTC B1451 is not already set
- System voltage between 6 and 16 V

Conditions for Setting the DTC

B1451 01

Ignition output is not active and a short to battery is detected 3 consecutive times.

B1451 02

Ignition output is active and a short to ground is detected 3 consecutive times.

B1451 04

Ignition output is not active and an open circuit is detected 20 consecutive times.

Action Taken When the DTC Sets

B1451 02

The ignition output is deactivated when a short to ground is detected. After 100 ms the output is activated again. This happens 3 times and then the output is deactivated until a new ACCESSORY or Ignition ON mode request is received.

B1451 01, B1451 04

No action is taken.

Conditions for Clearing the DTC

- The current DTC will clear when the malfunction is no longer present during a DTC check.
- A history DTC clears when the module power mode cycle counter reaches the reset threshold of 40, without a repeat of the malfunction.

cardiagn.com

Diagnostic Aids

- A short to voltage in the ignition control circuit will keep the vehicle modules awake, which can drain the vehicle's battery.
- A short to ground in the extension of this circuit through the body control module can back feed to the keyless entry control module. Check for a short to ground on the ignition circuit on the other side of the ignition pass thru, in the body control module, before replacing the body control module.

Reference Information

Schematic Reference

- **Power Distribution Schematics**
- **Remote Function Schematics**
- **Body Control System Schematics**

Connector End View Reference

COMPONENT CONNECTOR END VIEWS - INDEX

Description and Operation

Power Mode Description and Operation (With BTM) **Power Mode Description and Operation (Without BTM)**

Electrical Information Reference

- **Circuit Testing**
- **Connector Repairs**
- **Testing for Intermittent Conditions and Poor Connections**
- **Wiring Repairs**

Scan Tool Reference

Control Module References for scan tool information

Circuit/System Verification

1. Verify DTC U1814 or B1380 is not set.

cardiagn.com

- **If any of the DTCs are set**

  Refer to **Diagnostic Trouble Code (DTC) List - Vehicle** .

- **If none of the DTCs are set**

2. Refer to Circuit/System Testing.

Circuit/System Testing

1. Ignition OFF, disconnect the X3 harness connector at the K9 Body Control Module.
2. Test for less than 1 V between the ignition circuit terminal 5 and ground.
   - **If 1 V or greater**

     Repair the short to voltage on the circuit.

   - **If less than 1 V**
3. Ignition ON.
4. Verify a test lamp illuminates between the ignition circuit terminal 5 and ground.
   - **If the test lamp does not illuminate**
   1. Ignition OFF, remove the test lamp.
   2. Test for infinite resistance between the ignition circuit and ground.
      - If less than infinite resistance, repair the short to ground on the circuit.
      - If infinite resistance.
   3. Test for less than 2 Ω in the ignition circuit end to end.
      - If 2 Ω or greater, repair the open/high resistance in the circuit.
      - If less than 2 Ω, replace the K84 Keyless Entry Control Module.
   - **If the test lamp illuminates**
5. Replace the K9 Body Control Module.

Repair Instructions

Perform the **Diagnostic Repair Verification** after completing the repair.

Refer to **Control Module References** for keyless entry control module or body control module replacement, programming and setup.

cardiagn.com

DTC B305E: INTERRUPTIBLE RAP RELAY CIRCUIT

Diagnostic Instructions

- Perform the **Diagnostic System Check - Vehicle** prior to using this diagnostic procedure.
- Review **Strategy Based Diagnosis** for an overview of the diagnostic approach.
- Refer to **Diagnostic Procedure Instructions** to provide an overview of each diagnostic category.

DTC Descriptor

DTC B305E

Interruptible RAP Relay Circuit

For symptom byte information refer to **Symptom Byte List**

Diagnostic Fault Information

Circuit	Short to Ground	Open/High Resistance	Short to Voltage	Signal Performance
Relay Coil Control	B305E 02	B305E 05	B305E 01, B305E 05	-

Circuit/System Description

The keyless entry control module controls the retained accessory power relays through the control circuit by applying voltage to the interruptible retained accessory power relay coil control circuit. The retained accessory power relays are energized when the ignition is in the ACCESSORY or the ON position. The relays are also energized for approximately 10 min after shutting the ignition OFF, providing no door is opened.

Conditions for Running the DTC

- System voltage is greater than 6 V.
- The DTC can only set when the output is actively being requested by the module.

Conditions for Setting the DTC

B305E 01

The ignition output is not active and a short to battery is detected 3 consecutive times on the ignition voltage circuit.

cardiagn.com

B305E 02

The ignition output is active and a short to ground is detected on the ignition voltage circuit.

B305E 05

The ignition output is active and an open or short to battery is detected on the ignition voltage circuit.

Action Taken When the DTC Sets

B305E 01, B305E 05

No action is taken.

B305E 02

The module output driver will be shut down and not supply voltage to the circuit.

Conditions for Clearing the DTC

- The current DTC will clear when the malfunction is no longer present and the ignition output is active.
- A history DTC clears when the module ignition cycle counter reaches the reset threshold of 50, without a repeat of the malfunction.

Reference Information

Schematic Reference

- **Power Moding Schematics**
- **Power Distribution Schematics**

Connector End View Reference

COMPONENT CONNECTOR END VIEWS - INDEX

Description and Operation

Retained Accessory Power Description and Operation (Without BTM) **Retained Accessory Power Description and Operation (With BTM)**

Electrical Information Reference

cardiagn.com

- **Circuit Testing**
- **Connector Repairs**
- **Testing for Intermittent Conditions and Poor Connections**
- **Wiring Repairs**

Scan Tool Reference

Control Module References for scan tool information

Circuit/System Verification

1. Ignition ON.
2. Verify the KR76A Retained Accessory Power Relay 1 and KR76B Retained Accessory Power Relay 2 turn ON and OFF when switching the ignition between ON and OFF.
   - **If the KR76A Retained Accessory Power Relay 1 and KR76B Retained Accessory Power Relay 2 do not turn ON and OFF**

     Refer to Circuit/System Testing.

   - **If the KR76A Retained Accessory Power Relay 1 and KR76B Retained Accessory Power Relay 2 turn ON and OFF**
3. All OK.

Circuit/System Testing

1. Ignition OFF and all vehicle systems OFF, disconnect the KR76A Retained Accessory Power Relay 1 and KR76B Retained Accessory Power Relay 2. It may take up to 2 min for all vehicle systems to power down.
2. Test for less than 10 Ω between the ground circuits listed below and ground.
   - KR76A Retained Accessory Power Relay 1 - Ground circuit terminal 85
   - KR76B Retained Accessory Power Relay 2 - Ground circuit terminal 85
   - **If 10 Ω or greater**

     1. Ignition OFF.
     2. Test for less than 2 Ω in the ground circuit end to end.
        - If 2 Ω or greater, repair the open/high resistance in the circuit.
        - If less than 2 Ω, repair the open/high resistance in the ground connection.
   - **If less than 10 Ω**

cardiagn.com

3. Ignition ON, connect a test lamp between the control circuits listed below and ground.
    - KR76A Retained Accessory Power Relay 1 - Control circuit terminal 86
    - KR76B Retained Accessory Power Relay 2 - Control circuit terminal 86
4. Verify the test lamp turns ON and OFF when switching the ignition between ON and OFF.
    - **If the test lamp is always OFF**
    1. Ignition OFF, remove the test lamp, disconnect the harness connector at the K84 Keyless Entry Control Module.
    2. Test for infinite resistance between the control circuit and ground.
        - If less than infinite resistance, repair the short to ground on the circuit.
        - If infinite resistance
    3. Test for less than 2 Ω in the control circuit end to end.
        - If 2 Ω or greater, repair the open/high resistance in the circuit.
        - If less than 2 Ω, replace the K84 Keyless Entry Control Module.
    - **If the test lamp is always ON**
    1. Ignition OFF, remove the test lamp, disconnect the harness connector at the K84 Keyless Entry Control Module, ignition ON.
    2. Test for less than 1 V between the control circuit and ground.
        - If 1 V or greater, repair the short to voltage on the circuit.
        - If less than 1 V, replace the K84 Keyless Entry Control Module.
    - **If the test lamp turns ON and OFF**
5. Test or replace the appropriate KR76A Retained Accessory Power Relay 1 or the KR76B Retained Accessory Power Relay 2.

Repair Instructions

Perform the **Diagnostic Repair Verification** after completing the repair.

- Refer to **Relay Replacement (Attached to Wire Harness)** **Relay Replacement (Within an Electrical Center)**
- Refer to **Control Module References** for the appropriate control module replacement, programming and setup.

DTC P2534 OR P2535: IGNITION ON/START SWITCH CIRCUIT VOLTAGE

Diagnostic Instructions

- Perform the **Diagnostic System Check - Vehicle** prior to using this diagnostic procedure.

cardiagn.com

- Review **Strategy Based Diagnosis** for an overview of the diagnostic approach.
- Refer to **Diagnostic Procedure Instructions** to provide an overview of each diagnostic category.

DTC Descriptors

DTC P2534

Ignition On/Start Switch Circuit Low Voltage

DTC P2535

Ignition On/Start Switch Circuit High Voltage

Diagnostic Fault Information

Circuit	Short to Ground	Open/High Resistance	Short to Voltage	Signal Performance
Ignition	P2534	P2535	P2535	-
Ground	-	P2534	-	-

Circuit/System Description

The body control module (BCM) controls the ignition main relay through the control circuit by applying voltage to the circuit. The control module samples the system voltage on the Ignition 1 voltage circuit from the ignition main relay every 0.1 s.

Conditions for Running the DTC

P2534

The control module ignition voltage signal is valid, with the ignition ON.

P2535

The control module ignition voltage signal is valid, with the ignition OFF.

Conditions for Setting the DTC

P2534

cardiagn.com

The control module detects 6 V or less on the ignition voltage circuit, with the ignition turned ON.

P2535

The control module detects greater than 6 V or greater on the ignition voltage circuit, with the ignition turned OFF.

Action Taken When the DTC Sets

DTCs P2534 and P2535 are Type A DTCs.

Conditions for Clearing the DTC

DTCs P2534 and P2535 are Type A DTCs.

Diagnostic Aids

A short to voltage in the ignition circuit will keep the vehicle modules awake, which can drain the vehicle's battery.

Reference Information

Schematic Reference

Power Distribution Schematics

Connector End View Reference

COMPONENT CONNECTOR END VIEWS - INDEX

Electrical Information Reference

- **Circuit Testing**
- **Connector Repairs**
- **Testing for Intermittent Conditions and Poor Connections**
- **Wiring Repairs**

Description and Operation

Power Mode Description and Operation (With BTM) **Power Mode Description and Operation (Without BTM)**

cardiagn.com

DTC Type Reference

Powertrain Diagnostic Trouble Code (DTC) Type Definitions

Scan Tool Reference

Control Module References for scan tool information

Circuit/System Verification

1. Engine running.
2. Verify DTC B144B is not set.
   - **If the DTC is set**

     Refer to **DTC B144B**.

   - **If the DTC is not set**
3. Verify the scan tool control module Ignition 1 Signal parameter is between 12.6-15 V.
   - **If not between 12.6-15 V**

     Refer to Circuit/System Testing.

   - **If between 12.6-15 V**
4. Verify that the DTC does not reset by operating the vehicle within the Conditions for Running the DTC. You may also operate the vehicle within the conditions you observe from the Freeze Frame/Failure Records data. If the vehicle passes the Circuit/System Verification procedure, then STOP. Do not perform the Circuit/System Testing or Component Testing as this may result in an unnecessary part replacement. Refer to **Testing for Intermittent Conditions and Poor Connections**.

Circuit/System Testing

1. Ignition OFF, and all vehicle systems OFF, disconnect the appropriate harness connector at the control module setting the DTC.
2. Test for less than 1 V between the ignition circuit terminal and ground.
   - **If 1 V or greater**

     Repair the short to voltage on the circuit.

   - **If less than 1 V**

cardiagn.com

3. Ignition ON.
4. Verify a test lamp illuminates between the ignition circuit terminal and ground.
    - **If the test lamp does not illuminate and the circuit fuse is good**
    1. Ignition OFF remove the test lamp.
    2. Test for less than 2 Ω in the ignition circuit end to end.
        - If 2 Ω or greater, repair the open/high resistance in the circuit.
        - If less than 2 Ω, refer to **Power Mode Mismatch (With BTM)Power Mode Mismatch (Without BTM)**.
    - **If the test lamp does not illuminate and the circuit fuse is open**
    1. Ignition OFF remove the test lamp
    2. Test for infinite resistance between the ignition circuit and ground.
        - If less than infinite resistance, repair the short to ground on the circuit.
    - **If the test lamp illuminates**
5. Replace the control module setting the DTC.

Repair Instructions

Perform the **Diagnostic Repair Verification** after completing the repair.

Refer to **Control Module References** for control module replacement, programming, and setup.

DTC P2537: IGNITION ACCESSORY SWITCH CIRCUIT LOW VOLTAGE

Diagnostic Instructions

- Perform the **Diagnostic System Check - Vehicle** prior to using this diagnostic procedure.
- Review **Strategy Based Diagnosis** for an overview of the diagnostic approach.
- Refer to **Diagnostic Procedure Instructions** to provide an overview of each diagnostic category.

DTC Descriptor

DTC P2537

Ignition Accessory Switch Circuit Low Voltage

Diagnostic Fault Information

cardiagn.com

Circuit	Short to Ground	Open/High Resistance	Short to Voltage	Signal Performance
Ignition	P2537, U1814, U2099	P2537	-	-

Circuit/System Description

The control module continuously monitors the voltage on the Ignition Accessory/Run circuit from the body control module (BCM). When the ignition is in the ACCESSORY or RUN position, the BCM sends a 12 V wake up signal to the control module. This wake up signal allows the control module to power up and start functioning before the engine is started.

Conditions for Running the DTC

The ignition is in the ACCESSORY or RUN position.

Conditions for Setting the DTC

The control module detects the Ignition Accessory/Run circuit is less than 6 V for 1 min.

Action Taken When the DTC Sets

DTC P2537 is a Type B DTC.

Conditions for Clearing the DTC

DTC P2537 is a Type B DTC.

Reference Information

Schematic Reference

Data Communication Schematics

Connector End View Reference

- **COMPONENT CONNECTOR END VIEWS - INDEX**
- **INLINE HARNESS CONNECTOR END VIEWS - INDEX**

Description and Operation

cardiagn.com

Data Link Communications Description and Operation

Electrical Information Reference

- **Circuit Testing**
- **Connector Repairs**
- **Testing for Intermittent Conditions and Poor Connections**
- **Wiring Repairs**

DTC Type Reference

Powertrain Diagnostic Trouble Code (DTC) Type Definitions

Scan Tool Reference

Control Module References for scan tool information

Circuit/System Verification

1. Verify DTC U1814 or U2099 is not set.
    - **If any of the DTCs are set**

      Refer to **Diagnostic Trouble Code (DTC) List - Vehicle** .

    - **If none of the DTCs are set**
2. Refer to Circuit/System Testing.

Circuit/System Testing

1. Ignition OFF, disconnect the harness connector at the control module setting the DTC.
2. Ignition ON.
3. Verify a test lamp illuminates between the accessory wake up serial data circuit and ground.
    - **If the test lamp does not illuminate.**
    1. Ignition OFF remove the test lamp, disconnect the X4 connector at the K9 Body Control Module.
    2. Test for less than 2 Ω on the ignition circuit end to end.

cardiagn.com

- If 2 Ω or greater, repair the open/high resistance in the circuit.
- If less than 2 Ω, replace the K9 Body Control Module.
- **If the test lamp illuminates**

4. Replace the control module setting the DTC.

Repair Instructions

Perform the **Diagnostic Repair Verification** after completing the repair.

Refer to **Control Module References** for control module replacement, programming, and setup.

SYMPTOMS - WIRING SYSTEMS

NOTE: **The following steps must be completed before using the symptom tables.**

1. Perform the **Diagnostic System Check - Vehicle** before using the symptom tables in order to verify that all of the following are true:
   - There are no DTCs set.
   - The control modules can communicate via the serial data links.
2. Review the system operation in order to familiarize yourself with the system functions. Refer to the following:
   - **Power Mode Description and Operation (With BTM)** **Power Mode Description and Operation (Without BTM)**
   - **Retained Accessory Power Description and Operation (Without BTM)** **Retained Accessory Power Description and Operation (With BTM)**

Visual/Physical Inspection

- Inspect for aftermarket devices which could affect the operation of the systems. Refer to **Checking Aftermarket Accessories**.
- Inspect the easily accessible or visible system components for obvious damage or conditions which could cause the symptom.

Intermittent

Faulty electrical connections or wiring may be the cause of intermittent conditions. Refer to **Testing for Intermittent Conditions and Poor Connections**.

Symptom List

Refer to a symptom diagnostic procedure from the following list in order to diagnose the symptom:

cardiagn.com

- Ignition Mode Switch Indicator Malfunction
- Power Mode Mismatch (With BTM)Power Mode Mismatch (Without BTM)
- Retained Accessory Power Malfunction (Without BTM)Retained Accessory Power Malfunction (With BTM)
- Vehicle Will Not Change Power Mode

IGNITION CAN/CANNOT BE TURNED OFF WITH TRANSMISSION IN ANY GEAR

Diagnostic Instructions

- Perform the Diagnostic System Check - Vehicle prior to using this diagnostic procedure.
- Review Strategy Based Diagnosis for an overview of the diagnostic approach.
- Refer to Diagnostic Procedure Instructions to provide an overview of each diagnostic category

Diagnostic Fault Information

Circuit	Short to Ground	Open/High Resistance	Short to Voltage	Signal Performance
Signal	2	1	-	-
Ground	-	1	-	-
1. Ignition will not turn to OFF with vehicle in park 2. Ignition will turn to OFF with vehicle out of park				

Circuit/System Description

If the vehicle is equipped with automatic transmission and an ignition mode switch, it has an electronic park lock system. The electronic park lock system purpose is to prevent the ignition from being switched to the OFF position when the transmission is in any position other than PARK and the vehicle may still be moving. The electronic park lock system incorporates the park position switch that located in the A/T shift lock control switch. When the transmission shift selector is in Park, the park position switch closes and the BCM allows the ignition to be turned OFF.

If the vehicle is not in Park, the ignition will return to ACC/ACCESSORY and display the message SHIFT TO PARK in the Driver Information Center. When the vehicle is shifted into Park, the ignition system will switch to OFF.

Diagnostic Aids

- Verify that the transmission shift selector indicator matches the position of the gear shift lever while selecting between the Park, Reverse, Drive and Low positions.

cardiagn.com

Reference Information

Schematic Reference

Shift Lock Control Schematics

Connector End View Reference

COMPONENT CONNECTOR END VIEWS - INDEX

Description and Operation

Electronic Park Lock Description and Operation

Electrical Information Reference

- **Circuit Testing**
- **Connector Repairs**
- **Testing for Intermittent Conditions and Poor Connections**
- **Wiring Repairs**

Circuit/System Verification

1. Ignition ON.
2. Verify the scan tool body control module In Park Switch Status parameter changes between On and Off when shifting the S3 Transmission Shift Lever in and out of Park.
   - **If the parameter does not change**

     Refer to Circuit/System Testing.

   - **If the parameter changes**
3. All OK.

Circuit/System Testing

1. Ignition OFF and all vehicle systems OFF, disconnect the harness connector at the B81B Park Position Switch. It may take up to 2 min for all vehicle systems to power down.

cardiagn.com

2. Test for less than 10 Ω between the ground circuit terminal B and ground.
    - **If 10 Ω or greater**
    1. Ignition OFF.
    2. Test for less than 2 Ω in the ground circuit end to end.
        - If 2 Ω or greater, repair the open/high resistance in the circuit.
        - If less than 2 Ω, repair the open/high resistance in the ground connection.
    - **If less than 10 Ω**
3. Ignition ON.
4. Verify the scan tool Body Control Module In Park Switch Status parameter is Off.
    - **If not Off**
    1. Ignition OFF, disconnect the harness connector at the K9 Body Control Module.
    2. Test for infinite resistance between the signal circuit terminal A and ground.
        - If less than infinite resistance, repair the short to ground on the circuit.
        - If infinite resistance, replace the K9 Body Control Module.
    - **If Off**
5. Install a 3 A fused jumper wire between the signal circuit terminal A and the ground circuit terminal B.
6. Verify the scan tool Body Control Module In Park Switch Status parameter is On.
    - **If not On**
    1. Ignition OFF, remove the jumper wire, disconnect the harness connector at the K9 Body Control Module, ignition ON.
    2. Test for less than 1 V between the signal circuit and ground.
        - If 1 V or greater, repair the short to voltage on the circuit.
        - If less than 1 V
    3. Test for less than 2 Ω in the signal circuit end to end.
        - If 2 Ω or greater, repair the open/high resistance in the circuit.
        - If less than 2 Ω, replace the K9 Body Control Module.
    - **If On**
7. Test or replace the B81B Park Position Switch.

Repair Instructions

cardiagn.com

Perform the **Diagnostic Repair Verification** after completing the repair.

- Refer to **Control Module References** for body control module replacement, programming, and setup.

IGNITION MODE SWITCH INDICATOR MALFUNCTION

Diagnostic Instructions

- Perform the **Diagnostic System Check - Vehicle** prior to using this diagnostic procedure.
- Review **Strategy Based Diagnosis** for an overview of the diagnostic approach.
- Refer to **Diagnostic Procedure Instructions** to provide an overview of each diagnostic category.

Diagnostic Fault Information

Circuit	Short to Ground	Open/High Resistance	Short to Voltage	Signal Performance
F19DL (BCM 1) Fuse B+	2	2	-	-
Control	2	2	1	-
Ground	-	2	-	-
1. Ignition mode switch indicator always On 2. Ignition mode switch indicator inoperative				

Circuit/System Description

The ignition mode switch has two LEDs that indicate the vehicle power mode. When the vehicle is in the off mode, both LEDs will be off. Pressing the ignition mode switch button once (without the brake pedal applied), the vehicle enters the accessory mode and the amber LED (Accessory) will illuminate. The accessory mode has a 10 min time-out to reduce battery drain. Pressing and holding the push button start switch (without the brake pedal applied) for 5 s will place the vehicle in run/start mode (without the vehicle running) and the green LED (Run/Start) will illuminate. With the ignition off (with the brake pedal applied), pressing the ignition mode switch button once, the vehicle will enter run/start mode and the green LED (run/start) will illuminate. This will start the engine. Both LEDs have the voltage supplied from the body control module.

Reference Information

Schematic Reference

- **Power Distribution Schematics**
- **Power Moding Schematics**

cardiagn.com

Connector End View Reference

COMPONENT CONNECTOR END VIEWS - INDEX

Description and Operation

Power Mode Description and Operation (With BTM) **Power Mode Description and Operation (Without BTM)**

Electrical Information Reference

- **Circuit Testing**
- **Connector Repairs**
- **Testing for Intermittent Conditions and Poor Connections**
- **Wiring Repairs**

Scan Tool Reference

Control Module References for scan tool information

Circuit/System Verification

1. Ignition ON.
2. Verify the green LED turns ON and OFF when commanding the Run/Start Power Mode Indicator On and Off with the scan tool.
   - **If the green LED does not turn ON and OFF**

     Refer to Circuit/System Testing - Green LED Test.

   - **If the green LED turns ON and OFF**
3. Verify the amber LED turns ON and OFF when commanding the Accessory Power Mode Indicator On and Off with the scan tool.
   - **If the amber LED does not turn ON and OFF**

     Refer to Circuit/System Testing - Amber LED Test.

   - **If the amber LED turns ON and OFF**
4. All OK.

Circuit/System Testing

cardiagn.com

Green LED Test

1. Ignition OFF, disconnect the X2 harness connector at the K9 Body Control Module, Ignition ON.
2. Verify a test lamp illuminates between the B+ circuit terminal 1 and ground.
   - **If the test lamp does not illuminate and the circuit fuse is good**
   1. Ignition OFF, remove the test lamp.
   2. Test for less than 2 Ω in the B+ circuit end to end.
      - If 2 Ω or greater, repair the open/high resistance in the circuit.
      - If less than 2 Ω, verify the fuse is not open and there is voltage at the fuse.
   - **If the test lamp does not illuminate and the circuit fuse is open**
   1. Ignition OFF, remove the test lamp.
   2. Test for infinite resistance between the B+ circuit and ground.
      - If less than infinite resistance, repair the short to ground on the circuit.
      - If infinite resistance, replace the K9 Body Control Module
   - **If the test lamp illuminates**
3. Ignition OFF, Connect the X2 harness connector at the K9 Body Control Module.
4. Ignition OFF and all vehicle systems OFF, disconnect the harness connector at the S38 Ignition Mode Switch. It may take up to 2 min for all vehicle systems to power down.
5. Test for less than 10 Ω between the ground circuit terminal 4 and ground.
   - **If 10 Ω or greater**
   1. Ignition OFF.
   2. Test for less than 2 Ω in the ground circuit end to end.
      - If 2 Ω or greater, repair the open/high resistance in the circuit.
      - If less than 2 Ω, repair the open/high resistance in the ground connections.
   - **If less than 10 Ω**
6. Connect the harness connector at the S38 Ignition Mode Switch.
7. Ignition ON, disconnect the harness connector at the S38 Ignition Mode Switch.
8. Connect a test lamp between the control circuit terminal 5 and ground.
9. Verify the test lamp stays OFF when commanding Run/Start Power Mode Indicator Off with the scan tool.

cardiagn.com

- **If the test lamp is always ON**

1. Connect the harness connector at the S38 Ignition Mode Switch.
2. Ignition OFF, remove the test lamp, disconnect the harness connector at the K9 Body Control Module.
3. Ignition ON, disconnect the harness connector at the S38 Ignition Mode Switch.
4. Test for less than 1 V between the control circuit and ground.
    - If 1 V or greater, repair the short to voltage on the circuit.
    - If less than 1 V, replace the K9 Body Control Module.

- **If the test lamp is always OFF**

10. Test for greater than 3 V between the control circuit terminal 5 and ground while commanding Run/Start Power Mode Indicator On with the scan tool.
    - **If 3 V or less**

    1. Ignition OFF, disconnect the harness connector at the K9 Body Control Module.
    2. Test for infinite resistance between the control circuit and ground.
        - If less than infinite resistance, repair the short to ground on the circuit.
        - If infinite resistance
    3. Test for less than 2 Ω in the control circuit end to end.
        - If 2 Ω or greater, repair the open/high resistance in the circuit.
        - If less than 2 Ω, replace the K9 Body Control Module.

    - **If 3 V or greater**

11. Test or replace the S38 Ignition Mode Switch.

Amber LED Test

1. Ignition OFF and all vehicle systems OFF, disconnect the harness connector at the S38 Ignition Mode Switch. It may take up to 2 min for all vehicle systems to power down.
2. Test for less than 10 Ω between the ground circuit terminal 4 and ground.
    - **If 10 Ω or greater**

    1. Ignition OFF.
    2. Test for less than 2 Ω in the ground circuit end to end.
        - If 2 Ω or greater, repair the open/high resistance in the circuit.

cardiagn.com

- If less than 2 Ω, repair the open/high resistance in the ground connections.
- **If less than 10 Ω**

3. Connect the harness connector at the S38 Ignition Mode Switch.
4. Ignition ON, disconnect the harness connector at the S38 Ignition Mode Switch.
5. Connect a test lamp between the control circuit terminal 2 and ground.
6. Verify the test lamp stays OFF when commanding Accessory Power Mode Indicator Off with the scan tool.
   - **If the test lamp is always ON**
   1. Connect the harness connector at the S38 Ignition Mode Switch.
   2. Ignition OFF, remove the test lamp, disconnect the harness connector at the K9 Body Control Module.
   3. Ignition ON, disconnect the harness connector at the S38 Ignition Mode Switch.
   4. Test for less than 1 V between the control circuit and ground.
      - If 1 V or greater, repair the short to voltage on the circuit.
      - If less than 1 V, replace the K9 Body Control Module.
   - **If the test lamp is always OFF**
7. Test for greater than 3 V between the control circuit terminal 2 and ground while commanding Accessory Power Mode Indicator On with the scan tool.
   - **If 3 V or less**
   1. Ignition OFF, disconnect the harness connector at the K9 Body Control Module.
   2. Test for infinite resistance between the control circuit and ground.
      - If less than infinite resistance, repair the short to ground on the circuit.
      - If infinite resistance
   3. Test for less than 2 Ω in the control circuit end to end.
      - If 2 Ω or greater, repair the open/high resistance in the circuit.
      - If less than 2 Ω, replace the K9 Body Control Module.
   - **If 3 V or greater**
8. Test or replace the S38 Ignition Mode Switch.

Component Testing

1. Ignition OFF, disconnect the harness at the S38 Ignition Mode Switch.

cardiagn.com

2. Connect a jumper wire between the S38 Ignition Mode Switch terminal 4 and ground.
3. Connect a 3 A fused jumper wire between the S38 Ignition Mode Switch terminal 5 and B+.
4. Verify the green LED illuminates.
   - **If the LED does not illuminate**

     Replace the S38 Ignition Mode Switch.

   - **If the LED illuminates**
5. Connect a 3 A fused jumper wire between the S38 Ignition Mode Switch terminal 2 and B+.
6. Verify the amber LED illuminates.
   - **If the LED does not illuminate**

     Replace the S38 Ignition Mode Switch.

   - **If the LED illuminates**
7. All OK.

Repair Instructions

Perform the **Diagnostic Repair Verification** after completing the repair.

- Refer to **Ignition and Start Switch Replacement (Without BTM)** **Ignition and Start Switch Replacement (Chevrolet / GMC With BTM)** **Ignition and Start Switch Replacement (Cadillac With BTM)**
- Refer to **Control Module References** for body control module replacement, programming and setup.

POWER MODE MISMATCH (WITH BTM)

Diagnostic Instructions

- Perform the **Diagnostic System Check - Vehicle** prior to using this diagnostic procedure.
- Review **Strategy Based Diagnosis** for an overview of the diagnostic approach.
- Refer to **Diagnostic Procedure Instructions** to provide an overview of each diagnostic category.

Circuit/System Description

The body control module (BCM) controls the ignition main (underhood) and ignition main (instrument panel left) by applying voltage to their

cardiagn.com

individual relay control circuits. The ignition main relay (underhood) and ignition main relay (instrument panel left) are energized when the ignition switch is in the ON or the CRANK position.

The body control module (BCM) controls the transmission park relay by providing ground to the in park switch coil control circuit. The transmission park relay is a PCB relay that when energized, disconnects battery voltage from the ignition circuit. The transmission park relay is energized when the ignition is in the ACCESSORY or the ON position and when the transmission shift selector is not in PARK. When the vehicle is in PARK, the relay is de-energized providing battery voltage to the appropriate devices.

The keyless entry control module controls the retained accessory power relay 1 and retained accessory power relay 2 by applying voltage to their individual relay control circuits. The retained accessory power relays are energized during all power modes, except OFF-awake, and CRANK. The relays are also energized for approximately 10 min after shutting the ignition OFF and removing the key, providing no door is opened.

The engine control module (ECM) controls the engine controls the ignition relay by providing ground to the engine controls relay control circuit.

Diagnostic Aids

A short to voltage on the ignition run/crank relay coil control will cause the engine to remain running after the mode is changed to OFF.

Reference Information

Schematic Reference

- **Power Moding Schematics**
- **Engine Controls Schematics**
- **Adjustable Pedal Schematics**
- **Rear Seat Schematics**

Connector End View Reference

COMPONENT CONNECTOR END VIEWS - INDEX

Description and Operation

Power Mode Description and Operation (With BTM)

Electrical Information Reference

- **Circuit Testing**

cardiagn.com

- Connector Repairs
- Testing for Intermittent Conditions and Poor Connections
- Wiring Repairs

Scan Tool Reference

Control Module References for scan tool information

Circuit/System Verification

NOTE: **Use schematics to determine which ignition relay supplies the ignition feed for the appropriate devices. Use the connector end view to identify the ignition circuit terminal for each of those devices.**

1. Ignition ON.
2. Verify that the appropriate devices controlled by the KR73 Ignition Main Relay (underhood) and KR73 Ignition Main Relay (instrument panel left) turn ON and OFF when commanding the Run/Crank Relay On and Off with a scan tool.
   - **If the devices do not turn ON and OFF**

     Refer to Circuit/System Testing - Diagnostic A.

   - **If the devices turn ON and OFF**
3. Verify that the appropriate devices controlled by the KR75 Engine Controls Ignition Relay turn ON and OFF when commanding the Engine Controls Ignition Relay On and Off with the scan tool.
   - **If the devices do not turn ON and OFF**

     Refer to Circuit/System Testing - Diagnostic B.

   - **If the devices turn ON and OFF**
4. Verify that the appropriate devices controlled by the KR76A Retained Accessory Power Relay 1 and KR76B Retained Accessory Power Relay 2 turn ON and OFF when commanding the Interruptible Retained Accessory Power Relay On and Off with a scan tool.
   - **If the devices do not turn ON and OFF**

     Refer to Circuit/System Testing - Diagnostic C.

   - **If the devices turn ON and OFF**

cardiagn.com

5. Verify that the appropriate devices controlled by the KR87 Transmission Park Relay turn ON and OFF when shifting in and out of PARK.
   - **If the devices do not turn ON and OFF**

     Refer to Circuit/System Testing - Diagnostic D.

   - **If the devices turn ON and OFF**
6. All OK.

Circuit/System Testing

Diagnostic A

1. Ignition OFF and all vehicle systems OFF, disconnect the KR73 Ignition Main Relay (underhood) and KR73 Ignition Main Relay (instrument panel left). It may take up to 2 min for all vehicle systems to power down.
2. Test for less than 10 Ω between the ground circuits listed below and ground.
   - KR73 Ignition Main Relay (underhood) - Ground circuit terminal 86
   - KR73 Ignition Main Relay (instrument panel left) - Ground circuit terminal 86
   - **If 10 Ω or greater**
   1. Ignition OFF.
   2. Test for less than 2 Ω in the ground circuit end to end.
      - If 2 Ω or greater, repair the open/high resistance in the circuit.
      - If less than 2 Ω, repair the open/high resistance in the ground connection.
   - **If less than 10 Ω**
3. Ignition ON.
4. Verify a test lamp illuminates between the B+ circuits below and ground.
   - KR73 Ignition Main Relay (underhood) - B+ circuit terminal 30
   - KR73 Ignition Main Relay (instrument panel left) - B+ circuit terminal 30
   - **If the test lamp does not illuminate**

     Replace the appropriate fuse block.

   - **If the test lamp illuminates**
5. Connect a test lamp between the control circuits listed below and ground.

cardiagn.com

- KR73 Ignition Main Relay (underhood) - Control circuit terminal 85
- KR73 Ignition Main Relay (instrument panel left) - Control circuit terminal 85

6. Verify the test lamp turns ON and OFF when commanding the Run/Crank Relay On and Off with a scan tool.
    - **If the test lamp is always OFF**
    1. Ignition OFF, remove the test lamp, disconnect the harness connector at the K9 Body Control Module.
    2. Test for infinite resistance between the control circuit and ground.
        - If less than infinite resistance, repair the short to ground on the circuit.
        - If infinite resistance
    3. Test for less than 2 Ω in the control circuit end to end.
        - If 2 Ω or greater, repair the open/high resistance in the circuit.
        - If less than 2 Ω, replace the K9 Body Control Module.
    - **If the test lamp is always ON**
    1. Ignition OFF, remove the test lamp, disconnect the harness connector at the K9 Body Control Module, ignition ON.
    2. Test for less than 1 V between the control circuit and ground.
        - If 1 V or greater, repair the short to voltage on the circuit.
        - If less than 1 V, replace the K9 Body Control Module.
    - **If the test lamp turns ON and OFF**
7. Verify that a test lamp does not illuminate between the ignition circuits below and ground.
    - KR73 Ignition Main Relay (underhood) - Ignition circuit terminal 87
    - KR73 Ignition Main Relay (instrument panel left) - Ignition circuit terminal 87
    - **If the test lamp does not illuminate**
8. Ignition ON, connect a 40 A fused jumper wire between the circuits listed below.
    - KR73 Ignition Main Relay (underhood) - B+ circuit Terminal 30 and ignition control circuit terminal 87
    - KR73 Ignition Main Relay (instrument panel left) - B+ circuit Terminal 30 and ignition control circuit terminal 87
9. Verify device is activated.
    - **If the device does not activate**
    1. Ignition OFF, disconnect the harness connector at the device.
    2. Test for infinite resistance between the ignition circuit and ground.
        - If less than infinite resistance, repair the short to ground on the circuit.

cardiagn.com

- If infinite resistance

3. Test for less than 2 Ω in the ignition circuit end to end.
   - If 2 Ω or greater, repair the open/high resistance in the circuit.
   - If less than 2 Ω, replace the device.
- **If the device activates**

10. Test or replace the appropriate KR73 Ignition Main Relay (underhood) or KR73 Ignition Main Relay (instrument panel left).

Diagnostic B

1. Ignition OFF and all vehicle systems OFF, disconnect the KR75 Engine Controls Ignition Relay, ignition ON.
2. Verify a test lamp illuminates between the B+ circuit terminal 30 and ground.
   - **If the test lamp does not illuminate**

     Replace the X50A Fuse Block Underhood

   - **If the test lamp illuminates**
3. Verify a test lamp illuminates between the B+ circuit terminal 86 and ground.
   - **If the test lamp does not illuminate**

     Replace the X50A Fuse Block Underhood

   - **If the test lamp illuminates**
4. Connect a test lamp between the B+ circuit terminal 86 and the control circuit terminal 85.
5. Verify the test lamp turns ON and OFF when commanding the Engine Controls Ignition Relay On and Off with the scan tool.
   - **If the test lamp is always OFF**
   1. Ignition OFF, remove the test lamp, disconnect the harness connector at the K20 Engine Control Module, ignition ON.
   2. Test for less than 1 V between the control circuit and ground.
      - If 1 V or greater, repair the short to voltage on the circuit.
      - If less than 1 V
   3. Ignition OFF.
   4. Test for less than 2 Ω in the control circuit end to end.
      - If 2 Ω or greater, repair the open/high resistance in the circuit.

cardiagn.com

- If less than 2 Ω, replace the K20 Engine Control Module.

- **If the test lamp is always ON**

1. Ignition OFF, remove the test lamp, disconnect the harness connector at the K20 Engine Control Module.
2. Test for infinite resistance between the control circuit and ground.
    - If less than infinite resistance, repair the short to ground on the circuit.
    - If infinite resistance, replace the K20 Engine Control Module.

- **If the test lamp turns ON and OFF**

6. Verify a test lamp does not illuminate between the ignition circuit terminal 87 and ground.

- **If the test lamp illuminates**

  Repair the short to voltage on the circuit.

- **If the test lamp does not illuminate**

7. Ignition ON, connect a 40 A fused jumper wire between the B+ circuit terminal 30 and the ignition circuit terminal 87.
8. Verify device is activated.

- **If the device does not activate**

1. Ignition OFF, disconnect the harness connector at the device.
2. Test for infinite resistance between the ignition circuit terminal 87 and ground.
    - If less than infinite resistance, repair the short to ground on the circuit.
    - If infinite resistance
3. Test for less than 2 Ω in the ignition circuit end to end.
    - If 2 Ω or greater, repair the open/high resistance in the circuit.
    - If less than 2 Ω, replace the device.

- **If the device activates**

9. Test or replace the KR75 Engine Controls Ignition Relay.

Diagnostic C

1. Ignition OFF and all vehicle systems OFF, disconnect the KR76A Retained Accessory Power Relay 1 and KR76B Retained Accessory Power Relay 2. It may take up to 2 min for all vehicle systems to power down.
2. Test for less than 10 Ω between the ground circuits listed below and ground.

cardiagn.com

- KR76A Retained Accessory Power Relay 1 - Ground circuit terminal 85
- KR76B Retained Accessory Power Relay 2 - Ground circuit terminal 85
- **If 10 Ω or greater**

1. Ignition OFF.
2. Test for less than 2 Ω in the ground circuit end to end.
    - If 2 Ω or greater, repair the open/high resistance in the circuit.
    - If less than 2 Ω, repair the open/high resistance in the ground connection.

- **If less than 10 Ω**

3. Ignition ON.
4. Verify a test lamp illuminates between the B+ circuits below and ground.
    - KR76A Retained Accessory Power Relay 1 - B+ circuit terminal 30
    - KR76B Retained Accessory Power Relay 2 - B+ circuit terminal 30
    - **If the test lamp does not illuminate**

      Replace the appropriate fuse block.

    - **If the test lamp illuminates**
5. Connect a test lamp between the control circuits listed below and ground
    - KR76A Retained Accessory Power Relay 1 - Control circuit terminal 86
    - KR76B Retained Accessory Power Relay 2 - Control circuit terminal 86
6. Verify the test lamp turns ON and OFF when commanding the Interruptible Retained Accessory Power Relay On and Off with a scan tool.
    - **If the test lamp is always OFF**

    1. Ignition OFF, remove the test lamp, disconnect the harness connector at the K84 Keyless Entry Control Module.
    2. Test for infinite resistance between the control circuit and ground.
        - If less than infinite resistance, repair the short to ground on the circuit.
        - If infinite resistance
    3. Test for less than 2 Ω in the control circuit end to end.
        - If 2 Ω or greater, repair the open/high resistance in the circuit.
        - If less than 2 Ω, replace the K84 Keyless Entry Control Module.

    - **If the test lamp is always ON**

cardiagn.com

1. Ignition OFF, remove the test lamp, disconnect the harness connector at the K84 Keyless Entry Control Module, ignition ON.
2. Test for less than 1 V between the control circuit and ground.
    - If 1 V or greater, repair the short to voltage on the circuit.
    - If less than 1 V, replace the K84 Keyless Entry Control Module.

- **If the test lamp turns ON and OFF**

7. Verify that a test lamp does not illuminate between the ignition circuits below and ground.
    - KR76A Retained Accessory Power Relay 1 - Ignition circuit terminal 87
    - KR76B Retained Accessory Power Relay 2 - Ignition circuit terminal 87
    - **If the test lamp does not illuminate**
8. Ignition ON, connect a 40 A fused jumper wire between the circuits listed below.
    - KR76A Retained Accessory Power Relay 1 - B+ circuit Terminal 30 and ignition control circuit terminal 87
    - KR76B Retained Accessory Power Relay 2 - B+ circuit Terminal 30 and ignition control circuit terminal 87
9. Verify device is activated.
    - **If the device does not activate**
    1. Ignition OFF, disconnect the harness connector at the device.
    2. Test for infinite resistance between the ignition circuit and ground.
        - If less than infinite resistance, repair the short to ground on the circuit.
        - If infinite resistance
    3. Test for less than 2 Ω in the ignition circuit end to end.
        - If 2 Ω or greater, repair the open/high resistance in the circuit.
        - If less than 2 Ω, replace the device.
    - **If the device activates**
10. Test or replace the appropriate KR76A Retained Accessory Power Relay 1 or KR76B Retained Accessory Power Relay 2.

Diagnostic D

1. Ignition OFF, disconnect the X5 harness connector at the K9 Body Control Module, ignition ON.
2. Verify a test lamp illuminates between the control circuit terminal 23 and ground.
    - **If the test lamp does not illuminate and the circuit fuse is good**
    1. Ignition OFF, remove the test lamp, disconnect the X2 harness connector at the X51L Fuse Block - Instrument Panel Left.

cardiagn.com

2. Test for infinite resistance between the control circuit terminal and ground.
    - If less than infinite resistance, repair the short to ground on the circuit.
    - If infinite resistance
3. Test for less than 2 Ω in the control circuit end to end.
    - If 2 Ω or greater, repair the open/high resistance in the circuit.
    - If less than 2 Ω.
4. Ignition OFF, remove the PARK ENABLE EAP fuse F34DL. Ignition ON.
5. Test for less than 1 V between the control circuit terminal and ground.
    - If 1 V or greater, repair the short to voltage on the circuit.
    - If less than 1 V, replace the X51L Fuse Block - Instrument Panel Left.

- **If the test lamp does not illuminate and the circuit fuse is open**

1. Ignition OFF, remove the test lamp, disconnect the X1 harness connector at the X51L Fuse Block - Instrument Panel Left.
2. Test for infinite resistance between the ignition circuit terminal 34 and ground.
    - If less than infinite resistance, repair the short to ground on the circuit.
    - If infinite resistance, replace the X51L Fuse Block - Instrument Panel Left

- **If the test lamp illuminates**

3. Install a 3 A fused jumper wire between the control circuit terminal 23 and ground.
4. Disconnect the harness connector at the appropriate folding seat switch, ignition ON.
5. Verify that a test lamp does not illuminate between each of the ignition circuits listed below and ground.
    - Folding Seat Switch - Left 2nd Row - Ignition circuit terminal C
    - Folding Seat Switch - Right 2nd Row - Ignition circuit terminal C
    - Folding Seat Switch - D-Pillar 2nd Row - Ignition circuit terminal 2
    - Folding Seat Switch - D-Pillar 3rd Row - Ignition circuit terminal 1
    - **If the test lamp illuminates**

      Repair the short to voltage on the ignition circuit.

    - **If the test lamp does not illuminate**
6. Ignition OFF, remove the 3 A fused jumper wire, ignition ON.
7. Verify that a test lamp illuminates between each of the ignition circuits listed below and ground.

cardiagn.com

- Folding Seat Switch - Left 2nd Row - Ignition circuit terminal C
- Folding Seat Switch - Right 2nd Row - Ignition circuit terminal C
- Folding Seat Switch - D-Pillar 2nd Row - Ignition circuit terminal 2
- Folding Seat Switch - D-Pillar 3rd Row - Ignition circuit terminal 1
- **If the test lamp does not illuminate**

1. Ignition OFF, remove the test lamp.
2. Test for less than 2 Ω in the ignition circuit end to end.
    - If 2 Ω or greater, repair the open/high resistance in the circuit.
    - If less than 2 Ω, replace the X51L Fuse Block - Instrument Panel Left.

- **If the test lamp illuminates**

8. Replace the appropriate folding seat switch.

Component Testing

Relay Test

1. Ignition OFF, disconnect the appropriate relay.
2. Test for 70-150 Ω between terminals (85 or 1) and (86 or 2).
    - **If less than 70 or greater than 150 Ω**

      Replace the relay.

    - **If between 70-150 Ω**
3. Test for infinite resistance between the terminals listed below:
    - (30 or 3) and (86 or 2)
    - (30 or 3) and (87 or 5)
    - (30 or 3) and (85 or 1)
    - (85 or 1) and (87 or 5)
    - (86 or 2) and (87 or 5)
    - **If less than infinite resistance**

      Replace the relay.

cardiagn.com

- **If infinite resistance**

4. Install a 3 A fused jumper wire between relay terminal (85 or 1) and 12 V. Install a jumper wire between relay terminal (86 or 2) and ground.
5. Test for less than 5.0 Ω between terminals (30 or 3) and (87 or 5).
   - **If 5.0 Ω or greater**

     Replace the relay.

   - **If less than 5.0 Ω**
6. All OK

Repair Instructions

Perform the **Diagnostic Repair Verification** after completing the repair.

- Refer to **Relay Replacement (Attached to Wire Harness)** **Relay Replacement (Within an Electrical Center)**
- Refer to **Control Module References** for the appropriate control module replacement, programming and setup.

POWER MODE MISMATCH (WITHOUT BTM)

Diagnostic Instructions

- Perform the **Diagnostic System Check - Vehicle** prior to using this diagnostic procedure.
- Review **Strategy Based Diagnosis** for an overview of the diagnostic approach.
- Refer to **Diagnostic Procedure Instructions** to provide an overview of each diagnostic category.

Circuit/System Description

The body control module (BCM) controls the ignition main (underhood), ignition main (instrument panel left), and retained accessory power relays by applying voltage to their individual relay control circuits. The ignition main relay (underhood) and ignition main relay (instrument panel left) are energized when the ignition switch is in the ON or the CRANK position. The retained accessory power relays are energized during all power modes, except OFF-awake and CRANK. The relays are also energized for approximately 10 min after shutting the ignition OFF and removing the key, providing no door is opened.

The body control module (BCM) controls the transmission park relay by providing ground to the in park switch coil control circuit. The transmission park relay is a PCB relay that when energized, disconnects battery voltage from the ignition circuit. The transmission park relay is energized when the ignition is in the ACCESSORY or the ON position and when the transmission shift selector is not in PARK. When the vehicle is in PARK, the relay is de-energized providing battery voltage to the appropriate devices.

cardiagn.com

The engine control module (ECM) controls the engine controls the ignition relay by providing ground to the engine controls relay control circuit.

Diagnostic Aids

A short to voltage on the ignition run/crank relay coil control will cause the engine to remain running after the mode is changed to OFF.

Reference Information

Schematic Reference

- **Power Moding Schematics**
- **Engine Controls Schematics**
- **Adjustable Pedal Schematics**
- **Rear Seat Schematics**

Connector End View Reference

COMPONENT CONNECTOR END VIEWS - INDEX

Description and Operation

Power Mode Description and Operation (Without BTM)

Electrical Information Reference

- **Circuit Testing**
- **Connector Repairs**
- **Testing for Intermittent Conditions and Poor Connections**
- **Wiring Repairs**

Scan Tool Reference

Control Module References for scan tool information

Circuit/System Verification

NOTE: **Use schematics to determine which ignition relay supplies the ignition feed for the appropriate devices. Use the**

cardiagn.com

connector end view to identify the ignition circuit terminal for each of those devices.

1. Ignition ON.
2. Verify that the appropriate devices controlled by the KR73 Ignition Main Relay (underhood) and KR73 Ignition Main Relay (instrument panel left) turn ON and OFF when commanding the Run/Crank Relay On and Off with a scan tool.
   - **If the devices do not turn ON and OFF**

     Refer to Circuit/System Testing - Diagnostic A.

   - **If the devices turn ON and OFF**
3. Verify that the appropriate devices controlled by the KR75 Engine Controls Ignition Relay turn ON and OFF when switching the ignition between ON and OFF.
   - **If the devices do not turn ON and OFF**

     Refer to Circuit/System Testing - Diagnostic B.

   - **If the devices turn ON and OFF**
4. Verify that the appropriate devices controlled by the KR76A Retained Accessory Power Relay 1 and KR76B Retained Accessory Power Relay 2 turn ON and OFF when commanding the Accessory/Retained Accessory Power Relay On and Off with a scan tool.
   - **If the devices do not turn ON and OFF**

     Refer to Circuit/System Testing - Diagnostic C.

   - **If the devices turn ON and OFF**
5. Verify that the appropriate devices controlled by the KR87 Transmission Park Relay turn ON and OFF when shifting in and out of PARK.
   - **If the devices do not turn ON and OFF**

     Refer to Circuit/System Testing - Diagnostic D.

   - **If the devices turn ON and OFF**
6. All OK.

Circuit/System Testing

Diagnostic A

cardiagn.com

1. Ignition OFF and all vehicle systems OFF, disconnect the KR73 Ignition Main Relay (underhood) and KR73 Ignition Main Relay (instrument panel left). It may take up to 2 min for all vehicle systems to power down.
2. Test for less than 10 Ω between the ground circuits listed below and ground.
   - KR73 Ignition Main Relay (underhood) - Ground circuit terminal 86
   - KR73 Ignition Main Relay (instrument panel left) - Ground circuit terminal 86
   - **If 10 Ω or greater**
   1. Ignition OFF.
   2. Test for less than 2 Ω in the ground circuit end to end.
      - If 2 Ω or greater, repair the open/high resistance in the circuit.
      - If less than 2 Ω, repair the open/high resistance in the ground connection.
   - **If less than 10 Ω**
3. Ignition ON.
4. Verify a test lamp illuminates between the B+ circuits below and ground.
   - KR73 Ignition Main Relay (underhood) - B+ circuit terminal 30
   - KR73 Ignition Main Relay (instrument panel left) - B+ circuit terminal 30
   - **If the test lamp does not illuminate**

     Replace the appropriate fuse block.

   - **If the test lamp illuminates**
5. Connect a test lamp between the control circuits listed below and ground
   - KR73 Ignition Main Relay (underhood) - Control circuit terminal 85
   - KR73 Ignition Main Relay (instrument panel left) - Control circuit terminal 85
6. Verify the test lamp turns ON and OFF when commanding the Run/Crank Relay On and Off with a scan tool.
   - **If the test lamp is always OFF**
   1. Ignition OFF, remove the test lamp, disconnect the harness connector at the K9 Body Control Module.
   2. Test for infinite resistance between the control circuit and ground.
      - If less than infinite resistance, repair the short to ground on the circuit.
      - If infinite resistance
   3. Test for less than 2 Ω in the control circuit end to end.

cardiagn.com

- If 2 Ω or greater, repair the open/high resistance in the circuit.
- If less than 2 Ω, replace the K9 Body Control Module.

- **If the test lamp is always ON**

1. Ignition OFF, remove the test lamp, disconnect the harness connector at the K9 Body Control Module, ignition ON.
2. Test for less than 1 V between the control circuit and ground.
    - If 1 V or greater, repair the short to voltage on the circuit.
    - If less than 1 V, replace the K9 Body Control Module.

- **If the test lamp turns ON and OFF**

7. Verify that a test lamp does not illuminate between the ignition circuits below and ground.
    - KR73 Ignition Main Relay (underhood) - Ignition circuit terminal 87
    - KR73 Ignition Main Relay (instrument panel left) - Ignition circuit terminal 87
    - **If the test lamp illuminates**

      Repair the short to voltage on the ignition circuit

    - **If the test lamp does not illuminate**
8. Ignition ON, connect a 40 A fused jumper wire between the circuits listed below.
    - KR73 Ignition Main Relay (underhood) - B+ circuit Terminal 30 and ignition control circuit terminal 87
    - KR73 Ignition Main Relay (instrument panel left) - B+ circuit Terminal 30 and ignition control circuit terminal 87
9. Verify device is activated.
    - **If the device does not activate**

    1. Ignition OFF, disconnect the harness connector at the device.
    2. Test for infinite resistance between the ignition circuit and ground.
        - If less than infinite resistance, repair the short to ground on the circuit.
        - If infinite resistance
    3. Test for less than 2 Ω in the ignition circuit end to end.
        - If 2 Ω or greater, repair the open/high resistance in the circuit.
        - If less than 2 Ω, replace the device.

    - **If the device activates**

10. Test or replace the appropriate KR73 Ignition Main Relay (underhood) or KR73 Ignition Main Relay (instrument panel left).

cardiagn.com

Diagnostic B

1. Ignition OFF and all vehicle systems OFF, disconnect the KR75 Engine Controls Ignition Relay, ignition ON.
2. Verify a test lamp illuminates between the B+ circuit terminal 30 and ground.
   - **If the test lamp does not illuminate**

     Replace the X50A Fuse Block Underhood

   - **If the test lamp illuminates**
3. Verify a test lamp illuminates between the B+ circuit terminal 86 and ground.
   - **If the test lamp does not illuminate**

     Replace the X50A Fuse Block Underhood

   - **If the test lamp illuminates**
4. Connect a test lamp between the B+ circuit terminal 86 and the control circuit terminal 85.
5. Verify the test lamp turns ON and OFF when cycling the ignition ON and OFF.
   - **If the test lamp is always OFF**

   1. Ignition OFF, remove the test lamp, disconnect the harness connector at the K20 Engine Control Module, ignition ON.
   2. Test for less than 1 V between the control circuit and ground.
      - If 1 V or greater, repair the short to voltage on the circuit.
      - If less than 1 V
   3. Ignition OFF.
   4. Test for less than 2 Ω in the control circuit end to end.
      - If 2 Ω or greater, repair the open/high resistance in the circuit.
      - If less than 2 Ω, replace the K20 Engine Control Module.

   - **If the test lamp is always ON**

   1. Ignition OFF, remove the test lamp, disconnect the harness connector at the K20 Engine Control Module.
   2. Test for infinite resistance between the control circuit and ground.
      - If less than infinite resistance, repair the short to ground on the circuit.
      - If infinite resistance, replace the K20 Engine Control Module.

cardiagn.com

- **If the test lamp turns ON and OFF**

6. Verify a test lamp does not illuminate between the ignition circuit terminal 87 and ground.
   - **If the test lamp illuminates**

     Repair the short to voltage on the circuit.

   - **If the test lamp does not illuminate**
7. Ignition ON, connect a 40 A fused jumper wire between the B+ circuit terminal 30 and the ignition circuit terminal 87.
8. Verify device is activated.
   - **If the device does not activate**
   1. Ignition OFF, disconnect the harness connector at the device.
   2. Test for infinite resistance between the ignition circuit terminal 87 and ground.
      - If less than infinite resistance, repair the short to ground on the circuit.
      - If infinite resistance
   3. Test for less than 2 Ω in the ignition circuit end to end.
      - If 2 Ω or greater, repair the open/high resistance in the circuit.
      - If less than 2 Ω, replace the device.
   - **If the device activates**
9. Test or replace the KR75 Engine Controls Ignition Relay.

Diagnostic C

1. Ignition OFF, disconnect the X5 harness connector at the K9 Body Control Module, ignition ON.
2. Verify a test lamp illuminates between the B+ circuit terminal 4 and ground.
   - **If the test lamp does not illuminate and the circuit fuse is good**
   1. Ignition OFF, remove the test lamp.
   2. Test for less than 2 Ω in the B+ circuit end to end.
      - If 2 Ω or greater, repair the open/high resistance in the circuit.
      - If less than 2 Ω, verify the fuse is not open and there is voltage at the fuse.
   - **If the test lamp does not illuminate and the circuit fuse is open**
   1. Ignition OFF, remove the test lamp.

cardiagn.com

2. Test for infinite resistance between the B+ circuit and ground.
    - If less than infinite resistance, repair the short to ground on the circuit.
    - If infinite resistance, replace the K9 Body Control Module
- **If the test lamp illuminates**

3. Ignition OFF, Connect the X5 harness connector at the K9 Body Control Module.
4. Ignition OFF and all vehicle systems OFF, disconnect the KR76A Retained Accessory Power Relay 1 and KR76B Retained Accessory Power Relay 2. It may take up to 2 min for all vehicle systems to power down.
5. Test for less than 10 Ω between the ground circuits listed below and ground.
    - KR76A Retained Accessory Power Relay 1 - Ground circuit terminal 85
    - KR76B Retained Accessory Power Relay 2 - Ground circuit terminal 85
    - **If 10 Ω or greater**

    1. Ignition OFF.
    2. Test for less than 2 Ω in the ground circuit end to end.
        - If 2 Ω or greater, repair the open/high resistance in the circuit.
        - If less than 2 Ω, repair the open/high resistance in the ground connection.
    - **If less than 10 Ω**
6. Ignition ON.
7. Verify a test lamp illuminates between the B+ circuits below and ground.
    - KR76A Retained Accessory Power Relay 1 - B+ circuit terminal 30
    - KR76B Retained Accessory Power Relay 2 - B+ circuit terminal 30
    - **If the test lamp does not illuminate**

      Replace the appropriate fuse block.

    - **If the test lamp illuminates**
8. Connect a test lamp between the control circuits listed below and ground
    - KR76A Retained Accessory Power Relay 1 - Control circuit terminal 86
    - KR76B Retained Accessory Power Relay 2 - Control circuit terminal 86
9. Verify the test lamp turns ON and OFF when commanding the Accessory/Retained Accessory Power Relay On and Off with a scan tool.
    - **If the test lamp is always OFF**

cardiagn.com

1. Ignition OFF, remove the test lamp, disconnect the harness connector at the K9 Body Control Module.
2. Test for infinite resistance between the control circuit and ground.
    - If less than infinite resistance, repair the short to ground on the circuit.
    - If infinite resistance
3. Test for less than 2 Ω in the control circuit end to end.
    - If 2 Ω or greater, repair the open/high resistance in the circuit.
    - If less than 2 Ω, replace the K9 Body Control Module.

- **If the test lamp is always ON**

1. Ignition OFF, remove the test lamp, disconnect the harness connector at the K9 Body Control Module, ignition ON.
2. Test for less than 1 V between the control circuit and ground.
    - If 1 V or greater, repair the short to voltage on the circuit.
    - If less than 1 V, replace the K9 Body Control Module.

- **If the test lamp turns ON and OFF**

10. Verify that a test lamp does not illuminate between the ignition circuits below and ground.
    - KR76A Retained Accessory Power Relay 1 - Ignition circuit terminal 87
    - KR76B Retained Accessory Power Relay 2 - Ignition circuit terminal 87
    - **If the test lamp illuminates**

      Repair the short to voltage on the ignition circuit

    - **If the test lamp does not illuminate**
11. Ignition ON, connect a 40 A fused jumper wire between the circuits listed below.
    - KR76A Retained Accessory Power Relay 1 - B+ circuit Terminal 30 and ignition control circuit terminal 87
    - KR76B Retained Accessory Power Relay 2 - B+ circuit Terminal 30 and ignition control circuit terminal 87
12. Verify device is activated.
    - **If the device does not activate**

1. Ignition OFF, disconnect the harness connector at the device.
2. Test for infinite resistance between the ignition circuit and ground.
    - If less than infinite resistance, repair the short to ground on the circuit.
    - If infinite resistance

cardiagn.com

3. Test for less than 2 Ω in the ignition circuit end to end.
    - If 2 Ω or greater, repair the open/high resistance in the circuit.
    - If less than 2 Ω, replace the device.
- **If the device activates**

13. Test or replace the appropriate KR76A Retained Accessory Power Relay 1 or KR76B Retained Accessory Power Relay 2.

Diagnostic D

1. Ignition OFF, disconnect the X5 harness connector at the K9 Body Control Module, ignition ON.
2. Verify a test lamp illuminates between the control circuit terminal 23 and ground.
    - **If the test lamp does not illuminate and the circuit fuse is good**
    1. Ignition OFF, remove the test lamp, disconnect the X2 harness connector at the X51L Fuse Block - Instrument Panel Left.
    2. Test for infinite resistance between the control circuit terminal and ground.
        - If less than infinite resistance, repair the short to ground on the circuit.
        - If infinite resistance
    3. Test for less than 2 Ω in the control circuit end to end.
        - If 2 Ω or greater, repair the open/high resistance in the circuit.
        - If less than 2 Ω.
    4. Ignition OFF, remove the PARK ENABLE EAP fuse F34DL. Ignition ON.
    5. Test for less than 1 V between the control circuit terminal and ground.
        - If 1 V or greater, repair the short to voltage on the circuit.
        - If less than 1 V, replace the X51L Fuse Block - Instrument Panel Left.
    - **If the test lamp does not illuminate and the circuit fuse is open**
    1. Ignition OFF, remove the test lamp, disconnect the X1 harness connector at the X51L Fuse Block - Instrument Panel Left.
    2. Test for infinite resistance between the ignition circuit terminal 34 and ground.
        - If less than infinite resistance, repair the short to ground on the circuit.
        - If infinite resistance, replace the X51L Fuse Block - Instrument Panel Left
    - **If the test lamp illuminates**
3. Install a 3 A fused jumper wire between the control circuit terminal 23 and ground.
4. Disconnect the harness connector at the appropriate folding seat switch, ignition ON.

cardiagn.com

5. Verify that a test lamp does not illuminate between each of the ignition circuits listed below and ground.
    - Folding Seat Switch - Left 2nd Row - Ignition circuit terminal C
    - Folding Seat Switch - Right 2nd Row - Ignition circuit terminal C
    - Folding Seat Switch - D-Pillar 2nd Row - Ignition circuit terminal 2
    - Folding Seat Switch - D-Pillar 3rd Row - Ignition circuit terminal 1
    - **If the test lamp illuminates**

      Repair the short to voltage on the ignition circuit.

    - **If the test lamp does not illuminate**
6. Ignition OFF, remove the 3 A fused jumper wire, ignition ON.
7. Verify that a test lamp illuminates between each of the ignition circuits listed below and ground.
    - Folding Seat Switch - Left 2nd Row - Ignition circuit terminal C
    - Folding Seat Switch - Right 2nd Row - Ignition circuit terminal C
    - Folding Seat Switch - D-Pillar 2nd Row - Ignition circuit terminal 2
    - Folding Seat Switch - D-Pillar 3rd Row - Ignition circuit terminal 1
    - **If the test lamp does not illuminate**
    1. Ignition OFF, remove the test lamp.
    2. Test for less than 2 Ω in the ignition circuit end to end.
        - If 2 Ω or greater, repair the open/high resistance in the circuit.
        - If less than 2 Ω, replace the X51L Fuse Block - Instrument Panel Left.
    - **If the test lamp illuminates**
8. Replace the appropriate folding seat switch.

Component Testing

Relay Test

1. Ignition OFF, disconnect the appropriate relay.
2. Test for 70-150 Ω between terminals (85 or 1) and (86 or 2).
    - **If less than 70 or greater than 150 Ω**

cardiagn.com

Replace the relay.

- **If between 70-150 Ω**

3. Test for infinite resistance between the terminals listed below:
   - (30 or 3) and (86 or 2)
   - (30 or 3) and (87 or 5)
   - (30 or 3) and (85 or 1)
   - (85 or 1) and (87 or 5)
   - (86 or 2) and (87 or 5)
   - **If less than infinite resistance**

     Replace the relay.

   - **If infinite resistance**
4. Install a 3 A fused jumper wire between relay terminal (85 or 1) and 12 V. Install a jumper wire between relay terminal (86 or 2) and ground.
5. Test for less than 5.0 Ω between terminals (30 or 3) and (87 or 5).
   - **If 5.0 Ω or greater**

     Replace the relay.

   - **If less than 5.0 Ω**
6. All OK

Repair Instructions

Perform the **Diagnostic Repair Verification** after completing the repair.

- Refer to **Relay Replacement (Attached to Wire Harness)** **Relay Replacement (Within an Electrical Center)**
- Refer to **Control Module References** for the appropriate control module replacement, programming and setup.

RETAINED ACCESSORY POWER MALFUNCTION (WITHOUT BTM)

Diagnostic Instructions

- Perform the **Diagnostic System Check - Vehicle** prior to using this diagnostic procedure.

cardiagn.com

- Review **Strategy Based Diagnosis** for an overview of the diagnostic approach.
- Refer to **Diagnostic Procedure Instructions** to provide an overview of each diagnostic category.

Diagnostic Fault Information

Circuit	Short to Ground	Open/High Resistance	Short to Voltage	Signal Performance
Relay Switch B+	1	1	1	-
Relay Switch Ignition	1	1	1, 2	-
Relay Coil Control	B1445 02	1	1	-
Relay Coil Ground	-	1	-	-
1. Retained Accessory Power Malfunction 2. Retained Accessory Power Relay Always On				

Circuit/System Description

The body control module (BCM) control the retained accessory power relay 1 and retained accessory power relay 2 through their control circuits by applying voltage to the retained accessory power relay coil control circuit. The retained accessory power relay 1 and retained accessory power relay 2 are energized when the ignition switch is in the ACCESSORY or the ON position.

Reference Information

Schematic Reference

- **Power Distribution Schematics**
- **Power Moding Schematics**

Connector End View Reference

COMPONENT CONNECTOR END VIEWS - INDEX

Description and Operation

Retained Accessory Power Description and Operation (Without BTM)

Electrical Information Reference

cardiagn.com

- Circuit Testing
- Connector Repairs
- Relay Replacement (Attached to Wire Harness) Relay Replacement (Within an Electrical Center)
- Testing for Intermittent Conditions and Poor Connections
- Wiring Repairs

Scan Tool Reference

Control Module References for scan tool information

Circuit/System Verification

NOTE: **Use schematics to determine which devices are controlled by the KR76A Retained Accessory Power Relay 1 and KR76 Retained Accessory Power Relay 2. Use the connector end view to identify the ignition circuit terminal for each of those devices.**

1. Ignition ON.
2. Verify the appropriate devices controlled by the KR76 Retained Accessory Power Relay turn ON and OFF when commanding the Accessory/Retained Accessory Power Relay On and Off with a scan tool.
   - **If the devices do not turn ON and OFF**

     Refer to Circuit/System Testing

   - **If the devices turn ON and OFF**
3. All OK.

Circuit/System Testing

1. Ignition OFF, disconnect the X5 harness connector at the K9 Body Control Module, ignition ON.
2. Verify a test lamp illuminates between the B+ circuit terminal 4 and ground.
   - **If the test lamp does not illuminate and the circuit fuse is good**
   1. Ignition OFF, remove the test lamp.
   2. Test for less than 2 Ω in the B+ circuit end to end.
      - If 2 Ω or greater, repair the open/high resistance in the circuit.

cardiagn.com

- If less than 2 Ω, verify the fuse is not open and there is voltage at the fuse.

- **If the test lamp does not illuminate and the circuit fuse is open**

1. Ignition OFF, remove the test lamp.
2. Test for infinite resistance between the B+ circuit and ground.
    - If less than infinite resistance, repair the short to ground on the circuit.
    - If infinite resistance, replace the K9 Body Control Module

- **If the test lamp illuminates**

3. Ignition OFF, Connect the X5 harness connector at the K9 Body Control Module.
4. Ignition OFF and all vehicle systems OFF, disconnect the KR76A Retained Accessory Power Relay 1 and KR76B Retained Accessory Power Relay 2. It may take up to 2 min for all vehicle systems to power down.
5. Test for less than 10 Ω between the ground circuits listed below and ground.
    - KR76A Retained Accessory Power Relay 1 - Ground circuit terminal 85
    - KR76B Retained Accessory Power Relay 2 - Ground circuit terminal 85
    - **If 10 Ω or greater**

    1. Ignition OFF.
    2. Test for less than 2 Ω in the ground circuit end to end.
        - If 2 Ω or greater, repair the open/high resistance in the circuit.
        - If less than 2 Ω, repair the open/high resistance in the ground connection.

    - **If less than 10 Ω**

6. Ignition ON.
7. Verify a test lamp illuminates between the B+ circuits below and ground.
    - KR76A Retained Accessory Power Relay 1 - B+ circuit terminal 30
    - KR76B Retained Accessory Power Relay 2 - B+ circuit terminal 30
    - **If the test lamp does not illuminate**

      Replace the appropriate fuse block.

    - **If the test lamp illuminates**

8. Connect a test lamp between the control circuits listed below and ground
    - KR76A Retained Accessory Power Relay 1 - Control circuit terminal 86

cardiagn.com

- KR76B Retained Accessory Power Relay 2 - Control circuit terminal 86

9. Verify the test lamp turns ON and OFF when commanding the Accessory/Retained Accessory Power Relay On and Off with a scan tool.
    - **If the test lamp is always OFF**
    1. Ignition OFF, remove the test lamp, disconnect the harness connector at the K9 Body Control Module.
    2. Test for infinite resistance between the control circuit and ground.
        - If less than infinite resistance, repair the short to ground on the circuit.
        - If infinite resistance
    3. Test for less than 2 Ω in the control circuit end to end.
        - If 2 Ω or greater, repair the open/high resistance in the circuit.
        - If less than 2 Ω, replace the K9 Body Control Module.
    - **If the test lamp is always ON**
    1. Ignition OFF, remove the test lamp, disconnect the harness connector at the K9 Body Control Module, ignition ON.
    2. Test for less than 1 V between the control circuit and ground.
        - If 1 V or greater, repair the short to voltage on the circuit.
        - If less than 1 V, replace the K9 Body Control Module.
    - **If the test lamp turns ON and OFF**
10. Connect the KR76A Retained Accessory Power Relay 1 and KR76B Retained Accessory Power Relay 2.
11. Disconnect the appropriate X80 Accessory Power Receptacle, T22 Mobile Device Wireless Charger Module, S68 Sliding Rear Window Switch, S63 Roof Beacon Switch, S25 Garage Door Opener, or M69 Sunroof Module.
12. Ignition OFF.
13. Verify that a test lamp does not illuminate between each of the ignition circuits listed below and ground.
    - X80A Accessory Power Receptacle - Center Console 1 - Ignition circuit terminal A
    - X80B Accessory Power Receptacle - Center Console 2 - Ignition circuit terminal A
    - X80D Accessory Power Receptacle - Center Console Compartment - Ignition circuit terminal A
    - X80E Accessory Power Receptacle - Center Seat - Ignition circuit terminal A
    - X80G Accessory Power Receptacle - Instrument Panel - Ignition circuit terminal A
    - X80J Accessory Power Receptacle - Instrument Panel 1 - Ignition circuit terminal A
    - X80K Accessory Power Receptacle - Instrument Panel 2 - Ignition circuit terminal A
    - X80L Accessory Power Receptacle - Center Console Rear - Ignition circuit terminal A

cardiagn.com

- X32 Cigarette Lighter Receptacle - Ignition circuit terminal A
- T22 Mobile Device Wireless Charger Module - Ignition circuit terminal 1
- S68 Sliding Rear Window Switch - Ignition circuit terminal A
- M69 Sunroof Module - Ignition circuit terminal 1
- S63 Roof Beacon Switch - Ignition circuit terminal 3
- S25 Garage Door Opener - Ignition circuit terminal 1
- **If the test lamp illuminates**

  Repair the short to voltage on the ignition circuit.

- **If the test lamp does not illuminate**

14. Ignition ON.
15. Verify that a test lamp illuminates between each of the ignition circuits listed below and ground.
    - X80A Accessory Power Receptacle - Center Console 1 - Ignition circuit terminal A
    - X80B Accessory Power Receptacle - Center Console 2 - Ignition circuit terminal A
    - X80D Accessory Power Receptacle - Center Console Compartment - Ignition circuit terminal A
    - X80E Accessory Power Receptacle - Center Seat - Ignition circuit terminal A
    - X80G Accessory Power Receptacle - Instrument Panel - Ignition circuit terminal A
    - X80J Accessory Power Receptacle - Instrument Panel 1 - Ignition circuit terminal A
    - X80K Accessory Power Receptacle - Instrument Panel 2 - Ignition circuit terminal A
    - X80L Accessory Power Receptacle - Center Console Rear - Ignition circuit terminal A
    - X32 Cigarette Lighter Receptacle - Ignition circuit terminal A
    - T22 Mobile Device Wireless Charger Module - Ignition circuit terminal 1
    - S68 Sliding Rear Window Switch - Ignition circuit terminal A
    - M69 Sunroof Module - Ignition circuit terminal 1
    - S63 Roof Beacon Switch - Ignition circuit terminal 3
    - S25 Garage Door Opener - Ignition circuit terminal 1
    - **If the test lamp does not illuminate and the circuit fuse is good**

    1. Ignition OFF, remove the test lamp.
    2. Test for less than 2 Ω in the ignition circuit end to end.

cardiagn.com

- If 2 Ω or greater, repair the open/high resistance in the circuit.
- If less than 2 Ω, test or replace the appropriate KR76A Retained Accessory Power Relay 1 or KR76B Retained Accessory Power Relay 2.

- **If the test lamp does not illuminate and the circuit fuse is open**

1. Ignition OFF.
2. Test for infinite resistance between the ignition circuit and ground.
    - If less than infinite resistance, repair the short to ground on the circuit.
    - If infinite resistance, test or replace the appropriate X80 Accessory Power Receptacle, T22 Mobile Device Wireless Charger Module, S68 Sliding Rear Window Switch, S63 Roof Beacon Switch, S25 Garage Door Opener, or M69 Sunroof Module.

- **If the test lamp illuminates**

16. Test or replace the appropriate X80 Accessory Power Receptacle, T22 Mobile Device Wireless Charger Module, S68 Sliding Rear Window Switch, S63 Roof Beacon Switch, S25 Garage Door Opener, or M69 Sunroof Module.

Component Testing

Relay Test

1. Ignition OFF, disconnect the appropriate relay.
2. Test for 70-150 Ω between terminals (85 or 1) and (86 or 2).
    - **If less than 70 or greater than 150 Ω**

      Replace the relay.

    - **If between 70-150 Ω**
3. Test for infinite resistance between the terminals listed below:
    - (30 or 3) and (86 or 2)
    - (30 or 3) and (87 or 5)
    - (30 or 3) and (85 or 1)
    - (85 or 1) and (87 or 5)
    - (86 or 2) and (87 or 5)
    - **If less than infinite resistance**

      Replace the relay.

cardiagn.com

- **If infinite resistance**

4. Install a 3 A fused jumper wire between relay terminal (85 or 1) and 12 V. Install a jumper wire between relay terminal (86 or 2) and ground.
5. Test for less than 5.0 Ω between terminals (30 or 3) and (87 or 5).
   - **If 5.0 Ω or greater**

     Replace the relay.

   - **If less than 5.0 Ω**
6. All OK

Repair Instructions

Perform the **Diagnostic Repair Verification** after completing the repair.

- Refer to **Accessory Power Receptacle Replacement**
- Refer to **Control Module References** for body control module replacement, programming and setup.

RETAINED ACCESSORY POWER MALFUNCTION (WITH BTM)

Diagnostic Instructions

- Perform the **Diagnostic System Check - Vehicle** prior to using this diagnostic procedure.
- Review **Strategy Based Diagnosis** for an overview of the diagnostic approach.
- Refer to **Diagnostic Procedure Instructions** to provide an overview of each diagnostic category.

Diagnostic Fault Information

Circuit	Short to Ground	Open/High Resistance	Short to Voltage	Signal Performance
Relay Switch B+	1	1	1	-
Relay Switch Ignition	1	1	1, 2	-
Relay Coil Control	B305E 02	B305E 05	B305E 01, B305E 05	-
Relay Coil Ground	-	B305E 05	-	-
1. Retained Accessory Power Malfunction 2. Retained Accessory Power Relay Always ON				

cardiagn.com

Circuit/System Description

The keyless entry control module controls the retained accessory power relay 1 and retained accessory power relay 2 through their control circuits by applying voltage to the interruptible retained accessory power relay coil control circuit. The retained accessory power relay 1 and retained accessory power relay 2 are energized when the ignition switch is in the ACCESSORY or the ON position. The relays are also energized for approximately 10 min after shutting the ignition OFF, providing no door is opened.

Reference Information

Schematic Reference

- **Power Distribution Schematics**
- **Power Moding Schematics**

Connector End View Reference

COMPONENT CONNECTOR END VIEWS - INDEX

Description and Operation

Retained Accessory Power Description and Operation (With BTM)

Electrical Information Reference

- **Circuit Testing**
- **Connector Repairs**
- **Testing for Intermittent Conditions and Poor Connections**
- **Wiring Repairs**

Scan Tool Reference

Control Module References for scan tool information

Circuit/System Verification

NOTE: **Use schematics to determine which devices are controlled by the KR76A Retained Accessory Power Relay 1 and KR76B Retained Accessory Power Relay 2. Use the connector end view to identify the ignition circuit terminal for each of those devices.**

cardiagn.com

1. Ignition ON.
2. Verify the appropriate devices controlled by the KR76 Retained Accessory Power Relay turn ON and OFF when commanding the Interruptible Retained Accessory Power Relay On and Off with a scan tool.
   - **If the devices do not turn ON and OFF**

     Refer to Circuit/System Testing

   - **If the devices turn ON and OFF**
3. All OK.

Circuit/System Testing

1. Ignition OFF and all vehicle systems OFF, disconnect the KR76A Retained Accessory Power Relay 1 and KR76B Retained Accessory Power Relay 2. It may take up to 2 min for all vehicle systems to power down.
2. Test for less than 10 Ω between the ground circuits listed below and ground.
   - KR76A Retained Accessory Power Relay 1 - Ground circuit terminal 85
   - KR76B Retained Accessory Power Relay 2 - Ground circuit terminal 85
   - **If 10 Ω or greater**
   1. Ignition OFF.
   2. Test for less than 2 Ω in the ground circuit end to end.
      - If 2 Ω or greater, repair the open/high resistance in the circuit.
      - If less than 2 Ω, repair the open/high resistance in the ground connection.
   - **If less than 10 Ω**
3. Ignition ON.
4. Verify a test lamp illuminates between the B+ circuits below and ground.
   - KR76A Retained Accessory Power Relay 1 - B+ circuit terminal 30
   - KR76B Retained Accessory Power Relay 2 - B+ circuit terminal 30
   - **If the test lamp does not illuminate**

     Replace the appropriate fuse block.

   - **If the test lamp illuminates**

cardiagn.com

5. Connect a test lamp between the control circuits listed below and ground
    - KR76A Retained Accessory Power Relay 1 - Control circuit terminal 86
    - KR76B Retained Accessory Power Relay 2 - Control circuit terminal 86
6. Verify the test lamp turns ON and OFF when commanding the when commanding the Interruptible Retained Accessory Power Relay On and Off with a scan tool.
    - **If the test lamp is always OFF**
    1. Ignition OFF, remove the test lamp, disconnect the harness connector at the K84 Keyless Entry Control Module.
    2. Test for infinite resistance between the control circuit and ground.
        - If less than infinite resistance, repair the short to ground on the circuit.
        - If infinite resistance
    3. Test for less than 2 Ω in the control circuit end to end.
        - If 2 Ω or greater, repair the open/high resistance in the circuit.
        - If less than 2 Ω, replace the K84 Keyless Entry Control Module.
    - **If the test lamp is always ON**
    1. Ignition OFF, remove the test lamp, disconnect the harness connector at the K84 Keyless Entry Control Module, ignition ON.
    2. Test for less than 1 V between the control circuit and ground.
        - If 1 V or greater, repair the short to voltage on the circuit.
        - If less than 1 V, replace the K84 Keyless Entry Control Module.
    - **If the test lamp turns ON and OFF**
7. Connect the KR76A Retained Accessory Power Relay 1 and KR76B Retained Accessory Power Relay 2.
8. Disconnect the appropriate X80 Accessory Power Receptacle, T22 Mobile Device Wireless Charger Module, or M69 Sunroof Module.
9. Ignition OFF.
10. Verify that a test lamp does not illuminate between each of the ignition circuits listed below and ground.
    - X80A Accessory Power Receptacle - Center Console 1 - Ignition circuit terminal A
    - X80B Accessory Power Receptacle - Center Console 2 - Ignition circuit terminal A
    - X80D Accessory Power Receptacle - Center Console Compartment - Ignition circuit terminal A
    - X80E Accessory Power Receptacle - Center Seat - Ignition circuit terminal A
    - X80J Accessory Power Receptacle - Instrument Panel 1 - Ignition circuit terminal A
    - X80K Accessory Power Receptacle - Instrument Panel 2 - Ignition circuit terminal A

cardiagn.com

- X32 Cigarette Lighter Receptacle - Ignition circuit terminal A
- T22 Mobile Device Wireless Charger Module - Ignition circuit terminal 1
- S68 Sliding Rear Window Switch - Ignition circuit terminal A
- M69 Sunroof Module - Ignition circuit terminal 1
- **If the test lamp illuminates**

  Repair the short to voltage on the ignition circuit.

- **If the test lamp does not illuminate**

11. Ignition ON.
12. Verify that a test lamp illuminates between each of the ignition circuits listed below and ground.
    - X80A Accessory Power Receptacle - Center Console 1 - Ignition circuit terminal A
    - X80B Accessory Power Receptacle - Center Console 2 - Ignition circuit terminal A
    - X80D Accessory Power Receptacle - Center Console Compartment - Ignition circuit terminal A
    - X80E Accessory Power Receptacle - Center Seat - Ignition circuit terminal A
    - X80J Accessory Power Receptacle - Instrument Panel 1 - Ignition circuit terminal A
    - X80K Accessory Power Receptacle - Instrument Panel 2 - Ignition circuit terminal A
    - X32 Cigarette Lighter Receptacle - Ignition circuit terminal A
    - T22 Mobile Device Wireless Charger Module - Ignition circuit terminal 1
    - S68 Sliding Rear Window Switch - Ignition circuit terminal A
    - M69 Sunroof Module - Ignition circuit terminal 1
    - **If the test lamp does not illuminate and the circuit fuse is good**

    1. Ignition OFF, remove the test lamp.
    2. Test for less than 2 Ω in the ignition circuit end to end.
        - If 2 Ω or greater, repair the open/high resistance in the circuit.
        - If less than 2 Ω, test or replace the appropriate KR76A Retained Accessory Power Relay 1 or KR76B Retained Accessory Power Relay 2.
    - **If the test lamp does not illuminate and the circuit fuse is open**

    1. Ignition OFF.
    2. Test for infinite resistance between the ignition circuit and ground.

cardiagn.com

- If less than infinite resistance, repair the short to ground on the circuit.
- If infinite resistance, test or replace the appropriate X80 Accessory Power Receptacle, T22 Mobile Device Wireless Charger Module, or M69 Sunroof Module.

- **If the test lamp illuminates**

13. Test or replace the appropriate X80 Accessory Power Receptacle, T22 Mobile Device Wireless Charger Module, or M69 Sunroof Module.

Component Testing

Relay Test

1. Ignition OFF, disconnect the appropriate relay.
2. Test for 70-150 Ω between terminals (85 or 1) and (86 or 2).
   - **If less than 70 or greater than 150 Ω**

     Replace the relay.

   - **If between 70-150 Ω**
3. Test for infinite resistance between the terminals listed below:
   - (30 or 3) and (86 or 2)
   - (30 or 3) and (87 or 5)
   - (30 or 3) and (85 or 1)
   - (85 or 1) and (87 or 5)
   - (86 or 2) and (87 or 5)
   - **If less than infinite resistance**

     Replace the relay.

   - **If infinite resistance**
4. Install a 3 A fused jumper wire between relay terminal (85 or 1) and 12 V. Install a jumper wire between relay terminal (86 or 2) and ground.
5. Test for less than 5.0 Ω between terminals (30 or 3) and (87 or 5).
   - **If 5.0 Ω or greater**

     Replace the relay.

cardiagn.com

- **If less than 5.0 Ω**

6. All OK

Repair Instructions

Perform the **Diagnostic Repair Verification** after completing the repair.

- Refer to **Relay Replacement (Attached to Wire Harness)** **Relay Replacement (Within an Electrical Center)**
- Refer to **Accessory Power Receptacle Replacement**
- Refer to **Control Module References** for keyless entry control module replacement, programming and setup.

VEHICLE WILL NOT CHANGE POWER MODE

Diagnostic Instructions

- Perform the **Diagnostic System Check - Vehicle** prior to using this diagnostic procedure.
- Review **Strategy Based Diagnosis** for an overview of the diagnostic approach.
- Refer to **Diagnostic Procedure Instructions** to provide an overview of each diagnostic category.

Diagnostic Fault Information

Circuit	Short to Ground	Open/High Resistance	Short to Voltage	Signal Performance
B+ terminal 4	B1370 04, B1380 04	B1370 04, B1380 04	-	-
Ignition Terminal 2	B1370 04, B1380 04	B1370 04, B1380 04	B1370 01	-
Ignition Terminal 3	B1370 04, B1380 04	B1380 04	B1380 01	-
Ignition Terminal 5	B1370 04, B1380 04, B1441 04	B1441 04	B1441 04	-
Signal - Terminal 6	B097B 02*	B097B 05*	B097B 05*	-
Signal - Terminal 3	2	B097B 05*	2	-
5 V Reference	-	2	-	-
Low Reference	-	B097B 05*	-	-
Ground	-	1	-	-

* DTC set in keyless entry control module
1. Ignition mode switch indicator always Off

cardiagn.com

Circuit	Short to Ground	Open/High Resistance	Short to Voltage	Signal Performance
2. Power mode mismatch				

Circuit/System Description

Without ATH/BTM

The vehicle power mode master is the body control module. The ignition switch is a low current switch with multiple discrete circuits to the body control module. The body control module logic uses the ignition switch positions to identify the operator's desired power mode and activate specific discrete signals, and serial data messages for the operation of different subsystems as necessary. Other modules which have switched voltage inputs may operate in a default mode if the power mode master serial data message does not match what the individual module can detect from its own connections.

The power mode master will activate relays and other direct outputs of the power mode master as needed according to the calculated power mode. Some relays controlled by the body control module are switched ignition voltage outputs that are pass through circuits within the body control module directly from the ignition switch. If these circuits short to ground, the B+ circuit fuse to the ignition switch will open.

With ATH/BTM

The ignition mode switch has two LEDs that indicate the vehicle power mode. When the vehicle is in the off mode, both LEDs will be off. Pressing the ignition mode switch button once (without the brake pedal applied), the vehicle enters the accessory mode and the amber LED (Accessory) will illuminate. The accessory mode has a 10 min time-out to reduce battery drain. Pressing and holding the push button start switch (without the brake pedal applied) for 5 s will place the vehicle in run/start mode (without the vehicle running) and the green LED (Run/Start) will illuminate. With the ignition off (with the brake pedal applied), pressing the ignition mode switch button once, the vehicle will enter run/start mode and the green LED (run/start) will illuminate. This will start the engine. Both LEDs have the voltage supplied from the body control module. The ignition mode switch sends the ignition mode switch status to the keyless entry control module and to the body control module. The keyless entry control module sends a redundant signal to the body control module with the ignition mode switch status.

The ignition mode switch contains two individual switches that provide redundant switch inputs to both the body control module and the keyless entry control module. The body control module supplies the ignition mode switch a constant B+ signal. The body control module monitors this signal to determine if the switch is released or pressed. When the ignition mode switch is not pressed, voltage on the signal circuit is pulled down through two resistors in the switch. When the ignition mode switch is pressed, voltage on the signal circuit is pulled down through only one resistor, changing the voltage seen at the body control module and indicating that the ignition mode switch is pressed. The keyless entry control module monitors voltage on the switch in the same manner as the body control module, but monitors the other individual switch in the ignition mode switch.

Reference Information

cardiagn.com

Schematic Reference

- **Power Distribution Schematics**
- **Power Moding Schematics**

Connector End View Reference

COMPONENT CONNECTOR END VIEWS - INDEX

Description and Operation

Power Mode Description and Operation (With BTM) **Power Mode Description and Operation (Without BTM)**

Electrical Information Reference

- **Circuit Testing**
- **Connector Repairs**
- **Testing for Intermittent Conditions and Poor Connections**
- **Wiring Repairs**

Scan Tool Reference

Control Module References for scan tool information

Circuit/System Verification

Without ATH/BTM

1. Ignition ON.
2. Verify the scan tool power mode parameters change when cycling the S39 Ignition Switch between OFF, ACCESSORY, ON, and CRANK.
   - **If the parameters do not change**

     Refer to Circuit/System Testing - Without ATH/BTM.

   - **If the parameters change**
3. All OK.

cardiagn.com

With ATH/BTM

1. Verify DTC B097B 61 is not set.
   - **If DTC B097B 61 is set**

     Test or replace the S38 Ignition Mode Switch.

   - **If DTC B097B 61 is not set**
2. Verify the green LED illuminates when the S38 Ignition Mode Switch is pressed and held for up to 10 s, with the brake pedal released.
   - **If the green LED does not illuminate**

     Refer to Circuit/System Testing - With ATH/BTM.

   - **If the green LED illuminates**
3. All OK.

Circuit/System Testing

Without ATH/BTM

1. Ignition OFF, disconnect the S39 Ignition Switch.
2. Verify a test lamp illuminates between the B+ circuit terminal 4 and ground.
   - **If the test lamp does not illuminate and the circuit fuse is good**
   1. Remove the test lamp.
   2. Test for less than 2 Ω in the B+ circuit end to end.
      - If 2 Ω or greater, repair the open/high resistance in the circuit.
      - If less than 2 Ω, verify the fuse is not open and there is voltage at the fuse.
   - **If the test lamp does not illuminate and the circuit fuse is open**
   1. Remove the test lamp.
   2. Test for infinite resistance between the B+ circuit and ground.
      - If less than infinite resistance, repair the short to ground on one of the following circuits listed below:

NOTE: **To help isolate a short to ground, it may be necessary to disconnect modules that are connected to the following circuits:**

cardiagn.com

-
- B+ circuit terminal 4
- Ignition circuit terminal 2
- Ignition circuit terminal 3
- Ignition circuit terminal 5

- **If the test lamp illuminates**

3. Connect the S39 Ignition Switch.
4. Ignition ON, disconnect the harness connector at the S39 Ignition Switch while the ignition is ON.
5. Test for 4.8-5.2 V between the 5 V reference circuit terminal 6 and ground.
   - **If less than 4.8 V**
   1. Connect the S39 Ignition Switch.
   2. Ignition OFF, disconnect the X3 harness connector at the K9 Body Control Module and S39 Ignition Switch.
   3. Test for infinite resistance between the 5 V reference circuit and ground.
      - If less than infinite resistance, repair the short to ground on the circuit.
      - If infinite resistance
   4. Test for less than 2 Ω in the 5 V reference circuit end to end.
      - If 2 Ω or greater, repair the open/high resistance in the circuit.
      - If less than 2 Ω, replace the K9 Body Control Module.
   - **If greater than 5.2 V**
   1. Connect the S39 Ignition Switch.
   2. Ignition OFF, disconnect the X3 harness connector at the K9 Body Control Module.
   3. Ignition ON, disconnect the harness connector at the S39 Ignition Switch while the ignition is ON.
   4. Test for less than 1 V between the 5 V reference circuit and ground.
      - If 1 V or greater, repair the short to voltage on the circuit.
      - If less than 1 V, replace the K9 Body Control Module.
   - **If between 4.8-5.2 V**
6. Connect the S39 Ignition Switch.
7. Ignition OFF.
8. Disconnect the X3 harness connector at the K9 Body Control Module, ignition ON.

cardiagn.com

9. Verify a test lamp illuminates between each of the ignition circuits listed below and ground:
    - Ignition circuit terminal 5
    - Ignition circuit terminal 6
    - **If the test lamp does not illuminate and the circuit fuse is good**
    1. Ignition OFF remove the test lamp.
    2. Test for less than 2 Ω in the ignition circuit end to end.
        - If 2 Ω or greater, repair the open/high resistance in the circuit.
        - If less than 2 Ω, verify the fuse is not open and there is voltage at the fuse.
    - **If the test lamp does not illuminate and the circuit fuse is open**
    1. Ignition OFF remove the test lamp.
    2. Test for infinite resistance between the ignition circuit and ground.
        - If less than infinite resistance, repair the short to ground on the circuit.
        - If infinite resistance, replace the K9 Body Control Module.
    - **If the test lamp illuminates**
10. Ignition OFF with the key in.
11. Verify a test lamp illuminates between ignition circuit terminal 15 and ground.
    - **If the test lamp does not illuminate and the circuit fuse is good**
    1. Ignition OFF with the key out, remove the test lamp.
    2. Test for less than 2 Ω in the ignition circuit end to end.
        - If 2 Ω or greater, repair the open/high resistance in the circuit.
        - If less than 2 Ω, verify the fuse is not open and there is voltage at the fuse.
    - **If the test lamp does not illuminate and the circuit fuse is open**
    1. Ignition OFF with the key out remove the test lamp.
    2. Test for infinite resistance between the ignition circuit terminal 15 and ground.
        - If less than infinite resistance, repair the short to ground on the circuit.
        - If infinite resistance, replace the K9 Body Control Module.
    - **If the test lamp illuminates**
12. Connect the X3 harness connector at the K9 Body Control Module, ignition ON.
13. Disconnect the S39 Ignition Switch.

cardiagn.com

14. Test for less than 1 V between each of the ignition circuits listed below and ground:
    - Ignition circuit terminal 2
    - Ignition circuit terminal 3
    - Ignition circuit terminal 5
    - **If 1 V or greater**

      Repair the short to voltage on the circuit.

    - **If less than 1 V**
15. Test or replace the S39 Ignition Switch.

With ATH/BTM

1. Ignition OFF and all vehicle systems OFF, disconnect the harness connector at the S38 Ignition Mode Switch. It may take up to 2 min for all vehicle systems to power down.
2. Test for less than 10 Ω between the ground circuit terminal 4 and ground.
    - **If 10 Ω or greater**
    1. Test for less than 2 Ω in the ground circuit end to end.
        - If 2 Ω or greater, repair the open/high resistance in the circuit.
        - If less than 2 Ω, repair the open/high resistance in the ground connection.
    - **If less than 10 Ω**
3. Test for less than 10 Ω between the low reference circuit terminal 7 and ground.
    - **If 10 Ω or greater**
    1. Ignition OFF.
    2. Test for less than 2 Ω in the ground circuit end to end.
        - If 2 Ω or greater, repair the open/high resistance in the circuit.
        - If less than 2 Ω, replace the K84 Keyless Entry Control Module.
    - **If less than 10 Ω**
4. Connect the S38 Ignition Mode Switch, ignition ON.
5. Disconnect the S38 Ignition Mode Switch.
6. Verify the scan tool K9 Body Control Module Push Button Ignition Switch Voltage parameter is greater than 11 V.

cardiagn.com

- **If 11 V or less**

1. Connect the S38 Ignition Mode Switch.
2. Ignition OFF, disconnect the X2 harness connector at the K9 Body Control Module and S38 Ignition Mode Switch.
3. Test for infinite resistance between the signal circuit terminal 6 and ground.
    - If less than infinite resistance, repair the short to ground on the circuit.
    - If infinite resistance, replace the K9 Body Control Module.

- **If greater than 11 V**

7. Install a 3 A fused jumper wire between the signal circuit terminal 6 and ground.
8. Verify the scan tool K9 Body Control Module Push Button Ignition Switch Voltage parameter is less than 1 V.

- **If 1 V or greater**

1. Disconnect the harness connector at the K9 Body Control Module.
2. Test for less than 1 V between the signal circuit and ground.
    - If 1 V or greater, repair the short to voltage on the circuit.
    - If less than 1 V
3. Test for less than 2 Ω in signal circuit end to end.
    - If 2 Ω or greater, repair the open/high resistance in the circuit.
    - If less than 2 Ω, replace the K9 Body Control Module.

- **If less than 1 V**

9. Connect the harness connector at the S38 Ignition Mode Switch.
10. Verify the scan tool K9 Body Control Module Push Button Ignition Switch Voltage parameter is 8-10 V, with the S38 Ignition Mode Switch released.

- **If not between 8-10 V**

  Test or replace the S38 Ignition Mode Switch.

- **If between 8-10 V**

11. Verify the scan tool K9 Body Control Module Push Button Ignition Switch Voltage parameter is 4-7 V, with the S38 Ignition Mode Switch pressed.

- **If not between 4-7 V**

  Test or replace the S38 Ignition Mode Switch.

cardiagn.com

- **If between 4-7 V**

12. Disconnect the X1 harness connector at the K84 Keyless Entry Control Module.
13. Test for infinite resistance between the signal circuit terminal 11 and ground.
    - **If less than infinite resistance**

      Repair the short to ground on the circuit.

    - **If infinite resistance**
14. Ignition ON.
15. Test for less than 1 V between the signal circuit terminal 11 and ground.
    - **If 1 V or greater**

      Repair the short to voltage on the circuit.

    - **If less than 1 V**
16. Test for 4.5-5.5 kΩ between the signal circuit terminal 11 and the low reference circuit terminal 12, with the S38 Ignition Mode Switch released.
    - **If not between 4.5-5.5 kΩ**
    1. Ignition OFF, disconnect the harness connector at the S38 Ignition Mode Switch.
    2. Test for less than 2 Ω in the signal circuit end to end.
        - If 2 Ω or greater, repair the open/high resistance in the circuit.
        - If less than 2 Ω, test or replace the S38 Ignition Mode Switch.
    - **If between 4.5-5.5 kΩ**
17. Test for 1-1.5 kΩ between the signal circuit terminal 11 and the low reference circuit terminal 12, with the S38 Ignition Mode Switch pressed.
    - **If not between 1-1.5 kΩ**

      Test or replace the S38 Ignition Mode Switch.

    - **If between 1-1.5 kΩ**
18. Replace the K84 Keyless Entry Control Module.

Component Testing

cardiagn.com

S39 Ignition Switch

1. Ignition OFF, disconnect the X1 harness connector at the S39 Ignition Switch.
2. Using the Resistance Test below, verify the resistance between the terminals listed below match for each S39 Ignition Switch Position.
   - **If any reading is other than specified**

     Replace the S39 Ignition Switch.

   - **If the readings match**
3. All OK.

Resistance Test

Ignition Switch Position	Terminals 1 and 2	Terminals 2 and 3	Terminals 2 and 4	Terminals 2 and 6	Terminals 4 and 6
OFF Key Out	Infinite	Infinite	Infinite	Infinite	Infinite
OFF Key In	Infinite	Infinite	<5.0 Ω	Infinite	Infinite
Accessory	Infinite	<5.0 Ω	Infinite	Infinite	Infinite
Run	<5.0 Ω	<5.0 Ω	Infinite	Infinite	<5.0 Ω
Start	<5.0 Ω	Infinite	Infinite	Infinite	1275-1325 Ω

S38 Ignition Mode Switch

1. Ignition OFF, disconnect the harness connector at the S38 Ignition Mode Switch.
2. With the S38 Ignition Mode Switch released, test for 4.5-5.5 kΩ between the terminals listed below:
   - Signal terminal 6 and ground terminal 4
   - Signal terminal 3 and low reference terminal 7
   - **If not between 4.5-5.5 kΩ**

     Replace the S38 Ignition Mode Switch

   - **If between 4.5-5.5 kΩ**
3. With the S38 Ignition Mode Switch pressed, test for 1-1.5 kΩ between the terminals listed below:
   - Signal terminal 6 and ground terminal 4
   - Signal terminal 3 and low reference terminal 7

cardiagn.com

- **If not between 1-1.5 kΩ**

  Replace the S38 Ignition Mode Switch.

- **If between 1-1.5 kΩ**

4. All OK.

Repair Instructions

Perform the **Diagnostic Repair Verification** after completing the repair.

- Refer to **Ignition and Start Switch Replacement (Without BTM)** **Ignition and Start Switch Replacement (Chevrolet / GMC With BTM)** **Ignition and Start Switch Replacement (Cadillac With BTM)**
- Refer to **Control Module References** for the appropriate control module replacement, programming and setup.

GENERAL ELECTRICAL DIAGNOSIS

Basic Knowledge Required

Without a basic knowledge of electricity, it will be difficult to use the diagnostic procedures contained in the service manual. You should understand the basic theory of electricity, and know the meaning of voltage (V), current (A), and resistance (Ω). You should also be able to read and understand a wiring diagram, as well as understand what happens in a circuit with an open or a shorted wire.

CHECKING AFTERMARKET ACCESSORIES

WARNING: Refer to SIR Warning .

Do not connect aftermarket accessories into the SIR circuits, all such circuits are indicated on circuit diagrams with the SIR symbol.

Always check for aftermarket accessories (non-OEM) as the first step in diagnosing electrical problems. If the vehicle is so equipped, disconnect the system to verify that these add-on accessories are not the cause of the problems.

Possible causes of vehicle problems related to aftermarket accessories include:

- Power feeds connected to points other than the battery
- Antenna location
- Transceiver wiring located too close to vehicle electronic modules or wiring

cardiagn.com

- Poor shielding or poor connectors on antenna feed line
- Check for recent service bulletins detailing installation guidelines for aftermarket accessories.

CIRCUIT TESTING

The Circuit Testing section contains the following diagnostic testing information. Using this information along with the diagnostic procedures will identify the cause of the electrical malfunction.

- Using Connector Test Adapters
- Probing Electrical Connectors
- Troubleshooting with a Digital Multimeter
- Troubleshooting with a Test Lamp
- Using Fused Jumper Wires
- Measuring Voltage
- Measuring Voltage Drop
- Measuring Frequency
- Testing Ground and Low Reference Circuits
- Testing for Continuity
- Testing for Short to Ground
- Testing for a Short to Voltage
- Testing for Intermittent Conditions and Poor Connections
- Inducing Intermittent Fault Conditions
- Testing for Electrical Intermittents
- Scan Tool Snapshot Procedure
- Circuit Protection - Fuses
- Circuit Protection - Circuit Breakers
- Circuit Protection - Fusible Links

USING CONNECTOR TEST ADAPTERS

Special Tools

cardiagn.com

- **EL-35616** Terminal Test Probe Kit
- **EL-38125-550** Terminal Release Tool Kit

For equivalent regional tools, refer to **Special Tools** .

CAUTION: **Do not insert test equipment probes (DMM etc.) into any connector or fuse block terminal. The diameter of the test probes will deform most terminals. A deformed terminal will cause a poor connection, which will result in a system failure. Always use the EL-35616 GM Approved Terminal Test Probe Kit in order to front probe terminals. Do not use paper clips or other substitutes to probe terminals.**

When using the EL-35616 GM Approved Terminal Test Probe Kit, ensure the terminal test adapter choice is the correct size for the connector terminal. Do not visually choose the terminal test adapter because some connector terminal cavities may appear larger than the actual terminal in the cavity. Using a larger terminal test adapter will damage the terminal. Refer to the EL-35616 GM Approved Terminal Test Probe Kit label on the inside of the EL-35616 GM Approved Terminal Test Probe Kit for the correct adapter along with the connector end view.

PROBING ELECTRICAL CONNECTORS

Special Tools

EL-35616 Terminal Test Probe Kit

For equivalent regional tools, refer to **Special Tools** .

NOTE: **Always be sure to reinstall the connector position assurance (CPA) and terminal position assurance (TPA) when reconnecting connectors or replacing terminals.**

Front probe

Disconnect the connector and probe the terminals from the mating side (front) of the connector.

CAUTION: **Refer to Test Probe Caution .**

cardiagn.com

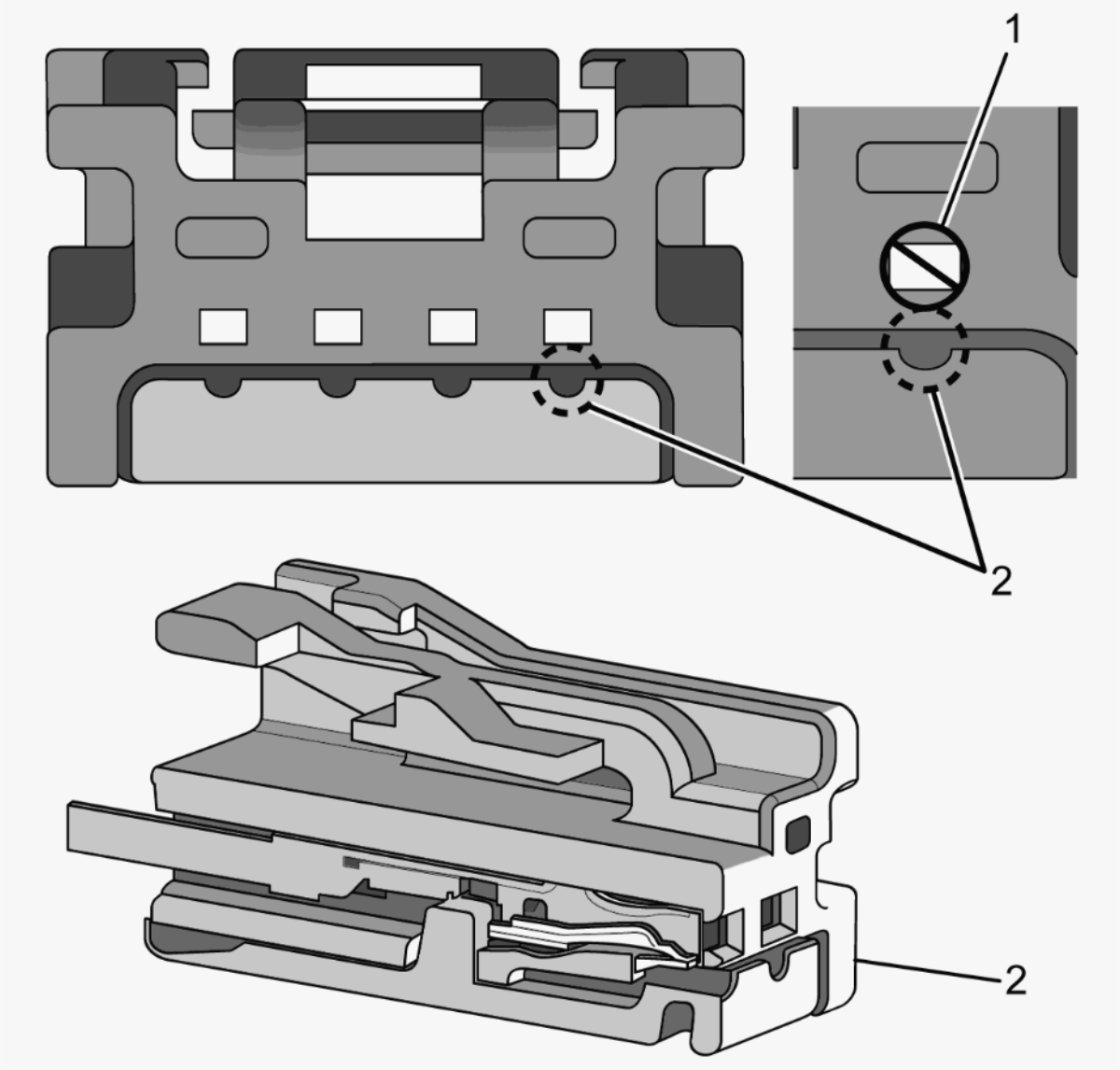

Fig. 1: Probing Terminal
Courtesy of GENERAL MOTORS COMPANY

NOTE: **Connectors with 0.50 terminals should not be probed within the female terminal (1). Damage may occur to the terminal and result in improper diagnosis. There is a test point on the connector (2) next to the terminal where testing should be performed.**

cardiagn.com

NOTE: **When probing female 0.64 terminals, it is important to use the correct adapter. There have been some revisions to the test adapter for 0.64 terminals. The proper adapter for 0.64 terminals is the J-35616-64B which has a gold terminal and a black wire between the base and tip. Failure to use the proper test adapter may result in damage to the terminal being tested and improper diagnosis.**

NOTE: **The proper adapter for probing the terminals for fuses, relays, or diodes in an electrical center is J-35616-35. Using any other tool or adapter may damage the terminal being tested.**

Refer to the following table as a guide in selecting the correct test adapter for front probing connectors:

Test Adapter	Description
J-35616-2A	150 Male Probe Adapter (gray)
J-35616-3	150 Female Probe Adapter (gray)
J-35616-4A	280 Male Probe Adapter (purple)
J-35616-5	280 Female Probe Adapter (purple)
J-35616-6	100W Male (round) Probe Adapter (brown)
J-35616-7	100W Female (round) Probe Adapter (brown)
J-35616-8	Weather Pack Male Probe Adapter (orange)
J-35616-9	Weather Pack Female Probe Adapter (orange)
J-35616-10	100W Male (round) Probe Adapter (green)
J-35616-11	100W Female (round) Probe Adapter (green)
J-35616-12	130 Male Probe Adapter (blue)
J-35616-13	130 Female Probe Adapter (blue)
J-35616-14	150 Male Probe Adapter (green)
J-35616-16	100 Male Probe Adapter (lt green)
J-35616-17	100 Female Probe Adapter (lt green)
J-35616-18	220 Male Probe Adapter (black)
J-35616-19	220 Female Probe Adapter (black)
J-35616-21	950 Female Probe Adapter (red)
J-35616-22	950 Male Probe Adapter (red)
J-35616-31	500 Male Probe Adapter (orange)
J-35616-32	500 Female Probe Adapter (orange)
J-35616-33	160/180 Male Probe Adapter (yellow)

cardiagn.com

Test Adapter	Description
J-35616-34	160/180 Female Probe Adapter (yellow)
J-35616-35	280 Male Probe Adapter (violet)
J-35616-40	480 Male Probe Adapter (dk blue)
J-35616-41	480 Female Probe Adapter (dk blue)
J-35616-42	630 Male Probe Adapter (red)
J-35616-43	630 Female Probe Adapter (red)
J-35616-44	800 Male Probe Adapter (yellow)
J-35616-45	800 Female Probe Adapter (yellow)
J-35616-54	280 Male (round) Probe Adapter (tan)
J-35616-55	280 Female (round) Probe Adapter (tan)
J-35616-64B	0.64 Male Probe Adapter (lt blue)
J-35616-65B	0.64 Female Probe Adapter (lt blue)
J-35616-66	150 Male (round) Probe Adapter (yellow)
J-35616-67	150 Female (round) Probe Adapter (yellow)

Backprobe

NOTE:

- **Backprobe connector terminals only when specifically required in diagnostic procedures.**
- **Do not backprobe a sealed (Weather PackÂ®) connector, less than a 280 series Metri-Pack connector, a Micro-Pack connector, or a flat wire connector.**
- **Backprobing can be a source of damage to connector terminals. Use care in order to avoid deforming the terminal, either by forcing the test probe too far into the cavity or by using too large of a test probe.**
- **After backprobing any connector, inspect for terminal damage. If terminal damage is suspected, test for proper terminal contact.**

Do not disconnect the connector and probe the terminals from the harness side (back) of the connector.

TROUBLESHOOTING WITH A DIGITAL MULTIMETER

Special Tools

EL-39200 Digital Multimeter (DMM)

cardiagn.com

For equivalent regional tools, refer to **Special Tools** .

CAUTION: Refer to Test Probe Caution .

Digital Multimeter (DMM) Basic Requirements

Service information is validated using digital multimeters that meet or exceed the following requirements. Using a multimeter that does not meet these basic requirements may give inaccurate readings which could lead to an incorrect diagnosis.

Display and Settings

1. Four digits displayed
2. Voltage, current, resistance, frequency, diode test settings, and min-max function
3. Display positive and negative values

Voltage

1. Have at least 10 MΩ input impedance
2. Test a DC voltage range of 0.1-1000 V.
3. Test an AC voltage range of 0.1-1000 V.

Current

1. Test a DC current range of 0.1 µA-10 A.
2. Test an AC current range of 0.1 µA-10 A.

Resistance

Test a resistance range of 0.1 Ω-40 MΩ and displays infinite for a value greater than 40 MΩ (O.L. (Over-load))

Frequency

Test for a frequency range of 0.5 Hz-199 k Hz

Diode Test

1. Apply at least 1 mA when performing the diode bias test

cardiagn.com

2. Display the break over voltage drop (0-3 V) of a forward biased diode
3. Display infinite (O.L. (Over-load)) when a diode is reverse biased

Min-Max Readings

1. Can update at a 25 ms sample rate
2. Saves and displays minimum and maximum values

NOTE: **Circuits which include any solid state control modules, such as the engine control module (ECM), should only be tested with a 10 MΩ or higher impedance digital multimeter such as the EL-39200.**

The DMM instruction manual is a good source of information and should be read thoroughly upon receipt of the DMM as well as kept on hand for future reference.

A DMM should be used instead of a test lamp in order to test for voltage in high impedance circuits. While a test lamp shows whether voltage is present if the impedance is low enough, a DMM indicates how much voltage is present. In other words, if there is not enough current, the test lamp will not illuminate even though voltage is present.

The ohmmeter function on a DMM shows how much resistance exists between 2 points along a circuit. Low resistance in a circuit means good continuity.

NOTE: **Disconnect the power feed from the suspect circuit when measuring resistance with a DMM. This prevents incorrect readings. DMMs apply such a small voltage to measure resistance that the presence of voltages can upset a resistance reading.**

Diodes and solid state components in a circuit can cause a DMM to display a false reading. To find out if a component is affecting a measurement take a reading once, then reverse the leads and take a second reading. If the readings differ the solid state component is affecting the measurement.

Following are examples of the various methods of connecting the DMM to the circuit to be tested:

- Probe both ends of the connector and either hold the leads in place while manipulating the connector or tape the leads to the harness for continuous monitoring while you perform other operations or test driving. Refer to **Probing Electrical Connectors**.
- Disconnect the harness at both ends of the suspected circuit where it connects either to a component or to other harnesses.
- If the system that is being diagnosed has a specified pinout or breakout box, it may be used in order to simplify connecting the DMM to the circuit or for testing multiple circuits quickly.

cardiagn.com

TROUBLESHOOTING WITH A TEST LAMP

Special Tools

EL-35616-210 Test Light - Probe Kit

NOTE: **Always use the proper replacement bulb (*6614F* Test Light Bulb (not LED)).**

For equivalent regional tools, refer to **Special Tools** .

CAUTION: **Refer to Test Probe Caution .**

A test lamp can simply and quickly test a low impedance circuit for voltage. A Digital Multimeter (DMM) should be used instead of a test lamp in order to test for voltage in high impedance circuits. While a test lamp shows whether voltage is present if the impedance is low enough, a DMM indicates how much voltage is present. In other words, if there is not enough current, the test lamp will not illuminate even though voltage is present.

The **EL-35616-210** kit is Micro-Pack compatible and includes a 12 V test lamp.

To properly operate this tool use the following procedures.

When testing for voltage:

1. Attach one lead to ground.
2. Touch the other lead to various points along the circuit where voltage should be present.
3. When the bulb illuminates, there is voltage at the point being tested.

When testing for ground:

1. Attach one lead to battery positive voltage.
2. Touch the other lead to various points along the circuit where ground should be present.
3. When the bulb illuminates, there is ground at the point being tested.

USING FUSED JUMPER WIRES

Special Tools

EL 35616-20F Fused Jumper Wire

cardiagn.com

For equivalent regional tools, refer to **Special Tools** .

WARNING: **This procedure should not be performed on high voltage circuits. Performing this procedure on high voltage circuits may result in serious injury or death.**

NOTE: **A fused jumper may not protect solid state components from being damaged.**

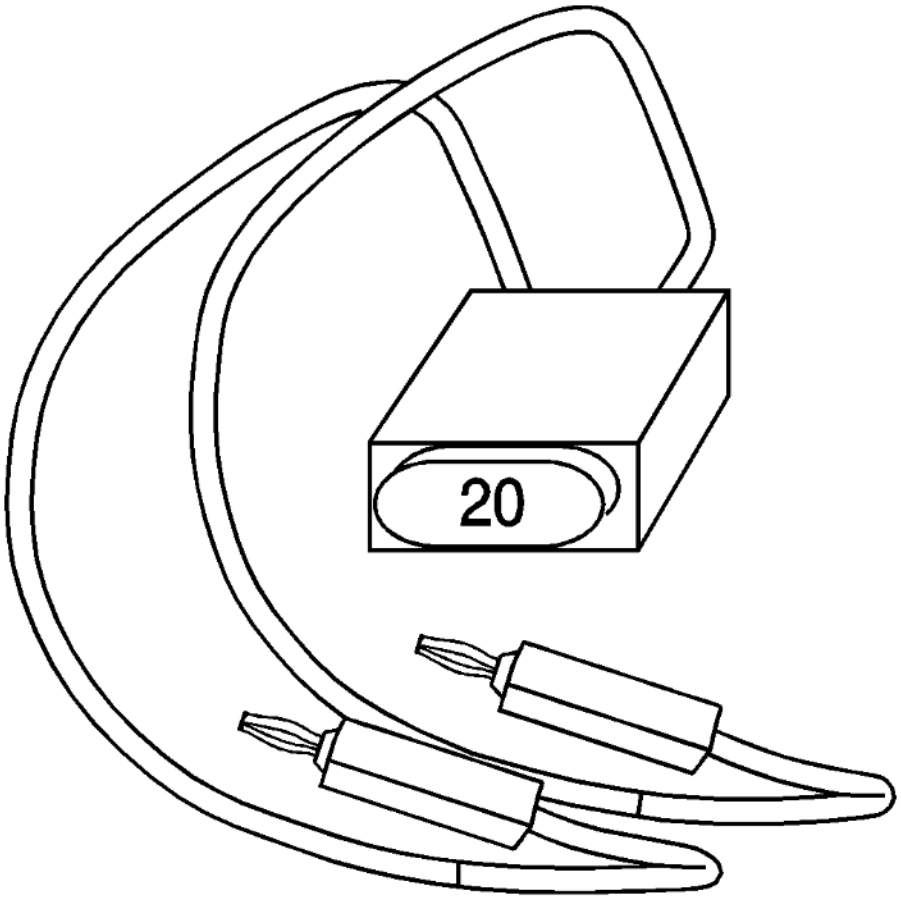

Fig. 2: Fused Jumper Wire

cardiagn.com

Courtesy of GENERAL MOTORS COMPANY

The **EL 35616-20F** Fused Jumper Wire includes banana jack connectors that provide adaptation to most connectors without damage. This fused jumper wire is supplied with a 20 A fuse which may not be suitable for some circuits. Do not use a fuse with a higher rating than the fuse that protects the circuit being tested.

MEASURING VOLTAGE

Special Tools

EL-39200 Digital Multimeter (DMM)

For equivalent regional tools, refer to **Special Tools** .

CAUTION: Refer to Test Probe Caution .

The following procedure measures the voltage at a selected point in a circuit.

1. Disconnect the electrical harness connector for the circuit being tested, if necessary.
2. Enable the circuit and/or system being tested. Use the following methods:
    - Turn ON the ignition, with the engine OFF.
    - Turn ON the engine.
    - Turn ON the circuit and/or system with a scan tool in Output Controls.
    - Turn ON the switch for the circuit and/or system being tested.
3. Select the V (AC) or V (DC) position on the Digital Multimeter (DMM).
4. Connect the positive lead of the DMM to the point of the circuit to be tested.
5. Connect the negative lead of the DMM to a good ground.
6. The DMM displays the voltage measured at that point.

MEASURING VOLTAGE DROP

Special Tools

EL-39200 Digital Multimeter (DMM)

cardiagn.com

For equivalent regional tools, refer to **Special Tools** .

CAUTION: Refer to Test Probe Caution .

The following procedure determines the difference in voltage potential between 2 points.

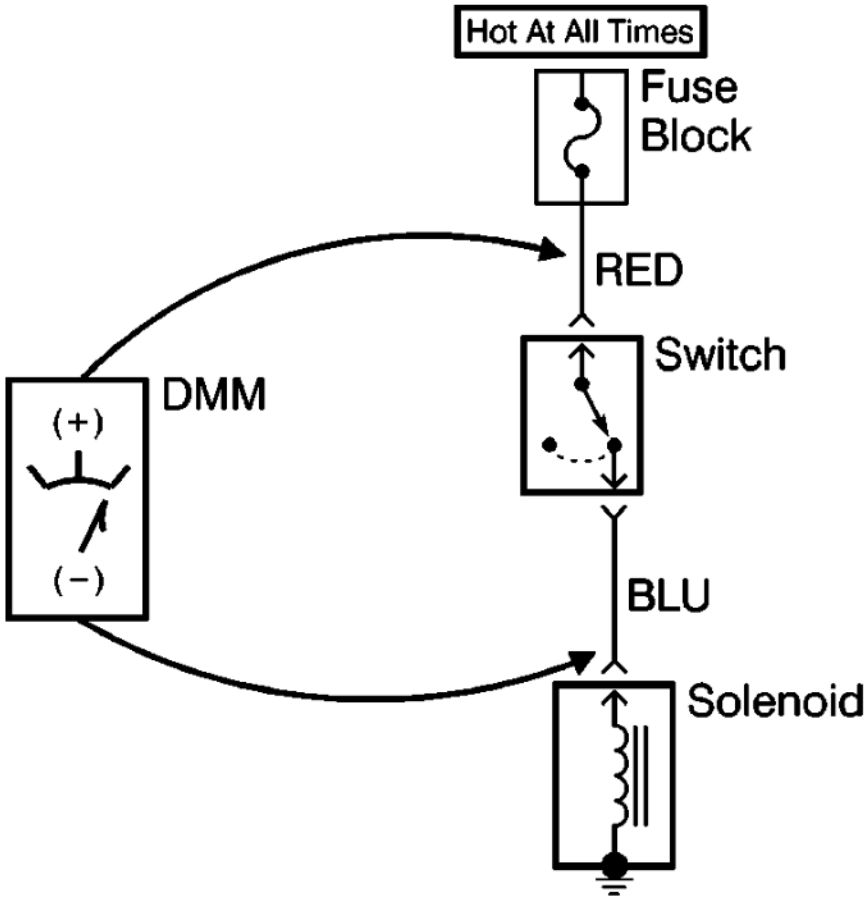

Fig. 3: Measuring Voltage Drop

cardiagn.com

Courtesy of GENERAL MOTORS COMPANY

1. Set the Digital Multimeter (DMM) to the V (DC) position.
2. Connect the positive lead of the DMM to one point of the circuit to be tested.
3. Connect the negative lead of the DMM to the other point of the circuit.
4. Operate the circuit.
5. The DMM displays the difference in voltage between the 2 points.

MEASURING FREQUENCY

Special Tools

EL-39200 Digital Multimeter (DMM)

For equivalent regional tools, refer to **Special Tools** .

CAUTION: Refer to Test Probe Caution .

The following procedure determines the frequency of a signal.

NOTE: Connecting the Digital Multimeter (DMM) to the circuit before pressing the Hz button will allow the DMM to autorange to an appropriate range.

1. Apply power to the circuit.
2. Set the DMM to the V (AC) position.
3. Connect the positive lead of the DMM to the circuit to be tested.
4. Connect the negative lead of the DMM to a good ground.
5. Set to Hz on the DMM.
6. The DMM will display the frequency measured.

TESTING GROUND AND LOW REFERENCE CIRCUITS

Because a test lamp can light with up to 200 Ω in a ground or low reference circuit they are not recommended to be used for this type of test. A low impedance test lamp can light and indicate the circuit is good when there is as much as 20-30 Ω present, while a high impedance test lamp can light with up to 200 Ω present in the circuit. This is why the Digital Multi-Meter (DMM) is used when validating a ground or low reference circuit

cardiagn.com

continuity.

When using the DMM there are many vehicle conditions that can affect the ground and low reference continuity testing. If these conditions are not met, a ground or low reference circuit test can fail on a good circuit. This may cause longer diagnosis time and incorrect component replacement.

Any current flow through a ground or low reference circuit, while being tested, will skew the DMM continuity reading, or display a reading higher than when there is no current flowing. Performing a ground or low reference circuit continuity test, in reference to the vehicles battery negative terminal, will have the highest risk of failing a good ground or low reference circuit test than any other ground reference point. The best ground test points would be a control module housing (if the control modules housing is metal and grounded), under dash metal frame work, engine block, or body ground studs (other than where the negative battery cable is attached).

A typical DMM ground or low reference circuit continuity reading can be as high as 100 Ω with the ignition ON, and drop to 15-25 Ω after the ignition is turned OFF. The reading will drop below 10 Ω after 30-40 seconds, then below 5 Ω after 60 seconds. Once the vehicle completely goes to sleep (generally 3-10 minutes) the reading will drop below 0.3 Ω.

The following list of conditions may need to be met to ensure a valid continuity reading on a ground or low reference circuit:

- Ignition OFF
- Key out of the ignition switch (when not equipped with keyless entry and remote start)
- Retained Accessory Power (RAP) OFF (open and close the driver door after ignition OFF)
- Battery charger set at a 2 A or less charge rate
- Scan tool not communicating with any vehicle control module (in some cases it may need to be disconnected from the DLC)
- All entry doors closed
- Headlamps OFF (auto headlamps disabled)
- Any delay lighting OFF
- HVAC after blow OFF
- Any accessory that can work when the ignition is OFF
- Wait up to 60 seconds (after all other listed conditions are met)

Activating the DOOR LOCK function with a key fob can greatly reduce the time to achieve a valid ground or low reference continuity test result.

TESTING FOR CONTINUITY

Special Tools

cardiagn.com

EL-39200 Digital Multimeter (DMM)

For equivalent regional tools, refer to **Special Tools** .

CAUTION: Refer to Test Probe Caution .

The following procedures verify good continuity in a circuit.

With a Digital Multimeter (DMM)

1. Set the DMM to the Ω position.
2. Disconnect the power feed (i.e. fuse, control module) from the suspect circuit.
3. Disconnect the load.
4. Select the MIN MAX function on the DMM.
5. Connect one lead of the DMM to one end of the circuit to be tested.
6. Connect the other lead of the DMM to the other end of the circuit.
7. If the DMM displays low or no resistance, the circuit has good continuity.

With a Test Lamp

NOTE: Only use the test lamp procedure on low impedance power and ground circuits.

1. Remove the power feed (i.e. fuse, control module) from the suspect circuit.
2. Disconnect the load.
3. Connect one lead of the test lamp to one end of the circuit to be tested.
4. Connect the other lead of the test lamp to battery positive voltage.
5. Connect the other end of the circuit to ground.
6. If the test lamp illuminates (full intensity), then the circuit has good continuity.

TESTING FOR SHORT TO GROUND

CAUTION: Refer to Test Probe Caution .

The following procedures test for a short to ground in a circuit.

cardiagn.com

With a Digital Multimeter (DMM)

1. Remove the power feed (i.e. fuse, control module) from the suspect circuit.
2. Disconnect the load.
3. Set the rotary dial of the DMM to the Ω position.
4. Connect one lead of the DMM to one end of the circuit to be tested.
5. Connect the other lead of the DMM to a good ground.
6. If the DMM does NOT display infinite resistance (OL), there is a short to ground in the circuit.

With a Test Lamp

1. Remove the power feed (i.e. fuse, control module) from the suspect circuit.
2. Disconnect the load.
3. Connect one lead of the test lamp to battery positive voltage.
4. Connect the other lead of the test lamp to one end of the circuit to be tested.
5. If the test lamp illuminates, there is a short to ground in the circuit.

Fuse Powering Several Loads

1. Review the system schematic and locate the fuse that is open.
2. Open the first connector or switch leading from the fuse to each load.
3. Connect a DMM across the fuse terminals (be sure that the fuse is powered).
    - When the DMM displays voltage the short is in the wiring leading to the first connector or switch.
    - If the DMM does not display voltage refer to the next step.
4. Close each connector or switch until the DMM displays voltage in order to find which circuit is shorted.

TESTING FOR A SHORT TO VOLTAGE

Special Tools

EL-39200 Digital Multimeter (DMM)

For equivalent regional tools, refer to **Special Tools** .

cardiagn.com

CAUTION: Refer to Test Probe Caution .

The following procedure tests for a short to voltage in a circuit.

1. Remove the power feed (i.e. fuse, control module) from the suspect circuit.
2. Disconnect the load.
3. Set the Digital Multimeter (DMM) to the V (DC) position.
4. Connect the positive lead of the DMM to one end of the circuit to be tested.
5. Connect the negative lead of the DMM to a good ground.
6. Turn ON the ignition and operate all accessories.
7. If the voltage measured is greater than 1 V, there is a short to voltage in the circuit.

TESTING FOR INTERMITTENT CONDITIONS AND POOR CONNECTIONS

Special Tools

EL-35616 Terminal Test Probe Kit

For equivalent regional tools, refer to **Special Tools** .

When the condition is not currently present, but is indicated in DTC history, the cause may be intermittent. An intermittent may also be the cause when there is a customer complaint, but the symptom cannot be duplicated. Refer to the Symptom Table of the system that is suspect of causing the condition before trying to locate an intermittent condition.

Most intermittent conditions are caused by faulty electrical connections or wiring. Inspect for the following items:

- Wiring broken inside the insulation
- Poor connection between the male and female terminal at a connector
- A terminal not seated all the way into the connector body
- Poor terminal to wire connection - Some conditions which fall under this description are poor crimps, poor solder joints, crimping over the wire insulation rather than the wire itself, and corrosion in the wire to terminal contact area, etc.
- Pierced or damaged insulation can allow moisture to enter the wiring causing corrosion. The conductor can corrode inside the insulation, with little visible evidence. Look for swollen and stiff sections of wire in the suspect circuits.
- Wiring which has been pinched, cut, or its insulation rubbed through may cause an intermittent open or short as the bare area touches other

cardiagn.com

wiring or parts of the vehicle.

- Wiring that comes in contact with hot or exhaust components
- Refer to **Inducing Intermittent Fault Conditions** in order to duplicate the conditions required, in order to verify the customer concern.
- Refer to **Testing for Electrical Intermittents** for test procedures to detect intermittent open, high resistance, short to ground, and short to voltage conditions.
- Refer to **Scan Tool Snapshot Procedure** for advanced intermittent diagnosis and Vehicle Data Recorder operation.

Testing for Terminal Fretting

Some intermittent conditions can be caused by wire terminal fretting corrosion. Fretting corrosion is a build-up of insulating, oxidized wear debris that can form when there is a small motion between electrical contacts. The oxidized wear debris can pile up enough at the electrical contact spots that the electrical resistance across the connection increases. Movement between the contacting surfaces as small as 10 to 100 microns can cause fretting. To put this in perspective, a sheet of paper is about 100 microns thick, so fretting motion is small and hard to see. Vibration and thermal expansion/contraction are the main sources that create fretting motion. Since vehicles vibrate and can experience large temperature swings, they are a good source for fretting motion. Tin, copper, nickel, and iron surfaces are all susceptible to fretting corrosion. Fretting corrosion can be difficult to see but it looks like small, dark smudges on the terminals contact surface.

To correct a fretting condition disconnect the suspect connector and add dielectric grease/lubricant (Nyogel 760G or equivalent, meeting GM specification 9986087) to both sides of the connector terminals. Then reconnect the connector and wipe away any excess lubricant. This will correct the additional terminal contact resistance due to the terminal fretting corrosion.

Testing for Proper Terminal Contact

It is important to test terminal contact at the component and any inline connectors before replacing a suspect component. Mating terminals must be inspected to ensure good terminal contact. A poor connection between the male and female terminal at a connector may be the result of contamination or deformation.

Contamination may be caused by the connector halves being improperly connected. A missing or damaged connector seal, damage to the connector itself, or exposing the terminals to moisture and dirt can also cause contamination. Contamination, usually in the underhood or underbody connectors, leads to terminal corrosion, causing an open circuit or intermittently open circuit.

Deformation is caused by probing the mating side of a connector terminal without the proper adapter. Always use the **EL-35616** kit when probing connectors. Other causes of terminal deformation are improperly joining the connector halves, or repeatedly separating and joining the connector halves. Deformation, usually to the female terminal contact tang, can result in poor terminal contact causing an open or intermittently open circuit.

Testing for Proper Terminal Contact in Bussed Electrical Centers

cardiagn.com

It is very important to use the correct test adapter when testing for proper terminal contact of fuses and relays in a bussed electrical center. Use the **EL-35616** kit to test for proper terminal contact. Failure to use the **EL-35616** kit can result in improper diagnosis of the bussed electrical center.

Follow the procedure below in order to test terminal contact:

1. Separate the connector halves.
2. Visually inspect the connector halves for contamination. Contamination may result in a white or green build-up within the connector body or between terminals. This causes high terminal resistance, intermittent contact, or an open circuit. An underhood or underbody connector that shows signs of contamination should be replaced in its entirety: terminals, seals, and connector body.
3. Using an equivalent male terminal/terminated lead, verify that the retention force is significantly different between a known good terminal and the suspect terminal. Replace the female terminal in question.

Flat Wire Connectors

There are no serviceable parts for flat wire connectors on the harness side or the component side.

Follow the procedure below in order to test terminal contact:

1. Remove the component in question.
2. Visually inspect each side of the connector for signs of contamination. Avoid touching either side of the connector as oil from your skin may be a source of contamination as well.
3. Visually inspect the terminal bearing surfaces of the flat wire circuits for splits, cracks, or other imperfections that could cause poor terminal contact. Visually inspect the component side connector to ensure that all of the terminals are uniform and free of damage or deformation.
4. Insert the appropriate adapter into the flat wire harness connector in order to test the circuit in question.

Control Module/Component Voltage and Grounds

Poor voltage or ground connections can cause widely varying symptoms.

- Test all control module voltage supply circuits. Many vehicles have multiple circuits supplying voltage to a control module. Other components in the system may have separate voltage supply circuits that may also need to be tested. Inspect connections at the module/component connectors, fuses, and any intermediate connections between the voltage source and the module/component. A test lamp or a DMM may indicate that voltage is present, but neither tests the ability of the circuit to carry sufficient current. Operate the component to test the ability of the circuit to carry sufficient current. Refer to **Circuit Testing**, and **Power Distribution Schematics** .
- Test all control module ground and system ground circuits. The control module may have multiple ground circuits. Other components in the system may have separate grounds that may also need to be tested. Inspect grounds for clean and tight connections at the grounding point.

cardiagn.com

Inspect the connections at the component and in splice packs, where applicable. Operate the component to test the ability of the circuit to carry sufficient current. Refer to **Circuit Testing**, and **Ground Distribution Schematics** .

Temperature Sensitivity

- An intermittent condition may occur when a component/connection reaches normal operating temperature. The condition may occur only when the component/connection is cold, or only when the component/connection is hot.
- Freeze Frame, Failure Records, Snapshot, or Vehicle Data Recorder data may help with this type of intermittent condition, where applicable.
- If the intermittent is related to heat, review the data for a relationship with the following:
  - High ambient temperatures
  - Underhood/engine generated heat
  - Circuit generated heat due to a poor connection, or high electrical load
  - Higher than normal load conditions, towing, etc.
- If the intermittent is related to cold, review the data for the following:
  - Low ambient temperatures - In extremely low temperatures, ice may form in a connection or component. Inspect for water intrusion.
  - The condition only occurs on a cold start.
  - The condition goes away when the vehicle warms up.
- Information from the customer may help to determine if the trouble follows a pattern that is temperature related.
- If temperature is suspected of causing an intermittent fault condition, attempt to duplicate the condition. Refer to **Inducing Intermittent Fault Conditions** in order to duplicate the conditions required.

Electromagnetic Interference and Electrical Noise

Some electrical components/circuits are sensitive to electromagnetic interference or other types of electrical noise. Inspect for the following conditions:

- A mis-routed harness that is too close to high voltage/high current devices such as secondary ignition components, motors, generator etc. - These components may induce electrical noise on a circuit that could interfere with normal circuit operation.
- Electrical system interference caused by a malfunctioning relay, or a control module driven solenoid or switch - These conditions can cause a sharp electrical surge. Normally, the condition will occur when the malfunctioning component is operating.
- Installation of non-factory or aftermarket add on accessories such as lights, 2-way radios, amplifiers, electric motors, remote starters, alarm systems, cell phones, etc. - These accessories may create interference in other circuits while operating and the interference would disappear when the accessory is not operating. Refer to **Checking Aftermarket Accessories**.

cardiagn.com

- Test for an open diode across the A/C compressor clutch and for other open diodes. Some relays may contain a clamping diode.
- The generator may be allowing AC noise into the electrical system.

Incorrect Control Module

- There are only a few situations where reprogramming a control module is appropriate:
  - A new service control module is installed.
  - A control module from another vehicle is installed.
  - Revised software/calibration files have been released for this vehicle.

NOTE: **DO NOT re-program the control module with the SAME software/calibration files that are already present in the control module. This is not an effective repair for any type of concern.**

- Verify that the control module contains the correct software/calibration. If incorrect programming is found, reprogram the control module with the most current software/calibration. Refer to **Control Module References** for replacement, setup, and programming.

INDUCING INTERMITTENT FAULT CONDITIONS

Special Tools

EL-25070 Heat Gun

For equivalent regional tools, refer to **Special Tools** .

WARNING: **Before working on any high voltage system, be sure to wear the following Personal Protection Equipment:**

- **Safety glasses with appropriate side shields when within 50 feet of the vehicle, either indoors or outdoors**
- **Certified and up-to-date Class "0" Insulation gloves rated at 1000V with leather protectors**
  - **Visually and functionally inspect the gloves before use.**
  - **Wear the Insulation gloves at all times when working with the high voltage battery assembly, whether the system is energized or not.**

Failure to follow the procedure exactly as written may result in serious injury or death.

Many intermittent open or shorted circuits are affected by harness/connector movement that is caused by vibration, engine torque, bumps/rough pavement, etc. In order to duplicate the customer's concern, it may be necessary to manipulate the wiring harness if the malfunction appears to be

cardiagn.com

vibration related. Manipulation of a circuit can consist of a wide variety of actions, including:

- Wiggling the harness
- Disconnecting a connector and reconnecting
- Stressing the mechanical connection of a connector
- Pulling on the harness or wire in order to identify a separation/break inside the insulation
- Relocating a harness or wires

All these actions should be performed with some goal in mind. For instance, with a scan tool connected, wiggling the wires may uncover a faulty input to the control module. The snapshot option would be appropriate here. Refer to **Scan Tool Snapshot Procedure**. Another option is, with the component commanded ON and OFF by the scan tool, to move related connectors and wiring and observe the component operation. With the engine running, move related connectors and wiring while monitoring engine operation. If harness or connector movement affects the data displayed, component/system operation, or engine operation, inspect and repair the harness/connections as necessary.

You may need to load the vehicle in order to duplicate the concern. This may require the use of weights, floor jacks, jackstands, frame machines, etc. In these cases you are attempting to duplicate the concern by manipulating the suspension or frame. This method is useful in finding harnesses that are too short and their connectors pull apart enough to cause a poor connection. A DMM set to the Min/Max mode and connected to the suspect circuit while testing can yield desirable results. Refer to **Testing for Electrical Intermittents**.

Certainly, using the senses of sight, smell, and hearing while manipulating the circuit can provide good results as well.

There may be instances where circuit manipulation alone will not meet the required criteria for the fault condition to appear. In such cases it may be necessary to expose the suspect circuit to other conditions while manipulating the harness. Such conditions would include high moisture conditions, along with exceptionally high or low temperatures. The following discusses how to expose the circuit to these kinds of conditions.

High Temperature Conditions

If the complaint tends to be heat related, you can simulate the condition using the **EL-25070** heat gun.

Using the heat gun, you can heat up the suspected area or component. Manipulate the harnesses under high temperature conditions while monitoring the scan tool or DMM to locate the fault condition.

The high temperature condition may be achieved simply by test driving the vehicle at normal operating temperature. If a heat gun is unavailable, consider this option to enhance your diagnosis. This option does not allow for the same control, however.

Low Temperature Conditions

cardiagn.com

Depending on the nature of the fault condition, placing a fan in front of the vehicle while the vehicle is in the shade can have the desired effect.

If this is unsuccessful, use local cooling treatments such as ice or a venturi type nozzle (one that provides hot or cold air). This type of tool is capable of producing air stream temperatures down to -18Â°C (0Â°F) from one end and +71Â°C (160Â°F) from the other. This is ideally suited for localized cooling needs. In addition, circuit cooling spray can be used to cool down a component or circuit.

Once the vehicle, component, or harness has been sufficiently cooled, manipulate the harness or components in an effort to duplicate the concern.

Duplicating Failure Conditions

- If none of the previous tests are successful, attempt to duplicate and/or capture the failure conditions.
- Freeze Frame/Failure Records data, where applicable, contains the conditions that were present when the DTC set.
    1. Review and record Freeze Frame/Failure Records data.
    2. Clear the DTCs using the scan tool.
    3. Turn the key to OFF and wait 15 seconds.
    4. Operate the vehicle under the same conditions that were noted in Freeze Frame/Failure Records data, as closely as possible. The vehicle must also be operating within the Conditions for Running the DTC. Refer to Conditions for Running the DTC in the supporting text if a DTC is being diagnosed.
    5. Monitor DTC Status for the DTC being tested. The scan tool will indicate Ran, when the enabling conditions have been satisfied long enough for the DTC to run. The scan tool will also indicate whether the DTC passed or failed.
- An alternate method is to drive the vehicle with the DMM connected to a suspected circuit. An abnormal reading on the DMM when the concern occurs, may help you locate the concern.

TESTING FOR ELECTRICAL INTERMITTENTS

Special Tools

EL-39200 Digital Multimeter

For equivalent regional tools, refer to **Special Tools** .

Perform the following procedures while wiggling the harness from side to side. Continue this at convenient points (about 6 inches apart) while watching the test equipment.

- **Testing for Short to Ground**
- **Testing for Continuity**

cardiagn.com

- **Testing for a Short to Voltage**

If the fault is not identified, perform the procedure below using the MIN MAX feature on the **EL-39200** digital multimeter (DMM). This feature allows you to manipulate the circuit without having to watch the DMM. The DMM will generate an audible tone when a change is detected.

NOTE: **The DMM must be used in order to perform the following procedure since the DMM can monitor current, resistance or voltage while recording the minimum (MIN), and maximum (MAX) values measured.**

1. Connect the DMM to both sides of a suspected connector (still connected), or from one end of a suspected circuit to the other. Refer to **Troubleshooting with a Digital Multimeter** for information on connecting the DMM to the circuit.
2. Set the DMM to the V (AC) or V (DC) position.
3. Select the voltage range feature of the DMM in order to select the desired voltage range.

   NOTE: **The 100 ms RECORD mode is the length of time an input must stay at a new value in order to record the full change.**

4. Select the MIN MAX function of the DMM. The DMM displays the 100 ms RECORD and emits an audible tone (beep).
5. Simulate the condition that is potentially causing the intermittent connection, either by wiggling the connections or the wiring, test driving, or performing other operations. Refer to **Inducing Intermittent Fault Conditions**.
6. Listen for the audible Min Max Alert which indicates that a new minimum or maximum value has been recorded.
7. Press the MIN MAX button until the MAX value is displayed and note the value.
8. Press the MIN MAX button until the MIN value is displayed and note the value.
9. Determine the difference between the MIN and MAX values.
   - If the variation between the recorded MIN and MAX voltage values is 1 V or greater an intermittent open or high resistance condition exists. Repair the condition as necessary.
   - If the variation between the recorded MIN and MAX voltage values is less than 1 V, an intermittent open or high resistance condition does not exist.

SCAN TOOL SNAPSHOT PROCEDURE

Reviewing Stored Data in Global Diagnostic System (GDS)

Overview

A snapshot is a recording of what a control module on the vehicle was receiving for information while the snapshot is being made. A snapshot is used

cardiagn.com

to analyze the data during the time a vehicle condition is current. In GDS 2 there is not a traditional snapshot as there has been in the past. GDS 2 saves all past VIN and diagnostic data for future viewing. GDS 2 automatically records data whenever the user views Module Diagnostics, Vehicle Diagnostics and/or Systems Diagnostics. Module Diagnostics includes DTC Data, Identification Information, Data Display, Control Functions and Configuration/Reset Functions. Vehicle Diagnostics includes Vehicle Wide DTCs. Systems Diagnostics includes Inspection/Maintenance Status and Inspection/Maintenance Information.

Reviewing Stored Data

The Review Stored Data function allows viewing and playing of previously recorded vehicle data. This information can be used in analysis of vehicle problems and detection of trigger error conditions. The graph function can be used to compare multiple parameters to see if a component is functioning properly. Recorded sessions can be selected for viewing by the following two methods:

- From the Home Page, click on Review Stored Data. In the Review Stored Data page, highlight a vehicle in the Sessions screen located in the upper pane and highlight the desired Stored Data in the lower pane, then click the Review button.
- The user can view stored data without ending a current on-vehicle diagnostic session by clicking the Vehicle Menu button (when active) or Back button until the Session Manager is displayed in the menu. This is used when a user is viewing live data and wants the quickest way to review the data. Click on the Session Manager button. Highlight the desired Stored Data in the lower pane and click the Review button.

Stored Data Review Selections

The following information can be selected in the tabs at the top of the screen:

- Graphical Data Display - Allows a detailed review of parameter data. The buttons on the right side modify the graph data
- Diagnostic Data Display - Displays incoming information from the file. The current value of the parameters is displayed on the screen.
- Line Graph - Allows selected locked parameters to be graphed with parameters overlaid for data comparison. The current value of the parameters is displayed on the screen. Use the buttons on the right side to modify the graph data.
- Bookmarks - If bookmarks are present, this displays the Type, Description and Time of automatic and manually generated bookmarks.
- System Information - Displays the GDS 2 Software Version and MDI Serial Number used when the session was recorded.
- Selected Vehicle Configuration - Displays vehicle identifiers, such as transmission type, for the vehicle selected on the Stored Data Review screen in the Sessions field.
- RPO - Displays vehicle build information.

Graphical Data Display

On the Graphical Data Display tab there are multiple selections at the top of the page. The selections available are:

cardiagn.com

- Create Report - Opens and internet browser page where a data display report can be printed or saved for future reference.
- Unit Switch - Toggles graph units between English and metric.
- Lock - When a parameter is selected, clicking the lock button locks a selected parameter for viewing in the Line Graph tab. In the Line Graph tab, locked parameters are isolated and overlaid for data comparison.
- Up Arrow - Click the up arrow to move a highlighted parameter up a position on the list.
- Down Arrow - Click the down arrow to move a highlighted parameter down a position on the list.
- Save As - This selection is available in the Graphical Data Display and Diagnostic Data Display tabs. This allows the user to export the graph data to a worksheet for in depth analysis and to timestamp data.

Review Stored Data Functions

To review the session there are buttons at the bottom of the window to control the cursor. From left to right the buttons are:

- Insert Bookmark - This button allows the user to insert bookmarks anywhere along the timeline. This provision allows the user to record notes regarding the inserted bookmark.
- Return Bookmark - This button moves the cursor to the previous bookmark.
- Back - This button moves the cursor back 1 frame.
- Timeline Slider Control - This allows the user to slide and select any position on the Timeline required.
- Forward - This button moves the cursor forward 1 frame.
- Forward Bookmark - This button moves the cursor forward 1 bookmark.
- Bookmarks - Allows the user to toggle bookmark visibility ON and OFF.

Graphical Preference Selections

The vertical side bar on the right side of the screen in the Graphical Data Display and Line Graph tabs toggles the Graphical Selection Panel from hidden to visible. The graphical preference selections available are:

- Reset - Resets the graph display back to the initial standard GDS 2 setting.
- Grid Line Toggle - This toggle reverses the current state of showing or removing grid lines.
- Hash Mark Toggle - This toggle reverses the current state of showing or removing data acquisition points or hash marks.
- Horizontal Graph Compression - Compresses the scale of the graph horizontally.
- Horizontal Graph Expansion - Expands the scale of the graph horizontally.
- Vertical Graph Compression - Compresses the scale of the graph vertically.

cardiagn.com

- Vertical Graph Expansion - Expands the scale of the graph vertically.
- Move Centerline of Graph Up - Moves the centerline of the graph up incrementally.
- Move Centerline of Graph Down - Moves the centerline of the graph down incrementally.

CIRCUIT PROTECTION - FUSES

Special Tools

EL-39200 Digital Multimeter (DMM)

For equivalent regional tools, refer to **Special Tools** .

cardiagn.com

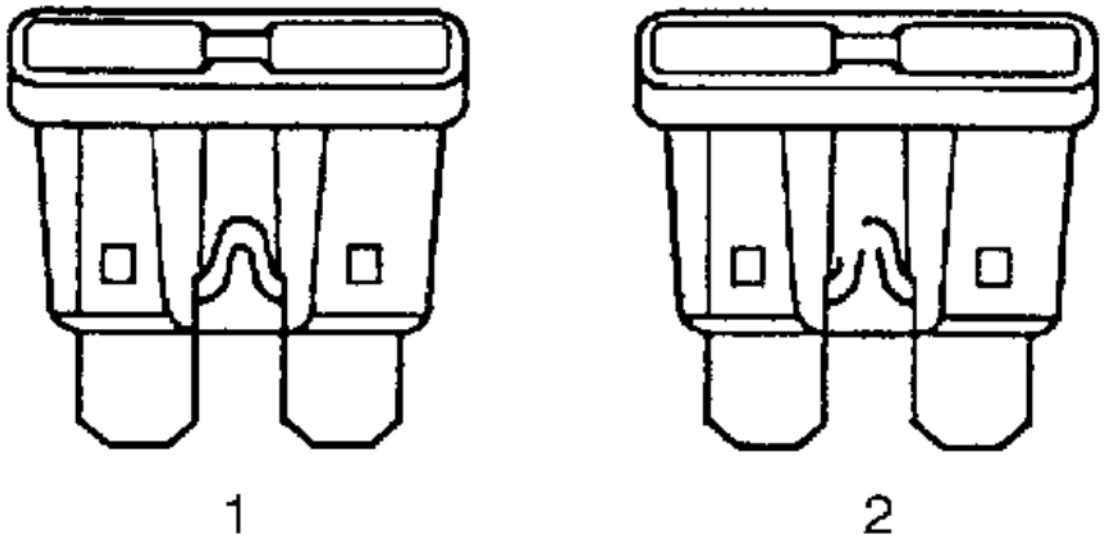

Fig. 4: Good Fuse And Open (Melted) Fuse
Courtesy of GENERAL MOTORS COMPANY

The fuse is the most common method of an automotive wiring circuit protection. Whenever there is an excessive amount of current flowing through a circuit the fusible element will melt and create an open or incomplete circuit. Fuses are a one time protection device and must be replaced each time

cardiagn.com

the circuit is overloaded. To determine if a fuse is open, remove the suspected fuse and examine if the element in the fuse is broken (2). If not broken (1), also check for continuity using a Digital Multimeter (DMM) or a continuity tester. If the element is broken or continuity is suspect, replace the fuse with one of equal current rating.

Fuse Types

Current Rating Amperes	Color
Auto Fuses, Mini Fuses	
2	Gray
3	Violet
5	Tan
7.5	Brown
10	Red
15	Blue
20	Yellow
25	White or Natural
30	Green
Maxi Fuses	
20	Yellow
30	Light Green
40	Orange or Amber
60	Blue
50	Red
J-Case Fuses	
20	Blue
30	Pink
40	Green
50	Red
60	Yellow
Midi Fuses	
80	Black
Mega Fuses	
100	Black

cardiagn.com

Current Rating Amperes	Color
150	Black
200	Black

CIRCUIT PROTECTION - CIRCUIT BREAKERS

A circuit breaker is a protective device that is designed to open the circuit when a current load is in excess of the rated breaker capacity. If there is a short or other type of overload condition in the circuit, the excessive current will open the circuit between the circuit breaker terminals. Two types of circuit breakers are used.

Circuit Breaker

This type opens when excessive current passes through it for a period of time. It closes again after a few seconds, and if the cause of the high current is still present, it will open again. The circuit breaker will continue to cycle open and closed until the condition causing the high current is removed.

Positive Temperature Coefficient (PTC) Circuit Breaker

This type greatly increases its resistance when excessive current passes through it. The excessive current heats the PTC device, as the device heats its resistance increases. Eventually the resistance gets so high that the circuit is effectively open. Unlike the ordinary circuit breaker the PTC unit will not reset until the circuit is opened, by removing the voltage from its terminals. Once the voltage is removed the circuit breaker will re-close within a second or 2.

CIRCUIT PROTECTION - FUSIBLE LINKS

Special Tools

EL-39200 Digital Multimeter (DMM)

For equivalent regional tools, refer to **Special Tools** .

NOTE: **When repairing a fusible link, fusible links cut longer than 225 mm (approximately 9 in) will not provide sufficient overload protection.**

Fusible link is wire designed to melt and break continuity when excessive current is applied. It is often located between or near the battery and starter or electrical center. Use a continuity tester or a Digital Multimeter (DMM) at each end of the wire containing the fusible link in order to determine if it is broken. If broken, it must be replaced with fusible link of the same gauge size.

cardiagn.com

IGNITION KEY CANNOT BE INSERTED, ROTATED, OR REMOVED FROM THE IGNITION LOCK CYLINDER

Step	Action	Yes	No
1	1. Ensure the transmission shift lever is in the PARK position and the steering column is NOT in the locked position. 2. Verify the ignition key cannot be removed from the ignition lock cylinder. Can the ignition key be removed from the ignition lock cylinder?	Go to **Step 4**	Go to **Step 2**
2	Verify the ignition key cannot be turned to the OFF position. Can the ignition key be turned to the OFF position?	Go to **Step 3**	Go to **Step 7**
3	Verify the ignition key cannot be removed from the ignition lock cylinder. Can the ignition key be removed from the ignition lock cylinder?	Go to **Step 7**	Go to **Step 9**
4	Verify the ignition key cannot be fully inserted and rotated without sticking in any position. Can the ignition key be fully inserted into the ignition lock cylinder and be rotated without sticking in any position?	Go to **Step 7**	Go to **Step 5**
5	Inspect for an incorrect, worn, or damaged ignition key. Is the ignition key incorrect, worn, or damaged?	Go to **Step 10**	Go to **Step 6**
6	Inspect the ignition key. Clean the entire middle groove area of the side milled ignition key. Can the cleaned key be fully inserted into the ignition lock cylinder and be rotated without sticking in any position?	Go to **Step 11**	Go to **Step 10**
7	Verify the adjustment of the shift control cable. Refer to **Range Selector Lever Cable Adjustment** . Can the ignition key be turned to the OFF position and be removed?	Go to **Step 12**	Go to **Step 8**
8	Attempt to override the ignition lock solenoid on the ignition and start switch housing. Can the ignition key be turned to the OFF position and be removed?	Go to **Step 9**	Go to **Step 11**
9	Inspect the electrical system for improper operation. Refer to **Testing for Intermittent Conditions and Poor Connections**. Can the ignition key be turned to the OFF position and be removed?	Go to **Step 12**	Go to **Step 11**
10	Replace the ignition key. Refer to **Programming Additional Keys (without BTM)** .	Go to **Step 12**	-

cardiagn.com

Step	Action	Yes	No
	Did you complete the repair?		
11	Replace the ignition lock cylinder. Refer to **Ignition Lock Cylinder Replacement** . Did you complete the repair?	Go to **Step 12**	-
12	Operate the system in order to verify the repair. Did you correct the condition?	System OK	-

WIRING REPAIRS

The Wiring Repairs section contains the following types of wiring repair information. Using these elements together will make wiring repair faster and easier:

- **Flat Wire Repairs**
- **GMLAN and Media Oriented Systems Transport (MOST) Wiring Repairs**
- **High Temperature Wiring Repairs**
- **Heated Oxygen Sensor Wiring Repairs**
- **Wire to Wire Repair**
- **Splicing Inline Harness Diodes**
- **Splicing Twisted or Shielded Cable**
- **SIR/SRS Wiring Repairs**

CONNECTOR REPAIRS

Connector Repairs contains a list of all connector repairs. The connector repairs are listed by the connector manufacturer and then by connector type. If the technician cannot identify the manufacturer of the connector, refer to Identifying Connectors below. Knowing the connector manufacturer will assist in finding the correct connector repair from the following list:

- **Connector Position Assurance Locks**
- **Terminal Position Assurance Locks**
- **AFL/EPC Connectors**
- **Bosch Connectors (BSK)** **Bosch Connectors (0.64)** **Bosch Connectors (2.8 JPT)** **Bosch Connectors (ECM)**
- **Delphi Connectors (Weather Pack)** **Delphi Connectors (Push To Seat)** **Delphi Connectors (Pull To Seat)** **Delphi Connectors (Micro-**

cardiagn.com

Pack 100W) Delphi Connectors (Micro.64) Delphi Connectors (12-Way) Delphi Connectors (Steering Gear)

- FCI Connectors (Lever Lock) FCI Connectors (SIR)
- FEP Connectors (Steering Gear)
- JST Connectors
- Kostal Connectors (Glow Plug Control Module) Kostal Connectors (Transmission)
- Molex Connectors (Lever Lock) Molex Connectors (SIR)
- Sumitomo Connectors
- Tyco/AMP Connectors (CM 42-Way) Tyco/AMP Connectors (Sensor) Tyco/AMP Connectors (0.25 Cap) Tyco/AMP Connectors (43-Way) Tyco/AMP Connectors (Door Module) Tyco/AMP Connectors (Seat) Tyco/AMP Connectors (102-Way Inline) Tyco/AMP Connectors (SIR)
- Yazaki Connectors (2-Way) Yazaki Connectors (16-Way)
- Repairing Connector Terminals (Terminated Lead Repair) Repairing Connector Terminals (Terminal Repair)

Connector Anatomy

cardiagn.com

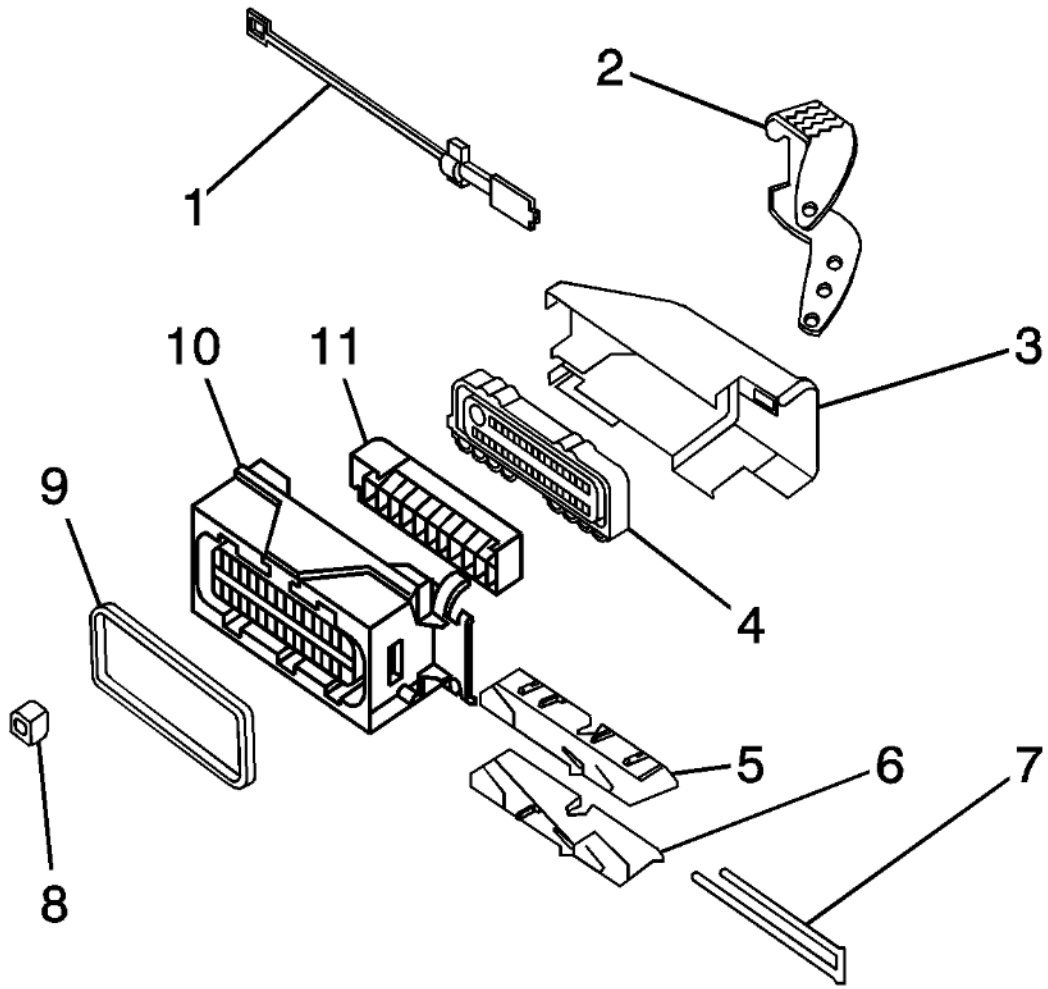

Fig. 5: Connector Anatomy
Courtesy of GENERAL MOTORS COMPANY

Callout	Component Name
1	Connector Positive Assurance (CPA)
2	Assist Lever
3	Wiredress Cover

cardiagn.com

Callout	Component Name
4	Seal Strain/Relief
5	Slide Left Hand
6	Slide Right Hand
7	Terminal Positive Assurance (TPA)
8	Terminal Positive Assurance (TPA)
9	Connector Seal
10	Connector Housing
11	Inner Connector

Identifying Connectors

Knowing the connector manufacturer is helpful when trying to locating the correct connector repair procedure. There are many different connector designs used on GM vehicles and it is sometimes difficult to identify the connector manufacturer. The information in this document should help with the identification of connector manufactures.

The following connector manufacturers make most of the connectors found in GM vehicles:

- AFL/EPC (Alcoa Fujikura Ltd./Engineered Plastics Components)
- Bosch
- Delphi
- FCI (Framatome Connectors International)
- JAE (Japan Aviation Electronics)
- JST (Japan Solderless Terminals)
- Kostal
- Molex
- Sumitomo
- Tyco/AMP
- Yazaki

Identifying the manufacturer of a connector is often difficult. When trying to determine the manufacturer of a connector, look for specific identifying marks that are unique to that connector supplier. Most of these identify marks are hard to find or see. Check the connector carefully and refer to the information below for pictures and descriptions of connector identification markings.

cardiagn.com

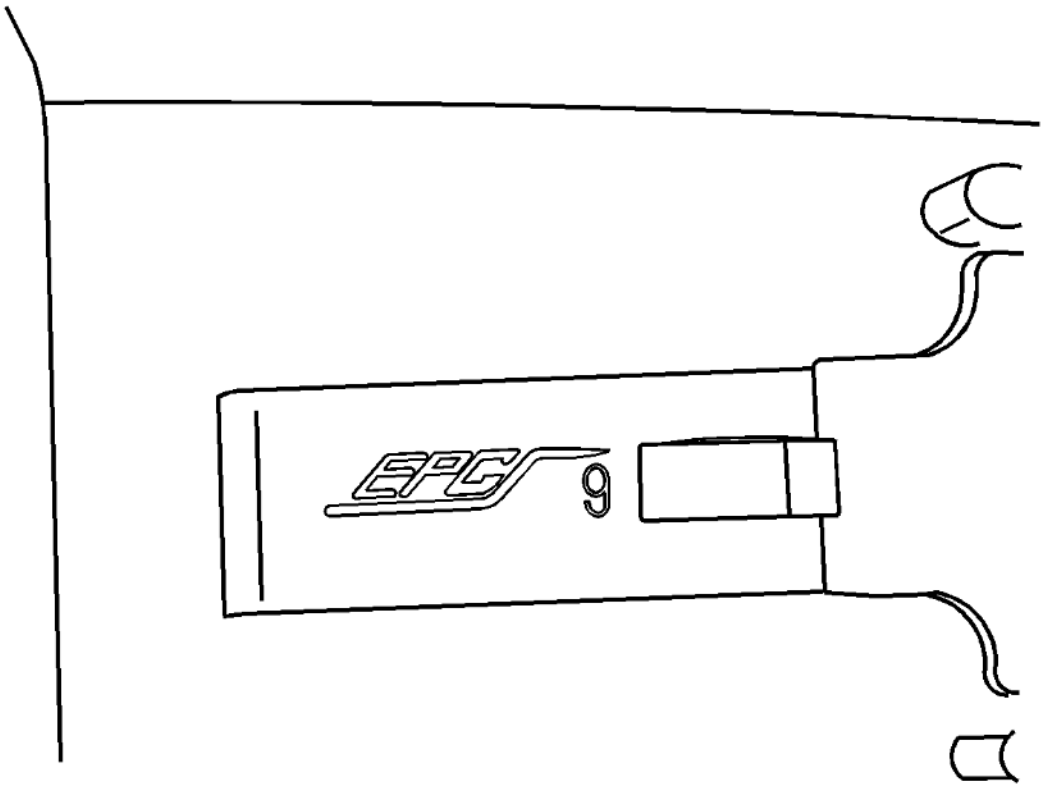

Fig. 6: EPC Identification On Connector Body
Courtesy of GENERAL MOTORS COMPANY

- Most of AFL's connectors have EPC on their connector body. Some of the smaller connectors will not have any markings on them.

cardiagn.com

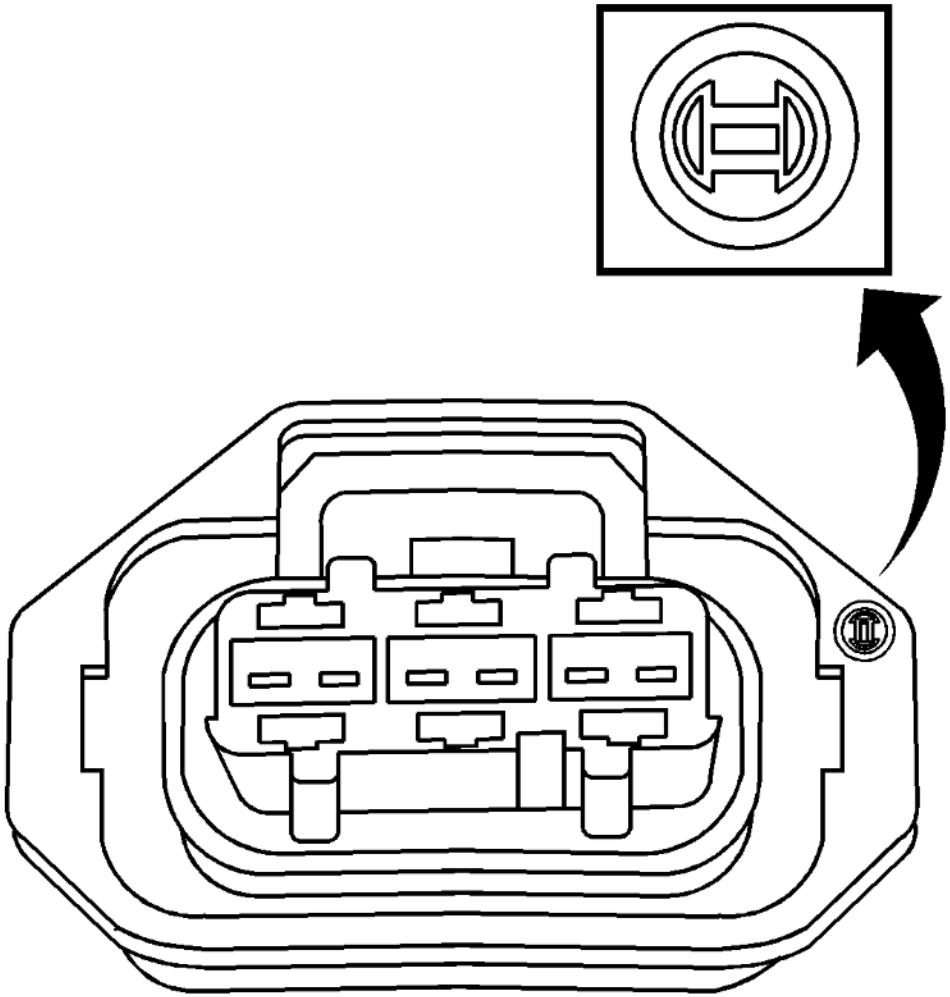

Fig. 7: Bosch Identification On Connector Body
Courtesy of GENERAL MOTORS COMPANY

- In some cases Bosch will actually be printed on the connector. If Bosch does not appear on the connector, look for the Bosch logo. The Bosch logo is a circle with a blunted arrow inside. This logo can appear anywhere on the connector and is often very small.

cardiagn.com

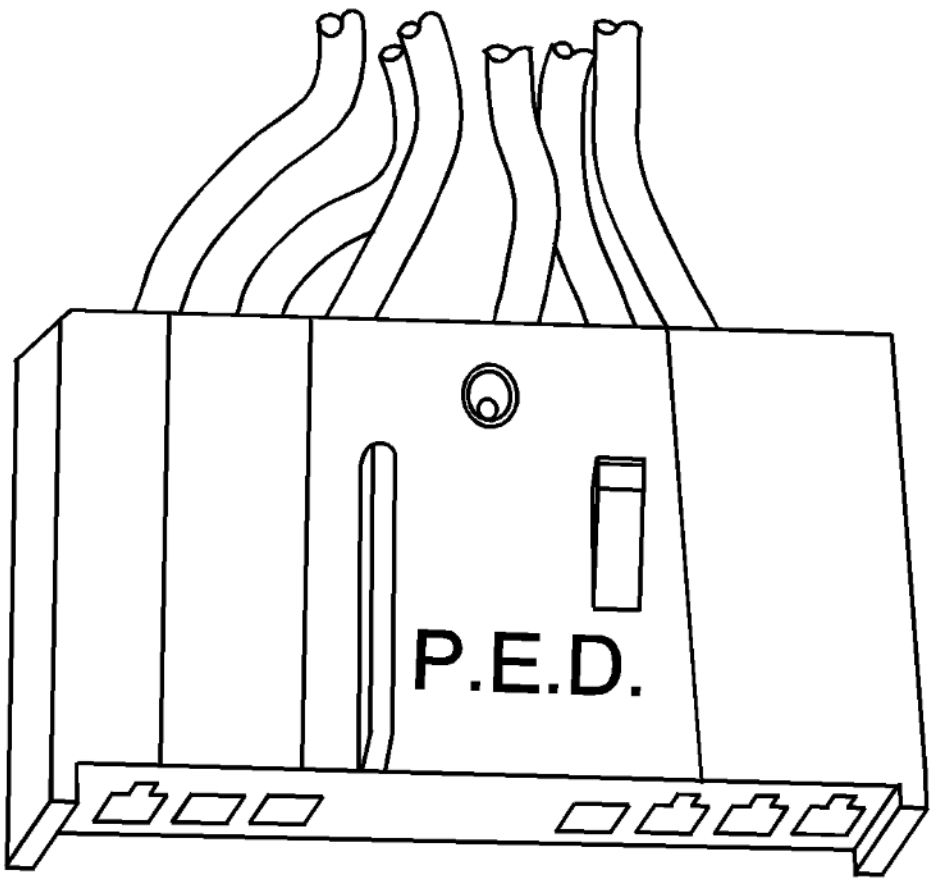

Fig. 8: PED Identification On Connector Body
Courtesy of GENERAL MOTORS COMPANY

- In some cases Delphi will actually be printed on the connector. If Delphi is not printed on the connector, look for PED. In both cases there is no specific orientation for Delphi or PED and they can appear anywhere on the connector.

cardiagn.com

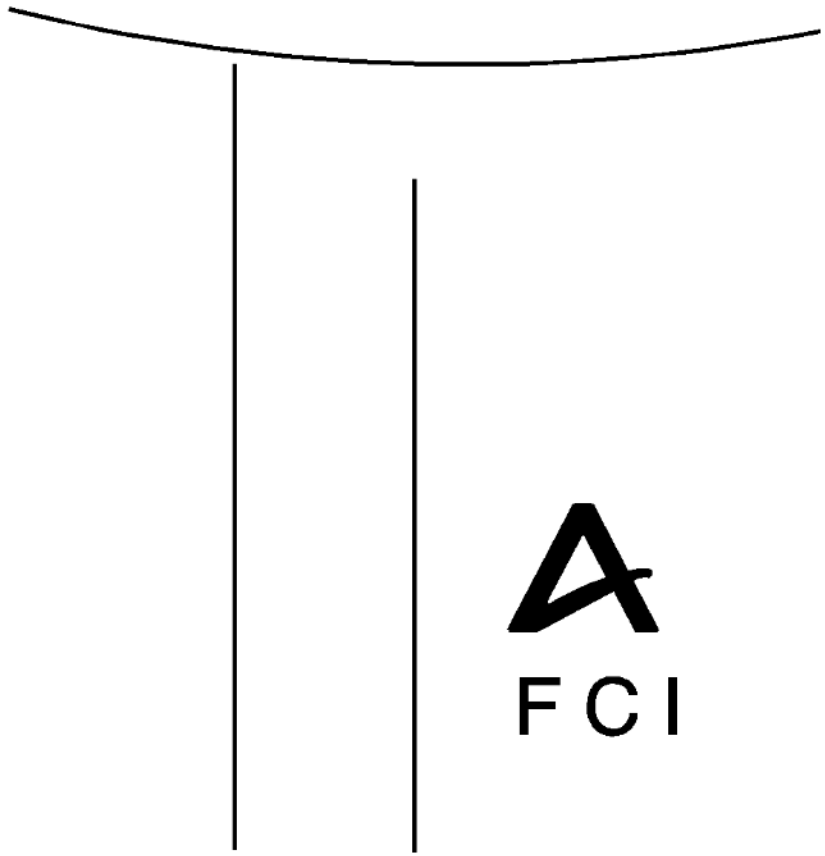

Fig. 9: FCI Identification On Connector Body
Courtesy of GENERAL MOTORS COMPANY

- FCI connectors may have the FCI logo on their connectors. The logo is the letters FCI with an "A" above it.

cardiagn.com

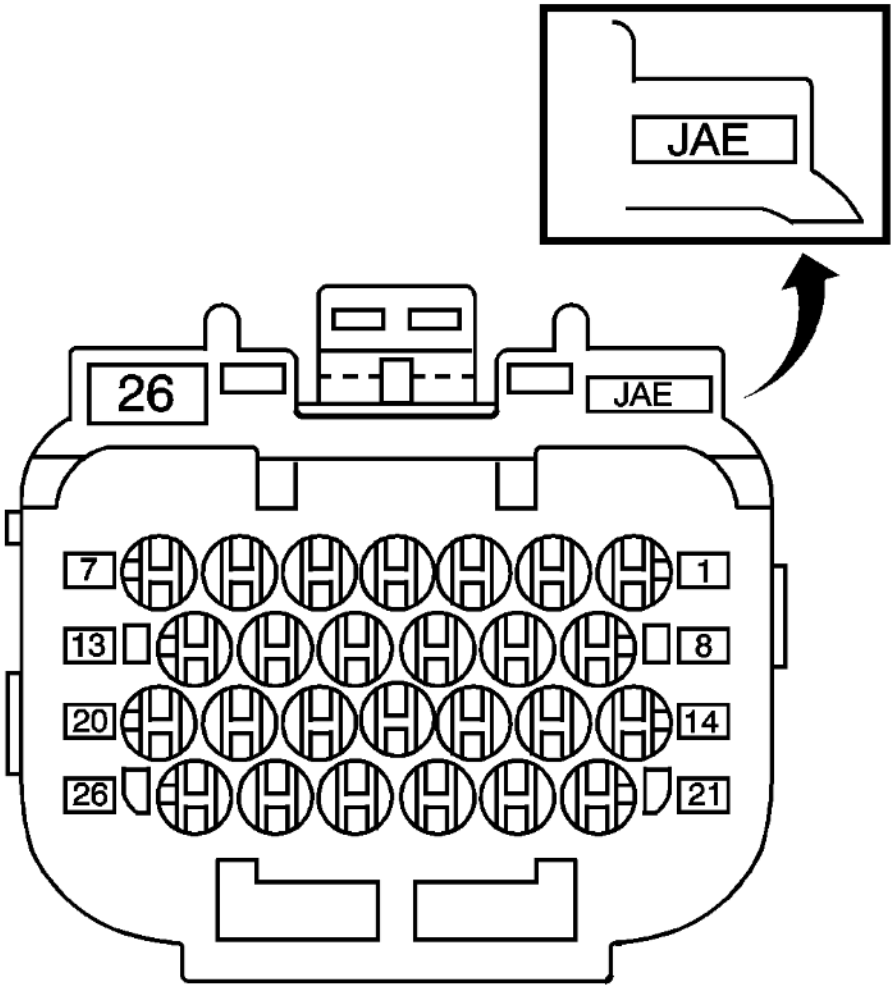

Fig. 10: JAE Identification On Connector Body
Courtesy of GENERAL MOTORS COMPANY

- JAE connector have JAE in small letters on their connectors.

cardiagn.com

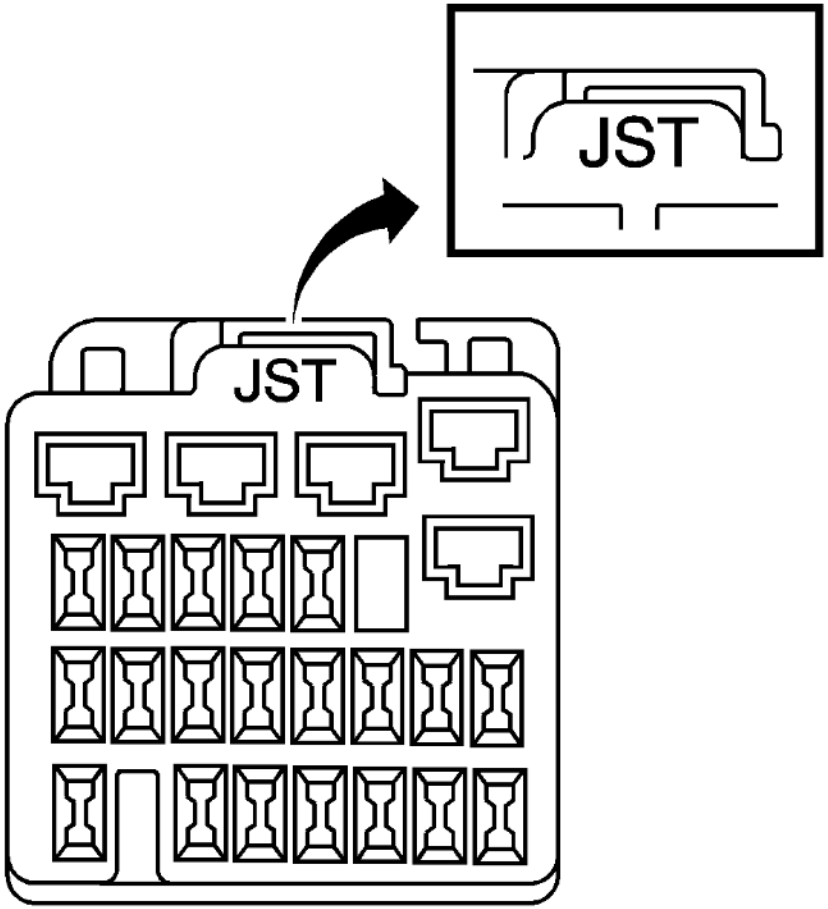

Fig. 11: JST Identification On Connector Body
Courtesy of GENERAL MOTORS COMPANY

- JST connectors have JST in small letters on their connectors, similar to that above. The location of the logo will vary with the connector size and style.

cardiagn.com

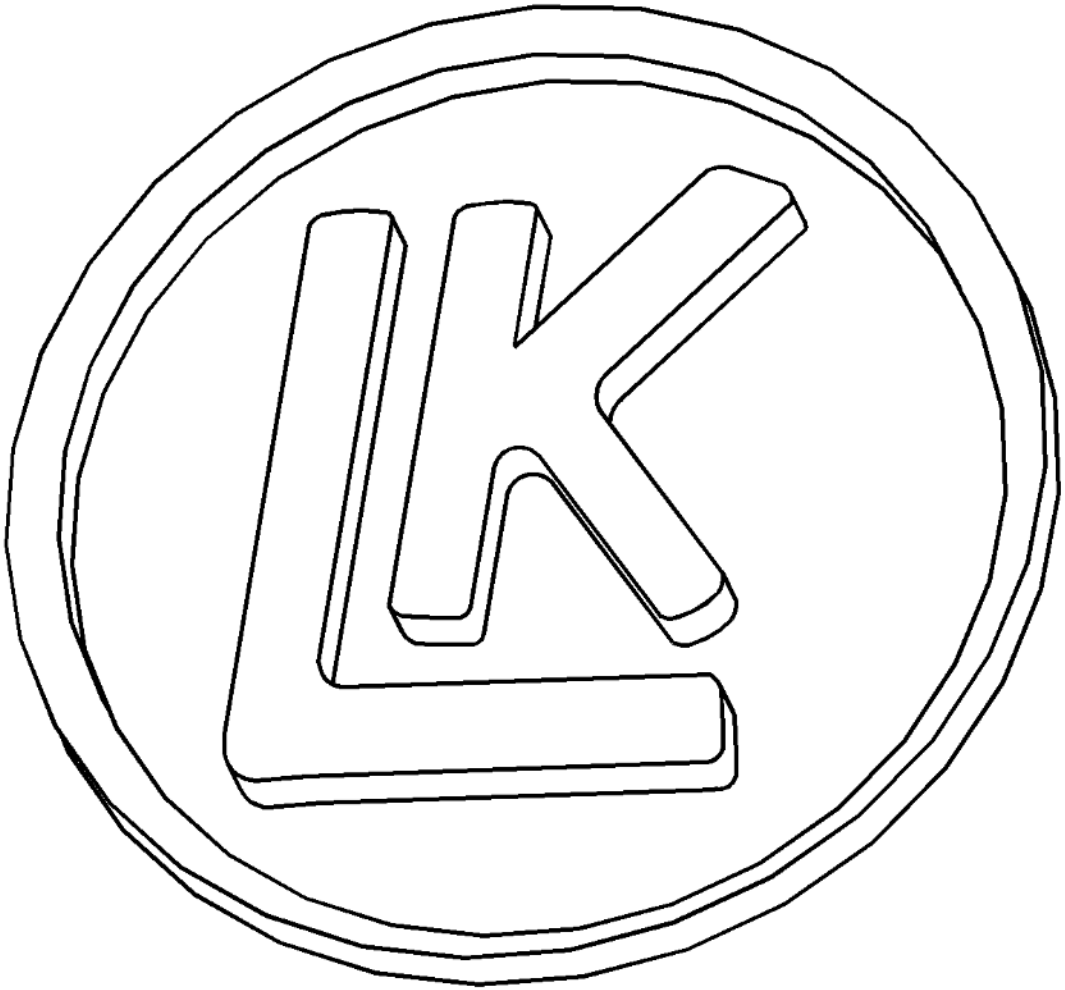

Fig. 12: Kostel Identification On Connector Body
Courtesy of GENERAL MOTORS COMPANY

- Kostel has an "LK" with a circle around it. These connector are usually used as a transmissions connection.

cardiagn.com

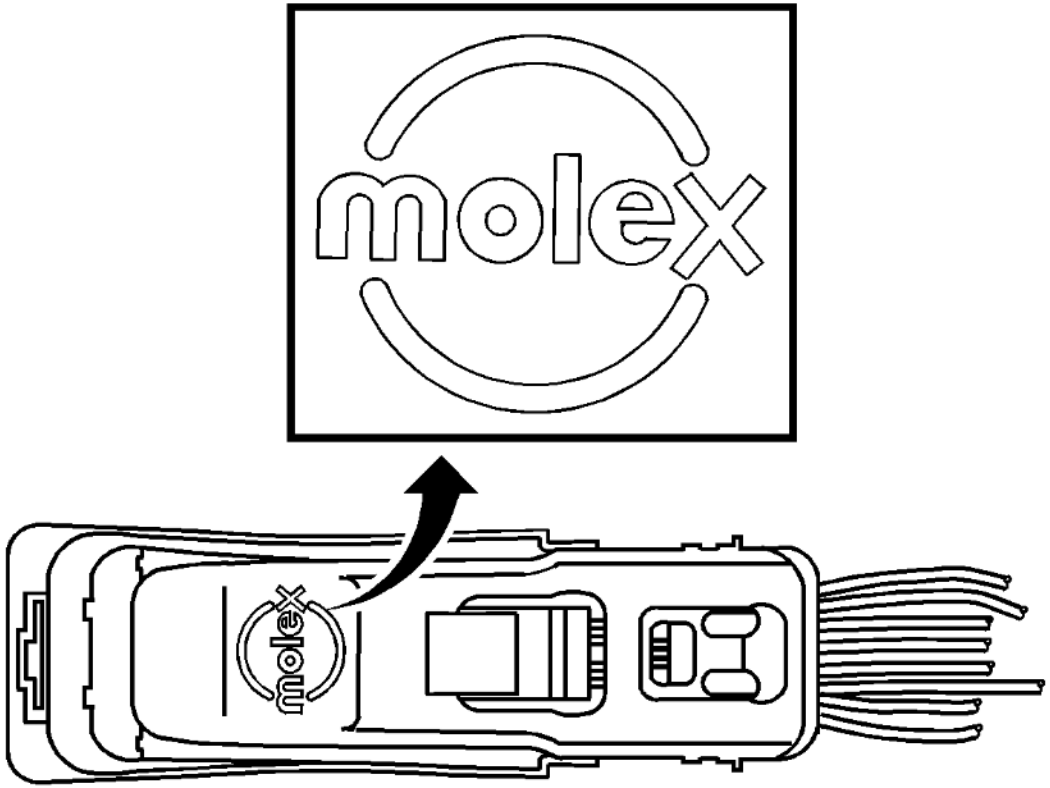

Fig. 13: Molex Identification On Connector Body
Courtesy of GENERAL MOTORS COMPANY

cardiagn.com

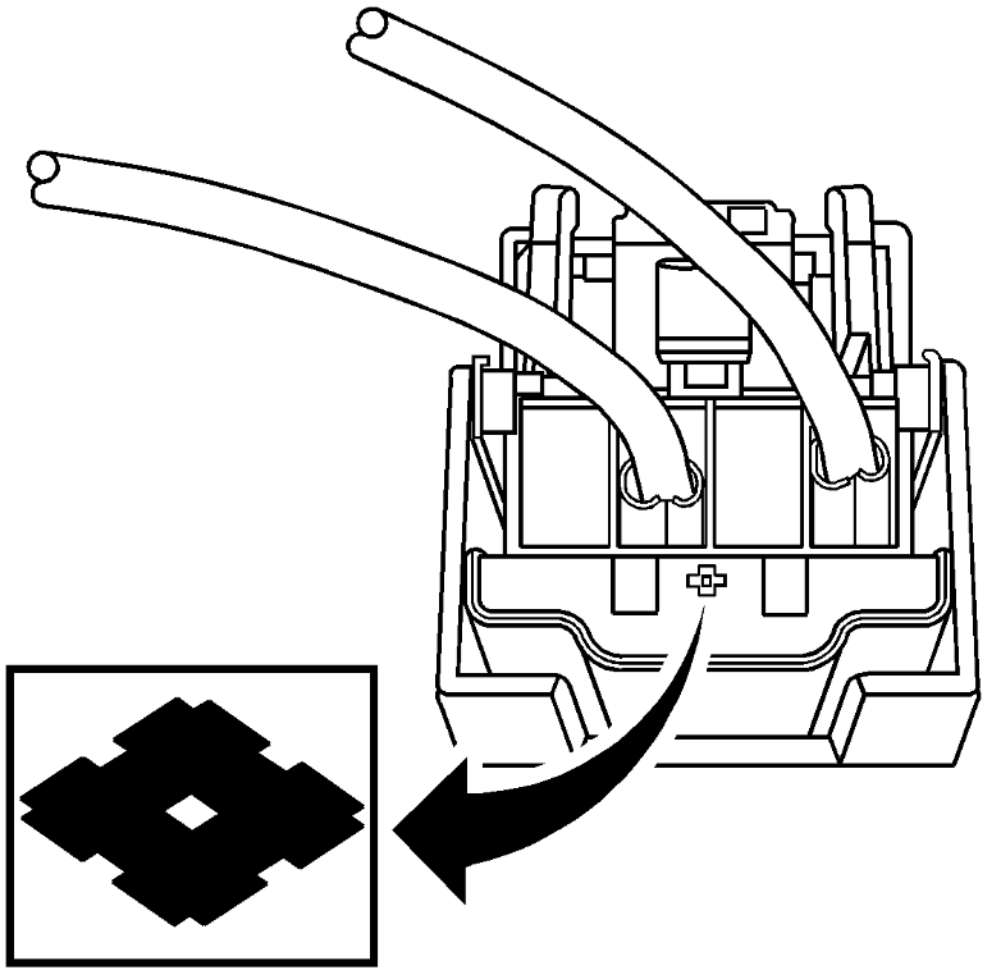

Fig. 14: Sumitomo Identification On Connector Body
Courtesy of GENERAL MOTORS COMPANY

- Most Molex connectors will have the Molex logo on the dresscover of the connector. In some cases the connectors may have MX followed by another letter. The third letter indicates where the connector was made. A connector with MXD is a Molex connector made in Detroit.

  Sumitomo has a unique symbol on their connector and possibly a part number. The symbol is similar to that of a diamond lying on its side, similar to that shown. The logo could appear anywhere but the most common place is at the wire side of the housing.

cardiagn.com

- Tyco/AMP has many different and unique connector designs. Some may or may not have identifiable marks on them.

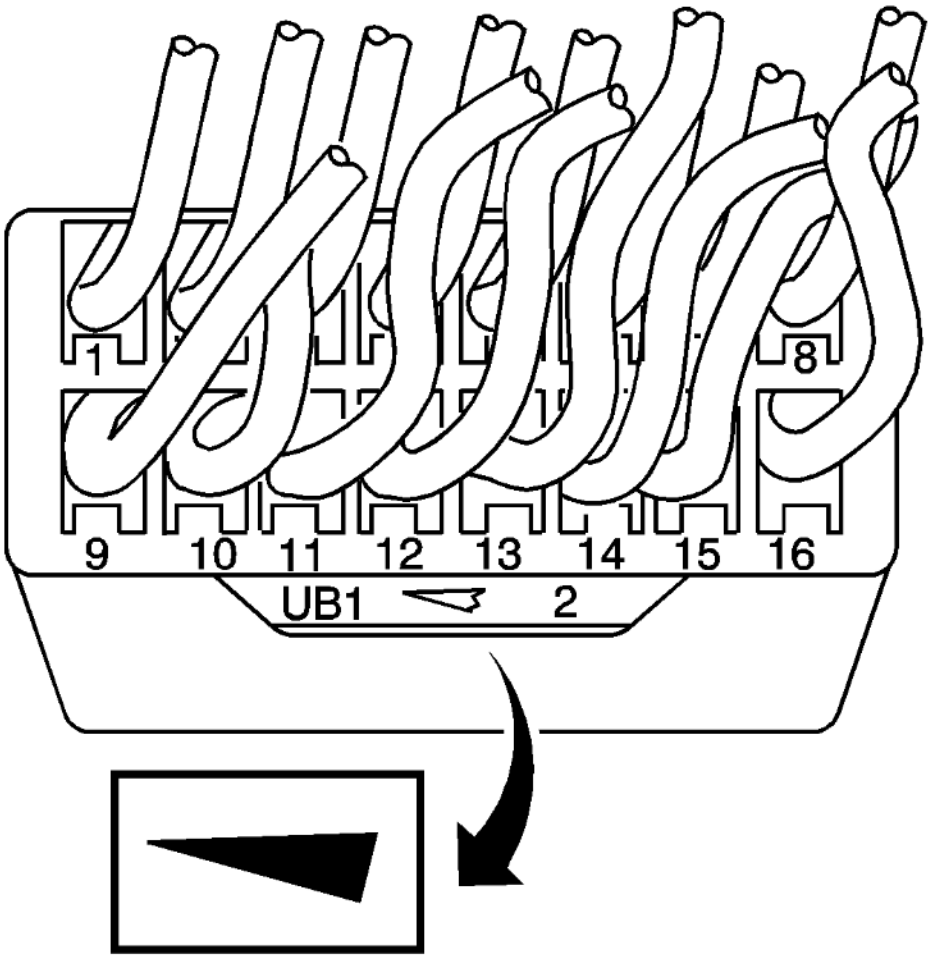

Fig. 15: Yazaki Identification On Connector Body
Courtesy of GENERAL MOTORS COMPANY

- Yazaki has a wedge or arrow shape, similar to that shown.

cardiagn.com

.

cardiagn.com

ACCESSORIES & EQUIPMENT

Wiring Systems and Power Management - Repair Instructions - Escalade, Suburban, Tahoe, Yukon

REPAIR INSTRUCTIONS

REPAIRING DAMAGED WIRE INSULATION

If the wire insulation has been chafed, or broken, enough to show the conductive portion of the wire, and the wire is not damaged, determine the length of insulation that needs to be repaired. If the repair is less than 280 mm (11 in), cut the wire within the damaged area. Then slide the appropriate heat shrink tubing (listed below) over the wire, and repair the wire by splicing the wires together. Refer to **Wire to Wire Repair**. Once the wire is spliced together slide heat shrink tubing over the damaged area and apply heat to seal the repaired wire.

If the wire is damaged, or the damaged area is larger than 280 mm (11 in), then replace the damaged wire by splicing in a new section of wire. Refer to **Wire to Wire Repair**.

Heat Shrink Tubing Selection

GM Part Number	Diameter		Description	Color	Length	
	Metric	English			Metric	English
12355010	3.2 mm	0.125 in	Tubing, Shrink 1/8	Black	305 mm	12 in
12355003	9.5 mm	0.375 in	Tubing, Shrink 3/8	Black	305 mm	12 in
12355005	12.7 mm	0.5 in	Tubing, Shrink 1/2	Black	305 mm	12 in
12355011	19.1 mm	0.75 in	Tubing, Shrink 3/4	Black	305 mm	12 in
12355008	25.4 mm	1.0 in	Tubing, Shrink 1.00	Black	305 mm	12 in

Wire Size Conversion

Metric Wire Sizes (mm 2)	AWG Sizes
0.13	26
0.21	24
0.35	22
0.5	20
0.8	18
1.31	16
2.09	14

cardiagn.com

Metric Wire Sizes (mm 2)	AWG Sizes
3.31	12
5.27	10
8.37	8
13.3	6
21.2	4
33.6	2
53.5	1/0

COAXIAL CABLE REPAIRS

The GM global coaxial (coax) cable repair strategy uses coaxial cables, connectors and jumpers to repair coaxial cables. The intent is to install the new service cable in vehicle, but removal of the old cable is not necessary. There are several repair scenarios:

- New cables, jumpers, and connector housing are required.
- Only new cables are required while it is possible to reuse the existing connector housing in vehicle. A jumper may or may not be needed.
- Only new connector housing are required, while it is possible to reuse the existing cable in the vehicle.
- A new cable would need to be installed from source to destination and by-pass the inline connector in some cases when an inline connector is unrepairable (Example: a cracked male end of a 1-way connector).

Coaxial Cable Kits

Four different kits will be available to repair coaxial cables. Components of each kit cannot be ordered separately from the kit.

- **Communication Interface Module Antenna Cable Kit** (Kit # 13581174) is used to repair Cellular coaxial cables. This kit uses RG58 low loss coaxial cables that are available in four lengths. The coaxial cables can be attached together in various lengths to closely match the length of the faulty/damaged coaxial cable.
- **Digital Radio and Vehicle Locator Antenna Coaxial Cable Kit** (Kit # 13581173) is used to repair XM and GPS coaxial cables. For vehicles that have a combined GPS and Cellular/OnStar signal on one cable, use Kit # 13581174. This kit uses RG316 low loss coaxial cables that are available in three lengths. The coaxial cables can be attached together in various lengths to closely match the length of the faulty/damaged coaxial cable.
- **Digital Radio, Mobile Telephone and Vehicle Locator Antenna Coaxial Cable Kit** (Kit # 19119056) is used with OnStar, XM, and GPS cables. This kit consists of jumpers and connectors. The jumpers are used to adapt different types of connectors together (to attach 2-way and 3-way connector onto the long 7, 5, and 3 foot cables). The connectors are used to replace existing connectors. The 1-way and 2-way

cardiagn.com

connectors in the kit are in water-blue color (different than what the vehicle is built with) and are non-keyed (universal fit). The 3-way connectors in the kit are in the same color as in the vehicle.

- **Communication Interface Module Antenna Cable Kit** (Kit # 22803854) is used for the OnStar module on some vehicles built before the 2011 model year.

Coaxial Cable Repair Kits

Repair Kit Name		Description
Communication Interface Module Antenna Cable Kit (Kit # 13581174)		RG58 coaxial cable with female/female connectors - 7ft/2.1m
		RG58 coaxial cable with female/male connectors - 5ft/1.5m
		RG58 coaxial cable with female/male connectors - 3.5ft/1.1m
		RG58 coaxial cable with female/male connectors - 3.5ft/1.1m
Digital Radio and Vehicle Locator Antenna Coaxial Cable Kit (Kit # 13581173)		RG316 coaxial cable with female/female connectors - 7ft/2.1m
		RG316 coaxial cable with female/male connectors - 5ft/1.5m
		RG316 coaxial cable with female/male connectors - 3.5ft/1.1m
Digital Radio, Mobile Telephone and Vehicle Locator Antenna Coaxial Cable Kit (Kit # 19119056)	3-way Gen 1 sub-kit	1-way to 3-way Gen 1 jumper for female connector - Part # 13581154 - 4in/10cm 1-way to 3-way Gen 1 jumper for male connector - Part # 19119052 - 4in/10cm
		White female connector
		White male connector
		Blue female connector
		Blue male connector
	3-way Gen 2 sub-kit	1-way to 3-way Gen 2 jumper for female connector - Part # 13581155 - 4in/10cm 1-way to 3-way Gen 2 jumper for male connector - Part # 19119058 - 4in/10cm

cardiagn.com

Repair Kit Name		Description
	2-way Gen 1 sub-kit	Tan female connector
		Tan male connector
		Gray female connector
		Gray male connector
		1-way to 2-way Gen 1 jumper for female connector - Part # 13581156 - 4in/10cm
		Water-blue female connector
	2-way Gen 2 sub-kit (wide)	1-way to 2-way Gen 2 jumper for female connector - Part # 13581157 - 4in/10cm
		1-way to 2-way Gen 2 jumper for male connector - Part # 13581158 - 4in/10cm
		Water-blue female connector
		Water-blue male connector
	2-way Gen 2 and 3 sub-kit (narrow)	1-way to 2-way Gen 2 and 3 jumper for female connector - Part # 13582468 - 4in/10cm
		Use the 1-way to 2-way Gen 2 jumper for female connector 19119058 - 4in/10cm from the 2-way Gen 2 sub-kit.
		Water-blue female connector
		Water-blue male connector
	Right-angle jumper with water-blue universal 1-way connector - 4in/10cm	
Communication Interface Module Antenna Cable Kit (Kit # 22803854)		1-way to mini UHF jumper - 4in/10cm

Connector Housing Repair Procedure

The connector housings (available in Digital Radio, Mobile Telephone and Vehicle Locator Antenna Coaxial Cable Kit) are available for 1-way housings, 2-way housings and 3-way housings. Determine the connector housing required:

1-way housing

No change to the service coaxial cable is necessary in order to install the new coaxial cable into the vehicle.

2-way housing

cardiagn.com

A 4-inch jumper is required.

1. Determine the appropriate generation (1, 2, or 3) and/or size (12.7 mm or 8 mm) of the 2-way housing that is in the vehicle.
2. Remove the faulty/damaged coaxial cable from the 2-way connector housing by removing the terminal position assurance (TPA) from the connector housing and then slide the cable out of the connector.

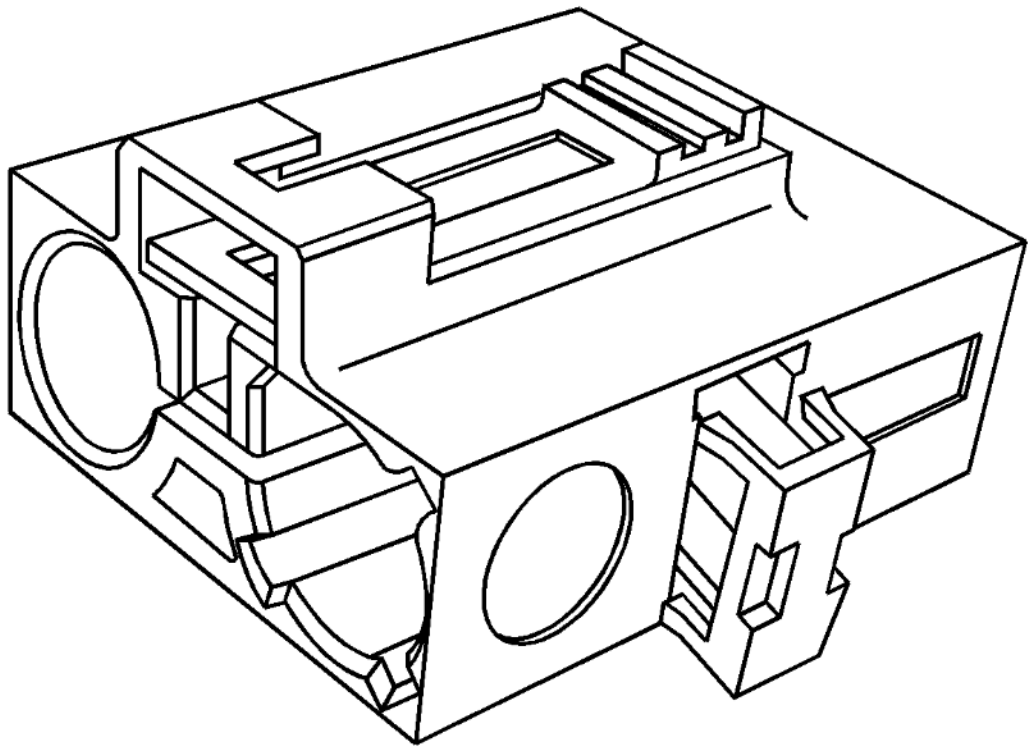

Fig. 1: Connector Housing
Courtesy of GENERAL MOTORS COMPANY

cardiagn.com

3. Install the new service coaxial cable into the vehicle. Use the 4-inch jumper for the appropriate 2-way connector housing to connect the new service coaxial cable to the connector housing.
4. If the issue is found to be the connector housing and not cable, a new connector housing may be installed while reusing all other components.

3-way housing

A 4-inch jumper is required.

1. Determine the appropriate generation (1 or 2) and keyed 3-way connector housing based on the connector housing color.
2. Note the locations of each of the cables in 3-way housing, as it is important for new cables be placed in the appropriate terminal location in the new connector. The connector housing colors are not interchangeable.
3. Remove the faulty/damaged coaxial cable from the 3-way connector housing by using a pair of side/diagonal cutters to nip and break away the housing.

cardiagn.com

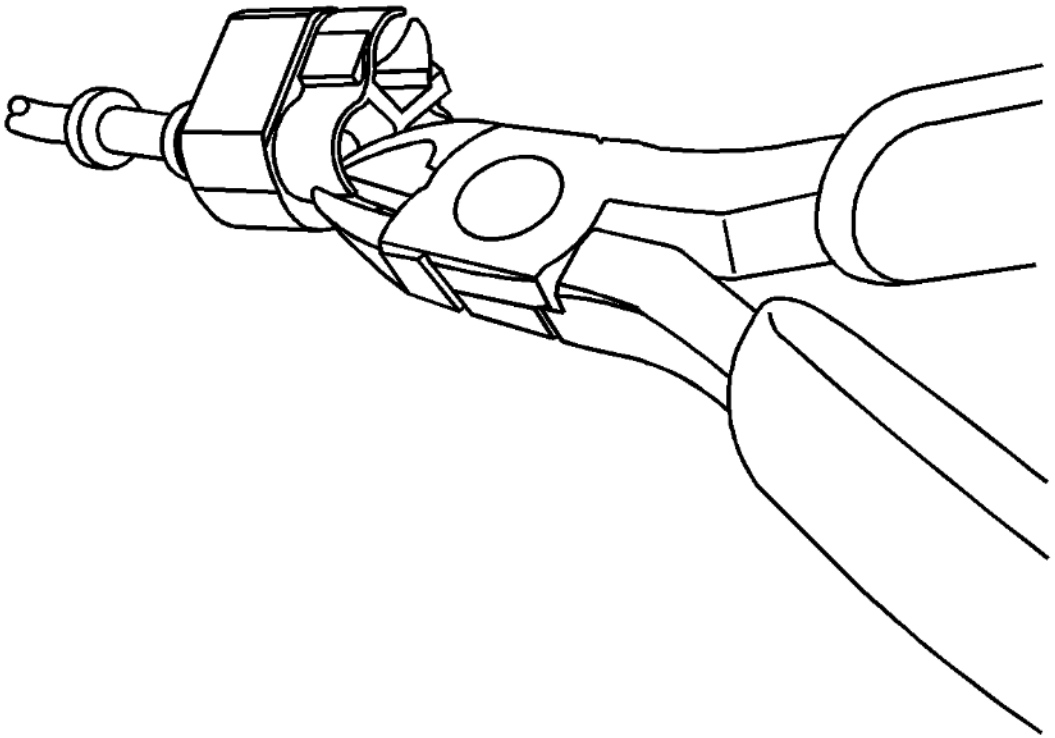

Fig. 2: Using Side/Diagonal Cutters To Nip And Break Away Connector Housing
Courtesy of GENERAL MOTORS COMPANY

4. Use caution not to damage the conductive ends of the coaxial cables inside the connector housing. Do not bend or force the terminal out or it could be damaged.

cardiagn.com

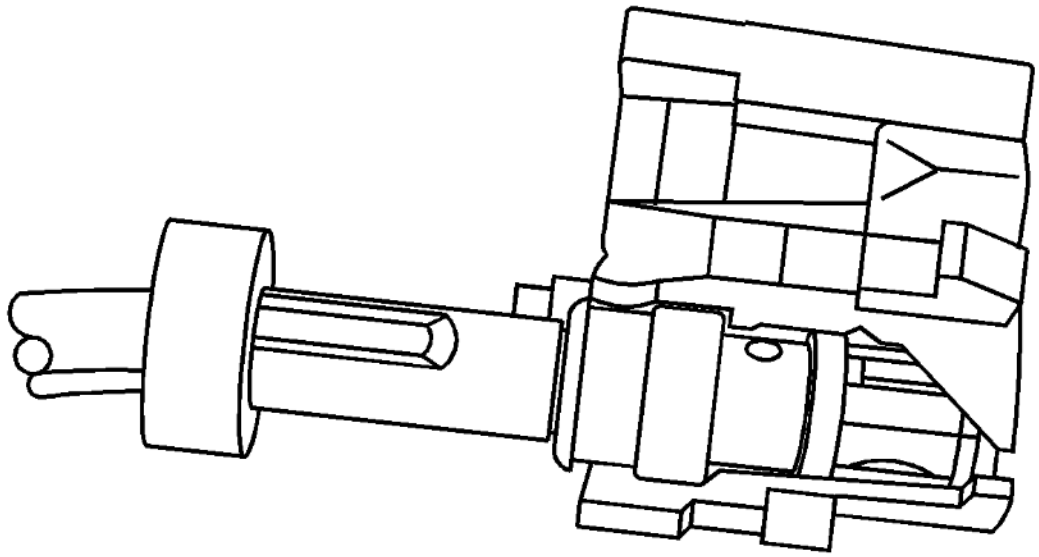

Fig. 3: Connecting New Service Coaxial Cable To New 3-Way Connector Housing
Courtesy of GENERAL MOTORS COMPANY

5. Install the new service coaxial cable into the vehicle. Use the 4-inch jumper for the appropriate color 3-way connector housing to connect the new service coaxial cable to the new 3-way connector housing.
6. If the issue is found to be the connector housing and not cable, a new connector housing may be installed while reusing all other components.

Coaxial Cable Repair Procedure

cardiagn.com

1. Identify the faulty/damaged coaxial cable.
2. Disconnect the faulty/damaged coaxial cable and leave it in the vehicle.
3. Identify the type of coaxial cable to be replaced and match up with the appropriate pieces to repair the damaged coaxial cable. Match up the type of coaxial cable, cable length and connector types. In some cases there may be extra length of cable left over.

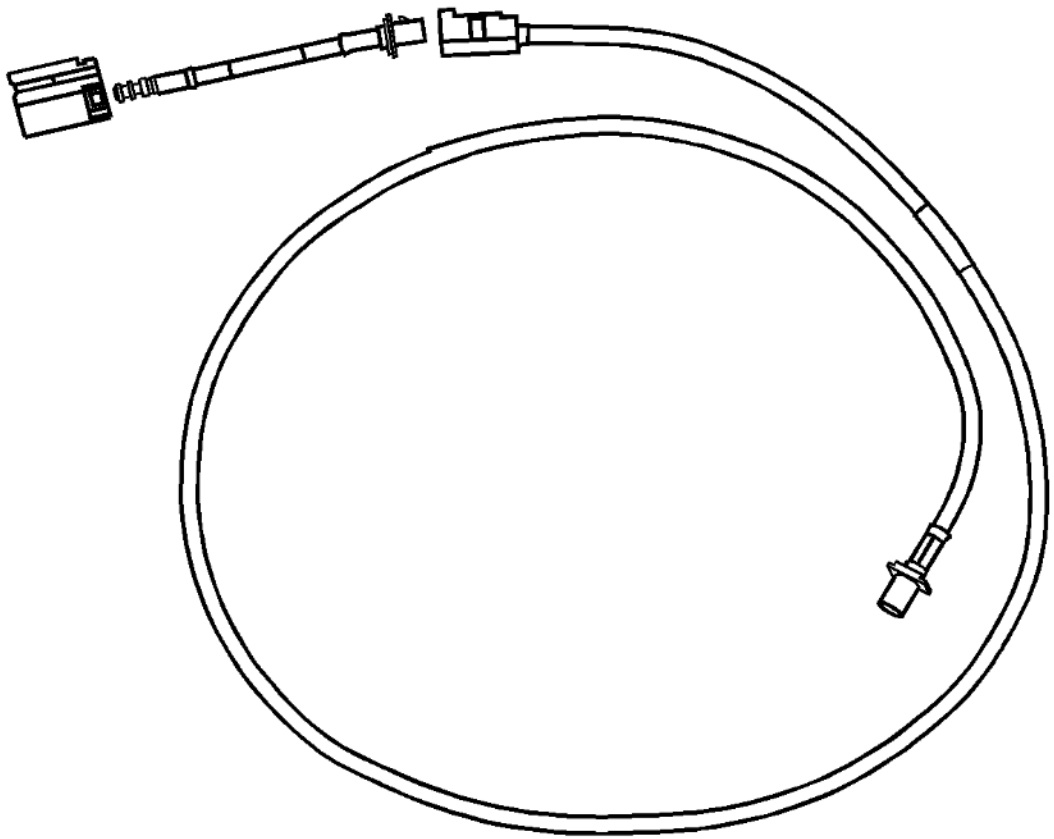

Fig. 4: Coaxial Cable
Courtesy of GENERAL MOTORS COMPANY

cardiagn.com

NOTE: **Avoid routing the new coaxial cable near sharp edges that can damage the new coaxial cable.**

4. Install the new coaxial cable in the vehicle.

   Use tie-straps to attach the new service coaxial cable to existing harnesses or brackets. Use felt tape/foam to reduce rattles, as necessary.

NOTE: **To avoid permanent damage, do not pinch the cable or bend it tighter than a 2 inch (5 centimeter) radius.**

5. Remove the faulty/damaged connectors, if applicable.
6. Install new connectors or jumpers, as needed. Refer to Connector Housing Repair Procedure.
7. Verify the repair by operating the system with the engine running.

FLAT WIRE REPAIRS

The flat wire within the flex wiring harness is not serviceable. If an open or short exists within the flex wiring harness the complete harness must be replaced.

FOLDED-OVER WIRE REPAIR

Special Tools

EL-38125-10 Splice Sleeve Crimping Tool

For equivalent regional tools, refer to **Special Tools** .

WARNING: **In order to reduce the risk of personal injury, loss of high voltage isolation to ground and higher system impedance, do not attempt to repair any HV wiring, connector, or terminal that is damaged. High voltage coaxial type cables are not repairable. Never attempt to repair a coaxial type cable. The entire cable/harness or component must be replaced. In order to maintain system integrity and personal safety, never attempt to repair any high voltage wiring, cables, or terminals. Performing this procedure on high voltage circuits may result in serious injury or death.**

The GM global wire repair strategy uses connector assemblies (pigtails) and terminated leads to repair wiring harnesses.

To reduce and manage GM Service Parts proliferation, the service pigtails and terminated leads are designed with the largest wire gauge size that can be held by either the terminal or the connector housing.

cardiagn.com

The folded over wire repair technique, in which the copper wire strands are folded over before being installed into a splice sleeve, allows the service part to be used when repairing a smaller gauge size wire in a vehicle. This technique has passed all GM testing standards.

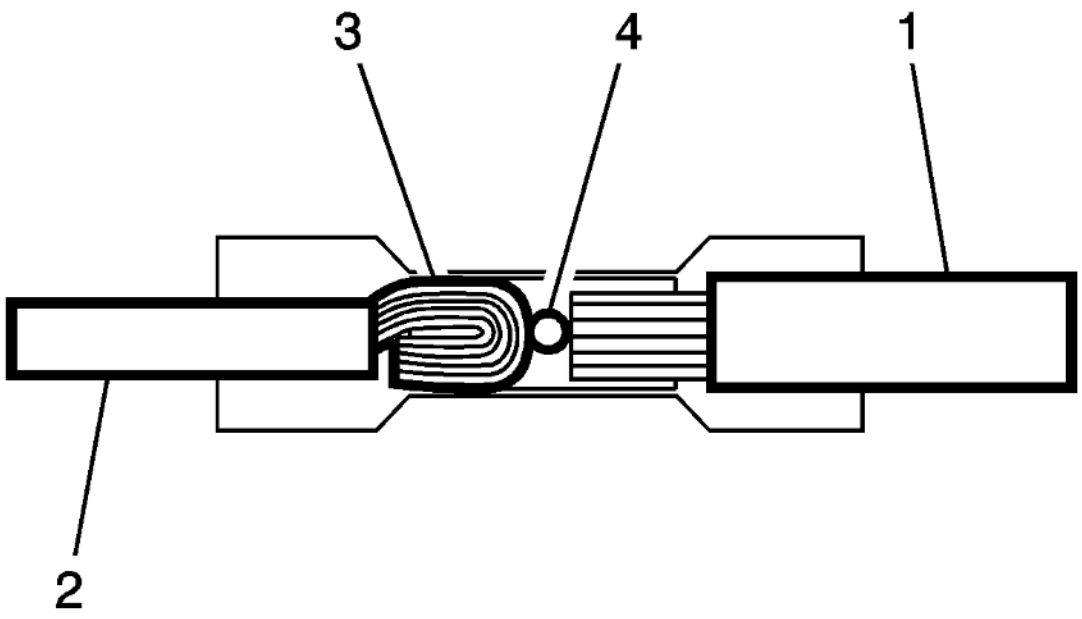

Fig. 5: Stripped Wires In Splice Sleeve Connector
Courtesy of GENERAL MOTORS COMPANY

The larger harness size wires (1) will be placed in one side of the splice sleeve and match the splice sleeve closely in size. The wires are moved into the splice sleeve until they hit the stop (4) in the splice sleeve. The smaller harness size wires (2) will be placed in the other side of the splice sleeve.

cardiagn.com

The smaller harness size wires will be folded over (3) to match up with the splice sleeve size.

Use the folded over wire repair for:

NOTE: **Increasing the amount of copper strands in the smaller gauge size will allow for a better crimp**

- Splicing wires of 0.35 mm^2 or less (22, 24, 26 gauge sizes)

NOTE: **Vehicle side needs to be of same or less gauge size (not greater than the service part's gauge size)**

- Splicing wires of different gauges

Use the Service Information (SI) connector end-views to determine:

- Gauge size of wiring harness
- Recommended Repair: Terminated Lead or Pigtail

The following table lists the acceptable variance within the gauge size

Folded-Over Wire Selection Table

Harness Wire Gauge		**Connector Assembly (Pigtail) or Terminated Lead Wire Gauge Size**			
-		Salmon Color Splice Sleeve		Blue Color Splice Sleeve	Yellow Color Splice Sleeve
Metric	-	0.35 mm^2	0.5-0.8 mm^2	1.0-2.5 mm^2	3.0-5.0 mm^2
-	Wire Gauge (AWG)	22	20-18	16-14	12-10
0.13 mm^2	26	Fold Over Wire	Fold Over Wire	Fold Over Wire	Not Acceptable
0.22 mm^2	24	Fold Over Wire	Fold Over Wire	Fold Over Wire	Not Acceptable
0.35 mm^2	22	Fold Over Wire	Fold Over Wire	Fold Over Wire	Not Acceptable
0.5 mm^2	20	Not Acceptable	Wire to Wire	Fold Over Wire	Not Acceptable
0.75 mm^2	-	Not Acceptable	Wire to Wire	Fold Over Wire	Not Acceptable
0.8 mm^2	18	Not Acceptable	Wire to Wire	Fold Over Wire	Not Acceptable
1.0 mm^2	16	Not Acceptable	Wire to Wire	Fold Over Wire	Not Acceptable
1.5 mm^2	-	Not Acceptable	Not Acceptable	Wire to Wire	Fold Over Wire

cardiagn.com

Harness Wire Gauge		Connector Assembly (Pigtail) or Terminated Lead Wire Gauge Size			
2.0 mm^2	14	Not Acceptable	Not Acceptable	Wire to Wire	Fold Over Wire
2.5 mm^2	-	Not Acceptable	Not Acceptable	Wire to Wire	Fold Over Wire
3.0-5.0 mm^2	12-10	Not Acceptable	Not Acceptable	Not Acceptable	Wire to Wire

Example

For an IP Harness of 0.22 mm^2 (24 gauge on left side of table) wire size, the SI connector end-view recommends a pigtail with leads of 0.8 mm^2 (18 gauge on the top of the table) with a salmon colored DuraSeal splice sleeve of 0.5-0.8 mm^2 (20-18 gauge).

Follow these steps to use the folded over wire (1) technique on an IP Harness.

cardiagn.com

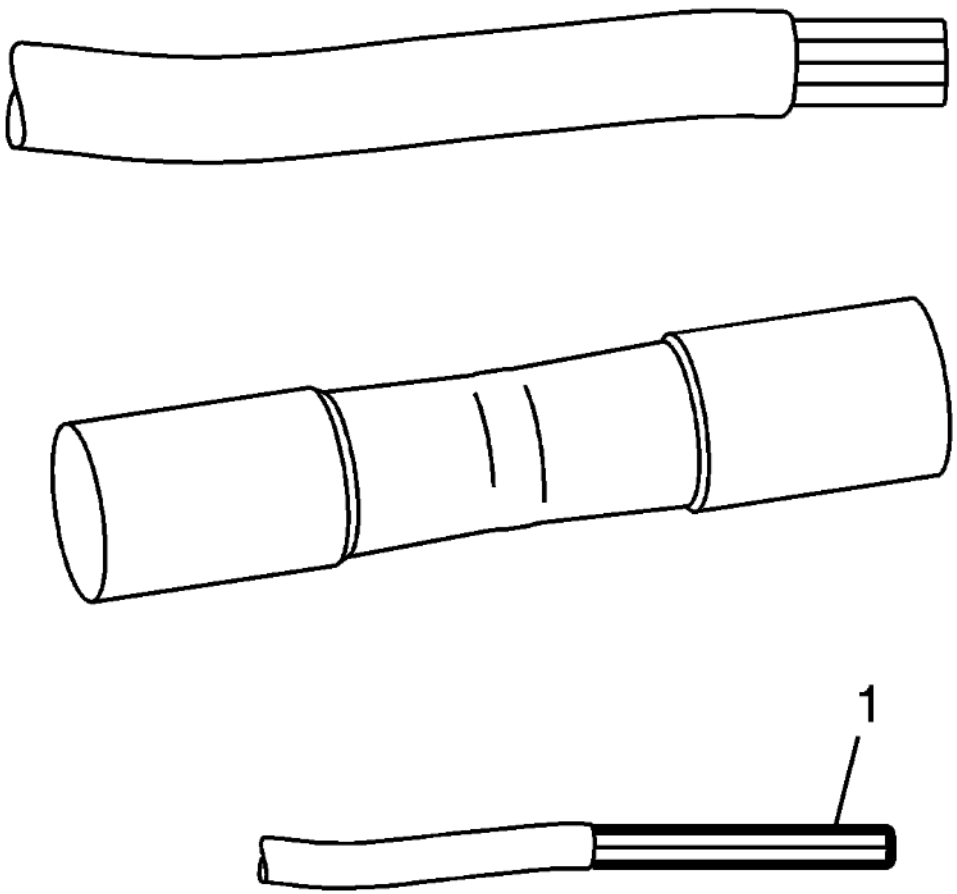

Fig. 6: Stripped Wires
Courtesy of GENERAL MOTORS COMPANY

Strip twice the amount of insulation on the smaller (1) wire (IP Harness is the lower wire) than normally required. Normally, the terminated leads have 5 mm of insulation stripped off the wire.

cardiagn.com

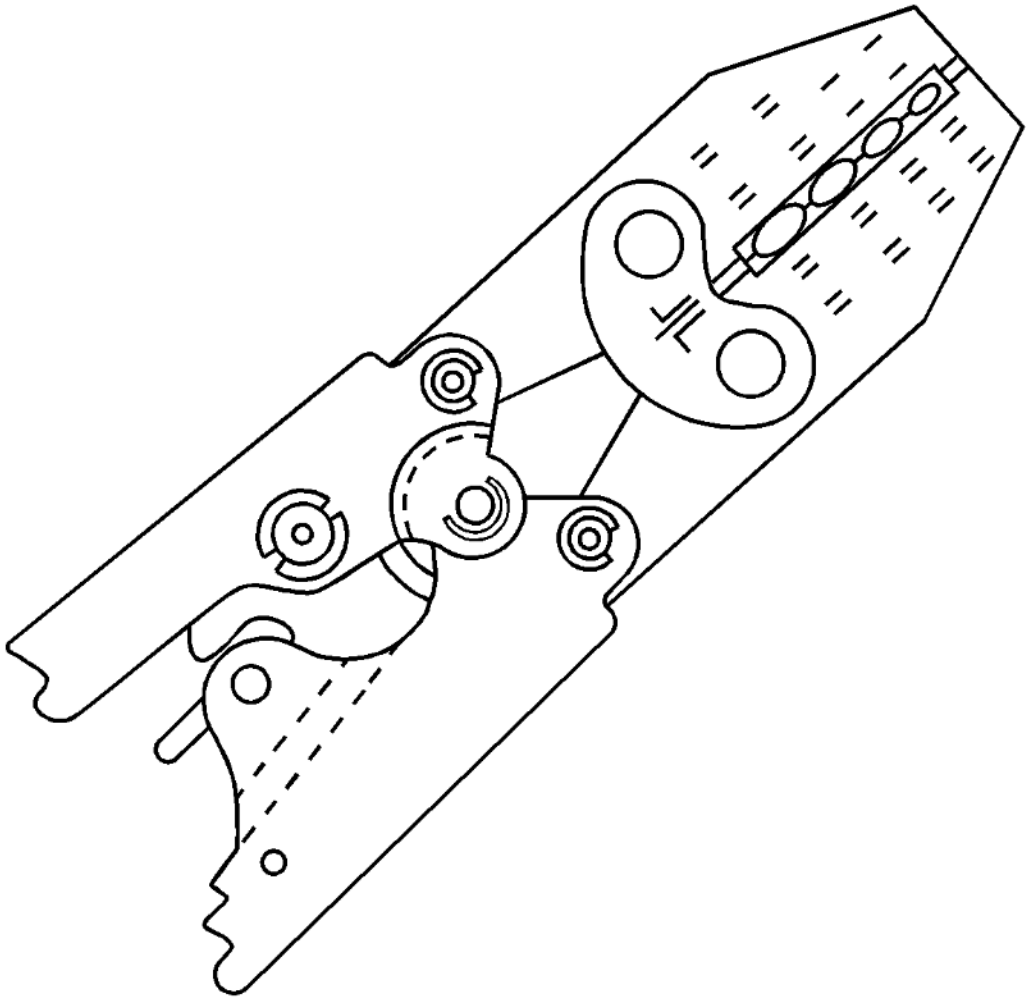

Fig. 7: Splice Sleeve Crimping Tool
Courtesy of GENERAL MOTORS COMPANY

NOTE: **Use EL-38125-10 splice sleeve crimping tool.**

1. For wiring repair, refer to **Wire to Wire Repair**.

cardiagn.com

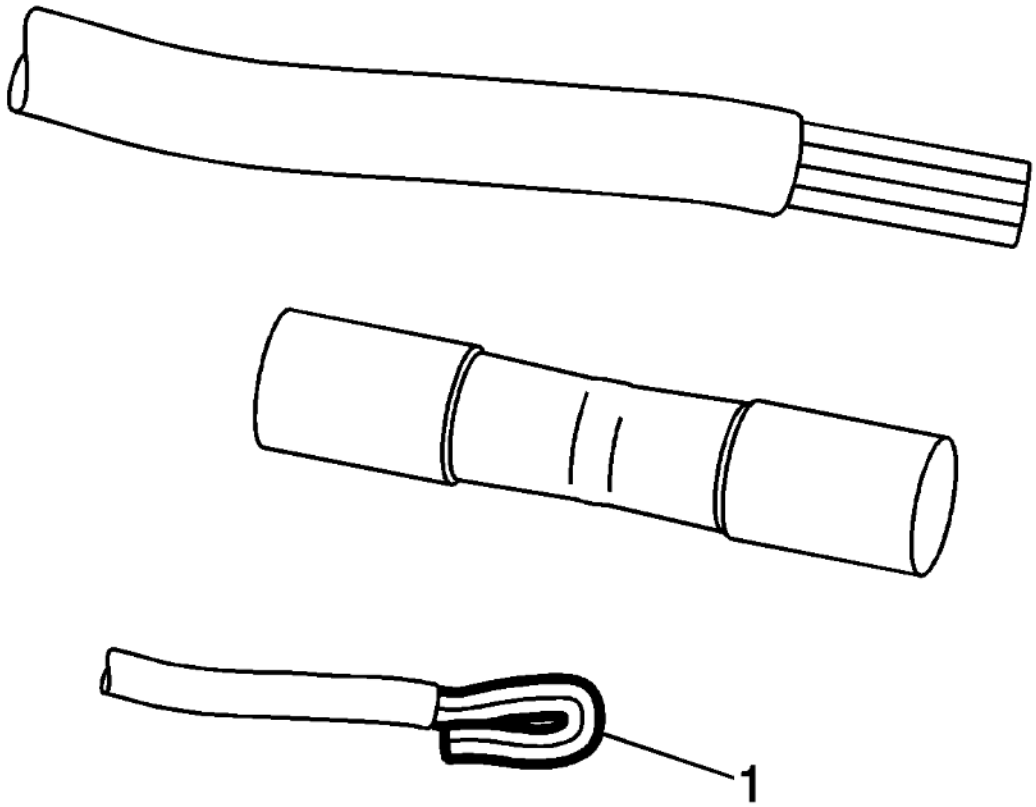

Fig. 8: Twisted And Folded Wire To Length
Courtesy of GENERAL MOTORS COMPANY

2. Twist the wires before you fold them over to prevent the wire strands from opening up. Fold over the copper wire strands of the smaller (1) gauge wire so that it is the same length as the non-folded wire.

cardiagn.com

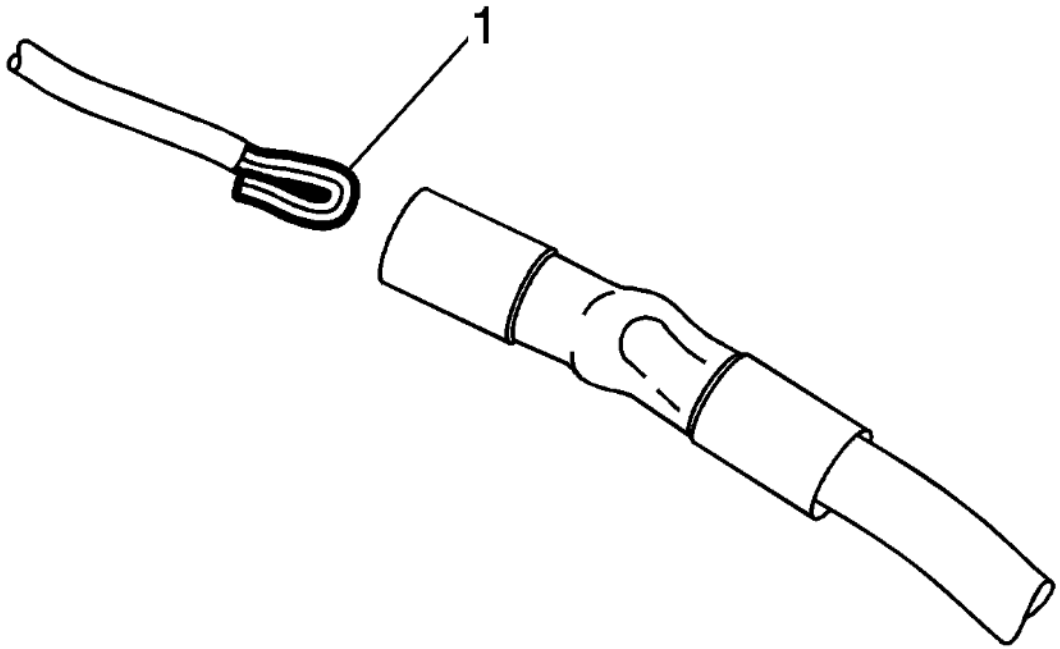

Fig. 9: Folded Wire And Splice Sleeve
Courtesy of GENERAL MOTORS COMPANY

3. Insert the folded over wire (1) into the splice sleeve.

cardiagn.com

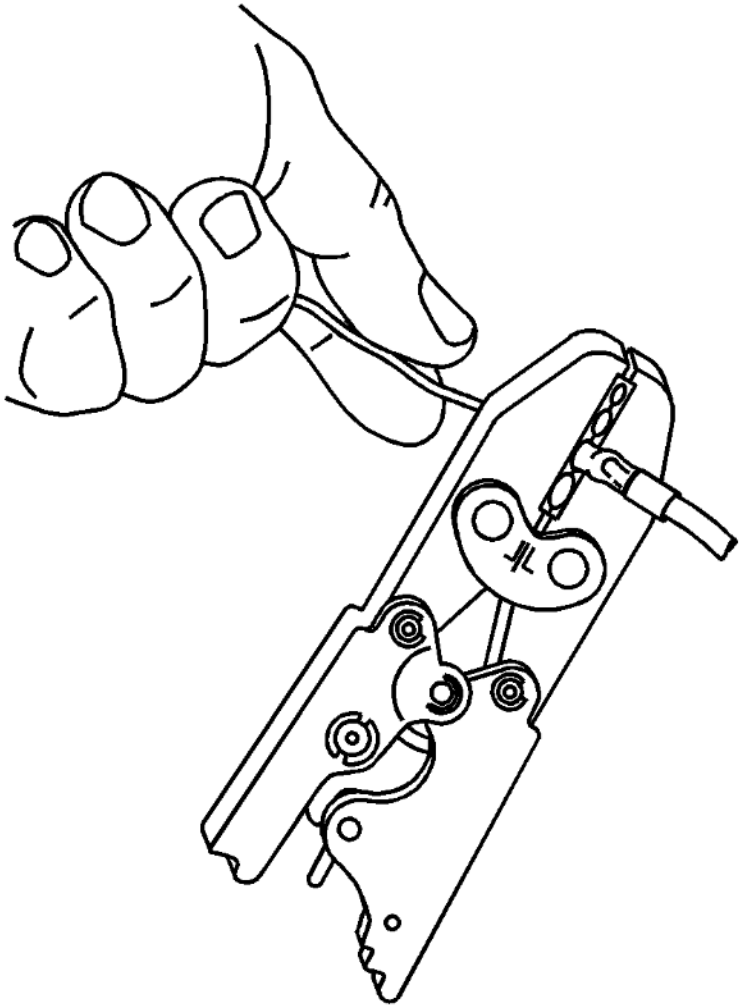

Fig. 10: Crimping Splice Sleeve
Courtesy of GENERAL MOTORS COMPANY

4. Use the proper crimp tool to crimp the splice sleeve to the smaller wire (harness side of repair). Complete the crimp as usual (using the heat tool to shrink the tube).

GMLAN AND MEDIA ORIENTED SYSTEMS TRANSPORT (MOST) WIRING REPAIRS

cardiagn.com

Special Tools

- **EL-38125-10** Splice Sleeve Crimping Tool
- DuraSeal splice sleeves
- A wire stripping tool

For equivalent regional tools, refer to **Special Tools** .

The DuraSeal splice sleeves have the following 2 critical features:

- A special heat shrink sleeve environmentally seals the splice. The heat shrink sleeve contains a sealing adhesive inside.
- A cross hatched (knurled) core crimp provides necessary contact integrity for the sensitive, low energy circuits.

The GM Local Area Network (GMLAN) System requires special wiring repair procedures due to the sensitive nature of the circuitry. Follow the specific procedures and instructions when working on GMLAN connectors and terminals.

GMLAN Repairs

NOTE: **When making a repair to any GMLAN network, the original wire length after the repair must be the same length as before the repair. If the network is a twisted pair, the twist must be maintained after the repair is completed.**

GMLAN has 2 types of networks, low speed and high speed. Low speed GMLAN has a single wire and works at slow speeds. High speed GMLAN has 2 wires in a twisted pair and works at higher speeds. For more information on GMLAN, refer to **Data Link Communications Description and Operation** .

GMLAN Connector Terminal Repair

NOTE: **A terminated lead can be used to replace damaged connector terminals for both high speed and low speed GMLAN systems. When making a connector terminal repair on a GMLAN high speed system with twisted pair wires, do not untwist the wires more than necessary to make the repair.**

If the individual terminals are damaged on any GMLAN connection, use the appropriate connector repair procedure in order to repair the terminal. Refer to **Connector Repairs** for the appropriate connector repair procedure.

GMLAN Wire Repair

NOTE: **Refer to Wiring Repairs in the service information connector end views or the vehicle schematics in order to**

cardiagn.com

determine the correct wire size for the circuit you are repairing. You must obtain this information in order to ensure circuit integrity.

If any wire except the pigtail is damaged, repair the wire by splicing in a new section of wire of the same gauge size (0.5 mm^2 , 0.8 mm^2 , 1.0 mm^2 etc.). Use the DuraSeal splice sleeves and **EL-38125-10** tool. For wiring repair, refer to **Wire to Wire Repair**.

Media Oriented Systems Transport (MOST) Wiring Repair

NOTE: **If harness repair/analysis is performed, MOST bus Twist Pair unshielded wire should be 0.35 mm^2 (22 AWG) wire with at least one twist per each 1 45/64 inch (45 mm) and must not be untwisted for more than 3 15/16 of an inch (10 cm).**

The following conditions need to be met to ensure a valid continuity:

- Untwisted length for all MOST 50 circuits at each wire harness connector should be no longer 50 mm max (25 mm preferred).
- When wire repairs are made, a minimum 25 twists/meter for all MOST 50 circuits.
- MOST 50 has specific receive and transmit I/O.

The transmit of one module is connected to receive of the next module in ring topology.

HEATED OXYGEN SENSOR WIRING REPAIRS

CAUTION: **Do not solder repairs under any circumstances as this could result in the air reference being obstructed.**

If the heated oxygen sensor pigtail wiring, connector, or terminal is damaged the entire oxygen sensor assembly must be replaced. Do not attempt to repair the wiring, connector, or terminals. In order for the sensor to function properly it must have a clean air reference. This clean air reference is obtained by way of the oxygen sensor signal and heater wires. Any attempt to repair the wires, connectors or terminals could result in the obstruction of the air reference and degrade oxygen sensor performance.

The following guidelines should be used when servicing the heated oxygen sensor:

- Do not apply contact cleaner or other materials to the sensor or vehicle harness connectors. These materials may get into the sensor, causing poor performance. Also, the sensor pigtail and harness wires must not be damaged in such a way that the wires inside are exposed. This could provide a path for foreign materials to enter the sensor and cause performance problems.
- Neither the sensor nor vehicle lead wires should be bent sharply or kinked. Sharp bends, kinks, etc., could block the reference air path through the lead wire.

cardiagn.com

- Do not remove or defeat the oxygen sensor ground wire (where applicable). Vehicles that utilize the ground wire sensor may rely on this ground as the only ground contact to the sensor. Removal of the ground wire will also cause poor engine performance.
- To prevent damage due to water intrusion, be sure that the peripheral seal remains intact on the vehicle harness connector.

HIGH TEMPERATURE WIRING REPAIRS

WARNING: **This procedure should not be performed on high voltage circuits. Performing this procedure on high voltage circuits may result in serious injury or death.**

NOTE: **All wiring repairs need to be 200 mm from the heat zone. Areas of consideration would be any area located near the exhaust manifolds, catalytic converter, exhaust pipes, and turbocharged engines.**

Items Required

- DuraSeal splice sleeves to crimp and seal connections
- High temperature SCT1 shrink tubing to protect the splice sleeves
- Terminated leads or pigtails
- The correct tools to remove the terminals from the connectors

Use high temperature bulk wire rated at 150Â°C (302Â°F) continuous temperature of the same or larger gauge size as the original wire when repair damage wire. Also replace any reflective tape that you remove during the repair.

High Temperature Wiring

Wiring that is exposed to high temperatures, 135Â°C (275Â°F) or higher, for prolonged periods of time may use materials i.e. wires, connectors, and shielding that has a higher heat rating than typical wiring. When making a repair in a high temperature area observe the following:

- Use high temperature bulk wire rated at 150Â°C (302Â°F) continuous temperature to replace any damaged wire.
- Replace any heat shielding that is removed.
- Cover any DuraSeal splice sleeves with SCT1 shrink tubing.
- After making a wiring repair, ensure that the location of the wiring is not moved closer to the heat source.

Identifying High Temperature Wiring

NOTE: **High temperature areas would be areas located near exhaust manifolds, catalytic converters, exhaust pipes, and turbocharged engines.**

cardiagn.com

Wiring that is exposed to high temperature, 135Â°C (275Â°F) or higher, for prolonged periods of time need special considerations when making wiring repairs. Areas that may be exposed to higher temperatures can be identified by heat resistant materials that are being used in those areas. These materials may include heat reflective tape, moon tape, and high temperature shrink tubing. Also conduit and other protective coverings may be used. Because conduit or similar coverings are used throughout the vehicle regardless of the temperature, it may be necessary for the technician to determine if an area is exposed to excessive heat before making a wiring repair.

SIR/SRS WIRING REPAIRS

NOTE: **Refer to SIR Service Precautions .**

For European Regions

CAUTION: **If the SIR/SRS wiring, connector, or terminal is damaged, the affected wiring harness must be replaced. Do not attempt to repair the wiring, connector, or terminals. Any attempt to repair the wires, connectors, or terminals could result in performance problems of the SIR/SRS System. Operations on restraint systems must only be performed by trained and qualified personnel.**

For Non-European Regions

Special Tools

Splice Sleeve Crimping Tool, refer to **Special Tools** .

The Supplemental Inflatable Restraint (SIR) System/Supplemental Restraint System (SRS) requires special wiring repair procedures due to the sensitive nature of the circuitry. Follow the specific procedures and instructions when working with the SIR/SRS, and the wiring components, such as connectors and terminals.

SIR/SRS Connector Repair (Plastic Body and Terminal Metal Pin)

NOTE: **Do not use the terminals in the kit in order to replace damaged SIR/SRS system terminals. Use either an SIR/SRS pigtail or a terminated lead from the SIR Repair Kit Tray.**

The terminals in the SIR/SRS system are made with a special plating. This plating provides the necessary contact integrity for the sensitive, low energy circuits.

Pigtail repair packs are available for SIR/SRS connectors with eight or less terminals. Only the connector body is available for connectors with more than eight terminals. Terminated leads can be used to replace damaged terminals when replacing the connector body.

cardiagn.com

SIR/SRS Component Wire Pigtail Repair

NOTE: **Do not make wire, connector, or terminal repairs on components with wire pigtails.**

A wire pigtail is a wire or wires attached directly to the device, not by a connector. If a wiring pigtail is damaged, you must replace the entire component, with pigtail. The inflatable restraint steering wheel module coil is an example of a pigtail component.

SIR/SRS Wire Repair

CAUTION: **Do not install more than 2 DuraSeal splice sleeves per SIR deployment loop. A deployment loop consists of both wires from the K36 Inflatable Restraint Sensing and Diagnostic Module to the deployable component. If more than 2 DuraSeal splice sleeves are required for any SIR deployment loop, the complete circuit of the loop must be replaced. More than 2 DuraSeal splice sleeves per deployment loop may increase the resistance in the circuit causing a DTC to be set.**

NOTE: **Refer to Wiring Repairs in the service information connector end views or the vehicle schematics in order to determine the correct wire size for the circuit you are repairing. You must obtain this information in order to ensure circuit integrity.**

If any wire except the pigtail is damaged, repair the wire by splicing in a new section of wire of the same gauge size (0.5 mm, 0.8 mm, 1.0 mm etc.). Use the DuraSeal splice sleeves and the appropriate splice sleeve crimping tool. For wiring repair, refer to **Wire to Wire Repair**.

For connector position assurance (CPA), refer to **Connector Position Assurance Locks**.

For terminal position assurance (TPA), refer to **Terminal Position Assurance Locks**.

SPLICING INLINE HARNESS DIODES

Many vehicle electrical systems use a diode to isolate circuits and protect the components from voltage spikes. When installing a new diode use the following procedure.

1. Open the harness.
   - If the harness is taped, remove the tape.
   - To avoid wiring insulation damage, use a sewing seam ripper (available from sewing supply stores) in order to cut open the harness.
   - If the harness has a black plastic conduit, pull out the diode.
2. If the diode is taped to the harness, remove all of the tape.

cardiagn.com

3. Check and record the current flow direction and orientation of diode.
4. Remove the inoperative diode from the harness with a suitable soldering tool.

NOTE: **If the diode is located next to a connector terminal remove the terminal(s) from the connector to prevent damage from the soldering tool.**

5. Carefully strip away a section of insulation next to the old soldered portion of the wire(s). Do not remove any more than is needed to attach the new diode.
6. Check current flow direction of the new diode, being sure to install the diode with correct bias. Reference the appropriate service manual wiring schematic to obtain the correct diode installation position.
7. Attach the new diode to the wire(s) using 60/40 rosin core solder. Before soldering attach some heat sinks (aluminum alligator clips) across the diode wire ends to protect the diode from excessive heat. Follow the manufacturer's instruction for the soldering equipment.
8. Reinstall terminal(s) into the connector body if previously removed.

NOTE: **To prevent shorts to ground and water intrusion, completely cover all exposed wire and diode attachment points with tape.**

9. Tape the diode to the harness or connector using electrical tape.

SPLICING TWISTED OR SHIELDED CABLE

Twisted/shielded cable is used in order to protect wiring from electrical noise. Two-conductor cable of this construction is used between the radio and the Delco-BoseÂ® speaker/amplifier units and other applications where low level, sensitive signals must be carried. Follow the instructions below in order to repair the twisted/shielded cable.

cardiagn.com

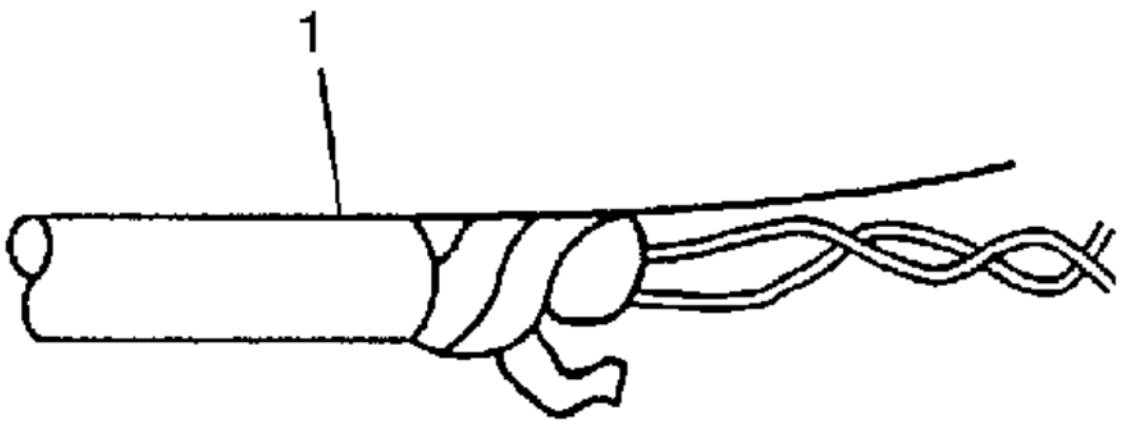

Fig. 11: Outer Wiring Jacket
Courtesy of GENERAL MOTORS COMPANY

1. Remove the outer jacket (1). Use care not to cut into the drain wire of the mylar tape.
2. Unwrap the tape. Do not remove the tape. Use the tape in order to rewrap the twisted conductors after the splice is made.

cardiagn.com

Fig. 12: Preparing Splice
Courtesy of GENERAL MOTORS COMPANY

3. Prepare the splice. Untwist the conductors and follow the instructions for **Wire to Wire Repair**. Staggering the splices by 65 mm (2.5 in) is recommended.

cardiagn.com

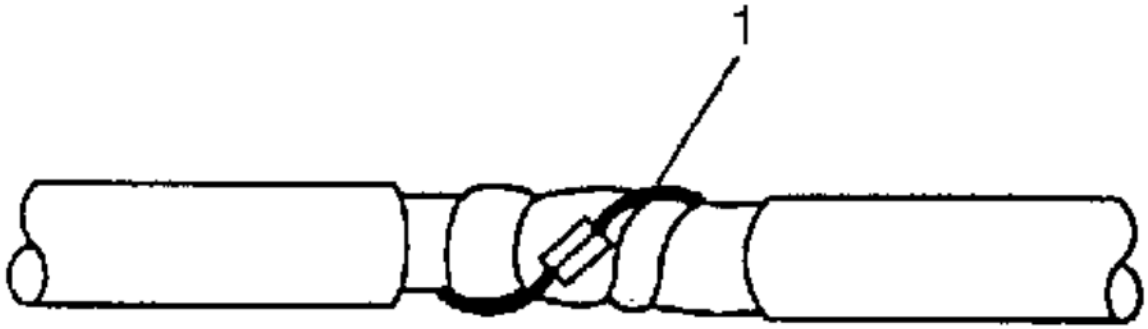

Fig. 13: Drain Wire
Courtesy of GENERAL MOTORS COMPANY

NOTE: **Apply the mylar tape with the aluminum side inward. This ensures good electrical contact with the drain wire.**

cardiagn.com

4. Re-assemble the cable.
    - Rewrap the conductors with the mylar tape. If the mylar tape is damaged, use 3M product AL-36FR to replace the damaged mylar tape.
    - Use caution not to wrap the drain wire in the tape (1).
    - Follow the splicing instructions for copper wire and splice the drain wire.
    - Wrap the drain wire around the conductors and tape with electrical tape to replace the outer insulation.

cardiagn.com

Fig. 14: Repaired Wire Covered With Electrical Tape
Courtesy of GENERAL MOTORS COMPANY

5. Tape over the entire cable. Use a winding motion when you apply the tape.

cardiagn.com

WIRE TO WIRE REPAIR

Special Tools

- **EL-38125-10** Splice Sleeve Crimping Tool (non GMNA)
- **J-38125-5A** Ultra Torch Special Tool
- **J-38125-8** Splice Sleeve Crimping Tool (GMNA)

For equivalent regional tools, refer to **Special Tools** .

WARNING: **In order to reduce the risk of personal injury, loss of high voltage isolation to ground and higher system impedance, do not attempt to repair any HV wiring, connector, or terminal that is damaged. High voltage coaxial type cables are not repairable. Never attempt to repair a coaxial type cable. The entire cable/harness or component must be replaced. In order to maintain system integrity and personal safety, never attempt to repair any high voltage wiring, cables, or terminals. Performing this procedure on high voltage circuits may result in serious injury or death.**

NOTE: **If the wiring harness internal to the transmission is damaged, the wiring harness must be replaced. The use of splice sleeves in an attempt to repair the internal transmission wires, connectors, or terminals could result in performance issues.**

NOTE: **Do not splice wires in Door Harness Grommets.**

NOTE: **The DuraSeal splice sleeves have the following 2 critical features:**

- **A special heat shrink sleeve environmentally seals the splice. The heat shrink sleeve contains a sealing adhesive inside.**
- **A cross hatched (knurled) core crimp provides the necessary low resistance contact integrity for these sensitive, low energy circuits.**

Use only DuraSeal splice sleeves to form a one-to-one splice on all types of insulation except high voltage and specialty cables. Use DuraSeal splice sleeves where there are special requirements such as moisture sealing. Follow the instructions below in order to splice copper wire using DuraSeal splice sleeves.

Splice Sleeve Selection

cardiagn.com

Splice Sleeve Color	Crimp Tool Nest Color		Wire Gauge mm^2 /(AWG)
	3 Crimp Nests	4 Crimp Nests	
Salmon (Yellow-Pink) 19300089	Red (1) or Red/Green (1)	Red (2)	0.22-0.8/(18-26)
Blue 19168447	Blue (2)	Blue (3)	1.0-2.0/(14-16)
Yellow 19168448	Yellow (3)	Yellow (4)	3.0-5.0/(10-12)

NOTE: **You must perform the following procedures in the listed order. Repeat the procedure if any wire strands are damaged. You must obtain a clean strip with all of the wire strands intact.**

1. Open the harness by removing any tape:
   - Use a sewing seam ripper, available from sewing supply stores, in order to cut open the harness in order to avoid wire insulation damage.
   - Use the DuraSeal splice sleeves on all types of insulation except Tefzel and coaxial.
   - Do not use the crimp and DuraSeal splice sleeve to form a splice with more than 2 wires coming together.
2. Cut as little wire off the harness as possible. You may need the extra length of wire in order to change the location of a splice.

   Adjust splice locations so that each splice is at least 40 mm (1.5 in) away from the other splices, harness branches, or connectors.

3. Strip the insulation:
   - When adding a length of wire to the existing harness, use the same size wire as the original wire.
   - Perform one of the following items in order to find the correct wire size:
     - Find the wire on the schematic and convert to regional wiring gauge size.
     - If you are unsure of the wire size, begin with the largest opening in the wire stripper and work down until achieving a clean strip of the insulation.
   - Strip approximately 5.0 mm (0.20 in) of insulation from each wire to be spliced.
   - Do not nick or cut any of the strands. Inspect the stripped wire for nicks or cut strands.
   - If the wire is damaged, repeat this procedure after removing the damaged section.
4. For high temperature wiring, slide a section of high temperature SCT1 shrink tubing down the length of wire to be spliced. Ensure that the shrink tubing will not interfere with the splice procedure.
5. Select the proper DuraSeal splice sleeve according to the wire size. Refer to the above table at the beginning of the repair procedure for the

cardiagn.com

color coding of the DuraSeal splice sleeves and the crimp tool nests.

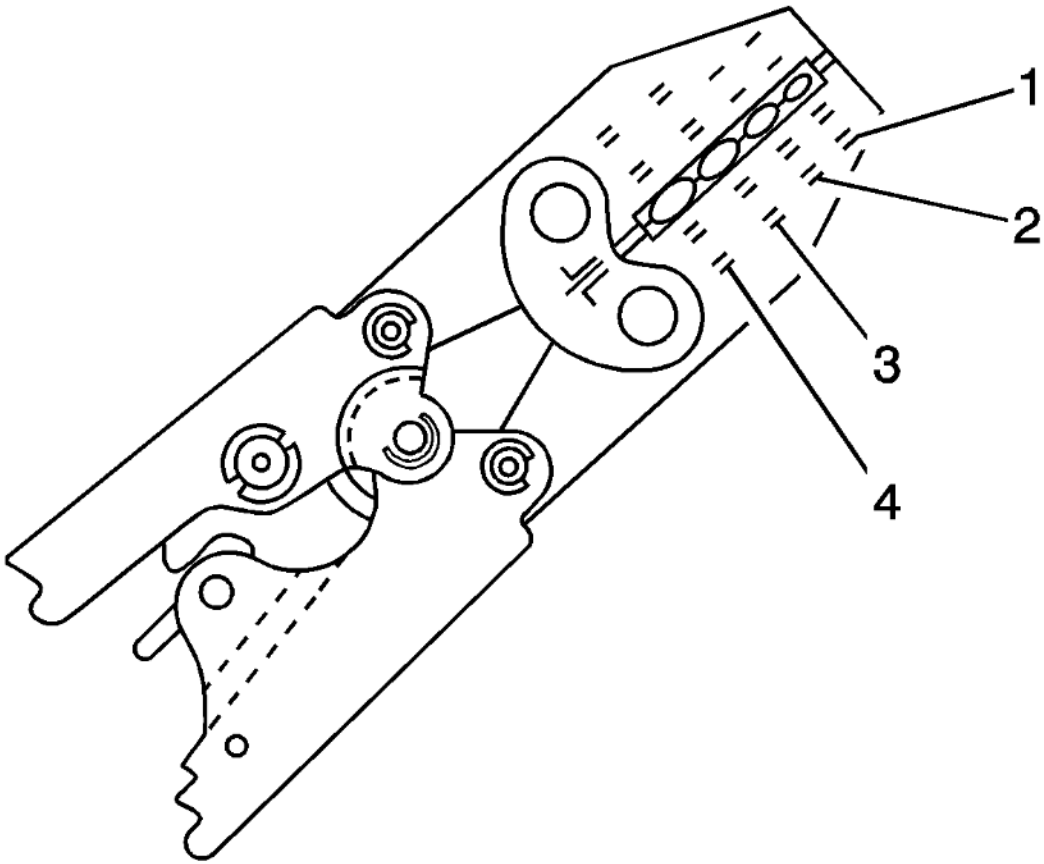

Fig. 15: Splice Sleeve Crimping Tool With 4 Crimp Nests
Courtesy of GENERAL MOTORS COMPANY

6. The **EL-38125-10** splice sleeve crimping tool has four crimp nests. The largest crimp nest (4) is used for crimping 10 and 12 gauge wires. The second largest crimp nest (3) is used for crimping 14 and 16 gauge wires. The third largest crimp nest (2) is used for crimping 18 and 20 gauge wires. The smallest crimp nest (1) is used for crimping 22 to 26 gauge wires. The crimp nests are referenced in the table (farther above) under

cardiagn.com

the crimp tool nest color.

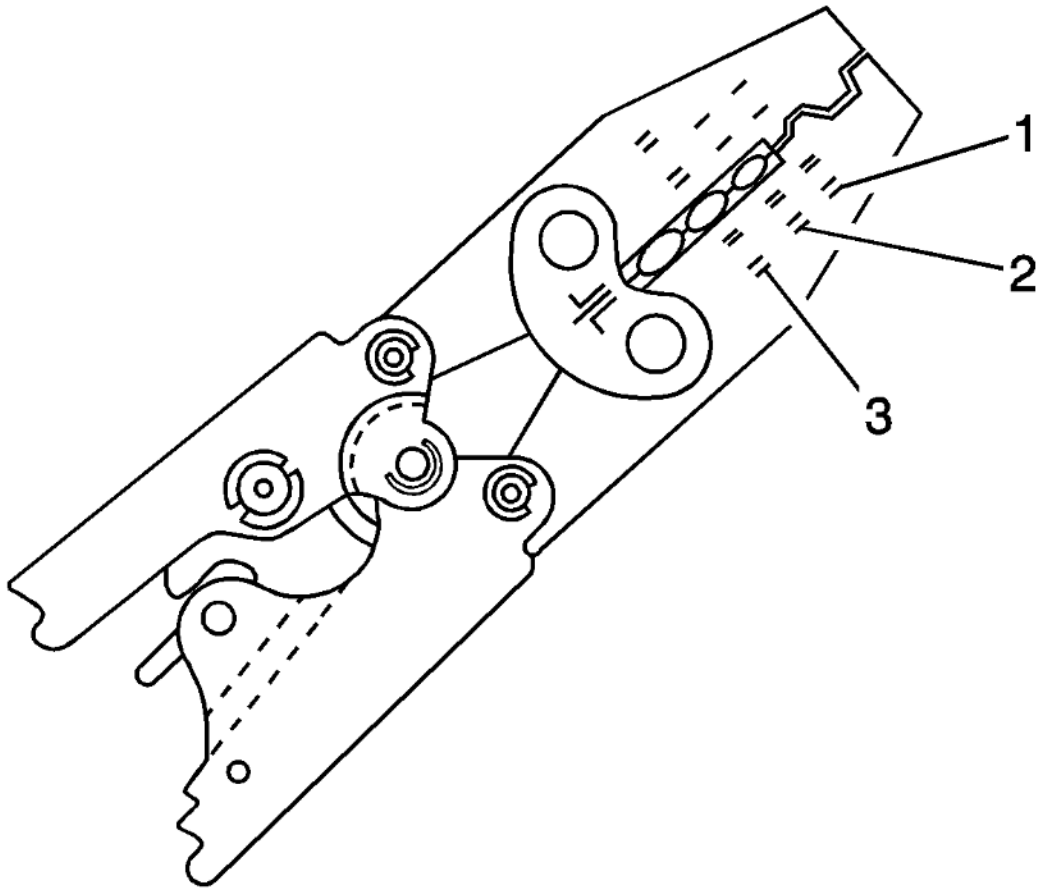

Fig. 16: Splice Sleeve Crimping Tool With 3 Crimp Nests
Courtesy of GENERAL MOTORS COMPANY

7. The **J-38125-8** splice sleeve crimping tool has three crimp nests. The largest crimp nest (3) is used for crimping 10 and 12 gauge wires. The second largest crimp nest (2) is used for crimping 14 and 16 gauge wires. The smallest crimp nest (1) is used for crimping 18 to 20 gauge wires. The crimp nests are referenced in the table (farther above) under the crimp tool nest color.

cardiagn.com

8. Use the splice sleeve crimp tool in order to position the DuraSeal splice sleeve in the proper color nest of the splice sleeve crimp tool. For the four crimp nest tool, use the three largest crimp nests to crimp the splice sleeves. For the three crimp nest tool, use all three crimp nests to crimp the splice sleeves. Use the four and three crimp tool diagrams (above) and the table (farther above) to match the splice sleeve with the correct crimp nest. The crimp tool diagram callout numbers match the numbers in the table (under crimp tool nest color).

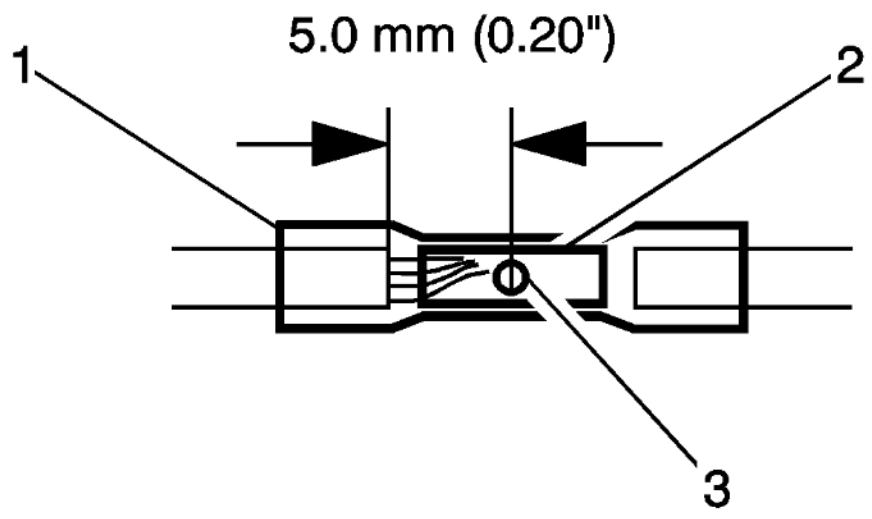

Fig. 17: Identifying DuraSeal Splice Sleeve
Courtesy of GENERAL MOTORS COMPANY

cardiagn.com

9. Place the DuraSeal splice sleeve in the nest. Ensure that the crimp falls midway between the end of the barrel and the stop. The sleeve has a stop (3) in the middle of the barrel (2) in order to prevent the wire (1) from going further. Close the hand crimper handles slightly in order to firmly hold the DuraSeal splice sleeve in the proper nest.

Fig. 18: Crimped DuraSeal Splice Sleeve

cardiagn.com

Courtesy of GENERAL MOTORS COMPANY

10. Insert the wire into the splice sleeve barrel until the wire hits the barrel stop. Refer to **Folded-Over Wire Repair** for splicing wires of 0.35 mm or less (22, 24, 26 gauge sizes) and for splicing wires of different gauges.
11. Tightly close the handles of the crimp tool until the crimper handles open when released.

    The crimper handles will not open until you apply the proper amount of pressure to the DuraSeal splice sleeve. Repeat steps 4 and 6 for the opposite end of the splice.

cardiagn.com

Fig. 19: Heated Splice Sleeve
Courtesy of GENERAL MOTORS COMPANY

12. Using the heat torch, apply heat to the crimped area of the barrel.
13. Start in the middle and gradually move the heat barrel to the open ends of the tubing:

cardiagn.com

- The tubing will shrink completely as the heat is moved along the insulation.
- A small amount of sealant will come out of the end of the tubing when sufficient shrinkage is achieved.

Weatherpack™ Wiring Repair

NOTE: **Some replacement pigtail connectors may be delivered without the terminated leads installed into the connector. For Weatherpack™ connectors, all terminated leads included in the package should to be installed into the connector. If the connector end view shows that a terminal is not occupied, the extra terminated lead(s) need to be installed and the end(s) sealed using a DuraSeal splice sleeve and taped back into the harness.**

1. Insert the wire into the splice sleeve barrel until the wire hits the barrel stop. Refer to **Folded-Over Wire Repair** for splicing wires of 0.35 mm or less (22, 24, 26 gauge sizes) and for splicing wires of different gauges.

cardiagn.com

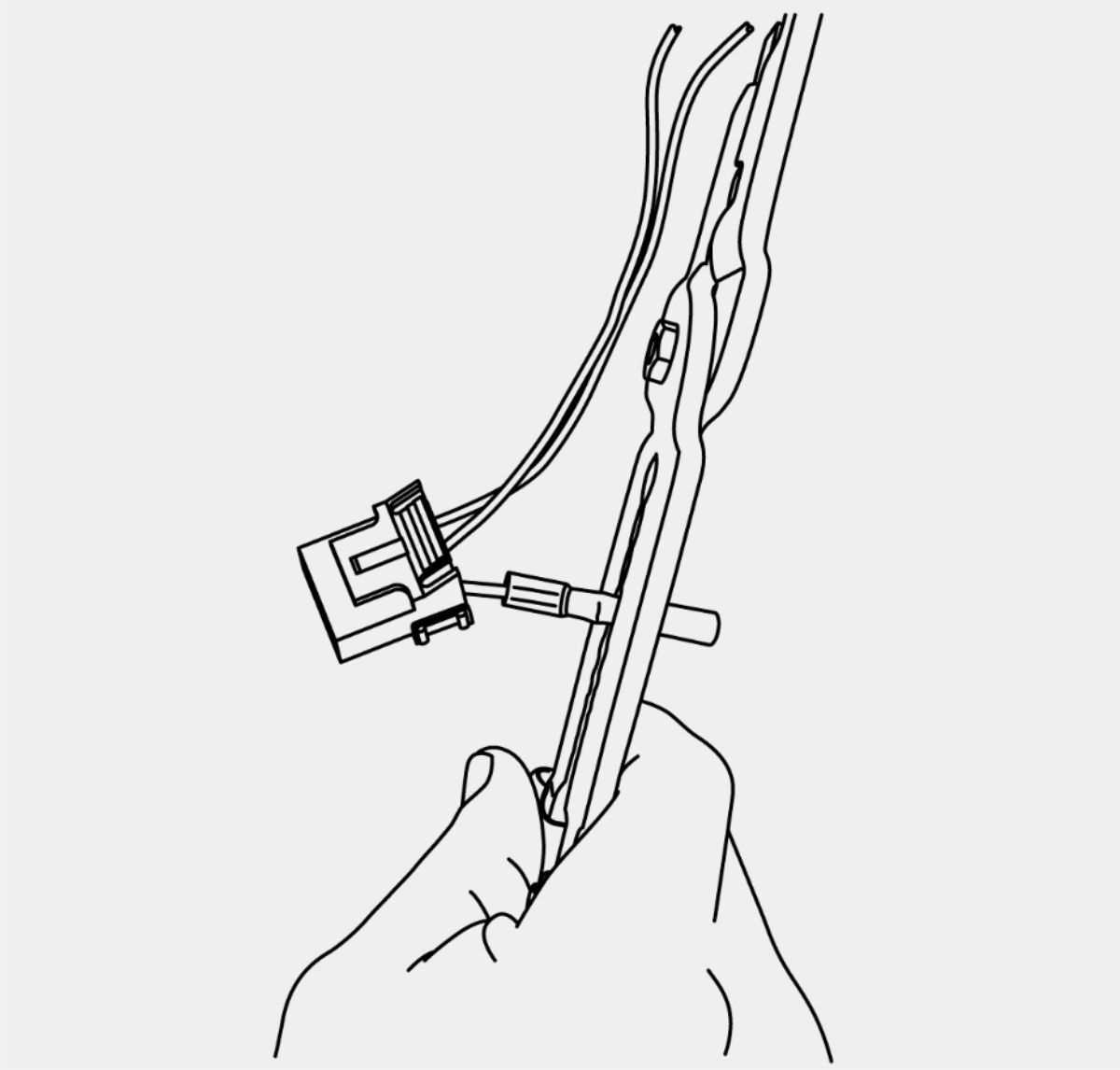

Fig. 20: Tightly Close Handles Of Crimp Tool
Courtesy of GENERAL MOTORS COMPANY

2. Tightly close the handles of the crimp tool until the crimper handles open when released.

   The crimper handles will not open until you apply the proper amount of pressure to the DuraSeal splice sleeve. Holding the DuraSeal with one

cardiagn.com

hand gently tug on the wire to ensure it is crimped in the DuraSeal.

3. Using the heat torch, apply heat to the crimped area of the barrel.

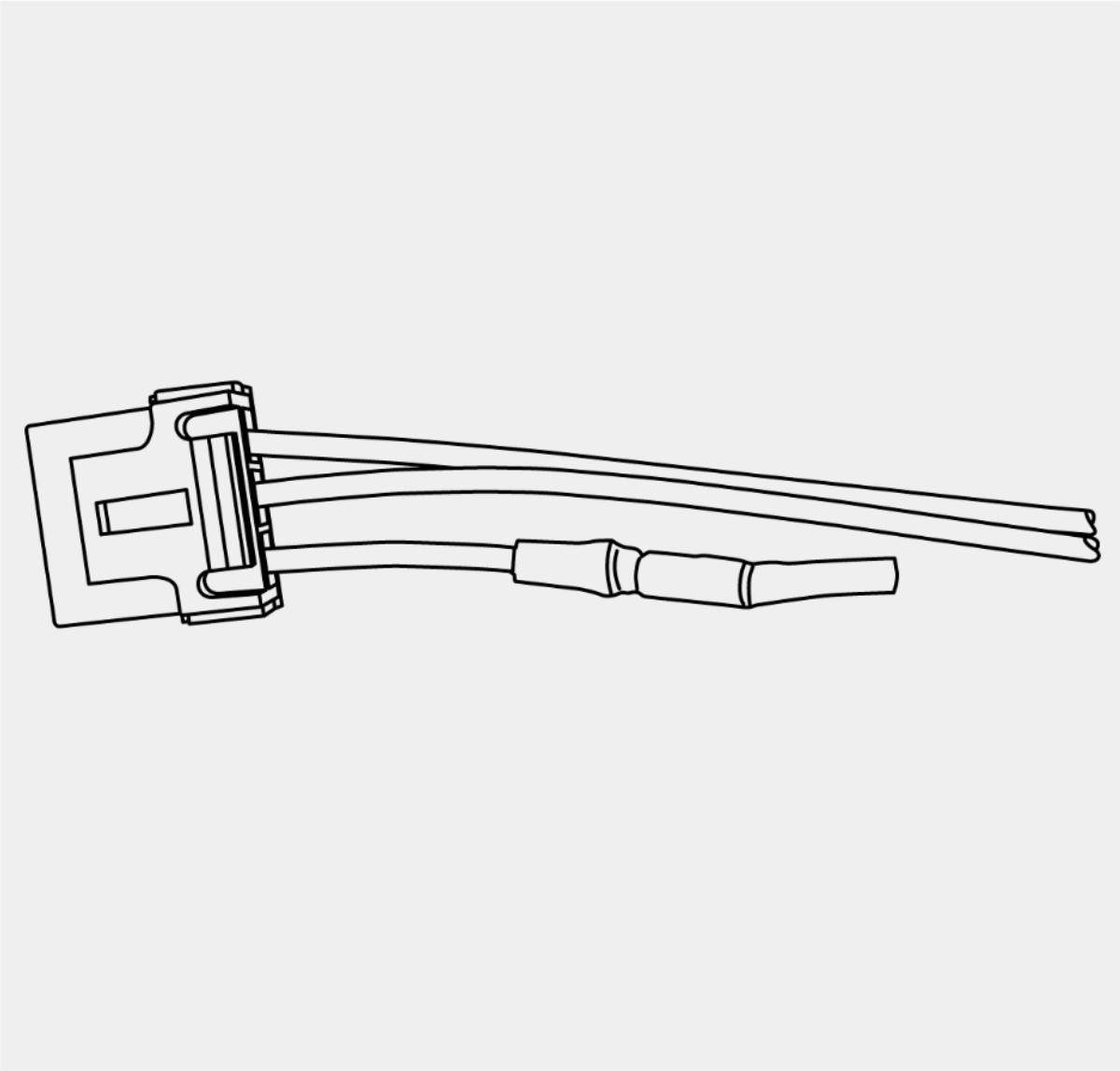

Fig. 21: Heat To Crimped Area Of Barrel
Courtesy of GENERAL MOTORS COMPANY

cardiagn.com

4. Start in the middle and gradually move the heat barrel to the open ends of the tubing:
    - The tubing will shrink completely as the heat is moved along the insulation.
    - A small amount of sealant will come out of the end of the tubing when sufficient shrinkage is achieved.

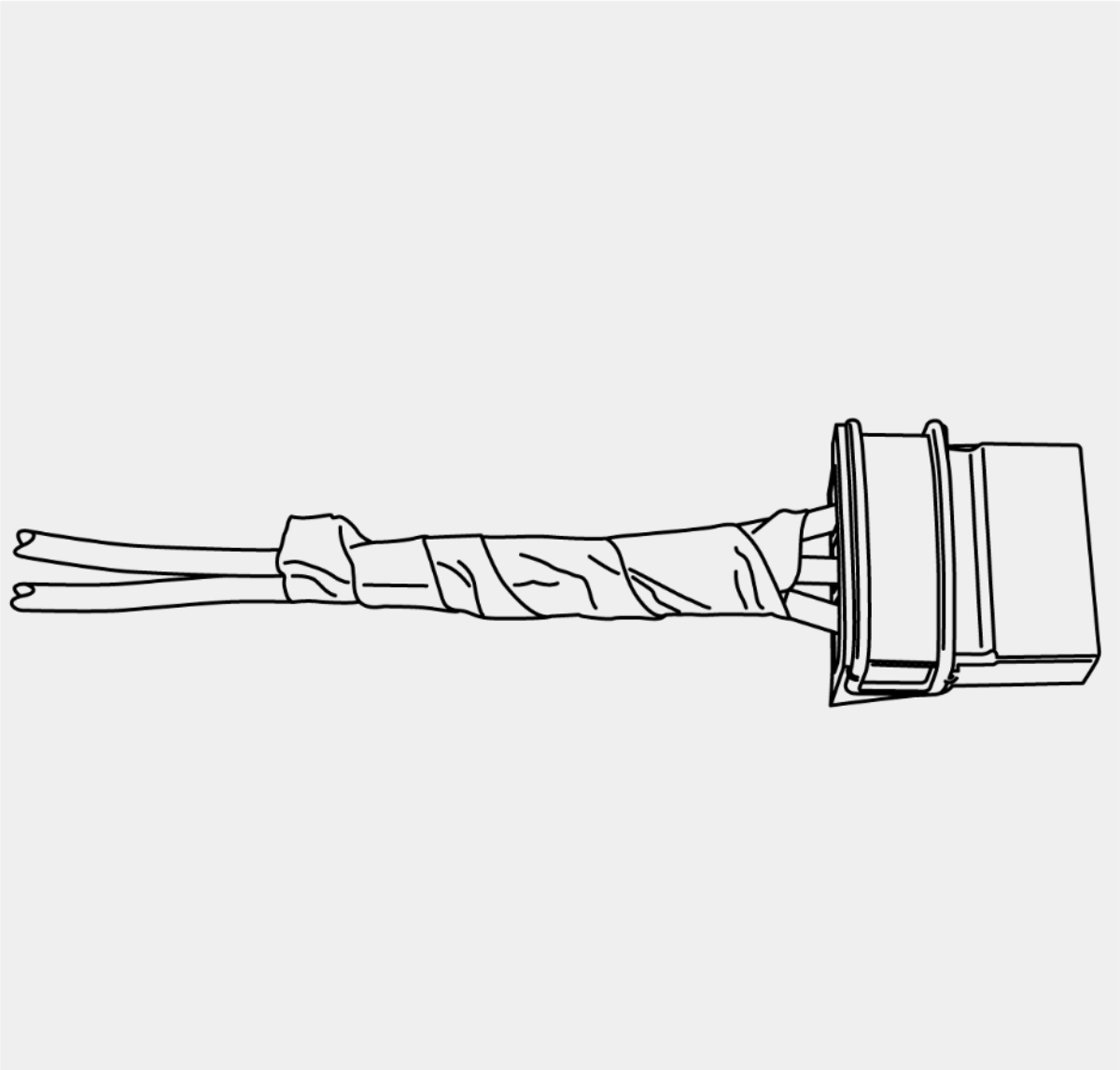

Fig. 22: Taping Extra Terminated Leads Back Into Harness
Courtesy of GENERAL MOTORS COMPANY

cardiagn.com

5. Tape the extra terminated lead(s) back into the harness.

High Temperature Wiring Repairs

Use the following procedures to perform high temperature wiring repairs:

1. Center the high temperature SCT1 shrink tube over the DuraSeal splice sleeve.
2. Using the heat torch, apply heat to the high temperature heat shrink tubing.
3. Gradually move the heat from the center to the open end of the tubing:
    - The tubing will shrink completely as the heat is moved along the insulation.
    - A small amount of sealant will come out of the end of the tubing when sufficient shrinkage is achieved.
4. Replace any reflective tape and clips that may have been removed during the repair.

CONNECTOR POSITION ASSURANCE LOCKS

The connector position assurance (CPA) is a small plastic insert that fits through the locking tabs of the connector. CPAs are used in various connectors throughout the vehicle. CPAs are also used in all SIR system electrical connectors. The CPA ensures that the connector halves cannot vibrate apart. You must have the CPA in place in order to ensure good contact between the mating terminals of the connector.

TERMINAL POSITION ASSURANCE LOCKS

The terminal position assurance (TPA) insert resembles the plastic combs used in the control module connectors. The TPA keeps the terminal securely seated in the connector body. Do not remove the TPA from the connector body unless you remove a terminal for replacement. If the TPA is removed, be sure to reinstall it before reconnecting the connector.

AFL/EPC CONNECTORS

Special Tools

- **EL-38125-550** Terminal Release Tool Kit
- **EL-38125-580** Terminal Release Tool Kit
- **J-38125-12A** Terminal Release Tool
- **J-38125-216** Terminal Release Tool

For equivalent regional tools, refer to **Special Tools** .

Terminal Removal Procedure

cardiagn.com

Follow the steps below in order to remove terminals from the connector.

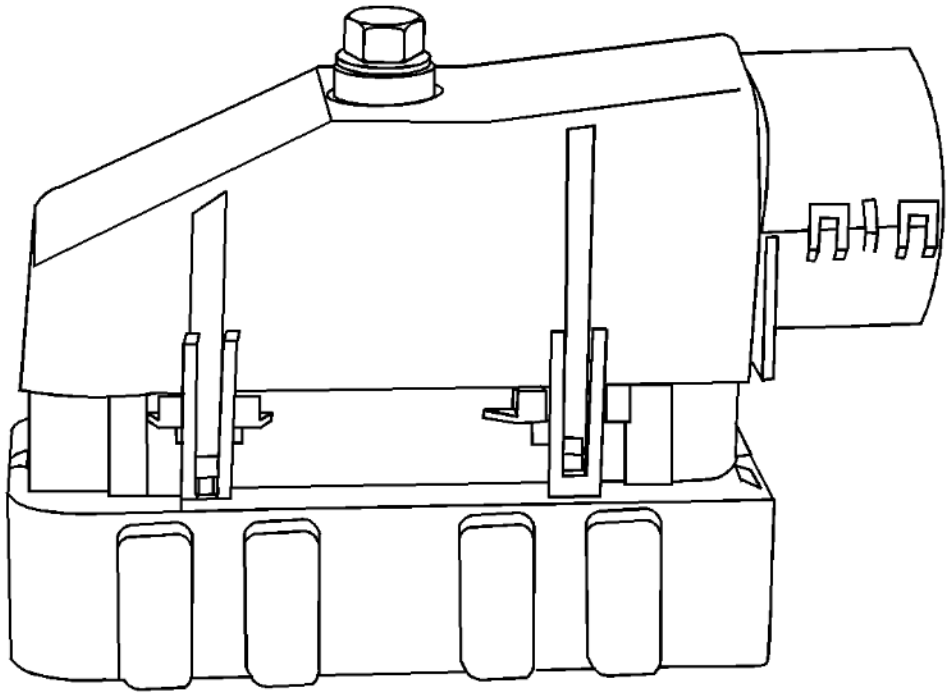

Fig. 23: Bolt On Connector Cover
Courtesy of GENERAL MOTORS COMPANY

cardiagn.com

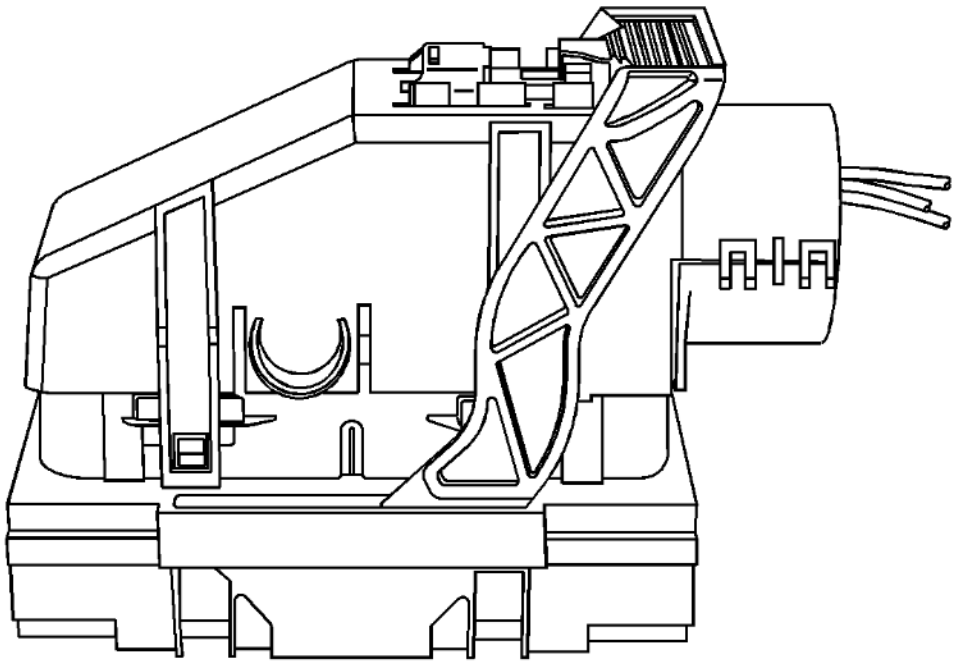

Fig. 24: Connector Position Assurance (CPA)
Courtesy of GENERAL MOTORS COMPANY

1. For connectors with a bolt in the dress cover, turn the bolt counterclockwise to remove the connector from the component.
2. Locate the connector position assurance (CPA) on the top of the wire dress cover. Slide the CPA forward.

cardiagn.com

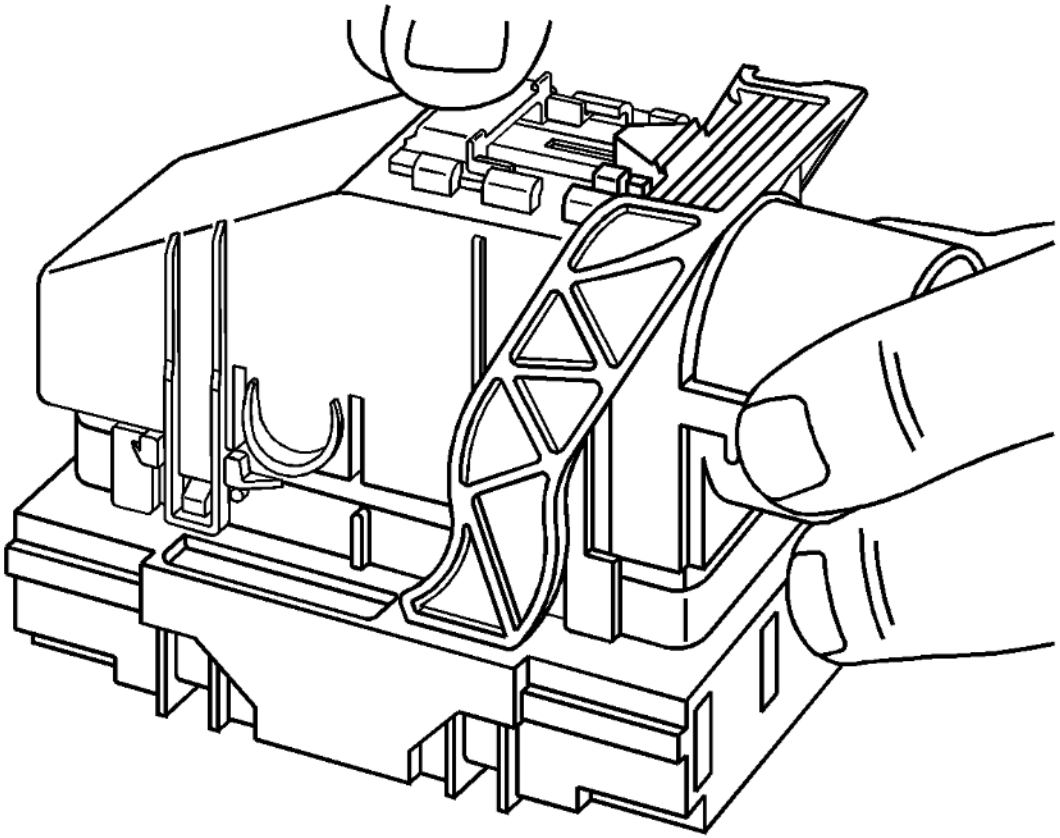

Fig. 25: Lever Lock And Lever Lock Release Tab
Courtesy of GENERAL MOTORS COMPANY

3. Slide the lever lock forward while pressing down on the lever lock release tab.

cardiagn.com

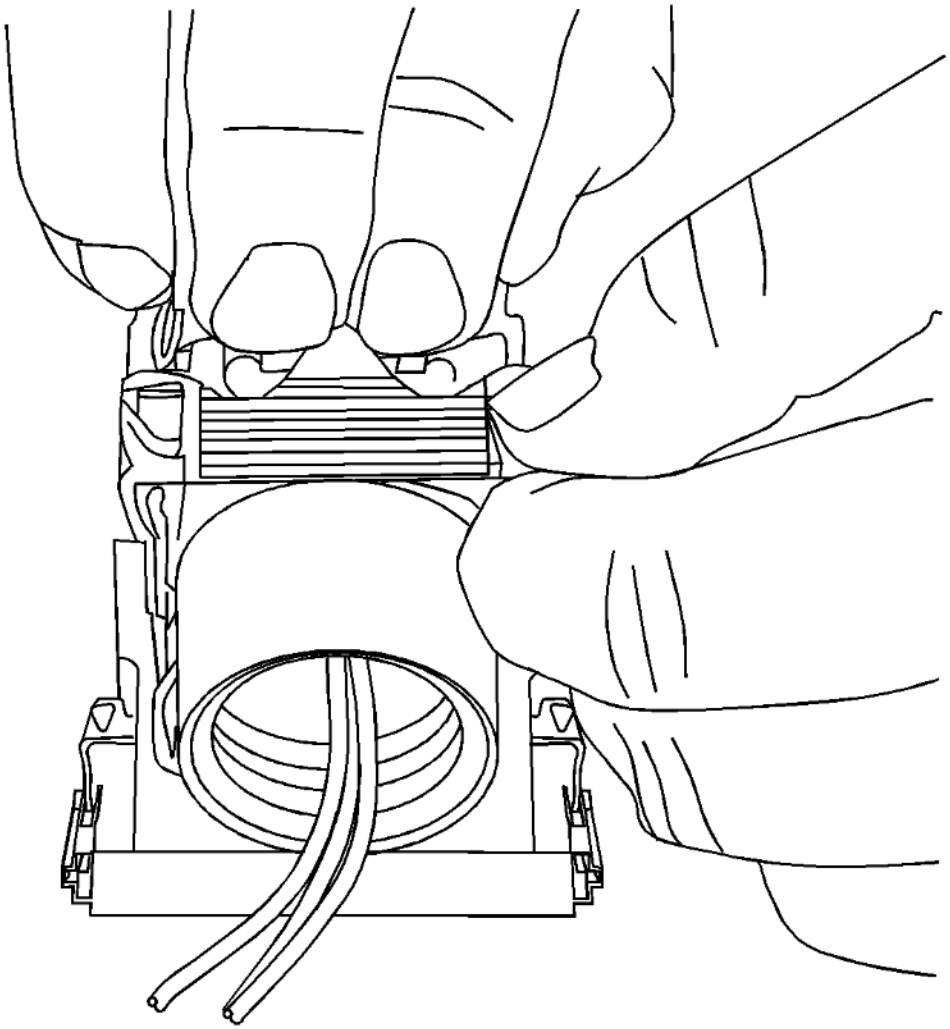

Fig. 26: Depressing Lever Lock Release Tab
Courtesy of GENERAL MOTORS COMPANY

4. View showing depressing of the lever lock release tab.

cardiagn.com

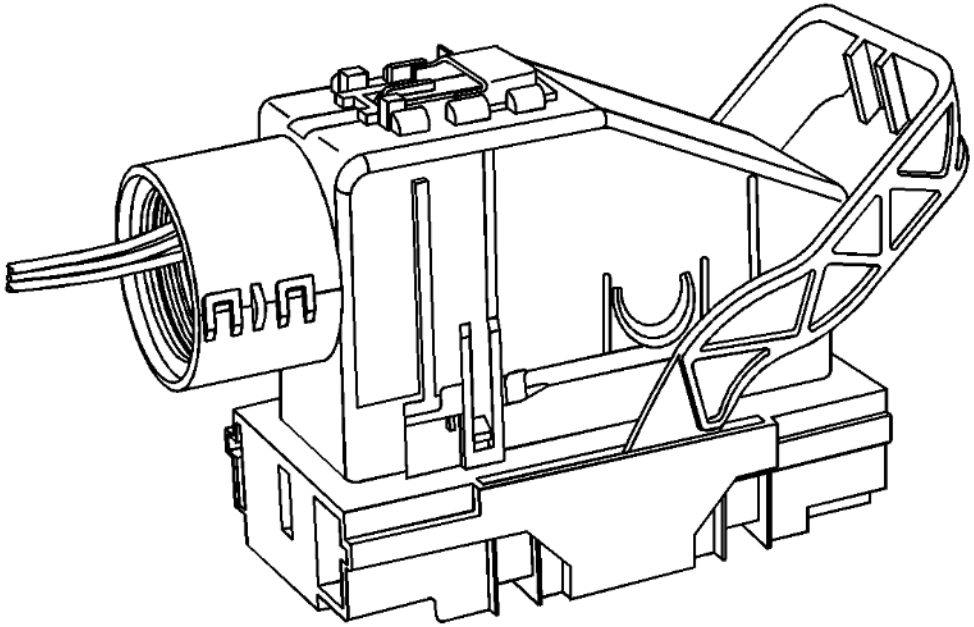

Fig. 27: Connector In Released Position
Courtesy of GENERAL MOTORS COMPANY

5. View of connector in released position.
6. Disconnect the connector from the component.
7. Locate the dress cover locking tabs at the corners of the dress cover. Use a small flat-blade tool to release the locking tabs and remove the dress cover.

cardiagn.com

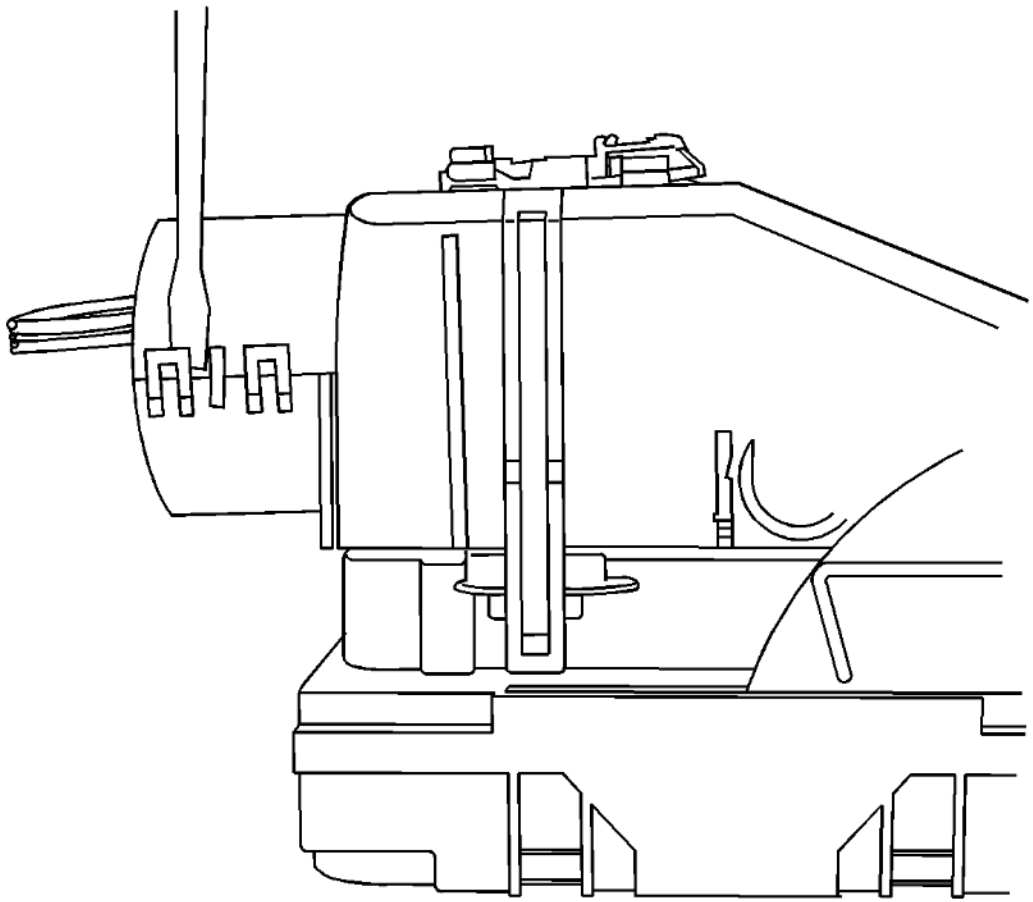

Fig. 28: Releasing Rear Lower Half Of Wiredress Cover
Courtesy of GENERAL MOTORS COMPANY

8. Release the rear lower half of the wiredress cover.

cardiagn.com

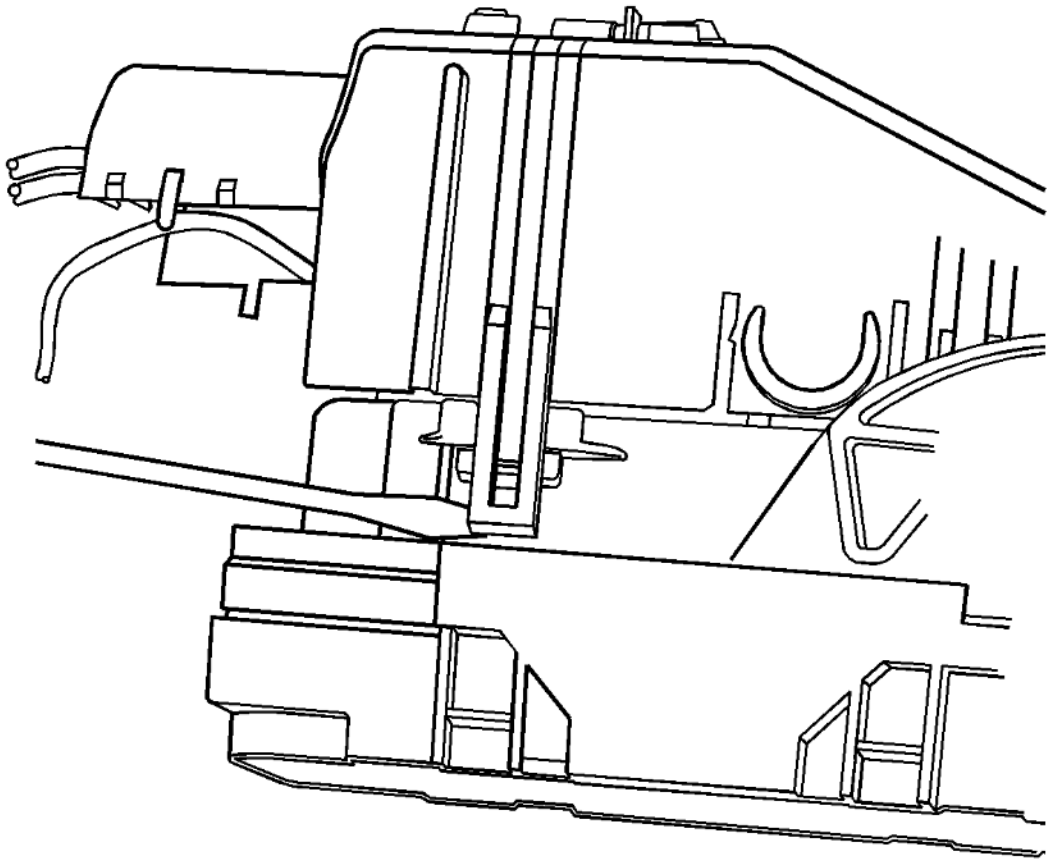

Fig. 29: Tabs Holding Wiredress Cover
Courtesy of GENERAL MOTORS COMPANY

9. Release the tabs that are holding the wiredress cover to the connector body.
10. Remove the nose piece by inserting a small flat-blade tool into the slots on both ends of the connector body. Gently pry the nose piece out of the connector. J-38125-216 can also be used to remove the nose piece.

cardiagn.com

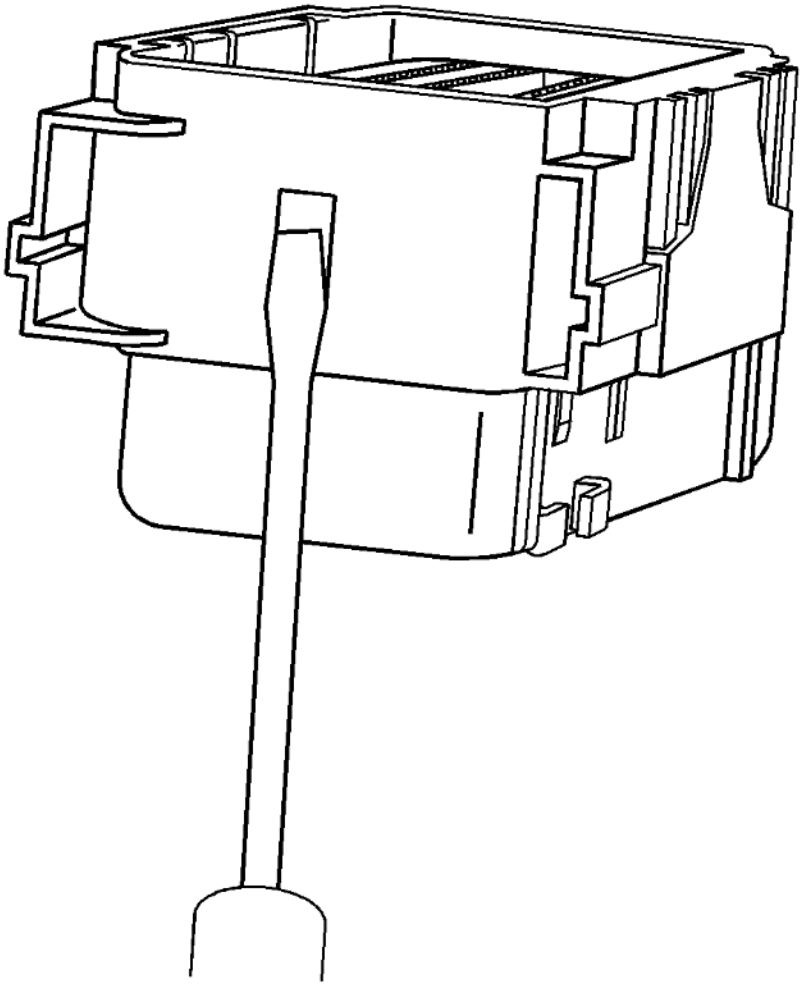

Fig. 30: Lifting Terminal Retaining Tabs
Courtesy of GENERAL MOTORS COMPANY

11. Use the J-38125-12A tool to release the terminals by lifting the terminal retaining tabs on the inside of the connector.

cardiagn.com

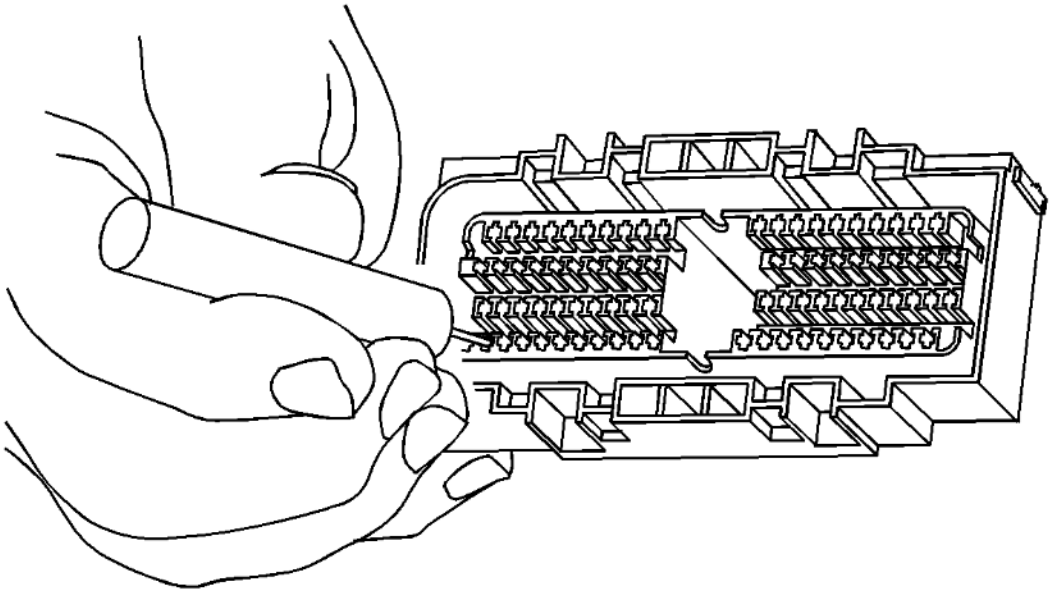

Fig. 31: Releasing Terminals
Courtesy of GENERAL MOTORS COMPANY

12. While holding the removal tool in place, gently pull the wire out of the back of the connector. Always remember never use force when pulling a terminal out of a connector.
13. Repair the terminal by following the **Repairing Connector Terminals (Terminated Lead Repair)Repairing Connector Terminals (Terminal Repair)** procedure.

cardiagn.com

14. Insert the repaired terminal back into the cavity. Repeat the diagnostic procedure to verify the repair and reconnect the connector bodies.

BOSCH CONNECTORS (BSK)

Special Tools

- **EL-38125-550** Terminal Release Tool Kit
- **EL-38125-580** Terminal Release Tool Kit
- **J-38125-561** Terminal Release Tool

For equivalent regional tools, refer to **Special Tools** .

Terminal Removal Procedure

1. Disconnect the connector from the component.
2. Remove the wire dress cover, if necessary.
3. Push the wire side of the terminal that is being removed toward the connector and hold it in position.

cardiagn.com

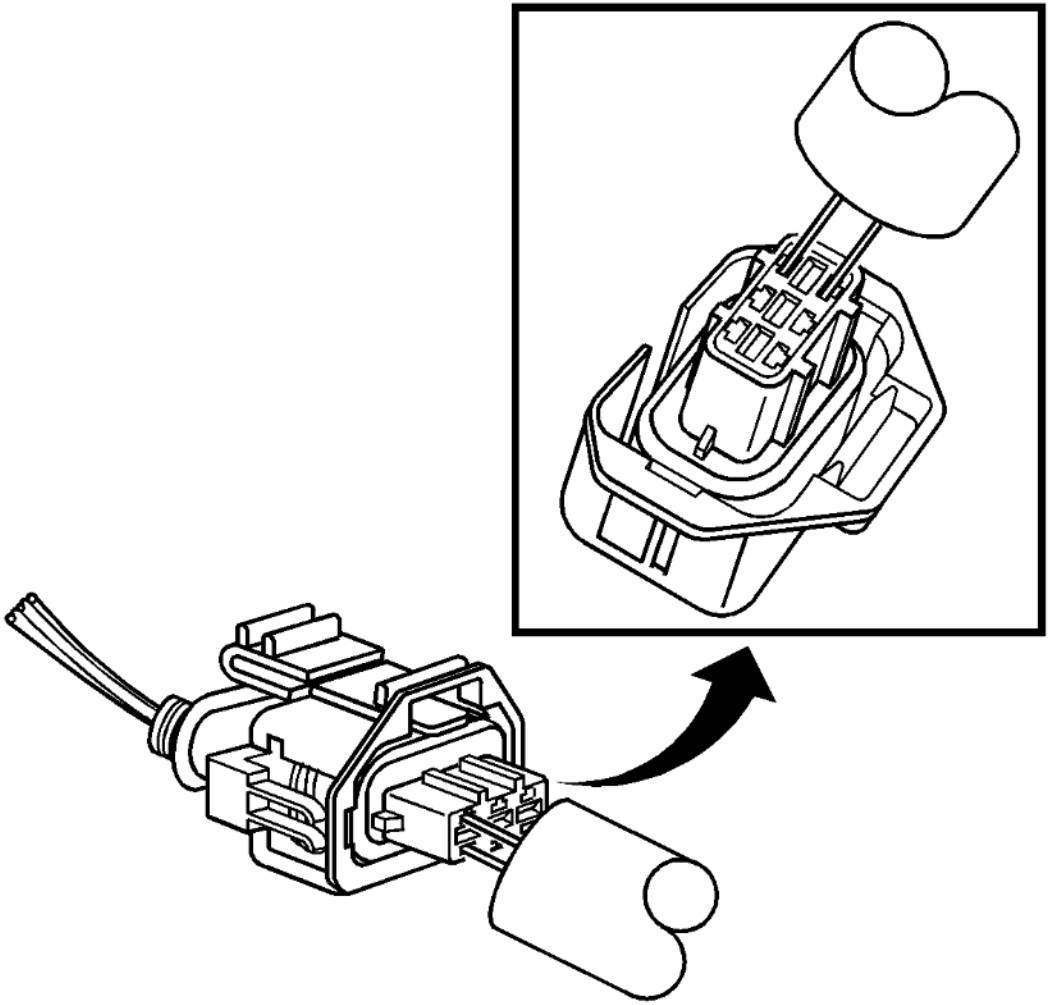

Fig. 32: Removing Bosch Connector Terminals (BSK)
Courtesy of GENERAL MOTORS COMPANY

4. Insert the J-38125-561 tool into the 2 cavities on each side of the terminal at the front of the connector and push until you feel the tool disengage the terminal retainers.
5. Carefully pull the terminal out of the connector. Always remember never use force when pulling a terminal out of a connector. If the terminal is difficult to remove, repeat the entire procedure.

cardiagn.com

6. Repair the terminal by following the **Repairing Connector Terminals (Terminated Lead Repair)Repairing Connector Terminals (Terminal Repair)** procedure.
7. Insert the repaired terminal back into the cavity. Repeat the diagnostic procedure to verify the repair and reconnect the connector bodies.

BOSCH CONNECTORS (0.64)

Special Tools

- **EL-38125-550** Terminal Release Tool Kit
- **EL-38125-580** Terminal Release Tool Kit
- **J-38125-560** Terminal Release Tool

For equivalent regional tools, refer to **Special Tools** .

Terminal Removal Procedure

1. Locate the lever lock on the wire dress cover. While pressing the lock, pull the lever over and past the lock until the lever is at the end of its travel.
2. Disconnect the connector from the component.
3. Pull the rubber boot that covers the wires back to expose the end of the connector dress cover.
4. Place the connector locking lever in the center of the connector.

cardiagn.com

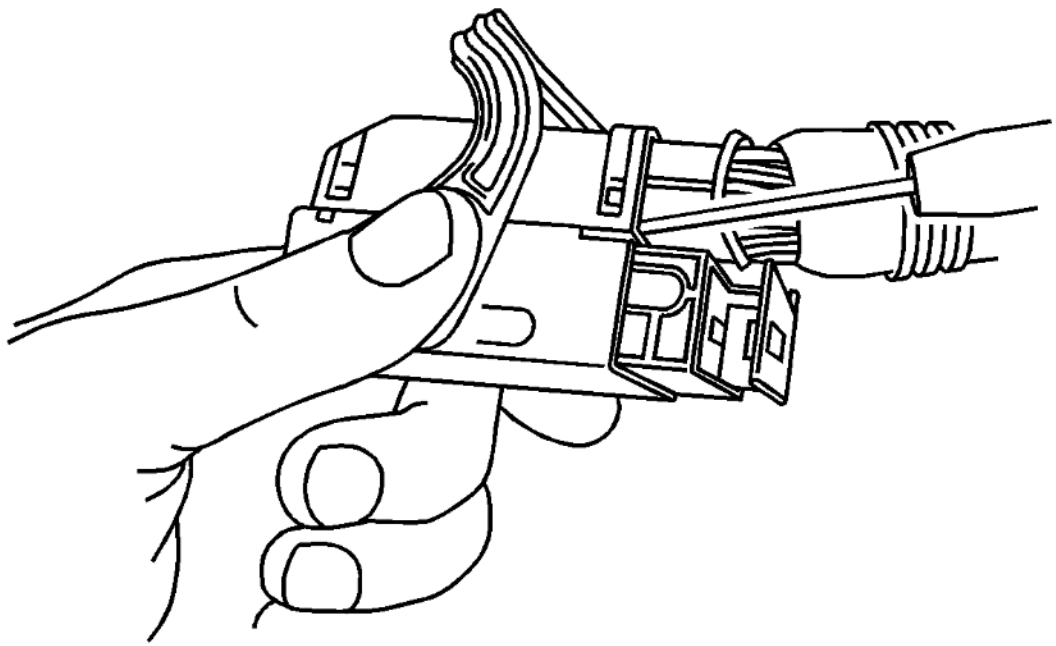

Fig. 33: Inserting Flat-Bladed Tool Between Cover And Connector Body
Courtesy of GENERAL MOTORS COMPANY

5. Locate the 2 dress cover locking tabs that are on the wire end of the connector. Insert a small flat-bladed tool between the cover and connector body and pry up.

cardiagn.com

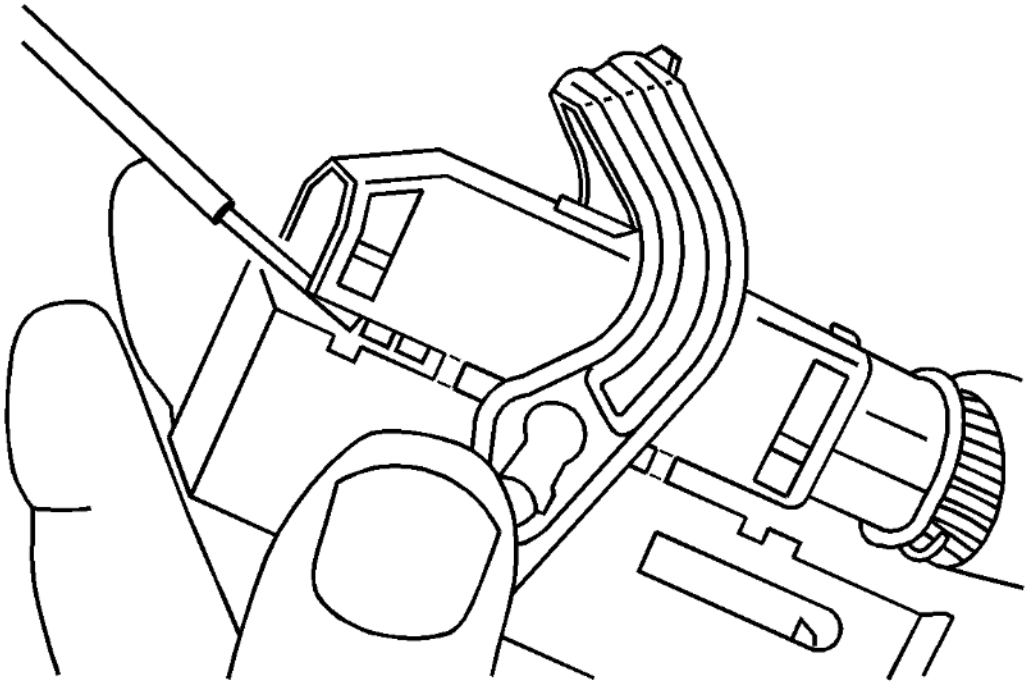

Fig. 34: Inserting Flat-Bladed Tool Between Cover And Connector End
Courtesy of GENERAL MOTORS COMPANY

6. Locate the 2 dress cover locking tabs located on the opposite side of the connector. Insert a small flat-bladed tool between the cover at the connector end and pry up.
7. Remove the dress cover.
8. Cut the tie wrap on the wire bundle.

cardiagn.com

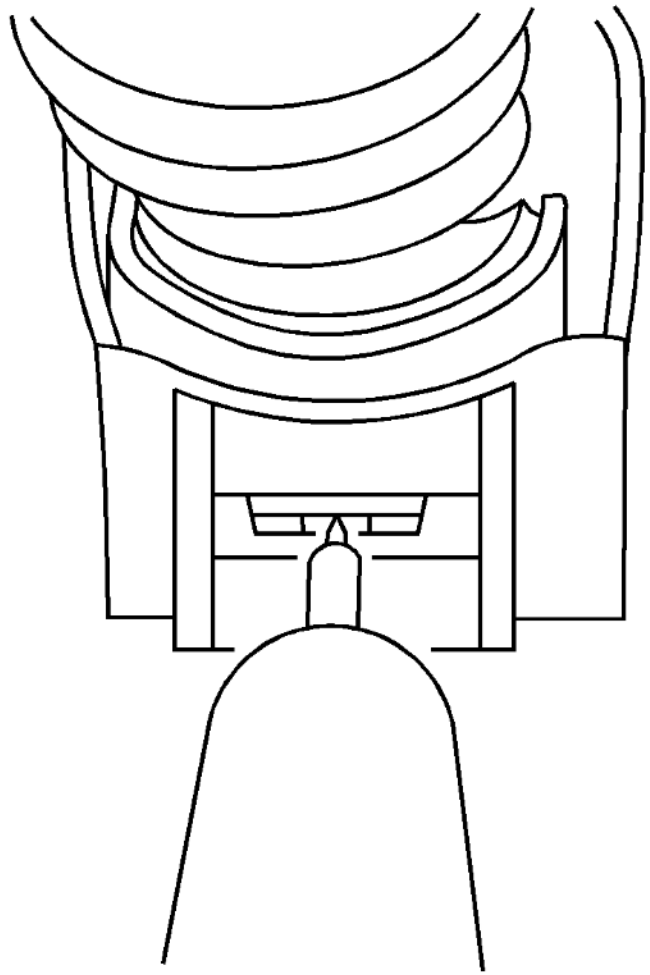

Fig. 35: Removing Terminal Position Assurance (TPA)
Courtesy of GENERAL MOTORS COMPANY

9. Remove the terminal position assurance (TPA) by inserting a small flat-bladed tool into the small slot in the end of the slider and pushing on the TPA until it comes out of the connector. When the TPA exits the opposite side of the connector, gasp the TPA and pull it completely out of the connector.
10. Push the wire side of the terminal that is being removed toward the connector and hold it in position.

cardiagn.com

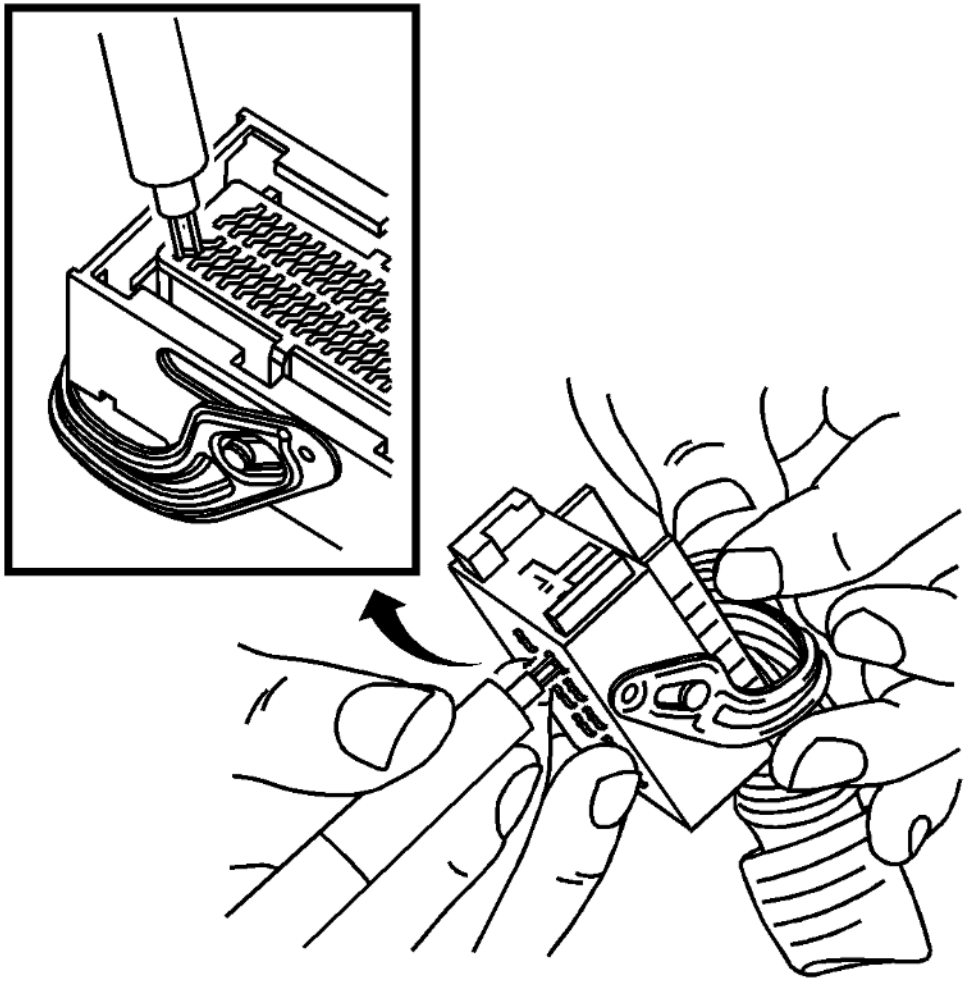

Fig. 36: Terminal Release Tool Being Inserted Into Triangular Cavities
Courtesy of GENERAL MOTORS COMPANY

11. Insert the J-38125-560 into the 2 triangular cavities on each side of the terminal at the front of the connector.
12. Carefully pull the terminal out of the connector. Always remember never use force when pulling a terminal out of a connector. If the terminal is difficult to remove, repeat the entire procedure.
13. Repair the terminal by following the **Repairing Connector Terminals (Terminated Lead Repair)Repairing Connector Terminals**

cardiagn.com

(Terminal Repair) procedure.

14. Insert the repaired terminal back into the cavity. Repeat the diagnostic procedure to verify the repair and reconnect the connector bodies.

Terminal Insertion Procedure

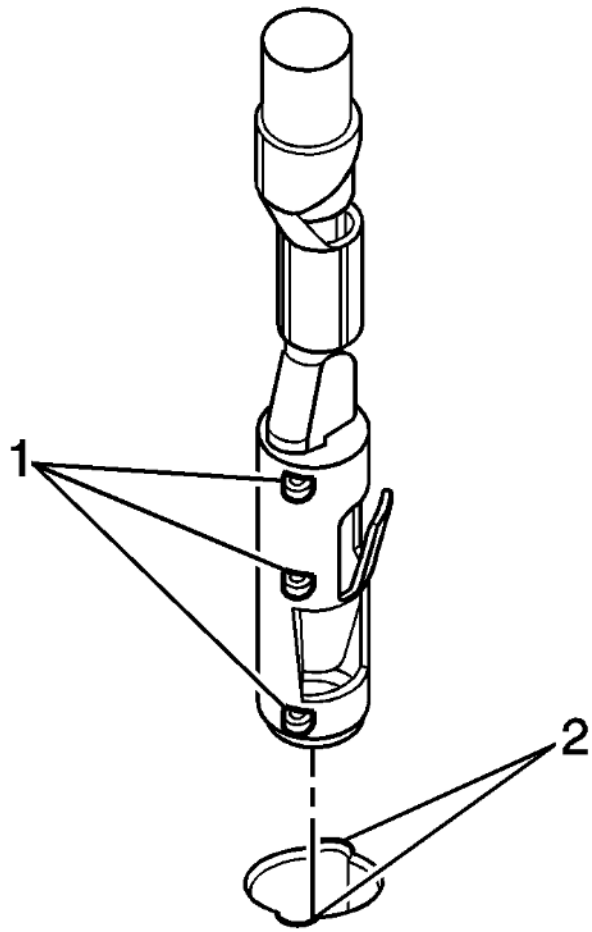

Fig. 37: Aligning Coding Lugs With Connector Coding Grooves
Courtesy of GENERAL MOTORS COMPANY

cardiagn.com

1. Prior to installation the terminal must be aligned so the (1) coding lugs align with the (2) coding grooves on the connector.
2. Once the terminal is aligned, slide the terminal into the cavity until the retainer has engaged in the cavity of the connector.
3. Slide the TPA in the connector body and seat it using a small flat bladed tool. The TPA is seated when it is flush with the contact housing.
4. Secure the wires to the connector body using a tie wrap and replace the dress cover and grommet.

BOSCH CONNECTORS (2.8 JPT)

Special Tools

- **EL-38125-550** Terminal Release Tool Kit
- **EL-38125-580** Terminal Release Tool Kit
- **J-38125-557** Terminal Release Tool

For equivalent regional tools, refer to **Special Tools** .

Terminal Removal Procedure

1. Pull out the slider on the connector position assurance (CPA) until it is at the end of its travel.
2. Disconnect the connector from the component.
3. Remove the wire dress cover, if necessary.
4. Push the wire side of the terminal that is being removed toward the connector and hold it in position.

cardiagn.com

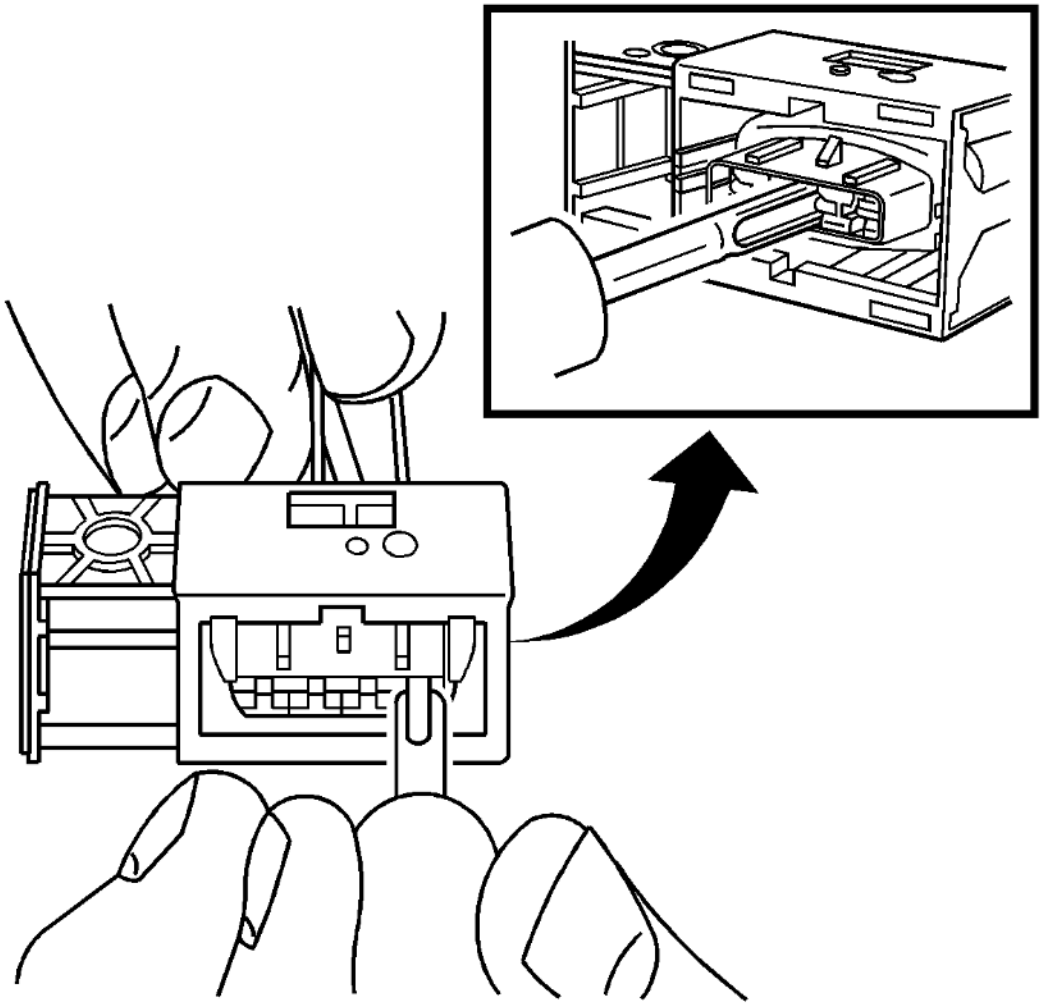

Fig. 38: Disengaging Terminal Retainers
Courtesy of GENERAL MOTORS COMPANY

5. Insert the J-38125-557 into the 2 cavities on each side of the terminal at the front of the connector and push until you feel the tool disengage the terminal retainers.
6. Carefully pull the terminal out of the connector. Always remember never use force when pulling a terminal out of a connector. If the terminal is difficult to remove, repeat the entire procedure.

cardiagn.com

7. Repair the terminal by following the **Repairing Connector Terminals (Terminated Lead Repair)Repairing Connector Terminals (Terminal Repair)** procedure.
8. Insert the repaired terminal back into the cavity. Repeat the diagnostic procedure to verify the repair and reconnect the connector bodies.

BOSCH CONNECTORS (ECM)

Special Tools

- **EL-38125-550** Terminal Release Tool Kit
- **EL-38125-580** Terminal Release Tool Kit
- **J-38125-213** Terminal Release Tool
- **J-38125-556** Terminal Release Tool

For equivalent regional tools, refer to **Special Tools** .

Terminal Removal Procedure

cardiagn.com

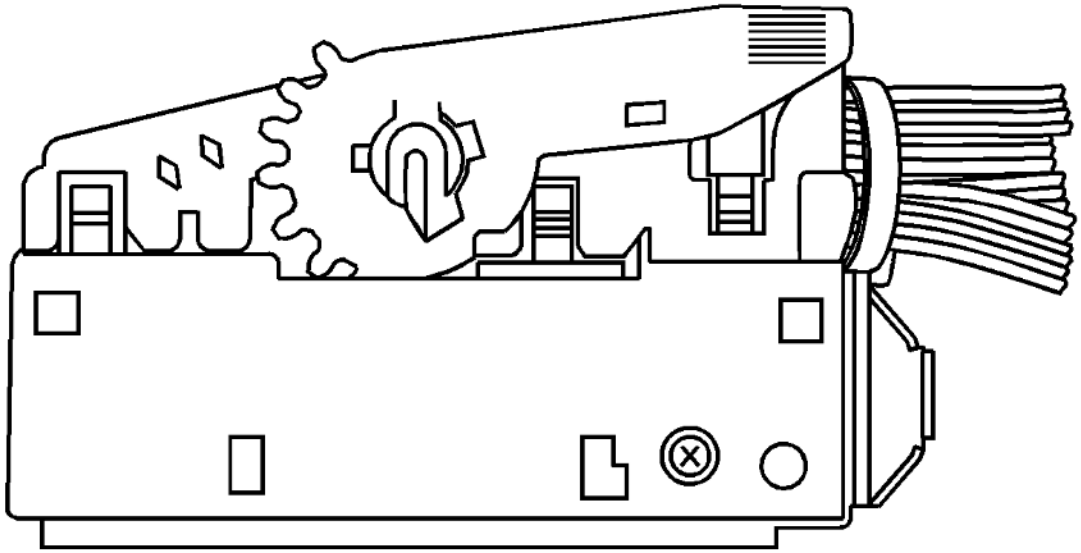

Fig. 39: Assist Lever
Courtesy of GENERAL MOTORS COMPANY

1. Locate the assist lever on the top of the connector. Move the assist lever to the forward position.

cardiagn.com

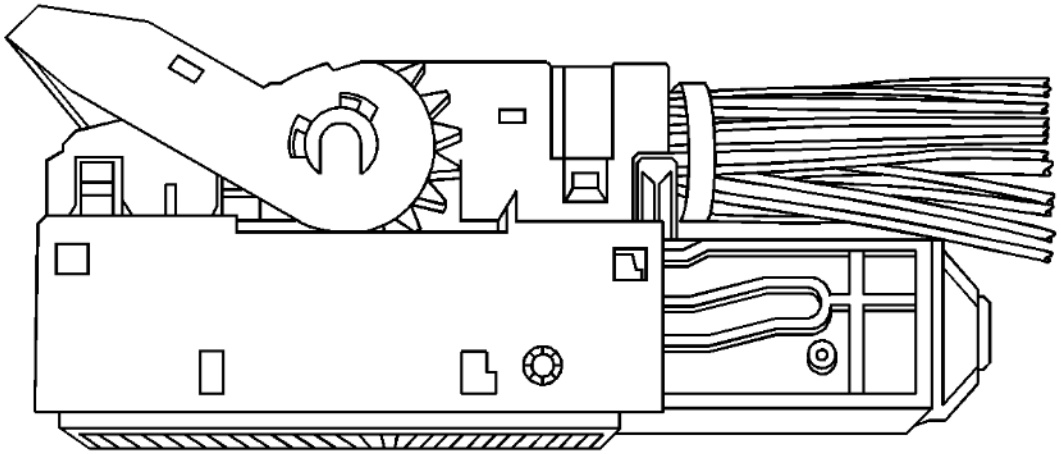

Fig. 40: Assist Lever In Forward Position
Courtesy of GENERAL MOTORS COMPANY

2. Disconnect the connector from the component.

cardiagn.com

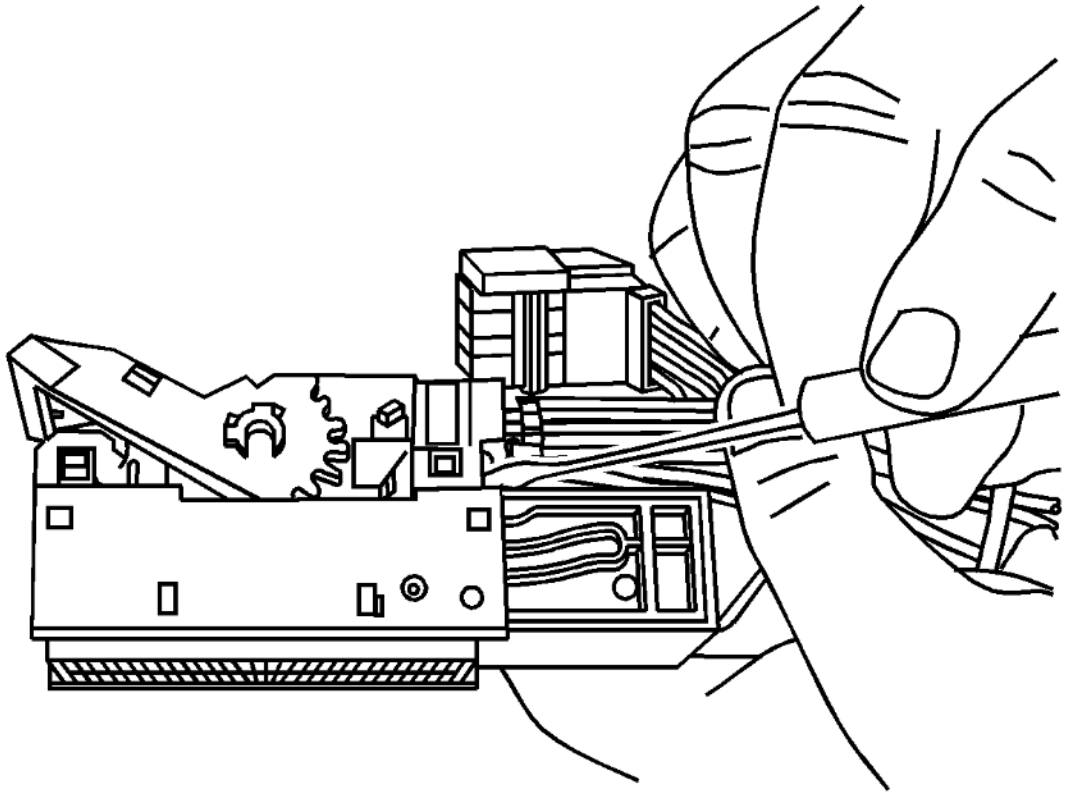

Fig. 41: Releasing Locking Tabs To Remove Dress Cover
Courtesy of GENERAL MOTORS COMPANY

3. Locate the dress cover locking tabs at the corners of the connector. Use a small flat-blade tool to release the locking tabs and remove the dress cover.

cardiagn.com

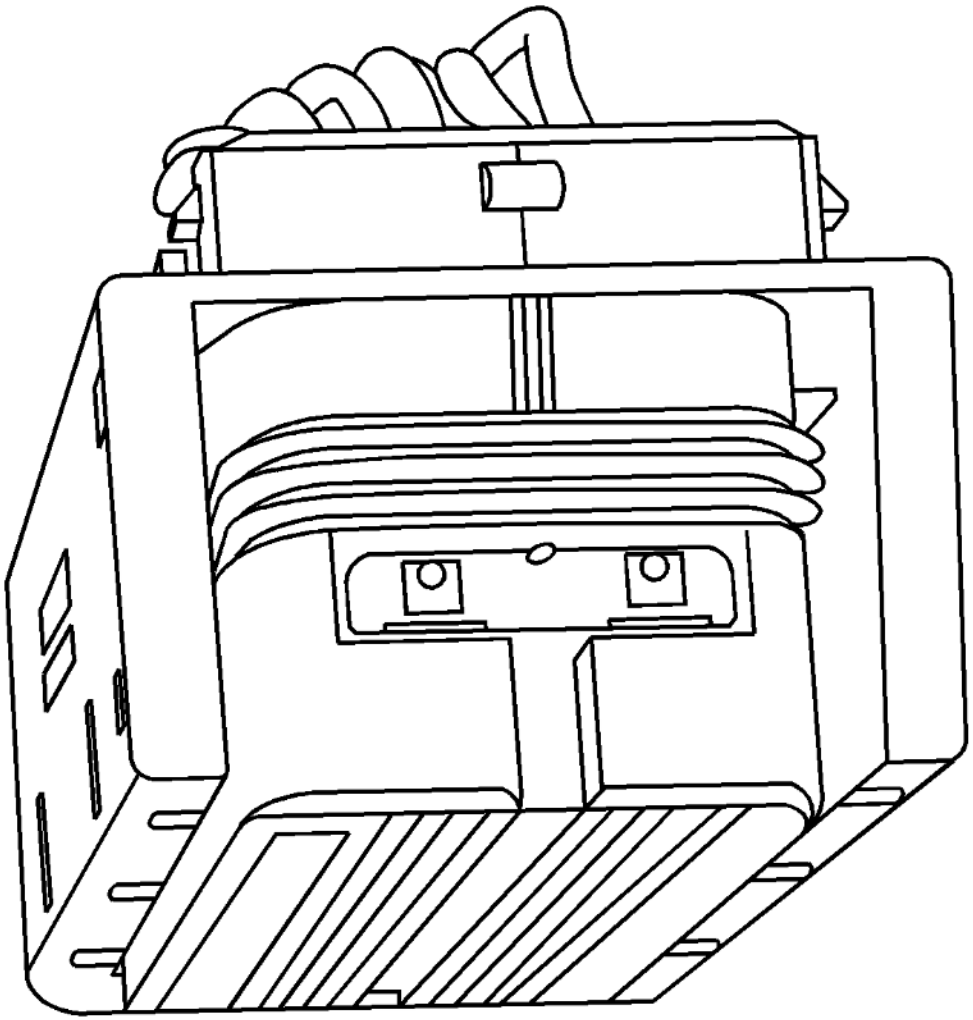

Fig. 42: Terminal Positive Assurance (TPA) Connector
Courtesy of GENERAL MOTORS COMPANY

4. The terminal positive assurance (TPA) is located in the front of the connector.

cardiagn.com

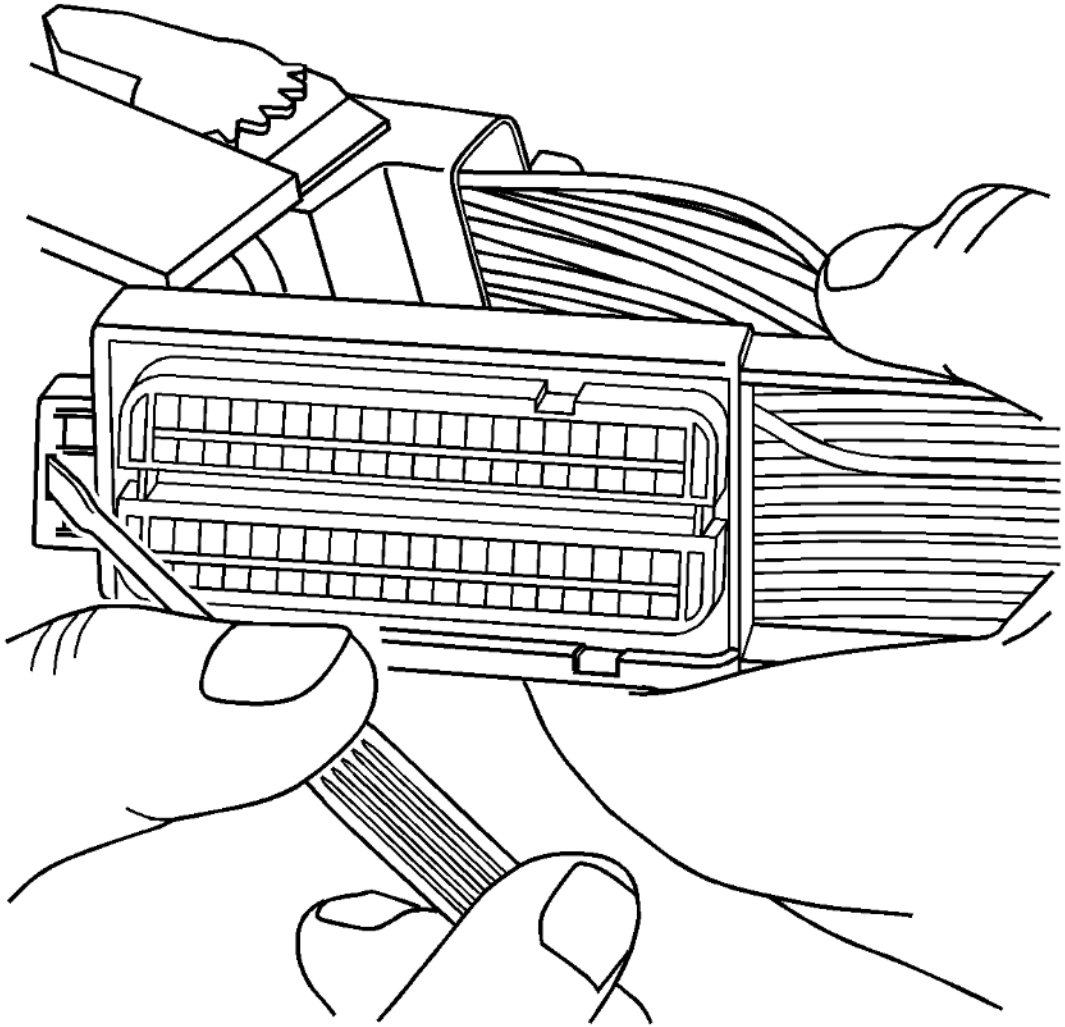

Fig. 43: Removing TPA From Connector
Courtesy of GENERAL MOTORS COMPANY

5. Use a small flat-blade tool to remove TPA from the connector.

cardiagn.com

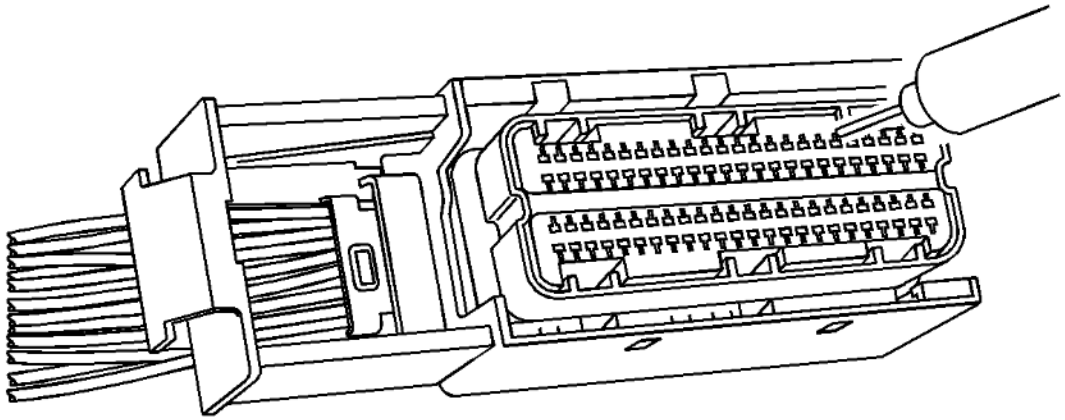

Fig. 44: Inserting Tool Into Terminal Release Cavity
Courtesy of GENERAL MOTORS COMPANY

6. Use the J-38125-213 or the J-38125-556 tool to release the terminals by inserting the tool into the terminal release cavity.
7. While holding the removal tool in place, gently pull the wire out of the back of the connector. Always remember never use force when pulling a terminal out of a connector.
8. Repair the terminal by following the **Repairing Connector Terminals (Terminated Lead Repair)Repairing Connector Terminals**

cardiagn.com

(Terminal Repair) procedure.

9. Insert the repaired terminal back into the cavity. Repeat the diagnostic procedure to verify the repair and reconnect the connector bodies.

NOTE: **Ensure that the dress cover and connector body are both in the released position before reassembling. Failure to do so may cause damage to the connector and component.**

10. Reconnect the connector bodies.

CPA CONNECTORS

Connector Removal Procedure

cardiagn.com

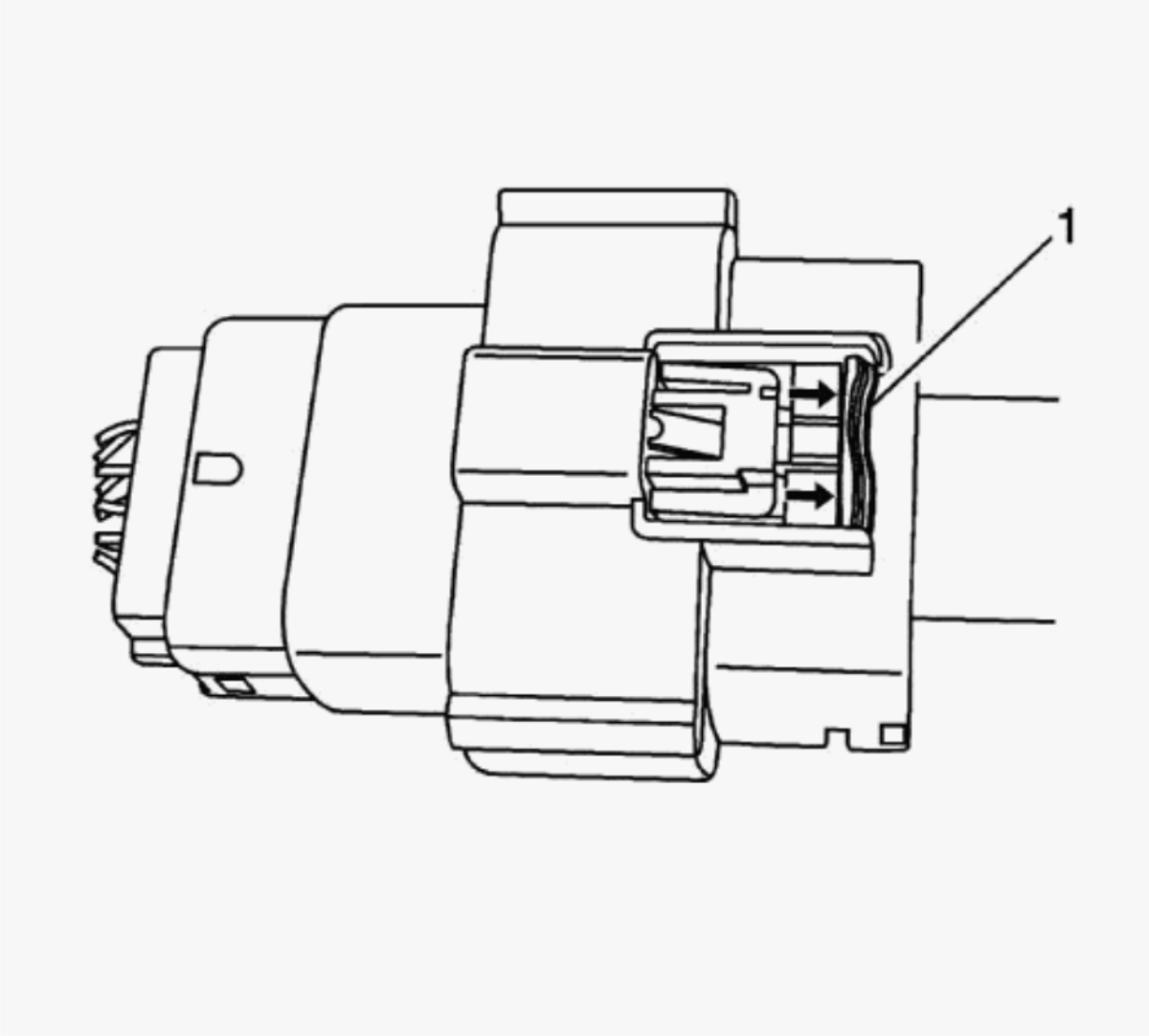

Fig. 45: Pulling Out Red CPA (Connector Position Assurance) On Female Chassis Harness Signal Connector
Courtesy of GENERAL MOTORS COMPANY

1. Pull out the red CPA (Connector Position Assurance) [1] on the female chassis harness signal connector.

cardiagn.com

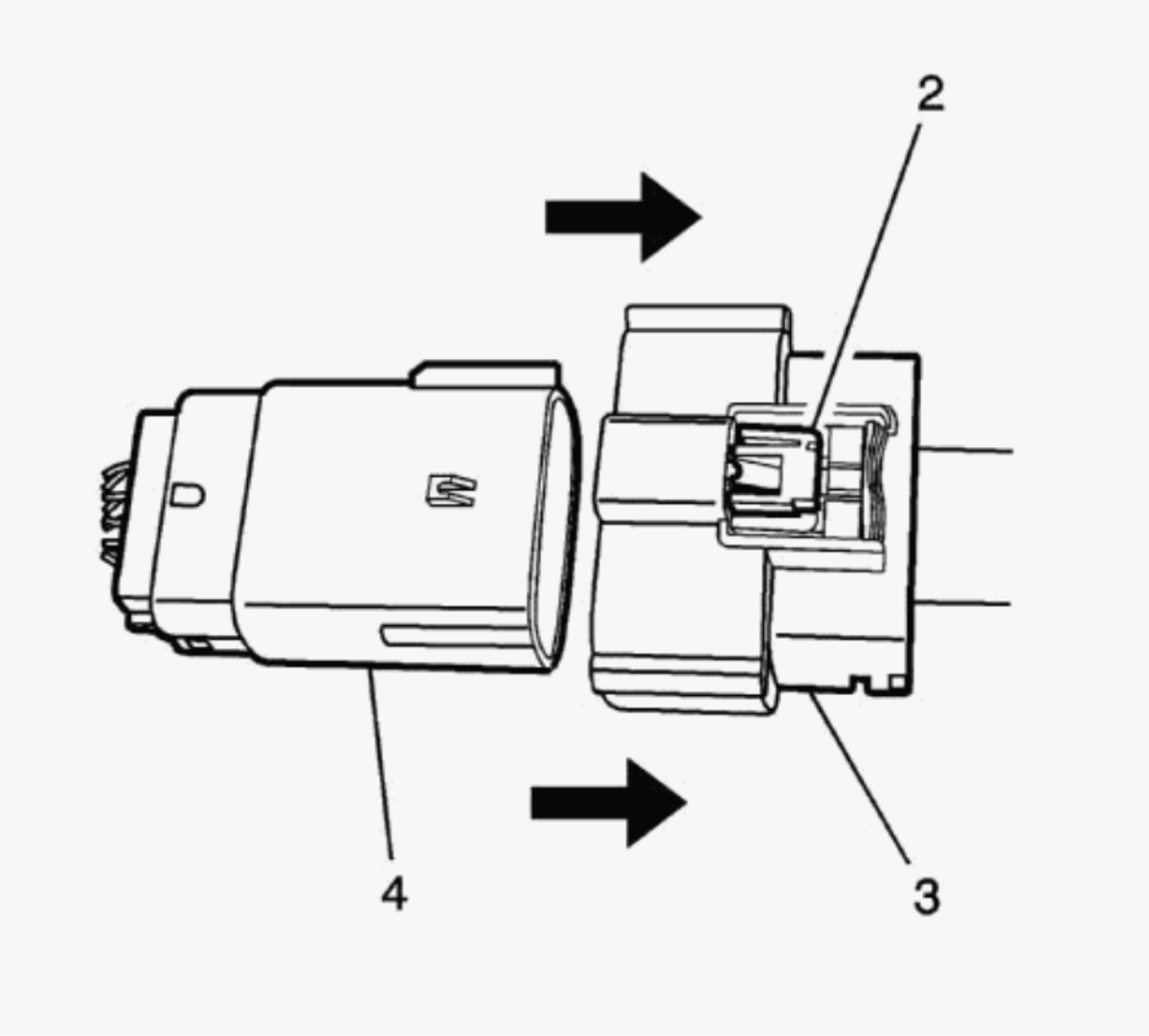

Fig. 46: Locking Tab (Pump Arm) And Male Pigtail Connector
Courtesy of GENERAL MOTORS COMPANY

2. Depress the connector locking tab (pump arm) [2] of this connector [3] to allow it to disengage from the male pigtail connector [4].
3. Pull on the female connector [3] to separate it from the male connector [4].

Connector Installation Procedure

cardiagn.com

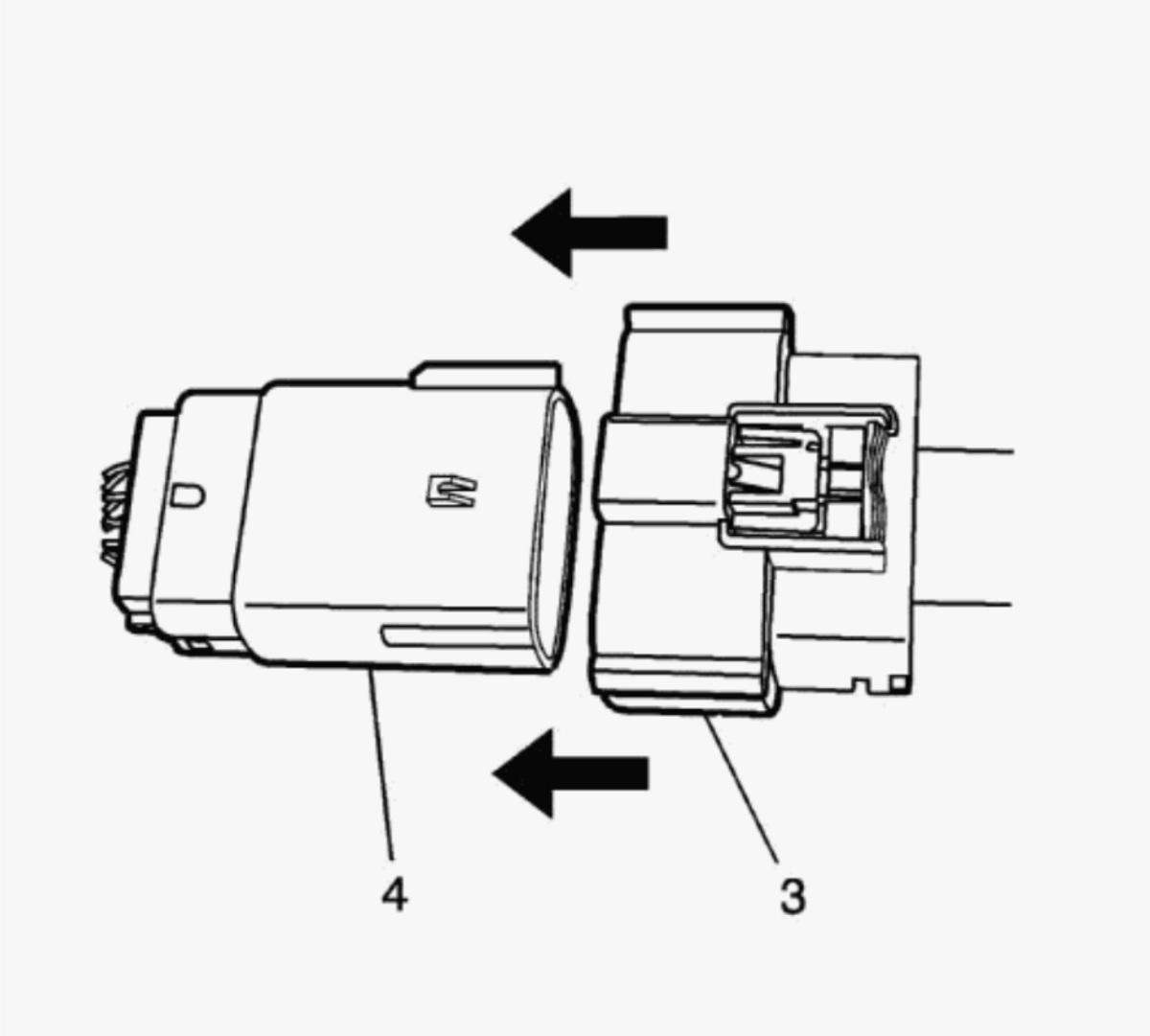

Fig. 47: Female Connector And Male Connector
Courtesy of GENERAL MOTORS COMPANY

1. Align the female connector [3] to the male connector [4] locking feature and push them together until fully engaged.

cardiagn.com

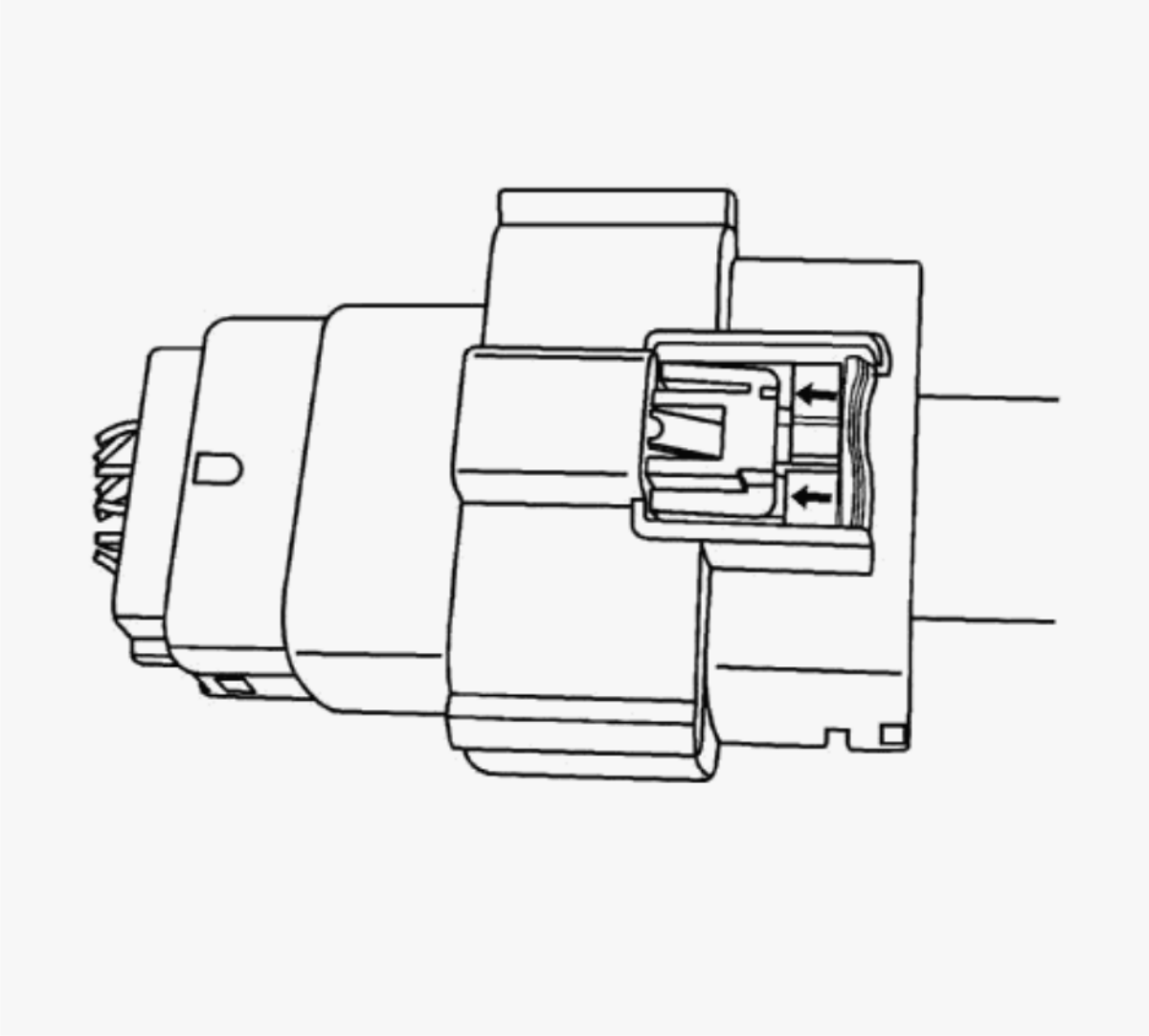

Fig. 48: Red CPA (Connector Position Assurance)
Courtesy of GENERAL MOTORS COMPANY

2. Push in the red CPA (Connector Position Assurance) on the female chassis harness signal connector to lock them securely.

DELPHI CONNECTORS (WEATHER PACK)

Special Tools

cardiagn.com

- **EL-38125-550** Terminal Release Tool Kit
- **EL-38125-580** Terminal Release Tool Kit
- **J-38125-10A** Terminal Release Tool

For equivalent regional tools, refer to **Special Tools** .

Terminal Removal Procedure

The following is the proper procedure for the repair of Weather PackÂ® Connectors.

cardiagn.com

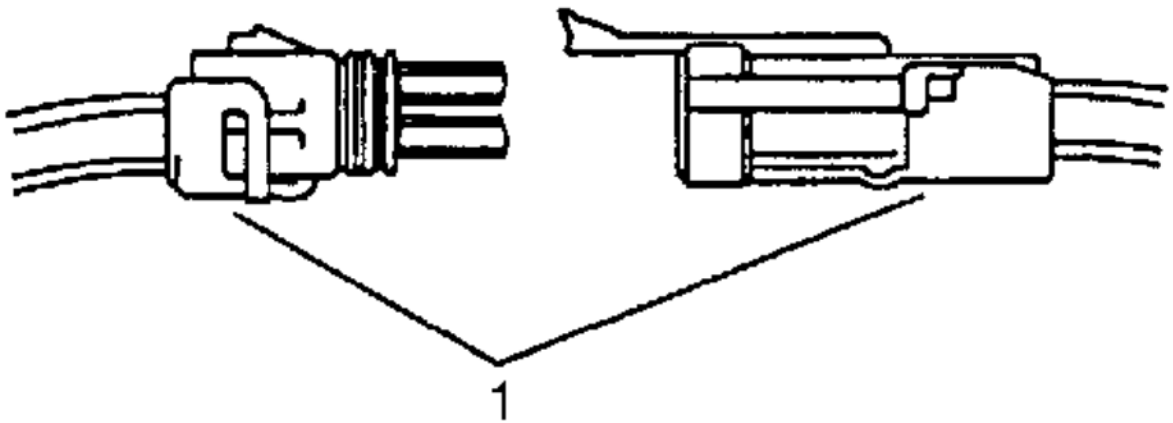

Fig. 49: Separating Connector Halves
Courtesy of GENERAL MOTORS COMPANY

1. Separate the connector halves (1).
2. Open the secondary lock. A secondary lock aids in terminal retention and is usually molded to the connector (1).

cardiagn.com

3. Grasp the wire and push the terminal to the forward most position. Hold the wire in this position.

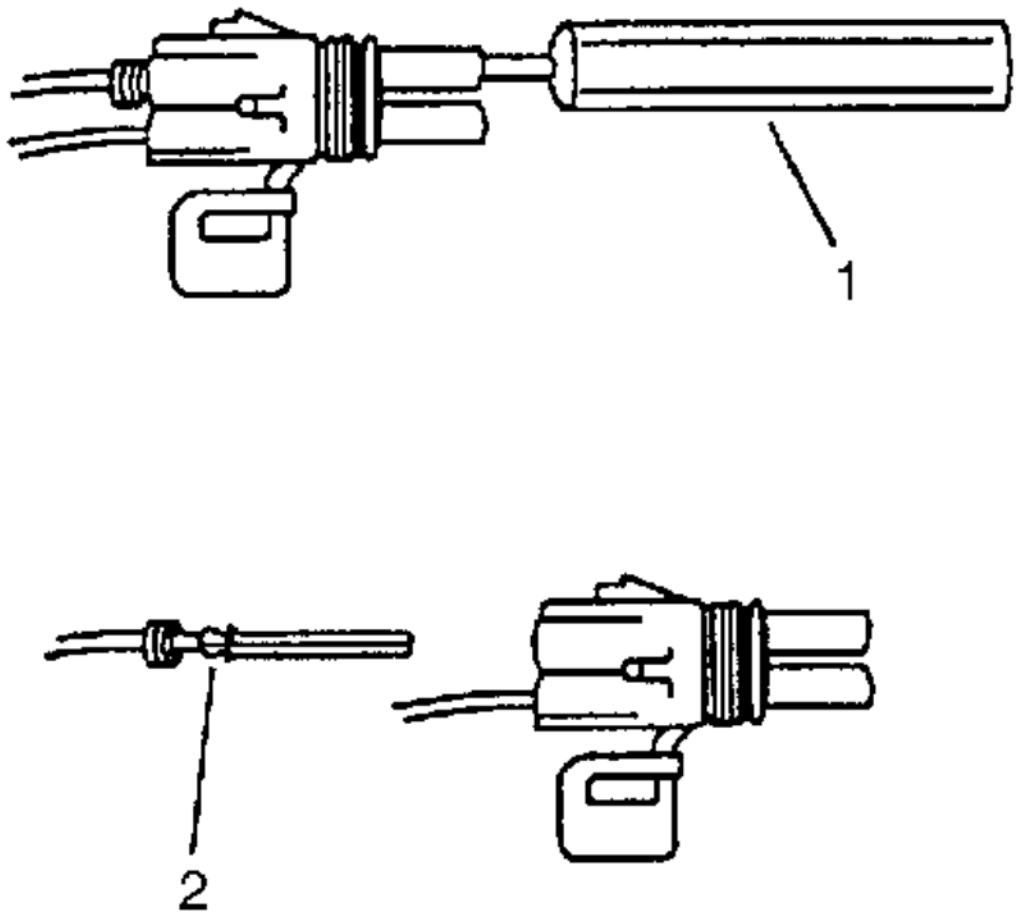

Fig. 50: Removal Tool And Terminal
Courtesy of GENERAL MOTORS COMPANY

cardiagn.com

4. Insert the Weather PackÂ® terminal removal tool J-38125-10A into the front (mating end) of the connector cavity until it rests on the cavity shoulder (1).
5. Gently pull on the wire to remove the terminal through the back of the connector (2).

NOTE: **Never use force to remove a terminal from a connector.**

6. Inspect the terminal and connector for damage. Repair as necessary. Refer to **Repairing Connector Terminals (Terminated Lead Repair)Repairing Connector Terminals (Terminal Repair)**.
7. Reform the lock tang (2) and reset terminal in connector body.
8. Close secondary locks and join connector halves.
9. Verify that circuit is complete and working satisfactorily.
10. Perform system check.
11. Repair the terminal by following the **Repairing Connector Terminals (Terminated Lead Repair)Repairing Connector Terminals (Terminal Repair)** procedure.
12. Insert the repaired terminal back into the cavity. Repeat the diagnostic procedure to verify the repair and reconnect the connector bodies.

DELPHI CONNECTORS (PUSH TO SEAT)

Special Tools

- **EL-38125-550** Terminal Release Tool Kit
- **EL-38125-580** Terminal Release Tool Kit

For equivalent regional tools, refer to **Special Tools** .

Terminal Removal Procedure

Follow the steps below in order to repair push to seat connectors.

1. Remove the terminal position assurance (TPA) device, the connector position assurance (CPA) device, and/or the secondary lock.

cardiagn.com

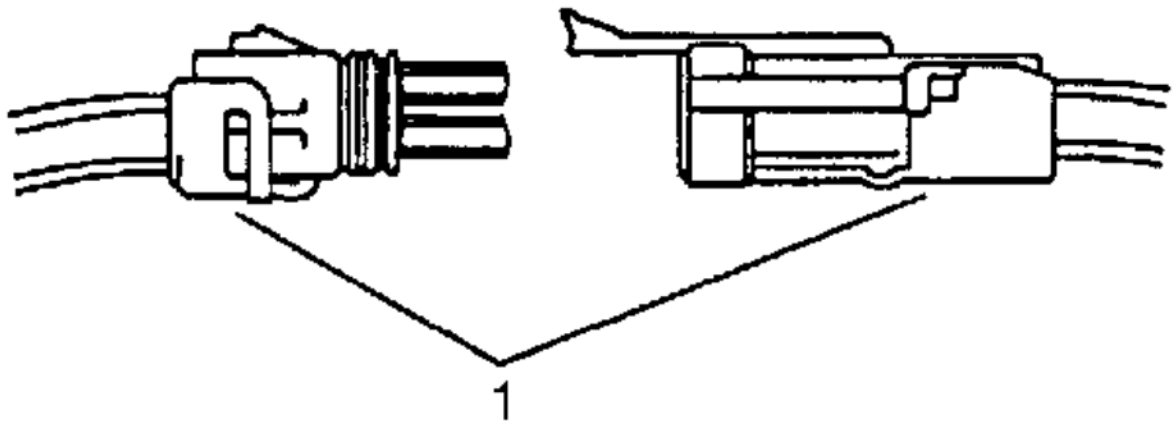

Fig. 51: Separating Connector Halves
Courtesy of GENERAL MOTORS COMPANY

2. Separate the connector halves (1).

cardiagn.com

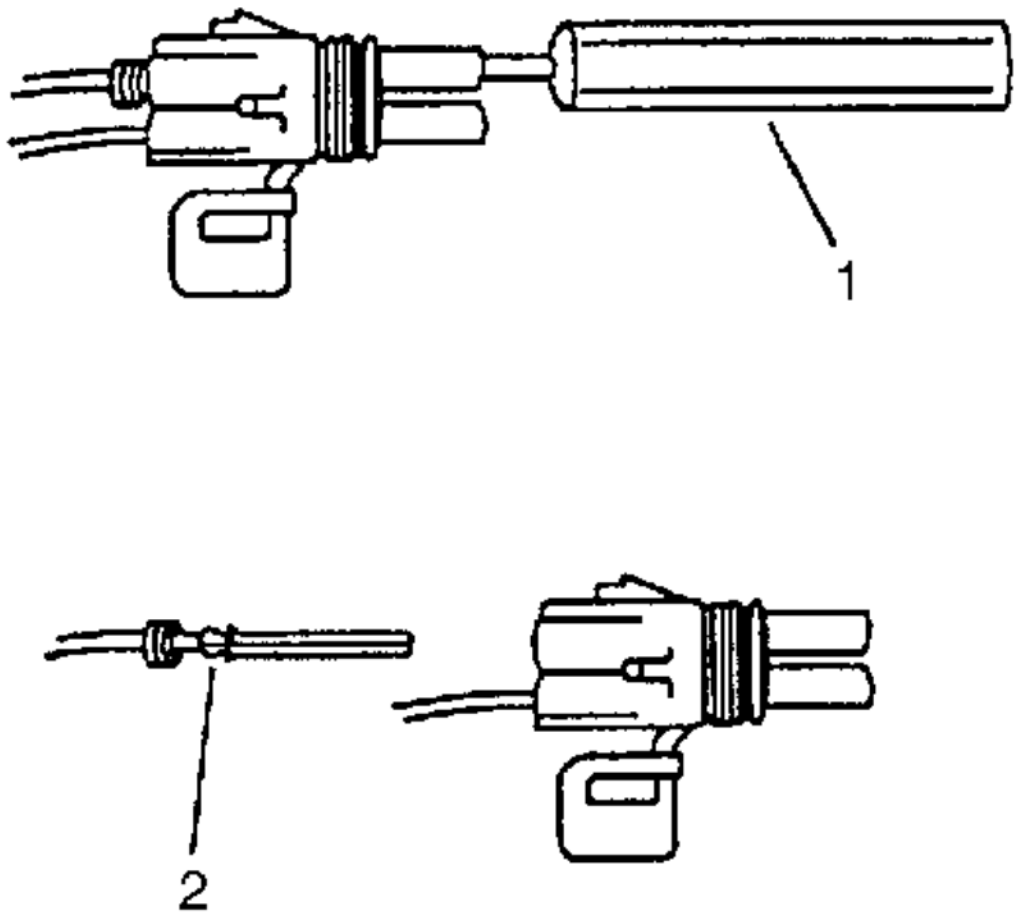

Fig. 52: Removal Tool And Terminal
Courtesy of GENERAL MOTORS COMPANY

3. Use the proper pick or removal tool (1) in order to release the terminal.
4. Gently pull the cable and the terminal (2) out of the back of the connector.

cardiagn.com

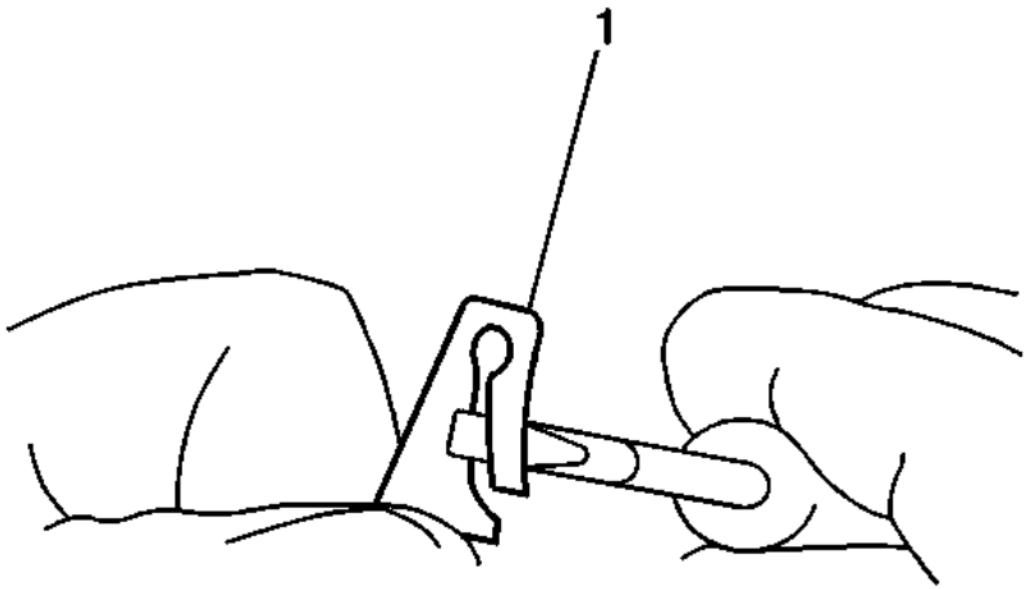

Fig. 53: Re-Forming Locking Device
Courtesy of GENERAL MOTORS COMPANY

5. Re-form the locking device if you are going to reuse the terminal (1).
6. Repair the terminal by following the **Repairing Connector Terminals (Terminated Lead Repair)Repairing Connector Terminals (Terminal Repair)** procedure.
7. Insert the repaired terminal back into the cavity. Repeat the diagnostic procedure to verify the repair and reconnect the connector bodies.

cardiagn.com

Terminal Insertion Procedure

1. In order to reuse a terminal or lead assembly, refer to **Wiring Repairs** .
2. Ensure that the cable seal is kept on the terminal side of the splice.
3. Insert the lead from the back until it catches.
4. Install the TPA, CPA, and/or the secondary locks.

DELPHI CONNECTORS (PULL TO SEAT)

Special Tools

- **EL-38125-550** Terminal Release Tool Kit
- **EL-38125-580** Terminal Release Tool Kit

For equivalent regional tools, refer to **Special Tools** .

Terminal Removal Procedure

If the terminal is visibly damaged or is suspected of having a faulty connection, the terminal should be replaced.

cardiagn.com

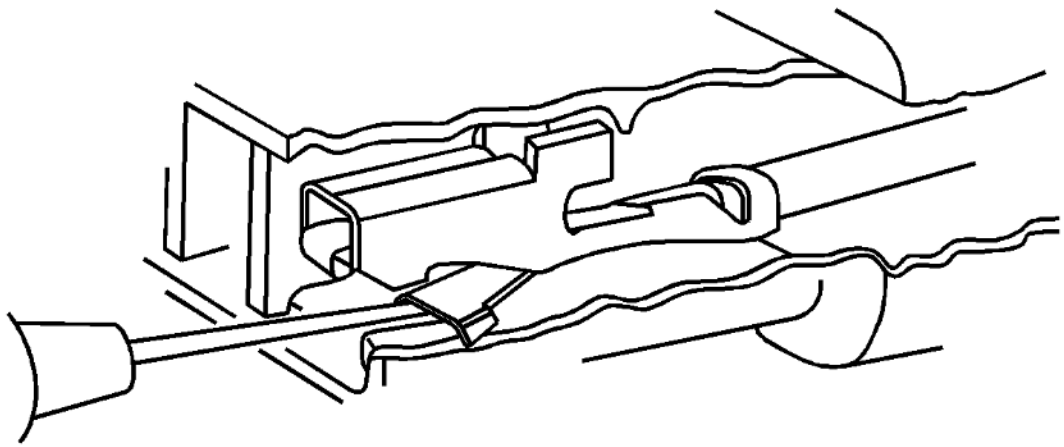

Fig. 54: Aligning Removal Tool - Delphi (Pull To Seat)
Courtesy of GENERAL MOTORS COMPANY

Follow the steps below in order to repair pull-to-seat connectors:

1. Remove the connector position assurance (CPA) device and/or the secondary lock.
2. Disconnect the connector from the component or separate the connectors for in-line connectors.
3. Remove the terminal position assurance (TPA) device.

cardiagn.com

4. Review the connector end view to determine the proper test probe and release tool.
5. Insert the release tool into the front of the connector body.
6. Grasp the wire at the back of the connector body and gently push the terminal out the front of the connector body.
7. Repair the terminal by following the **Repairing Connector Terminals (Terminated Lead Repair)Repairing Connector Terminals (Terminal Repair)** procedure.
8. Insert the repaired terminal back into the cavity. Repeat the diagnostic procedure to verify the repair and reconnect the connector bodies.

Terminal Insertion Procedure

1. Align the terminal and pull the wire from the back of the connector in order to seat the terminal.
2. If the connector is outside of the passenger compartment, apply dielectric grease to the connector.
3. Install the TPA, CPA, and/or the secondary locks.

DELPHI CONNECTORS (MICRO-PACK 100W)

Special Tools

- **EL-38125-550** Terminal Release Tool Kit
- **EL-38125-580** Terminal Release Tool Kit
- **J-38125-12A** Terminal Release Tool

For equivalent regional tools, refer to **Special Tools** .

Terminal Removal Procedure

There are 2 styles of Micro-Pack 100W connectors. These connectors are very similar but use different terminals and have some minor physical differences also.

cardiagn.com

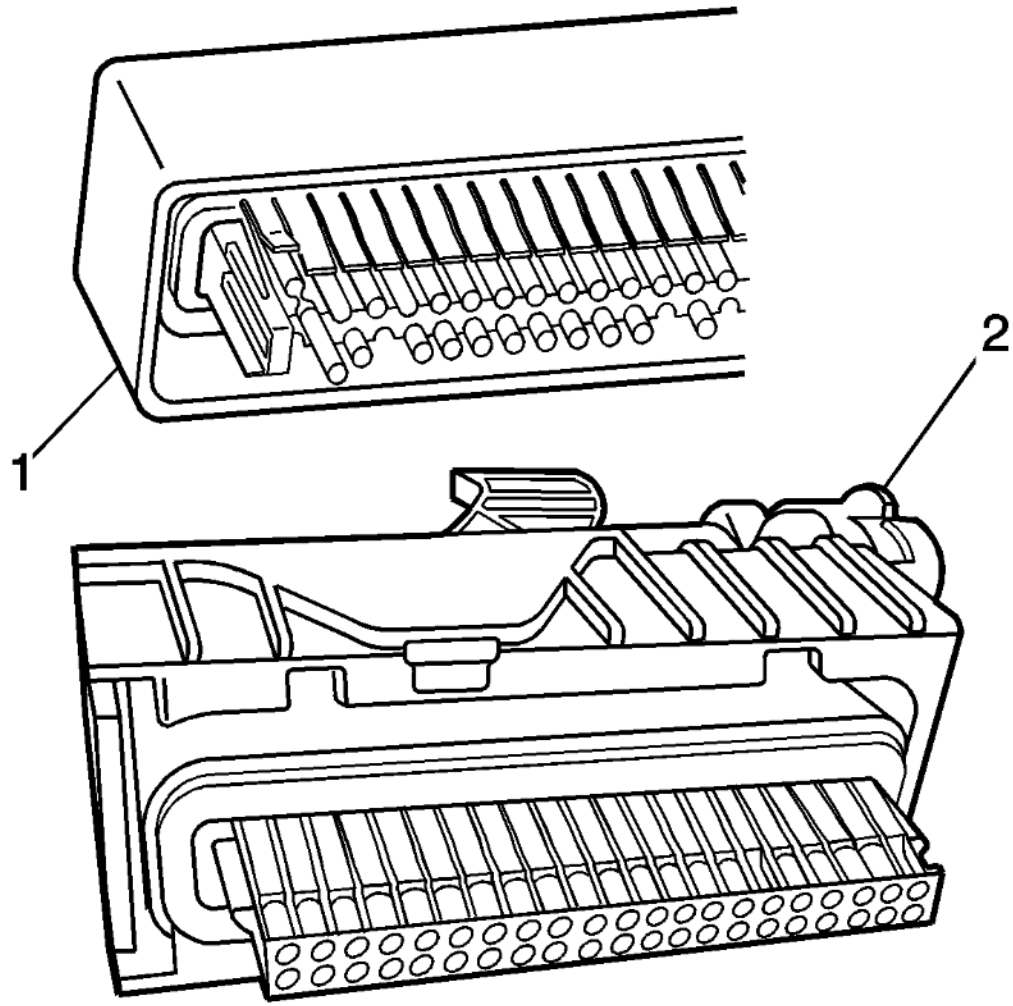

Fig. 55: Micro-Pack 100W First & Second Connector Designs
Courtesy of GENERAL MOTORS COMPANY

The first connector design of the Micro-Pack 100W (1) has a white connector interface that holds the terminals. The second design of the Micro-Pack 100W (2) has a gray interface to hold the terminals. Also, the first design has terminal cavities that are further apart (3 mm centerline) and offset from the other row of terminal cavities in the connector. The second design has terminals cavities that are closer together (2.54 mm centerline) and aligned vertically. One other way to identify the second design is the thin strip of material that runs along the outside of the cavities.

cardiagn.com

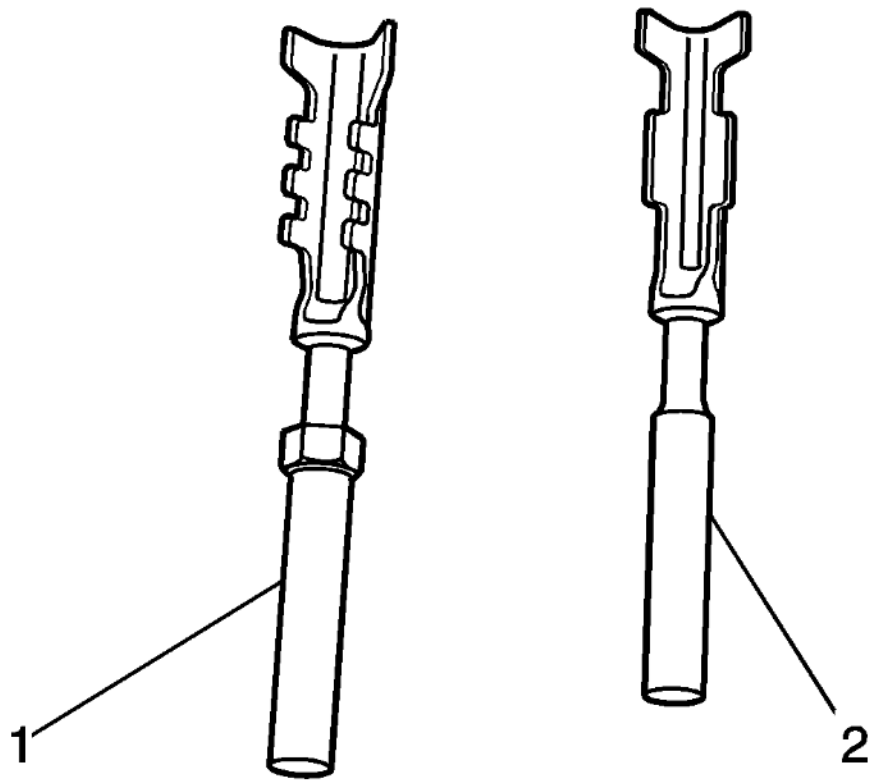

Fig. 56: Micro-Pack 100W Short And Long Terminals
Courtesy of GENERAL MOTORS COMPANY

NOTE: **There are 2 styles of Micro-Pack 100W terminals which are very similar. Ensure that you have the correct terminal before crimping the new terminal to the wire. The first design connector uses the longer terminal (1) that has a raised area in front of the recess in the terminal. The second design connector uses the shorter terminal without the raised area.**

cardiagn.com

Follow the steps below in order to remove terminals from Micro-Pack 100W connectors. Some Micro-Pack 100W connector disassembly procedures will vary. Use this procedure as a guide.

1. Disconnect the connector from the component.

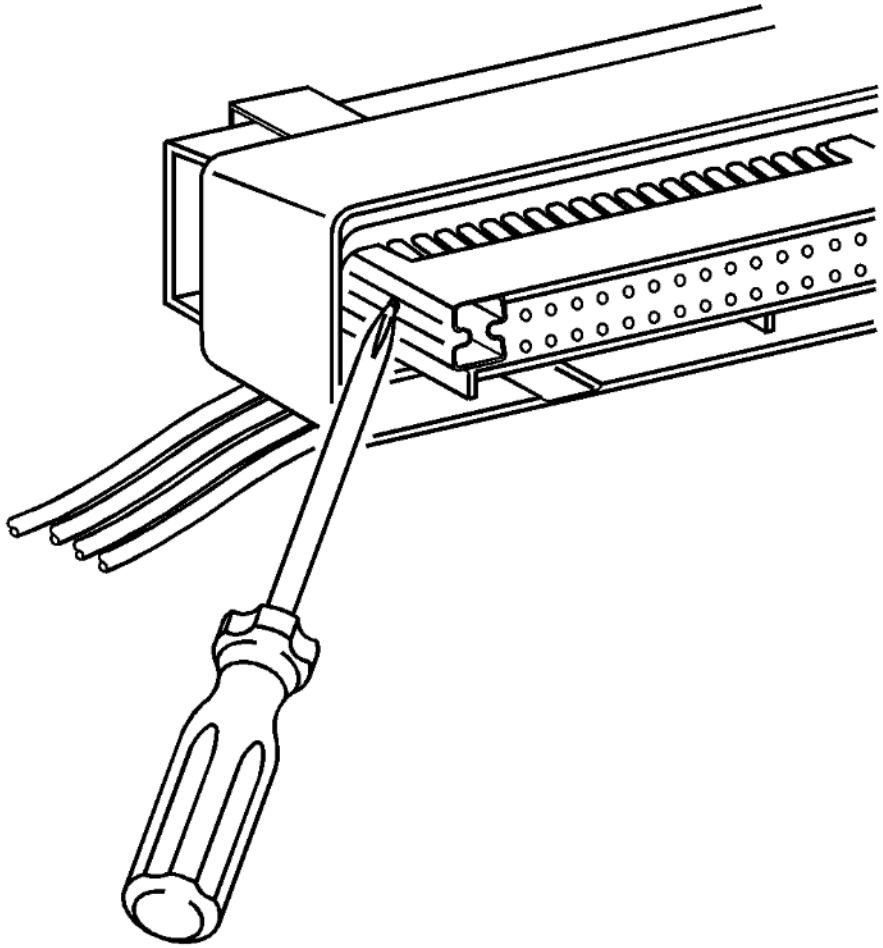

Fig. 57: Nose Piece Locking Tabs
Courtesy of GENERAL MOTORS COMPANY

cardiagn.com

2. Locate the nose piece locking tabs that are positioned on the side of the connector nose piece. The connector nose piece acts as a terminal positive assurance (TPA) and may be referred to as such.

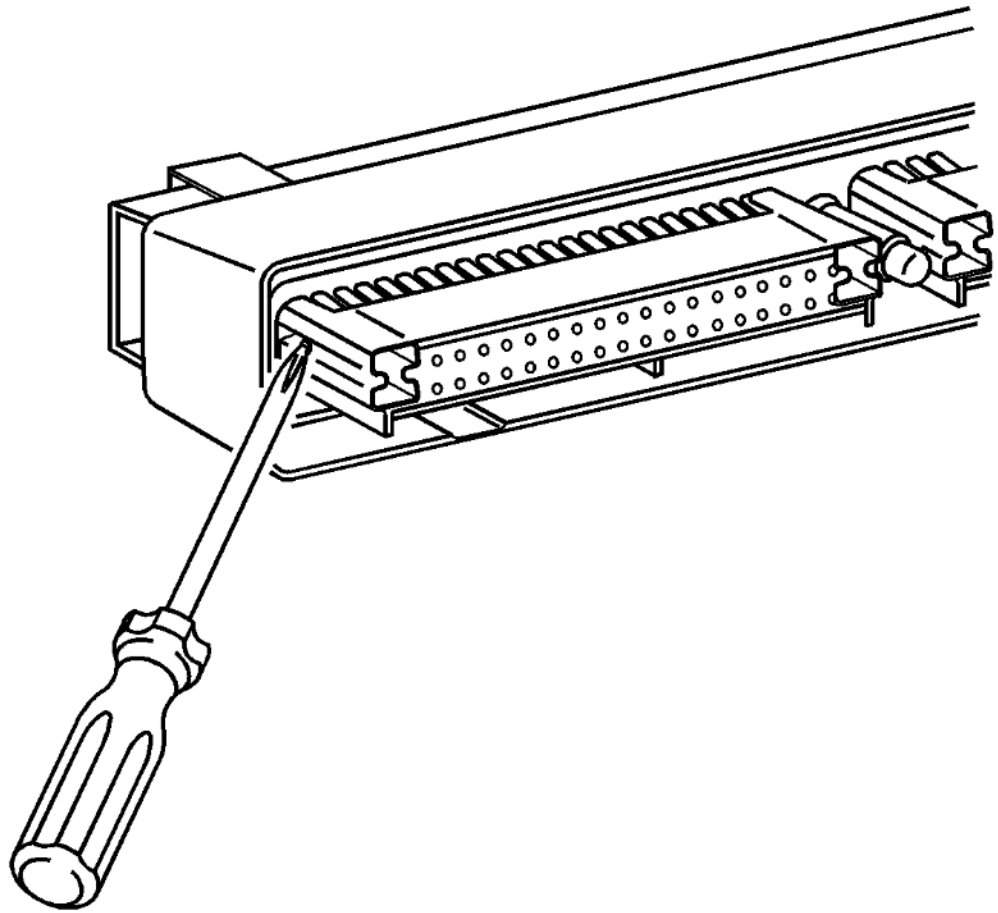

Fig. 58: Pushing In Nose Piece Locking Tabs
Courtesy of GENERAL MOTORS COMPANY

3. Use a small flat-blade tool to push in one of the locking tabs while gently pulling on the same side of the nose piece.
4. Repeat the procedure for the other locking tab and remove the nose piece.

cardiagn.com

5. Remove the wire dress cover. The following is a general procedure for wire dress cover removal. Use this procedure as a guide, some dress cover removal procedures may vary.

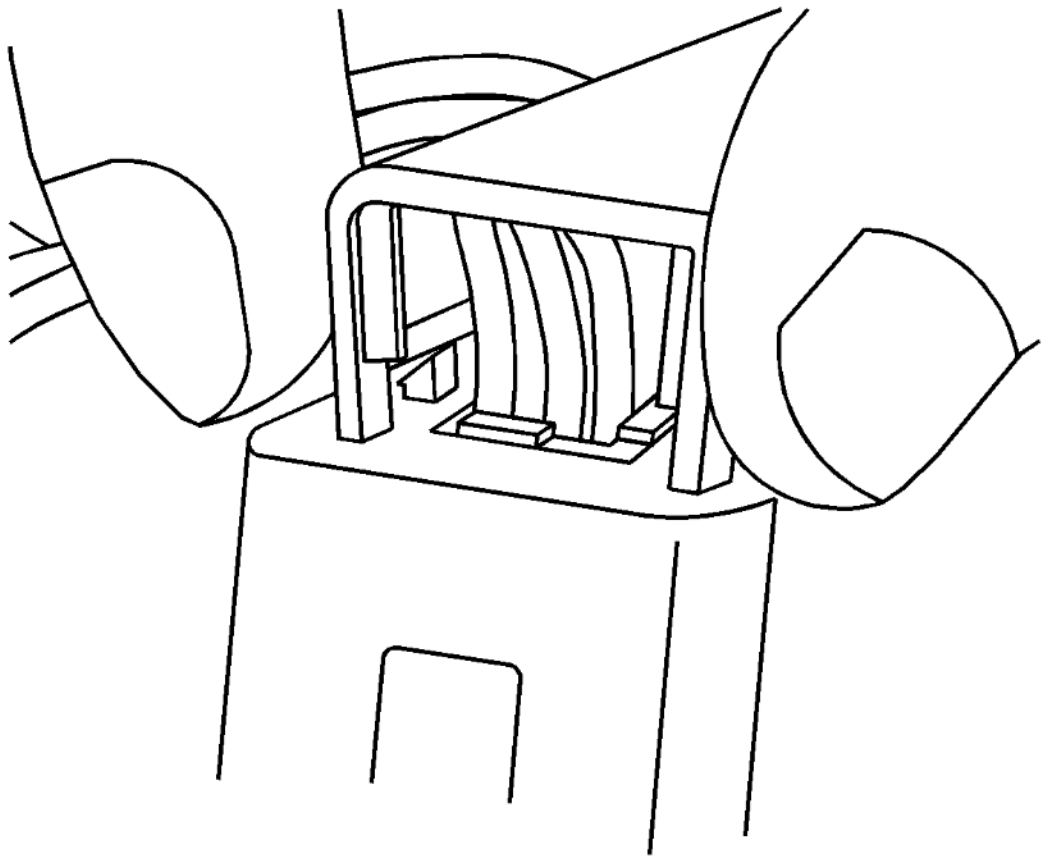

Fig. 59: Squeezing Cover Locking Legs
Courtesy of GENERAL MOTORS COMPANY

6. Use fingers to squeeze the 2 locking legs of the cover.

cardiagn.com

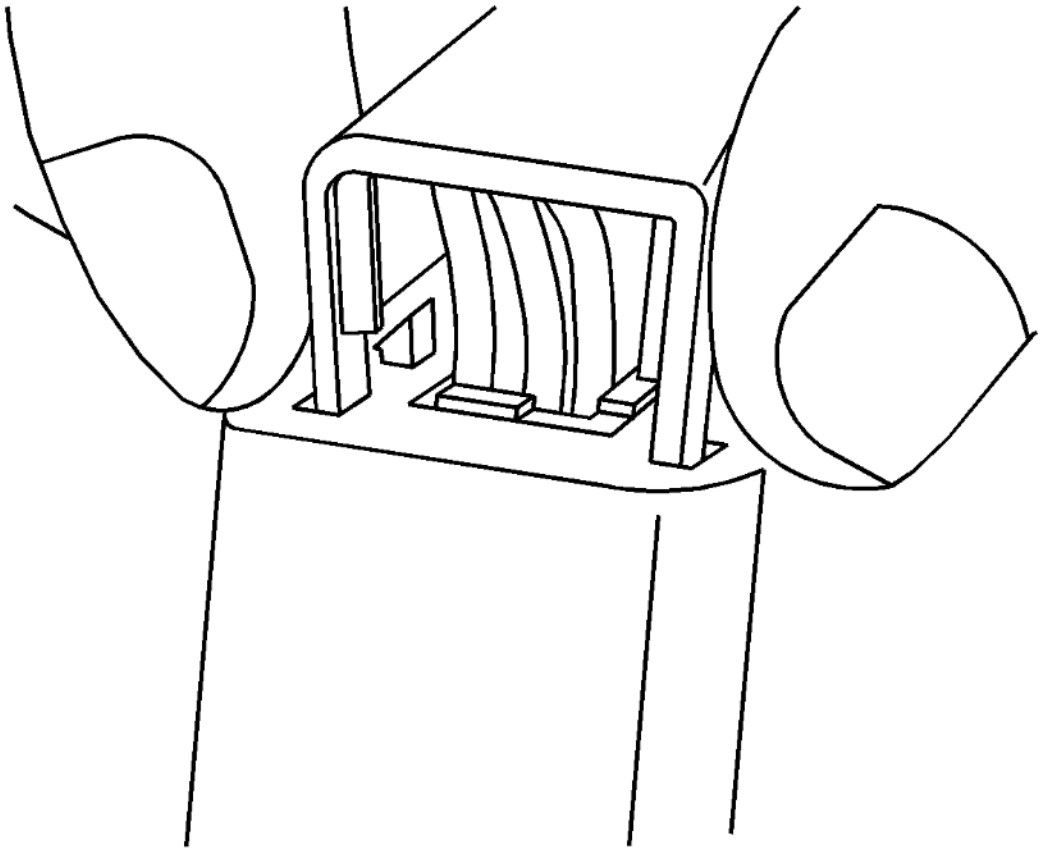

Fig. 60: Unseating Locking Leg
Courtesy of GENERAL MOTORS COMPANY

7. Apply pressure and gently rock the cover until one locking leg is unseated.

cardiagn.com

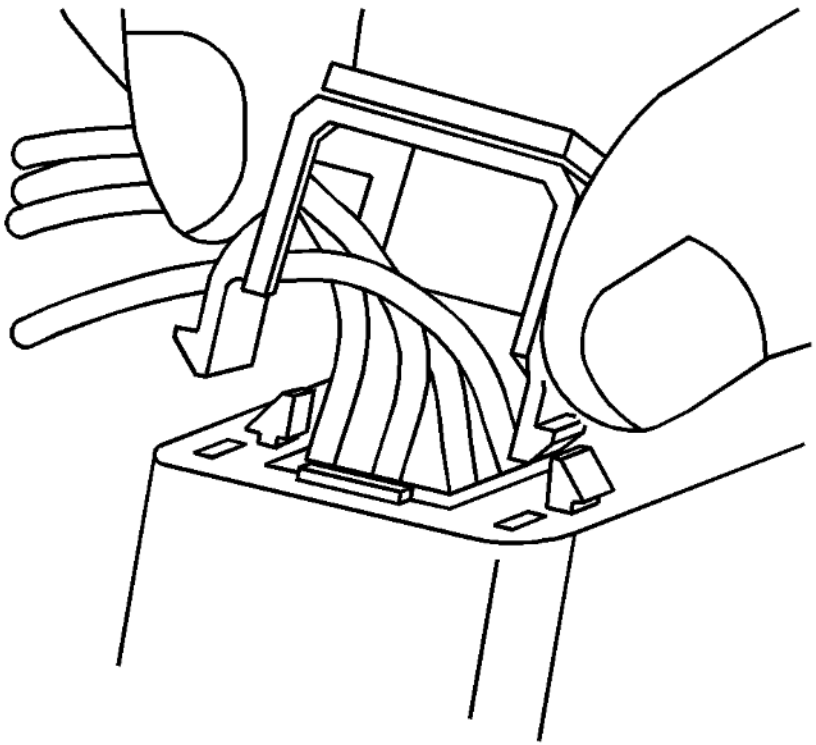

Fig. 61: Removing Cover
Courtesy of GENERAL MOTORS COMPANY

8. Continue to apply pressure and rock the cover until the second locking leg is unseated. Repeat procedure for the other side of the dress cover and remove the cover.

cardiagn.com

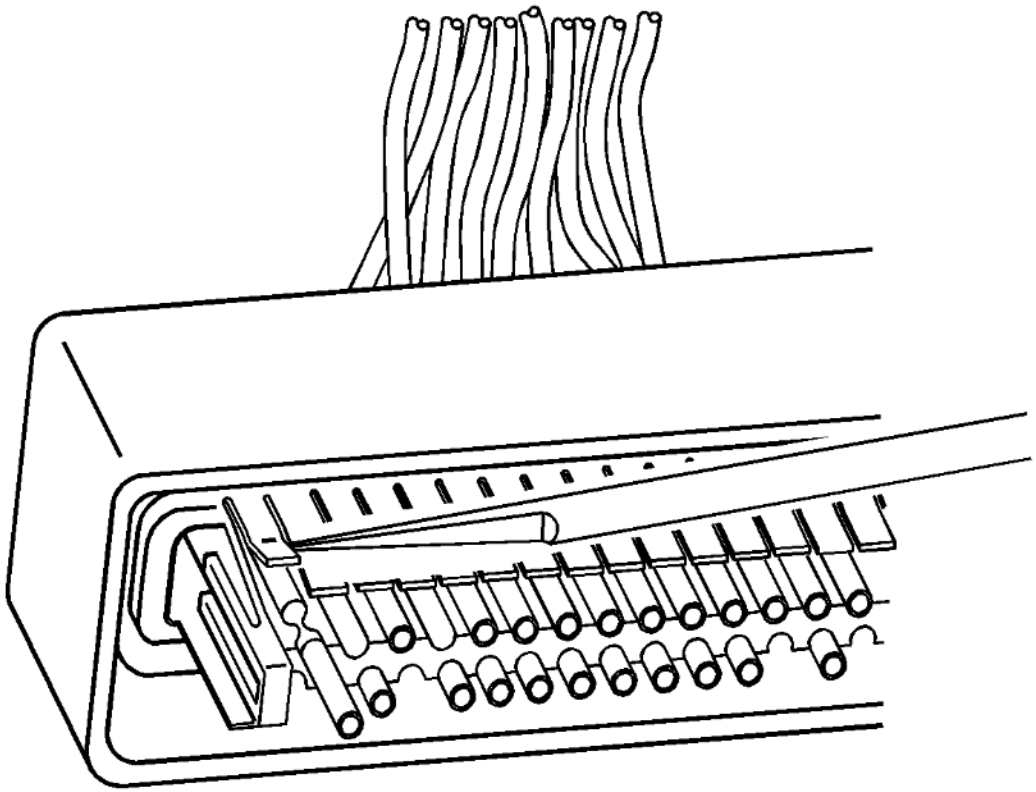

Fig. 62: Lifting Terminal Retaining Tab
Courtesy of GENERAL MOTORS COMPANY

9. Use J-38125-12A to gently lift the terminal retaining tab while gently pulling the wire out of the back of the connector. Always remember never use force when pulling a terminal out of a connector.
10. If the terminal is severely bent or damaged, it may be possible on some connectors to push the wire out of the front of the connector instead of pulling it through. This will prevent damage to the internal seals of the connector. Once the terminal is pushed out of the connector, cut the wire as close to the terminal as possible and pull the wire through the connector.

cardiagn.com

11. Repair the terminal by following the **Repairing Connector Terminals (Terminated Lead Repair)Repairing Connector Terminals (Terminal Repair)** procedure.
12. Insert the repaired terminal back into the cavity. Repeat the diagnostic procedure to verify the repair and reconnect the connector bodies.

Terminal Insertion Procedure

After the terminal is crimped to the wire perform the following procedure in order to replace Micro-Pack 100 terminals.

1. Slide the new terminal into the correct cavity at the back of the connector.
2. Push the terminal into the connector until it locks into place. The new terminal should be even with the other terminals. Ensure that the terminal is locked in place by gently pulling on the wire.
3. To assemble the connector, reverse the Terminal Removal Procedure.

DELPHI CONNECTORS (MICRO.64)

Special Tools

- **EL-38125-550** Terminal Release Tool Kit
- **EL-38125-580** Terminal Release Tool Kit
- **J-38125-21** Terminal Release Tool

For equivalent regional tools, refer to **Special Tools** .

Terminal Removal Procedure

Follow the steps below in order to remove terminals from Micro.64 connectors.

cardiagn.com

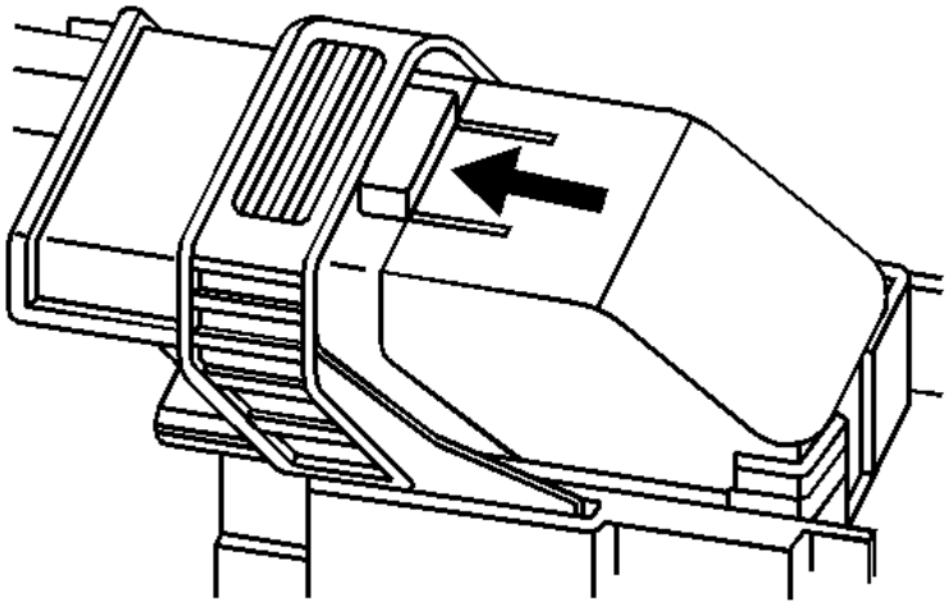

Fig. 63: Wire Dress Cover Lever Lock
Courtesy of GENERAL MOTORS COMPANY

cardiagn.com

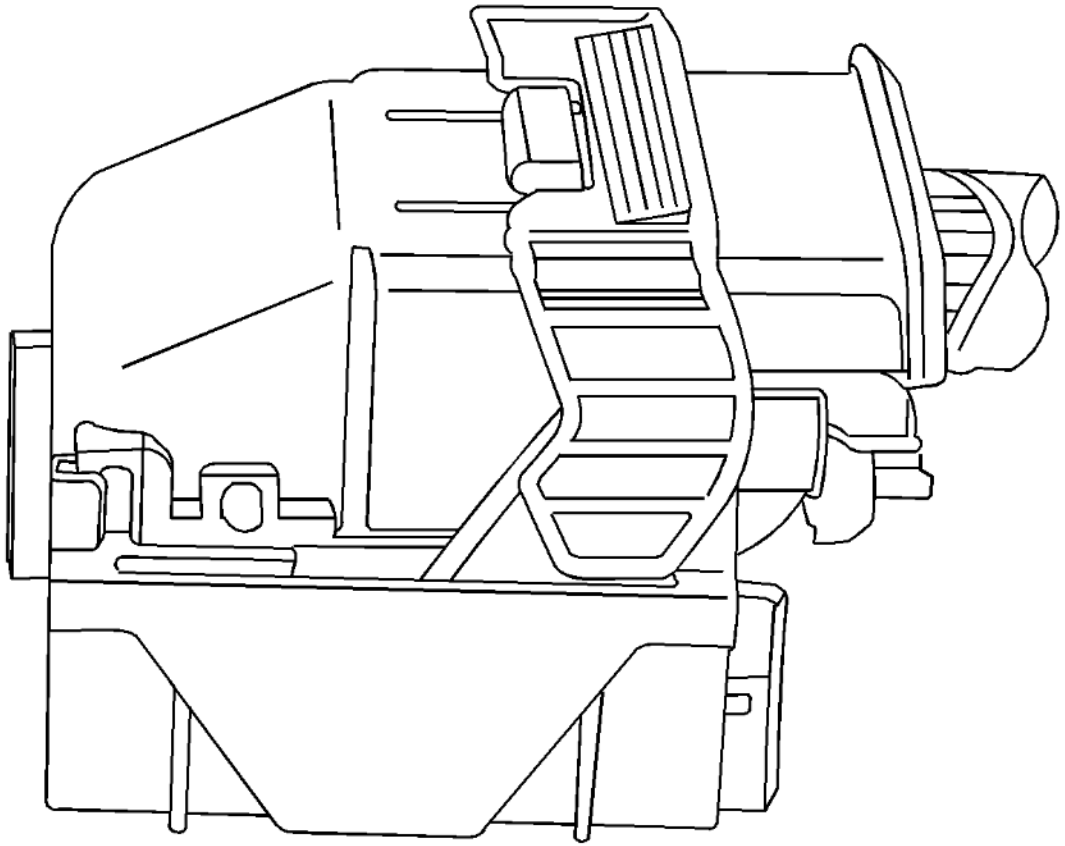

Fig. 64: Typical Micro 64 Connector
Courtesy of GENERAL MOTORS COMPANY

cardiagn.com

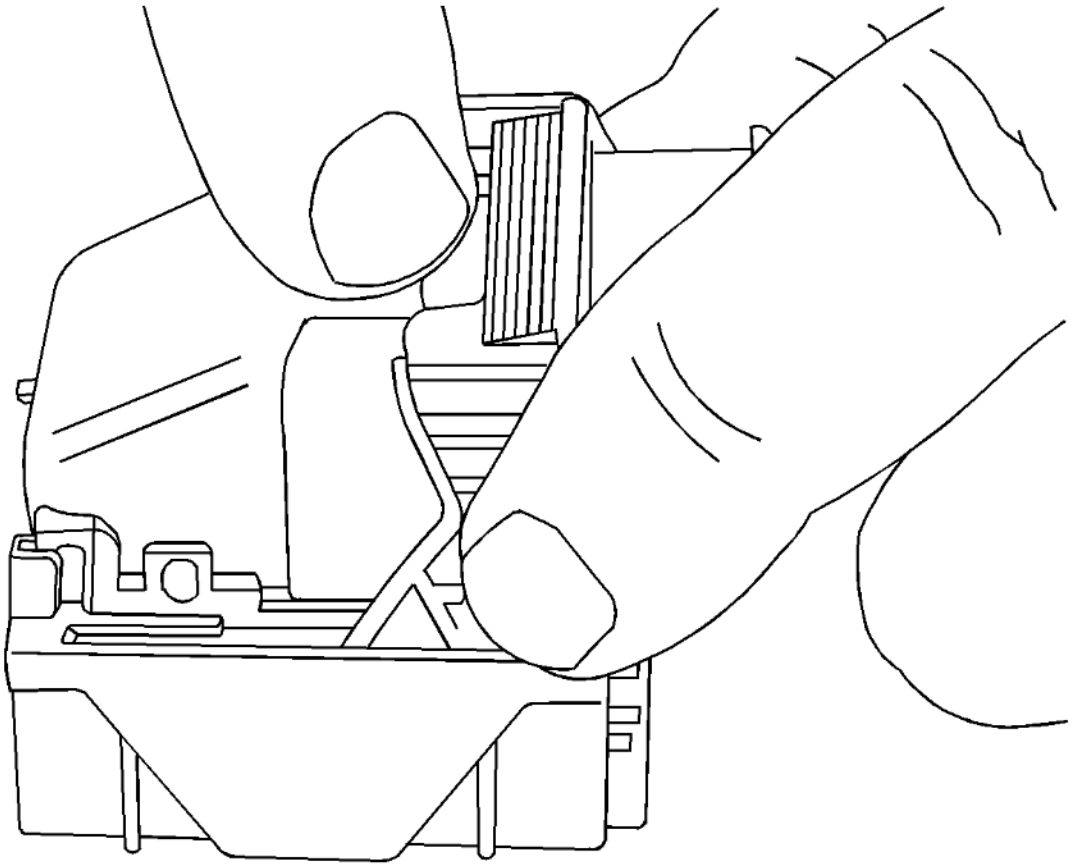

Fig. 65: Depressing Lock And Pulling Lever
Courtesy of GENERAL MOTORS COMPANY

cardiagn.com

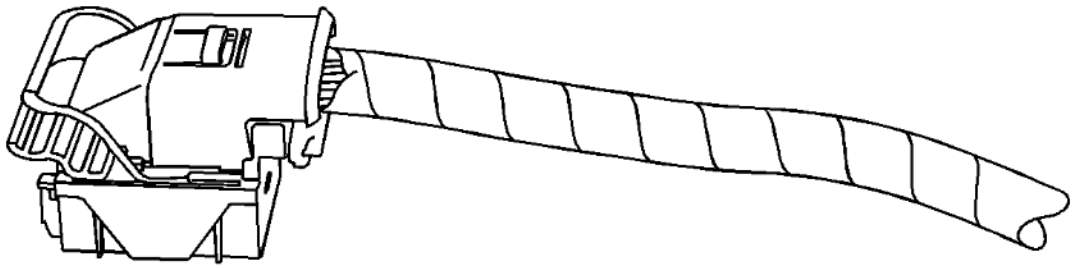

Fig. 66: Connector When Released From Component
Courtesy of GENERAL MOTORS COMPANY

cardiagn.com

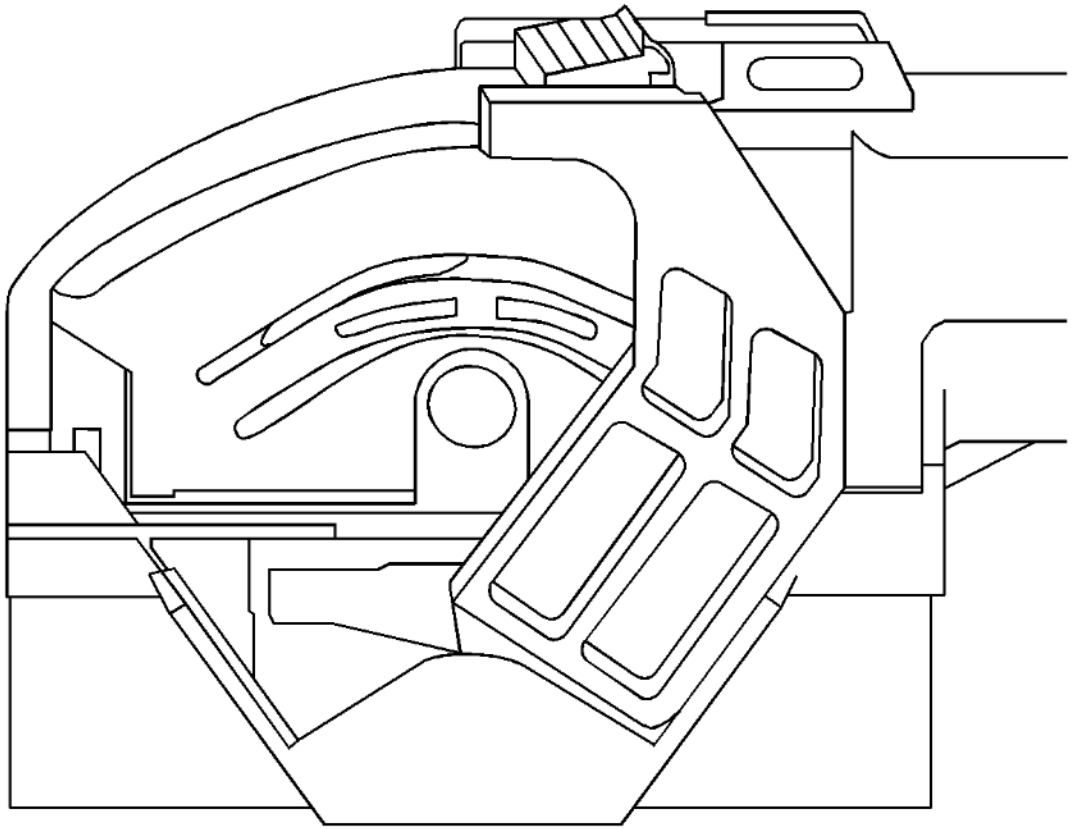

Fig. 67: Another Type Of Micro 64 Connector
Courtesy of GENERAL MOTORS COMPANY

cardiagn.com

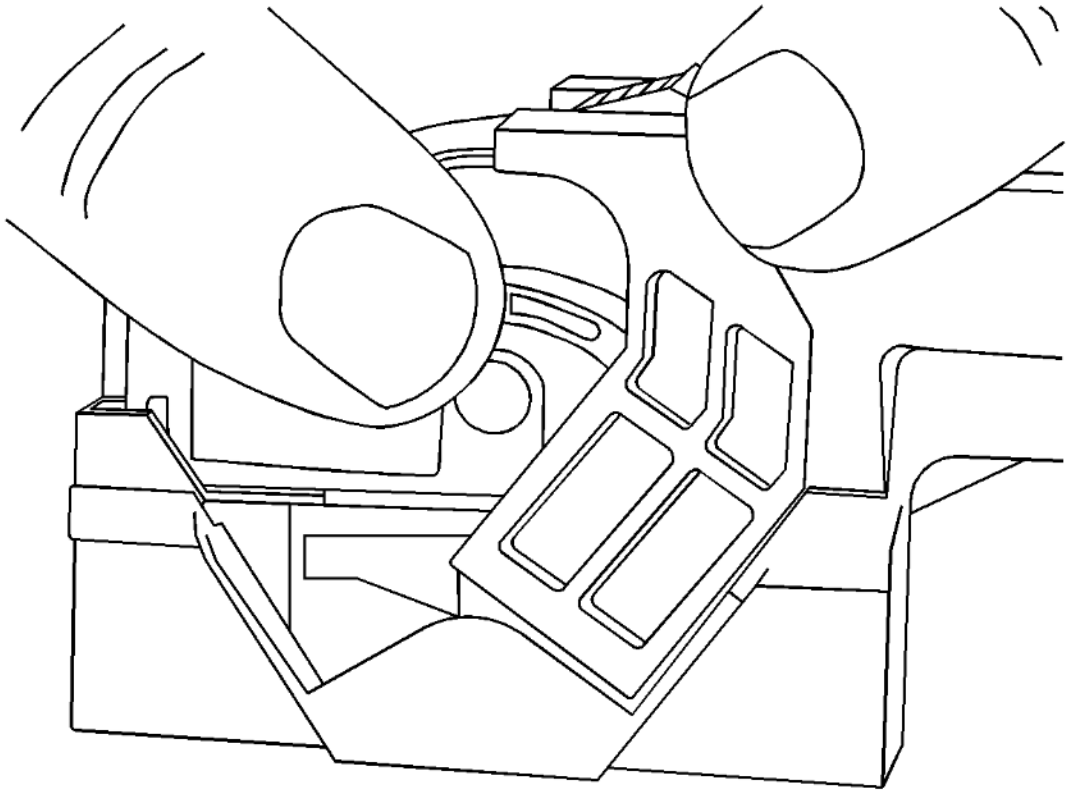

Fig. 68: Depressing Locks On Both Sides Of Wiredress Cover
Courtesy of GENERAL MOTORS COMPANY

cardiagn.com

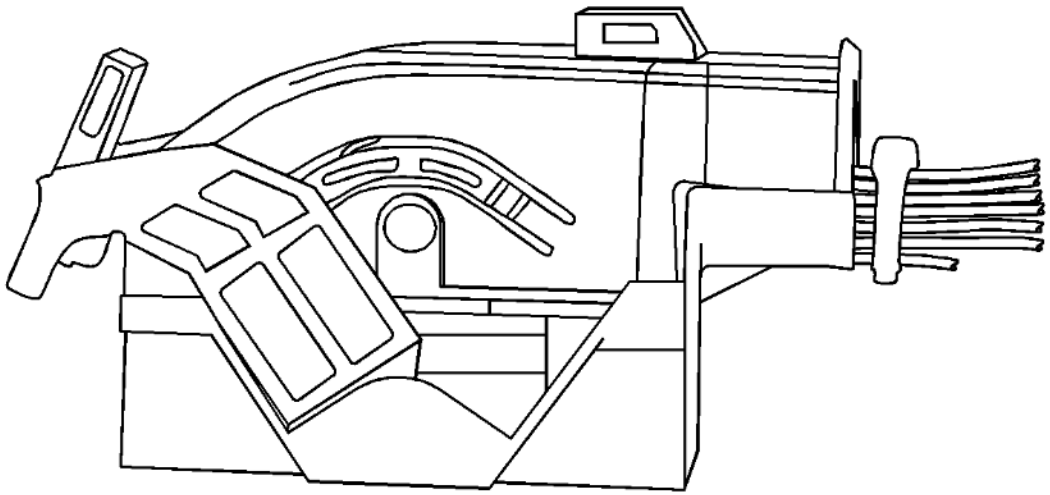

Fig. 69: Connector When Released From Component
Courtesy of GENERAL MOTORS COMPANY

1. Locate the lever lock on the wire dress cover. While depressing the lock, pull the lever over and past the lock. The lever lock may be located on the top or sides of the wire dress cover.

   View of a typical Micro 64 connector.

cardiagn.com

Depress the lock and pull the lever over and past the lock.

View of the connector when released from the component.

View of another type of Micro 64 connector.

Depress the locks that are located on both sides of the wire dress cover and pull the lever over and past the locks.

View of the connector when released from the component.

2. Disconnect the connector from the component.

cardiagn.com

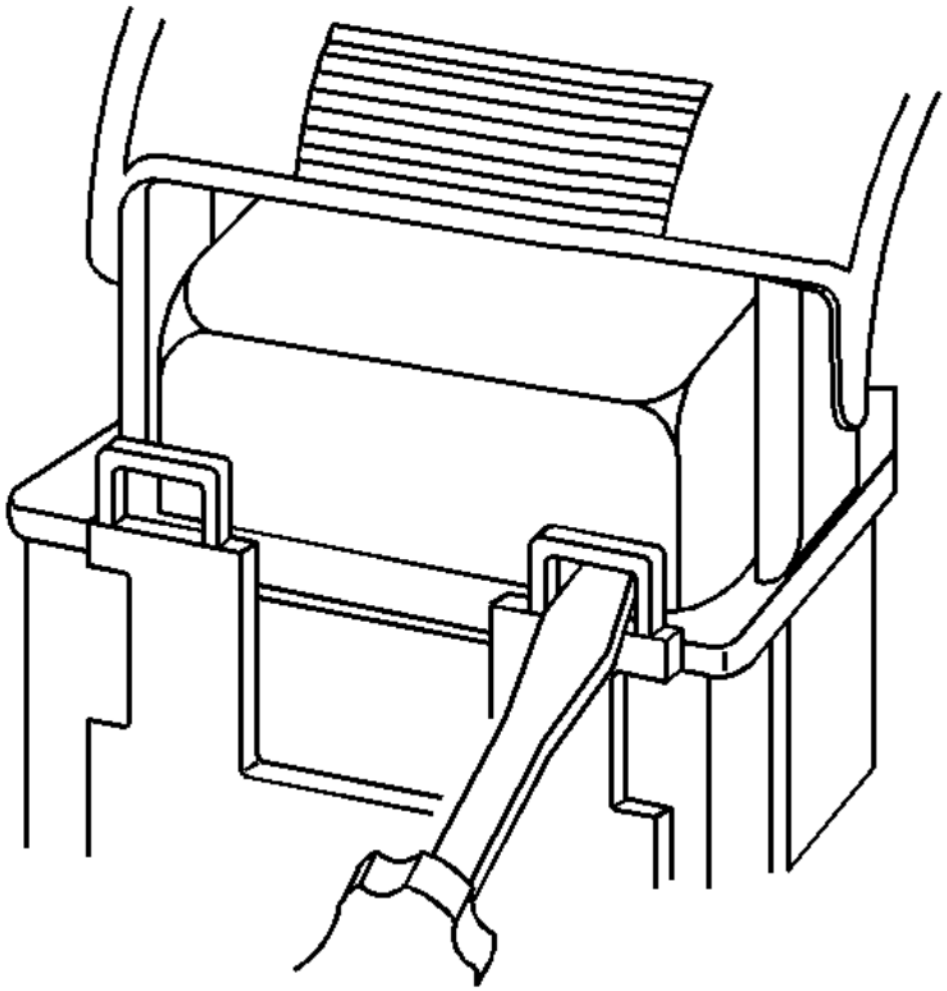

Fig. 70: Releasing Locking Tabs
Courtesy of GENERAL MOTORS COMPANY

3. Locate the dress cover locking tabs at the front of the connector. Using a small flat-blade tool push down on one of the locking tabs and pull the cover up until the dress cover releases. Repeat this procedure for the other locking tab.
4. Once the front 2 locks are unlocked, lift the front of the dress cover and pull it forward.

cardiagn.com

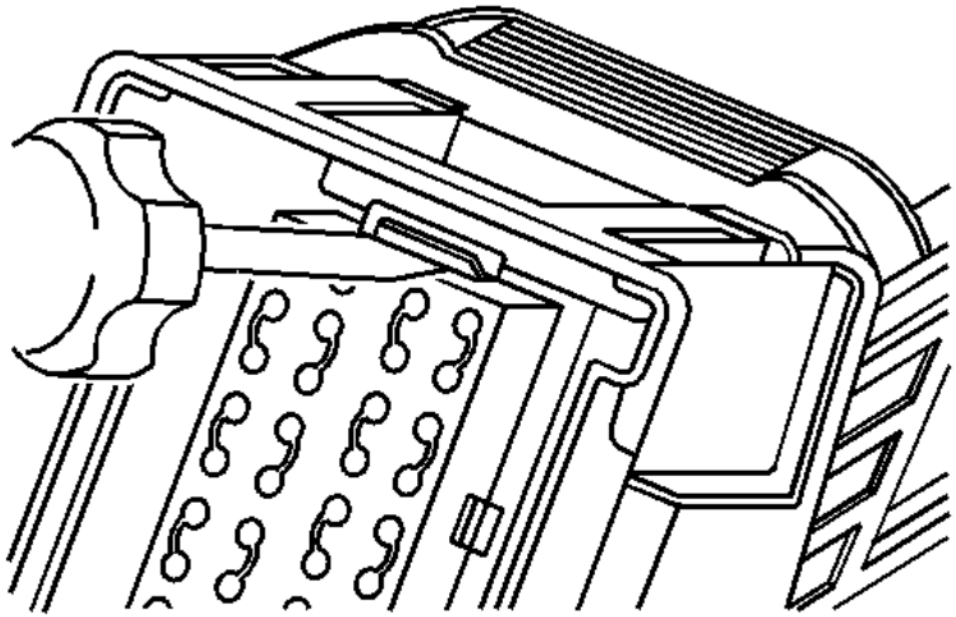

Fig. 71: Removing Terminal Position Assurance
Courtesy of GENERAL MOTORS COMPANY

NOTE: **Always use care when removing a terminal position assurance (TPA) in order to avoid damaging it.**

5. Remove the TPA by inserting a small flat-blade tool into the small slot on the TPA and pushing down until the TPA releases. Gently pry the TPA out of the connector.

cardiagn.com

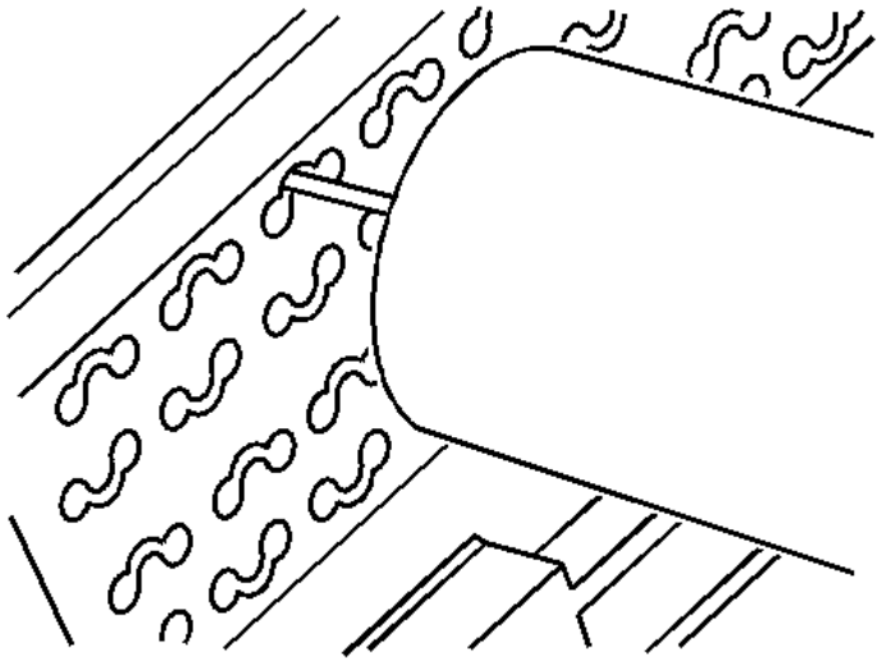

Fig. 72: Terminal Release Tool
Courtesy of GENERAL MOTORS COMPANY

NOTE: **Be careful not to angle or rock the J-38125-21 tool when inserting it into the connector or the tool may break.**

6. Insert the J-38125-21 tool into the round canal between the terminals cavities at the front of the connector.

cardiagn.com

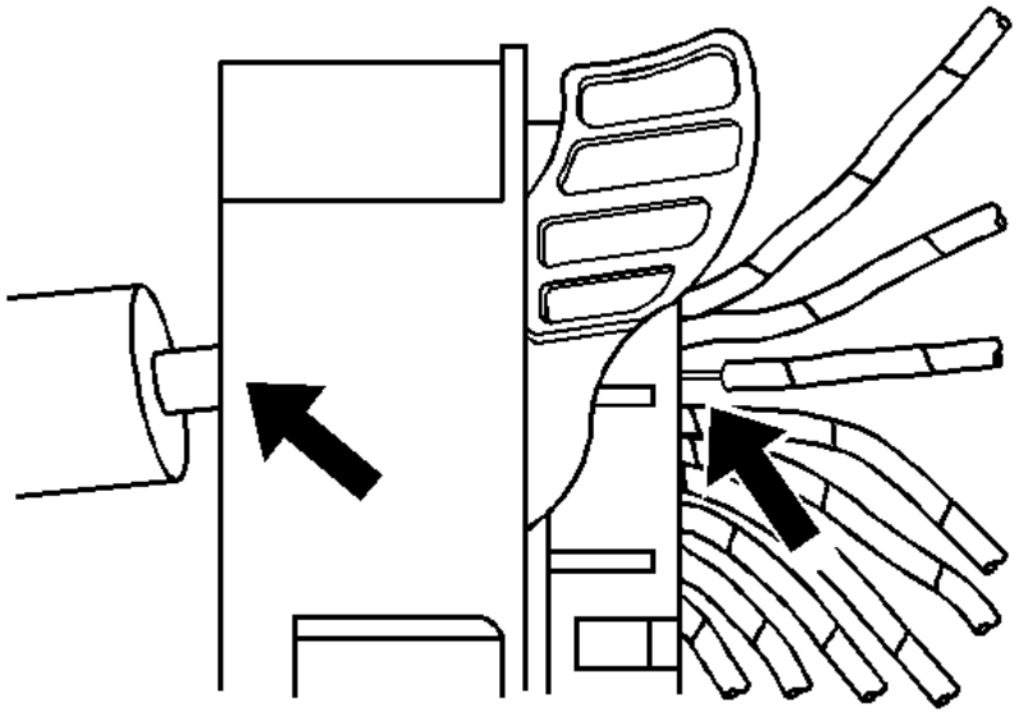

Fig. 73: Removing Wire From Back Of Connector
Courtesy of GENERAL MOTORS COMPANY

7. While holding the removal tool in place, gently pull the wire out of the back of the connector. Always remember never use force when pulling a terminal out of a connector.
8. Repair the terminal by following the **Repairing Connector Terminals (Terminated Lead Repair)Repairing Connector Terminals (Terminal Repair)** procedure.

cardiagn.com

9. Insert the repaired terminal back into the cavity. Repeat the diagnostic procedure to verify the repair and reconnect the connector bodies.

DELPHI CONNECTORS (12-WAY)

Special Tools

- **EL-38125-550** Terminal Release Tool Kit
- **EL-38125-580** Terminal Release Tool Kit
- **J-38125-12A** Terminal Release Tool

For equivalent regional tools, refer to **Special Tools** .

Terminal Removal Procedure

Follow the steps below in order to remove terminals from the connector.

cardiagn.com

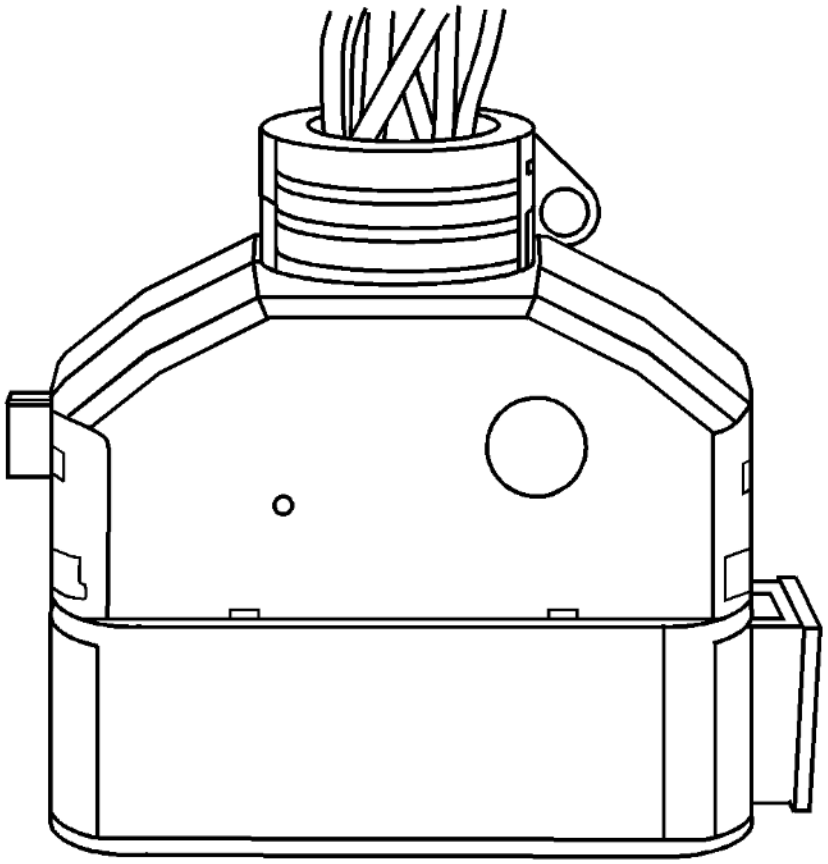

Fig. 74: Lever Lock
Courtesy of GENERAL MOTORS COMPANY

1. Locate the lever lock on the wire dress cover. Remove the connector position assurance (CPA) and slide the lever lock away from the connector body.
2. Disconnect the connector from the component.

cardiagn.com

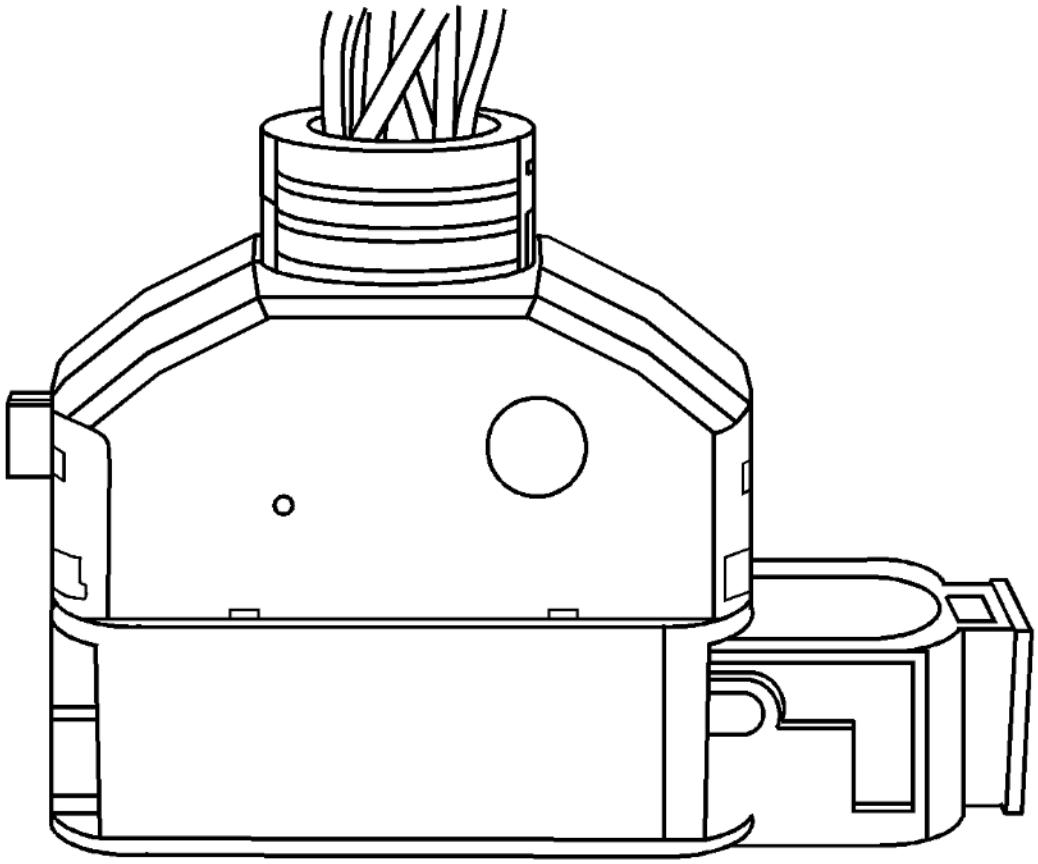

Fig. 75: Lever Lock Slid Away From Connector Body
Courtesy of GENERAL MOTORS COMPANY

3. Locate the dress cover locking tabs on the dress cover of the connector. Using a small flat-blade tool release all of the locking tabs.

cardiagn.com

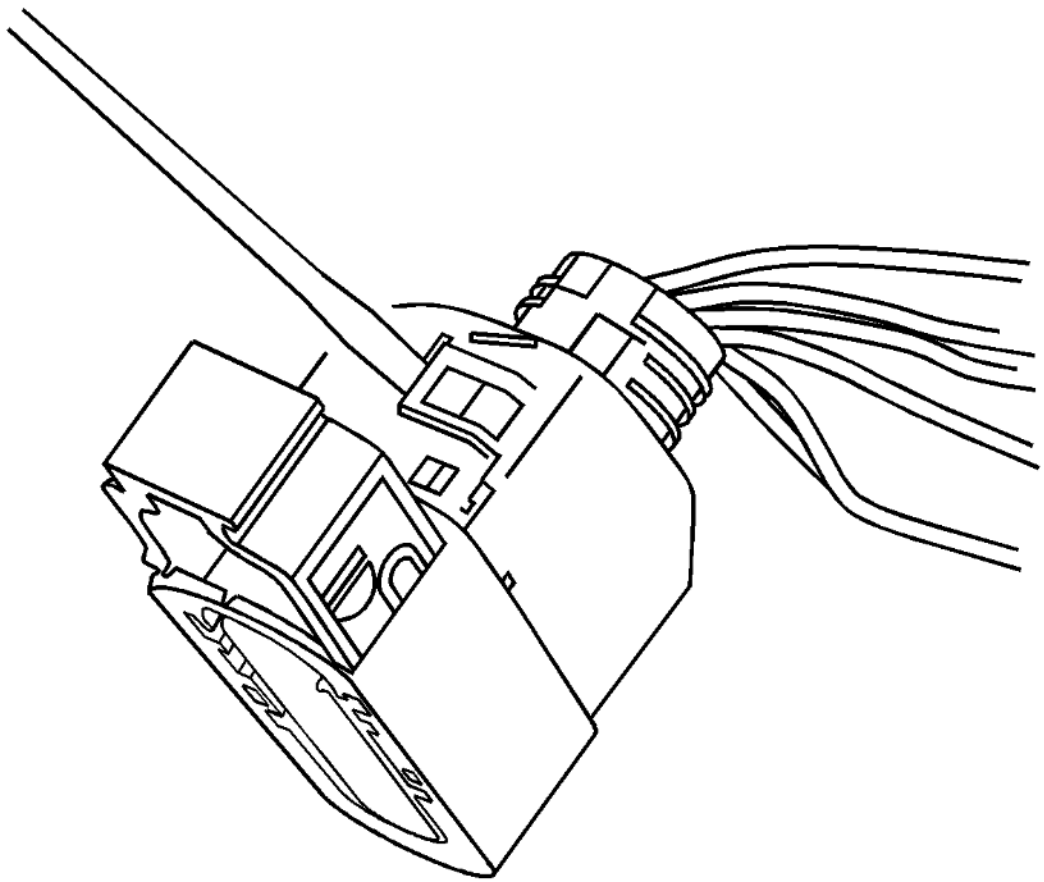

Fig. 76: Lower Wire Dress Cover Locking Tab
Courtesy of GENERAL MOTORS COMPANY

4. Release the lower wire dress cover locking tab.

cardiagn.com

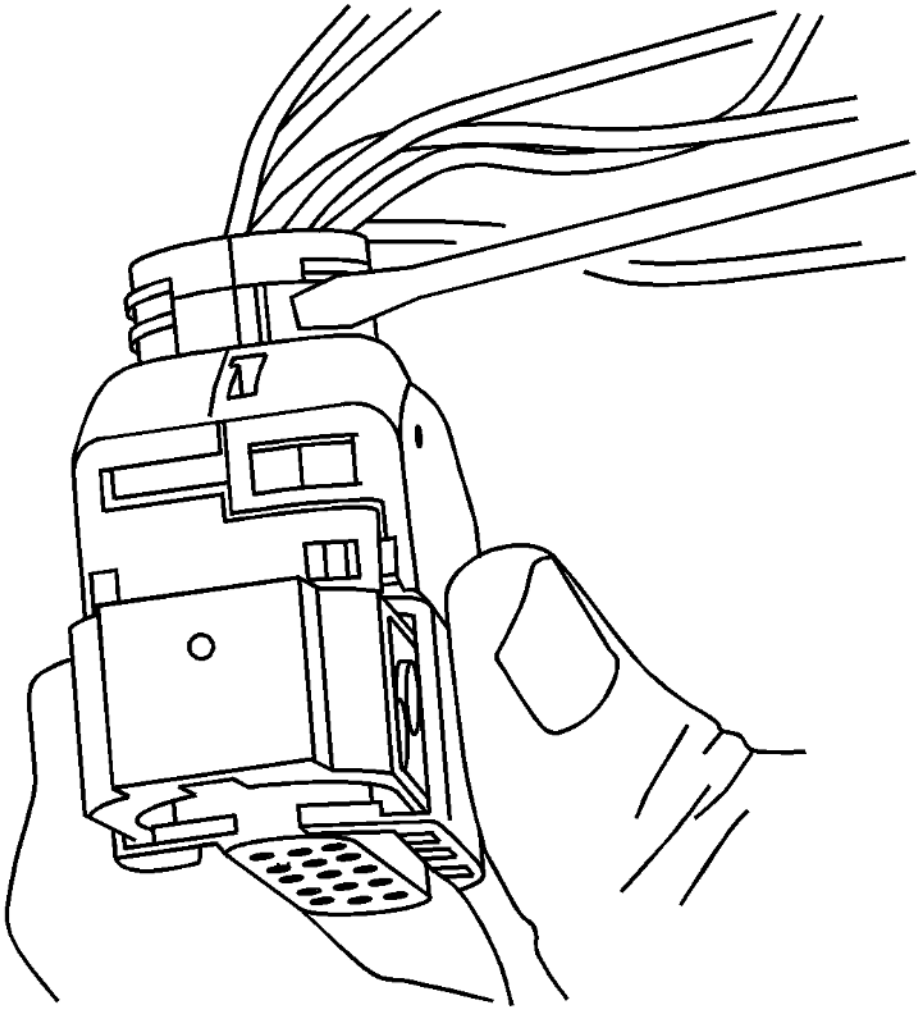

Fig. 77: Upper Wire Dress Cover Locking Tab
Courtesy of GENERAL MOTORS COMPANY

5. Release the upper wire dress cover locking tab.
6. Once the locks are unlocked, lift the dress cover off.

cardiagn.com

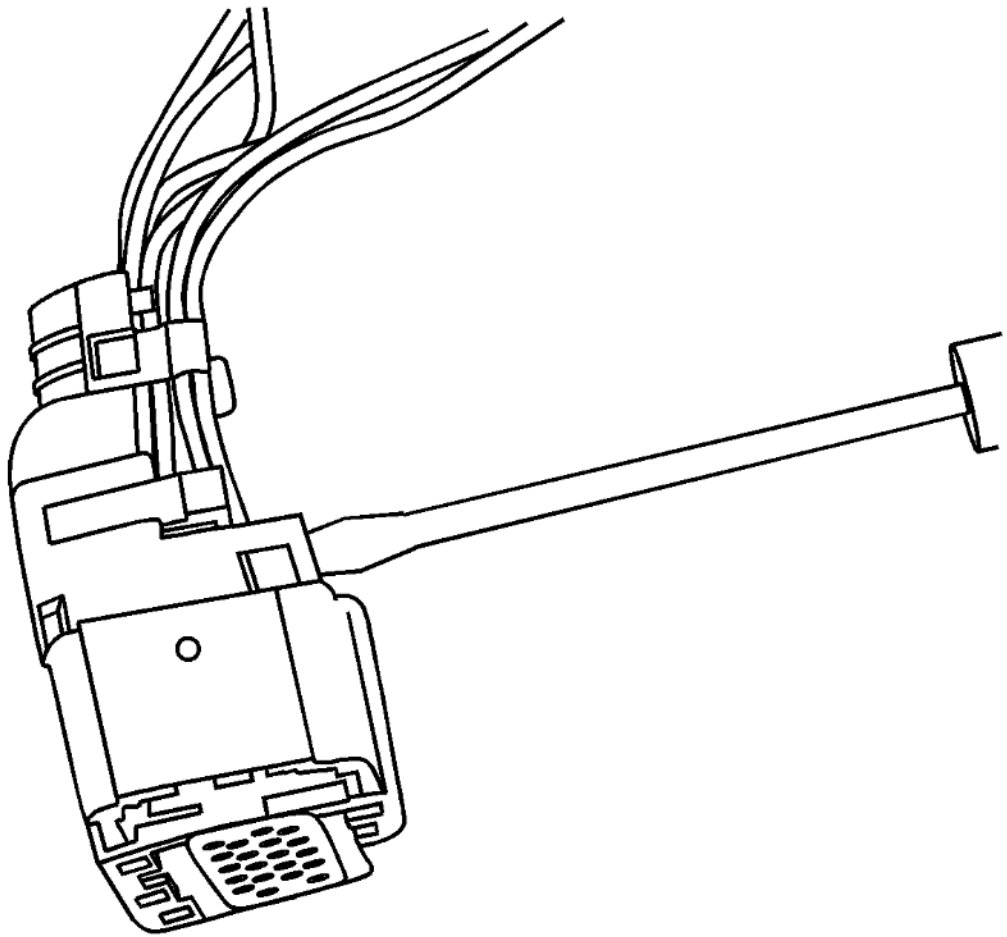

Fig. 78: Gently Prying TPA Out Of Connector
Courtesy of GENERAL MOTORS COMPANY

NOTE: **Always use care when removing a terminal position assurance (TPA) in order to avoid damaging it.**

7. Remove the TPA by inserting a small flat-blade tool into the locking tabs on both sides of the TPA. Gently pry the TPA out of the connector.

cardiagn.com

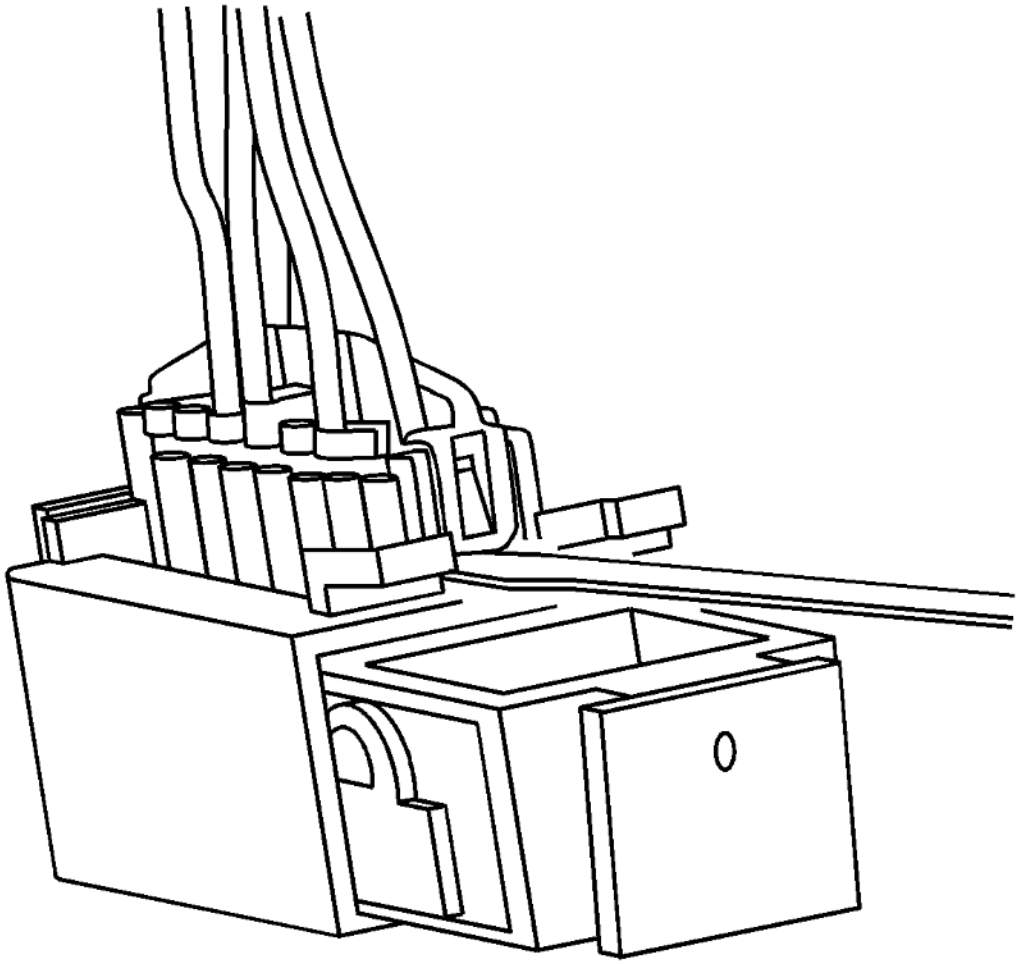

Fig. 79: Removing Nose Piece
Courtesy of GENERAL MOTORS COMPANY

8. Remove the nose piece by inserting a small flat-blade tool into the locking tabs on both sides of the nose piece. Gently pry the nose piece out of the connector.

cardiagn.com

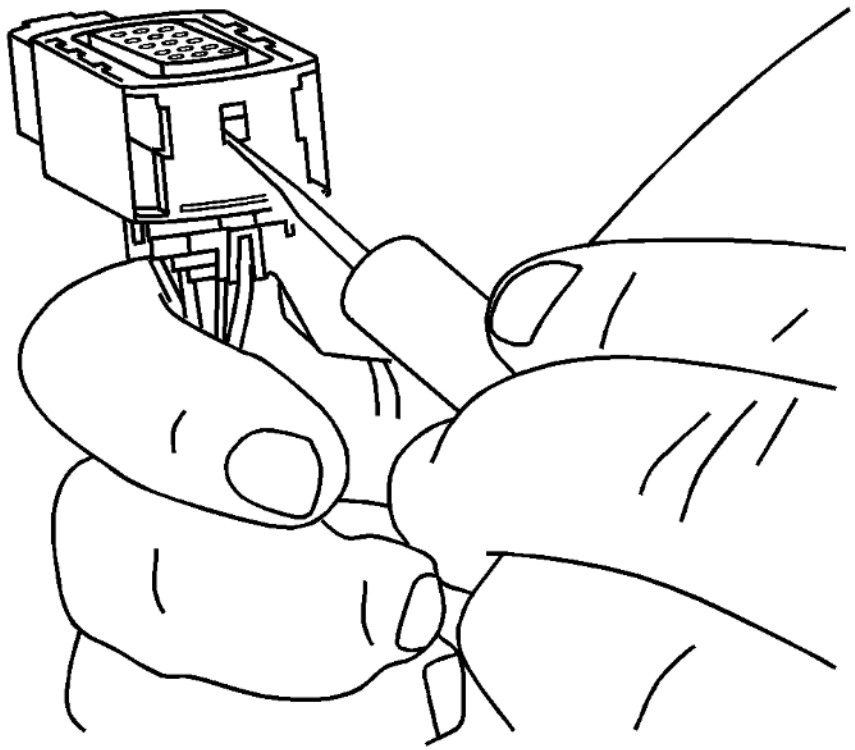

Fig. 80: Inserting Special Tool Into Terminal Release Cavity
Courtesy of GENERAL MOTORS COMPANY

9. Insert the J-38125-12A tool to release the terminals by inserting the tool into the terminal release cavity.

cardiagn.com

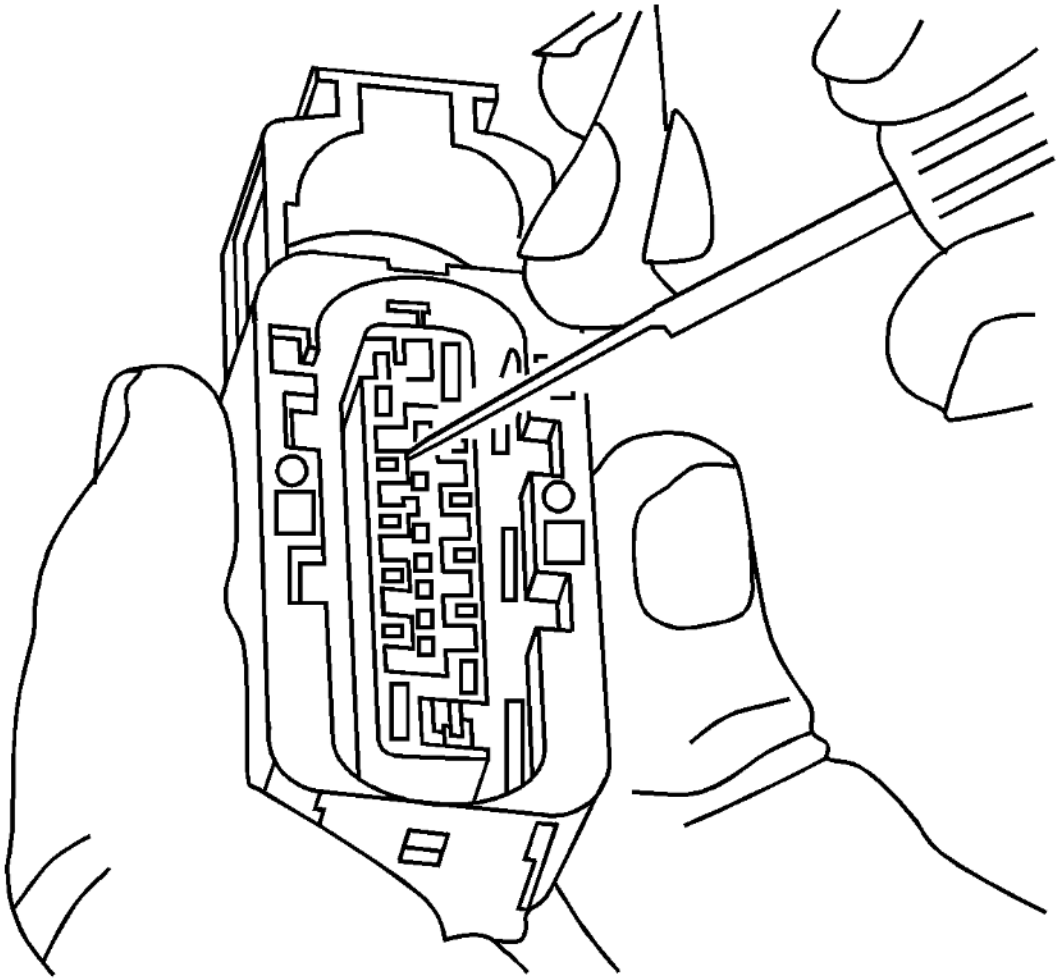

Fig. 81: Holding Removal Tool In Place
Courtesy of GENERAL MOTORS COMPANY

10. While holding the removal tool in place, gently pull the wire out of the back of the connector. Always remember never use force when pulling a terminal out of a connector.
11. Repair the terminal by following the **Repairing Connector Terminals (Terminated Lead Repair)Repairing Connector Terminals (Terminal Repair)** procedure.

cardiagn.com

12. Insert the repaired terminal back into the cavity. Repeat the diagnostic procedure to verify the repair and reconnect the connector bodies.

DELPHI CONNECTORS (STEERING GEAR)

Removal Procedure

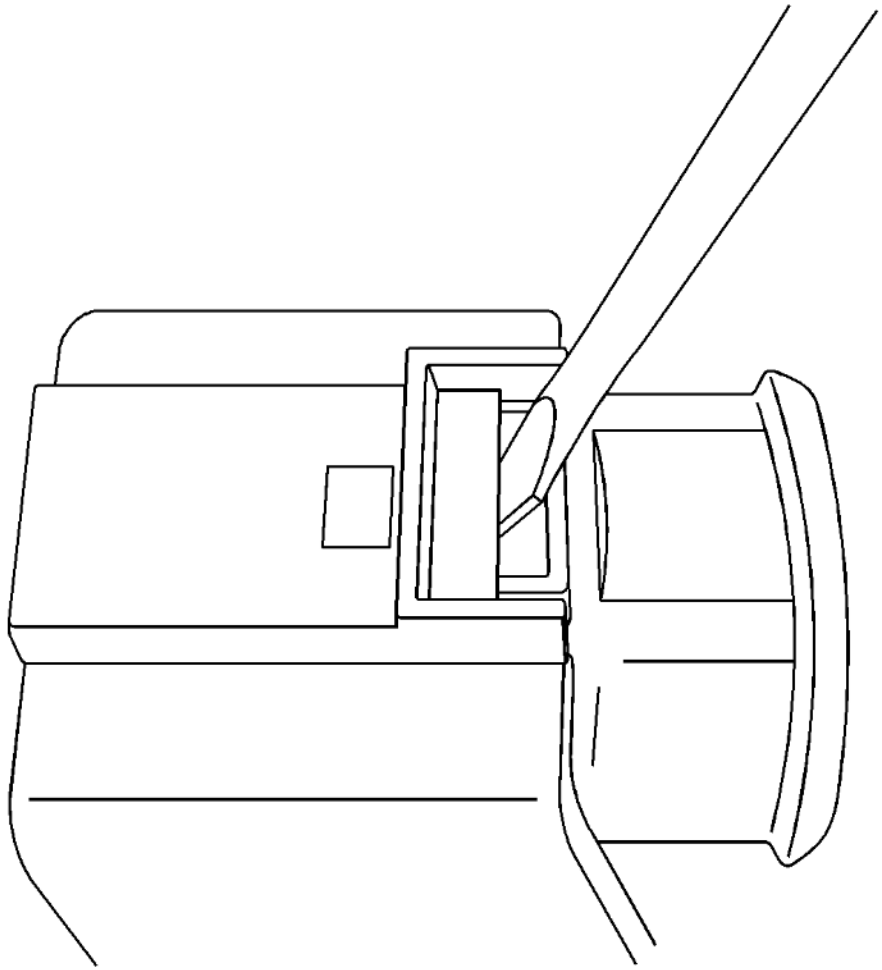

Fig. 82: Releasing Locking Tab On Connector
Courtesy of GENERAL MOTORS COMPANY

cardiagn.com

1. Use a small flat-bladed tool to release the locking tab on the connector.

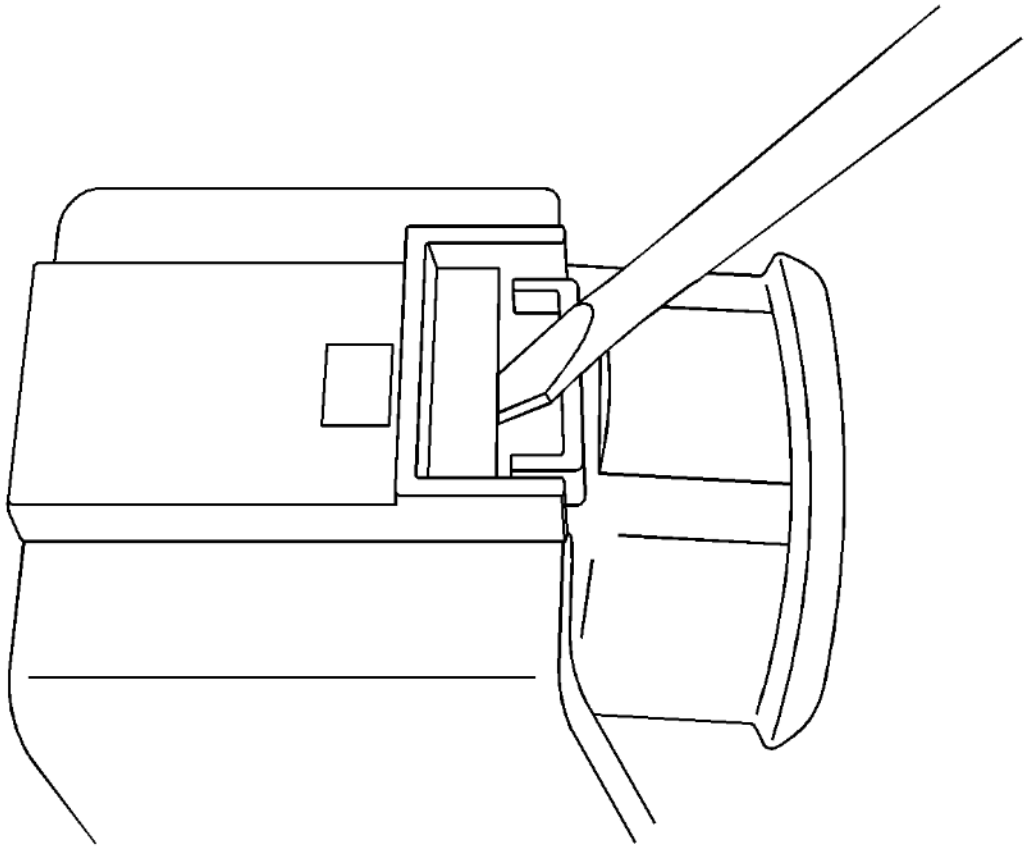

Fig. 83: Releasing Connector
Courtesy of GENERAL MOTORS COMPANY

2. Push down the locking tab to release the connector. The small flat-bladed tool may need to be pushed down and angled back slightly to depress the locking tab. Pull on the connector body while releasing the locking tab to disconnect the connector.

cardiagn.com

FCI CONNECTORS (LEVER LOCK)

Special Tools

- **EL-38125-550** Terminal Release Tool Kit
- **EL-38125-580** Terminal Release Tool Kit
- **J-38125-556** Terminal Release Tool
- **J-38125-560** Terminal Release Tool

For equivalent regional tools, refer to **Special Tools** .

Terminal Removal Procedure

Follow the steps below in order to remove terminals from the connector.

cardiagn.com

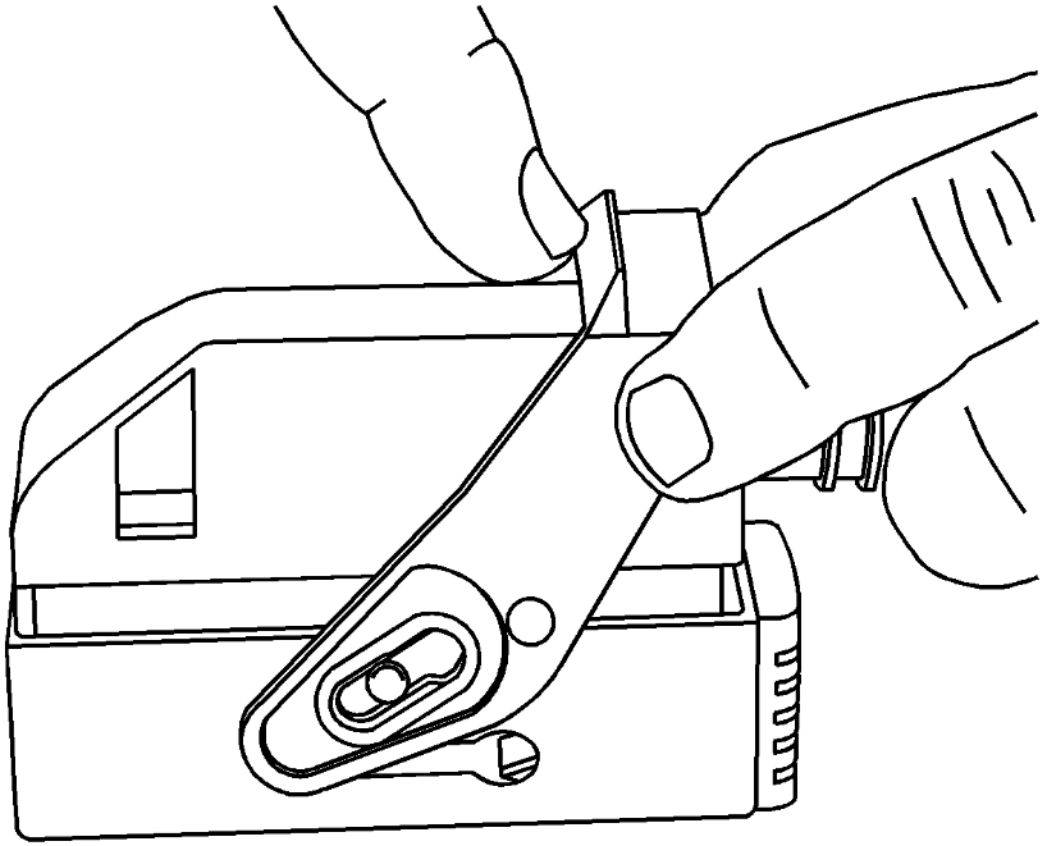

Fig. 84: Pressing Down On Lever Lock Release Tab
Courtesy of GENERAL MOTORS COMPANY

1. Slide the lever lock forward while pressing down on the lever lock release tab.
2. The release tab is located on the top of the wiredress cover.

cardiagn.com

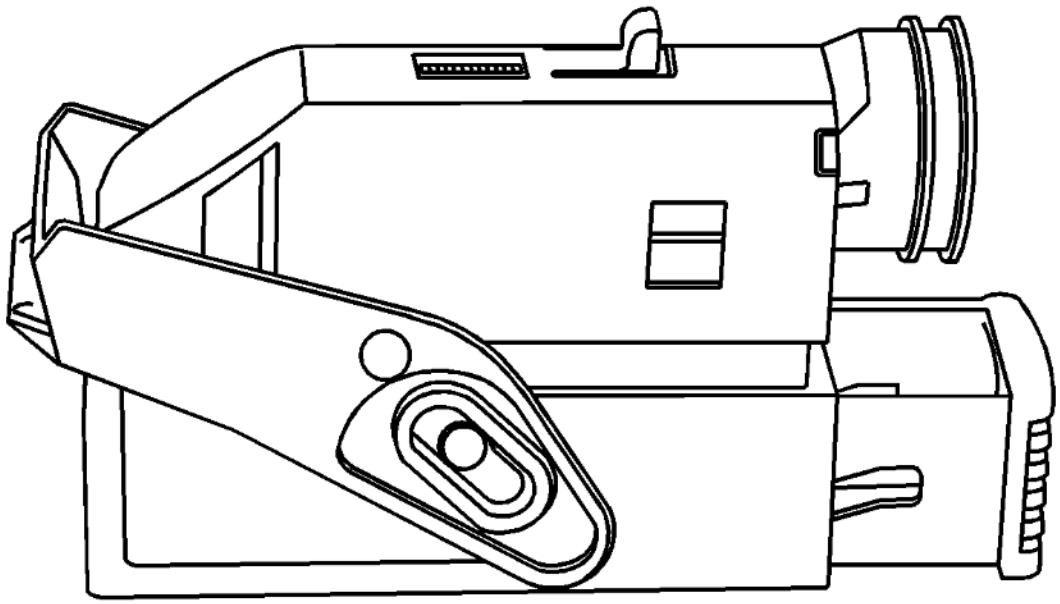

Fig. 85: Connector In Released Position
Courtesy of GENERAL MOTORS COMPANY

3. View of connector in released position.
4. Disconnect the connector from the component.
5. Locate the dress cover locking tabs at the corners of the dress cover. Use a small flat-blade tool to release the locking tabs and remove the dress cover.

cardiagn.com

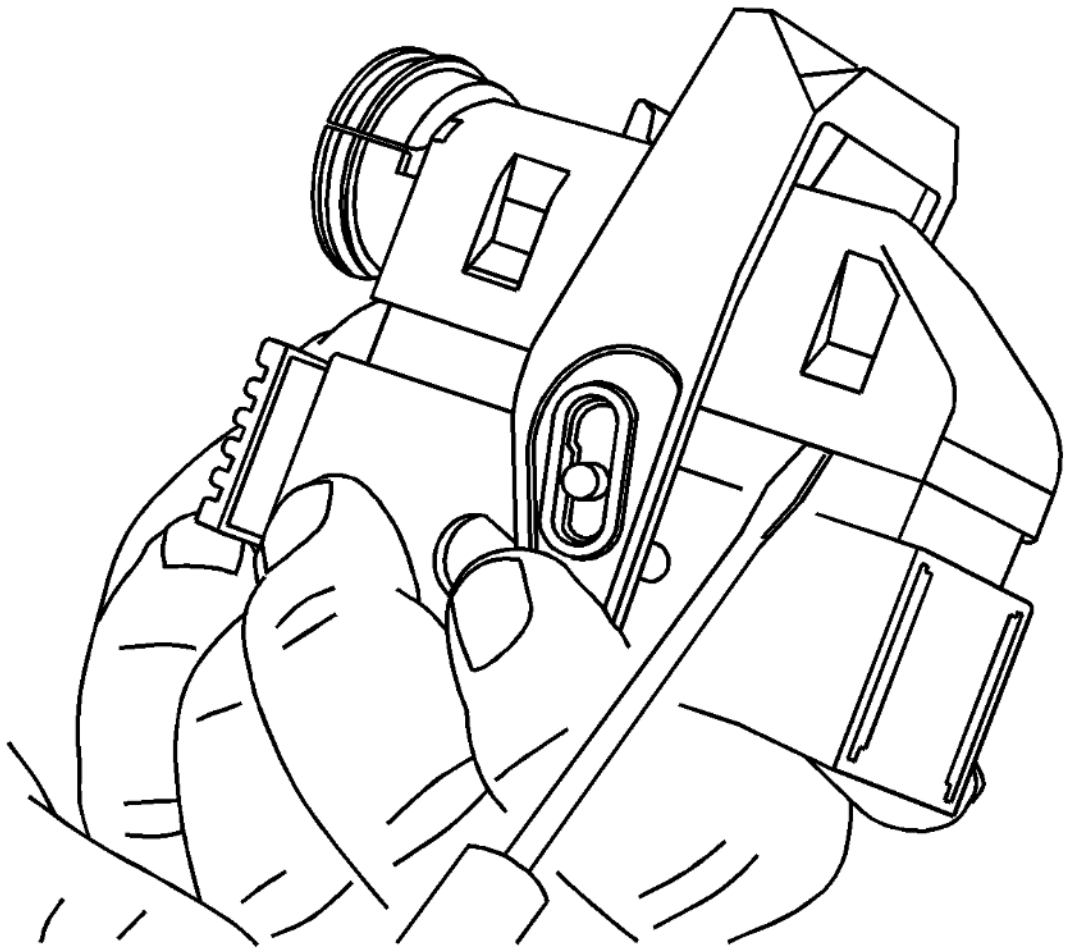

Fig. 86: Sliding Terminal Position Assurance (TPA) Up One Notch
Courtesy of GENERAL MOTORS COMPANY

6. Use a small flat-blade tool to slide the terminal position assurance (TPA) up one notch on both ends of the connector. The TPA is located underneath the wire dress cover.

cardiagn.com

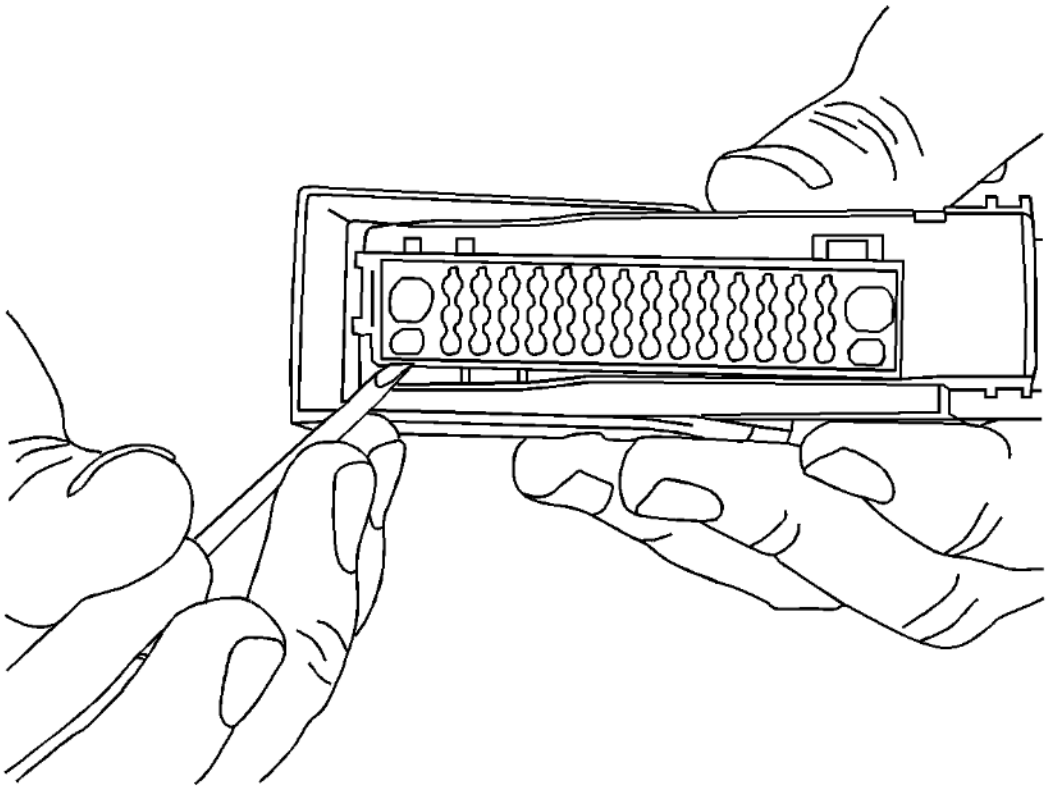

Fig. 87: Releasing Terminals
Courtesy of GENERAL MOTORS COMPANY

7. For the larger terminals insert the J-38125-556 tool to release the terminals by inserting the tool into the terminal release cavity. For the smaller terminals insert the J-38125-560 tool to release the terminals by inserting the tool into the terminal release cavity.

cardiagn.com

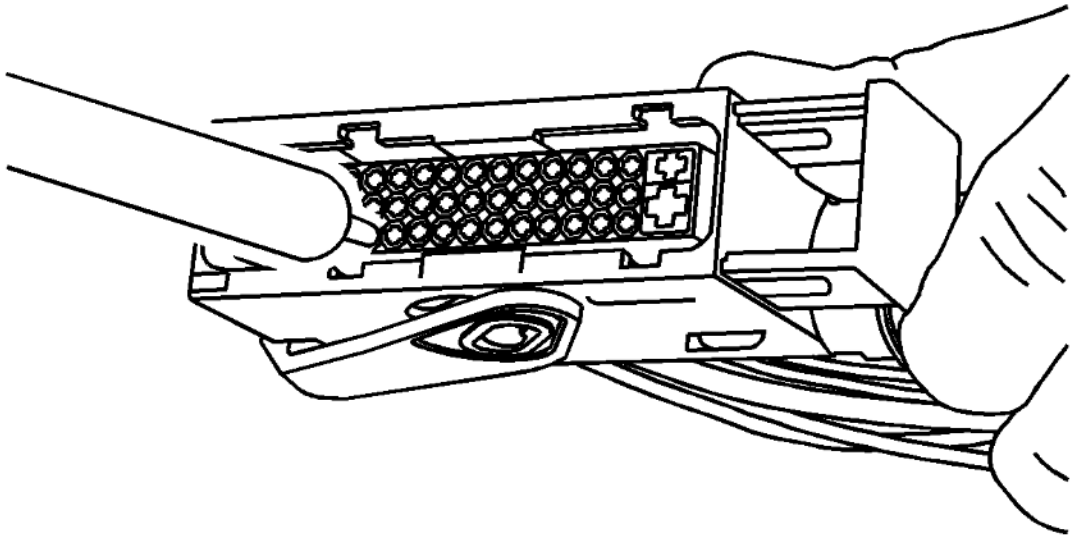

Fig. 88: Holding Removal Tool In Place, Gently Pull Wire Out Of Back Of Connector
Courtesy of GENERAL MOTORS COMPANY

8. While holding the removal tool in place, gently pull the wire out of the back of the connector. Always remember never use force when pulling a terminal out of a connector.
9. Repair the terminal by following the **Repairing Connector Terminals (Terminated Lead Repair)Repairing Connector Terminals (Terminal Repair)** procedure.

cardiagn.com

10. Insert the repaired terminal back into the cavity. Repeat the diagnostic procedure to verify the repair and reconnect the connector bodies.

FCI CONNECTORS (SIR)

Removal Procedure

NOTE: **The orange or yellow connector position assurance (CPA) must be released first to disconnect or to connect the connector.**

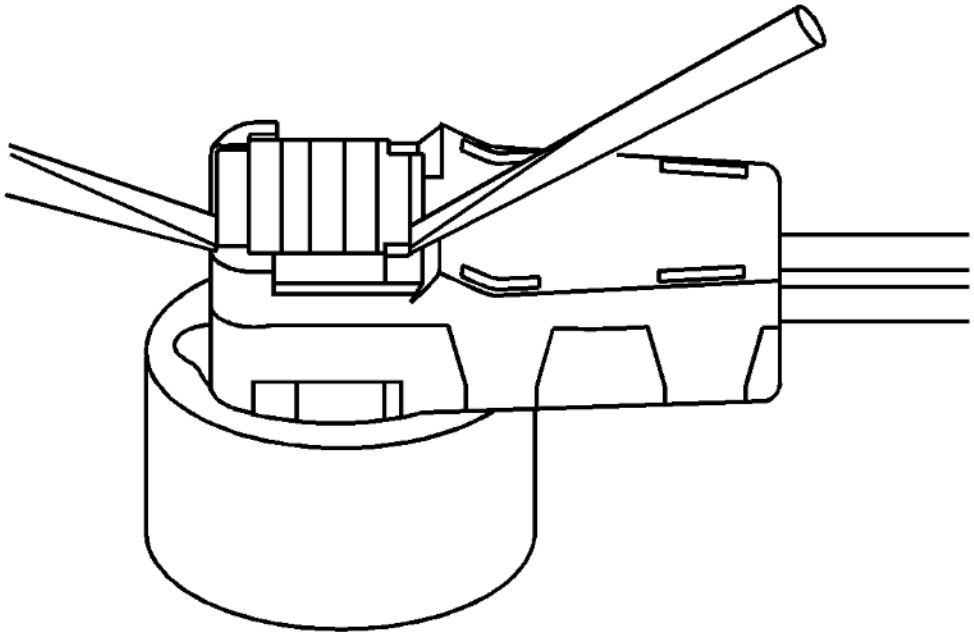

cardiagn.com

Fig. 89: Lifting Orange CPA
Courtesy of GENERAL MOTORS COMPANY

1. Lift the orange or yellow CPA vertically (avoid lifting on an angle to the connector) approximately 4 mm to release the connector. Use a small flat-bladed tool to help release the CPA. The CPA may also be released manually without any tools.

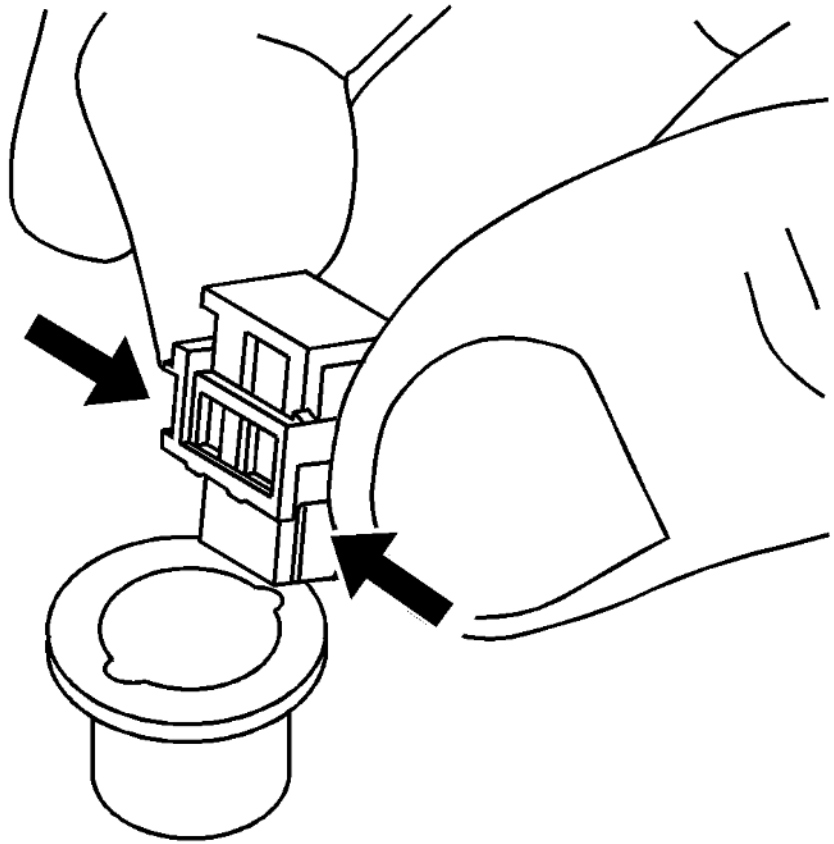

Fig. 90: Grabbing Connector On Both Sides
Courtesy of GENERAL MOTORS COMPANY

cardiagn.com

2. Grab the connector on both sides and lift vertically to disconnect the connector.

Installation Procedure

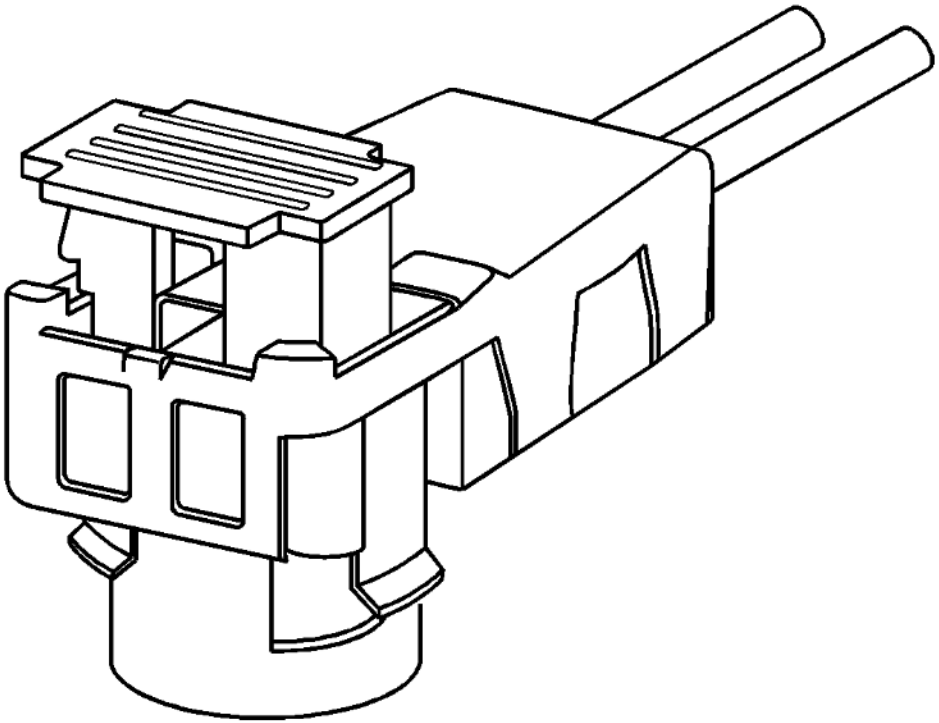

Fig. 91: Lifting Orange CPA
Courtesy of GENERAL MOTORS COMPANY

1. The CPA should be approximately 4 mm above the yellow cover before installing the connector. If not, use a small flat-bladed tool to help

cardiagn.com

release the CPA. The CPA may also be released manually without any tools.

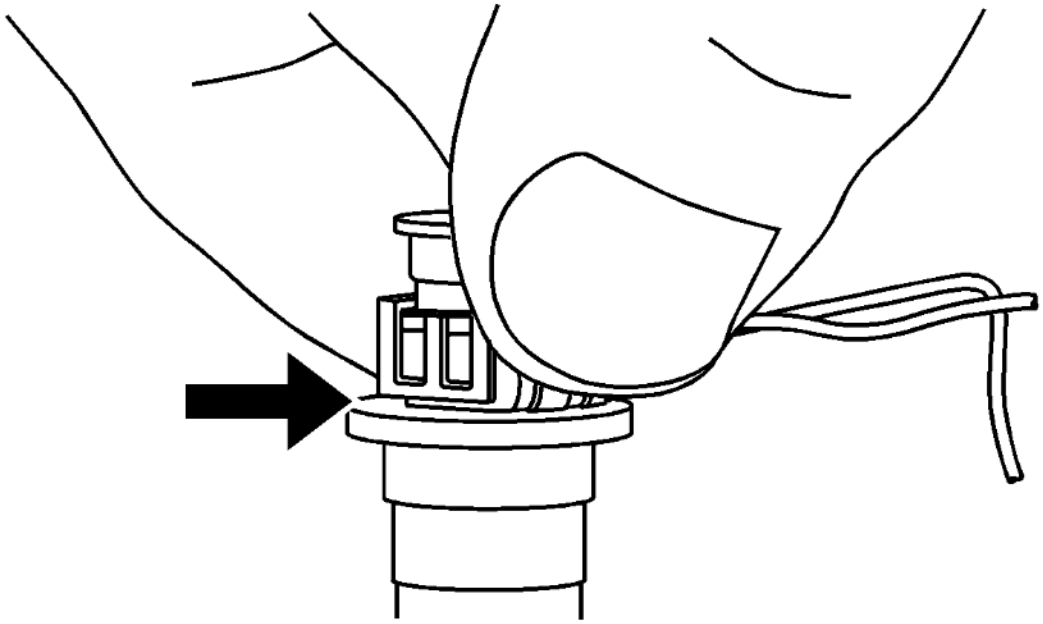

Fig. 92: Seating Connector Sub-Assembly
Courtesy of GENERAL MOTORS COMPANY

2. Line up the connector key tabs with the initiator key slots. Grab the connector on both sides and push down into the initiator connector sub assembly until fully seated.

cardiagn.com

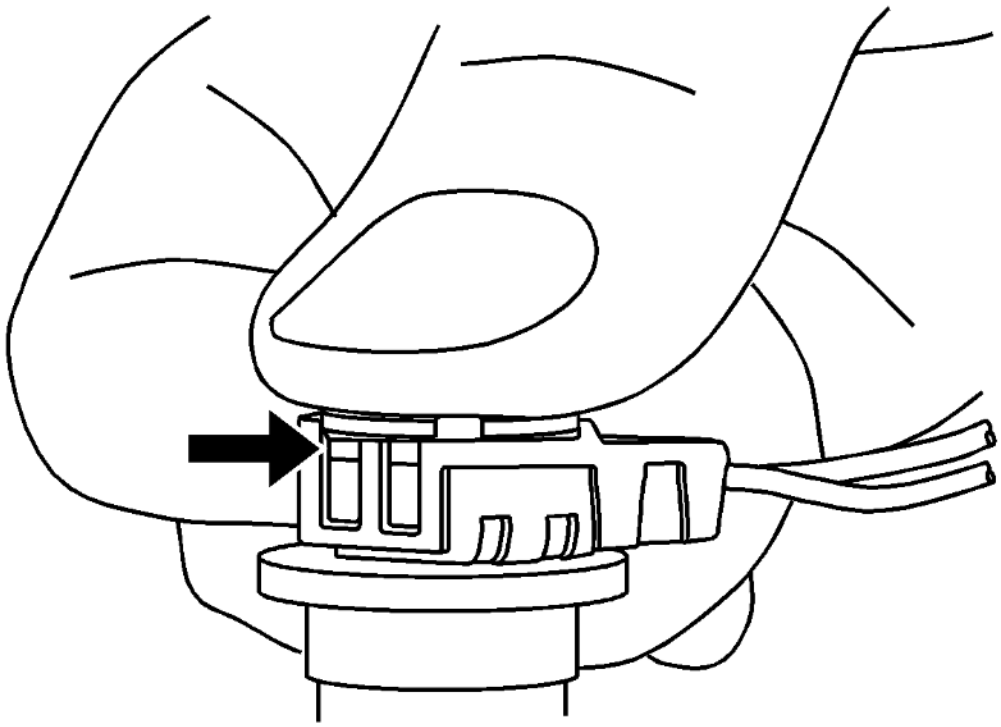

Fig. 93: Pushing CPA Down
Courtesy of GENERAL MOTORS COMPANY

3. After the connector is fully seated, push the CPA down with your thumb until the CPA is touching the yellow cover on the connector.

FEP CONNECTORS (STEERING GEAR)

Removal Procedure

cardiagn.com

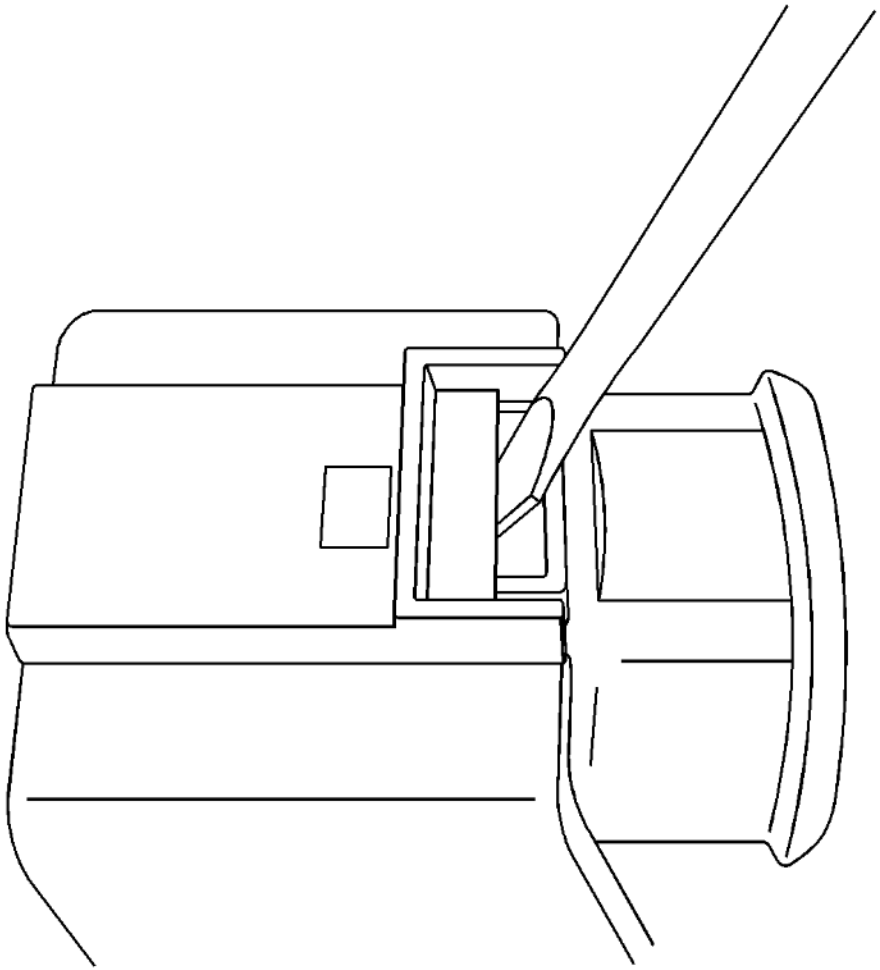

Fig. 94: Releasing Locking Tab On Connector
Courtesy of GENERAL MOTORS COMPANY

1. Use a flat-bladed tool to release the locking tab on the connector.

cardiagn.com

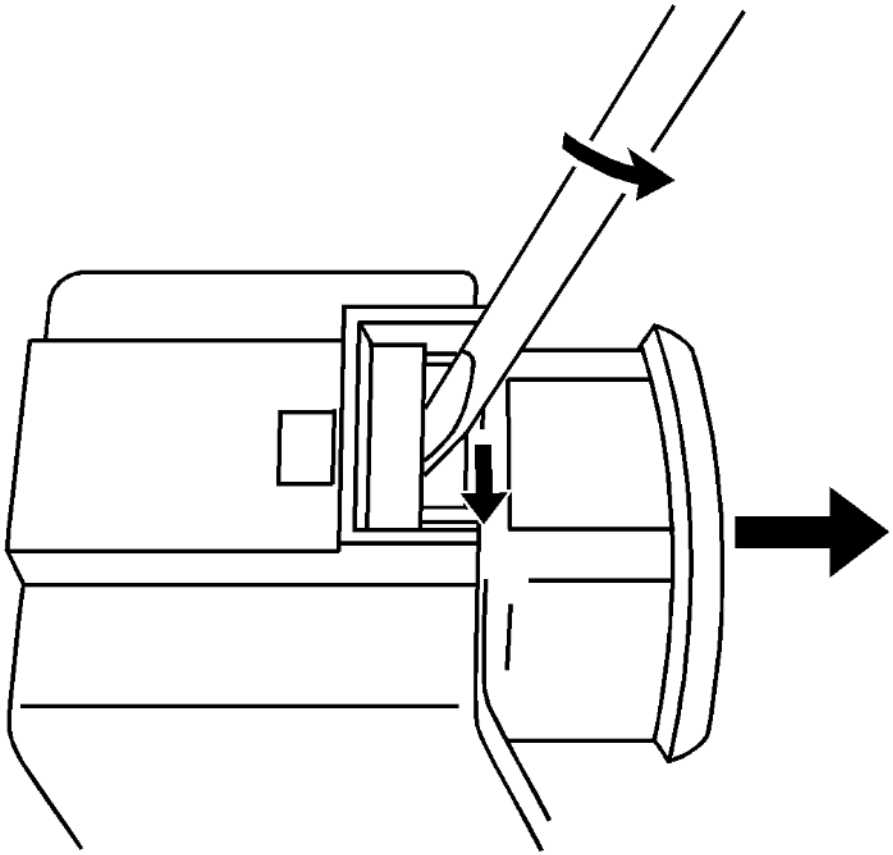

Fig. 95: Twisting Flat-Bladed Tool To Push Top Of Locking Tab Inward
Courtesy of GENERAL MOTORS COMPANY

2. Option 1: Twist the flat-bladed tool to push the top of the locking tab inward while pulling the connector body out.

cardiagn.com

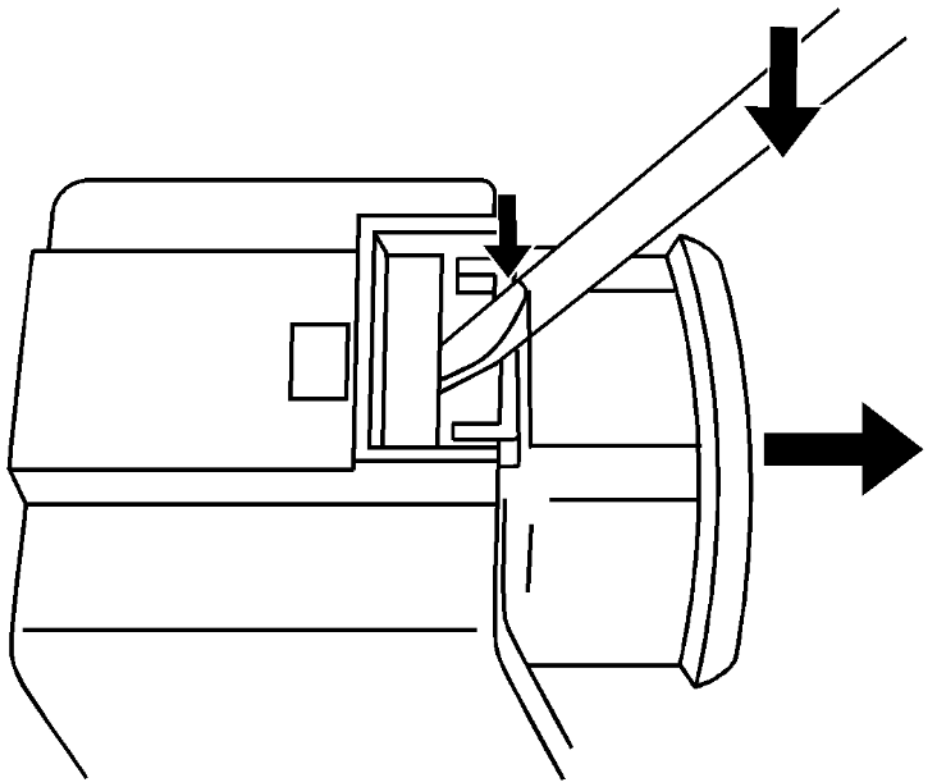

Fig. 96: Using Flat-Bladed Tool To Depress Locking Tab
Courtesy of GENERAL MOTORS COMPANY

3. Option 2: Pry using the flat-bladed tool to depress the locking tab while pulling the connector body out.

JST CONNECTORS

Special Tools

cardiagn.com

- **EL-38125-550** Terminal Release Tool Kit
- **EL-38125-580** Terminal Release Tool Kit
- **J-38125-553** Terminal Release Tool

For equivalent regional tools, refer to **Special Tools** .

Terminal Removal Procedure

The JST connector family consists of seven unique connector housings differentiated by color and keying. This connector family is designed to use both 0.64 and 2.8 sized terminals.

JST BCM Connector

GM Service Part #	Color
88988806	Gray
88988837	Brown
88988838	Lt Green
88988839	Natural
88988840	Lt Blue
88988841	Black
88988842	Pink

cardiagn.com

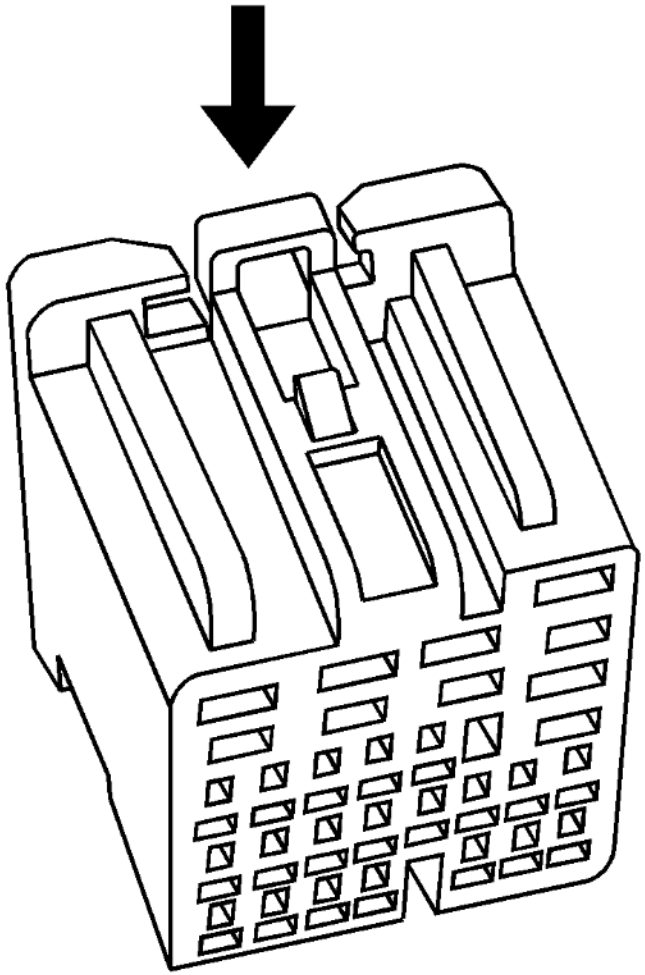

Fig. 97: Depressing Lock
Courtesy of GENERAL MOTORS COMPANY

1. While depressing the lock, remove the connector from the component.

cardiagn.com

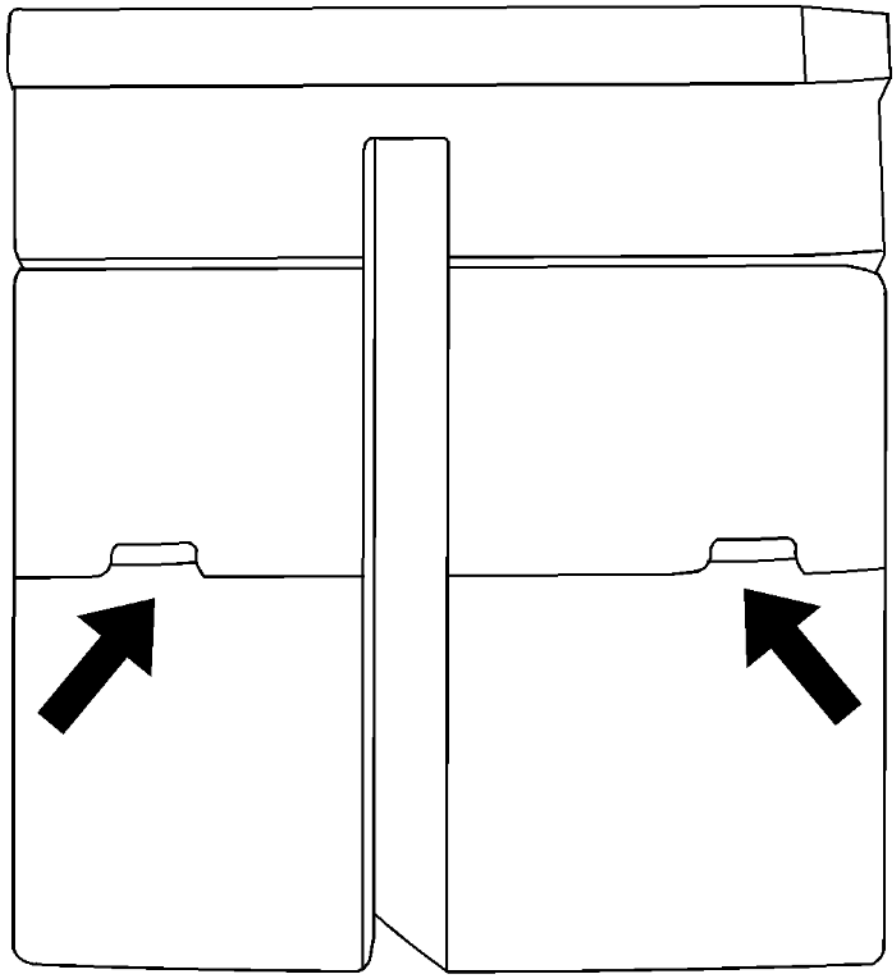

Fig. 98: Terminal Position Assurance Indents
Courtesy of GENERAL MOTORS COMPANY

2. Unlock the terminal position assurance (TPA):
    - Position connector as shown (above) and locate TPA staging cavities.

cardiagn.com

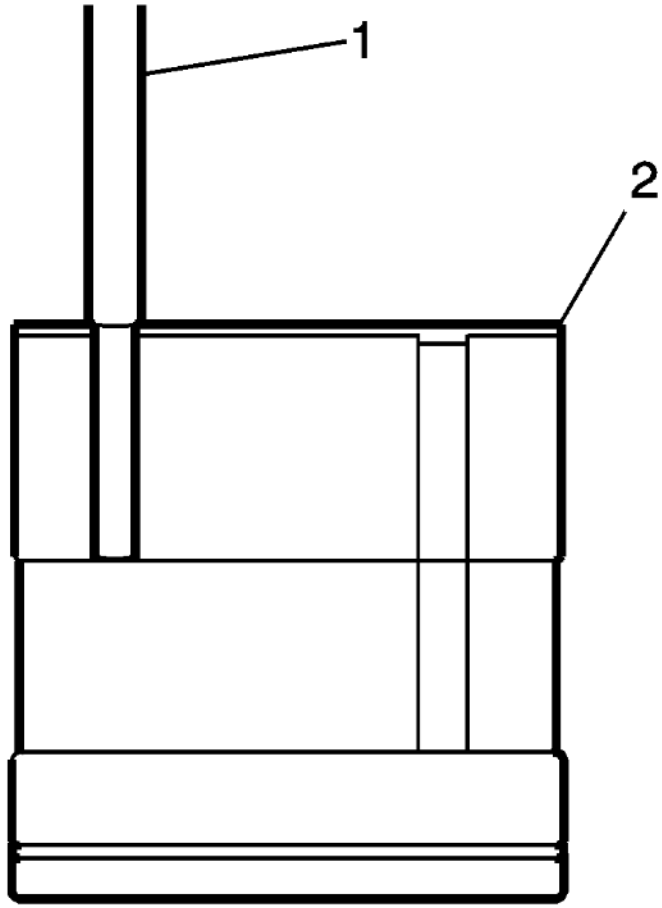

Fig. 99: Terminal Release Tool
Courtesy of GENERAL MOTORS COMPANY

- Using connector terminal release tool J-38125-553 (1) lift the TPA into the staged position. Perform this step on both sides of the TPA.

cardiagn.com

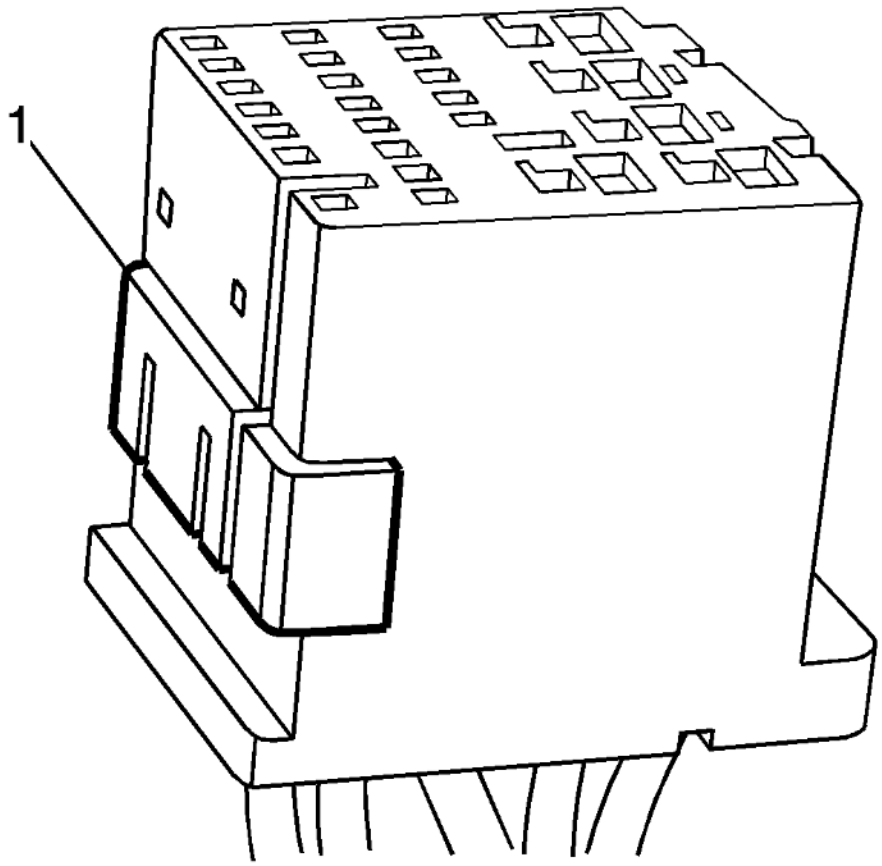

Fig. 100: TPA In Staged Position
Courtesy of GENERAL MOTORS COMPANY

- You will feel the TPA click into place when fully extended into the staged position. The figure above shows the TPA (1) in the staged position.

cardiagn.com

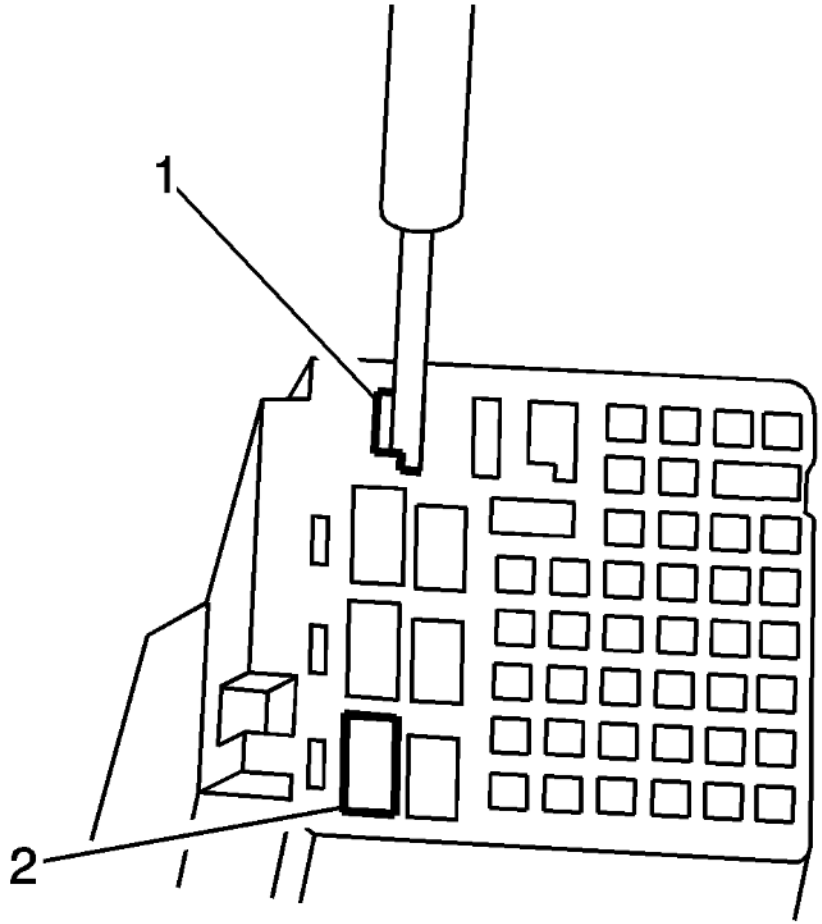

Fig. 101: Connector Terminal Release Tool
Courtesy of GENERAL MOTORS COMPANY

3. Release the terminal from the connector:
   - Position the connector as shown (above) and locate the terminal release entry canal (1) of the suspect terminal.
   - Insert the connector terminal release tool J-38125-553 into the entry canal with the angled side of the tool facing the connector wall containing cavity 4 (2).

cardiagn.com

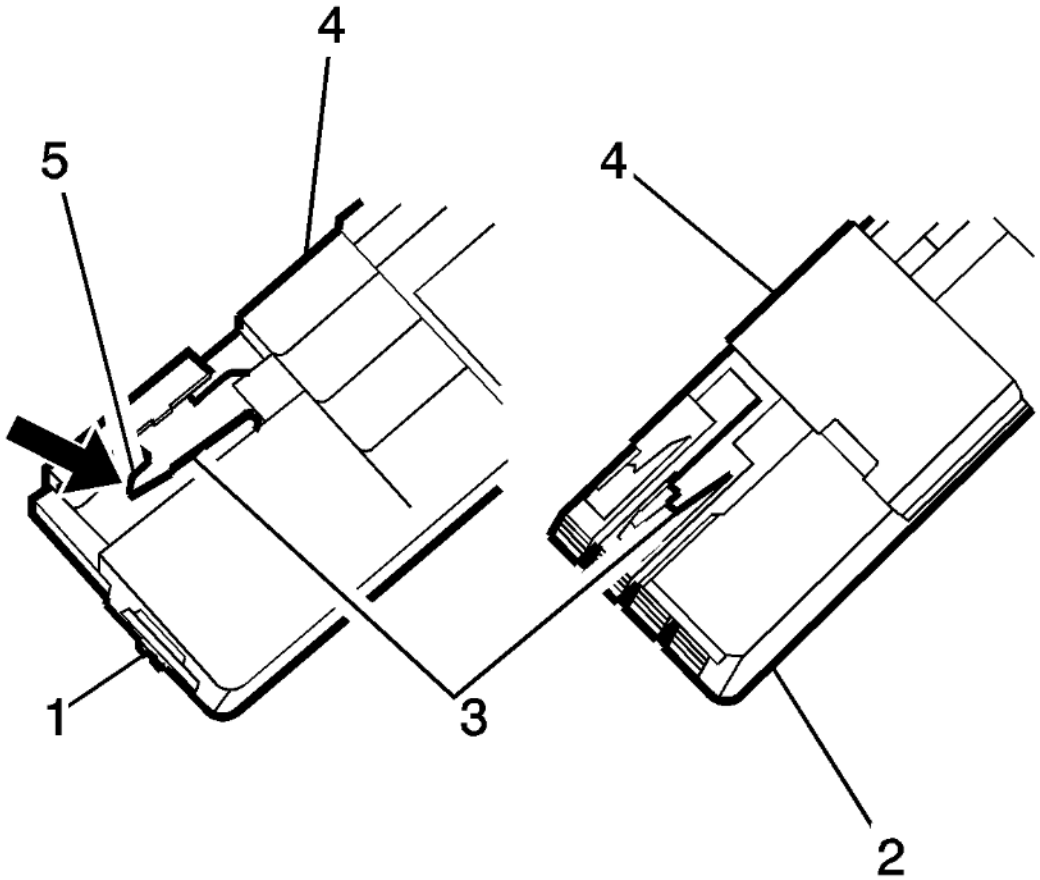

Fig. 102: Connector Lance And TPA
Courtesy of GENERAL MOTORS COMPANY

- The cavity on the left (1) is a 2.8 mm^2 cavity and the cavity on the right (2) is a 0.64 mm^2 cavity.
- Place the tip of the connector terminal release tool onto the connector lance (3) and deflect the lance to the right (5) to release the lock. Hold this released position.
- Holding the lance in the released position, slightly pull on the suspect terminal to remove it from the connector housing. The side TPA

cardiagn.com

(4) is a secondary lock.

4. Repair the terminal by following the **Repairing Connector Terminals (Terminated Lead Repair)Repairing Connector Terminals (Terminal Repair)** procedure.
5. Insert the repaired terminal back into the cavity. Repeat the diagnostic procedure to verify the repair and reconnect the connector bodies.

KOSTAL CONNECTORS (GLOW PLUG CONTROL MODULE)

Special Tools

- **EL-38125-550** Terminal Release Tool Kit
- **EL-38125-580** Terminal Release Tool Kit
- **J-38125-24** Terminal Release Tool
- **J-38125-560** Terminal Release Tool

For equivalent regional tools, refer to **Special Tools** .

Terminal Removal Procedure

cardiagn.com

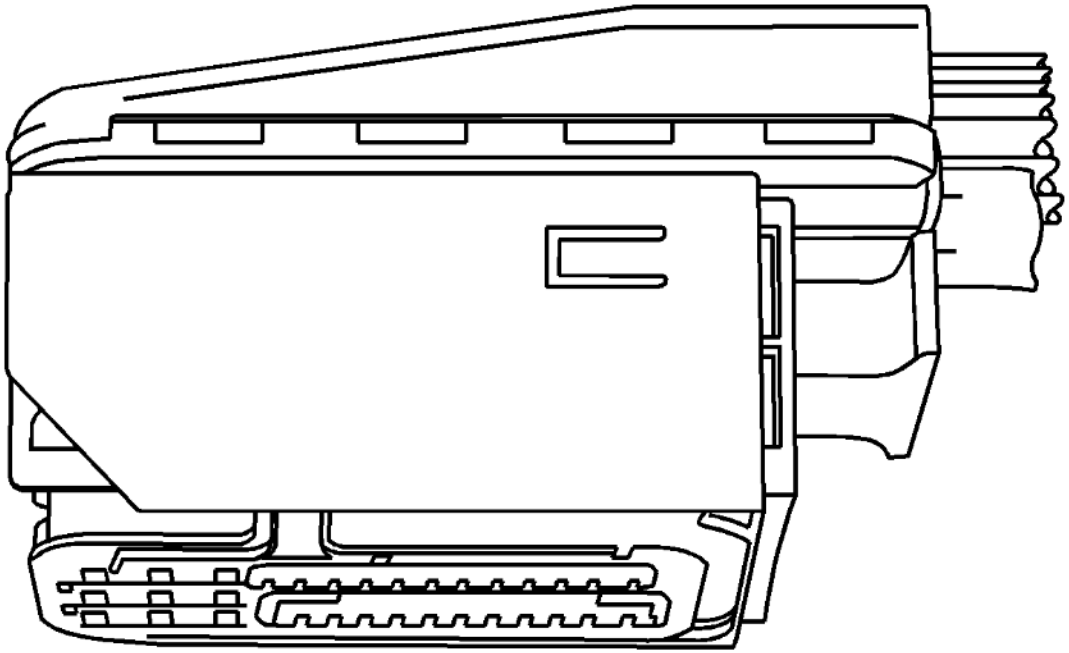

Fig. 103: Typical Kostal Connector
Courtesy of GENERAL MOTORS COMPANY

View of typical connector.

cardiagn.com

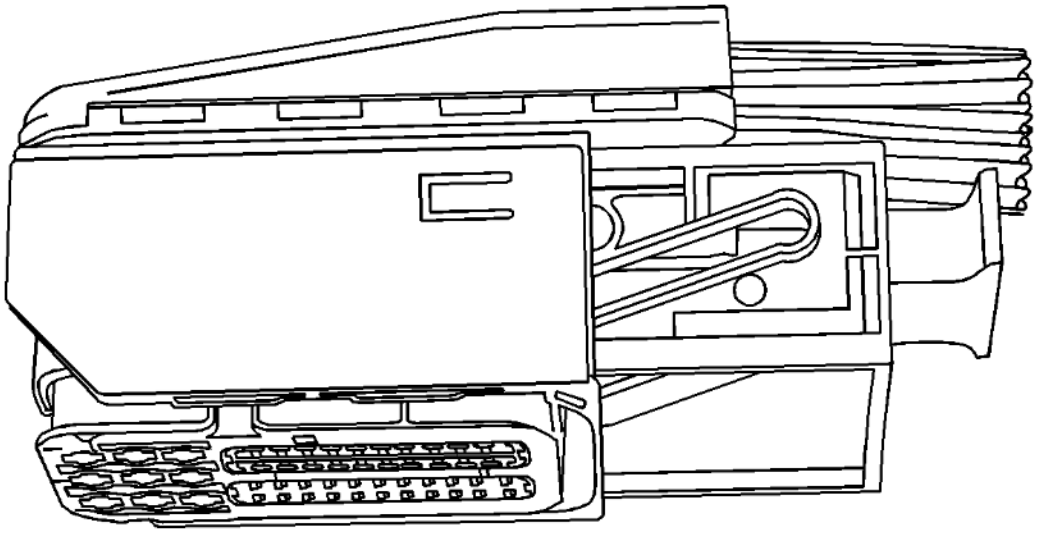

Fig. 104: Connector In Released Position
Courtesy of GENERAL MOTORS COMPANY

View of connector in released position.

1. Locate the assist lever at the back of the connector. Move the assist lever to the rear position.
2. Disconnect the connector from the component.

cardiagn.com

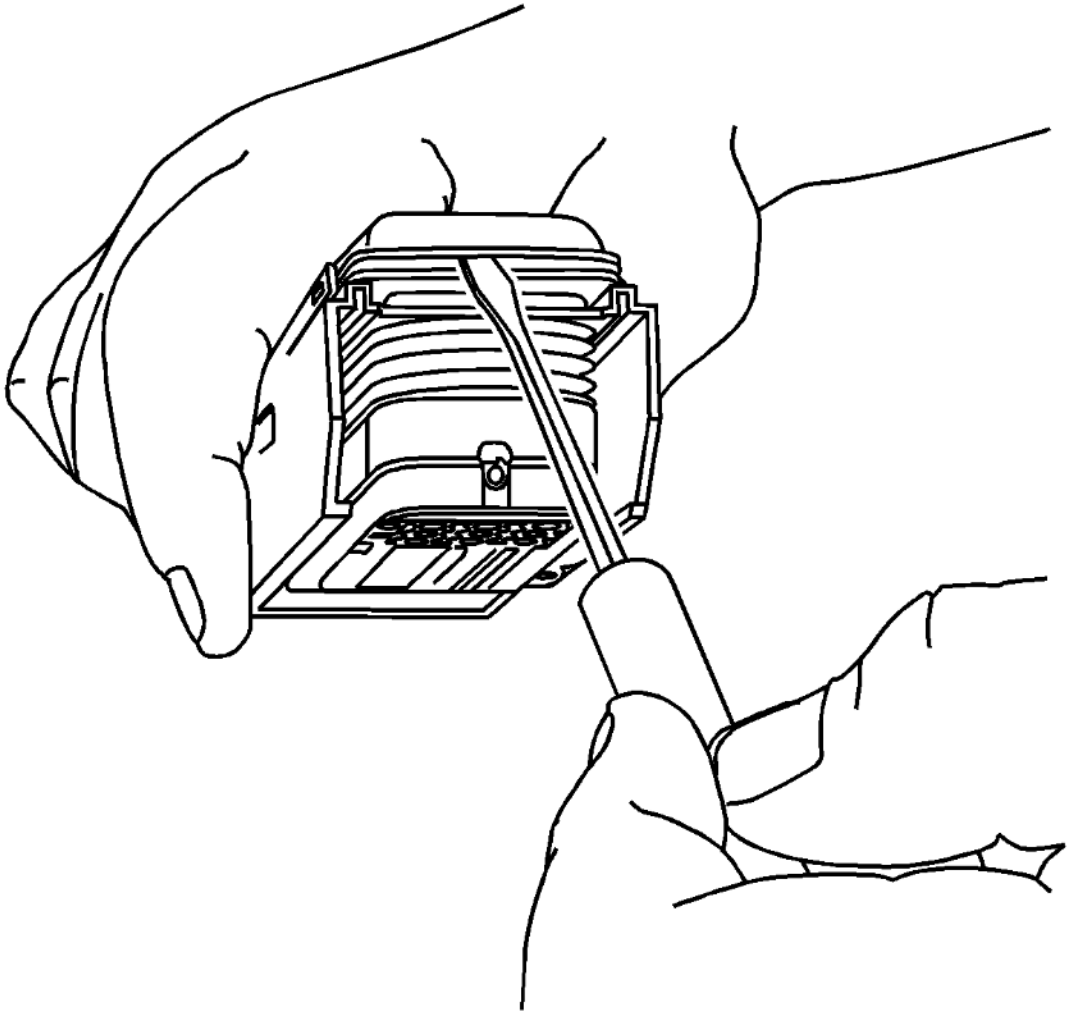

Fig. 105: Using Small Flat-Blade Tool To Remove Dress Cover
Courtesy of GENERAL MOTORS COMPANY

3. Use a small flat-blade tool to remove the dress cover.

cardiagn.com

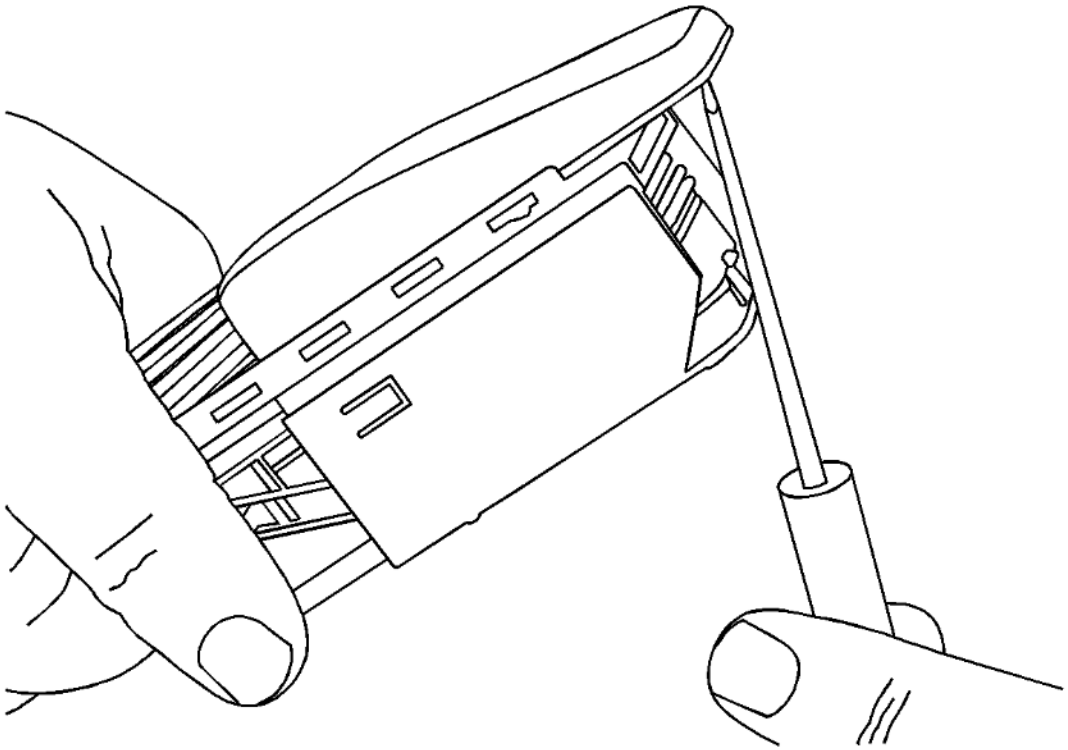

Fig. 106: Slide Dress Cover Forward And Off Of Connector
Courtesy of GENERAL MOTORS COMPANY

4. Slide the dress cover forward and off of the connector.

cardiagn.com

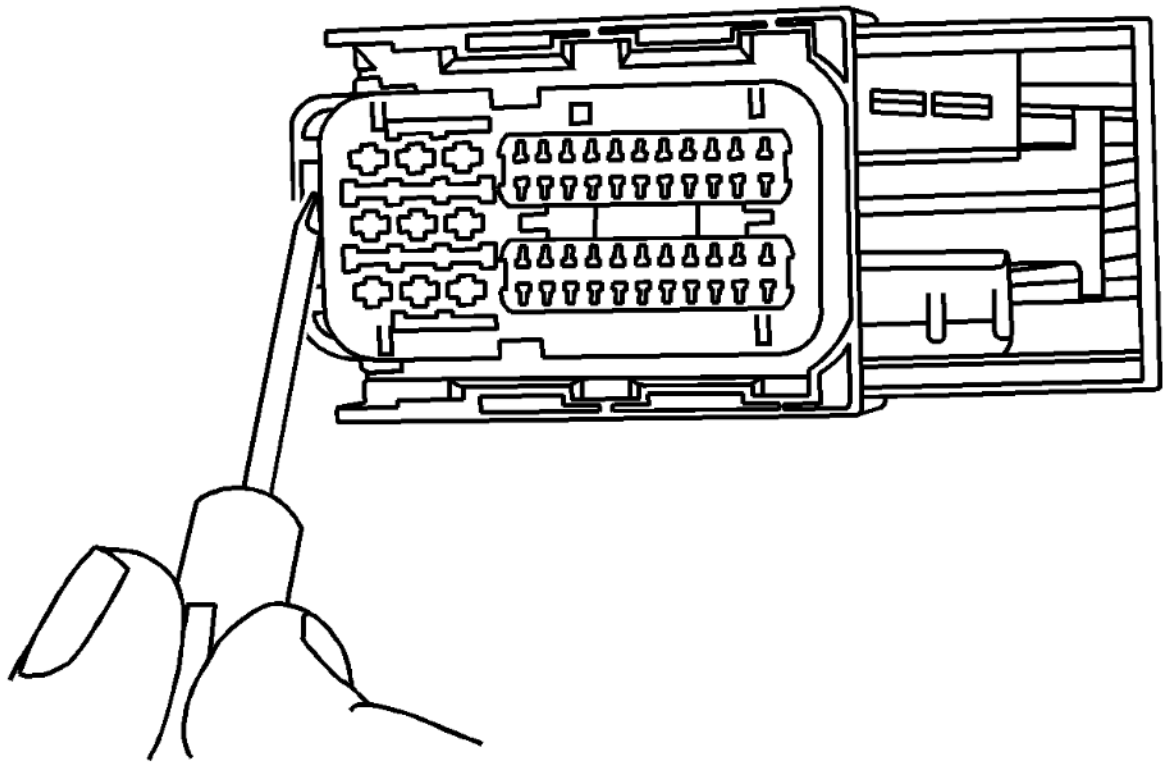

Fig. 107: Moving TPA To Preset Position
Courtesy of GENERAL MOTORS COMPANY

5. The terminal positive assurance (TPA) is located in the front and rear of the connector.

NOTE: **The front TPA cannot be removed from the connector. Only move it to the preset position.**

cardiagn.com

6. Use a small flat-blade tool to move the front TPA to the preset position, outboard approximately 0.125 in. (3 mm).

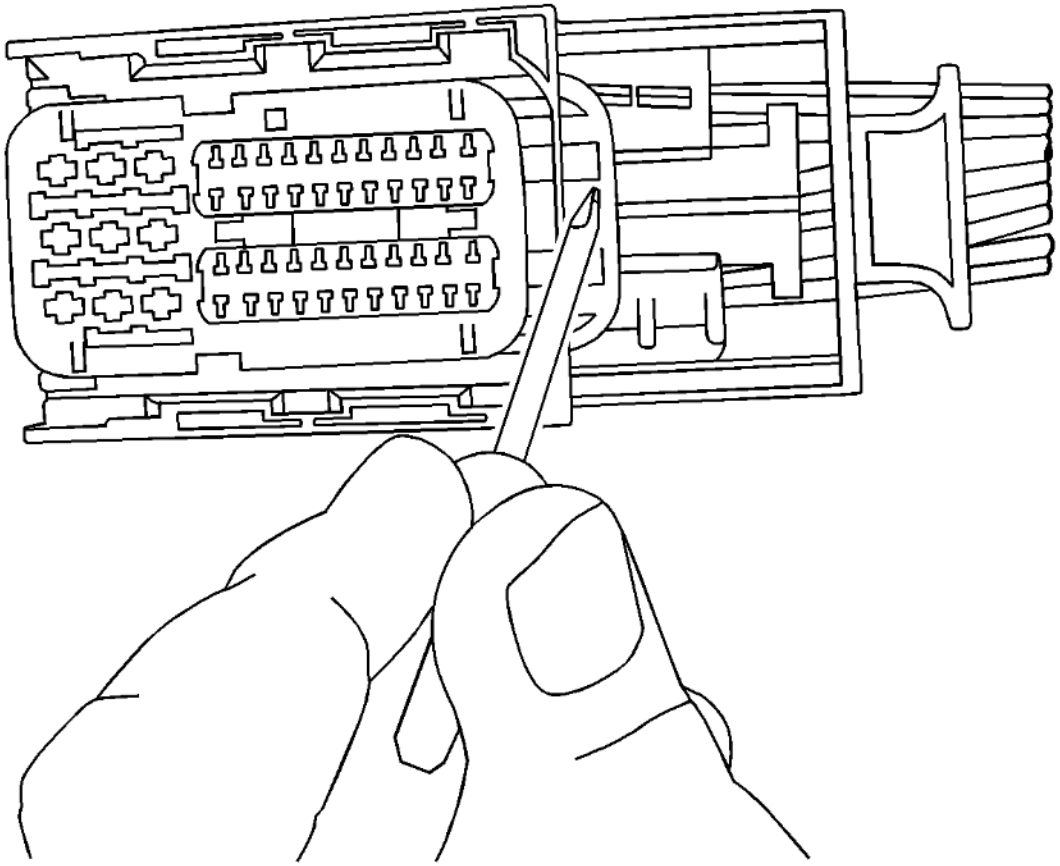

Fig. 108: Using Small Flat-Blade Tool To Remove Rear TPA
Courtesy of GENERAL MOTORS COMPANY

7. Use a small flat-blade tool to completely remove the rear TPA from the connector.

cardiagn.com

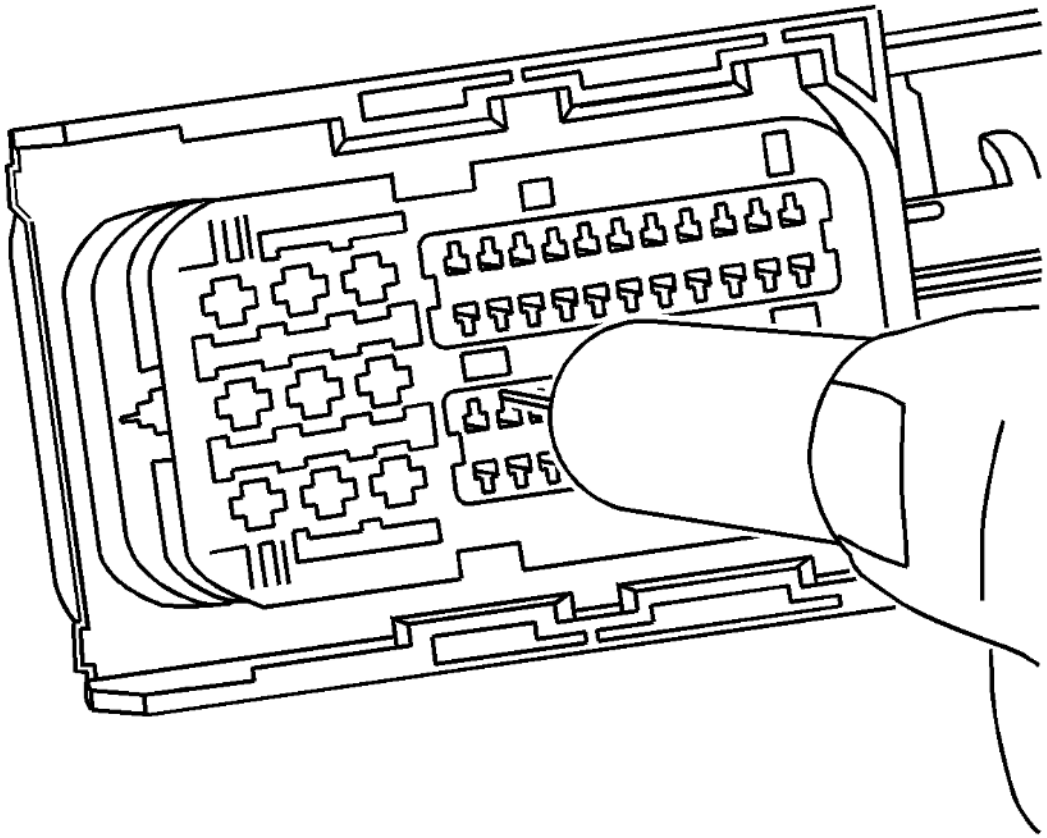

Fig. 109: Using Special Tool To Release Terminals
Courtesy of GENERAL MOTORS COMPANY

8. Use the J-38125-24 or the J-38125-560 tool to release the terminals by inserting the tool into the terminal release cavity.
9. While holding the removal tool in place, gently pull the wire out of the back of the connector. Always remember never use force when pulling a terminal out of a connector.
10. Repair the terminal by following the **Repairing Connector Terminals (Terminated Lead Repair)Repairing Connector Terminals**

cardiagn.com

(Terminal Repair) procedure.

KOSTAL CONNECTORS (TRANSMISSION)

Special Tools

- **EL-38125-550** Terminal Release Tool Kit
- **EL-38125-580** Terminal Release Tool Kit
- **J-38125-28** Terminal Release Tool

For equivalent regional tools, refer to **Special Tools** .

Terminal Removal Procedure

cardiagn.com

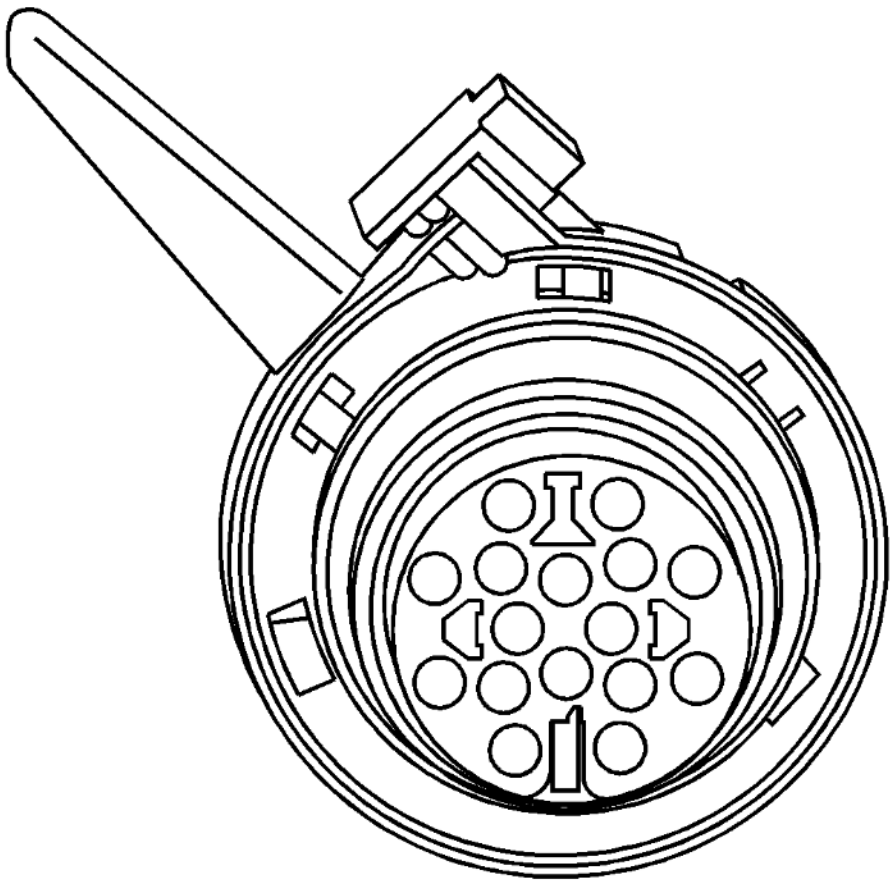

Fig. 110: Connector And Lock
Courtesy of GENERAL MOTORS COMPANY

1. While depressing the lock, twist and remove the connector from the component.

cardiagn.com

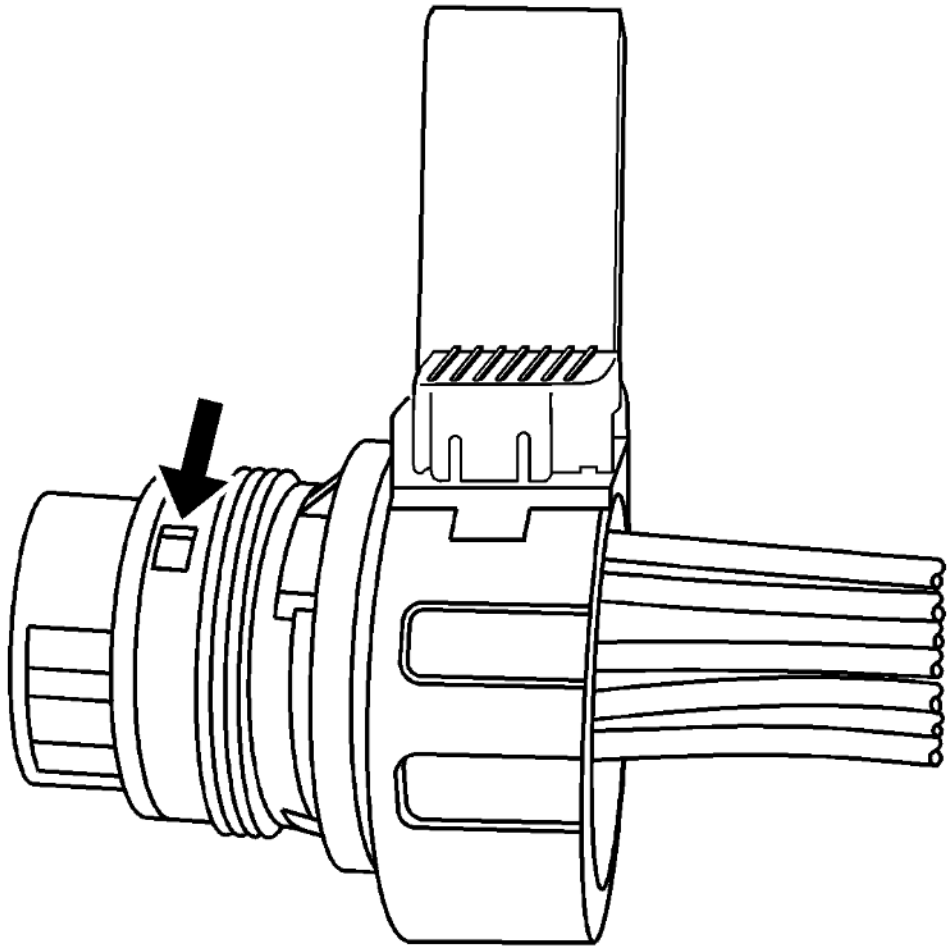

Fig. 111: Terminal Position Assurance (TPA)
Courtesy of GENERAL MOTORS COMPANY

2. Locate the terminal position assurance (TPA).

cardiagn.com

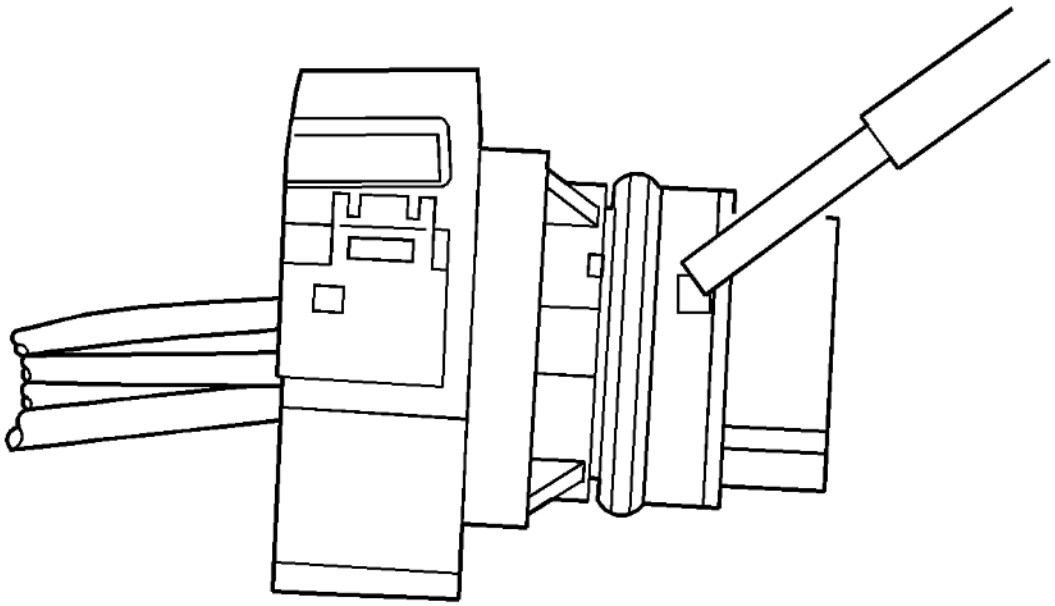

Fig. 112: TPA And Flat-Bladed Tool
Courtesy of GENERAL MOTORS COMPANY

NOTE: **The TPA cannot be removed from the connector while there are terminals present in the connector body.**

3. Use a small flat-blade tool to push the TPA until it bottoms out.

cardiagn.com

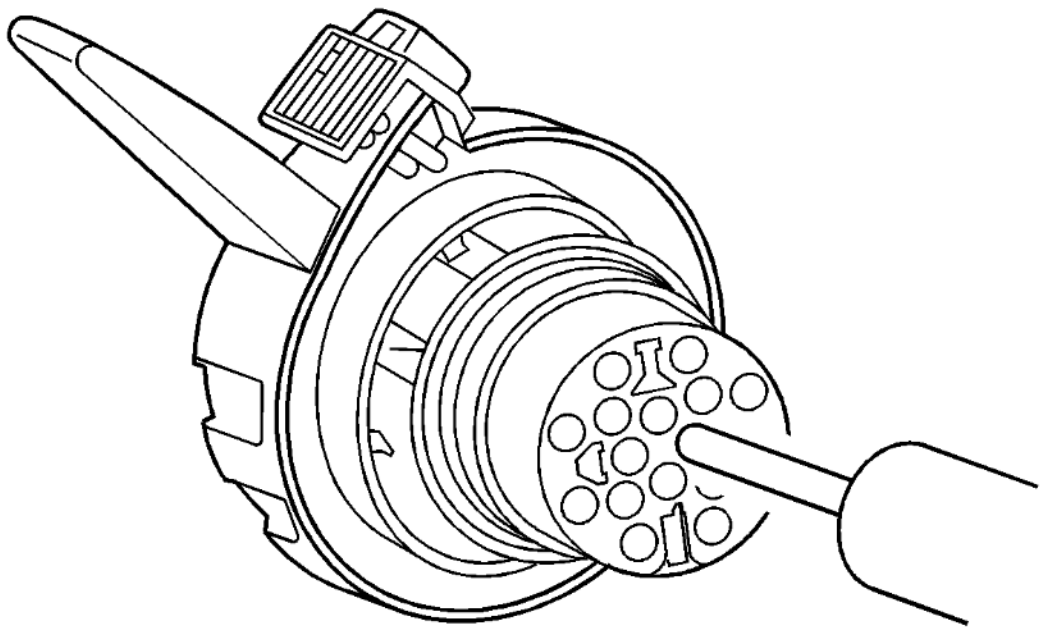

Fig. 113: Releasing Terminals
Courtesy of GENERAL MOTORS COMPANY

4. Use the J-38125-28 tool to release the terminals by inserting the tool into the terminal cavity as shown in the graphic.
5. While holding the removal tool in place, gently pull the wire out of the back of the connector. Always remember never use force when pulling a terminal out of a connector.
6. Repair the terminal by following the **Repairing Connector Terminals (Terminated Lead Repair)Repairing Connector Terminals**

cardiagn.com

(Terminal Repair) procedure.

Terminal Insertion Procedure

After the terminal is replaced, perform the following procedure in order to insert the terminal.

1. Slide the new terminal into the correct cavity at the back of the connector.
2. Push the terminal into the connector until it locks into place. The new terminal should be even with the other terminals. Ensure that the terminal is locked in place by gently pulling on the wire.

cardiagn.com

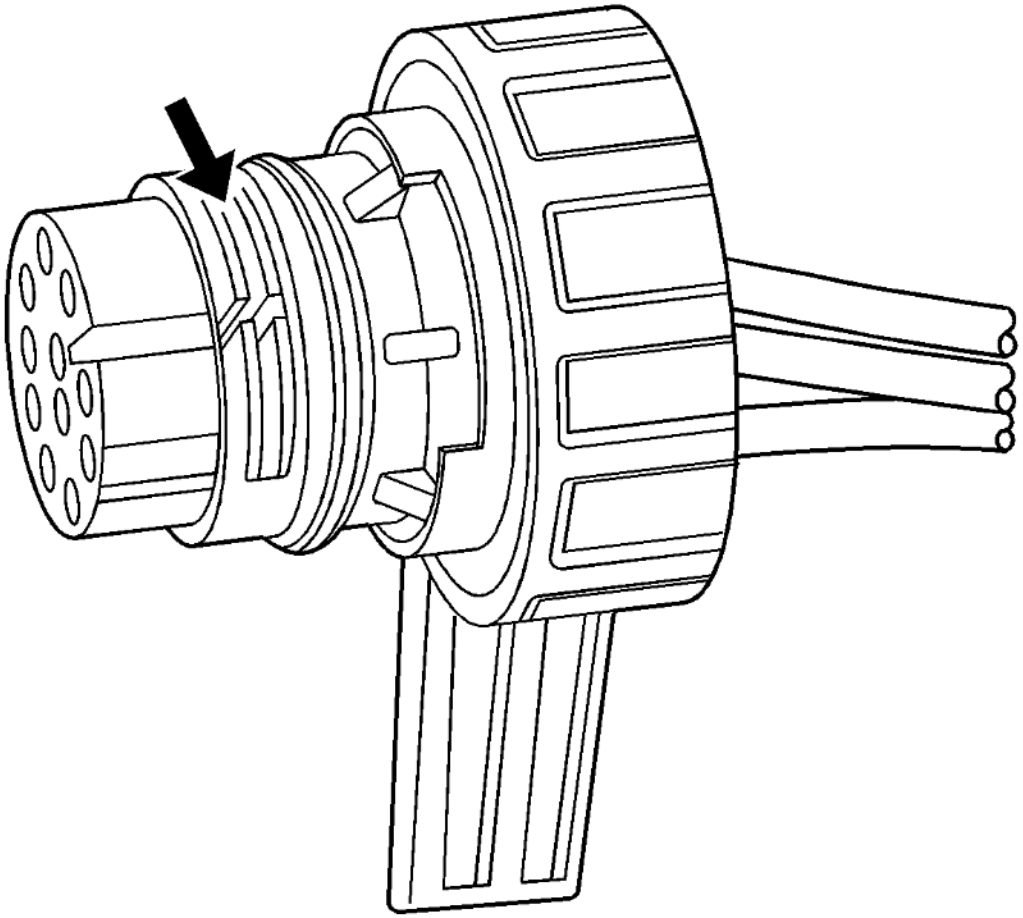

Fig. 114: Locating Terminal Position Assurance (TPA)
Courtesy of GENERAL MOTORS COMPANY

3. Locate the TPA.

cardiagn.com

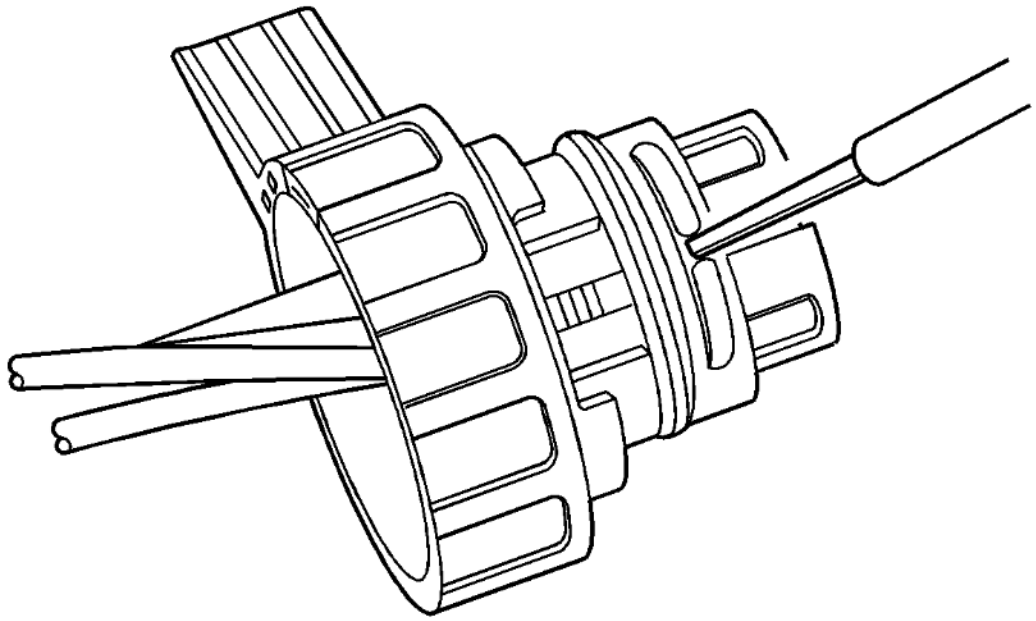

Fig. 115: TPA And Flat-Bladed Tool
Courtesy of GENERAL MOTORS COMPANY

4. Use a small flat-blade tool to push the TPA until it bottoms out.

cardiagn.com

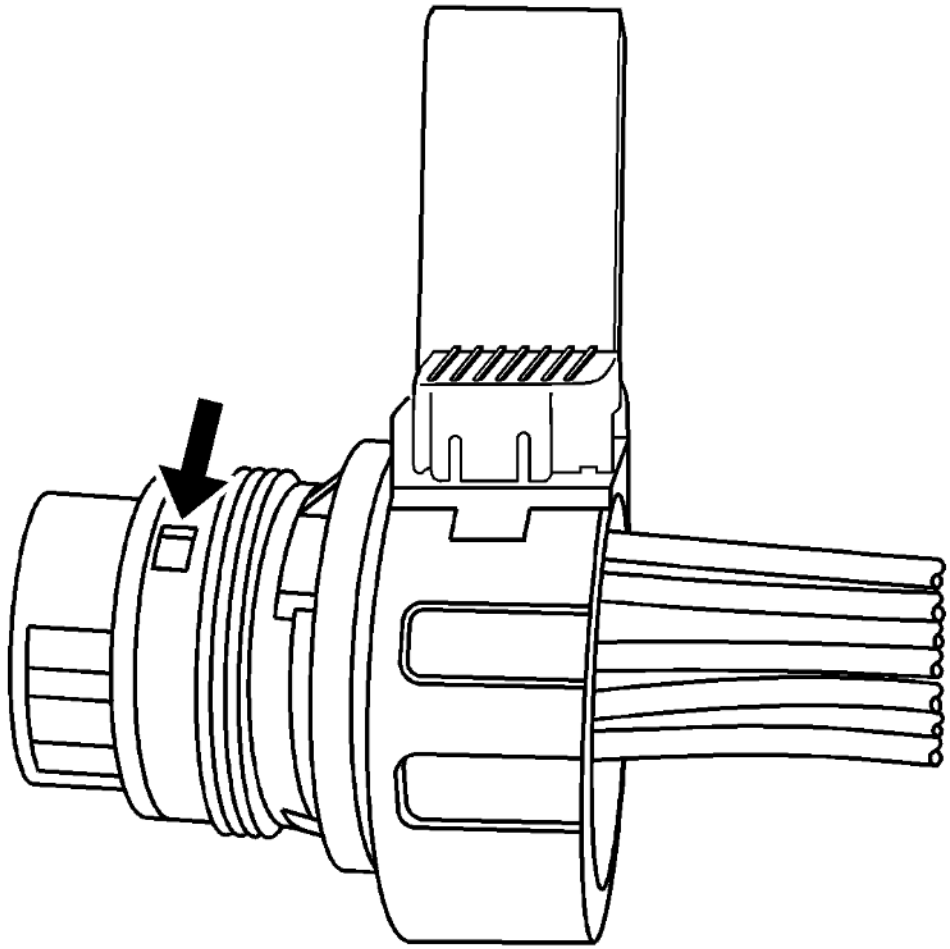

Fig. 116: Terminal Position Assurance (TPA)
Courtesy of GENERAL MOTORS COMPANY

5. Ensure the TPA is fully seated. The TPA should be centered and flush with the connector body when viewed.

MOLEX CONNECTORS (LEVER LOCK)

Special Tools

cardiagn.com

- **EL-38125-550** Terminal Release Tool Kit
- **EL-38125-580** Terminal Release Tool Kit
- **J-38125-213** Terminal Release Tool

For equivalent regional tools, refer to **Special Tools** .

Terminal Removal Procedure

1. Locate the connector position assurance (CPA) on the top of the wire dress cover. Slide the CPA forward.

cardiagn.com

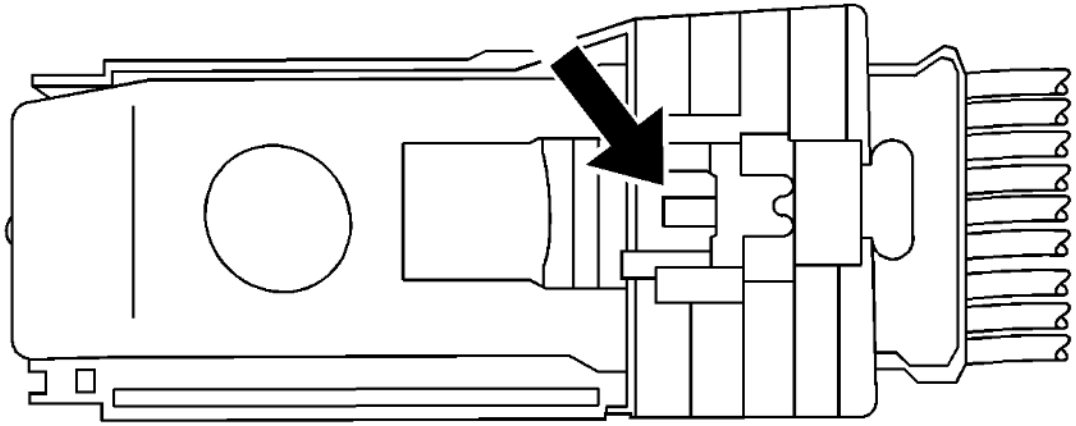

Fig. 117: Lever Lock Release Tab
Courtesy of GENERAL MOTORS COMPANY

2. Slide the lever lock forward while pressing down on the lever lock release tab.

cardiagn.com

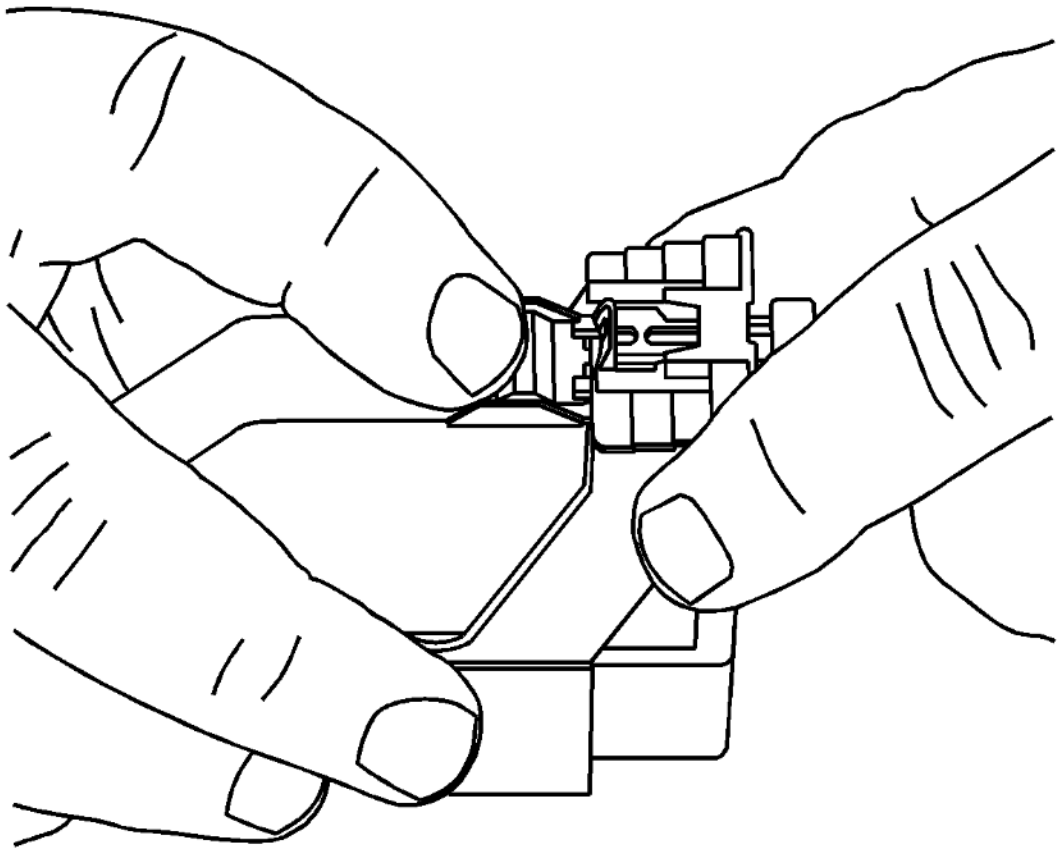

Fig. 118: Pressing Lever Lock Release Tab
Courtesy of GENERAL MOTORS COMPANY

3. The lever should be in the full forward position.

cardiagn.com

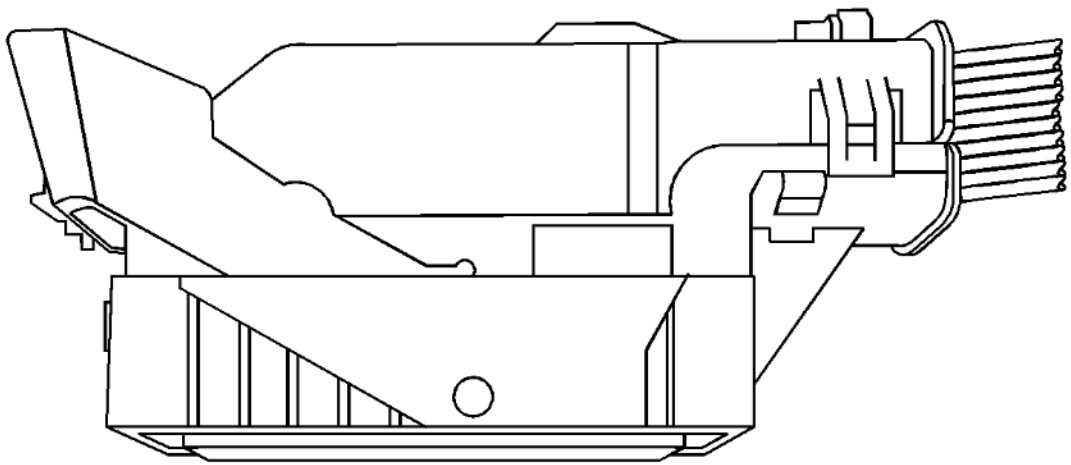

Fig. 119: Lever In Full Forward Position
Courtesy of GENERAL MOTORS COMPANY

4. Disconnect the connector from the component.

cardiagn.com

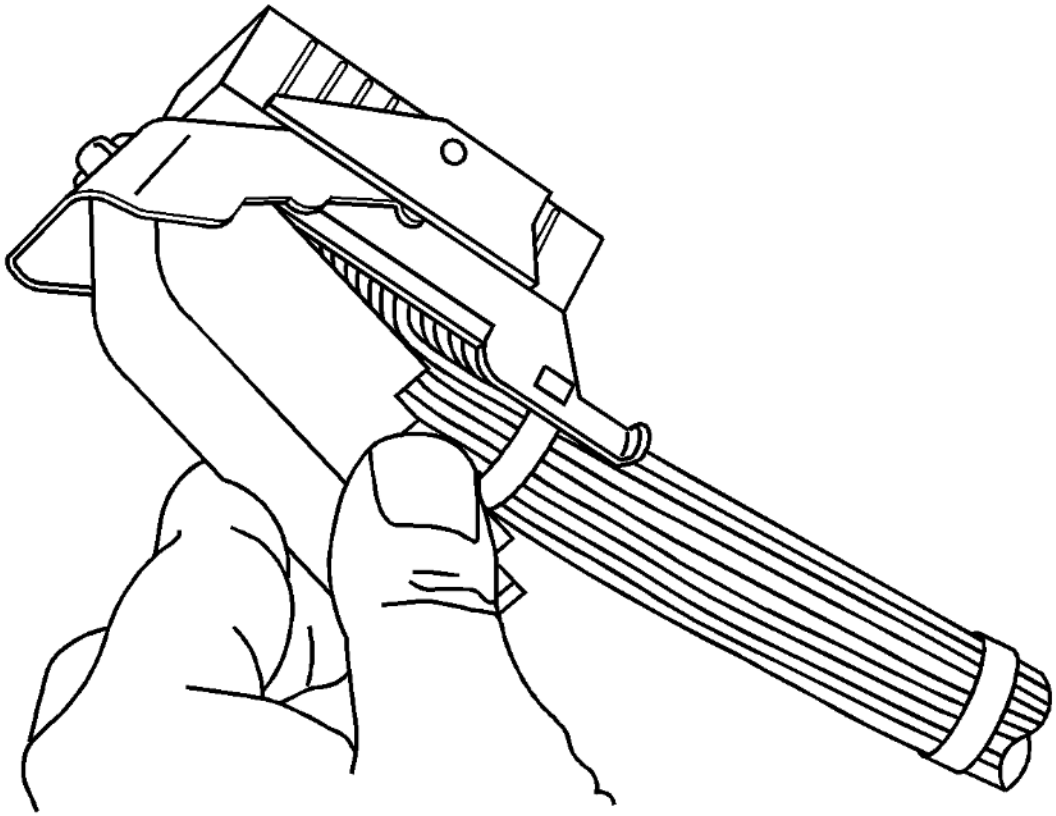

Fig. 120: Removing Dress Cover
Courtesy of GENERAL MOTORS COMPANY

5. Remove the dress cover by using a flat bladed tool to release the dress cover locking tabs and lift up on the dress cover.
6. Cut the tie wrap that holds the wires to the connector body.

cardiagn.com

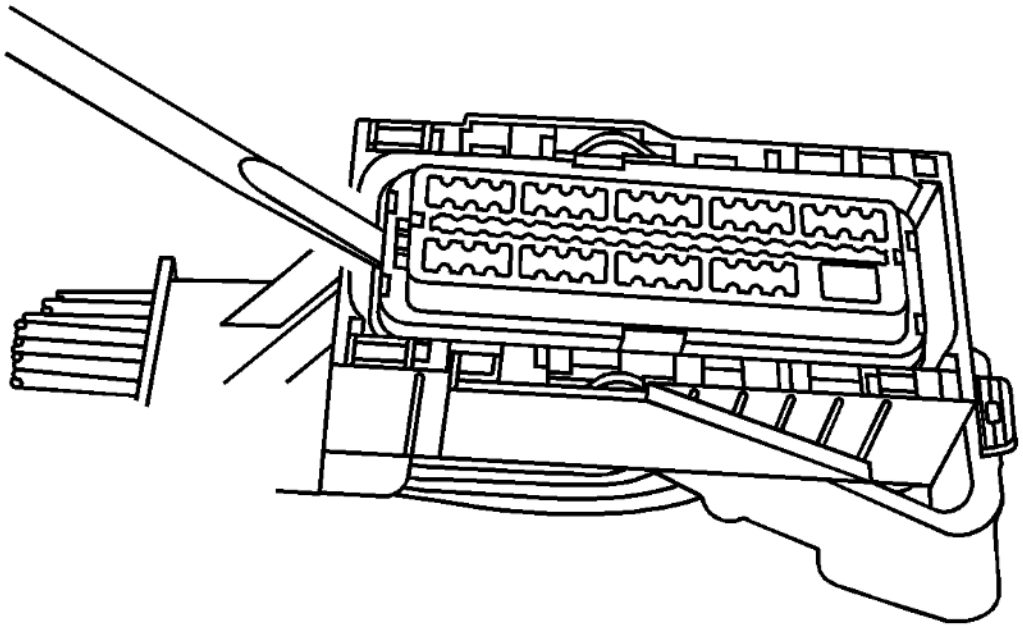

Fig. 121: Prying One Side Of Nose Piece
Courtesy of GENERAL MOTORS COMPANY

7. Use a small flat-blade tool to pry one side of the nose piece up to the pre-stage position. When the nose piece is in the pre-staged position, the nose piece will be raised above the connector body the length of the step in the nose piece.

cardiagn.com

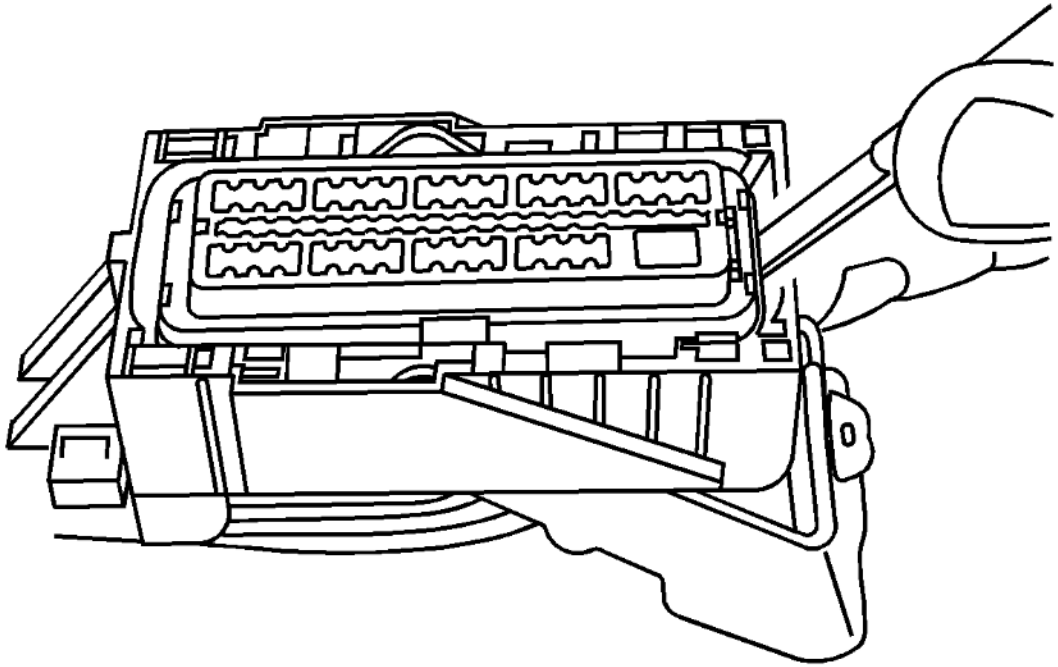

Fig. 122: Prying Other Side Of Nose Piece
Courtesy of GENERAL MOTORS COMPANY

8. Use a small flat-blade tool to pry the other side of the piece to the pre-stage position. If the nose piece is higher than the first step in the nose piece, gently push down on the nose piece until it meets with resistance from the connector body, you should feel the nose piece click into position.

cardiagn.com

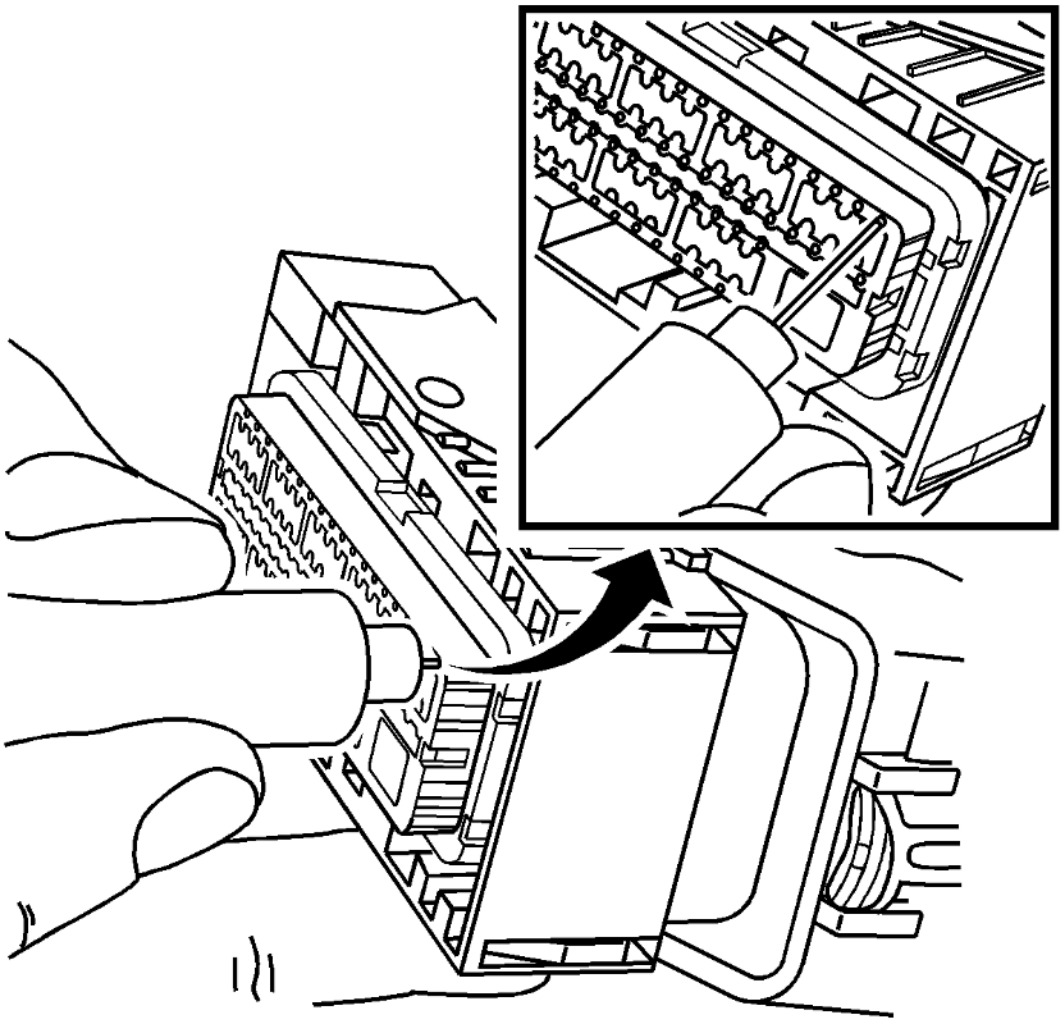

Fig. 123: Releasing Terminal
Courtesy of GENERAL MOTORS COMPANY

9. Insert the J-38125-213 into the small terminal release hole on the nose piece and gently pull on the back of the wire.
10. Repair the terminal by following the **Repairing Connector Terminals (Terminated Lead Repair)Repairing Connector Terminals (Terminal Repair)** procedure.
11. Insert the repaired terminal back into the cavity. Repeat the diagnostic procedure to verify the repair and reconnect the connector bodies.

cardiagn.com

Terminated Lead Repair

1. Remove the terminal.
2. Find the appropriate terminated lead.
3. Use the appropriate splice sleeves depending on the gauge size.
4. Refer to **Wire to Wire Repair**.

Terminal Insertion Procedure

After the terminal is replaced, perform the following procedure in order to insert the terminal.

1. Slide the new terminal into the correct cavity at the back of the connector.
2. Push the terminal into the connector until it locks into place. The new terminal should be even with the other terminals. Insure that the terminal is locked in place by gently pulling on the wire.
3. To assemble the connector, reverse the connector disassembly procedure.

MOLEX CONNECTORS (SIR)

Removal Procedure

NOTE: **The orange or yellow connector position assurance (CPA) must be released first to disconnect or to connect the connector.**

cardiagn.com

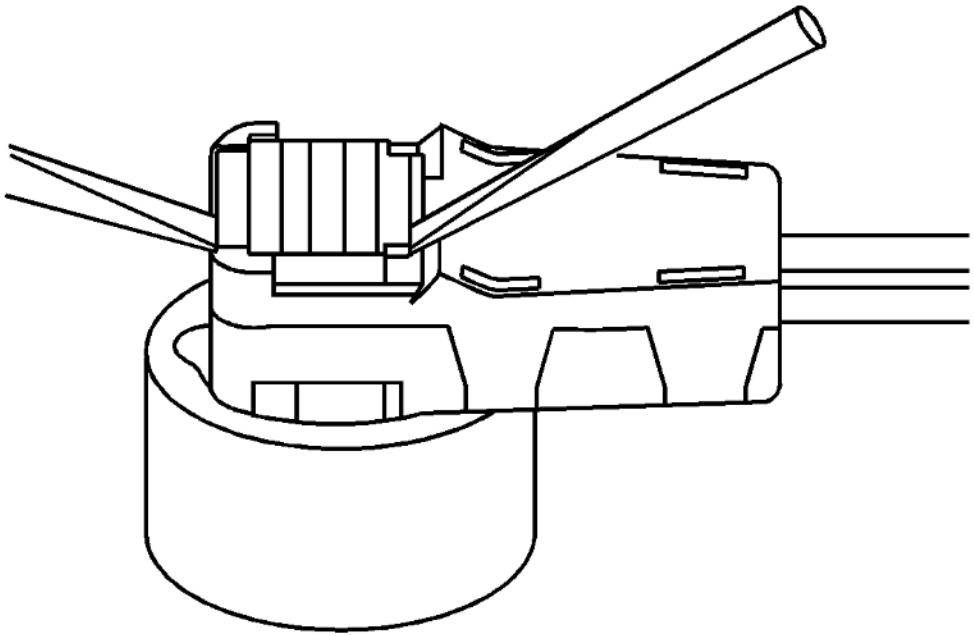

Fig. 124: Lifting Orange CPA
Courtesy of GENERAL MOTORS COMPANY

1. Lift the orange or yellow CPA vertically (avoid lifting on an angle to the connector) approximately 4 mm to release the connector. Use a small flat-bladed tool to help release the CPA. The CPA may also be released manually without any tools.

cardiagn.com

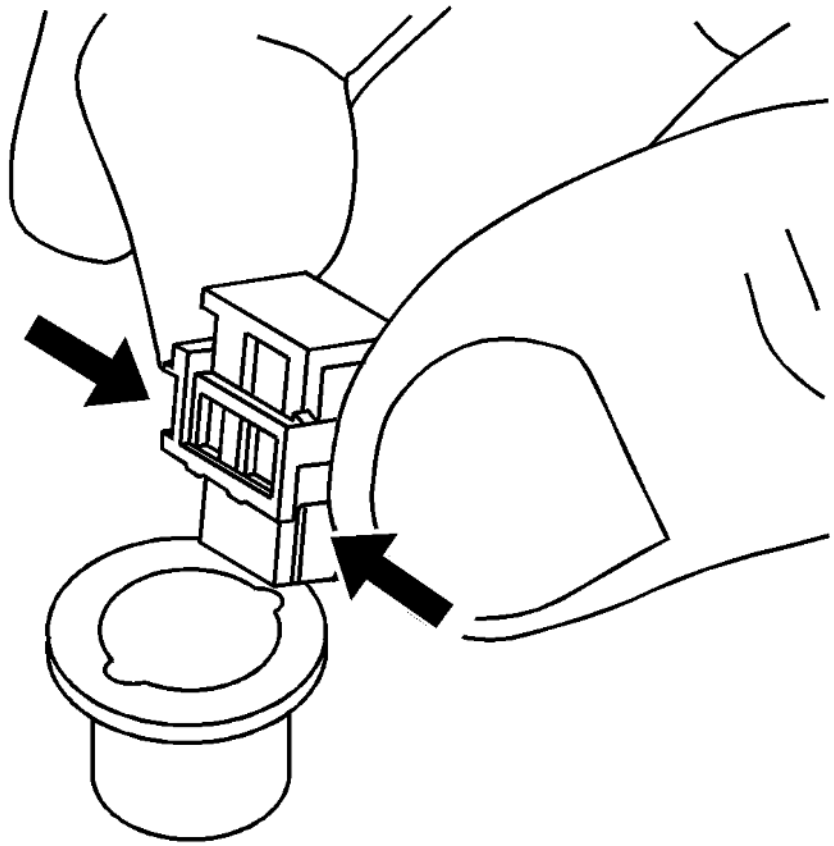

Fig. 125: Grabbing Connector On Both Sides
Courtesy of GENERAL MOTORS COMPANY

2. Grab the connector on both sides and lift vertically to disconnect the connector.

Installation Procedure

cardiagn.com

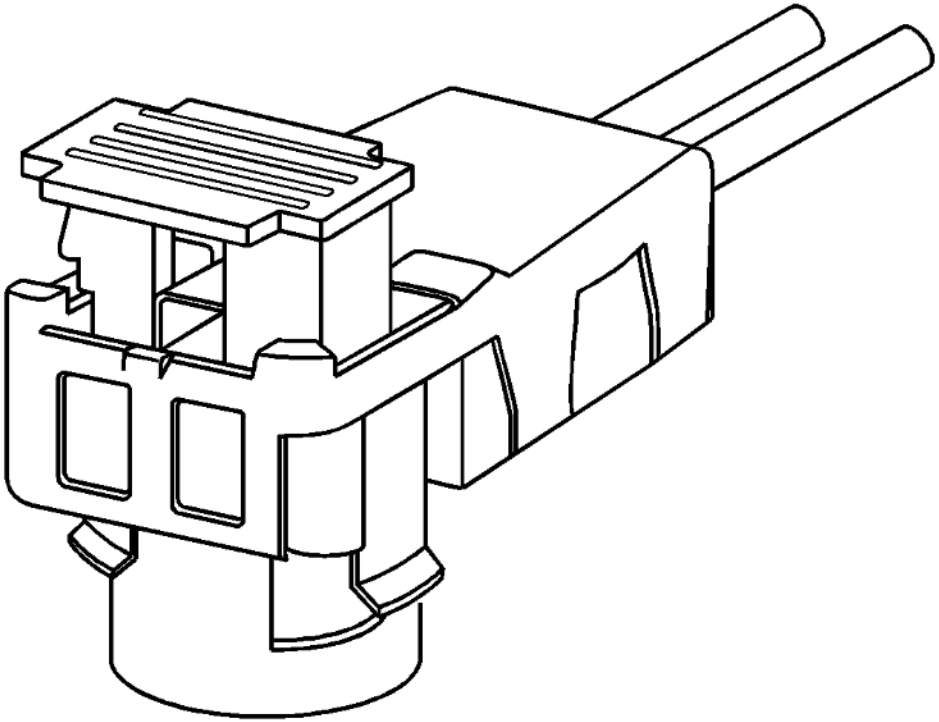

Fig. 126: Lifting Orange CPA
Courtesy of GENERAL MOTORS COMPANY

1. The CPA should be approximately 4 mm above the yellow cover before installing the connector. If not, use a small flat-bladed tool to help release the CPA. The CPA may also be released manually without any tools.

cardiagn.com

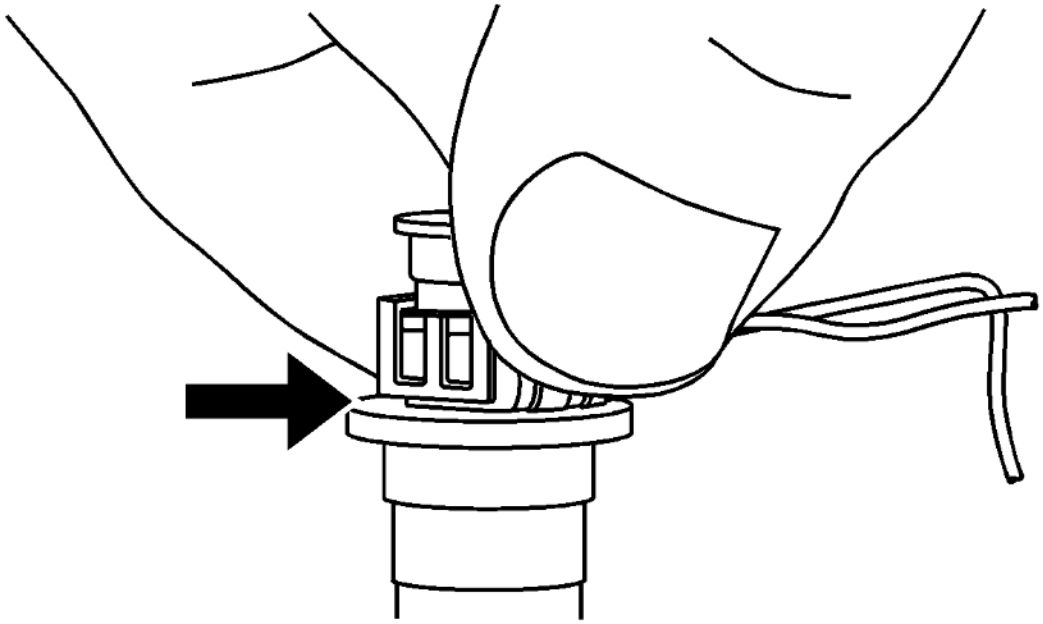

Fig. 127: Seating Connector Sub-Assembly
Courtesy of GENERAL MOTORS COMPANY

2. Line up the connector key tabs with the initiator key slots. Grab the connector on both sides and push down into the initiator connector sub assembly until fully seated.

cardiagn.com

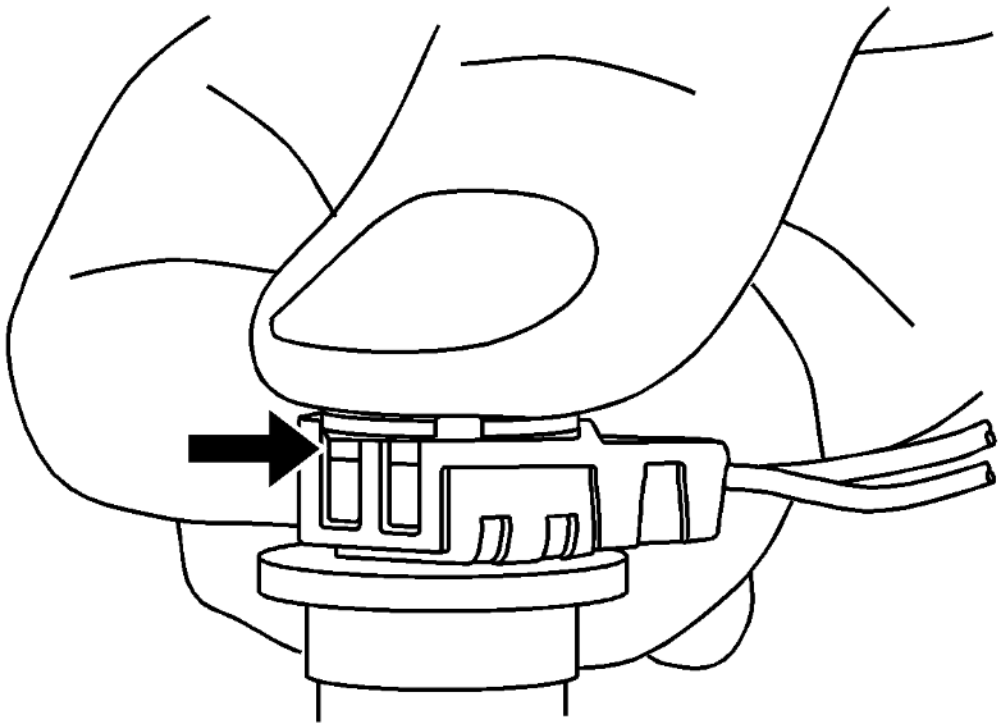

Fig. 128: Pushing CPA Down
Courtesy of GENERAL MOTORS COMPANY

3. After the connector is fully seated, push the CPA down with your thumb until the CPA is touching the yellow cover on the connector.

SUMITOMO CONNECTORS

Special Tools

cardiagn.com

- **EL-38125-550** Terminal Release Tool Kit
- **EL-38125-580** Terminal Release Tool Kit
- **J-38125-12A** Terminal Release Tool
- **J-38125-552** Terminal Release Tool
- **J-38125-553** Terminal Release Tool

For equivalent regional tools, refer to **Special Tools** .

Terminal Removal Procedure

cardiagn.com

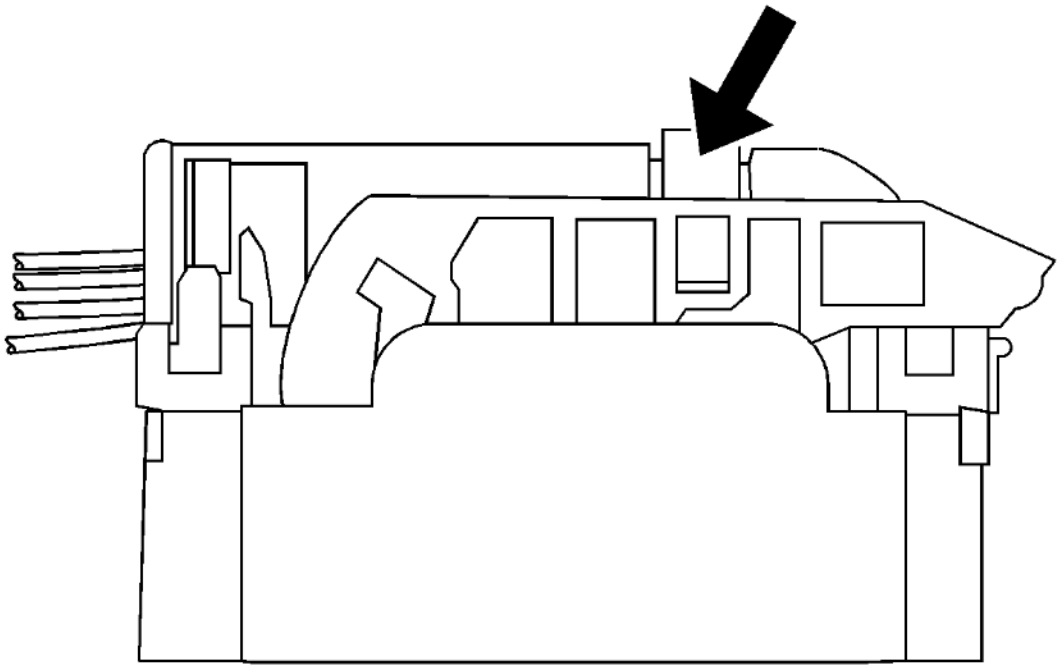

Fig. 129: Lever Lock Release Tab
Courtesy of GENERAL MOTORS COMPANY

cardiagn.com

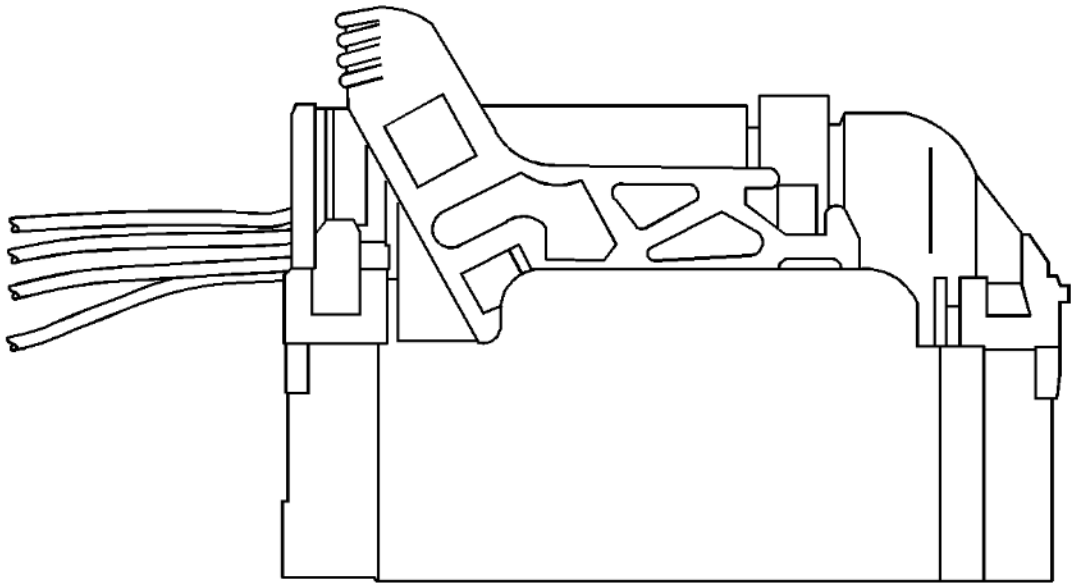

Fig. 130: Lever Lock In Forward Position
Courtesy of GENERAL MOTORS COMPANY

1. Slide the lever lock forward while pressing down on the lever lock release tab.
2. Disconnect the connector from the component.

cardiagn.com

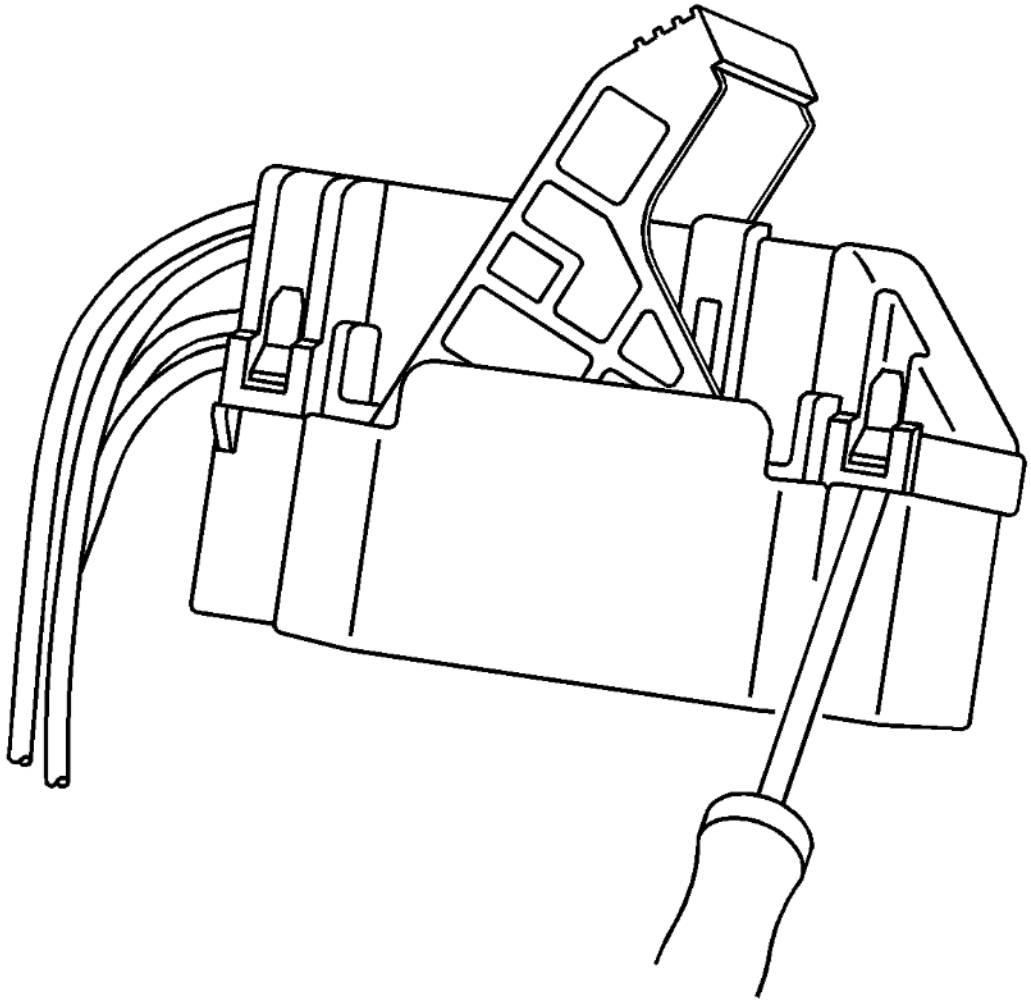

Fig. 131: Releasing Connector Locking Tabs
Courtesy of GENERAL MOTORS COMPANY

3. Remove the dress cover by using a flat-blade tool to release the connector locking tabs and pulling off the dress cover.

cardiagn.com

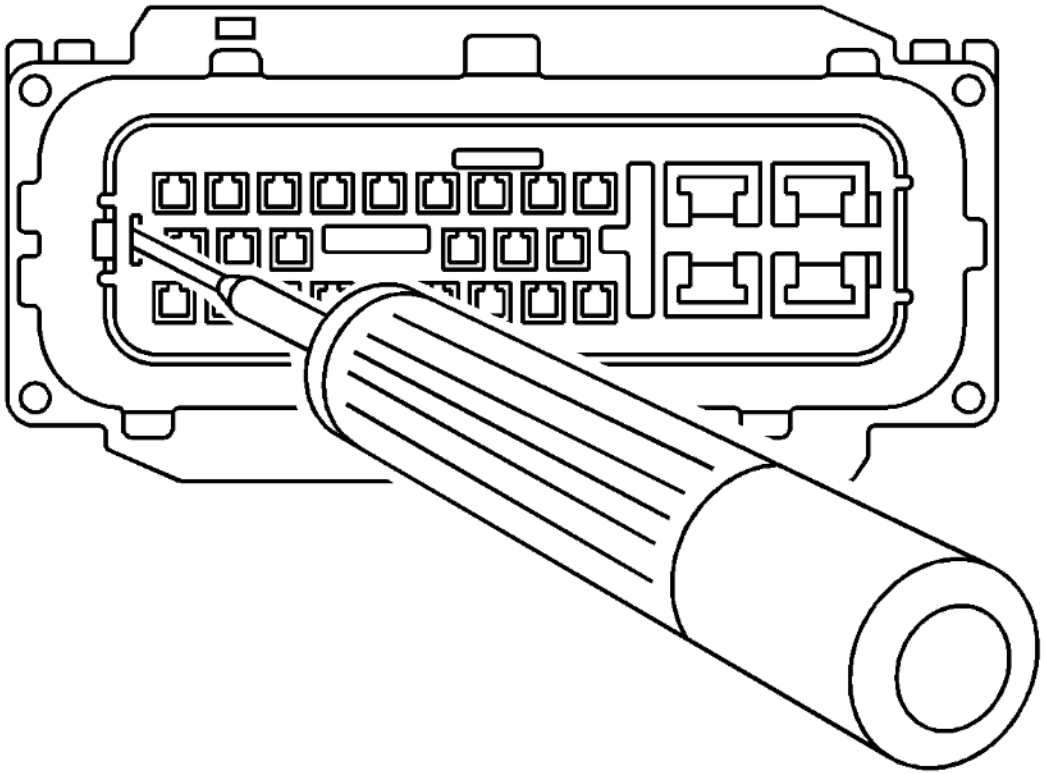

Fig. 132: Releasing Nose Piece Locking Tabs
Courtesy of GENERAL MOTORS COMPANY

4. Relieve the tension on the nose piece retainers by inserting J-38125-12A into the single retainer slot on the end of the nose piece and gently prying out the locking tab. Repeat the process for both of the nose piece locking tabs on the opposite side of the nose piece.

cardiagn.com

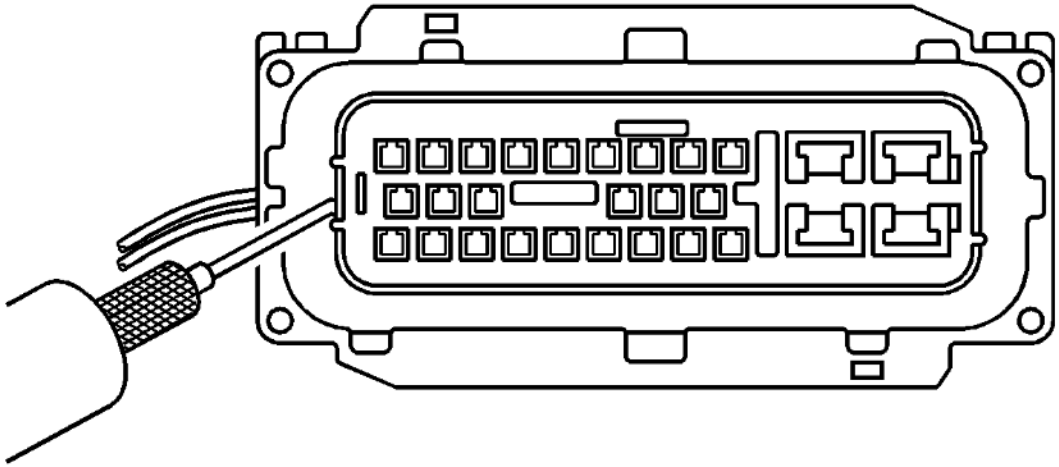

Fig. 133: Pulling Up End Of Nose Piece
Courtesy of GENERAL MOTORS COMPANY

5. Once the nose piece retainers are relaxed, use the J-38125-552 to pull up the nose piece by hooking the tool under the nose piece and pulling up. The nose piece should raise slightly.

cardiagn.com

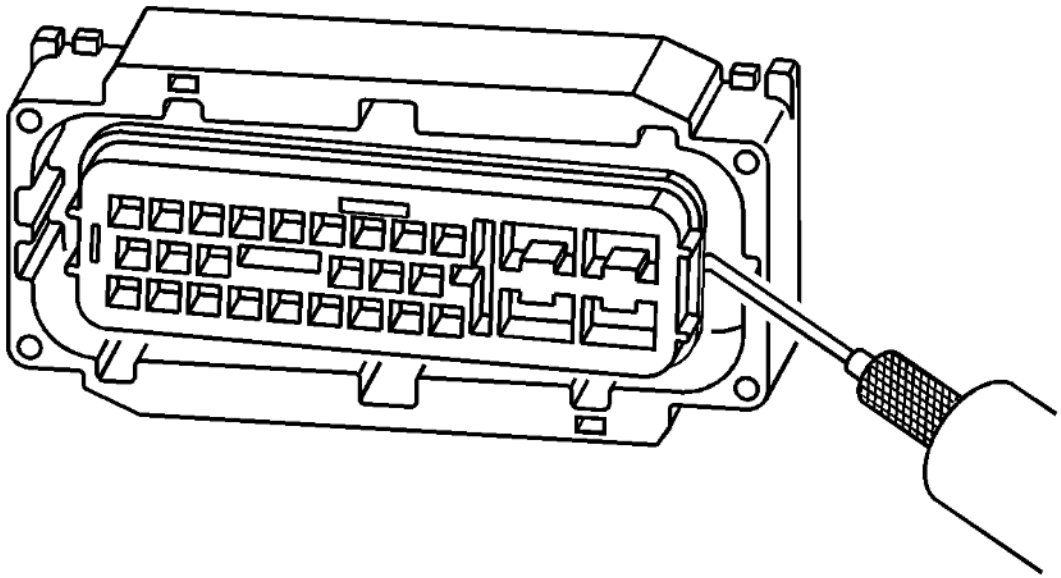

Fig. 134: Pulling Up Other End Of Nose Piece
Courtesy of GENERAL MOTORS COMPANY

6. On the opposite side of the nose piece, use the J-38125-552 pull up the nose piece by hooking the tool under the nose piece and pulling up. The nose piece should release completely. If the nose piece does not come off, repeat the procedure on the opposite side.

cardiagn.com

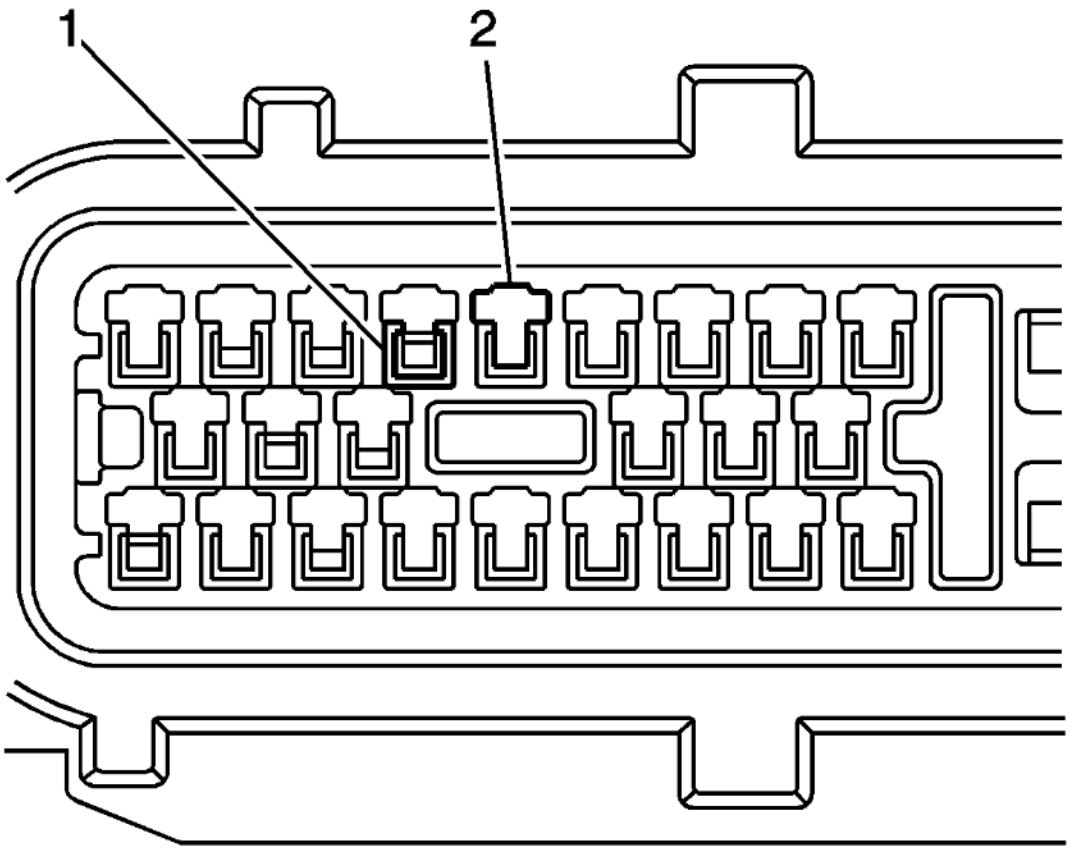

Fig. 135: Terminal And Entry Canal
Courtesy of GENERAL MOTORS COMPANY

7. The illustration above identifies the entry canal where the terminal release tool will be inserted, and the terminal cavity.
    - Terminal (1)
    - Entry Canal (2)

cardiagn.com

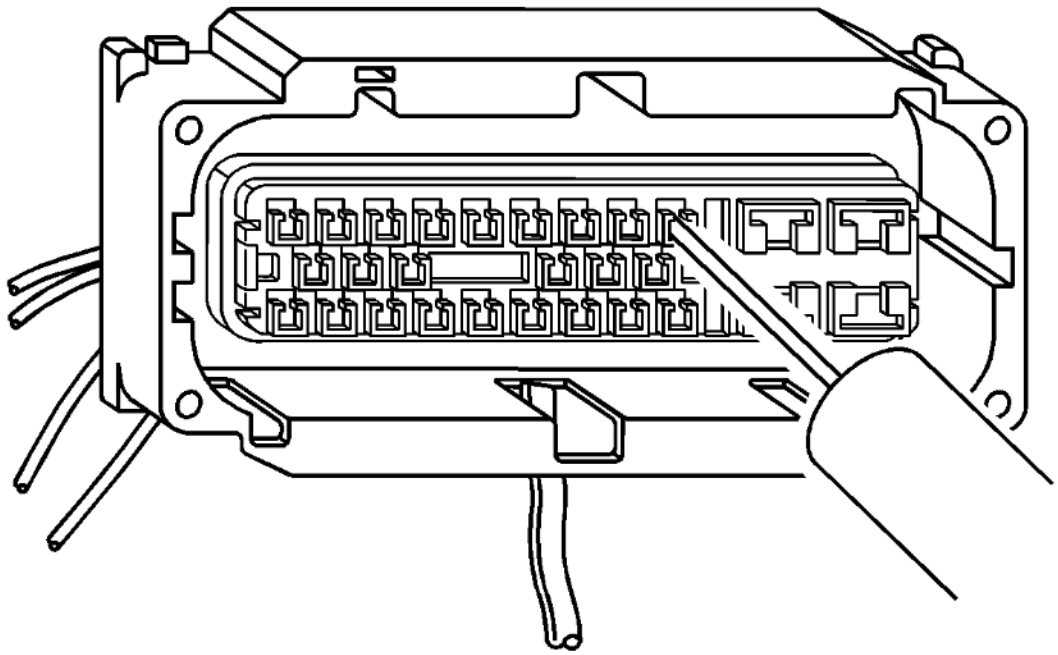

Fig. 136: Inserting Tool Into Entry Canal
Courtesy of GENERAL MOTORS COMPANY

8. Insert the J-38125-553 tool into the entry canal and pry up on the terminal retainer. The terminal retainer is a small plastic piece on the top of the terminal. The terminal retainer must be held up while the terminal is pulled out of the connector.

cardiagn.com

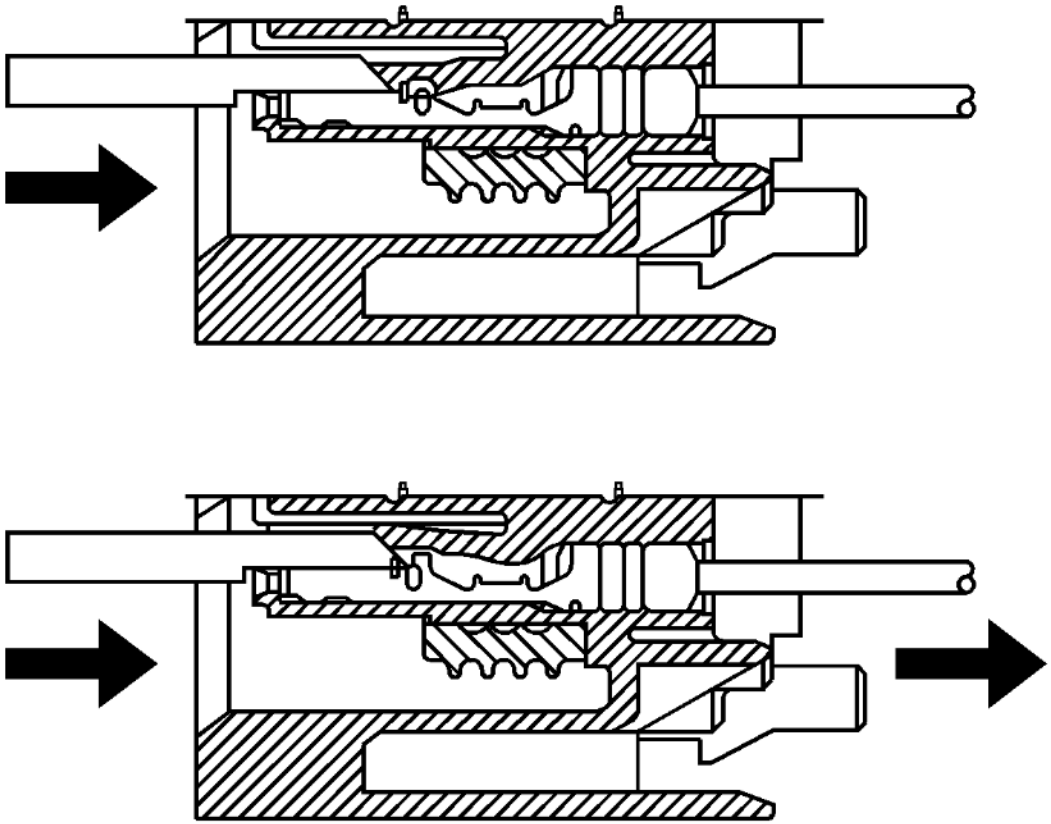

Fig. 137: Cutaway View Of Connector
Courtesy of GENERAL MOTORS COMPANY

9. The illustration shows a cutaway view of the connector to aid the technician in releasing the terminal retainer.
10. Repair the terminal by following the **Repairing Connector Terminals (Terminated Lead Repair)Repairing Connector Terminals (Terminal Repair)** procedure.
11. Insert the repaired terminal back into the cavity. Repeat the diagnostic procedure to verify the repair and reconnect the connector bodies.

cardiagn.com

Terminal Insertion Procedure

After the terminal is replaced, perform the following procedure in order to insert the terminal.

1. Slide the new terminal into the correct cavity at the back of the connector.
2. Push the terminal into the connector until it locks into place. The new terminal should be even with the other terminals. Ensure that the terminal is locked in place by gently pulling on the wire.
3. To assemble the connector, reverse the connector disassembly procedure.

TYCO/AMP CONNECTORS (CM 42-WAY)

Special Tools

- **EL-38125-550** Terminal Release Tool Kit
- **EL-38125-580** Terminal Release Tool Kit
- **J-38125-12A** Terminal Release Tool

For equivalent regional tools, refer to **Special Tools** .

Terminal Removal Procedure

1. Locate the connector position assurance (CPA) on the connector body and pull the CPA out. The CPA is on the wire harness side of connector.
2. Disconnect the connector from the component.

cardiagn.com

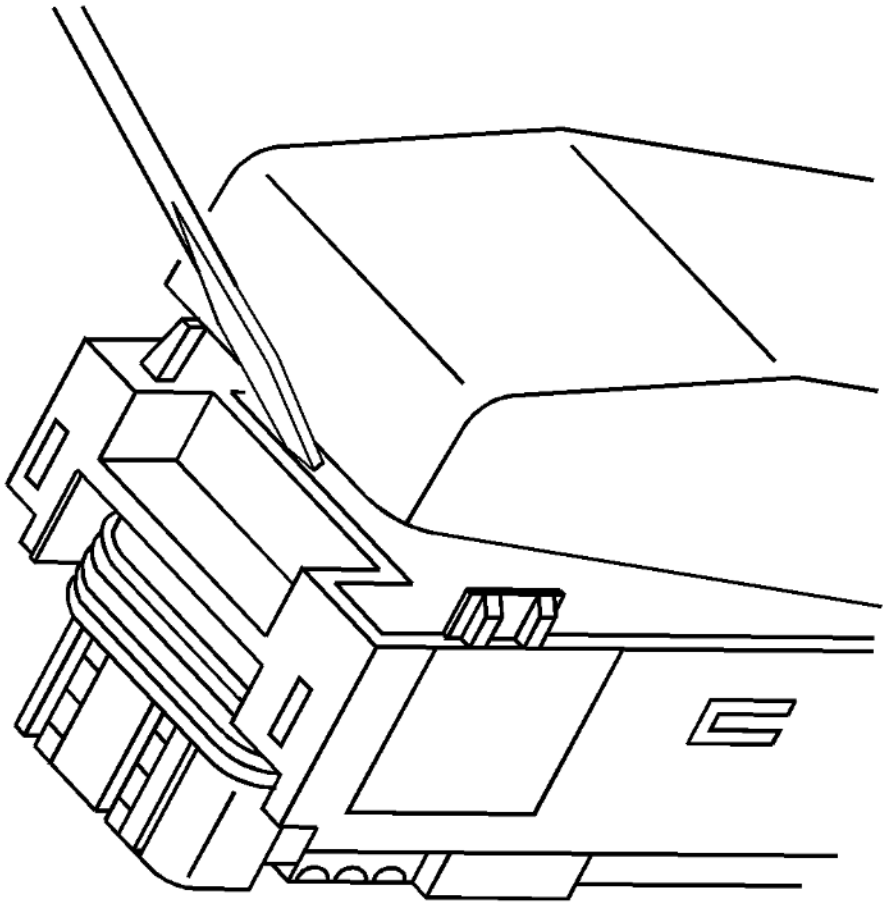

Fig. 138: Removing Dress Cover
Courtesy of GENERAL MOTORS COMPANY

3. Use a small flat-bladed tool to gently pry off the dress cover by inserting the tool under the cover opposite the harness side and prying up.
4. Remove the cover.

cardiagn.com

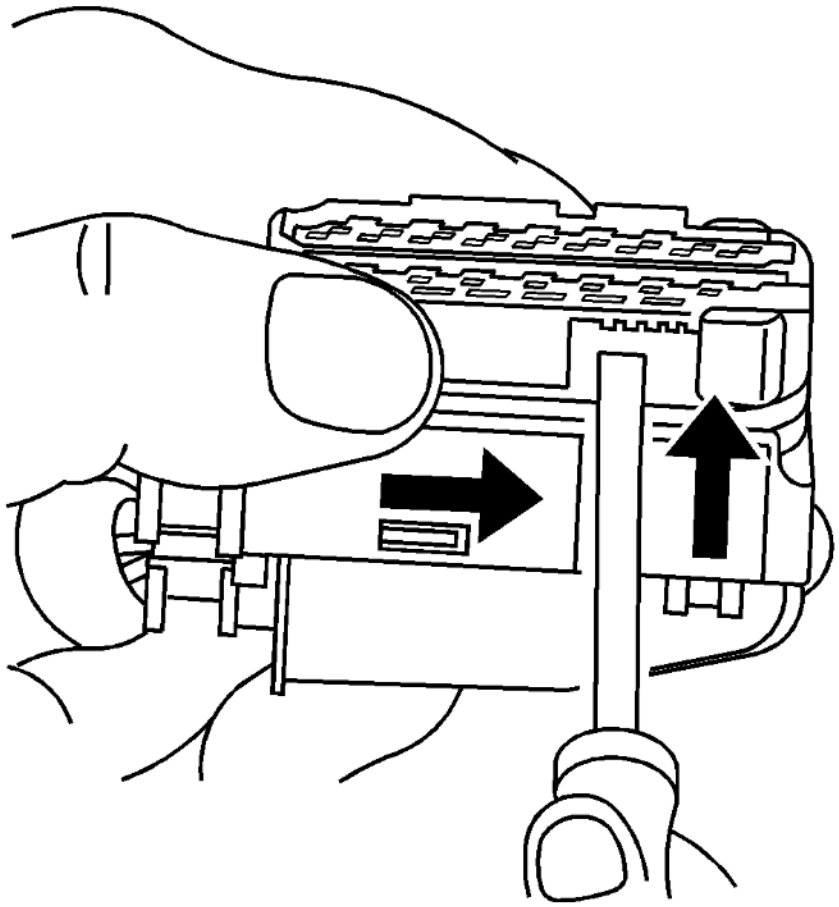

Fig. 139: Releasing Terminal Position Assurance (TPA)
Courtesy of GENERAL MOTORS COMPANY

5. Using a small flat-bladed tool, push on the side of the nose piece retainer while pushing the nose piece forward with your thumb. This will release the terminal position assurance (TPA).

cardiagn.com

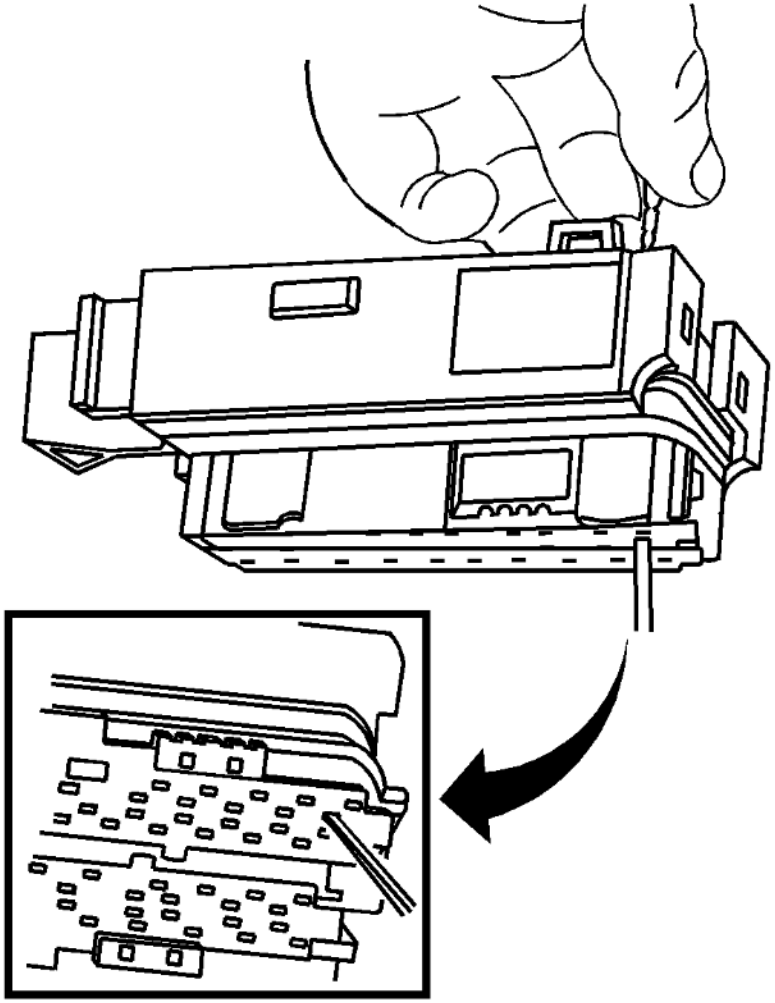

Fig. 140: Inserting Special Tool Into Terminal Release Cavity
Courtesy of GENERAL MOTORS COMPANY

6. Insert the **J-38125-12A** tool into the corresponding terminal release cavity. The release cavities are the 2 center rows of cavities on one half of the connector.

cardiagn.com

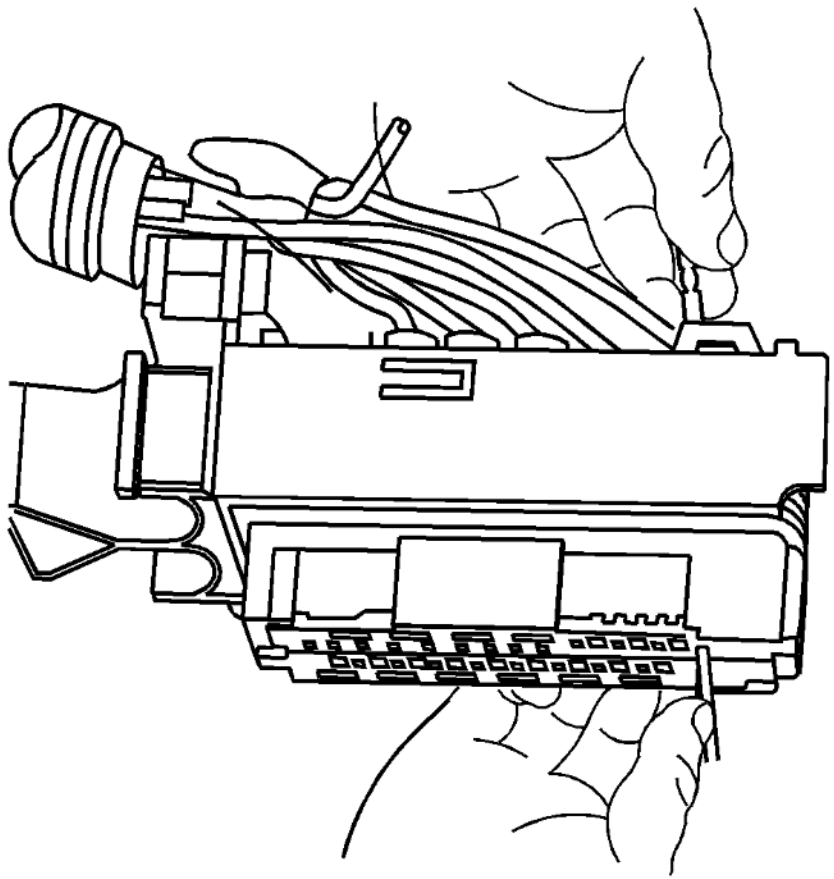

Fig. 141: Pulling Wire Out Of Back Of Connector
Courtesy of GENERAL MOTORS COMPANY

7. Pressing the **J-38125-12A** tool in the release cavity of the terminal you are removing, gently pull the wire out of the back of the connector. Always remember never use force when pulling a terminal out of a connector.
8. Repair the terminal by following the **Repairing Connector Terminals (Terminated Lead Repair)Repairing Connector Terminals (Terminal Repair)** procedure.

cardiagn.com

9. Insert the repaired terminal back into the cavity. Repeat the diagnostic procedure to verify the repair and reconnect the connector bodies.

TYCO/AMP CONNECTORS (SENSOR)

Special Tools

- **EL-38125-550** Terminal Release Tool Kit
- **EL-38125-580** Terminal Release Tool Kit
- **J-38125-11A** Terminal Release Tool

For equivalent regional tools, refer to **Special Tools** .

Terminal Removal Procedure

1. Disconnect the connector from the component.

cardiagn.com

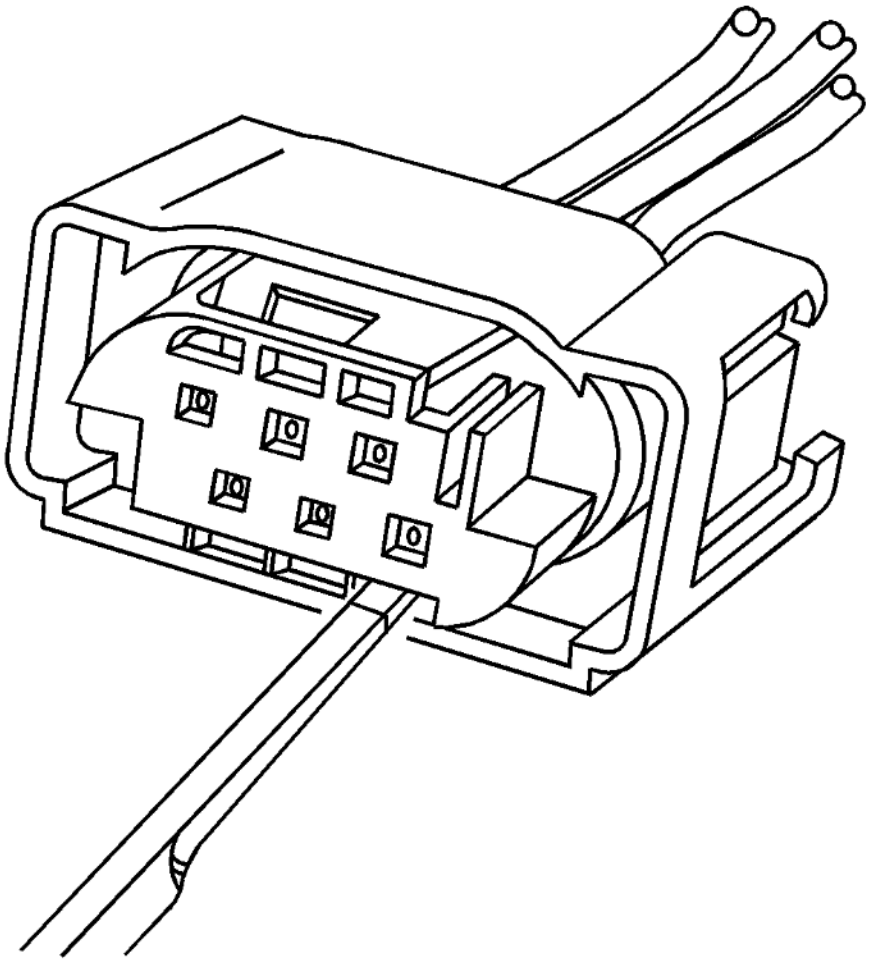

Fig. 142: Inserting Special Tool Into Lower Right Face Of Connector
Courtesy of GENERAL MOTORS COMPANY

2. Insert the J-38125-11A tool into the cavity on the lower right hand face of the connector until the terminal release tang access panel slides over.

cardiagn.com

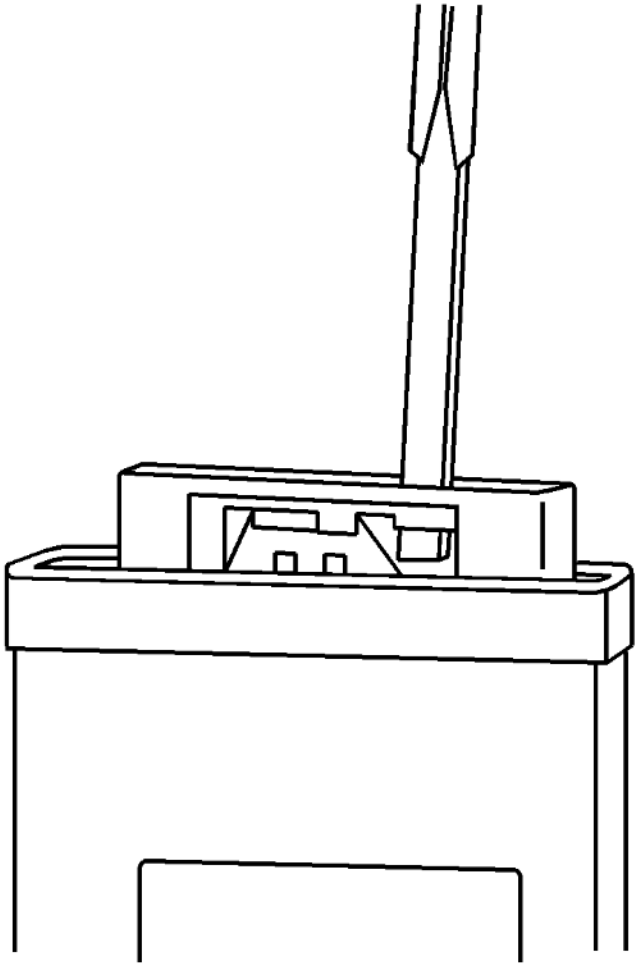

Fig. 143: Pushing Wire Side Of Terminal Toward Connector
Courtesy of GENERAL MOTORS COMPANY

3. Ensure that the terminal release tang access panel is in the correct location to access the terminals.
4. Push the wire side of the terminal that is being removed toward the connector and hold it in position.

cardiagn.com

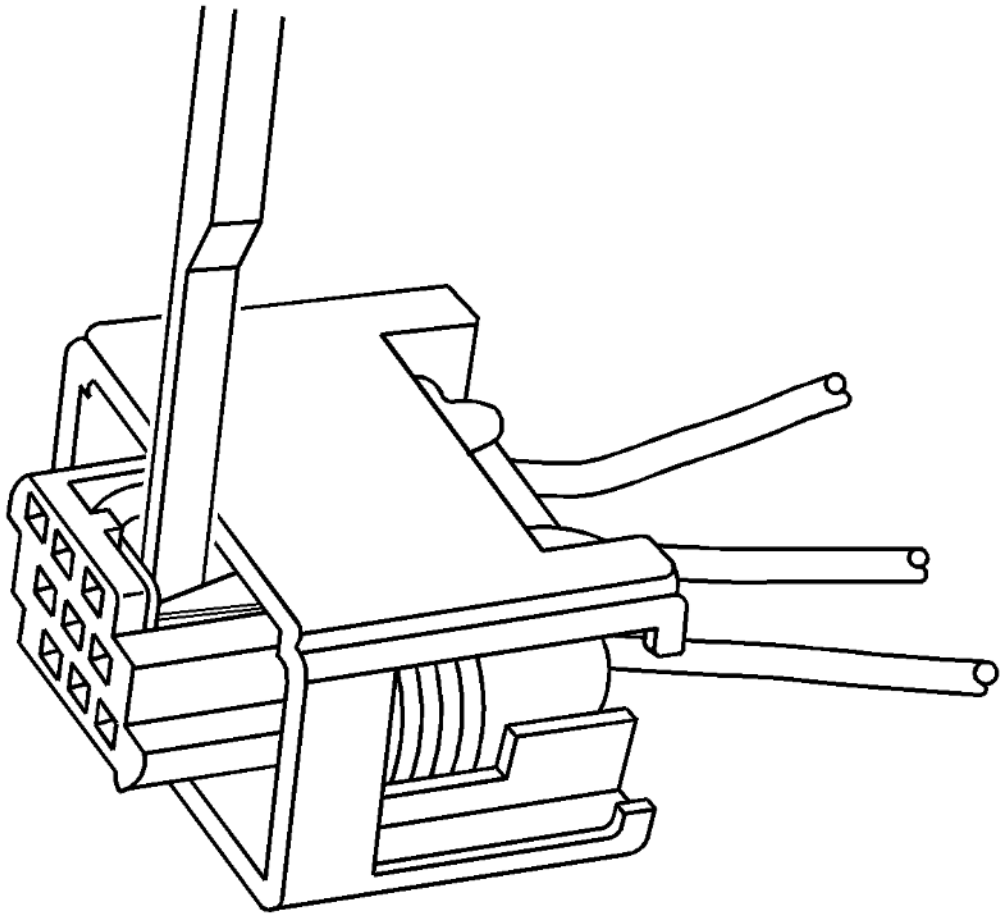

Fig. 144: Inserting Tool Into Terminal Release Tang Access Slot
Courtesy of GENERAL MOTORS COMPANY

5. Insert the J-38125-11A into the terminal release tang access slot located behind the access panel of the connector and press down on the terminal while carefully pulling the terminal out of the connector. Always remember never use force when pulling a terminal out of a connector. If the terminal is difficult to remove, repeat the entire procedure.
6. Repair the terminal by following the **Repairing Connector Terminals (Terminated Lead Repair)Repairing Connector Terminals (Terminal Repair)** procedure.

cardiagn.com

7. Insert the repaired terminal back into the cavity. Repeat the diagnostic procedure to verify the repair and reconnect the connector bodies.

TYCO/AMP CONNECTORS (0.25 CAP)

Special Tools

- **EL-38125-550** Terminal Release Tool Kit
- **EL-38125-580** Terminal Release Tool Kit
- **J-38125-24** Terminal Release Tool

For equivalent regional tools, refer to **Special Tools** .

Terminal Removal Procedure

1. Disconnect the connector from the component by pressing down on the connector position assurance (CPA).

cardiagn.com

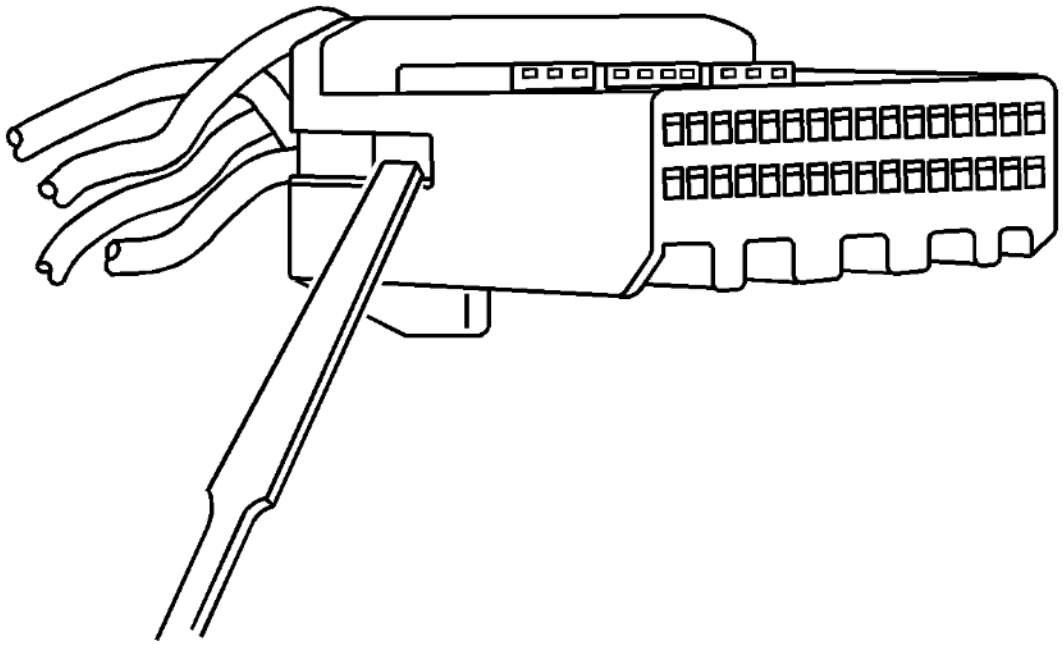

Fig. 145: Releasing TPA Using Small Flat-Bladed Tool
Courtesy of GENERAL MOTORS COMPANY

NOTE: The TPA on this connector cannot be removed unless the terminals are removed first. The TPA will come out of the connector body, but only slightly. When the TPA is slightly raised the terminals can be removed. Using excessive force to remove the TPA with the terminals still in the connector will damage the connector.

cardiagn.com

2. Use a small flat-bladed tool to release the terminal position assurance (TPA) by inserting the tool in the small recess on the side of the connector and pushing up until the TPA releases from the connector body. The TPA should raise just slightly. Do not try to remove the TPA.
3. Repeat the process for the other side of the connector.

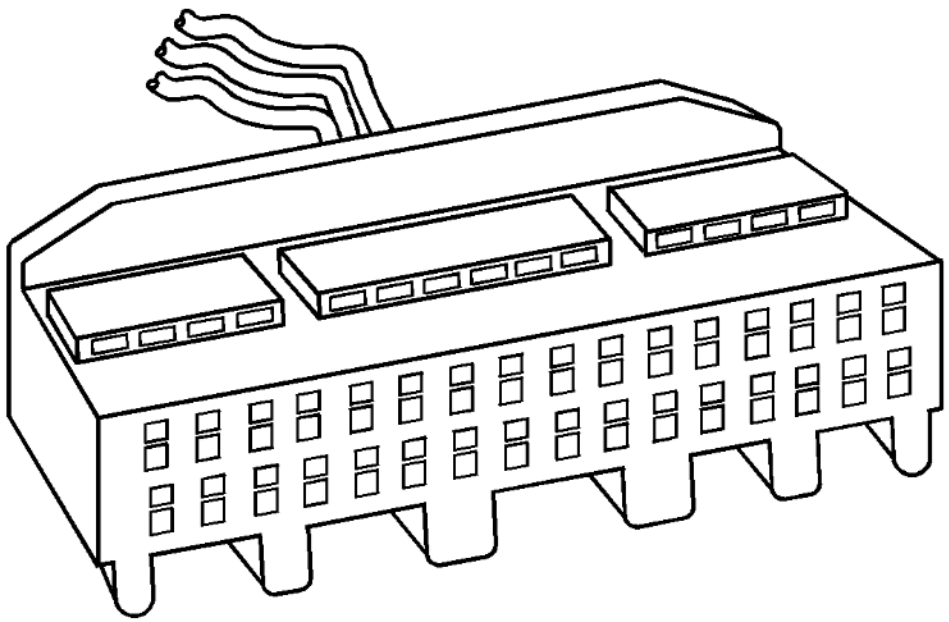

Fig. 146: Terminal Position Assurance
Courtesy of GENERAL MOTORS COMPANY

4. Ensure that the TPA is in the proper position to remove the terminals.

cardiagn.com

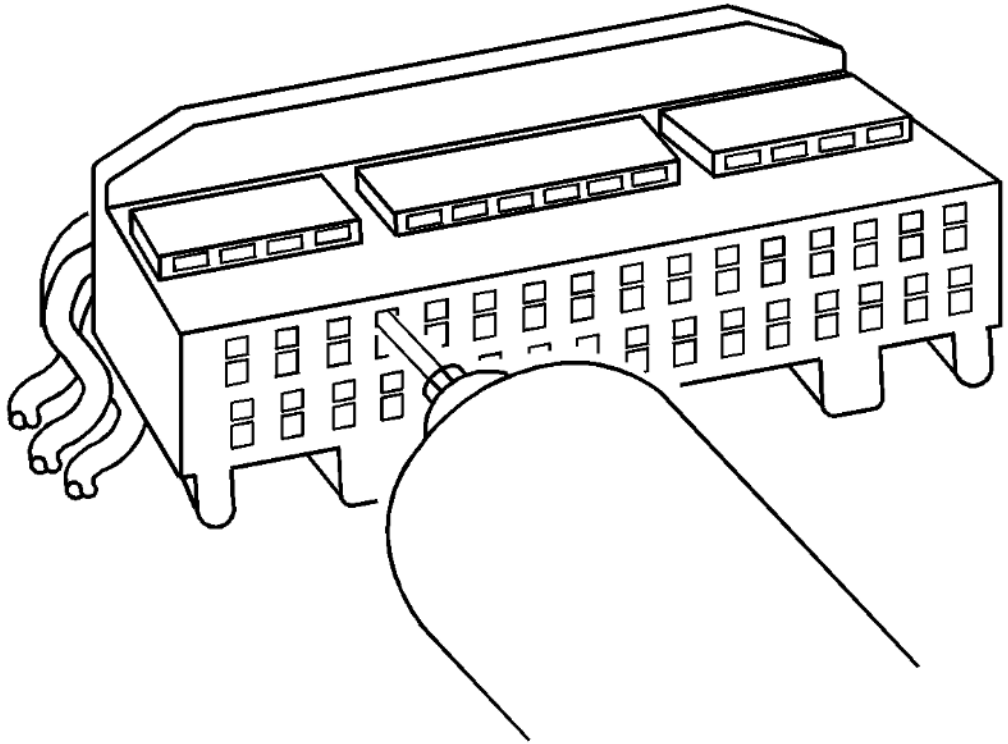

Fig. 147: Inserting Special Tool Into Release Cavity
Courtesy of GENERAL MOTORS COMPANY

5. While pushing the terminal forward, insert the J-38125-24 in the release cavity above the terminal you are removing, gently pull the wire out of the back of the connector. Always remember never use force when pulling a terminal out of a connector.
6. Repair the terminal by following the **Repairing Connector Terminals (Terminated Lead Repair)Repairing Connector Terminals (Terminal Repair)** procedure.

cardiagn.com

7. Insert the repaired terminal back into the cavity. Repeat the diagnostic procedure to verify the repair and reconnect the connector bodies.

TYCO/AMP CONNECTORS (43-WAY)

Special Tools

- **EL-38125-550** Terminal Release Tool Kit
- **EL-38125-580** Terminal Release Tool Kit
- **J-38125-12A** Terminal Release Tool
- **J-38125-13A** Terminal Release Tool

For equivalent regional tools, refer to **Special Tools** .

Terminal Removal Procedure

Follow the steps below in order to remove terminals from the connector.

1. Locate the lever lock on the wire dress cover. Slide the lever lock away from the connector body.
2. Disconnect the connector from the component.
3. Locate the dress cover locking tabs on the dress cover of the connector. Using a small flat-bladed tool release all of the locking tabs.
4. Once the locks are unlocked, lift the dress cover off.

cardiagn.com

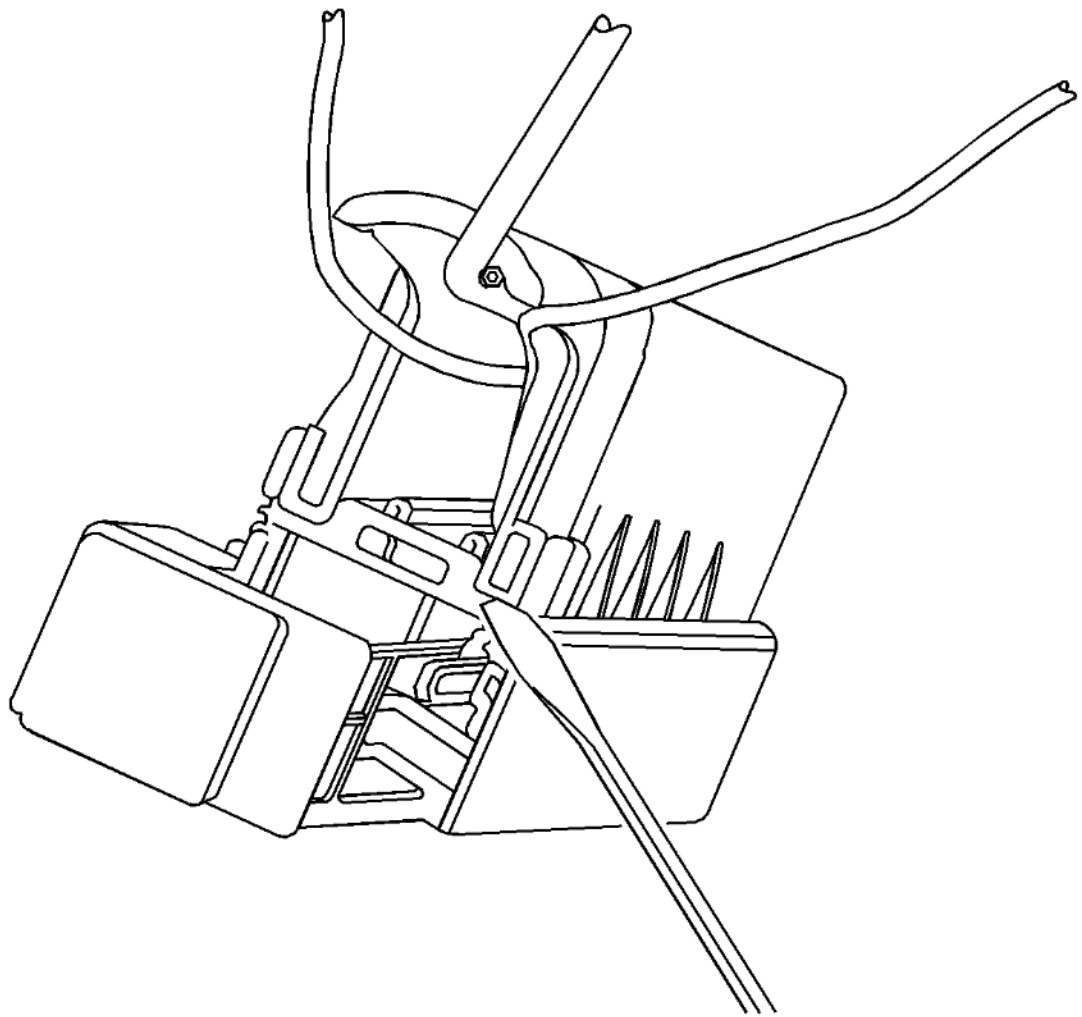

Fig. 148: Releasing TPA
Courtesy of GENERAL MOTORS COMPANY

NOTE: **Always use care when removing a terminal position assurance (TPA) in order to avoid damaging it.**

5. Release the TPA by inserting a small flat-bladed tool into the blue locking tabs on both ends of the connector. Gently slide the TPA up to the released position on both ends.

cardiagn.com

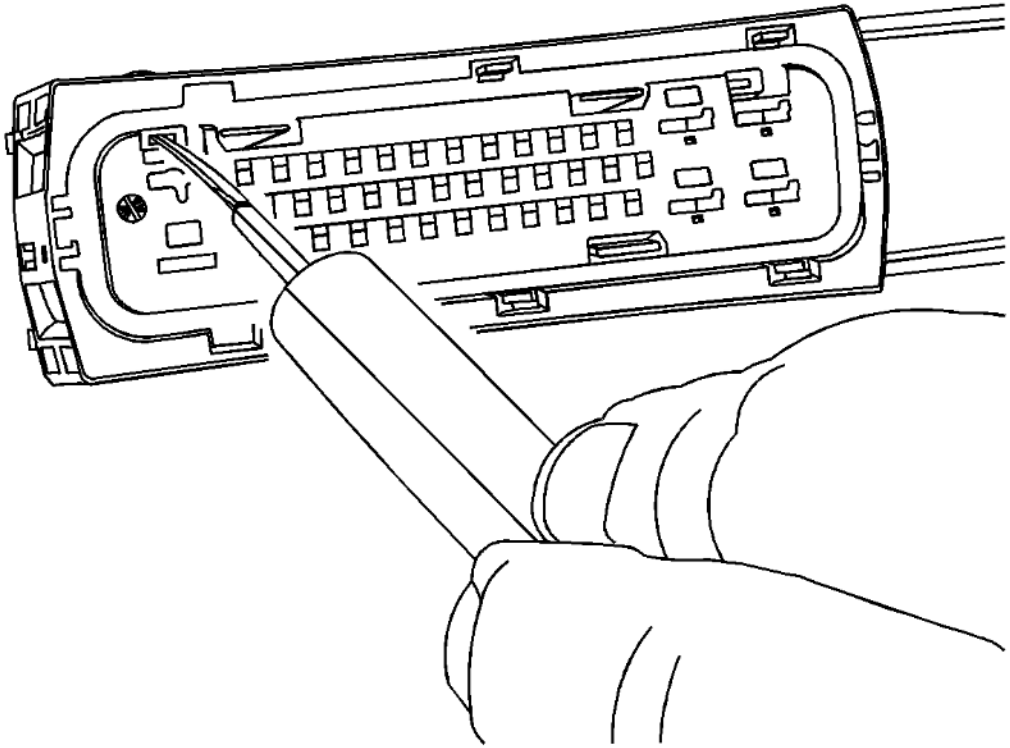

Fig. 149: Inserting Tool Into Terminal Release Cavity
Courtesy of GENERAL MOTORS COMPANY

cardiagn.com

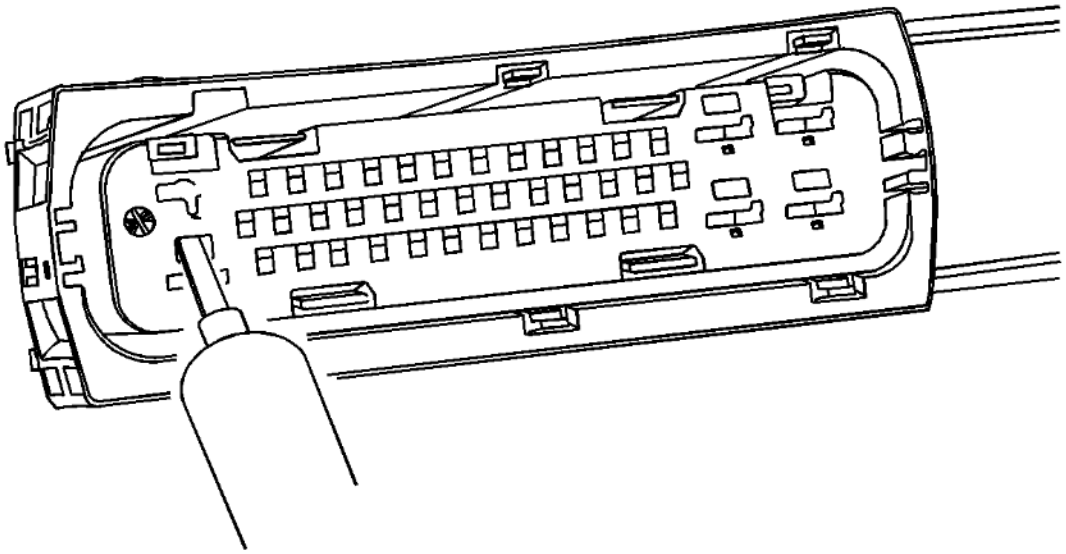

Fig. 150: Release Tool Being Used For Larger Terminals
Courtesy of GENERAL MOTORS COMPANY

cardiagn.com

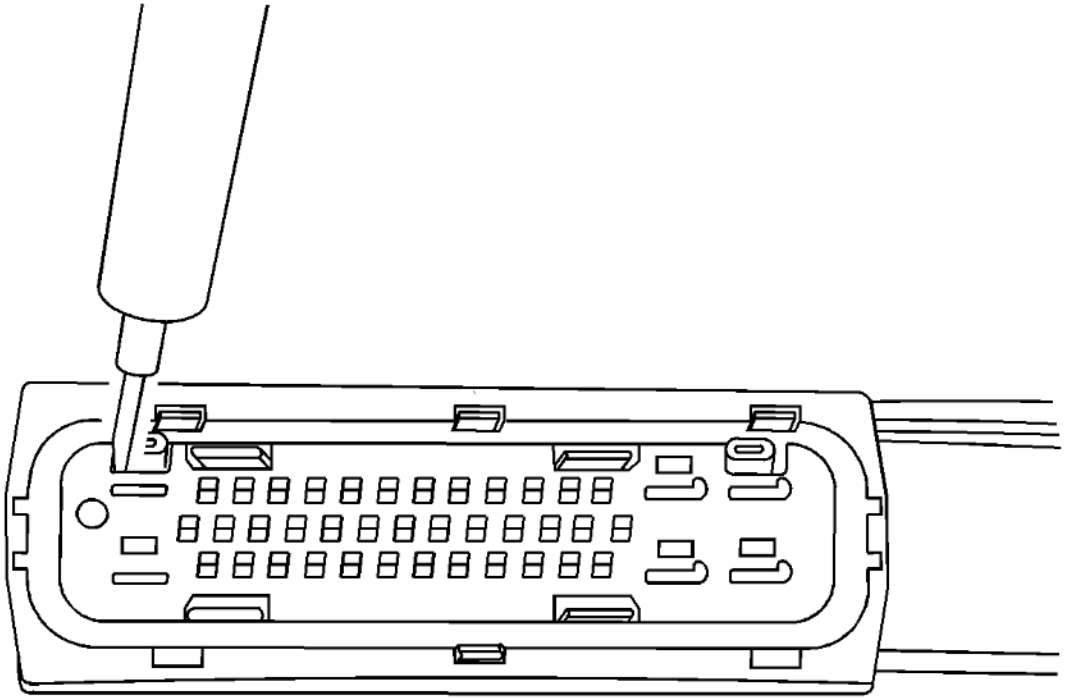

Fig. 151: Release Tool Being Used For Larger Terminals
Courtesy of GENERAL MOTORS COMPANY

cardiagn.com

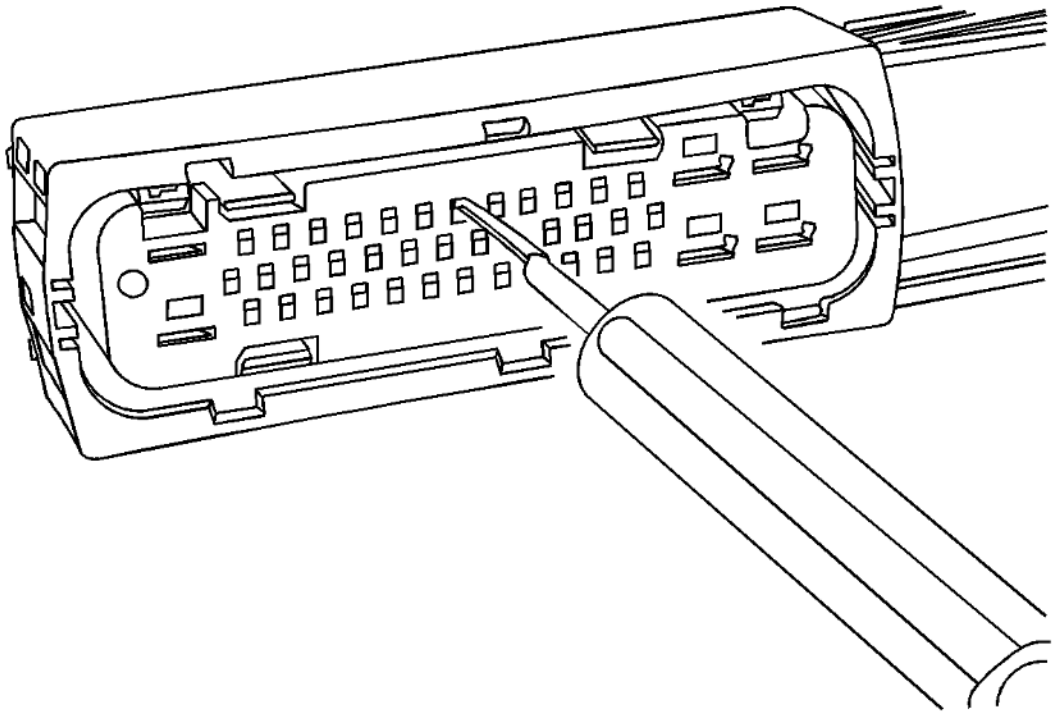

Fig. 152: Release Tool Being Used For Smaller Terminals
Courtesy of GENERAL MOTORS COMPANY

6. For the larger terminals insert the **J-38125-13A** tool to release the terminals by inserting the tool into the terminal release cavity. For the smaller terminals insert the **J-38125-12A** tool to release the terminals by inserting the tool into the terminal release cavity.

   View of the release tool being used for the larger terminals.

cardiagn.com

View of the release tool being used for the larger terminals.

View of the release tool being used for the smaller terminals.

7. While holding the removal tool in place, gently pull the wire out of the back of the connector. Always remember never use force when pulling a terminal out of a connector.
8. Repair the terminal by following the **Repairing Connector Terminals (Terminated Lead Repair)Repairing Connector Terminals (Terminal Repair)** procedure.
9. Insert the repaired terminal back into the cavity. Repeat the diagnostic procedure to verify the repair and reconnect the connector bodies.

TYCO/AMP CONNECTORS (DOOR MODULE)

Special Tools

- **EL-38125-550** Terminal Release Tool Kit
- **EL-38125-580** Terminal Release Tool Kit
- **J-38125-12A** Terminal Release Tool

For equivalent regional tools, refer to **Special Tools** .

Terminal Removal Procedure

cardiagn.com

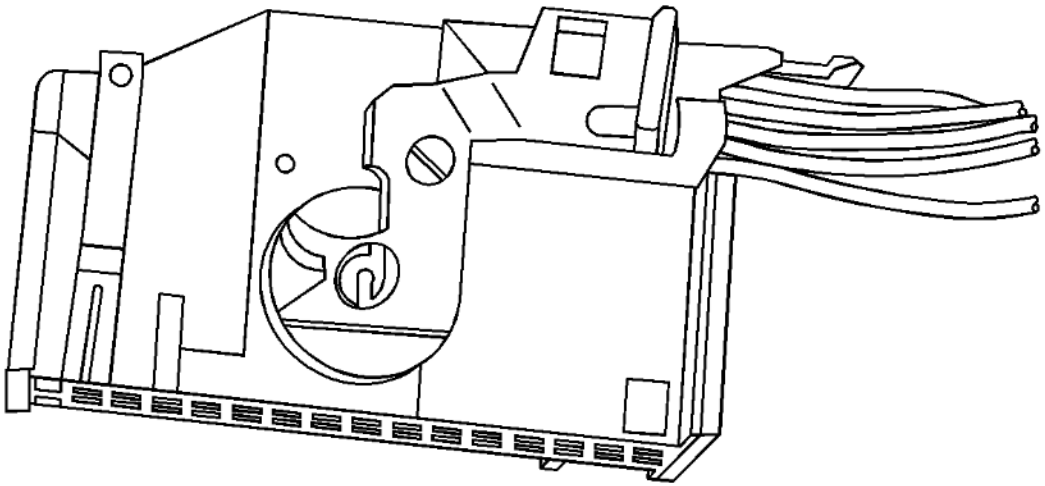

Fig. 153: Side View Of Tyco/AMP Connector
Courtesy of GENERAL MOTORS COMPANY

Side view of connector.

cardiagn.com

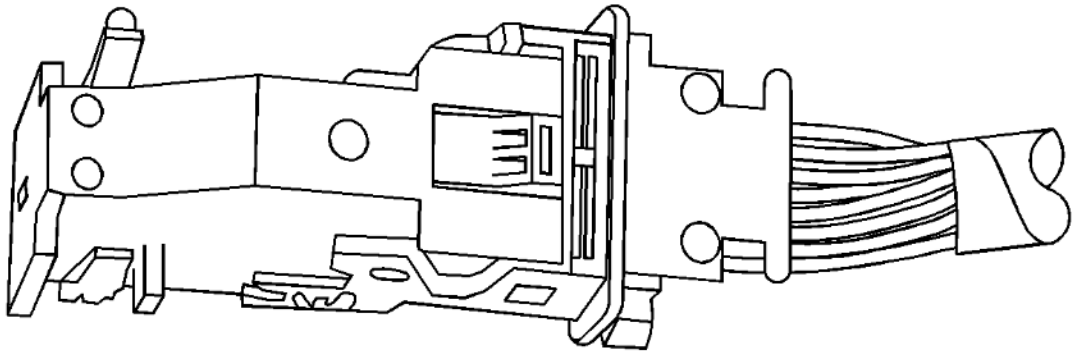

Fig. 154: Top View Of Tyco/AMP Connector
Courtesy of GENERAL MOTORS COMPANY

View of top of connector.

1. Locate the assist lever and lock on the top of the connector.

cardiagn.com

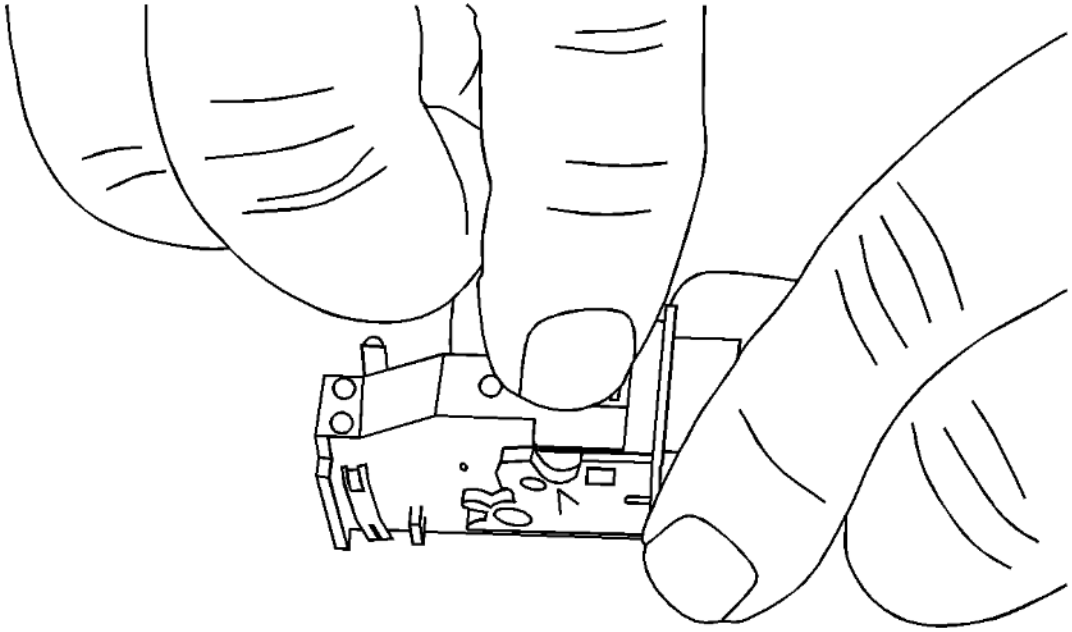

Fig. 155: Depressing Lock And Pulling Lever
Courtesy of GENERAL MOTORS COMPANY

2. While depressing the lock, pull the lever over and past the lock.

cardiagn.com

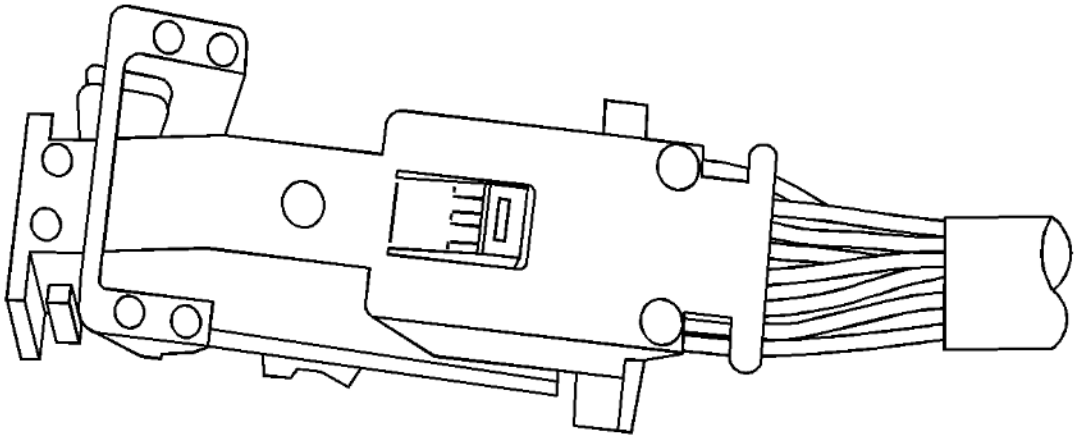

Fig. 156: Component Connector
Courtesy of GENERAL MOTORS COMPANY

3. Disconnect the connector from the component.

cardiagn.com

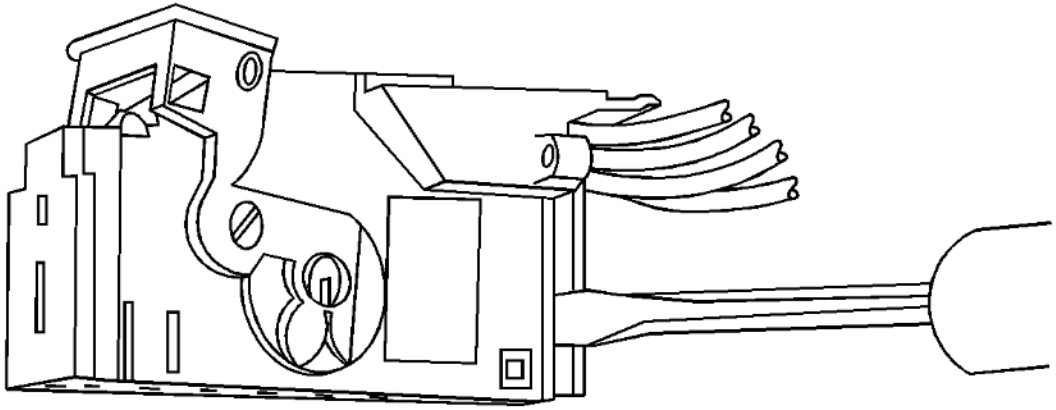

Fig. 157: Releasing Locking Tabs
Courtesy of GENERAL MOTORS COMPANY

4. Locate the dress cover locking tabs at the rear of the connector. Use a small flat-blade tool to release the locking tabs. Repeat this procedure for the other locking tab.

cardiagn.com

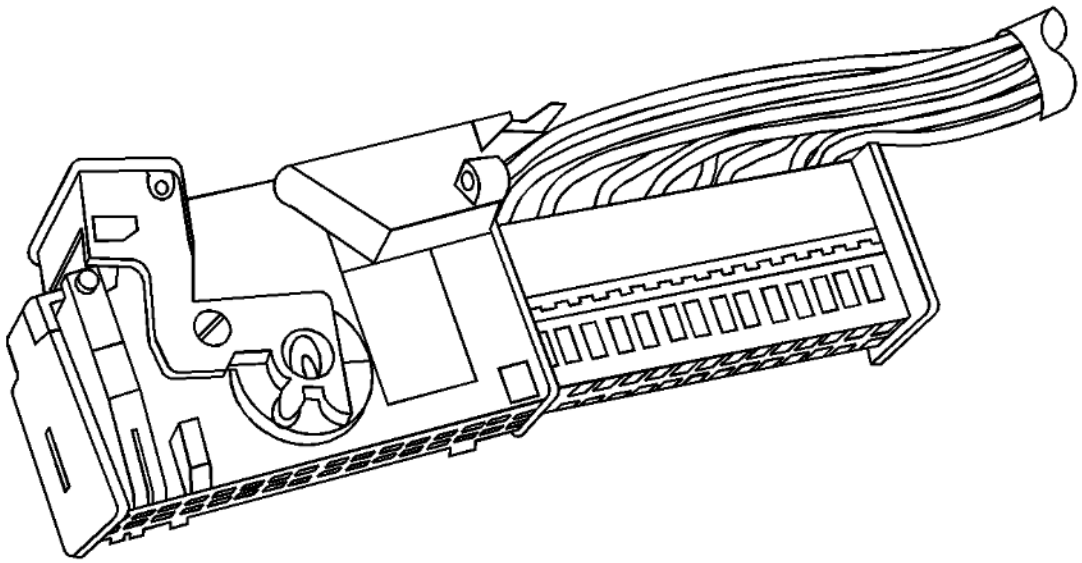

Fig. 158: Sliding Inner Connector Out Of Connector Housing
Courtesy of GENERAL MOTORS COMPANY

5. Once the locking tabs are unlocked, slide the inner connector out of the rear of the connector housing.

cardiagn.com

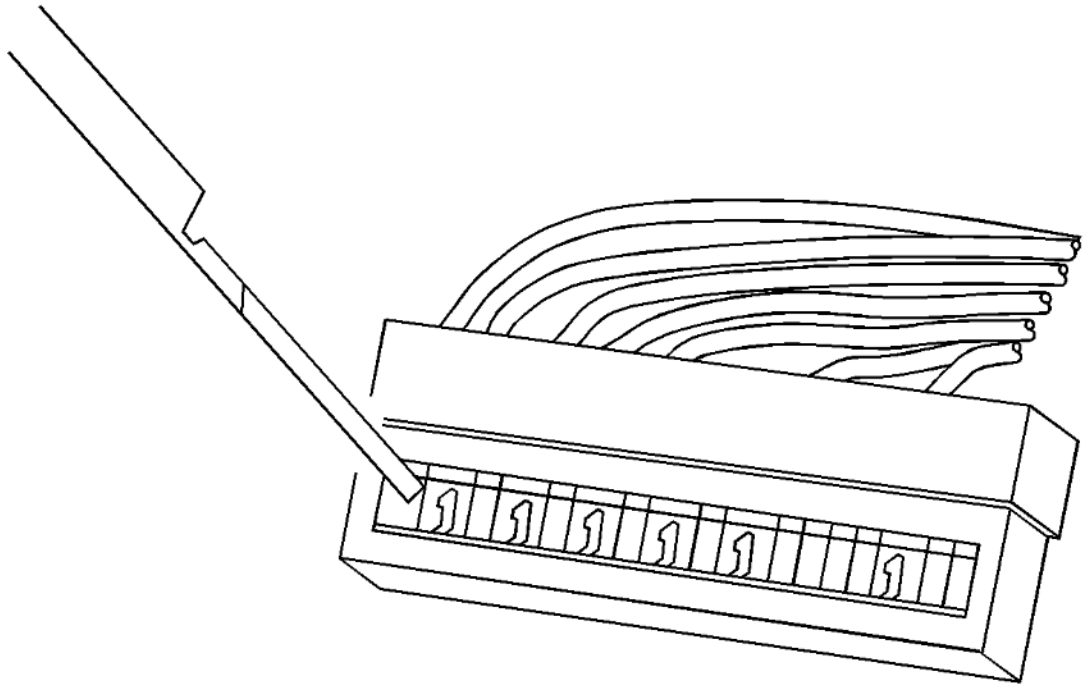

Fig. 159: Using Special Tool To Release Terminals
Courtesy of GENERAL MOTORS COMPANY

6. Use the J-38125-12A tool to release the terminals by pressing on the tang.
7. While holding the removal tool in place, gently pull the wire out of the back of the connector. Always remember never use force when pulling a terminal out of a connector.
8. Repair the terminal by following the **Repairing Connector Terminals (Terminated Lead Repair)Repairing Connector Terminals**

cardiagn.com

(Terminal Repair) procedure.

9. Insert the repaired terminal back into the cavity. Repeat the diagnostic procedure to verify the repair and reconnect the connector bodies.

TYCO/AMP CONNECTORS (SEAT)

Special Tools

- **EL-38125-550** Terminal Release Tool Kit
- **EL-38125-580** Terminal Release Tool Kit
- **J-38125-11A** Terminal Release Tool
- **J-38125-212** Terminal Release Tool
- **J-38125-556** Terminal Release Tool
- **J-38125-560** Terminal Release Tool

For equivalent regional tools, refer to **Special Tools** .

Terminal Removal Procedure

cardiagn.com

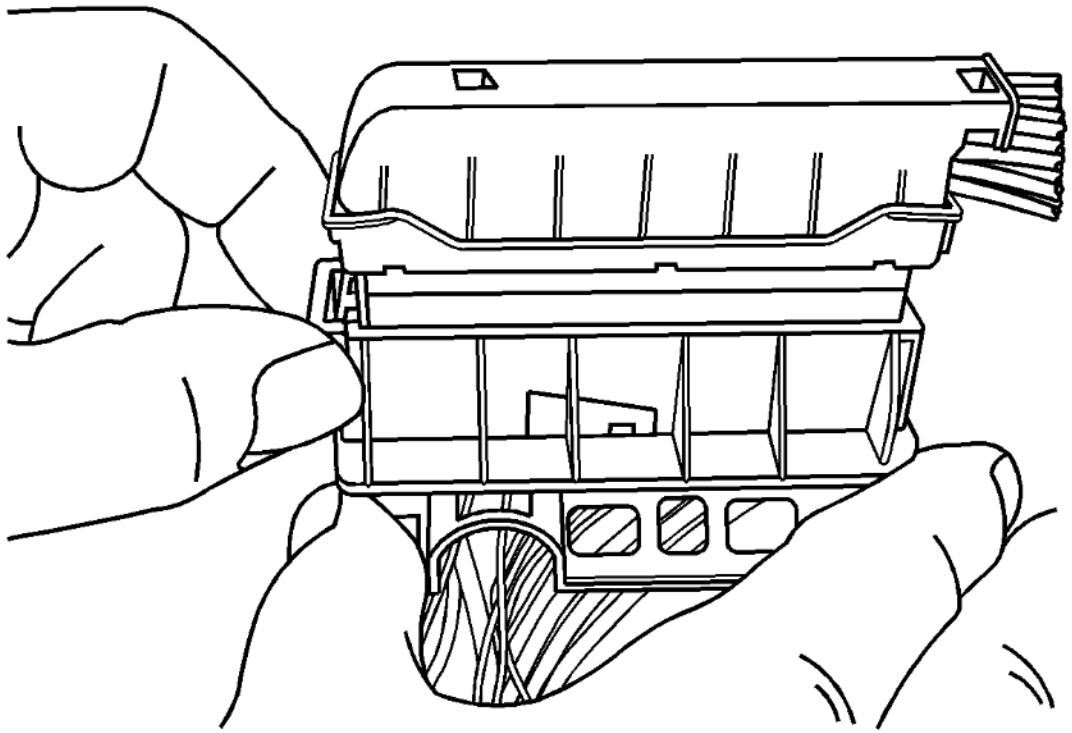

Fig. 160: Grasping Locking Slide Lever
Courtesy of GENERAL MOTORS COMPANY

1. Grasp the locking slide lever and pull outward from the end of the connector.

cardiagn.com

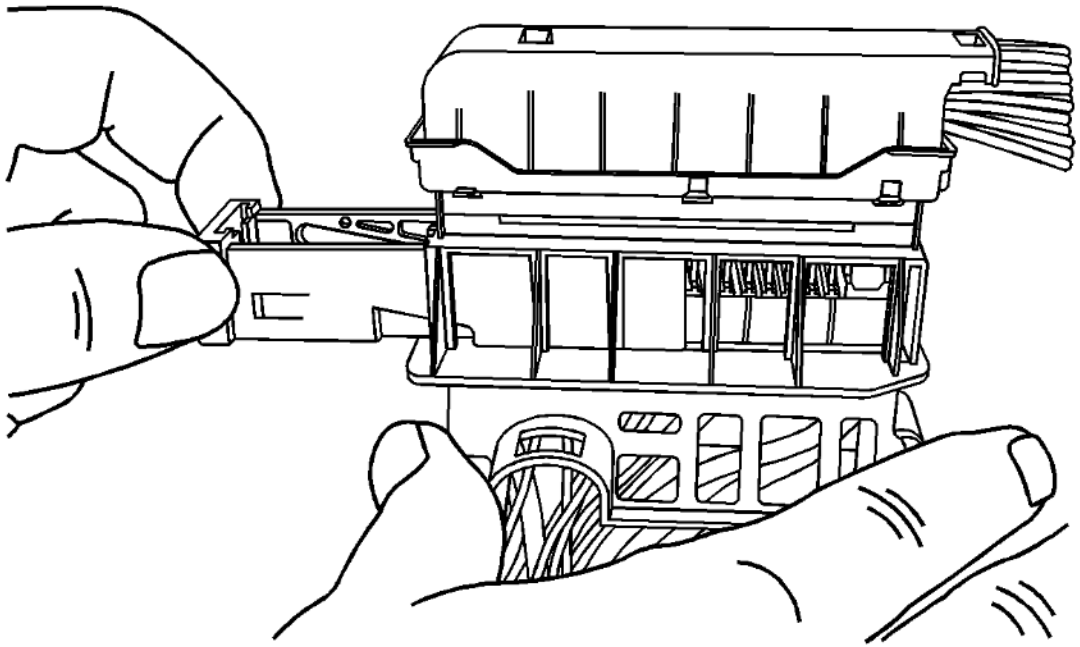

Fig. 161: Pulling Slide Lever Out Of Mating Connector
Courtesy of GENERAL MOTORS COMPANY

2. As the slide lever is pulled out the mating connector is lifted from the seated position.

cardiagn.com

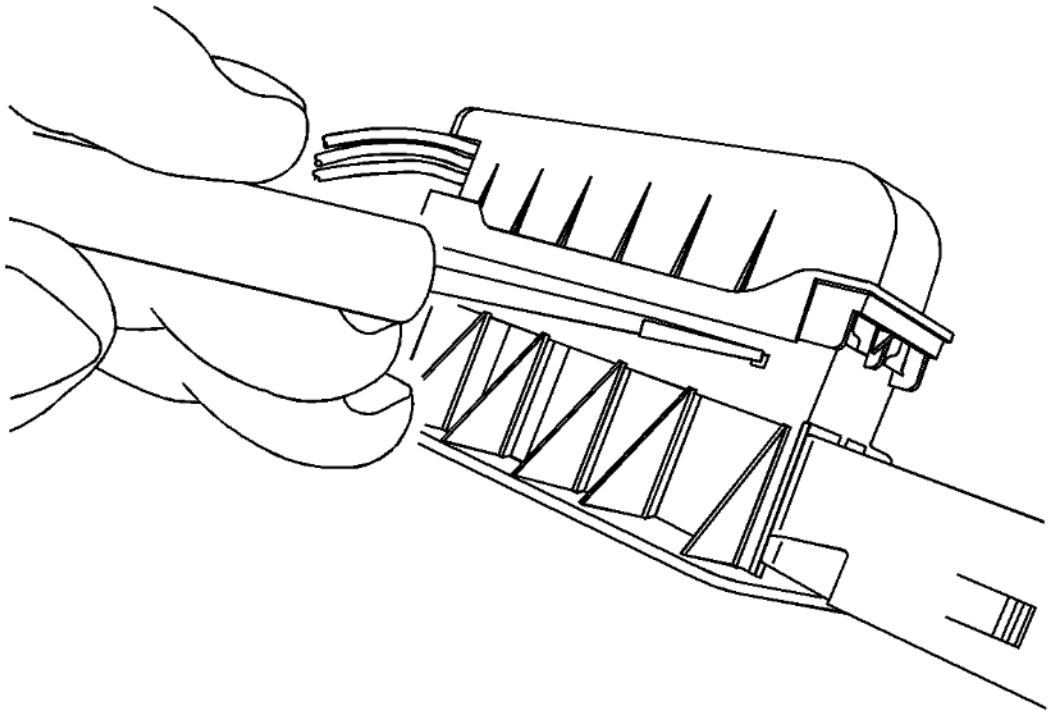

Fig. 162: Pushing TPA Tabs Into Connector Body
Courtesy of GENERAL MOTORS COMPANY

NOTE: **Terminal position assurance (TPA) is keyed and can only be inserted in one direction.**

3. Using terminal release tool J-38125-11A or equivalent, push the TPA tabs into the connector body.

cardiagn.com

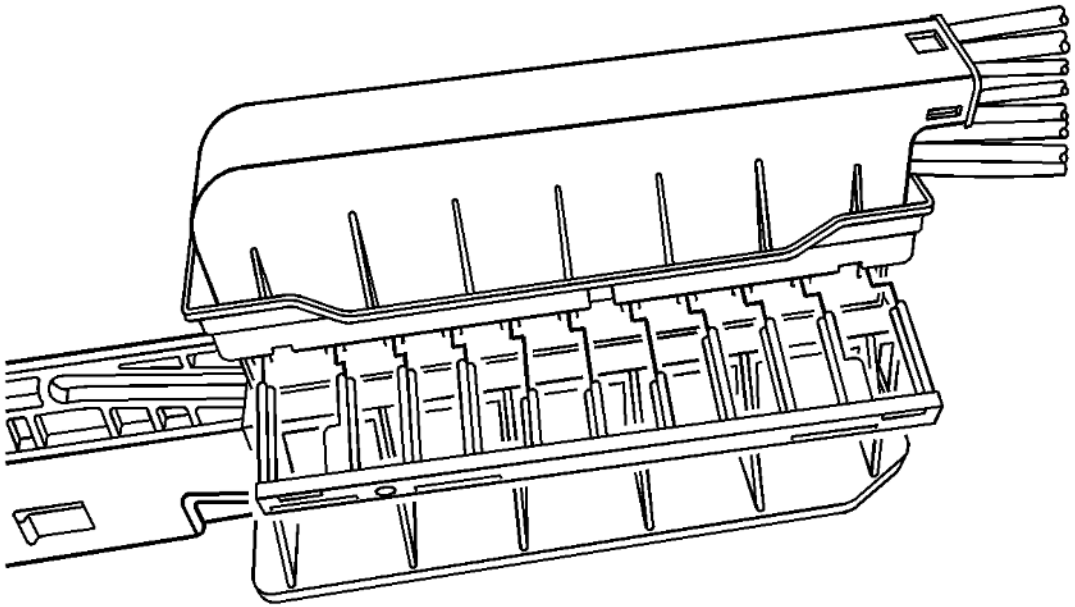

Fig. 163: Pulling TPA From Connector Body
Courtesy of GENERAL MOTORS COMPANY

4. Pull the TPA from the connector body.

cardiagn.com

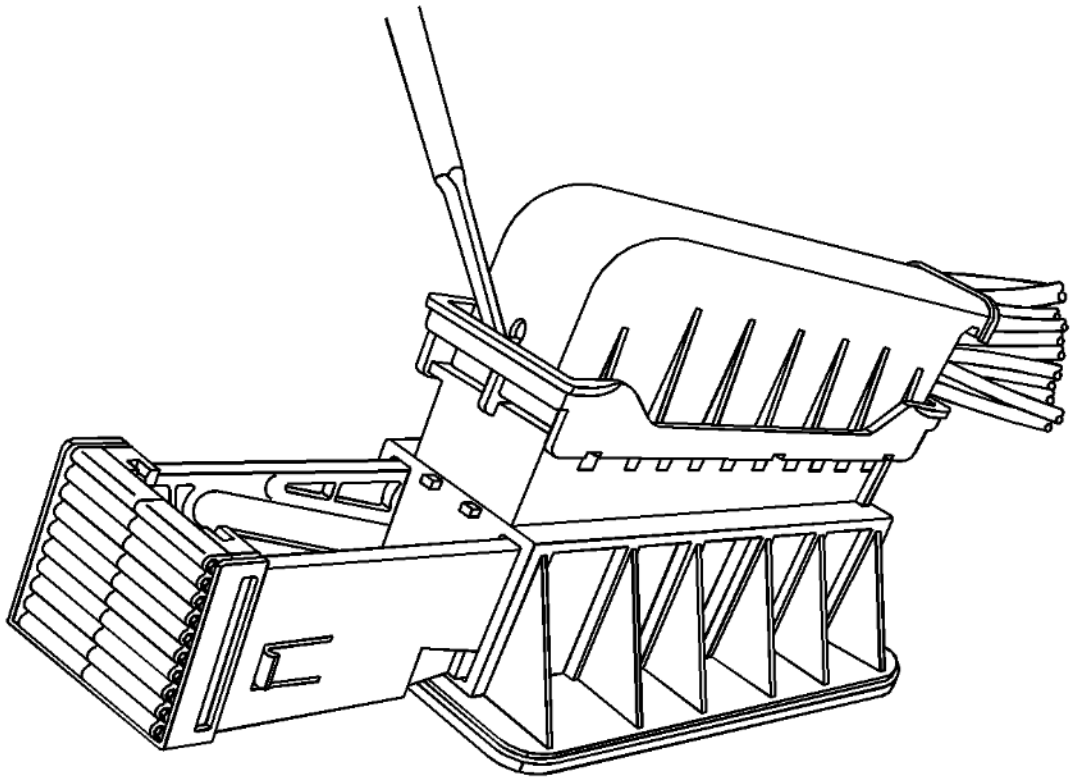

Fig. 164: Releasing Connector Wire Dress Cover Locking Tab
Courtesy of GENERAL MOTORS COMPANY

5. Using terminal release tool J-38125-11A or equivalent, release the connector wire dress cover locking tab.

cardiagn.com

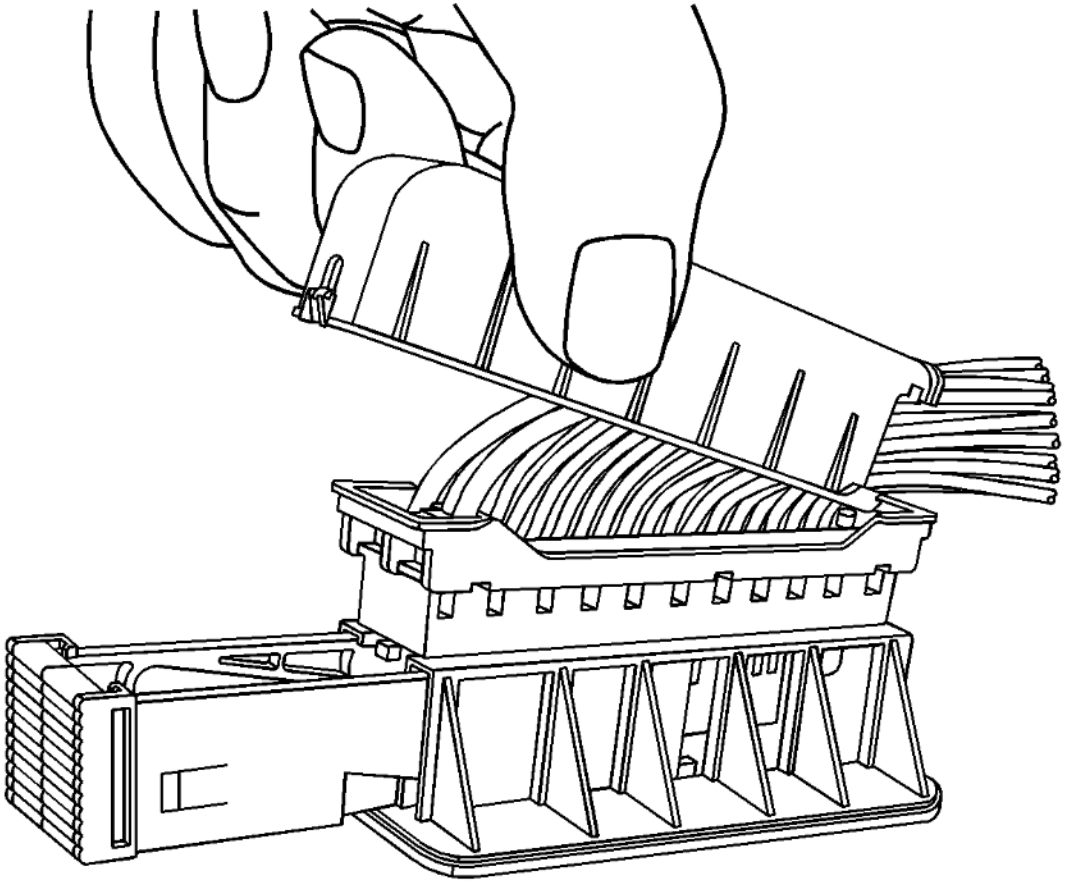

Fig. 165: Lifting Connector Wire Dress Cover From Connector Body
Courtesy of GENERAL MOTORS COMPANY

6. With the lock tab released, lift the connector wire dress cover from the connector body.

cardiagn.com

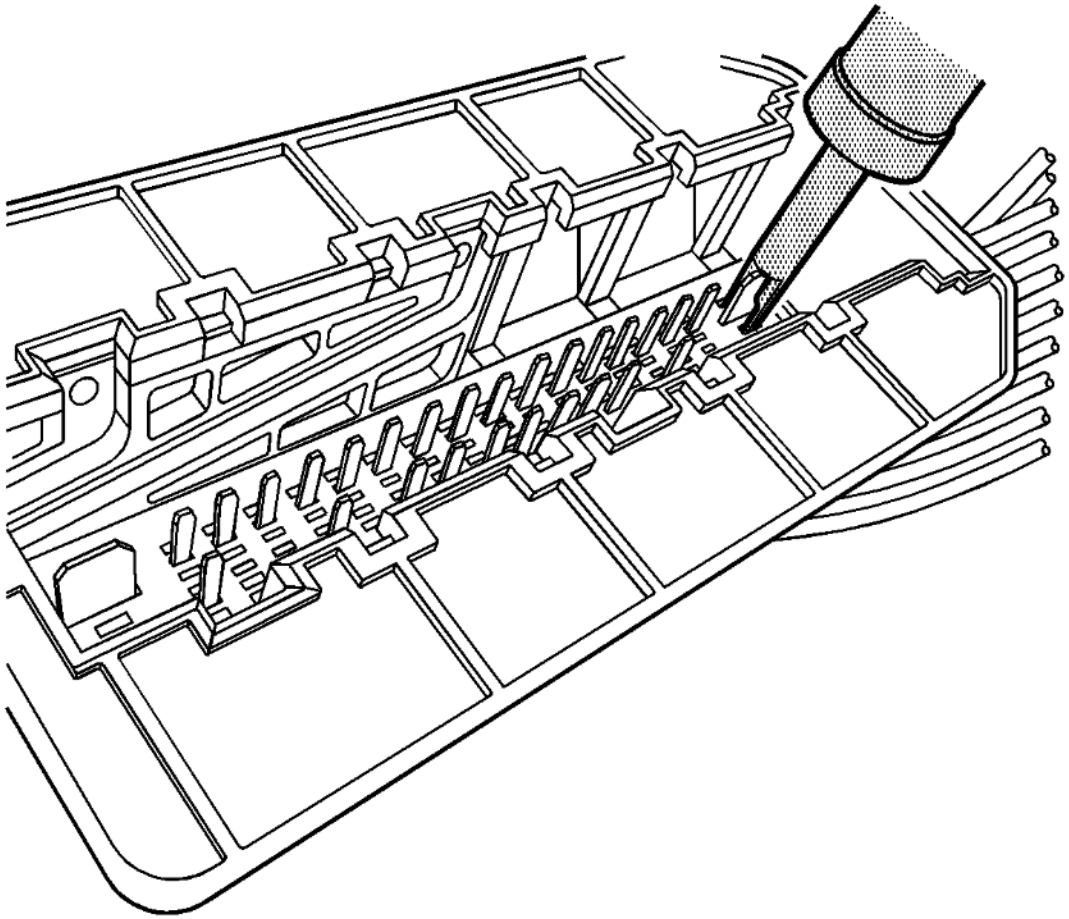

Fig. 166: Using Terminal Release Tool
Courtesy of GENERAL MOTORS COMPANY

7. Using terminal release tool J-38125-212, press the prongs into the holes each side of the terminal to be removed to release the lock tabs and pull the terminal out of the connector body.

cardiagn.com

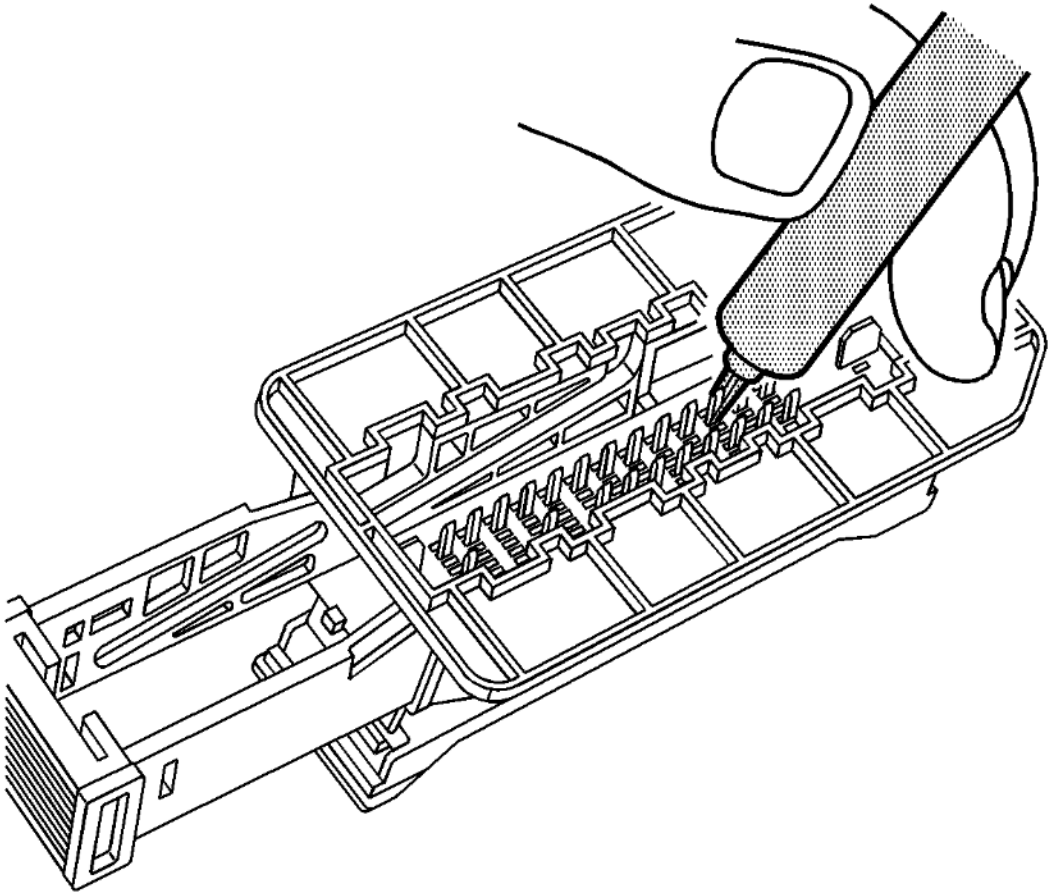

Fig. 167: Using Terminal Release Tool
Courtesy of GENERAL MOTORS COMPANY

8. Using terminal release tool J-38125-560, press the prongs into the holes on each side of the terminal to be removed to release the lock tabs and pull the terminal out of the connector body.

cardiagn.com

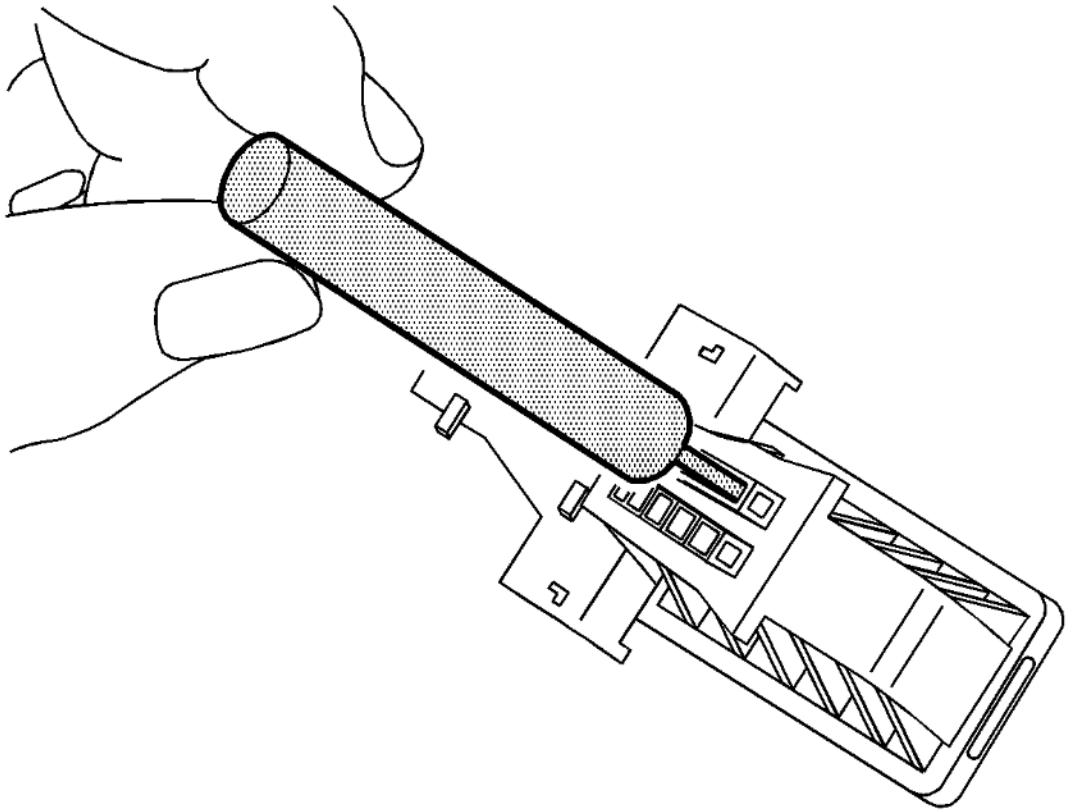

Fig. 168: Using Terminal Release Tool
Courtesy of GENERAL MOTORS COMPANY

9. Using terminal release tool J-38125-556, press the prongs into the holes on each side of the terminal to be removed to release the lock tabs and pull the terminal out of the connector body.
10. Repair the terminal by following the **Repairing Connector Terminals (Terminated Lead Repair)Repairing Connector Terminals (Terminal Repair)** procedure.

cardiagn.com

11. Insert the repaired terminal back into the cavity. Repeat the diagnostic procedure to verify the repair and reconnect the connector bodies.

TYCO/AMP CONNECTORS (102-WAY INLINE)

Special Tools

- **EL-38125-550** Terminal Release Tool Kit
- **EL-38125-580** Terminal Release Tool Kit
- **J-38125-11A** Terminal Release Tool
- **J-38125-212** Terminal Release Tool
- **J-38125-216** Terminal Release Tool
- **J-38125-221** Terminal Release Tool
- **J-38125-560** Terminal Release Tool
- **J-38125-566** Terminal Release Tool

For equivalent regional tools, refer to **Special Tools** .

Terminal Removal Procedure

cardiagn.com

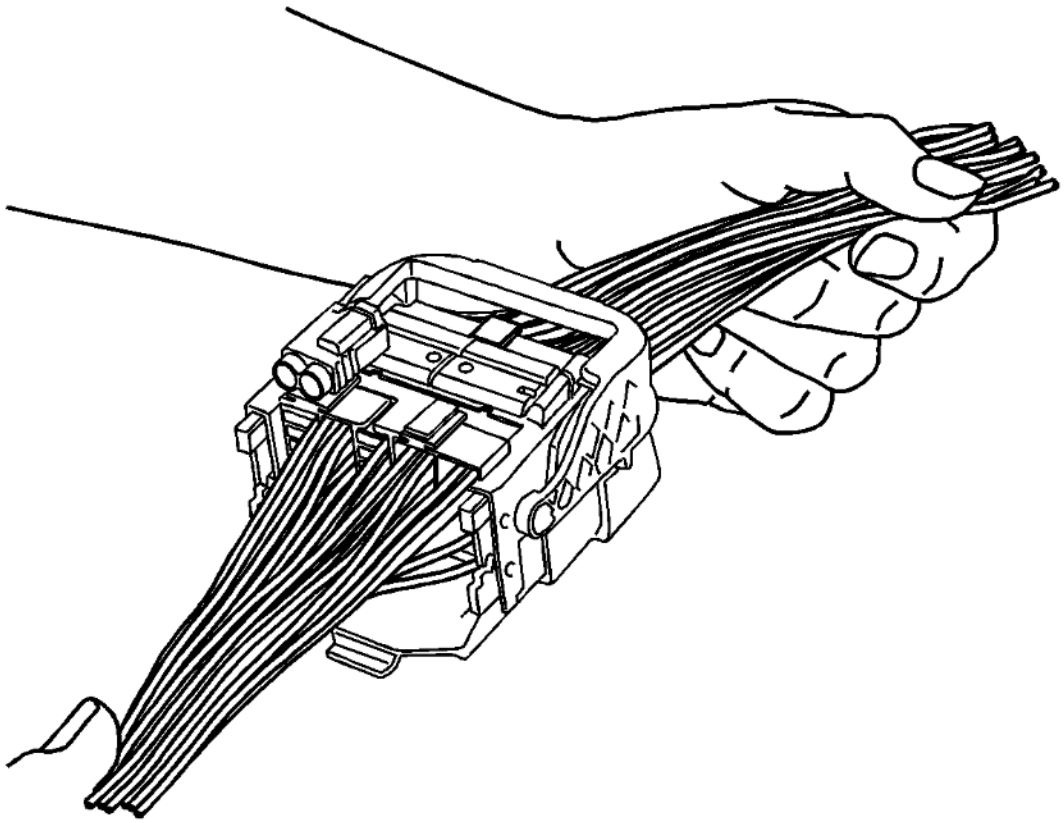

Fig. 169: Typical Connector In Assembled Position
Courtesy of GENERAL MOTORS COMPANY

View of a typical connector in the assembled position.

cardiagn.com

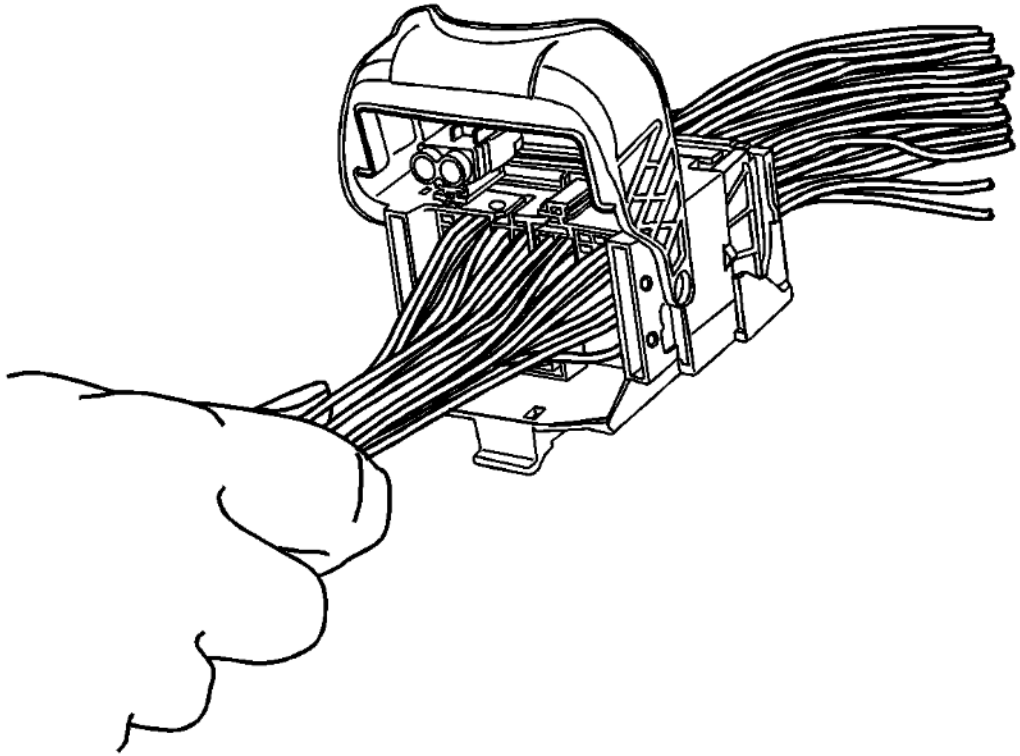

Fig. 170: Locking Lever At 90 Degrees From Connector Body
Courtesy of GENERAL MOTORS COMPANY

1. Pull the locking lever to the 90 degree position from the connector body.

cardiagn.com

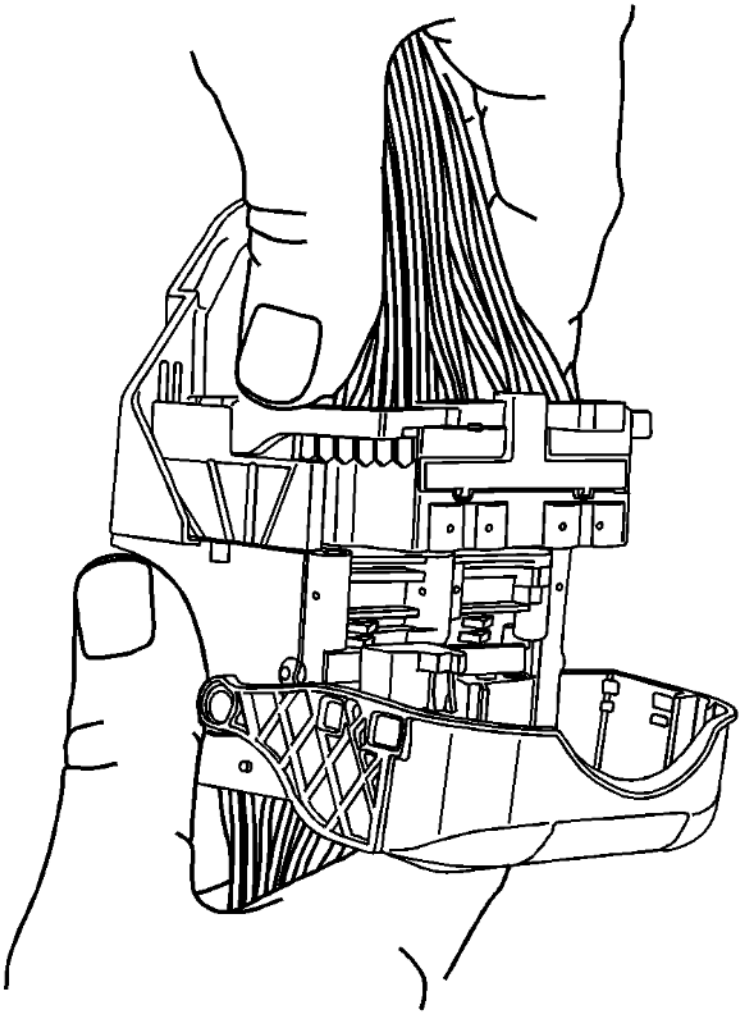

Fig. 171: Sliding Male Connector Body Outward
Courtesy of GENERAL MOTORS COMPANY

2. With the locking lever in the 90 degree position and the male connector body separated, it can be slid outward for removal.

cardiagn.com

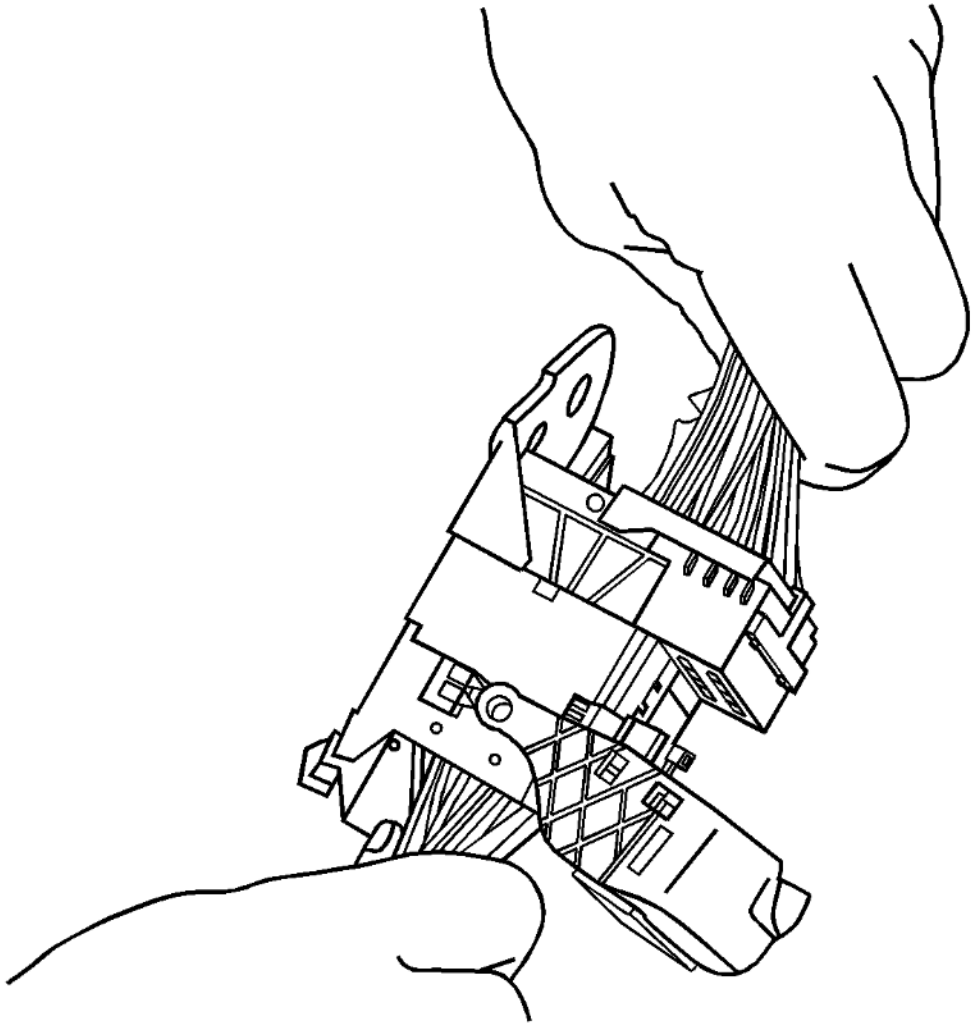

Fig. 172: Sliding Male Connector Body Away From Guide Plates
Courtesy of GENERAL MOTORS COMPANY

3. Slide the male connector body out away from the guide plates.

cardiagn.com

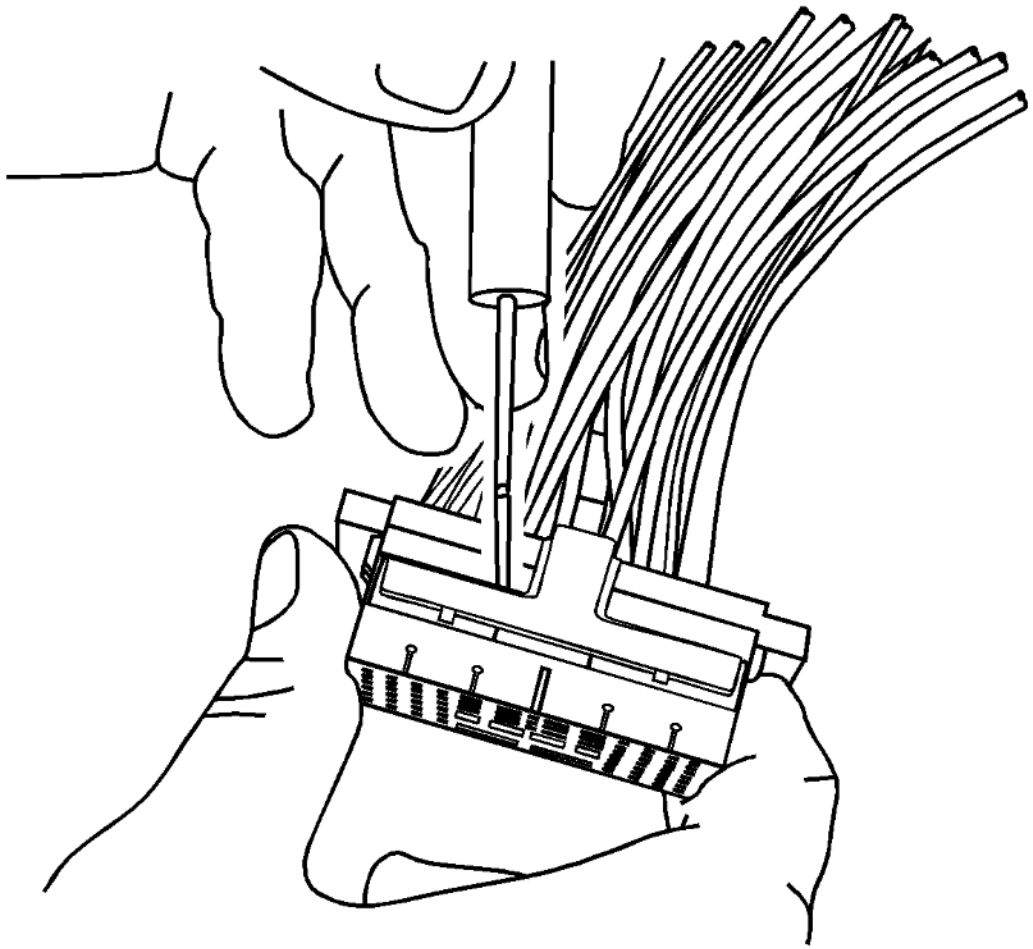

Fig. 173: Removing TPA From Connector Body
Courtesy of GENERAL MOTORS COMPANY

NOTE: **During assembly the terminal position assurance (TPA) will not fully seat if any terminal is not fully seated.**

4. Using terminal release tool J-38125-11A or equivalent, remove the TPA from the connector body.

cardiagn.com

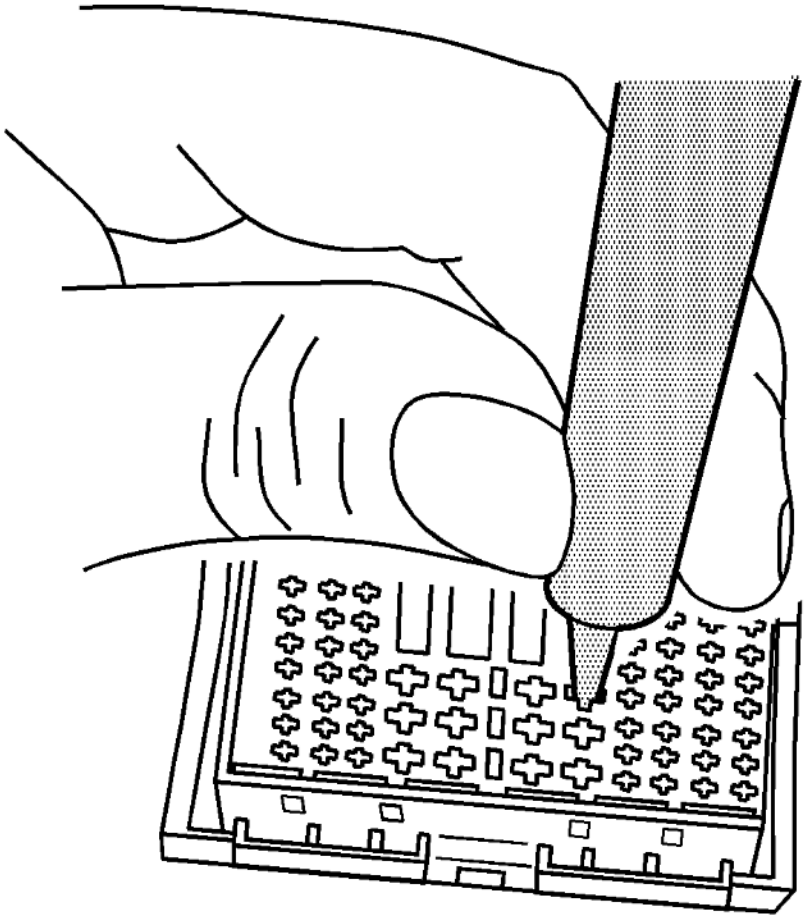

Fig. 174: Using Terminal Release Tool To Release Lock Tabs
Courtesy of GENERAL MOTORS COMPANY

5. Using terminal release tool J-38125-566, press the prongs into the holes on each side of the terminal to be removed to release the lock tabs and pull the terminal out of the connector body.

cardiagn.com

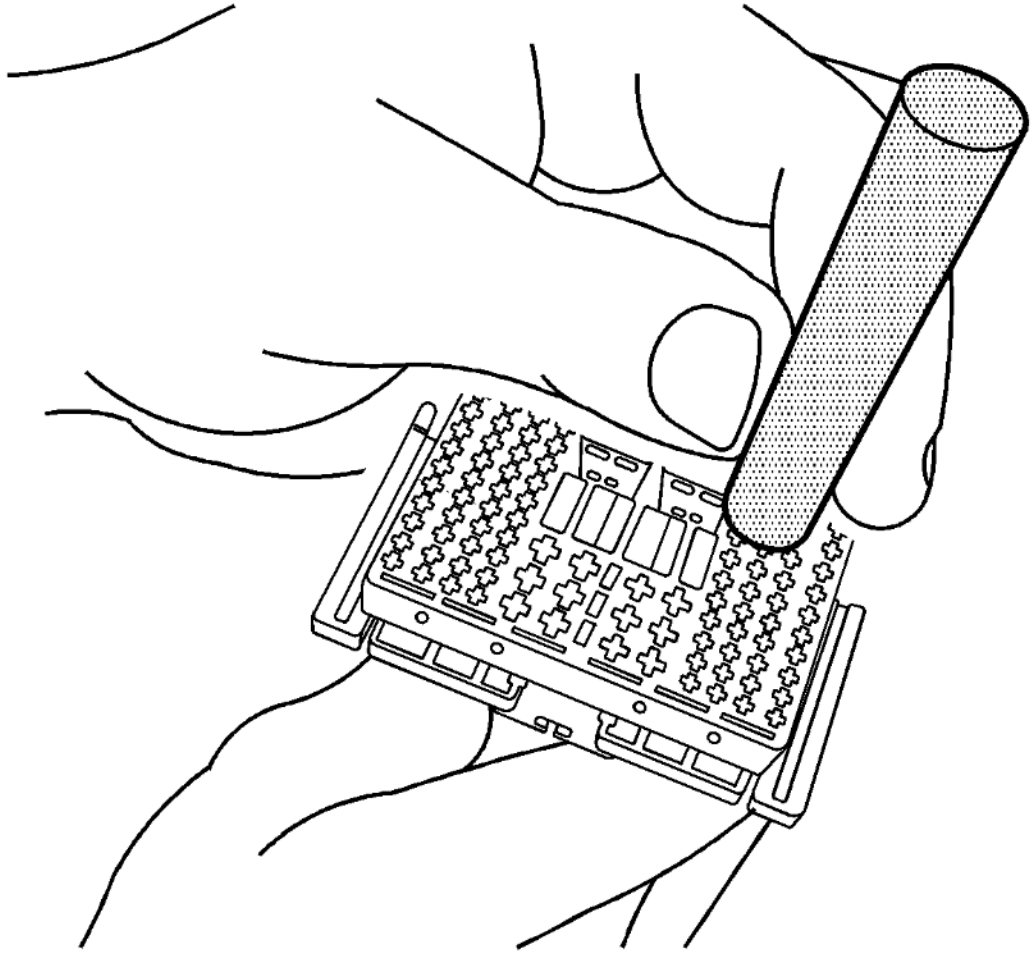

Fig. 175: Using Terminal Release Tool To Release Lock Tabs
Courtesy of GENERAL MOTORS COMPANY

6. Using terminal release tool J-38125-560, press the prongs into the holes on each side of the terminal to be removed to release the lock tabs and pull the terminal out of the connector body.

cardiagn.com

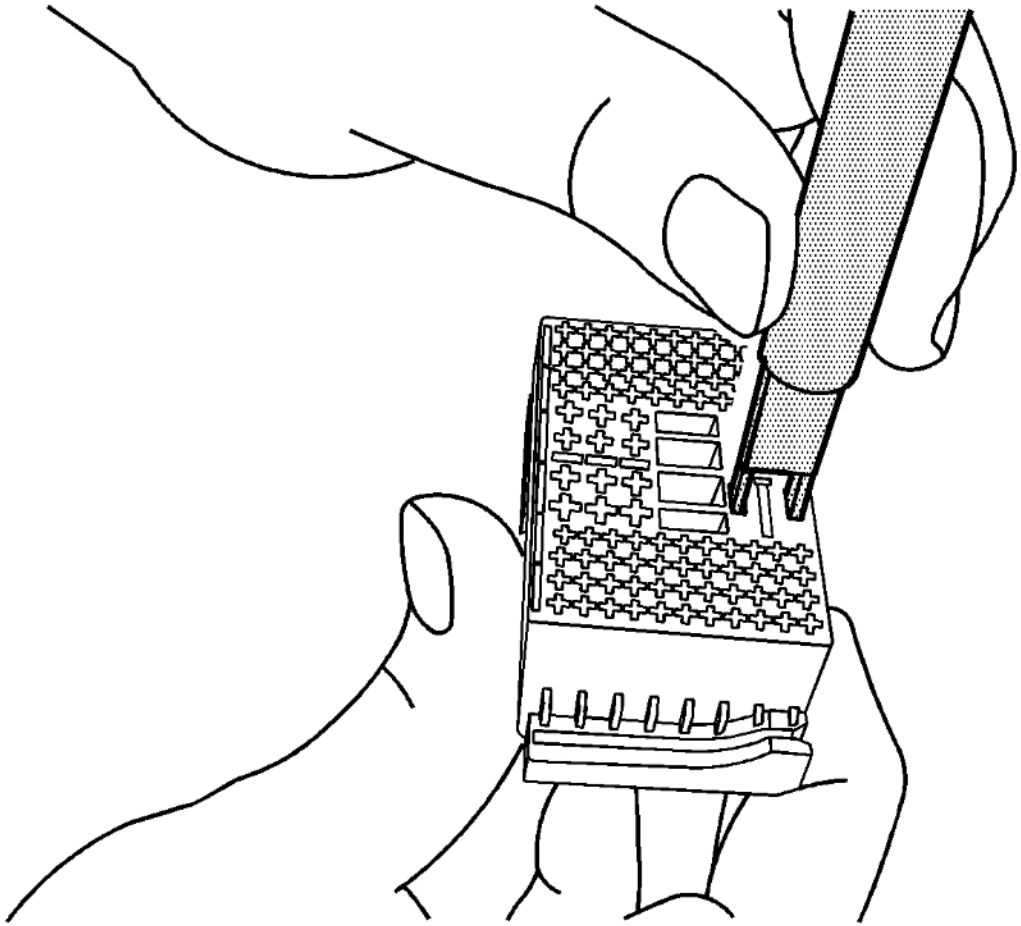

Fig. 176: Using Terminal Release Tool To Release Lock Tabs
Courtesy of GENERAL MOTORS COMPANY

7. Using terminal release tool J-38125-221, press the prongs into the holes on each side of the terminal to be removed to release the lock tabs and pull the terminal out of the connector body.

cardiagn.com

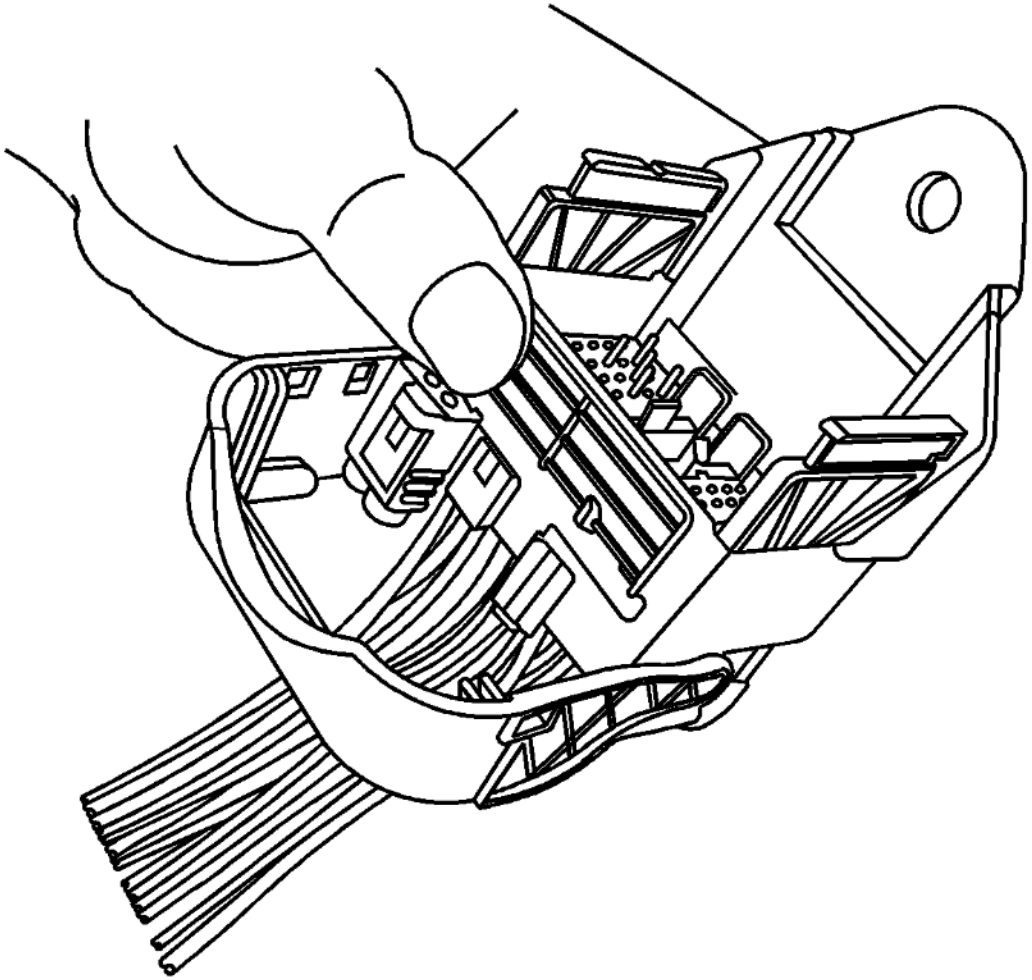

Fig. 177: Sliding Connector Off Female Body
Courtesy of GENERAL MOTORS COMPANY

8. The female connector body may have an additional connector hooked to the edge of the body. Use terminal release tool J-38125-11A or equivalent to release the locking tab and slide the connector off the female body.

cardiagn.com

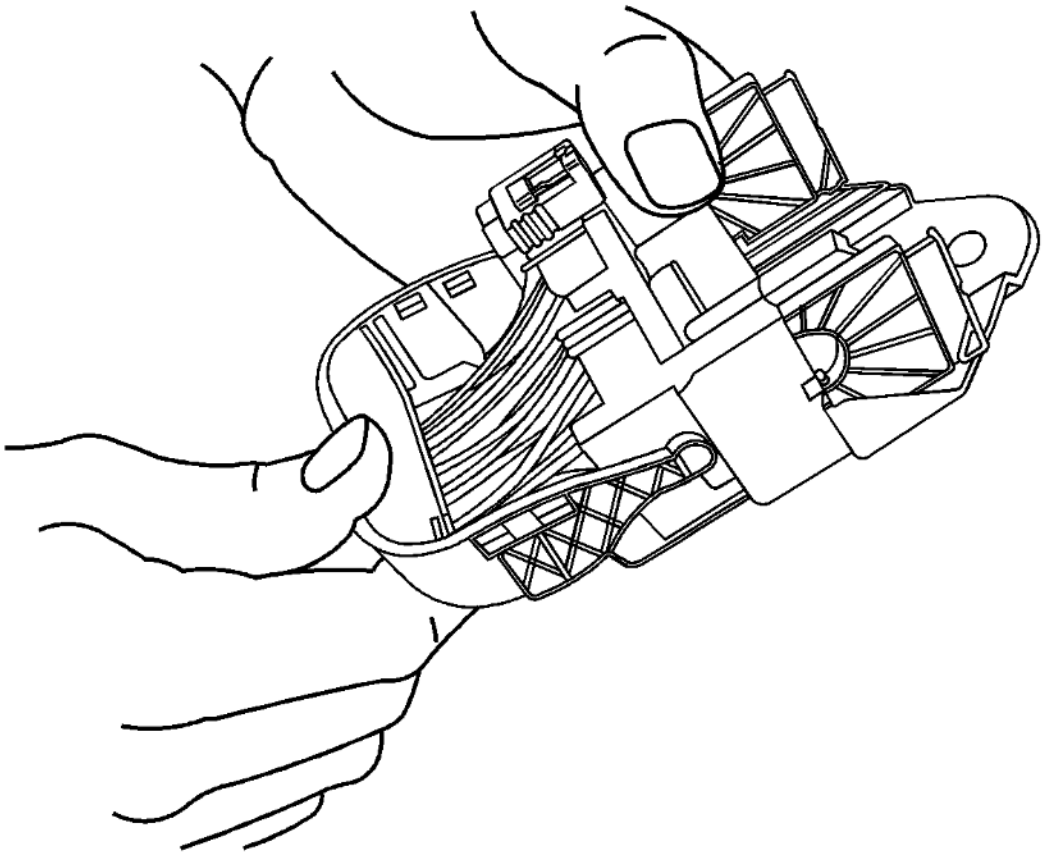

Fig. 178: Moving Locking Lever
Courtesy of GENERAL MOTORS COMPANY

9. Move the locking lever 180 degrees from the connected position.

cardiagn.com

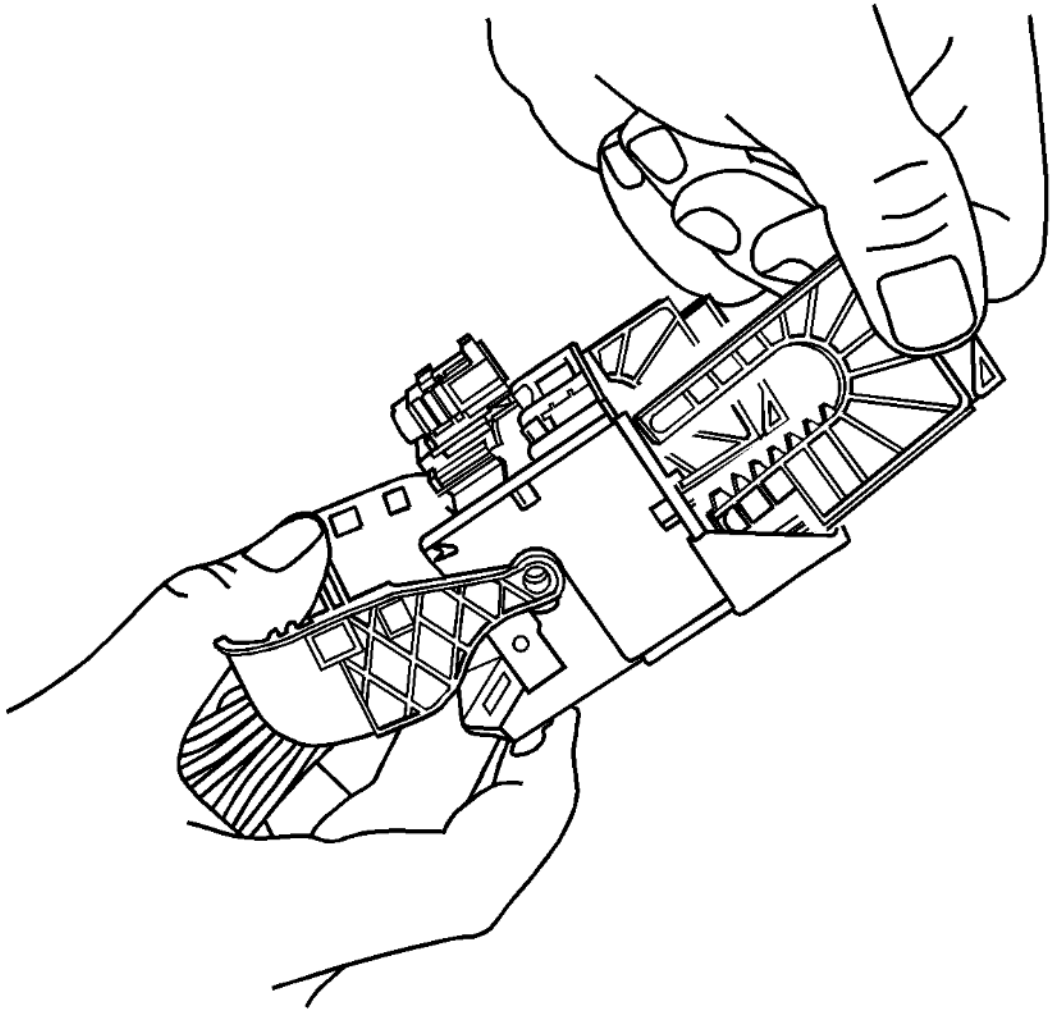

Fig. 179: Removing Guide Plates From Connector Body
Courtesy of GENERAL MOTORS COMPANY

10. With the locking lever in the 180 degree position the guide plates can be removed from the connector body.

cardiagn.com

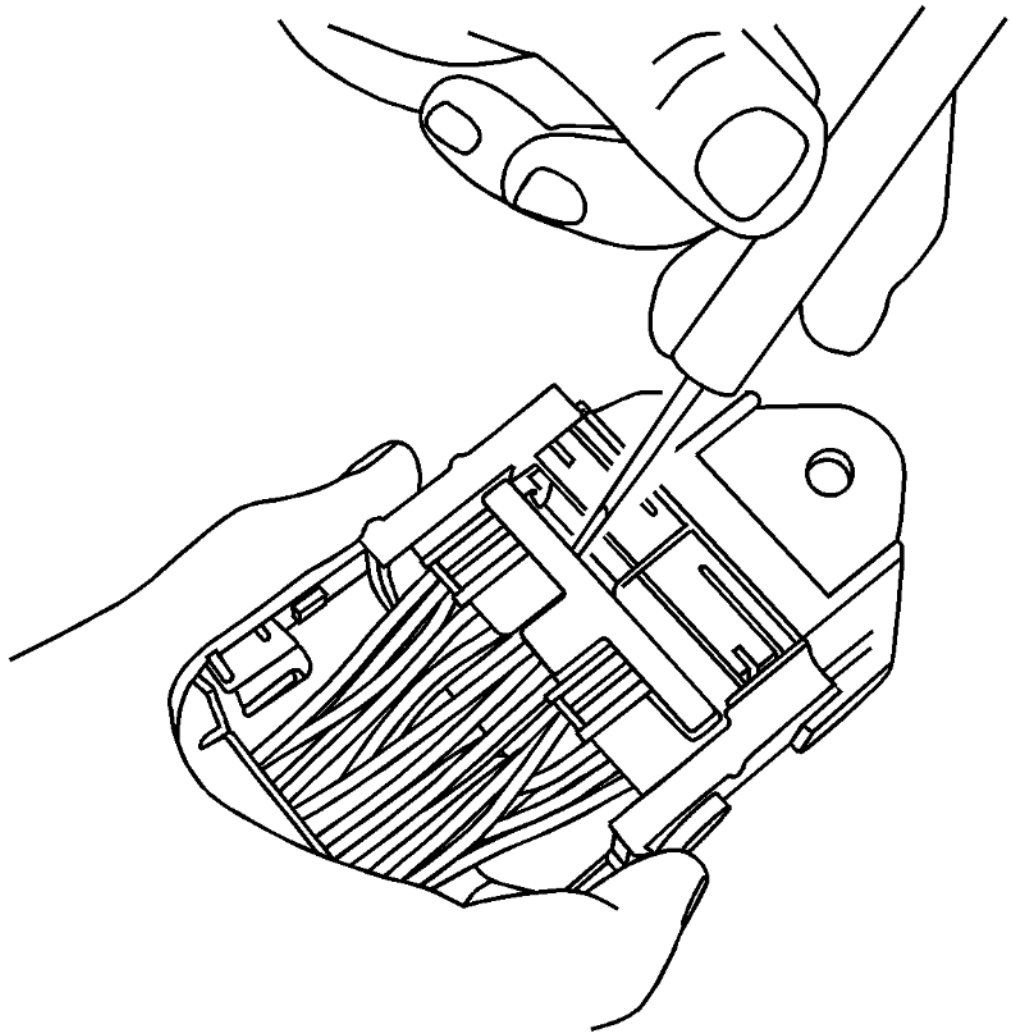

Fig. 180: Removing TPA From Connector Body
Courtesy of GENERAL MOTORS COMPANY

NOTE: **During assembly the TPA will not fully seat if any terminal is not fully seated.**

11. Using terminal release tool J-38125-11A or equivalent, remove the TPA from the connector body.

cardiagn.com

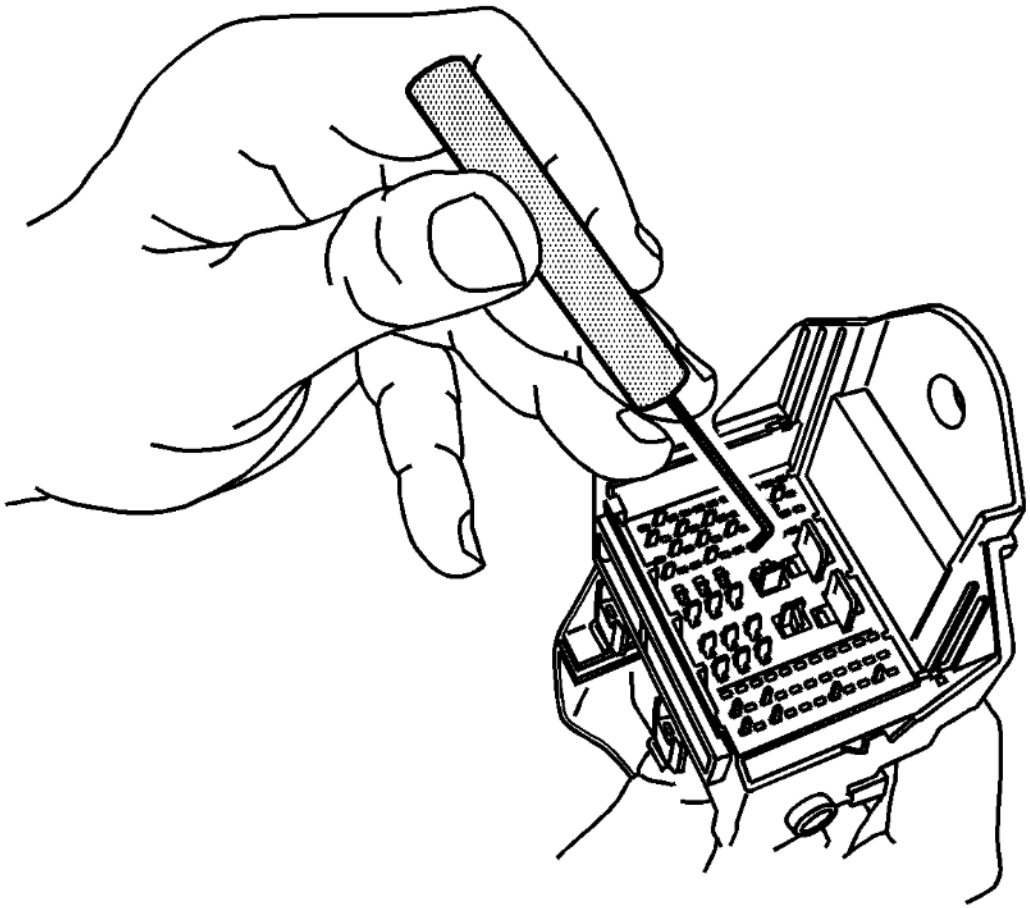

Fig. 181: Lifting Terminal Plate Past Terminals
Courtesy of GENERAL MOTORS COMPANY

12. Using terminal release tool J-38125-216, lift the terminal plate past the terminals and out of the connector body cavity.

cardiagn.com

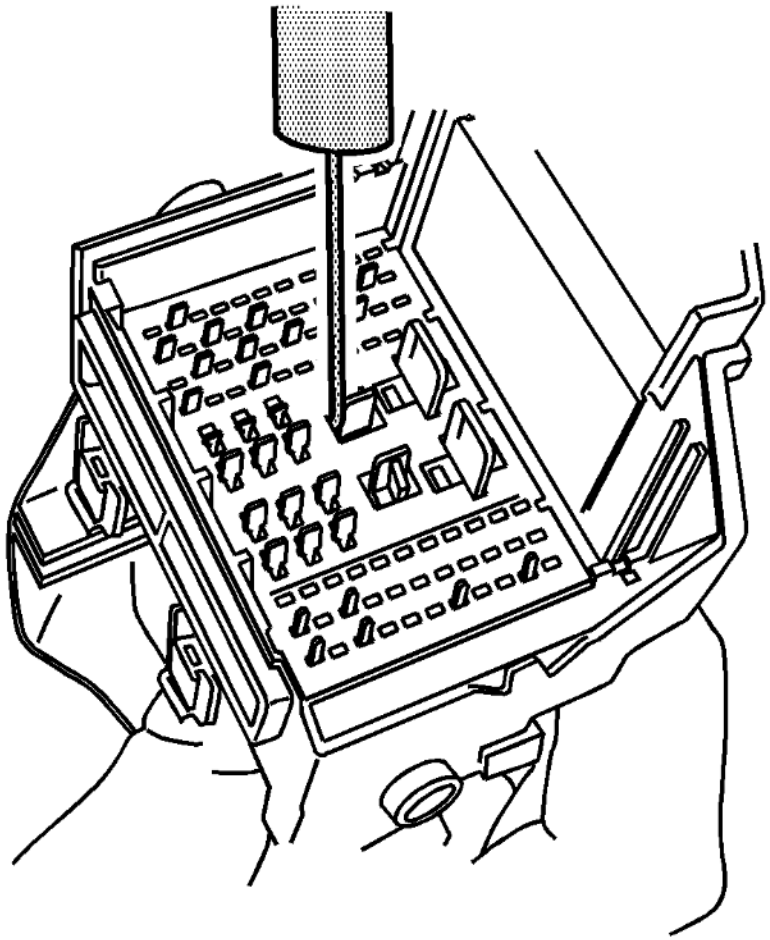

Fig. 182: Terminal Plate
Courtesy of GENERAL MOTORS COMPANY

13. Terminal plate will bind slightly on each corner.

cardiagn.com

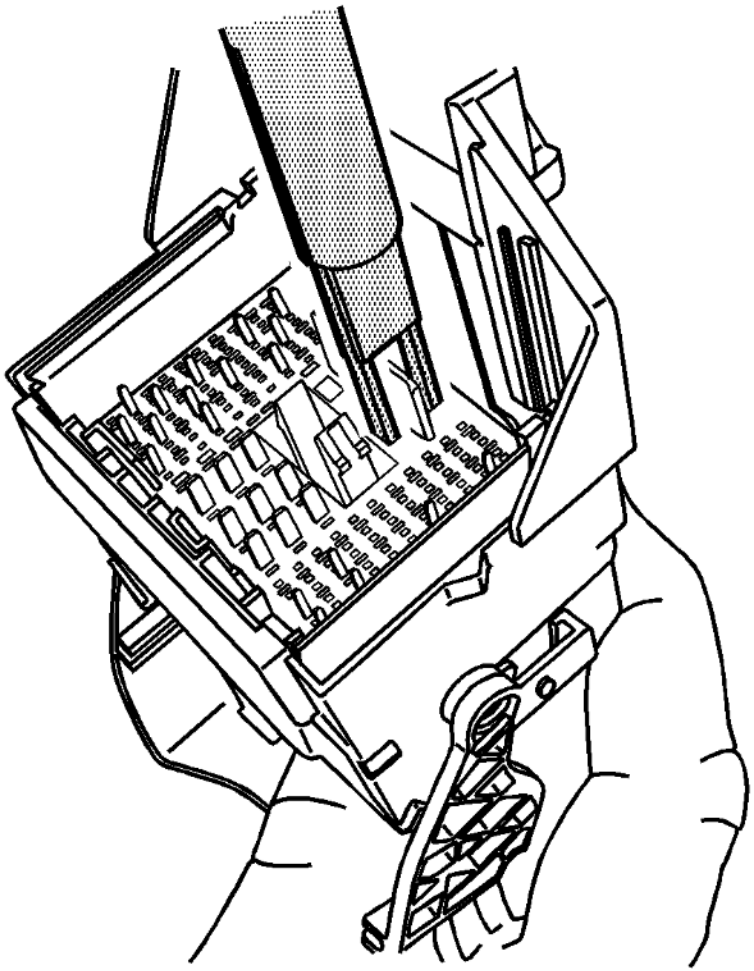

Fig. 183: Using Terminal Release Tool To Release Lock Tabs
Courtesy of GENERAL MOTORS COMPANY

14. Using terminal release tool J-38125-221, press the prongs into the holes on each side of the terminal to be removed to release the lock tabs and pull the terminal out of the connector body.

cardiagn.com

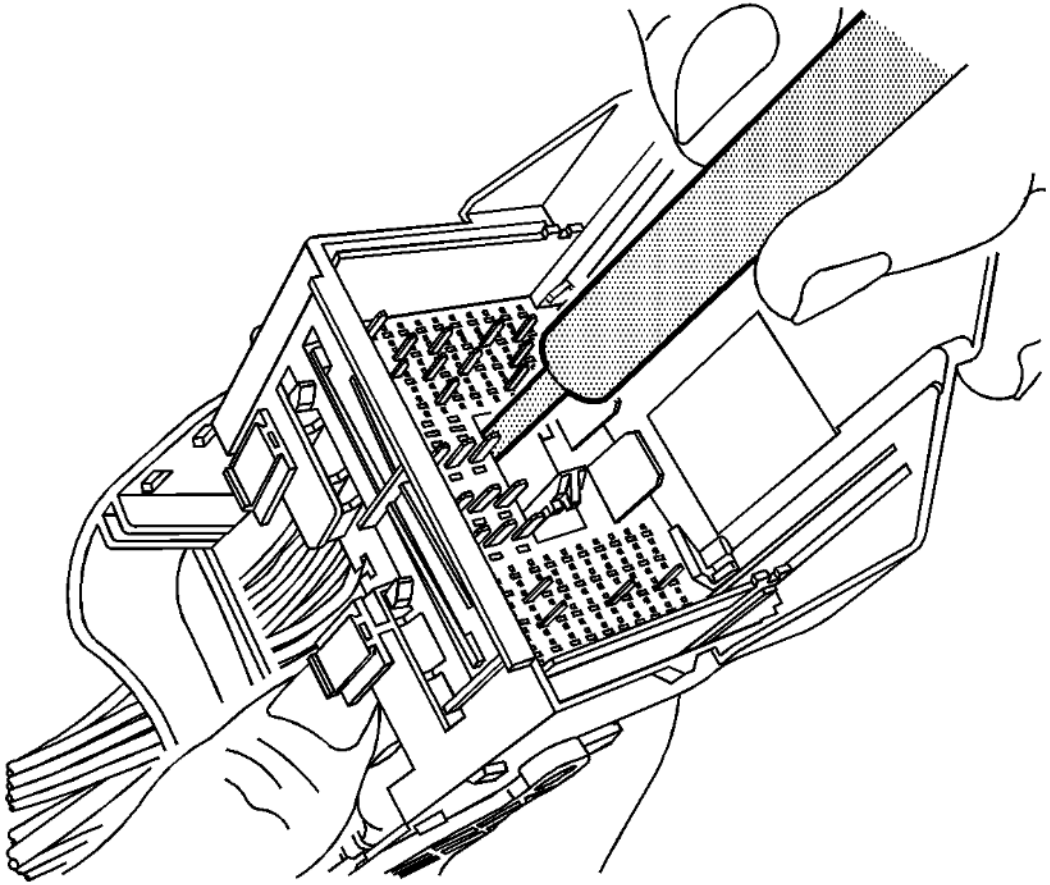

Fig. 184: Using Terminal Release Tool To Release Lock Tabs
Courtesy of GENERAL MOTORS COMPANY

15. Using terminal release tool J-38125-212, press the prongs into the holes on each side of the terminal to be removed to release the lock tabs and pull the terminal out of the connector body.

cardiagn.com

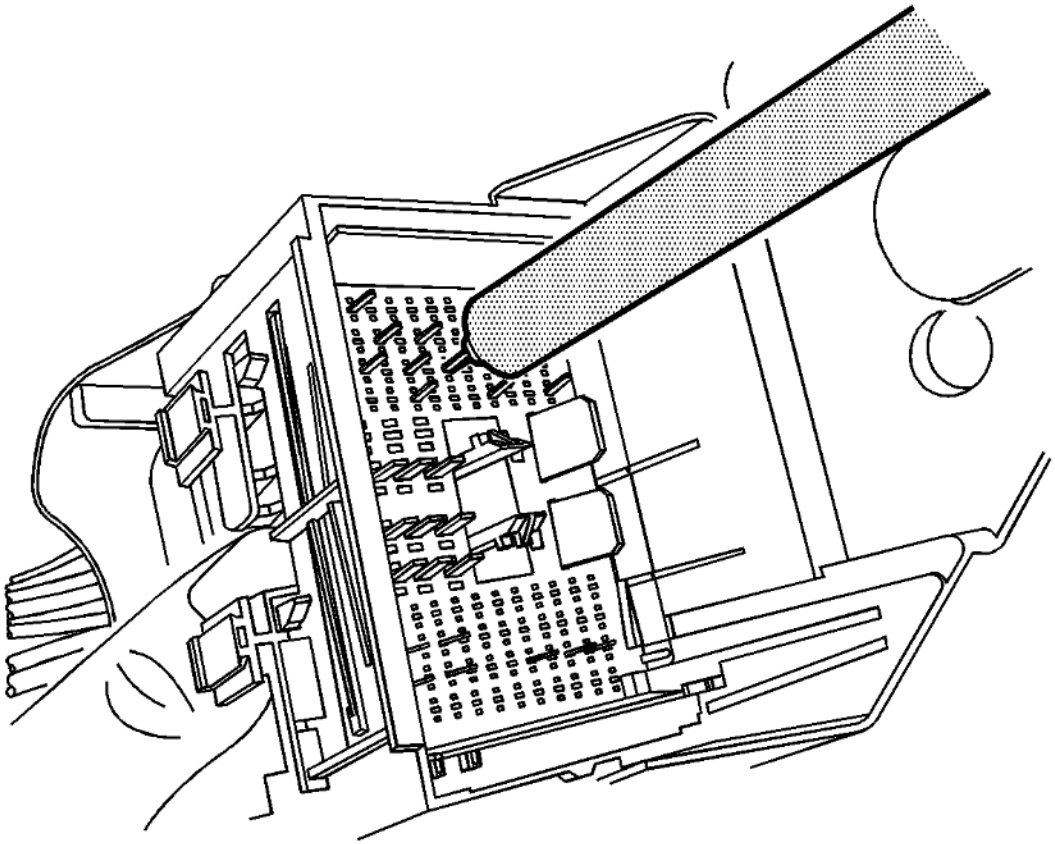

Fig. 185: Using Terminal Release Tool To Release Lock Tabs
Courtesy of GENERAL MOTORS COMPANY

16. Using terminal release tool J-38125-560, press the prongs into the holes on each side of the terminal to be removed to release the lock tabs and pull the terminal out of the connector body.

cardiagn.com

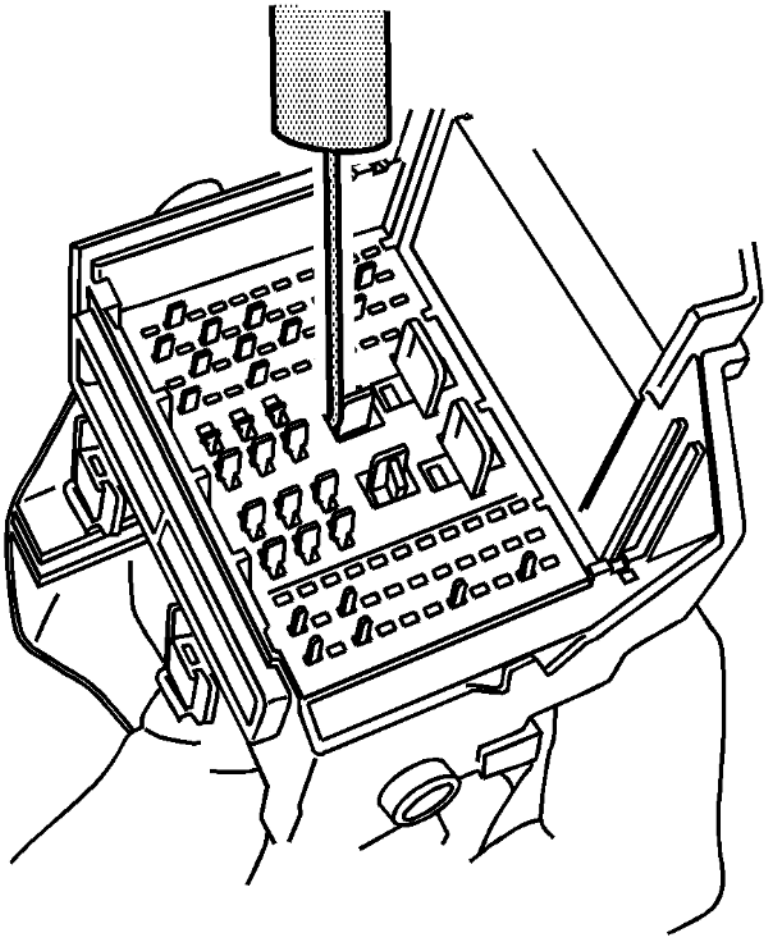

Fig. 186: Terminal Plate
Courtesy of GENERAL MOTORS COMPANY

17. Press the terminal plate back into the female connector to the preset position. The plate will bind slightly on each corner.

cardiagn.com

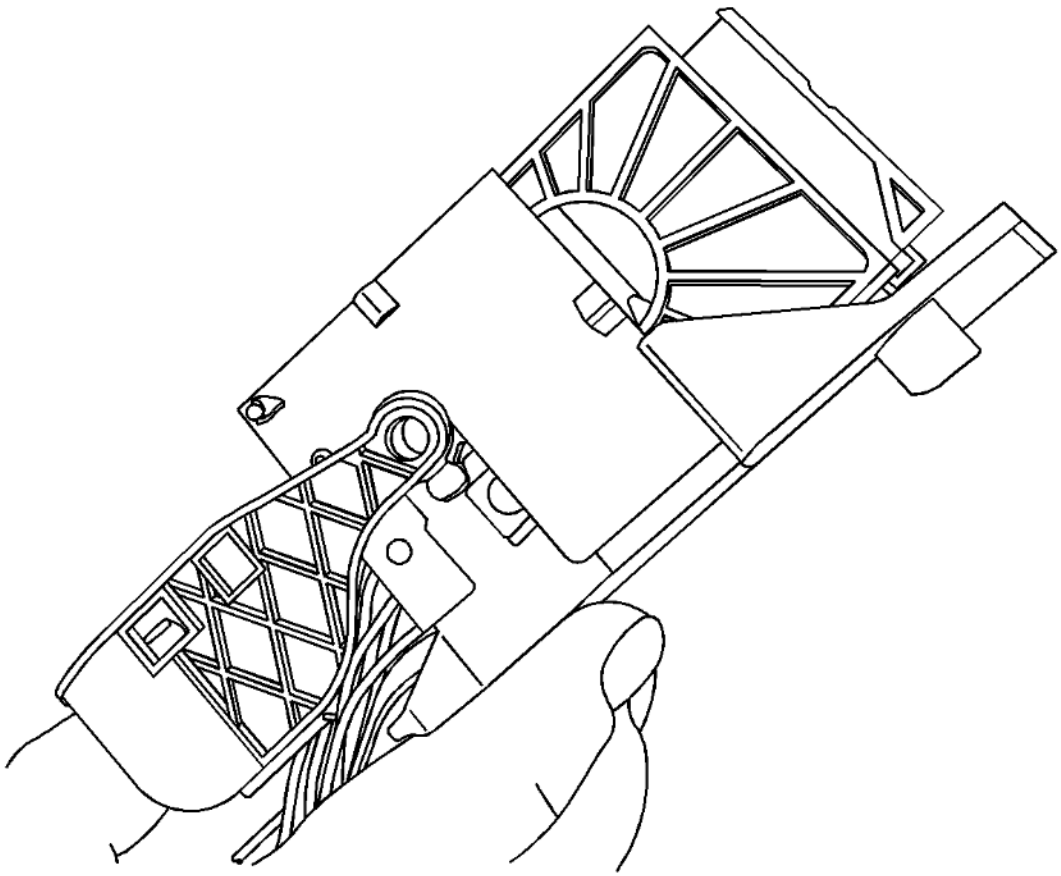

Fig. 187: Aligning Guide Plates To Mesh With Locking Lever Gears
Courtesy of GENERAL MOTORS COMPANY

18. With the locking lever in the 180 degree position, align the guide plates to mesh with the gears on the locking lever.

cardiagn.com

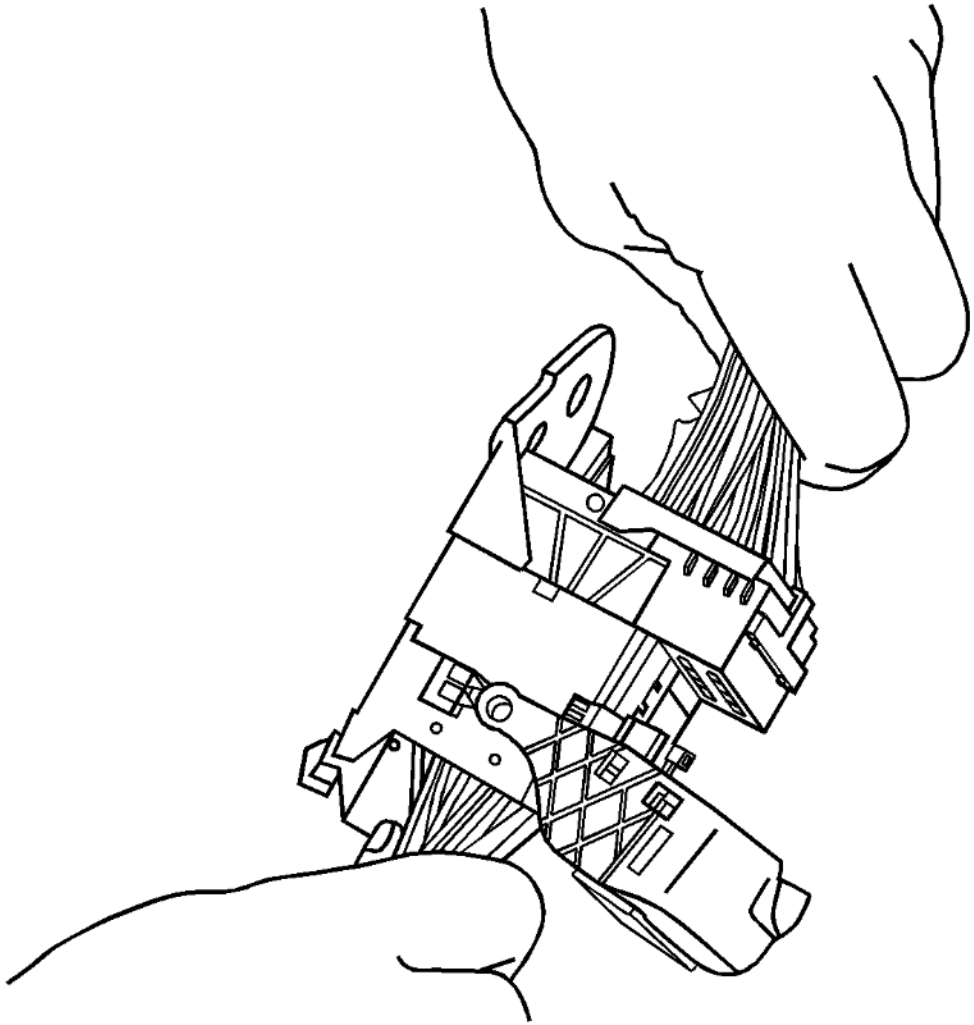

Fig. 188: Sliding Male Connector Body Towards Guide Plates
Courtesy of GENERAL MOTORS COMPANY

19. Slide the male connector body back inward toward the guide plates.

cardiagn.com

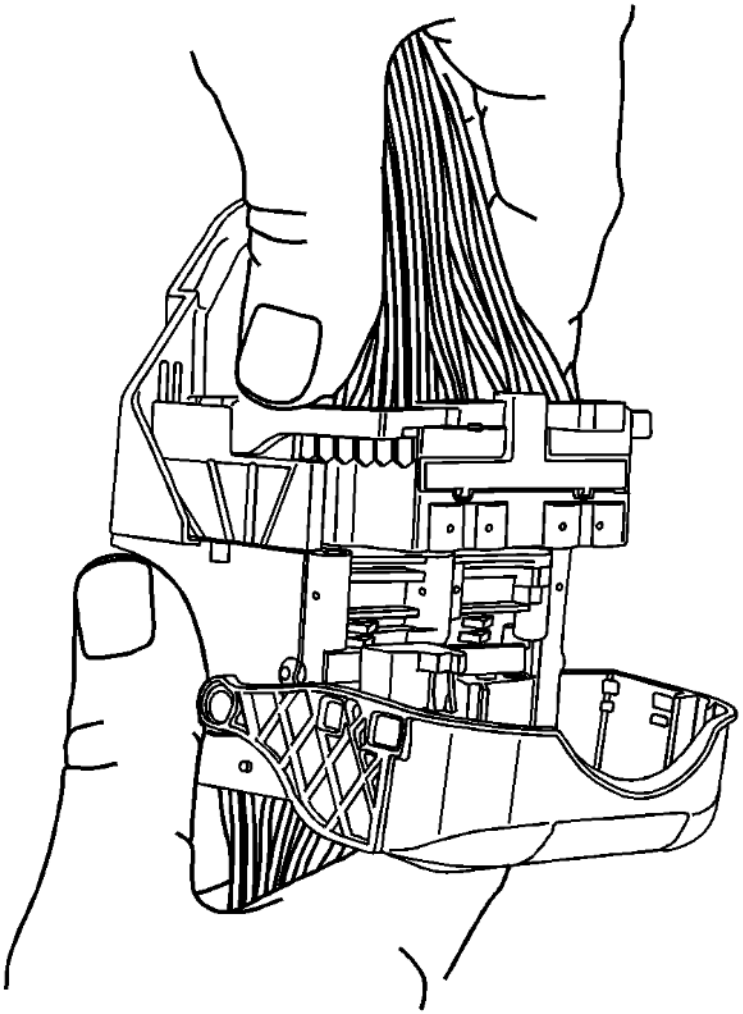

Fig. 189: Sliding Male Connector Body Inward
Courtesy of GENERAL MOTORS COMPANY

20. With the locking lever in the 90 degree position and the male connector body connected, it can be slid inward for assembly.

cardiagn.com

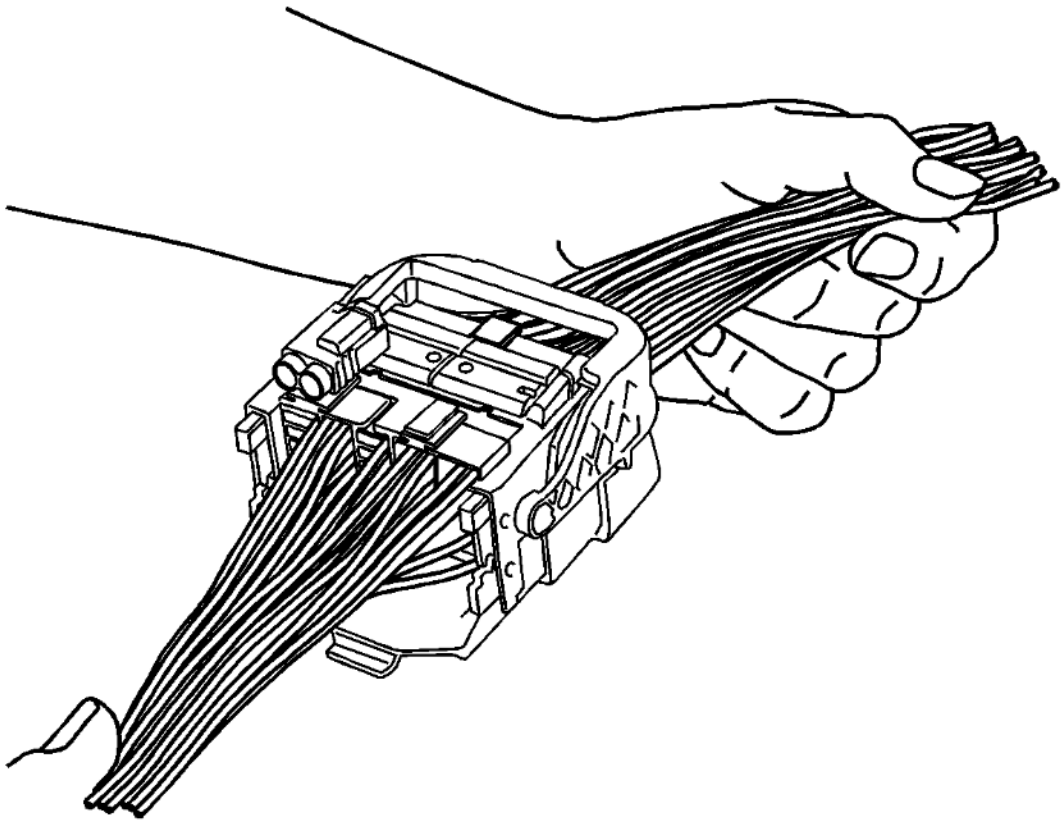

Fig. 190: Typical Connector In Assembled Position
Courtesy of GENERAL MOTORS COMPANY

21. Move the lever into the locked position or in the assembled position. This will pull the male connector down into the female connector.
22. Repair the terminal by following the **Repairing Connector Terminals (Terminated Lead Repair)Repairing Connector Terminals (Terminal Repair)** procedure.
23. Insert the repaired terminal back into the cavity. Repeat the diagnostic procedure to verify the repair and reconnect the connector bodies.

cardiagn.com

TYCO/AMP CONNECTORS (SIR)

Special Tools

- **EL-38125-550** Terminal Release Tool Kit
- **EL-38125-580** Terminal Release Tool Kit
- **J-38125-11A** Terminal Release Tool
- **J-38125-215A** Terminal Release Tool

For equivalent regional tools, refer to **Special Tools** .

Removal Procedure

cardiagn.com

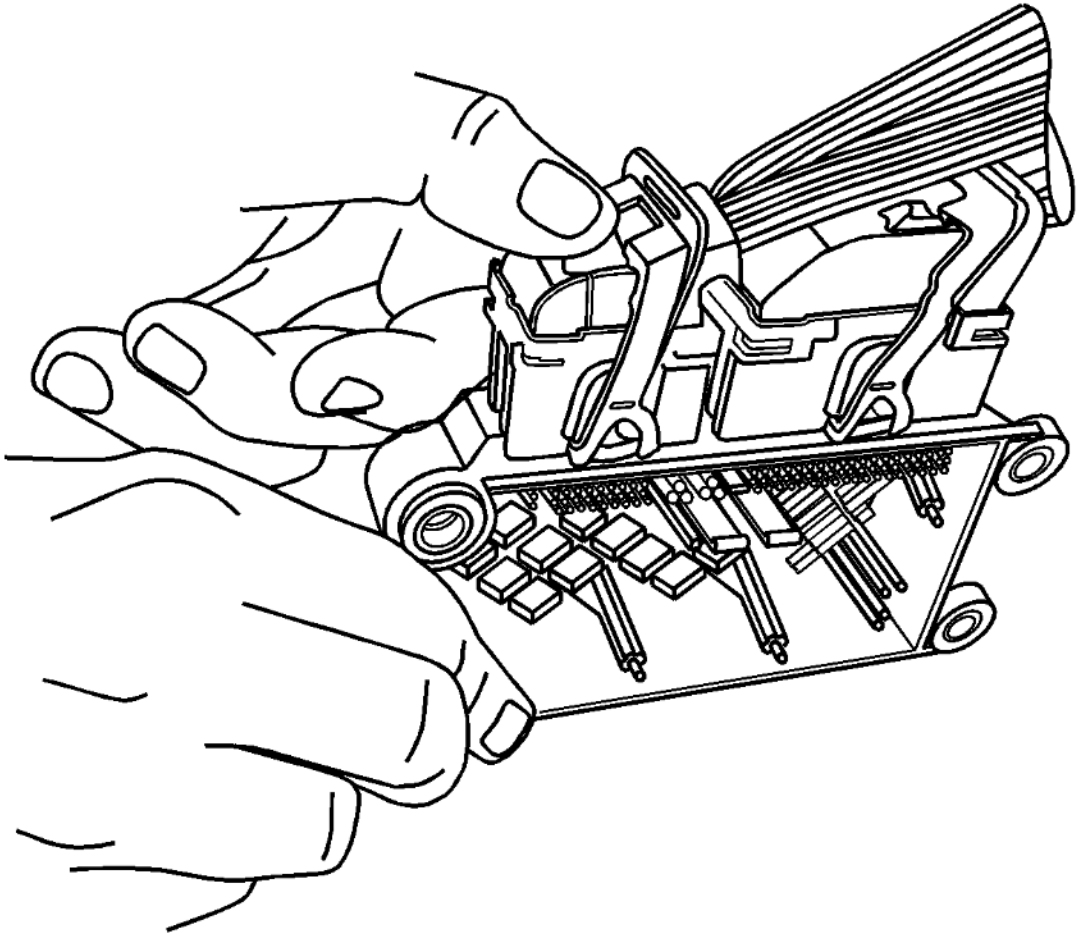

Fig. 191: Sliding Red CPA Away From Connector Lever
Courtesy of GENERAL MOTORS COMPANY

1. Using your thumbs press down and slide the red CPA away from the connector lever.

cardiagn.com

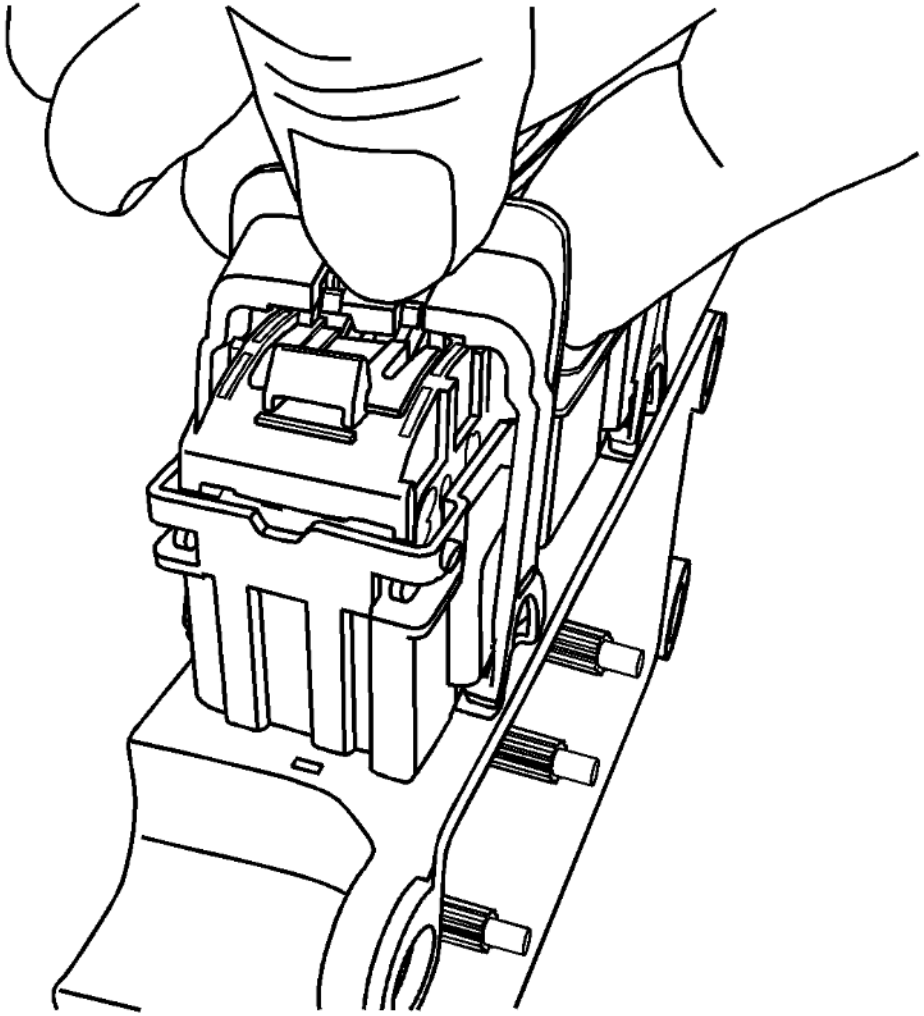

Fig. 192: Pressing Down On Locking Tab
Courtesy of GENERAL MOTORS COMPANY

2. Using your thumb press down on the locking tab and move the lever to the released position.

cardiagn.com

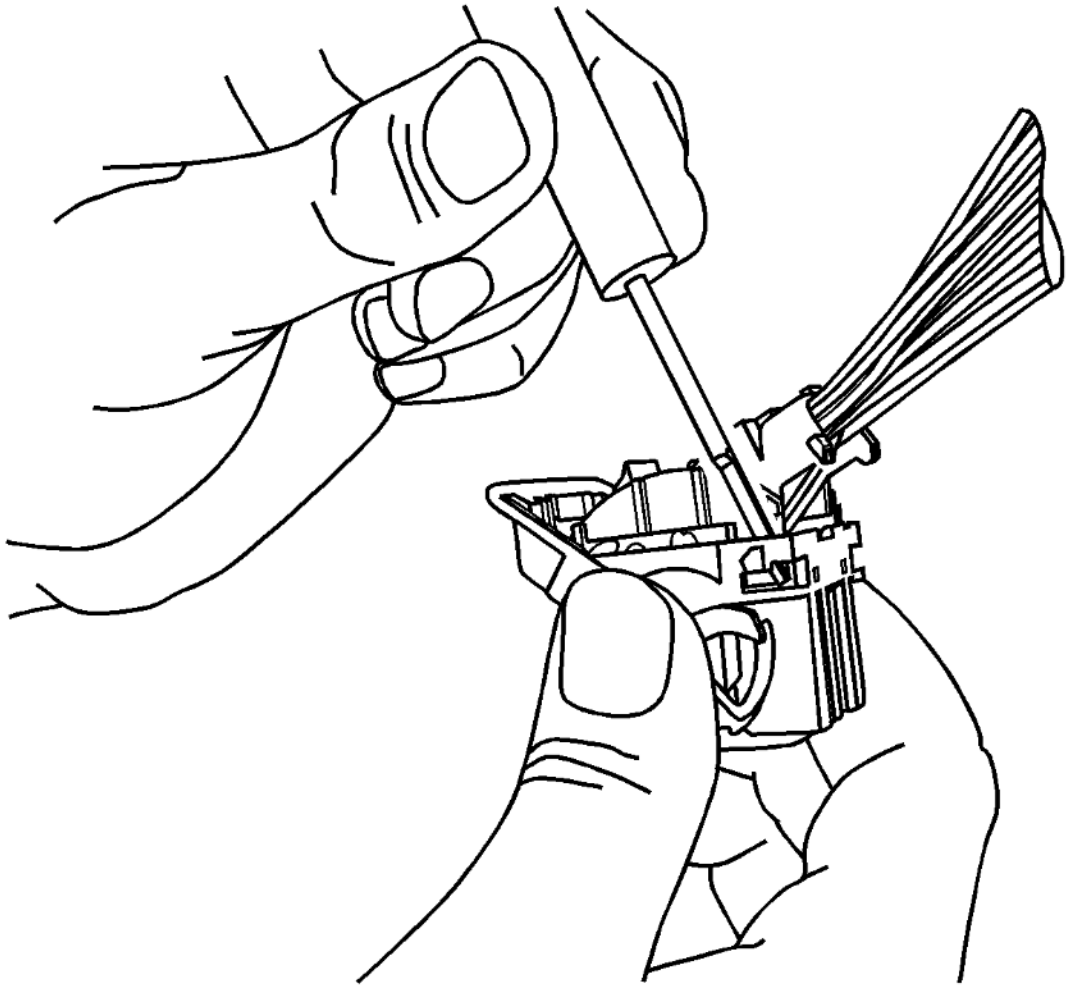

Fig. 193: Releasing Wire Dress Cover Locking Tabs
Courtesy of GENERAL MOTORS COMPANY

3. Using terminal tool J-38125-11A or equivalent, release the wire dress cover locking tabs.

cardiagn.com

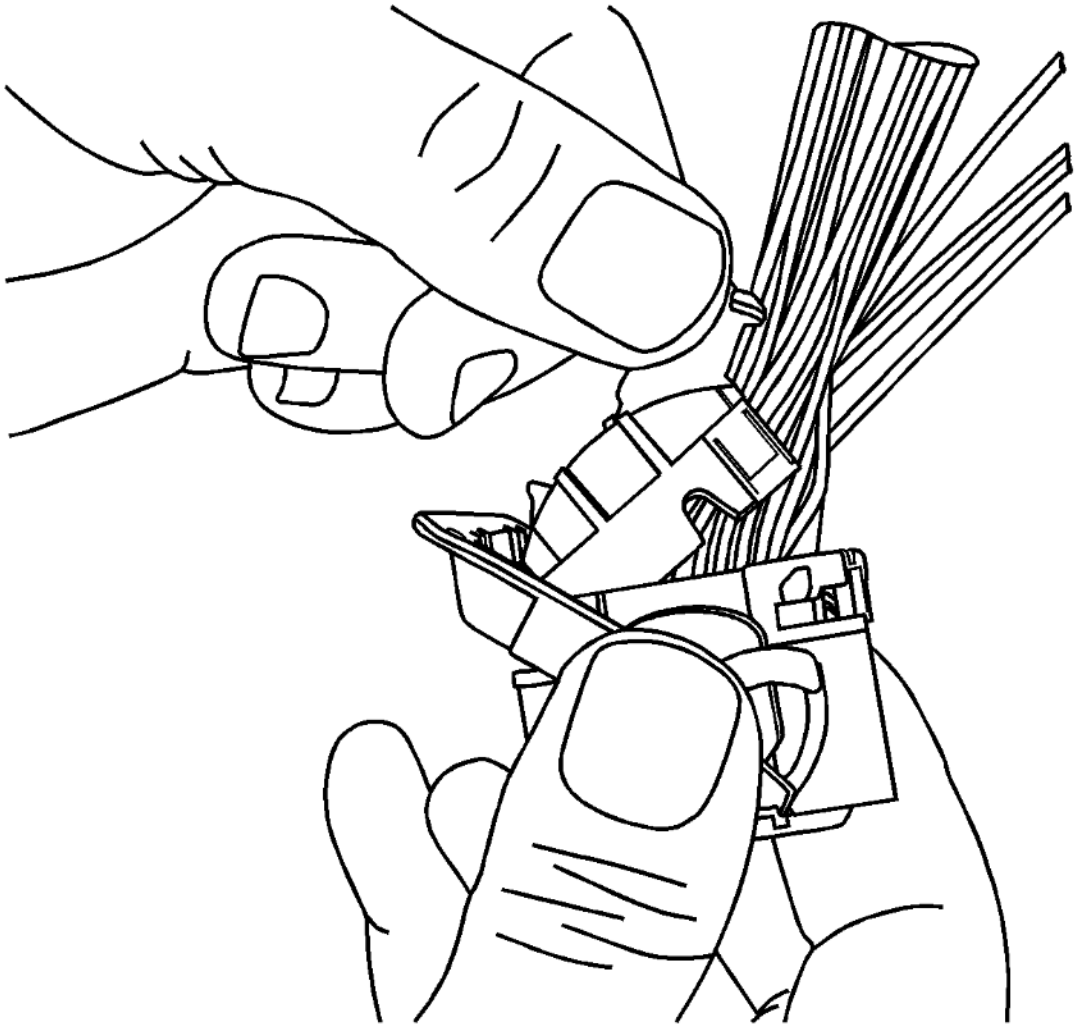

Fig. 194: Pivoting Connector Wire Dress Cover
Courtesy of GENERAL MOTORS COMPANY

4. Pivot connector wire dress cover while removing from the connector body.

cardiagn.com

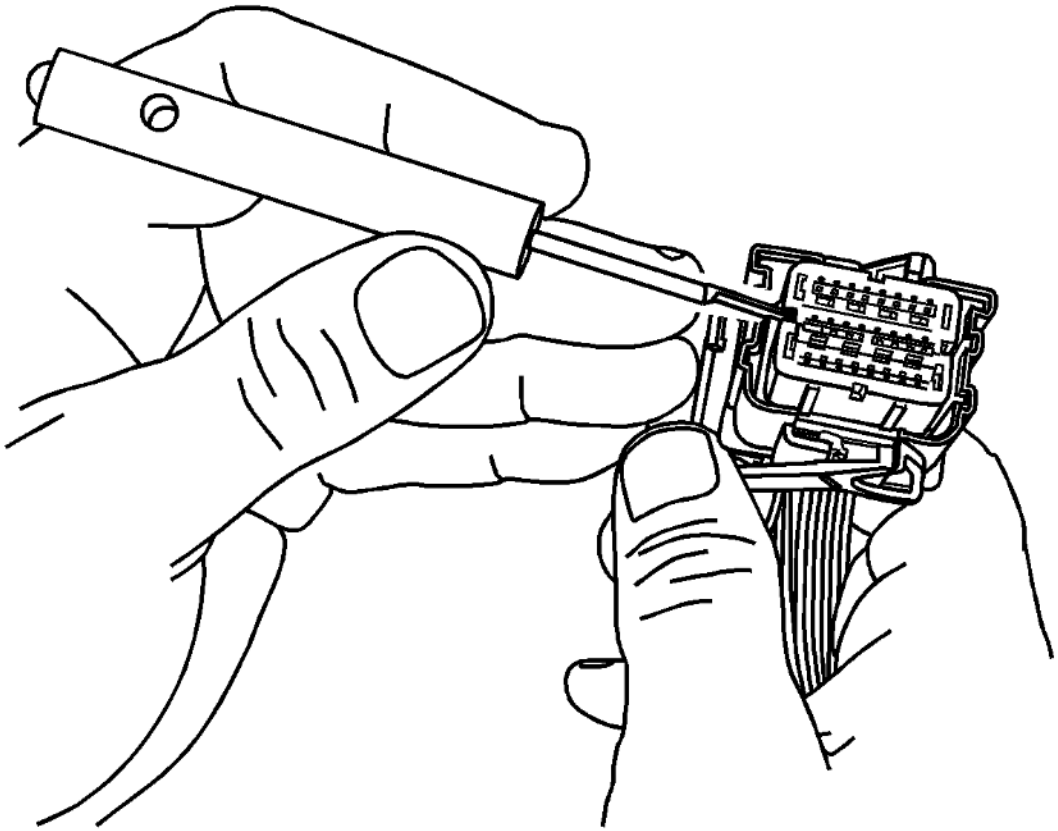

Fig. 195: Removing TPA
Courtesy of GENERAL MOTORS COMPANY

5. Using terminal tool J-38125-11A or equivalent, remove the TPA by lifting straight off the connector body.

cardiagn.com

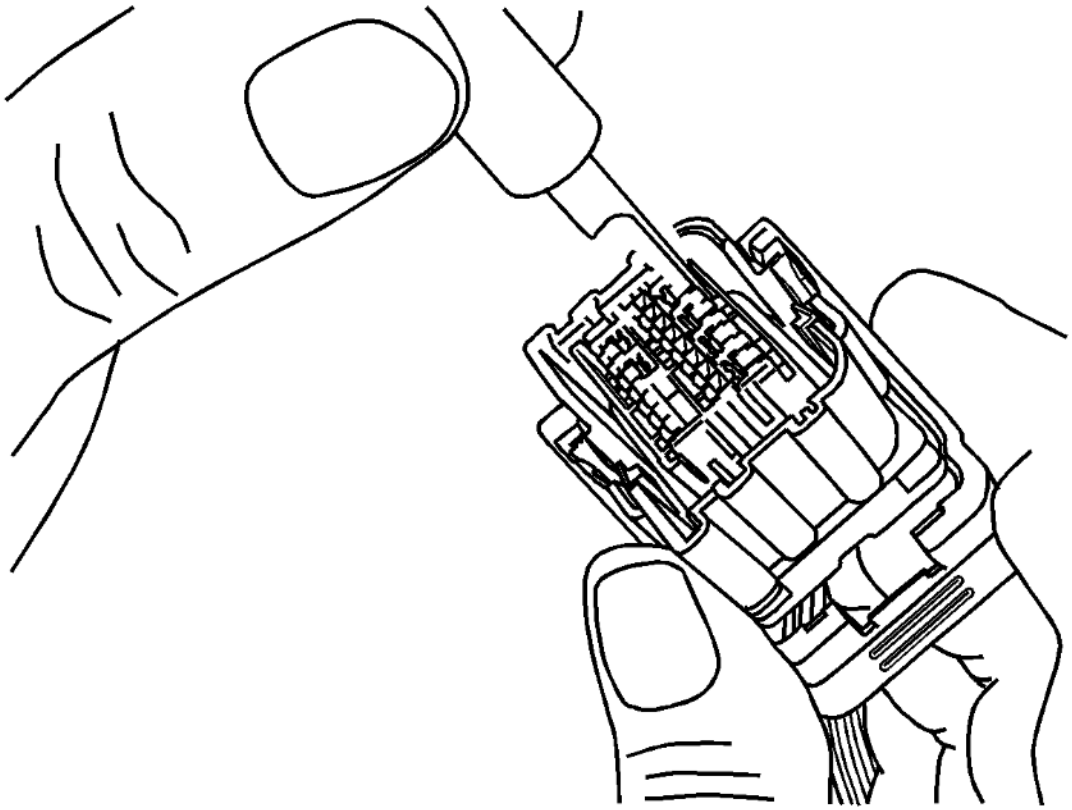

Fig. 196: Terminal Release Tool And Rear Of Connector Body
Courtesy of GENERAL MOTORS COMPANY

6. Using terminal release tool J-38125-215A, place the tip of the tool on the outside edge next to the terminal and depress the lock tab and remove the rear of the connector body.

Terminal Repair Procedure

cardiagn.com

Use the appropriate terminal and crimper in order to replace the terminal.

YAZAKI CONNECTORS (2-WAY)

Special Tools

- **EL-38125-550** Terminal Release Tool Kit
- **EL-38125-580** Terminal Release Tool Kit
- **J-38125-553** Terminal Release Tool

For equivalent regional tools, refer to **Special Tools** .

Terminal Removal Procedure

1. Disconnect the connector from the component.

cardiagn.com

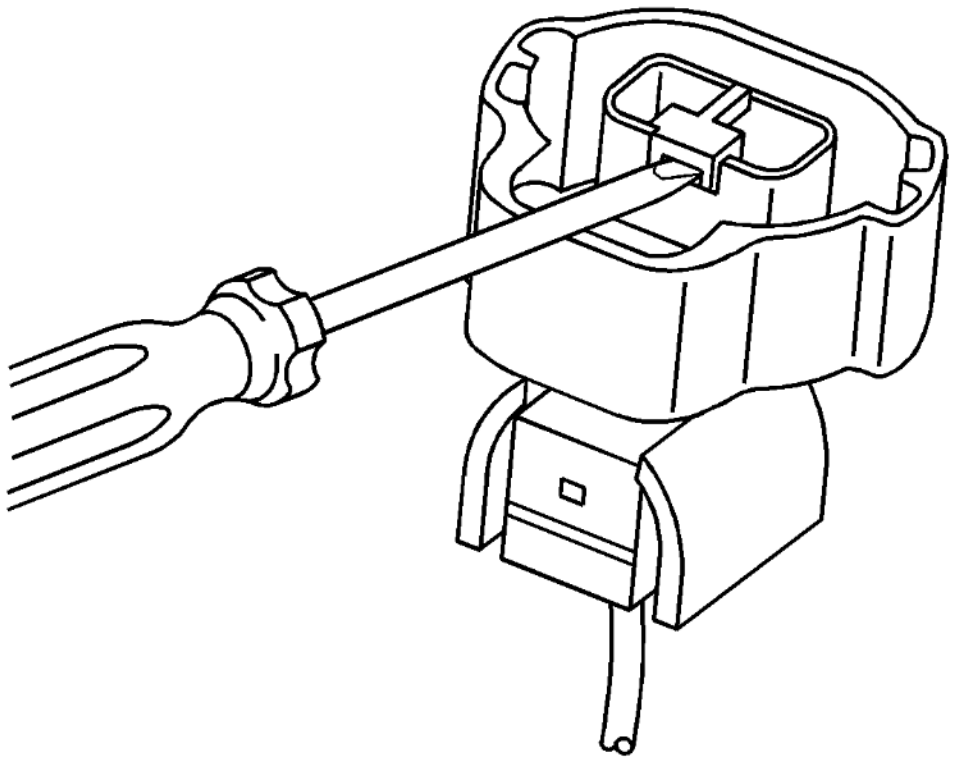

Fig. 197: Prying Up Terminal Position Assurance
Courtesy of GENERAL MOTORS COMPANY

2. Insert a small flat-blade tool in the slot below the front loaded terminal position assurance (TPA) and pry up.
3. Remove the TPA by pulling it out of the connector.
4. Push the wire side of the terminal that is being removed toward the connector and hold it in position.

cardiagn.com

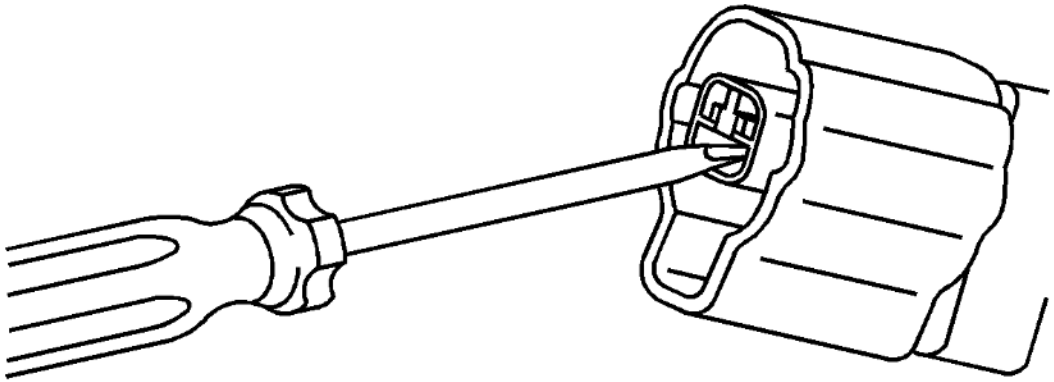

Fig. 198: Inserting Tool Into Terminal Cavity
Courtesy of GENERAL MOTORS COMPANY

5. Insert the J-38125-553 on a slight upward angle into the cavity below the terminal to be removed. Ensure that the pointed on the end of the tool is facing the bottom of the terminal and it stays in contact with the terminal until it stops on the plastic terminal retainer.

cardiagn.com

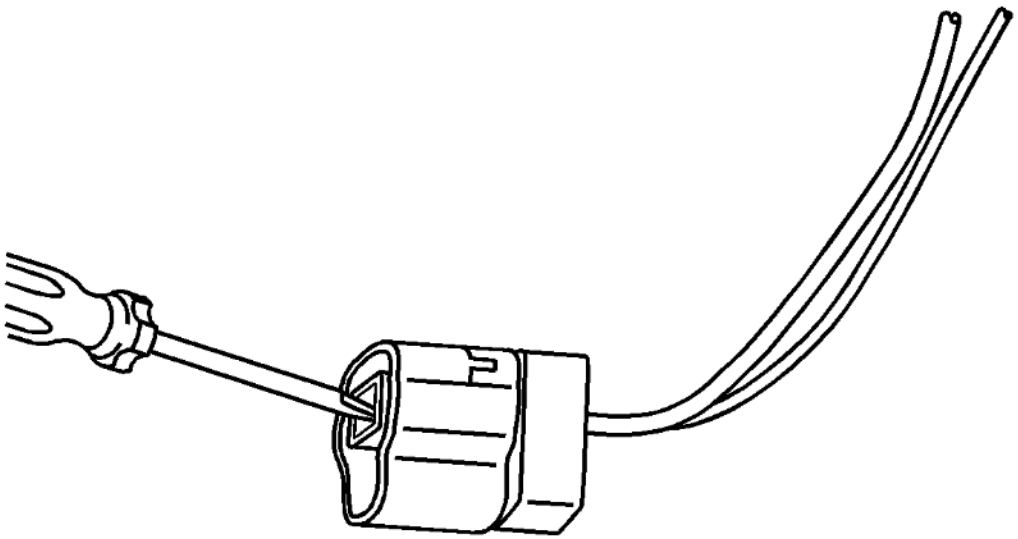

Fig. 199: Pulling Terminal Out Of Connector
Courtesy of GENERAL MOTORS COMPANY

6. Gently pry the plastic terminal retainer down and carefully pull the terminal out of the connector. Always remember never use force when pulling a terminal out of a connector. If the terminal is difficult to remove, repeat the entire procedure.
7. Repair the terminal by following the **Repairing Connector Terminals (Terminated Lead Repair)Repairing Connector Terminals (Terminal Repair)** procedure.

cardiagn.com

8. Insert the repaired terminal back into the cavity. Repeat the diagnostic procedure to verify the repair and reconnect the connector bodies.

YAZAKI CONNECTORS (16-WAY)

Special Tools

- **EL-38125-550** Terminal Release Tool Kit
- **EL-38125-580** Terminal Release Tool Kit
- **J-38125-215** Terminal Release Tool

For equivalent regional tools, refer to **Special Tools** .

Terminal Removal Procedure

cardiagn.com

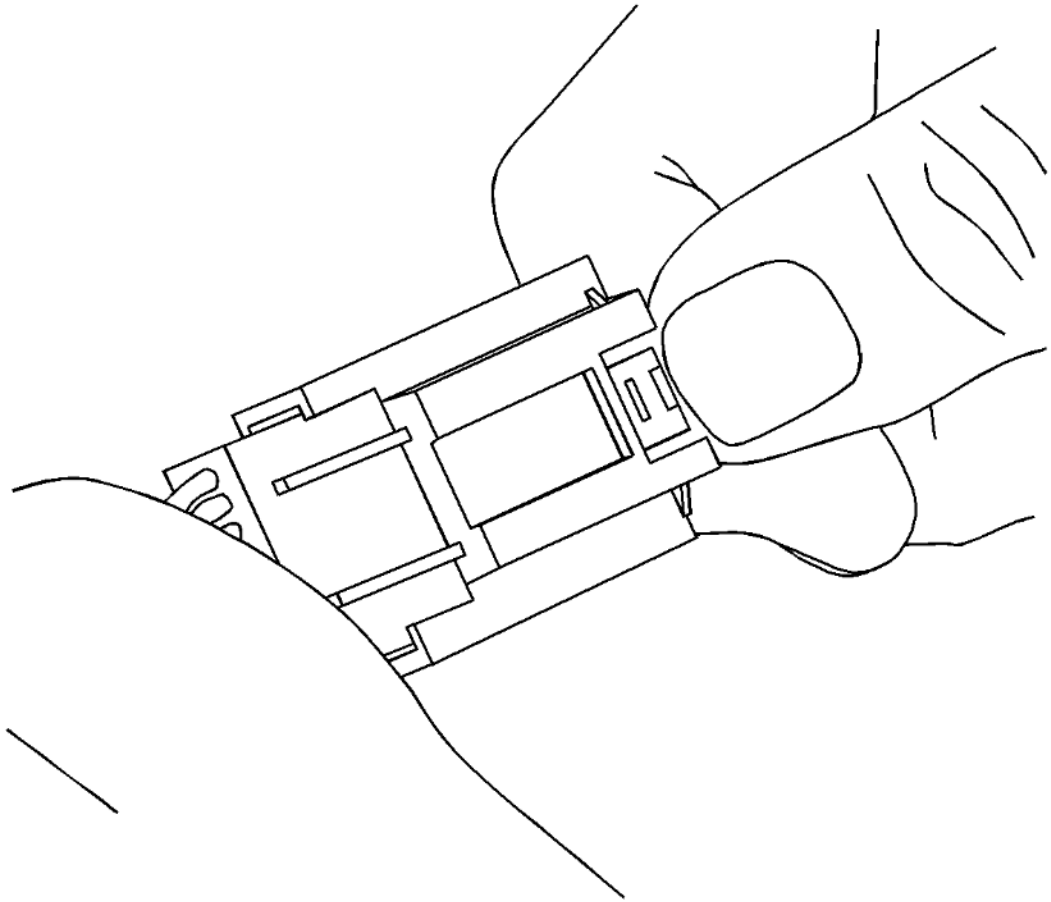

Fig. 200: Pulling Connector Halves Apart
Courtesy of GENERAL MOTORS COMPANY

1. While depressing the lock, pull the two connector halves apart.

NOTE: **The terminal position assurance (TPA) is fragile and may break if not done carefully.**

2. Use a small flat-blade tool to very carefully push the TPA towards the face of the connector on both sides of the connector.

cardiagn.com

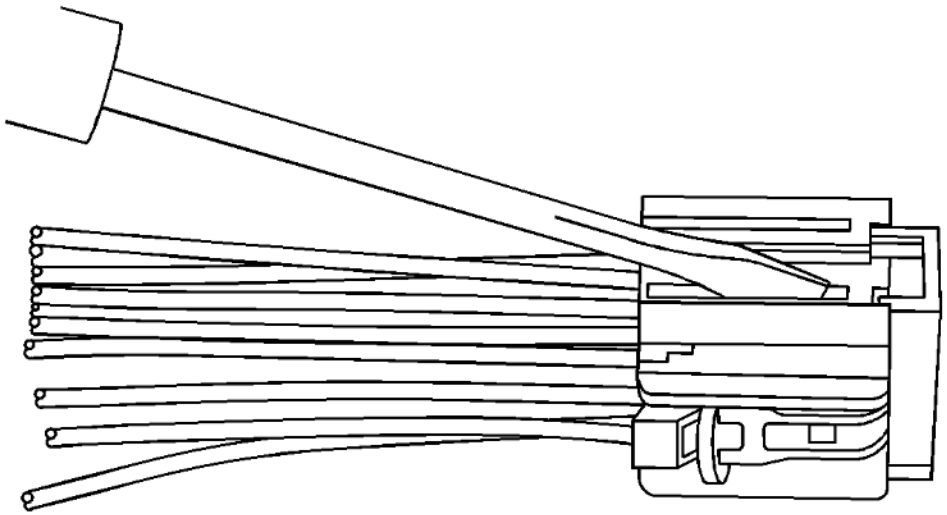

Fig. 201: Male Half Of Connector With Female Terminals
Courtesy of GENERAL MOTORS COMPANY

3. View of the male half of the connector with female terminals.

cardiagn.com

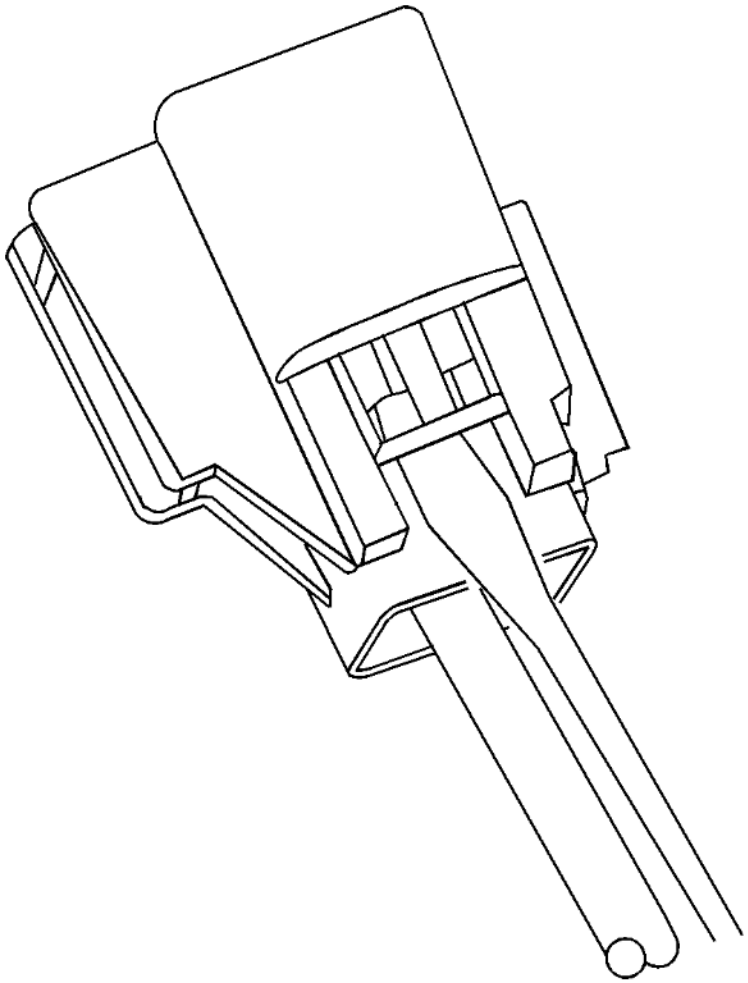

Fig. 202: Female Half Of Connector With Male Terminals
Courtesy of GENERAL MOTORS COMPANY

4. View of the female half of the connector with male terminals.
5. Use the J-38125-215 tool to release the terminals by inserting the tool into the terminal release cavity.

cardiagn.com

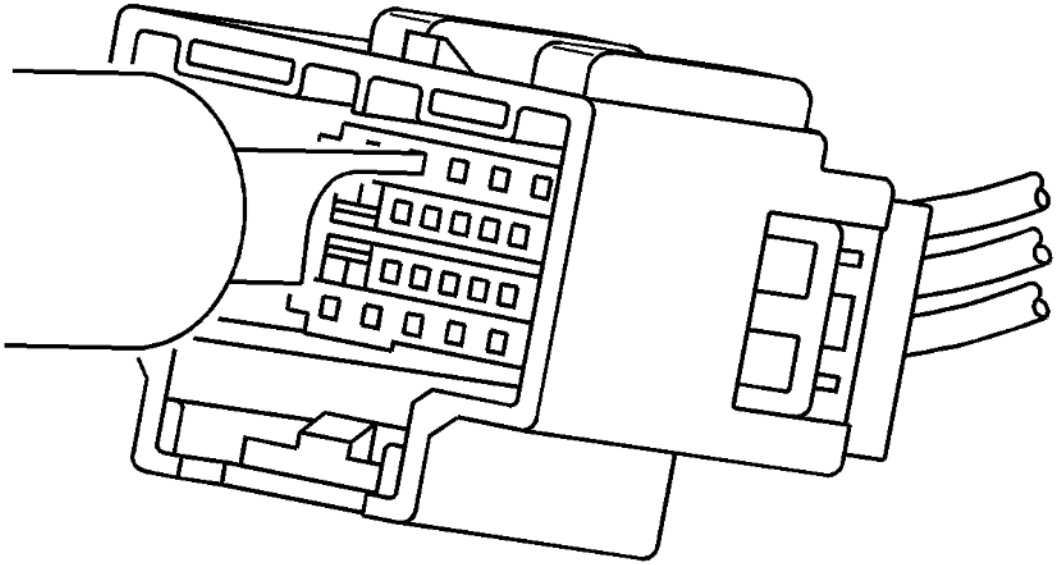

Fig. 203: Using Removal Tool On Female Half Of Connector
Courtesy of GENERAL MOTORS COMPANY

6. View of the female half of the connector with male terminals.

cardiagn.com

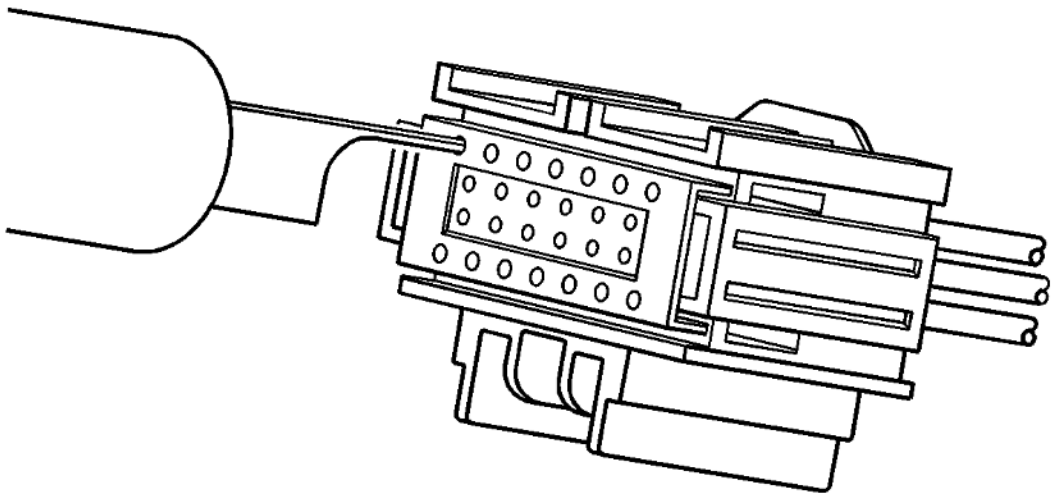

Fig. 204: Using Removal Tool On Male Half Of Connector
Courtesy of GENERAL MOTORS COMPANY

7. View of the male half of the connector with female terminals.
8. While holding the removal tool in place, gently pull the wire out of the back of the connector. Always remember never use force when pulling a terminal out of a connector.
9. Repair the terminal by following the **Repairing Connector Terminals (Terminated Lead Repair)Repairing Connector Terminals**

cardiagn.com

(Terminal Repair) procedure.

10. Insert the repaired terminal back into the cavity. Repeat the diagnostic procedure to verify the repair and reconnect the connector bodies.

REPAIRING CONNECTOR TERMINALS (TERMINATED LEAD REPAIR)

Special Tools

EL-38125-10 Splice Sleeve Crimp Tool

For equivalent regional tools, refer to **Special Tools** .

NOTE: **All repairs near the engine manifold, turbo engine and all exhaust pipes should follow the High Temperature Wiring Repairs procedures.**

For high temperature wiring repairs, refer to **High Temperature Wiring Repairs**.

Terminated leads are terminals that are crimped onto wires. The terminated lead can be used throughout the vehicle since it is designed for temperatures up to 150Â°C. The length of the wire is 450 mm.

1. Use the connector end view to identify the correct terminated lead.
2. The terminated lead package should include a DuraSeal splice sleeve. If not, use the chart to in Splicing Copper Wire Using Splice Sleeves to identify the correct DuraSeal splice sleeve, refer to **Wire to Wire Repair**.

REPAIRING CONNECTOR TERMINALS (TERMINAL REPAIR)

Special Tools

- **J-38125-580** Terminal Repair Kit
- **J-38125-6** Crimp Tool
- **J-38125-7** Crimp Tool
- **J-38125-8** Crimp Tool
- **J-38125-64** Crimp Tool
- **J-38125-101** Crimp Tool
- **J-38125-641** Crimp Tool
- **J-38125-642** Crimp Tool

cardiagn.com

- **J-38125-643** Crimp Tool

For equivalent regional tools, refer to **Special Tools** .

Use the following repair procedures to repair each type of terminal:

- For push to seat terminals, refer to **Delphi Connectors (Weather Pack)Delphi Connectors (Push To Seat)Delphi Connectors (Pull To Seat)Delphi Connectors (Micro-Pack 100W)Delphi Connectors (Micro.64)Delphi Connectors (12-Way)Delphi Connectors (Steering Gear)**.
- For pull to seat terminals, refer to **Delphi Connectors (Weather Pack)Delphi Connectors (Push To Seat)Delphi Connectors (Pull To Seat)Delphi Connectors (Micro-Pack 100W)Delphi Connectors (Micro.64)Delphi Connectors (12-Way)Delphi Connectors (Steering Gear)**.

NOTE: **The first step for all terminal repairs is to find the connector end view in SI.**

Cable Seal Terminals

1. Cut off the terminal between the core and the insulation crimp to minimize any wire loss.
2. Remove the old seal.
3. Apply the correct cable seal, per the wire gauge size, from the kit. Slide the seal back along the wire to enable removal of the insulation.
4. To minimize wire loss, remove only the insulation required.
5. Using the connector end view, determine the correct crimp tool and crimp jaw.
6. Align the seal with the end of the cable insulation.
7. Position the stripped wire and seal in the terminal.
8. Hand Crimp the core wings first.
9. Hand Crimp the insulation wings around the seal and the cable.

Unsealed Terminals

1. Cut off the terminal between the core and the insulation crimp to minimize any wire loss.
2. To minimize wire loss, remove only the insulation required.
3. Position the stripped wire in the terminal.
4. Hand Crimp the core wings first.
5. Hand Crimp the insulation wings around the cable.

cardiagn.com

Micro-Pack 100W Size Terminal

The Micro-Pack 100W connectors have small terminals that are difficult to handle and hold when crimping. In order to aid the technician when crimping these terminals, a new crimping tool was developed. The J 38125-101 (W jaw) crimping tool was developed to crimp Micro-Pack 100W terminals. The J 38125-101 (W jaw) crimping tool has a terminal holding block that will hold the terminal in place while the terminal is being crimped. After the terminal is removed from the connector perform the following procedure in order to repair Micro-Pack 100 terminals.

1. Cut the wire as close to the terminal as possible.

   NOTE: **After cutting the damaged terminal from the wire, determine if the remaining wire is long enough to reach the connector without putting a strain on the wire. If the wire is not long enough, splice a small length of the same gauge wire to the existing wire, then crimp the new terminal on the added wire.**

2. Strip 5 mm (3/16 in) of insulation from the wire.

cardiagn.com

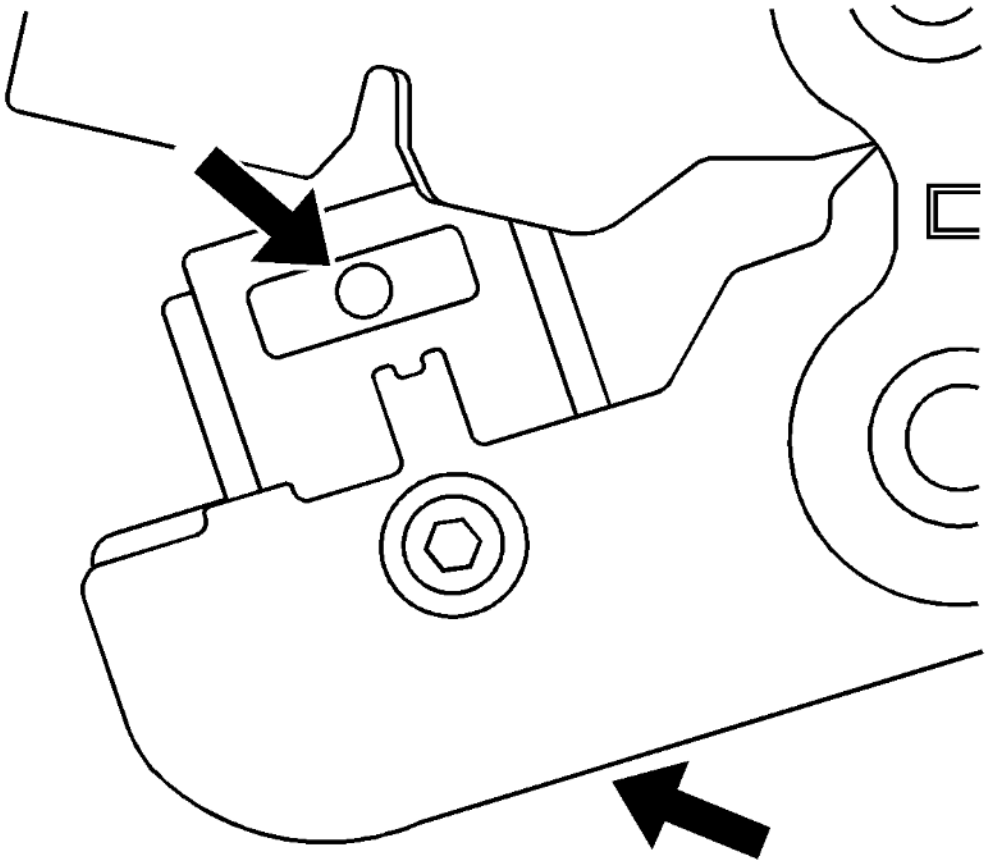

Fig. 205: Crimping Tool Spring Loaded Locator
Courtesy of GENERAL MOTORS COMPANY

3. Depress the spring loaded locator of the J 38125-101 (W jaw) crimping tool until the terminal holder is completely visible.

cardiagn.com

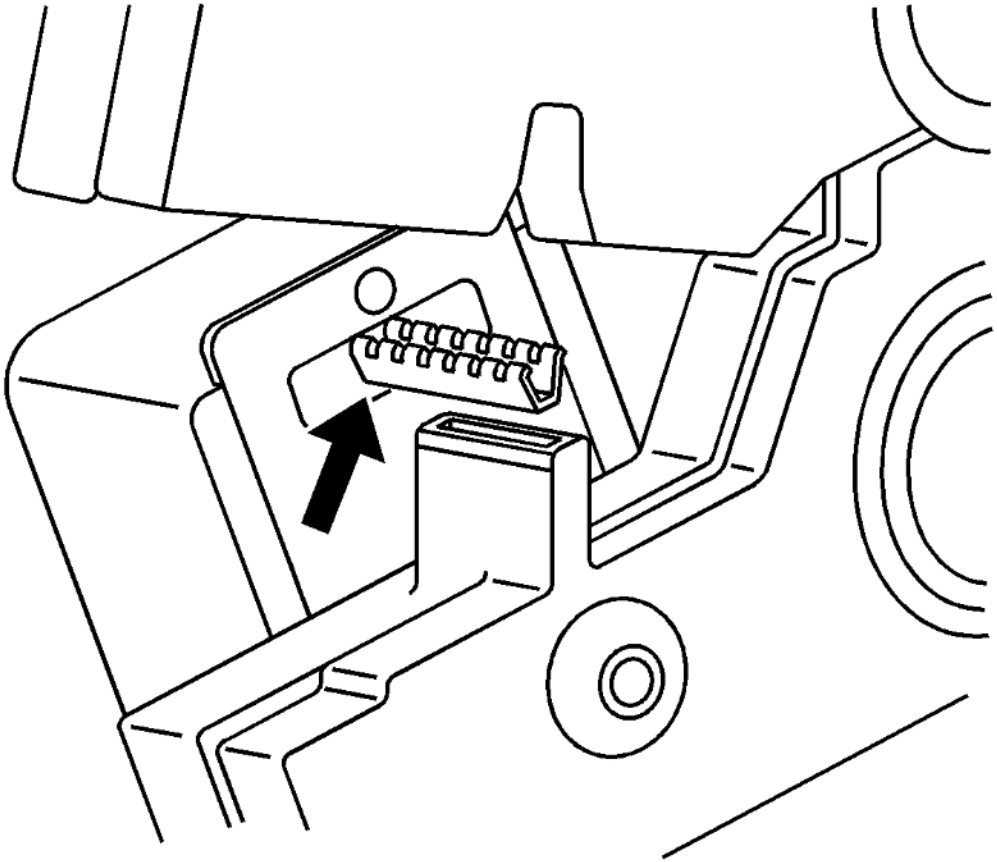

Fig. 206: Terminal In Crimping Tool
Courtesy of GENERAL MOTORS COMPANY

4. Insert the terminal into the crimp tool until the core wings are flush with the anvil on the crimp tool. Be sure that the wings are pointed toward the crimp tool former and release the spring locator. The locator will hold the terminal in place. Inspect the alignment of the terminal wings with the crimp tool former. If the terminal wings are wider than the crimp tool former, remove the terminal and bend the terminal wings in slightly.
5. Place stripped wire into terminal.

cardiagn.com

6. Crimp the new terminal to the wire. If a jam occurs, press the emergency release to open applicator.

Micro 0.64 Size Terminal

The Micro 64 connectors have small terminals that are difficult to handle and hold when crimping. In order to aid the technician when crimping these terminals, a new crimping tool was developed. The J 38125-64 (M jaw) was developed to crimp Micro 64 terminals. The J-38125-64 crimping tool has a terminal holding block that will hold the terminal in place while the terminal is being crimped. The J-38125-64 crimping tool is also designed to crimp both the wire and the insulation at the same time.

After the terminal is removed from the connector perform the following procedure in order to repair Micro 64 terminals.

NOTE: **After cutting the damaged terminal from the wire, determine if the remaining wire is long enough to reach the connector without putting a strain on the wire. If the wire is not long enough, splice a small length of the same gauge wire to the existing wire, then crimp the new terminal on the added wire.**

1. Cut the wire as close to the damaged terminal as possible.
2. Strip 5 mm (3/16 in) of insulation from the wire.

cardiagn.com

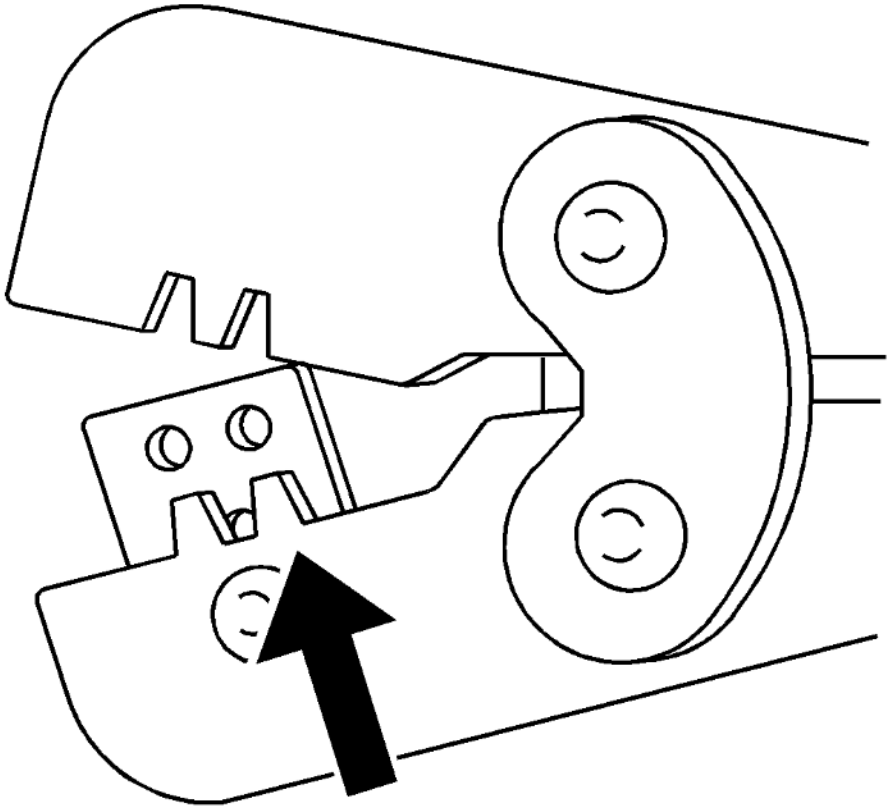

Fig. 207: Crimping Tool Spring Loaded Locator
Courtesy of GENERAL MOTORS COMPANY

3. Depress the spring loaded locator of the crimping tool until the terminal holder is completely visible.

cardiagn.com

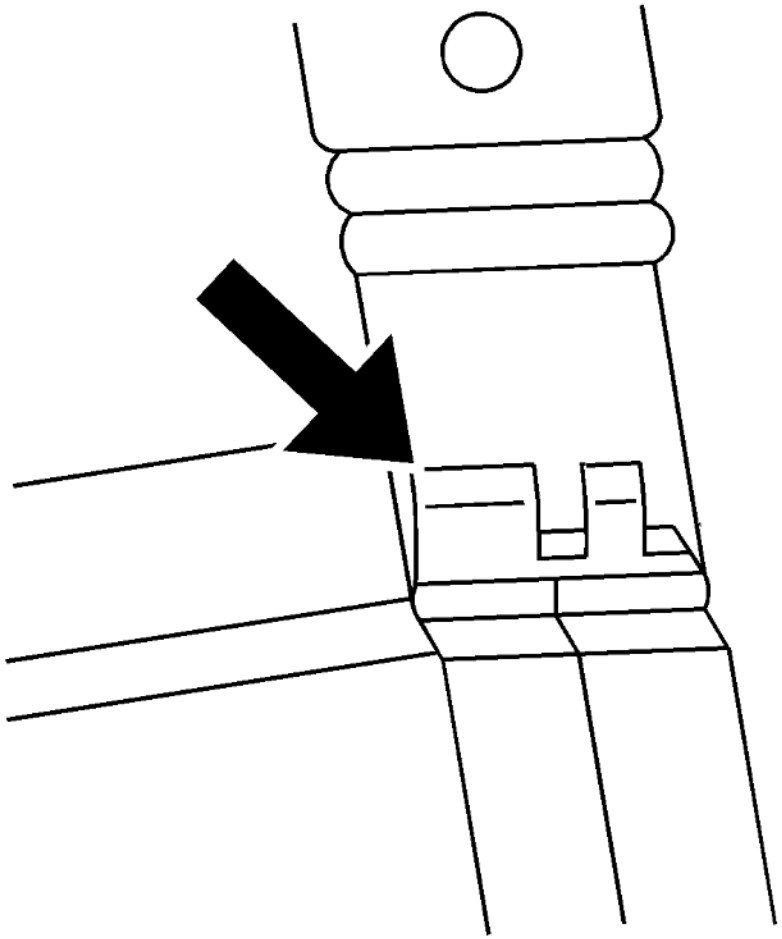

Fig. 208: Inserting Terminal Into Terminal Holder
Courtesy of GENERAL MOTORS COMPANY

4. Insert terminal into the appropriate terminal holder until it hits bottom and stops. The correct terminal holder is determined by the wire size. Also ensure that the terminals wings are pointing towards the former on the tool and the release locator.
5. Insert the stripped cable into the terminal. Insulation should be visible on both sides of the terminal insulation wings.
6. Compress the handles until the ratchet automatically releases.

cardiagn.com

7. Place the terminal into the appropriate cavity and assemble the connector.

TERMINAL REMOVAL

Special Tools

- **EL-38125-550** Terminal Release Tool Kit
- **EL-38125-580** Terminal Release Tool Kit
- **EL-35616** Terminal Test Probe Kit

For equivalent regional tools, refer to **Special Tools** .

NOTE: **All repairs near the engine manifold, turbo engine and all exhaust pipes should follow the High Temperature Wiring Repair procedures.**

1. Find the appropriate connector end view within the connector end view section. The connector end view has the following information:
   - Diagnostic probe tool
   - Terminal release tool
   - Terminal/terminated lead part numbers

   NOTE: **Not using the proper test kit probe may cause damage to the terminal(s) that are probed.**

2. Determine if a terminal is damaged.
   1. Locate the diagnostic probe tool from the connector end view. The connector end view describes the color and part number to help the technician find and use the correct tool.
   2. Connect the probe tool to the Digital Multimeter.
   3. Insert the probe tool into the cavity and follow the procedures from the **Troubleshooting with a Digital Multimeter** .
3. Disconnect the connector body to perform the repair.
4. Use the following procedure to remove the terminal from the connector body.

   NOTE: **Several procedures for specific connector bodies are called out in the Wiring Repairs section.**

   1. The terminal position assurance (TPA) and connector position assurance (CPA) should be removed before releasing the terminal for the connector body.

cardiagn.com

2. Look at the connector end view to locate the cavity of the damaged terminal and find the proper terminal release tool from the terminal release tool kit.

NOTE: **Using the incorrect terminal release tool can damage the connector body.**

NOTE: **Some terminals have a lever that must be disengaged before the terminal can be released.**

3. Insert the terminal release tool into the cavity.

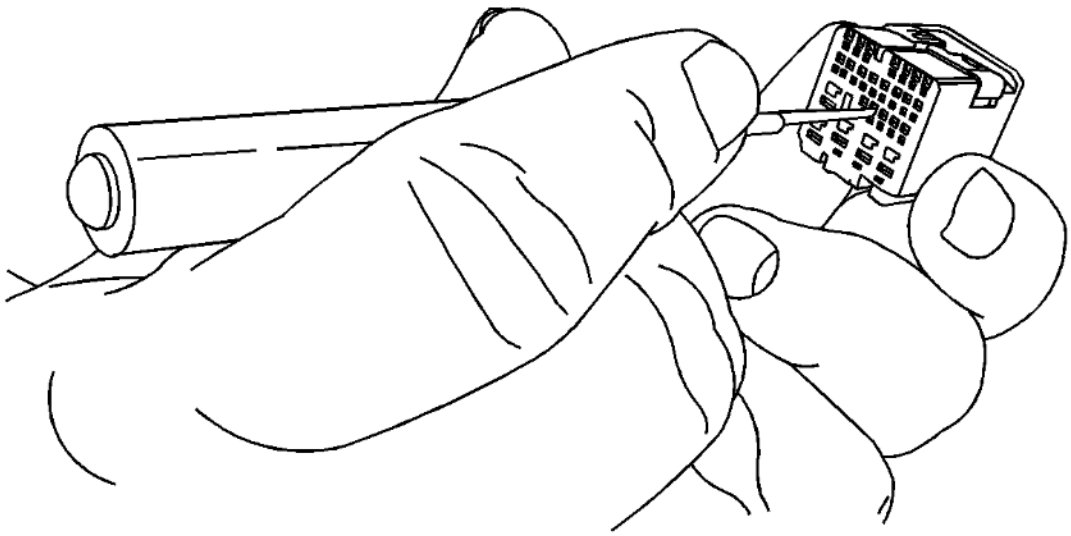

cardiagn.com

Fig. 209: Holding Removal Tool In Place, Gently Pull Wire Out Of Back Of Connector
Courtesy of GENERAL MOTORS COMPANY

5. Gently pull the wire out of the back of the connector.
6. Repair the terminal by following the **Repairing Connector Terminals (Terminated Lead Repair)Repairing Connector Terminals (Terminal Repair)** procedure.
7. Insert the repaired terminal back into the cavity. Repeat the diagnostic procedure to verify the repair and reconnect the connector bodies.

RELAY REPLACEMENT (ATTACHED TO WIRE HARNESS)

Removal Procedure

cardiagn.com

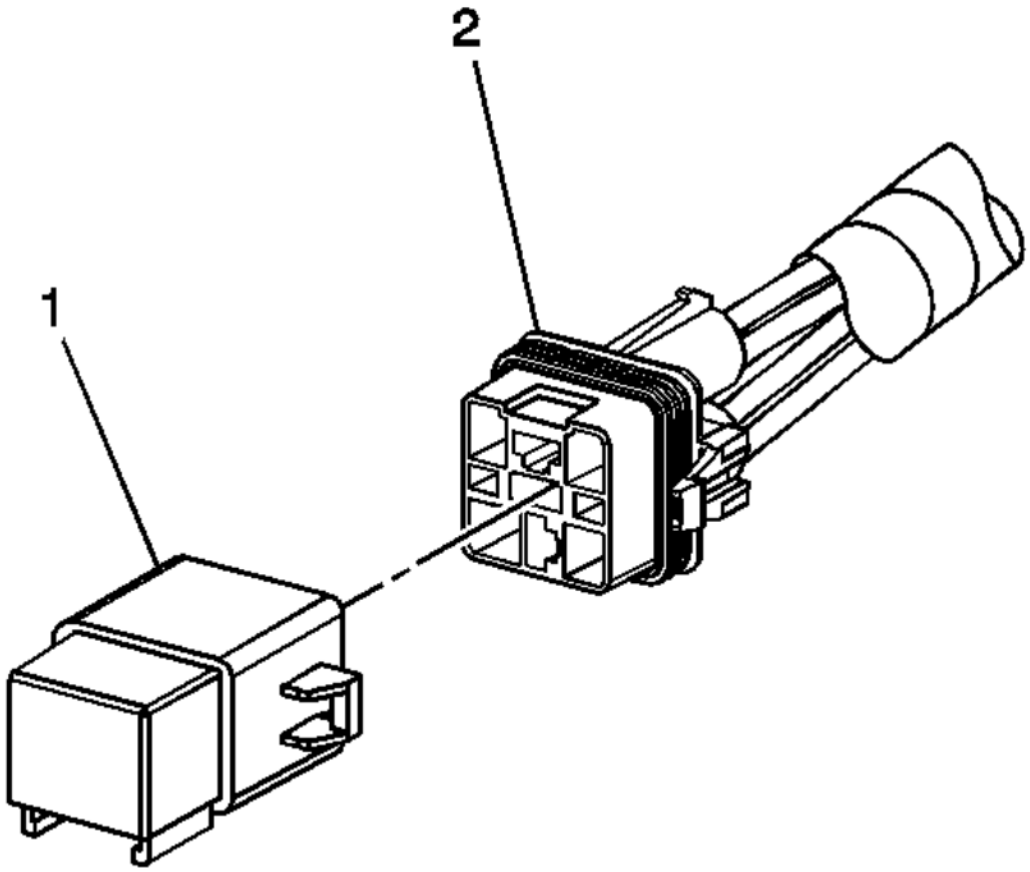

Fig. 210: Relay And Wire Harness Connector
Courtesy of GENERAL MOTORS COMPANY

1. Locate the relay. Refer to the **Master Electrical Component List** to locate the relay in the vehicle.
2. Remove any fasteners which hold the relay in place.
3. Remove any connector position assurance (CPA) devices or secondary locks.

cardiagn.com

NOTE: **Use care when removing a relay in a wiring harness when the relay is secured by fasteners or tape.**

4. Separate the relay (1) from the wire harness connector (2).

Installation Procedure

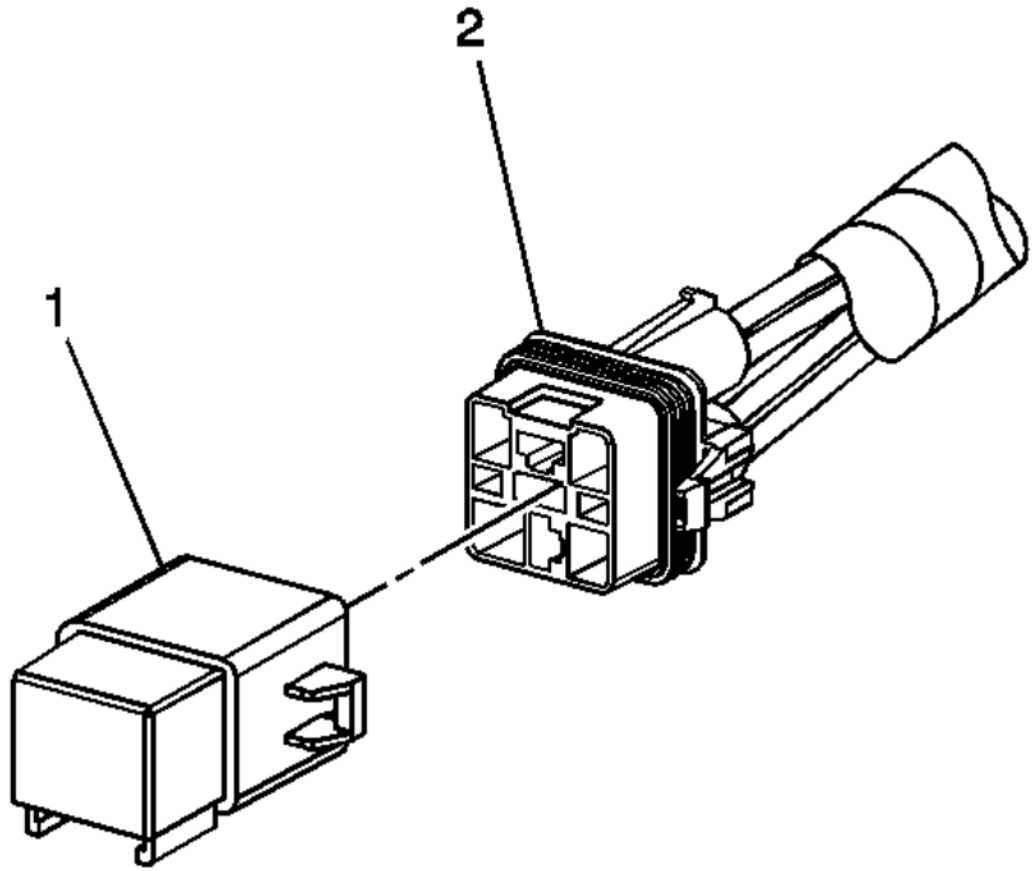

Fig. 211: Relay And Wire Harness Connector
Courtesy of GENERAL MOTORS COMPANY

cardiagn.com

1. Connect the relay (1) to the wire harness connector (2).
2. Install any connector position assurance (CPA) devices or secondary locks.
3. Install the relay using any fasteners or tape that originally held the relay in place.

RELAY REPLACEMENT (WITHIN AN ELECTRICAL CENTER)

Special Tools

EL-43244 Relay Puller Pliers

Removal Procedure

1. Remove the electrical center cover.

NOTE:

- **Always note the orientation of the relay.**
- **If equipped with a notch style relay; observe the location of the notch on the old relay to verify the new relay is installed with the notch in the same location.**
- **Ensure that the electrical center is secure, as not to put added stress on the wires or terminals.**

2. Locate the relay. Refer to **Electrical Center Identification Views** **Electrical Center Identification Views** to locate the electrical center where the relay exists.

cardiagn.com

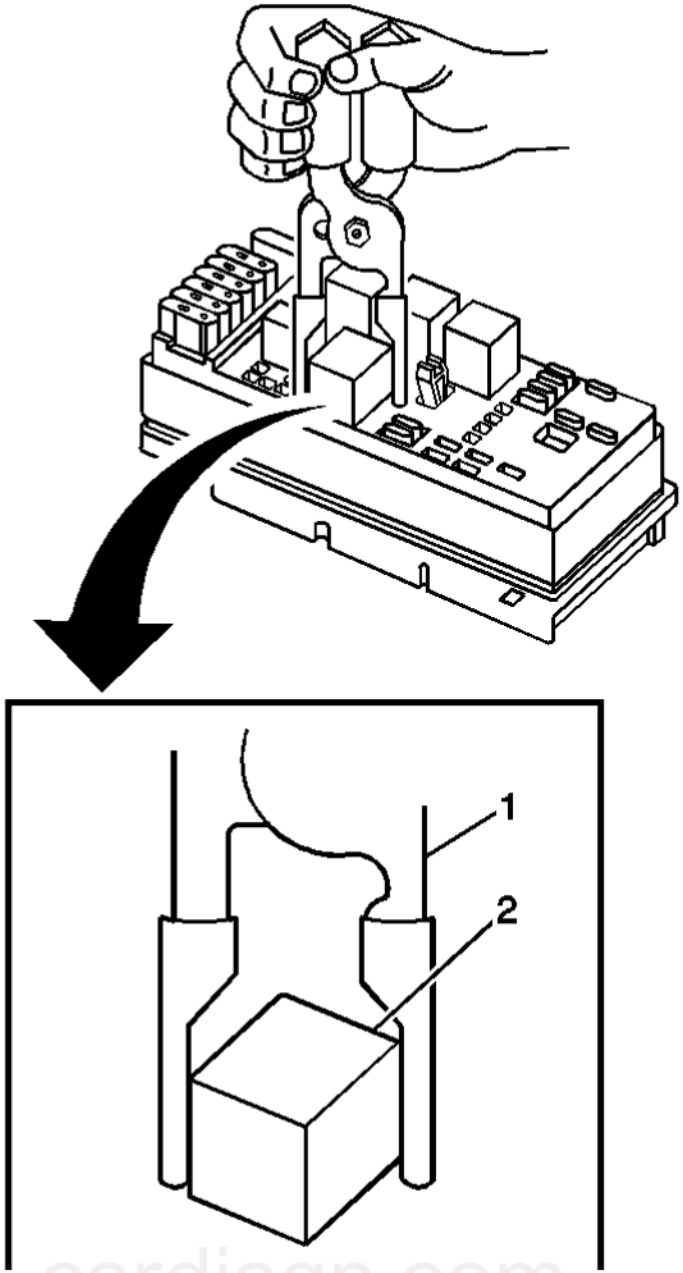

cardiagn.com

Fig. 212: Removing/Installing Relay
Courtesy of GENERAL MOTORS COMPANY

3. Using the EL-43244 (1) position the tool on opposing corners of the relay (2).

CAUTION: Use EL-43244 to pull the relay straight out from the electrical center terminals. The use of pliers or a flat bladed tool could damage the electrical center.

4. Remove the relay (2) from the electrical center.

Installation Procedure

cardiagn.com

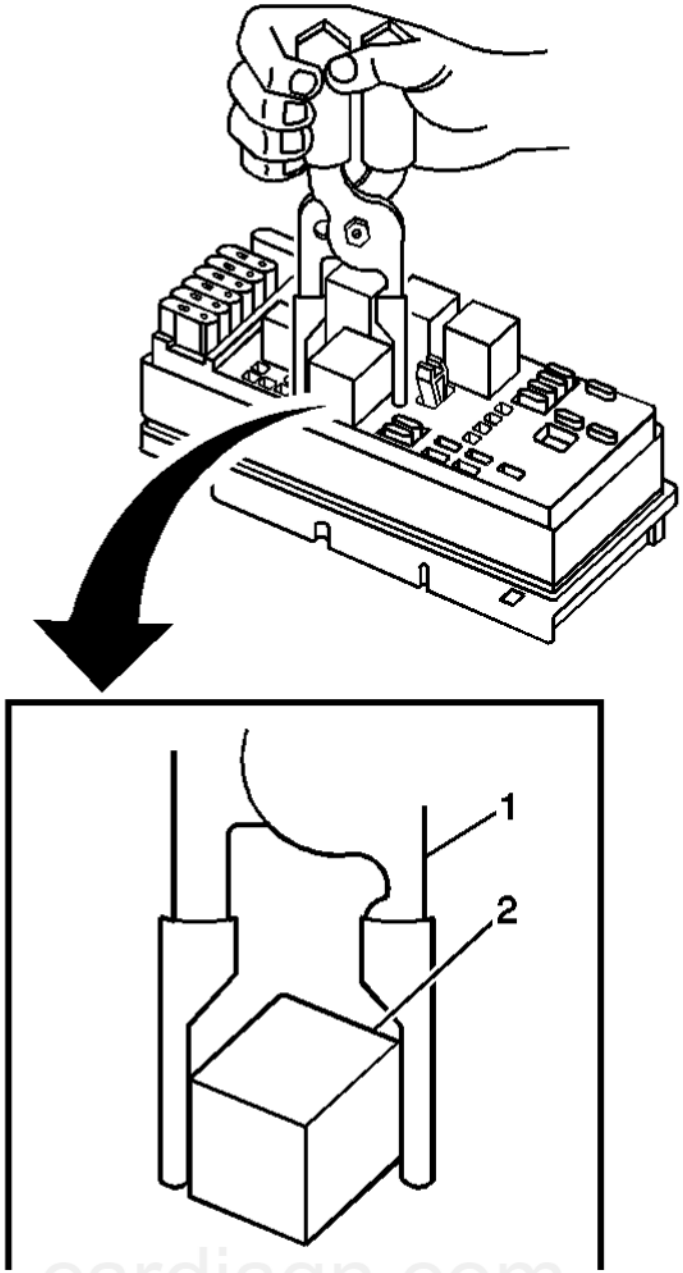

cardiagn.com

Fig. 213: Removing/Installing Relay
Courtesy of GENERAL MOTORS COMPANY

1. Install the relay (2) in the same position as removed.
2. Install the electrical center cover.

GROUND REPAIR

Electrical Grounds

Proper electrical system function relies on secure, positive, corrosion-free ground connections. Loose, stripped, or corroded connections increase the possibility of improper system function and loss of module communication. These conditions may also lead to unnecessary repairs and component replacements.

In general, electrical ground connections are accomplished using one, or a combination of, three attachment methods:

- Welded M6 stud and nut
- Welded M6 nut and bolt
- Welded M8 nut and bolt

CAUTION: Use GM approved replacement fasteners with conductive finish for electrical ground repair.

Determine which attachment method is used, and carry out the appropriate repair.

M6 Weld Stud Replacement

1. Select a location adjacent the damaged or missing M6 ground stud having 20 mm (0.79 in) clearance behind the panel surface and 20 mm (0.79 in) clearance surrounding the M6 rivet stud flange.
2. Using GM approved residue-free solvent or equivalent, remove any grease from the repair site and allow to dry.

   NOTE: Ensure 20 mm (0.79 in) clearance is maintained behind the panel to be drilled.

3. Drill a 10 mm (0.40 in) diameter hole through the panel.
4. Carefully remove paint and primer from the area surrounding the rivet stud flange until bare metal is visible.

   CAUTION: Use GM approved replacement fasteners with conductive finish for electrical ground repair.

cardiagn.com

5. Select a replacement conductive M6 rivet stud. Reference the GM parts catalog for the correct part number and application.
6. Using a rivet stud installer, install the replacement conductive M6 rivet stud.
7. Ensure the new rivet stud is securely fastened, with no detectable movement.

NOTE: **The rivet stud and surrounding panel area must be properly refinished prior to the installation of the ground terminal and nut to maintain positive electrical grounding.**

8. Completely wrap the threads of the rivet stud with painters tape or equivalent.
9. Refinish the repair area using an anti-corrosion primer.
10. Allow the refinished repair area to cure sufficiently before removing the protective material applied to the rivet stud threads.
11. Remove the painters tape or equivalent from the rivet stud threads.
12. Using GM approved residue-free solvent or equivalent, thoroughly clean the rivet stud threads to remove any adhesive and allow to dry.
13. Carefully remove any corrosion from the electrical ground wire terminal. Refer to **Testing for Intermittent Conditions and Poor Connections**
14. Using a small brush, apply Dielectric Lubricant GM P/N 12377900 (Canadian P/N 10953529) to the new conductive M6 rivet stud threads.
15. Install the ground terminal to the new rivet stud.
16. Select a new, conductive M6 nut. Reference the GM parts catalog for the correct part number and application.

CAUTION: **Refer to Fastener Caution**

17. Install the conductive M6 nut and tighten to 8 N.m (71 lb in).
18. Check for proper system operation.

M6 Weld Nut

CAUTION: **Use GM approved replacement fasteners with conductive finish for electrical ground repair.**

1. If the M6 weld nut at the electrical ground location is damaged or stripped, a new, conductive self-threading M7 bolt may be used to secure the ground terminal. Reference the GM parts catalog for the correct part number and application.
2. Using GM approved residue-free solvent or equivalent, remove any grease from the surface surrounding the weld nut and allow to dry.
3. Remove any loose metal particles from the damaged or stripped weld nut with a stiff brush.
4. Using a small brush, apply Dielectric Lubricant GM P/N 12377900 (Canadian P/N 10953529) to the new, conductive, self-threading M7 bolt threads.

cardiagn.com

5. Carefully remove any corrosion from the electrical ground terminal. Refer to **Testing for Intermittent Conditions and Poor Connections**
6. Install the electrical ground terminal to the new, conductive M7 bolt.

CAUTION: Refer to Fastener Caution

7. Install the conductive M7 bolt and tighten to 9 N.m (80 lb in).
8. Check for proper system operation.

M6 Weld Nut (Alternative Repair)

CAUTION: Use GM approved replacement fasteners with conductive finish for electrical ground repair.

1. If the electrical ground location is accessible from both sides of the panel, a conductive M6 bolt and a conductive M6 nut may be used to secure the electrical ground terminal. Reference the GM parts catalog for the correct part number and application.
2. Select a location adjacent the damaged M6 weld nut having 20 mm (0.79) clearance behind the panel surface and 20 mm (0.79 in) clearance surrounding the new electrical ground site.
3. Using GM approved residue-free solvent or equivalent, remove any grease from the surface surrounding the ground location and allow to dry.

NOTE: Ensure 20 mm (0.79 in) clearance is maintained behind the panel to be drilled.

4. Drill a 10 mm (0.40 in) diameter hole through the panel.
5. Carefully remove paint and primer from the area surrounding the new ground site until bare metal is visible.
6. Using a small brush, apply Dielectric Lubricant GM P/N 12377900 (Canadian P/N 10953529) to the new, conductive M6 bolt threads.
7. Carefully remove any corrosion from the electrical ground terminal. Refer to **Testing for Intermittent Conditions and Poor Connections**
8. Install the electrical ground terminal and new, conductive M6 bolt to the ground location.

CAUTION: Refer to Fastener Caution

9. Install the conductive M6 nut and tighten to 8 N.m (71 lb in).

NOTE: The repair area must be properly refinished to maintain positive electrical grounding.

10. Refinish the repair area using an anti-corrosion primer.
11. Check for proper system operation.

cardiagn.com

M8 Weld Nut

CAUTION: Use GM approved replacement fasteners with conductive finish for electrical ground repair.

1. If the M8 weld nut electrical ground location is accessible from both sides of the panel, a conductive M8 bolt and a conductive M8 nut may be used to secure the ground terminal. Reference the GM parts catalog for the correct part number and application.
2. Select a location adjacent to M8 weld nut having 20 mm (0.79 in) clearance behind the panel surface and 20 mm (0.79 in) clearance surrounding the new electrical ground site.
3. Using GM approved residue-free solvent or equivalent, remove any grease from the surface surrounding the ground location and allow to dry.

NOTE: Ensure 20 mm (0.79 in) clearance is maintained behind the panel to be drilled.

4. Drill a 10 mm (0.40 in) diameter hole through the panel.
5. Carefully remove paint and primer from the area surrounding the new ground site until bare metal is visible.
6. Using a small brush, apply Dielectric Lubricant GM P/N 12377900 (Canadian P/N 10953529) to the new, conductive M8 bolt threads.
7. Carefully remove any corrosion from the electrical ground terminal. Refer to **Testing for Intermittent Conditions and Poor Connections**
8. Install the electrical ground terminal and new, conductive M8 bolt to the ground location.

CAUTION: Refer to Fastener Caution

9. Install the conductive M8 nut and tighten to 22 N.m (16 lb ft).

NOTE: The repair area must be properly refinished to maintain positive electrical grounding.

10. Refinish the repair area using an anti-corrosion primer.
11. Check for proper system operation.

M8 Weld Nut (Alternative Repair)

CAUTION: Use GM approved replacement fasteners with conductive finish for electrical ground repair.

1. If the M8 weld nut electrical ground location is not accessible from both sides of the panel, a conductive M6 rivet stud and a conductive M6 nut may be used to secure the ground terminal. Reference the GM parts catalog for the correct part number and application.
2. Select a location adjacent the damaged M8 weld nut having 20 mm (0.79 in) clearance behind the panel surface and 20 mm (0.79 in) clearance

cardiagn.com

surrounding the new, conductive M6 rivet stud flange.

3. Using GM approved residue-free solvent or equivalent, remove any grease from the repair site and allow to dry.

NOTE: **Ensure 20 mm (0.79 in) clearance is maintained behind the panel to be drilled.**

4. Drill a 10 mm (0.40 in) diameter hole through the panel.
5. Carefully remove paint and primer from the area surrounding the rivet stud flange until bare metal is visible.
6. Using a rivet stud installer, install the replacement conductive M6 rivet stud.
7. Ensure the new rivet stud is securely fastened, with no detectable movement.

NOTE: **The rivet stud and surrounding panel area must be properly refinished prior to the installation of the ground terminal and nut to maintain positive electrical grounding.**

8. Completely wrap the threads of the rivet stud with painters tape or equivalent.
9. Refinish the repair area using an anti-corrosion primer.
10. Allow the refinished repair area to cure sufficiently before removing the protective material applied to the rivet stud threads.
11. Remove the painters tape or equivalent from the rivet stud threads.
12. Using GM approved residue-free solvent or equivalent, thoroughly clean the rivet stud threads to remove any adhesive and allow to dry.
13. Carefully remove any corrosion from the electrical ground wire terminal. Refer to **Testing for Intermittent Conditions and Poor Connections**
14. Using a small brush, apply Dielectric Lubricant GM P/N 12377900 (Canadian P/N 10953529) to the new conductive M6 rivet stud threads.
15. Install the ground terminal to the new, conductive M6 rivet stud.

CAUTION: **Refer to Fastener Caution**

16. Install the conductive M6 nut and tighten to 8 N.m (71 lb in).
17. Check for proper system operation.

Securing Loose Electrical Ground Connections

If the electrical ground connection is loose and the ground attachments are not damaged, properly securing the loose electrical ground may be all that is necessary. Carry out the following procedure to secure loose electrical ground connections.

cardiagn.com

CAUTION: Use GM approved replacement fasteners with conductive finish for electrical ground repair.

1. Using GM approved residue-free solvent or equivalent, thoroughly clean the ground stud threads and allow to dry.
2. Carefully remove any corrosion from the electrical ground wire terminal. Refer to **Testing for Intermittent Conditions and Poor Connections**
3. Using a small brush, apply Dielectric Lubricant GM P/N 12377900 (Canadian P/N 10953529) to the ground stud threads.
4. Install the ground wire terminal to the ground stud.

CAUTION: Refer to Fastener Caution

5. Install the appropriate conductive nut.
   - Conductive M6 nut: Tighten to 8 N.m (71 lb in)
   - Conductive M8 nut: Tighten to 22 N.m (16 lb ft)
   - Conductive M10 nut: Tighten to 45 N.m (33 lb ft)
6. Check for proper system operation.

UNDERHOOD ELECTRICAL CENTER OR JUNCTION BLOCK REPLACEMENT

cardiagn.com

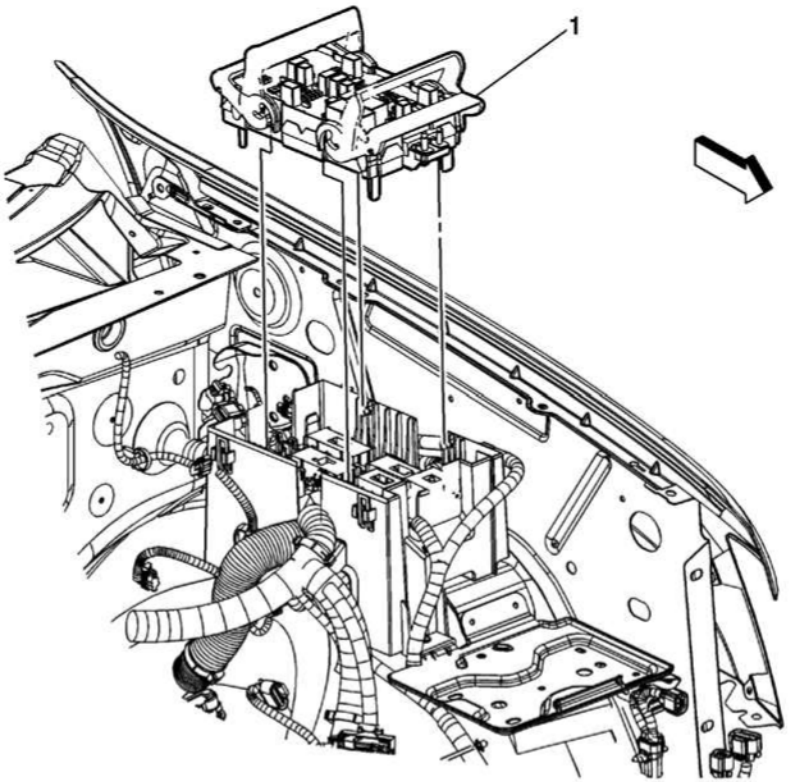

Fig. 214: Underhood Electrical Center/Junction Block
Courtesy of GENERAL MOTORS COMPANY

Callout	Component Name
Preliminary Procedure 1. Disconnect the battery negative cable. Refer to **Battery Negative Cable Disconnection and Connection (Dual Battery)** **Battery Negative Cable Disconnection and Connection (Single Battery)** . 2. Remove the auxiliary battery positive cable if equipped. Refer to **Auxiliary Battery Positive Cable Replacement - Battery to Battery Relay (9C1)** 3. Remove the left front fender rear upper brace. Refer to **Front Fender Rear Upper Brace Replacement**	
1	Underhood Electrical Center Junction Block

cardiagn.com

Callout	Component Name
	Procedure 1. Remove the cover. 2. Remove the battery cable junction block nut and remove the cable from the junction block. 3. Release the locks securing the junction block handles. 4. Rotate both handles upward disengaging the junction block from the base and the connectors. 5. Lift the junction block away from the base and remove it from the vehicle.

UNDERHOOD ELECTRICAL CENTER OR JUNCTION BLOCK BRACKET REPLACEMENT

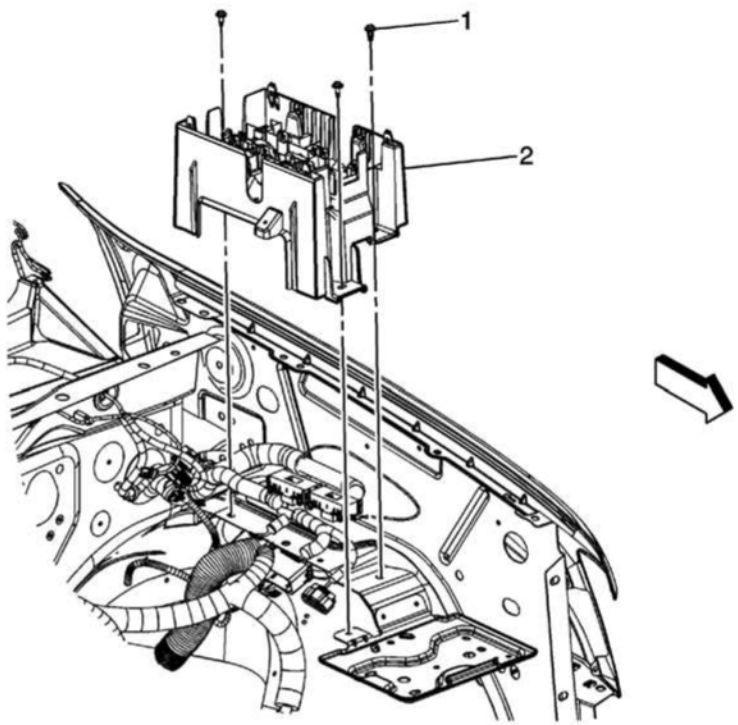

Fig. 215: Underhood Electrical Center/Junction Block Bracket And Screws
Courtesy of GENERAL MOTORS COMPANY

cardiagn.com

Callout	Component Name
Preliminary Procedure Remove the underhood electrical center junction block. Refer to **Underhood Electrical Center or Junction Block Replacement**.	
1	Underhood Electrical Center Junction Block Bolt (Qty: 3) **CAUTION:** **Refer to** **Fastener Caution** . **Tighten** 9 N.m (80 lb in)
2	Underhood Electrical Center Junction Block **Procedure** Unclip and reposition wiring harnesses and connectors from the junction block bracket as necessary.

INSTRUMENT PANEL WIRING HARNESS JUNCTION BLOCK REPLACEMENT

cardiagn.com

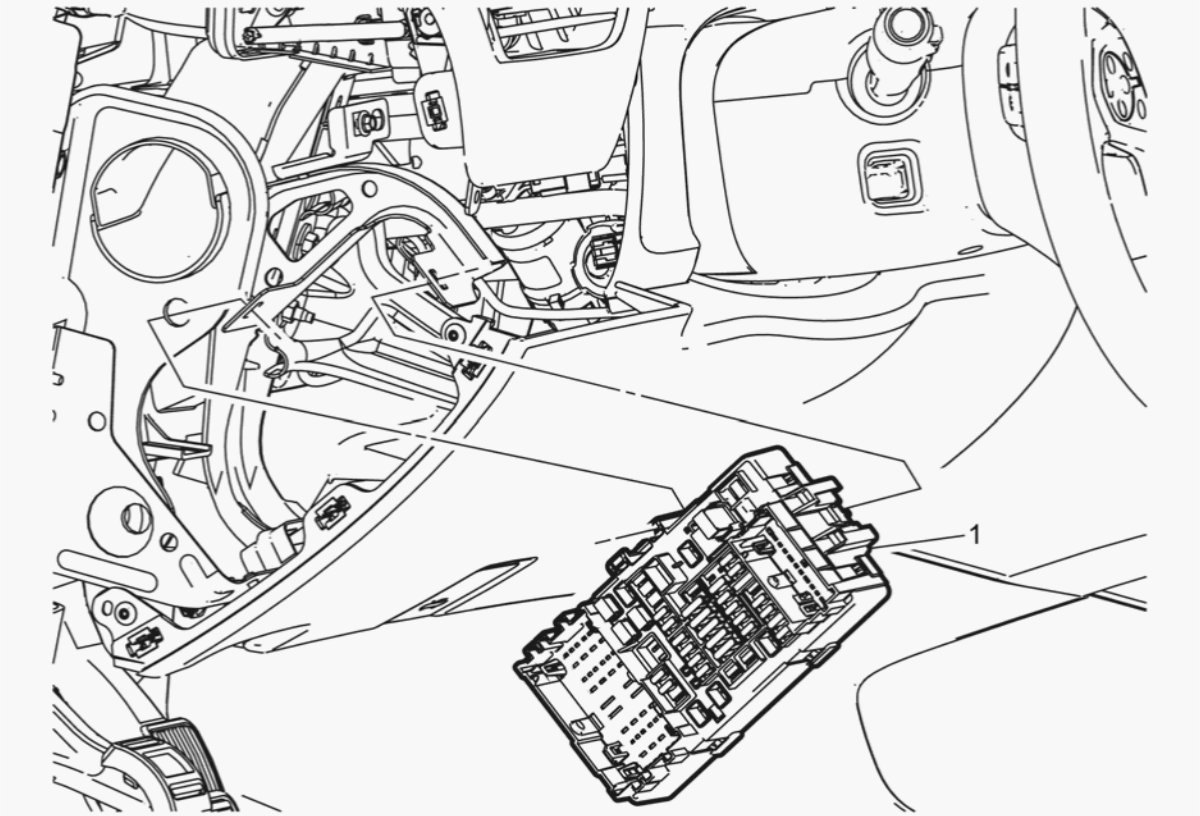

Fig. 216: Instrument Panel Wiring Harness Junction Blocks
Courtesy of GENERAL MOTORS COMPANY

Callout	Component Name
Preliminary Procedure Remove the instrument panel fuse block access hole cover. Refer to **Instrument Panel Fuse Block Access Hole Cover Replacement (Chevrolet / GMC)** **Instrument Panel Fuse Block Access Hole Cover Replacement (Cadillac)** .	
1	Instrument Panel Wiring Harness Junction Block **NOTE:** **Left side instrument panel wiring harness**

cardiagn.com

Callout	Component Name
	junction block shown, right side similar. **Procedure** 1. Disconnect all electrical connections. 2. Release the two integral retainers on the block from the instrument panel carrier tabs.

BODY WIRING HARNESS JUNCTION BLOCK REPLACEMENT

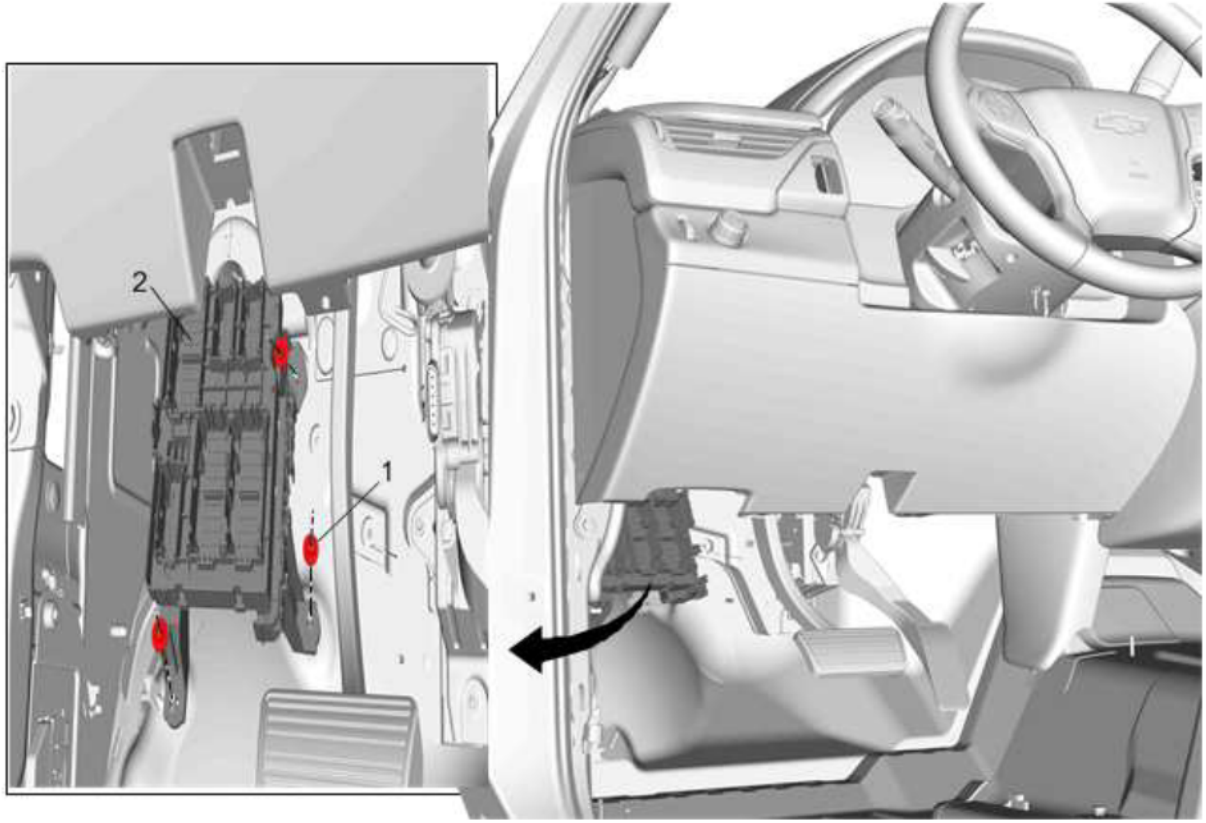

cardiagn.com

Fig. 217: Body Wiring Harness Junction Block
Courtesy of GENERAL MOTORS COMPANY

Callout	Component Name
Preliminary Procedure 1. Disconnect the negative battery cable. Refer to **Battery Negative Cable Disconnection and Connection (Dual Battery)** **Battery Negative Cable Disconnection and Connection (Single Battery)** 2. Remove the cover. 3. Disconnect the electrical connectors.	
1	Body Harness Junction Block Nut (3) **CAUTION:** **Refer to Fastener Caution .** **Tighten** 7 N.m (62 lb in)
2	Body Harness Junction Block **Procedure** 1. Disconnect any remaining electrical connectors under the fuse block. 2. Remove the block from the vehicle.

ROOF WIRING HARNESS REPLACEMENT (CHEVROLET, GMC)

cardiagn.com

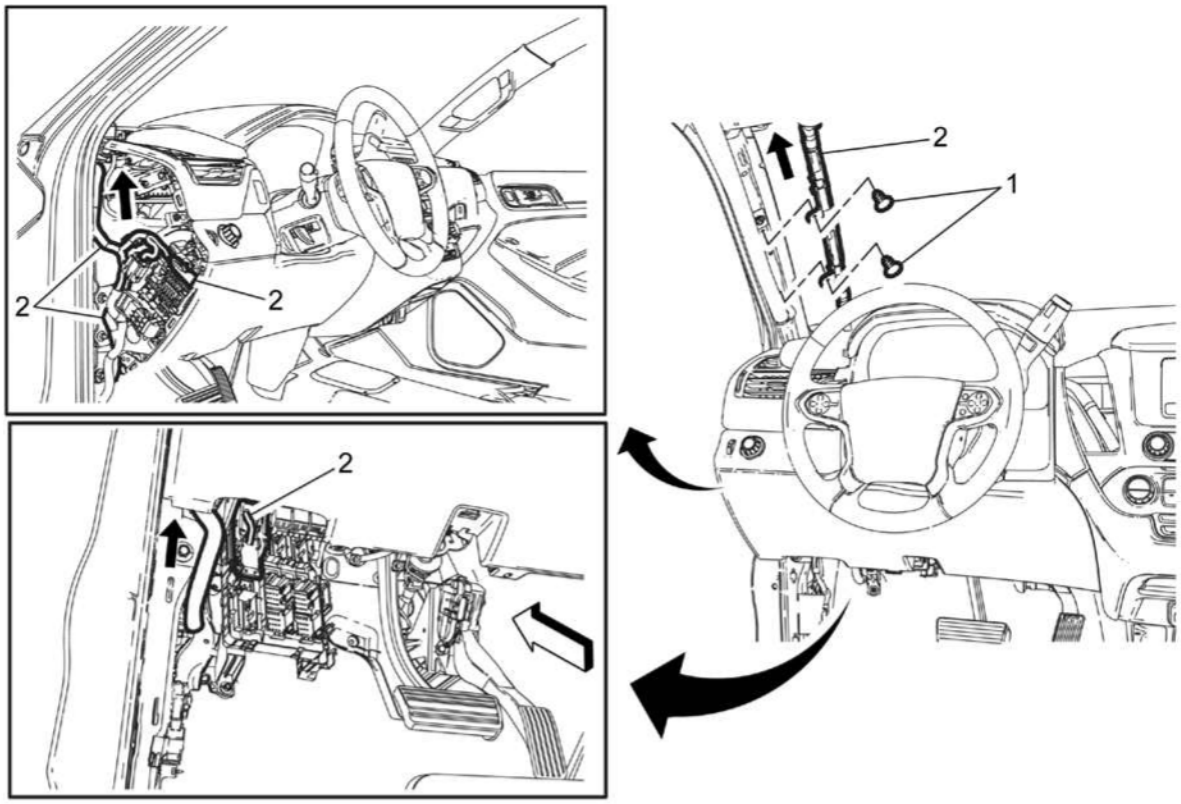

Fig. 218: Roof Wiring Harness (Chevrolet, GMC)
Courtesy of GENERAL MOTORS COMPANY

Callout	Component Name
WARNING: **Do not attempt to repair or alter the head impact energy-absorbing material glued to the**	

cardiagn.com

Callout	Component Name
headliner or to the garnish trims. If the material is damaged, replace the headliner and/or the garnish trim. Failure to do so could result in personal injury. CAUTION: If a vehicle is equipped with a head curtain inflator module ensure that the inflator module and tether are undamaged. If tether or curtain airbag are damaged in any way, they must be replaced.	

cardiagn.com

Callout	Component Name
CAUTION: **Use care when working around the head curtain inflator module. Sharp tools may puncture the curtain airbag. If the head curtain inflator module is damaged in any way, it must be replaced.**	
Preliminary Procedures	
	1. Disable the SIR system. Refer to **SIR Disabling and Enabling** .
	2. Remove the left front side door sill garnish molding. Refer to **Front Side Door Sill Garnish Molding Replacement**
	3. Remove the left instrument panel fuse block access hole cover. Refer to **Instrument Panel Fuse Block Access Hole Cover Replacement (Chevrolet / GMC)**
	4. Windshield Defroster Nozzle Grille. Refer to **Windshield Defroster Nozzle Grille Replacement (Chevrolet / GMC)**
	5. Remove the instrument panel outer air outlet left side. Refer to **Instrument Panel Outer Air Outlet Replacement - Left Side (Chevrolet / GMC)**
1	Roof Wiring Harness Retainer (Qty 2)
2	Roof Wiring Harness

cardiagn.com

Callout	Component Name
	Procedure 1. Disconnect the connector from the instrument panel fuse block. 2. Disconnect the connector from the body wiring harness junction block 3. Disconnect the inline connectors to instrument panel wiring harness under the left front speaker. 4. Guide the harness up through the opening of the instrument panel. 5. Remove the headliner harness. Refer to **Headliner Harness Replacement**

ROOF WIRING HARNESS REPLACEMENT (CADILLAC)

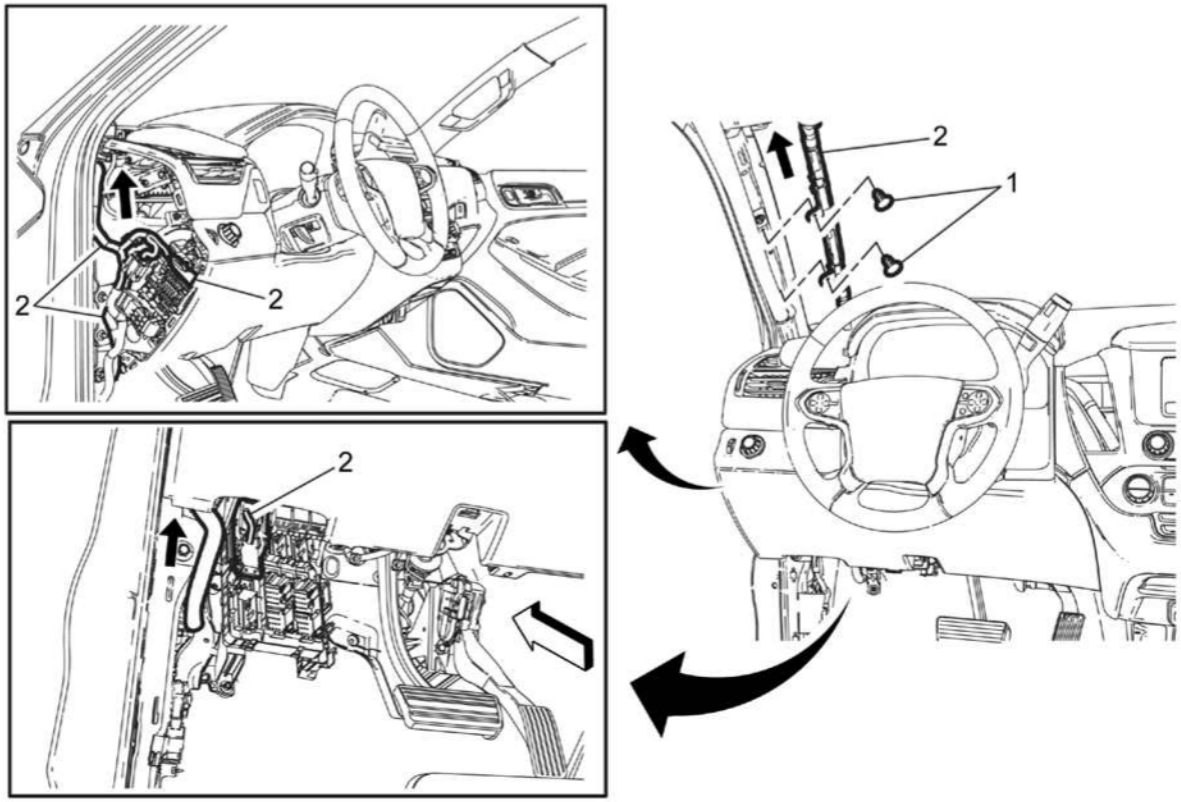

Fig. 219: Roof Wiring Harness (Cadillac)
Courtesy of GENERAL MOTORS COMPANY

cardiagn.com

Callout	Component Name
WARNING: **Do not attempt to repair or alter the head impact energy-absorbing material glued to the headliner or to the garnish trims. If the material is damaged, replace the headliner and/or the garnish trim. Failure to do so could result in personal injury.** **CAUTION:** **If a vehicle is equipped with a head curtain inflator module ensure that**	

cardiagn.com

Callout	Component Name
the inflator module and tether are undamaged. If tether or curtain airbag are damaged in any way, they must be replaced. CAUTION: Use care when working around the head curtain inflator module. Sharp tools may puncture the curtain airbag. If the head curtain inflator module is damaged in any way, it must be replaced. Preliminary Procedures	

cardiagn.com

Callout	Component Name
1. Disable the SIR system. Refer to **SIR Disabling and Enabling** . 2. Remove the left front side door sill garnish molding. Refer to **Front Side Door Sill Garnish Molding Replacement** 3. Remove the left instrument panel fuse block access hole cover. Refer to **Instrument Panel Fuse Block Access Hole Cover Replacement (Cadillac)** 4. Remove instrument panel extension. Refer to **Instrument Panel Extension Replacement (Cadillac)** 5. Remove the instrument panel outer air outlet left side. Refer to **Instrument Panel Outer Air Outlet Replacement - Left Side (Cadillac)**	
1	Roof Wiring Harness Retainer (Qty 2)
2	Roof Wiring Harness **Procedure** 1. Disconnect the connector from the instrument panel fuse block. 2. Disconnect the connector from the body wiring harness junction block 3. Disconnect the inline connectors to instrument panel wiring harness under the left front speaker. 4. Guide the harness up through the opening of the instrument panel. 5. Remove the headliner harness. Refer to **Headliner Harness Replacement**

TOW VEHICLE ELECTRICAL RECEPTACLE REPLACEMENT

cardiagn.com

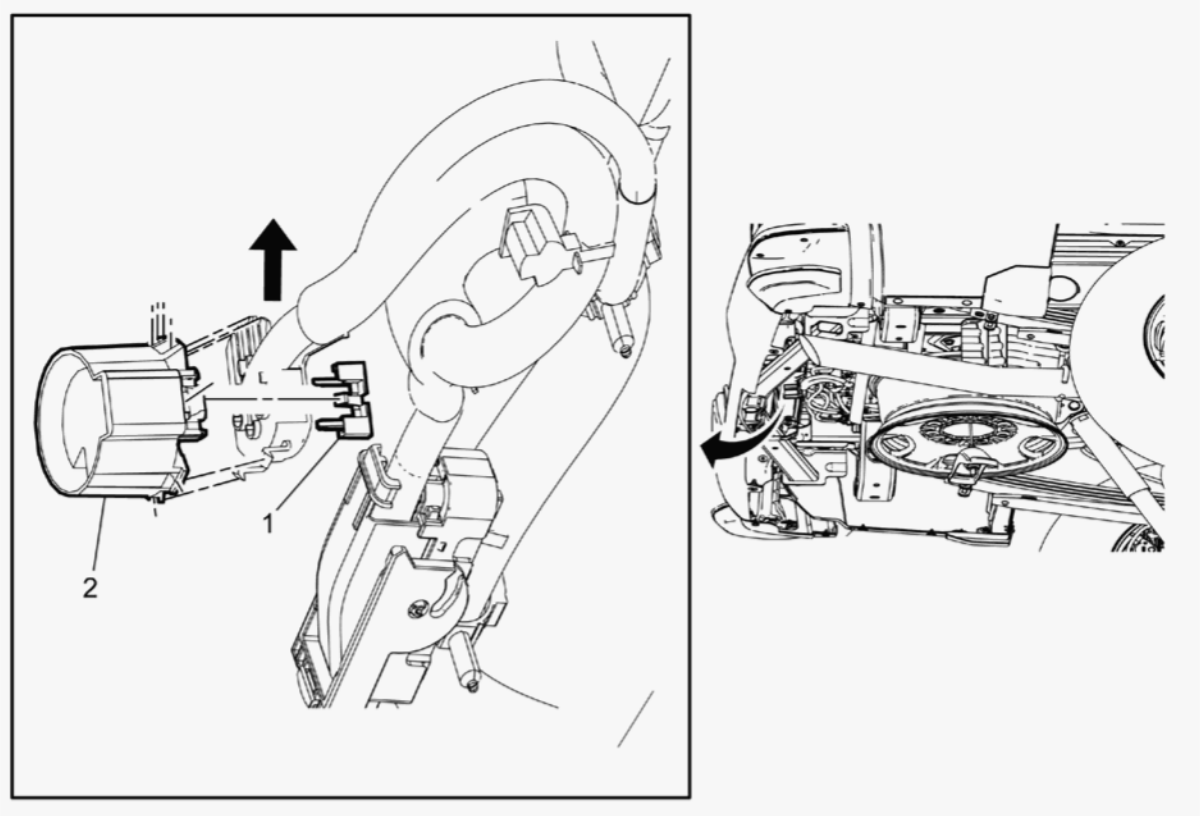

Fig. 220: Tow Vehicle Electrical Receptacle
Courtesy of GENERAL MOTORS COMPANY

Callout	Component Name
Preliminary Procedure Remove the rear bumper fascia trailer hitch access hole cover. Refer to **Rear Bumper Fascia Trailer Hitch Access Hole Cover Replacement (Cadillac, GMC)** **Rear Bumper Fascia Trailer Hitch Access Hole Cover Replacement (Chevrolet)**	
1	Tow Vehicle Electrical Receptacle Lock
2	Tow Vehicle Electrical Receptacle **Procedure** Release the two lower retainers tabs. Rotate the bottom of tow vehicle electrical receptacle slightly up wards and push the receptacle off the upper connector tabs.

IGNITION LOCK CYLINDER REPLACEMENT

cardiagn.com

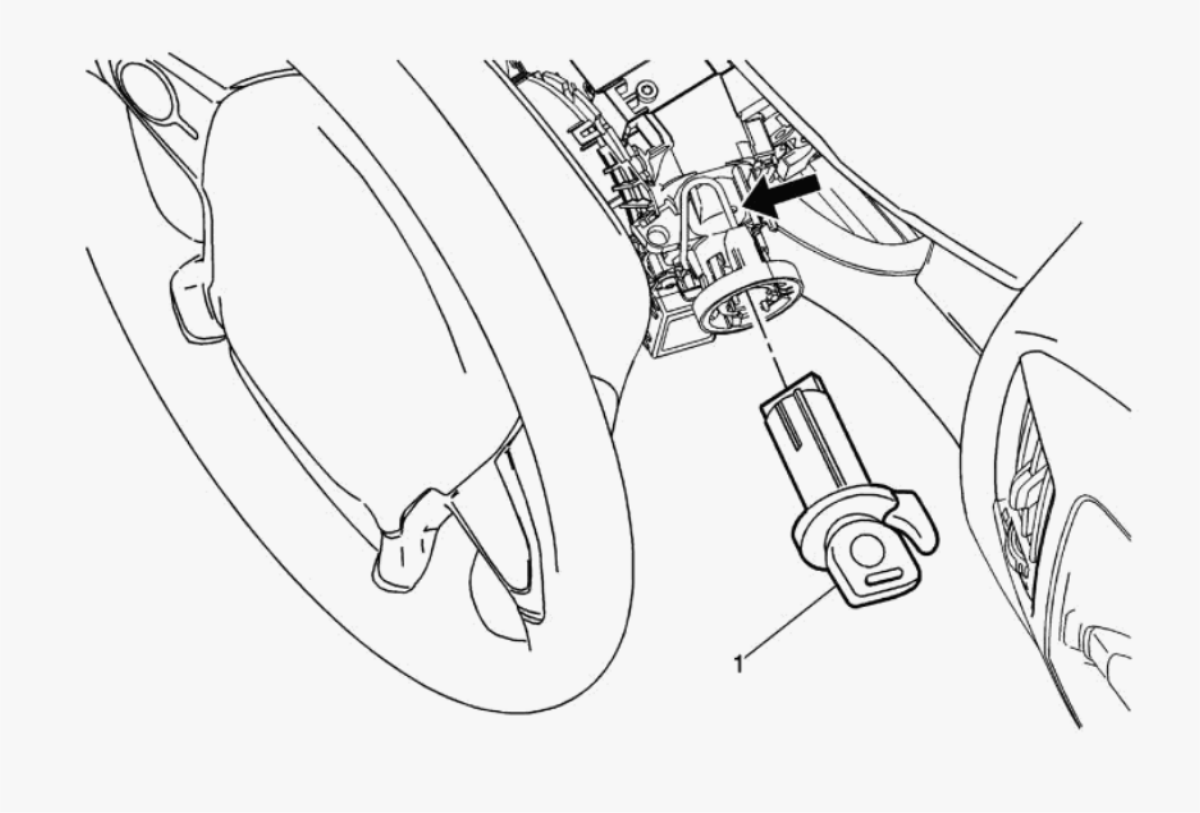

Fig. 221: Ignition Lock Cylinder
Courtesy of GENERAL MOTORS COMPANY

Callout	Component Name
Preliminary Procedures 1. Disconnect the negative battery cable. Refer to **Battery Negative Cable Disconnection and Connection (Dual Battery)** **Battery Negative Cable Disconnection and Connection (Single Battery)** 2. Remove Steering Column Shroud. Refer to **Steering Column Shroud Replacement (RPO N37)** **Steering Column Shroud Replacement (RPO N38)** **Steering Column Shroud Replacement (RPO N33)**	
1	Ignition Lock Cylinder **Procedure**

cardiagn.com

Callout	Component Name
	1. Turn the ignition lock cylinder to the START position. 2. Insert an allen wrench or other suitable tool into the access hole on the ignition lock cylinder case and press the lock tab down. 3. Pull the ignition lock cylinder out of the ignition lock cylinder case. 4. Use a screwdriver to rotate the ignition lock cylinder case gear clockwise to the START position and then release the tool to allow the cylinder to return under spring tension back to the RUN position. 5. Install the ignition lock cylinder into the ignition lock cylinder case. **NOTE:** **The gears between the ignition and start switch and the ignition lock cylinder case MUST be in the correct position. Failure to do so will cause a misalignment of the gears between the switch and the case which may result in a NO START or BATTERY DRAIN condition.**

cardiagn.com

IGNITION AND START SWITCH REPLACEMENT (WITHOUT BTM)

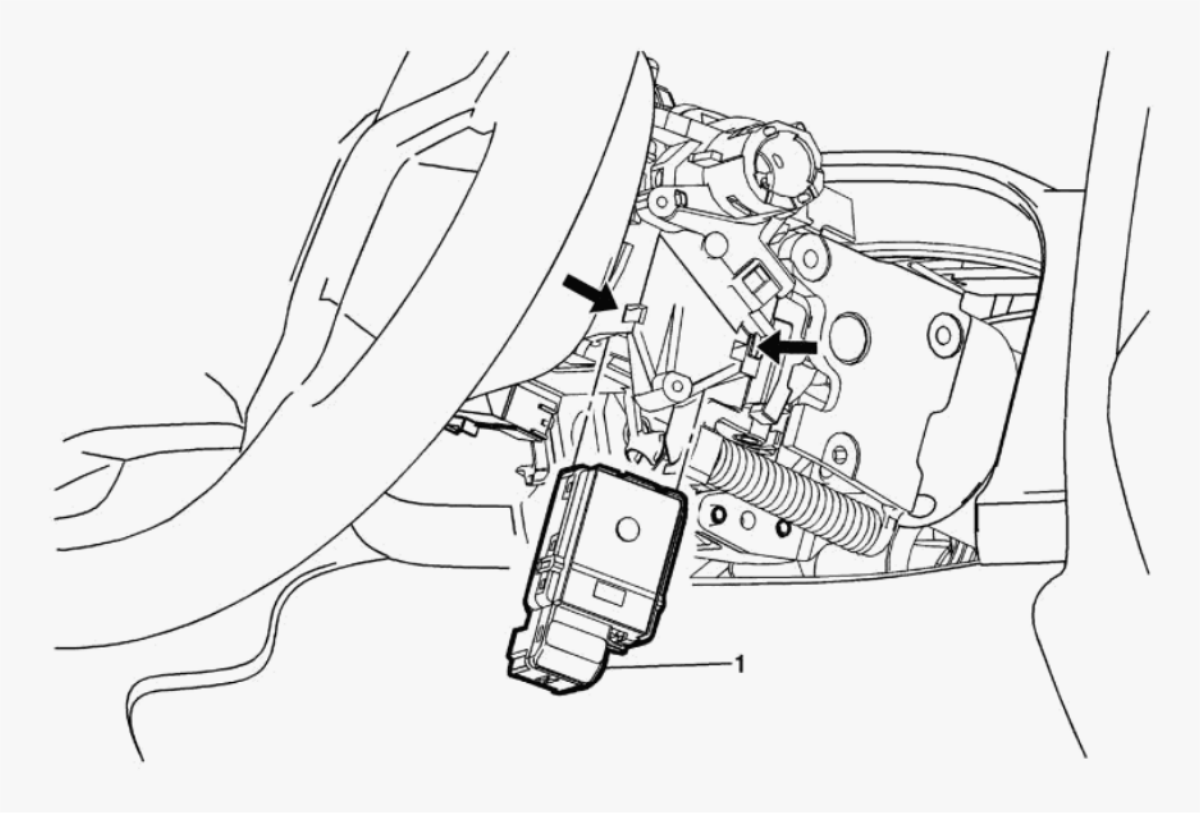

Fig. 222: Ignition And Start Switch (Without BTM)
Courtesy of GENERAL MOTORS COMPANY

Callout	Component Name
Preliminary Procedure Theft Deterrent Module Replacement (Chevrolet / GMC) Theft Deterrent Module Replacement (Cadillac)	
1	Ignition and Start Switch **Procedure** 1. Disconnect the electrical connector. 2. Remove the Passlock and key buzzer from the ignition lock cylinder case.

cardiagn.com

Callout	Component Name
	3. Use the **EL-42759** release tool to release the plastic retaining tabs on the ignition and start switch. 4. Pull the ignition and start switch out of the ignition lock cylinder case. **Special Tools** **EL-42759** Ignition Switch Connector Release Tool Equivalent regional tools:**Special Tools**

IGNITION AND START SWITCH REPLACEMENT (CHEVROLET / GMC WITH BTM)

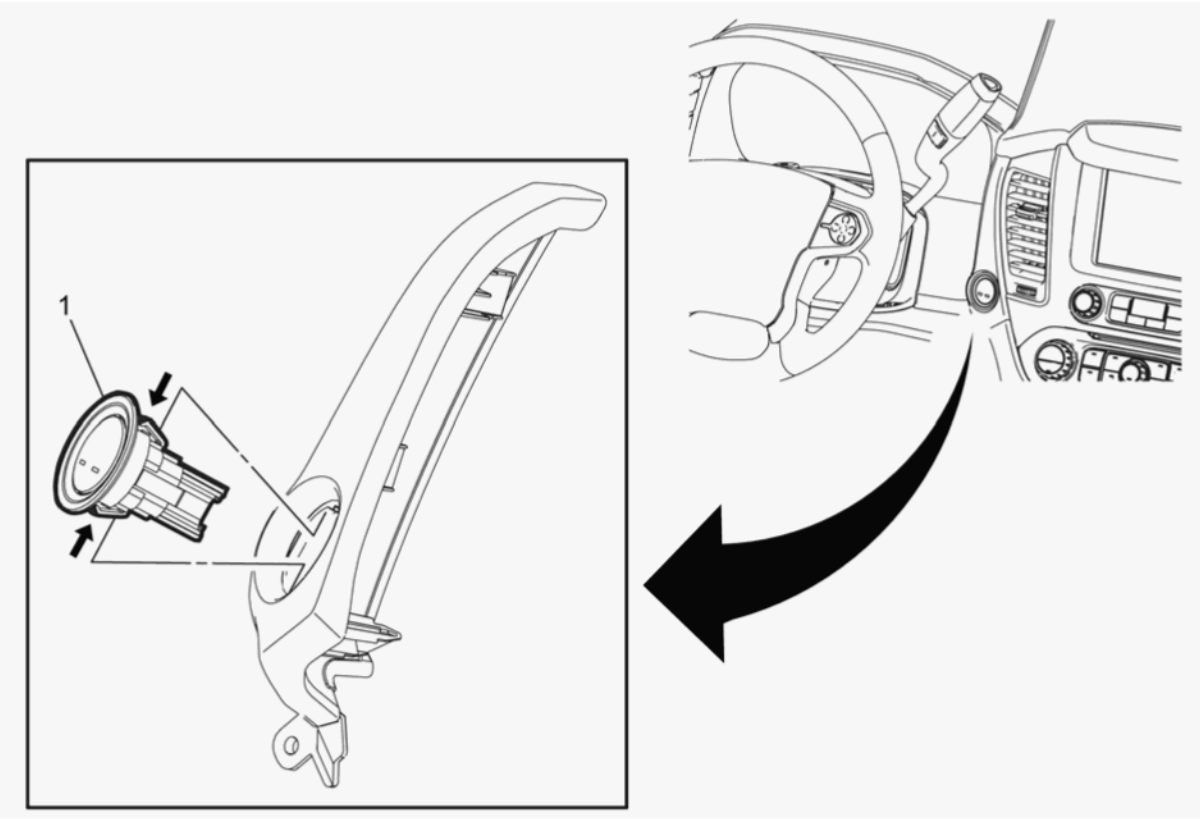

Fig. 223: Ignition And Start Switch (Chevrolet / GMC With BTM)
Courtesy of GENERAL MOTORS COMPANY

cardiagn.com

Callout	Component Name
Preliminary Procedure Remove the instrument panel center trim pad. Refer to **Instrument Panel Center Trim Pad Replacement (Chevrolet / GMC)** .	
1	Ignition and Start Switch **Procedure** 1. Disconnect electrical connection. 2. Depress tabs on switch and remove from the panel.

IGNITION AND START SWITCH REPLACEMENT (CADILLAC WITH BTM)

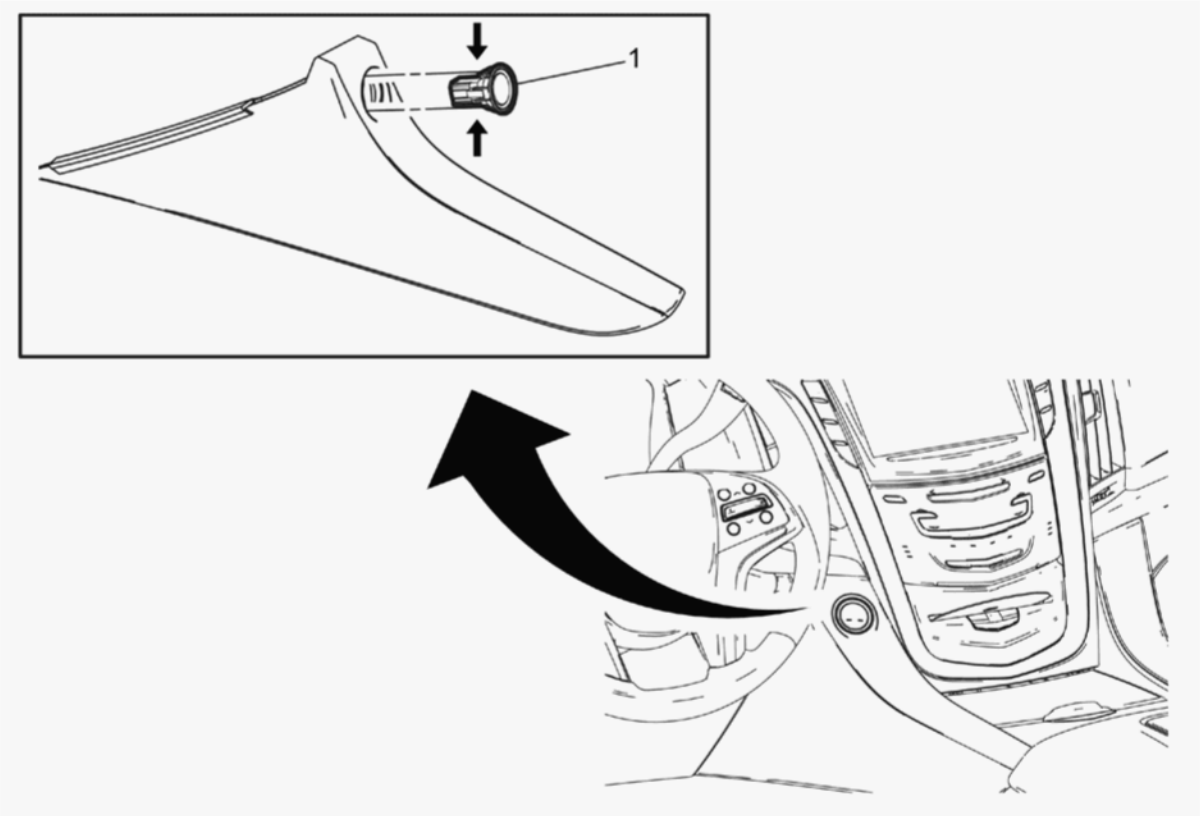

Fig. 224: Ignition And Start Switch (Cadillac With BTM)

cardiagn.com

Courtesy of GENERAL MOTORS COMPANY

Callout	Component Name
Preliminary Procedure Remove the front floor console applique - left side. Refer to **Front Floor Console Applique Replacement - Left Side (Cadillac)** .	
1	Ignition and Start Switch **Procedure** Depress tabs on switch and remove from the applique.

IGNITION LOCK CYLINDER CASE REPLACEMENT

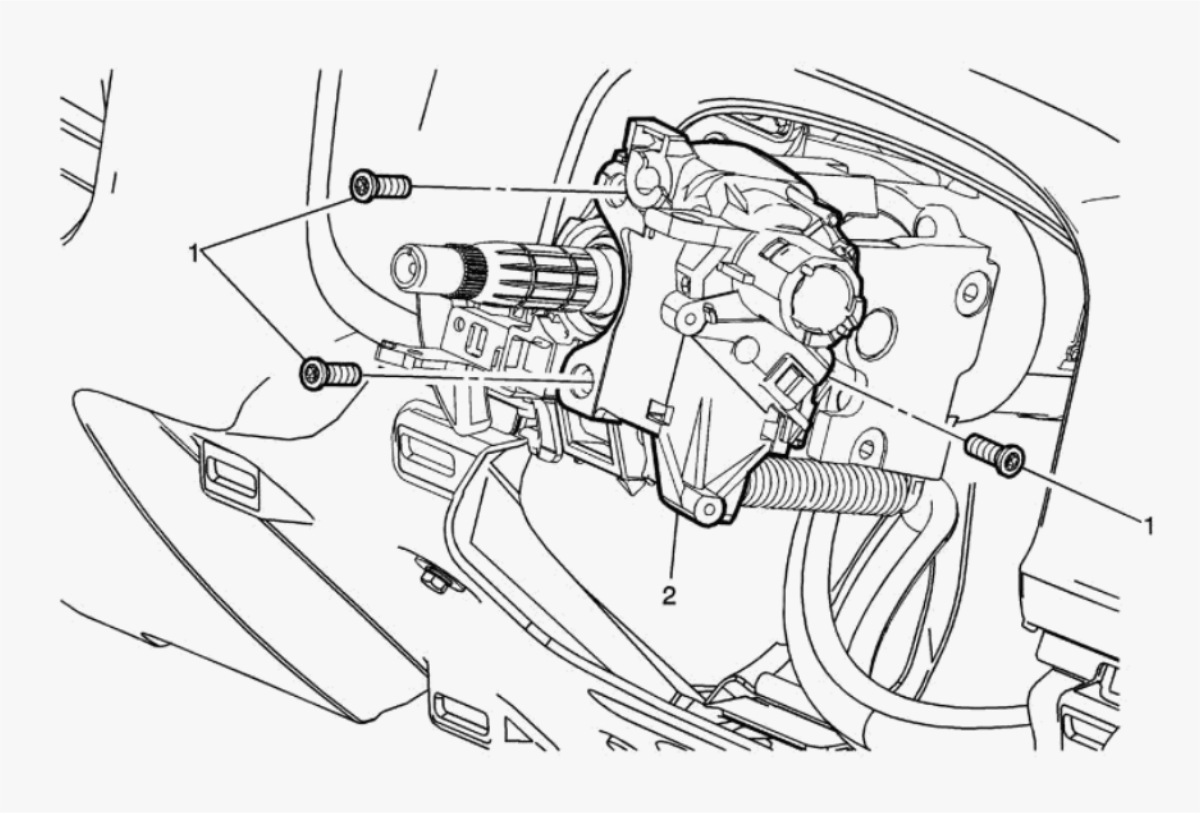

Fig. 225: Ignition Lock Cylinder Case
Courtesy of GENERAL MOTORS COMPANY

cardiagn.com

Callout	Component Name
Preliminary Procedures 1. If equipped, disconnect the park lock cable from the ignition lock cylinder case. Refer to **Transmission Control Replacement (N33, N37)** **Transmission Control Replacement (N38)** 2. Remove Theft Deterrent Module. Refer to **Theft Deterrent Module Replacement (Chevrolet / GMC)** **Theft Deterrent Module Replacement (Cadillac)** 3. Remove Ignition and Start Switch. Refer to **Ignition and Start Switch Replacement (Without BTM)Ignition and Start Switch Replacement (Chevrolet / GMC With BTM)Ignition and Start Switch Replacement (Cadillac With BTM)** 4. Remove Turn Signal Switch Cancel Cam. Refer to **Turn Signal Switch Cancel Cam Replacement (Chevrolet/GMC)** **Turn Signal Switch Cancel Cam Replacement (Cadillac)** 5. Remove Turn Signal Switch. Refer to **Turn Signal Switch Replacement (N33, N37)** **Turn Signal Switch Replacement (N38)**	
1	Ignition Lock Cylinder Case Bolt (Qty: 3) **CAUTION:** **Refer to** **Fastener** **Caution** . **Tighten** 7 N.m (62 lb in)
2	Ignition Lock Cylinder Case

PARK POSITION SWITCH REPLACEMENT

cardiagn.com

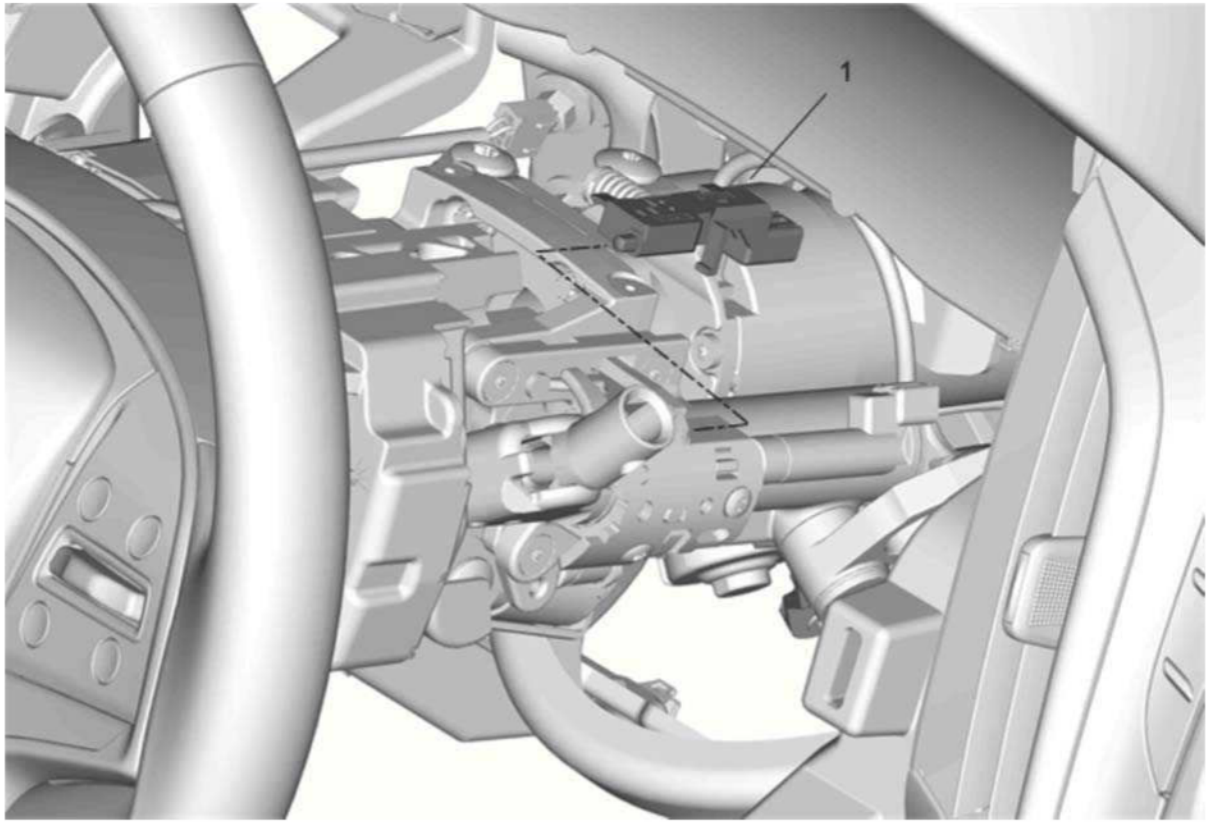

Fig. 226: Park Position Switch
Courtesy of GENERAL MOTORS COMPANY

Callout	Component Name
Preliminary Procedures 1. Telescope the steering column to the most extended length possible. 2. Remove Steering Column Shroud. Refer to **Steering Column Shroud Replacement (RPO N37)** **Steering Column Shroud Replacement (RPO N38)** **Steering Column Shroud Replacement (RPO N33)**	
1	Park Position Switch **Procedure**

cardiagn.com

Callout	Component Name
	1. Disconnect the electrical connector. 2. Release the retaining tabs and remove the park position switch from the transmission control.

.

cardiagn.com

ELECTRICAL

Wiring Systems and Power Management- Component Locator- Electrical Center Identification Views - X51R To X61- Escalade, Suburban, Tahoe, Yukon

ELECTRICAL CENTER IDENTIFICATION VIEWS - X51R TO X61

X51R FUSE BLOCK- INSTRUMENT PANEL RIGHT TOP VIEW

cardiagn.com

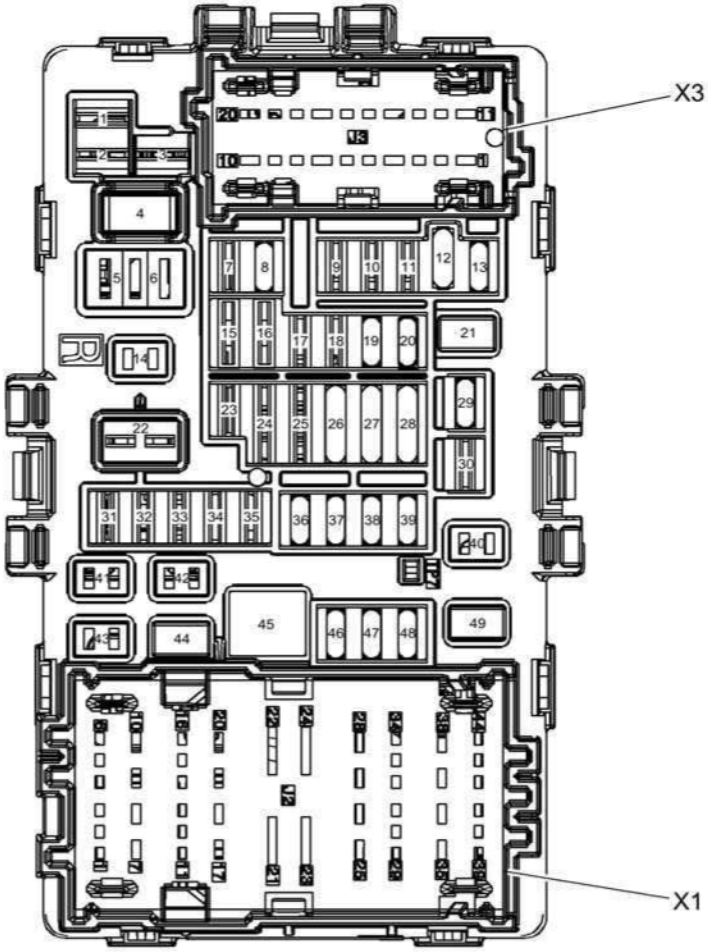

Fig. 1: X51R Fuse Block- Instrument Panel Right Top View
Courtesy of GENERAL MOTORS COMPANY

X50R Fuse Block- Instrument Panel Right Usage

No.	Device Label Name	Device Assigned Name	Rating	Description
Fuses				

cardiagn.com

No.	Device Label Name	Device Assigned Name	Rating	Description
1	EMPTY	F1DR	-	Not Used
2	EMPTY	F2DR	-	Not Used
3	EMPTY	F3DR	-	Not Used
4	APO 4 (15A)	F4DR	15A	X80D Accessory Power Receptacle- Center Console Compartment (AZ3 with AVF or D07 without AVF), X80L Accessory Power Receptacle- Center Console Rear (D07)
5	EMPTY	F5DR	-	Not Used
6	EMPTY	F6DR	-	Not Used
7	EMPTY	F7DR	-	Not Used
8	GLBX (10A)	F8DR	-	KR147 Instrument Panel Compartment Door Unlatch Actuator Relay (Z75), M91 Instrument Panel Compartment Door Unlatch Actuator (Z75)
9	EMPTY	F9DR	-	Not Used
10	EMPTY	F10DR	-	Not Used
11	EMPTY	F11DR	-	Not Used
12	SWC (2A)	F12DR	2A	S70L Steering Wheel Controls Switch- Left, S70R Steering Wheel Controls Switch- Right
13	BCM 8 (20A)	F13DR	20A	A23D Door Latch Assembly- Driver, A23LR Door Latch Assembly- Left Rear, A23P Door Latch Assembly- Passenger, A23RR Door Latch Assembly- Right Rear, K9 Body Control Module, KR113 Child Security Lock Disable Relay, M27 Fuel Fill Door Unlatch Actuator
14	EMPTY	F14DR	-	Not Used
15	EMPTY	F15DR	-	Not Used
16	EMPTY	F16DR	-	Not Used
17	EMPTY	F17DR	-	Not Used
18	EMPTY	F18DR	-	Not Used
19	BCM 4 (20A)	F19DR	-	E4G Headlamp- Left Low Beam (X88 or Z88), E4RF Turn Signal Lamp- Right Front (X88 or Z75), E4Z Turn Signal Repeater Lamp- Right (DL3 or DR4), E5L Stop Lamp- Left (X88 with T89), K9 Body Contol Module, K166R

cardiagn.com

No.	Device Label Name	Device Assigned Name	Rating	Description
				Multifunction LED Control Module- Right Headlamp (X88 with TB8, Z88 or Z75), K166L Multifunction LED Control Module- Left Headlamp (Z75), K167R Multifunction LED Control Module- Front Fascia Right (Z75), K174L Multifunction LED Control Module- Left Tail Lamp (Z88 or Z75)
20	RSE (10A)	F20DR	10A	P22A Video Display- 2nd Row (U42), P22B Video Display- 3rd Row (DNU), S48C Multifunction Switch 1- Instrument Panel (Z75), S48D Multifunction Switch 2- Instrument Panel (Z75), S140 Media Disc Eject Switch (TG5 or U42)
21	S/ROOF (30A)	F21DR	30A	KR58 Roof Beacon Relay (TRW), M69 Sunroof Motor (CF5)
22	EMPTY	F22DR	-	Not Used
23	EMPTY	F23DR	-	Not Used
24	EMPTY	F24DR	-	Not Used
25	EMPTY	F25DR	-	Not Used
26	INFO/AIRBAG (10A/10A)	F26DR	10A	K36 Inflatable Restraint Sensing and Diagnostic Module, K73 Telematics Communication Interface Control Module (UE1), K85 Passenger Presence Module
27	SPARE/RAIN SNSR (10A/10A)	F27DR	10A	B200 Rain Sensor Module, S79P Window Switch- Passenger
28	USB / OBS DET (10A)	F28DR	10A	B174W Frontview Camera- Windshield (UFL, UHX or UGN with Z75), B218R Side Object Sensor Module- Right (UKC), K14 Distance Sensing Cruise Control Module (K59), K41 Front and Rear Parking Assist Control Module (UD5 or UD7), K124 Active Saftey Control Module (UGN), X83 Auxiliary Audio Input (AZ3)
29	RDO (20A)	F29DR	20A	A11 Radio, A33 Media Disc Player, K74 Human Machine Interface Control Module (IO5 or IO6), X82 Audio/Video Input Adapter (D07 with U42), X83 Auxiliary Audio Input (D07)
30	EMPTY	F30DR	-	Not Used

cardiagn.com

No.	Device Label Name	Device Assigned Name	Rating	Description
31	EMPTY	F31DR	-	Not Used
32	EMPTY	F32DR	-	Not Used
33	EMPTY	F33DR	-	Not Used
34	EMPTY	F34DR	-	Not Used
35	EMPTY	F35DR	-	Not Used
36	SEO B2 (30A)	F36DR	30A	KR103 DVD Relay (AYE), X55X Fuse Holder- Video Display (AYE), X61A Junction Block- Instrument Panel (AYE)
37	SEO (15A)	F37DR	15A	Not Used
38	BCM 2 (10A)	F38DR	10A	K9 Body Control Module, KR81 Auxiliary Battery Relay 1 (5W4 or 9C1), S30 Headlamp Switch, S77 Transfer Case Shift Control Switch (NP0 or NQH), X81 Accessory Power Receptacle- 110V AC (KI4), X81B Accessory Power Receptacle- 220V AC (KI5)
39	AC INV (25A)	F39DR	25A	T1 Accessory DC/AC Power Inverter Module (KI4 or KI5)
40	EMPTY	F40DR	-	Not Used
41	EMPTY	F41DR	-	Not Used
42	EMPTY	F42DR	-	Not Used
43	EMPTY	F43DR	-	Not Used
44	RT DR WNDW MTR (30A)	F44DR	30A	M74P Window Motor- Passenger, S79P Window Switch- Passenger
45	FRT BLWR (40A)	F45DR	40A	M8 Blower Motor
46	BCM 6 (15A)	F46DR	15A	E4RR Turn Signal Lamp- Right Rear (X88 with T89), E5AU Stop/Turn Signal Lamp- Right Upper (X88 without T89), E5AV Stop/Turn Signal Lamp- Right Lower (X88 without T89), E37B Dome/Reading Lamps- 2nd Row (without U42), E37C Dome/Reading Lamps- 3rd Row (without DNU), E37EL Dome/Reading Lamps- Front Overhead Console Left, E37ER Dome/Reading Lamps- Front Overhead Console Right, E37H Dome/Reading Lamps- Left Roof Rail (AZ3), E37J Dome/Reading Lamps-

cardiagn.com

No.	Device Label Name	Device Assigned Name	Rating	Description
				Right Roof Rail (AZ3), F12DL, K9 Body Control Module, KR11 Windshield Washer Pump Relay, KR12B Windshield Wiper Relay, K20 Engine Control Module, K38 Chassis Control Module (IK9, JL1 or Z85), K69 Transfer Case Control Module (NP0 or NQH), K71 Transmission Control Module (M5U), K111 Fuel Pump Control Module, K167R Multifunction LED Control Module- Front Fascia Right (Z75), K174R Multifunction LED Control Module- Right Tail Lamp (Z88 or Z75), P22A Video Display- 2nd Row (U42), P22B Video Display- 3rd Row (DNU), Q8 Control Solenoid Valve Assembly (MYC), S12 Dome Lamp Switch, S13D Door Lock Switch- Driver, S13P Door Lock Switch- Passenger, S25 Garage Door Opener (UG1), S27 Heads-Up Display Switch (UV6), S30 Headlamp Switch, S38 Ignition Mode Switch (BTM), S43 Content Theft Deterrent Sensor Disable Switch (UTT), S45B Liftgate Control Switch- Interior (TB5 or TC2), S47D Seat Memory Switch- Driver (A45), S48A Multifunction Switch- Instrument Panel (X88 or Z88), S48D Multifunction Switch 2- Instrument Panel (Z75), S52 Outside Rearview Mirror Switch (without A45), S72 Sunroof Switch (CF5), S76 Trailer Brake Control Switch (JL1), S77 Transfer Case Shift Control Switch (NP0 or NQH), S79P Window Switch- Passenger, S91 Park Brake Control Switch (J71), S140 Media Disc Eject Switch (Z75), S145 Center Console Compartment Cooler Switch (DCK)
47	BCM 7 (15A)	F47DR	15A	A23D Door Latch Assembly- Driver, A23LR Door Latch Assembly- Left Rear, A23P Door Latch Assembly- Passenger, A23RR Door Latch Assembly- Right Rear, E4LR Turn Signal Lamp- Left Rear, E5AS Stop/Turn Signal Lamp- Left Upper, E5AT Stop/Turn Signal Lamp- Left Lower, E8XA Door Handle Courtesy Lamp- Driver Exterior (DL3 or DR4 with HD7), E8XB Door Handle Courtesy Lamp- Passenger Exterior (DL3 or DR4 with HD7), E8XC

cardiagn.com

No.	Device Label Name	Device Assigned Name	Rating	Description
				Door Handle Courtesy Lamp- Left Rear Exterior (HD7), E8XD Door Handle Courtesy Lamp- Right Rear Exterior (HD7), E8YD Outside Rearview Mirror Courtesy Lamp- Driver (DL3 or DR4), E8YP Outside Rearview Mirror Courtesy Lamp- Passenger (DL3 or DR4), E8ZL Running Board Step Courtesy Lamp- Left (BRS), E8ZR Running Board Step Courtesy Lamp- Right (BRS), K9 Body Control Module, K174L Multifunction LED Control Module- Left Tail Lamp (Z88 or Z75), KR114 Door Lock Relay, M7 Transmission Shift Lock Control Solenoid Actuator, M27 Fuel Fill Door Unlatch Actuator (N08)
48	AMP (30A)	F48DR	30A	T3 Audio Amplifier (IO5 or IO6)
49	RT FRT SEAT (30A)	F49DR	30A	K40P Seat Memory Control Module- Passenger (AG2 with ULT), S64P Seat Adjuster Switch- Passenger (AG2 without ULT)

X51R FUSE BLOCK- INSTRUMENT PANEL RIGHT BOTTOM VIEW

cardiagn.com

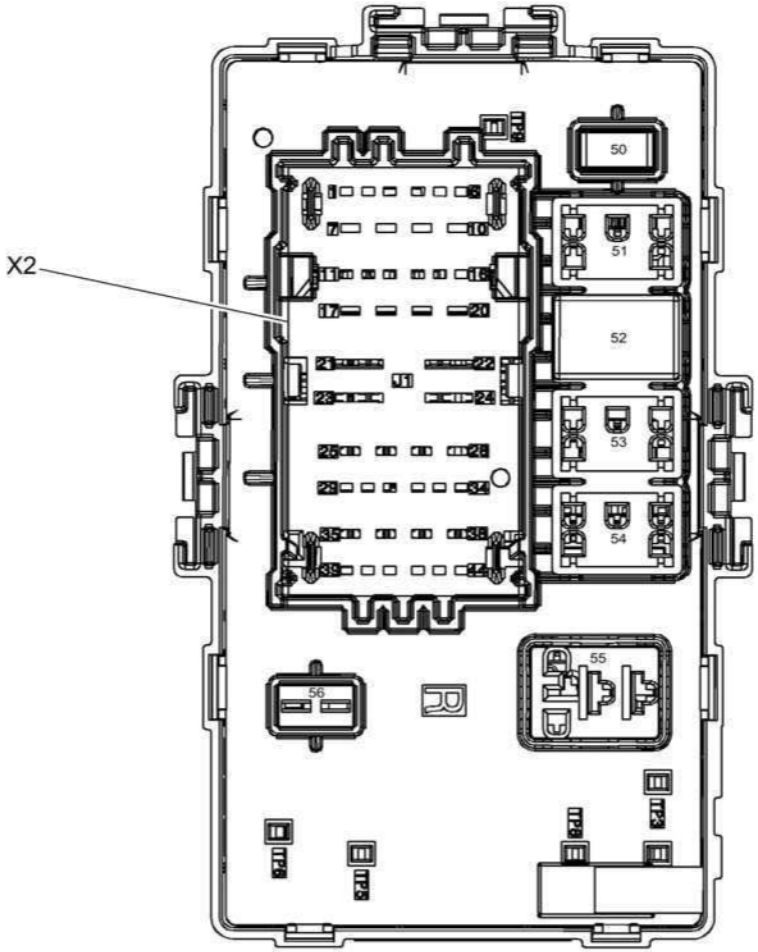

Fig. 2: X51R Fuse Block- Instrument Panel Right Bottom View
Courtesy of GENERAL MOTORS COMPANY

X50R Fuse Block- Instrument Panel Right Usage

No.	Fuse And Relay Description	Device Assigned Name	Rating	Circuits
Fuses				

cardiagn.com

No.	Fuse And Relay Description	Device Assigned Name	Rating	Circuits
50	APO 3 (15A)	F50DR	15A	X80D Accessory Power Receptacle- Center Console Compartment (AZ3 without AVF or D07 with AVF), X80E Accessory Power Receptacle - Center Seat (AZ3)
56	EMPTY	F56DR	-	Not Used
Relays				
51	EMPTY	-	-	Not Used
52	RAP / ACCY RELAY	KR76B Retained Accessory Power Relay 2	-	F4DR, F50DR
53	EMPTY	-	-	Not Used
54	EMPTY	-	-	Not Used
55	EMPTY	-	-	Not Used
Important: Relays listed below are non-serviceable Printed Circuit Board (PCB) relays and are internal to the block				
-	KR113 Child Security Lock Disable Relay	-	-	A23LR Door Latch Assembly- Left Rear, A23P Door Latch Assembly- Passenger, A24RR Door Latch Assembly- Right Rear
-	KR114 Door Dead Lock Relay (N08 or UTT)	-	-	A24D Door Latch Assembly- Driver, A23LR Door Latch Assembly- Left Rear, A23P Door Latch Assembly- Passenger, A24RR Door Latch Assembly- Right Rear, M27 Fuel Fill Door Unlatch Actuator (N08)
-	KR147 Instrument Panel Compartment Door Unlatch Actuator Relay (Z75)	-	-	M91 Instrument Panel Compartment Door Unlatch Actuator (Z75)

X51R FUSE BLOCK- INSTRUMENT PANEL RIGHT X1

cardiagn.com

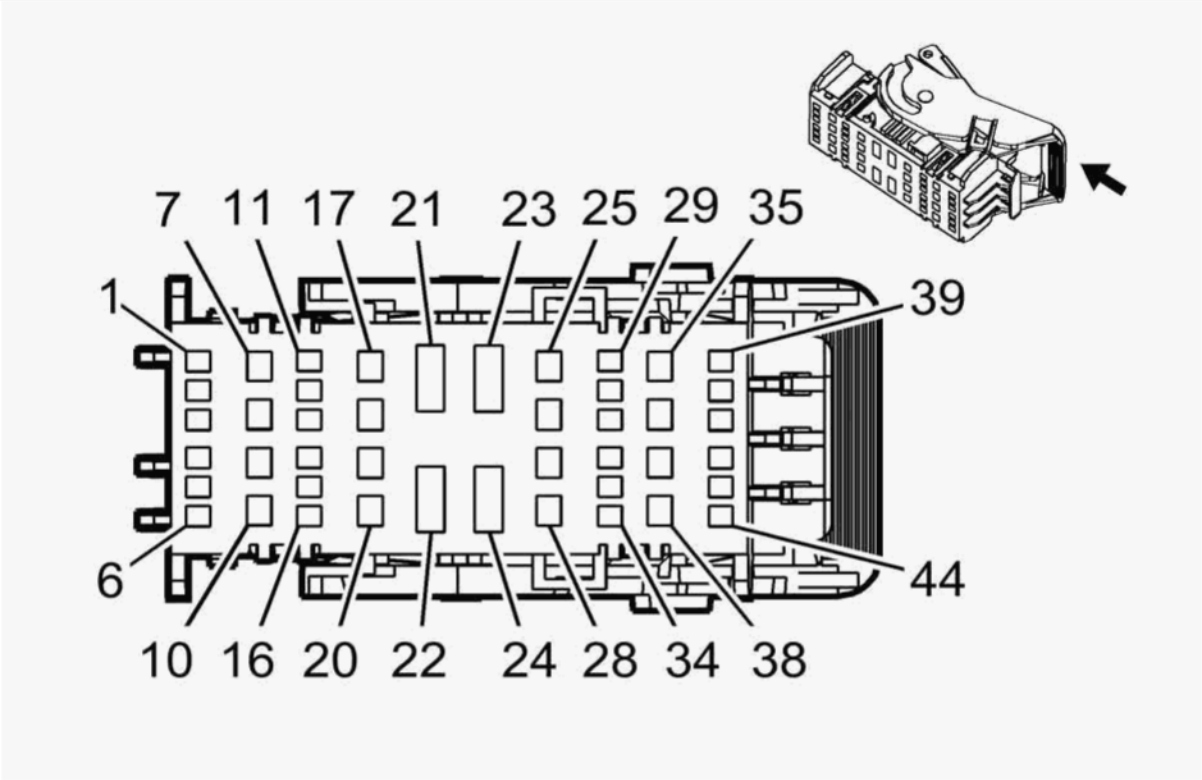

Connector Part Information

- Harness Type: Body
- OEM Connector: 13967689
- Service Connector: 19329457
- Description: 44-Way F 1.5, 2.8, 800 Metri-Pack Series (NA)

Terminal Part Information

Terminal Type ID	Terminated Lead	Diagnostic Test Probe	Terminal Removal Tool	Service Terminal	Tray	Core Crimp	Insulation Crimp
I	13575718	J-35616-44 (YE)	J-38125-558	12110127	2	F	G
II	13575718	J-35616-44 (YE)	J-38125-558	Not Available	Not Available	Not Available	Not Available
III	13575839	J-35616-35 (VT)	J-38125-11A	7116-4112-02	14	C	D
IV	19301761	J-35616-35 (VT)	J-38125-12A	Not Available	Not Available	Not Available	Not Available

cardiagn.com

Terminal Type ID	Terminated Lead	Diagnostic Test Probe	Terminal Removal Tool	Service Terminal	Tray	Core Crimp	Insulation Crimp
IV	19301761	J-35616-35 (VT)	J-38125-12A	Not Available	Not Available	Not Available	Not Available
IV	19301761	J-35616-35 (VT)	J-38125-12A	Not Available	Not Available	Not Available	Not Available
V	19301767	J-35616-2A (GY)	J-38125-560	Not Available	Not Available	Not Available	Not Available
V	19301767	J-35616-2A (GY)	J-38125-560	Not Available	Not Available	Not Available	Not Available
V	19301767	J-35616-2A (GY)	J-38125-560	Not Available	Not Available	Not Available	Not Available

Pin	Size	Color	Circuit	Function	Terminal Type ID	Option
1	1.5	GY	295	Door Lock Actuator Lock Control	V	-
2	1.5	WH/D-BU	3266	Child Security Lock Motor Lock Control	V	-
3	0.35	VT/YE	3267	Child Security Lock Relay Control	V	-
4	1.5	GY/L-GN	3271	Door Lock Control (2)	V	-
5	-	-	-	Not Occupied	-	-
6	0.35 0.35	GY/L-GN GY/VT	4083 755	RAP Relay 2 Coil Control RAP Relay Coil Control	V	- -
7- 14	-	-	-	Not Occupied	-	-
15	0.35	RD/D-BU	840	Battery Positive Voltage	V	-
16	0.35 0.5	RD/L-GN RD/L-GN	4440 4440	Battery Positive Voltage	V	- -
17	-	-	-	Not Occupied	-	-
18	1.5	VT/YE	143	Accessory Ignition Voltage	IV	-
19	2.5 2.5	RD/WH RD/WH	1340 1340	Battery Positive Voltage	IV III	- -
20	2.5 2.5	RD/WH RD/WH	1340 1340	Battery Positive Voltage	III IV	- -
21	6	RD/L-GN	242	Battery Positive Voltage	II	-
22	4	RD/VT	542	Battery Positive Voltage	I	-
23	-	-	-	Not Occupied	-	-
24	6	RD/GY	142	Battery Positive Voltage	II	-
25- 26	-	-	-	Not Occupied	-	-

cardiagn.com

Pin	Size	Color	Circuit	Function	Terminal Type ID	Option
27	0.75	RD/VT	340	Battery Positive Voltage	IV	-
28	-	-	-	Not Occupied	-	-
29	1.5	D-BU/WH	195	Door Lock Control	V	-
30	1.5	BN	5910	Door Double Lock Actuator Lock Control	V	-
31	-	-	-	Not Occupied	-	-
32	0.5	L-GN/BN	6132	Local Interconnect Network Serial Data Bus 1	V	-
33	0.75	RD/WH	3440	Battery Positive Voltage	V	-
34	0.75	RD/L-GN	5140	Battery Positive Voltage	V	-
35- 36	-	-	-	Not Occupied	-	-
37	2.5	RD/YE	3740	Battery Positive Voltage	IV	-
38	2.5	RD/BN	1440	Battery Positive Voltage	IV	-
39	-	-	-	Not Occupied	-	-
40	0.75 0.75	GY GY	295 5911	Door Lock Actuator Lock Control Door Lock Actuator Lock Control 2	V	- -
41	0.35	D-BU/BN	7547	Security Lock Relay Control	V	-
42	0.35 0.5	RD/D-BU RD/D-BU	840 840	Battery Positive Voltage	V	- -
43	0.75	RD/L-GN	3140	Battery Positive Voltage	V	-
44	-	-	-	Not Occupied	-	-

X51R FUSE BLOCK- INSTRUMENT PANEL RIGHT X2

cardiagn.com

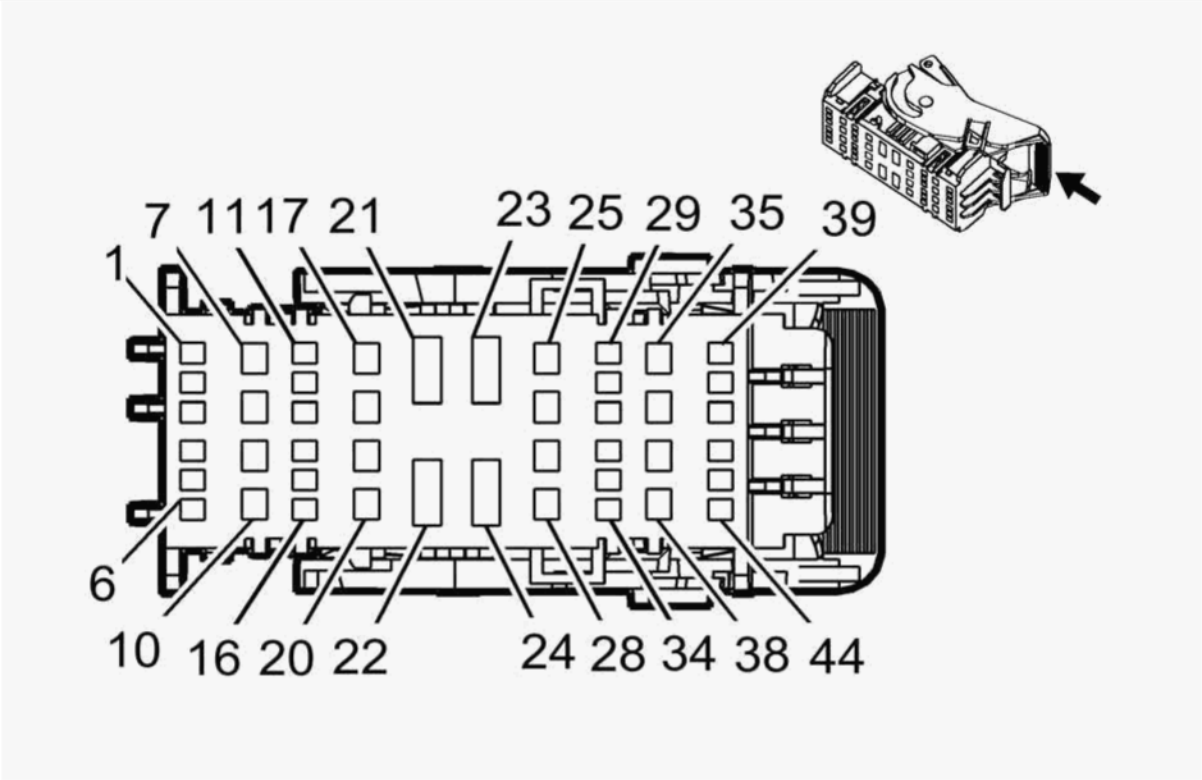

Connector Part Information

- Harness Type: Instrument Panel
- OEM Connector: 13967690
- Service Connector: 19329458
- Description: 44-Way F 1.5, 2.8, 800 Metri-Pack Series (GN)

Terminal Part Information

Terminal Type ID	Terminated Lead	Diagnostic Test Probe	Terminal Removal Tool	Service Terminal	Tray	Core Crimp	Insulation Crimp
I	13575718	J-35616-44 (YE)	J-38125-558	12110127	2	F	G
II	19301761	J-35616-35 (VT)	J-38125-12A	Not Available	Not Available	Not Available	Not Available
II	19301761	J-35616-35 (VT)	J-38125-12A	Not Available	Not Available	Not Available	Not Available
II	19301761	J-35616-35 (VT)	J-38125-12A	Not Available	Not Available	Not Available	Not Available

cardiagn.com

Terminal Type ID	Terminated Lead	Diagnostic Test Probe	Terminal Removal Tool	Service Terminal	Tray	Core Crimp	Insulation Crimp
III	19301767	J-35616-2A (GY)	J-38125-560	Not Available	Not Available	Not Available	Not Available

Pin	Size	Color	Circuit	Function	Terminal Type ID	Option
1	0.5	RD/L-GN	1540	Battery Positive Voltage	III	-
2	0.35	BN/WH	4046	Glove Box Door Release Relay Control	III	-
3- 6	-	-	-	Not Occupied	-	-
7	0.75	RD/VT	4040	Battery Positive Voltage	II	-
8	0.75	RD/D-BU	2540	Battery Positive Voltage	II	-
9	-	-	-	Not Occupied	-	-
10	1.5	VT/YE	243	Accessory Ignition Voltage	II	-
11- 15	-	-	-	Not Occupied	-	-
16	0.35	RD/YE	3040	Battery Positive Voltage	III	-
17	1	RD/VT	340	Battery Positive Voltage	II	-
18	-	-	-	Not Occupied	-	-
19	0.5	BN/GY	4048	Glove Box Door Release Control	II	-
20- 21	-	-	-	Not Occupied	-	-
22	2.5	BK	1050	Ground	I	-
23- 28	-	-	-	Not Occupied	-	-
29	0.5	RD/BN	2240	Battery Positive Voltage	III	-
30- 33	-	-	-	Not Occupied	-	-
34	0.35	RD/D-BU	3240	Battery Positive Voltage	III	-
35	2.5	RD/GY	4140	Battery Positive Voltage	II	-
36- 37	-	-	-	Not Occupied	-	-
38	1.5	RD/YE	2340	Battery Positive Voltage	II	-
39- 44	-	-	-	Not Occupied	-	-

X51R FUSE BLOCK- INSTRUMENT PANEL RIGHT X3

cardiagn.com

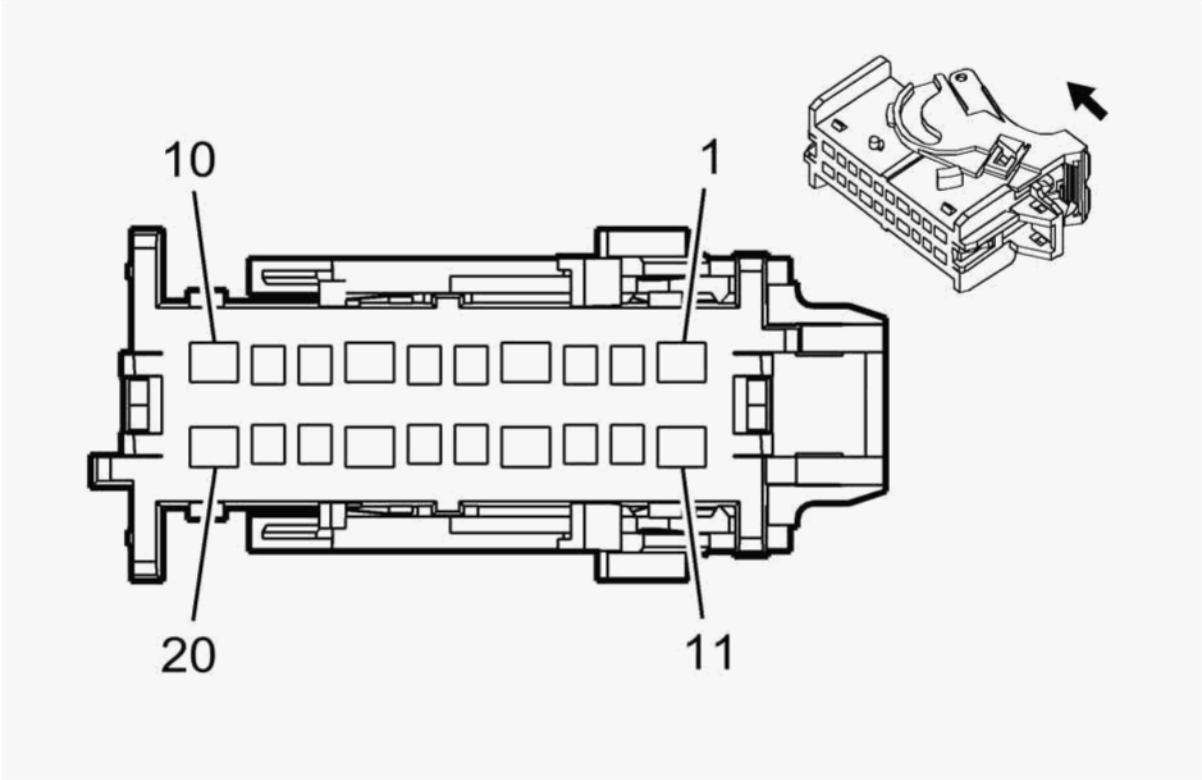

Connector Part Information

- Harness Type: A-Pillar
- OEM Connector: 15547107
- Service Connector: Service by Harness- See Part Catalog
- Description: 20-Way F 1.5, 2.8 OCS Series (GY)

Terminal Part Information

Terminal Type ID	Terminated Lead	Diagnostic Test Probe	Terminal Removal Tool	Service Terminal	Tray	Core Crimp	Insulation Crimp
I	Not Required	J-35616-2A (GY)	Not Required	Not Required	Not Required	Not Required	Not Required
II	Not Required	J-35616-35 (VT)	Not Required	Not Required	Not Required	Not Required	Not Required
II	Not Required	J-35616-35 (VT)	Not Required	Not Required	Not Required	Not Required	Not Required
II	Not Required	J-35616-35 (VT)	Not Required	Not Required	Not Required	Not Required	Not Required

cardiagn.com

Pin	Size	Color	Circuit	Function	Terminal Type ID	Option
1	2.5	RD/L-GN	3140	Battery Positive Voltage	II	-
2	0.5	L-GN/BN	6132	Local Interconnect Network Serial Data Bus 1	I	-
3- 7	-	-	-	Not Occupied	-	-
8	0.35	RD/D-BU	840	Battery Positive Voltage	I	-
9	-	-	-	Not Occupied	-	-
10	0.35 2.5	BK BK	1050 1050	Ground	II	- -
11- 20	-	-	-	Not Occupied	-	-

X53A FUSE BLOCK- REAR BODY TOP VIEW

cardiagn.com

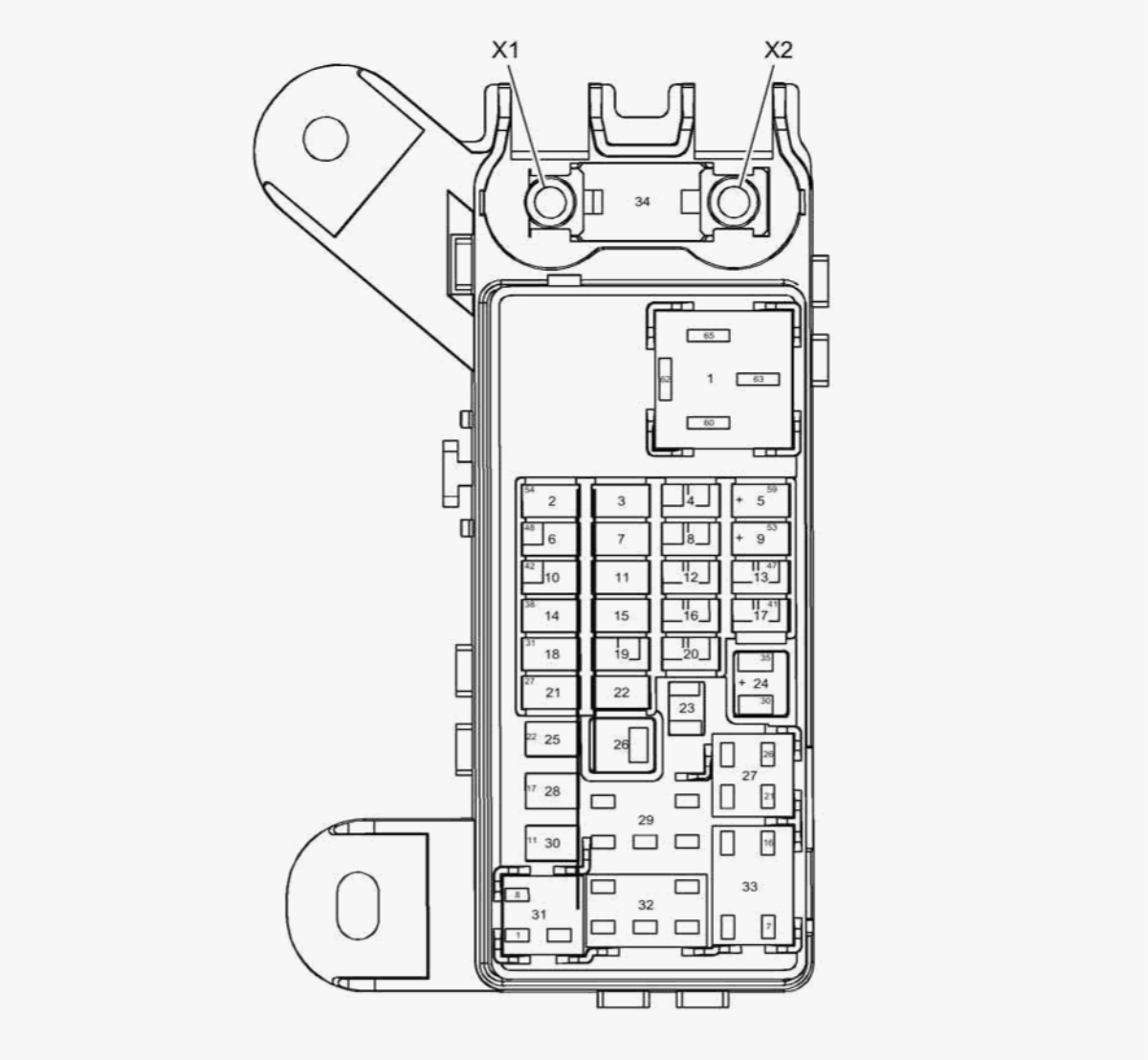

Fig. 3: X53A Fuse Block- Rear Body Top View
Courtesy of GENERAL MOTORS COMPANY

X53A Fuse Block- Rear Body Usage

No.	Device Label Name	Fuse And Relay Description	Rating	Circuits
Fuses				

cardiagn.com

No.	Device Label Name	Fuse And Relay Description	Rating	Circuits
2	-	F2RA	15A	K29R Seat Heating Control Module- Rear (KA6)
3	-	F3RA	15A	K29R Seat Heating Control Module- Rear (KA6)
4	-	F4RA	15A	E17D Outside Rearview Mirror Glass- Driver (DL3 or DL8 or DR4), E17P Outside Rearview Mirror Glass- Passenger (DL3 or DL8 or DR4)
5	-	F5RA	15A	Not Used
6	-	F6RA	-	Not Used
7	-	F7RA	10A	KR95A Liftgate Unlatch Relay (TB4)
8	-	F8RA	-	Not Used
9	-	F9RA	10A	B159L Glass Breakage Sensor- Left (UTV)
10	-	F10RA	-	Not Used
11	-	F11RA	10A	KR162 Liftgate Window Unlatch Relay
12	-	F12RA	-	Not Used
13	-	F13RA	-	Not Used
14	-	F14RA	10A	K39 Liftgate Control Module (TB5)
15	-	F15RA	20A	M45 Rear Wiper Motor
16	-	F16RA	-	Not Used
17	-	F17RA	-	Not Used
18	-	F18RA	30A	K8A Blower Motor Control Module- Auxiliary
19	-	F19RA	-	Not Used
20	-	F20RA	-	Not Used
21	-	F21RA	20A	Folding Seat Motor- Left 2nd Row (ATN or ATT), Folding Seat Motor- Right 2nd Row (ATN or ATT)
22	-	F22RA	10A	KR57 Rear Fog Lamp Relay (T79)
23	-	F23RA	-	Not Used
24	-	F24RA	30A	F9RA (UTV), E18 Rear Defogger Grid
25	-	F25RA	30A	K39 Liftgate Control Module (TB5)
26	-	F26RA	-	Not Used
28	-	F28RA	30A	K169 Folding Seat Control Module- 3rd Row (AS8)

cardiagn.com

No.	Device Label Name	Fuse And Relay Description	Rating	Circuits
30	-	F30RA	20A	X80RL Accessory Power Receptacle- Rear Compartment Left, X80RR Accessory Power Receptacle- Rear Compartment Right
Relays				
1	-	KR5 Rear Defogger Relay	-	F5RA, F9RA, F24RA
27	-	KR95A Liftgate Unlatch Relay	-	M30 Liftgate Latch (TB4)
29	-	-	-	Not Used
31	-	KR4B Outside Rearview Mirror Heater Relay	-	E17D Outside Rearview Mirror Glass - Driver (DL3, DL8 or DR4), E17P Outside Rearview Mirror Glass - Passenger (DL3, DL8 or DR4), F4RA
32	-	KR57 Rear Fog Lamp Relay	-	E29LR Fog Lamp - Left Rear (T79), E29RR Fog Lamp - Right Rear (T79)
33	-	KR162 Liftgate Window Unlatch Relay	-	M33 Liftgate Window Latch Assembly

X53A FUSE BLOCK- REAR BODY

-

Connector Part Information

- Harness Type: Body
- OEM Connector: 13940427
- Service Connector: 13586872
- Description: -

Terminal Part Information

Terminal Type ID	Terminated Lead	Diagnostic Test Probe	Terminal Removal Tool	Service Terminal	Tray	Core Crimp	Insulation Crimp
I	13575544	J-35616-35 (VT)	J-38125-12A	Not Available	Not Available	Not Available	Not Available

cardiagn.com

Terminal Type ID	Terminated Lead	Diagnostic Test Probe	Terminal Removal Tool	Service Terminal	Tray	Core Crimp	Insulation Crimp
II	13575718	J-35616-44 (YE)	J-38125-558	Not Available	Not Available	Not Available	Not Available
III	13575721	J-35616-4A (PU)	J-38125-553	Not Available	Not Available	Not Available	Not Available
III	13575721	J-35616-4A (PU)	J-38125-553	Not Available	Not Available	Not Available	Not Available
IV	13575824	J-35616-5 (PU)	J-38125-11A	Not Available	Not Available	Not Available	Not Available
IV	13575824	J-35616-5 (PU)	J-38125-11A	Not Available	Not Available	Not Available	Not Available
V	13575833	J-35616-42 (RD)	J-38125-11A	Not Available	Not Available	Not Available	Not Available
VI	13575835	J-35616-42 (RD)	J-38125-11A	Not Available	Not Available	Not Available	Not Available
VII	13579923	J-35616-4A (PU)	J-38125-553	Not Available	Not Available	Not Available	Not Available
VIII	13579978	J-35616-43 (RD)	J-38125-553	Not Available	Not Available	Not Available	Not Available
IX	13582322	J-35616-35 (VT)	J-38125-11A	Not Available	Not Available	Not Available	Not Available
X	19300659	J-35616-43 (RD)	J-38125-553	Not Available	Not Available	Not Available	Not Available
XI	19301761	J-35616-35 (VT)	J-38125-12A	Not Available	Not Available	Not Available	Not Available
XII	Not Available	No Tool Required	No Tool Required	Not Available	Not Available	Not Available	Not Available

Pin	Size	Color	Circuit	Function	Terminal Type ID	Option
1	0.5 0.5	RD/VT RD/VT	340 340	Battery Positive Voltage	I XI	- -
2	0.35	BN/VT	193	Rear Defog Relay Control	XI	-
3	0.5 0.5	RD/VT RD/VT	340 340	Battery Positive Voltage	I XI	- -
5	0.35	YE/VT	317	Fog Lamp Relay Coil Control	XI	-
6	0.35	GY/YE	6188	Lift Glass/Rear Compartment Lid Motor Release Control	XI	-
7	0.5	RD/YE	4340	Battery Positive Voltage	XI	-
8	0.5 0.5	BK BK	1150 1150	Ground	IX XI	- -
9	0.5 0.5	BK BK	1150 1150	Ground	XI IX	- -
10	0.5	YE/GY	122	Rear Fog Lamp Control	XI	-

cardiagn.com

Pin	Size	Color	Circuit	Function	Terminal Type ID	Option
11	1.5	RD/D-BU	6040	Battery Positive Voltage	IV	-
15	0.5	D-BU/YE	6795	Lift Glass/Rear Compartment Lid Motor Release Control 2	XI	-
16	0.5	BK	1150	Ground	XI	-
17	2.5	RD/D-BU	1240	Battery Positive Voltage	IV	-
20	0.35	L-GN/BN	5706	Endgate Latch Relay Control	XI	-
21	0.5	RD/BN	4240	Battery Positive Voltage	XI	-
22	3	RD/GY	7040	Battery Positive Voltage	IV	-
25	0.5	D-BU/WH	6128	Rear Closure Unlatch Motor Unlatch Control	XI	-
26	0.35	YE	5704	Endgate Latch Relay Coil Control	XI	-
27	0.75	RD/D-BU	1240	Battery Positive Voltage	III	-
28	0.5	RD/VT	340	Battery Positive Voltage	III	-
30	4	BN/VT	938	-	VIII	-
31	2.5	RD/GY	1740	Battery Positive Voltage	VII	-
35	2.5	BN/VT	293	Rear Defog Element Control	X	-
36	0.5	RD/D-BU	840	Battery Positive Voltage	III	-
37	0.75	RD/YE	3040	Battery Positive Voltage	III	-
43	0.5	RD/YE	4340	Battery Positive Voltage	III	-
49	0.5	RD/BN	4240	Battery Positive Voltage	III	-
52	2.5	BN/VT	293	Rear Defog Element Control	VII	-
53	0.5	BN/VT	293	Rear Defog Element Control	XII	-
54	0.75	RD/L-GN	5140	Battery Positive Voltage	III	-
55	0.75	RD/L-GN	6140	Battery Positive Voltage	III	-
56	0.5	RD/VT	340	Battery Positive Voltage	III	-
57	0.5	BN/YE	2267	Mirror Heating Element Control	III	-
60	0.5	BK	1150	Ground	V	-
61	4	RD/D-BU	42	Battery Positive Voltage	VI	-
62	4	BN/VT	938	-	VI	-
63	4	RD/D-BU	42	Battery Positive Voltage	VI	-

cardiagn.com

Pin	Size	Color	Circuit	Function	Terminal Type ID	Option
64	6	RD/WH	942	-	II	-
65	0.35 0.5	BN/VT BN/VT	193 193	Rear Defog Relay Control	V	- -

X55X FUSE HOLDER- VIDEO DISPLAY (AYE)

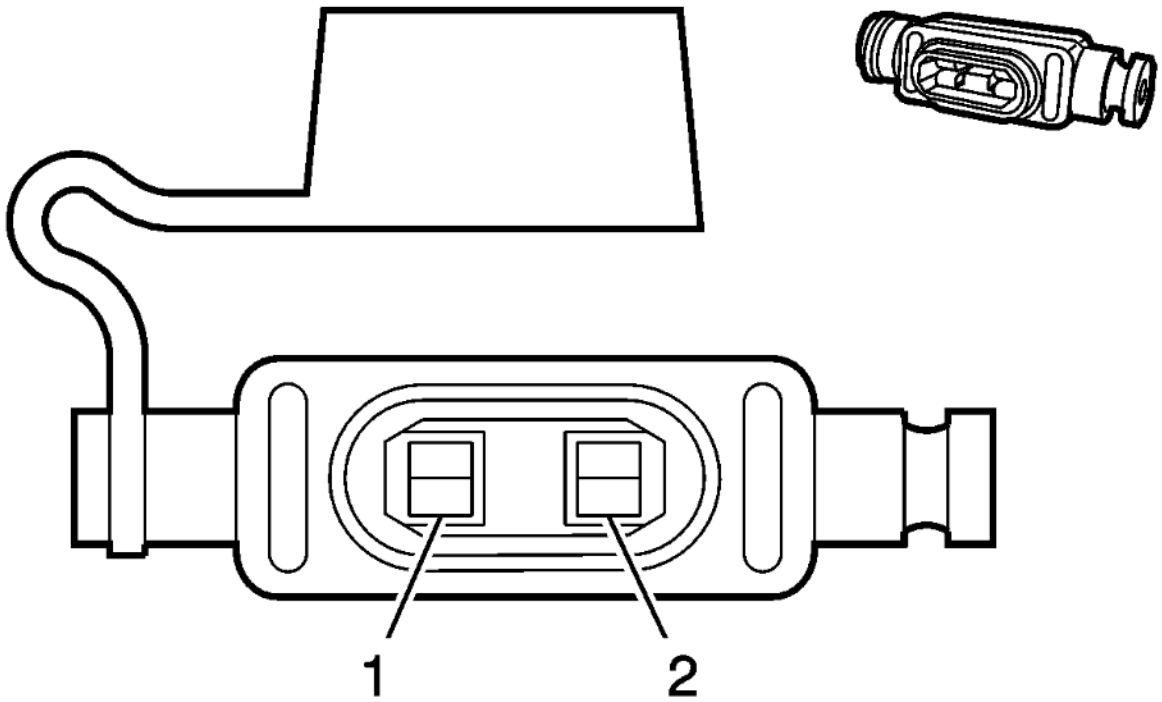

Connector Part Information

- Harness Type: Accessory Power Harness
- OEM Connector: Not Available
- Service Connector: Service by Harness - See Part Catalog
- Description: 2-Way Fuse Holder

cardiagn.com

Terminal Part Information

Terminal Type ID	Terminated Lead	Diagnostic Test Probe	Terminal Removal Tool	Service Terminal	Tray	Core Crimp	Insulation Crimp
I	Not Required	Not Required	Not Required	Not Required	Not Required	Not Required	Not Required

Pin	Size	Color	Circuit	Function	Terminal Type ID	Option
1	-	RD	-	Battery Positive Voltage	I	-
2	-	RD	-	Battery Positive Voltage	I	-

X61A JUNCTION BLOCK- INSTRUMENT PANEL TOP VIEW

cardiagn.com

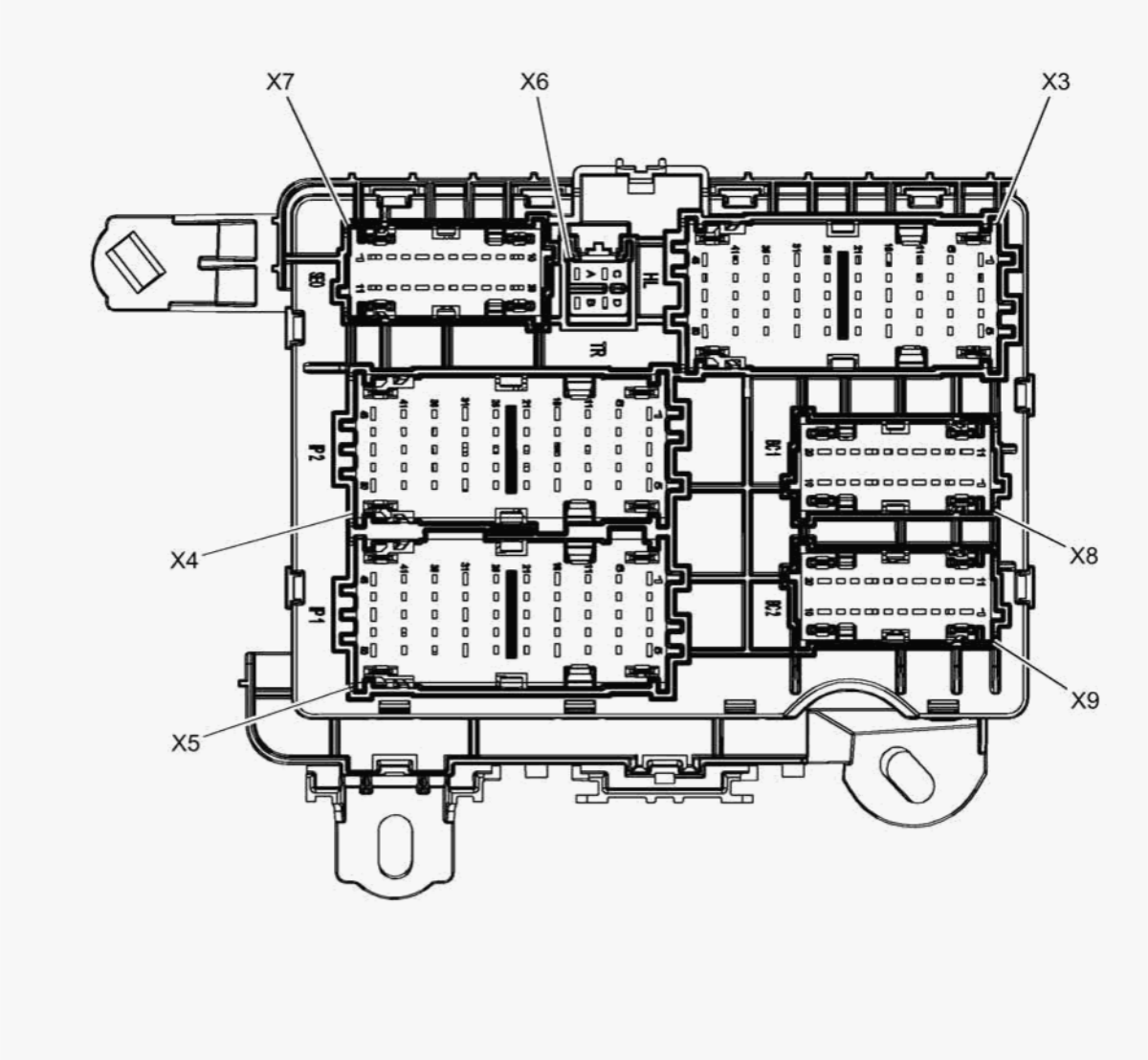

Fig. 4: X61A Junction Block- Instrument Panel Top View
Courtesy of GENERAL MOTORS COMPANY

X61A JUNCTION BLOCK- INSTRUMENT PANEL BOTTOM VIEW

cardiagn.com

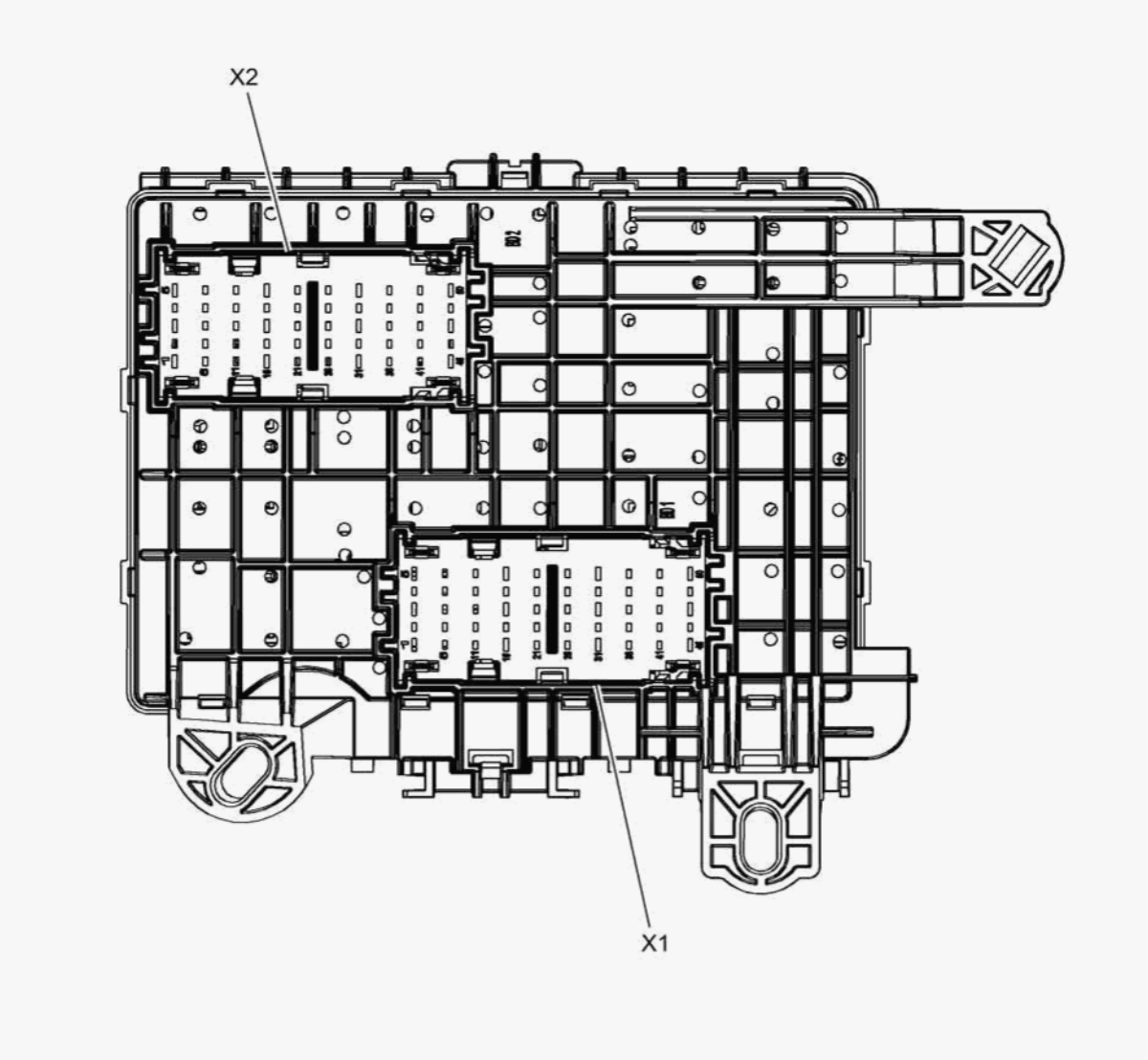

Fig. 5: X61A Junction Block- Instrument Panel Bottom View
Courtesy of GENERAL MOTORS COMPANY

X61A JUNCTION BLOCK- INSTRUMENT PANEL X1

cardiagn.com

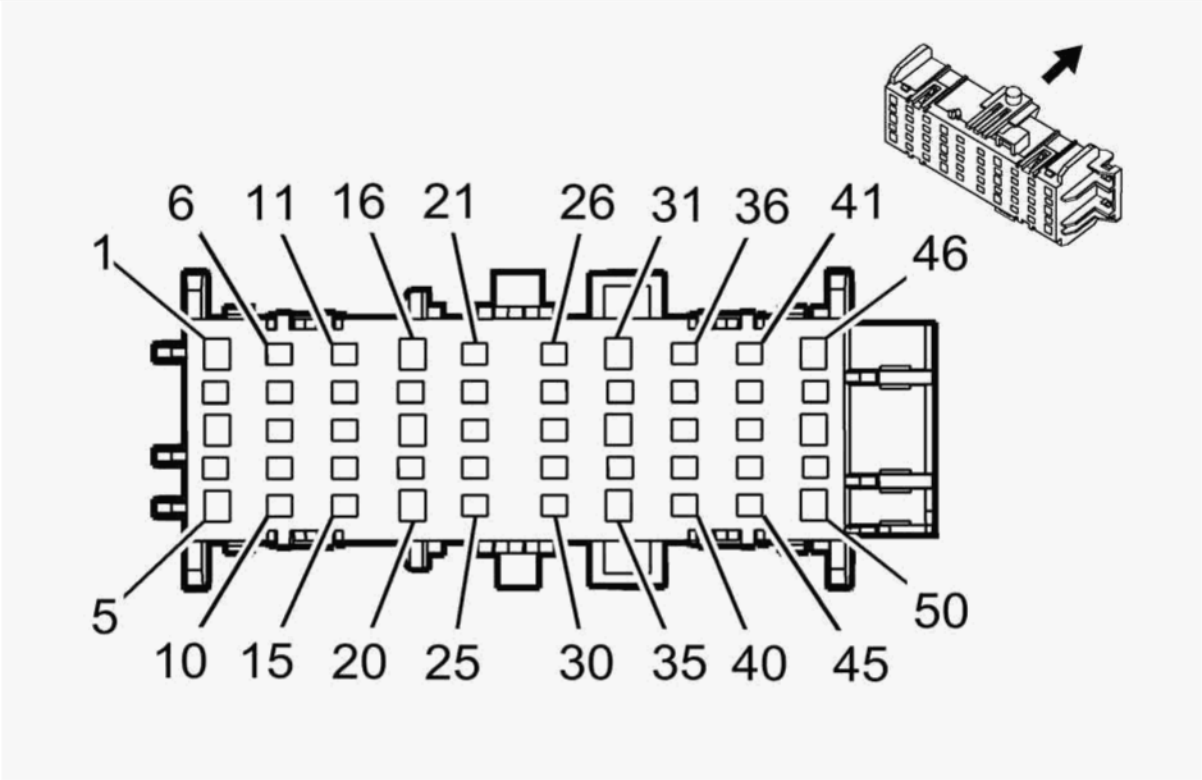

Connector Part Information

- Harness Type: Body
- OEM Connector: 33114819
- Service Connector: 19301798
- Description: 50-Way F 1.5, 2.8 OCS Series (BK)

Terminal Part Information

Terminal Type ID	Terminated Lead	Diagnostic Test Probe	Terminal Removal Tool	Service Terminal	Tray	Core Crimp	Insulation Crimp
I	19301761	J-35616-35 (VT)	J-38125-12A	Not Available	Not Available	Not Available	Not Available
I	19301761	J-35616-35 (VT)	J-38125-12A	Not Available	Not Available	Not Available	Not Available
I	19301761	J-35616-35 (VT)	J-38125-12A	Not Available	Not Available	Not Available	Not Available
II	19301767	J-35616-2A (GY)	J-38125-560	Not Available	Not Available	Not Available	Not Available

cardiagn.com

Terminal Type ID	Terminated Lead	Diagnostic Test Probe	Terminal Removal Tool	Service Terminal	Tray	Core Crimp	Insulation Crimp
II	19301767	J-35616-2A (GY)	J-38125-560	Not Available	Not Available	Not Available	Not Available

Pin	Size	Color	Circuit	Function	Terminal Type ID	Option
1	-	-	-	Not Occupied	-	-
2	0.5	GY/BK	1570	Front Axle Actuator Control	II	-
3- 10	-	-	-	Not Occupied	-	-
11	0.35	GY/L-GN	2555	Rear Park Assist Disable Signal	II	-
12- 15	-	-	-	Not Occupied	-	-
16	2.5	D-BU	965	-	I	-
17	-	-	-	Not Occupied	-	-
18	0.5	D-BU/YE	6105	High Speed GMLAN Serial Data (+) (2)	I	-
19	0.5	D-BU/YE	6105	High Speed GMLAN Serial Data (+) (2)	II	-
20	0.5	WH	6106	High Speed GMLAN Serial Data (-) (2)	I	-
21	0.5	RD/WH	961	-	II	-
22	0.35	VT	185	Low Washer Fluid Indicator Control	II	-
23	0.35	BN/YE	780	Driver Door Lock Switch Lock Signal	II	-
24	0.5	BN	7634	Integrated Trailer Brake Controller Redundant Manual Apply Signal	II	-
25	0.35	GY	5697	Child Lockout Indicator Control	II	-
26	0.5	D-BU/RD	7632	Integrated Trailer Brake Controller Switch 5 Volt Reference	II	-
27	0.5	BK/BN	7631	Integrated Trailer Brake Controller Switch Low Reference	II	-
28	0.35	BN/WH	781	Driver Door Lock Switch Unlock Signal	II	-
29	0.5	YE	7635	Integrated Trailer Brake Controller Manual Apply Signal	II	-
30	0.5	L-GN/GY	963	-	II	-
31	2.5	GY/BK	966	-	I	-
32	0.5	WH	6106	High Speed GMLAN Serial Data (-) (2)	II	-

cardiagn.com

Pin	Size	Color	Circuit	Function	Terminal Type ID	Option
33	0.5	VT/BN	300	Run Ignition 3 Voltage	I	-
34	0.5	YE/WH	962	-	II	-
35	2.5	YE/BN	967	-	I	-
36	0.35	WH/GY	5285	Adjustable Pedal Switch Rearward Signal	II	-
37	-	-	-	Not Occupied	-	-
38	0.5	WH/D-BU	964	-	II	-
39	1	D-BU/VT	1134	Park Brake Switch Signal	II	-
40	0.5	L-GN	5060	Low Speed GMLAN Serial Data	II	-
41	0.5	L-GN/BK	7633	Integrated Trailer Brake Controller User Gain Signal	II	-
42	0.35	L-GN/GY	5286	Adjustable Pedal Switch Forward Signal	II	-
43	0.35	L-GN/VT	1601	Steering Column Lock Signal	II	-
44	0.5	WH/D-BU	3691	Trailer Brake Apply Signal	II	-
45	0.35	L-GN/BN	5852	Rear Park Assist LED Disable Signal	II	-
46	0.5	VT/WH	1939	Run/Crank Ignition 1 Voltage	I	-
47	0.5	WH	6816	Indicator Dimming Control	II	-
48	2.5	RD/L-GN	968	-	I	-
49	0.5	YE/WH	816	Brake Transmission Shift Interlock Solenoid Control	II	-
50	2.5	BK	2550	Ground	I	-

X61A JUNCTION BLOCK- INSTRUMENT PANEL X2

cardiagn.com

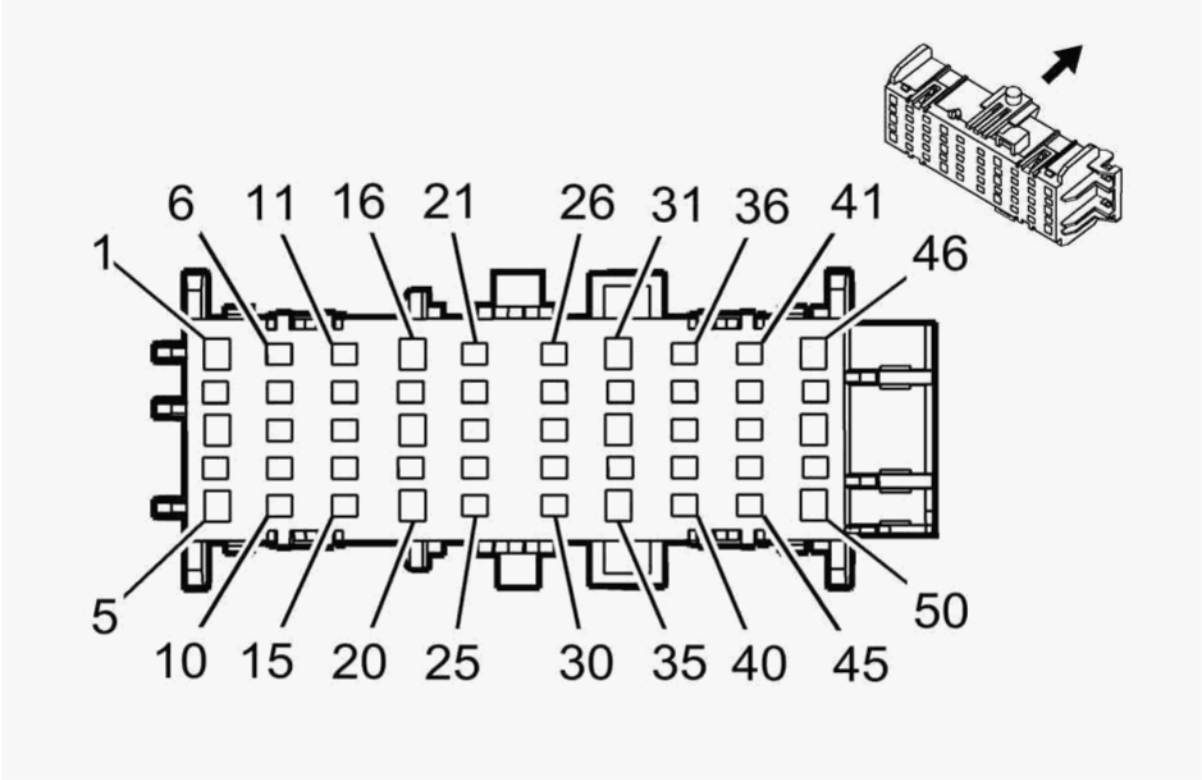

Connector Part Information

- Harness Type: Body
- OEM Connector: 33115109
- Service Connector: 19329464
- Description: 50-Way F 1.5, 2.8 OCS Series (GY)

Terminal Part Information

Terminal Type ID	Terminated Lead	Diagnostic Test Probe	Terminal Removal Tool	Service Terminal	Tray	Core Crimp	Insulation Crimp
I	13575543	J-35616-35 (VT)	J-38125-12A	1326030-8	13	B	F
II	19301761	J-35616-35 (VT)	J-38125-12A	Not Available	Not Available	Not Available	Not Available
II	19301761	J-35616-35 (VT)	J-38125-12A	Not Available	Not Available	Not Available	Not Available
II	19301761	J-35616-35 (VT)	J-38125-12A	Not Available	Not Available	Not Available	Not Available

cardiagn.com

Terminal Type ID	Terminated Lead	Diagnostic Test Probe	Terminal Removal Tool	Service Terminal	Tray	Core Crimp	Insulation Crimp
III	19301767	J-35616-2A (GY)	J-38125-560	Not Available	Not Available	Not Available	Not Available
III	19301767	J-35616-2A (GY)	J-38125-560	Not Available	Not Available	Not Available	Not Available
III	19301767	J-35616-2A (GY)	J-38125-560	Not Available	Not Available	Not Available	Not Available

Pin	Size	Color	Circuit	Function	Terminal Type ID	Option
1- 2	-	-	-	Not Occupied	-	-
3	4	RD/GY	1342	Battery Positive Voltage	I	-
4	0.35	D-BU	2307	Passenger Air Bag On Indicator Control	III	-
5	0.35 0.5	RD/L-GN RD/L-GN	3140 3140	Battery Positive Voltage	II	- -
6	0.5	WH	2501	High Speed GMLAN Serial Data (-) (1)	III	-
7	0.5	D-BU	2500	High Speed GMLAN Serial Data (+) (1)	III	-
8	0.35	WH/RD	6207	Memory Sensor High Reference	III	-
9	0.35	BK/YE	1691	Automatic Day/Night Mirror Low Reference	III	-
10	0.35	YE/WH	1690	Automatic Day/Night Mirror Signal	III	-
11	0.35	D-BU	5952	Adjustable Pedal Position Sensor Brake Signal	III	-
12	0.75 1.5	YE YE	5129 5129	Adjustable Pedal Actuator Rearward Control	III	- -
13- 14	-	-	-	Not Occupied	-	-
15	0.35	L-GN/WH	24	Backup Lamp Control	III	-
16	2.5	YE/BN	1569	Transfer Case Lock Solenoid Control	II	-
17	-	-	-	Not Occupied	-	-
18	4	BK	550	Ground	I	-
19	0.35	VT/WH	5234	Passenger Seat Belt Indicator Control	III	-
20	0.35	L-GN	6112	Power Lift Gate On/Off Switch Signal	II	-
21	0.75 1.5	L-GN/VT L-GN/VT	5130 5130	Adjustable Pedal Actuator Forward Control	III	- -
22	0.35	BK/GY	6206	Memory Sensor Low Reference	III	-
23	0.5	WH/BN	6815	Inadvertent Power Control	III	-

cardiagn.com

Pin	Size	Color	Circuit	Function	Terminal Type ID	Option
24	0.35	L-GN	2308	Passenger Air Bag Off Indicator Control	III	-
25	-	-	-	Not Occupied	-	-
26	0.35	D-BU/GY	7473	Incremental Encoder Impulse Signal	III	-
27	0.35	VT	7476	Incremental Encoder Sensor Low Reference	III	-
28	-	-	-	Not Occupied	-	-
29	0.5	GY	157	Interior Lamp Control	III	-
30	0.35	GY	156	Courtesy Lamp Switch Signal	III	-
31	4	YE/VT	1553	Transfer Case Motor Counter Clockwise Control	I	-
32	0.35	YE	7474	Incremental Encoder Direction Signal	III	-
33- 34	-	-	-	Not Occupied	-	-
35	2.5	RD/L-GN	242	Battery Positive Voltage	II	-
36	0.35	WH/L-GN	7475	Incremental Encoder Sensor 8 Volt Reference	III	-
37	0.5	YE/WH	1695	Four Wheel Drive Wheel Lock Indicator Control	III	-
38	0.35	VT/YE	5985	Accessory Wakeup Serial Data	III	-
39	-	-	-	Not Occupied	-	-
40	0.35	GY/BK	6113	Rear Lift Gate Open/Close Switch Signal	III	-
41- 42	-	-	-	Not Occupied	-	-
43	0.35	GY/WH	3153	Lane Departure Warning Disable Switch Signal	III	-
44	0.5	WH/D-BU	3691	Trailer Brake Apply Signal	III	-
45	-	-	-	Not Occupied	-	-
46	4	YE/GY	1552	Transfer Case Motor Clockwise Control	I	-
47	0.5	L-GN/GY	817	Vehicle Speed Signal	III	-
48	2.5	D-BU	47	Trailer Auxiliary Control	II	-
49	0.35	WH	3152	Lane Departure Warning Indicator Control	III	-
50	0.35	VT/YE	43	Accessory Ignition Voltage	II	-

X61A JUNCTION BLOCK- INSTRUMENT PANEL X3

cardiagn.com

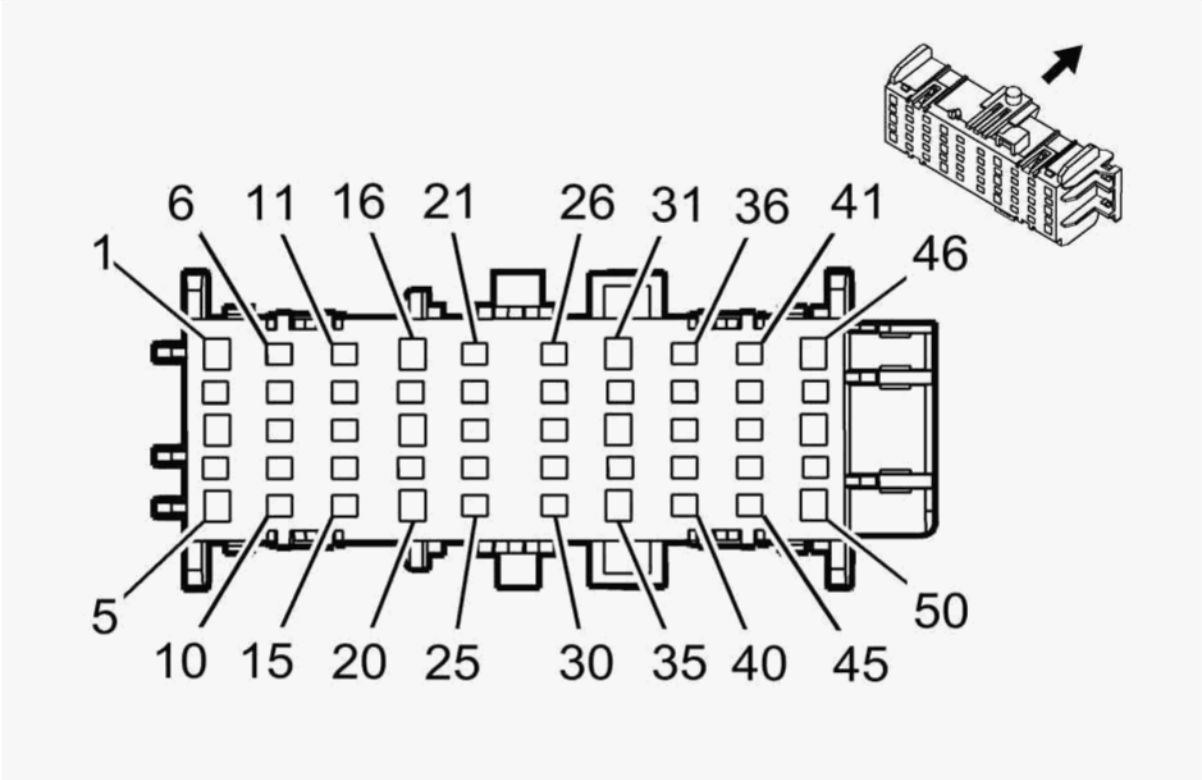

Connector Part Information

- Harness Type: Headliner
- OEM Connector: 33115112
- Service Connector: 19329467
- Description: 50-Way F 1.5, 2.8 OCS Series (BU)

Terminal Part Information

Terminal Type ID	Terminated Lead	Diagnostic Test Probe	Terminal Removal Tool	Service Terminal	Tray	Core Crimp	Insulation Crimp
I	13578891	J-35616-2A (GY)	J-38125-11A	Not Available	Not Available	Not Available	Not Available
II	19301761	J-35616-35 (VT)	J-38125-12A	Not Available	Not Available	Not Available	Not Available
II	19301761	J-35616-35 (VT)	J-38125-12A	Not Available	Not Available	Not Available	Not Available
III	19301767	J-35616-2A (GY)	J-38125-560	Not Available	Not Available	Not Available	Not Available

cardiagn.com

Pin	Size	Color	Circuit	Function	Terminal Type ID	Option
1- 2	-	-	-	Not Occupied	-	-
3	0.35 0.5	RD/L-GN RD/L-GN	3140 3140	Battery Positive Voltage	II	- -
4	0.35	D-BU	2307	Passenger Air Bag On Indicator Control	I	-
5- 7	-	-	-	Not Occupied	-	-
8	0.35	YE/WH	1690	Automatic Day/Night Mirror Signal	III	-
9	0.35	BK/YE	1691	Automatic Day/Night Mirror Low Reference	III	-
10- 12	-	-	-	Not Occupied	-	-
13	0.35 0.5	L-GN/RD L-GN/RD	24 24	Backup Lamp Control	III	- -
14- 16	-	-	-	Not Occupied	-	-
17	0.35	L-GN/BK	2515	Keypad Control	III	-
18	0.35	L-GN	6112	Power Lift Gate On/Off Switch Signal	II	-
19	0.35	VT/WH	5234	Passenger Seat Belt Indicator Control	I	-
20	-	-	-	Not Occupied	-	-
21	0.35	L-GN/D-BU	2514	Keypad Signal	III	-
22	0.35	YE/BN	2516	Keypad Green LED Control	III	-
23	-	-	-	Not Occupied	-	-
24	0.35	L-GN/RD	2308	Passenger Air Bag Off Indicator Control	I	-
25	0.5	WH/BN	6815	Inadvertent Power Control	III	-
26	-	-	-	Not Occupied	-	-
27	0.5	YE	6817	LED Backlight Dimming Control	III	-
28	0.35	GY/D-BU	156	Courtesy Lamp Switch Signal	I	-
29	0.5	GY	157	Interior Lamp Control	III	-
30- 35	-	-	-	Not Occupied	-	-
36	0.35	BN/WH	2517	Keypad Red LED Control	III	-
37	-	-	-	Not Occupied	-	-
38	0.35	GY/BK	6113	Rear Lift Gate Open/Close Switch Signal	I	-
39- 40	-	-	-	Not Occupied	-	-
41	0.35	GY/L-GN	328	Interior Lamp Defeat Switch Signal	I	-

cardiagn.com

Pin	Size	Color	Circuit	Function	Terminal Type ID	Option
42	0.35 0.35	VT/L-GN VT/L-GN	7558 7558	LED Ambient Lighting Control 2	III I	- -
43- 44	-	-	-	Not Occupied	-	-
45	0.35	GY/WH	3153	Lane Departure Warning Disable Switch Signal	III	-
46	2.5	BK	1050	Ground	II	-
47	0.35	L-GN	5060	Low Speed GMLAN Serial Data	III	-
48	-	-	-	Not Occupied	-	-
49	0.35	WH	3152	Lane Departure Warning Indicator Control	III	-
50	-	-	-	Not Occupied	-	-

X61A JUNCTION BLOCK- INSTRUMENT PANEL X4

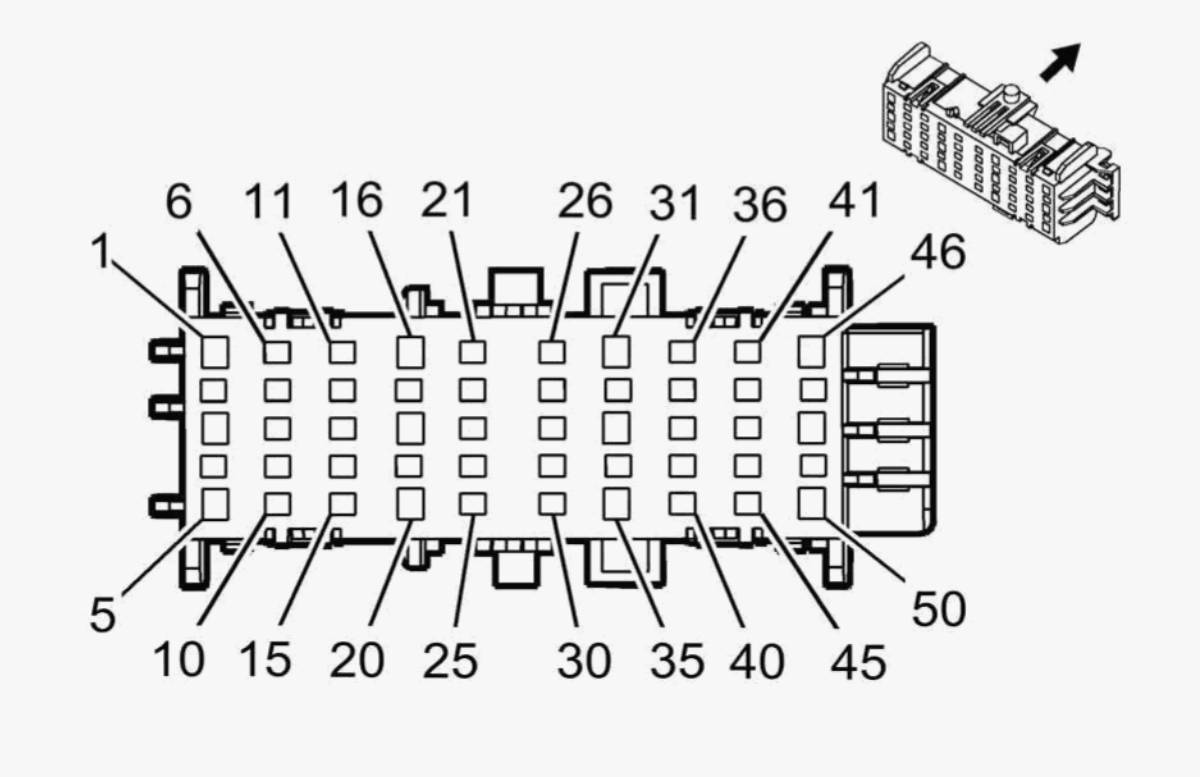

cardiagn.com

Connector Part Information

- Harness Type: Instrument Panel
- OEM Connector: 33115111
- Service Connector: 19329466
- Description: 50-Way F 1.5, 2.8 OCS Series (GN)

Terminal Part Information

Terminal Type ID	Terminated Lead	Diagnostic Test Probe	Terminal Removal Tool	Service Terminal	Tray	Core Crimp	Insulation Crimp
I	19301761	J-35616-35 (VT)	J-38125-12A	Not Available	Not Available	Not Available	Not Available
I	19301761	J-35616-35 (VT)	J-38125-12A	Not Available	Not Available	Not Available	Not Available
I	19301761	J-35616-35 (VT)	J-38125-12A	Not Available	Not Available	Not Available	Not Available
I	19301761	J-35616-35 (VT)	J-38125-12A	Not Available	Not Available	Not Available	Not Available
II	19301767	J-35616-2A (GY)	J-38125-560	Not Available	Not Available	Not Available	Not Available
II	19301767	J-35616-2A (GY)	J-38125-560	Not Available	Not Available	Not Available	Not Available

Pin	Size	Color	Circuit	Function	Terminal Type ID	Option
1	-	-	-	Not Occupied	-	-
2	0.35	YE/VT	2516	Keypad Green LED Control	II	-
3	0.35	BK/L-GN	552	Sensor Low Reference	I	-
4	0.5	WH	2501	High Speed GMLAN Serial Data (-) (1)	II	-
5	0.5	D-BU	2500	High Speed GMLAN Serial Data (+) (1)	I	-
6	0.5	YE	6817	LED Backlight Dimming Control	II	-
7	0.35	L-GN/WH	2514	Keypad Signal	II	-
8	0.35	GY/RD	598	5 Volt Reference	II	-
9	0.35	WH/L-GN	526	Stop Lamp Switch Signal	II	-
10	0.35	D-BU/YE	1693	Four Wheel Drive Switch Signal	II	-
11	0.35	GY/WH	3153	Lane Departure Warning Disable Switch Signal	II	-
12- 13	-	-	-	Not Occupied	-	-

cardiagn.com

Pin	Size	Color	Circuit	Function	Terminal Type ID	Option
14	0.35	BN	1560	Neutral Indicator Control	II	-
15	0.35	GY/RD	6029	Four Wheel Drive Mode Switch 5 Volt Reference	II	-
16	2.5	BK	1050	Ground	I	-
17- 18	-	-	-	Not Occupied	-	-
19	0.35	L-GN/BK	2515	Keypad Control	II	-
20	-	-	-	Not Occupied	-	-
21	0.5	VT/L-GN	7558	LED Ambient Lighting Control 2	II	-
22	0.35	BN/WH	2517	Keypad Red LED Control	II	-
23	0.35	BN/BK	1566	4 HI Indicator Control	II	-
24	0.35	VT/WH	1565	4 LO Indicator Control	II	-
25	0.35	VT/L-GN	1739	Run/Crank Ignition 1 Voltage	II	-
26	0.35	WH	3152	Lane Departure Warning Indicator Control	II	-
27	0.35	GY/L-GN	328	Interior Lamp Defeat Switch Signal	II	-
28- 29	-	-	-	Not Occupied	-	-
30	0.35	GY/L-GN	1561	AWD Indicator Control	II	-
31	1.5	RD/YE	2340	Battery Positive Voltage	I	-
32	0.5	BK/WH	1851	Signal Ground	II	-
33	0.35 0.75	BK/WH BK/WH	1851 1851	Signal Ground	I	- -
34	0.35	BK/WH	1851	Signal Ground	II	-
35	2.5	BK/WH	1851	Signal Ground	I	-
36	-	-	-	Not Occupied	-	-
37	0.35	BK/WH	1851	Signal Ground	II	-
38	0.5	BK/WH	1851	Signal Ground	II	-
39	0.35	BK/WH	1851	Signal Ground	II	-
40	0.35	L-GN/BK	1563	2 HI Indicator Control	II	-
41	0.35	BK/WH	1851	Signal Ground	II	-
42	0.35	BK/WH	1851	Signal Ground	II	-
43	0.35	BK/WH	1851	Signal Ground	II	-

cardiagn.com

Pin	Size	Color	Circuit	Function	Terminal Type ID	Option
44	0.35	BK	2550	Ground	II	-
45	0.35	BK	2550	Ground	II	-
46	0.75	BK	2550	Ground	I	-
47	0.35	BK	2550	Ground	II	-
48	0.5 0.75	BK BK	2550 2550	Ground	I	- -
49	0.35	BK	2550	Ground	II	-
50	0.75	BK	2550	Ground	I	-

X61A JUNCTION BLOCK- INSTRUMENT PANEL X5

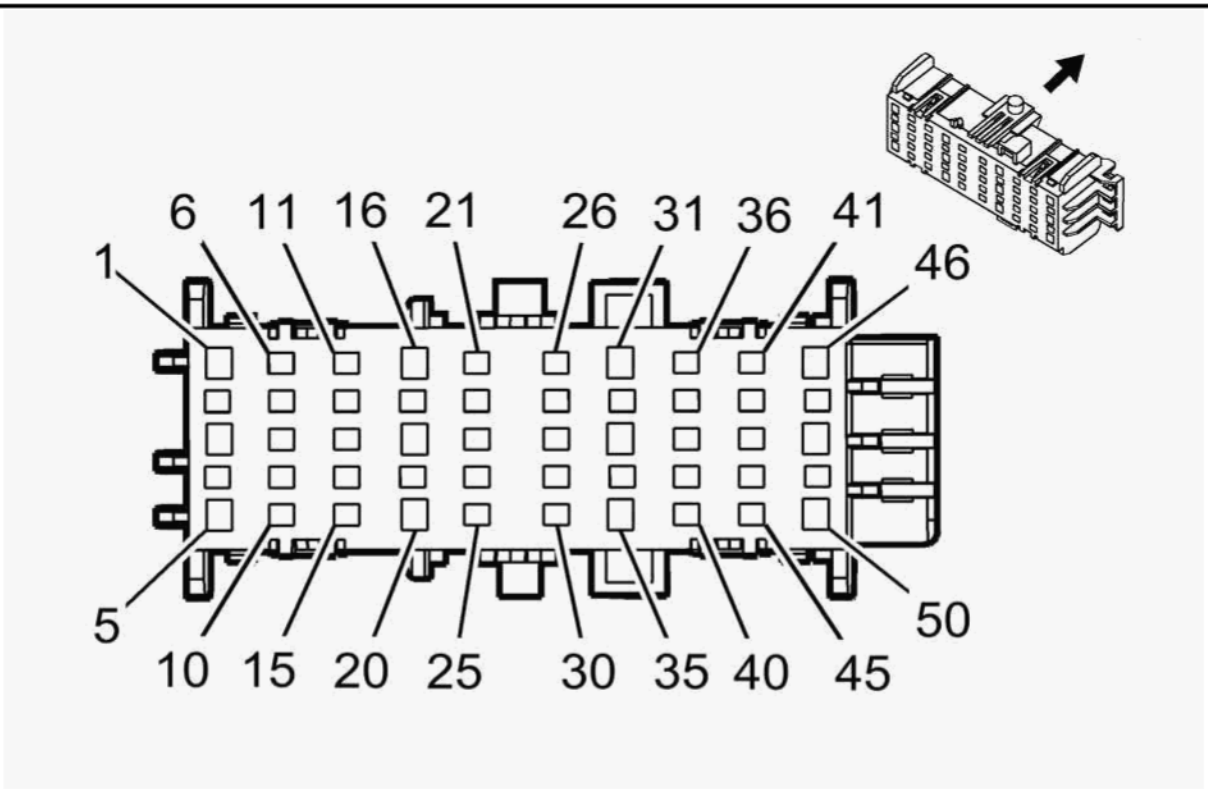

Connector Part Information

cardiagn.com

- Harness Type: Instrument Panel
- OEM Connector: 33115110
- Service Connector: 19329465
- Description: 50-Way F 1.5, 2.8 OCS Series (NA)

Terminal Part Information

Terminal Type ID	Terminated Lead	Diagnostic Test Probe	Terminal Removal Tool	Service Terminal	Tray	Core Crimp	Insulation Crimp
I	19301761	J-35616-35 (VT)	J-38125-12A	Not Available	Not Available	Not Available	Not Available
I	19301761	J-35616-35 (VT)	J-38125-12A	Not Available	Not Available	Not Available	Not Available
II	19301767	J-35616-2A (GY)	J-38125-560	Not Available	Not Available	Not Available	Not Available
II	19301767	J-35616-2A (GY)	J-38125-560	Not Available	Not Available	Not Available	Not Available

Pin	Size	Color	Circuit	Function	Terminal Type ID	Option
1	0.5	WH	6106	High Speed GMLAN Serial Data (-) (2)	I	-
2	0.5	D-BU/YE	6105	High Speed GMLAN Serial Data (+) (2)	II	-
3	0.5	D-BU/YE	6105	High Speed GMLAN Serial Data (+) (2)	I	-
4- 5	-	-	-	Not Occupied	-	-
6	0.35	GY	5697	Child Lockout Indicator Control	II	-
7	0.5	BN	7634	Integrated Trailer Brake Controller Redundant Manual Apply Signal	II	-
8	0.35	BN/YE	780	Driver Door Lock Switch Lock Signal	II	-
9	0.35	VT	185	Low Washer Fluid Indicator Control	II	-
10	0.5	RD/WH	961	-	II	-
11	0.5	L-GN/GY	963	-	II	-
12	0.5	YE	7635	Integrated Trailer Brake Controller Manual Apply Signal	II	-
13	0.35	BN/WH	781	Driver Door Lock Switch Unlock Signal	II	-
14	0.5	BK/BN	7631	Integrated Trailer Brake Controller Switch Low Reference	II	-

cardiagn.com

Pin	Size	Color	Circuit	Function	Terminal Type ID	Option
15	0.5	D-BU/RD	7632	Integrated Trailer Brake Controller Switch 5 Volt Reference	II	-
16	-	-	-	Not Occupied	-	-
17	0.5	YE/WH	962	-	II	-
18	0.5	VT/BN	300	Run Ignition 3 Voltage	I	-
19	0.5	WH	6106	High Speed GMLAN Serial Data (-) (2)	II	-
20- 21	-	-	-	Not Occupied	-	-
22	0.5	D-BU/VT	1134	Park Brake Switch Signal	II	-
23	0.5	WH/D-BU	964	-	II	-
24	-	-	-	Not Occupied	-	-
25	0.35	WH/GY	5285	Adjustable Pedal Switch Rearward Signal	II	-
26	0.35	L-GN/BN	5852	Rear Park Assist LED Disable Signal	II	-
27	0.5	WH/D-BU	3691	Trailer Brake Apply Signal	II	-
28	0.35	L-GN/VT	1601	Steering Column Lock Signal	II	-
29	0.35	L-GN/GY	5286	Adjustable Pedal Switch Forward Signal	II	-
30	0.5	L-GN/BK	7633	Integrated Trailer Brake Controller User Gain Signal	II	-
31	-	-	-	Not Occupied	-	-
32	0.5	YE/WH	816	Brake Transmission Shift Interlock Solenoid Control	II	-
33	-	-	-	Not Occupied	-	-
34	0.5	WH	6816	Indicator Dimming Control	II	-
35- 36	-	-	-	Not Occupied	-	-
37	0.35	WH	6816	Indicator Dimming Control	II	-
38	0.35	WH	6816	Indicator Dimming Control	II	-
39	0.5	WH	6816	Indicator Dimming Control	II	-
40- 44	-	-	-	Not Occupied	-	-
45	0.35	GY/L-GN	2555	Rear Park Assist Disable Signal	II	-
46- 50	-	-	-	Not Occupied	-	-

cardiagn.com

X61A JUNCTION BLOCK- INSTRUMENT PANEL X6

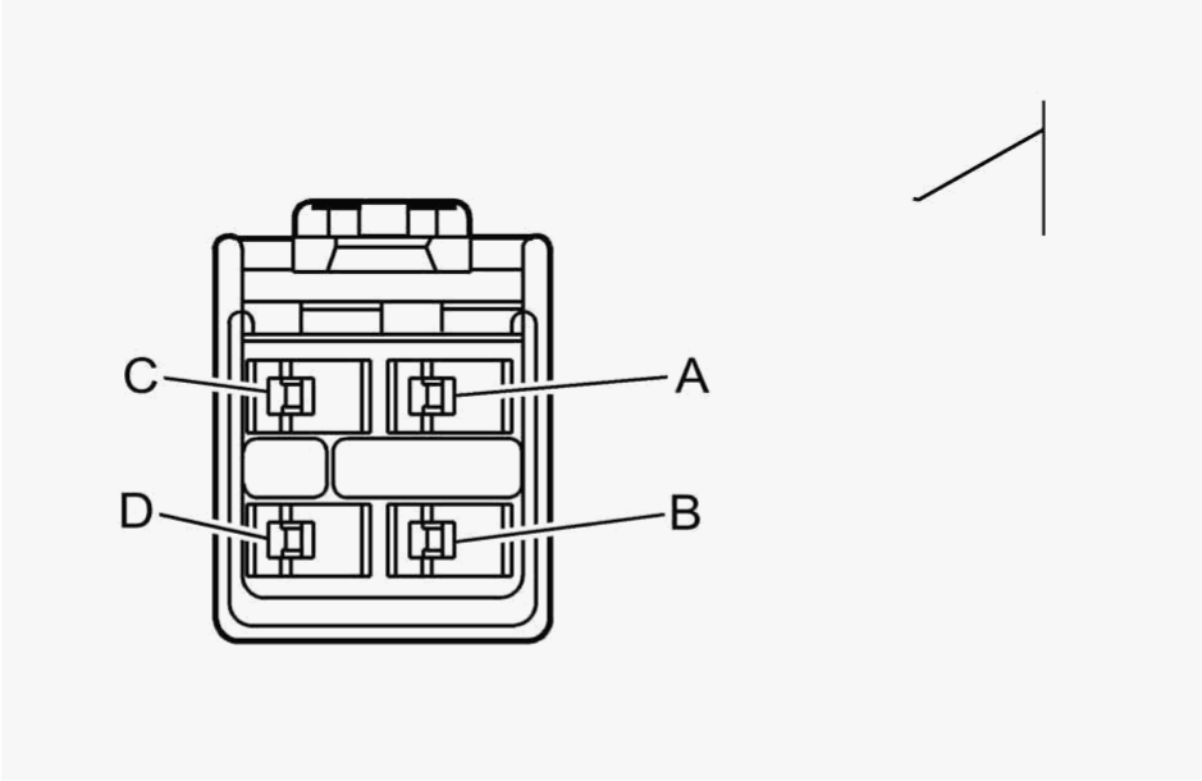

Connector Part Information

- Harness Type: Trailer Tow
- OEM Connector: 12194033
- Service Connector: Service by Harness- See Part Catalog
- Description: 4-Way F 280 Metri-Pack Series, Flexlock (CR)

Terminal Part Information

Terminal Type ID	Terminated Lead	Diagnostic Test Probe	Terminal Removal Tool	Service Terminal	Tray	Core Crimp	Insulation Crimp
I	Not Required	J-35616-4A (PU)	Not Required	Not Required	Not Required	Not Required	Not Required
I	Not Required	J-35616-4A (PU)	Not Required	Not Required	Not Required	Not Required	Not Required

cardiagn.com

Pin	Size	Color	Circuit	Function	Terminal Type ID	Option
A	0.5	BK	1050	Ground	I	-
B	0.5	WH/D-BU	3691	Trailer Brake Apply Signal	I	-
C	2.5	RD/L-GN	242	Battery Positive Voltage	I	-
D	2.5	D-BU	47	Trailer Auxiliary Control	I	-

X61A JUNCTION BLOCK- INSTRUMENT PANEL X7 (AYE/5W4/9C1/ACCESSORY WIFI)

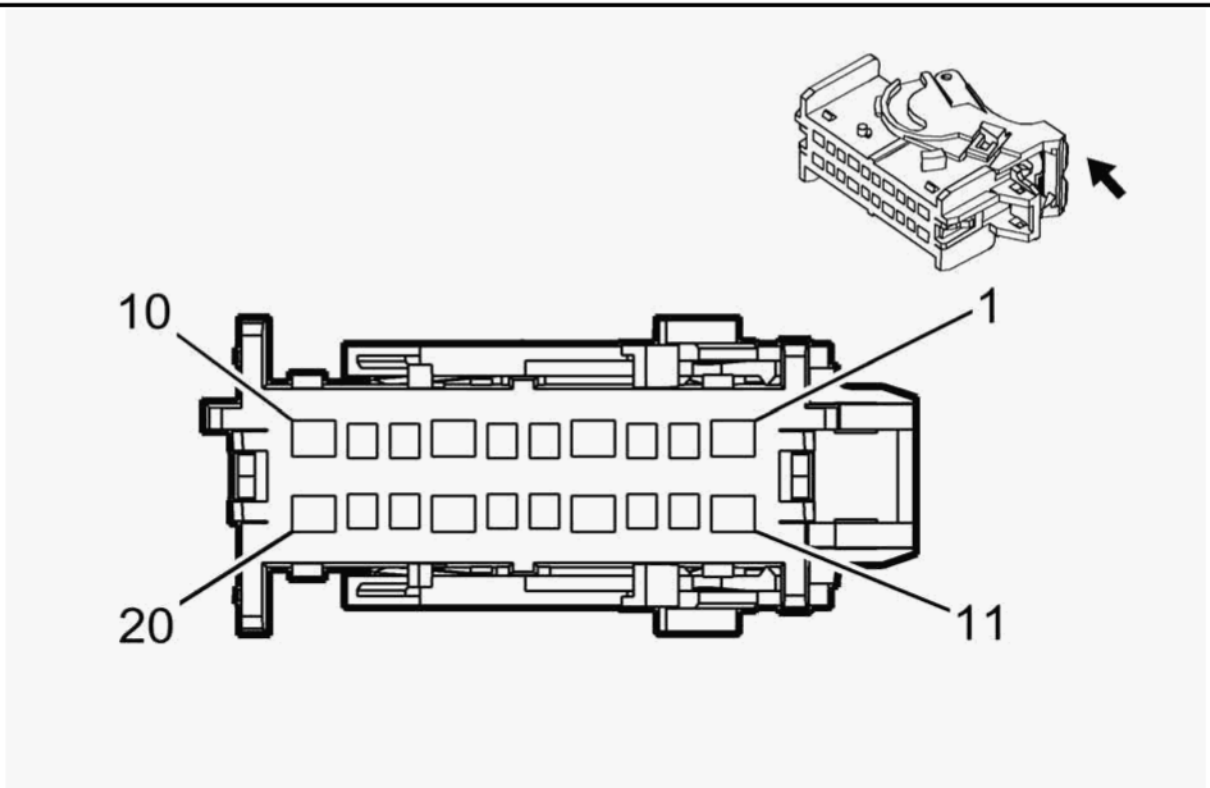

Connector Part Information

- Harness Type: Instrument Panel
- OEM Connector: 13597271
- Service Connector: 25801650
- Description: 20-Way F 1.5, 2.8 OCS Series (NA)

cardiagn.com

Terminal Part Information

Terminal Type ID	Terminated Lead	Diagnostic Test Probe	Terminal Removal Tool	Service Terminal	Tray	Core Crimp	Insulation Crimp
I	19301761	J-35616-35 (VT)	J-38125-12A	Not Available	Not Available	Not Available	Not Available
I	19301761	J-35616-35 (VT)	J-38125-12A	Not Available	Not Available	Not Available	Not Available
II	19301767	J-35616-2A (GY)	J-38125-560	Not Available	Not Available	Not Available	Not Available

Pin	Size	Color	Circuit	Function	Terminal Type ID	Option
1	2.5	RD/L-GN	968	-	I	-
2- 3	-	-	-	Not Occupied	-	-
4	2.5	YE/BN	967	-	I	-
5- 7	-	-	-	Not Occupied	-	-
8	0.5	VT/YE	43	Accessory Ignition Voltage	II	-
9	-	-	-	Not Occupied	-	-
10	0.5	BK	1050	Ground	I	-
11	0.5	VT/WH	1939	Run/Crank Ignition 1 Voltage	I	-
12- 13	-	-	-	Not Occupied	-	-
14	2.5	GY/BK	966	-	I	-
15- 18	-	-	-	Not Occupied	-	-
19	0.5	L-GN/GY	817	Vehicle Speed Signal	II	-
20	2.5	D-BU	965	-	I	-

X61A JUNCTION BLOCK- INSTRUMENT PANEL X8

cardiagn.com

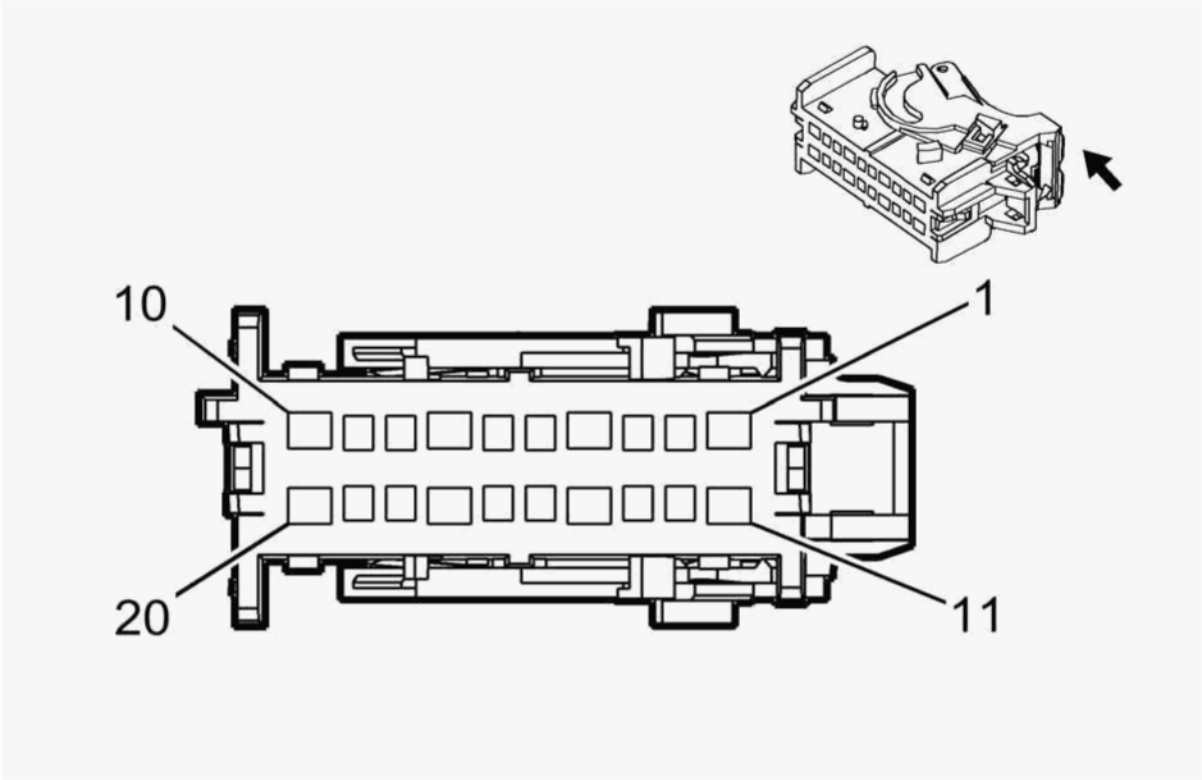

Connector Part Information

- Harness Type: Brake Clutch Jumper
- OEM Connector: 15547106
- Service Connector: Service by Harness- See Part Catalog
- Description: 20-Way F 1.5, 2.8 OCS Series (BK)

Terminal Part Information

Terminal Type ID	Terminated Lead	Diagnostic Test Probe	Terminal Removal Tool	Service Terminal	Tray	Core Crimp	Insulation Crimp
I	Not Required	J-35616-2A (GY)	Not Required	Not Required	Not Required	Not Required	Not Required
I	Not Required	J-35616-2A (GY)	Not Required	Not Required	Not Required	Not Required	Not Required
II	Not Required	J-35616-35 (VT)	Not Required	Not Required	Not Required	Not Required	Not Required

cardiagn.com

Pin	Size	Color	Circuit	Function	Terminal Type ID	Option
1- 7	-	-	-	Not Occupied	-	-
8	0.5	WH/L-GN	526	Stop Lamp Switch Signal	I	-
9	0.5	WH	2501	High Speed GMLAN Serial Data (-) (1)	I	-
10	0.5	D-BU	2500	High Speed GMLAN Serial Data (+) (1)	II	-
11	-	-	-	Not Occupied	-	-
12	0.5	WH	2501	High Speed GMLAN Serial Data (-) (1)	I	-
13	0.5	D-BU	2500	High Speed GMLAN Serial Data (+) (1)	I	-
14	0.5	WH/RD	6207	Memory Sensor High Reference	II	-
15	0.5	D-BU	5952	Adjustable Pedal Position Sensor Brake Signal	I	-
16	1.5	YE	5129	Adjustable Pedal Actuator Rearward Control	I	-
17	0.5	BK/GY	6206	Memory Sensor Low Reference	II	-
18	1.5	L-GN/VT	5130	Adjustable Pedal Actuator Forward Control	I	-
19	0.5	BK/L-GN	552	Sensor Low Reference	I	-
20	0.5	GY/RD	598	5 Volt Reference	II	-

X61A JUNCTION BLOCK- INSTRUMENT PANEL X9

cardiagn.com

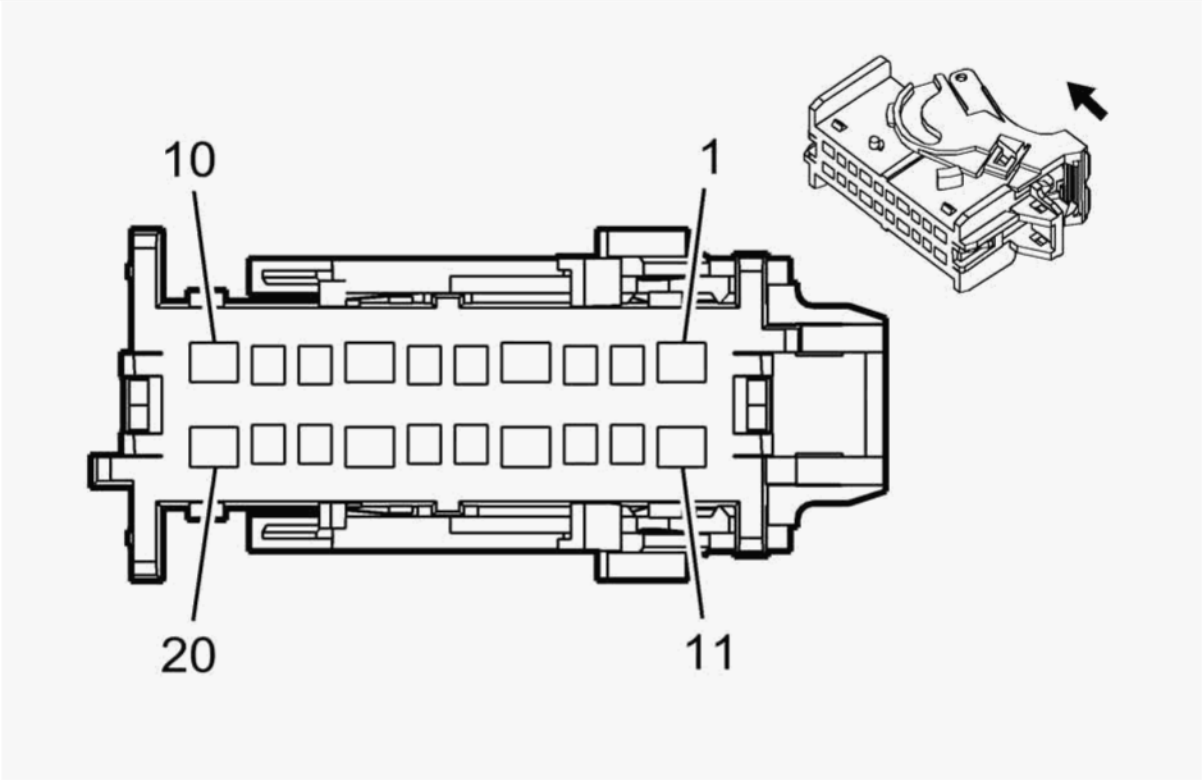

Connector Part Information

- Harness Type: Brake Clutch Jumper
- OEM Connector: 15547107
- Service Connector: Service by Harness- See Part Catalog
- Description: 20-Way F 1.5, 2.8 OCS Series (GY)

Terminal Part Information

Terminal Type ID	Terminated Lead	Diagnostic Test Probe	Terminal Removal Tool	Service Terminal	Tray	Core Crimp	Insulation Crimp
I	Not Required	J-35616-2A (GY)	Not Required	Not Required	Not Required	Not Required	Not Required
II	Not Required	J-35616-35 (VT)	Not Required	Not Required	Not Required	Not Required	Not Required
II	Not Required	J-35616-35 (VT)	Not Required	Not Required	Not Required	Not Required	Not Required
II	Not Required	J-35616-35 (VT)	Not Required	Not Required	Not Required	Not Required	Not Required

cardiagn.com

Terminal Type ID	Terminated Lead	Diagnostic Test Probe	Terminal Removal Tool	Service Terminal	Tray	Core Crimp	Insulation Crimp
II	Not Required	J-35616-35 (VT)	Not Required	Not Required	Not Required	Not Required	Not Required

Pin	Size	Color	Circuit	Function	Terminal Type ID	Option
1	2.5	YE/BN	1569	Transfer Case Lock Solenoid Control	II	-
2	0.35	D-BU/YE	1693	Four Wheel Drive Switch Signal	I	-
3	0.35	GY/RD	6029	Four Wheel Drive Mode Switch 5 Volt Reference	I	-
4	0.35	BN/BK	1566	4 HI Indicator Control	II	-
5	0.35	VT/WH	1565	4 LO Indicator Control	I	-
6	0.35	VT/L-GN	1739	Run/Crank Ignition 1 Voltage	I	-
7	0.35	VT/YE	5985	Accessory Wakeup Serial Data	II	-
8	0.35	L-GN/BK	1563	2 HI Indicator Control	I	-
9	0.35	GY/L-GN	1561	AWD Indicator Control	I	-
10	0.5	GY/BK	1570	Front Axle Actuator Control	II	-
11	3	RD/GY	1342	Battery Positive Voltage	II	-
12	0.35	BN	1560	Neutral Indicator Control	I	-
13	0.35	VT	7476	Incremental Encoder Sensor Low Reference	I	-
14	3	BK	550	Ground	II	-
15	0.35	D-BU/GY	7473	Incremental Encoder Impulse Signal	I	-
16	0.35	YE	7474	Incremental Encoder Direction Signal	I	-
17	4	YE/VT	1553	Transfer Case Motor Counter Clockwise Control	II	-
18	0.35	WH/L-GN	7475	Incremental Encoder Sensor 8 Volt Reference	I	-
19	0.5	YE/WH	1695	Four Wheel Drive Wheel Lock Indicator Control	I	-
20	4	YE/GY	1552	Transfer Case Motor Clockwise Control	II	-

Copyright 2018 Mitchell Repair Information Company, LLC. All Rights Reserved.

Article GUID: A00797715

cardiagn.com