Fastener Tightening Specifications

Application	Specification	
	Metric	English
3-Phase Cable Bracket to Tie Bar Bolt	10 N·m	89 lb in
Auxiliary Heater Water Pump Bolt	9 N·m	80 lb in
A/C Compressor to Block Bolts	22 N·m	16 lb ft
Balance Shaft Adjustable Chain Guide Bolt	15 N·m	11 lb ft
Balance Shaft Bearing Carrier to Block Bolt	10 N·m	89 lb in
Balance Shaft Fixed Chain Guide Bolt	15 N·m	11 lb ft
Balance Shaft Sprocket Bolt	50 N·m	37 lb ft
Battery Positive Cable to Starter Motor Nut	9 N·m	80 lb in
Block Core Plug	40 N·m	30 lb ft
Block Heater Bolt	10 N·m	89 lb in
Cam Cover to Cylinder Head Bolt	10 N·m	89 lb in
Cam Cover to Ground Cable Bolt	10 N·m	89 lb in
Cam Cover to Ground Cable Stud	10 N·m	89 lb in
Camshaft		
• Camshaft Cap Bolt	10 N·m	89 lb in
• Camshaft Position Actuator Solenoid Valve Bolt	10 N·m	89 lb in
• Camshaft Position Sensor Bolt	10 N·m	89 lb in
• Camshaft Timing Chain Tensioner	75 N·m	55 lb ft
• Exhaust Camshaft Position Actuator -- First Pass	30 N·m	22 lb ft
• Exhaust Camshaft Position Actuator -- Final Pass	100 degrees	
• Intake Camshaft Position Actuator -- First Pass	30 N·m	22 lb ft
• Intake Camshaft Position Actuator -- Final Pass	100 degrees	
• Intake Camshaft Rear Cap Bolt	25 N·m	18 lb ft
Chain Guide Plug	90 N·m	59 lb ft
Connecting Rod Bolt		
• First Pass	25 N·m	18 lb ft
• Final Pass	100 degrees	
Crankshaft Balancer Bolt		
• First Pass	100 N·m	74 lb ft
• Final Pass	125 degrees	
Crankshaft Bearings - Lower Crankcase to Block - Bedplate		
• First Pass	20 N·m	15 lb ft
• Final Pass	70 degrees	
Crankshaft Position Reluctor Ring	15 N·m	11 lb ft
Crankshaft Position Sensor Bolt	10 N·m	89 lb in

cardiagn.com

First Pass	30 N·m	22 lb ft
Final Pass	155 degrees	
Cylinder Head Front Chaincase Bolt	35 N·m	26 lb ft
Cylinder Head Oil Gallery Plug	35 N·m	26 lb ft
Drive Belt Spring Tensioner Bolts	22 N·m	16 lb ft
Drive Belt Tensioner Bracket Bolt	58 N·m	43 lb ft
EGR Cover Bolt	25 N·m	18 lb ft
Engine Coolant Temperature Sensor	20 N·m	15 lb ft
Engine Lift Bracket Front Bolt	25 N·m	18 lb ft
Engine Lift Bracket Rear Bolt	25 N·m	18 lb ft
Engine Mount Bolts	50 N·m	37 lb ft
Engine Mount Bracket Bolts	100 N·m	74 lb ft
Engine Wiring Harness Ground Terminal Bolt	20 N·m	15 lb ft
EVAP Canister Valve Bolt	22 N·m	16 lb ft
Exhaust Manifold Pipe Flange Stud	16 N·m	12 lb ft
Exhaust Manifold to Cylinder Head Nut - 2 passes	14 N·m	124 lb in
Exhaust Manifold to Cylinder Head Stud	10 N·m	89 lb in
Flywheel Bolt - Automatic Transmission		
First Pass	53 N·m	39 lb ft
Final Pass	25 degrees	
Flywheel Bolt - Manual Transmission		
First Pass	53 N·m	39 lb ft
Final Pass	25 degrees	
Frame to Body Bolts - Use new bolts	155 N·m	114 lb ft
Front Cover to Block Bolt	25 N·m	18 lb ft
Front Lift Bracket Bolt	25 N·m	18 lb ft
Fuel Pipe Bracket Bolt	10 N·m	89 lb in
Fuel Rail Bracket Stud	10 N·m	89 lb in
Generator Control Module Coolant Pump to Block Bolts	25 N·m	18 lb ft
Generator to Block Bolt	23 N·m	17 lb ft
Heat Shield to Exhaust Manifold Bolt	22 N·m	16 lb ft
Ignition Coil Bolt	10 N·m	89 lb in
Intake Manifold to Cylinder Head Bolt	10 N·m	89 lb in
Intake Manifold to Cylinder Head Nut	10 N·m	89 lb in
Intake Manifold to Cylinder Head Stud	6 N·m	53 lb in
Knock Sensor Bolt	25 N·m	18 lb ft
Lower Crankcase to Block Perimeter Bolt	25 N·m	18 lb ft
Oil Filter Housing Cover	22 N·m	16 lb ft
Oil Gallery Gerotor Cover - Rear Bolt	6 N·m	53 lb in

cardiagn.com

Oil Gallery Plug - Rear	60 N·m	44 lb ft
Oil Level Indicator Tube to Intake Manifold Bolt	10 N·m	89 lb in
Oil Pan Drain Plug	25 N·m	18 lb ft
Oil Pan to Block Bolts	25 N·m	18 lb ft
Oil Pan to Transaxle Bolts	75 N·m	55 lb ft
Oil Pressure Switch	22 N·m	16 lb ft
Oil Pump Cover Bolt	6 N·m	53 lb in
Oil Pump Pressure Relief Valve Plug	40 N·m	30 lb ft
Oxygen Sensor	42 N·m	31 lb ft
Piston Oil Squirter	15 N·m	11 lb ft
Spark Plug	20 N·m	15 lb ft
Starter Generator Bolts	58 N·m	43 lb ft
Starter Motor to Block Bolt	53 N·m	39 lb ft
Thermostat Housing to Block Bolts	10 N·m	89 lb in
Throttle Body Bolt	10 N·m	89 lb in
Throttle Body Nut	10 N·m	89 lb in
Throttle Body Stud	6 N·m	53 lb in
Timing Adjustable Chain Guide Bolt	10 N·m	89 lb in
Timing Chain Oil Nozzle Bolt	10 N·m	89 lb in
Timing Fixed Chain Guide Bolt	15 N·m	11 lb ft
Timing Upper Chain Guide Bolt	10 N·m	89 lb in
Torque Converter to Flexplate Bolts	60 N·m	44 lb ft
Vent Tube to Cylinder Head	15 N·m	11 lb ft
Water Jacket Drain Plug	20 N·m	15 lb ft
Water Pipe Support Bracket Bolt	10 N·m	89 lb in
Water Pump Access Cover Bolt	7 N·m	62 lb in
Water Pump/Balance Shaft Chain Tensioner Bolt	10 N·m	89 lb in
Water Pump Bolts	25 N·m	18 lb ft
Water Pump Sprocket Bolt	10 N·m	89 lb in

cardiagn.com

Engine Mechanical Specifications

Engine Mechanical Specifications

Application	Specification	
	Metric	English
General Data		
Engine Type	Inline 4 Cylinder	
Displacement	2.4 L	146 CID
RPO	LE5 LAT	
Liter (VIN)	LE5: B LAT: 5	
Bore	87.992-88.008 mm	3.4668-3.4675 in
Stroke	98 mm	3.861 in
Compression Ratio	10:01	
Balance Shaft		
Bearing Clearance	0.030-0.060 mm	0.0012-0.0024 in
Bearing Diameter - Inside - Carrier	20.050-20.063 mm	0.7894-0.7899 in
Bearing Diameter - Outside - Carrier	41.975-41.995 mm	1.6526-1.6534 in
Bearing Journal Diameter	20.000-20.020 mm	0.7874-0.7882 in
Bushing Clearance	0.033-0.102 mm	0.0013-0.0040 in
Bushing Diameter - Inside	36.776-36.825 mm	1.4479-1.4498 in
Bushing Journal Diameter	36.723-36.743 mm	1.4458-1.4466 in
End Play	0.050-0.300 mm	0.0020-0.0118 in
Block		
Balance Shaft Bearing Bore Diameter - Carrier	42.000-42.016 mm	1.6535-1.6542 in
Balance Shaft Bushing Bore Diameter	40.763-40.776 mm	1.6048-1.6054 in
Crankshaft Main Bearing Bore Diameter	64.068-64.082 mm	2.5224-2.5229 in
	87.992-	3.4668-

© 2010 General Motors Corporation. All rights reserved.

cardiagn.com

Cylinder Bore Out-of-Round - Maximum	0.010 mm	0.0004 in
Cylinder Bore Taper - Maximum	0.010 mm	0.0004 in
Cylinder Head Deck Surface Flatness - Longitude	0.050 mm	0.002 in
Cylinder Head Deck Surface Flatness - Overall	0.08 mm	0.0031 in
Cylinder Head Deck Surface Flatness - Transverse	0.030 mm	0.0012 in
Camshaft		
Camshaft End Play	0.040-0.144 mm	0.0016-0.0057 in
Camshaft Journal Diameter	26.935-26.960 mm	1.0604-1.0614 in
Camshaft Thrust Surface	21.000-21.052 mm	0.8268-0.8252 in
Connecting Rod		
Connecting Rod Bearing Clearance	0.029-0.073 mm	0.0011-0.0029 in
Connecting Rod Bore Diameter - Bearing End	52.118-52.134 mm	2.0519-2.05252 in
Connecting Rod Bore Diameter - Pin End	20.007-20.021 mm	0.7877-0.7882 in
Connecting Rod Side Clearance	0.070-0.370 mm	0.0028-0.0146 in
Connecting Rod Straightness - Bend - Maximum	0.021 mm	0.0083 in
Connecting Rod Straightness - Twist - Maximum	0.04 mm	0.0157 in
Crankshaft		
Connecting Rod Journal Diameter	49.000-49.014 mm	1.9291-1.9297 in
Crankshaft End Play	0.050-0.380 mm	0.0012-0.0150 in
Crankshaft Main Bearing Clearance	0.031-0.067 mm	0.0012-0.0026 in
Crankshaft Main Journal Diameter	55.994-56.008 mm	2.2045-2.2050 in
Cylinder Head		
Overall Height - Minimum	128.9 mm	5.07 in
Surface Flatness - Block Deck - Longitude	0.050 mm	0.002 in
Surface Flatness - Block Deck - Overall	0.1 mm	0.004 in
Surface Flatness - Block Deck - Transverse	0.030 mm	0.0012 in
Valve Guide Bore - Exhaust	6.000-6.012 mm	0.2362-0.2367 in
Valve Guide Bore - Intake	6.000-6.012 mm	0.2362-0.2367 in
Valve Lifter Bore Diameter - Stationary Lash Adjusters	12.013-12.037 mm	0.4730-0.4739 in

cardiagn.com

Oil Pressure - Minimum - @1000 RPM	344.75-551.60 kPa	50-80 psi
Oil Capacity	4.8L	5.0 quarts
Piston Rings		
Piston Ring End Gap - First Compression Ring	0.15-0.30 mm	0.006-0.012 in
Piston Ring End Gap - Second Compression Ring	0.20-0.45 mm	0.008-0.018 in
Piston Ring End Gap - Oil Control Ring - Rails	0.15-0.51 mm	0.006-0.020 in
Piston Ring to Groove Clearance - First Compression Ring	0.04-0.08 mm	0.0015-0.0031 in
Piston Ring to Groove Clearance - Second Compression Ring	0.030-0.070 mm	0.0012-0.0030 in
Piston Ring to Groove Clearance - Oil Control Ring	0.027-0.176 mm	0.0011-0.0069 in
Piston Ring Thickness - First Compression Ring	1.170-1.190 mm	0.0461-0.0469 in
Piston Ring Thickness - Second Compression Ring	1.471-1.490 mm	0.0579-0.0587 in
Piston Ring Thickness - Oil Control Ring - Rail - Maximum	0.473 mm	0.0186 in
Piston Ring Thickness - Oil Control Ring - Spacer	1.460-1.537 mm	0.0575-0.0605 in
Pistons and Pins		
Pin - Piston Pin Clearance to Connecting Rod Bore	0.007-0.026 mm	0.0003-0.0010 in
Pin - Piston Pin Clearance to Piston Pin Bore	0.004-0.014 mm	0.0002-0.0006 in
Pin - Piston Pin Diameter	19.995-20.000 mm	0.7872-0.7874 in
Pin - Piston Pin End Play	0.410-1.266 mm	0.0161-0.0498 in
Piston - Piston Diameter - @14.5 mm up	87.967-87.982 mm	3.4633-3.4638 in
Piston - Piston Pin Bore Diameter	20.004-20.009 mm	0.7876-0.7878 in
Piston - Piston Ring Groove Width - Oil Control	2.51-2.53 mm	0.0988-0.0996 in
Piston - Piston Ring Groove Width - Second	1.52-1.54 mm	0.0598-0.0606 in
Piston - Piston Ring Groove Width - Top	1.23-1.25 mm	0.0484-0.0492 in
Piston - Piston to Bore Clearance	0.010-0.041 mm	0.0004-0.0016 in
Valve System		
Valves - Valve Face Runout - Maximum	0.04 mm	0.0016 in

cardiagn.com

Valves - Valve Stem Diameter - Exhaust	5.935-5.950 mm	0.2337-0.2343 in
Valves - Valve Stem Diameter - Intake	5.955-5.970 mm	0.2344-0.2355 in
Valves - Valve Stem to Guide Clearance - Exhaust	0.050-0.077 mm	0.0020-0.0026 in
Valves - Valve Stem to Guide Clearance - Intake	0.030-0.057 mm	0.0012-0.0022 in
Valve Lash Adjusters - Valve Lash Adjuster Diameter - Stationary Lash Adjuster	11.986-12.000 mm	0.0005-0.0020 in
Valve Lash Adjusters - Valve Lash-Adjuster-to-Bore Clearance - Stationary Lash Adjuster	0.013-0.051 mm	3.2210-3.2299 in
Valve Springs - Valve Spring Load - Closed - @22.5 mm	525.0-575.0 N. - Eng Spec.	
Valve Springs - Valve Spring Load - Open - @32.5 mm	245.0-271.0 N. - Eng Spec.	

cardiagn.com

Adhesives, Fluids, Lubricants, and Sealers

Application	Type of Material	GM Part Number	
		United States	Canada
# 6 Intake Rear Camshaft Cap	Sealant	12378521	88901148
Balance Shaft Bearings	Engine Oil	12345610	993193
Cam Lobes	Engine Oil	12345610	993193
Crank Sensor O-ring	Engine Oil	12345610	993193
Cylinder Bores	Engine Oil	12345610	993193
Cylinder Head Plugs	Sealant	12345382	10953489
Engine Block Threaded Plugs	Sealant	12346004	10953480
Engine Block to Bedplate	Sealant	12378521	88901148
Engine Oil	Engine Oil	12345610	993193
Engine Oil Level Indicator Tube O-ring	Lubricant	12345501	992704
Fuel Injector O-rings	Engine Oil	12345610	993193
Fuel Injector Tip Insulators	Engine Oil	12345610	993193
Intake and Exhaust Valve Stems	Lubricant	12345501	992704
Main Bearings	Lubricant	12345501	992704
Oil Filter Cap - Threads and O-ring Lead-in Chamfers	Engine Oil	12345610	993193
Oil Pan to Bedplate Joint	Sealant	12378521	88901148
Oil Pump - Pump Elements	Engine Oil	12345610	993193
Oxygen Sensor Threads	Anti-seize	12397953	--
Piston Pin to Piston/Rod - Pin Bores of Piston and Rod	Engine Oil	12345610	993193
Rod Bearings - Rod Pins of Crankshaft	Engine Oil	12345610	993193
Stationary Hydraulic Lash Adjusters	Lubricant	12345501	992704
Timing Chain Guide Bolt Access Hole Plug	Sealant	12345382	10953489
Valve Rocker Arm/Valve Tip	Lubricant	12345501	992704
Water Feed Tube O-rings	Lubricant	12345579	1974984
Water Pump Drain Plug	Sealant	12346004	10953480

cardiagn.com

Thread Repair Specifications

Table 1: Engine Block - Front View
Table 2: Engine Block - Back View
Table 3: Engine Block - Right Side View
Table 4: Engine Block - Left Side View
Table 5: Engine Block - Bottom View
Table 6: Engine Block - Top View
Table 7: Lower Crankcase - Front View
Table 8: Lower Crankcase - Back View
Table 9: Lower Crankcase - Bottom View
Table 10: Lower Crankcase - Right View
Table 11: Lower Crankcase - Left View
Table 12: Cylinder Head - Top View
Table 13: Cylinder Head - Intake Manifold Deck View
Table 14: Cylinder Head - Exhaust Manifold Deck View
Table 15: Cylinder Head - Front View
Table 16: Cylinder Head - Back View

Engine Block - Front View

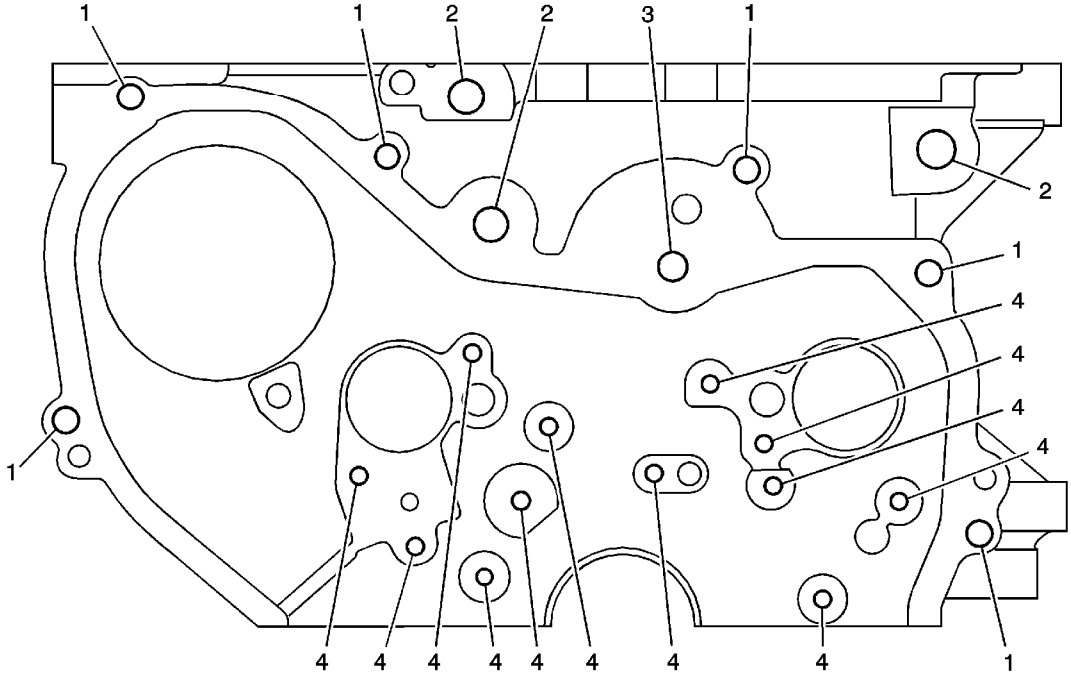

cardiagn.com

Engine Block - Front View

Service Call Out	Thread Size	Insert	Drill	Counterbore Tool	Tap	Driver	Drill Depth (Maximum)		Tap Depth (Maximum)	
J 42385-850							MM	(IN)	MM	(IN)
1	M8 x 1.25	210	206	207	208	209	23.5	0.93	18.5	0.73
2	M12 x 1.75	855	856	857	858	859	33.5	1.32	26.5	1.04
3	M10 x 1.5	215	211	212	213	214	24.5	0.96	19.5	0.77
4	M6 x 1	205	201	202	203	204	20	0.787	16	0.63

Engine Block - Back View

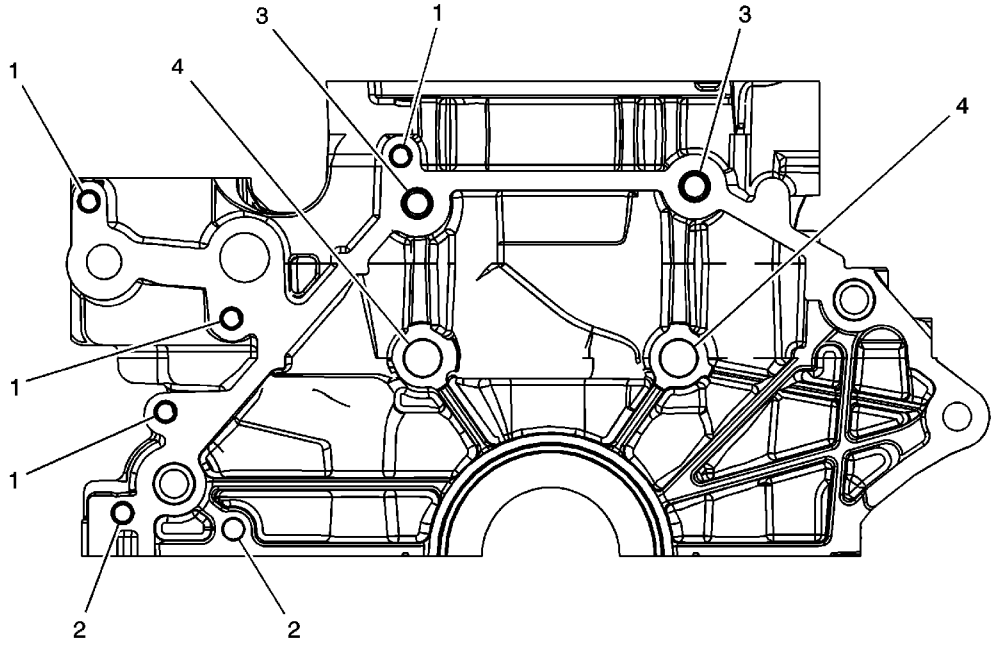

Engine Block - Back View

Service Call Out	Thread Size	Insert	Drill	Counterbore Tool	Tap	Driver	Drill Depth (Maximum)		Tap Depth (Maximum)	
J 42385-850							MM	(IN)	MM	(IN)
1	M8 x 1.25	210	206	207	208	209	18	0.709	THRU	

cardiagn.com

3	M12 x 1.75	855	856	857	858	859	39	1.535	33.5	1.32
4	M16 x 1.5	860	861	862	863	864	21	0.827	15	0.59

Engine Block - Right Side View

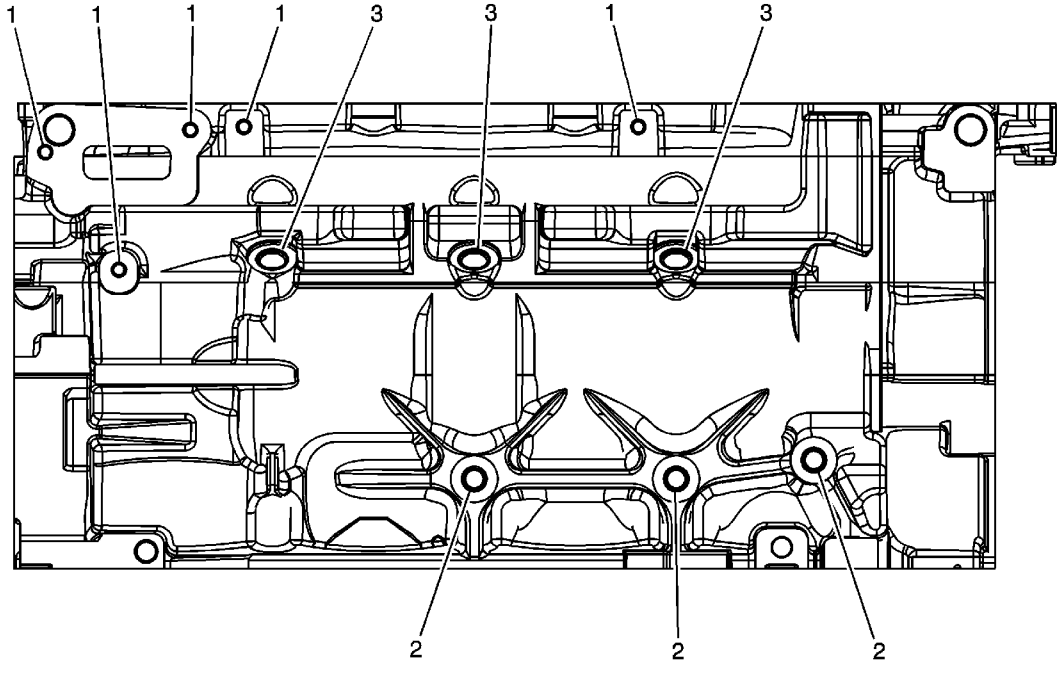

Engine Block - Right Side View

Service Call Out	Thread Size	Insert	Drill	Counterbore Tool	Tap	Driver	Drill Depth (Maximum)		Tap Depth (Maximum)	
J 42385-850							MM	(IN)	MM	(IN)
1	M6 x 1	205	201	202	203	204	20.5	0.807	16	0.63
2	M10 x 1.5	215	211	212	213	214	23.5	0.925	18.5	0.73
3	M12 x 1.75	865	856	857	858	859	19.5	0.768	12.5	0.49

Engine Block - Left Side View

cardiagn.com

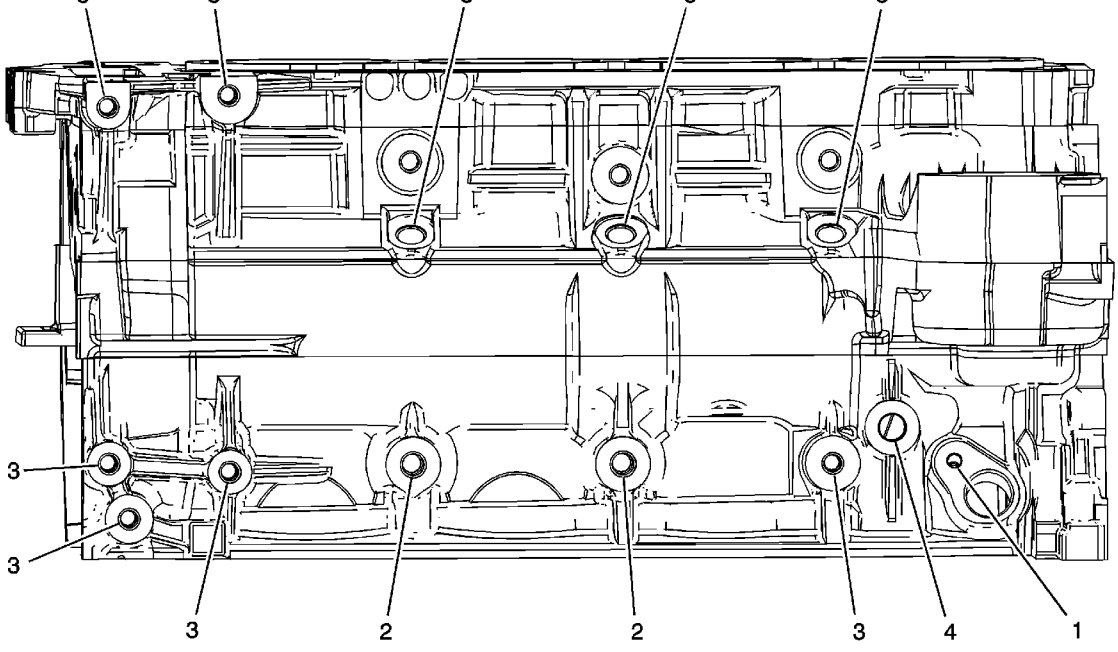

Engine Block - Left Side View

Service Call Out	Thread Size	Insert	Drill	Counterbore Tool	Tap	Driver	Drill Depth (Maximum)		Tap Depth (Maximum)	
J 42385-850							MM	(IN)	MM	(IN)
1	M6 x 1	205	201	202	203	204	20.5	0.807	16.5	0.65
2	M10 x 1.5	215	211	212	213	214	23.5	0.925	18	0.71
3	M8 x 1.25	210	206	2047	208	209	30.5	1.201	22.5	0.89
4	M12 x 1.75	865	856	857	858	859	15.5	.061	12.5	0.49
5	M12 x 1.75	865	856	857	858	859	19.5	0.768	12.5	0.49

Engine Block - Bottom View

cardiagn.com

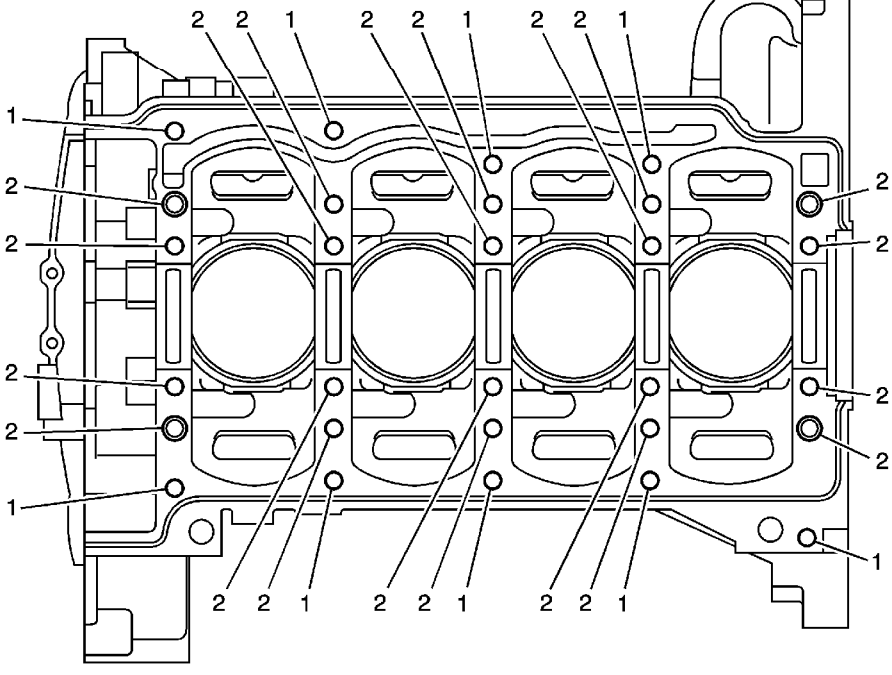

Engine Block - Bottom View

Service Call Out	Thread Size	Insert	Drill	Counterbore Tool	Tap	Driver	Drill Depth (Maximum)		Tap Depth (Maximum)	
J 42385-850							MM	(IN)	MM	(IN)
1	M8 x 1.25	210	206	207	208	209	28	1.102	22	0.87
2	M10 x 1.5	514	511	N/A	512	513	60	2.362	53.5	2.11

Engine Block - Top View

cardiagn.com

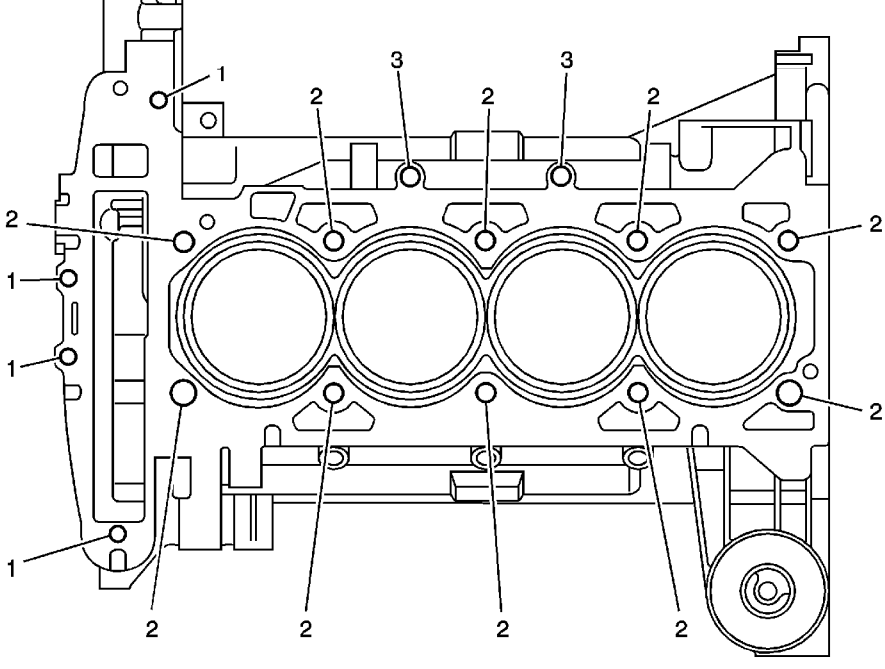

Engine Block - Top View

Service Call Out	Thread Size	Insert	Drill	Counterbore Tool	Tap	Driver	Drill Depth (Maximum)		Tap Depth (Maximum)	
J 42385-850							MM	(IN)	MM	(IN)
1	M8 x 1.25	210	206	207	208	209	23.5	0.925	18.5	0.73
2	M11 x 1.5	507	504	N/A	505	506	113.3	4.461	107.3	4.22
3	M12 x 1.75	865	856	857	858	859	13.5	0.531	12.5	0.49

Lower Crankcase - Front View

cardiagn.com

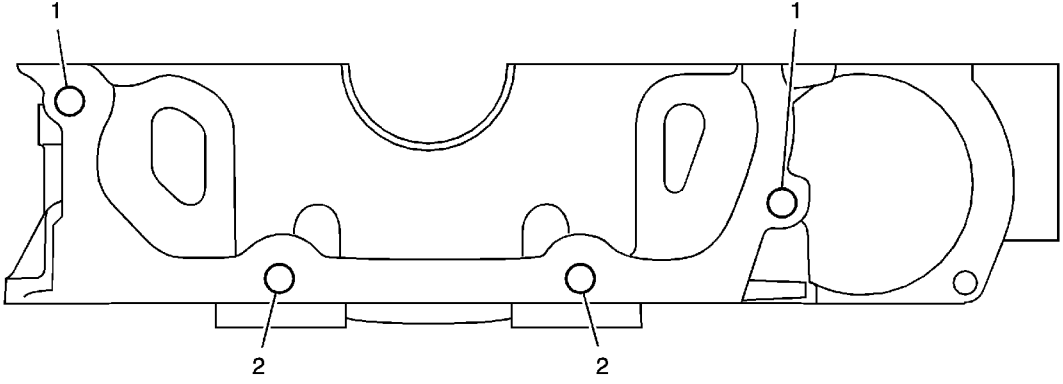

Lower Crankcase - Front View

Service Call Out	Thread Size	Insert	Drill	Counterbore Tool	Tap	Driver	Drill Depth (Maximum)		Tap Depth (Maximum)	
J 42385-850							MM	(IN)	MM	(IN)
1	M8 x 1.25	210	206	207	208	209	23.5	0.925	18.5	0.73
2	M8 x 1.25	210	206	207	208	209	30.5	1.201	25.5	1.00

Lower Crankcase - Back View

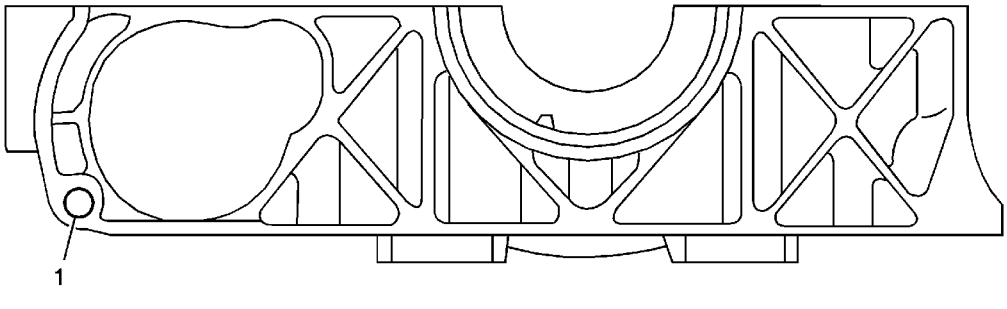

Lower Crankcase - Back View

Service Call Out	Thread Size	Insert	Drill	Counterbore Tool	Tap	Driver	Drill Depth (Maximum)		Tap Depth (Maximum)	
J 42385-850							MM	(IN)	MM	(IN)

cardiagn.com

Lower Crankcase - Bottom View

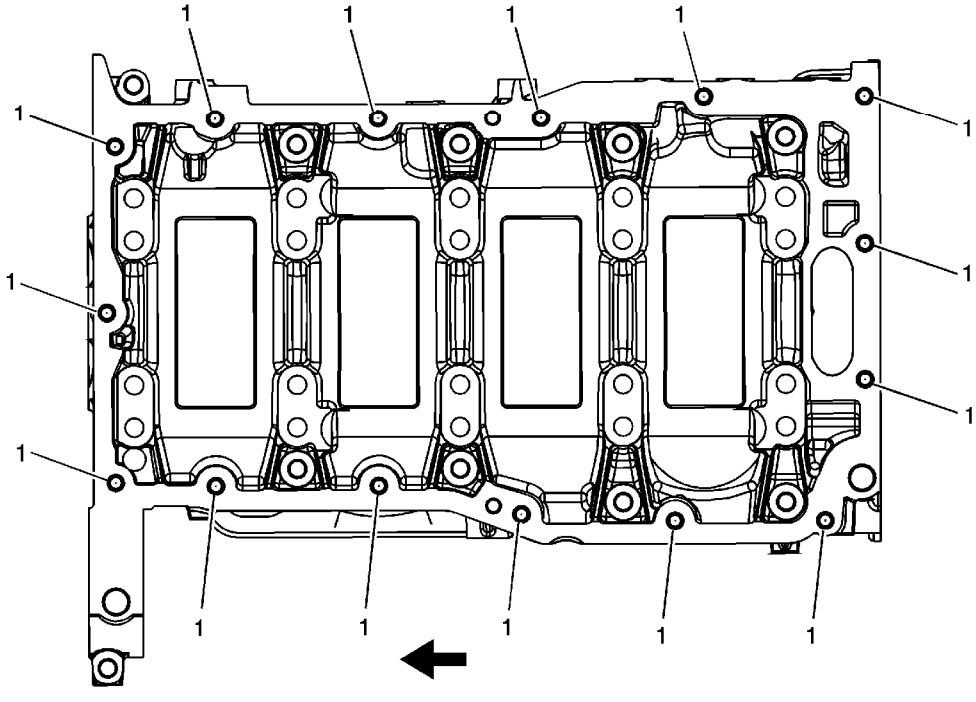

Lower Crankcase - Bottom View

Service Call Out	Thread Size	Insert	Drill	Counterbore Tool	Tap	Driver	Drill Depth (Maximum)		Tap Depth (Maximum)	
J 42385-850							MM	(IN)	MM	(IN)
1	M8 x 1.25	210	206	207	208	209	23.5	0.925	18.5	0.73

Lower Crankcase - Right View

cardiagn.com

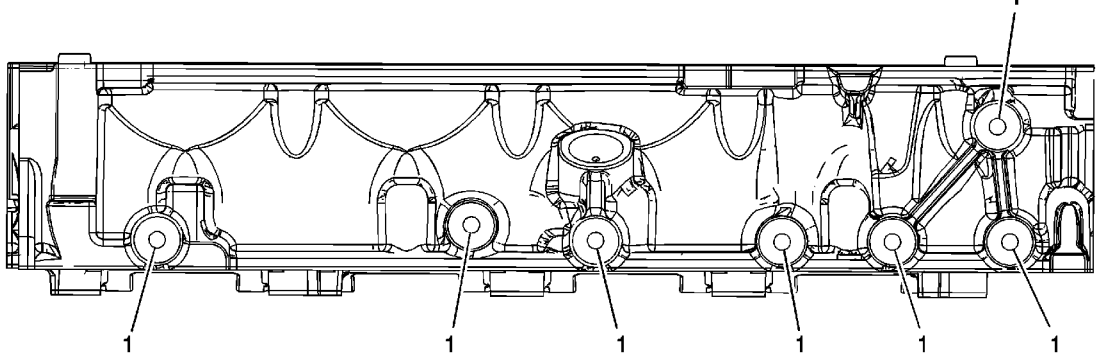

Lower Crankcase - Right View

Service Call Out	Thread Size	Insert	Drill	Counterbore Tool	Tap	Driver	Drill Depth (Maximum)		Tap Depth (Maximum)	
J 42385-850							MM	(IN)	MM	(IN)
1	M10 x 1.5	215	211	212	213	214	34	1.339	27	1.063

Lower Crankcase - Left View

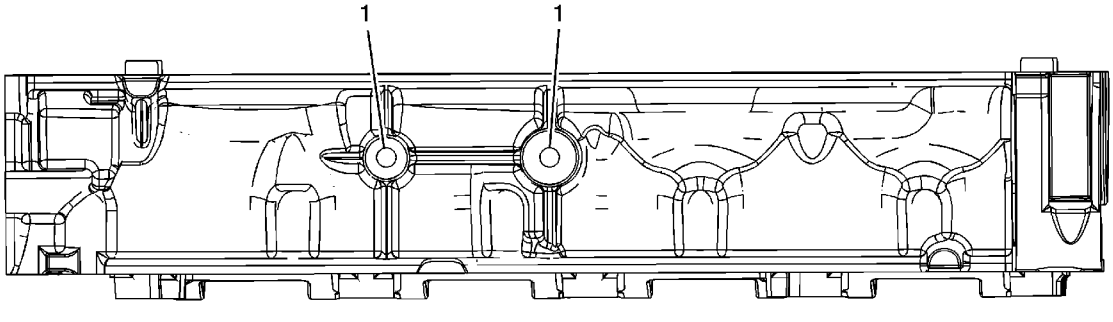

Lower Crankcase - Left View

Service Call Out	Thread Size	Insert	Drill	Counterbore Tool	Tap	Driver	Drill Depth (Maximum)		Tap Depth (Maximum)	
J 42385-850							MM	(IN)	MM	(IN)
1	M8 x 1.25	210	211	212	213	214	34	1.339	27	1.063

cardiagn.com

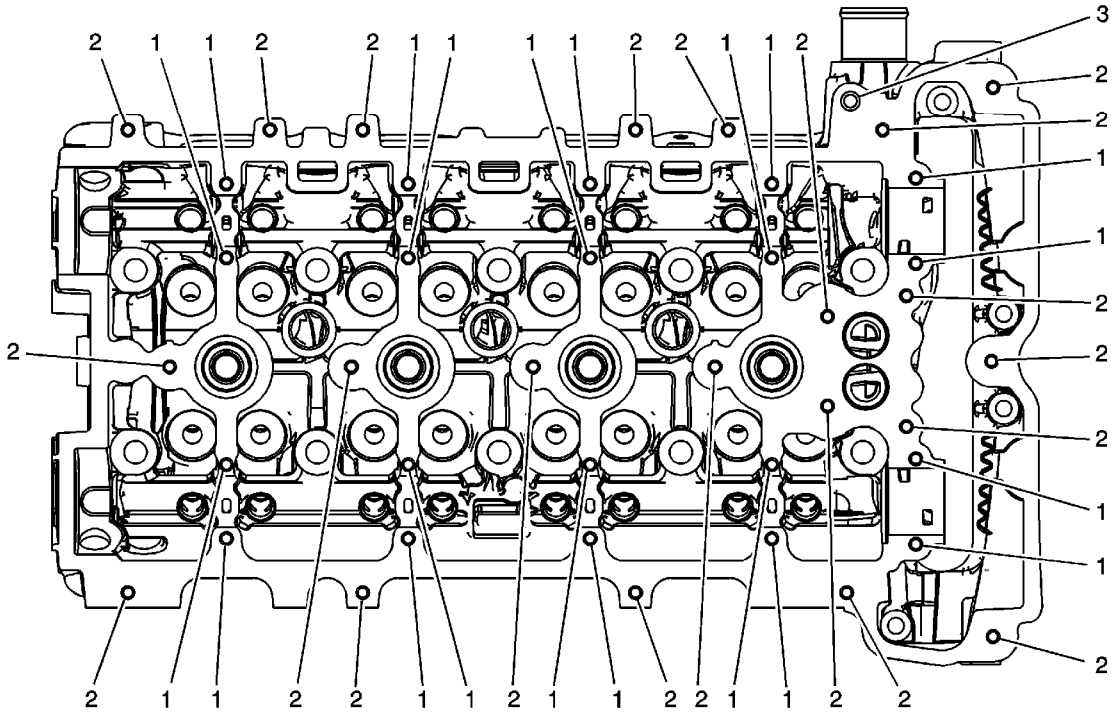

Cylinder Head - Top View

Service Call Out	Thread Size	Insert	Drill	Counterbore Tool	Tap	Driver	Drill Depth (Maximum)		Tap Depth (Maximum)	
J 42385-850							MM	(IN)	MM	(IN)
1	M6 x 1	205	852	N/A	203	204	24	0.945	20	0.787
2	M6 x 1	205	201	202	203	204	20	0.787	16	0.63
3	M8 x 1.25	854	206	207	208	209	THRU		THRU	

Cylinder Head - Intake Manifold Deck View

cardiagn.com

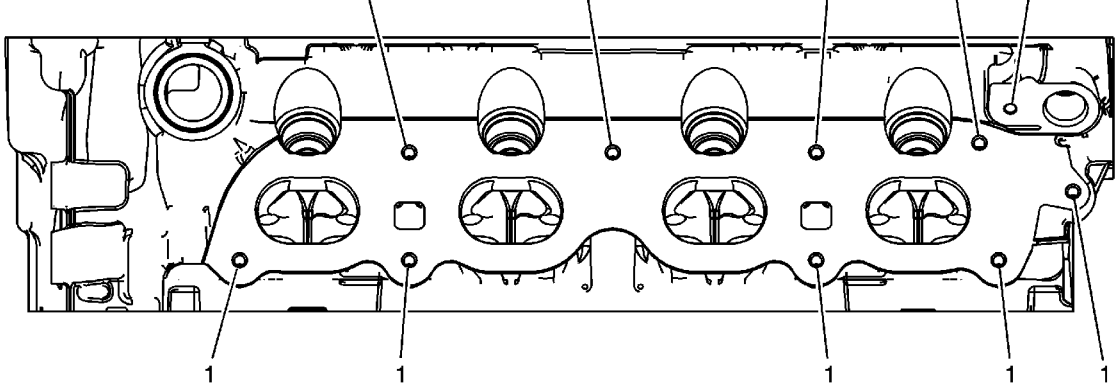

Cylinder Head - Intake Manifold Deck View

Service Call Out	Thread Size	Insert	Drill	Counterbore Tool	Tap	Driver	Drill Depth (Maximum)		Tap Depth (Maximum)	
J 42385-850							MM	(IN)	MM	(IN)
1	M6 x 1	205	201	202	203	204	20	0.787	16	0.63

Cylinder Head - Exhaust Manifold Deck View

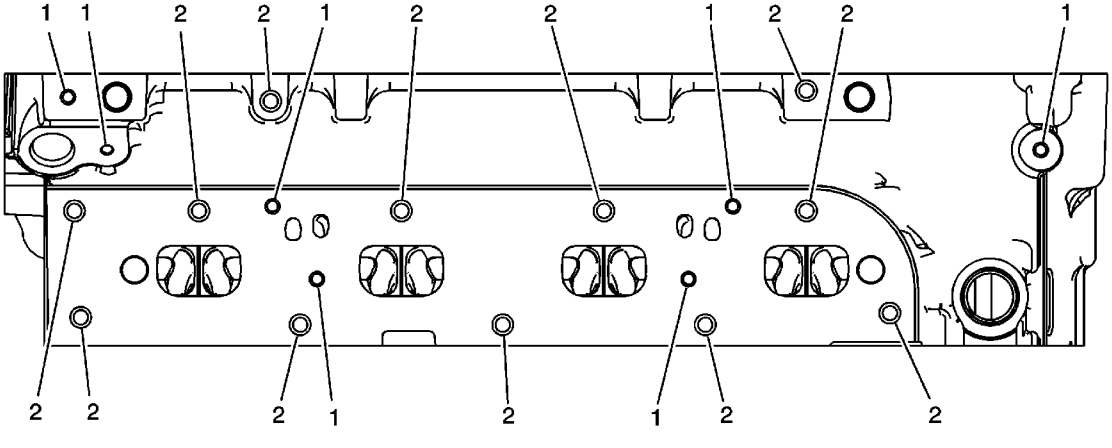

Cylinder Head - Exhaust Manifold Deck View

Service Call Out	Thread Size	Insert	Drill	Counterbore Tool	Tap	Driver	Drill Depth (Maximum)		Tap Depth (Maximum)	
J 42385-850							MM	(IN)	MM	(IN)
1	M6 x 1	205	201	202	203	204	20	0.78	16	0.63
2	M8 x	210	206	207	208	209	25	0.984	20	0.78

cardiagn.com

Cylinder Head - Front View

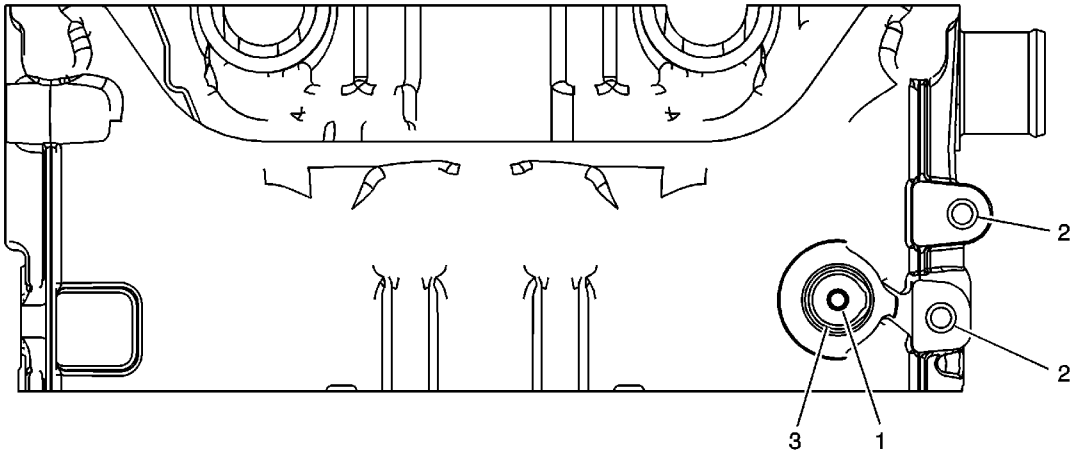

Cylinder Head - Front View

Service Call Out	Thread Size	Insert	Drill	Counterbore Tool	Tap	Driver	Drill Depth (Maximum)		Tap Depth (Maximum)	
J 42385-850							MM	(IN)	MM	(IN)
1	M6 x 1	205	201	202	203	204	20	0.787	16	0.63
2	M8 x 1.25	210	206	207	208	209	25	0.984	20	0.787
3	M22 x 1.5	No Service Tools Available					THRU		THRU	

Cylinder Head - Back View

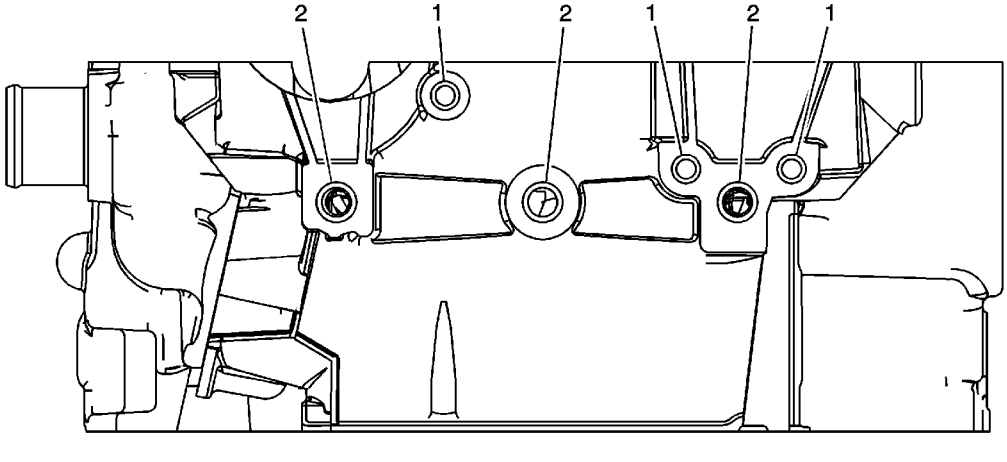

cardiagn.com

Cylinder Head - Back View

Service Call Out	Thread Size	Insert	Drill	Counterbore Tool	Tap	Driver	Drill Depth (Maximum)		Tap Depth (Maximum)	
J 42385-850							MM	(IN)	MM	(IN)
1	M8 x 1.25	210	206	207	208	209	25	0.984	20	0.787
2	M12 x 1.75	865	856	857	858	859	17	0.67	14	0.551

cardiagn.com

Engine Identification

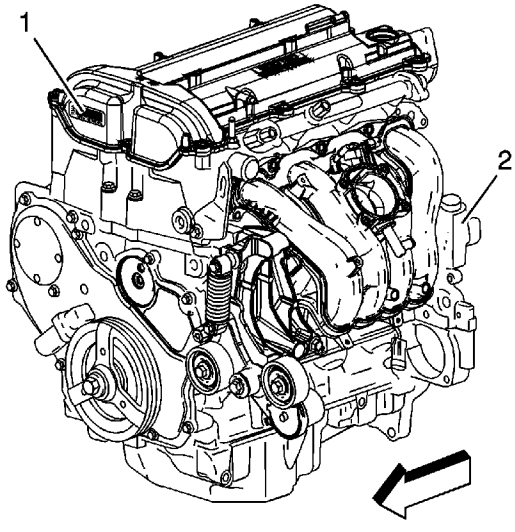

Identification can be made through the use of the Broadcast Code label on the engine front cover (1) and the use of the partial VIN etched on the oil filter bowl (2).

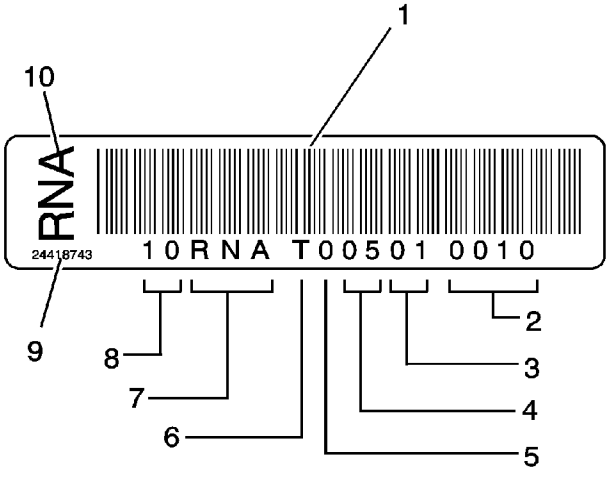

- Barcode (1)
- Sequence Number (2)

cardiagn.com

- Month (4)
- Year (5)
- Engine Assembly Plant (6)
- Broadcast Code (7)
- Part Designation (8)
- Engine Assembly Number (9)
- Broadcast Code (10)

The partial VIN identifies the specific vehicle by sequence number.

cardiagn.com