# SPECIFICATIONS

## FASTENER TIGHTENING SPECIFICATIONS

**Fastener Tightening Specifications**

| Application | Specification | |
|---|---|---|
| | Metric | English |
| Rear Drive Shaft Spindle Nut | 160 N.m | 118 lb ft |

# COMPONENT LOCATOR

## WHEEL DRIVE SHAFTS DISASSEMBLED VIEWS

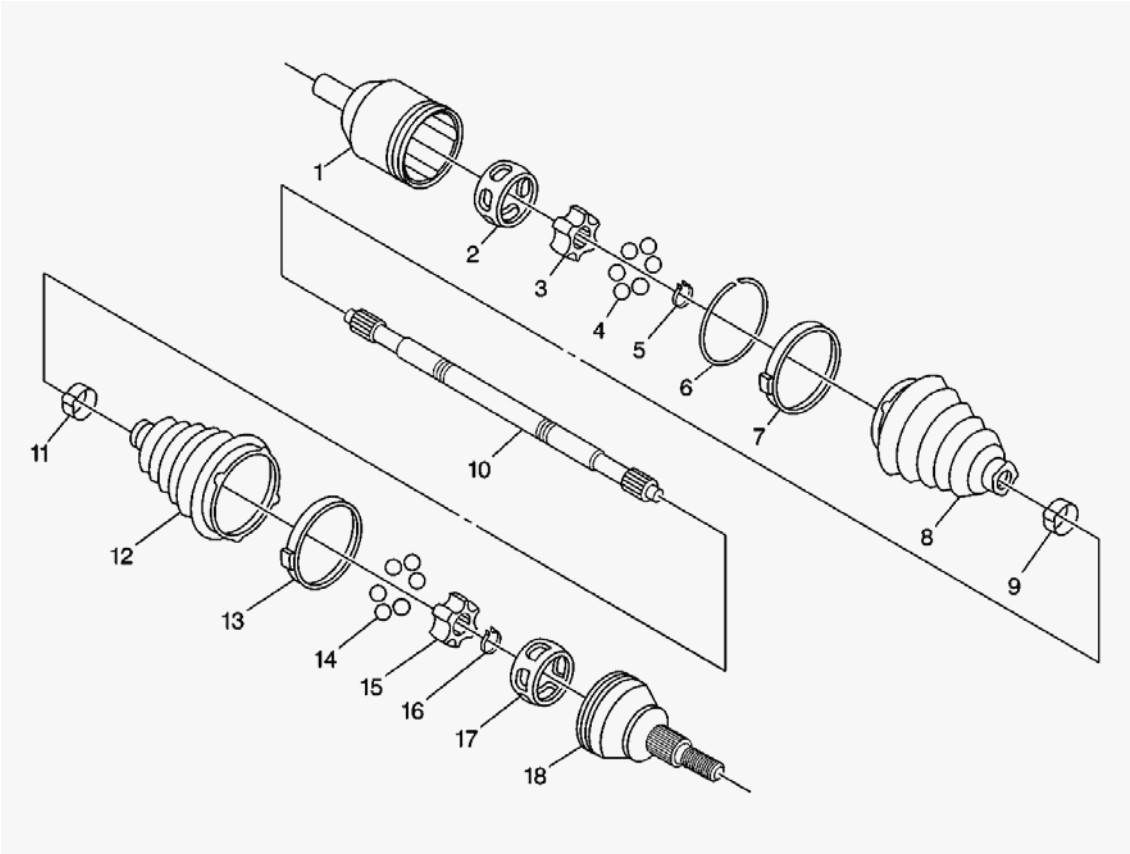


**Fig. 1: Wheel Drive Shafts Disassembled Component View**
**Courtesy of GENERAL MOTORS CORP.**

**Callouts For Fig. 1**

| Callout | Component Name |
|---|---|
| 1 | Inner Joint Outer Race |
| 2 | Inner Joint Cage |
| 3 | Inner Joint Inner Race |
| 4 | Ball Bearings |
| 5 | Inner Joint Inner Race Retaining Snap Ring |
| 6 | Inner Joint Outer Race Retaining Ring |
| 7 | Inner Joint Large Seal Clamp |
| 8 | Inner Joint Seal |
| 9 | Inner Joint Small Seal Clamp |
| 10 | Axle Shaft |
| 11 | Outer Joint Small Seal Clamp |
| 12 | Outer Joint Seal |
| 13 | Outer Joint Large Seal Clamp |
| 14 | Ball Bearings |
| 15 | Outer Joint Inner Race |
| 16 | Outer Joint Retaining Ring |
| 17 | Outer Joint Cage |
| 18 | Outer Joint Outer Race |

## DIAGNOSTIC INFORMATION AND PROCEDURES

### DIAGNOSTIC STARTING POINT - WHEEL DRIVE SHAFTS

Begin the wheel drive shaft system diagnosis with **Diagnostic Starting Point - Vibration Diagnosis and Correction** in Vibration Diagnosis and Correction. The use of the Diagnostic Starting Point will determine if the concern is wheel drive shaft related. When instructed to exit the Vibration Diagnosis and Correction diagnostic and return to the Diagnostic Starting Point - Wheel Drive Shafts, proceed to **Wheel Drive Shafts Description and Operation** in order to become familiar with the design of the wheel drive shaft.

The wheel drive shafts in this vehicle may not exhibit the same noise symptoms as wheel drive shafts in front wheel drive vehicles. Since the vehicle is a rear wheel drive design, the wheel drive shafts are not subjected to the same input forces and may not make any discernible noises if they are damaged. Thoroughly inspect the entire wheel drive shaft for visible damage, leaking joint seals, and missing seal clamps. Replace these components as necessary. Refer to **Wheel Drive Shaft Inner Joint and Seal Replacement** or **Wheel Drive Shaft Outer Joint and Seal Replacement** .

After the inspection reveals no visual signs of wear or damage, it may be necessary to manipulate the inner and outer constant velocity (CV) joints in order to detect internal damage. Any binding or impeded movement of the CV joints may indicate damage requiring repair or replacement. Refer to **Wheel Drive Shaft Inner Joint and Seal Replacement** or **Wheel Drive Shaft Outer Joint and Seal Replacement** .

### SYMPTOMS - WHEEL DRIVE SHAFTS

**IMPORTANT: Complete the following steps prior to beginning the wheel drive shaft diagnosis.**

1. Review the **Diagnostic Starting Point - Vibration Diagnosis and Correction** in Vibration Diagnosis and Correction.
2. Perform the **Vibration Analysis - Road Testing** in Vibration Diagnosis and Correction in order to effectively diagnose the concern.
3. Review the system operation in order to become familiar with the system function. Refer to **Wheel Drive Shafts Description and Operation** .

**Visual Inspection**

- Inspect for aftermarket equipment and modifications which could affect the operation of the wheel drive shafts or other rotating components.
- Inspect the easily accessible or visible system components for obvious damage or conditions which could cause the symptom.
- Thoroughly inspect the entire wheel drive shaft for visible damage, leaking joint seals, and missing seal clamps.
- Inspect the wheel drive shaft seals for cuts, tears, or other damage which may allow the loss of lubricant and the entry of contaminates.

**Physical Inspection**

After performing the Visual/Inspection and no visual signs of damage or other interference impairing the wheel drive shaft function is apparent, it may be necessary to remove the wheel drive shaft from the vehicle and manipulate the joints manually. Any binding or otherwise impeded movement of the joints may indicate damage which could contribute to the concern.

## REPAIR INSTRUCTIONS

### WHEEL DRIVE SHAFT REPLACEMENT

**Tools Required**

- **J 2619-O1** Slide Hammer
- **J 29794** Extension. See **Special Tools and Equipment** .
- **J 42128** Axle Shaft Remover. See **Special Tools and Equipment** .
- **J 42129** Rear Hub Spindle Remover. See **Special Tools and Equipment** .

**Removal Procedure**

1. Shift the transmission into PARK (A/T) or NEUTRAL (M/T).
2. Apply the parking brake.
3. Raise and suitably support the vehicle. Refer to **Lifting and Jacking the Vehicle** in General Information.

4. Remove the tire and wheel assembly. Refer to **Tire and Wheel Removal and Installation** in Tires and Wheels.
5. Insert a drift or punch into the brake rotor cooling fins and against the brake caliper to prevent the wheel hub and bearing from turning.

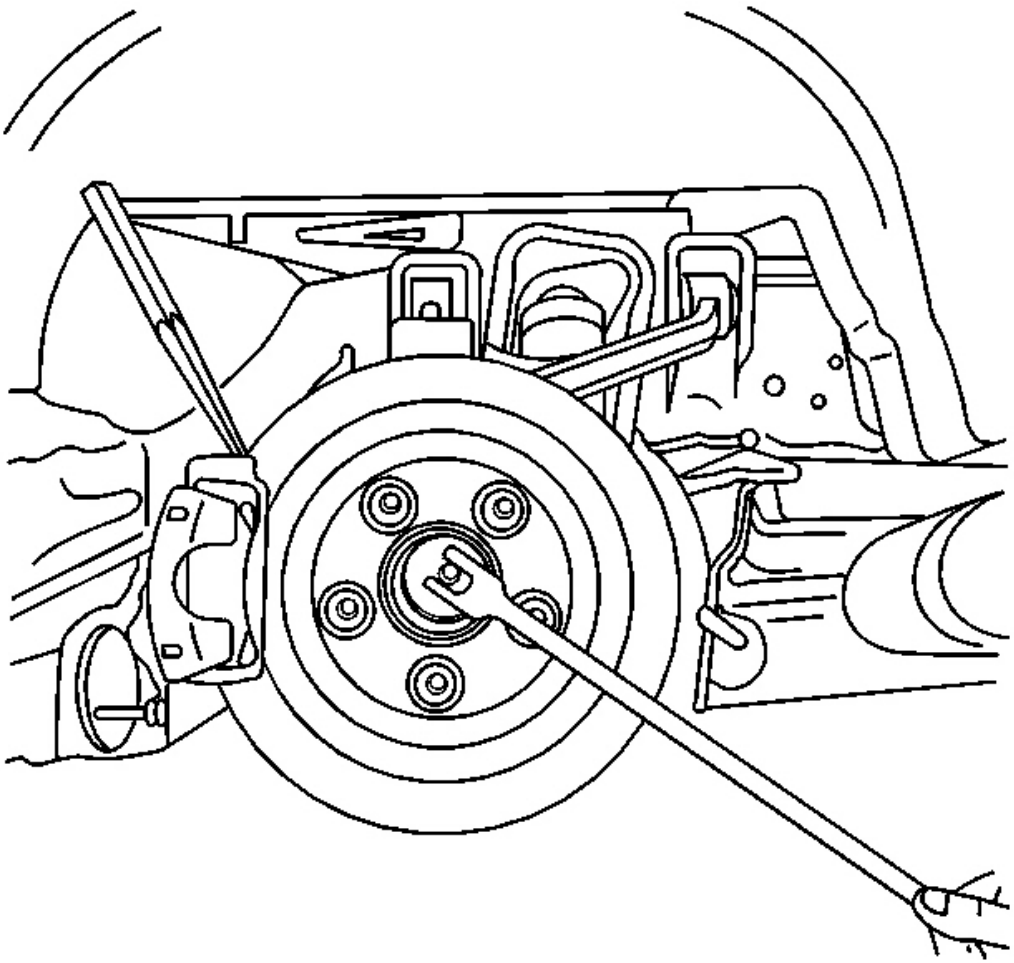

**Fig. 2: Inserting Drift Or Punch To Brake Rotor Cooling Fins & Brake Caliper**
**Courtesy of GENERAL MOTORS CORP.**

6. Remove the spindle nut retaining the rear wheel drive shaft to the hub.
7. Remove the drift or punch.
8. Release the parking brake.

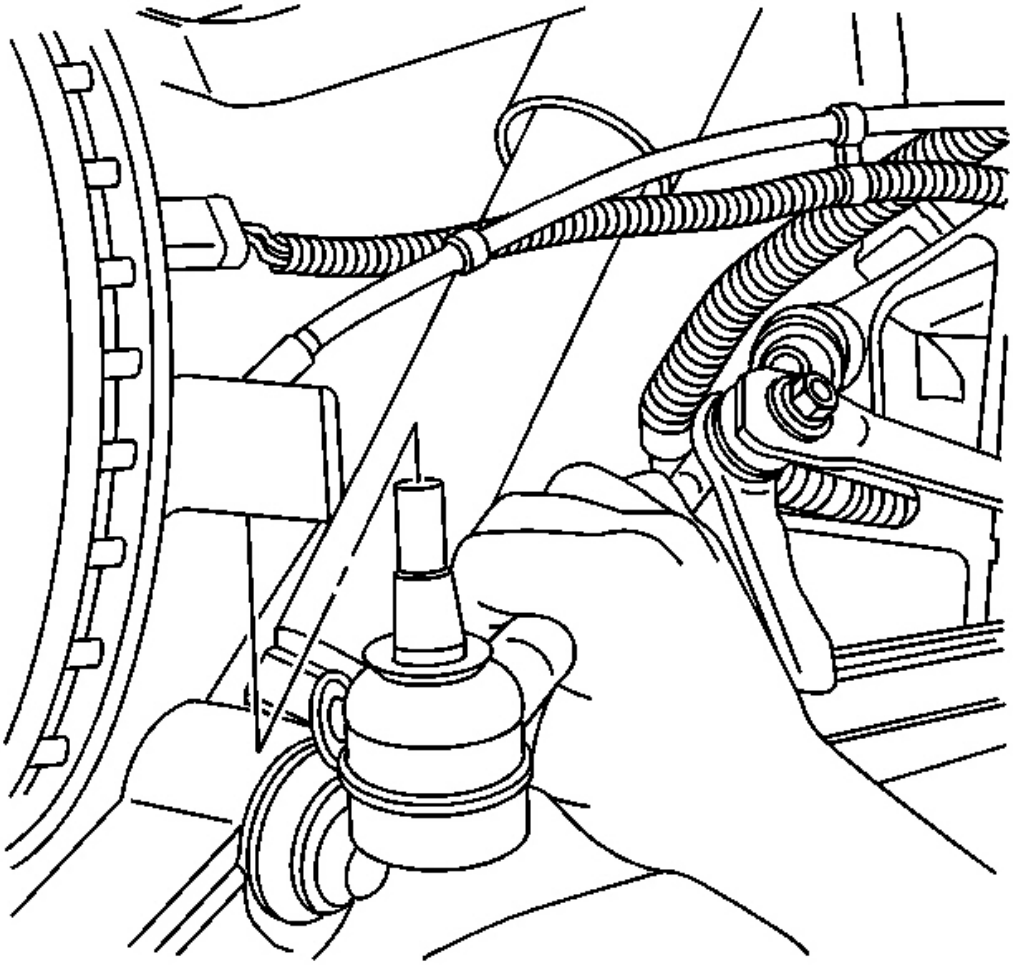

**Fig. 3: View Of Outer Tie Rod End At The Suspension Knuckle**
**Courtesy of GENERAL MOTORS CORP.**

9. Remove the rear transverse spring. Refer to **Rear Transverse Spring Replacement** in Rear Suspension.

**IMPORTANT: Do not loosen the outer tie rod jam nut.**

10. Separate the outer tie rod end from the knuckle and reposition the tie rod toward the rear of the vehicle. Refer to **Tie Rod Replacement (Outer End)** or **Tie Rod Replacement (Suspension Link)** in Rear Suspension.

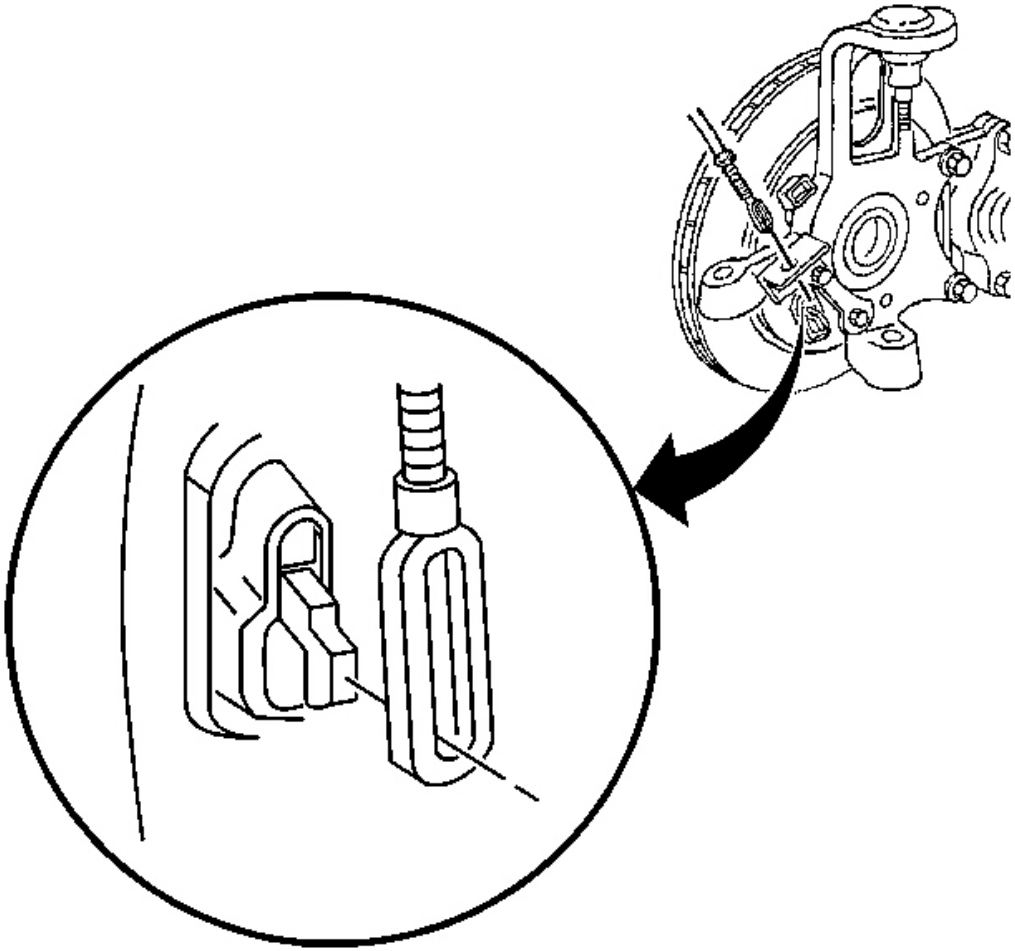

**Fig. 4: Parking Brake Cable To Parking Brake Lever**
**Courtesy of GENERAL MOTORS CORP.**

11. Disconnect the wheel speed sensor electrical connector.
12. Disconnect the parking brake cable from the parking brake lever.

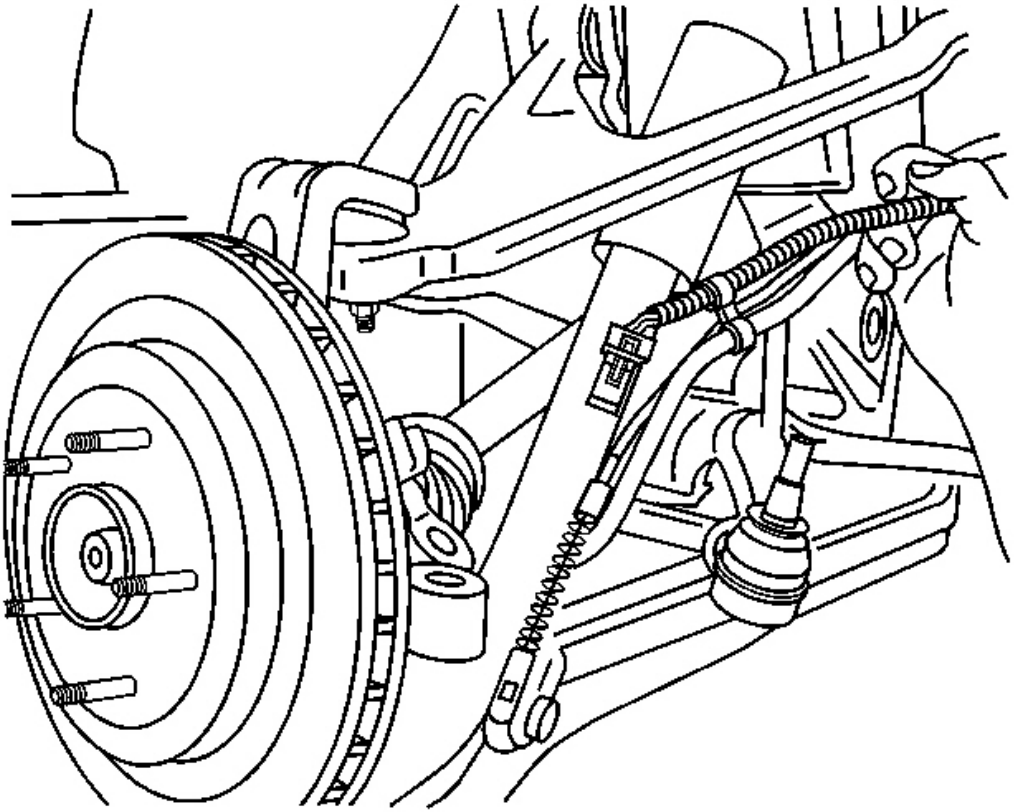

**Fig. 5: Parking Brake Cable To Bracket At Rear**
**Courtesy of GENERAL MOTORS CORP.**

13. Remove the parking brake cable from the bracket and reposition toward the rear.

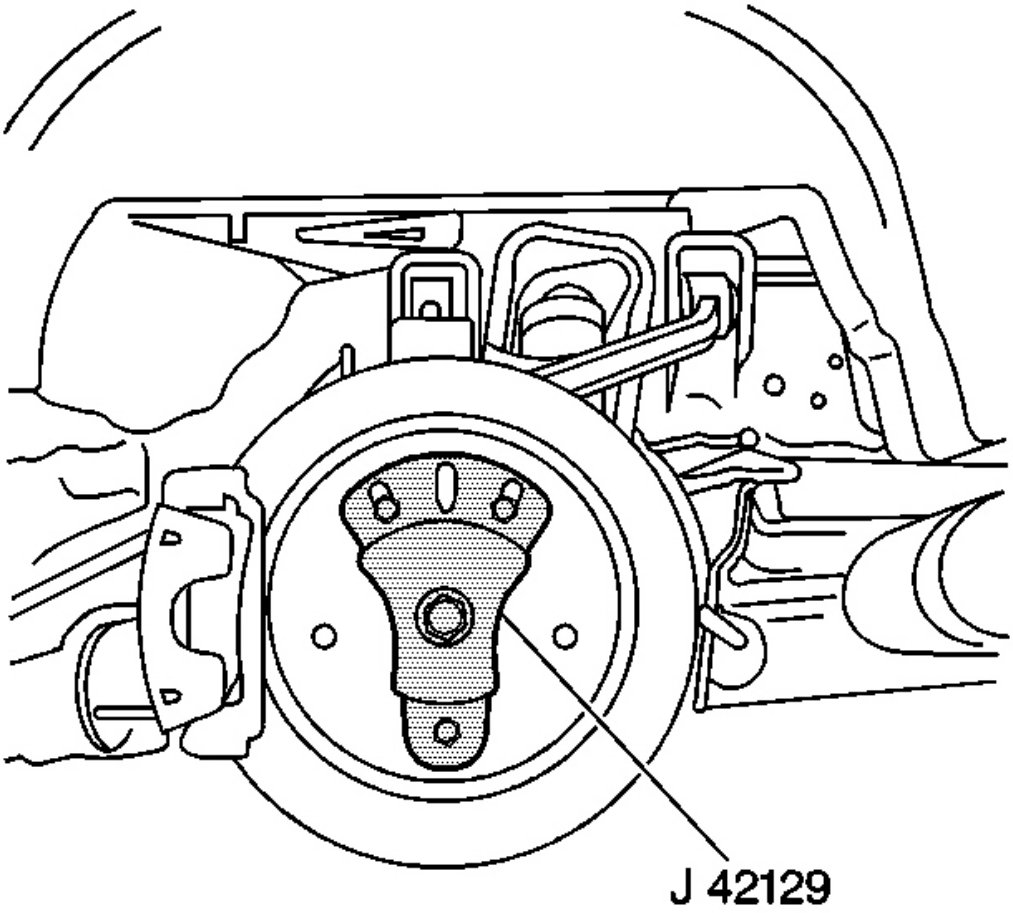


**Fig. 6: Installing J 42129 To Wheel Hub & Bearing**
**Courtesy of GENERAL MOTORS CORP.**

14. Install **J 42129** onto the wheel hub and secure with wheel nuts. See **Special Tools and Equipment** .
15. Begin to disengage the drive shaft from the wheel hub and bearing.

    This will provide additional clearance to the lower ball joint nut.

16. Separate the lower ball joint from the suspension knuckle. Refer to **Knuckle Replacement** in Rear Suspension.
17. Disengage the drive shaft completely from the wheel hub and bearing.

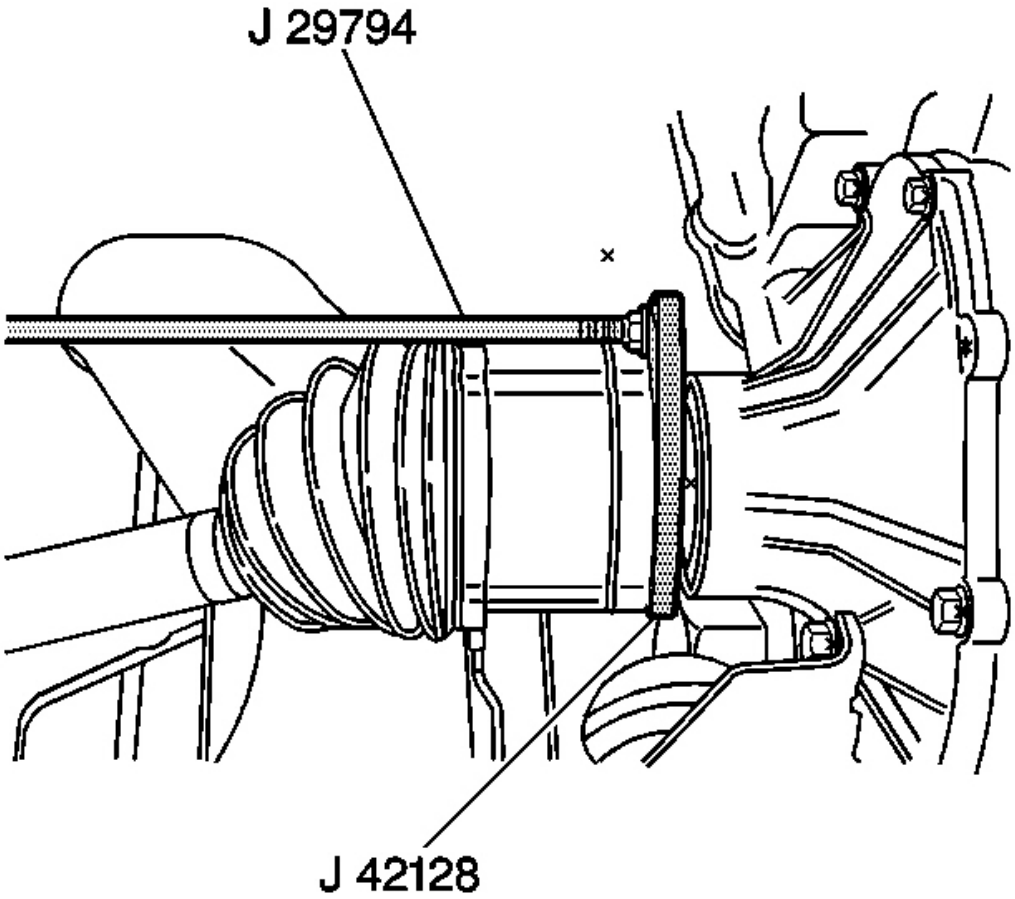


**Fig. 7: Rear Beveled Surface At Drive Shaft Inner Joint Housing**
**Courtesy of GENERAL MOTORS CORP.**

**IMPORTANT: Be sure to support the drive shaft until it is removed.**

18. Support the drive shaft.
19. Support the suspension knuckle and upper control arm and reposition the knuckle toward the front of the vehicle.
20. Assemble the **J 42128** , **J 29794** , and **J 2619-O1** .
21. Install the **J 42128** evenly onto the rear beveled surface of the drive shaft inner joint housing.

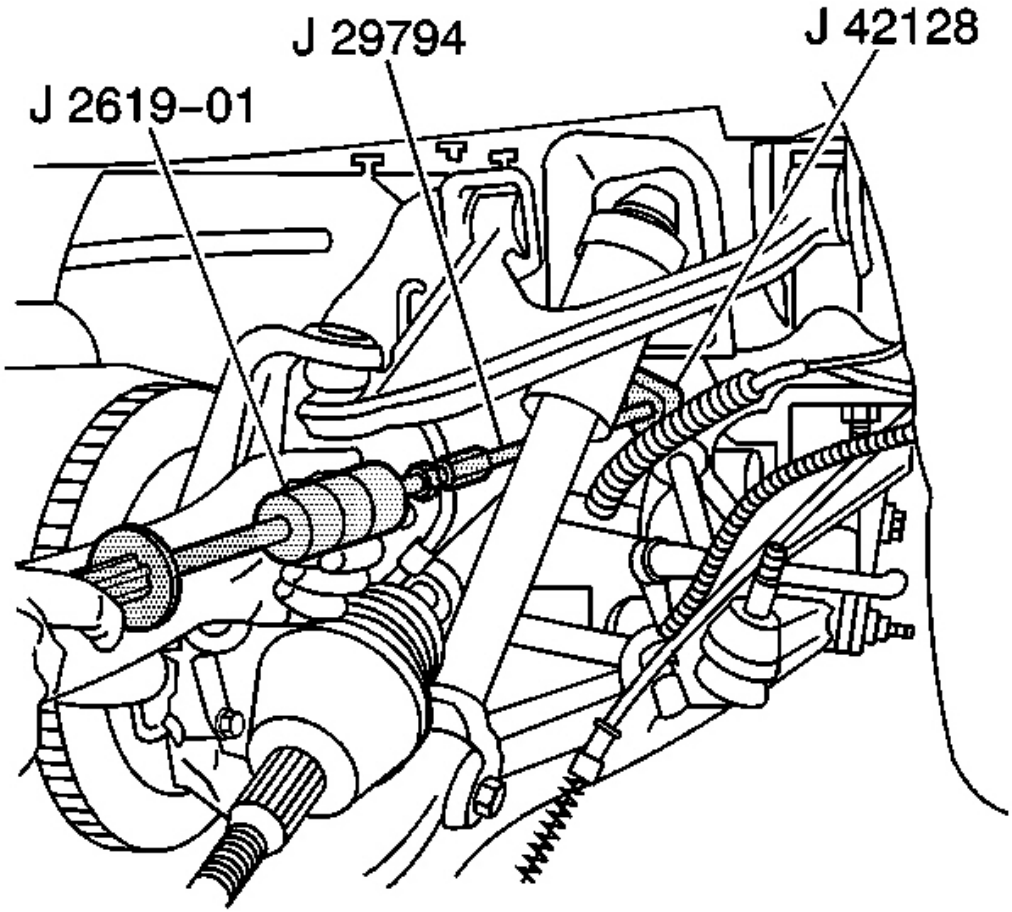


**Fig. 8: Removing Drive Shaft From Rear Axle**
**Courtesy of GENERAL MOTORS CORP.**

22. Disengage the drive shaft from the rear axle differential using the **J 42128** , **J 29794** , and **J 2619-O1** , then remove the tool assembly.

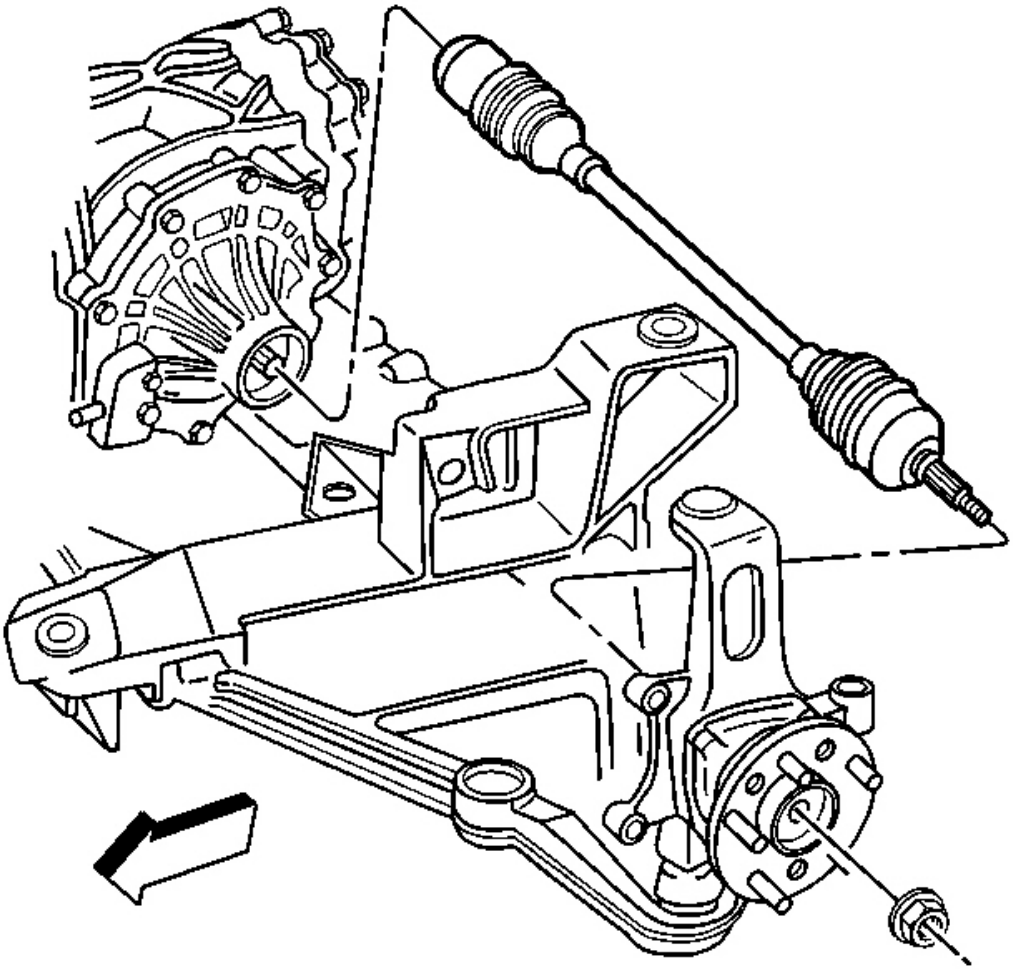

**Fig. 9: View Of Rear Drive Shaft**
**Courtesy of GENERAL MOTORS CORP.**

23. Remove the drive shaft from the vehicle.
24. Remove **J 42129** from the wheel hub. See **Special Tools and Equipment** .

**Installation Procedure**

1. Clean and inspect the journal on the axle shaft prior to installation.

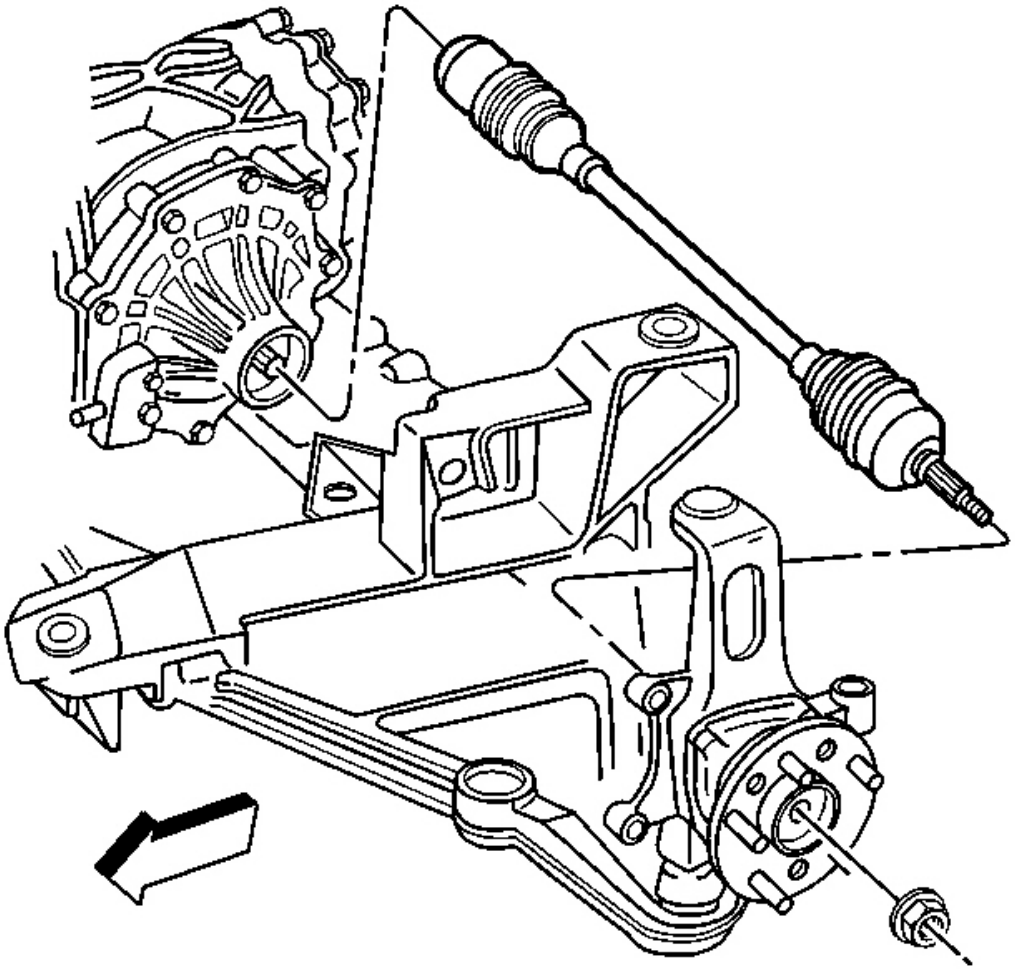

**Fig. 10: View Of Rear Drive Shaft**
**Courtesy of GENERAL MOTORS CORP.**

**IMPORTANT: Be sure to support the drive shaft until it is completely installed.**

2. Position the drive shaft to the rear axle differential output shaft.

**IMPORTANT: Use care not to damage the rear axle differential output shaft seal.**

3. Carefully align and guide the drive shaft onto the differential output shaft.
4. Engage the drive shaft fully onto the differential output shaft using light force.
5. Check to be certain that the drive shaft is fully seated on the differential output shaft.

6. Begin to position the suspension knuckle to the drive shaft.
7. Align and carefully guide the drive shaft into the wheel hub and bearing but do not seat fully.

   This will provide additional clearance to the lower ball joint nut.

8. Connect the lower ball joint to the suspension knuckle. Refer to **Knuckle Replacement** in Rear Suspension.

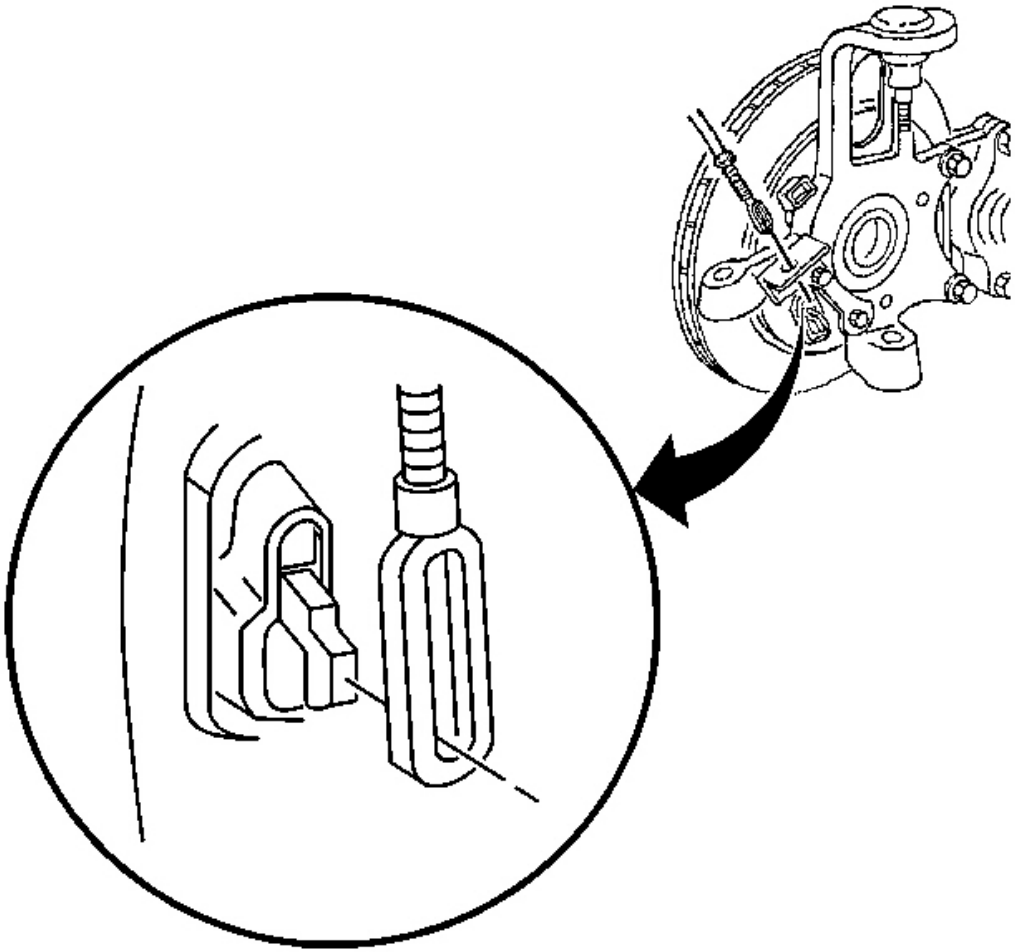

**Fig. 11: View Of Parking Brake Cable To Parking Brake Lever**
**Courtesy of GENERAL MOTORS CORP.**

9. Install the parking brake cable into the bracket.
10. Connect the parking brake cable to the parking brake lever.

11. Connect the wheel speed sensor electrical connector.

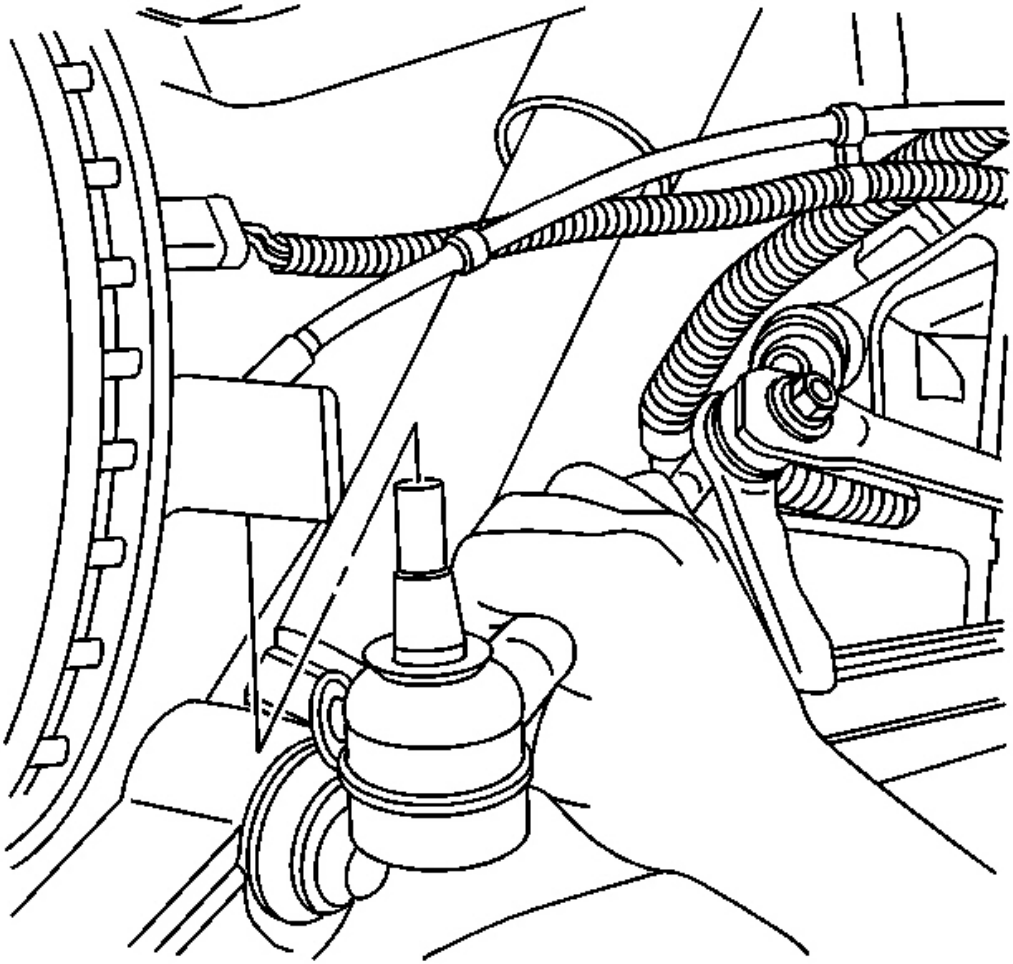

**Fig. 12: View Of Outer Tie Rod End At The Suspension Knuckle**
**Courtesy of GENERAL MOTORS CORP.**

12. Connect the outer tie rod end to the suspension knuckle. Refer to **Tie Rod Replacement (Outer End)** or **Tie Rod Replacement (Suspension Link)** in Rear Suspension.
13. Install the rear transverse spring. Refer to **Rear Transverse Spring Replacement** in Rear Suspension.

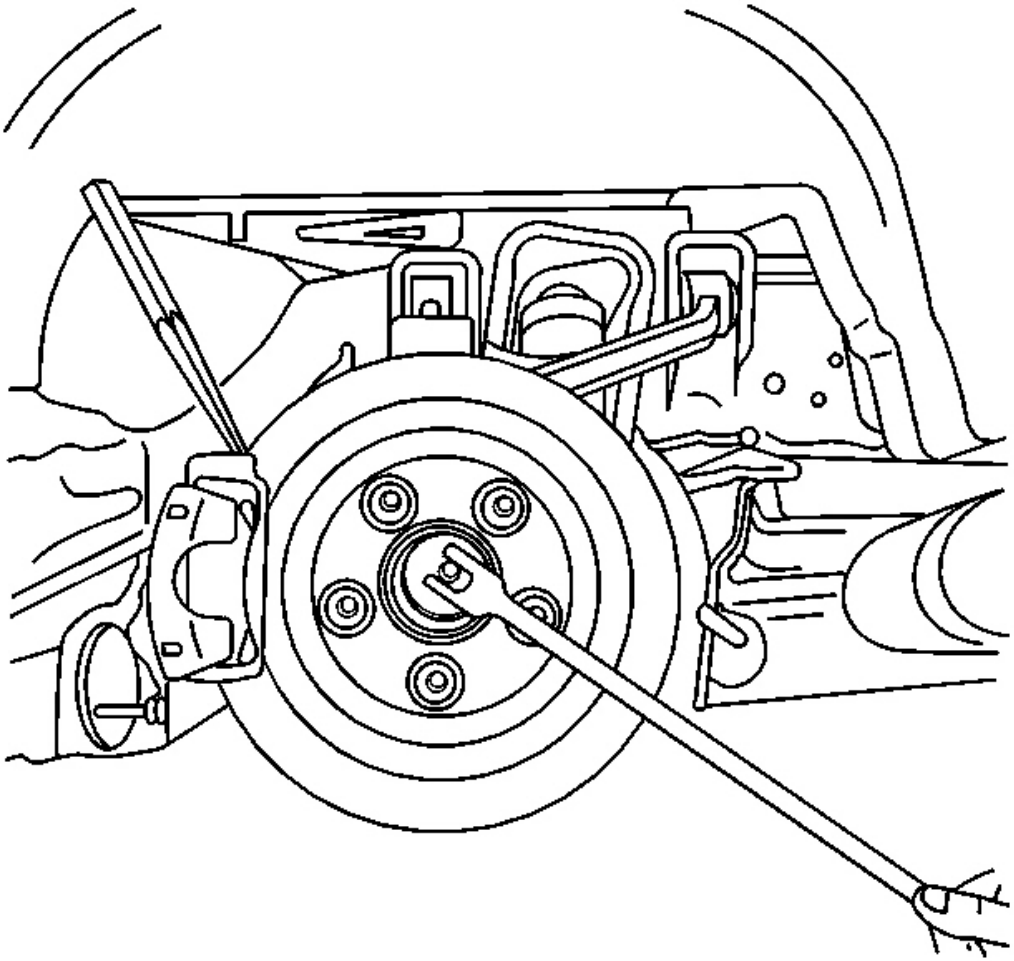

**Fig. 13: Inserting Drift Or Punch To Brake Rotor Cooling Fins & Brake Caliper**
**Courtesy of GENERAL MOTORS CORP.**

14. Set the parking brake.
15. Insert a drift or punch into the brake rotor cooling fins and against the caliper to prevent the wheel hub and bearing from turning.
16. Begin to install the drive shaft retaining nut onto the drive shaft by hand.

**NOTE: Refer to Fastener Notice in Cautions and Notices.**

17. Slowly tighten the nut to draw the drive shaft to the wheel hub and bearing.

**Tighten:** Tighten the drive axle spindle nut to 160 N.m (118 lb ft).

18. Remove the drift or punch.
19. Release the parking brake.
20. Install the tire and wheel assembly. Refer to **Tire and Wheel Removal and Installation** in Tires and Wheels.
21. Lower the vehicle.

## WHEEL DRIVE SHAFT INNER JOINT AND SEAL REPLACEMENT

### Tools Required

-

- **J 42572** Drive Axle Seal Clamp Pliers. See **Special Tools and Equipment** .
- **J 46588** Axle Seal Crimp Tool. See **Special Tools and Equipment** .

### Removal Procedure

This procedure is to be performed only after the drive shaft has been removed from the vehicle; for the removal procedure refer to **Wheel Drive Shaft Replacement** .

1. Wrap a shop towel around the axle shaft.
2. Place the wheel drive shaft horizontally in a bench vise.
3. Using **J 46588** , remove the large seal retaining clamp from the CV joint seal. See **Special Tools and Equipment** .

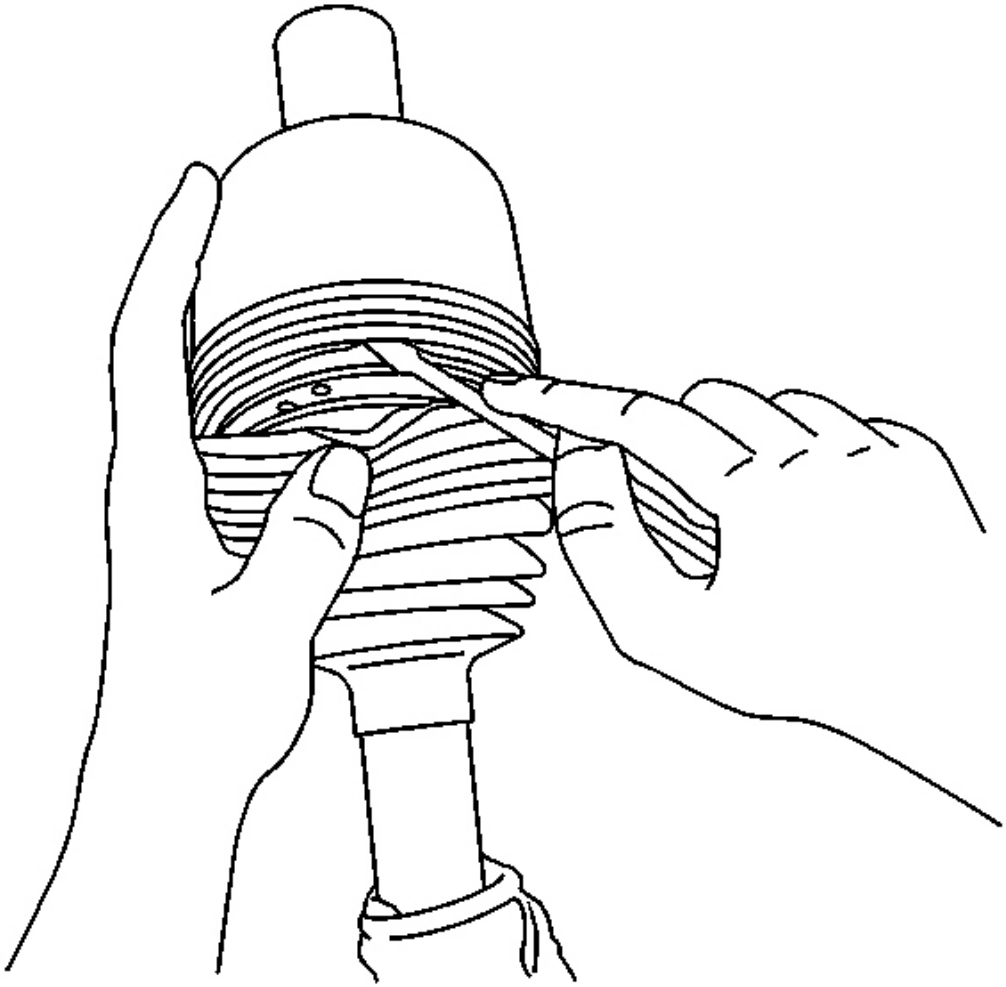

**Fig. 14: Removing The Large Seal Retaining Clamp From The CV Joint Seal**
**Courtesy of GENERAL MOTORS CORP.**

4. Remove the small seal retaining clamp from the joint seal.

   Use a side cutter or other suitable tool and discard the clamp.

5. Separate the seal from the joint outer race at the large diameter end.
6. Position the seal behind the joint face.
7. Position the wheel drive shaft vertically in the bench vise so the inner joint is up.
8. Slide the joint outer race down toward the vise.

9. Disengage the outer race retaining ring.
    1. Insert a small flat-bladed screwdriver between the retaining ring and the outer race.
    2. Remove the retaining ring from the outer race.
    3. Position the retaining ring along the axle shaft away from the outer race.

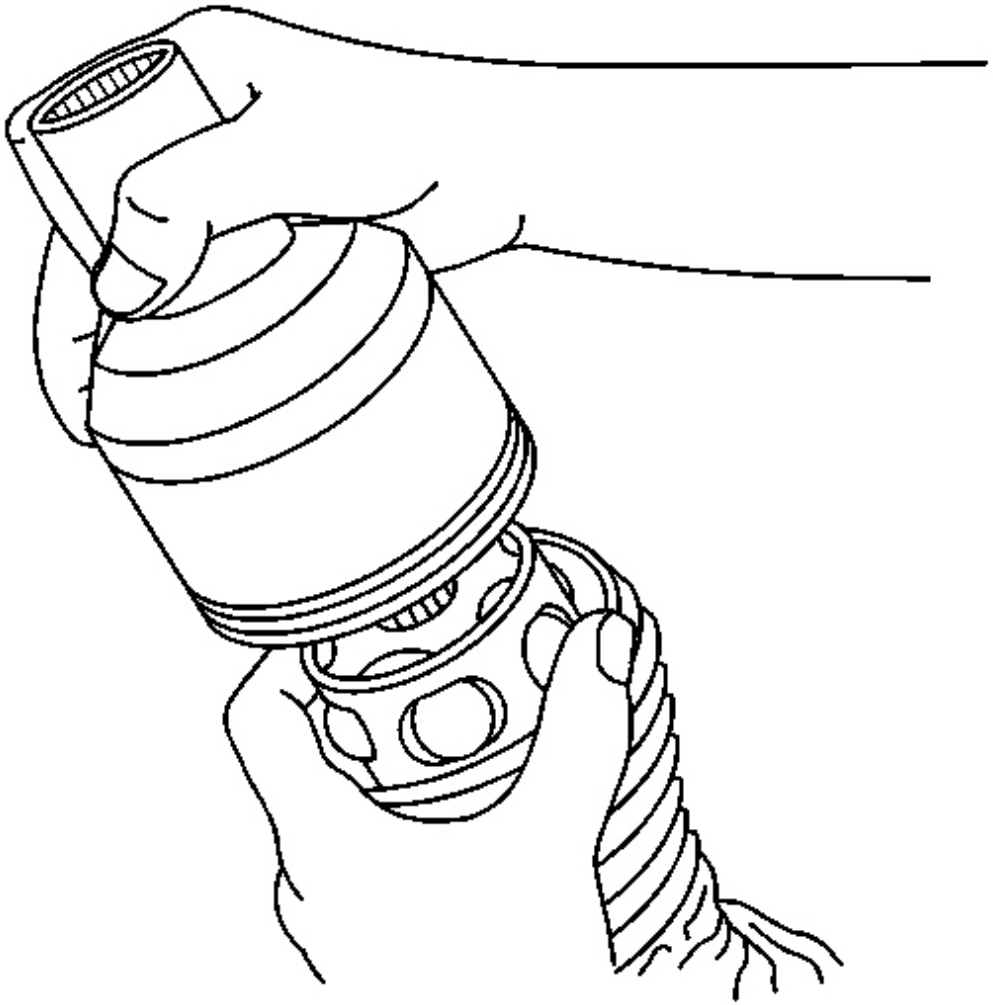

**Fig. 15: View Of Outer Race At Axle Shaft**
**Courtesy of GENERAL MOTORS CORP.**

**IMPORTANT: The balls may fall out of the cage and inner race when the outer race is**

**removed.**

10. Remove the outer race from the axle shaft.
    1. Use the seal to catch any balls which are not retained by grease.
    2. Lift the outer race off the axle shaft.

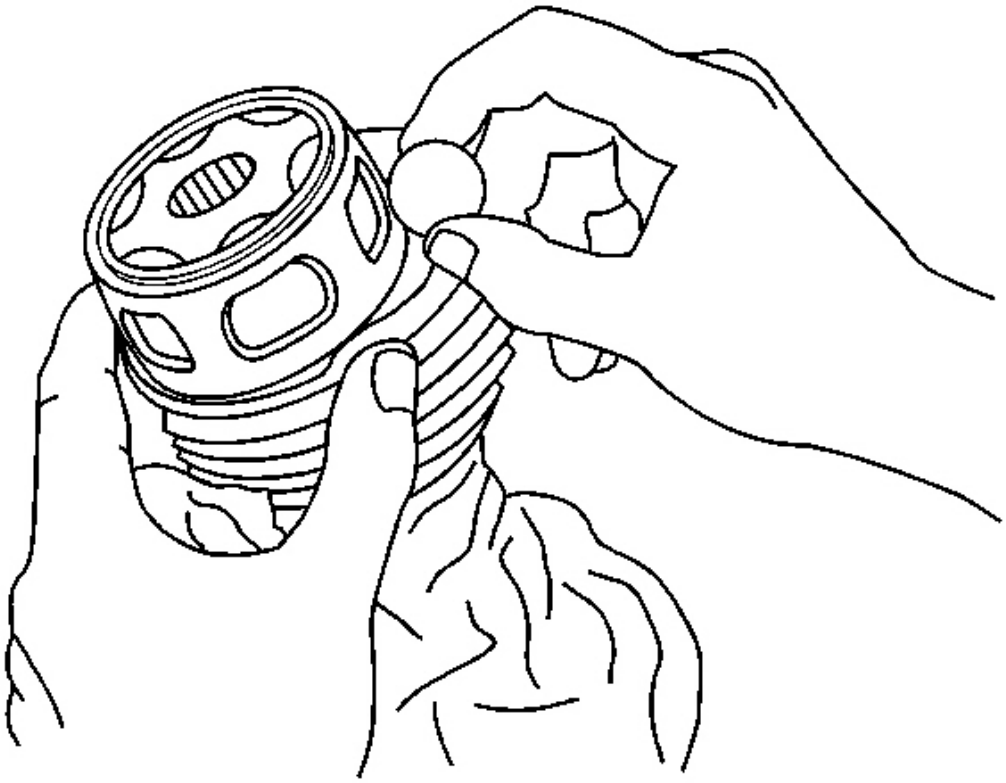

**Fig. 16: View Of Balls, Cage & Inner Race**
**Courtesy of GENERAL MOTORS CORP.**

11. Remove any remaining balls from the cage and inner race.

    Remove any balls caught by the seal.

12. Position the wheel drive shaft horizontally in the bench vise.
13. Remove the outer race retaining ring from the axle shaft.

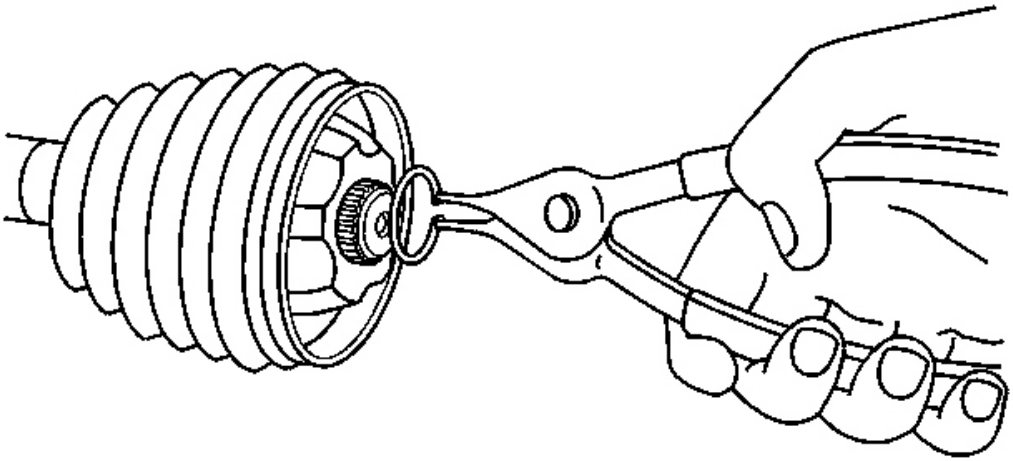

**Fig. 17: Removing/Installing Axle Shaft Snap Ring**
**Courtesy of GENERAL MOTORS CORP.**

14. Remove the snap ring from the axle shaft.
15. Align the cage lands with the inner race ball tracks.
16. Reposition the cage along the axle shaft away from the inner race.
17. Wipe the grease from the inner race.
18. Remove the inner race from the axle shaft using a 3 jaw puller.

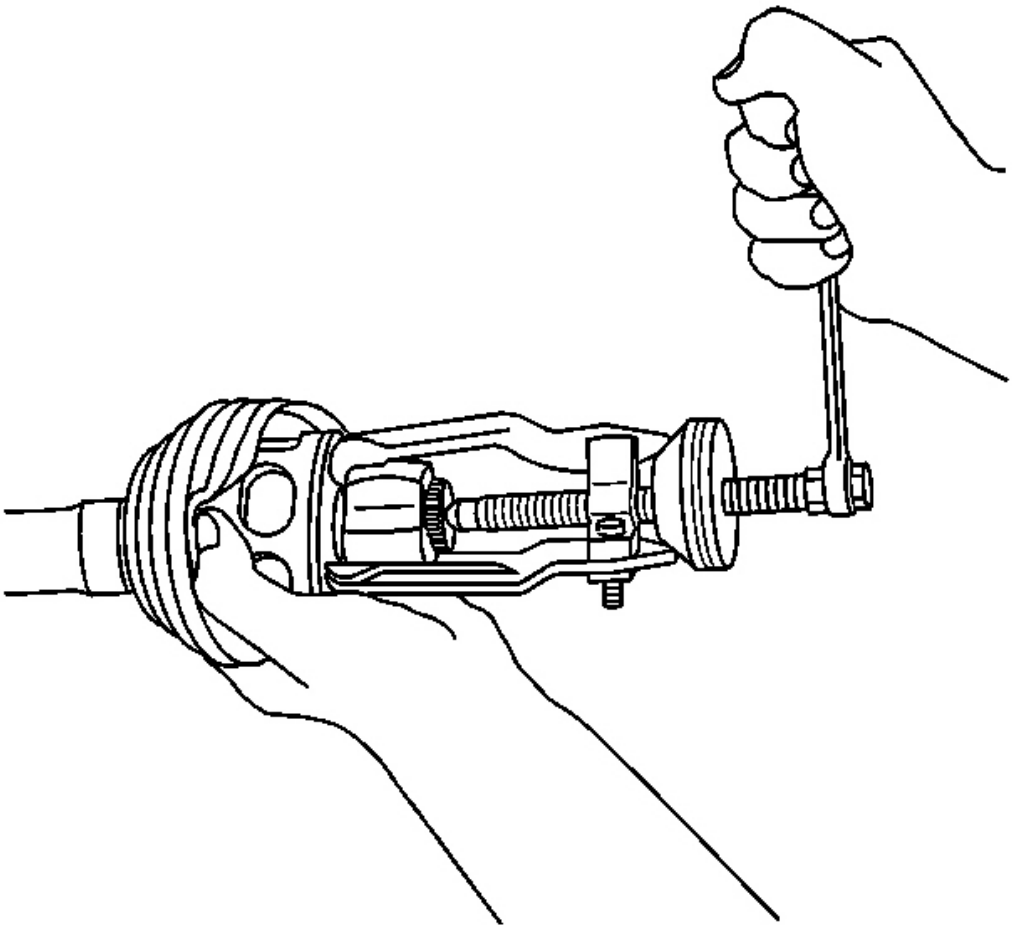

**Fig. 18: Removing The Inner Race From The Axle Shaft Using A 3 Jaw Puller**
**Courtesy of GENERAL MOTORS CORP.**

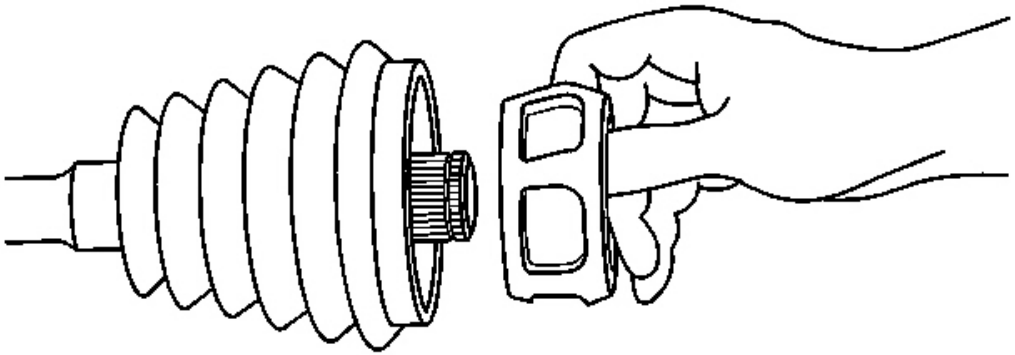

**Fig. 19: Cage To Axle Shaft**
**Courtesy of GENERAL MOTORS CORP.**

19. Remove the cage from the axle shaft.

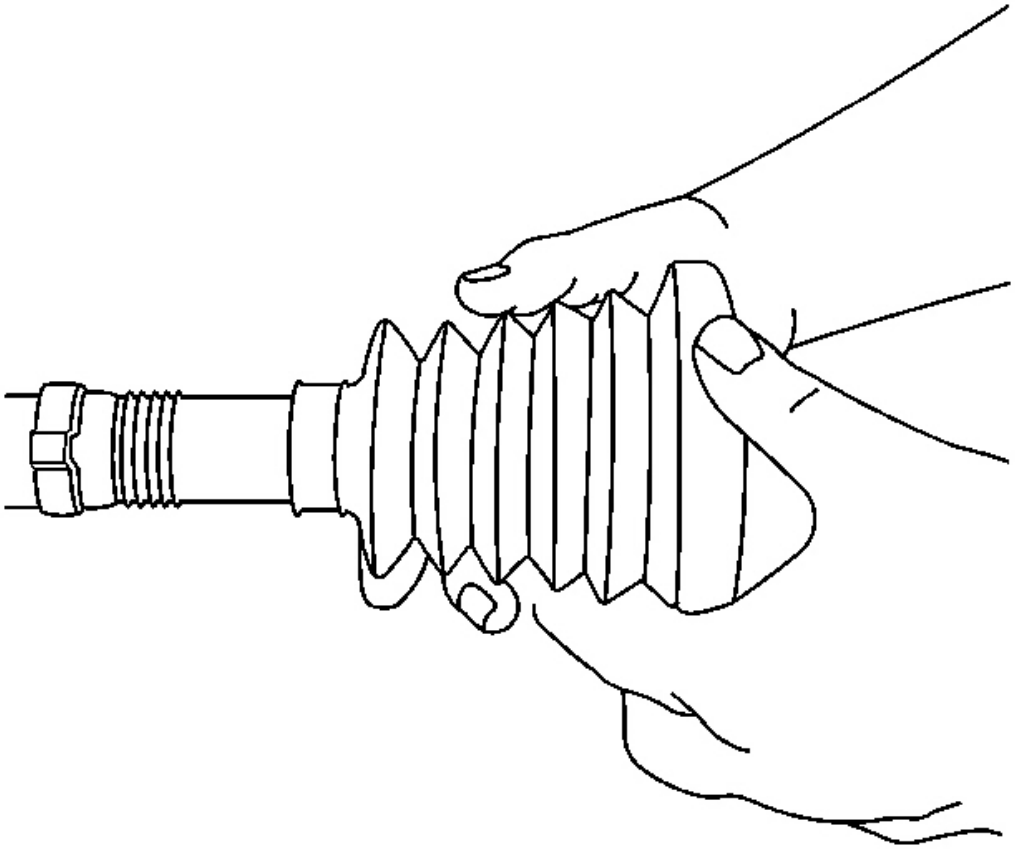

**Fig. 20: Pulling Axle Boot**
**Courtesy of GENERAL MOTORS CORP.**

20. Remove the seal from the axle shaft.
21. Remove the wheel drive shaft from the bench vise.

**IMPORTANT: All traces of old grease and any contaminates must be removed.**

22. Clean the following thoroughly with clean solvent:
    - The inner race
    - The outer race
    - The cage
    - The balls
    - The axle shaft exposed end.

23. Thoroughly air dry all the parts.

**Installation Procedure**

**NOTE:** **Wheel drive shaft boots, seals and clamps should be protected from sharp objects any time service is performed on or near the wheel drive shaft(s). Damage to the boot(s), the seal(s) or the clamp(s) may cause lubricant to leak from the joint and lead to increased noise and possible failure of the wheel drive shaft.**

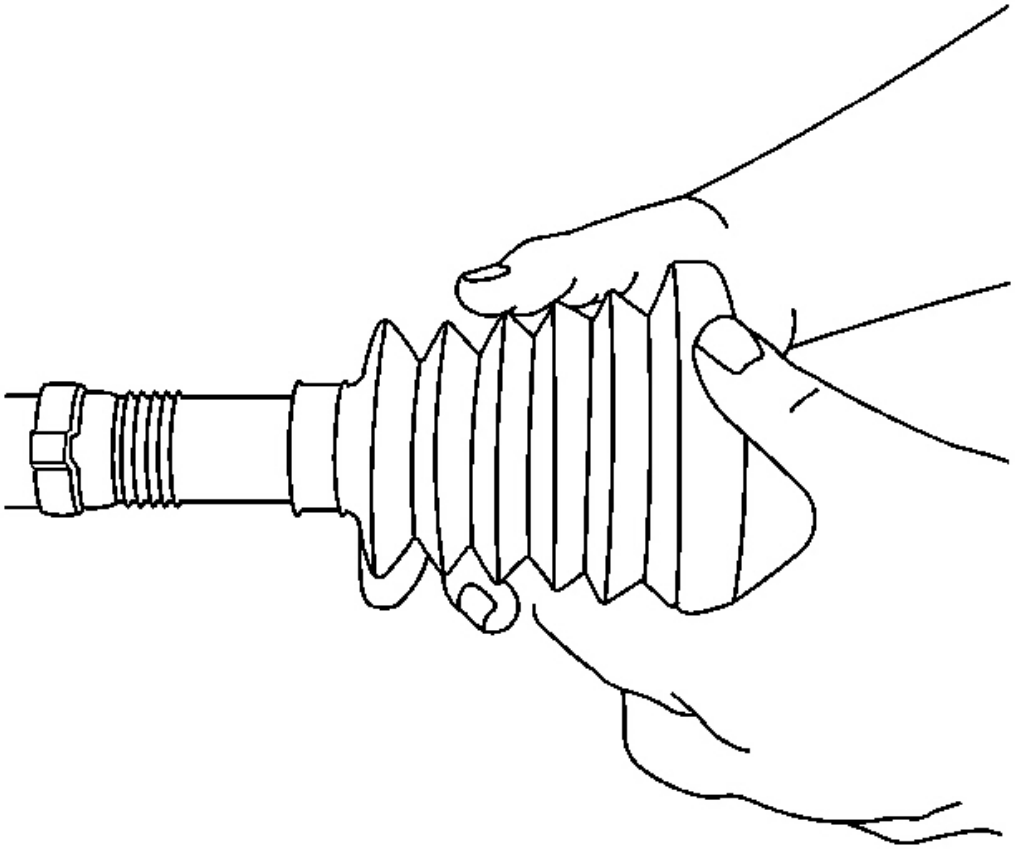

**Fig. 21: Pulling Axle Boot**
**Courtesy of GENERAL MOTORS CORP.**

1. Wrap a shop towel around the axle shaft.
2. Place the wheel drive shaft horizontally in a bench vise.

3. Install a new small seal retaining clamp onto the wheel drive shaft.
4. Install the seal onto the axle shaft.

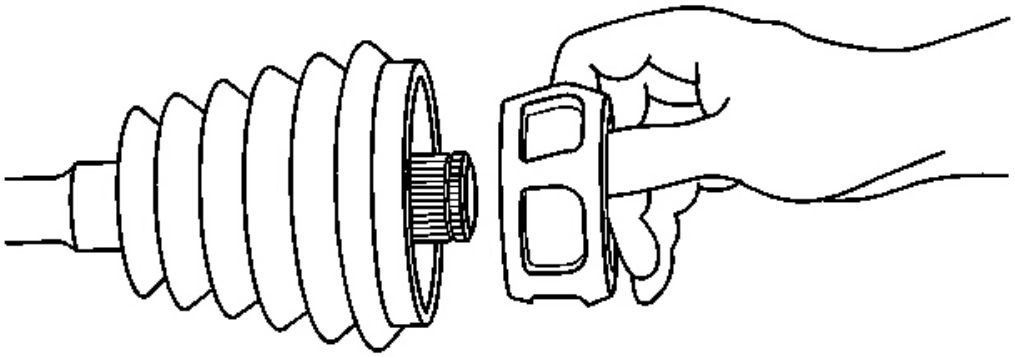

**Fig. 22: Cage To Axle Shaft**
**Courtesy of GENERAL MOTORS CORP.**

5. Install the cage onto the axle shaft so the smaller diameter end faces the vise.

**IMPORTANT: The inner race spline relief must face away from the end of the axle shaft.**

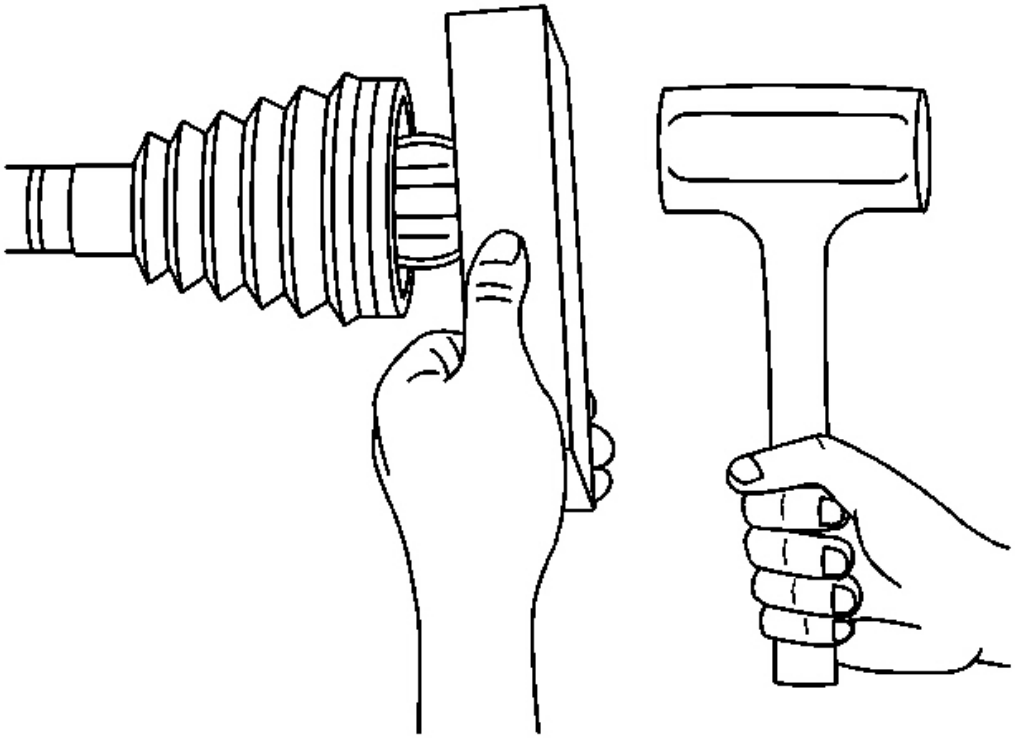

**Fig. 23: Installing Inner Race To Axle Shaft**
**Courtesy of GENERAL MOTORS CORP.**

6. Install the inner race onto the axle shaft.
    1. Engage the inner race splines onto the axle shaft splines.

       Be sure to install the inner race spline relief side onto the axle shaft first.

    2. Position a wood block squarely over the end of the inner race.
    3. Use a hammer to begin to drive the inner race onto the axle shaft.
    4. Reposition the wood block along the face of the inner race to avoid the axle shaft.
    5. Work evenly around the inner race and continue to drive the inner race, until you feel the inner race seat fully onto the axle shaft.
    6. Inspect to be sure that the axle shaft snap ring groove is exposed.

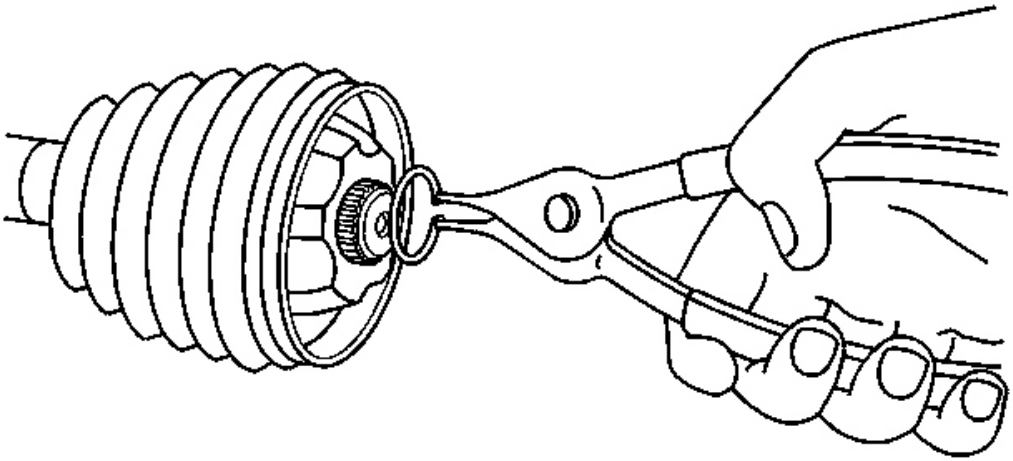

**Fig. 24: Removing/Installing Axle Shaft Snap Ring**
**Courtesy of GENERAL MOTORS CORP.**

7. Install the snap ring to the axle shaft.
8. Position the cage so the cage lands align with the inner race ball tracks.
9. Install the cage onto the inner race.
10. Position the cage windows to align with the inner race ball tracks.

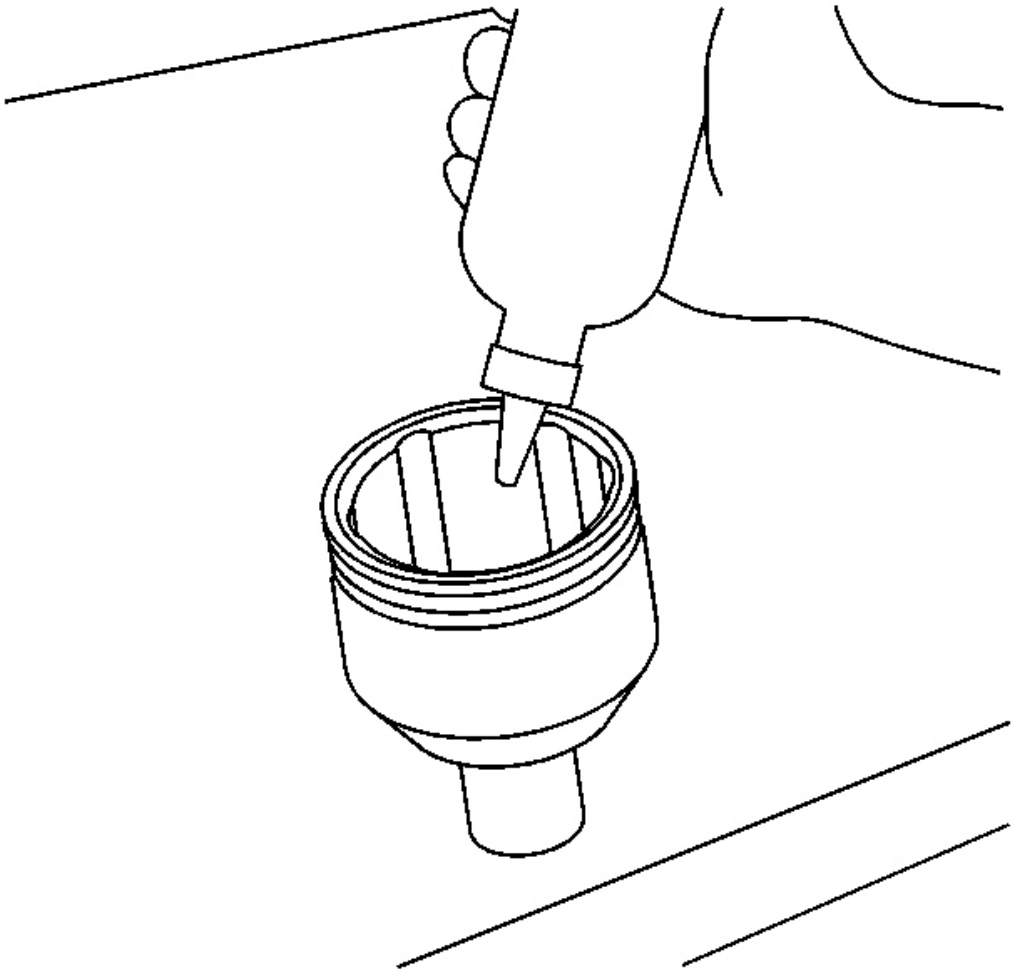

**Fig. 25: Inserting Grease From The Service Kit Into The Outer Race**
**Courtesy of GENERAL MOTORS CORP.**

11. Insert approximately 60 percent of the grease from the service kit into the outer race.
12. Position the wheel drive shaft vertically in the bench vise so the inner joint end is up.
13. Apply a small amount of the grease from the service kit to the cage windows and inner race ball tracks.

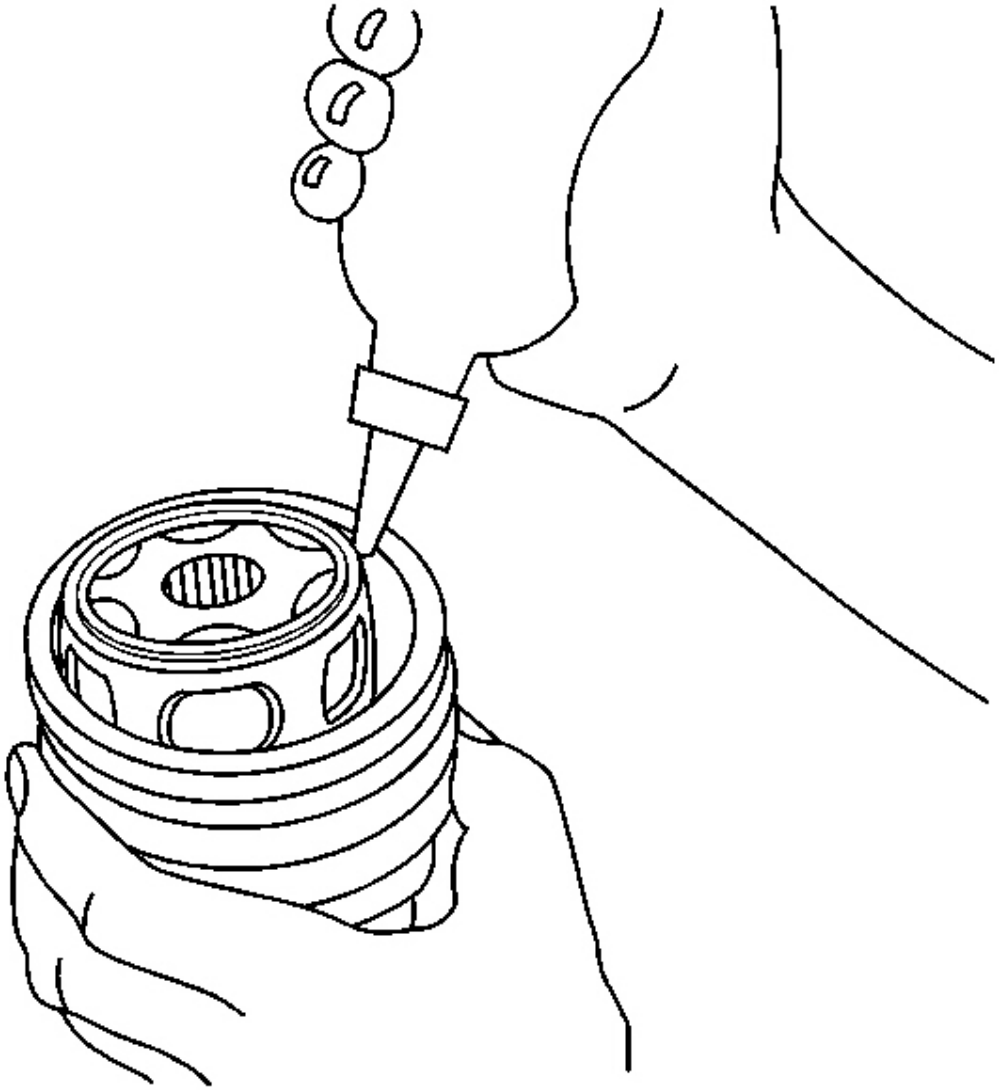

**Fig. 26: Applying Grease From The Service Kit To The Cage Windows And Inner Race Ball Tracks**
**Courtesy of GENERAL MOTORS CORP.**

14. Insert the remaining grease from the service kit into the seal.

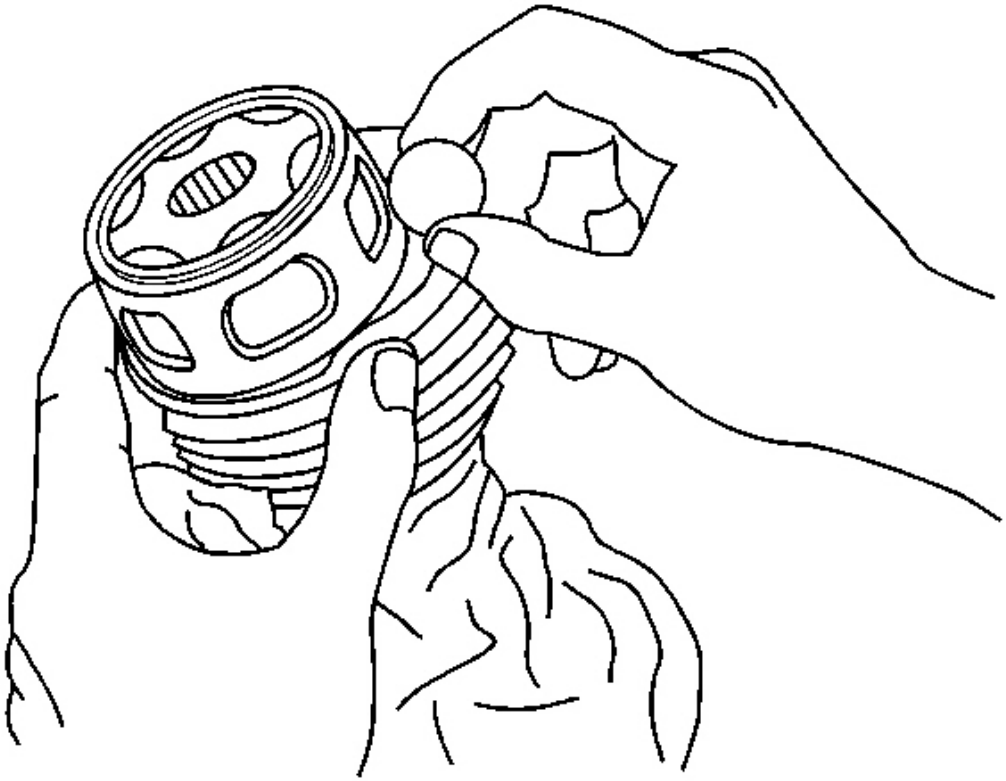

**Fig. 27: View Of Balls, Cage & Inner Race**
**Courtesy of GENERAL MOTORS CORP.**

15. Install the outer race retaining ring onto the axle shaft.

    Position the retaining ring below the cage toward the vise.

16. Install the balls through the cage windows to the inner race ball tracks.

    Use the seal to keep the balls in position if necessary.

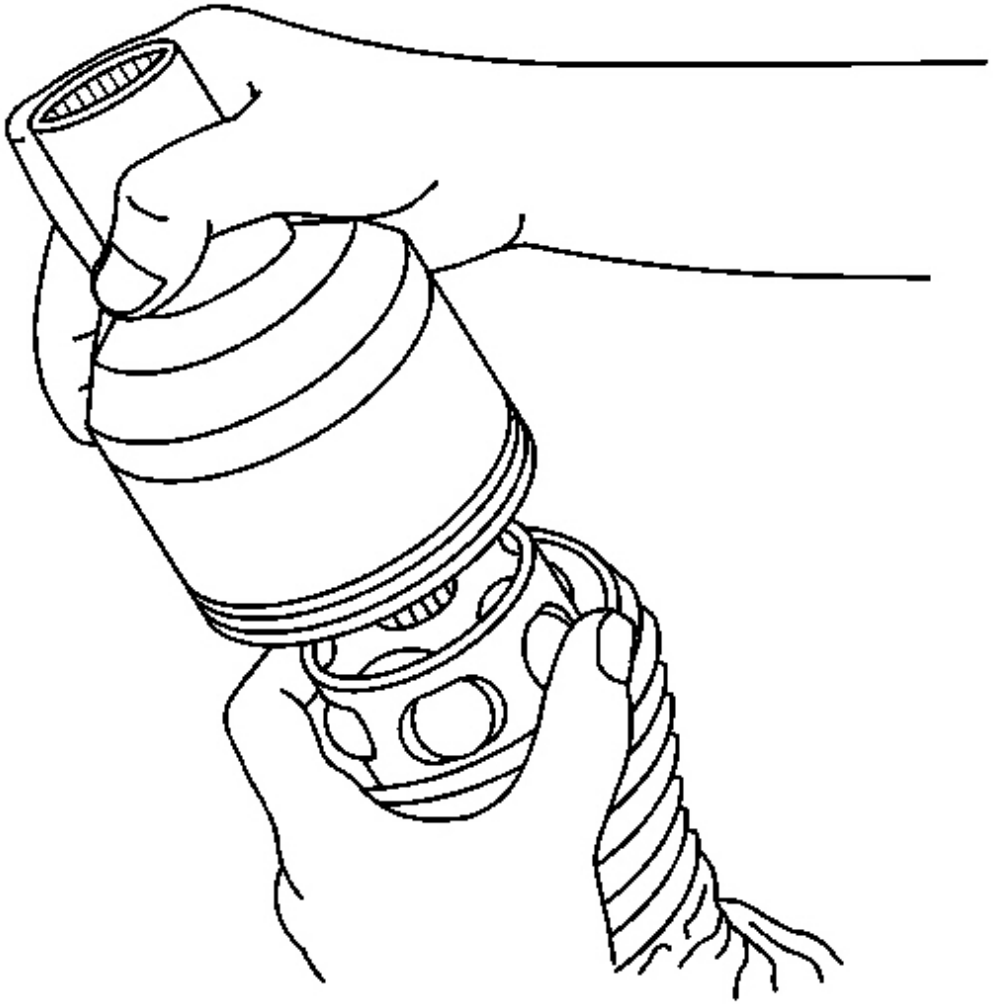

**Fig. 28: View Of Outer Race At Axle Shaft**
**Courtesy of GENERAL MOTORS CORP.**

17. Install the outer race onto the axle shaft.
    1. Be careful not to allow the grease in the outer race to leak out.
    2. Align the outer race ball tracks to the balls.
    3. Slide the outer race down over the balls.
18. Position the wheel drive shaft horizontally in the bench vise.
19. Engage the outer race retaining ring.

1. Slide the outer race toward the vise.
2. Insert the outer race retaining ring into the groove along the outer edge of the outer race.
3. Position the outer race retaining ring so the opening in the ring aligns with an outer race land (not a ball track).

20. Position the large diameter end of the seal onto the outer race.

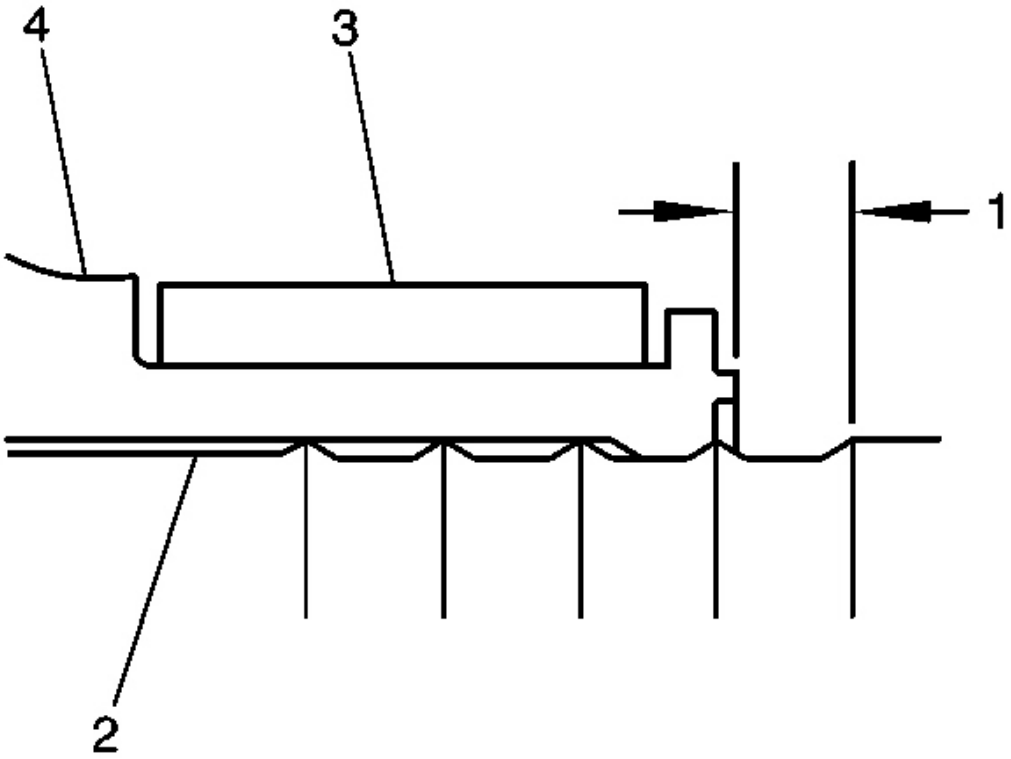


**Fig. 29: Positioning Small Seal Retaining Clamp To Neck Of Seal**
**Courtesy of GENERAL MOTORS CORP.**

21. Position the small seal retaining clamp (3) onto the neck of the seal (4).
22. Position the seal and small retaining clamp to the axle shaft (2) as shown.
23. Measure the distance (1) between the edge of the seal and the edge of the last axle shaft groove closing edge; adjust fit accordingly.

    **Specification:** 2.5 mm (0.10 in)

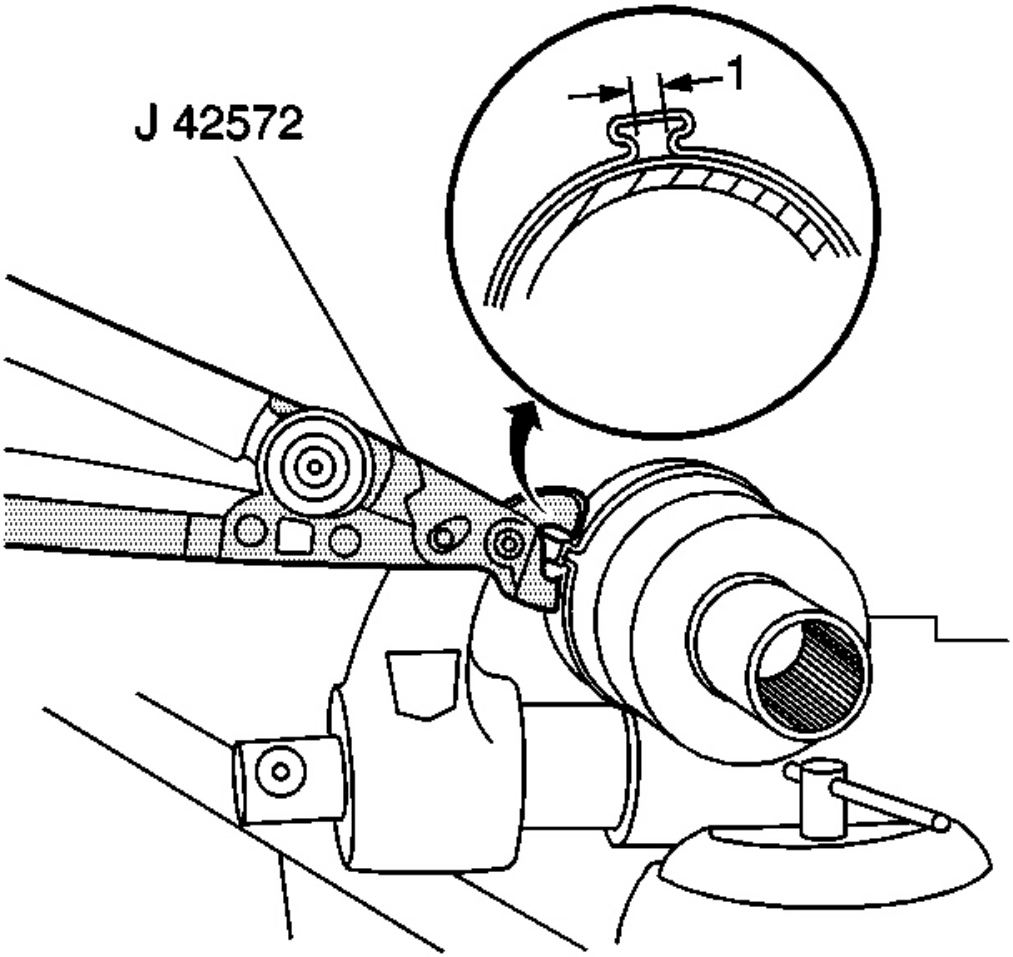


**Fig. 30: Crimping Small Seal Retaining Clamp**
**Courtesy of GENERAL MOTORS CORP.**

**IMPORTANT: The seal retaining clamp must not be over-tightened or under-tightened.**

24. Crimp the small seal retaining clamp using the **J 42572** . See **Special Tools and Equipment** .

    **Tighten:** Tighten the small seal retaining clamp until the base of the omega (ohm) shape has a gap width (1) between 2 and 3 mm (0.079 and 0.118 in), with a difference in the gap width from side to side no greater than 0.4 mm (0.016 in). The clamping hold time must be no less than 2 seconds.

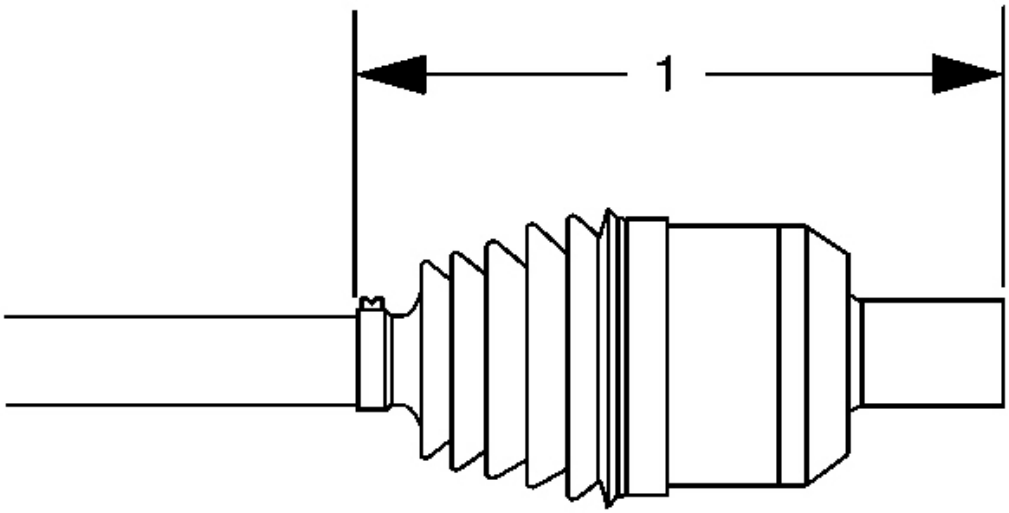


**Fig. 31: Measuring The Distance Between The End Of The Seal And The End Of The Joint Outer Race**
**Courtesy of GENERAL MOTORS CORP.**

25. Measure the distance (1) between the end of the seal and the end of the joint outer race; adjust the plunging motion of the joint accordingly.

    **Specification:** 224-228 mm (8.82-8.98 in)

26. Position the large seal retaining clamp (2) onto the seal (3).
27. Position the seal and large retaining clamp to the joint outer race (4) as shown.

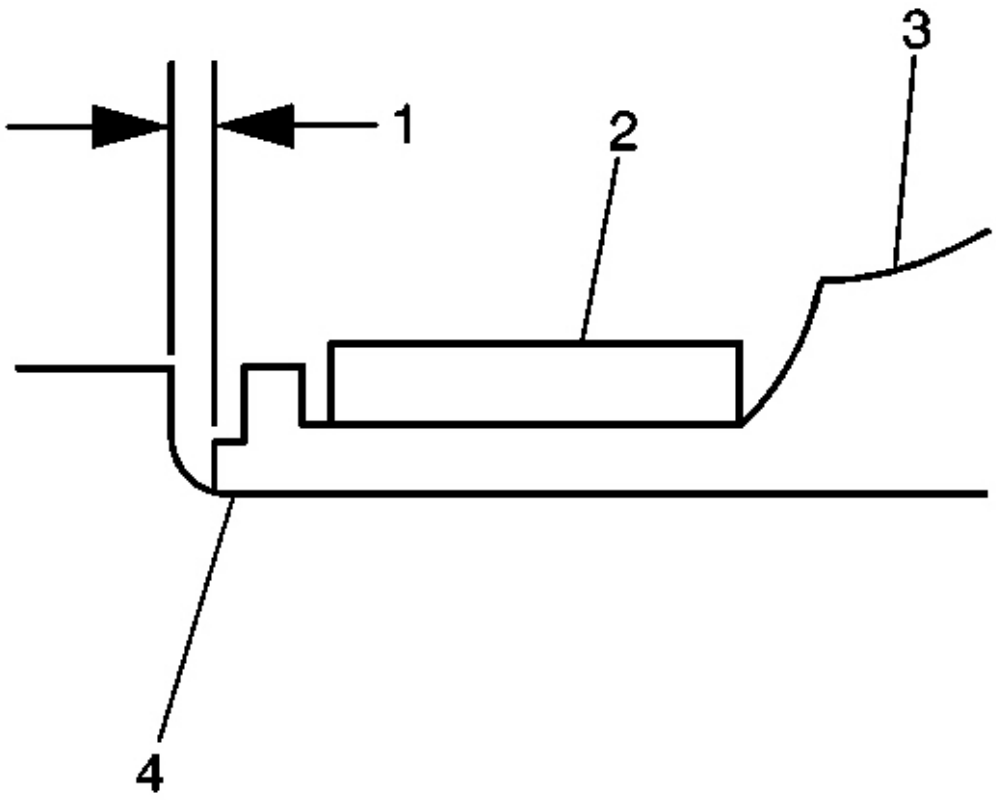


**Fig. 32: Positioning The Seal And Large Retaining Clamp To The Joint Outer Race**
**Courtesy of GENERAL MOTORS CORP.**

28. Measure the distance (1) between the edge of the seal and the edge of the joint outer race last groove closing edge; adjust fit accordingly.

    **Specification:** 0.8 mm (0.03 in)

    **IMPORTANT: The seal must not be dimpled, stretched or out of shape in any way.**

29. Inspect the seal for proper shape.

    If the seal is NOT shaped correctly, equalize the pressure in the seal and shape the seal properly by hand.

30. Inspect the seal for damage.

If the seal has been cut or punctured during assembly, you must discard and replace the seal.

31. Align the following items while latching:
    - The wheel drive shaft inboard seal (2)
    - The tripot housing
    - The large seal retaining clamp (3)
32. Using the **J 46588** , latch the large seal retaining clamp. See **Special Tools and Equipment** . Ensure that the latching tangs are fully engaged in the large seal clamp band.

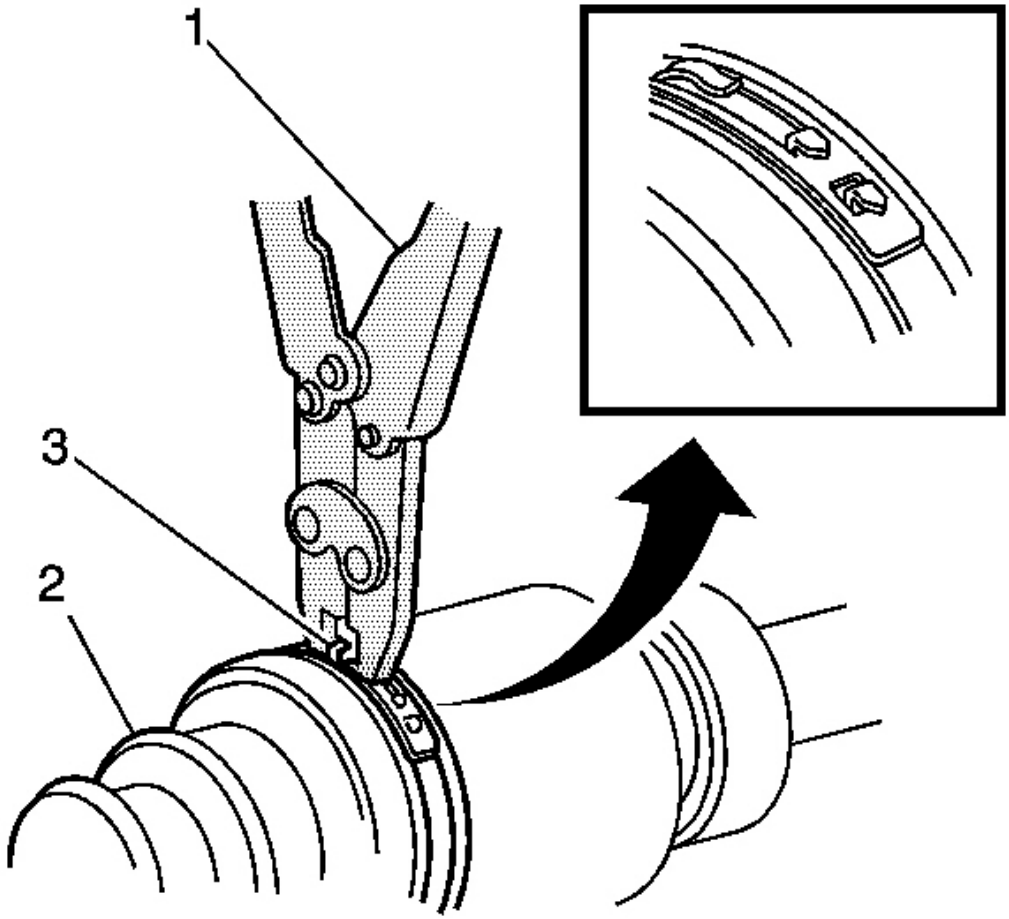


**Fig. 33: Latching The Large Seal Retaining Clamp Using J 46588**
**Courtesy of GENERAL MOTORS CORP.**

33. Remove the wheel drive shaft from the bench vise.

34. Distribute the grease within the inner CV joint.

    Plunge the joint back and forth four or five times.

35. Inspect the inner CV joint and wheel drive shaft for smooth operation.
    1. Hold the wheel drive shaft vertically, with the outer joint at the bottom.
    2. Rotate the wheel drive shaft four or five times in a circular motion.

To install the wheel drive shaft into the vehicle, refer to **Wheel Drive Shaft Replacement** .

## WHEEL DRIVE SHAFT OUTER JOINT AND SEAL REPLACEMENT

### Tools Required

-

- **J 42572** Drive Axle Seal Clamp Pliers. See **Special Tools and Equipment** .
- **J 46588** Axle Seal Crimp Tool. See **Special Tools and Equipment** .

### Removal Procedure

This procedure is to be performed only after the drive shaft has been removed from the vehicle. For the removal procedure refer to **Wheel Drive Shaft Replacement** .

1. Wrap a shop towel around the axle shaft.
2. Place the wheel drive shaft horizontally in a bench vise.
3. Using the **J 46588** , remove the large seal retaining clamp from the CV joint seal. See **Special Tools and Equipment** .
4. Remove the small seal retaining clamp from the joint seal.

   Use a side cutter or other suitable tool and discard the clamp.

5. Separate the seal from the joint outer race at the large diameter end.
6. Position the seal behind the joint face.
7. Wipe the grease from the face of the joint inner race, cage, balls, etc.
8. Remove the outer joint from the axle shaft.
    1. Have an assistant hold the joint housing.
    2. Position a wood block between the seal and the joint along the joint face.
    3. Strike the wood block with a hammer to compress the axle shaft retaining clip.
    4. Continue to strike the wood block to remove the outer joint from the axle shaft.

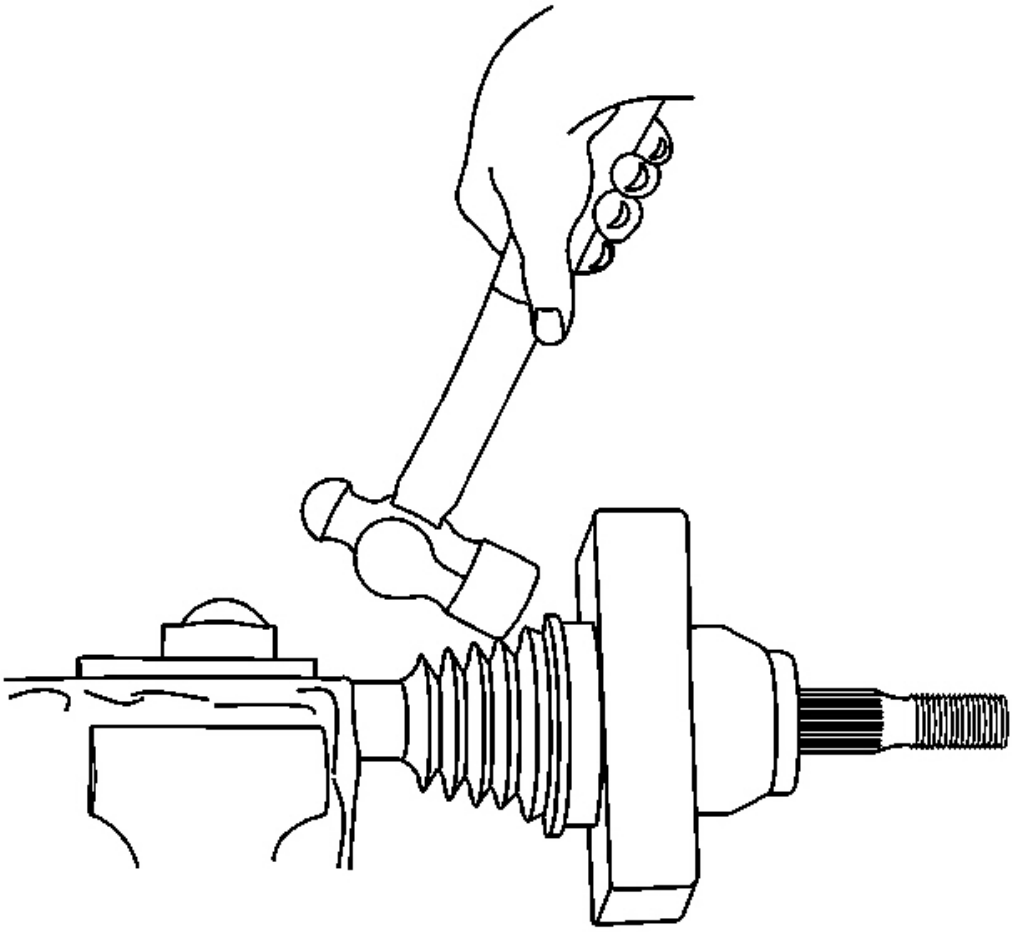

**Fig. 34: Removing The Outer Joint From The Axle Shaft**
**Courtesy of GENERAL MOTORS CORP.**

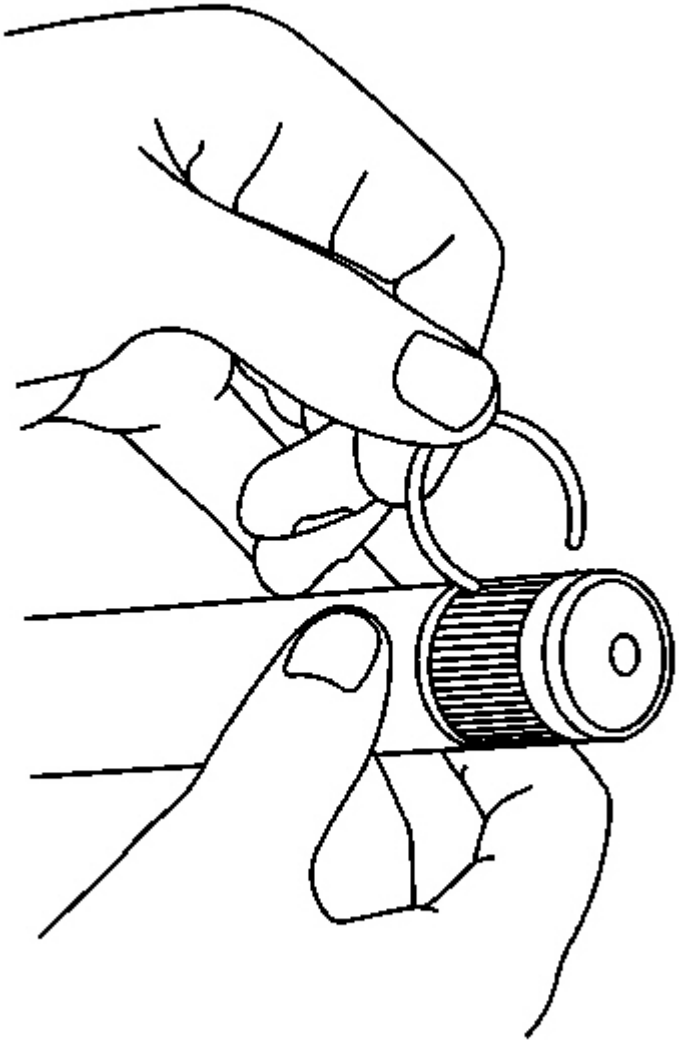

**Fig. 35: View Of Axle Shaft Retaining Ring**
**Courtesy of GENERAL MOTORS CORP.**

9. Remove the axle shaft retaining ring from the axle shaft.

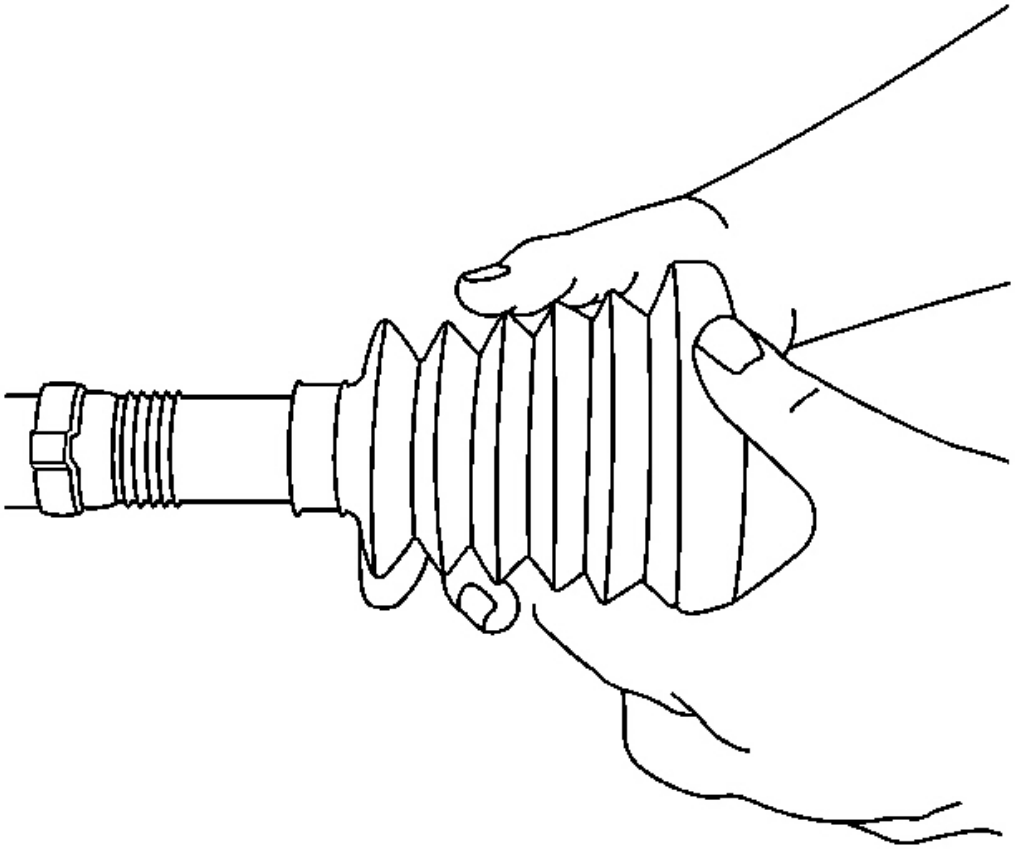

**Fig. 36: Pulling Axle Boot From Axle Shaft**
**Courtesy of GENERAL MOTORS CORP.**

10. Remove the seal from the axle shaft.
11. Remove the wheel drive shaft from the vise.
12. Wrap a shop towel around the joint outer race splined shaft.
13. Place the outer race vertically in a bench vise.
14. Make a ball accessible for removal.

    Tap gently on the joint cage, using a brass drift and a hammer, in order to drive a ball toward the bottom of its track. The opposing ball will be made accessible for removal.

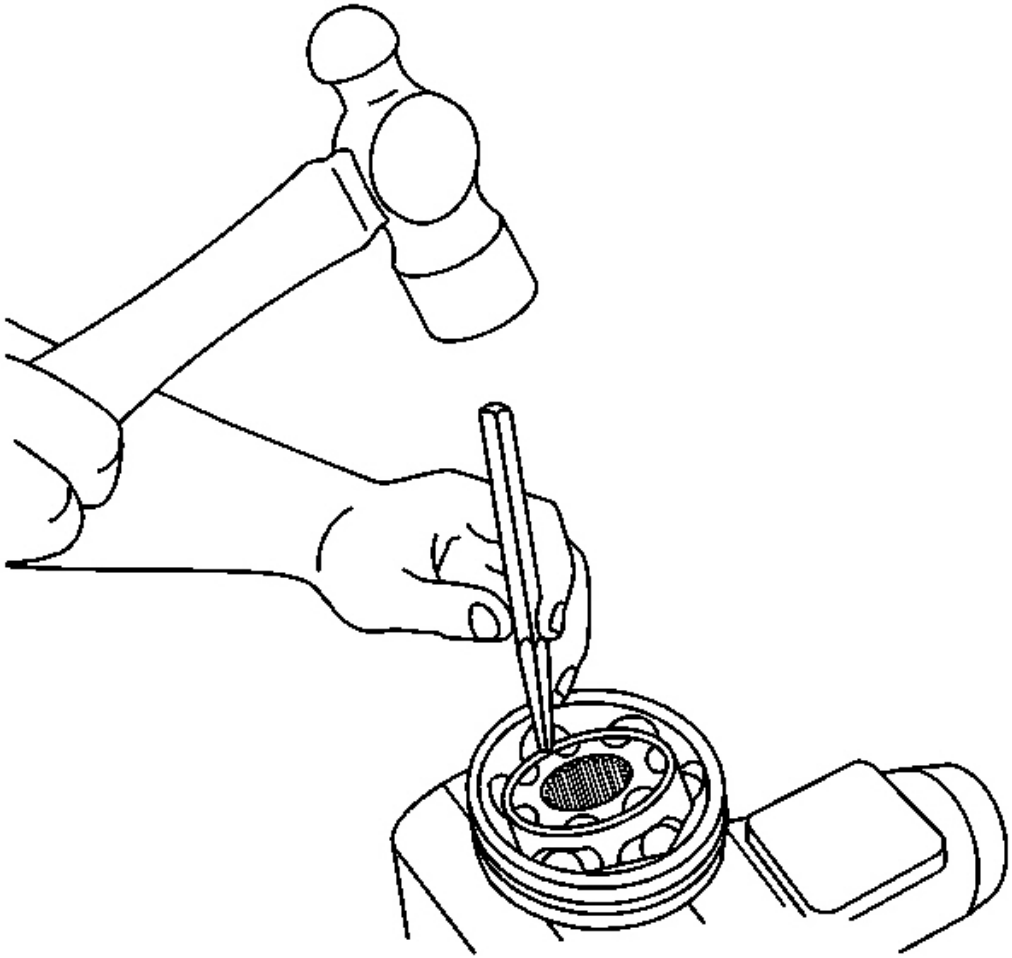

**Fig. 37: Using A Brass Drift And A Hammer To Position Ball Cage**
**Courtesy of GENERAL MOTORS CORP.**

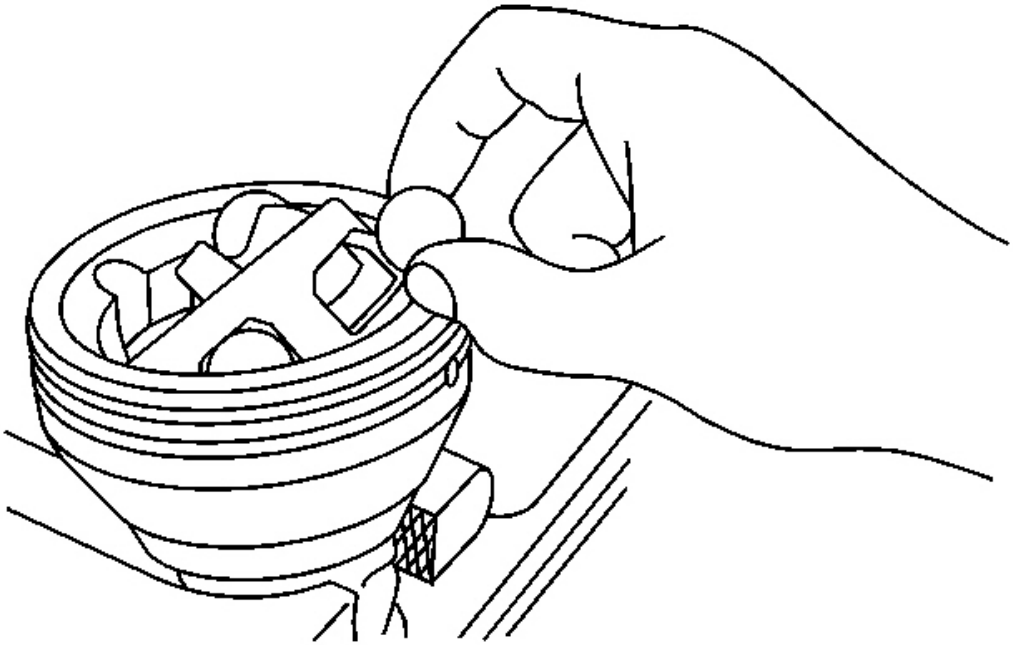

**Fig. 38: Removing/Install Ball From Cage & Inner Race**
**Courtesy of GENERAL MOTORS CORP.**

15. Remove the exposed ball.

    Use a small screwdriver to aid in removal if necessary.

16. Position the cage and inner race so they are level.

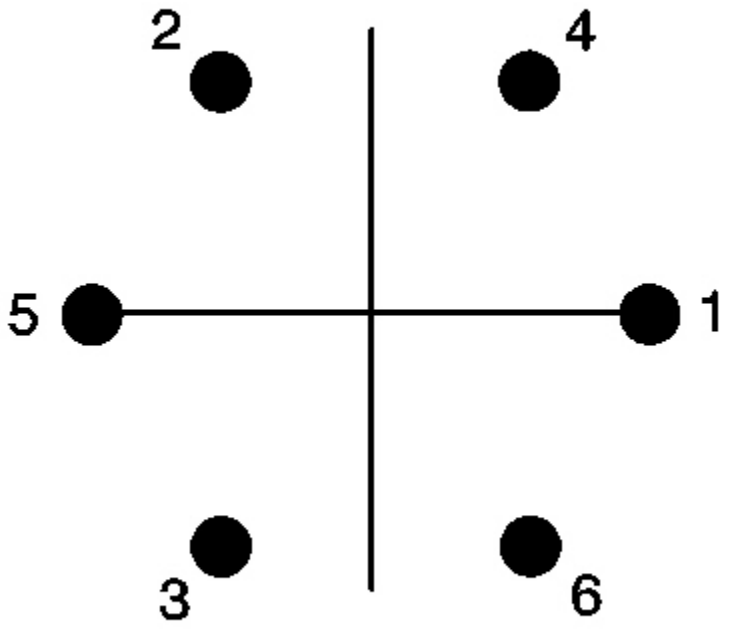


**Fig. 39: Removal Sequence For All Six Balls**
**Courtesy of GENERAL MOTORS CORP.**

17. Repeat steps 14 through 16 in the removal sequence as shown until you remove all six balls.

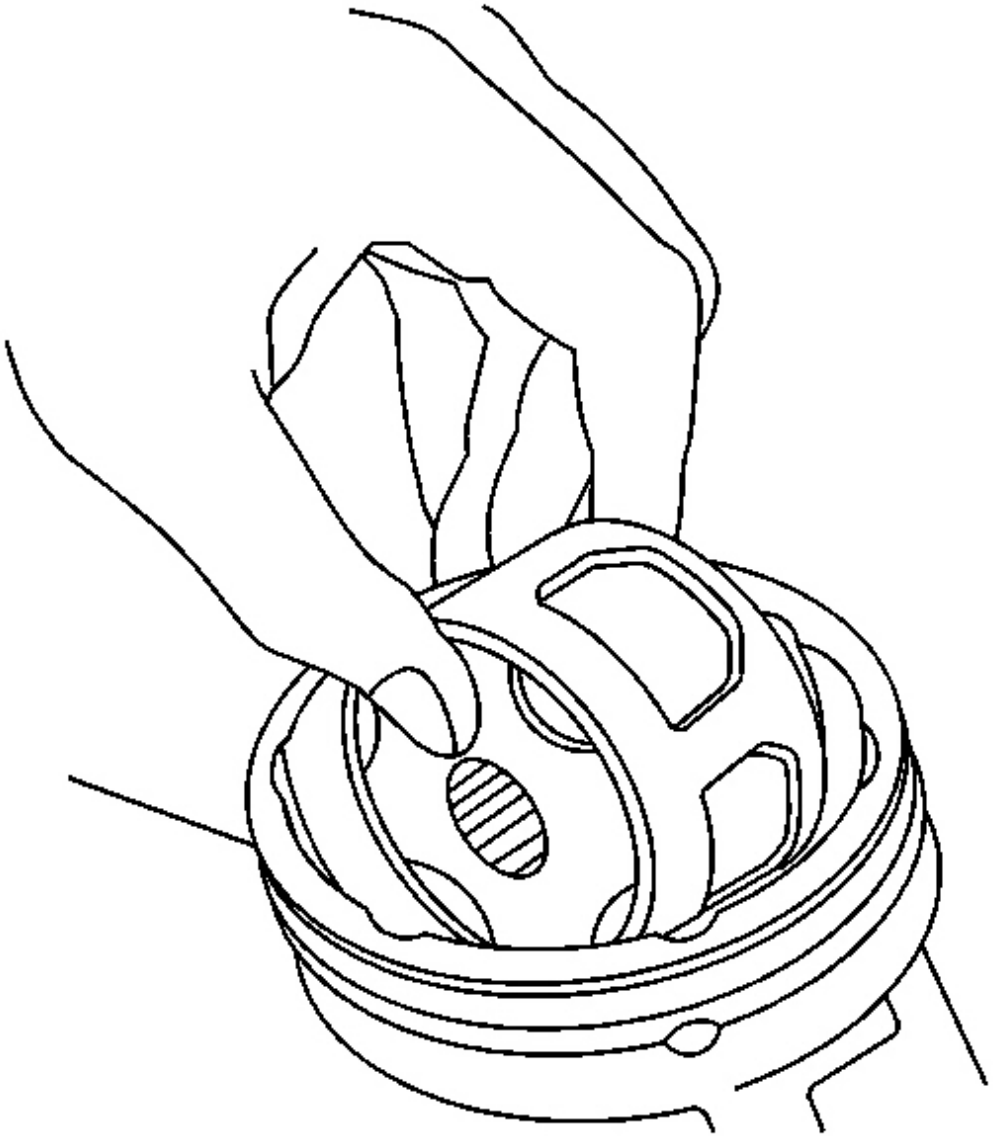

**Fig. 40: Positioning Cage & Inner Race 90 Degrees To Centerline Of Outer Race**
**Courtesy of GENERAL MOTORS CORP.**

18. Position the cage and the inner race 90 degrees to the centerline of the outer race.
19. Align the cage windows with the lands of the outer race.
20. Lift to remove the cage and the inner race from the outer race.

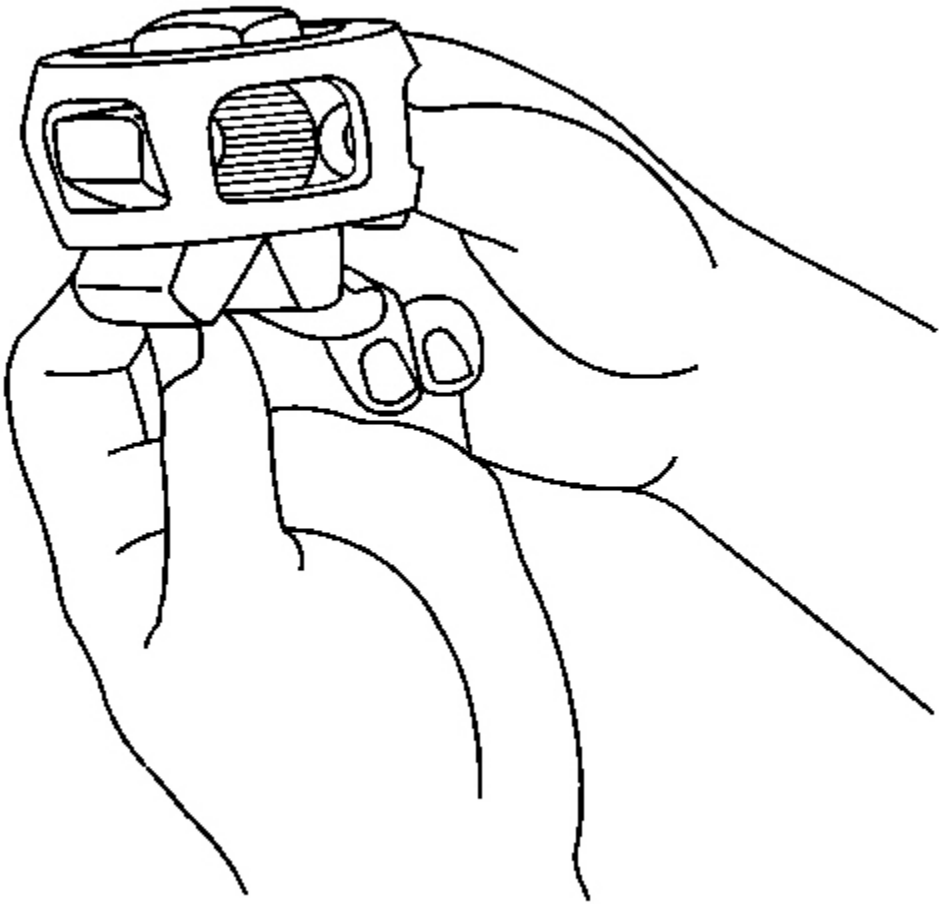

**Fig. 41: Positioning Cage And Inner Race So Larger Radius Corners Of Cage Windows Are Up**
**Courtesy of GENERAL MOTORS CORP.**

21. Position the cage and inner race so that the larger radius corners of the cage windows are up.
22. Rotate the inner race 90 degrees to the centerline of the cage.
23. Align the lands of the inner race with the windows of the cage.
24. Insert an inner race land into a cage window.
25. Pivot the inner race down and remove it from the cage.

**IMPORTANT: All traces of old grease and any contaminates must be removed.**

26. Clean the following thoroughly with clean solvent:

- The inner race
- The outer race
- The cage
- The balls
- The axle shaft exposed end.

27. Thoroughly air dry all the parts.

**Installation Procedure**

**NOTE:** **Wheel drive shaft boots, seals and clamps should be protected from sharp objects any time service is performed on or near the wheel drive shaft(s). Damage to the boot(s), the seal(s) or the clamp(s) may cause lubricant to leak from the joint and lead to increased noise and possible failure of the wheel drive shaft.**

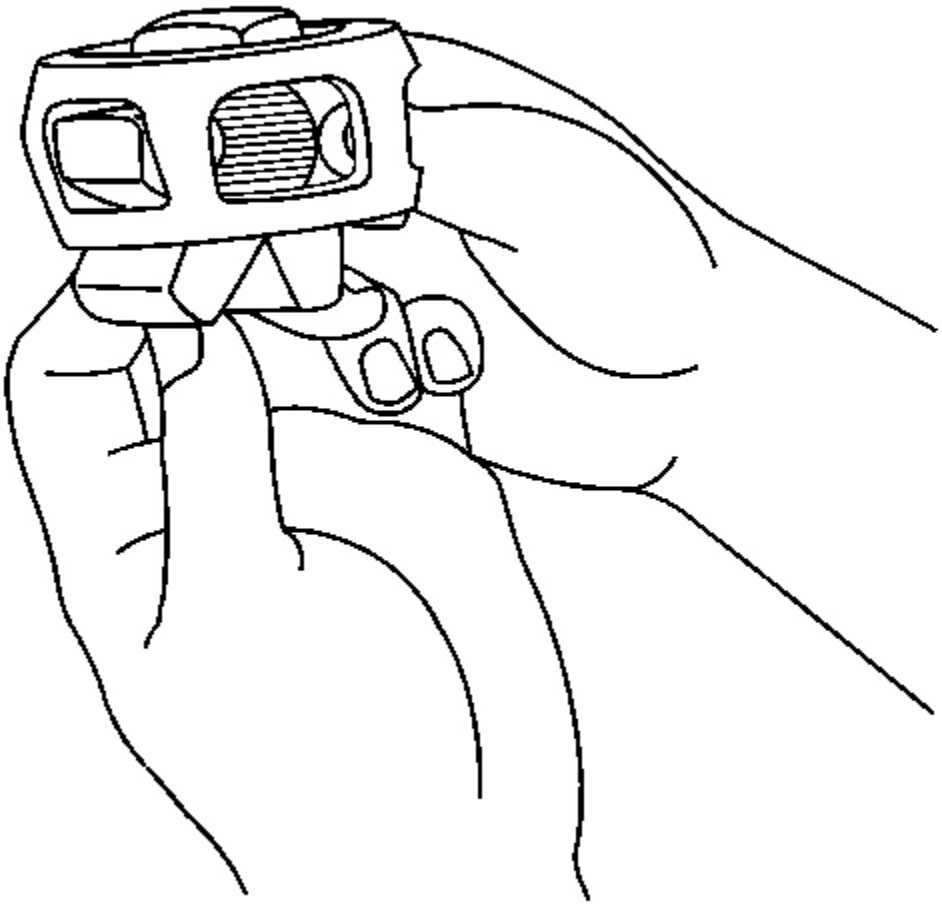

**Fig. 42: Positioning Cage So Larger Radius Corners Of Cage Windows Are Up**
**Courtesy of GENERAL MOTORS CORP.**

1. Position the cage so the larger radius corners of the cage windows are up.
2. Position the inner race 90 degrees to the centerline of the cage.
3. Begin to insert the inner race up through the bottom of the cage.
4. Align a land of the inner race to a window of the cage.
5. Insert the inner race land into the cage window.
6. Rotate the remainder of the inner race into the cage.
7. Rotate the inner race within the cage so that the grooved surface of the inner race is facing up.
8. Align the inner race ball tracks with the cage windows.

9. Wrap a shop towel around the joint outer race splined shaft.
10. Place the outer race vertically in a bench vise.
11. Position the cage and inner race 90 degrees to the centerline of the outer race.

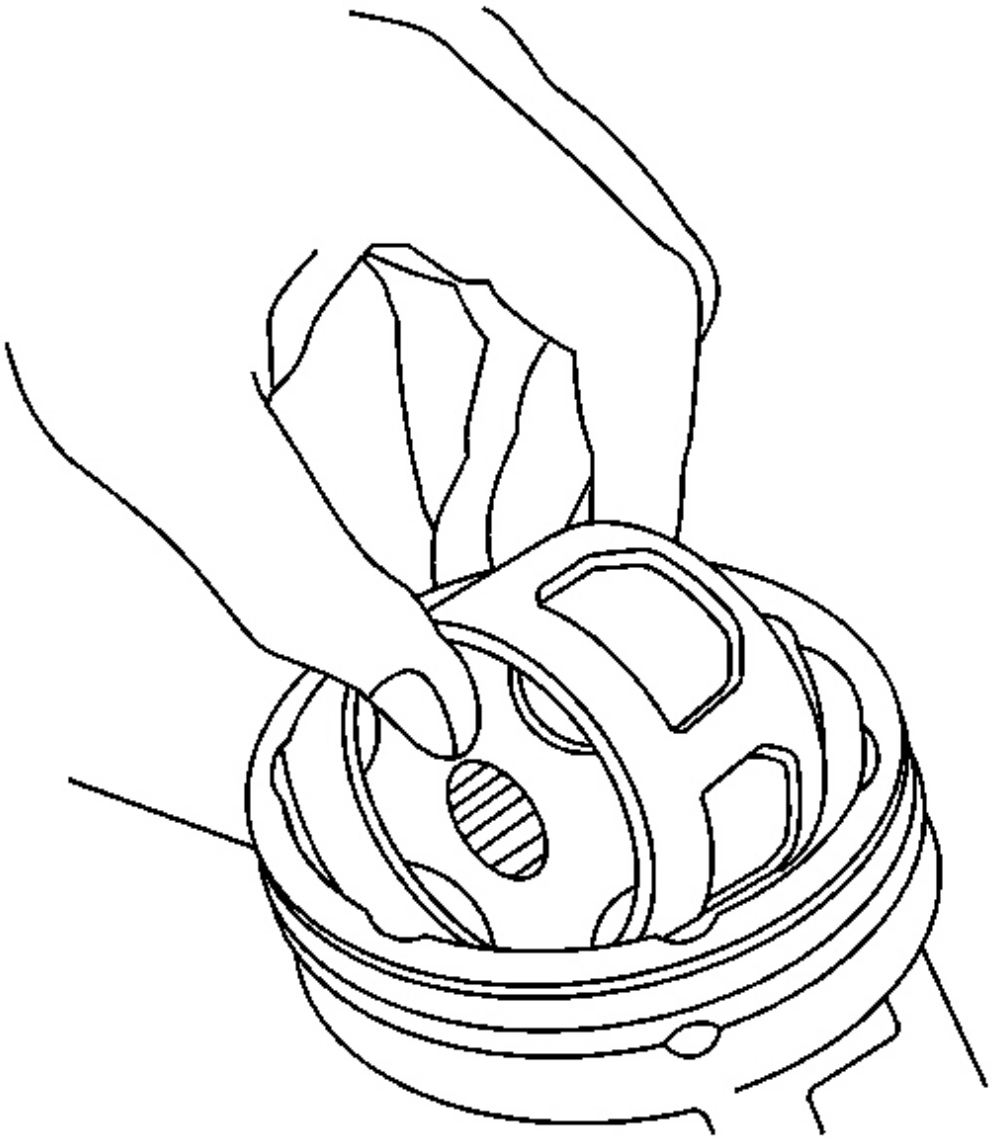

**Fig. 43: Positioning Cage & Inner Race 90 Degrees To Centerline Of Outer Race**
**Courtesy of GENERAL MOTORS CORP.**

12. Align two cage windows at 0 and 180 degrees.

    Rotate the inner race and cage assembly in the vertical plane.

13. Align the two windows at 0 and 180 degrees with two of the outer race lands.
14. Insert the cage and inner race into the outer race.

**IMPORTANT: The larger radius corners of the cage windows should be positioned up and the grooved surface of the inner race should be visible.**

15. Position the cage and inner race so they are level.
16. Align the cage windows and inner race ball tracks with the outer race ball tracks.

    Rotate the appropriate component(s).

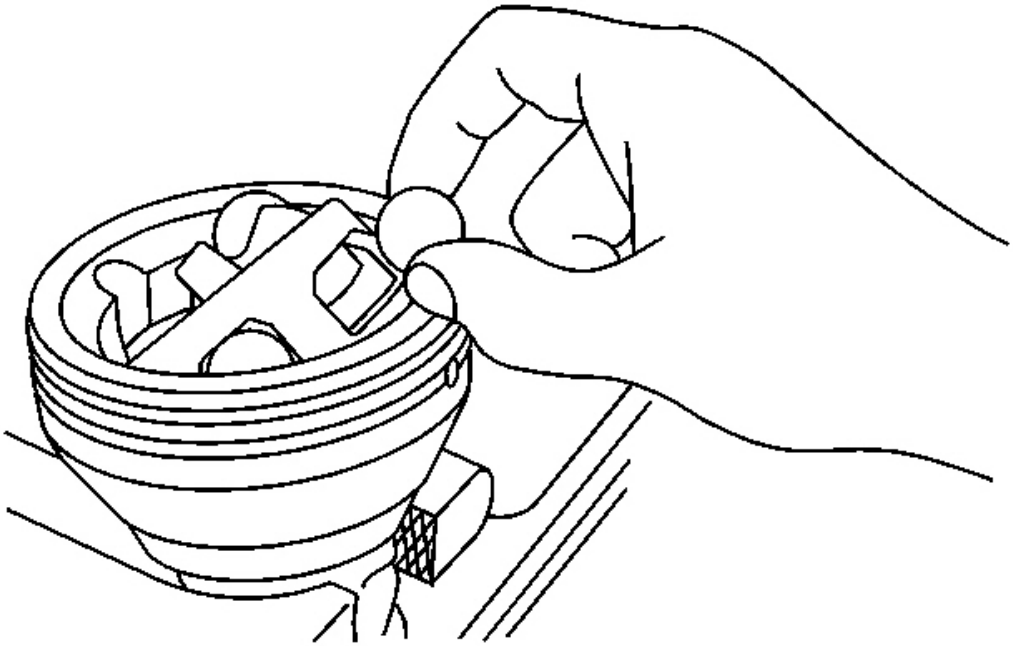

**Fig. 44: Positioning Cage & Inner Race To Install Ball**
**Courtesy of GENERAL MOTORS CORP.**

17. Position a cage window and inner race ball track for ball installation.
    1. Press down on the cage following one of the outer race ball tracks. The opposing cage window and

inner race ball track will be accessible for ball installation.

2. After you install the first ball, you will need to use a brass drift and a hammer to tap gently on the cage, in order to drive the cage and inner race down completely.

**IMPORTANT: No gap should exist between the ball and the inner race ball track.**

18. Insert a ball through the cage window onto the inner race ball track.

    Tap the ball lightly with a plastic tipped hammer.

19. Position the cage and inner race so they are level.

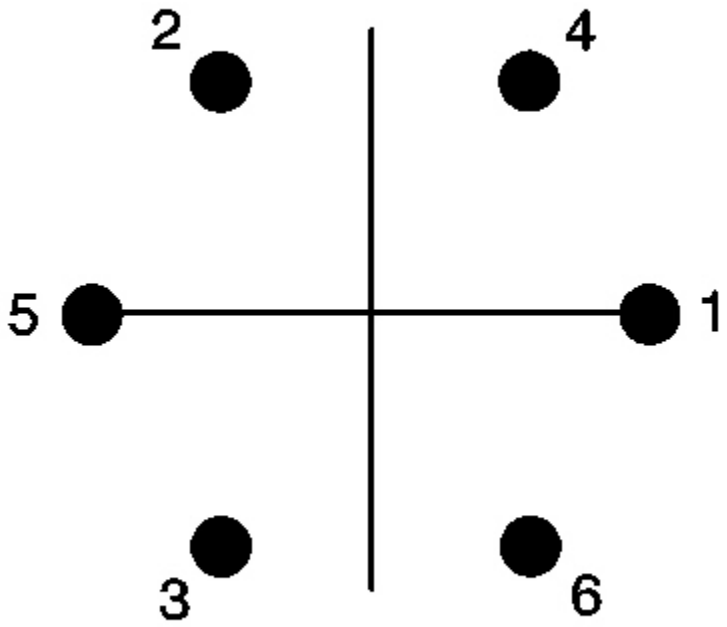


**Fig. 45: Removing/Installing All Six Balls**
**Courtesy of GENERAL MOTORS CORP.**

**IMPORTANT: The ball installation sequence must be followed as shown.**

20. Repeat steps 17 through 19 in the installation sequence as shown until you install all six balls.

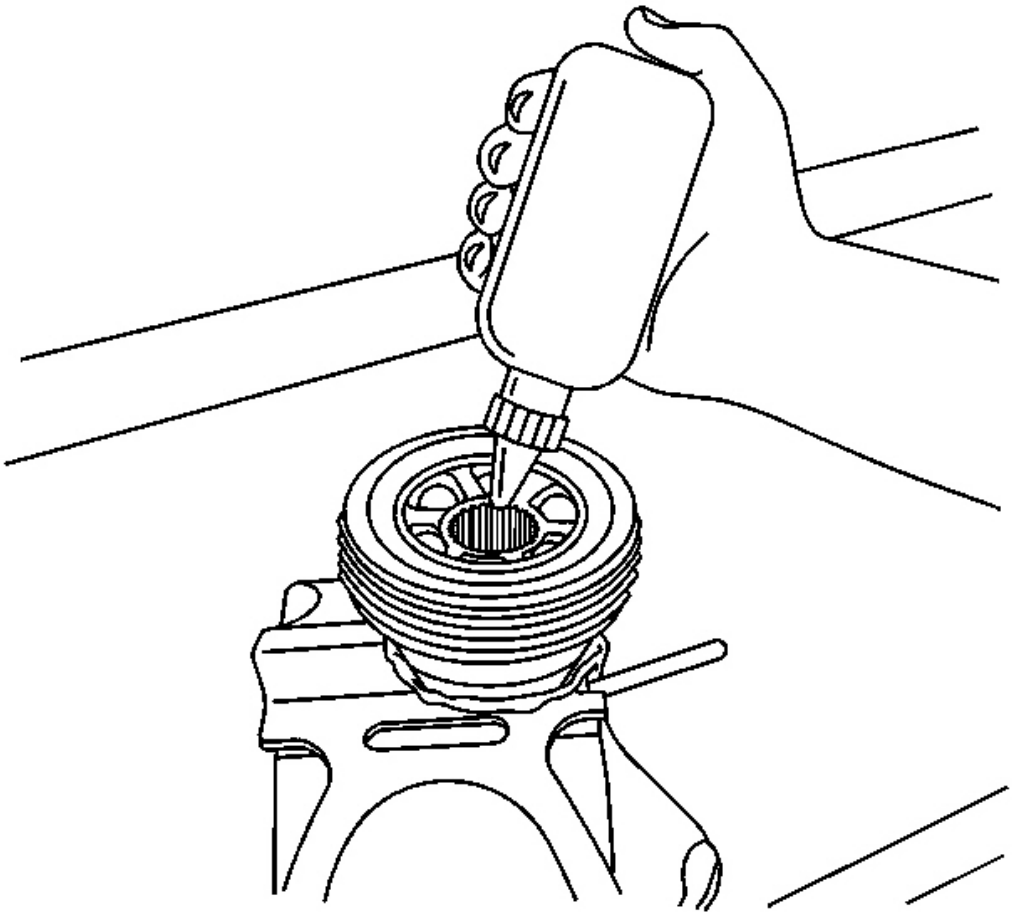

**Fig. 46: Grease To Bottom Of Outer Race**
**Courtesy of GENERAL MOTORS CORP.**

21. Insert approximately 60 percent of the grease from the service kit into the outer joint.
    1. Spread the grease onto the ball tracks, the balls, the cage and the inner race.
    2. Spread the remainder of the grease into the bottom of the outer race.
22. Remove the outer joint from the bench vise.

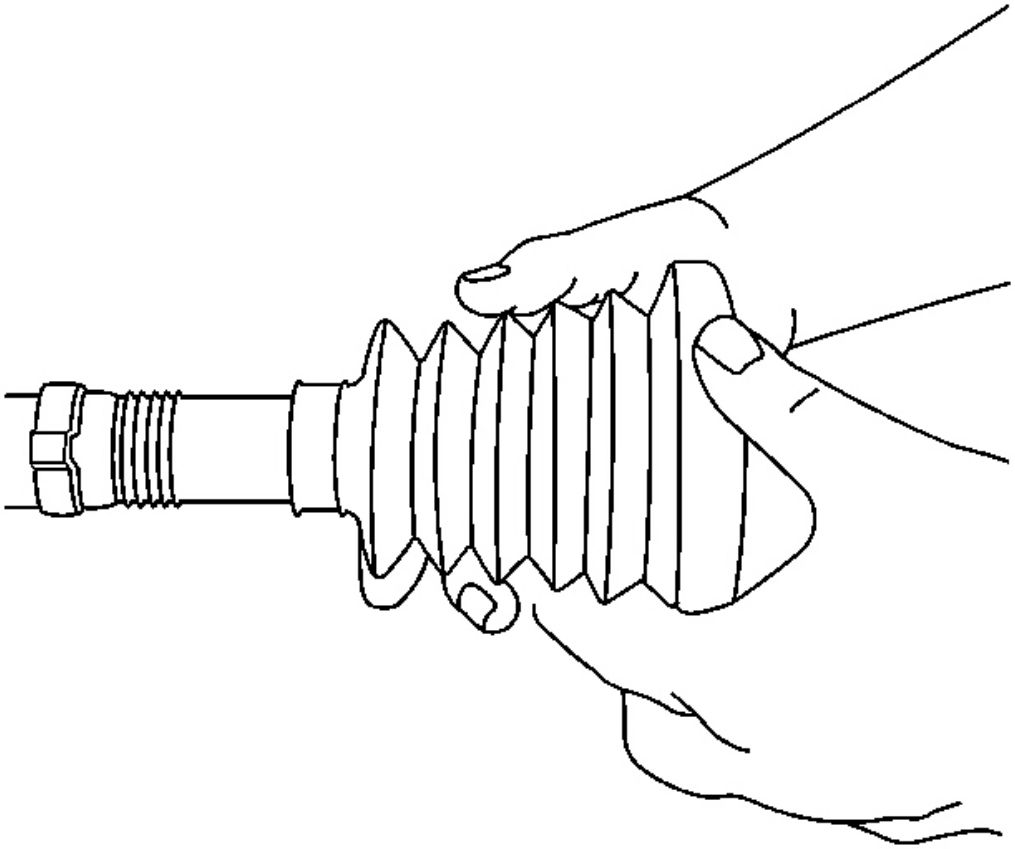

**Fig. 47: Axle Boot**
**Courtesy of GENERAL MOTORS CORP.**

23. Wrap a shop towel around the axle shaft.
24. Place the wheel drive shaft horizontally in a bench vise.
25. Install a new small seal retaining clamp onto the axle shaft.
26. Install the seal onto the axle shaft.

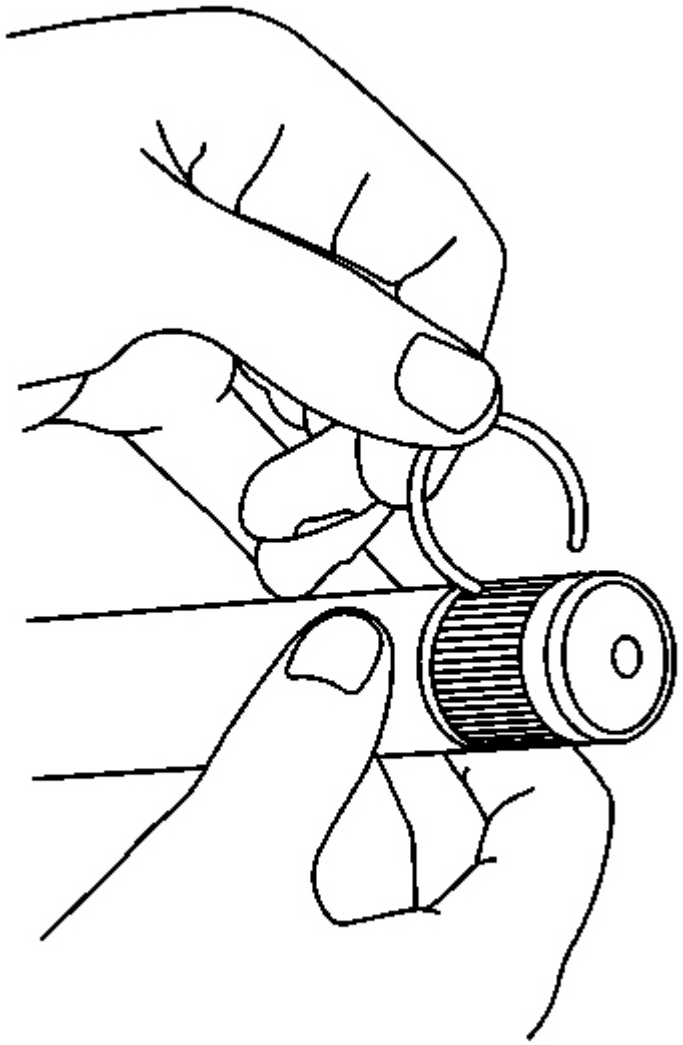

**Fig. 48: View Of Axle Shaft Retaining Ring**
**Courtesy of GENERAL MOTORS CORP.**

27. Install the axle shaft retaining ring to the axle shaft.
28. Position the outer joint horizontally.
29. Engage the inner race splines onto the axle shaft splines.
30. Compress the axle shaft retaining ring.
    1. Press one end of the retaining ring, using a flat bladed screwdriver or equivalent tool, into the axle shaft groove while firmly pressing the outer joint onto the axle shaft.

2. Continue to work around the retaining ring until it is compressed.

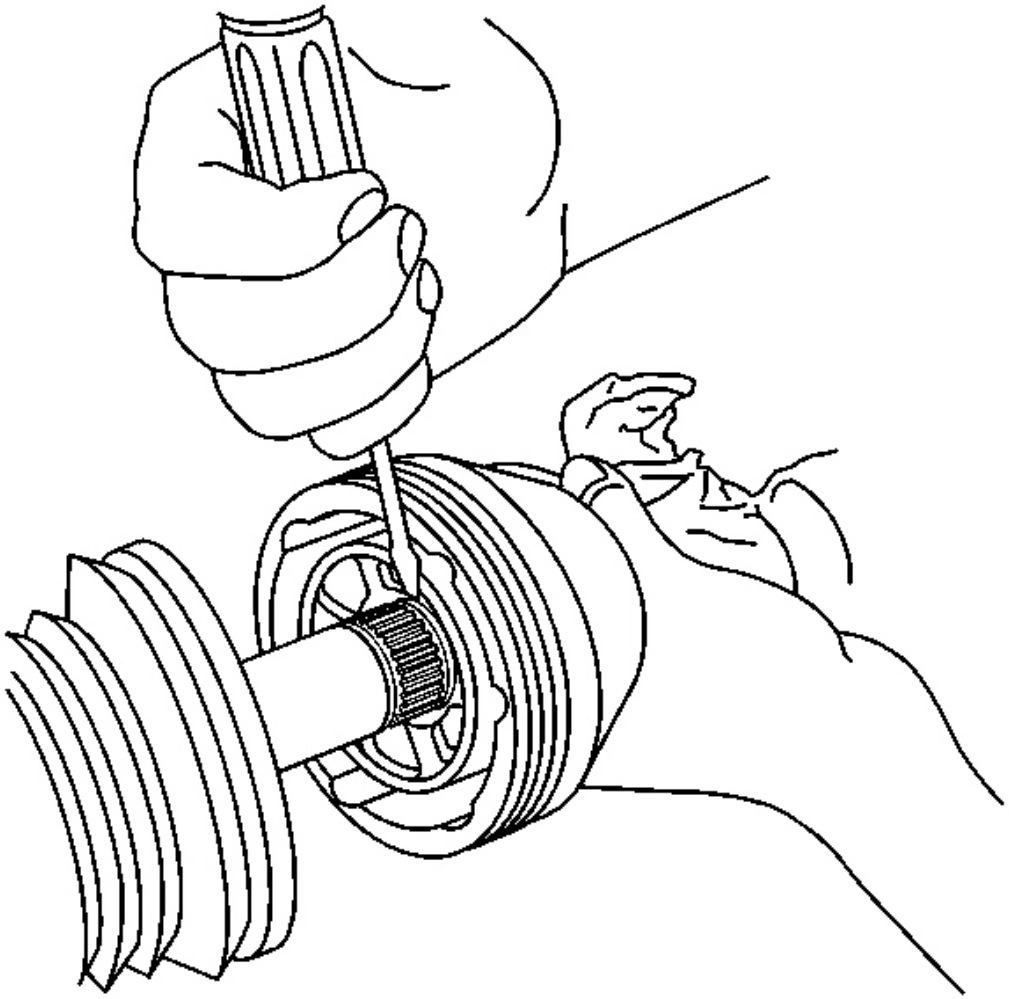

**Fig. 49: Compressing The Axle Shaft Retaining Ring**
**Courtesy of GENERAL MOTORS CORP.**

**IMPORTANT: The axle shaft and inner race must be fully seated to each other.**

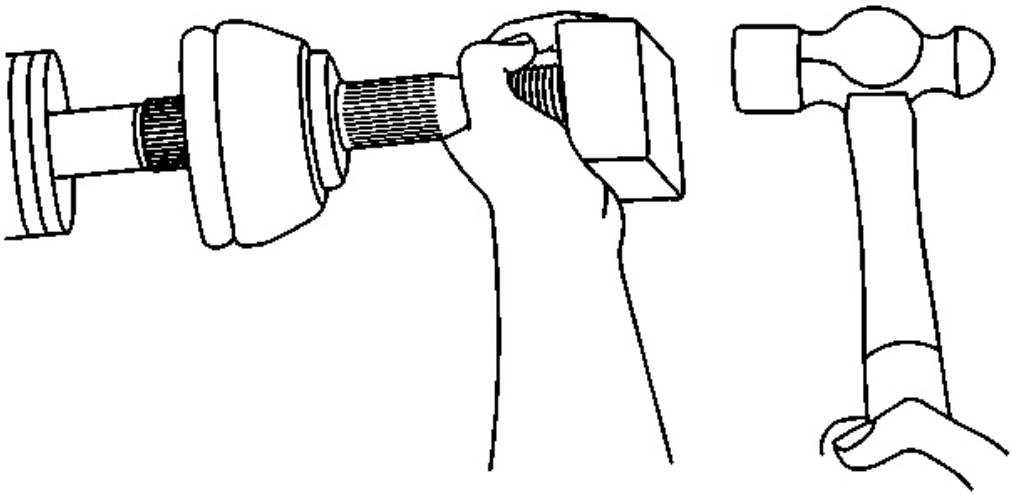

**Fig. 50: Installing The Outer Joint To The Axle Shaft**
**Courtesy of GENERAL MOTORS CORP.**

31. Install the outer joint to the axle shaft.
    1. Position a wood block squarely over the end of the outer joint threaded shaft.
    2. Use a hammer to drive the outer joint onto the shaft.
    3. Continue to drive the outer joint until you feel the outer joint seat fully onto the axle shaft.
    4. Inspect to be sure that the axle shaft and the inner race stepped surfaces are fully seated to each other.

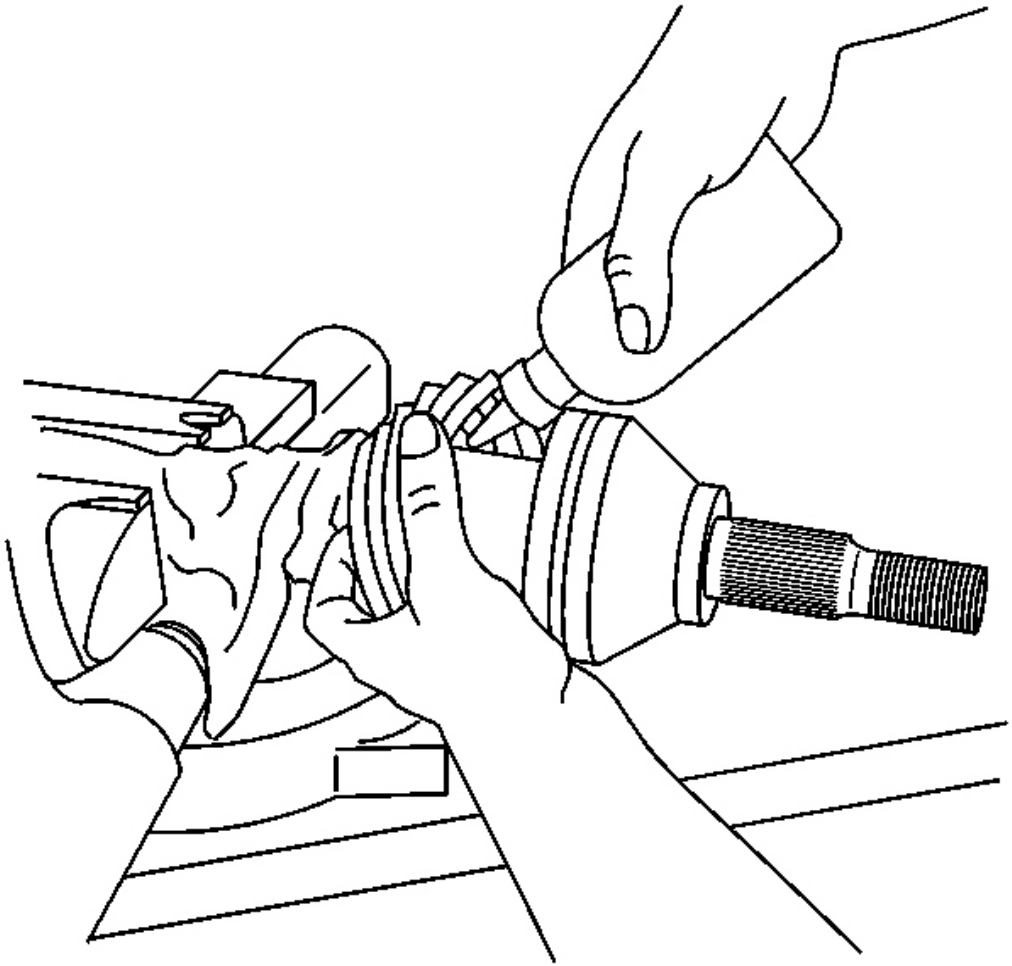

**Fig. 51: Inserting The Remaining Grease From The Service Kit Into The Seal**
**Courtesy of GENERAL MOTORS CORP.**

32. Insert the remaining grease from the service kit into the seal.

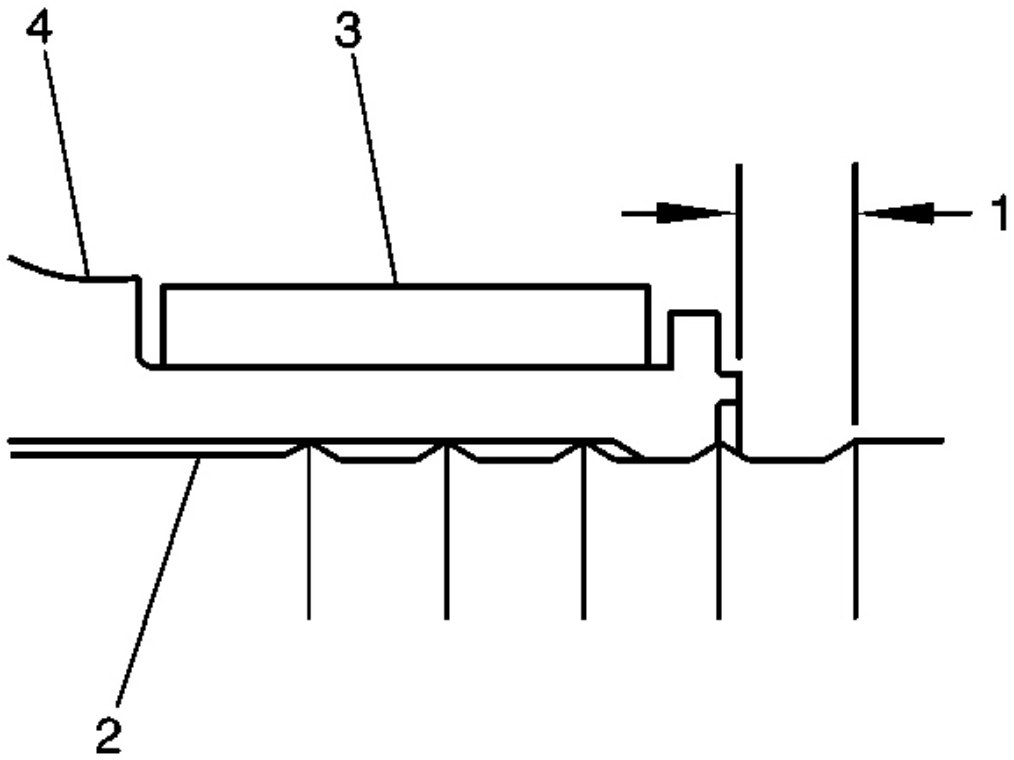


**Fig. 52: Positioning Small Seal Retaining Clamp To Neck Of Seal**
**Courtesy of GENERAL MOTORS CORP.**

33. Position the small seal retaining clamp (3) onto the neck of the seal (4).
34. Position the seal and small retaining clamp to the axle shaft (2) as shown.
35. Measure the distance (1) between the edge of the seal and the edge of the last axle shaft groove closing edge; adjust fit accordingly.

    **Specification:** 2.5 mm (0.10 in)

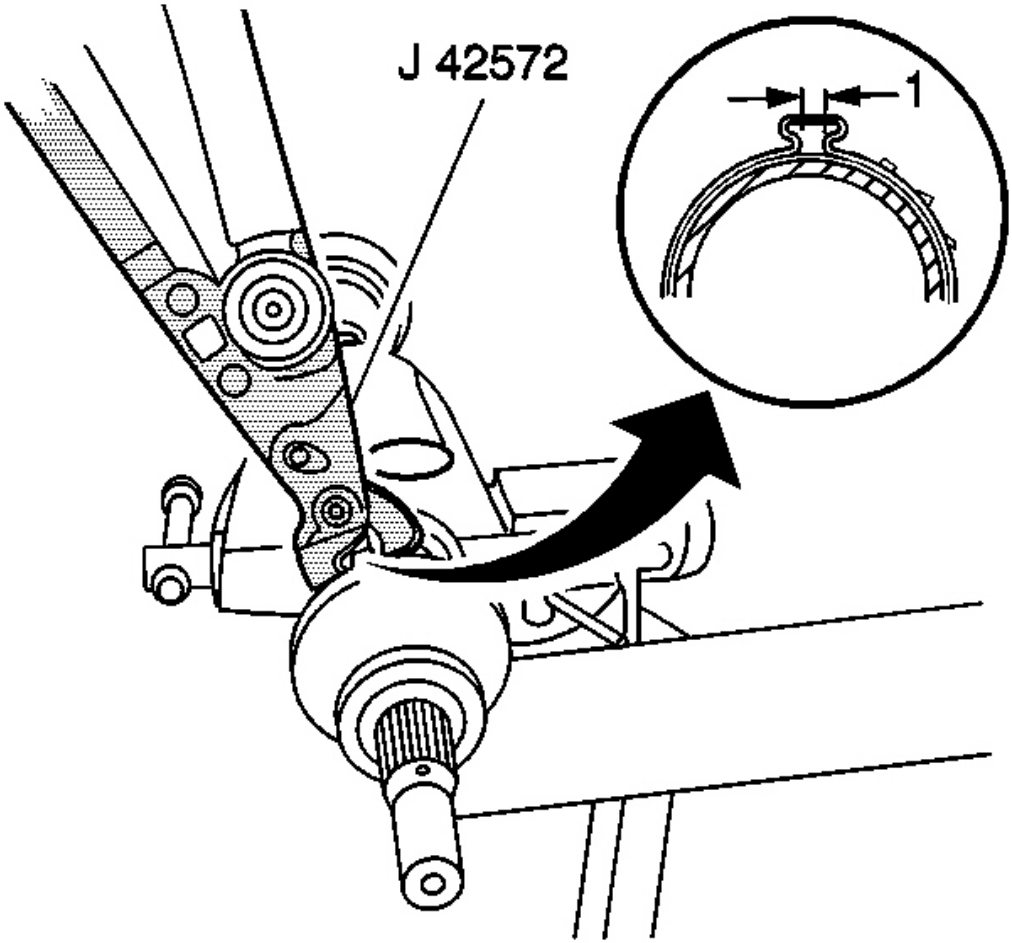


**Fig. 53: Inspect Seal For Proper Shape & Damage**
**Courtesy of GENERAL MOTORS CORP.**

**IMPORTANT: The seal retaining clamp must not be over-tightened or under-tightened.**

36. Crimp the small seal retaining clamp using the **J 42572** . See **Special Tools and Equipment** .

**Tighten:** Tighten the small seal retaining clamp until the base of the omega (ohm) shape has a gap width (1) between 2 and 3 mm (0.079 and 0.118 in), with a difference in the gap width from side to side no greater than 0.4 mm (0.016 in). The clamping hold time must be no less than 2 seconds.

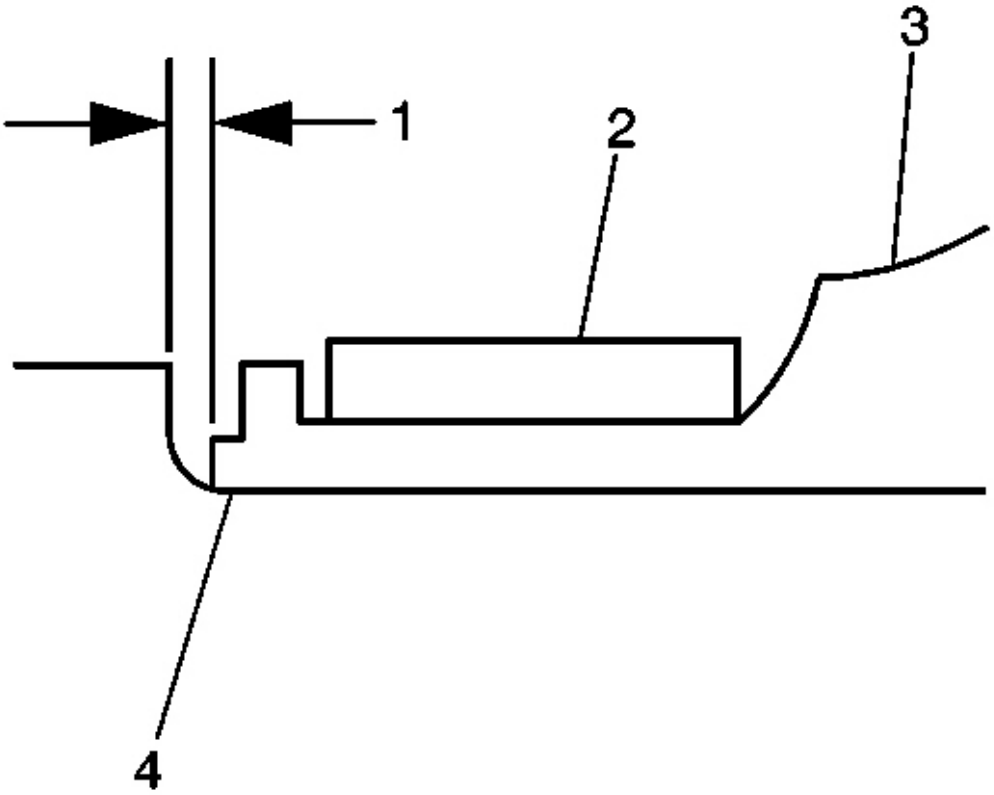


**Fig. 54: Positioning The Seal And Large Retaining Clamp To The Joint Outer Race**
**Courtesy of GENERAL MOTORS CORP.**

37. Position the large seal retaining clamp (2) onto the seal (3).
38. Position the seal and large retaining clamp to the joint outer race (4) as shown.

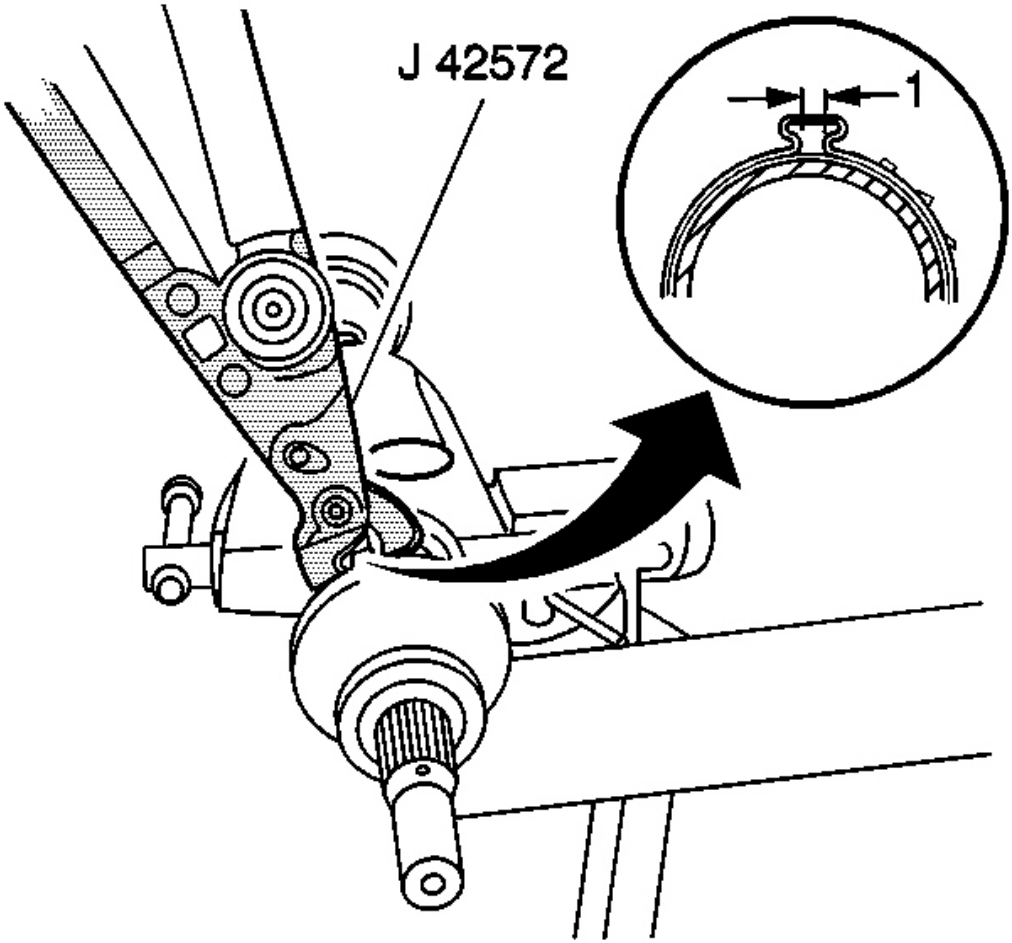


**Fig. 55: Positioning Large Seal Retaining Clamp**
**Courtesy of GENERAL MOTORS CORP.**

39. Measure the distance (1) between the edge of the seal and the edge of the joint outer race last groove closing edge; adjust fit accordingly.

    **Specification:** 0.8 mm (0.03 in)

    **IMPORTANT: The seal must not be dimpled, stretched or out of shape in any way.**

40. Inspect the seal for proper shape.

    If the seal is NOT shaped correctly, equalize the pressure in the seal and shape the seal properly by hand.

41. Inspect the seal for damage.

    If the seal has been cut or punctured during assembly, you must discard and replace the seal.

42. Align the following items while latching:
    - The wheel drive shaft inboard seal (2)
    - The tripot housing
    - The large seal retaining clamp (3)
43. Using the **J 46588** , latch the large seal retaining clamp. See **Special Tools and Equipment** . Ensure that the latching tangs are fully engaged in the large seal clamp band.

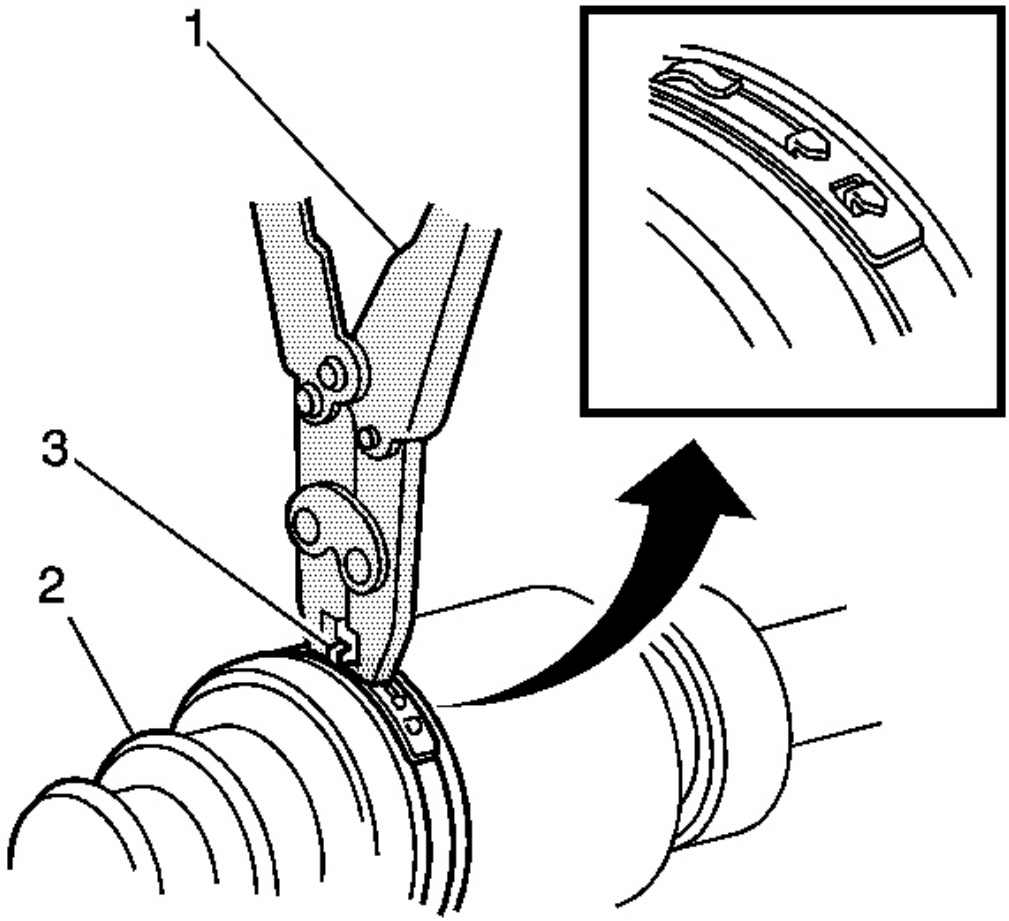


**Fig. 56: Latching The Large Seal Retaining Clamp**
**Courtesy of GENERAL MOTORS CORP.**

44. Rotate the inner tripot housing four or five times in order to distribute the grease throughout the tripot spider bearings.
45. Inspect the outer CV joint and wheel drive shaft for smooth operation. This will also distribute the grease within the joint.
    1. Hold the wheel drive shaft vertically, with the outer joint at the bottom.
    2. Rotate the wheel drive shaft four or five times in a circular motion.

To install the wheel drive shaft into the vehicle, refer to **Wheel Drive Shaft Replacement** .

## DESCRIPTION AND OPERATION

### WHEEL DRIVE SHAFTS DESCRIPTION AND OPERATION

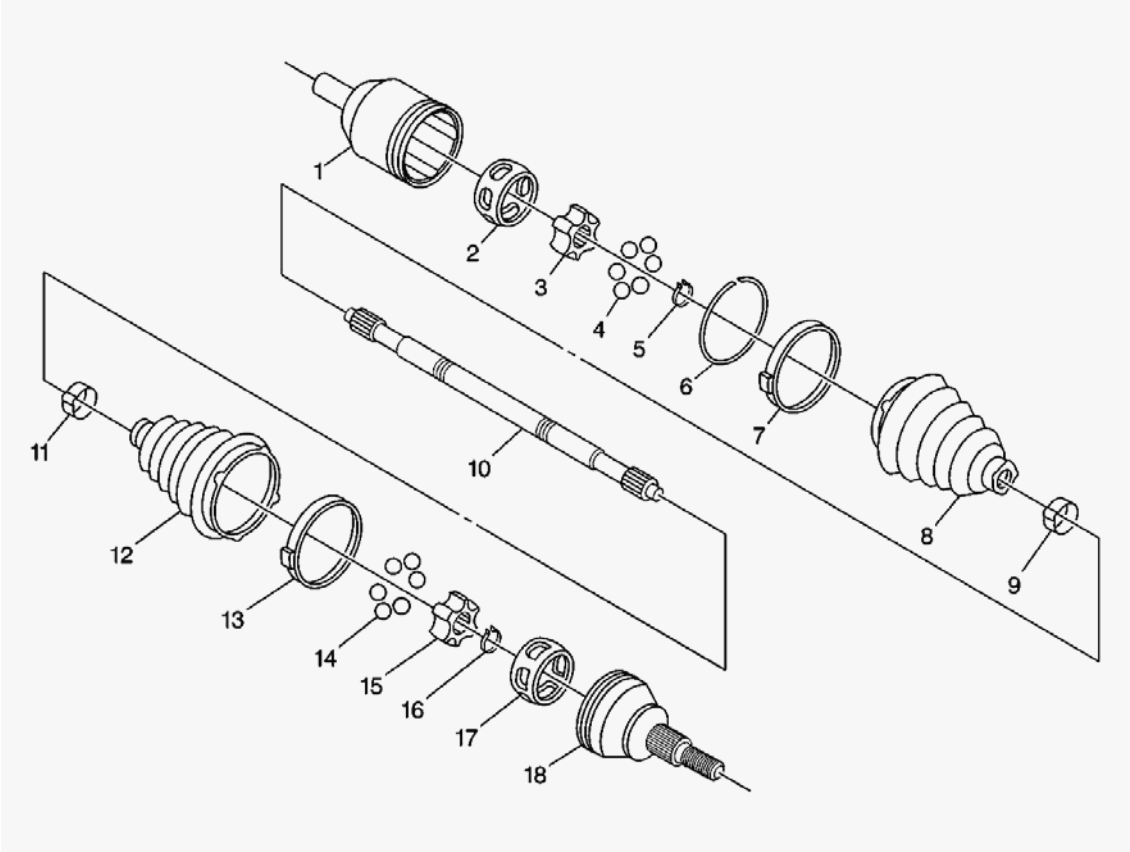


**Fig. 57: Wheel Drive Shafts Disassembled View**
**Courtesy of GENERAL MOTORS CORP.**

**Callouts For Fig. 57**

| Callout | Component Name |
|---|---|
| 1 | Inner Joint Outer Race |
| 2 | Inner Joint Cage |
| 3 | Inner Joint Inner Race |

| | |
|---|---|
| 4 | Ball Bearings |
| 5 | Inner Joint Inner Race Retaining Snap Ring |
| 6 | Inner Joint Outer Race Retaining Ring |
| 7 | Inner Joint Large Seal Clamp |
| 8 | Inner Joint Seal |
| 9 | Inner Joint Small Seal Clamp |
| 10 | Axle Shaft |
| 11 | Outer Joint Small Seal Clamp |
| 12 | Outer Joint Seal |
| 13 | Outer Joint Large Seal Clamp |
| 14 | Ball Bearings |
| 15 | Outer Joint Inner Race |
| 16 | Outer Joint Retaining Ring |
| 17 | Outer Joint Cage |
| 18 | Outer Joint Outer Race |

Drive axles are flexible assemblies consisting of an inner and outer constant velocity (CV) joint connected by an axle shaft. The inner joint is completely flexible, and can move in and out. The outer joint is also flexible, but cannot move in and out. These drive axles are used to transmit rotational force from the rear axle differential to the rear tire and wheel assemblies.

**Seal and Clamp**

The drive axle assemblies use inboard and outboard joint seals made of thermoplastic material, and clamps made of stainless steel. The functions of the seals are as follows:

- The seals protect the internal parts of the inboard and outboard joints.
  - They protect the joint lubricating grease from surrounding detrimental atmospheric conditions (such as extreme temperatures, ozone gas, etc.).
  - They protect the joint lubricating grease from foreign materials (such as stones, dirt, water, salt, etc.).
- The seals facilitate angular and axial movement of the inboard joint.
- The seals facilitate angular movement of the outboard joint.

The function of the clamps is as follows:

Provide a leak proof connection at both the housing and the axle shaft for the inboard and outboard joints.

The thermoplastic material performs well against normal handing, operational wear and conditions. This material however, is not strong enough to withstand abusive handling or damage due to objects such as sharp tools or the sharp edge of any other surrounding component on the vehicle.

**Inner Joint**

The inner joints are of the enhanced double offset design. The inner joints use a female spline which is installed over a stub shaft protruding from the rear axle differential.

**Outer Joint**

The outer joints are of the Rzeppa joint design. The splined shaft end which mates with the knuckle and hub assembly, incorporates a helical spline to assure a tight, press-type fit. This design assures that no end play will exist between the hub bearing and the drive shaft assembly for added durability and reduced bearing noise.

## SPECIAL TOOLS AND EQUIPMENT

### SPECIAL TOOLS

**Special Tools**

| Illustration | Tool Number/ Description |
|---|---|
| | J 2619-01<br>Slide Hammer |
| 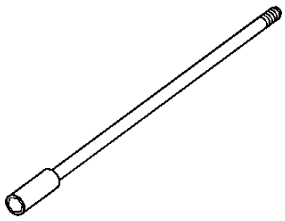 | J 29794<br>Extension |
| 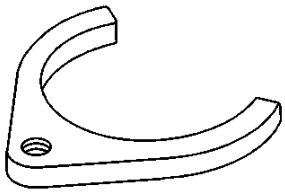 | J 42128<br>Axle Shaft Remover |
| | J 42129 |

| | |
|---|---|
| 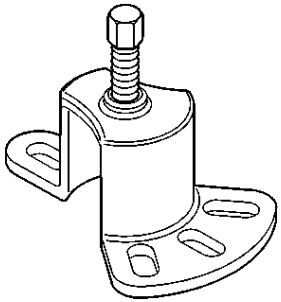 | Rear Hub Spindle Remover |
| 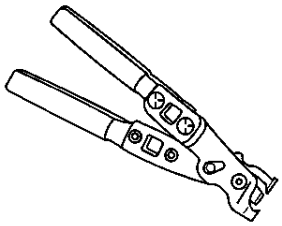 | J 42572<br>Drive Axle Seal Clamp Pliers |
| 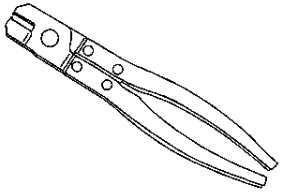 | J 46588<br>Axle Seal Crimp Tool |