Fuel System

GENERAL

DIESEL CONTROL SYSTEM

- ENGINE CONTROL MODULE (ECM)
- MASS AIR FLOW SENSOR (MAFS)
- BOOST PRESSURE SENSOR (BPS)
- INTAKE AIR TEMPERATURE SENSOR (IATS)
- ENGINE COOLANT TEMPERATURE SENSOR (ECTS)
- CAMSHAFT POSITION SENSOR (CMPS)
- CRANKSHAFT POSITION SENSOR (CKPS)
- ACCELERATOR POSITION SENSOR (APS)
- RAIL PRESSURE SENSOR (RPS)
- FUEL TEMPERATURE SENSOR (FTS)
- FUEL PRESSURE REGULATOR VALVE
- RAIL PRESSURE REGULATOR VALVE
- ELECTRIC EGR CONTROL VALVE
- THROTTLE CONTROL ACTUATOR
- VARIABLE SWIRL CONTROL ACTUATOR
- WATER SENSOR
- VGT CONTROL SOLENOID VALVE

DTC TROUBLESHOOTING PROCEDURES

FUEL DELIVERY SYSTEM-DIESEL

- FUEL TANK
- FUEL PUMP
- FILLER-NECK ASSEMBLY
- ACCELERATION PEDAL
- SUB FUEL SENDER
- FUEL FILTER
- HIGH PRESSURE FUEL PUMP
- COMMON RAIL
- INJECTOR

GENERAL

SPECIFICATIONS E670548B

FUEL DELIVERY SYSTEM

Items	Specification	
Fuel Tank	Capacity	75 lit. (15.32 Imp.gal., 19.81 U.S.gal.)
Fuel Return System	Type	Return Type
Fuel Filter	Type	High pressure type (Built in engine room)
High Pressure Fuel Pump	Type	Mechanical, Plunger Pumping Type
	Driven by	Camshaft
Fuel Pressure (Maximum)	Pressure	1,600 bar (160 MPa, 23,206 psi)

INPUT SENSORS

MASS AIR FLOW SENSOR (MAFS)
▷ Type: Hot-Film Type
▷ Specification
* At intake air temperature = 20℃(68°F)

Air Flow (kg/h)	Frequency (kHz)
8	1.94 ~ 1.96
10	1.98 ~ 1.99
15	2.06 ~ 2.07
75	2.72 ~ 2.75
160	3.36 ~ 3.41
310	4.44 ~ 4.53
640	7.66 ~ 8.01
800	10.13 ~ 11.17

* At intake air temperature = -15℃(5°F) or 80℃(176°F)

Air Flow (kg/h)	Frequency (kHz)
10	1.97 ~ 1.99
75	2.71 ~ 2.76
160	3.34 ~ 3.43
310	4.39 ~ 4.58

INTAKE AIR TEMPERATURE SENSOR (IATS) #1 [BUILT IN MAFS]
▷ Type: Thermistor type
▷ Specification

Temperature [℃(°F)]	Resistance(kΩ)
-40(-40)	35.14 ~ 43.76
-20(-4)	12.66 ~ 15.12
0(32)	5.12 ~ 5.89
20(68)	2.29 ~ 2.55
40(104)	1.10 ~ 1.24
60(140)	0.57 ~ 0.65
80(176)	0.31 ~ 0.37

BOOST PRESSURE SENSOR (BPS)
▷ Type: Piezo-resistive pressure sensor type
▷ Specification

Pressure (kPa)	Output Voltage (V)
70	1.02 ~ 1.17
140	2.13 ~ 2.28
210	3.25 ~ 3.40
270	4.20 ~ 4.35

INTAKE AIR TEMPERATURE SENSOR (IATS) #2 [BUILT IN BPS]
▷ Type: Thermistor type
▷ Specification

Temperature [℃(°F)]	Resistance(kΩ)
-40(-40)	40.93 ~ 48.35
-20(-4)	13.89 ~ 16.03
0(32)	5.38 ~ 6.09
20(68)	2.31 ~ 2.57
40(104)	1.08 ~ 1.21
60(140)	0.54 ~ 0.62
80(176)	0.29 ~ 0.34

ENGINE COOLANT TEMPERATURE SENSOR (ECTS)
▷ Type: Thermistor type
▷ Specification

Temperature [℃(°F)]	Resistance(kΩ)
-40(-40)	48.14
-20(-4)	14.13 ~ 16.83
0(32)	5.79
20(68)	2.31 ~ 2.59
40(104)	1.15
60(140)	0.59
80(176)	0.32

CAMSHAFT POSITION SENSOR (CMPS)
▷ Type: Hall effect type
▷ Specification

Level	Output Pulse (V)
High	5V
Low	0V

Items	Specification
Air Gap	1.0± 0.5mm

CRANKSHAFT POSITION SENSOR (CKPS)
▷ Type: Variable reluctance type
▷ Output Voltage (V): 0 ~ 5V

Items	Specification
Coil Resistance (Ω))	774 ~ 946Ω [20℃(68°F)]

ACCELERATOR POSITION SENSOR (APS)
▷ Type: Potentiometer type
▷ Specification

Test Condition	Output Voltage(V)	
	APS 1	APS 2
Idle	0.7 ~ 0.8	0.29 ~ 0.46
Fully depressed	3.85 ~ 4.35	1.92 ~ 2.18

FUEL TEMPERATURE SENSOR (FTS)
▷ Type: Thermistor type
▷ Specification

Temperature [℃(°F)]	Resistance(kΩ)
-30(-22)	27.00
-20(-4)	15.67
-10(14)	9.45
0(32)	5.89
20(68)	2.27 ~ 2.73
40(104)	1.17
50(122)	0.83
60(140)	0.60
70(158)	0.43
80(176)	0.30 ~ 0.32

RAIL PRESSURE SENSOR (RPS)
▷ Type: Piezo-electricity type
▷ Specification

Test Condition	Rail pressure (bar)	Output Voltage(V)
Idle	220 ~ 320	Below 1.7
Fully depressed	About 1,800	Approx. 4.5

VEHICLE SPEED SENSOR (VSS)
▷ Type: Inductive type

OUTPUT ACTUATORS

INJECTOR
▷ Number: 4
▷ Specification

Items	Specification
Coil Resistance (Ω)	0.215 ~ 0.295Ω [20℃ (68°F)]

FUEL PRESSURE REGULATOR VALVE
▷ Specification

Items	Specification
Coil Resistance (Ω)	2.9 ~ 3.15Ω [20℃(68°F)]

RAIL PRESSURE REGULATOR VALVE
▷ Specification

Items	Specification
Coil Resistance (Ω)	3.42 ~ 3.78Ω [20℃(68°F)]

THROTTLE CONTROL ACTUATOR
▷ Type : Duty control motor type
▷ Specification

Duty (%)	Throttle Valve Position
5	Open
5 ~ 94	Normal operation (Partially open in proportion to duty value)
94	Closed
94 ~ 95	Maintaining the last valid position
95 ~ 97	Fully closed

ELECTRIC EGR CONTROL VALVE
▷ Type: Linear solenoid type
▷ Specification

Items	Specification
Coil Resistance (Ω)	7.3 ~ 8.3Ω [20℃(68°F)]

VGT CONTROL SOLENOID VALVE
▷ Specification

Items	Specification
Coil Resistance (Ω)	14.7 ~ 16.1Ω [20℃(68°F)]

VARIABLE SWIRL CONTROL ACTUATOR
▷ Type: Motor Driven (including Position Sensor)
▷ Specification
Motor

Items	Specification
Coil Resistance (Ω)	3.4 ~ 4.4Ω [20℃(68°F)]

Position Sensor

Items	Specification
Coil Resistance (kΩ)	3.44 ~ 5.16kΩ [20℃(68°F)]

SERVICE STANDARD EA925EF7

Basic Idle rpm(After warm up)	A/C OFF	Neutral,N,P-range	790 ± 100 rpm
		D-range	790 ± 100 rpm
	A/C ON	Neutral,N,P-range	790 ± 100 rpm
		D-range	790 ± 100 rpm

TIGHTENING TORQUES E3562770

ENGINE CONTROL SYSTEM

Item	N·m	Kgf·m	lbf·ft
ECM bracket installation bolts	7.8 ~ 11.8	0.8 ~ 1.2	5.8 ~ 8.7
Boost pressure sensor installation bolts	7.8 ~ 11.8	0.8 ~ 1.2	5.8 ~ 8.7
Engine coolant temperature sensor installation	19.6 ~ 39.2	2.0 ~ 4.0	14.5 ~ 28.9
Crankshaft position sensor installation bolt	3.9 ~ 5.9	0.4 ~ 0.6	2.9 ~ 4.3
Camshaft position sensor installation bolt	3.9 ~ 5.9	0.4 ~ 0.6	2.9 ~ 4.3
Electric EGR control valve installation bolts	19.6 ~ 26.5	2.0 ~ 2.7	14.5 ~ 19.5
Variable swirl control actuator installation bolts	9.8 ~ 11.8	1.0 ~ 1.2	7.2 ~ 8.7
Throttle body installation bolts	9.8 ~ 11.8	1.0 ~ 1.2	7.2 ~ 8.7
Oil pressure switch installation	14.7 ~ 21.6	1.5 ~ 2.2	10.9 ~ 15.9

FUEL DELIVERY SYSTEM

Item	N·m	Kgf·m	lbf·ft
Injector clamp installation bolt	24.5 ~ 28.4	2.5 ~ 2.9	18.1 ~ 21.0
Common rail installation bolts	19.6 ~ 26.5	2.0 ~ 2.7	14.5 ~ 19.5
High pressure fuel pump installation bolts	24.5 ~ 34.3	2.5 ~ 3.5	18.0 ~ 25.3
High pressure pipe (Injector ↔ Common Rail) installation nuts	24.5 ~ 28.4	2.5 ~ 2.9	18.1 ~ 21.0
High pressure pipe (Common Rail ↔ High Pressure Fuel Pump) installation nuts	24.5 ~ 28.4	2.5 ~ 2.9	18.1 ~ 21.0
Fuel tank band installation bolts	39.2 ~ 54.0	4.0 ~ 5.5	28.9 ~ 39.8
Accelerator pedal installation bolts	16.6 ~ 25.5	1.7 ~ 2.6	12.3 ~ 18.8
Fuel pump / Sender plate cover tightening	5.9 ~ 6.9	0.6 ~ 0.7	4.3 ~ 5.1

SPECIAL SERVICE TOOLS E94FDF3C

Tool (Number and name)	Illustration	Application
09351-27210 Injector Remover Adapter	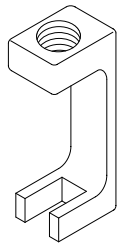 LCGF062A	Removing the injector
09351-4A200 Injector Remover	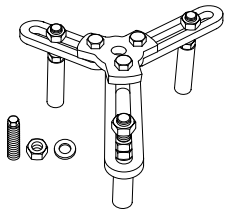 LXGF022A	Removing the injector
09314-27110(14mm) 09314-27120(17mm) Torque Wrench Socket	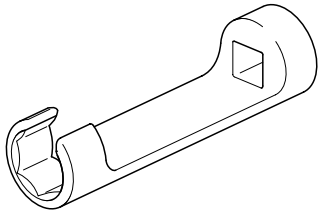 AFAF201B	Installing the high pressure pipe
09310-2B100 Fuel pump Plate Cover Wrench	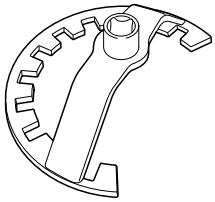 SCMFL6666D	Removing and Installing the low pressure fuel pump & sub fuel sender plate cover

REFERENCE SERVICE TOOLS (I) - WIRE HARNESS REPAIR KIT II

Tool Number	Tool name
TRK00A	Wiring Repair Kit

* For more information of the Wiring Repair Kit, please refer to BE group - “ REFERENCE SERVICE TOOLS” .

REFERENCE SERVICE TOOL (II) - COMMON RAIL TESTER

Tool Number	Tool Name
CRT-1010	Tool Case
CRT-1020	Regulator Valve
CRT-1021	Plug (for Delphi) M14mm
CRT-1022	Plug (for Bosch) M12mm
CRT-1023	Adapter (for Bosch)
CRT-1030	Flask & Holder
CRT-1031	Visible Tube
CRT-1032	Injector Return Hose Adapter
CRT-1033	Injector Return Hose Plug
CRT-1034	Flushing Tube
CRT-1035	Dust Cap
CRT-1040	High Pressure Meter
CRT-1041	Adapter Connector (for Delphi Old)
CRT-1042	Adapter Connector (for Delphi New)
CRT-1043	Adapter Connector (for Bosch)
CRT-1044	IMV Control Valve
CRT-1050	Vacuum Gauge
CRT-1051	Pressure Gauge
CRT-1052	Gauge Connection Tube
CRT-1053	Connection Adapter
CRT-1054	Connection Adapter with Hose
CRT-1055	Hose Clamp
CRT-1060	User's Guide

* To use this Common Rail Tester, refer to the user's guide included in this kit.

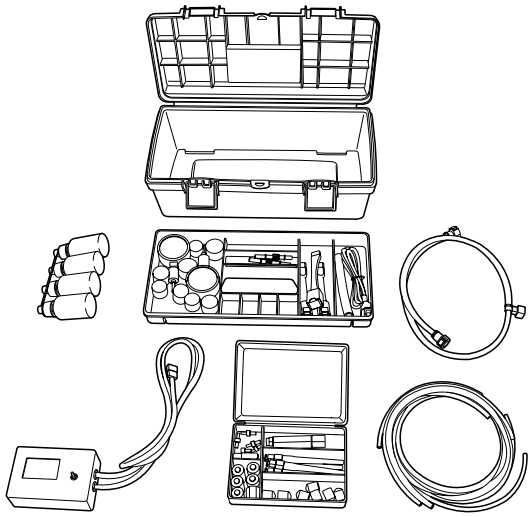

SCMFL6900L

BASIC TROUBLESHOOTING E7201775

BASIC TROUBLESHOOTING GUIDE

1	**Bring Vehicle to Workshop**

2	**Analyze Customer's Problem**
	Ask the customer about the conditions and environment relative to the issue (Use CUSTOMER PROBLEM ANALYSIS SHEET).

3	**Verify Symptom, and then Check DTC and Freeze Frame Data**
	Connect Hi-Scan (Pro) to Diagnostic Link Connector (DLC). Record the DTC and freeze frame data. ***NOTE*** *To erase DTC and freeze frame data, refer to Step 5.*

4	**Confirm the Inspection Procedure for the System or Part**
	Using the SYMPTOM TROUBLESHOOTING GUIDE CHART, choose the correct inspection procedure for the system or part to be checked.

5	**Erase the DTC and Freeze Frame Data**
	WARNING **NEVER erase DTC and freeze frame data before completing Step 2 MIL/DTC in "CUSTOMER PROBLEM ANALYSIS SHEET".**

6	**Inspect Vehicle Visually**
	Go to Step 11, if you recognize the problem.

7	**Recreate (Simulate) Symptoms of the DTC**
	Try to recreate or simulate the symptoms and conditions of the malfunction as described by customer. If DTC(s) is/are displayed, simulate the condition according to troubleshooting procedure for the DTC.

8	**Confirm Symptoms of Problem**
	If DTC(s) is/are not displayed, go to Step 9. If DTC(s) is/are displayed, go to Step 11.

9	**Recreate (Simulate) Symptom**
	Try to recreate or simulate the condition of the malfunction as described by the customer.

10	**Check the DTC**
	If DTC(s) does(do) not occur, refer to INTERMITTENT PROBLEM PROCEDURE in BASIC INSPECTION PROCEDURE. If DTC(s) occur(s), go to Step 11.

11	**Perform troubleshooting procedure for DTC**

12	**Adjust or repair the vehicle**

13	**Confirmation test**

14	**END**

LW8F1001

CUSTOMER PROBLEM ANALYSIS SHEET

1. VEHICLEINFORMAITON

VIN No.		Transmission	☐ M/T ☐ A/T ☐CVT ☐ etc.
Production date		Driving type	☐ 2WD (FF) ☐ 2WD (FR) ☐ 4WD
Odometer Reading	_____km/mile		

2. SYMPTOMS

☐ Unable to start	☐ Engine does not turn over ☐ Incomplete combustion ☐ Initial combustion does not occur
☐ Difficult to start	☐ Engine turns over slowly ☐ Other_____
☐ Poor idling	☐ Rough idling ☐ Incorrect idling ☐ Unstable idling (High:_____ rpm, Low:_____rpm) ☐ Other
☐ Engine stall	☐ Soon after starting ☐ After accelerator pedal depressed ☐ After accelerator pedal released ☐ During A/C ON ☐ Shifting from N to D-range ☐ Other_____
☐ Others	☐ Poor driving (Surge) ☐ Knocking ☐ Poor fuel economy ☐ Back fire ☐ After fire ☐ Other_____

3. ENVIRONMENT

Problem frequency	☐ Constant ☐ Sometimes (_____) ☐ Once only ☐ Other_____
Weather	☐ Fine ☐ Cloudy ☐ Rainy ☐ Snowy ☐ Other_____
Outdoor temperature	Approx. _____ °C/°F
Place	☐ Highway ☐ Suburbs ☐ Inner City ☐ Uphill ☐ Downhill ☐ Rough road ☐ Other_____
Engine temperature	☐ Cold ☐ Warming up ☐ After warming up ☐ Any temperature
Engine operation	☐ Starting ☐ Just after starting (____min) ☐ Idling ☐ Racing ☐ Driving ☐ Constant speed ☐ Acceleration ☐ Deceleration ☐ A/C switch ON/OFF ☐ Other_____

4. MIL/DTC

MIL (Malfunction Indicator Lamp)		☐ Remains ON ☐ Sometimes lights up ☐ Does not light
DTC	Normal check (Pre-check)	☐ Normal ☐ DTC (_____) ☐ Freeze Frame Data
	Check mode	☐ Normal ☐ DTC (_____) ☐ Freeze Frame Data

5. ECM/PCM INFORMATION

ECM/PCM Part No.	
ROM ID	

SCMFL6150L

BASIC INSPECTION PROCEDURE

MEASURING CONDITION OF ELECTRONIC PARTS' RESISTANCE

The measured resistance at high temperature after vehicle running may be high or low. So all resistance must be measured at ambient temperature (20°C, 68°F), unless stated otherwise.

NOTE

The measured resistance in except for ambient temperature (20°C, 68°F) is reference value.

INTERMITTENT PROBLEM INSPECTION PROCEDURE

Sometimes the most difficult case in troubleshooting is when a problem symptom occurs but does not occur again during testing. An example would be if a problem appears only when the vehicle is cold but has not appeared when warm. In this case, the technician should thoroughly make out a "CUSTOMER PROBLEM ANALYSIS SHEET" and recreate (simulate) the environment and condition which occurred when the vehicle was having the issue.

1. Clear Diagnostic Trouble Code (DTC).
2. Inspect connector connection, and check terminal for poor connections, loose wires, bent, broken or corroded pins, and then verify that the connectors are always securely fastened.

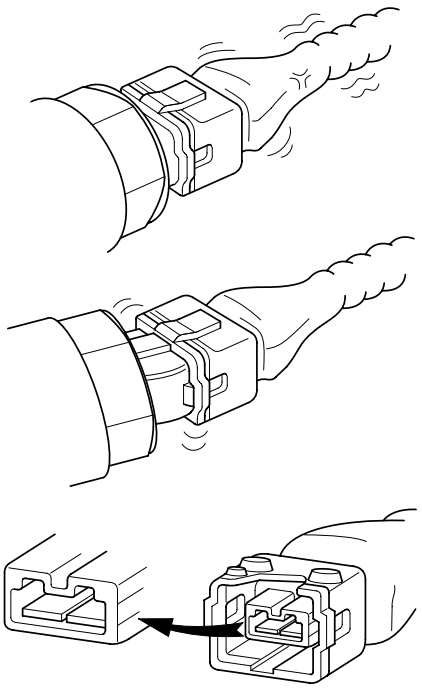

BFGE321A

3. Slightly shake the connector and wiring harness vertically and horizontally.
4. Repair or replace the component that has a problem.
5. Verify that the problem has disappeared with the road test.

● SIMULATING VIBRATION

a. Sensors and Actuators
: Slightly vibrate sensors, actuators or relays with finger.

WARNING

Strong vibration may break sensors, actuators or relays

b. Connectors and Harness
: Lightly shake the connector and wiring harness vertically and then horizontally.

● SIMULATING HEAT

a. Heat components suspected of causing the malfunction with a hair dryer or other heat source.

WARNING

- **DO NOT heat components to the point where they may be damaged.**
- **DO NOT heat the ECM directly.**

● SIMULATING WATER SPRINKLING

a. Sprinkle water onto vehicle to simulate a rainy day or a high humidity condition.

WARNING

DO NOT sprinkle water directly into the engine compartment or electronic components.

● SIMULATING ELECTRICAL LOAD

a. Turn on all electrical systems to simulate excessive electrical loads (Radios, fans, lights, rear window defogger, etc.).

CONNECTOR INSPECTION PROCEDURE

1. Handling of Connector
   a. Never pull on the wiring harness when disconnecting connectors.

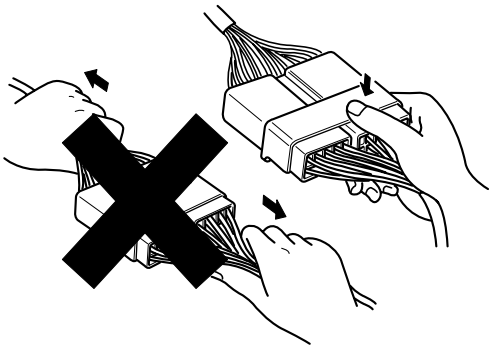

BFGE015F

   b. When removing the connector with a lock, press or pull locking lever.

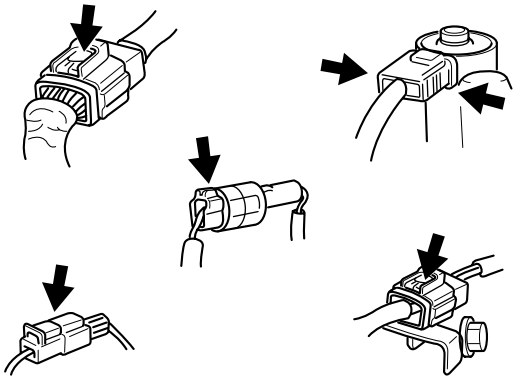

BFGE015G

   c. Listen for a click when locking connectors. This sound indicates that they are securely locked.

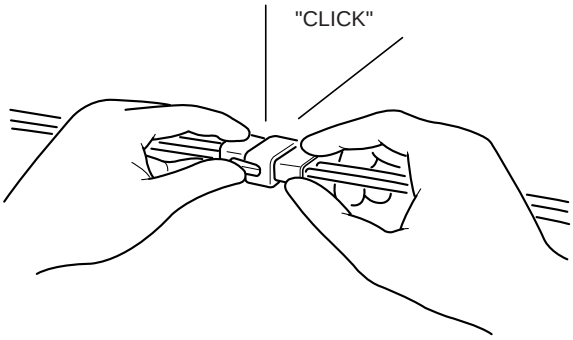

BFGE015H

   d. When a tester is used to check for continuity, or to measure voltage, always insert tester probe from wire harness side.

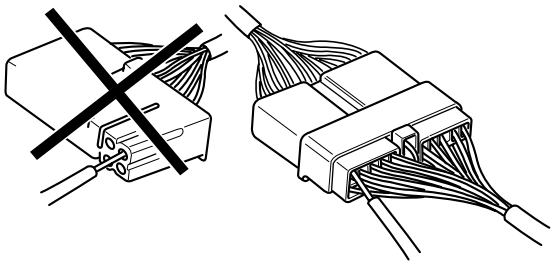

BFGE015I

   e. Check waterproof connector terminals from the connector side. Waterproof connectors cannot be accessed from harness side.

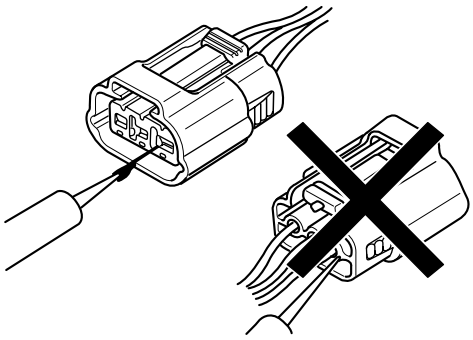

BFGE015J

NOTE

- *Use a fine wire to prevent damage to the terminal.*
- *Do not damage the terminal when inserting the tester lead.*

2. Checking Point for Connector
   a. While the connector is connected:
      Hold the connector, check connecting condition and locking efficiency.
   b. When the connector is disconnected:
      Check missed terminal, crimped terminal or broken core wire by slightly pulling the wire harness. Visually check for rust, contamination, deformation and bend.
   c. Check terminal tightening condition:
      Insert a spare male terminal into a female terminal, and then check terminal tightening conditions.
   d. Pull lightly on individual wires to ensure that each wire is secured in the terminal.

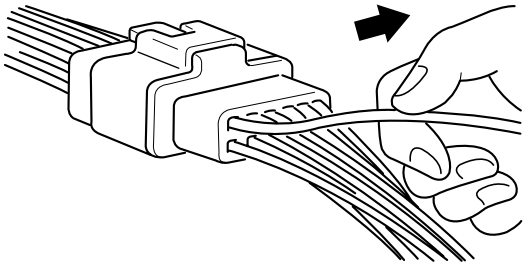

BFGE015K

3. Repair Method of Connector Terminal
   a. Clean the contact points using air gun and/or shop rag.

NOTE

Never use sand paper when polishing the contact points, otherwise the contact point may be damaged.

   b. In case of abnormal contact pressure, replace the female terminal.

WIRE HARNESS INSPECTION PROCEDURE

1. Before removing the wire harness, check the wire harness position and crimping in order to restore it correctly.
2. Check whether the wire harness is twisted, pulled or loosened.
3. Check whether the temperature of the wire harness is abnormally high.
4. Check whether the wire harness is rotating, moving or vibrating against the sharp edge of a part.
5. Check the connection between the wire harness and any installed part.
6. If the covering of wire harness is damaged; secure, repair or replace the harness.

ELECTRICAL CIRCUIT INSPECTION PROCEDURE

● CHECK OPEN CIRCUIT

1. Procedures for Open Circuit
   - Continuity Check
   - Voltage Check

   If an open circuit occurs (as seen in [FIG. 1]), it can be found by performing Step 2 (Continuity Check Method) or Step 3 (Voltage Check Method) as shown below.

FIG 1

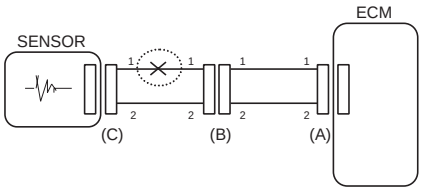

BFGE501A

2. Continuity Check Method

   NOTE

   When measuring for resistance, lightly shake the wire harness above and below or from side to side.

Specification (Resistance)
1Ω or less → Normal Circuit
1MΩ or Higher → Open Circuit

   a. Disconnect connectors (A), (C) and measure resistance between connector (A) and (C) as shown in [FIG. 2].

      In [FIG.2.] the measured resistance of line 1 and 2 is higher than 1MΩ and below 1 Ω respectively. Specifically the open circuit is line 1 (Line 2 is normal). To find exact break point, check sub line of line 1 as described in next step.

FIG 2

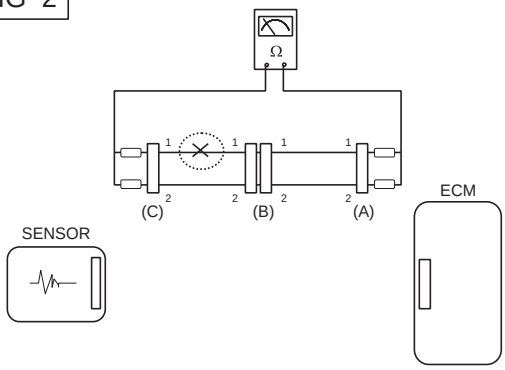

BFGE501B

   b. Disconnect connector (B), and measure for resistance between connector (C) and (B1) and between (B2) and (A) as shown in [FIG. 3].

      In this case the measured resistance between connector (C) and (B1) is higher than 1MΩ and the open circuit is between terminal 1 of connector (C) and terminal 1 of connector (B1).

FIG 3

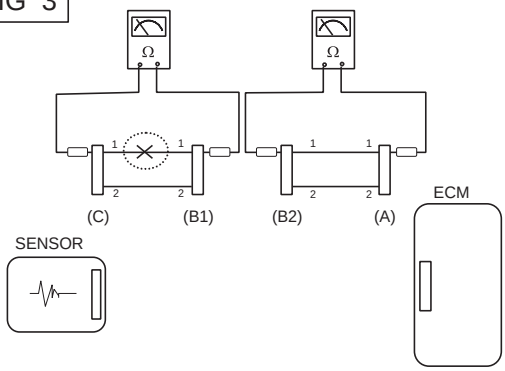

BFGE501C

3. Voltage Check Method
   a. With each connector still connected, measure the voltage between the chassis ground and terminal 1 of each connectors (A), (B) and (C) as shown in [FIG. 4].

      The measured voltage of each connector is 5V, 5V and 0V respectively. So the open circuit is between connector (C) and (B).

FIG 4

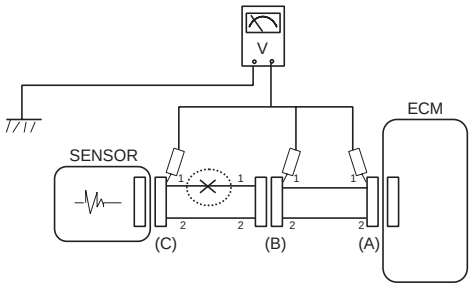

BFGE501D

● CHECK SHORT CIRCUIT

1. Test Method for Short to Ground Circuit
   - Continuity Check with Chassis Ground

   If short to ground circuit occurs as shown in [FIG. 5], the broken point can be found by performing Step 2 (Continuity Check Method with Chassis Ground) as shown below.

FIG 5

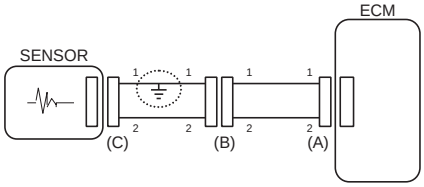

BFGE501E

2. Continuity Check Method (with Chassis Ground)

   NOTE

   Lightly shake the wire harness above and below, or from side to side when measuring the resistance.

Specification (Resistance)
1Ω or less → Short to Ground Circuit
1MΩ or Higher → Normal Circuit

   a. Disconnect connectors (A), (C) and measure for resistance between connector (A) and Chassis Ground as shown in [FIG. 6].

   The measured resistance of line 1 and 2 in this example is below 1 Ω and higher than 1MΩ respectively. Specifically the short to ground circuit is line 1 (Line 2 is normal). To find exact broken point, check the sub line of line 1 as described in the following step.

FIG 6

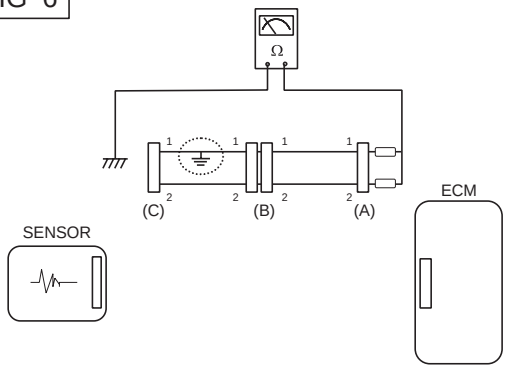

BFGE501F

   b. Disconnect connector (B), and measure the resistance between connector (A) and chassis ground, and between (B1) and chassis ground as shown in [FIG. 7].

   The measured resistance between connector (B1) and chassis ground is 1Ω or less. The short to ground circuit is between terminal 1 of connector (C) and terminal 1 of connector (B1).

FIG 7

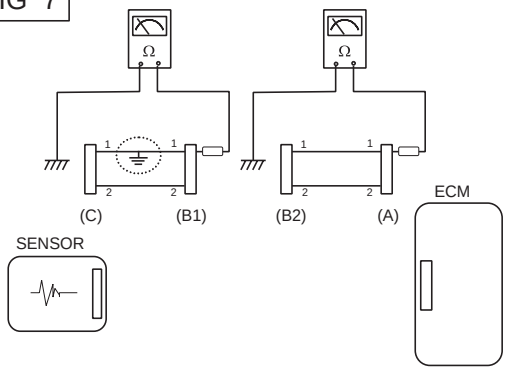

BFGE501G

SYMPTOM TROUBLESHOOTING GUIDE TABLE

(SYMPTOM 1) ENGINE DOES NOT START

Possible Cause	
• Run out of fuel • Starter faulty • Fuel pump hose supply cut • High pressure leakage • Fuse out of order • Drift of the rail pressure sensor not detected • Cam and Crank signals missing simultaneously • Battery voltage too low • Faulty immobilizer • Electric EGR control valve blocked open • Fuel pressure regulator valve contaminated, stuck, jammed • Rail pressure regulator valve contaminated, stuck, jammed • Fuel quality / presence of water	• Inversion of low pressure fuel connections • Fuel filter not adapted • Low pressure fuel circuit sealed • Sealed fuel filter • Intermittent fault connection • Air ingress in the low pressure fuel circuit • Fuel return circuit of the pump sealed • Engine compression too low • Leakage at the injector • Low pressure fuel pump faulty • High pressure fuel pump faulty • Injector jammed open • Bug software or hardware fault not detected • Glow system faulty

(SYMPTOM 2) ENGIEN STARTS WITH DIFFICULTY OR STARTS AND STALLS

Possible Cause	
• Run out of fuel • Fuel return hose of injector cut • High pressure leakage • Fuse faulty • Air filter sealed • Alternator or voltage regulator faulty • The compensation of individual injector not adapted • Drift of the engine coolant temperature sensor not detected • Drift of the rail pressure sensor not detected • Battery voltage too low • Electric EGR control valve blocked open • Fuel pressure regulator valve contaminated, stuck, jammed • Rail pressure regulator valve contaminated, stuck, jammed • Fuel quality / presence of water	• Inversion of low pressure fuel connections • Low pressure fuel circuit sealed • Sealed fuel filter • Oil level too high/too low • Catalytic converter sealed or damaged • Intermittent fault connection • Air ingress in the low pressure fuel circuit • Fuel return circuit of the pump sealed • Glow system faulty • Engine compression too low • Fuel return hose of injector sealed • Carbon deposit on the injector (sealed holes) • Needle stuck (injection possible over a certain pressure) • Gasoline in fuel • Bug software or hardware fault not detected

(SYMPTOM 3) POOR STARTING WHEN HOT

Possible Cause	
• The compensation of individual injector not adapted • Drift of the rail pressure sensor not detected • Electric EGR control valve blocked open • Fuel pressure regulator valve contaminated, stuck, jammed • Rail pressure regulator valve contaminated, stuck, jammed • Air filter sealed • Air ingress in the low pressure fuel circuit • Fuel quality / presence of water	• Fuel return circuit of the pump sealed • Sealed fuel filter • Engine compression too low • Intermittent fault connection • Carbon deposit on the injector (sealed holes) • Needle stuck (injection possible over a certain pressure) • Gasoline in fuel • Bug software or hardware fault not detected

(SYMPTOM 4) UNSTABLE IDLING

Possible Cause	
• Fuel return hose of injector cut • The compensation of individual injector not adapted • Drift of the rail pressure sensor not detected • Harness resistance increased • Air ingress in the low pressure fuel circuit • Fuel quality / presence of water • Sealed fuel filter • Air filter sealed • Fuel return hose of injector sealed • High pressure leakage	• Glow system faulty • Engine compression too low • Bad flanging of the injector • High pressure pump out of order • Injector not adapted • Carbon deposit on the injector (sealed holes) • Needle stuck (injection possible over a certain pressure) • Injector jammed open • Electric EGR control valve blocked open

(SYMPTOM 5) IDLE SPEED TOO HIGH OR TOO LOW

Possible Cause	
• Drift of the engine coolant temperature sensor not detected • Incorrect state of the electrical pack devices • Alternator or voltage regulator faulty	• Clutch not well set • Bug software or hardware fault not detected • Electric EGR control valve blocked open • Throttle control actuator faulty

(SYMPTOM 6) BLUE, WHITE, OR BLACK SMOKES

Possible Cause	
• The compensation of individual injector not adapted • Drift of the engine coolant temperature sensor not detected • Drift of the rail pressure sensor not detected • Electric EGR control valve blocked open • Fuel pressure regulator valve contaminated, stuck, jammed • Rail pressure regulator valve contaminated, stuck, jammed • Oil level too high/too low • Fuel quality / presence of water	• Catalytic converter sealed or damaged • Air filter sealed • Oil suction (engine racing) • Glow system faulty • Engine compression too low • Bad flanging of the injector • Injector washer not adapted, forgotten, doubled • Injector not adapted • Carbon deposit on the injector (sealed holes) • Injector jammed open • Gasoline in fuel

(SYMPTOM 7) ENGINE RATTLING, NOISY ENGINE

Possible Cause	
• The compensation of individual injector not adapted • Electric EGR control valve blocked closed (noisy engine) • Electric EGR control valve blocked open • Drift of the engine coolant temperature sensor not detected • Glow system faulty • Engine compression too low • Fuel return hose of injector sealed	• Drift of the rail pressure sensor not detected • Injector washer not adapted, forgotten, doubled • Injector not adapted • Carbon deposit on the injector (sealed holes) • Needle stuck (injection possible over a certain pressure) • Injector jammed open • Drift of engine coolant temperature sensor not detected

(SYMPTOM 8) BURST NOISE

Possible Cause	
• The compensation of individual injector not adapted • Intermittent fault connection • Exhaust system sealed • Drift of the rail pressure sensor not detected	• Fuel pressure regulator valve contaminated, stuck, jammed • Rail pressure regulator valve contaminated, stuck, jammed • Bug software or hardware fault not detected

(SYMPTOM 9) UNTIMELY ACCELERATION/DECELERATION AND ENGINE RACING

Possible Cause	
• Accelerator position sensor blocked • Electric EGR valve blocked open • Intermittent fault connection	• Oil suction (engine racing) • Drift of the rail pressure sensor not detected • Bug software or hardware fault not detected

(SYMPTOM 10) GAP WHEN ACCELERATING AND AT RE-COUPLING (RESPONSE TIME)

Possible Cause	
• Air inlet circuit open • Incorrect state of the electrical pack devices • Accelerator position sensor blocked • Electric EGR valve blocked open • Turbo charger damaged, vacuum hose line leakage • Sealed fuel filter	• Engine compression too low • High pressure leakage • Fuel pressure regulator valve contaminated, stuck, jammed • Rail pressure regulator valve contaminated, stuck, jammed • Needle stuck (injection possible over a certain pressure) • Bug software or hardware fault not detected

(SYMPTOM 11) ENGINE STOP OR STALLING

Possible Cause	
• Run out of fuel • Fuel pump hose supply cut • High pressure leakage • Fuse faulty • Fuel quality / presence of water • Low pressure fuel circuit sealed • Sealed fuel filter • Crank signals missing simultaneously • Electric EGR valve blocked open • Fuel pressure regulator valve contaminated, stuck, jammed	• Rail pressure regulator valve contaminated, stuck, jammed • Alternator or voltage regulator faulty • Intermittent fault connection • Catalytic converter sealed or damaged • Low pressure fuel pump faulty • High pressure pump faulty • Gasoline in fuel • Bug software or hardware fault not detected

(SYMPTOM 12) ENGINE JUDDER

Possible Cause	
• Run out of fuel • Fuel return hose of injector cut • Incorrect state of the electrical pack devices • The compensation of individual injector not adapted • Electric EGR valve blocked open • Fuel filter not adapted • Air ingress in the low pressure fuel circuit • Fuel quality / presence of water • Sealed fuel filter • Intermittent fault connection • Harness resistance increased	• Glow system faulty • Engine compression too low • Fuel return hose of injector sealed • Valve clearance • Low pressure fuel pump faulty • Injector washer not adapted, forgotten, doubled • Carbon deposit on the injector (sealed holes) • Needle stuck (injection possible over a certain pressure) • Injector jammed open • Gasoline in fuel • Bug software or hardware fault not detected

(SYMPTOM 13) LACK OF POWER

Possible Cause	
• The compensation of individual injector not adapted • Accelerator position sensor blocked • Incorrect state of the electrical pack devices • Electric EGR valve blocked open • Air inlet circuit open • Air filter sealed • Oil level too high/too low • Catalytic converter sealed or damaged • Turbo charger damaged, vacuum hose line leakage	• Sealed fuel filter • Leakage at the injector • Fuel return circuit of the pump sealed • Fuel return hose of injector sealed • Engine compression too low • Injector not adapted • Carbon deposit on the injector (sealed holes) • Valve clearance • Throttle control actuator faulty • Engine coolant temperature too high • Fuel temperature too high

(SYMPTOM 14) TOO MUCH POWER

Possible Cause	
• The compensation of individual injector not adapted • Oil suction (engine racing)	• Bug software or hardware fault not detected

(SYMPTOM 15) EXCESSIVE FUEL CONSUMPTION

Possible Cause	
• Fuel return hose of injector cut • Leakage at the Fuel pressure regulator valve • Leakage at fuel temperature sensor • Leakage at the spacers • High pressure leakage • Air inlet circuit open • Air filter sealed • The compensation of individual injector not adapted • Electric EGR valve blocked open	• Incorrect state of the electrical pack devices • Oil level too high/too low • Fuel quality / presence of water • Catalytic converter sealed or damaged • Turbo charger damaged • Engine compression too low • Injector not adapted • Bug software or hardware fault not detected

(SYMPTOM 16) OVER SPEED ENGINE WHEN CHANGING THE GEAR BOX RATIO

Possible Cause	
• Accelerator position sensor blocked • The compensation of individual injector not adapted • Intermittent fault connection • Clutch not well set	• Oil suction (engine racing) • Turbo charger damaged • Injector not adapted • Bug software or hardware fault not detected

(SYMPTOM 17) EXHAUST SMELLS

Possible Cause	
• Electric EGR control valve leakage • Oil suction (engine racing) • Turbo charger damaged • Oil level too high/too low • The compensation of individual injector not adapted • Catalytic converter sealed or damaged • Bad flanging of the injector	• Injector washer not adapted, forgotten, doubled • Injector not adapted • Carbon deposit on the injector (sealed holes) • Needle stuck (injection possible over a certain pressure) • Injector jammed open • Bug software or hardware fault not detected

(SYMPTOM 18) SMOKES (BLACK, WHITE, BLUE) WHEN ACCELERATING

Possible Cause	
• The compensation of individual injector not adapted • Electric EGR valve blocked open • Air filter sealed • Fuel quality / presence of water • Oil level too high/too low • Turbo charger damaged • Catalytic converter sealed or damaged • Oil suction (engine racing) • Air heaters out of order • Engine compression too low • High pressure leakage	• Intermittent fault connection • Bad flanging of the injector • Injector washer not adapted, forgotten, doubled • Injector not adapted • Carbon deposit on the injector (sealed holes) • Needle stuck (injection possible over a certain pressure) • Injector jammed open • Gasoline in fuel • Bug software or hardware fault not detected • Catalyzed Particulate Filter (CPF) fail

(SYMPTOM 19) FUEL SMELLS

Possible Cause	
• Fuel pump hose supply cut • Fuel return hose of injector cut • Leakage at the Fuel pressure regulator valve	• Leakage at fuel temperature sensor • Leakage at the spacers • High pressure leakage

(SYMPTOM 20) THE ENGINE COLLAPSES AT TAKE OFF

Possible Cause	
• Accelerator position sensor blocked • Incorrect state of the electrical pack devices • Air filter sealed • Inversion of low pressure fuel connections • Fuel filter not adapted • Fuel quality/presence of water • Air ingress in the low pressure fuel circuit • Sealed fuel filter	• Catalytic converter sealed or damaged • Clutch not well set • Intermittent fault connection • Drift of the rail pressure sensor not detected • Fuel pressure regulator valve contaminated, stuck, jammed • Rail pressure regulator valve contaminated, stuck, jammed • Gasoline in fuel • Bug software or hardware fault not detected

(SYMPTOM 21) THE ENGINE DOES NOT STOP

Possible Cause
• Oil suction (engine racing) • Bug software or hardware fault not detected

(SYMPTOM 22) DIFFERENT MECHANICAL NOISES

Possible Cause	
• Buzzer noise (discharge by the injectors) • Clip broken (vibrations, resonance, noises) • Incorrect state of the electrical pack devices • Catalytic converter sealed or damaged • Air inlet circuit open	• Bad flanging of the injector • Clutch not well set • Turbo charger damagedValve clearance • Valve clearance

DIESEL CONTROL SYSTEM

DESCRIPTION E02A4912

If the disel control system components (sensors, ECM, injector, etc.) fail, interruption to the fuel supply or failure to supply the proper amount of fuel for variousengine operating conditions will result. The following situations may be encountered

1. Engine is hard to start or does not start at all.
2. Nstable idle.
3. Poor driveability.

If any of the above conditions are noted, first perform a routine diagnosis that includes basic engine checks (ignition system malfunction, incorrectengine adjustment, etc.). Then, inspect the disel contorl system components with the HI-SCAN (Pro).

NOTE

- *Before removing or installing any part, read the diagnostic trouble codesand then disconnect the battery negative (-) terminal.*
- *Before disconnecting the cable from battery terminal, turn the ignition switch to OFF. Removal or connection of the battery cable during engine operationor while the ignition switch is ON could cause damage to the ECM.*
- *Wchecking the generator for the charging state, do not disconnect the battery '+' terminal to prevent the ECM from damage due to the voltage.*
- *Wcharging the battery with the external charger, disconnect the vehicleside battery terminals to prevent damage to the ECM.*

SELF-DIAGNOSIS

The ECM monitors the input/output signals (some signals at all times and theothers under specified conditions). When the ECM detects an irregularity, it records the diagnostic trouble code, and outputs the signal to the Data Link connector. The diagnosis results can be read with the MIL or HI-SCAN(Pro). Diagnostic Trouble Codes(DTC) will remain in the ECM as long as battery power is maintained. The diagnostic trouble codes will, however, be erased when the battery terminal or the engine control module(ECM) connector isdisconnected, or by the HI-SCAN (Pro).

NOTE

If a sensor connector is disconnected with the ignition switch turned on, the diagnostic trouble code (DTC) is recorded. In this case, disconnect the battery negative terminal (-) for 15 seconds or more, and the diagnosis memory will be erased.

CHECKING PROCEDURE (SELF-DIAGNOSIS)

NOTE

- *When attery voltage is excessively low, diagnostic trouble codes can not be read. Be sure to check the battery for voltage and the charging system before starting the test*
- *Diagnosis memory is erased if the battery or the ECM connector is disconnected. Do not disconnect the battery before the diagnostic trouble codes are completely read and recorded.*

INSPECTION PROCEDURE (USING GENERIC SCAN TOOL)

1. Turn OFF the ignition switch.
2. Connect the scan tool to the data link connector on the lower crash pad.

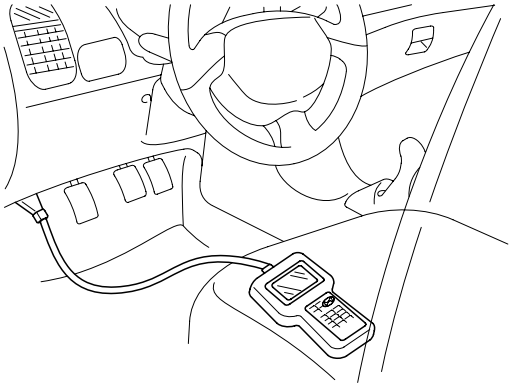

AWJF300D

3. Turn ON the ignition switch.
4. Use the scan tool to check the diagnostic trouble code.
5. Repair the faulty part from the diagnosis chart.
6. Erase the diagnostic trouble code.
7. Disconnect the GST.

NOTE

When deleting diagnostic trouble code, use scan tool as possible.

COMPONENT LOCATION E311F376

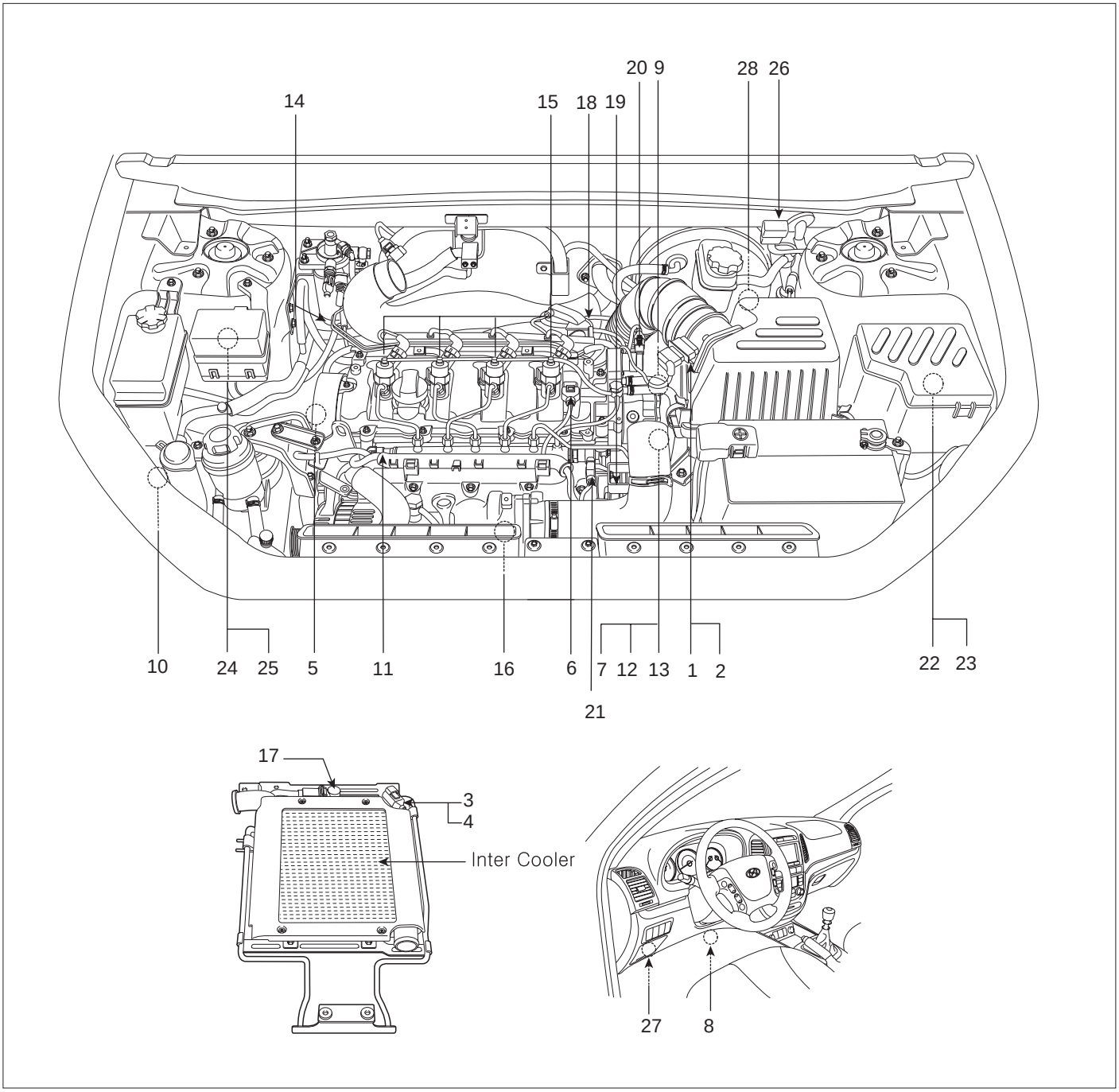

1. Mass Air Sensor (MAFS)
2. Intake Air Temperature Sensor (IATS) #1 built in MAFS
3. Boost Pressure Sensor (BPS)
4. Intake Air Temperature Sensor (IATS) #2 built in BPS
5. Engine Coolant Temperature Sensor (ECTS)
6. Camshaft Position Sensor (CMPS)
7. Crankshaft Position Sensor (CKPS)
8. Accelerator Position Sensor (APS)
9. Fuel Temperature Sensor (FTS)
10. A/C Pressure Transducer (APT)
11. Rail Pressure Sensor (RPS)
12. Vehicle Speed Sensor (VSS)
13. Oil Pressure Switch (OPS)
14. Water Sensor (included in Fuel Filter)
15. Injector
16. Throttle Control Actuator
17. VGT Control Solenoid Valve
18. Electric EGR Control Valve
19. Variable Swirl Control Actuator
20. Fuel Pressure Regulator Valve
21. Rail Pressure Regulator Valve
22. Main Relay
23. Fuel Pump Relay
24. Glow Relay
25. Auxiliary Heater Relay
26. Multi-Purpose Check Connector
27. Data Link Connector (DLC)
28. ECM (Engine Control Module)

SCMFL6101L

1. Mass Air Flow Sensor (MAFS)
2. Intake Air Temperature Sensor (IATS) #1 built in MAFS

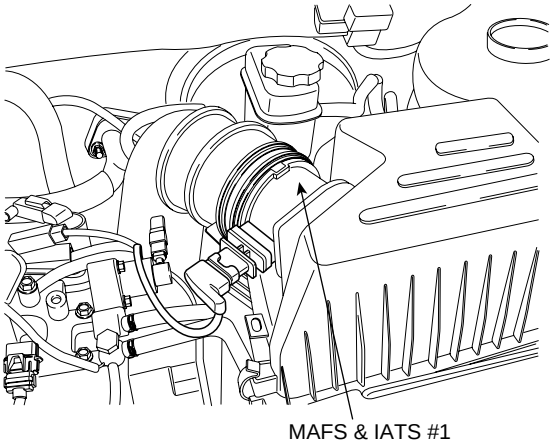

SCMFL6003D

3. Boost Pressure Sensor (BPS)
4. Intake Air Temperature Sensor (IATS) #2 built in BPS
17. VGT Control Solenoid Valve

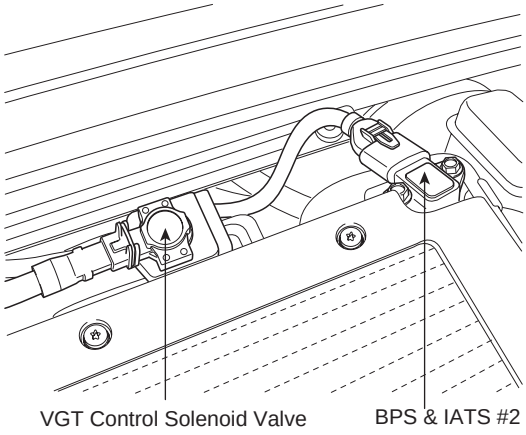

SCMFL6102L

5. Engine Coolant Temperature Sensor (ECTS)

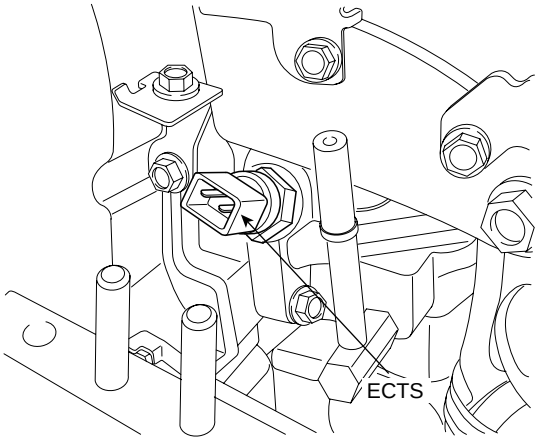

EFQG008A

6. Camshaft Position Sensor (CMPS)

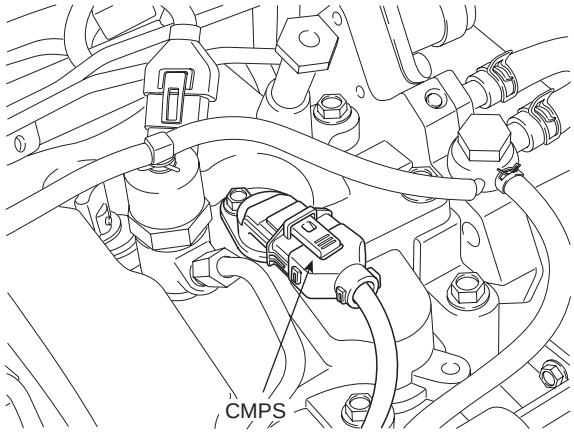

EFQG010A

7. Crankshaft Position Sensor (CKPS)
13. Oil Pressure Switch (OPS)

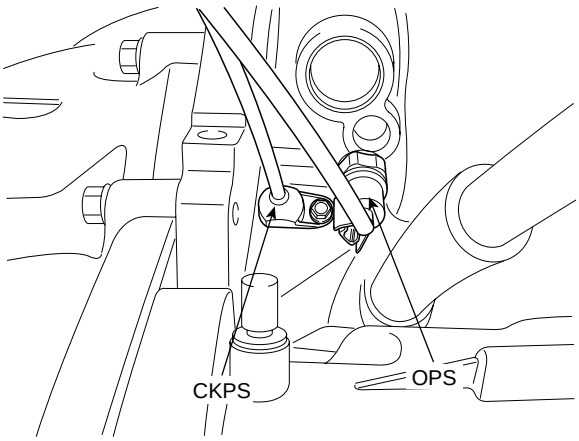

EFQG011A

8. Accelerator Pedal Position Sensor (APS)

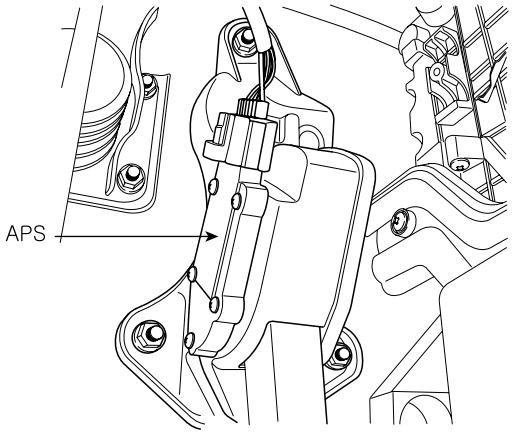

SCMFL6005D

9. Fuel Temperature Sensor (FTS)
20. Fuel Pressure Regulator Valve

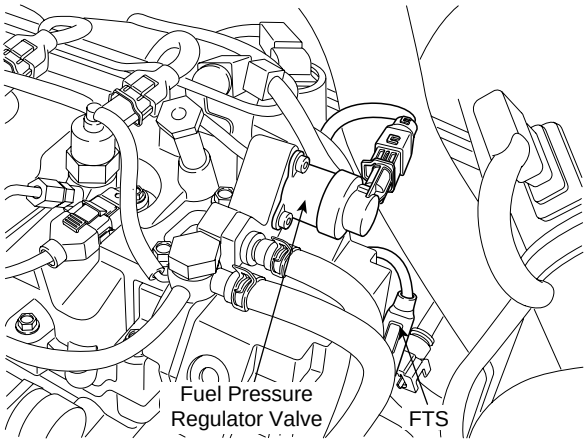

EFQG013A

10. A/C Pressure Transducer (APT)

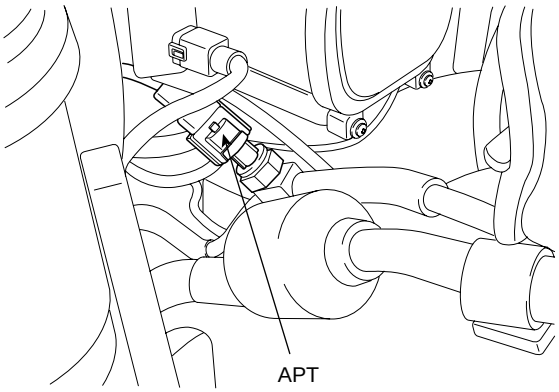

SCMFL6004D

11. Rail Pressure Sensor (RPS)

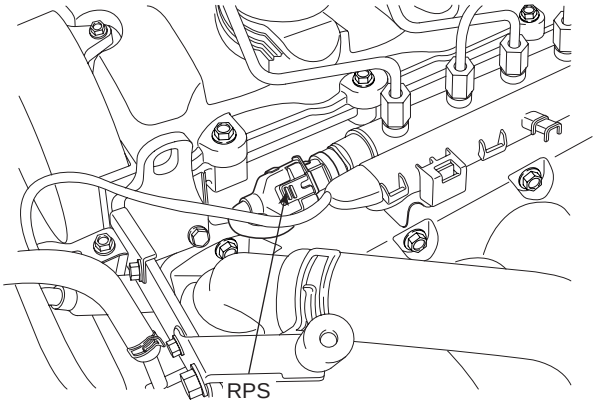

EFQG017A

12. Vehicle Speed Sensor (VSS)

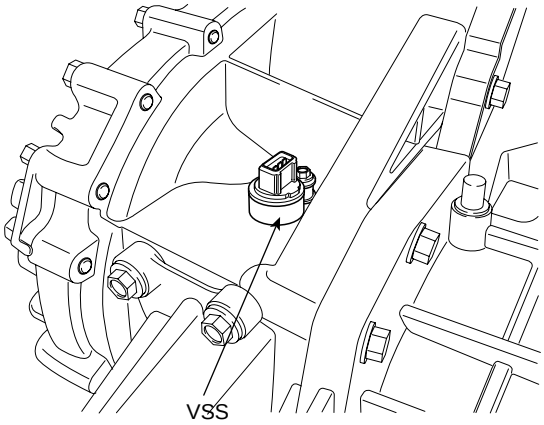

SCMFL6011D

14. Water Sensor (included in Fuel Filter)

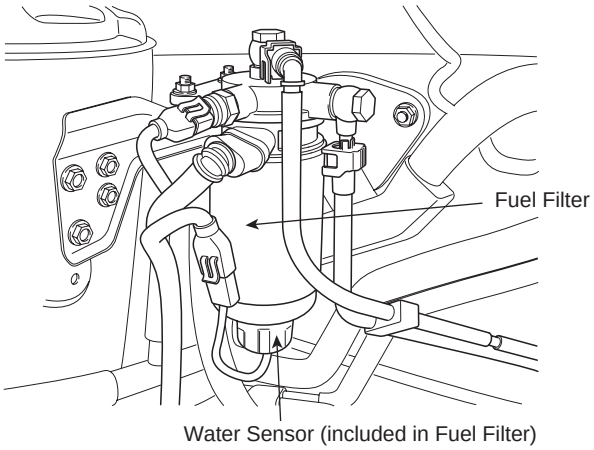

SCMFL6103L

15. Injector

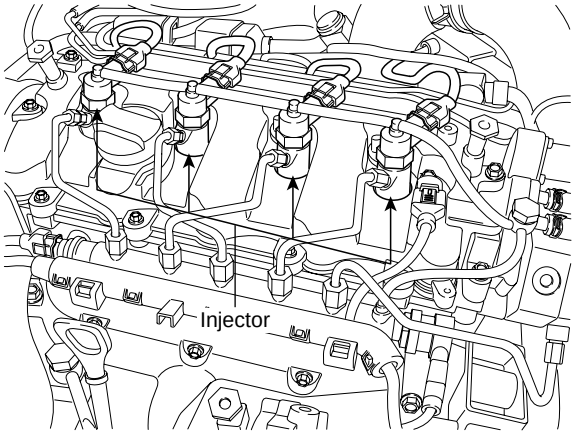

EFQG020A

16. Throttle Control Actuator

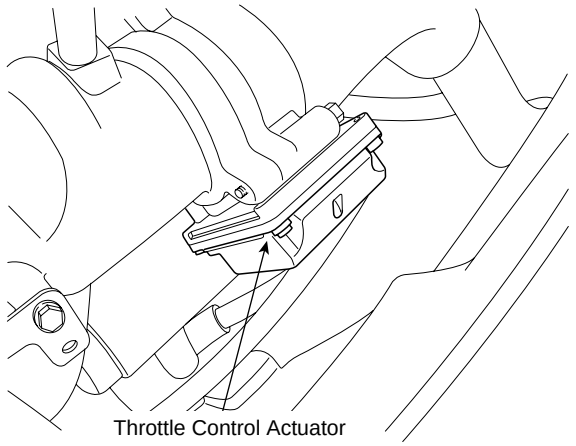

EFQG021A

18. ectric EGR Control Valve

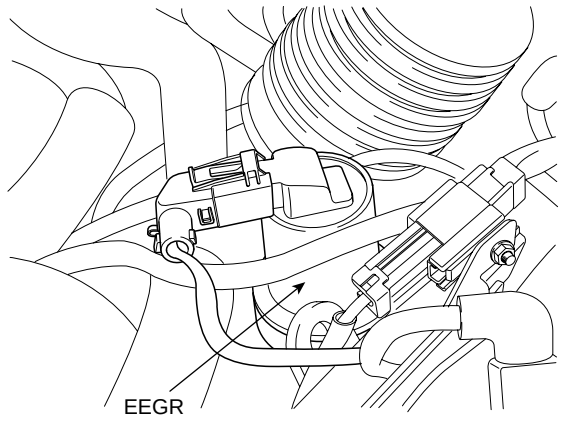

SCMFL6006D

19. Variable Swirl Control Actuater

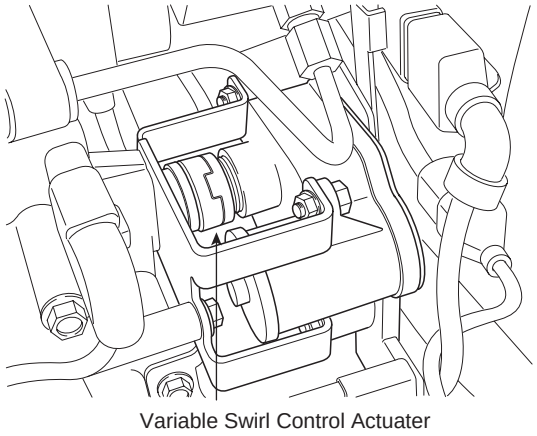

SCMFL6104L

21. Rail Pressure Regulator Valve

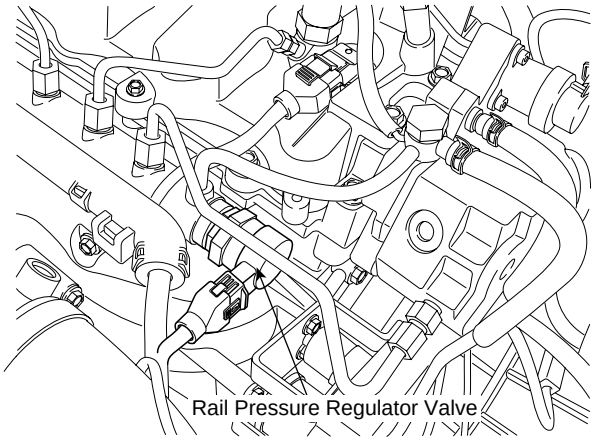

EFQG023A

22. Main Relay
23. Fuel Pump Relay

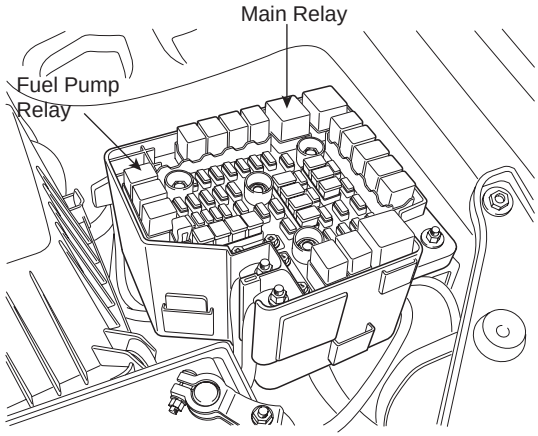

SCMFL6105L

24. Glow Relay
25. Auxiliary Heater Relay

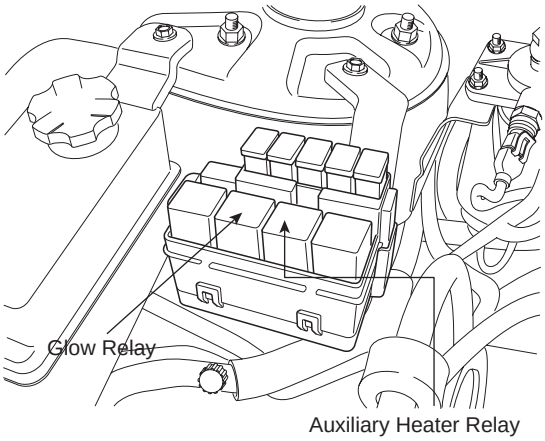

SCMFL6106L

26. Multi-Purpose Check Connector 28. ECM (Engine Control Module)	
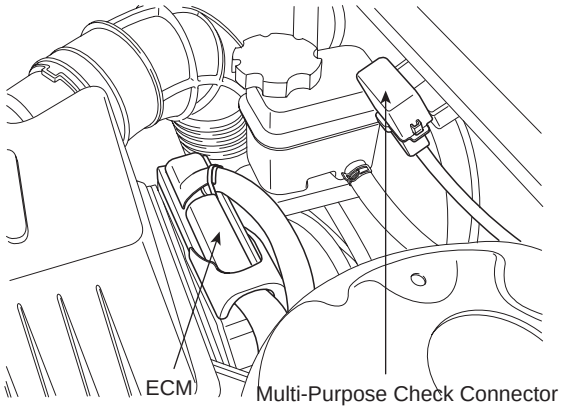 SCMFL6107L	

ENGINE CONTROL MODULE (ECM)

ECM (ENGINE CONTROL MODULE) E9D63F3D

1. ECM HARNESS CONNECTOR

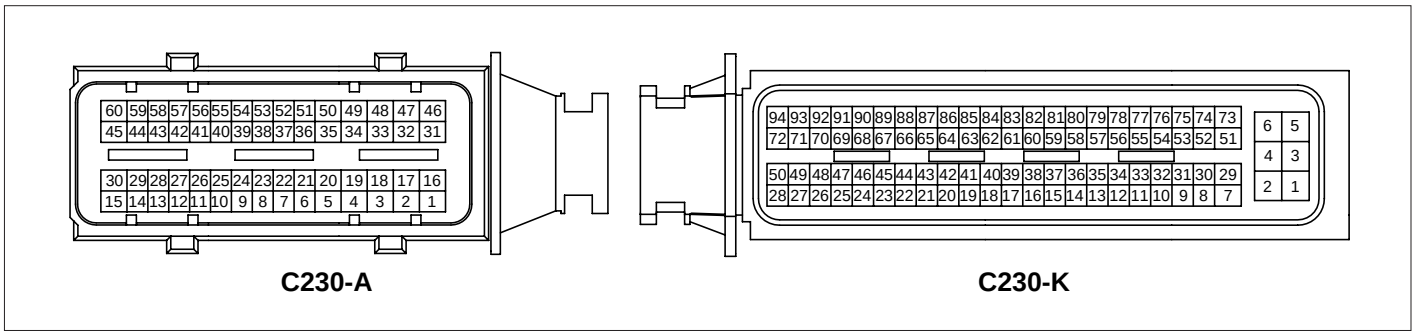

SCMFL6108L

2. ECM TERMINAL FUNCTION

CONNECTOR [C230-A]

Pin	Description	Connected to
1	Injector (Cylinder #3) [HIGH] control output	Injector (Cylinder #3)
2	Injector (Cylinder #2) [HIGH] control output	Injector (Cylinder #2)
3	-	
4	Battery power	Rail Pressure Regulator Valve
5	-	
6	Sensor ground	Position Sensor in Variable Swirl Control Actuator
7	Sensor shield	Crankshaft Position Sensor (CKPS)
8	Sensor ground	Rail Pressure Sensor (RPS)
9	-	
10	-	
11	-	
12	Crankshaft Position Sensor (CKPS) [-] signal input	Crankshaft Position Sensor (CKPS)
13	Reference voltage (+5V)	Boost Pressure Sensor (BPS)
14	-	
15	-	
16	Injector (Cylinder #1) [HIGH] control output	Injector (Cylinder #1)
17	Injector (Cylinder #4) [HIGH] control output	Injector (Cylinder #4)
18	-	
19	Battery power	Fuel Pressure Regulator Valve
20	Sensor ground	Camshaft Position Sensor (CMPS)
21	-	
22	-	

Pin	Description	Connected to
23	Sensor ground	Boost Pressure Sensor (BPS)
24	-	
25	-	
26	Reference voltage (+5V)	Position Sensor in Variable Swirl Control Actuator
27	Crankshaft Position Sensor (CKPS) [+] signal input	Crankshaft Position Sensor (CKPS)
28	Reference voltage (+5V)	Rail Pressure Sensor (RPS)
29	-	
30	Motor [-] control output	Variable Swirl Control Actuator
31	Injector (Cylinder #2) [LOW] control output	Injector (Cylinder #2)
32	-	
33	Injector (Cylinder #4) [LOW] control output	Injector (Cylinder #4)
34	Rail Pressure Regulator Valve control output	Rail Pressure Regulator Valve
35	-	
36	-	
37	Reference frequency	Mass Air Flow Sensor (MAFS)
38	-	
39	-	
40	Boost Pressure Sensor (BPS) signal input	Boost Pressure Sensor (BPS)
41	Sensor ground	Engine Coolant Temperature Sensor (ECTS)
42	Mass Air Flow Sensor (MAFS) signal input	Mass Air Flow Sensor (MAFS)
43	Rail Pressure Sensor (RPS) signal input	Rail Pressure Sensor (RPS)
44	Sensor ground	MAFS & IATS #1
45	Fuel Pump Relay output	Fuel Pump Relay
46	Injector (Cylinder #3) [LOW] control output	Injector (Cylinder #3)
47	Injector (Cylinder #1) [LOW] control output	Injector (Cylinder #1)
48	-	
49	Fuel Pressure Regulator Valve control output	Fuel Pressure Regulator Valve
50	Camshaft Position Sensor (CMPS) signal input	Camshaft Position Sensor (CMPS)
51	-	
52	-	
53	Intake Air Temperature Sensor (IATS) #2 signal input	Intake Air Temperature Sensor (IATS) #2 built in BPS
54	-	
55	-	
56	Position Sensor signal input	Position Sensor in Variable Swirl Control Actuator
57	-	
58	Engine Coolant Temperature Sensor (ECTS) signal input	Engine Coolant Temperature Sensor (ECTS)

Pin	Description	Connected to
59	Electric EGR Control Valve control output	Electric EGR Control Valve
60	Motor [+] control output	Variable Swirl Control Actuator

CONNECTOR [C230-K]

Pin	Description	Connected to
1	Batter voltage supply after main relay	Main Relay
2	Power ground	Chassis Ground
3	Batter voltage supply after main relay	Main Relay
4	Power ground	Chassis Ground
5	Batter voltage supply after main relay	Main Relay
6	Power ground	Chassis Ground
7	Cooling Fan Relay [HIGH] control output	Cooling Fan Relay [HIGH]
8	Sensor ground	Accelerator Position Sensor (APS) #2
9	Accelerator Position Sensor (APS) #1 signal input	Accelerator Position Sensor (APS) #1
10	Sensor ground	Fuel Temperature Sensor (FTS)
11	Fuel Temperature Sensor (FTS) signal input	Fuel Temperature Sensor (FTS)
12	Ground	A/C Pressure Transducer (APT)
13	A/C Pressure Transducer signal input	A/C Pressure Transducer (APT)
14	Ground	Cruise Control Switch
15	Cruise Control "ACTIVATOR" signal input	Cruise Control Switch
16	Ground	Immobilizer Control Module
17	-	
18	-	
19	ESP Auto Recognition signal input	With ESP : Open, Without ESP : Ground
20	-	
21	-	
22	Reference voltage (+5V)	A/C Pressure Transducer (APT)
23	-	
24	Reference voltage (+5V)	Cruise Control Switch
25	Diagnosis Data Line (K-Line)	Data Link Connector (DLC), Multi-Purpose Check Connector
26	-	
27	Fuel consumption signal output	Trip computer
28	Ignition switch signal input	Ignition Switch
29	VGT Control Solenoid Valve control output	VGT Control Solenoid Valve
30	Sensor ground	Accelerator Position Sensor (APS) #1
31	Accelerator Position Sensor (APS) #2 signal input	Accelerator Position Sensor (APS) #2
32	-	
33	-	
34	-	

Pin	Description	Connected to
35	-	
36	-	
37	-	
38	Brake Switch "Lamp" signal input	Brake Switch
39	-	
40	Water Sensor siganl input	Water Sensor in Fuel Filter
41	-	
42	Blower Switch Signal input	Blower Switch
43	-	
44	-	
45	Reference voltage (+5V)	Accelerator Position Sensor (APS) #1
46	Reference voltage (+5V)	Accelerator Position Sensor (APS) #2
47	Immobilizer Communication Line	Immobilizer Control Module
48	Engine speed signal output	Tachometer (Cluster)
49	Cruise Control "SET" Lamp control output	Cruise Control "SET" Lamp (Cluster)
50	-	
51	-	
52	-	
53	-	
54	A/C Switch "ON" signal input	A/C Switch
55	-	
56	Thermo Switch signal input	A/C Switch
57	Gear Neutral Switch signal input (MT Only)	Gear Neutral Switch
58	-	
59	-	
60	-	
61	-	
62	-	
63	-	
64	-	
65	-	
66	-	
67	-	
68	Malfunction Indicator Lamp (MIL) control output	Malfunction Indicator Lamp (MIL)
69	Glow Time Indicator Lamp contorl output	Glow Time Indicator Lamp (Cluster)
70	A/C Compressor Relay control output	A/C Compressor Relay
71	Cooling Fan Relay [LOW] control output	Cooling Fan Relay
72	Main Relay control output	Main Relay
73	-	

Pin	Description	Connected to
74	-	
75	Vehicle speed signal input	Vehicle Speed Sensor (VSS)
76	-	
77	Feedback signal input	Throttle Control Actuator
78	-	
79	Clutch Switch signal input	Clutch Switch
80	Brake Switch "Redundant" signal input	Brake Switch
81	MT/AT auto reconition signal input	M/T: Open, A/T: Ground
82	-	
83	CAN [LOW]	Other Control Modules
84	CAN [HIGH]	Other Control Modules
85	-	
86	-	
87	-	
88	-	
89	Intake Air Temperature Sensor (IATS) #1 signal input	Intake Air Temperature Sensor (IATS) #1 in MAFS
90	Throttle Control Actuator control output	Throttle Control Actuator
91	Cruise Control "MAIN" Lamp control output	Cruise Control "MAIN" Lamp (Cluster)
92	Immobilizer Lamp control output	Immobilizer Lamp (Cluster)
93	Glow Relay control output	Glow Relay
94	PTC Heater Relay control output	PTC Heater Relay

3. ECM TERMINAL INPUT/OUTPUT SIGNAL

CONNECTOR [C230-A]

Pin	Description	Type	Vehicle State	Level
1	Injector (Cylinder #3) [HIGH] control output	Idle	Pulse	B+ ~ 80V
2	Injector (Cylinder #2) [HIGH] control output	Idle	Pulse	B+ ~ 80V
3	-	-	-	-
4	Battery power	Idle	DC	Vbatt
5	-	-	-	-
6	Sensor ground	Idle	DC	Max. 50mV
7	Sensor shield	Idle	DC	Max. 50mV
8	Sensor ground	Idle	DC	Max. 50mV
9	-	-	-	-
10	-	-	-	-
11	-	-	-	-
12	Crankshaft Position Sensor (CKPS) [-] signal input	Idle	Sine Wave	Vp_p : Min.1.0V
13	Reference voltage (+5V)	IG OFF	DC	Max. 0.5V
		IG ON		4.9 ~ 5.1V
14	-	-	-	-
15	-	-	-	-
16	Injector (Cylinder #1) [HIGH] control output	Idle	Pulse	Vbatt ~ 80V
17	Injector (Cylinder #4) [HIGH] control output	Idle	Pulse	Vbatt ~ 80V
18	-	-	-	-
19	Battery power	IG OFF	DC	Max. 0.5 V
		IG ON		Vbatt
20	Sensor ground	Idle	DC	Max. 50 mV
21	-	-	-	-
22	-	-	-	-
23	Sensor ground	Idle	DC	Max. 50 mV
24	-	-	-	-
25	-	-	-	-
26	Reference voltage (+5V)	IG OFF	DC	Max. 0.5V
		IG ON		4.9 ~ 5.1V
27	Crankshaft Position Sensor (CKPS) [+] signal input	Idle	Sine Wave	Vp_p : Min.1.0V
28	Reference voltage (+5V)	IG OFF	DC	Max. 0.5V
		IG ON		4.9 ~ 5.1V
29	-	-	-	-
30	Motor [-] control output	Active	DC	Max.0.5V

Pin	Description	Type	Vehicle State	Level
31	Injector (Cylinder #2) [LOW] control output	Idle	Current	Peak Current : 19 ~ 21 A Hold Current : 11~ 13 A 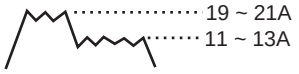 EFQG102A
32	-	-	-	-
33	Injector (Cylinder #4) [LOW] control output	Idle	Current	Peak Current : 19 ~ 21 A Hold Current : 11~ 13 A 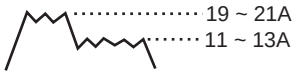 EFQG102A
34	Rail Pressure Regulator Valve control output	Idle	Current	Hi: Vbatt Lo: Max. 1.0V Frequency = 1kHz ± 2%
35	-	-	-	-
36	-	-	-	-
37	Reference frequency	Idle	Pulse	Hi: Vcc or Vbatt Lo: Max. 1.0V
38	-	-	-	-
39	-	-	-	-
40	Boost Pressure Sensor (BPS) signal input	IG ON	Analog	0.5 ~ 4.5V
41	Sensor ground	Idle	DC	Max. 50 mV
42	Mass Air Flow Sensor (MAFS) signal input	Idle	Pulse	Hi: Vcc or Vbatt Lo: Max. 1.0V
43	Rail Pressure Sensor (RPS) signal input	IG ON	Analog	Max. 1.0V
		Idle		1.0 ~ 1.5 V
		3000 RPM		1.5 ~ 3.0 V
44	Sensor ground	Idle	DC	Max. 50 mV
45	Fuel Pump Relay output	Relay OFF	DC	Vbatt
		Relay ON		Max. 1.0V
46	Injector (Cylinder #3) [LOW] control output	Idle	Current	Peak Current : 19 ~ 21 A Hold Current : 11~ 13 A 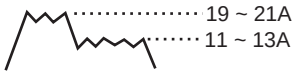 EFQG102A
47	Injector (Cylinder #1) [LOW] control output	Idle	Pulse	Peak Current : 19 ~ 21 A Hold Current : 11~ 13 A 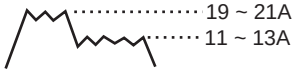 EFQG102A

Pin	Description	Type	Vehicle State	Level
48	-	-	-	-
49	Fuel Pressure Regulator Valve control output	Idle	Pulse	Hi: Vbatt Lo: Max. 1.0V
50	Camshaft Position Sensor (CMPS) signal input	Idle	Pulse	Hi: 4.8 ~ 12.0V Lo: Max. 1.0V
51	-	-	-	-
52	-	-	-	-
53	Intake Air Temperature Sensor (IATS) #2 signal input	Idle	Analog	0.5 ~ 4.5V
54	-	-	-	-
55	-	-	-	-
56	Position Sensor signal input	Idle	DC	0.5 ~ 4.5V
57	-	-	-	-
58	Engine Coolant Temperature Sensor (ECTS) signal input	Idle	Analog	0.5 ~ 4.5V
59	Electric EGR Control Valve control output	Idle	Pulse	Hi: Vbatt Lo: Max. 1.0V
60	Motor [+] control output	Active	Pulse	Hi: Vbatt Lo: Max. 1.0V

CONNECTOR [C230-K]

Pin	Description	Type	Vehicle State	Level
1	Batter voltage supply after main relay	IG OFF	DC	Max. 1.0 V
		IG ON		Vbatt
2	Power ground	Idle	DC	Max. 50 mV
3	Batter voltage supply after main relay	IG OFF	DC	Max. 1.0 V
		IG ON		Vbatt
4	Power ground	Idle	DC	Max. 50 mV
5	Batter voltage supply after main relay	IG OFF	DC	Max. 1.0 V
		IG ON		Vbatt
6	Power ground	Idle	DC	Max. 50 mV
7	Cooling Fan Relay [HIGH] control output	Relay OFF	DC	Vbatt
		Relay ON		Max. 1.0V
8	Sensor ground	Idle	DC	Max. 50 mV
9	Accelerator Position Sensor (APS) #1 signal input	C.T	Analog	0.3 ~ 0.9V
		W.O.T		4.0 ~ 4.8V
10	Sensor ground	Idle	DC	Max. 50 mV
11	Fuel Temperature Sensor (FTS) signal input	IG ON	Analog	0.5 ~ 4.5V
12	Ground	Idle	DC	Max. 50 mV
13	A/C Pressure Transducer signal input	A/C On	Analog	Max. 4.8V

Pin	Description	Type	Vehicle State	Level
14	Ground	Idle	DC	Max. 50mV
15	Cruise Control "ACTIVATOR" signal input	-	-	-
16	Ground	Idle	DC	Max. 50 mV
17	-	-	-	-
18	-	-	-	-
19	ESP Auto Recognition signal input	With ESP	DC	Max. 0.5V
		Without ESP		Vbatt
20	-	-	-	-
21	-	-	-	-
22	Reference voltage (+5V)	IG OFF	DC	Max. 0.5V
		IG ON		4.9 ~ 5.1V
23	-	-	-	-
24	Reference voltage (+5V)	IG OFF	DC	Max. 0.5V
		IG ON		4.9 ~ 5.1V
25	Diagnosis K-Line	When transmitting	Pulse	Hi: Min. Vbatt×80% Lo: Max. Vbatt×20%
		When receiving		Hi: Min. Vbatt×70% Lo: Max. Vbatt×30%
26	-	-	-	-
27	Fuel consumption signal output	Idle	Pulse	Hi: Vbatt or Vcc Lo: Max. 0.5V
28	Ignition switch signal input	IG OFF	DC	Max. 1.0V
		IG ON		Vbatt
29	VGT Control Solenoid Valve control output	Idle	Pulse	Hi: Vbatt Lo: Max. 0.5V
30	Sensor ground	Idle	DC	Max. 50 mV
31	Accelerator Position Sensor (APS) #2 signal input	C.T	Analog	0.3 ~ 0.9V
		W.O.T		1.5 ~ 3.0V
32	-	-	-	-
33	-	-	-	-
34	-	-	-	-
35	-	-	-	-
36	-	-	-	-
37	-	-	-	-
38	Brake Switch "Lamp" signal input	Release	DC	Max. 0.5V
		Push		Vbatt
39	-	-	-	-
40	Water Sensor siganl input	Full of Water	Analog	Vbatt
		No Water		Max. 1V
41	-	-	-	-

Pin	Description	Type	Vehicle State	Level
42	Blower Switch Signal input	Blower Off	DC	Vbatt
		Blower On		Max. 2V
43	-	-	-	-
44	-	-	-	-
45	Reference voltage (+5V)	IG OFF	DC	Max. 0.5V
		IG ON		4.9 ~ 5.1V
46	Reference voltage (+5V)	IG OFF	DC	Max. 0.5V
		IG ON		4.9 ~ 5.1V
47	Immobilizer Communication Line	After IG ON when communicating	Pulse	Hi: Min. 8.5V
				Lo: Max. 3.5V
48	Engine speed signal output	Idle	Pulse	Hi: Vbatt Lo: Max. 5V Frequency : 50~60Hz
49	Cruise Control "SET" Lamp control output	-	-	-
50	-	-	-	-
51	-	-	-	-
52	-	-	-	-
53	-	-	-	-
54	A/C Switch "ON" signal input	A/C SW OFF	DC	Max. 1.0V
		A/C SW ON		Vbatt
55	-	-	-	-
56	Thermo Switch signal input	A/C OFF	DC	Max. 0.5V
		A/C ON		Vbatt
57	Gear Neutral Switch signal input (MT Only)	SW OFF (Neutral)	DC	Vbatt
		SW ON (1st)		Max. 0.5V
58	-	-	-	-
59	-	-	-	-
60	-	-	-	-
61	-	-	-	-
62	-	-	-	-
63	-	-	-	-
64	-	-	-	-
65	-	-	-	-
66	-	-	-	-
67	-	-	-	-
68	Malfunction Indicator Lamp (MIL) control output	Lamp OFF	DC	Vbatt
		Lamp ON		Max. 1.0V
69	Glow Time Indicator Lamp control output	Glow OFF	DC	Vbatt
		Glow ON		Max. 1.0V

Pin	Description	Type	Vehicle State	Level
70	A/C Compressor Relay control output	A/Con OFF	DC	Vbatt
		A/Con ON		Max. 1.0V
71	Cooling Fan Relay [LOW] control output	Relay OFF	DC	Vbatt
		Relay ON		Max. 1.0V
72	Main Relay control output	Relay OFF	DC	Vbatt
		Relay ON		Max. 1.0V
73	-			
74	-	-	-	-
75	Vehicle speed signal input	Vehicle Run	Pulse	Hi: Min. 5.0V Lo: Max. 1.0V
76	-	-	-	-
77	Feedback signal input	Normal	DC	Vbatt
		Abnormal		Max. 0.5V
78	-	-	-	-
79	Clutch Switch signal input	Release	DC	Max. 0.5V
		Push		Vbatt
80	Brake Switch "Redundant" signal input	Release	DC	Vbatt
		Push		Max. 0.5V
81	MT/AT auto reconition signal input	MT	DC	Vbatt
		AT		Max. 0.5V
82	-	-	-	-
83	CAN [LOW]	Recessive	Pulse	2.0 ~ 3.0 V
		Dominant		0.5 2.25 V
84	CAN [HIGH]	Recessive	Pulse	2.0 ~ 3.0 V
		Dominant		2.75 4.5 V
85	-	-	-	-
86	-	-	-	-
87	-	-	-	-
88	-	-	-	-
89	Intake Air Temperature Sensor (IATS) #1 signal input	Idle	Analog	0.5V ~ 4.5V
90	Throttle Control Actuator control output	Key On/Key Off	Pulse	Hi: Vbatt Lo: Max. 1V
91	Cruise Control "MAIN" Lamp control output	-	-	-
92	Immobilizer Lamp control output	Lamp OFF	DC	Vbatt
		Lamp ON		Max. 1.0V
93	Glow Relay control output	Relay OFF	DC	Vbatt
		Relay ON		Max. 1.0V

Pin	Description	Type	Vehicle State	Level
94	PTC Heater Relay control output	Relay OFF	DC	Vbatt
		Relay ON		Max. 1.0V

CIRCUIT DIAGRAM ED23E502

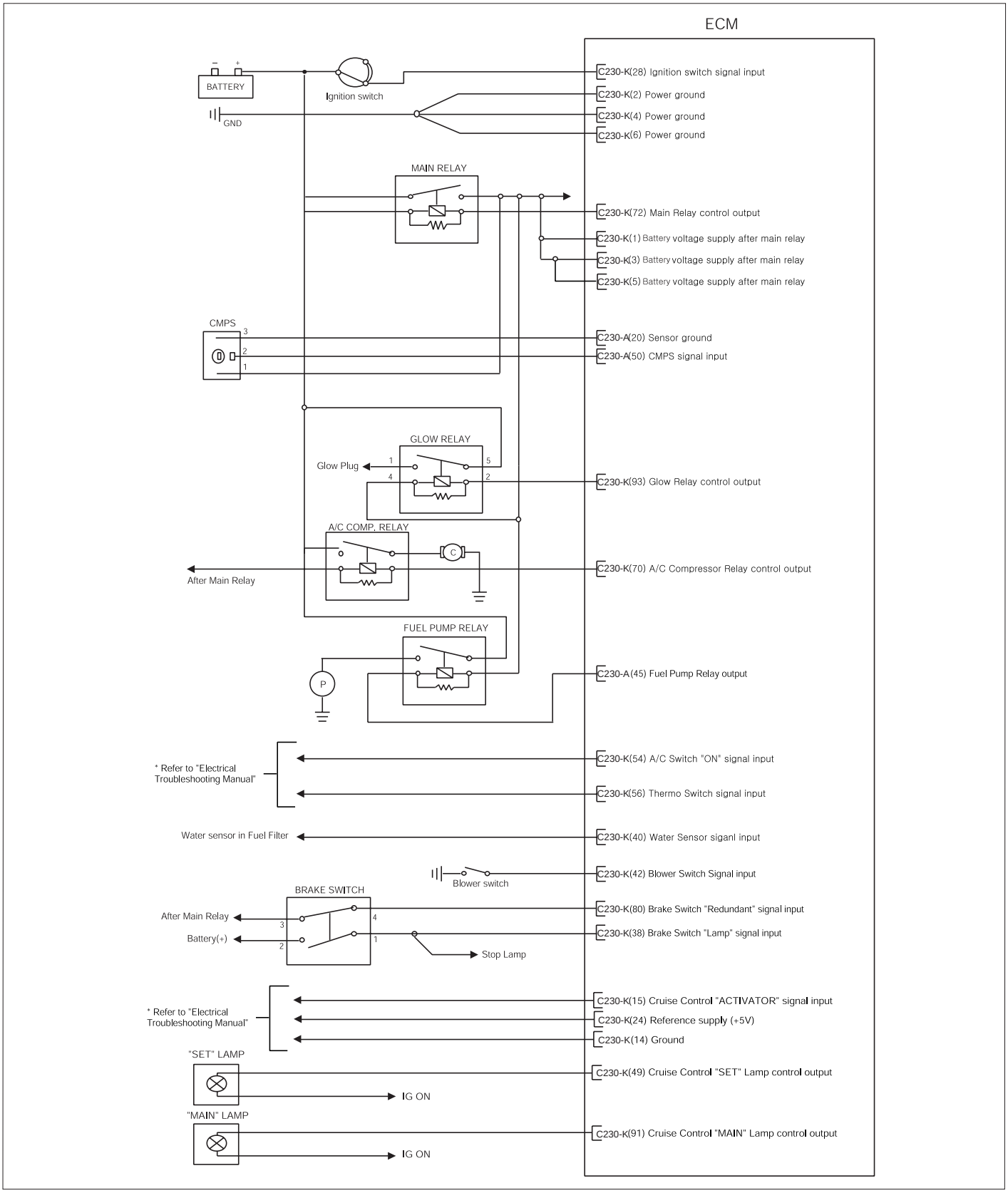

SCMFL6109L

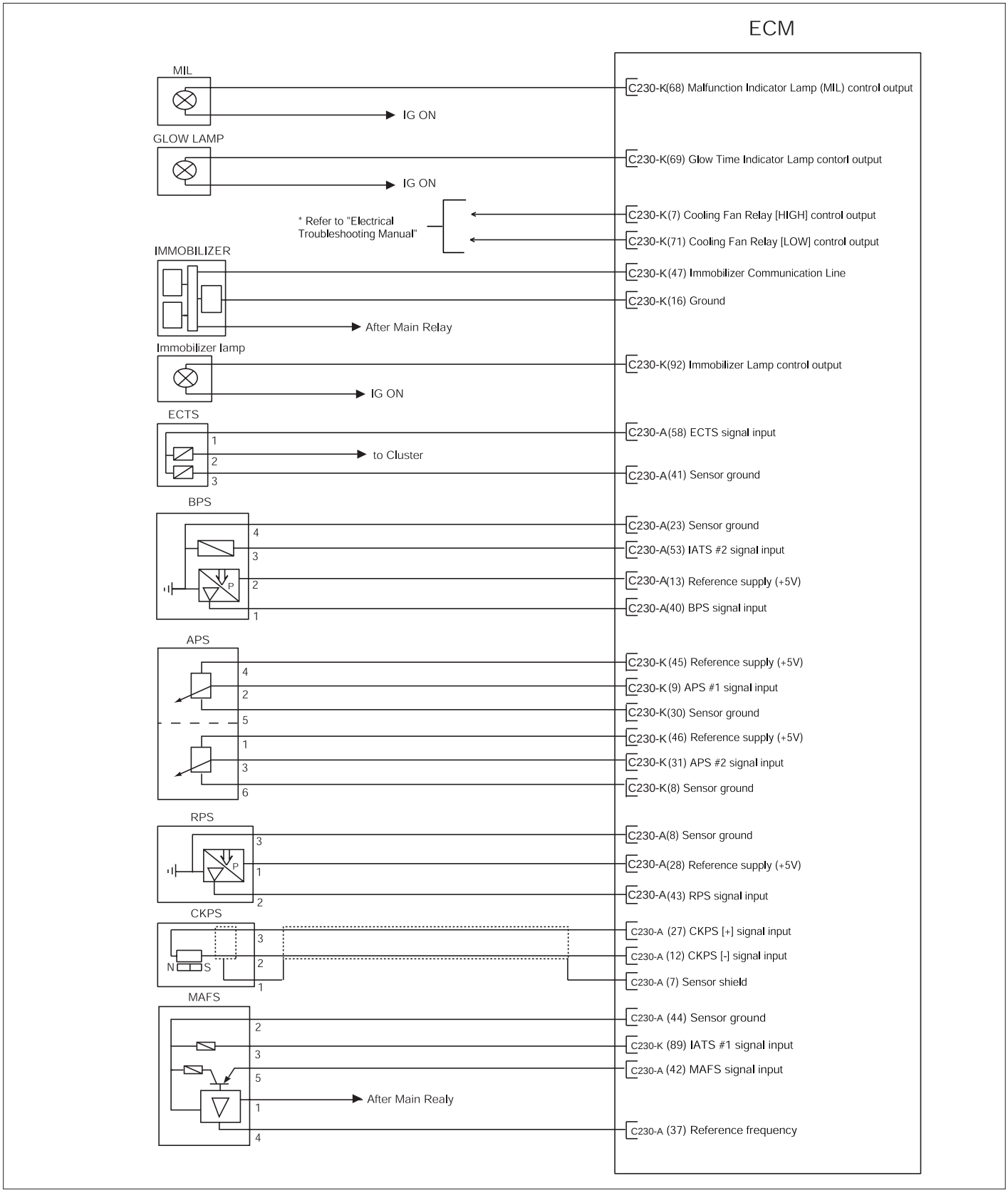
ECM
MIL
IG ON
C230-K(68) Malfunction Indicator Lamp (MIL) control output
GLOW LAMP
IG ON
C230-K(69) Glow Time Indicator Lamp contorl output
* Refer to "Electrical Troubleshooting Manual"
C230-K(7) Cooling Fan Relay [HIGH] control output
C230-K(71) Cooling Fan Relay [LOW] control output
IMMOBILIZER
C230-K(47) Immobilizer Communication Line
C230-K(16) Ground
After Main Relay
Immobilizer lamp
C230-K(92) Immobilizer Lamp control output
IG ON
ECTS
1
2
3
to Cluster
C230-A(58) ECTS signal input
C230-A(41) Sensor ground
BPS
4
3
2
1
P
C230-A(23) Sensor ground
C230-A(53) IATS #2 signal input
C230-A(13) Reference supply (+5V)
C230-A(40) BPS signal input
APS
4
2
5
1
3
6
C230-K(45) Reference supply (+5V)
C230-K(9) APS #1 signal input
C230-K(30) Sensor ground
C230-K(46) Reference supply (+5V)
C230-K(31) APS #2 signal input
C230-K(8) Sensor ground
RPS
3
1
2
P
C230-A(8) Sensor ground
C230-A(28) Reference supply (+5V)
C230-A(43) RPS signal input
CKPS
3
2
1
N
S
C230-A (27) CKPS [+] signal input
C230-A (12) CKPS [-] signal input
C230-A (7) Sensor shield
MAFS
2
3
5
1
4
After Main Realy
C230-A (44) Sensor ground
C230-K (89) IATS #1 signal input
C230-A (42) MAFS signal input
C230-A (37) Reference frequency

SCMFL6110L

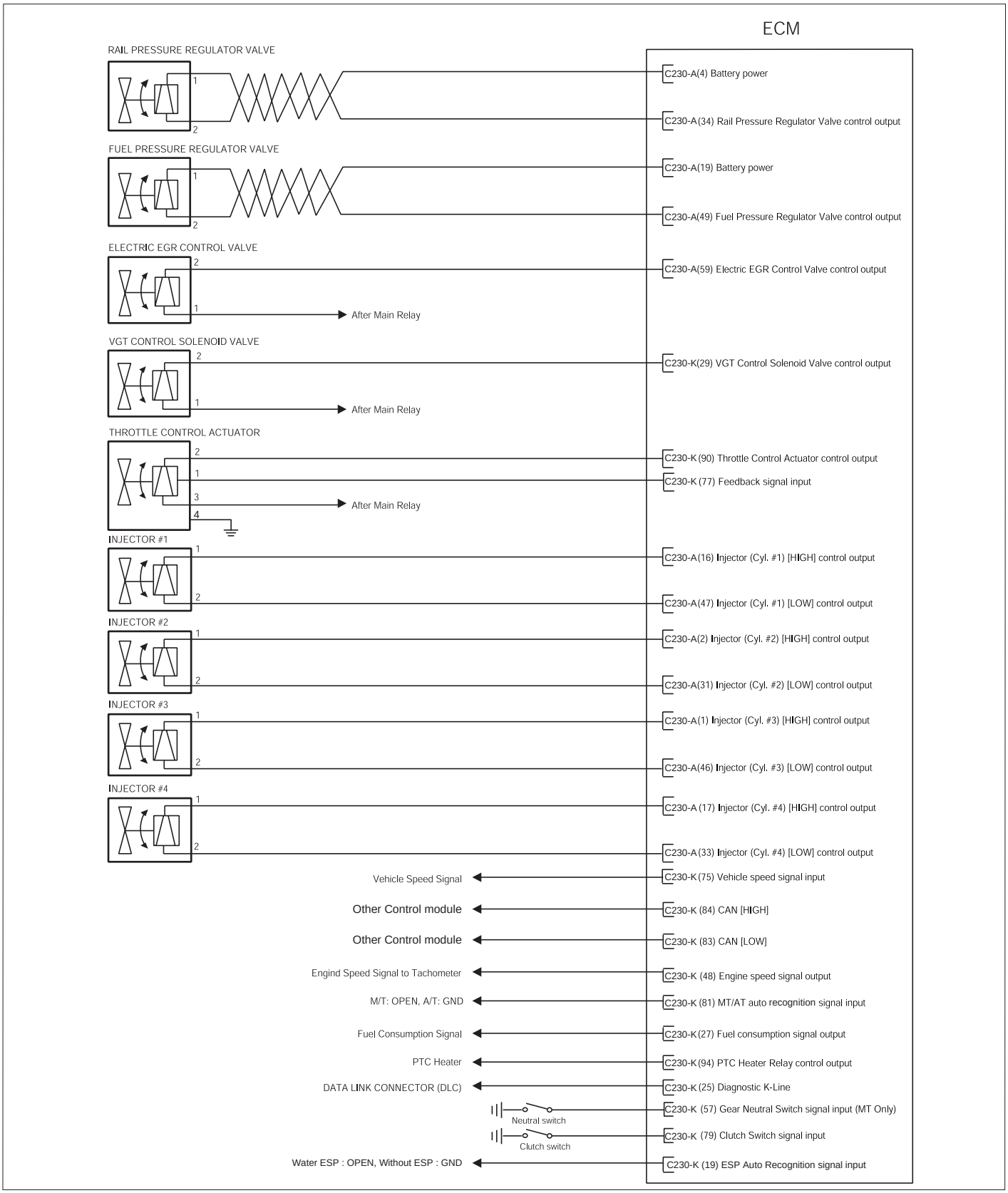
ECM
RAIL PRESSURE REGULATOR VALVE
C230-A(4) Battery power
C230-A(34) Rail Pressure Regulator Valve control output
FUEL PRESSURE REGULATOR VALVE
C230-A(19) Battery power
C230-A(49) Fuel Pressure Regulator Valve control output
ELECTRIC EGR CONTROL VALVE
C230-A(59) Electric EGR Control Valve control output
After Main Relay
VGT CONTROL SOLENOID VALVE
C230-K(29) VGT Control Solenoid Valve control output
After Main Relay
THROTTLE CONTROL ACTUATOR
C230-K (90) Throttle Control Actuator control output
C230-K (77) Feedback signal input
After Main Relay
INJECTOR #1
C230-A(16) Injector (Cyl. #1) [HIGH] control output
C230-A(47) Injector (Cyl. #1) [LOW] control output
INJECTOR #2
C230-A(2) Injector (Cyl. #2) [HIGH] control output
C230-A(31) Injector (Cyl. #2) [LOW] control output
INJECTOR #3
C230-A(1) Injector (Cyl. #3) [HIGH] control output
C230-A(46) Injector (Cyl. #3) [LOW] control output
INJECTOR #4
C230-A (17) Injector (Cyl. #4) [HIGH] control output
C230-A (33) Injector (Cyl. #4) [LOW] control output
Vehicle Speed Signal
C230-K (75) Vehicle speed signal input
Other Control module
C230-K (84) CAN [HIGH]
Other Control module
C230-K (83) CAN [LOW]
Engind Speed Signal to Tachometer
C230-K (48) Engine speed signal output
M/T: OPEN, A/T: GND
C230-K (81) MT/AT auto recognition signal input
Fuel Consumption Signal
C230-K (27) Fuel consumption signal output
PTC Heater
C230-K (94) PTC Heater Relay control output
DATA LINK CONNECTOR (DLC)
C230-K (25) Diagnostic K-Line
Neutral switch
C230-K (57) Gear Neutral Switch signal input (MT Only)
Clutch switch
C230-K (79) Clutch Switch signal input
Water ESP : OPEN, Without ESP : GND
C230-K (19) ESP Auto Recognition signal input

SCMFL6111L

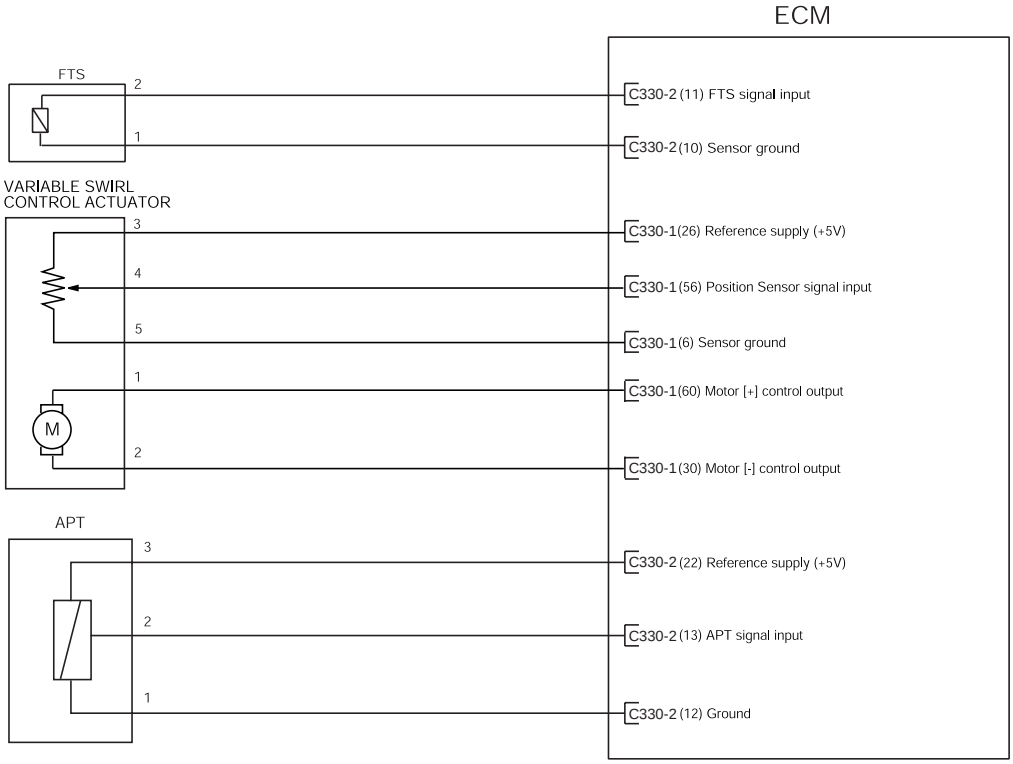
ECM
FTS
2
1
C330-2 (11) FTS signal input
C330-2 (10) Sensor ground
VARIABLE SWIRL
CONTROL ACTUATOR
3
4
5
1
2
M
C330-1 (26) Reference supply (+5V)
C330-1 (56) Position Sensor signal input
C330-1 (6) Sensor ground
C330-1 (60) Motor [+] control output
C330-1 (30) Motor [-] control output
APT
3
2
1
C330-2 (22) Reference supply (+5V)
C330-2 (13) APT signal input
C330-2 (12) Ground

SCMFL6112L

ECM PROBLEM INSPECTION PROCEDURE EF6D6E39

1. TEST ECM GROUND CIRCUIT: Measure resistance between ECM and chassis ground using the backside of ECM harness connector as ECM side check point. If the problem is found, repair it.

2. TEST ECM CONNECTOR: Disconnect the ECM connector and visually check the ground terminals on ECM side and harness side for bent pins or poor contact contact pressure. If the problem is found, repair it.

3. If problem is not found in Step 1 and 2, the ECM could be faulty. If so, replace the ECM with a new one, and then check the vehicle again. If the vehicle operates normally then the problem was likely with the ECM.

4. RE-TEST THE ORIGINAL ECM : Install the original ECM (may be broken) into a known-good vehicle and check the vehicle. If the problem occurs again, replace the original ECM with a new one. If problem does not occur, this is intermittent problem (Refer to INTERMITTENT PROBLEM PROCEDURE in BASIC INSPECTION PROCEDURE)

REPLACEMENT E54D9658

CAUTION

After replacing an ECM, MUST input the injector data (7 digit) of each cylinder into a new ECM. In the case of the vehicle eguipped with immobilizer, perform "KEY TEACHING" procedure with injector data input. (Refer to "BE" group in this shop Manual)

1. Turn ignition switch OFF.

2. Remove the battery negative (-) cable from the battery.

3. Disconnect the ECM connector (A) and unfasten the mounting bolts under the instrument panel.

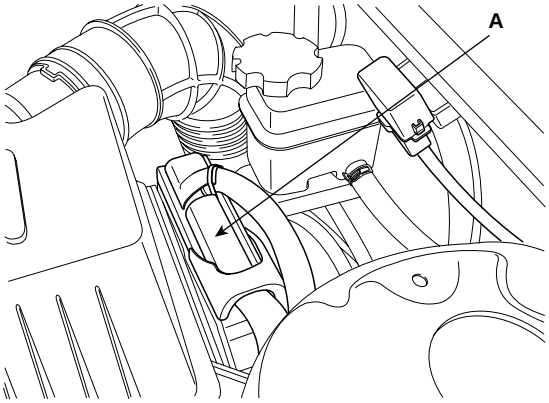

SCMFL6602D

4. Install a new ECM according to the reverse order of step 1, 2, and 3.

ECM mounting bolts/nuts : 0.8 ~ 1.2kgf·m (7.8 ~ 11.8 N·m, 5.8 ~ 8.6lbf·ft)

5. Connect a scan tool to Data Link Connector (DLC).

6. Connect the negative (-) battery cable.

7. Turn ignition switch on.

8. Proceed "INJECTOR SPECIFIC DATA" procedure.

   1) Select "ENGINE (DIESEL)"

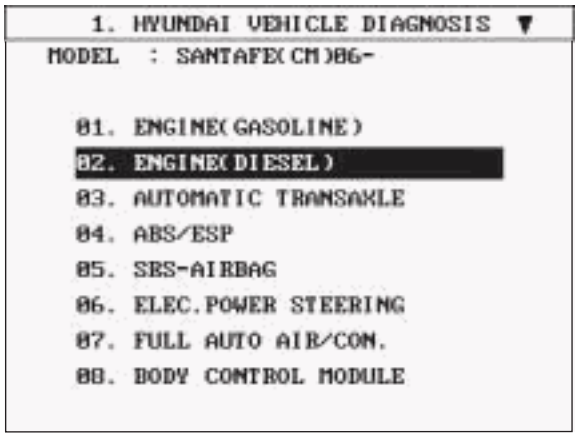

SCMFL6125L

   2) Select "INJECTOR SPECFIC DATA".

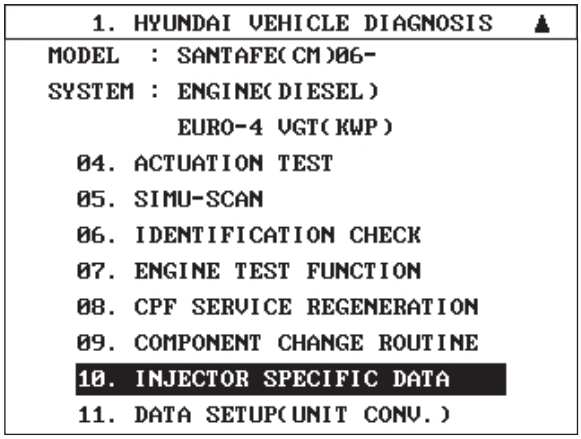

SCMFL6142L

   3) Press "ENTER" key.

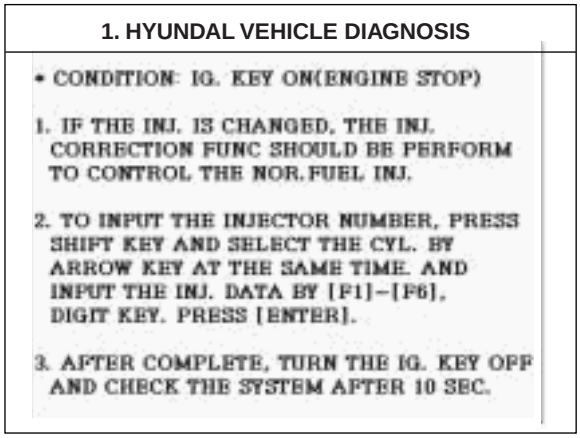

SCMFL6143L

   4) Input the injector data (7 digit) written on the top of each injector with function keys ([F1] ~ [F6]) and number keys.

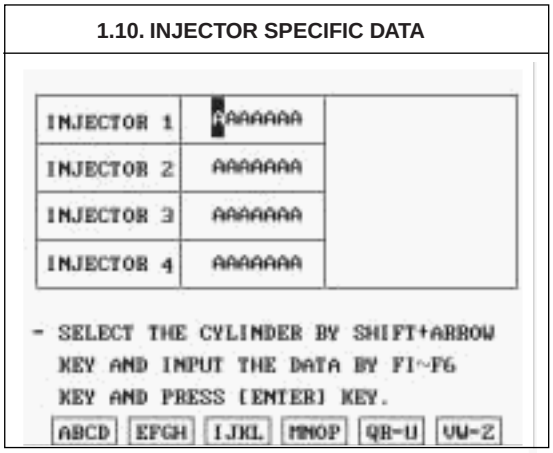

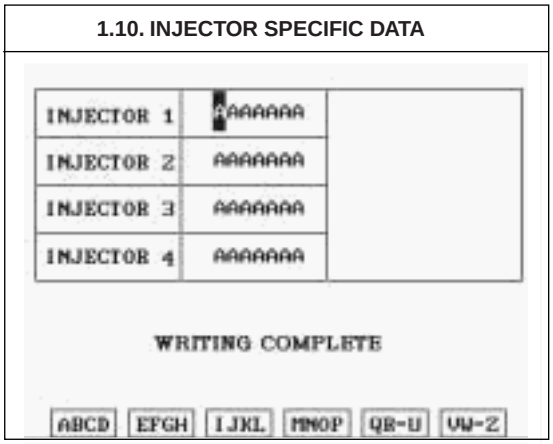

SCMFL6144L

9. Wait 10 seconds after displaying "WRITING COMPLETE", turn ignition switch OFF.

NOTE

When "WRITING FAIL" is displayed on the scan tool, input injector data (7 digits) of each cylinder into a new ECM again starting from 7th step.

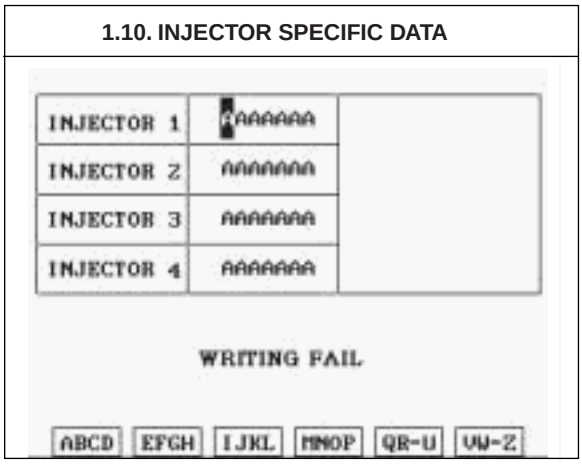

SCMFL6145L

MASS AIR FLOW SENSOR (MAFS)

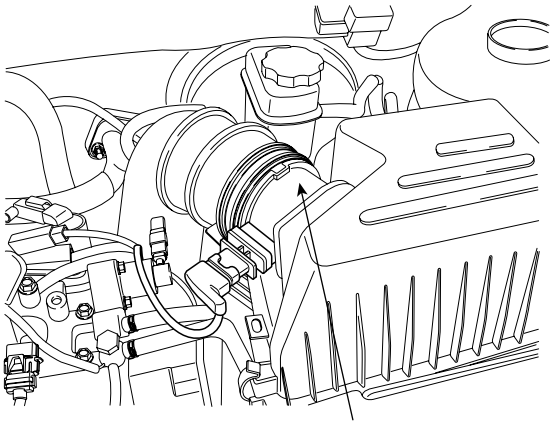

SCMFL6003D

INSPECTION E09E1CDA

FUNCTION AND OPERATION PRINCIPLE

MAFS uses a hot-film type sensing element to measure the mass of intake air entering the engine, and send the signal to ECM.
A large amount of intake air represents acceleration or high load conditions while a small amount of intake air represents deceleration or idle.
The ECM uses this information to control the EGR solenoid valve and correct the fuel amount.

SPECIFICATION

*At intake air temperature = 20℃(68˚F)

Air Flow (kg/h)	Frequency (kHz)
8	1.94 ~ 1.96
10	1.98 ~ 1.99
15	2.06 ~ 2.07
75	2.72 ~ 2.75
160	3.36 ~ 3.41
310	4.44 ~ 4.53
640	7.66 ~ 8.01
800	10.13 ~ 11.17

*At intake air temperature = -15℃(5˚F) or 80℃(176˚F)

Air Flow (kg/h)	Frequency (kHz)
10	1.97 ~ 1.99
75	2.71 ~ 2.76
160	3.34 ~ 3.43
310	4.39 ~ 4.58

EFQG034A

CIRCUIT DIAGRAM

[CIRCUIT DIAGRAM]

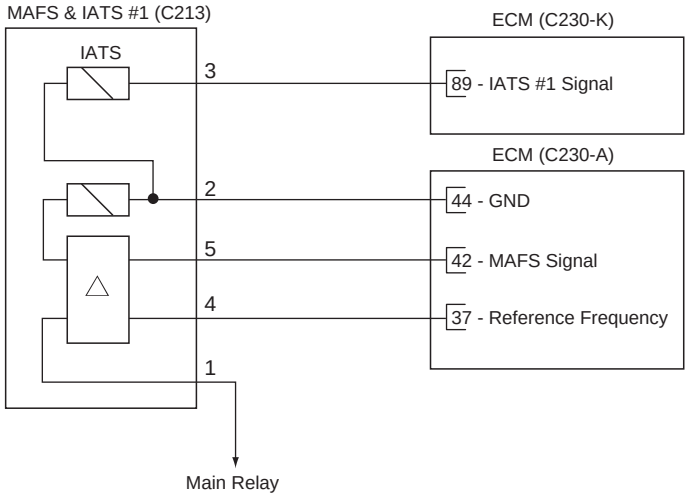

[CONNECTION INFORMATION]

Terminal	Connected to	Function
1	Main Relay	Battery Voltage (B+)
2	ECM C230-A (44)	Sensor Ground
3	ECM C230-K (89)	IATS #1 Signal
4	ECM C230-A (37)	Reference Frequency
5	ECM C230-A (42)	MAFS Signal

[HARNESS CONNECTORS]

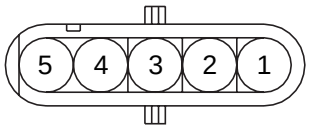

C213

MAFS & IATS #1

C230-A

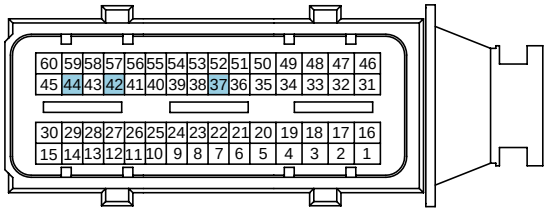

C230-K

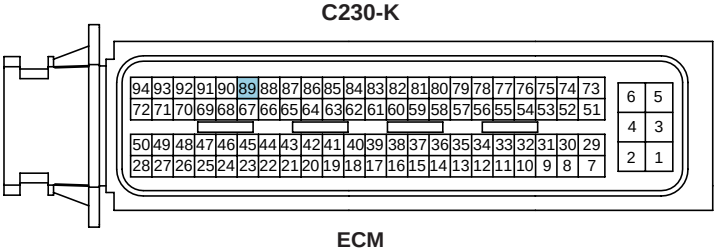

ECM

SCMFL6113L

SIGNAL WAVEFORM

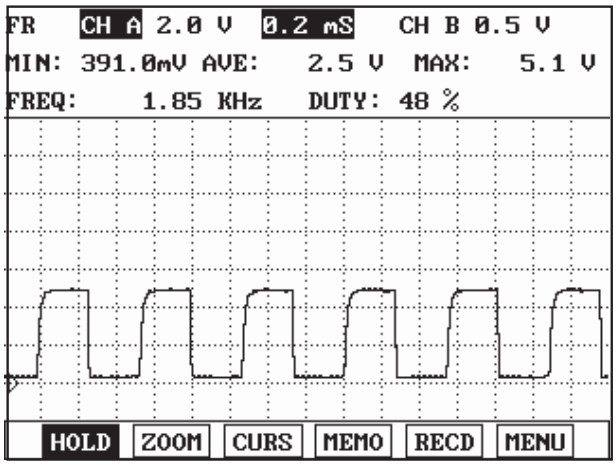

Fig.1

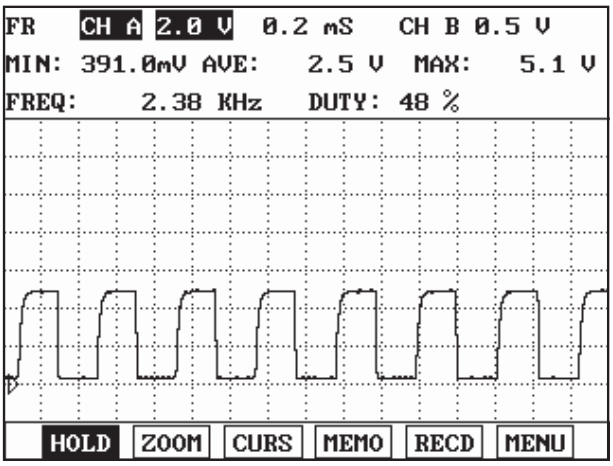

Fig.2

Fig.1) AFS signal waveform at IG KEY "ON". It shows digital signal of 50% duty, 1.8KHz.
Fig.2) AFS signal waveform at idle(790RPM, EGR actuator duty 5%, air flow for each cylinder 410mg/st).
It shows digital signal of 50% duty, 2.2~2.7KHz.

EFQG222A

COMPONENT INSPECTION

1. Check the MAFS visually.
   - Mounting direction correct.
   - Any contamination, corrosion or damage on connector.
   - Air cleaner's clogging or wet.
   - MAFS cylinder's deforming or blocking by any foreign material.

2. Check any leakage on intake system and intercooler system.

REPLACEMENT EE06EA00

NOTE

After replacing a Mass Air Flow Sensor (MAFS) or Intake Air Temperature Sensor (IATS)#1, MUST proceed below procedure.

1. Turn ignition switch OFF.
2. Connect a scan tool to Data Link Connector (DLC).
3. Turn ignition switch ON.
4. Select "ENGINE (DIESEL)".

```
1. HYUNDAI VEHICLE DIAGNOSIS ▼
MODEL  : SANTAFE(CM)06-

  01. ENGINE(GASOLINE)
  02. ENGINE(DIESEL)
  03. AUTOMATIC TRANSAXLE
  04. ABS/ESP
  05. SRS-AIRBAG
  06. ELEC.POWER STEERING
  07. FULL AUTO AIR/CON.
  08. BODY CONTROL MODULE
```

SCMFL6114L

5. Select "COMPONET CHANGE ROUTNE"

```
1. HYUNDAI VEHICLE DIAGNOSIS ▲
MODEL  : SANTAFE(CM)06-
SYSTEM : ENGINE(DIESEL)
         EURO-4 VGT(KWP)
  04. ACTUATION TEST
  05. SIMU-SCAN
  06. IDENTIFICATION CHECK
  07. ENGINE TEST FUNCTION
  08. CPF SERVICE REGENERATION
  09. COMPONENT CHANGE ROUTINE
  10. INJECTOR SPECIFIC DATA
  11. DATA SETUP(UNIT CONV.)
```

SCMFL6115L

6. Select "AIR FLOW SENSOR CHANGE".

```
1.9 . COMPONENT CHANGE ROUTINE
MODEL  : SANTAFE(CM)06-
SYSTEM : ENGINE(DIESEL)
         EURO-4 VGT(KWP)
  01. ECU CHANGE
  02. LAMBDA SENSOR CHANGE
  03. RAIL PRESSURE SENSOR CHANGE
  04. AIR FLOW SENSOR CHANGE
  05. CPF CHANGE
  06. D/PRESSURE SENSOR CHANGE
  07. SWIRL CONTROL VALVE CHANGE
```

SCMFL6116L

7. Press "ENTER" key.

```
1. 9. COMPONENT CHANGE ROUTINE
        AIR FLOW SENSOR CHANGE

IN THIS MODE, CAN RESET THE STORED
DRIFT VALUES OF HOT FILM AIR FLOW
SENSOR IN EEPROM

        PRESS [ENTER] KEY
```

```
1. 9. COMPONENT CHANGE ROUTINE
        AIR FLOW SENSOR CHANGE

IN THIS MODE, CAN RESET THE STORED
DRIFT VALUES OF HOT FILM AIR FLOW
SENSOR IN EEPROM

      IG KEY ON BEFORE IG KEY
        OFF FOR 10SEC
```

EFQG129A

8. Wait 10 seconds with IG ON.
9. Turn ignition switch off.

BOOST PRESSURE SENSOR (BPS)

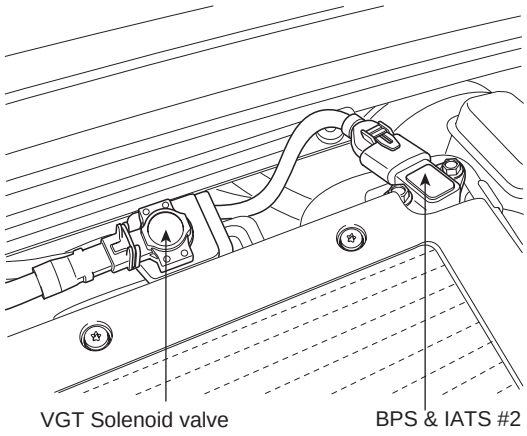

SCMFL6146L

INSPECTION E497534D

FUNCTION AND OPERATION PRINCIPLE

Boost pressure sensor (BPS) is installed on surge tank to measure the absolute intake manifold pressure. BPS input voltage is changed in proportion with absolute pressure in manifold. This information is used to control Variable Geometery Turbocharger (VGT) by ECM.

SPECIFICATION

Pressure (kPa)	Output Voltage (V)
70	1.02 ~ 1.17
140	2.13 ~ 2.28
210	3.25 ~ 3.40
270	4.20 ~ 4.35

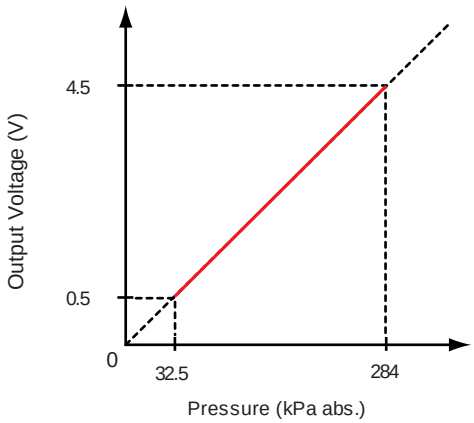

EFQG038A

[CIRCUIT DIAGRAM]

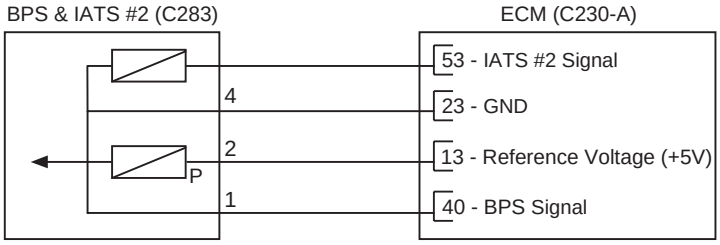

[CONNECTION INFORMATION]

Terminal	Connected to	Function
1	ECM C230-A (40)	BPS Signal
2	ECM C230-A (13)	Reference Voltage (+5V)
3	ECM C230-A (53)	IATS #2 Signal
4	ECM C230-A (23)	Sensor ground

[HARNESS CONNECTORS]

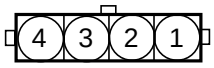

C283

BPS & IATS #2

C230-A

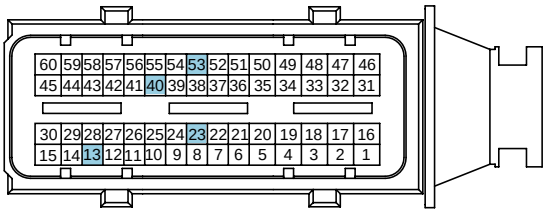

C230-K

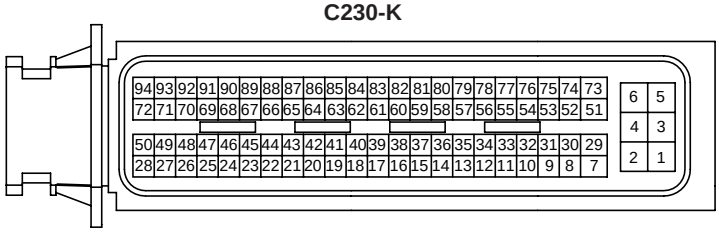

ECM

SCMFL6118L

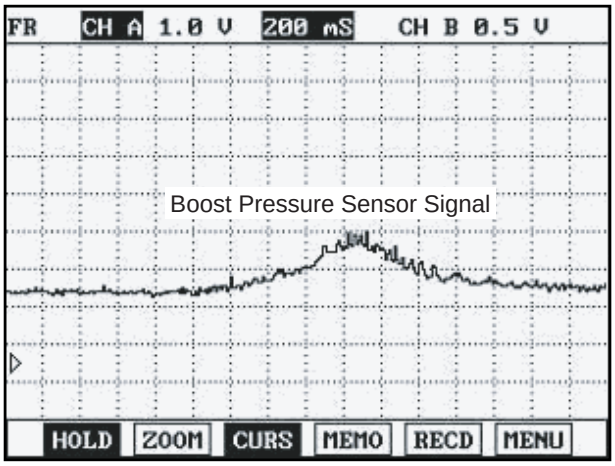

This illustration represents waveform of BPS when accelerating and decelerating.

EFQG040A

INTAKE AIR TEMPERATURE SENSOR (IATS)

INSPECTION E826298B

FUNCTION AND OPERATION PRINCIPLE

Intake Air Temperature Sensor (IATS) uses a Negative Temperature Characteristics (NTC) thermistor and senses intake air temperature. Two intake air temperature sensors are installed in this engine.

IATS #1 in Mass Air Flow Sensor (MAFS) and IATS #2 in Boost Pressure Sensor (BPS) are located in front of and behind turbo-charger respectively. IATS #1 senses air temperature entering turbo-charger and the other (IATS #2) does air temperature coming out from the turbo-charger.
Comparing these air temperature values from both sensors, more accurate sensing of intake air temperature is possible. ECM uses these air temperature signals to perform EGR control correction and fuel injection quantity correction.

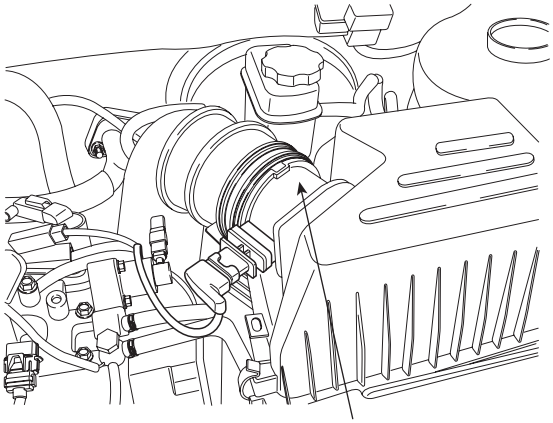

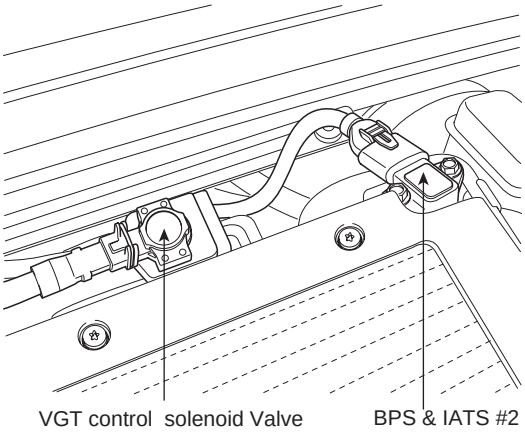

SCMFL6147L

SPECIFICATION

IATS #1 in MAFS

Temperature [℃(˚F)]	Resistance (kΩ)
-40(-40)	35.14 ~ 43.76
-20(-4)	12.66 ~ 15.12
0(32)	5.12 ~ 5.89
20(68)	2.29 ~ 2.55
40(104)	1.10 ~ 1.24
60(140)	0.57 ~ 0.65
80(176)	0.31 ~ 0.37

IATS #2 in BPS

Temperature [℃(˚F)]	Resistance (kΩ)
-40(-40)	40.93 ~ 48.35
-20(-4)	13.89 ~ 16.03
0(32)	5.38 ~ 6.09
20(68)	2.31 ~ 2.57
40(104)	1.08 ~ 1.21
60(140)	0.54 ~ 0.62
80(176)	0.29 ~ 0.34

EFQG042A

CIRCUIT DIAGRAM

[CIRCUIT DIAGRAM]

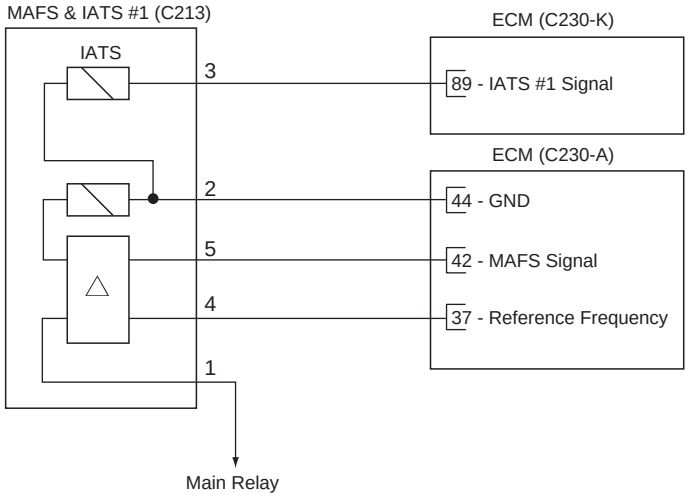

[CONNECTION INFORMATION]

Terminal	Connected to	Function
1	Main Relay	Battery Voltage (B+)
2	ECM C230-A (44)	Sensor Ground
3	ECM C230-K (89)	IATS #1 Signal
4	ECM C230-A (37)	Reference Frequency
5	ECM C230-A (42)	MAFS Signal

[HARNESS CONNECTORS]

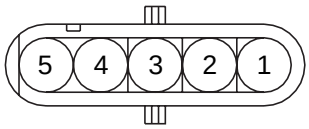

C213

MAFS & IATS #1

C230-A

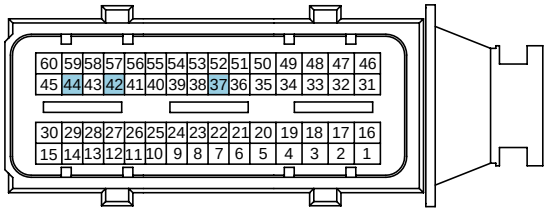

C230-K

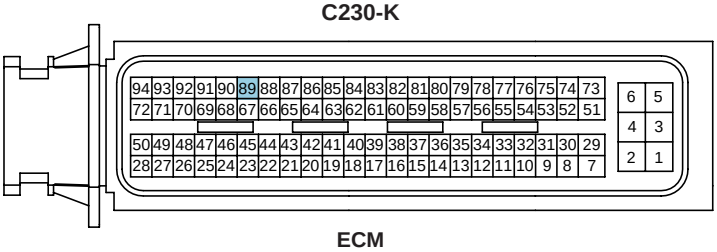

ECM

SCMFL6113L

[CIRCUIT DIAGRAM]

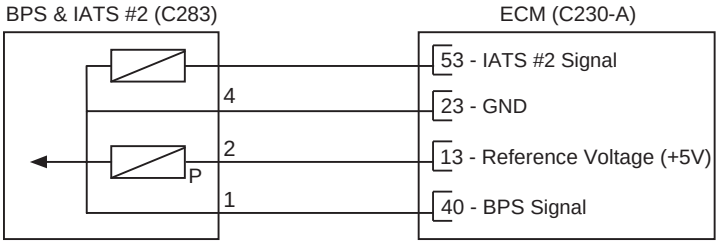

[CONNECTION INFORMATION]

Terminal	Connected to	Function
1	ECM C230-A (40)	BPS Signal
2	ECM C230-A (13)	Reference Voltage (+5V)
3	ECM C230-A (53)	IATS #2 Signal
4	ECM C230-A (23)	Sensor ground

[HARNESS CONNECTORS]

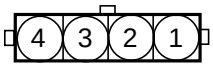

C283

BPS & IATS #2

C230-A

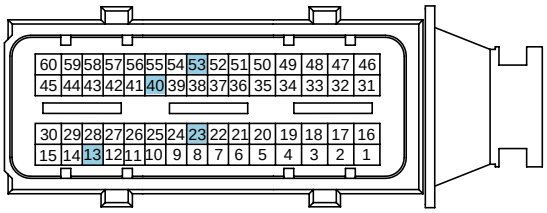

C230-K

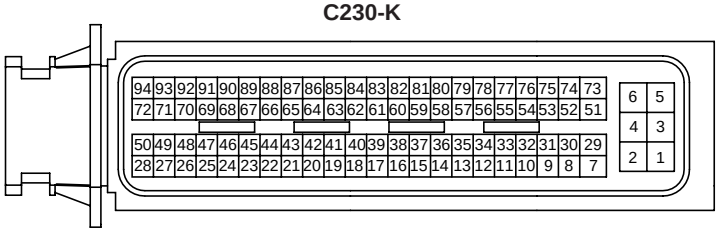

ECM

SCMFL6118L

SIGNAL WAVEFORM

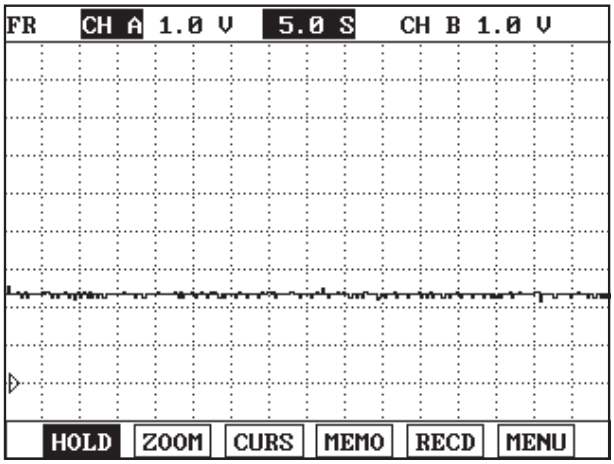

IATS signal should be smooth and continuous without any sudden changes.
After warmed-up, the IATS signal should not change significantly while ECTS signal drops.

EFQG043A

COMPONENT INSPECTION

1. Turn ignition switch OFF.
2. Disconnect the IATS #1 or the IATS #2 connector.
3. Measure resistance between IATS signal terminal and sensor ground terminal.
4. Check that the resistance is within the specification.

Specification: Refer to "SPECIFICATION".

REPLACEMENT EB9ACB19

NOTE

After replacing a Mass Air Flow Sensor (MAFS) or Intake Air Temperature Sensor (IATS)#1, MUST proceed below procedure.

1. Turn ignition switch OFF.
2. Connect a scan tool to Data Link Connector (DLC).
3. Turn ignition switch ON.
4. Select "ENGINE (DIESEL)".

```
1. HYUNDAI VEHICLE DIAGNOSIS ▼
MODEL  : SANTAFE(CM)06-

  01. ENGINE(GASOLINE)
  02. ENGINE(DIESEL)
  03. AUTOMATIC TRANSAXLE
  04. ABS/ESP
  05. SRS-AIRBAG
  06. ELEC.POWER STEERING
  07. FULL AUTO AIR/CON.
  08. BODY CONTROL MODULE
```

SCMFL6114L

5. Select "COMPONET CHANGE ROUTNE"

```
1. HYUNDAI VEHICLE DIAGNOSIS ▲
MODEL  : SANTAFE(CM)06-
SYSTEM : ENGINE(DIESEL)
         EURO-4 VGT(KWP)
  04. ACTUATION TEST
  05. SIMU-SCAN
  06. IDENTIFICATION CHECK
  07. ENGINE TEST FUNCTION
  08. CPF SERVICE REGENERATION
  09. COMPONENT CHANGE ROUTINE
  10. INJECTOR SPECIFIC DATA
  11. DATA SETUP(UNIT CONV.)
```

SCMFL6115L

6. Select "AIR FLOW SENSOR CHANGE".

```
1.9 . COMPONENT CHANGE ROUTINE
MODEL  : SANTAFE(CM)06-
SYSTEM : ENGINE(DIESEL)
         EURO-4 VGT(KWP)
  01. ECU CHANGE
  02. LAMBDA SENSOR CHANGE
  03. RAIL PRESSURE SENSOR CHANGE
  04. AIR FLOW SENSOR CHANGE
  05. CPF CHANGE
  06. D/PRESSURE SENSOR CHANGE
  07. SWIRL CONTROL VALVE CHANGE
```

SCMFL6116L

7. Press "ENTER" key.

```
1. 9. COMPONENT CHANGE ROUTINE
      AIR FLOW SENSOR CHANGE

IN THIS MODE, CAN RESET THE STORED
DRIFT VALUES OF HOT FILM AIR FLOW
SENSOR IN EEPROM

      PRESS [ENTER] KEY
```

```
1. 9. COMPONENT CHANGE ROUTINE
      AIR FLOW SENSOR CHANGE

IN THIS MODE, CAN RESET THE STORED
DRIFT VALUES OF HOT FILM AIR FLOW
SENSOR IN EEPROM

      IG KEY ON BEFORE IG KEY
      OFF FOR 10SEC
```

EFQG129A

8. Wait 10 seconds with IG ON.
9. Turn ignition switch off.

ENGINE COOLANT TEMPERATURE SENSOR (ECTS)

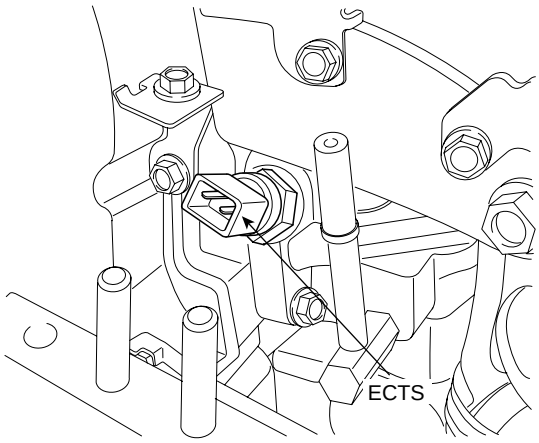

EFQG008A

INSPECTION E1C34D15

FUNCTION AND OPERATION PRINCIPLE

Engine Coolant Temperature Sensor (ECTS) is located in the engine coolant passage of the cylinder head for detecting the engine coolant temperature. The ECTS uses a thermistor whose resistance changes with the temperature. The electrical resistance of the ECTS decreases as the temperature increases, and increases as the temperature decreases. The reference 5V in the ECM is supplied to the ECTS via a resistor in the ECM.
That is, the resistor in the ECM and the thermistor in the ECTS are connected in series. When the resistance value of the thermistor in the ECTS changes according to the engine coolant temperature, the output voltage also changes. During cold engine operation the ECM increases the fuel injection duration and controls the ignition timing using the information of engine coolant temperature to avoid engine stalling and improve drivability.

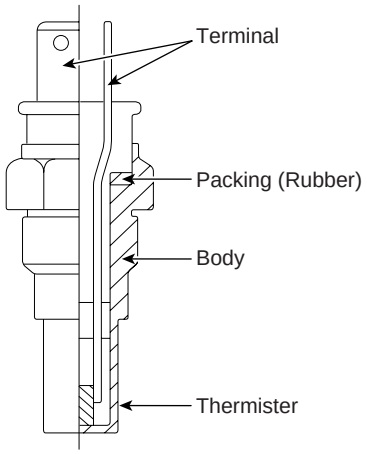

EGRF241A

SPECIFICATION

Temperature [℃(℉)]	Resistance(kΩ)
-40(-40)	48.14
-20(-4)	14.13 ~ 16.83
0(32)	5.79
20(68)	2.31 ~ 2.59
40(104)	1.15
60(140)	0.59
80(176)	0.32

CIRCUIT DIAGRAM

[CIRCUIT DIAGRAM]

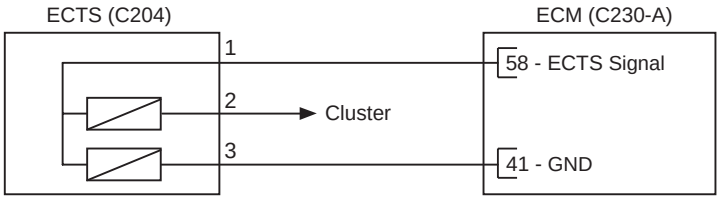

[CONNECTION INFORMATION]

Terminal	Connected to	Function
1	ECM C230-A (58)	ECTS Signal
2	Cluster	-
3	ECM C230-A (41)	Sensor ground

[HARNESS CONNECTORS]

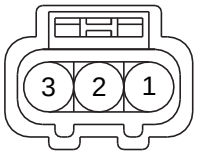

C204
ECTS

C230-A

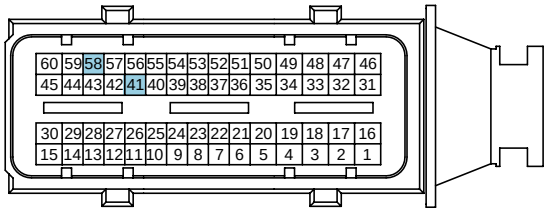

C230-K

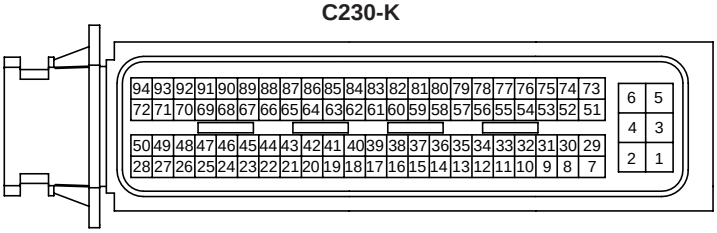

ECM

SCMFL6119L

COMPONENT INSPECTION

1. Turn ignition switch OFF.
2. Disconnect the engine coolant temperature sensor connector.
3. Remove the sensor.
4. After immersing the thermistor of the sensor into engine coolant, measure resistance between ECTS signal terminal and ground terminal.

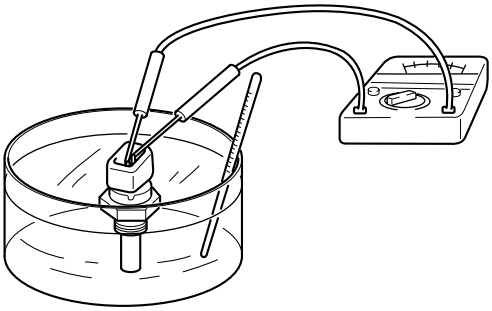

EFNF541A

5. Check that the resistance is within the specification.

Specification: Refer to "SPECIFICATION".

CAMSHAFT POSITION SENSOR (CMPS)

INSPECTION E9909235

FUNCTION AND OPERATION PRINCIPLE

Camshaft Position Sensor (CMPS) is a hall sensor and detects the camshaft position by using a hall element. It is related with Crankshaft Position Sensor (CKPS) and detects the piston position of the each cylinder which the CKPS can't detect. The two CMPS are installed on engine head cover and uses a target wheel installed on the camshaft. This sensor has a hall-effect IC which output voltage changes when magnetic field is made on the IC with current flow. So the sequential injection of the 4 cylinders is impossible without CMPS signal.

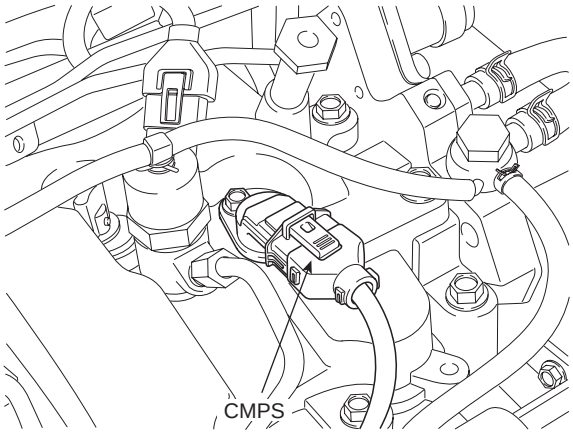

EFQG010A

SPECIFICATION

Level	Output Pulse (V)
High	5V
Low	0V

Items	Specification
Air Gap	1.0 ± 0.5 mm

CIRCUIT DIAGRAM

[CIRCUIT DIAGRAM]

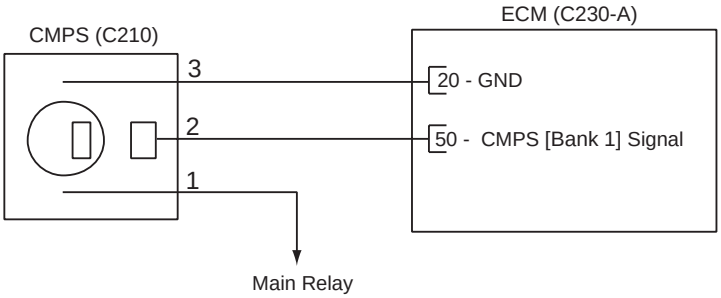

[CONNECTION INFORMATION]

Terminal	Connected to	Function
1	Main Relay	Battery Voltage
2	ECM C230-A (50)	CMPS Signal
3	ECM C230-A(20)	GND

[HARNESS CONNECTORS]

C210

CMPS

C230-A

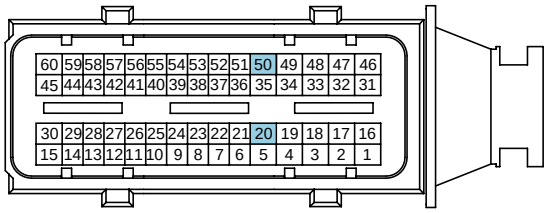

C230-K

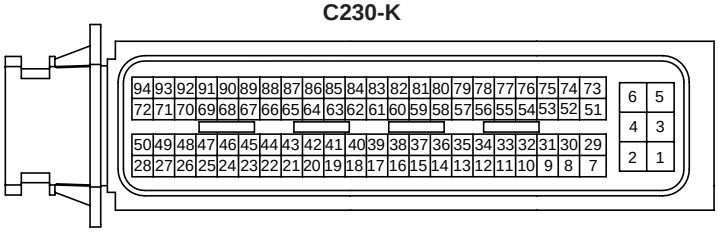

ECM

SCMFL6120L

SIGNAL WAVEFORM

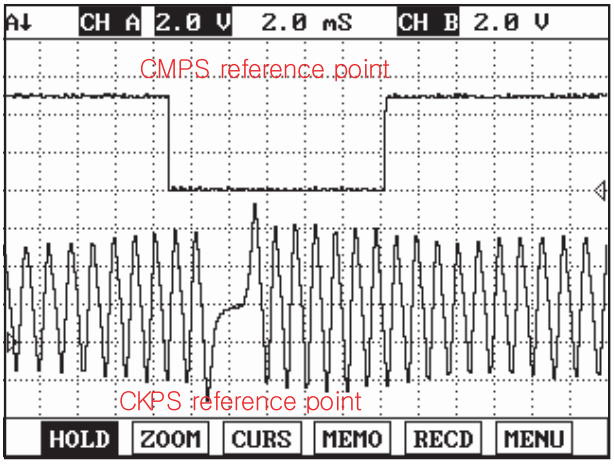

Fig.1

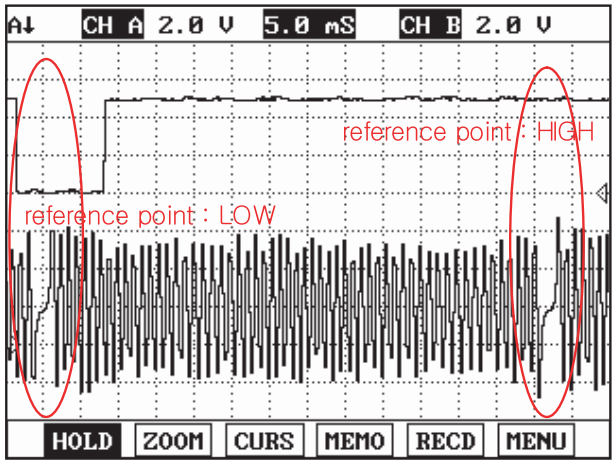

Fig.2

Fig.1) This shows waveform of Crank Shaft Position Sensor and Cam Shaft Position Sensor simulatneously. The middle area indicates reference points of Crank Shaft Position Sensor and Cam Shaft Position Sensor.

Fig.2) Crank Shaft Position Sensor and Cam Shaft Position Sensor signal are measured simultaneously.
Cam Shaft Position Sensor
signal is outputted once when Crank Shaft Position sensor signal is outputted twice. LOW and HIGH output of Cam Shaft Position sensor reference point is detected at Crank Shaft Position sensor reference point.
(Injection sequence is determined based on LOW and HIGH signal of Cam Shaft Position Sensor reference point as detecting cylinder position.)

EFQG299A

CRANKSHAFT POSITION SENSOR (CKPS)

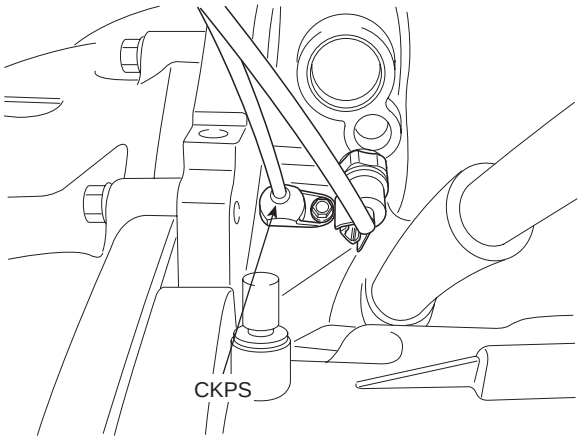

EFQG046A

INSPECTION E39BA5C3

FUNCTION AND OPERATION PRINCIPLE

Piston position on combustion chamber is the substantial to define the starting of injection timing. All engine pistons are connected to crankshaft by connecting rod. Sensor on crankshaft can supply the informations concerning all piston positions, revolution speed is defined by revolution perminute of crankshaft. Prior input variable is determined at ECM by using signal induced from crankshaft position sensor.

SPECIFICATION

Items	Specification
Coil Resistance (Ω)	774 ~ 946Ω [20℃(68°F)]

CIRCUIT DIAGRAM

[CIRCUIT DIAGRAM]

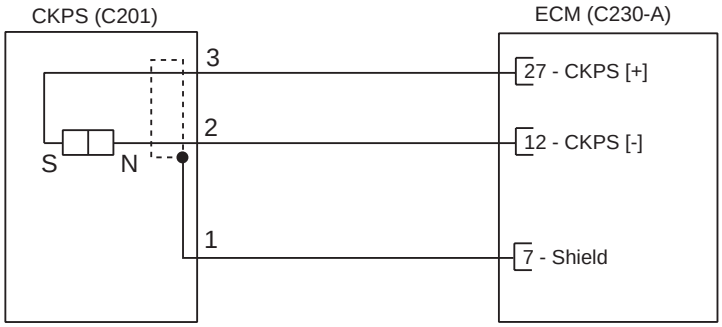

[CONNECTION INFORMATION]

Terminal	Connected to	Function
1	ECM C230-A (7)	Sensor Shield
2	ECM C230-A (12)	CKPS [-] Signal
3	ECM C230-A (27)	CKPS [+] Signal

[HARNESS CONNECTORS]

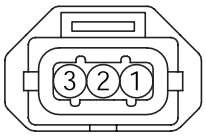

C201

CKPS

C230-A

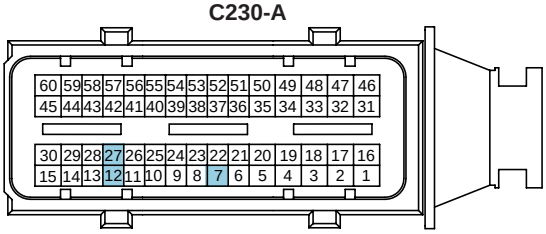

C230-K

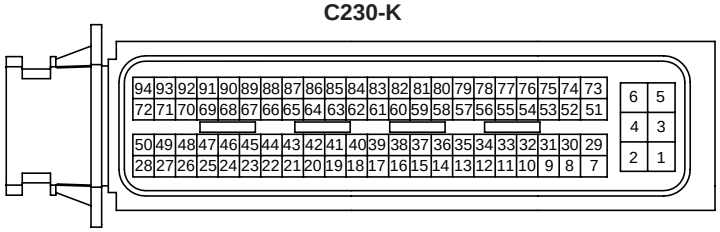

ECM

SCMFL6121L

SIGNAL WAVEFORM

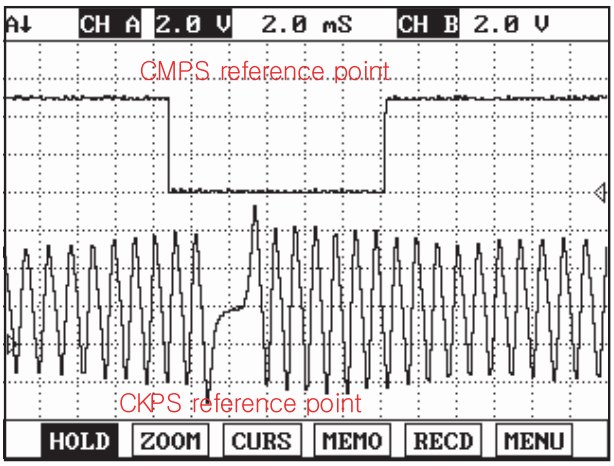

Fig.1

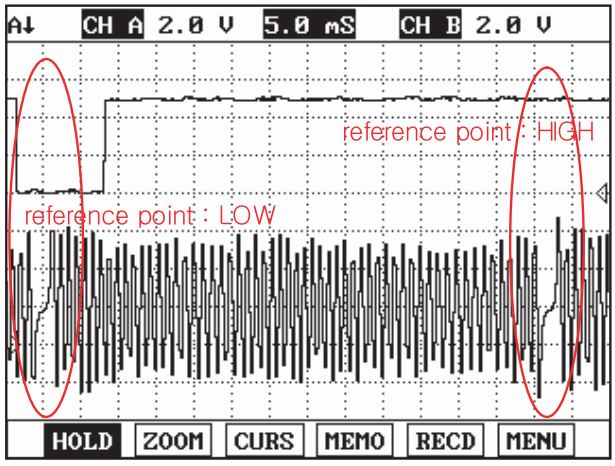

Fig.2

Fig.1) This shows waveform of Crank Shaft Position Sensor and Cam Shaft Position Sensor simulatneously. The middle area indicates reference points of Crank Shaft Position Sensor and Cam Shaft Position Sensor.

Fig.2) Crank Shaft Position Sensor and Cam Shaft Position Sensor signal are measured simultaneously.
Cam Shaft Position Sensor
signal is outputted once when Crank Shaft Position sensor signal is outputted twice. LOW and HIGH output of Cam Shaft Position sensor reference point is detected at Crank Shaft Position sensor reference point.
(Injection sequence is determined based on LOW and HIGH signal of Cam Shaft Position Sensor reference point as detecting cylinder position.)

EFQG299A

ACCELERATOR POSITION SENSOR (APS)

INSPECTION E66C7390

FUNCTION AND OPERATION PRINCIPLE

On electronic injection systems, there is no longer a load lever that mechanically controls the fuelling. The flow is caculated by the ECM depending on a number of parameters, including pedal position, which is measured using a potentiometer. The pedal sensor has two potentio-meters whoses slides are mechanically solid. The two potentiometers are supplied from distinct and different power sources so there is built in redundancy of information giving reliable driver's request information. A voltage is generated across the potentiometer in the acceleration position sensor as a function of the accelerator-pedal setting. Using a peogrammed characteristic curve, the pedal's position is then calculated from this voltage.

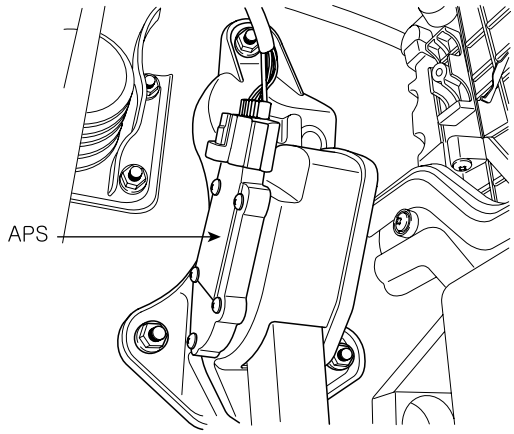

SCMFL6005D

SPECIFICATION

Test Condition	Output Voltage(V)	
	APS 1	APS 2
Idle	0.7 ~ 0.8	0.29 ~ 0.46
Fully depressed	3.85 ~ 4.35	1.93 ~ 2.18

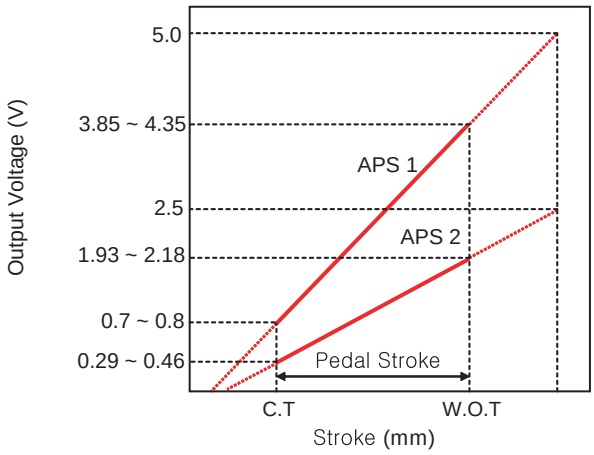

SCMFL6122L

CIRCUIT DIAGRAM

[CIRCUIT DIAGRAM]

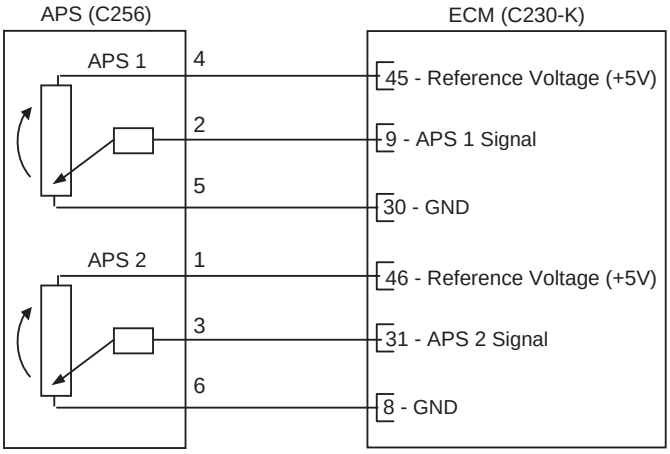

[CONNECTION INFORMATION]

Terminal	Connected to	Function
1	ECM C230-K (46)	APS 2 Reference Voltage (+5V)
2	ECM C230-K (9)	APS 1 Signal
3	ECM C230-K (31)	APS 2 Signal
4	ECM C230-K (45)	APS 1 Reference Voltage (+5V)
5	ECM C230-K (30)	APS 1 Ground
6	ECM C230-K (8)	APS 2 Ground

[HARNESS CONNECTORS]

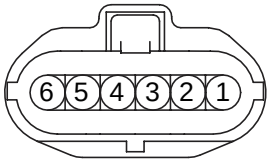

C256
APS

C230-A

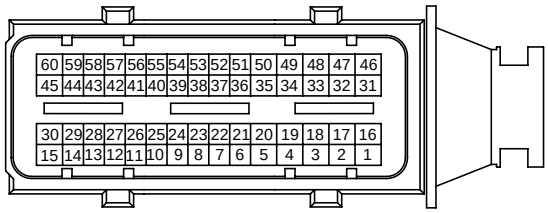

C230-K

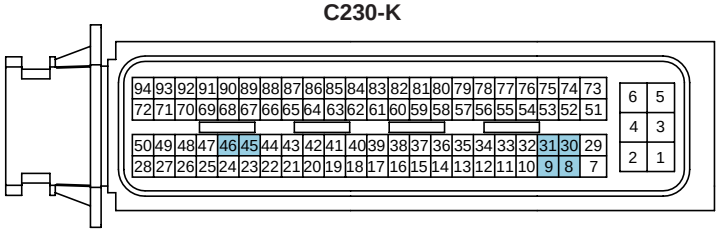

ECM

SCMFL6123L

SIGNAL WAVEFORM

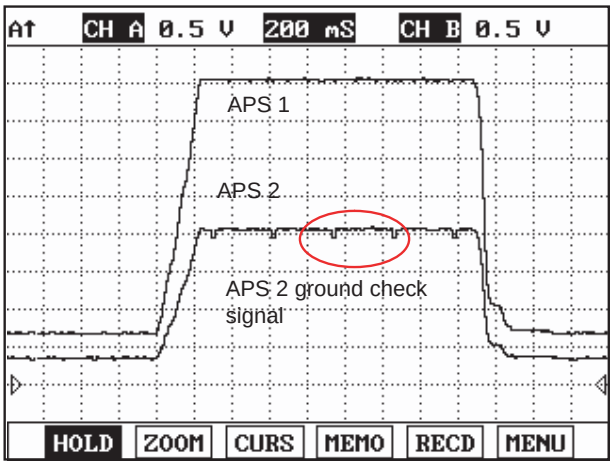

Fig.1

Fig.1) APS 1 and APS 2 signals are measured simultaneously, Check if output value is rising and APS 2 is 1/2 of APS 1 signal.

EFQG541A

RAIL PRESSURE SENSOR (RPS)

INSPECTION E0734AD3

FUNCTION AND OPERATION PRINCIPLE

Rail Pressure Sensor (RPS) is installed at the end of the common rail and measures the instantaneous fuel pressure in the common rail by using its diaphragm. Its sensing element (semiconductor device) mounted on the diaphragm converts the fuel pressure to an electric signal.

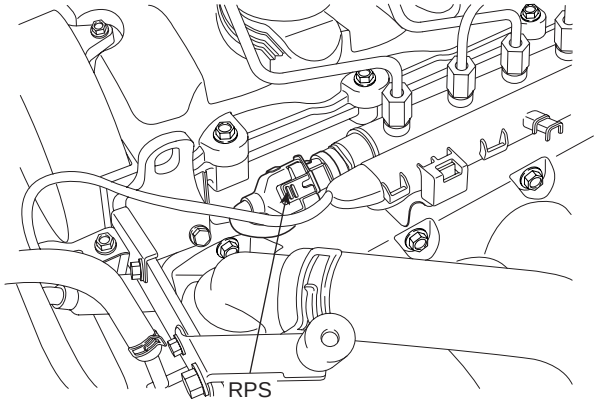

EFQG017A

SPECIFICATION

Test Condition	Rail pressure (bar)	Output Voltage (V)
Idle	220 ~ 320	Below 1.7
Fully depressed	About 1,800	Approx. 4.5

CIRCUIT DIAGRAM

[CIRCUIT DIAGRAM]

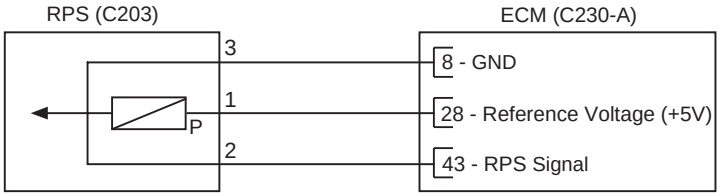

[CONNECTION INFORMATION]

Terminal	Connected to	Function
1	ECM C230-A (28)	Reference Voltage (+5V)
2	ECM C230-A (43)	RPS Signal
3	ECM C230-A (8)	Sensor Signal

[HARNESS CONNECTORS]

C203

RPS

C230-A

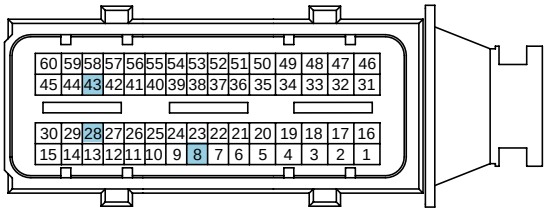

C230-K

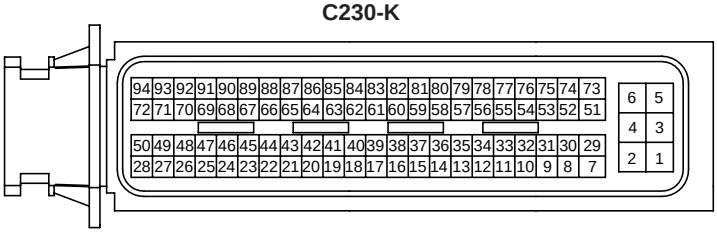

ECM

SCMFL6124L

SIGNAL WAVEFORM

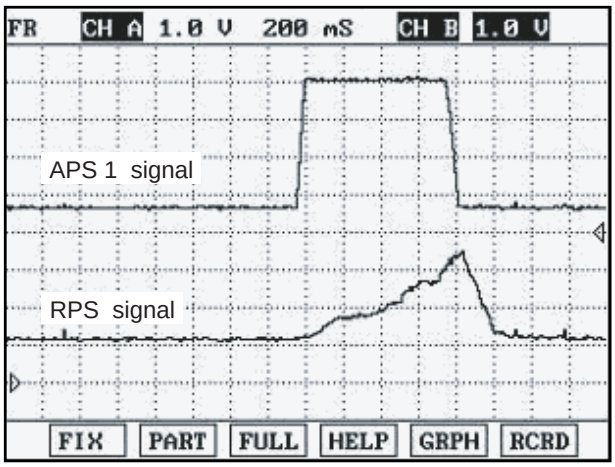

Rail Pressure Sensor (RPS) is to provide to the ECM the voltage signal corresponding to rail pressure.
The change in resistance is preportional to the rail pressure acting upon the diaphragm and rail pressure increases as load increases.

EFNF550A

REPLACEMENT E1CDDEAF

NOTE

After replacing a Rail Pressure Sensor (RPS), MUST proceed below procedure.

1. Turn ignition switch OFF.
2. Connect a scan tool to Data Link Connector (DLC).
3. Turn ignition switch ON.
4. Select "ENGINE (DIESEL)".

```
    1. HYUNDAI VEHICLE DIAGNOSIS ▼
  MODEL  : SANTAFE(CM)06-

    01. ENGINE(GASOLINE)
    02. ENGINE(DIESEL)
    03. AUTOMATIC TRANSAXLE
    04. ABS/ESP
    05. SRS-AIRBAG
    06. ELEC.POWER STEERING
    07. FULL AUTO AIR/CON.
    08. BODY CONTROL MODULE
```

SCMFL6114L

5. Select "COMPONET CHANGE ROUTNE"

```
    1. HYUNDAI VEHICLE DIAGNOSIS ▲
  MODEL  : SANTAFE(CM)06-
  SYSTEM : ENGINE(DIESEL)
           EURO-4 VGT(KWP)
    04. ACTUATION TEST
    05. SIMU-SCAN
    06. IDENTIFICATION CHECK
    07. ENGINE TEST FUNCTION
    08. CPF SERVICE REGENERATION
    09. COMPONENT CHANGE ROUTINE
    10. INJECTOR SPECIFIC DATA
    11. DATA SETUP(UNIT CONV.)
```

SCMFL6115L

6. Select "RAIL PRESSURE SENSOR CHANGE".

```
    1.9 . COMPONENT CHANGE ROUTINE
  MODEL  : SANTAFE(CM)06-
  SYSTEM : ENGINE(DIESEL)
           EURO-4 VGT(KWP)
    01. ECU CHANGE
    02. LAMBDA SENSOR CHANGE
    03. RAIL PRESSURE SENSOR CHANGE
    04. AIR FLOW SENSOR CHANGE
    05. CPF CHANGE
    06. D/PRESSURE SENSOR CHANGE
    07. SWIRL CONTROL VALVE CHANGE
```

SCMFL6126L

7. Press "ENTER" key.

1.9. COMPONENT CHANGE ROUTINE

RAIL PRESSURE SENSOR CHANG(RPS)

IN THIS MODE, CAN SET THE FMA (FUEL MEAN ADAPTATION) VALUES AND ZERO SET THE ADAPTATION TIME FOR THE CHANGED RAIL PRESSURE SENSOR.

PRESS [ENTER] KEY

1.9. COMPONENT CHANGE ROUTINE

RAIL PRESSURE SENSOR CHANG(RPS)

IN THIS MODE, CAN SET THE FMA (FUEL MEAN ADAPTATION) VALUES AND ZERO SET THE ADAPTATION TIME FOR THE CHANGED RAIL PRESSURE SENSOR.

IG KEY ON BEFORE IG KEY

OFF FOR 10SEC

SCMFL6149L

8. Wait 10 seconds with IG ON.

9. Turn ignition switch off.

FUEL TEMPERATURE SENSOR (FTS)

INSPECTION E2D9DBE8

FUNCTION AND OPERATION PRINCIPLE

Fuel Temperature Sensor(FTS) is installed in fuel supplying line and senses the termperature of fuel supplied to high pressure pump. Fuel temperature is limmited to protect fuel such as high pressure pump and injectors from damages due to rapid deterioration by vapor-lock which can occur at high temperature or destruction of oil membrance.

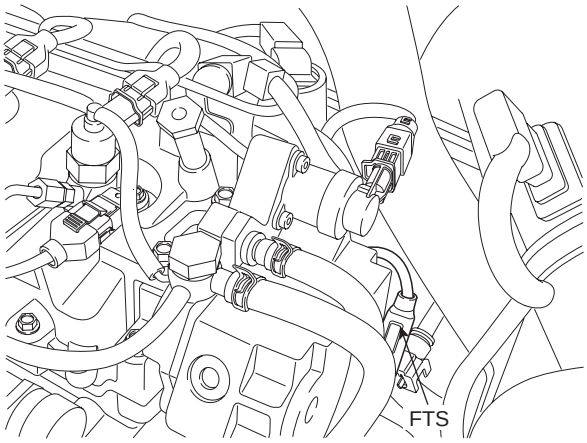

EFQG051A

SPECIFICATION

Temperature [℃(˚F)]	Resistance (kΩ)
-30 (-22)	27.00
-20 (-4)	15.67
-10 (14)	9.45
0 (32)	5.89
20 (68)	2.27 ~ 2.73

Temperature [℃(˚F)]	Resistance (kΩ)
40 (104)	1.17
50 (122)	0.83
60 (140)	0.60
70 (158)	0.43
80 (176)	0.30 ~ 0.32

EFQG052A

CIRCUIT DIAGRAM

[CIRCUIT DIAGRAM]

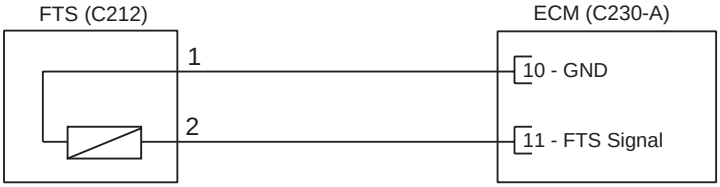

[CONNECTION INFORMATION]

Terminal	Connected to	Function
1	ECM C230-A (10)	Sensor ground
2	ECM C230-A (11)	FTS Signal

[HARNESS CONNECTORS]

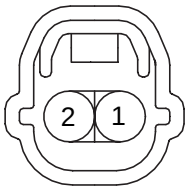

C212

FTS

C230-A

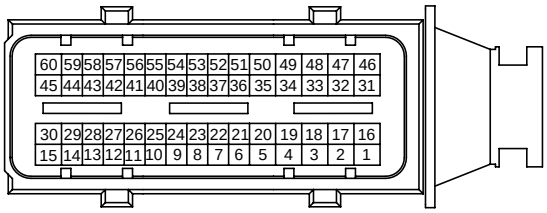

C230-K

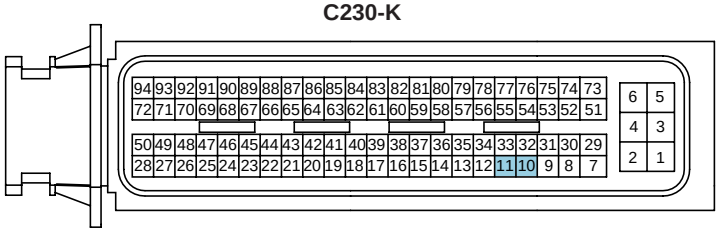

ECM

SCMFL6127L

SIGNAL WAVEFORM

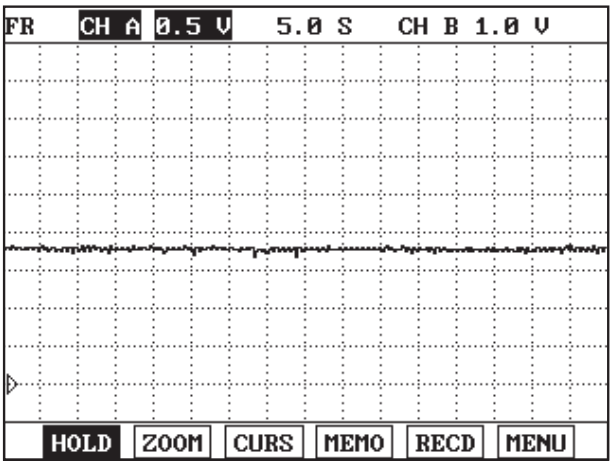

This illustration shows the waveform of fuel temperature sensor at 50℃.
The higher fuel temperature rises, the lower signal voltage becomes.

LGJF502I

COMPONENT INSPECTION

1. Turn ignition switch OFF.
2. Disconnect the fuel temperature sensor connector.
3. Measure resistance between sensor signal terminal and ground terminal.

Specification: Refer to "SPECIFICATION".

FUEL PRESSURE REGULATOR VALVE

INSPECTION E58A5218

FUNCTION AND OPERATION PRINCIPLE

The Fuel Pressure Regulator Valve and the Rail Pressure Regulator Valve are installed on high pressure pump and common rail respectively. These valves control fuel inlet (feed) from fuel tank via fuel filter and outlet (return) to fuel tank of high pressure fuel circuit.
This system is called "Dual Fuel Pressure Control System" and can precisely and quickly control the fuel pressure in accordance with various engine conditions by controlling the fuel inlet and outlet simultaneously.

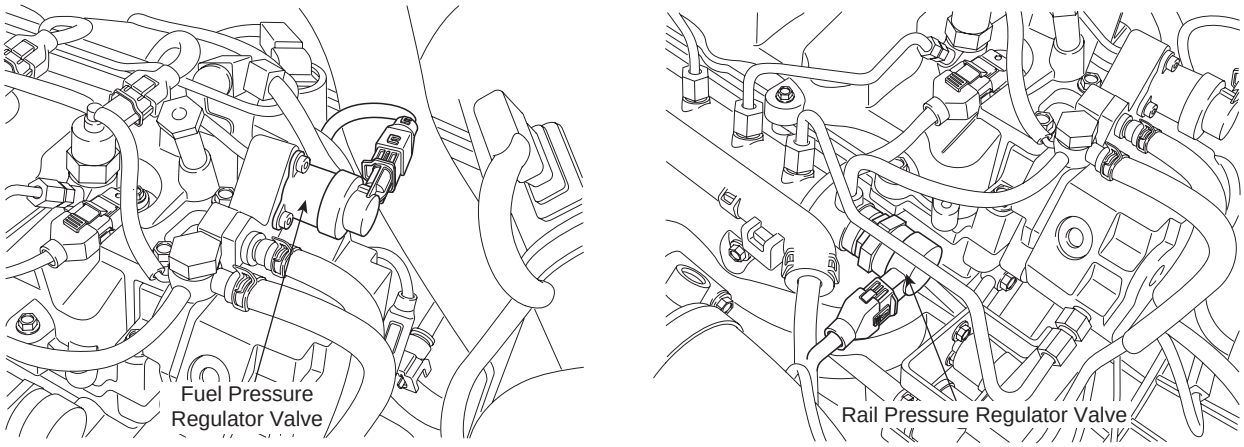

EFQG114A

SPECIFICATION

Items	Specification
Coil Resistance (Ω)	2.9 ~ 3.15Ω [20℃(68℉)]

CIRCUIT DIAGRAM

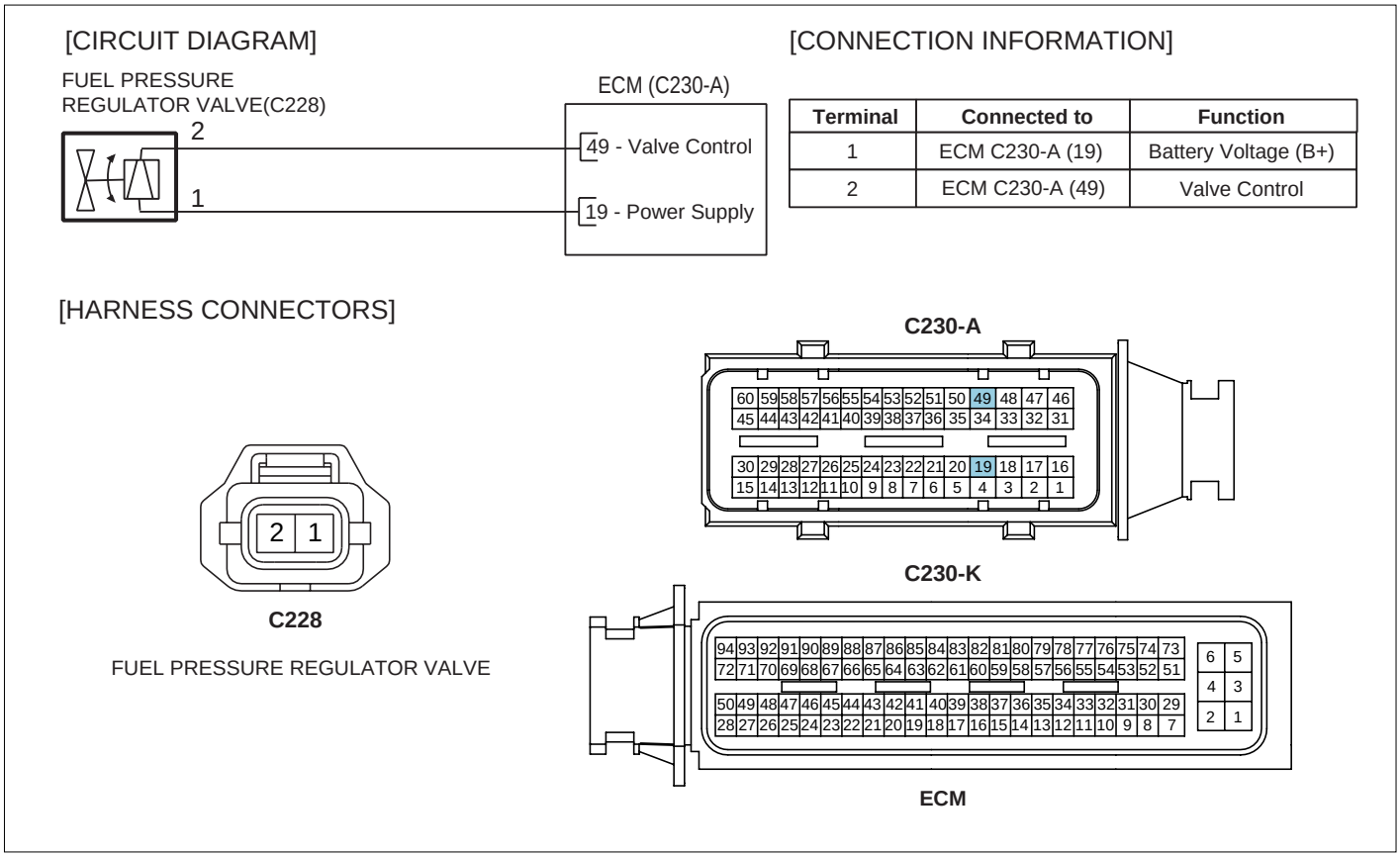

Terminal	Connected to	Function
1	ECM C230-A (19)	Battery Voltage (B+)
2	ECM C230-A (49)	Valve Control

SCMFL6128L

SIGNAL WAVEFORM

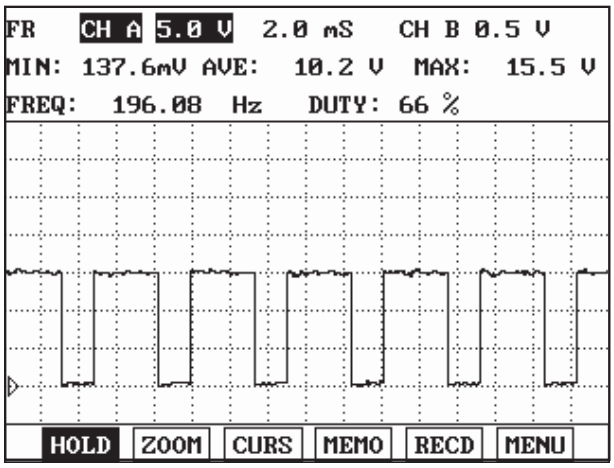

Fig.1

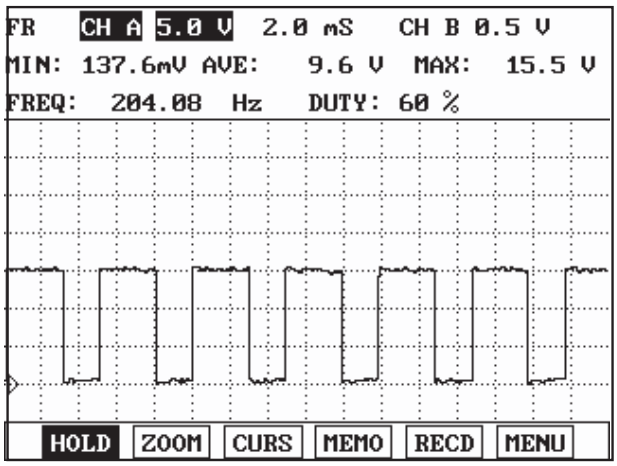

Fig.2

Fig.1) Waveform of fuel pressure regulator valve at idle. It shows approx. 34% duty((-)duty).
Fig.2) Waveform of fuel pressure regulator valve as accelerating. approx. 38% duty((-)duty) is outputted as engine load increases.

EFQG396A

COMPONENT INSPECTION

1. Turn ignition switch OFF.
2. Disconnect the fuel pressure regulator valve connector.
3. Measure resistance between terminal 1 and 2 of the valve.

Specification: Refer to "SPECIFICATION".

RAIL PRESSURE REGULATOR VALVE

INSPECTION EE7E3738

FUNCTION AND OPERATION PRINCIPLE

The Fuel Pressure Regulator Valve and the Rail Pressure Regulator Valve are installed on high pressure pump and common rail respectively. These valves control fuel inlet (feed) from fuel tank via fuel filter and outlet (return) to fuel tank of high pressure fuel circuit.
This system is called "Dual Fuel Pressure Control System" and can precisely and quickly control the fuel pressure in accordance with various engine conditions by controlling the fuel inlet and outlet simultaneously.

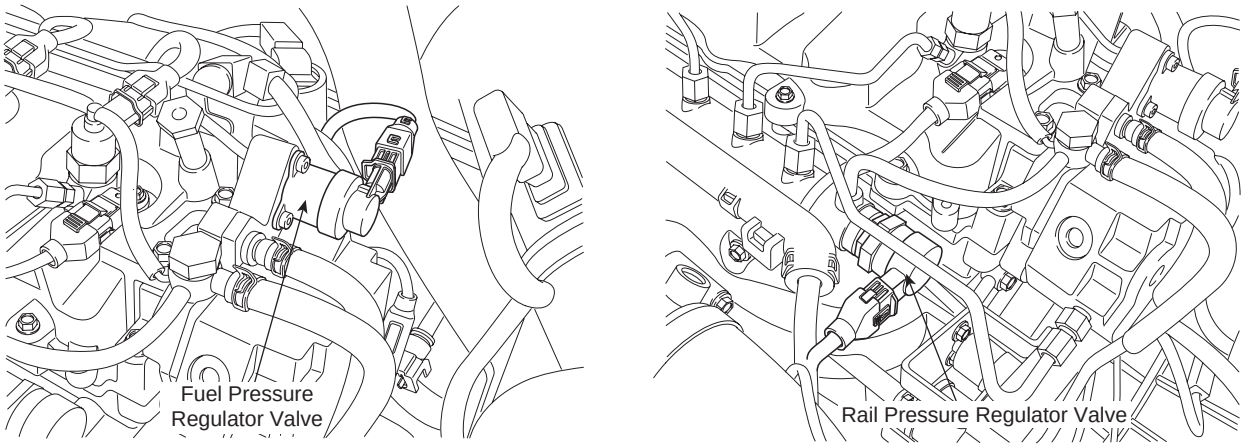

EFQG114A

SPECIFICATION

Items	Specification
Coil Resistance (Ω)	3.42 ~ 3.78Ω [20℃(68°F)]

CIRCUIT DIAGRAM

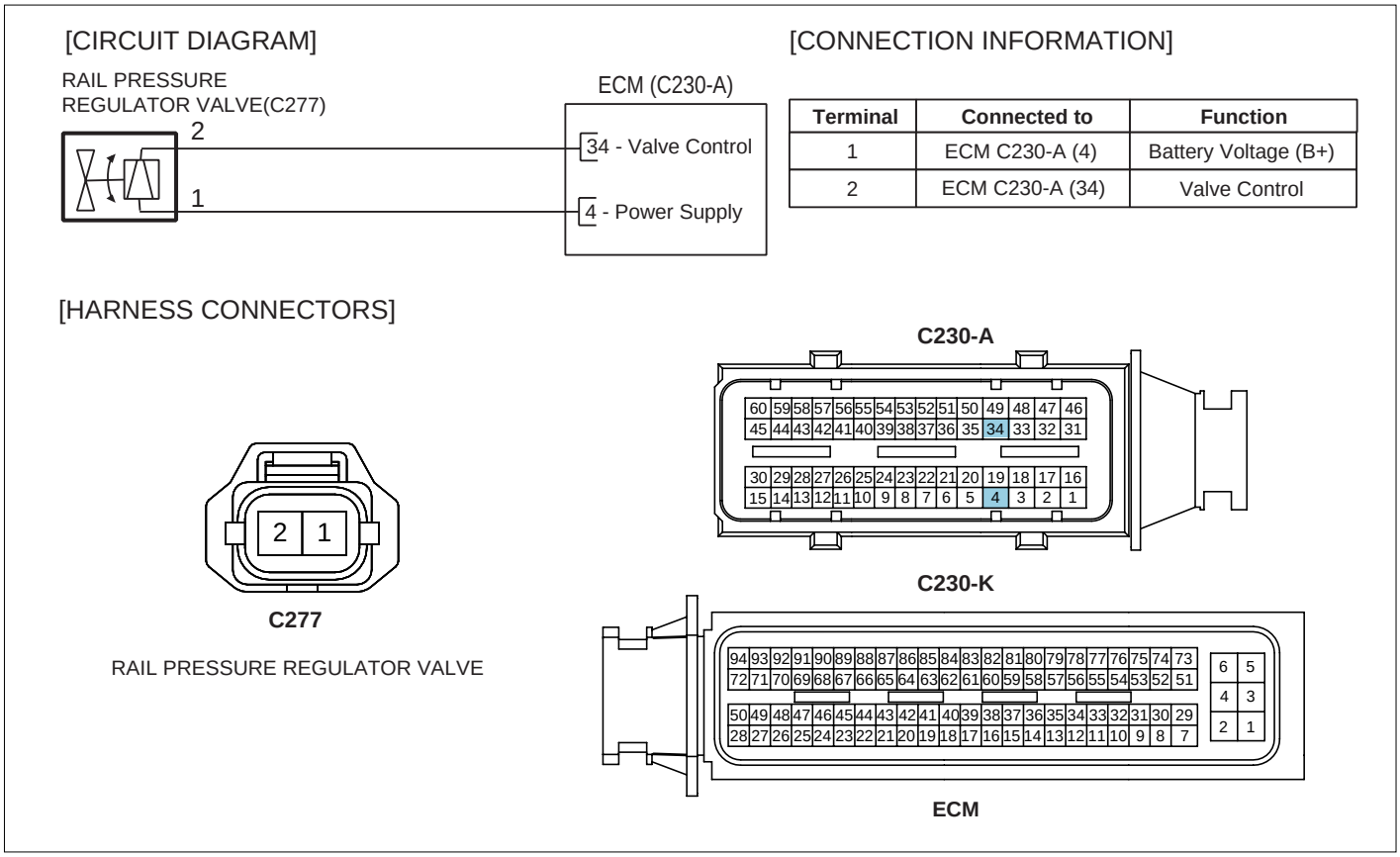

Terminal	Connected to	Function
1	ECM C230-A (4)	Battery Voltage (B+)
2	ECM C230-A (34)	Valve Control

SCMFL6129L

SIGNAL WAVEFORM

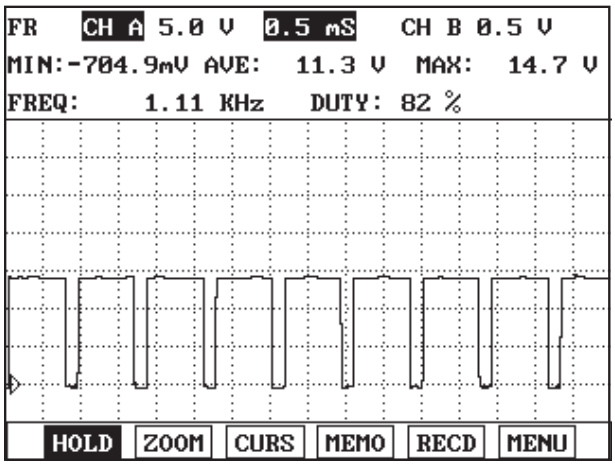

Fig.1

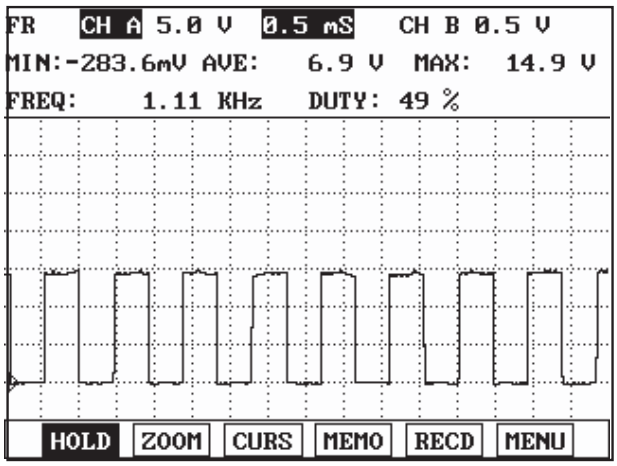

Fig.2

Fig.1) Waveform of rail pressure regulator valve at idle. It shows approx. 17% duty((-) duty).
Fig.2) Waveform of rail pressure regulator valve as accelerating. Approx. 50% duty is outputted as engine load increases.
(When rail pressure increases as accelerating, rail pressure regulator valve duty(current) rises.)

EFQG377A

COMPONENT INSPECTION

1. Turn ignition switch OFF.
2. Disconnect the rail pressure regulator valve connector.
3. Measure resistance between terminal 1 and 2 of the valve.

Specification: Refer to "SPECIFICATION".

ELECTRIC EGR CONTROL VALVE

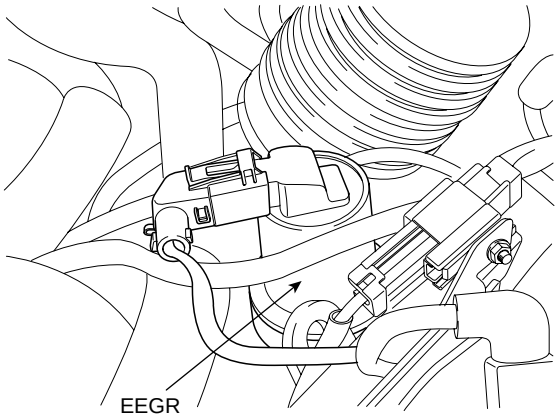

SCMFL6006D

INSPECTION E0CD3D42

FUNCTION AND OPERATION PRINCIPLE

The Exhaust Gas Recirculation (EGR) system is used to add the exhaust gas to intake air in order to reduce an excess of air and the temperature in the combustion chamber. The Electric EGR control valve is controlled by ECM's duty control signal depending on engine load and the need of intake air and is operated by solenoid valve not vacuum valve.

SPECIFICATION

Items	Specification
Coil Resistance (Ω)	7.3 ~ 8.3Ω [20℃(68°F)]

CIRCUIT DIAGRAM

[CIRCUIT DIAGRAM]

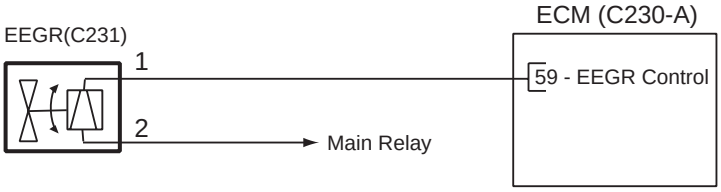

[CONNECTION INFORMATION]

Terminal	Connected to	Function
2	Main Relay	Battery Voltage (B+)
1	ECM C230-A (59)	EEGR Control

[HARNESS CONNECTORS]

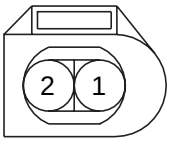

C231

EEGR

C230-A

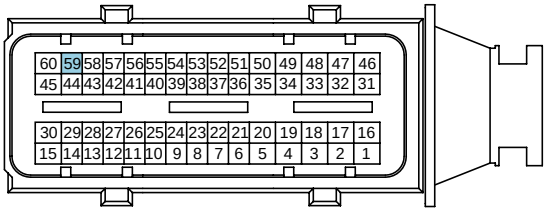

C230-K

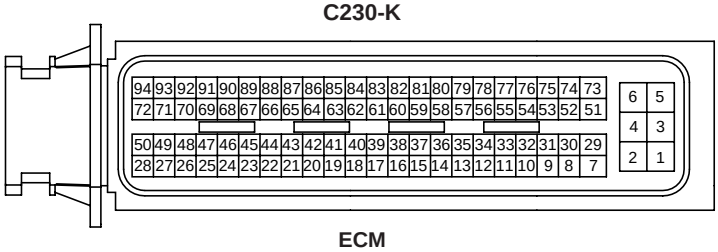

ECM

SCMFL6130L

SIGNAL WAVEFORM

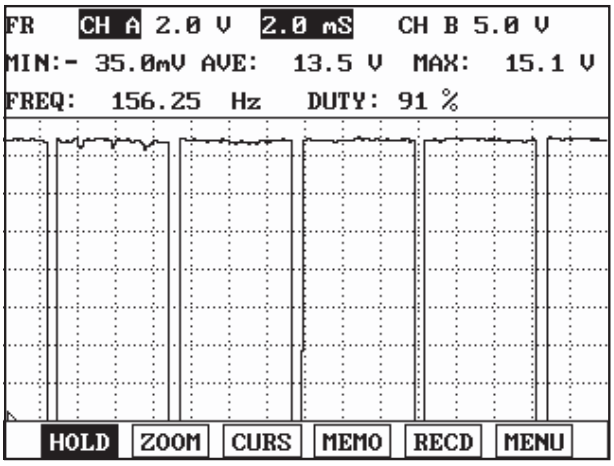

Fig.1

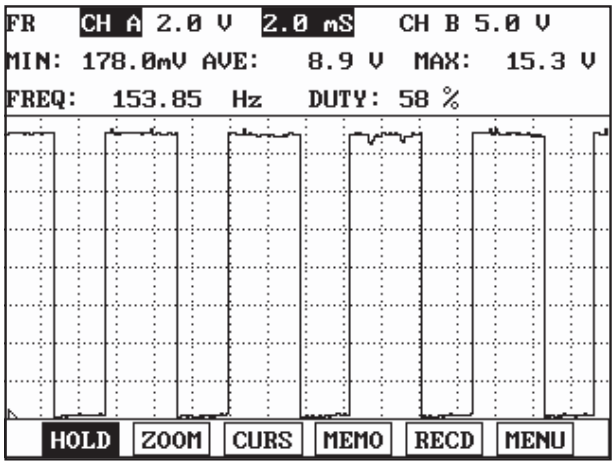

Fig.2

Fig.1) Approx. 10% duty((-)duty) signal waveform of EEGR actuator (with EEGR valve closed)
Fig.2) Approx. 40% duty((-)duty) signal waveform of EEGR actuator(with EEGR valve opened)

EFQG414A

COMPONENT INSPECTION

1. Turn ignition switch OFF.
2. Disconnect the electric EGR control valve connector.
3. Measure resistance between terminal 1 and 2 of the valve.

Specification: Refer to "SPECIFICATION".

THROTTLE CONTROL ACTUATOR

INSPECTION EE647E4E

FUNCTION AND OPERATION PRINCIPLE

The Throttle Control Actuator is mounted on throttle body of diesel engine and controls throttle valve according to PWM (Pulse With Modulation) signal from ECM.
It consists of;

- a DC motor which actuates the throttle valve,
- a 2-step gear (transmission ratio = 1:40) which is located in between the DC motor and the throttle valve and increases torque of the DC motor,
- a position sensor which is a hall-effect sensor and detects status of the throttle valve,
- an electric control unit which is a micro-controller and drives the DC motor by the PWM (Pulse With Modulation) signal from the ECM,
- and a reset spring which resets the de-energized throttle valve to its open position.

Its function is described below:

1. Anti-judder function: When engine is shut off, the ECM can prevent intake air from entering to intake manifold by fully closing the throttle valve for 1.5 seconds (95% < Duty < 97%) to reduce engine vibration.
2. Intake air control for EGR: When exhaust gas pressure is equal to or lower than intake air pressure (for example, when low engine speed), the exhaust gas would not enter to the intake manifold. At this time, the ECM partially closes the throttle valve (5% < Duty < 94%) to reduce the intake air quantity. The intake air pressure thus is lower than the exhaust gas pressure.
3. Exhaust gas temperature control for CPF regeneration (Vehicle equipped with CPF System) : When the Catalyzed Particulate Filter (CPF) is need to regenerate, the ECM partially closes the throttle valve (5% < Duty < 94%) to reduce the intake air quantity. At this time, the air-fuel ratio would become rich and the exhaust gas temperature would be high enough to burn the soot inside the CPF.

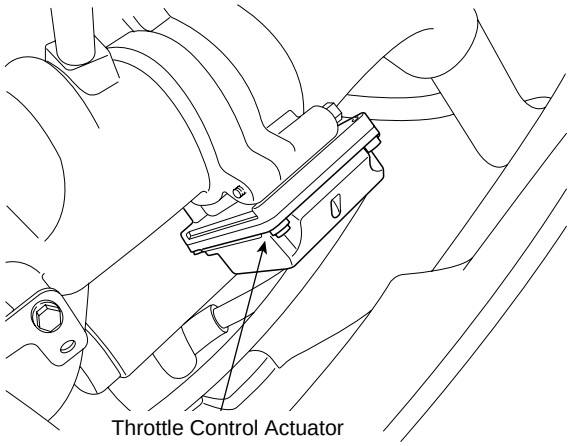

EFQG021A

SPECIFICATION

Duty (%)	Throttle Valve Position
5	Open
5 ~ 94	Normal operation (Partially open in proportion to duty value)
94	Closed
94 ~ 95	Maintaining the last valid position
95 ~ 97	Fully closed

CIRCUIT DIAGRAM

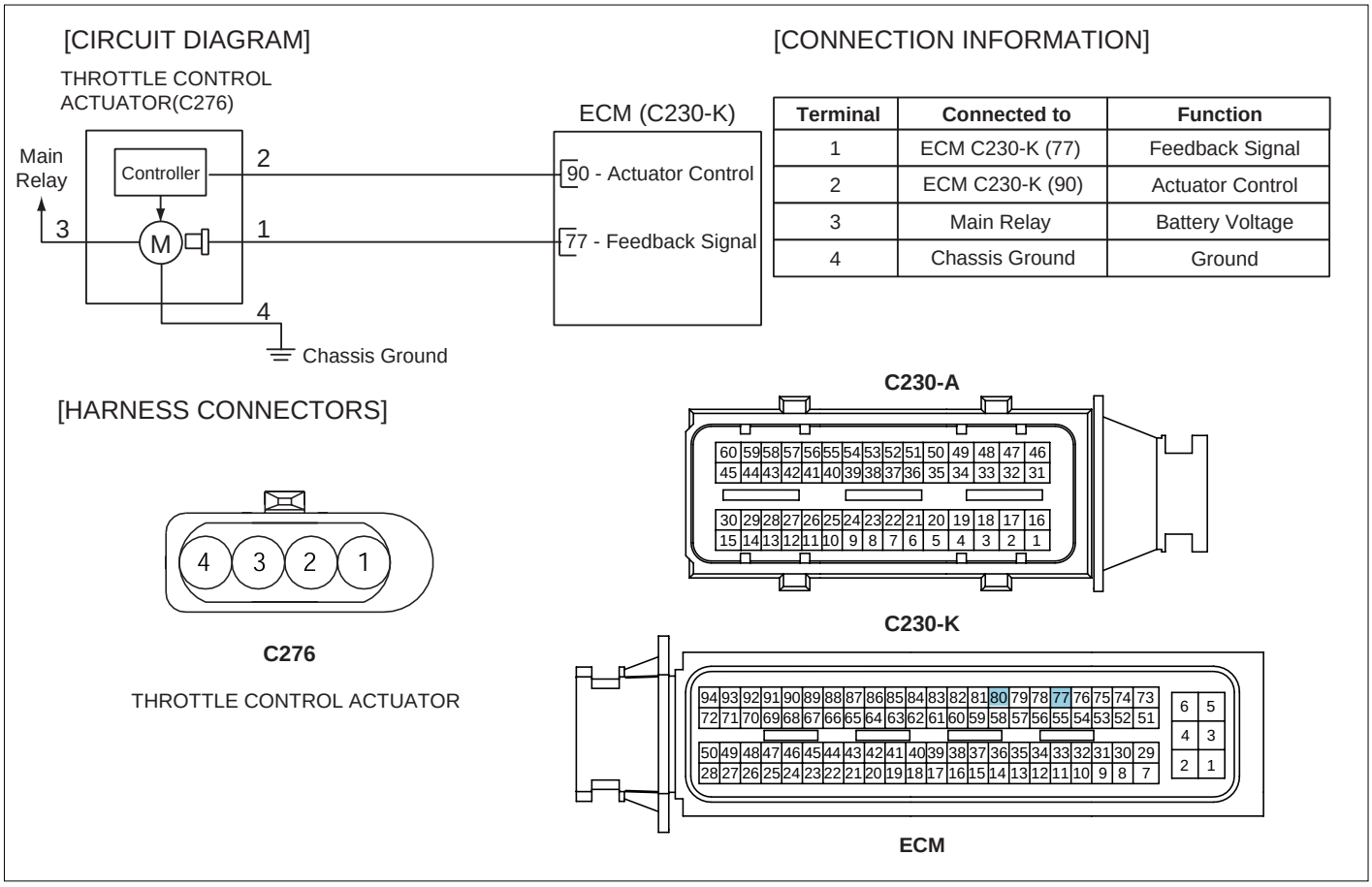

Terminal	Connected to	Function
1	ECM C230-K (77)	Feedback Signal
2	ECM C230-K (90)	Actuator Control
3	Main Relay	Battery Voltage
4	Chassis Ground	Ground

SCMFL6131L

SIGNAL WAVEFORM

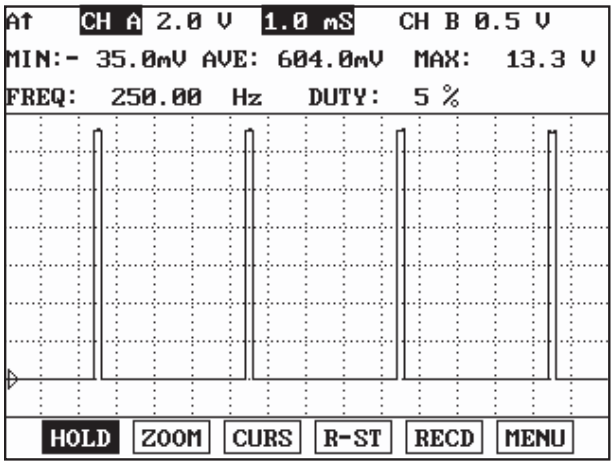

Fig.1

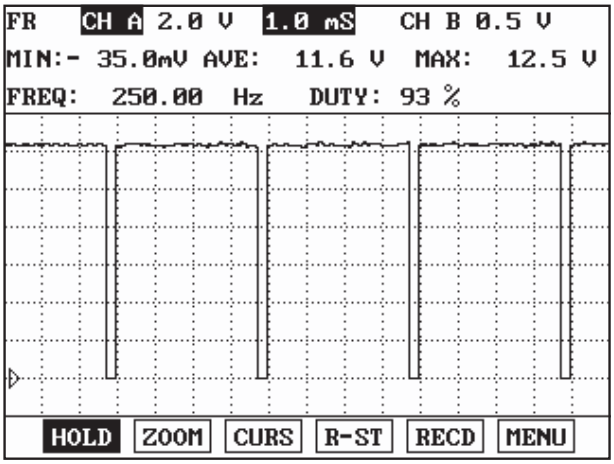

Fig.2

Fig.1) Waveform of Throttle control actuator at wide open(at idle) : At IG KEY "ON", ENGINE "ON", 5% duty is outputted continuously.

Fig.2) Waveform of Throttle control actuator at closed position : At IG KEY "OFF", 93% duty is outputted for about 1 sec.

EFQG529A

VARIABLE SWIRL CONTROL ACTUATOR

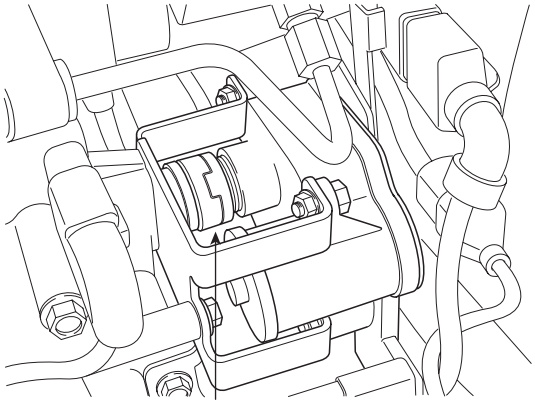

Variable Swirl Control Actuater

SCMFL6104L

INSPECTION EF65DC23

FUNCTION AND OPERATION PRINCIPLE

Variable Swirl Control Actuator consists of DC motor and position sensor which detects the position of the swirl valve.
At idle or below 3000rpm, the swirl valve is closed. This swirl effect increases air flow rate.

	Low and Middle Load	High Load
Engine speed	Below 3000rpm	Above 3000rpm
Valve operation	CLOSE	OPEN
Description illustration	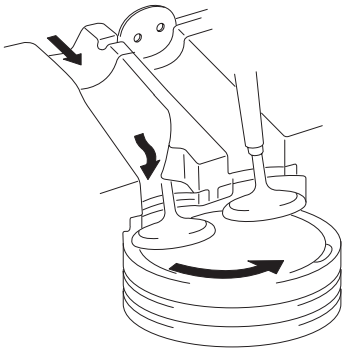 KGNF302A	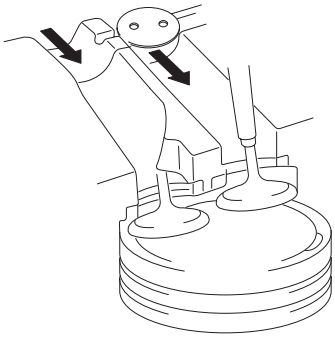 KGNF302B
Fail-safe	Fully opened	

NOTE

To prevent the swirl valve and the shaft from being stuck by foreign material and to learn max opening and closing position of the valve, the ECM fully opens and closes the valve twice when engine is being stopped.

SPECIFICATION

Motor

Items	Specification
Coil Resistance (Ω)	3.4 ~ 4.4Ω [20℃(68°F)]

Position Sensor

Items	Specification
Coil Resistance (Ω)	3.44 ~ 5.16Ω [20℃(68°F)]

EFQG058A

CIRCUIT DIAGRAM

[CIRCUIT DIAGRAM]

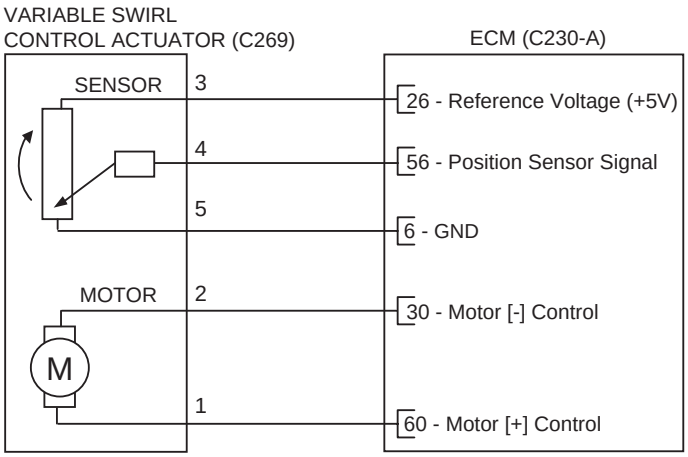

[CONNECTION INFORMATION]

Terminal	Connected to	Function
1	ECM C230-A (60)	Motor [+] Control
2	ECM C230-A (30)	Motor [-] Control
3	ECM C230-A (26)	Reference Voltage (+5V)
4	ECM C230-A (56)	Position Signal
5	ECM C230-A (6)	Sensor Ground

[HARNESS CONNECTORS]

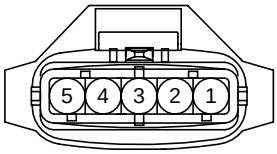

C269

VARIABLE SWIRL CONTROL ACTUATOR

C230-A

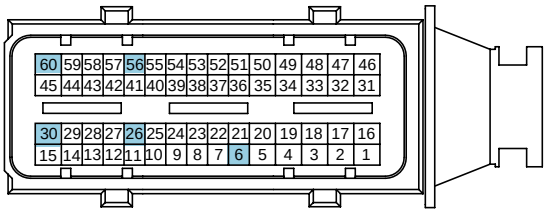

C230-K

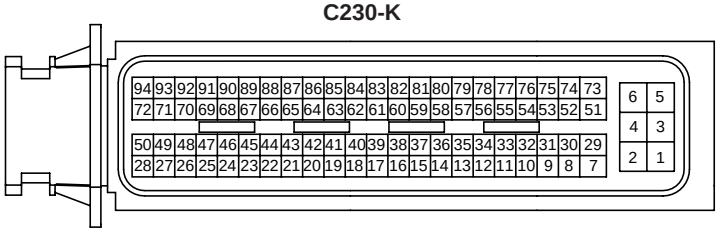

ECM

SCMFL6132L

SIGNAL WAVEFORM

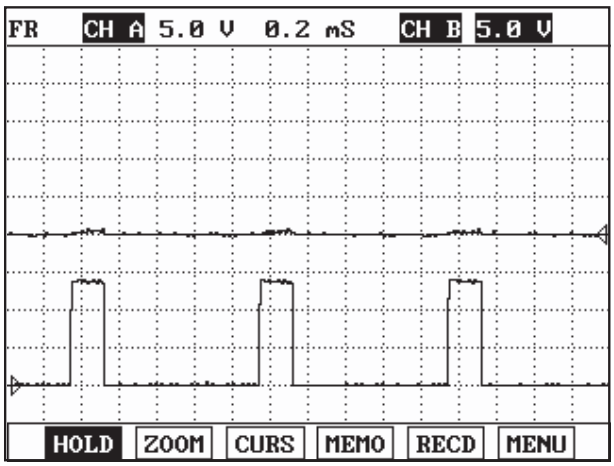

Fig.1

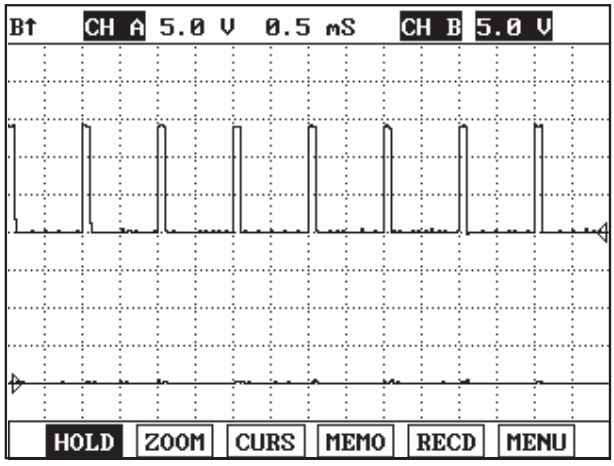

Fig.2

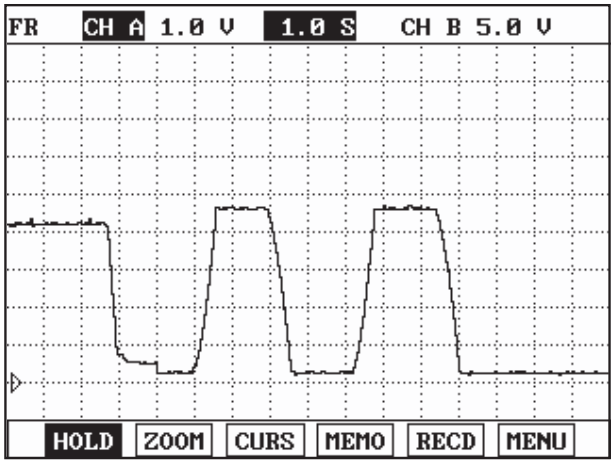

Fig.3

Fig.1) Waveform when variable swirl valve closed at idle. Terminal 5 is (+) and 4 is (-).
Fig. 2) Waveform when variable swirl valve opened at above 3000RPM. Terminal 5 is (-) and 4 is (+).
Fig. 3) Waveform of variable swirl control actuator motor position sensor at the point of turning engine OFF.
4.3V at swirl valve closed and 0.3V at swirl valve opened. Swirl valve is opened and closed twice at engine "OFF".

EFQG512A

COMPONENT INSPECTION

1. Turn ignition switch OFF.
2. Disconnect the electric EGR control valve connector.
3. Check that swirl valve is stuck by foreign material.
4. Measure resistance between motor (+) and (-) control terminals.

Specification: Refer to "SPECIFICATION".

5. Measure resistance between voltage supply terminal and ground terminal of position sensor.

Specification: Refer to "SPECIFICATION".

REPLACEMENT EB91BC1B

NOTE

After replacing a Mass Air Flow Sensor (MAFS) or Intake Air Temperature Sensor (IATS)#1, MUST proceed below procedure.

1. Turn ignition switch OFF.
2. Connect a scan tool to Data Link Connector (DLC).
3. Turn ignition switch ON.
4. Select "ENGINE (DIESEL)".

```
1. HYUNDAI VEHICLE DIAGNOSIS ▼
MODEL  : SANTAFE(CM)06-

  01. ENGINE(GASOLINE)
  02. ENGINE(DIESEL)
  03. AUTOMATIC TRANSAXLE
  04. ABS/ESP
  05. SRS-AIRBAG
  06. ELEC.POWER STEERING
  07. FULL AUTO AIR/CON.
  08. BODY CONTROL MODULE
```

SCMFL6114L

5. Select "COMPONET CHANGE ROUTNE"

```
1. HYUNDAI VEHICLE DIAGNOSIS ▲
MODEL  : SANTAFE(CM)06-
SYSTEM : ENGINE(DIESEL)
         EURO-4 VGT(KWP)
  04. ACTUATION TEST
  05. SIMU-SCAN
  06. IDENTIFICATION CHECK
  07. ENGINE TEST FUNCTION
  08. CPF SERVICE REGENERATION
  09. COMPONENT CHANGE ROUTINE
  10. INJECTOR SPECIFIC DATA
  11. DATA SETUP(UNIT CONV.)
```

SCMFL6115L

6. Select "SWIRL CONTROL VALVE CHANGE".

```
1.9 . COMPONENT CHANGE ROUTINE
MODEL  : SANTAFE(CM)06-
SYSTEM : ENGINE(DIESEL)
         EURO-4 VGT(KWP)
  01. ECU CHANGE
  02. LAMBDA SENSOR CHANGE
  03. RAIL PRESSURE SENSOR CHANGE
  04. AIR FLOW SENSOR CHANGE
  05. CPF CHANGE
  06. D/PRESSURE SENSOR CHANGE
  07. SWIRL CONTROL VALVE CHANGE
```

SCMFL6133L

7. Press "ENTER" key.

```
1.9. COMPONENT CHANGE ROUTINE
SWIRL CONTROL VALVE CHANGE(VSA)

IN THIS MODE, CAN INITIATE OFFSET
LEARNING FOR NEW VARIABLE SWIRL
ACTUATOR.

PRESS [ENTER] KEY
```

```
1.9. COMPONENT CHANGE ROUTINE
SWIRL CONTROL VALVE CHANGE(VSA)

IN THIS MODE, CAN INITIATE OFFSET
IG KEY ON BEFORE IG KEY
OFF FOR 10SEC
```

SCMFL6134L

8. Wait 10 seconds with IG ON.
9. Turn ignition switch off.

WATER SENSOR

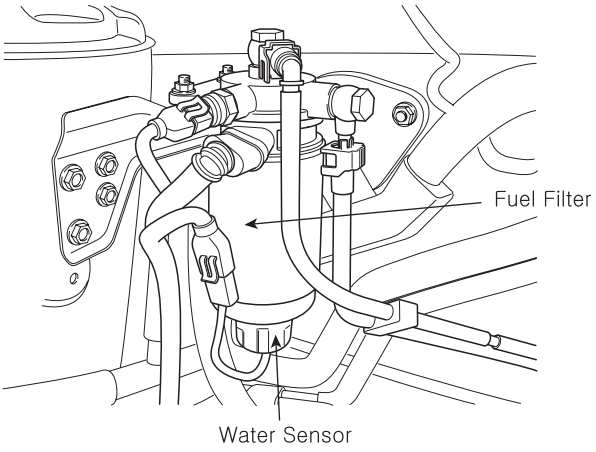

SCMFL6148L

INSPECTION E254D4A2

FUNCTION AND OPERATION PRINCIPLE

Water Sensor is installed on bottom end of fuel filter and detects presence of water in fuel. When the water level reaches the lower level of the upper electrode, the "WATER" lamp in cluster should flash. If the water level decreases below the lower electrode, the lamp should turn off.

NOTE

Without presence of water, the lamp should flash for 2 seconds and turn off afterward in order that this system has normal condition.

SPECIFICATION

Items	Specification
Warning Level of Water Presence (cc)	40 ~ 60

CIRCUIT DIAGRAM

[CIRCUIT DIAGRAM]

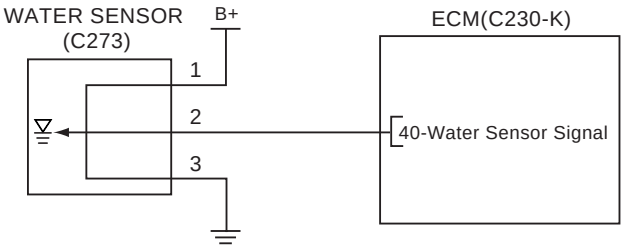

[CONNECTION INFORMATION]

Terminal	Connected to	Function
1	Main Relay	Battery voltage(B+)
2	ECM C230-K (40)	Sensor Signal
3	Chassis ground	Sensor ground

[HARNESS CONNECTOR]

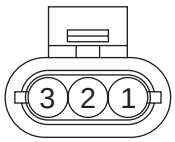

C273
WATER SENSOR

C230-A

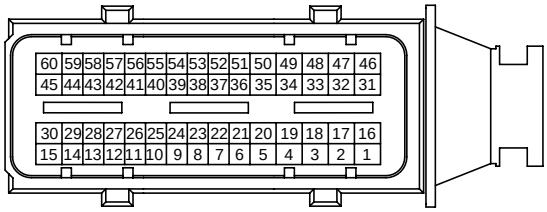

C230-K

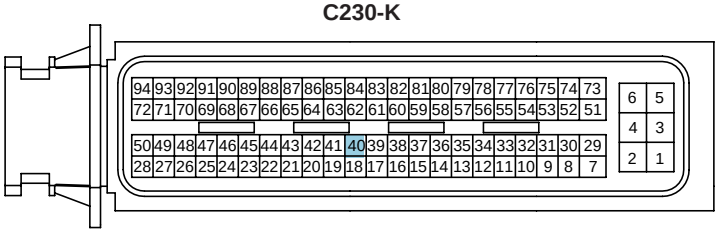

ECM

SCMFL6135L

VGT CONTROL SOLENOID VALVE

INSPECTION E5398CFD

FUNCTION AND OPERATION PRINCIPLE

Variable Geometry Turbo-charger (VGT) is used to charge additional air into combustion chamber for improvement of combustion efficiency.
ECM controls the VGT with controlling duty of the VGT control solenoid valve according to engine load.

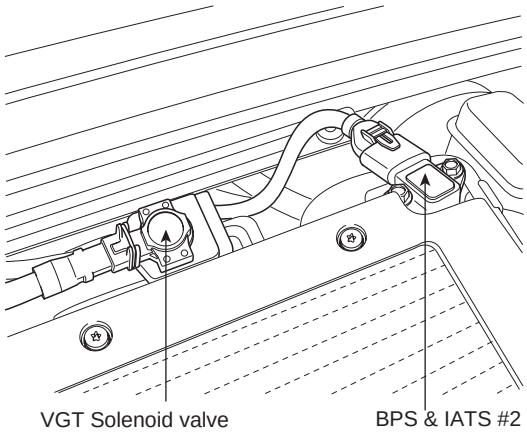

SCMFL6146L

SPECIFICATION

Items	Specification
Coil Resistance (Ω)	14.7 ~ 16.1Ω [20℃(68°F)]

CIRCUIT DIAGRAM

[CIRCUIT DIAGRAM]

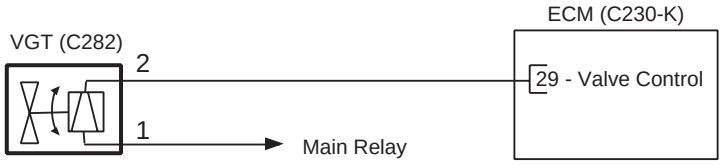

[CONNECTION INFORMATION]

Terminal	Connected to	Function
1	Main Relay	Battery Voltage (B+)
2	ECM C230-K (29)	Valve Control

[HARNESS CONNECTORS]

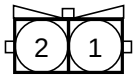

C282

VGT CONTROL SOLENOID VALVE

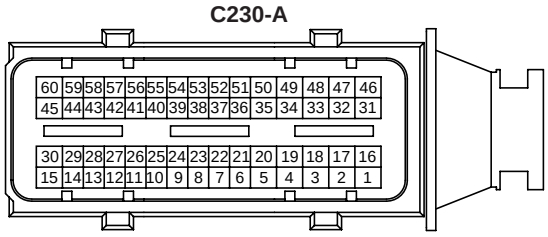

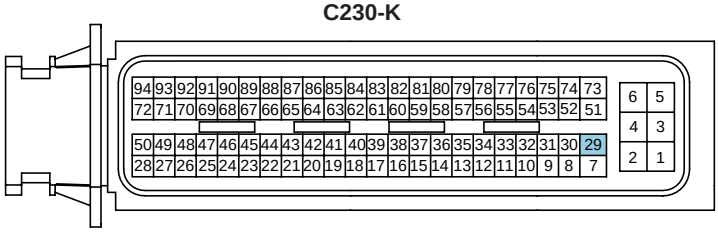

SCMFL6136L

SIGNAL WAVEFORM

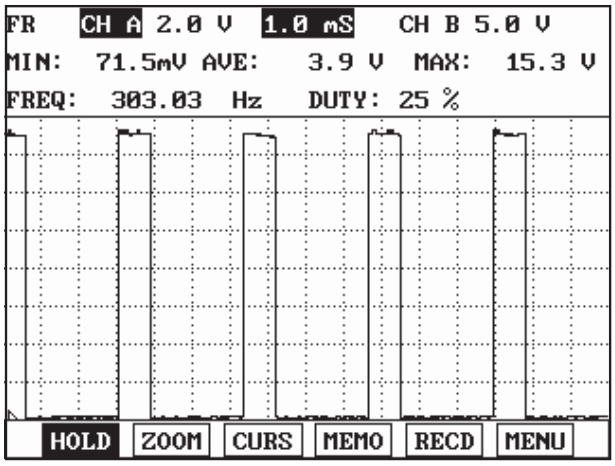

Fig.1

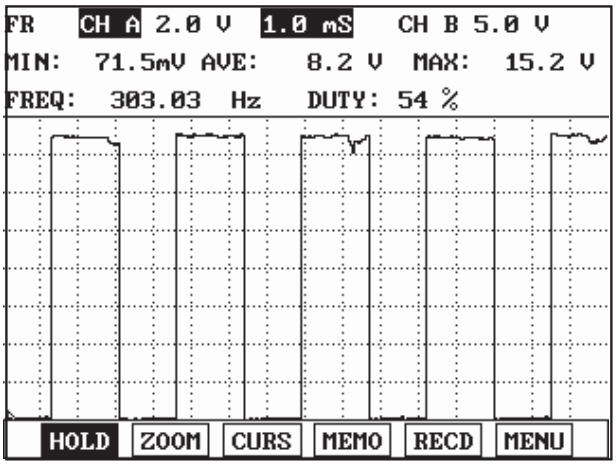

Fig.2

Fig.1) VGT actuator output waveform at 76% duty((-)duty). Duty decreases as boost pressure increases.
Fig.2) VGT actuator duty((-)duty) decreases as accelerating.

EFQG369A

COMPONENT INSPECTION

1. Turn ignition switch OFF.
2. Disconnect the VGT control solenoid valve connector.
3. Measure resistance between terminal 1 and 2 of the valve.

Specification: Refer to "SPECIFICATION".

DTC TROUBLESHOOTING PROCEDURES

INSPECTION CHART FOR DIAGNOSTIC TROUBLE CODES (DTC) EFBBBD88

DTC	DESCRIPTION	MIL	PAGE
P0047	VGT Vacuum Modulator Circuit Low	●	FL-91
P0048	VGT Vacuum Modulator Circuit High	●	FL-98
P0069	Boost Pressure Sensor Circuit Malfunction	▲	FL-102
P0087	Rail Pressure Monitoring-Minimum Pressure at Engine Speed Too Low	●	FL-107
P0088	Rail Pressure Monitoring-Maximum Pressure Exceeded	●	FL-112
P0089	Rail Pressure Regulator Valve Circuit Over Current	●	FL-113
P0091	Rail Pressure Regulator Valve Circuit Low	●	FL-120
P0092	Rail Pressure Regulator Valve Circuit High	●	FL-127
P0097	Intake Air Temperature Sensor 2 Circuit Low Input	▲	FL-130
P0098	Intake Air Temperature Sensor 2 Circuit High Input	▲	FL-136
P0101	Mass or Volume Air Flow Circuit Range/Performance	●	FL-140
P0102	Mass or Volume Air Flow Circuit Low Input	●	FL-148
P0103	Mass or Volume Air Flow Circuit high Input	●	FL-152
P0107	Atmospheric Pressure Circuit Low Input	●	FL-156
P0108	Atmospheric Pressure Circuit High Input	●	FL-159
P0112	Intake Air Temperature Sensor 1 Circuit Low Input	▲	FL-161
P0113	Intake Air Temperature Sensor 1 Circuit High Input	▲	FL-166
P0117	Engine Coolant Temperature Circuit Low Input	●	FL-170
P0118	Engine Coolant Temperature Circuit High Input	●	FL-176
P0182	Fuel Temperature Sensor A Circuit Low Input	▲	FL-182
P0183	Fuel Temperature Sensor A Circuit High Input	▲	FL-186
P0192	Fuel Rail Pressure Sensor Low input	●	FL-190
P0193	Fuel Rail Pressure Sensor High Input	●	FL-197
P0201	Cylinder 1-Injector Circuit/Open	●	FL-201
P0202	Cylinder 2-Injector Circuit/Open	●	FL-201
P0203	Cylinder 3-Injector Circuit/Open	●	FL-201
P0204	Cylinder 4-Injector Circuit/Open	●	FL-201
P0231	Electric Fuel Pump Relay-Open or Short Circuit	▲	FL-207
P0232	Electric Fuel Pump Relay-Short Circuit	▲	FL-213

DTC	DESCRIPTION	MIL	PAGE
P0234	Turbo/Super Charger Overboost Condition	●	FL-217
P0237	Boost Pressure Sensor Circuit Low Input	●	FL-222
P0238	Boost Pressure Sensor Circuit High Input	●	FL-226
P0252	Fuel Pressure Regulator Valve Circuit Over Current	●	FL-232
P0253	Fuel Pressure Regulator Valve Circuit Low	●	FL-238
P0254	Fuel Pressure Regulator Valve Circuit High	●	FL-241
P0262	Cylinder 1-Injector Circuit High	●	FL-245
P0265	Cylinder 2-Injector Circuit High	●	FL-245
P0268	Cylinder 3-Injector Circuit High	●	FL-245
P0271	Cylinder 4-Injector Circuit High	●	FL-245
P0299	Turbo/Super Charger Underboost Condition	●	FL-251
P0335	Crankshaft Position Sensor A Circuit	●	FL-254
P0336	Crankshaft Position Sensor A Circuit Range/Performance	●	FL-264
P0340	Camshaft Position Sensor A Circuit Malfunction (Bank 1 or Single Sensor)	●	FL-269
P0341	Camshaft Position Sensor A Circuit Range/Performance (Bank 1 or Single Sensor)	●	FL-276
P0381	Glow Indicator Lamp Circuit Malfunction	▲	FL-280
P0489	Exhaust Gas Recirculation Control Circuit Low Voltage	●	FL-285
P0490	Exhaust Gas Recirculation Control Circuit High Voltage	●	FL-292
P0501	Vehicle Speed Sensor A Range/Performance	▲	FL-295
P0504	Brake Pedal Position A/B Correlation	▲	FL-301
P0532	A/C Refrigerant Pressure Sensor "A" Circuit Low Input	▲	FL-307
P0533	A/C Refrigerant Pressure Sensor "A" Circuit High Input	▲	FL-314
P0562	System Voltage Low	▲	FL-318
P0563	System Voltage High	▲	FL-324
P0602	EEPROM-Programming Error	▲	FL-327
P0605	Internal Control Module Read Only Memory(ROM) Error	▲	FL-329
P0606	ECM/PCM Processor(ECM-SELF TEST Failed)	●	FL-331
P0611	Injector Circuit Malfunction (More than two injectors)	●	FL-334
P0642	Sensor Reference Voltage "A" Circuit Low	▲	FL-340
P0643	Sensor Reference Voltage "A" Circuit High	▲	FL-346
P0646	A/C Clutch Relay Control Circuit Low	▲	FL-349
P0647	A/C Clutch Relay Control Circuit High	▲	FL-355
P0650	Malfunction Indicator Lamp (MIL) Control Circuit	▲	FL-359

DTC	DESCRIPTION	MIL	PAGE
P0652	Sensor Reference Voltage "B" Circuit Low	●/▲	FL-363
P0653	Sensor Reference Voltage "B" Circuit High	●/▲	FL-370
P0670	Glow Relay Circuit Malfunction	▲	FL-374
P0685	ECM/PCM Power Relay Control Circuit /Open	▲	FL-381
P0698	Sensor Reference Voltage "C" Circuit Low	▲	FL-388
P0699	Sensor Reference Voltage "C" Circuit High	▲	FL-394
P0820	Neutral S/W Malfunction	▲	FL-397
P0830	Clutch Pedal Switch "A" Circuit	▲	FL-402
P1145	Overrun monitoring error	▲	FL-408
P1171	Minimum Rail Pressure Exceeded	▲	FL-410
P1172	Maximum Rail Pressure Exceeded	▲	FL-414
P1173	Set Value Of Rail Pressure Not In Plausibility Range	▲	FL-415
P1185	Fuel Pressure Monitoring-Maximum Pressure Exceeded	●	FL-416
P1186	Fuel Pressure Monitoring-Minimum Pressure at Engine Speed Too Low	●	FL-421
P1586	MT/AT Encoding	◆	FL-423
P1587	CAN Communication Error (MT/AT Recognition Error)	◆	FL-426
P1588	Signal Change Through MT/AT Line (During Engine Running)	◆	FL-433
P1634	Auxiliary Heater Malfunction	▲	FL-436
P1652	Ignition Switch Circuit Malfunction	▲	FL-443
P1670	Injector Specific Data Error	■	FL-447
P1671	Check-Sum Error	■	FL-449
P2009	Intake Manifold Runner Control Circuit Low (Bank 1)	▲	FL-451
P2010	Intake Manifold Runner Control Circuit High (Bank 1)	▲	FL-458
P2015	Intake Manifold Runner Position Sensor/Switch Circuit Range/Performance (Bank 1)	●/▲	FL-461
P2016	Intake Manifold Runner Position Sensor/Switch Circuit Low (Bank 1)	▲	FL-468
P2017	Intake Manifold Runner Position Sensor/Switch Circuit High (Bank 1)	▲	FL-472
P2111	Throttle Control Actuator Circuit High	●	FL-476
P2112	Throttle Control Actuator Circuit Low	●	FL-483
P2113	Throttle Control Actuator Circuit Malfunction - Range/Performance	▲	FL-487
P2123	Throttle/Pedal Position Sensor/Switch "D" Circuit High Input	●	FL-491
P2128	Throttle/Pedal Position Sensor/Switch "E" Circuit High Input	●	FL-498
P2138	Throttle/Pedal Position Sensor/Switch "D" / "E" Voltage Correlation	●	FL-502

DTC	DESCRIPTION	MIL	PAGE
P2264	Detection of Water in fuel	▲	FL-507
P2299	Brake Pedal Position / Accelerator Pedal Position Incompatible	▲	FL-512

NOTE

●*: MIL ON & Memory*
▲*: MIL OFF & Memory*
■*: MIL Blinking & MEMORY*
◆*: Glow Lamp Blinking & MEMORY*

DTC P0047 VGT VACUUM MODULATOR CIRCUIT LOW

COMPONENT LOCATION E2D3F84E

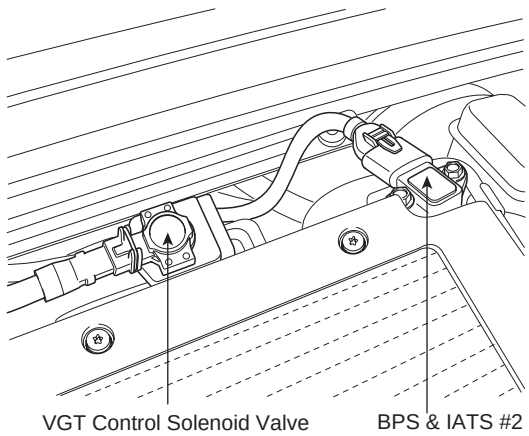

SCMFL6500L

GENERAL DESCRIPTION E309637A

VGT(Variable Geometric Turbocharger) is the device which increases the efficiency of turbocharger at low rpm and lasts optimum turbo efficiency at high rpm as varying the cross sectional area through which exhaust gas passes turbocharger impeller. It relieves turbo lag at low speed and increse engine power generation.Engine speed, APS signal, MAFS and Boost pressure sensor information is inputted to ECM. ECM actuates vacuum diafragm which controls exhaust gas line as controlling VGT actuator duty to maintain optimum state of air compression.

DTC DESCRIPTION EBA784B6

P0047 is set when "0"A is detected in VGT actuator control circuit for more than 1 sec.. This code is due to open or short to ground in VGT actuator circuit, or open in VGT actuator component.

DTC DETECTING CONDITION E1B0BA6B

Item	Detecting Condition			Possible Cause
DTC Strategy	• Signal monitoring			• VGT actuator circuit • VGT actuator component
Enable Conditions	• IG KEY "ON"			
Threshold Value	• short to GND, wiring open			
Diagnostic Time	• 1 sec.			
Fail Safe	Fuel cut	NO		
	EGR Off	YES		
	Fuel Limit	YES		
	Check Lamp	NO		

SPECIFICATION E71947EC

VGT actuator component resistance	VGT actuator operating Hz	VGT actuator operating duty
14.7 ~ 16.1Ω (20℃)	300Hz	76% at idle, decreases as accelerating

SCHEMATIC DIAGRAM E98D5878

[CIRCUIT DIAGRAM]

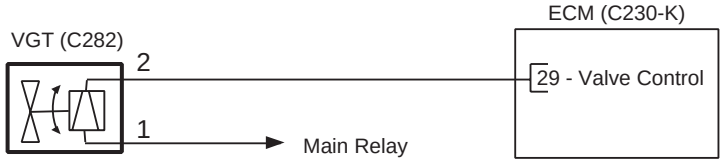

[CONNECTION INFORMATION]

Terminal	Connected to	Function
1	Main Relay	Battery Voltage (B+)
2	ECM C230-K (29)	Valve Control

[HARNESS CONNECTORS]

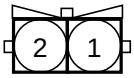

C282

VGT CONTROL SOLENOID VALVE

C230-A

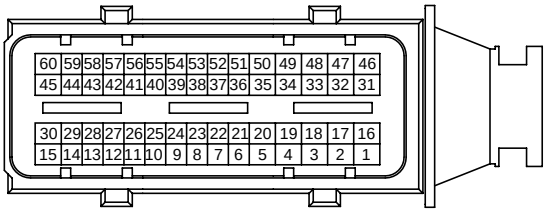

C230-K

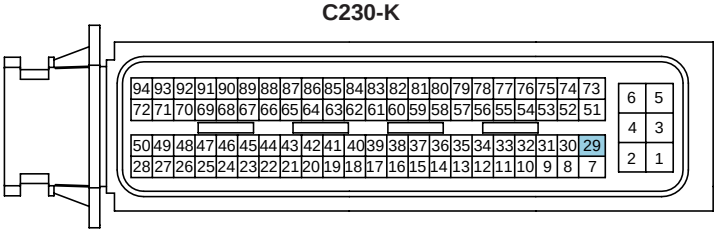

ECM

SCMFL6136L

SIGNAL WAVEFORM AND DATA E17569EF

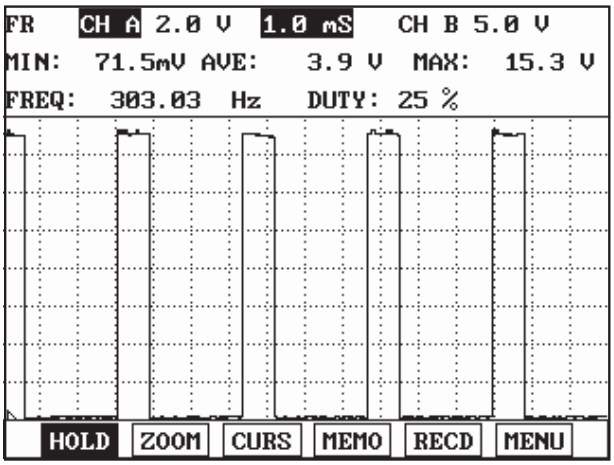

Fig.1

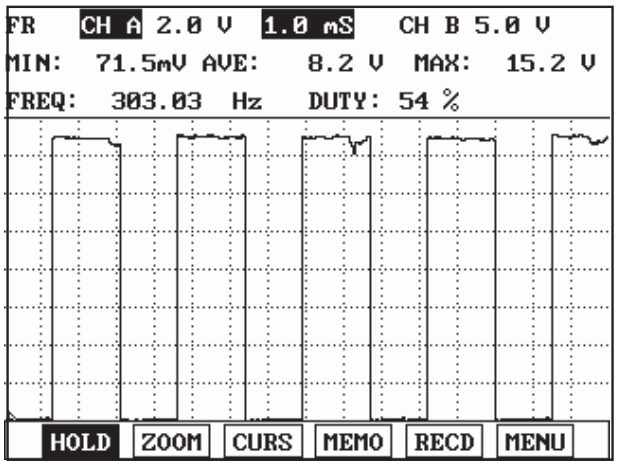

Fig.2

Fig.1) VGT actuator output waveform at 76% duty((-)duty). Duty decreases as boost pressure increases.
Fig.2) VGT actuator duty((-)duty) decreases as accelerating.

LFIG369A

MONITOR SCANTOOL DATA E08D4DA0

1. Connect Scantool to Data Link Connector (DLC).
2. Warm engine up to normal operating temperature.
3. Turn "OFF" electrical devices and A/C.
4. Monitor "BOOST PRESSURE SENSOR" parameter on the Scantool.

Specification : 1000hpa ± 100hpa(VGT actuator : approx. 76%) at idle

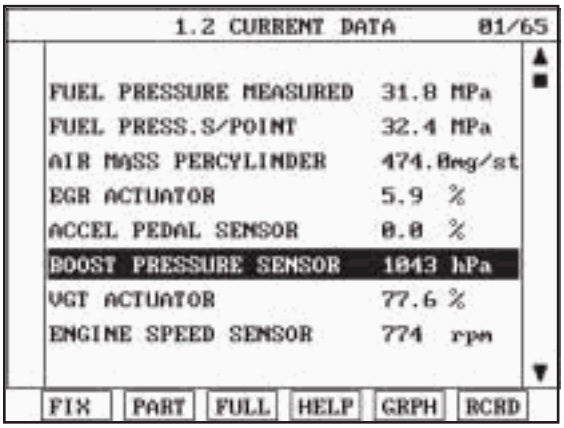

Fig.1

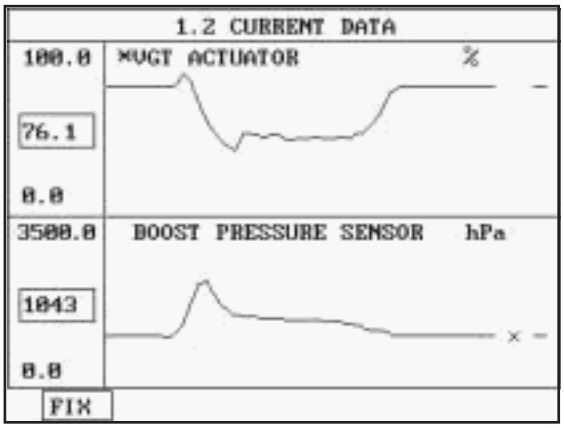

Fig.2

Fig1) Monitor "BOOST PRESSURE SENSOR" parameter on the Scantool at idle after warming engine up. 1000hpa±100hpa(approx. 1 atm) is correct value.
Fig.2) VGT actuator duty and boost pressure at acceleration is shown . If boost pressure rises and reaches certain value, VGT actuator duty stops to drop and keeps steady. Releasing accelerator pedal at this moment, VGT actuator duty drops to approx. 45%, then if RPM drops to idle range, duty returns to 76%.

SCMFL6253L

TERMINAL AND CONNECTOR INSPECTION EE9A6CFC

1. Electrical systems consist of a lot of harness and connectors, poor connection of terminals can cause various problems and damge of component.

2. Perform checking procedure as follows.

   1) Check damage of harness and terminals : Check terminals for contact resistance, corrosion and deformation.

   2) Check connecting condition of ECM and component connector : Check terminal seperation, damage of locking device and connecting condition between terminal and wiring.

   NOTE

   Disconnect the pin which requires checking at male connector and insert it to the terminal at female connector or checking connecting condition. (after checking, reconnect the pin at correct position.)

3. Is the problem found?

   YES

   ▶ Repair the trouble causing part and go to "Verification of Vehicle Repair".

   NO

   ▶ Go to "Power Circuit Inspection".

POWER CIRCUIT INSPECTION EBFD3161

1. Check power circuit voltage

   1) IG KEY "OFF", ENGINE "OFF"

   2) Disconnect VGT actuator connector

   3) IG KEY "ON"

   4) Measure the voltage of terminal 1 of VGT actuator.

Specification : 11.5V~13.0V

   5) Is the measured voltage within the specification?

   YES

   ▶ Go to "Control Circuit Inspection".

   NO

   ▶ Repair E/R FUSE & RELAY BOX 15A SENSOR #2 FUSE and related circuit and go to "Verification of Vehicle Repair".

CONTROL CIRCUIT INSPECTION EF9A84EE

1. Check monitoring voltage in control circuit

   1) IG KEY "OFF", ENGINE "OFF"

2) Disconnect VGT actuator connector

3) IG KEY "ON"

4) Measure the voltage of terminal 2 of VGT actuator.

Specification : 3.2V~3.7V

5) Is the measured voltage within the specification?

YES

▶ Go to "Component Inspection".

NO

▶ When voltage is not detected : Go to "2. Check open in control circuit" as follows.
▶ When high voltage is detected : Repair short to battery and go to "Verification of Vehicle Repair".

2. Check open in control circuit

1) IG KEY "OFF", ENGINE "OFF"

2) Disconnect VGT actuator connector and ECM connector.

3) Check continuity between VGT actuator connector terminal 2 and ECM connector (C230-K) terminal 29.

specification : Continuity (below 1.0Ω)

4) Is the measured resistance within the specification?

YES

▶ Repair short to ground and go to "Verification of Vehicle Repair".

NO

▶ Repair open in control circuit and go to "Verification of Vehicle Repair".

COMPONENT INSPECTION E4799834

1. Check VGT actuator component resistance

1) IG KEY "OFF", ENGINE "OFF"

2) Disconnect VGT actuator connector.

3) Measure the resistance between VGT actuator component terminal 1 and 2.

Specification : 14.7 ~ 16.1Ω (20℃)

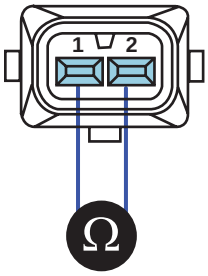

LFIG373A

4) Is VGT actuator component resistance within the specification?

YES

▶ Go to "2.Check VGT actuator operation" as follows.

NO

▶ Replace VGT actuator and go to "Verification of Vehicle Repair".

2. Check VGT actuator operation

1) IG KEY "ON", ENGINE "ON".

2) Check that VGT actuator operating duty is 76% after warming engine up.

3) Check if vacuum generates after disconnecting VGT valve vacuum hose.

4) Check if vacuum generates when decelerating after rapid acceleration (Vacuum must not generates, correct VGT actuator operating duty is 45%).

Specification : VGT actuator duty 76% : vacuum generates VGT actuator duty 45% : vacuum does not generate

YES

▶ Go to "Verification of Vehicle Repair".

NO

▶ Replace VGT actuator and go to "Verification of Vehicle Repair".

※ Repeat this process 2~3 times.

VERIFICATION OF VEHICLE REPAIR E308252D

After a repair, it is essential to verify that the fault is corrected.

1. After connecting Scantool select "DIAGNOSTIC TROUBLE CODES(DTCs)" mode.

2. Clear recorded DTC using Scantool.

3. Drive the vehicle within DTC "Enable conditions" in "General information".

4. After selecting "DIAGNOSTIC TROUBLE CODES(DTCs)" mode and check if DTC is recorded again.

5. Are any DTCs recorded ?

YES

▶ Go to the DTC guide of recorded NO. in Scantool.

NO

▶ System operates within specification.

DTC P0048 VGT VACUUM MODULATOR CIRCUIT HIGH

COMPONENT LOCATION E31DDD68

Refer to DTC P0047.

GENERAL DESCRIPTION E79C2EC2

Refer to DTC P0047.

DTC DESCRIPTION E1025927

P0048 is set when excessive current is detected in VGT actuator control circuit for more than 1 sec.. This code is due to short to battery in control circuit or internal short of VGT actuator component.

DTC DETECTING CONDITION EBDE4E4B

Item	Detecting Condition			Possible Cause
DTC Strategy	• Signal monitoring			• VGT actuator circuit • VGT actuator component
Enable Conditions	• IG KEY "ON"			
Threshold Value	• Short to battery			
Diagnostic Time	• 1 sec.			
Fail Safe	Fuel cut	NO		
	EGR Off	YES		
	Fuel Limit	YES		
	Check Lamp	NO		

SPECIFICATION E44EFFDF

Refer to DTC P0047.

SCHEMATIC DIAGRAM E9230DEB

Refer to DTC P0047.

SIGNAL WAVEFORM AND DATA E944A3C3

Refer to DTC P0047.

MONITOR SCANTOOL DATA EEB997ED

Refer to DTC P0047.

TERMINAL AND CONNECTOR INSPECTION EFCF8A29

Refer to DTC P0047.

POWER CIRCUIT INSPECTION E7D4F518

1. Check power circuit voltage

   1) IG KEY "OFF", ENGINE "OFF"

   2) Disconnect VGT actuator connector

   3) IG KEY "ON"

   4) Measure the voltage of terminal 1 of VGT actuator.

Specification : 11.5V~13.0V

   5) Is the measured voltage within the specification?

   YES

   ▶ Go to "Control Circuit Inspection".

   NO

   ▶ Repair E/R FUSE & RELAY BOX 15A SENSOR #2 FUSE and related circuit and go to "Verification of Vehicle Repair".

CONTROL CIRCUIT INSPECTION E6DBA293

1. Check monitoring voltage in control circuit

   1) IG KEY "OFF", ENGINE "OFF"

   2) Disconnect VGT actuator connector

   3) IG KEY "ON"

   4) Measure the voltage of terminal 2 of VGT actuator.

Specification : 3.2V~3.7V

   5) Is the measured voltage within the specification?

   YES

   ▶ Go to "Component Inspection".

   NO

   ▶ When voltage is not detected : Go to "2. Check open in control circuit" as follows.
   ▶ When high voltage is detected : Repair short to battery and go to "Verification of Vehicle Repair".

2. Check open in control circuit

   1) IG KEY "OFF", ENGINE "OFF"

   2) Disconnect VGT actuator connector and ECM connector.

   3) Check continuity between VGT actuator connector terminal 2 and ECM connector (C230-K) terminal 29.

specification : Continuity (below 1.0Ω)

4) Is the measured resistance within the specification?

YES

▶ Repair short to ground and go to "Verification of Vehicle Repair".

NO

▶ Repair open in control circuit and go to "Verification of Vehicle Repair".

COMPONENT INSPECTION EB0EB6D3

1. Check VGT actuator component resistance

1) IG KEY "OFF", ENGINE "OFF"

2) Disconnect VGT actuator connector.

3) Measure the resistance between VGT actuator component terminal 1 and 2.

Specification : 14.7 ~ 16.1Ω (20℃)

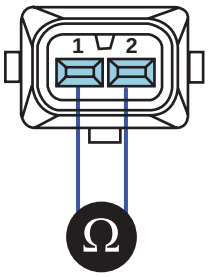

LFIG373A

4) Is VGT actuator component resistance within the specification?

YES

▶ Go to "2.Check VGT actuator operation" as follows.

NO

▶ Replace VGT actuator and go to "Verification of Vehicle Repair".

2. Check VGT actuator operation

1) IG KEY "ON", ENGINE "ON".

2) Check that VGT actuator operating duty is 76% after warming engine up.

3) Check if vacuum generates after disconnecting VGT valve vacuum hose.

4) Check if vacuum generates when decelerating after rapid acceleration (Vacuum must not generates, correct VGT actuator operating duty is 45%).

Specification : VGT actuator duty 76% : vacuum generates VGT actuator duty 45% : vacuum does not generate

YES

▶ Go to "Verification of Vehicle Repair".

NO

▶ Replace VGT actuator and go to "Verification of Vehicle Repair".

※ Repeat this process 2~3 times.

VERIFICATION OF VEHICLE REPAIR E4F82FD7

Refer to DTC P0047.

DTC P0069 BOOST PRESSURE SENSOR CIRCUIT MALFUNCTION

COMPONENT LOCATION E1BE504F

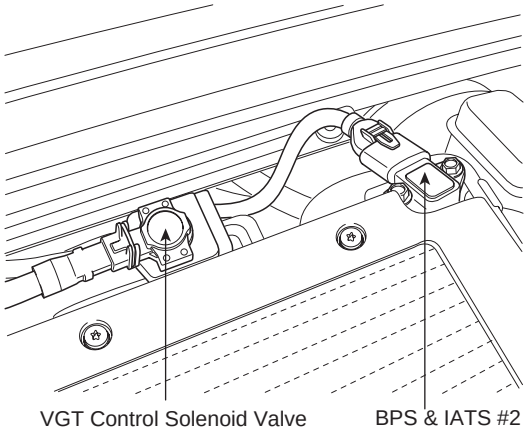

SCMFL6500L

GENERAL DESCRIPTION E18B084E

Boost Pressure Sensor(BPS) is installed in intake manifold and senses the pressure of air inside of intake manifold which is compressed by turbo charager.Measuring mass air flow accurately with the information of intake mainfold pressure, mass air flow and intake air temperature, ECM performs actuating correction of EGR and VGT.When excessive intake manifold pressure is detected, engine power generation is limited to protect engine because too highly compressed pressure due to turbo charger may harm engine.

DTC DESCRIPTION E1A24E17

P0069 is set when the difference between Boost pressure and atmospheric pressure sensor is above 100hpa at below 100RPM(in other word, IG KEY ON condition) for more than 2 sec. This code is due to abnormal output characteristic of BPS component.

DTC DETECTING CONDITION EAA4EA2C

<table>
<tr><th>Item</th><th colspan="3">Detecting Condition</th><th>Possible Cause</th></tr>
<tr><td>DTC Strategy</td><td colspan="3">• Voltage monitoring</td><td rowspan="6">• BPS circuit
• BPS component</td></tr>
<tr><td>Enable Conditions</td><td colspan="3">• IG KEY "ON" (below 100RPM)</td></tr>
<tr><td>Threshold Value</td><td colspan="3">• |Boost pressure - Atmospheric pressure|
is above 100hpa.</td></tr>
<tr><td>Diagnostic Time</td><td colspan="3">• 2 sec.</td></tr>
<tr><td rowspan="4">Fail Safe</td><td>Fuel cut</td><td>NO</td><td rowspan="4">• Boost pressure is fixed at 1000 hpa.</td></tr>
<tr><td>EGR Off</td><td>YES</td></tr>
<tr><td>Fuel Limit</td><td>YES</td></tr>
<tr><td>Check Lamp</td><td>NO</td></tr>
</table>

SPECIFICATION E96F7817

Pressure [Kpa]	20	100	190	250
Output voltage [V]	0.4±0.077	1.878±0.063	3.541±0.063	4.650±0.077

SCHEMATIC DIAGRAM E12D020E

[CIRCUIT DIAGRAM]

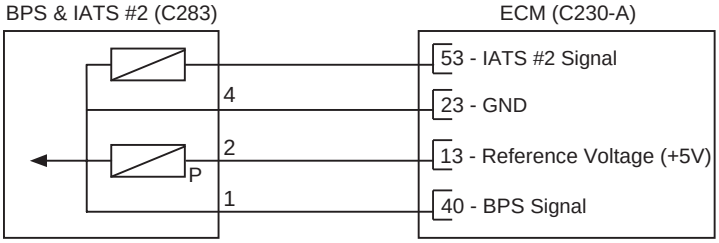

[CONNECTION INFORMATION]

Terminal	Connected to	Function
1	ECM C230-A (40)	BPS Signal
2	ECM C230-A (13)	Reference Voltage (+5V)
3	ECM C230-A (53)	IATS #2 Signal
4	ECM C230-A (23)	Sensor ground

[HARNESS CONNECTORS]

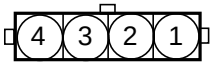

C283

BPS & IATS #2

C230-A

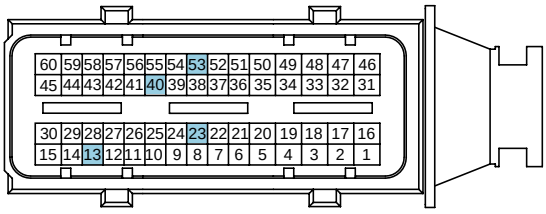

C230-K

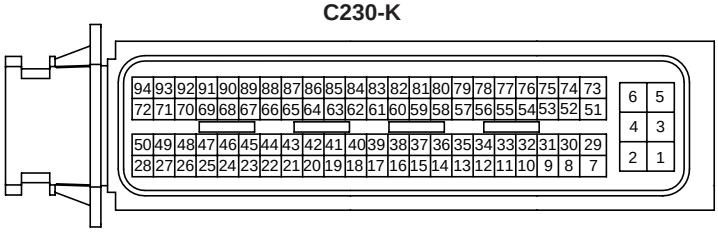

ECM

SCMFL6118L

SIGNAL WAVEFORM AND DATA E98FDD7C

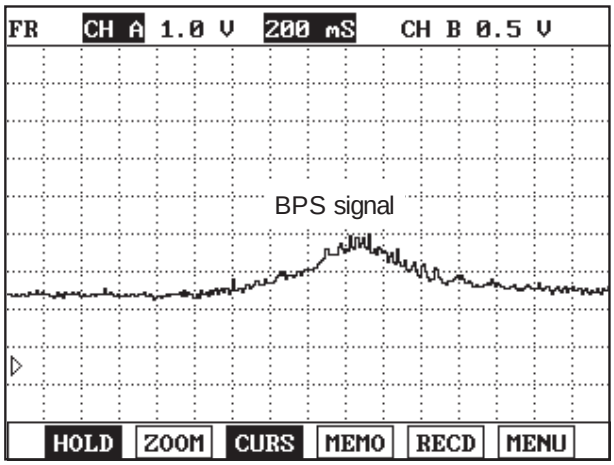

Fig.1

Fig1). This is the waveform of BPS as accelerating from idle state. Signal voltage rises as accelerating.

LFIG208A

MONITOR SCANTOOL DATA E9EBA7FE

1. Connect Scantool to Data Link Connector (DLC).
2. Warm engine up to normal operating temperature.
3. Turn "OFF" electrical devices and A/C.
4. Monitor "BOOST PRESSURE SENSOR" parameter on the Scantool.

Specification : 1000hpa ± 100hpa(VGT actuator : approx. 76%) at idle

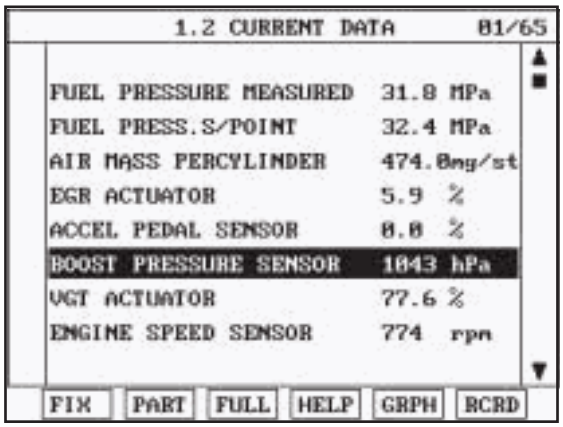

Fig.1

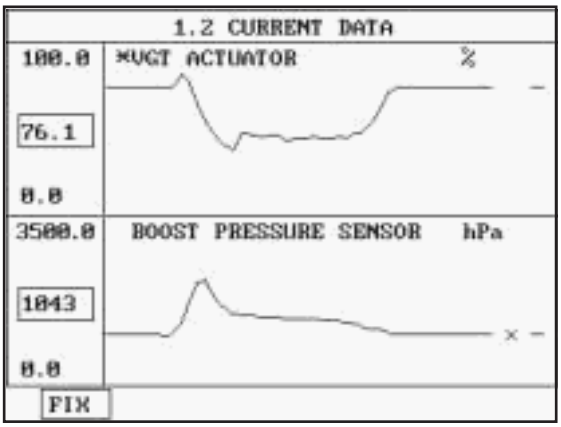

Fig.2

Fig1) Monitor "BOOST PRESSURE SENSOR" parameter on the Scantool at idle after warming engine up.
1000hpa ± 100hpa(approx. 1 atm) is correct value.

Fig.2) VGT actuator duty and boost pressure atacceleration is shown . If boost pressure rises and reaches certain value, VGT actuator duty stops to drop and keeps steady. Releasing accelerator pedal at this moment, VGT actuator duty drops to approx. 45%, then if RPM drops to idle range, duty returns to 76%.

SCMFL6205L

TERMINAL AND CONNECTOR INSPECTION EE7CA11A

1. Electrical systems consist of a lot of harness and connectors, poor connection of terminals can cause various problems and damge of component.

2. Perform checking procedure as follows.

   1) Check damage of harness and terminals : Check terminals for contact resistance, corrosion and deformation.

   2) Check connecting condition of ECM and component connector : Check terminal seperation, damage of locking device and connecting condition between terminal and wiring.

   NOTE

   Disconnect the pin which requires checking at male connector and insert it to the terminal at female connector for checking connecting condition. (after checking, reconnect the pin at correct position.)

3. Is the problem found?

   YES

   ▶ Repair the trouble causing part and go to "Verification of Vehicle Repair".

   NO

   ▶ Go to "Component Inspection ".

COMPONENT INSPECTION E42A32F0

1. BPS visual inspection

   1) IG KEY "OFF", ENGINE "OFF".

   2) Disconnect BPS connector.

   3) Check if corrosion and damage in BPS terminal is detected.

   4) Check BPS mounting state, leakage at O'ring, clogged carbon at pressure detecting hall.

   5) Are the problems relevant to BPS found?

      YES

      ▶ Replace BPS if necessary and go to "Verification of Vehicle Repair".

      NO

      ▶ Go to "2. Check BPS output voltage at IG KEY ON" as follows.

2. Check BPS output voltage at IG KEY ON

   1) IG KEY "OFF", ENGINE "OFF".

   2) Connect Scantool to Data Link Connector (DLC).

   3) IG KEY "ON"

   4) Monitor "ATMOSPHERIC PRESSURE" and "BOOST PRESSURE SENSOR" parameters on scantool.

5) Check if both "ATMOSPHERIC PRESSURE" and "BOOST PRESSURE SENSOR" indicates similar value at IG KEY "ON".

Specification : Refer to "Monitor Scantool Data" .

6) Is any BPS related problem is detected?

YES

▶ Replace BPS and go to "Verification of Vehicle Repair".

NO

▶ Go to "Verification of Vehicle Repair".

VERIFICATION OF VEHICLE REPAIR EE191B53

After a repair, it is essential to verify that the fault is corrected.

1. After connecting Scantool select "DIAGNOSTIC TROUBLE CODES(DTCs)" mode.
2. Clear recorded DTC using Scantool.
3. Drive the vehicle within DTC "Enable conditions" in "General information".
4. After selecting "DIAGNOSTIC TROUBLE CODES(DTCs)" mode and check if DTC is recorded again.
5. Are any DTCs recorded ?

YES

▶ Go to the DTC guide of recorded NO. in Scantool.

NO

▶ System operates within specification.

DTC P0087 RAIL PRESSURE MONITORING-MINIMUM PRESSURE AT ENGINE SPEED TOO LOW

COMPONENT LOCATION E7F91708

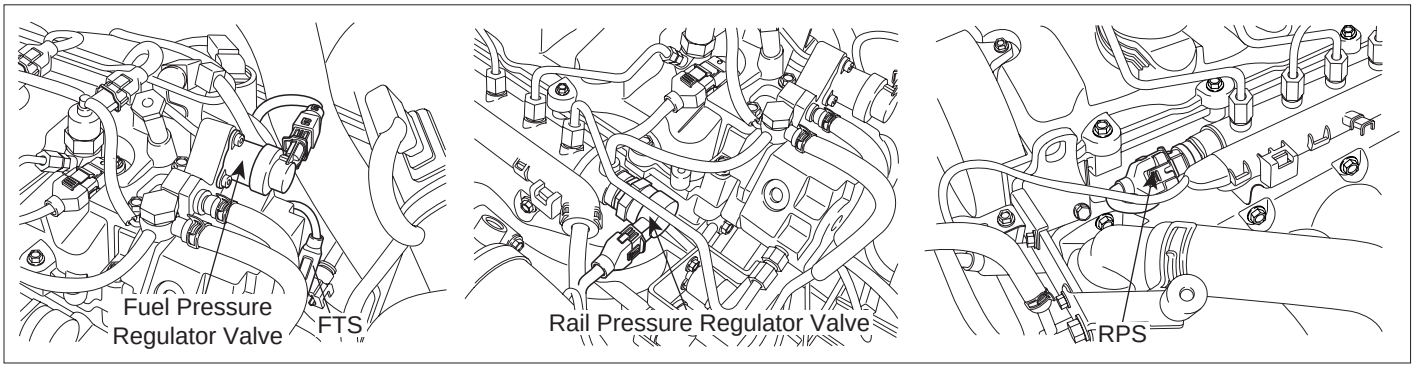

LFIG215A

GENERAL DESCRIPTION E1C6FF62

As inputted rail pressure sensor signal, ECM of Commom rail diesel engine controls fuel metering unit(FPRV-intergrated with high press. pump) and rail pressure control valve(RPRV-integrated with common rail) in order to maintain optimum rail pressure according to current engine rpm and load. However when the problem that leads rail pressure to out of target value intended by ECM occurs due to mechanical or electronical reason, ECM limits engine performance and sets DTC by limiting fuel (stops injector operation) in order to prevent engine from being controlled abnormally. "rail pressure monitoring error" is the DTC which diagnoses 1) supplying state of low pressure fuel and 2) mechanical operating conditions of high pressure pump and 3). RPRV indirectly based on RPS output voltage and RPS duty. Thus, repair relavant to this DTC requires mechanics the total understand of fuel system.

DTC DESCRIPTION EE69C2CE

P0087 is set when rail pressure is lower than target rail pressure by more than 250bar for more than 2 sec. in condition that rail press. is controlled by rail pressure regulator valve(RPRV) or rail pressure is below the lower limit value(200bar). This code is due to 1)fuel less than target value supplied to common rail or 2)excessive return of fuel supplied to common rail or 3)short to low voltage line in rail press. sensor.

DTC DETECTING CONDITION E1AF079E

Item	Detecting Condition			Possible Cause
DTC Strategy	• Voltage monitoring			• fuel pressure regulator valve (close stuck) • rail pressure regulator valve (open stuck) • Rail pressure sensor(Output fixed at low voltage line)
Enable Conditions	• Engine running			
Threshold Value	• (Case1) : Rail pressure is below target rail pressure by more than 250bar at rail pressure regulator valve(RPRV) operating condition. • (Case2) : Rail pressure is below minimum limiting value(200bar) at rail pressure regulator valve(RPRV) operating condition.			
Diagnostic Time	• 2 sec.			
Fail Safe	Fuel cut	(Case1) NO (Case2) YES		
	EGR Off	NO		
	Fuel Limit	(Case1) YES (Case2) NO		
	Check Lamp	YES		

MONITOR SCANTOOL DATA ED817027

1. Monitoring rail pressure data

   1) Connect Scantool to Data Link Connector (DLC).

   2) Warm engine up to normal operating temperature.

   3) Turn "OFF" electrical devices and A/C.

   4) Monitor "FUEL PRESSURE MEASURED", "FUEL PRESS. S/POINT", "RAIL PRESS. REGULATOR1", "INJ. PUMP REGULATOR" parameter on the Scantool.

Specification : FUEL PRESSURE MEASURED : similar to "FUEL PRESSURE-TARGET"
FUEL PRESS. S/POINT : 27 ± 5 Mpa
RAIL PRESS. REGULATOR1 : 16 ± 3%
INJ. PUMP REGULATOR : 34 ± 3%

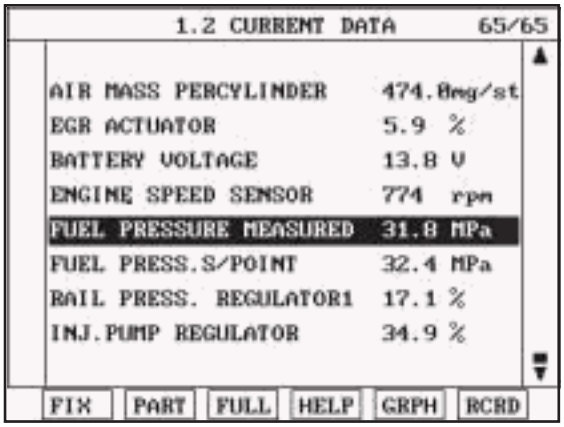

Fig.1

Fig.1) Monitor "FUEL PRESSURE MEASURED" at idle after warming engine up.

SCMFL6206L

Check if "FUEL PRESSURE MEASURED"data is similar to "FUEL PRESS. S/POINT". Not only former two data but also "RAIL PRESS. REGULATOR1" and "INJ. PUMP REGULATOR"should be monitored carefully. Although "FUEL PRESSURE MEASURED" is similar to "FUEL PRESS. S/POINT", if "RAIL PRESS. REGULATOR1" and "INJ. PUMP REGULATOR" is out of specification, it means wear, leakage, stuck of fuel system.

2. Monitoring rail pressure data at acceleration(loading condition).

   1) Connect Scantool to Data Link Connector (DLC).

   2) Warm engine up to normal operating temperature.

   3) Turn "OFF" electrical devices and A/C.

   4) Monitor "FUEL PRESSURE MEASURED", "INJ. PUMP REGULATOR","RAIL PRESS. REGULATOR1" parameter on the Scantool.

SPECIFICATION :

	Idle(without load)	Accelerating(stall test)	Diagnosis
FUEL PRESSURE MEASURED	27 ± 5 Mpa	above 75 Mpa	press. increases
INJ. PUMP REGULATOR	34 ± 3%	38 ± 3%	duty increases
RAIL PRESS. REGULATOR1	16 ± 3%	45 ± 3%	duty increases

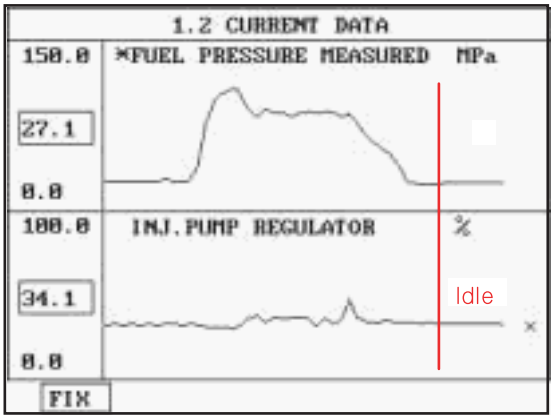

Fig.1

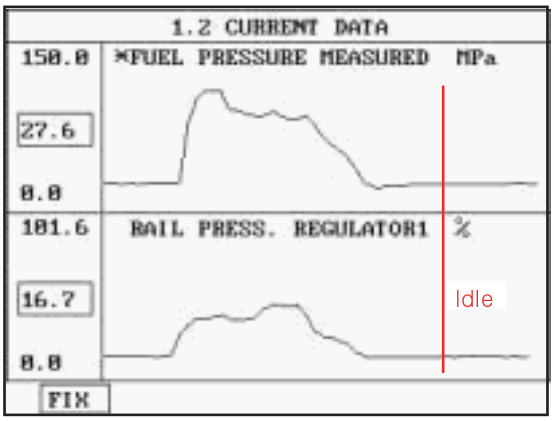

Fig.2

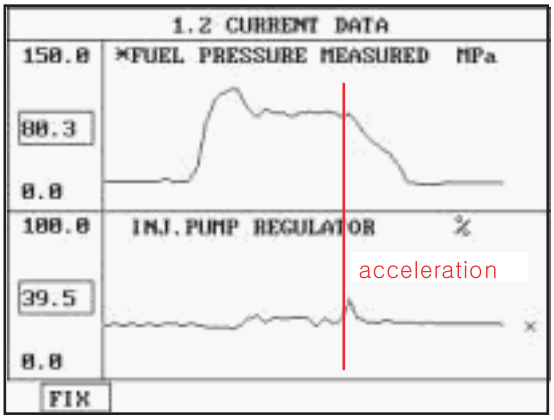

Fig.3

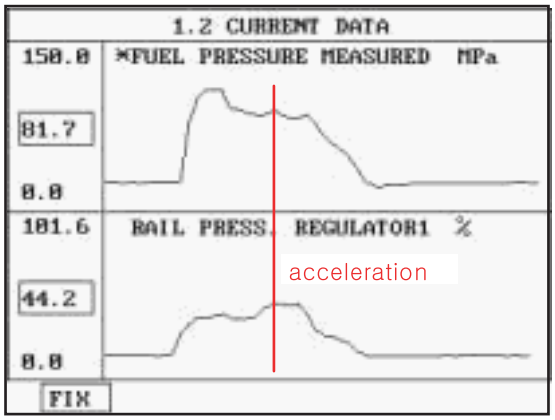

Fig.4

Fig.1) Fuel pressure and Fuel pressure regulator valve data at idle.
Fig.2) Fuel pressure and Rail pressure regulator valve data at idle.
Fig.3) Fuel pressure and Fuel pressure regulator valve data at acceleration.
Fig.4) Fuel pressure and Rail pressure regulator valve data at acceleration.

SCMFL6207L

NOTE

The waveform of fuel pressure regulator valve installed at high pressure pump(fuel detecting MPROP) shows 34 ± 3% duty at idle, duty rises to approx. 38% at acceleration to raise rail pressure.

The waveform of rail pressure regulator valve installed at common rail shows 16 ± 3% duty at idle, duty rises to approx. 45% at acceleration to raise rail pressure.

VERIFICATION OF VEHICLE REPAIR EBA939A2

After a repair, it is essential to verify that the fault is corrected.

1. After connecting Scantool select "DIAGNOSTIC TROUBLE CODES(DTCs)" mode.
2. Clear recorded DTC using Scantool.
3. Drive the vehicle within DTC "Enable conditions" in "General information".
4. After selecting "DIAGNOSTIC TROUBLE CODES(DTCs)" mode and check if DTC is recorded again.
5. Are any DTCs recorded ?

YES

▶ Go to the DTC guide of recorded NO. in Scantool.

NO

▶ System operates within specification.

DTC P0088 RAIL PRESSURE MONITORING-MAXIMUM PRESSURE EXCEEDED

COMPONENT LOCATION E95DA808

Refer to DTC P0087.

GENERAL DESCRIPTION E4AFDB7F

Refer to DTC P0087.

DTC DESCRIPTION E6A7625E

P0088 is set if 1)rail pressure is higher than target rail pressure by more than 200bar for more than 0.8 sec. at rail pressure regulator valve(PPRV) operating condition or 2)rail pressure is above upper limit value(1750bar) for more than 0.24 sec. at rail pressure regulator valve(PPRV) operating condition.This code is due to 1)fuel more than target value supplied to common rail or 2)poor return of fuel supplied to common rail or 3)short to high voltage line in rail press. sensor.

DTC DETECTING CONDITION E2791FDA

<table>
<tr><th>Item</th><th colspan="3">Detecting Condition</th><th>Possible Cause</th></tr>
<tr><td>DTC Strategy</td><td colspan="3">• Voltage monitoring</td><td rowspan="6">• fuel pressure regulator valve (open stuck)
• rail pressure regulator valve (close stuck)
• Rail pressure sensor(Output fixed at high voltage line)</td></tr>
<tr><td>Enable Conditions</td><td colspan="3">• Engine running</td></tr>
<tr><td>Threshold Value</td><td colspan="3">• Rail pressure is above target rail pressure by more than 200bar at rail pressure regulator valve(PPRV) operating condition.- 0.8 sec.
• Rail pressure is above upper limit value(1750bar) at rail pressure regulator valve(PPRV) operating condition. - 0.24 sec.</td></tr>
<tr><td>Diagnostic Time</td><td colspan="3">• Refer to threshold Value.</td></tr>
<tr><td rowspan="4">Fail Safe</td><td>Fuel cut</td><td>NO</td><td rowspan="4">• Engine shut down</td></tr>
<tr><td>EGR Off</td><td>NO</td></tr>
<tr><td>Fuel Limit</td><td>YES</td></tr>
<tr><td>Check Lamp</td><td>YES</td></tr>
</table>

MONITOR SCANTOOL DATA EB518E8A

Refer to DTC P0087.

VERIFICATION OF VEHICLE REPAIR EC3D3546

Refer to DTC P0087.

DTC P0089 RAIL PRESSURE REGULATOR VALVE CIRCUIT OVER CURRENT

COMPONENT LOCATION E438AB9C

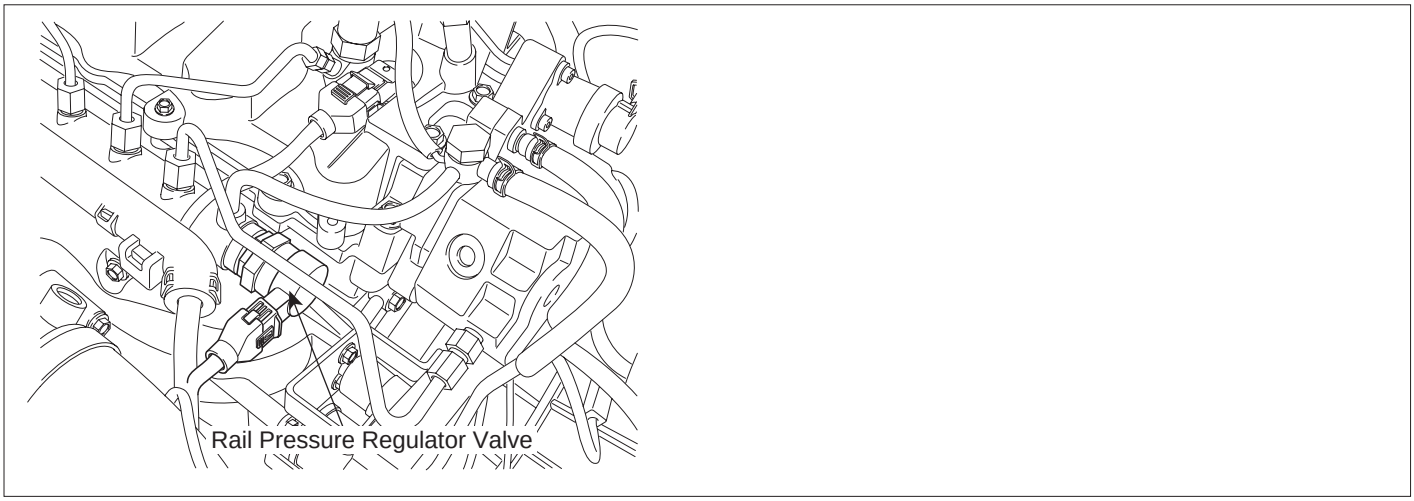

LFIG216A

GENERAL DESCRIPTION ED7CB6C0

Rail press. regulator valve(RPRV) is installed in common rail and controls common rail pressure fast as regulating returning quantity of fuel which is delivered to common rail when fast rise of rail pressure is required like the moment of turning engine ON or when fast relief of pressure is required like at the point of deceleration.The lower RPRV current is, the more fuel is supplied to common rail. Thus it leads rail pressure to be high. On the contrary, the higher RPRV current is, the less fuel is supplied to common rail.

DTC DESCRIPTION E78F4221

P0089 is set when excessive current in control circuit of Rail Pressure regulator valve(integrated with common rail) is detected for more than 0.28 sec.. This code is due to short to battery in control circuit or Rail Pressure regulator valve internal short.

DTC DETECTING CONDITION E60B09A8

Item	Detecting Condition			Possible Cause
DTC Strategy	• Voltage monitoring			• RPRV circuit • RPRV component
Enable Conditions	• IG KEY "ON"			
Threshold Value	• Short to battery in control circuit			
Diagnostic Time	• 0.28 sec.			
Fail Safe	Fuel cut	YES		
	EGR Off	NO		
	Fuel Limit	NO		
	Check Lamp	YES		

SPECIFICATION E418C5A6

rail pressure regulator valve resistance	Operating frequancy
3.42 ~ 3.78Ω (20℃)	1000Hz(1KHz)

SCHEMATIC DIAGRAM E3F48E07

[CIRCUIT DIAGRAM]

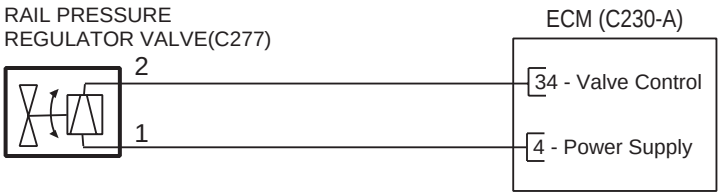

[CONNECTION INFORMATION]

Terminal	Connected to	Function
1	ECM C230-A (4)	Battery Voltage (B+)
2	ECM C230-A (34)	Valve Control

[HARNESS CONNECTORS]

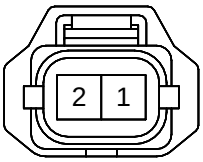

C277

RAIL PRESSURE REGULATOR VALVE

C230-A

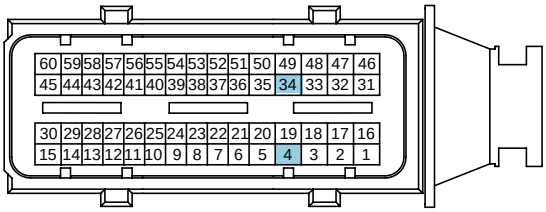

C230-K

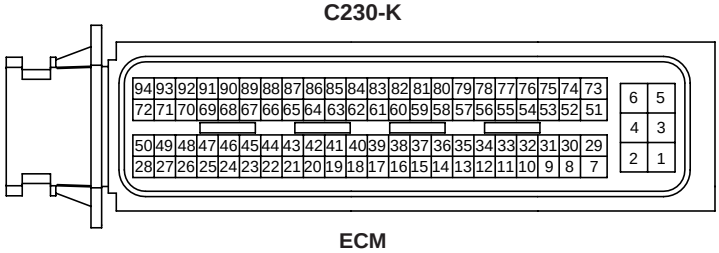

ECM

SCMFL6129L

SIGNAL WAVEFORM AND DATA E3734DDA

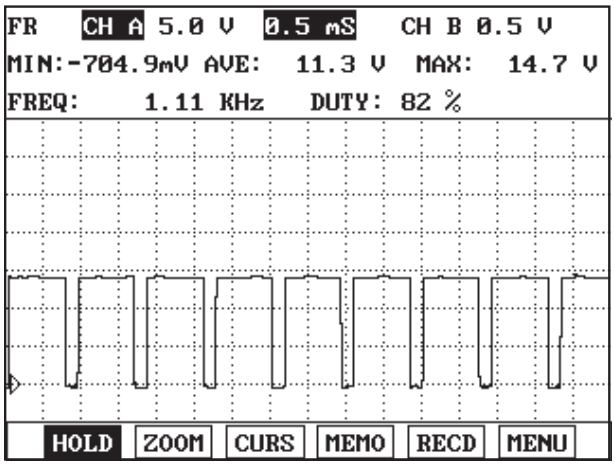

Fig.1

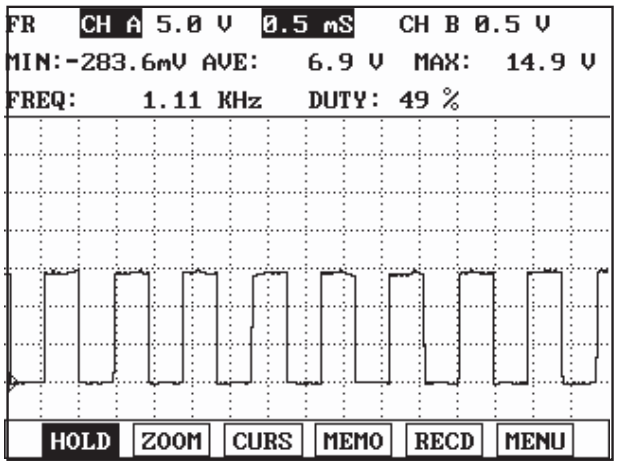

Fig.2

Fig.1) Waveform of rail pressure regulator valve at idle. It shows approx. 17% duty((-) duty).
Fig.2) Waveform of rail pressure regulator valve as accelerating. Approx. 50% duty is outputted as engine load increases.
(When rail pressure increases as accelerating, rail pressure regulator valve duty(current) rises.)

LFIG377A

MONITOR SCANTOOL DATA E1D0E757

1. Connect Scantool to Data Link Connector (DLC).
2. Warm engine up to normal operating temperature.
3. Turn "OFF" electrical devices and A/C.
4. Monitor "FUEL PRESSURE MEASURED", "INJ. PUMP REGULATOR","RAIL PRESS. REGULATOR1" parameter on the Scantool.

SPECIFICATION :

	Idle(without load)	Accelerating(stall test)	Diagnosis
FUEL PRESSURE MEASURED	27 ± 5 Mpa	above 75 Mpa	press. increases
INJ. PUMP REGULATOR	34 ± 3%	38 ± 3%	duty increases
RAIL PRESS. REGULATOR1	16 ± 3%	45 ± 3%	duty increases

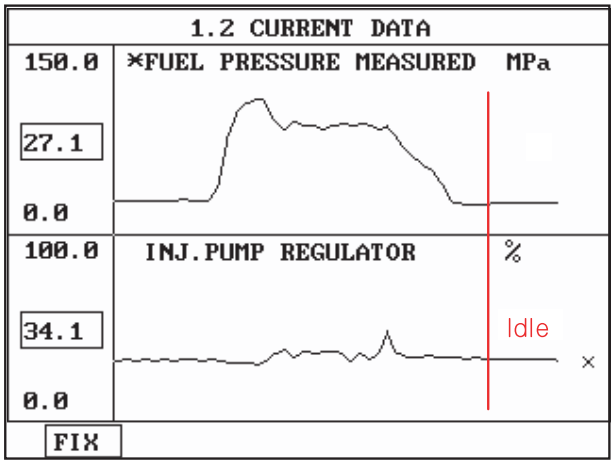

Fig.1

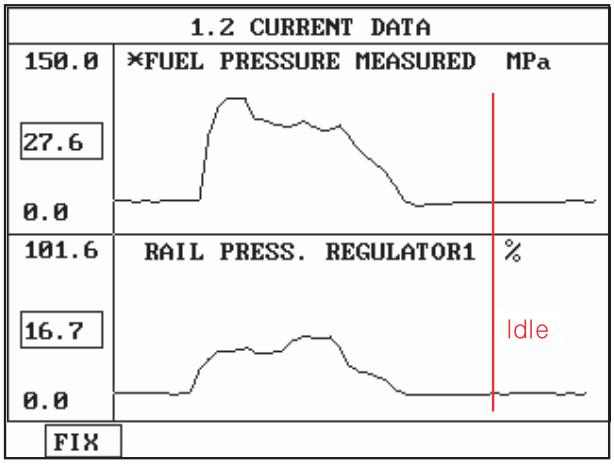

Fig.2

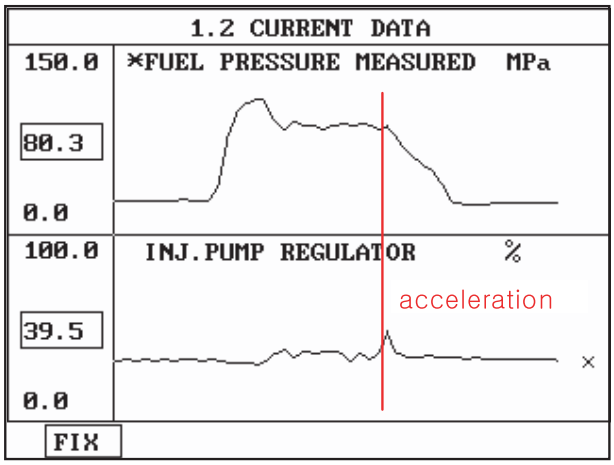

Fig.3

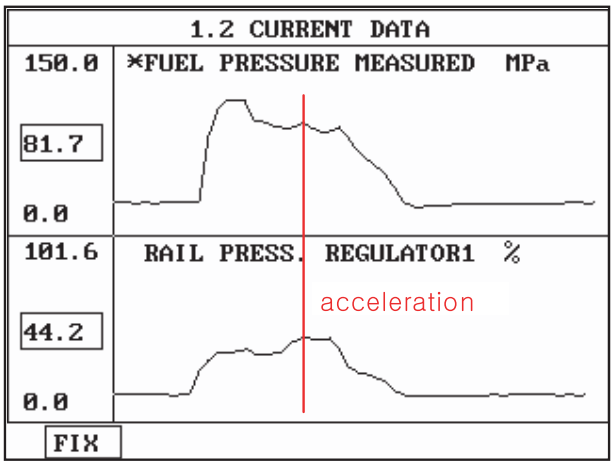

Fig.4

Fig.2) Fuel pressure and Fuel pressure regulator valve data at idle.
Fig.3) Fuel pressure and Rail pressure regulator valve data at idle.
Fig.4) Fuel pressure and Fuel pressure regulator valve data at acceleration.
Fig.5) Fuel pressure and Rail pressure regulator valve data at acceleration.

LFIG375A

NOTE

The waveform of fuel pressure regulator valve installed at high pressure pump(fuel detecting MPROP) shows 34 ± 3% duty at idle, duty rises to approx. 38% at acceleration to raise rail pressure.

The waveform of rail pressure regulator valve installed at common rail shows 16 ± 3% duty at idle, duty rises to approx. 45% at acceleration to raise rail pressure.

TERMINAL AND CONNECTOR INSPECTION E9CA1686

1. Electrical systems consist of a lot of harness and connectors, poor connection of terminals can cause various problems and damge of component.

2. Perform checking procedure as follows.

   1) Check damage of harness and terminals : Check terminals for contact resistance, corrosion and deformation.

   2) Check connecting condition of ECM and component connector : Check terminal seperation, damage of locking device and

NOTE

Disconnect the pin which requires checking at male connector and insert it to the terminal at female connector for checking connecting condition. (after checking, reconnect the pin at correct position.)

3. Is the problem found?

YES

▶ Repair the trouble causing part and go to "Verification of Vehicle Repair".

NO

▶ Go to "Power Circuit Inspection".

POWER CIRCUIT INSPECTION E872E161

1. Check power circuit voltage

   1) IG KEY "OFF", ENGINE "OFF"

   2) Disconnect RPRV connector.

   3) IG KEY "ON"

   4) Measure the voltage of RPRV connector terminal 1.

specification : 11.5V~13.0V

   5) Is the measured voltage within the specification?

YES

▶ Go to "Control Circuit Inspection".

NO

▶ Repair open between rail pressure regulator valve connector terminal 1 and ECM connector(C230-A) terminal 4

CONTROL CIRCUIT INSPECTION E6847DBA

1. Check monitoring voltage in control circuit

   1) IG KEY "OFF", ENGINE "OFF"

   2) Disconnect RPRV connector.

   3) IG KEY "ON"

   4) Measure the voltage of RPRV connector terminal 2.

specification : 3.2V~3.7V

   5) Is the measured voltage within the specification?

YES

▶ Go to "Component Inspection"

NO

▶ When voltage is not detected : Go to "2. Check open in control circuit" as follows.
▶ When high voltage is detected : Repair short to battery and go to "Verification of Vehicle Repair".

2. Check open in control circuit

1) IG KEY "OFF", ENGINE "OFF"

2) Disconnect RPRV connector and ECM connector.

3) Check continuity between RPRV connector terminal 2 and ECM connector (C230-A) terminal 34.

specification : Continuity (below 1.0Ω)

4) Is the measured resistance within the specification?

YES

▶ Repair short to ground in RPRV control circuit and go to "Verification of Vehicle Repair".

NO

▶ Repair open in RPRV control circuit and go to "Verification of Vehicle Repair".

COMPONENT INSPECTION EE7637AF

1. Check RPRV component resistance

1) IG KEY "OFF", ENGINE "OFF".

2) Disconnect RPRV connector.

3) Check RPRV component resistance.

Specification : 3.42 ~ 3.78Ω (20℃)

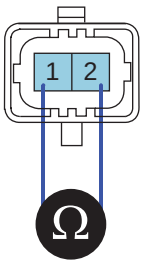

EGNG008I

4) Is the measured resistance within the specification?

YES

▶ Go to "Verification of Vehicle Repair".

NO

▶ Replace common rail assy' and go to "Verification of Vehicle Repair".

VERIFICATION OF VEHICLE REPAIR EBD95C7C

After a repair, it is essential to verify that the fault is corrected.

1. After connecting Scantool select "DIAGNOSTIC TROUBLE CODES(DTCs)" mode.
2. Clear recorded DTC using Scantool.
3. Drive the vehicle within DTC "Enable conditions" in "General information".
4. After selecting "DIAGNOSTIC TROUBLE CODES(DTCs)" mode and check if DTC is recorded again.
5. Are any DTCs recorded ?

YES

▶ Go to the DTC guide of recorded NO. in Scantool.

NO

▶ System operates within specification.

DTC P0091 RAIL PRESSURE REGULATOR VALVE CIRCUIT LOW

COMPONENT LOCATION EE6F4788

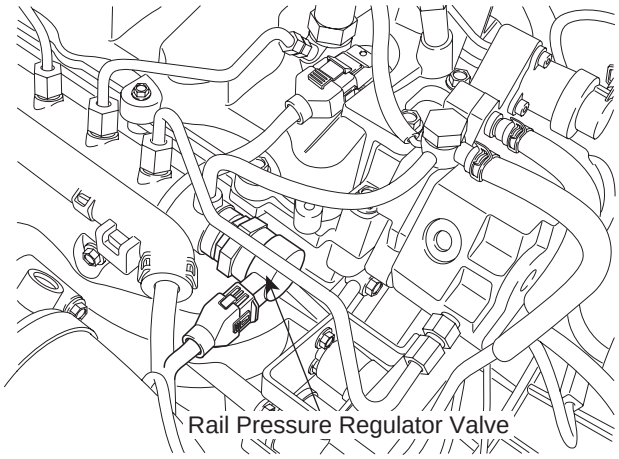

LFIG216A

GENERAL DESCRIPTION E015FD58

Rail press. regulator valve(RPRV) is installed in common rail and controls common rail pressure fast as regulating returning quantity of fuel which is delivered to common rail when fast rise of rail pressure is required like the moment of turning engine ON or when fast relief of pressure is required like at the point of deceleration.The lower RPRV current is, the more fuel is supplied to common rail. Thus it leads rail pressure to be high. On the contrary, the higher RPRV current is, the less fuel is supplied to common rail.

DTC DESCRIPTION E2D42A88

P0091 is set when "0"A in control circuit of Rail Pressure regulator valve(integrated with common rail) is detected for more than specified duration. This code is due to open or short to ground in control circuit or Rail Pressure regulator valve internal open.

DTC DETECTING CONDITION EA1128E7

<table>
<tr><th>Item</th><th colspan="3">Detecting Condition</th><th>Possible Cause</th></tr>
<tr><td>DTC Strategy</td><td colspan="3">• Voltage monitoring</td><td rowspan="6">• RPRV circuit
• RPRV component</td></tr>
<tr><td>Enable Conditions</td><td colspan="3">• IG KEY "ON"</td></tr>
<tr><td>Threshold Value</td><td colspan="3">• Short to GND - 0.22 sec.
• Wiring open - 0.28 sec.</td></tr>
<tr><td>Diagnostic Time</td><td colspan="3">• Refer to threshold Value.</td></tr>
<tr><td rowspan="4">Fail Safe</td><td>Fuel cut</td><td>YES</td><td rowspan="4">• Engine shut down</td></tr>
<tr><td>EGR Off</td><td>NO</td></tr>
<tr><td>Fuel Limit</td><td>NO</td></tr>
<tr><td>Check Lamp</td><td>YES</td></tr>
</table>

SPECIFICATION EDD3F929

rail pressure regulator valve resistance	Operating frequancy
3.42 ~ 3.78Ω (20℃)	1000Hz(1KHz)

SCHEMATIC DIAGRAM E004F6E8

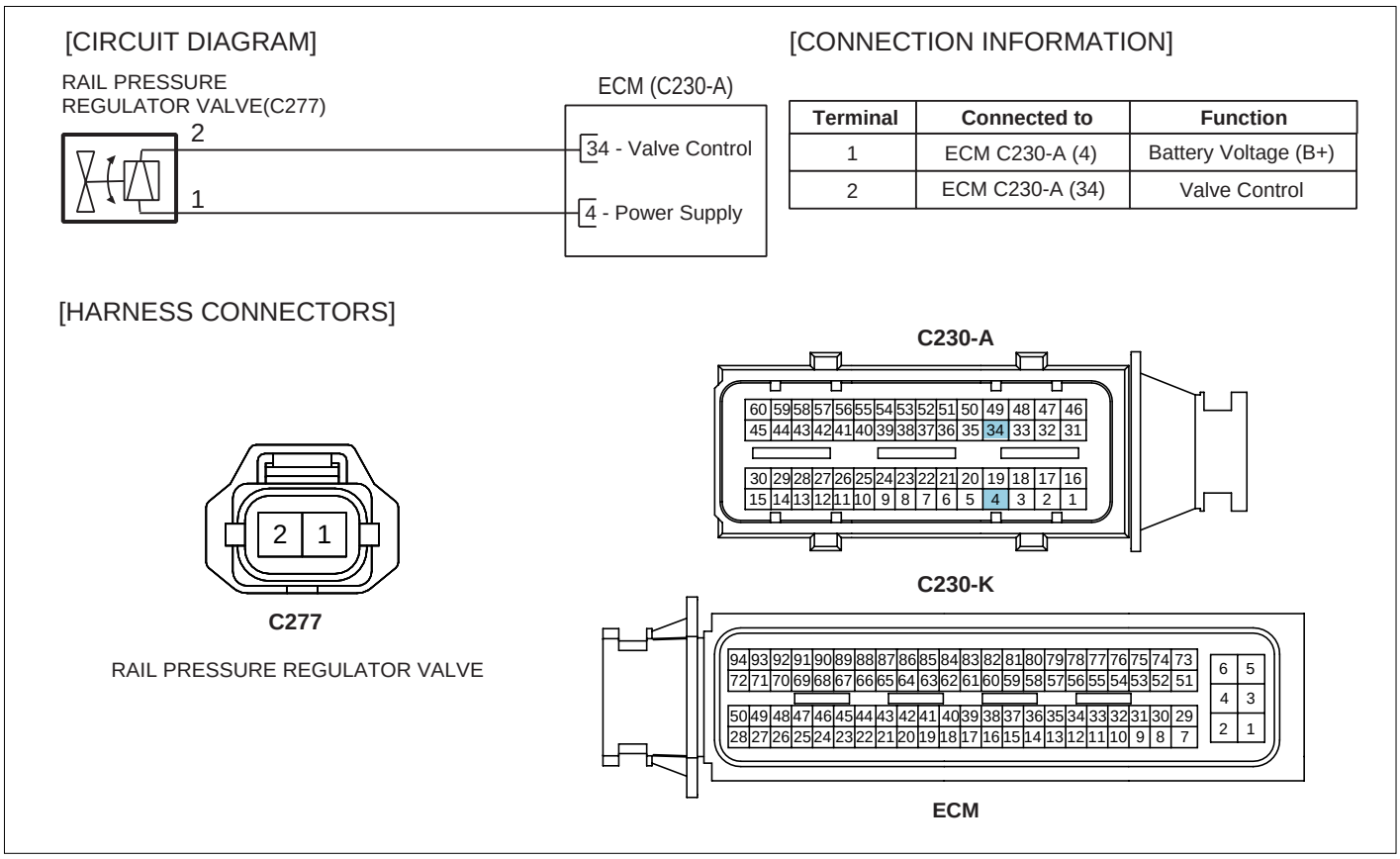

Terminal	Connected to	Function
1	ECM C230-A (4)	Battery Voltage (B+)
2	ECM C230-A (34)	Valve Control

SCMFL6129L

SIGNAL WAVEFORM AND DATA E028F2AE

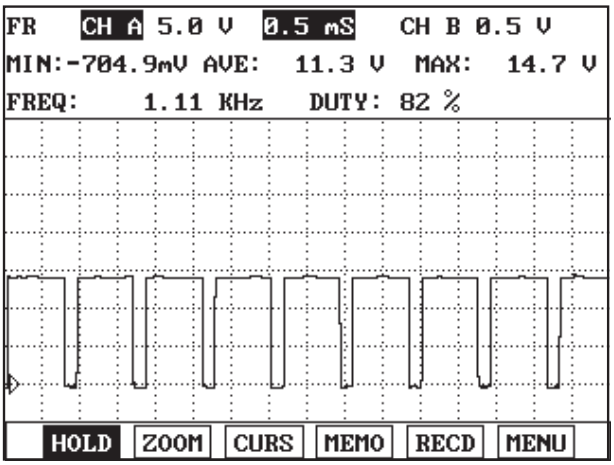

Fig.1

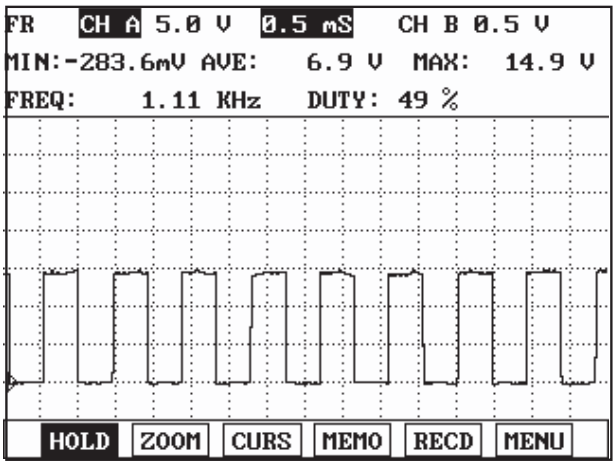

Fig.2

Fig.1) Waveform of rail pressure regulator valve at idle. It shows approx. 17% duty((-) duty).
Fig.2) Waveform of rail pressure regulator valve as accelerating. Approx. 50% duty is outputted as engine load increases.
(When rail pressure increases as accelerating, rail pressure regulator valve duty(current) rises.)

LFIG377A

MONITOR SCANTOOL DATA EF3C40CA

1. Connect Scantool to Data Link Connector (DLC).
2. Warm engine up to normal operating temperature.
3. Turn "OFF" electrical devices and A/C.
4. Monitor "FUEL PRESSURE MEASURED", "INJ. PUMP REGULATOR","RAIL PRESS. REGULATOR1" parameter on the Scantool.

SPECIFICATION :

	Idle(without load)	Accelerating(stall test)	Diagnosis
FUEL PRESSURE MEASURED	27 ± 5 Mpa	above 75 Mpa	press. increases
INJ. PUMP REGULATOR	34 ± 3%	38 ± 3%	duty increases
RAIL PRESS. REGULATOR1	16 ± 3%	45 ± 3%	duty increases

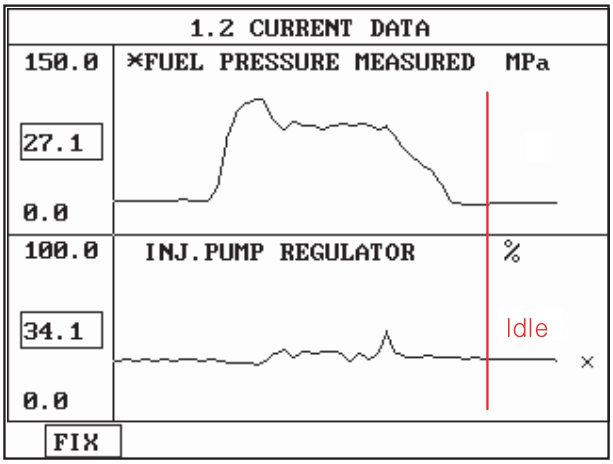

Fig.1

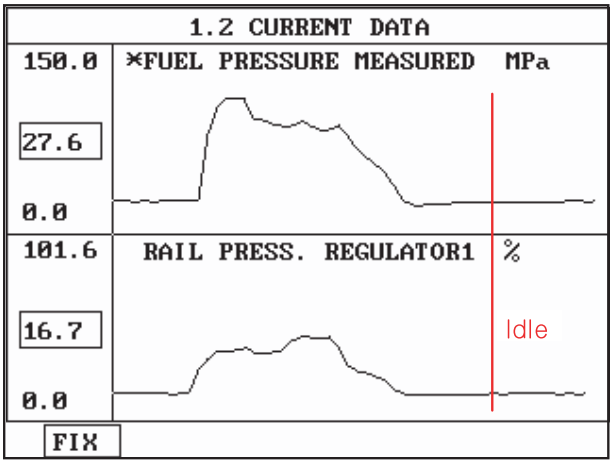

Fig.2

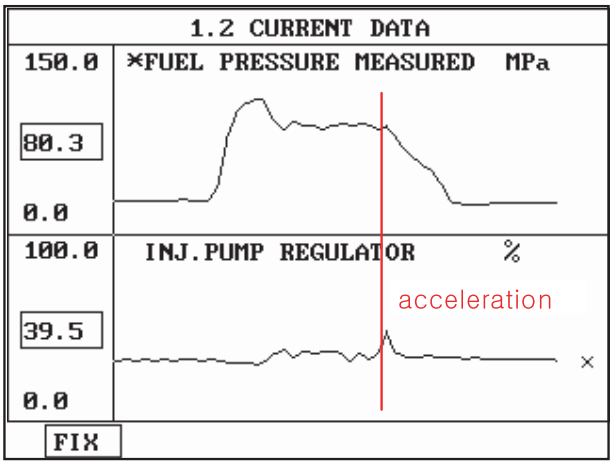

Fig.3

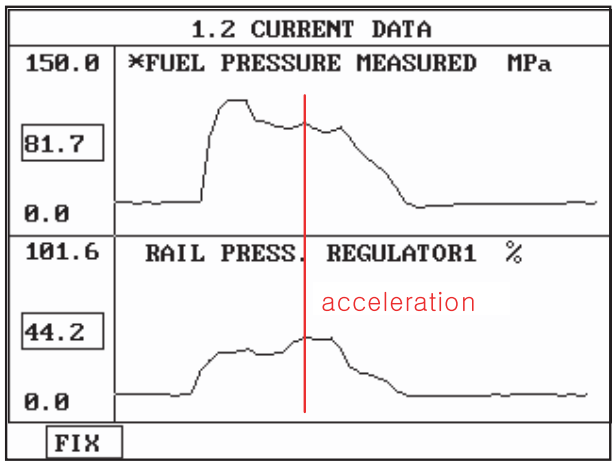

Fig.4

Fig.2) Fuel pressure and Fuel pressure regulator valve data at idle.
Fig.3) Fuel pressure and Rail pressure regulator valve data at idle.
Fig.4) Fuel pressure and Fuel pressure regulator valve data at acceleration.
Fig.5) Fuel pressure and Rail pressure regulator valve data at acceleration.

LFIG375A

NOTE

The waveform of fuel pressure regulator valve installed at high pressure pump(fuel detecting MPROP) shows 34 ± 3% duty at idle, duty rises to approx. 38% at acceleration to raise rail pressure.

The waveform of rail pressure regulator valve installed at common rail shows 16 ± 3% duty at idle, duty rises to approx. 45% at acceleration to raise rail pressure.

TERMINAL AND CONNECTOR INSPECTION E45C2DFB

1. Electrical systems consist of a lot of harness and connectors, poor connection of terminals can cause various problems and damge of component.

2. Perform checking procedure as follows.

   1) Check damage of harness and terminals : Check terminals for contact resistance, corrosion and deformation.

   2) Check connecting condition of ECM and component connector : Check terminal seperation, damage of locking device and

NOTE

Disconnect the pin which requires checking at male connector and insert it to the terminal at female connector for checking connecting condition. (after checking, reconnect the pin at correct position.)

3. Is the problem found?

YES

▶ Repair the trouble causing part and go to "Verification of Vehicle Repair".

NO

▶ Go to "Power Circuit Inspection".

POWER CIRCUIT INSPECTION E2F918E5

1. Check power circuit voltage

   1) IG KEY "OFF", ENGINE "OFF"

   2) Disconnect RPRV connector.

   3) IG KEY "ON"

   4) Measure the voltage of RPRV connector terminal 1.

specification : 11.5V~13.0V

   5) Is the measured voltage within the specification?

   YES

   ▶ Go to "Control Circuit Inspection".

   NO

   ▶ Repair open between rail pressure regulator valve connector terminal 1 and ECM connector(C230-A) terminal 4

CONTROL CIRCUIT INSPECTION ECBDD16F

1. Check monitoring voltage in control circuit

   1) IG KEY "OFF", ENGINE "OFF"

   2) Disconnect RPRV connector.

   3) IG KEY "ON"

   4) Measure the voltage of RPRV connector terminal 2.

specification : 3.2V~3.7V

   5) Is the measured voltage within the specification?

   YES

▶ Go to "Component Inspection"

NO

▶ When voltage is not detected : Go to "2. Check open in control circuit" as follows.
▶ When high voltage is detected : Repair short to battery and go to "Verification of Vehicle Repair".

2. Check open in control circuit

1) IG KEY "OFF", ENGINE "OFF"

2) Disconnect RPRV connector and ECM connector.

3) Check continuity between RPRV connector terminal 2 and ECM connector (C230-A) terminal 34.

specification : Continuity (below 1.0Ω)

4) Is the measured resistance within the specification?

YES

▶ Repair short to ground in RPRV control circuit and go to "Verification of Vehicle Repair".

NO

▶ Repair open in RPRV control circuit and go to "Verification of Vehicle Repair".

COMPONENT INSPECTION E82ECC11

1. Check RPRV component resistance

1) IG KEY "OFF", ENGINE "OFF".

2) Disconnect RPRV connector.

3) Check RPRV component resistance.

Specification : 3.42 ~ 3.78Ω (20℃)

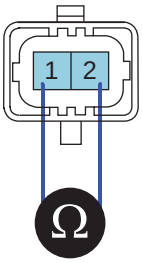

EGNG008I

4) Is the measured resistance within the specification?

YES

▶ Go to "Verification of Vehicle Repair".

NO

▶ Replace common rail assy' and go to "Verification of Vehicle Repair".

VERIFICATION OF VEHICLE REPAIR EF52AEC2

After a repair, it is essential to verify that the fault is corrected.

1. After connecting Scantool select "DIAGNOSTIC TROUBLE CODES(DTCs)" mode.
2. Clear recorded DTC using Scantool.
3. Drive the vehicle within DTC "Enable conditions" in "General information".
4. After selecting "DIAGNOSTIC TROUBLE CODES(DTCs)" mode and check if DTC is recorded again.
5. Are any DTCs recorded ?

YES

▶ Go to the DTC guide of recorded NO. in Scantool.

NO

▶ System operates within specification.

DTC P0092 RAIL PRESSURE REGULATOR VALVE CIRCUIT HIGH

COMPONENT LOCATION EA28FE1E

Refer to DTC P0091.

GENERAL DESCRIPTION EEED0BA5

Refer to DTC P0091.

DTC DESCRIPTION E01B3164

P0092 is set when excessive current in power circuit of Rail Pressure regulator valve(integrated with common rail) is detected for more than 0.28 sec.. This code is due to short to battery in power circuit or Rail pressure regulator valve internal short.

DTC DETECTING CONDITION EB66B445

<table>
<tr><th>Item</th><th colspan="3">Detecting Condition</th><th>Possible Cause</th></tr>
<tr><td>DTC Strategy</td><td colspan="3">• Voltage monitoring</td><td rowspan="6">• RPRV circuit
• RPRV component</td></tr>
<tr><td>Enable Conditions</td><td colspan="3">• IG KEY "ON"</td></tr>
<tr><td>Threshold Value</td><td colspan="3">• Short to battery (power circuit in rail pressure regulator valve)</td></tr>
<tr><td>Diagnostic Time</td><td colspan="3">• 0.28 sec.</td></tr>
<tr><td rowspan="4">Fail Safe</td><td>Fuel cut</td><td>YES</td><td rowspan="4">• Engine shut down</td></tr>
<tr><td>EGR Off</td><td>NO</td></tr>
<tr><td>Fuel Limit</td><td>NO</td></tr>
<tr><td>Check Lamp</td><td>YES</td></tr>
</table>

SPECIFICATION E2BADE99

Refer to DTC P0091.

SCHEMATIC DIAGRAM EFF54E8C

Refer to DTC P0091.

SIGNAL WAVEFORM AND DATA ED0669AE

Refer to DTC P0091.

MONITOR SCANTOOL DATA EADA623B

Refer to DTC P0091.

TERMINAL AND CONNECTOR INSPECTION ECBD4F31

Refer to DTC P0091.

POWER CIRCUIT INSPECTION ED82AADD

1. Check power circuit voltage

   1) IG KEY "OFF", ENGINE "OFF"

   2) Disconnect RPRV connector.

   3) IG KEY "ON"

   4) Measure the voltage of RPRV connector terminal 1.

specification : 11.5V~13.0V

   5) Is the measured voltage within the specification?

   YES

   ▶ Go to "Control Circuit Inspection".

   NO

   ▶ Repair open between rail pressure regulator valve connector terminal 1 and ECM connector(C230-A) terminal 4

CONTROL CIRCUIT INSPECTION E5C659E3

1. Check monitoring voltage in control circuit

   1) IG KEY "OFF", ENGINE "OFF"

   2) Disconnect RPRV connector.

   3) IG KEY "ON"

   4) Measure the voltage of RPRV connector terminal 2.

specification : 3.2V~3.7V

   5) Is the measured voltage within the specification?

   YES

   ▶ Go to "Component Inspection"

   NO

   ▶ When voltage is not detected : Go to "2. Check open in control circuit" as follows.
   ▶ When high voltage is detected : Repair short to battery and go to "Verification of Vehicle Repair".

2. Check open in control circuit

   1) IG KEY "OFF", ENGINE "OFF"

   2) Disconnect RPRV connector and ECM connector.

   3) Check continuity between RPRV connector terminal 2 and ECM connector (C230-A) terminal 34.

specification : Continuity (below 1.0Ω)

4) Is the measured resistance within the specification?

YES

▶ Repair short to ground in RPRV control circuit and go to "Verification of Vehicle Repair".

NO

▶ Repair open in RPRV control circuit and go to "Verification of Vehicle Repair".

COMPONENT INSPECTION E77176D0

1. Check RPRV component resistance

1) IG KEY "OFF", ENGINE "OFF".

2) Disconnect RPRV connector.

3) Check RPRV component resistance.

Specification : 3.42 ~ 3.78Ω (20℃)

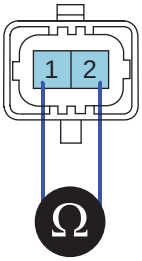

EGNG008I

4) Is the measured resistance within the specification?

YES

▶ Go to "Verification of Vehicle Repair".

NO

▶ Replace common rail assy' and go to "Verification of Vehicle Repair".

VERIFICATION OF VEHICLE REPAIR E7FD781E

Refer to DTC P0091.

DTC P0097 INTAKE AIR TEMPERATURE SENSOR 2 CIRCUIT LOW INPUT

COMPONENT LOCATION E67033BC

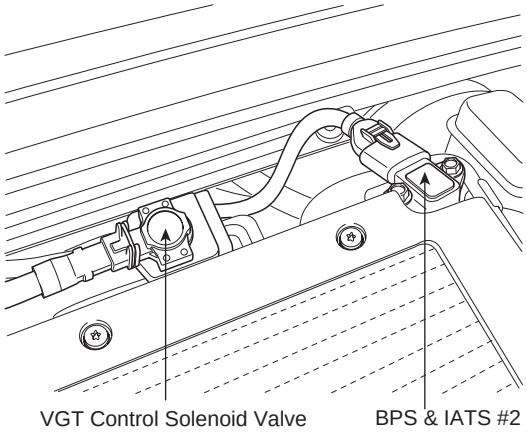

SCMFL6500L

GENERAL DESCRIPTION E9DA23FE

Intake Air Temperature Sensor(IATS) is NTC thermistor. Installed inside of both MAFS and BPS, it senses intake air temperature. In case of EURO-4 diesel engine, IATS is installed in front of turbocharger(inside of MAFS) and behind it(inside of BPS). Comparing air temperature from both sensors(one is intake air temperature, the other is air temperature passing through turbo charger), more accurate sensing of intake air temperature is possible.With intake air temperature signal, ECM performs EGR control correction and fuel injection quantity correction.(MAFS is needed for EGR FEED BACK control in electronically controlled diesel engine. The calculation of air density at certain temperture is required to perform EGR FEED BACK control correctly.)

DTC DESCRIPTION E3FE6714

P0097 is set when the voltage below 73mV - minimum output voltage of IATS(integrated with BPS) - is detected for more than 2.0 sec. This code is due to short to ground in IATS signal circuit.

DTC DETECTING CONDITION E925684D

<table>
<tr><th>Item</th><th colspan="3">Detecting Condition</th><th>Possible Cause</th></tr>
<tr><td>DTC Strategy</td><td colspan="3">• Voltage monitoring</td><td rowspan="6">• IATS circuit
• IATS component</td></tr>
<tr><td>Enable Conditions</td><td colspan="3">• IG KEY "ON"</td></tr>
<tr><td>Threshold Value</td><td colspan="3">• Output signal below minimum value(below 73mV)</td></tr>
<tr><td>Diagnostic Time</td><td colspan="3">• 2.0 sec.</td></tr>
<tr><td rowspan="4">Fail Safe</td><td>Fuel cut</td><td>NO</td><td rowspan="4">• Air temp. fixed at 28 ℃</td></tr>
<tr><td>EGR Off</td><td>NO</td></tr>
<tr><td>Fuel Limit</td><td>NO</td></tr>
<tr><td>Check Lamp</td><td>NO</td></tr>
</table>

SPECIFICATION E8B7F239

Temp.	-40℃	-20℃	0℃	20℃	40℃	60℃	80℃
Resistance	35.14 ~43.76KΩ	12.66 ~15.12KΩ	5.12 ~5.89KΩ	2.29 ~2.55KΩ	1.10 ~1.24KΩ	0.57 ~0.65KΩ	0.31 ~0.37KΩ

SCHEMATIC DIAGRAM ED9A170D

[CIRCUIT DIAGRAM]

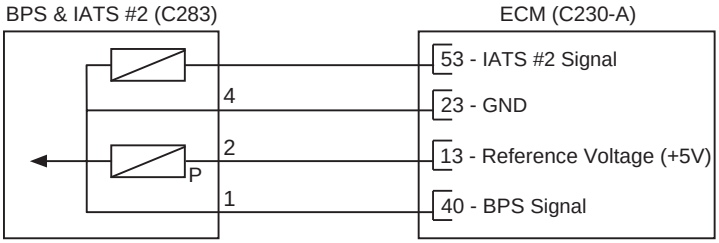

[CONNECTION INFORMATION]

Terminal	Connected to	Function
1	ECM C230-A (40)	BPS Signal
2	ECM C230-A (13)	Reference Voltage (+5V)
3	ECM C230-A (53)	IATS #2 Signal
4	ECM C230-A (23)	Sensor ground

[HARNESS CONNECTORS]

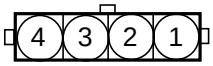

C283

BPS & IATS #2

C230-A

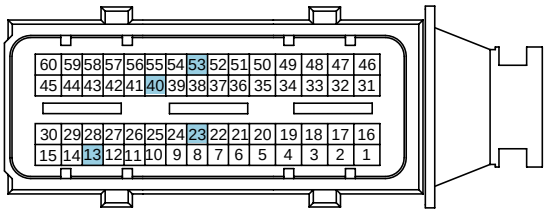

C230-K

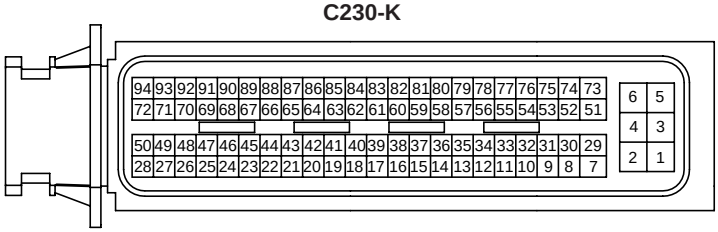

ECM

SCMFL6118L

SIGNAL WAVEFORM AND DATA E395DB03

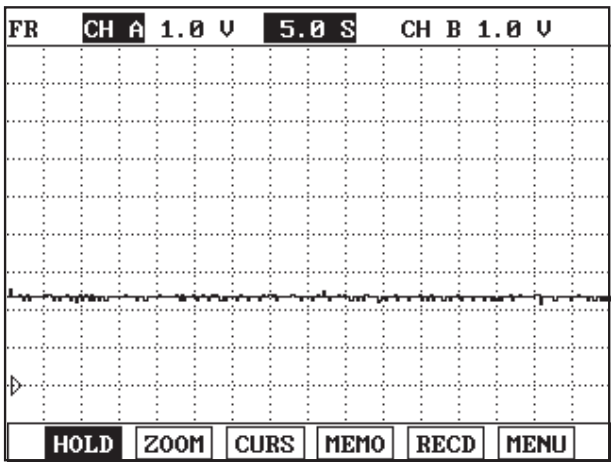

Fig.1

Fig.1) IATS output waveform at 45℃. The higher temperature is, the lower voltage becomes.

LFIG381A

MONITOR SCANTOOL DATA E5D4407A

1. Connect Scantool to Data Link Connector (DLC).
2. Warm engine up to normal operating temperature.
3. Turn "OFF" electrical devices and A/C.
4. Monitor "AIR TERMPERATURE SENSOR" parameter on the Scantool.

specification : current intake air temperture is displayed.

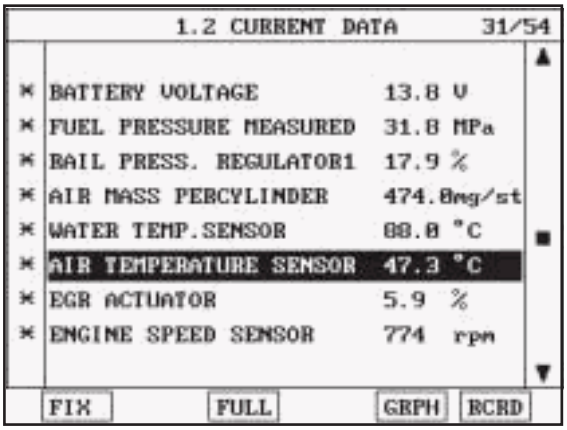

Fig.1

Fig.1) Check if current temperature is same as the value displayed on the Scantool.

SCMFL6211L

TERMINAL AND CONNECTOR INSPECTION E37C39EC

1. Electrical systems consist of a lot of harness and connectors, poor connection of terminals can cause various problems and damge of component.
2. Perform checking procedure as follows.

1) Check damage of harness and terminals : Check terminals for contact resistance, corrosion and deformation.

2) Check connecting condition of ECM and component connector : Check terminal seperation, damage of locking device and

NOTE

Disconnect the pin which requires checking at male connector and insert it to the terminal at female connector for checking connecting condition. (after checking, reconnect the pin at correct position.)

3. Is the problem found?

YES

▶ Repair the trouble causing part and go to "Verification of Vehicle Repair".

NO

▶ Go to "Signal Circuit Inspection".

SIGNAL CIRCUIT INSPECTION EB4A2F1F

1. Check signal circuit voltage

1) IG KEY "OFF", ENGINE "OFF"

2) Disconnect BPS connector.

3) IG KEY "ON"

4) Check the voltage of BPS connector terminal 3.

Specification : 4.8V~5.1V

5) Is the measured voltage within the specificaiton?

YES

▶ Go to "Component Inspection".

NO

▶ Repair "2. Check short to ground in signal circuit" as follows.

2. Check short to ground in signal circuit

1) IG KEY "OFF", ENGINE "OFF"

2) Disconnect BPS connector and ECM connector.

3) Check continuity between BPS connector terminal 3 and chassis ground.

Specification : Discontinuity(Infinite Ω)

4) Is the measured resistance within the specification?

YES

▶ Go to "Component Inspection".

NO

▶ Repair short to ground in signal circuit and go to "Verification of Vehicle Repair".
▶ Repair open in signal circuit and go to "Verification of Vehicle Repair".

COMPONENT INSPECTION E08990DE

1. IG KEY "OFF", ENGINE "OFF".
2. Disconnect BPS connector.
3. Measure resistance between IATS component terminal 3 and 4, referring to resistance characteristic table of specification of General information.

Specification : Refer to Specification of General Information

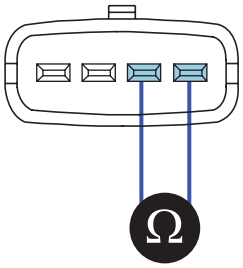

LFIG384A

4. Is the measured resistance at certain temperature within the specified resisance range at the temperature?

YES

▶ Go to "Verification of Vehicle Repair".

NO

▶ Replace BPS assy' and go to "Verification of Vehicle Repair".

VERIFICATION OF VEHICLE REPAIR E36A954E

After a repair, it is essential to verify that the fault is corrected.

1. After connecting Scantool select "DIAGNOSTIC TROUBLE CODES(DTCs)" mode.
2. Clear recorded DTC using Scantool.
3. Drive the vehicle within DTC "Enable conditions" in "General information".
4. After selecting "DIAGNOSTIC TROUBLE CODES(DTCs)" mode and check if DTC is recorded again.
5. Are any DTCs recorded ?

YES

▶ Go to the DTC guide of recorded NO. in Scantool.

NO

▶ System operates within specification.

DTC P0098 INTAKE AIR TEMPERATURE SENSOR 2 CIRCUIT HIGH INPUT

COMPONENT LOCATION E616B3FF

Refer to DTC P0097.

GENERAL DESCRIPTION EE99A887

Refer to DTC P0097.

DTC DESCRIPTION E6DFC952

P0098 is set when the voltage above 4965mV - maximum output voltage of IATS(integrated with BPS) - is detected for more than 2.0 sec.. This code is due to 1) open or 2)short to battery in IATS signal circuit.

DTC DETECTING CONDITION EA2C8C4D

<table>
<tr><th>Item</th><th colspan="3">Detecting Condition</th><th>Possible Cause</th></tr>
<tr><td>DTC Strategy</td><td colspan="3">• Voltage monitoring</td><td rowspan="6">• IATS circuit
• IATS component</td></tr>
<tr><td>Enable Conditions</td><td colspan="3">• IG KEY "ON"</td></tr>
<tr><td>Threshold Value</td><td colspan="3">• Output signal above maximum value(above 4965mV)</td></tr>
<tr><td>Diagnostic Time</td><td colspan="3">• 2.0 sec.</td></tr>
<tr><td rowspan="4">Fail Safe</td><td>Fuel cut</td><td>NO</td><td rowspan="4">• Air temp. fixed at 28 ℃</td></tr>
<tr><td>EGR Off</td><td>NO</td></tr>
<tr><td>Fuel Limit</td><td>NO</td></tr>
<tr><td>Check Lamp</td><td>NO</td></tr>
</table>

SPECIFICATION E898D2D7

Refer to DTC P0097.

SCHEMATIC DIAGRAM E96F6191

Refer to DTC P0097.

SIGNAL WAVEFORM AND DATA ECAC6CC0

Refer to DTC P0097.

MONITOR SCANTOOL DATA E6B65CF2

Refer to DTC P0097.

TERMINAL AND CONNECTOR INSPECTION EBC05B74

Refer to DTC P0097.

SIGNAL CIRCUIT INSPECTION E5C5C92B

1. Check signal circuit voltage

   1) IG KEY "OFF", ENGINE "OFF".

   2) Disconnect BPS connector.

   3) IG KEY "ON"

   4) Check the voltage of BPS connector terminal 3.

Specification : 4.8V~5.1V

   5) Is the measured voltage within the specificaiton?

   YES

   ▶ Go to "Ground Circuit Inspection".

   NO

   ▶ Go to "2.Check open in signal circuit" as follows.

2. Check open in signal circuit

   1) IG KEY "OFF", ENGINE "OFF".

   2) Disconnect BPS connector and ECM connector.

   3) Check continuity between BPS connector terminal 3 and ECM connector (C230-A) terminal 53.

Specification : Continuity (below 1.0Ω)

   4) Is the measured resistance within the specification?

   YES

   ▶ Go to "3. Check short to battery in signal circuit" as follows.

   NO

   ▶ Repair open in signal circuit and go to "Verification of Vehicle Repair".

3. Check short to battery in signal circuit

   1) IG KEY "OFF", ENGINE "OFF".

   2) Disconnect BPS connector and ECM connector.

   3) IG KEY "ON"

   4) Check the voltage of BPS connector terminal 3.

Specification : 0.0V~0.1V

   5) Is the measured voltage within the specification?(with both connector disconnected)

YES

▶ Go to "Ground Circuit Inspection".

NO

▶ Repair short to battery in signal circuit and go to "Verification of Vehicle Repair".

GROUND CIRCUIT INSPECTION E61BCC4C

1. IG KEY "OFF", ENGINE "OFF".
2. Disconnect BPS connector.
3. IG KEY "ON".
4. Measure the voltage of BPS connector terminal 3. [TEST "A"]
5. Measure the voltage between BPS connector terminal 3 and 4. [TEST "B"]
   (terminal 3 : Check + prove , terminal 4 : Check - prove)

Specification : [TEST "A"] Voltage - [TEST "B"] Voltage = below 200mV

6. Is the measured voltage within the specification?

YES

▶ Go to "Component Inspection".

NO

▶ When "B" voltage is not detected : Repair open in ground circuit and go to "Verification of Vehicle Repair".
▶ When the voltage difference between "A" and "B" is above 200mV : Eliminate the causes of excessive resistance and go to "Verification of Vehicle Repair".

COMPONENT INSPECTION EF39E398

1. IG KEY "OFF", ENGINE "OFF".
2. Disconnect BPS connector.
3. Measure resistance between IATS component terminal 3 and 4, referring to resistance characteristic table of specification of General information.

Specification : Refer to Specification of General Information

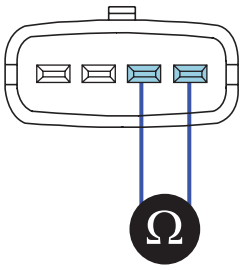

LFIG384A

4. Is the measured resistance at certain temperature within the specified resisance range at the temperature?

YES

▶ Go to "Verification of Vehicle Repair".

NO

▶ Replace BPS assy' and go to "Verification of Vehicle Repair".

VERIFICATION OF VEHICLE REPAIR E7F9E9F2

Refer to DTC P0097.

DTC P0101 MASS OR VOLUME AIR FLOW CIRCUIT RANGE/PERFORMANCE

COMPONENT LOCATION EEEE17FF

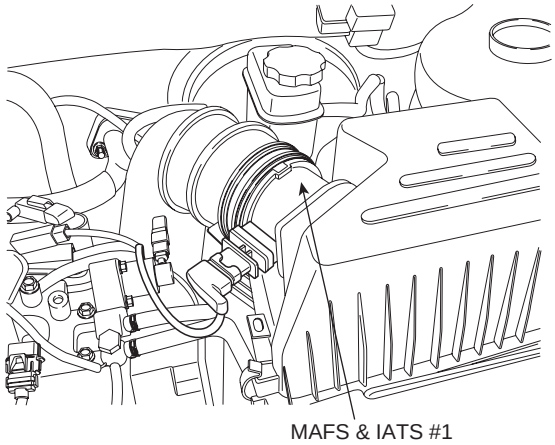

SCMFL6501L

GENERAL DESCRIPTION E53B271A

Mass Air Flow Sensor(MAFS) is digital sensor. Measuring mass of air flow, signal is outputted as frequency(Hz). ECM performs EGR system feed back control with the information of measured mass air flow. (The role of MAFS in diesel engine is different from gasoline engine. Fuel injection quantity is decided by MAFS signal in gasoline engine.)When the amount of EGR gas(contains no oxygen) flowing into combustion chamber increases, the air passing through MAFS(contains oxygen) decreases. Thus, with the output signal change of MAFS accompanied by EGR actuator actuation, ECM determines the amount of recirculated EGR gas quantity.

NOTE

NOx is produced in the reaction of nitrogen and oxygen.
If least intake air required for complete combustion flows into combustion chamber by controlling EGR gas(contains no oxygen) which is recirculated to combustion chamber, NOx decreases because there is no supplementary oxygen to react with nitrogen.

DTC DESCRIPTION E049FA0D

P0101 is set when short to battery or ground in MAFS or IATS signal circuit is detected for more than 0.58 sec.

DTC DETECTING CONDITION E02A7933

Item	Detecting Condition			Possible Cause
DTC Strategy	• Voltage monitoring			• MAFS circuit • MAFS component
Enable Conditions	• Engine running			
Threshold Value	• Shrot to battery or ground in MAFS or IATS circuit .			
Diagnostic Time	• 0.58 sec.			
Fail Safe	Fuel cut	NO		
	EGR Off	YES		
	Fuel Limit	YES		
	Check Lamp	YES		

SPECIFICATION E8013648

Intake air quantity (Kg/h)	Output frequency (KHz)		deviation [%]
	20℃	**80**℃	
8	1.97		±3
10	2.01	2.01	±2
40	2.50	2.50	±2
105	3.20	3.20	±2
220	4.30		±2
480	7.80	7.80	±2
560	9.50		±3

SCHEMATIC DIAGRAM EBA9E8D4

[CIRCUIT DIAGRAM]

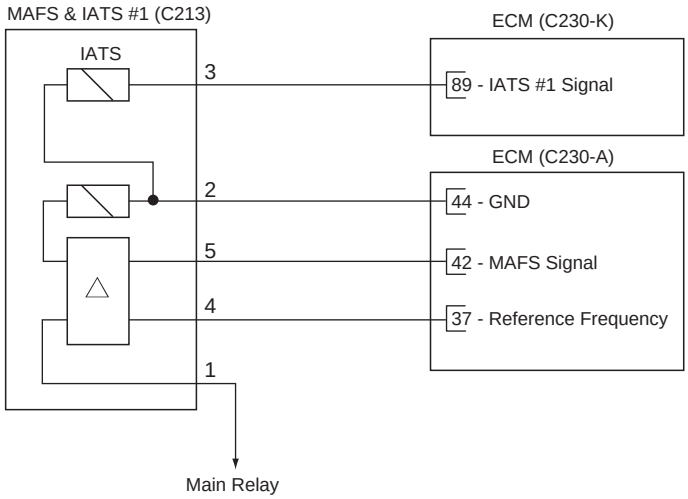

[CONNECTION INFORMATION]

Terminal	Connected to	Function
1	Main Relay	Battery Voltage (B+)
2	ECM C230-A (44)	Sensor Ground
3	ECM C230-K (89)	IATS #1 Signal
4	ECM C230-A (37)	Reference Frequency
5	ECM C230-A (42)	MAFS Signal

[HARNESS CONNECTORS]

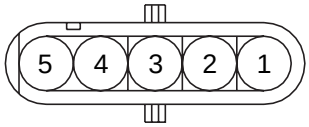

C213

MAFS & IATS #1

C230-A

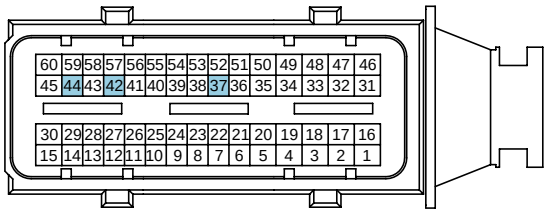

C230-K

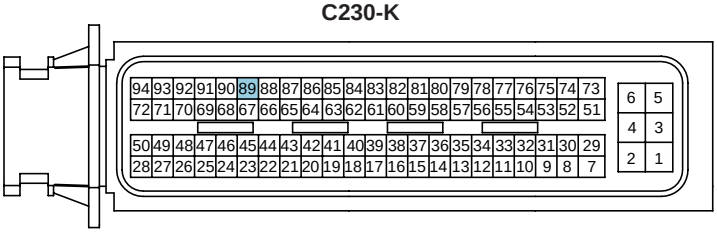

ECM

SCMFL6113L

SIGNAL WAVEFORM AND DATA EB833943

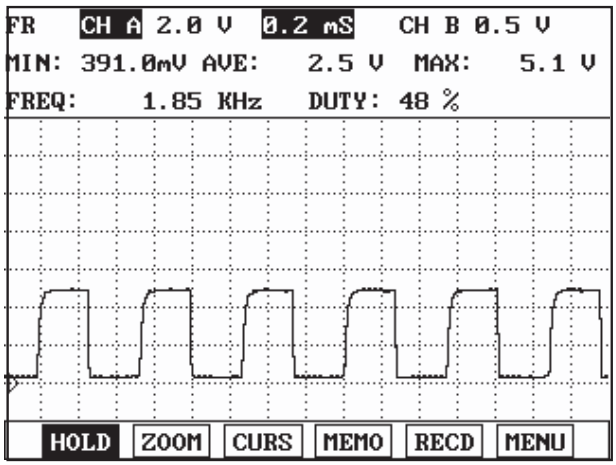

Fig.1

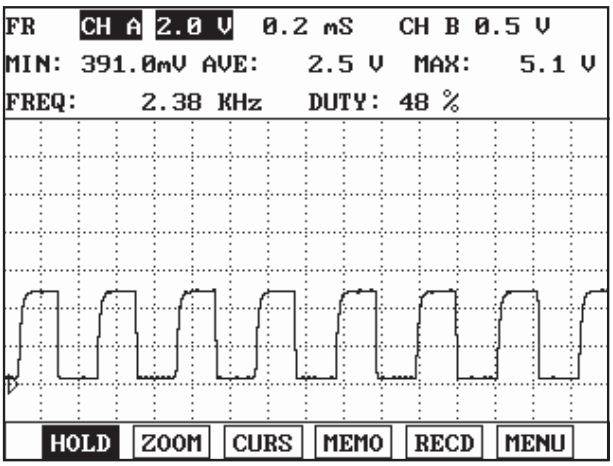

Fig.2

Fig.1) MAFS signal waveform at IG KEY "ON". It shows digital signal of 50% duty, 1.8KHz.
Fig.2) MAFS signal waveform at idle(750RPM, EGR actuator duty 5%, air flow for each cylinder 475mg/st).
It shows digital signal of 50% duty, 2.2~2.7KHz.

SCMFL6390L

NOTE

Signal frequency increases as RPM rises.

MONITOR SCANTOOL DATA E9C207F9

1. Connect Scantool to Data Link Connector (DLC).
2. Warm engine up to normal operating temperature.
3. Turn "OFF" electrical devices and A/C.
4. Monitor "AIR MASS PERCYLINDER" parameter on the Scantool.

Specification :	When EEGR actuator does not operate 5% duty) at idle : 450mg/st ± 50 mg/st
	When EEGR actuator operates(Approx. 45% duty) at idle : 400mg/st ± 50 mg/st

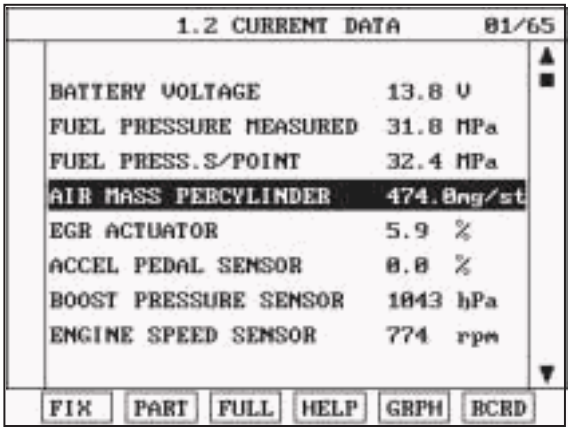

Fig.1

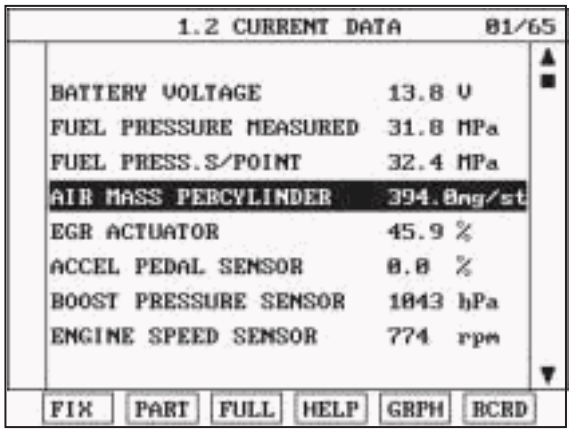

Fig.2

Fig.1) Check if "AIR MASS PERCYLINDER"l is 450mg/st ± 50mg/st without EEGR operation at warm idle (EEGR actuator 5% duty)
Fig.2) Check if "AIR MASS PERCYLINDER"l is 400mg/st ± 50mg/st with EEGR operation at warm idle (EEGR actuator approx. 45% duty)

SCMFL6391L

※EEGR actuator operates as decelerating after rapid acceleration when idle EEGR does not operate, EEGR actuator duty rises to approx. 45% at operating condition. This controlling process lasts for about 3 min. then EEGR actuator turns "OFF" (duty 5%).

NOTE

When IATS related DTC code(P0112, P0113) is set with this code, refer to IATS related DTC guide in advance.

TERMINAL AND CONNECTOR INSPECTION E5D4EF33

1. Electrical systems consist of a lot of harness and connectors, poor connection of terminals can cause various problems and damge of component.

2. Perform checking procedure as follows.

   1) Check damage of harness and terminals : Check terminals for contact resistance, corrosion and deformation.

   2) Check connecting condition of ECM and component connector : Check terminal seperation, damage of locking device and

NOTE

Disconnect the pin which requires checking at male connector and insert it to the terminal at female connector for checking connecting condition. (after checking, reconnect the pin at correct position.)

3. Is the problem found?

YES

▶ Repair the trouble causing part and go to "Verification of Vehicle Repair".

NO

▶ Go to "Power Circuit Inspection".

POWER CIRCUIT INSPECTION EE21F774

1. Check power circuit voltage

   1) IG KEY "OFF", ENGINE "OFF".

   2) Disconnect MAFS connector.

   3) IG KEY "ON".

   4) Measure the voltage of MAFS connector terminal 1 and 4.

Specification : Terminal 4 : 4.8V~5.1V (Sensor power) Terminal 1 : 11.5V~13.0V (IG Power)

   5) Is the measured voltage within the specification?

   YES

   ▶ Go to "Signal Circuit Inspection".

   NO

   6) ▶ When output voltage is not detected at terminal 1 :
   ☞ Repair open in I/P junction box 10A ECU FUSE and related circuit and go to "Verification of Vehicle Repair".
   ▶ When output voltage is not detected at terminal 4 :
   ☞ Repair open between MAFS connector terminal 4 and ECM connector(C230-A) terminal 37,

SIGNAL CIRCUIT INSPECTION E9EFE38E

1. Check signal circuit voltage

   1) IG KEY "OFF", ENGINE "OFF".

   2) Disconnect MAFS connector and ECM connector.

   3) IG KEY "ON".

   4) Measure the voltage of MAFS connector terminal 3 and 5.

Specification : Terminal 3 : 4.8V~5.1V (IATS signal) Terminal 5 : 4.8V~5.1V (MAFS signal)

   5) Is the measured voltage within the specification?

   YES

   ▶ Go to "Ground Circuit Inspection".

   NO

   ▶ Repair short to battery in signal circuit and go to "Verification of Vehicle Repair".

GROUND CIRCUIT INSPECTION E02158E5

1. IG KEY "OFF", ENGINE "OFF".

2. Disconnect MAFS connector.

3. IG KEY "ON".

4. Measure the voltage of MAFS connector terminal 4. [TEST "A"]

5. Measure the voltage between MAFS connector terminal 4 and 2. [TEST "B"]
(terminal 4 : Check + prove , terminal 2 : Check - prove)

Specification : [TEST "A"] Voltage - [TEST "B"] Voltage = below 200mV

6. Is the measured voltage within the specification?

YES

▶ Go to "Component Inspection".

NO

▶ When "B" voltage is not detected : Repair open in ground circuit and go to "Verification of Vehicle Repair".
▶ When the voltage difference between "A" and "B" is above 200mV : Eliminate the causes of excessive resistance and go to "Verification of Vehicle Repair".

COMPONENT INSPECTION E15837EE

1. IG KEY "OFF", ENGINE "OFF".

2. Check that MAFS is installed in correctly according to the direction of arrow on MAFS assy'.

3. Check contamination of air cleaner filter.

4. IG KEY "ON", ENGINE "ON".

5. Let IDLE RPM last after warming engine up.

6. Check the leakage of intake system(the leakage or damage of intercooler).

7. Check that VGT operates correctly.(Check if vacuum operating state of VGT actuator is appropriate, if VGT diaphragm and unison ring are stuck.)

8. Check that EEGR actuator does not operate.
(EEGR actuator turns "OFF" and 6% duty is outputted 3 min. after rapid acceleration. Disconnect EEGR actuator connector if needed.)

9. Monitor signal voltage of MAFS when engine speed lasts at approx. 750RPM using Scantool.

10. Check MAFS output signal at idle after rapid acceleration.(EEGR actuator duty 45%)

Specification : When EEGR actuator does not operate (6%) at idle : 450mg/st ± 50 mg/st EEGR When EEGR actuator operates(45%) at idle : 400mg/st ± 50 mg/st

11. Is output signal within the specification?

YES

▶ Go to "Verification of Vehicle Repair".

NO

▶ Replace MAFS assy' and go to "Verification of Vehicle Repair".

VERIFICATION OF VEHICLE REPAIR ED479790

After a repair, it is essential to verify that the fault is corrected.

1. After connecting Scantool select "DIAGNOSTIC TROUBLE CODES(DTCs)" mode.
2. Clear recorded DTC using Scantool.
3. Drive the vehicle within DTC "Enable conditions" in "General information".
4. After selecting "DIAGNOSTIC TROUBLE CODES(DTCs)" mode and check if DTC is recorded again.
5. Are any DTCs recorded ?

YES

▶ Go to the DTC guide of recorded NO. in Scantool.

NO

▶ System operates within specification.

DTC P0102 MASS OR VOLUME AIR FLOW CIRCUIT LOW INPUT

COMPONENT LOCATION ED4B0D80

Refer to DTC P0101.

GENERAL DESCRIPTION EB44E49F

Refer to DTC P0101.

DTC DESCRIPTION E13C0747

P0102 is set when MAFS output voltage below 0.2V(below 1200Hz) is detected for more than 0.6 sec.. This code is due to 1)open in power circuit 2) open or short to ground in signal circuit.

DTC DETECTING CONDITION EAF070B9

<table>
<tr><th>Item</th><th colspan="3">Detecting Condition</th><th>Possible Cause</th></tr>
<tr><td>DTC Strategy</td><td colspan="3">• Voltage monitoring</td><td rowspan="6">• MAFS circuit
• MAFS component</td></tr>
<tr><td>Enable Conditions</td><td colspan="3">• Engine running</td></tr>
<tr><td>Threshold Value</td><td colspan="3">• Abnormal minimum output signal(below 1200Hz)</td></tr>
<tr><td>Diagnostic Time</td><td colspan="3">• 0.6 sec.</td></tr>
<tr><td rowspan="4">Fail Safe</td><td>Fuel cut</td><td>NO</td><td rowspan="4"></td></tr>
<tr><td>EGR Off</td><td>YES</td></tr>
<tr><td>Fuel Limit</td><td>YES</td></tr>
<tr><td>Check Lamp</td><td>YES</td></tr>
</table>

SPECIFICATION E66267A6

Refer to DTC P0101.

SCHEMATIC DIAGRAM E93FBC46

Refer to DTC P0101.

SIGNAL WAVEFORM AND DATA EA2E8122

Refer to DTC P0101.

MONITOR SCANTOOL DATA E112B01D

Refer to DTC P0101.

TERMINAL AND CONNECTOR INSPECTION E10F61EE

Refer to DTC P0101.

POWER CIRCUIT INSPECTION E6801C71

1. Check power circuit voltage

   1) IG KEY "OFF", ENGINE "OFF".

   2) Disconnect MAFS connector.

   3) IG KEY "ON".

   4) Measure the voltage of MAFS connector terminal 1 and 4.

Specification : Terminal 4 : 4.8V~5.1V (Sensor power) Terminal 1 : 11.5V~13.0V (IG Power)

   5) Is the measured voltage within the specification?

   YES

   ▶ Go to "Signal Circuit Inspection".

   NO

   6) ▶ When output voltage is not detected at terminal 1 :
   ☞ Repair open in I/P junction box 10A ECU FUSE and related circuit and go to "Verification of Vehicle Repair".
   ▶ When output voltage is not detected at terminal 4 :
   ☞ Repair open between MAFS connector terminal 4 and ECM connector(C230-A) terminal 37, and go to "Verification of Vehicle Repair".

SIGNAL CIRCUIT INSPECTION EF16FF85

1. Check signal circuit voltage

   1) IG KEY "OFF", ENGINE "OFF".

   2) Disconnect MAFS connector.

   3) IG KEY "ON".

   4) Measure the voltage of MAFS connector terminal 5.

Specification : Continuity (below1.0 Ω)

   5) Is the measured voltage within the specification?

   YES

   ▶ Go to "Ground Circuit Inspection".

   NO

   ▶ Go to "2. Check open in signal circuit" as follows.

2. Check open in signal circuit

   1) IG KEY "OFF", ENGINE "OFF".

   2) Disconnect MAFS sensor connector and ECM connector.

3) Check continuity between MAFS connector terminal 5 and ECM connector (C230-A) terminal 42.

specification : Continuity (below 1.0Ω)

4) Is the measured resistance within the specification?

YES

▶ Go to "3. Check short to ground in signal circuit" as follows.

NO

▶ Repair open in signal circuit and go to "Verification of Vehicle Repair".

3. Check short to ground in signal circuit

1) IG KEY "OFF", ENGINE "OFF".

2) Disconnect MAFS sensor connector and ECM connector.

3) Check continuity between MAFS connector terminal 5 and chassis ground.

Specification : Discontinuity(Infinite Ω)

4) Is the measured resistance within the specification?

YES

▶ Go to "Ground Circuit Inspection".

NO

▶ Repair short to ground in signal circuit and go to "Verification of Vehicle Repair".

GROUND CIRCUIT INSPECTION ECB82765

1. IG KEY "OFF", ENGINE "OFF".
2. Disconnect MAFS connector.
3. IG KEY "ON".
4. Measure the voltage of MAFS connector terminal 4. [TEST "A"]
5. Measure the voltage between MAFS connector terminal 4 and 2. [TEST "B"]
   (terminal 4 : Check + prove , terminal 2 : Check - prove)

Specification : [TEST "A"] Voltage - [TEST "B"] Voltage = below 200mV

6. Is the measured voltage within the specification?

YES

▶ Go to "Component Inspection".

NO

▶ When "B" voltage is not detected : Repair open in ground circuit and go to "Verification of Vehicle Repair".
▶ When the voltage difference between "A" and "B" is above 200mV : Eliminate the causes of excessive resistance and go to "Verification of Vehicle Repair".

COMPONENT INSPECTION E5F4A381

1. IG KEY "OFF", ENGINE "OFF".
2. Check that MAFS is installed in correctly according to the direction of arrow on MAFS assy'.
3. Check contamination of air cleaner filter.
4. IG KEY "ON", ENGINE "ON".
5. Let IDLE RPM last after warming engine up.
6. Check the leakage of intake system(the leakage or damage of intercooler).
7. Check that VGT operates correctly.(Check if vacuum operating state of VGT actuator is appropriate, if VGT diaphragm and unison ring are stuck.)
8. Check that EEGR actuator does not operate.
   (EEGR actuator turns "OFF" and 6% duty is outputted 3 min. after rapid acceleration. Disconnect EEGR actuator connector if needed.)
9. Monitor signal voltage of MAFS when engine speed lasts at approx. 750RPM using Scantool.
10. Check MAFS output signal at idle after rapid acceleration.(EEGR actuator duty 45%)

Specification : When EEGR actuator does not operate (6%) at idle : 450mg/st ± 50 mg/st EEGR When EEGR actuator operates(45%) at idle : 400mg/st ± 50 mg/st

11. Is output signal within the specification?

YES

▶ Go to "Verification of Vehicle Repair".

NO

▶ Replace MAFS assy' and go to "Verification of Vehicle Repair".

VERIFICATION OF VEHICLE REPAIR EF8F6782

Refer to DTC P0101.

DTC P0103 MASS OR VOLUME AIR FLOW CIRCUIT HIGH INPUT

COMPONENT LOCATION E60D2AC9

Refer to DTC P0101.

GENERAL DESCRIPTION ED003DC6

Refer to DTC P0101.

DTC DESCRIPTION EF75F36A

P0103 is set when MAFS output voltage above 14100Hz is detected for more than 0.6 sec.. This code is due to excessive output voltage from sensor component or poor connection in sensor circuit.

DTC DETECTING CONDITION EB28A7B8

<table>
<tr><th>Item</th><th colspan="3">Detecting Condition</th><th>Possible Cause</th></tr>
<tr><td>DTC Strategy</td><td colspan="3">• Voltage monitoring</td><td rowspan="6">• MAFS circuit
• MAFS component</td></tr>
<tr><td>Enable Conditions</td><td colspan="3">• Engine running</td></tr>
<tr><td>Threshold Value</td><td colspan="3">• Abnormal maximum output signal(above 14100Hz)</td></tr>
<tr><td>Diagnostic Time</td><td colspan="3">• 0.6 sec.</td></tr>
<tr><td rowspan="4">Fail Safe</td><td>Fuel cut</td><td>NO</td><td rowspan="4"></td></tr>
<tr><td>EGR Off</td><td>YES</td></tr>
<tr><td>Fuel Limit</td><td>YES</td></tr>
<tr><td>Check Lamp</td><td>YES</td></tr>
</table>

SPECIFICATION E5180086

Refer to DTC P0101.

SCHEMATIC DIAGRAM EE0E1364

Refer to DTC P0101.

SIGNAL WAVEFORM AND DATA ED2962F4

Refer to DTC P0101.

MONITOR SCANTOOL DATA EC8612E2

Refer to DTC P0101.

TERMINAL AND CONNECTOR INSPECTION EEA31F85

Refer to DTC P0101.

POWER CIRCUIT INSPECTION E39961E4

1. Check power circuit voltage

   1) IG KEY "OFF", ENGINE "OFF".

   2) Disconnect MAFS connector.

   3) IG KEY "ON".

   4) Measure the voltage of MAFS connector terminal 1 and 4.

Specification : Terminal 4 : 4.8V~5.1V (Sensor power) Terminal 1 : 11.5V~13.0V (IG Power)

   5) Is the measured voltage within the specification?

   YES

   ▶ Go to "Signal Circuit Inspection".

   NO

   6) ▶ When output voltage is not detected at terminal 1 :
   ☞ Repair open in I/P junction box 10A ECU FUSE and related circuit and go to "Verification of Vehicle Repair".
   ▶ When output voltage is not detected at terminal 4 :
   ☞ Repair open between MAFS connector terminal 4 and ECM connector(C230-A) terminal 37, and go to "Verification of Vehicle Repair".

SIGNAL CIRCUIT INSPECTION E1934BDA

1. Check signal circuit voltage

   1) IG KEY "OFF", ENGINE "OFF".

   2) Disconnect AMFS connector.

   3) IG KEY "ON".

   4) Measure the voltage of MAFS connector terminal 5.

Specification : Continuity (below1.0 Ω)

   5) Is the measured voltage within the specification?

   YES

   ▶ Go to "Ground Circuit Inspection".

   NO

   ▶ Go to "2. Check open in signal circuit" as follows.

2. Check open in signal circuit

   1) IG KEY "OFF", ENGINE "OFF".

   2) Disconnect MAFS sensor connector and ECM connector.

3) Check continuity between MAFS connector terminal 5 and ECM connector (C230-A) terminal 42.

specification : Continuity (below 1.0Ω)

4) Is the measured resistance within the specification?

YES

▶ Go to "3. Check short to ground in signal circuit" as follows.

NO

▶ Repair open in signal circuit and go to "Verification of Vehicle Repair".

3. Check short to ground in signal circuit

1) IG KEY "OFF", ENGINE "OFF".

2) Disconnect MAFS sensor connector and ECM connector.

3) Check continuity between MAFS connector terminal 5 and chassis ground.

Specification : Discontinuity(Infinite Ω)

4) Is the measured resistance within the specification?

YES

▶ Go to "Ground Circuit Inspection".

NO

▶ Repair short to ground in signal circuit and go to "Verification of Vehicle Repair".

GROUND CIRCUIT INSPECTION E4429775

1. IG KEY "OFF", ENGINE "OFF".
2. Disconnect MAFS connector.
3. IG KEY "ON".
4. Measure the voltage of MAFS connector terminal 4. [TEST "A"]
5. Measure the voltage between MAFS connector terminal 4 and 2. [TEST "B"]
   (terminal 4 : Check + prove , terminal 2 : Check - prove)

Specification : [TEST "A"] Voltage - [TEST "B"] Voltage = below 200mV

6. Is the measured voltage within the specification?

YES

▶ Go to "Component Inspection".

NO

▶ When "B" voltage is not detected : Repair open in ground circuit and go to "Verification of Vehicle Repair".
▶ When the voltage difference between "A" and "B" is above 200mV : Eliminate the causes of excessive resistance and go to "Verification of Vehicle Repair".

COMPONENT INSPECTION E94DAB42

1. IG KEY "OFF", ENGINE "OFF".
2. Check that MAFS is installed in correctly according to the direction of arrow on MAFS assy'.
3. Check contamination of air cleaner filter.
4. IG KEY "ON", ENGINE "ON".
5. Let IDLE RPM last after warming engine up.
6. Check the leakage of intake system(the leakage or damage of intercooler).
7. Check that VGT operates correctly.(Check if vacuum operating state of VGT actuator is appropriate, if VGT diaphragm and unison ring are stuck.)
8. Check that EEGR actuator does not operate.
   (EEGR actuator turns "OFF" and 6% duty is outputted 3 min. after rapid acceleration. Disconnect EEGR actuator connector if needed.)
9. Monitor signal voltage of MAFS when engine speed lasts at approx. 750RPM using Scantool.
10. Check MAFS output signal at idle after rapid acceleration.(EEGR actuator duty 45%)

Specification : When EEGR actuator does not operate (6%) at idle : 450mg/st ± 50 mg/st EEGR When EEGR actuator operates(45%) at idle : 400mg/st ± 50 mg/st

11. Is output signal within the specification?

YES

▶ Go to "Verification of Vehicle Repair".

NO

▶ Replace MAFS assy' and go to "Verification of Vehicle Repair".

VERIFICATION OF VEHICLE REPAIR EB6BD954

Refer to DTC P0101.

DTC P0107 ATMOSPHERIC PRESSURE CIRCUIT LOW INPUT

COMPONENT LOCATION E887340A

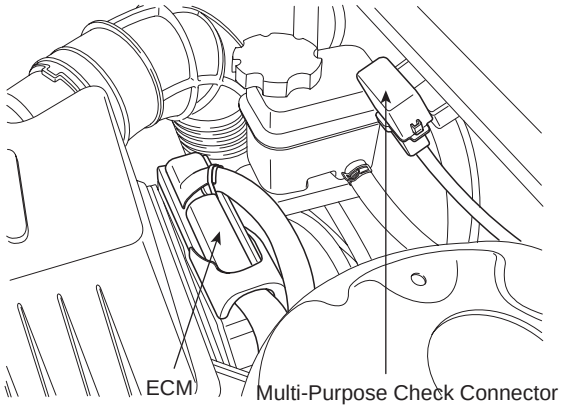

SCMFL6502L

GENERAL DESCRIPTION EE288751

Atmospheric sensor is installed in ECM and senses atmospheric pressure where the vehicle is.Based on singal of atmospheric sensor, air density is calculated. And atmospheric sensor is used to detect mass air flow with MAFS, IATS. This sensor is required to perform 1) fuel injection quantity correction in high altitude and 2) EGR control. Atmospheric pressure is fixed at 1000 hpa when atmospheric sensor fails.

DTC DESCRIPTION E60BA0C8

P0107 is set when the voltage below 0.25V - minimum output voltage of Atmospheric pressure sensor - is detected for more than 0.8 sec. This code is due to fhe failure of the sensor inside of ECM.

DTC DETECTING CONDITION E0AD6BA1

<table>
<tr><th>Item</th><th colspan="3">Detecting Condition</th><th>Possible Cause</th></tr>
<tr><td>DTC Strategy</td><td colspan="3">• Voltage monitoring</td><td rowspan="6">• Atmospheric pressure sensor(ECM component)</td></tr>
<tr><td>Enable Conditions</td><td colspan="3">• IG KEY "ON"</td></tr>
<tr><td>Threshold Value</td><td colspan="3">• When output voltage is below the minimum value.(below 0.25V)</td></tr>
<tr><td>Diagnostic Time</td><td colspan="3">• 0.8 sec.</td></tr>
<tr><td rowspan="4">Fail Safe</td><td>Fuel cut</td><td>NO</td><td rowspan="4">• Atmospheric pressure is fixed at 1000 hpa.</td></tr>
<tr><td>EGR Off</td><td>YES</td></tr>
<tr><td>Fuel Limit</td><td>NO</td></tr>
<tr><td>Check Lamp</td><td>NO</td></tr>
</table>

SPECIFICATION E6D72BDC

1atm is same as		
hpa (hecto pascal)	**mb**	**mmHg**
1013	1013	760

MONITOR SCANTOOL DATA E2E727D0

1. Connect Scantool to Data Link Connector (DLC).
2. Warm engine up to normal operating temperature.
3. Turn "OFF" electrical devices and A/C.
4. Monitor "ATMOSPHERIC PRESS. SNSR " parameter on the scantool.

Specification : Approx. 1 atm is displayed

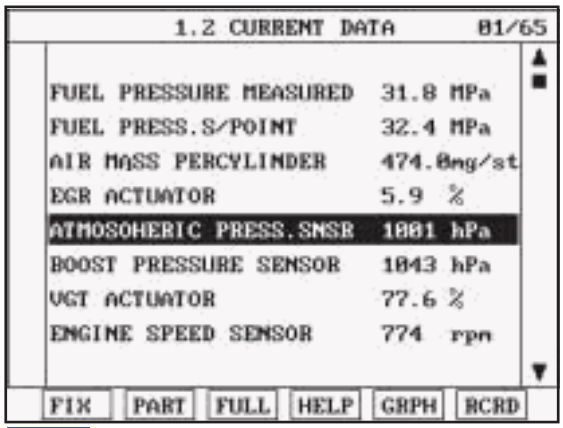

Fig.1

Fig.1) The atmospheric pressure where the vehicle is displayed. Atmospheric pressure decreases as vehicle going up to higher altitude. The pressure at average level of sea surface is considered as 1atm and, check if the pressure different from 1 atm is displayed. (1 atm is correct pressure)

SCMFL6417L

COMPONENT INSPECTION EC819D59

1. ECM Component Inspection

   1) IG KEY "OFF", ENGINE "OFF".

   2) Disconnect ECM.

   3) Replace ECM, check if abnormal operations disappear.

   4) If problems are corrected, replace ECM.

NOTE

Input injector IQA data(7 letters) using scantool at replacing ECM.
For immobilizer applied vehicle, input pin code.

VERIFICATION OF VEHICLE REPAIR E19D0072

After a repair, it is essential to verify that the fault is corrected.

1. After connecting Scantool select "DIAGNOSTIC TROUBLE CODES(DTCs)" mode.
2. Clear recorded DTC using Scantool.
3. Drive the vehicle within DTC "Enable conditions" in "General information".
4. After selecting "DIAGNOSTIC TROUBLE CODES(DTCs)" mode and check if DTC is recorded again.
5. Are any DTCs recorded ?

YES

▶ Go to the DTC guide of recorded NO. in Scantool.

NO

▶ System operates within specification.

DTC P0108 ATMOSPHERIC PRESSURE CIRCUIT HIGH INPUT

COMPONENT LOCATION E91DF613

Refer to DTC P0107.

GENERAL DESCRIPTION E8D790A9

Refer to DTC P0107.

DTC DESCRIPTION EE87F1B5

P0108 is set when the voltage above 4.85V - maximum output voltage of Barometric pressure sensor - is detected for more than 0.8 sec. This code is due to fhe failure of the sensor inside of ECM.

DTC DETECTING CONDITION EB79236E

<table>
<tr><th>Item</th><th colspan="3">Detecting Condition</th><th>Possible Cause</th></tr>
<tr><td>DTC Strategy</td><td colspan="3">• Voltage monitoring</td><td rowspan="6">• Atmospheric pressure sensor(ECM component)</td></tr>
<tr><td>Enable Conditions</td><td colspan="3">• IG KEY "ON"</td></tr>
<tr><td>Threshold Value</td><td colspan="3">• When output voltage is above the maximum value. (above 4.85V)</td></tr>
<tr><td>Diagnostic Time</td><td colspan="3">• 0.8 sec.</td></tr>
<tr><td rowspan="4">Fail Safe</td><td>Fuel cut</td><td>NO</td><td rowspan="4">• Atmospheric pressure is fixed at 1000 hpa.</td></tr>
<tr><td>EGR Off</td><td>YES</td></tr>
<tr><td>Fuel Limit</td><td>NO</td></tr>
<tr><td>Check Lamp</td><td>NO</td></tr>
</table>

SPECIFICATION E3C55B11

Refer to DTC P0107.

MONITOR SCANTOOL DATA EFF60DE3

Refer to DTC P0107.

COMPONENT INSPECTION EAAB6581

1. ECM Component Inspection

   1) IG KEY "OFF", ENGINE "OFF".

   2) Disconnect ECM.

   3) Replace ECM, check if abnormal operations disappear.

   4) If problems are corrected, replace ECM.

NOTE

Input injector IQA data(7 letters) using scantool at replacing ECM.
For immobilizer applied vehicle, input pin code.

VERIFICATION OF VEHICLE REPAIR E56D405C

Refer to DTC P0107.

DTC P0112 INTAKE AIR TEMPERATURE SENSOR1 CIRCUIT LOW INPUT

COMPONENT LOCATION E3C8B301

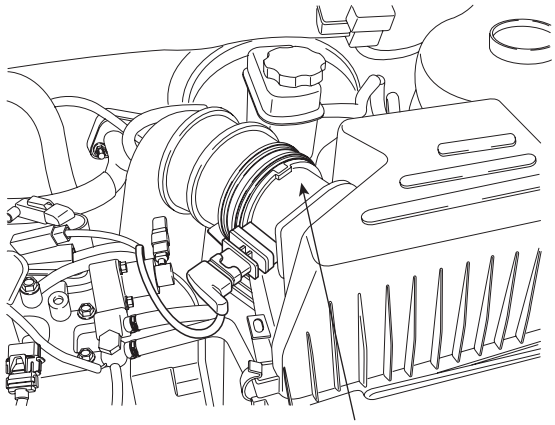

SCMFL6501L

GENERAL DESCRIPTION E0CAFEFF

Intake Air Temperature Sensor(IATS) is NTC thermistor. Installed inside of both MAFS and BPS, it senses intake air temperature. In case of EURO-4 diesel engine, IATS is installed in front of turbocharger(inside of MAFS) and behind it(inside of BPS). Comparing air temperature from both sensors(one is intake air temperature, the other is air temperature passing through turbo charger), more accurate sensing of intake air temperature is possible.With intake air temperature signal, ECM performs EGR control correction and fuel injection quantity correction.(MAFS is needed for EGR FEED BACK control in electronically controlled diesel engine. The calculation of air density at certain temperture is required to perform EGR FEED BACK control correctly.)

DTC DESCRIPTION E96E5888

P0112 is set when the voltage below 73mV - minimum output voltage of IATS(inside of MAFS) - is detected for more than 1 sec. This code is due to short to ground in IATS signal circuit.

DTC DETECTING CONDITION EB8B6F70

Item	Detecting Condition			Possible Cause
DTC Strategy	• Voltage monitoring			• IATS circuit • IATS component
Enable Conditions	• IG KEY "ON"			
Threshold Value	• When output signal is below the minimum value (below 0.073V)			
Diagnostic Time	• 1 sec.			
Fail Safe	Fuel cut	NO	• Intake air temperature is considered as 20℃	
	EGR Off	NO		
	Fuel Limit	NO		
	Check Lamp	NO		

SPECIFICATION EA5B229B

Tempera-ture	-40℃	-20℃	0℃	20℃	40℃	60℃	80℃
Resistance	35.14 ~43.76KΩ	12.66 ~15.12KΩ	5.12 ~5.89KΩ	2.29 ~2.55KΩ	1.10 ~1.24KΩ	0.57 ~0.65KΩ	0.31 ~0.37KΩ

SCHEMATIC DIAGRAM EAAD4B68

[CIRCUIT DIAGRAM]

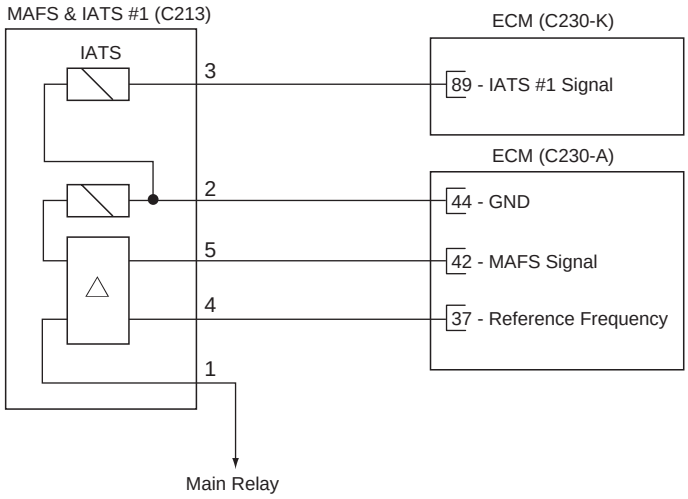

[CONNECTION INFORMATION]

Terminal	Connected to	Function
1	Main Relay	Battery Voltage (B+)
2	ECM C230-A (44)	Sensor Ground
3	ECM C230-K (89)	IATS #1 Signal
4	ECM C230-A (37)	Reference Frequency
5	ECM C230-A (42)	MAFS Signal

[HARNESS CONNECTORS]

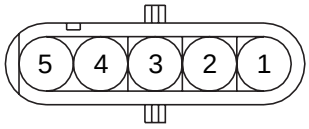

C213

MAFS & IATS #1

C230-A

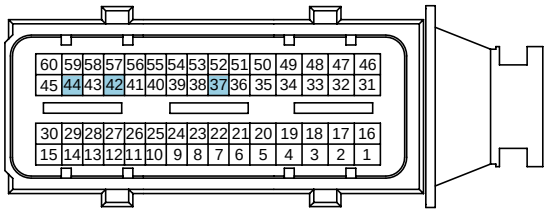

C230-K

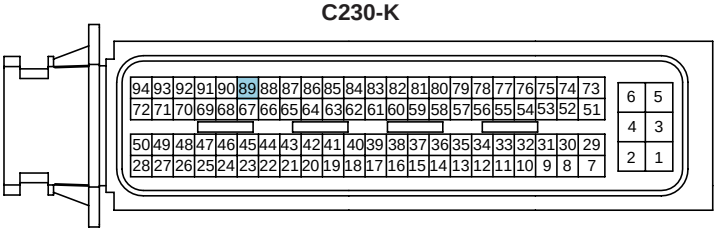

ECM

SCMFL6113L

SIGNAL WAVEFORM AND DATA E8B07533

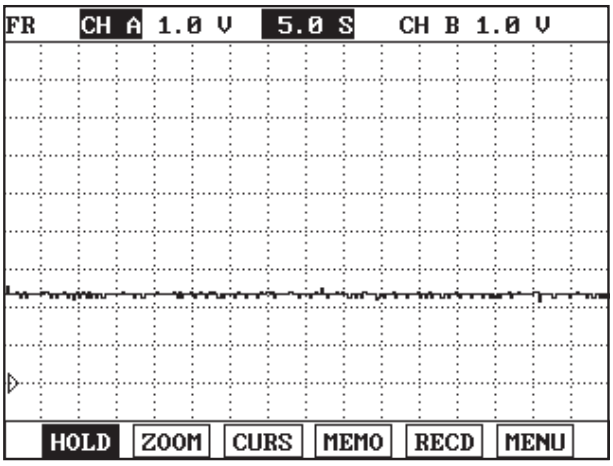

Fig.1

Fig.1) IATS output signal at warm idle.The higher temperature rises, the lower signal voltage becomes.

LFIG234A

TERMINAL AND CONNECTOR INSPECTION E8DFF227

1. Electrical systems consist of a lot of harness and connectors, poor connection of terminals can cause various problems and damge of component.

2. Perform checking procedure as follows.

   1) Check damage of harness and terminals : Check terminals for contact resistance, corrosion and deformation.

   2) Check connecting condition of ECM and component connector : Check terminal seperation, damage of locking device and connecting condition between terminal and wiring.

   NOTE

   Disconnect the pin which requires checking at male connector and insert it to the terminal at female connector for checking connecting condition. (after checking, reconnect the pin at correct position.)

3. Is the problem found?

   YES

   ▶ Repair the trouble causing part and go to "Verification of Vehicle Repair".

   NO

   ▶ Go to "Signal Circuit Inspection ".

SIGNAL CIRCUIT INSPECTION EFC4C008

1. Check signal circuit voltage

   1) IG KEY "OFF", ENGINE "OFF".

   2) Disconnect MAFS connector

   3) IG KEY "ON"

   4) Measure the voltage of terminal 3 of MAFS connector.

Specification : 4.8V~5.1V

5) Is the measured voltage within the specification?

YES

▶ Go to "Component Inspection"

NO

▶ Go to "2.Check short to ground in signal circuit" as follows.

2. Check short to ground in signal circuit

1) IG KEY "OFF", ENGINE "OFF".

2) Disconnect MAFS connector and ECM connector

3) Check continuity between MAFS connector terminal 3 and chassis ground.

Specification : Discontinuity (Infinite Ω)

4) Is the measured resistance within the specification?

YES

▶ Go to "Component Inspection".

NO

▶ Repair short to ground in signal circuit and go to "Verification of Vehicle Repair".

COMPONENT INSPECTION E64161C3

1. IG KEY "OFF", ENGINE "OFF"

2. Disconnect MAFS connector.

3. Measure resistance of IATS component terminal 3 and 2, referring to resistance characteristic table of specification of General information.

Specification : Refer to Specification of General Information.

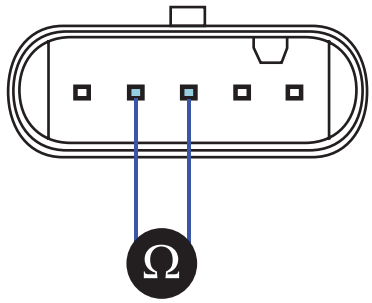

EGNG004S

4. Is the measured resistance at certain temperature within the specified resisance range at the temperature?

YES

▶ Go to "Verification of Vehicle Rapair"

NO

▶ Replace MAFS ASSY' and go to "Verification of Vehicle Repair".

VERIFICATION OF VEHICLE REPAIR E7F6435E

After a repair, it is essential to verify that the fault is corrected.

1. After connecting Scantool select "DIAGNOSTIC TROUBLE CODES(DTCs)" mode.
2. Clear recorded DTC using Scantool.
3. Drive the vehicle within DTC "Enable conditions" in "General information".
4. After selecting "DIAGNOSTIC TROUBLE CODES(DTCs)" mode and check if DTC is recorded again.
5. Are any DTCs recorded ?

YES

▶ Go to the DTC guide of recorded NO. in Scantool.

NO

▶ System operates within specification.

DTC P0113 INTAKE AIR TEMPERATURE SENSOR1 CIRCUIT HIGH INPUT

COMPONENT LOCATION E3BA2FB2

Refer to DTC P0112.

GENERAL DESCRIPTION EB72C8F3

Refer to DTC P0112.

DTC DESCRIPTION E7039491

P0113 is set when the voltage above 4.89V - maximum output voltage of IATS - is detected for more than 1 sec. This code is due to 1) open or 2) short to battery in IATS signal circuit.

DTC DETECTING CONDITION E93AB657

<table>
<tr><th>Item</th><th colspan="3">Detecting Condition</th><th>Possible Cause</th></tr>
<tr><td>DTC Strategy</td><td colspan="3">• Voltage monitoring</td><td rowspan="6">• IATS circuit
• IATS component</td></tr>
<tr><td>Enable Conditions</td><td colspan="3">• IG KEY "ON"</td></tr>
<tr><td>Threshold Value</td><td colspan="3">• When output signal is above the maximum value (above 4.89V)</td></tr>
<tr><td>Diagnostic Time</td><td colspan="3">• 1 sec.</td></tr>
<tr><td rowspan="4">Fail Safe</td><td>Fuel cut</td><td>NO</td><td rowspan="4">• Intake air temperature is considered as 20℃</td></tr>
<tr><td>EGR Off</td><td>NO</td></tr>
<tr><td>Fuel Limit</td><td>NO</td></tr>
<tr><td>Check Lamp</td><td>NO</td></tr>
</table>

SPECIFICATION E6EA3ABB

Refer to DTC P0112.

SCHEMATIC DIAGRAM E4B998B7

Refer to DTC P0112.

SIGNAL WAVEFORM AND DATA E32EDF8B

Refer to DTC P0112.

TERMINAL AND CONNECTOR INSPECTION E4A2FFF6

Refer to DTC P0112.

SIGNAL CIRCUIT INSPECTION EA6595CC

1. Check signal circuit voltage

1) IG KEY "OFF", ENGINE "OFF".

2) Disconnect MAFS connector.

3) IG KEY "ON"

4) Measure the voltage of terminal 3 of MAFS connector.

Specification : 4.8~5.1V

5) Is the measured voltage within the specification?

YES

▶ Go to "Component Inspection"

NO

▶ Go to "2.Check open in signal circuit" as follows.

2. Check open in signal circuit

1) IG KEY "OFF", ENGINE "OFF".

2) Disconnect MAFS connector and ECM connector.

3) Check continuity between MAFS connector terminal 3 and ECM connector (C230-K) terminal 89.

Specification : Continuity (below 1.0Ω)

4) Is the measured resistance within the specification?

YES

▶ Go to "3.Check short to battery in signal circuit " as follows

NO

▶ Repair open in signal circuit and go to "Verification of Vehicle Repair".

3. Check short to battery in signal circuit

1) IG KEY "OFF", ENGINE "OFF".

2) Disconnect MAFS connector and ECM connector.

3) IG KEY "ON".

4) Measure the voltage of terminal 3 of MAFS connector.

Specification : 0~0.1V

5) Is the measured voltage within the specification?

YES

▶ Go to "Ground Circuit Inspection".

NO

▶ Repair short to battery and go to "Verification of Vehicle Repair".

GROUND CIRCUIT INSPECTION EC57554A

1. IG KEY "OFF", ENGINE "OFF".
2. Disconnect MAFS connector and ECM connector
3. IG KEY "ON"
4. Measure the voltage of terminal 3 of MAFS connector. [TEST "A"]
5. Measure the voltage of MAFS terminal 3 and terminal 2. [TEST "B"]
   (terminal 3 : Check + prove , terminal 2 : Check - prove)

Specification : the voltage difference between TEST "A" and TEST "B" is within 200mV

6. Is the measured voltage within the specification?

YES

▶ Go to "Component Inspection"

NO

▶ When "B" voltage is not detected : Repair open in ground circuit and go to "Verification of Vehicle Repair".
▶ When the voltage difference between "A" and "B" is above 200mV : Eliminate the causes of excessive resistance and go to "Verification of Vehicle Repair".

COMPONENT INSPECTION E378C8EC

1. IG KEY "OFF", ENGINE "OFF"
2. Disconnect MAFS connector.
3. Measure resistance of IATS component terminal 3 and 2, referring to resistance characteristic table of specification of General information.

Specification : Refer to Specification of General Information.

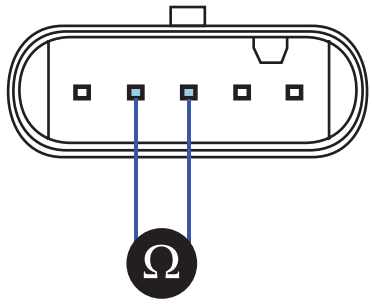

EGNG004S

4. Is the measured resistance at certain temperature within the specified resisance range at the temperature?

YES

▶ Go to "Verification of Vehicle Rapair"

NO

▶ Replace MAFS ASSY' and go to "Verification of Vehicle Repair".

VERIFICATION OF VEHICLE REPAIR E31D2BA8

Refer to DTC P0112.

DTC P0117 ENGINE COOLANT TEMPERATURE CIRCUIT LOW INPUT

COMPONENT LOCATION E356AAFA

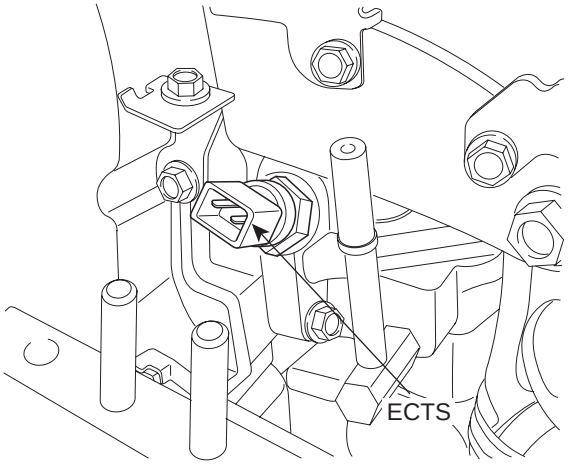

LFIG385A

GENERAL DESCRIPTION E0EDC9B9

Engine Coolant Temperature Sensor(ECTS), installed in coolant line, senses engine coolant temperature.With the information about engine coolant temperature, ECM performs fuel injection quantity correction, cooling fan control and glow relay operating duration control.Especially, because ECTS signal is main variable of fuel injection quantity correction when engine is cold, sensor trouble makes starting engine difficult when engine is cold.If engine is running when ECTS is out of order, ECM considers engine coolant temperature as 80℃. And during cranking, ECM considers engine coolant temperature as -10℃. Besides, cooling fan, which is controlled based on ECTS signal, operates at HIGH-MODE to prevent engine from being overheated and supplementary heater is deactivated.

DTC DESCRIPTION E89F57FF

P0117 is set when the voltage below 0.083V - minimum output voltage of ECTS - is detected for more than 2.0 sec. This code is due to short to ground in signal circuit.

DTC DETECTING CONDITION E23715EB

<table>
<tr><th>Item</th><th colspan="3">Detecting Condition</th><th>Possible Cause</th></tr>
<tr><td>DTC Strategy</td><td colspan="3">• Voltage monitoring</td><td rowspan="5">• ECTS circuit
• ECTS component</td></tr>
<tr><td>Enable Conditions</td><td colspan="3">• IG KEY "ON"</td></tr>
<tr><td>Threshold Value</td><td colspan="3">• Output signal below the minimum value.(below 0.083 V)</td></tr>
<tr><td>Diagnostic Time</td><td colspan="3">• 2.0 sec.</td></tr>
<tr><td rowspan="4">Fail Safe</td><td>Fuel cut</td><td>NO</td><td rowspan="4">• A/C condensor fan control operation based on engine coolant temperature inhibited.
• PTC heater inhibited.
• Cooling fan is fixed at HIGH-MODE.
• During engine operation : temperature is fixed at 80℃
• At cold and cranking : temperature is fixed at -10℃</td></tr>
<tr><td>EGR Off</td><td>YES</td></tr>
<tr><td>Fuel Limit</td><td>NO</td></tr>
<tr><td>Check Lamp</td><td>NO</td></tr>
</table>

SPECIFICATION EDD59882

Temperature	-40	-20	0	20	40
Resistance	48.14㎏Ω	15.48±1.35㎏Ω	5.790㎏Ω	2.45±0.14㎏Ω	1.148㎏Ω
Temperature	60	80	100	110	120
Resistance	0.586㎏Ω	0.322㎏Ω	0.188㎏Ω	0.147±0.002㎏Ω	0.116㎏Ω

SCHEMATIC DIAGRAM E4689316

[CIRCUIT DIAGRAM]

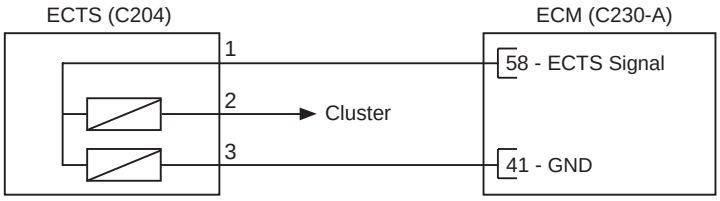

[CONNECTION INFORMATION]

Terminal	Connected to	Function
1	ECM C230-A (58)	ECTS Signal
2	Cluster	-
3	ECM C230-A (41)	Sensor ground

[HARNESS CONNECTORS]

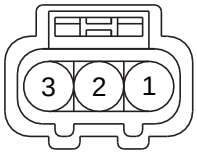

C204
ECTS

C230-A

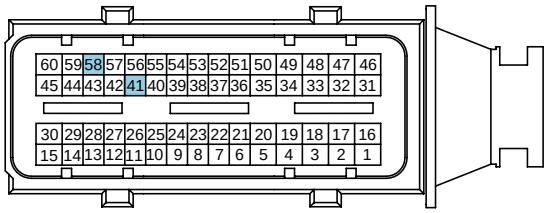

C230-K

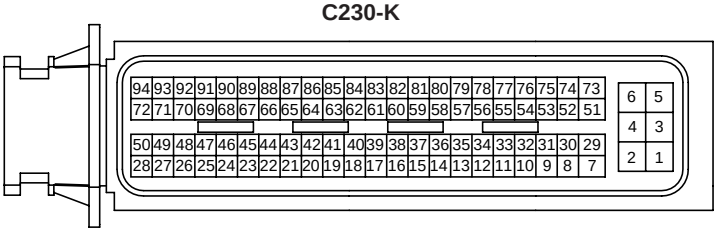

ECM

SCMFL6119L

SIGNAL WAVEFORM AND DATA E635F8BF

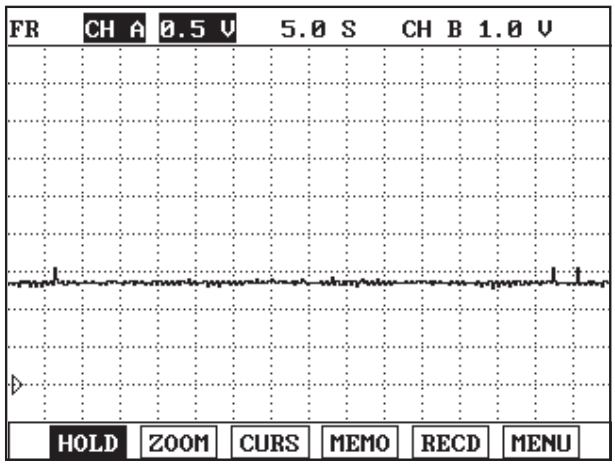

Fig.1

Fig.1) ECTS output signal at 80℃.The higher temperature rises, the lower signal voltage becomes.

LFIG387A

MONITOR SCANTOOL DATA ED4A0ECB

1. Connect Scantool to Data Link Connector (DLC).

2. Warm engine up to normal operating temperature.

3. Turn "OFF" electrical devices and A/C.

4. Monitor "ECTS" parameter on the Scantool.

Specification : Current enigne coolant temperature is displayed.

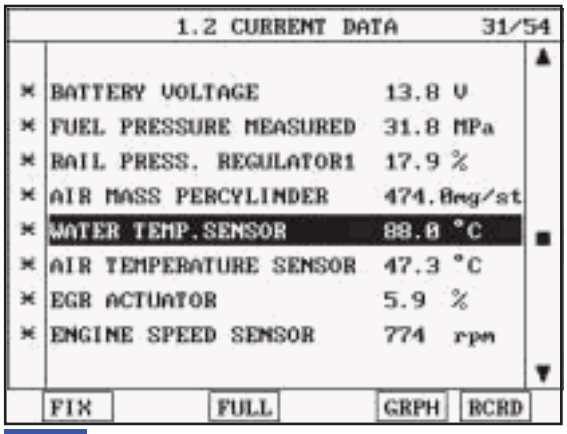

Fig.1

Fig.1) Check if 1) incorrect value is displayed 2) coolant temperature is fixed at 80℃ suddenly during driving 3)coolant temperature is fixed at -10℃ when turning IG KEY "ON". That coolant temperature is fixed at -10℃ or 80℃ means failure of ECTS. To prevent overheat of engine due to ECTS , if ECTS fails, cooling fan operates continuously.

SCMFL6227L

TERMINAL AND CONNECTOR INSPECTION E633DB0B

1. Electrical systems consist of a lot of harness and connectors, poor connection of terminals can cause various problems and damge of component.

2. Perform checking procedure as follows.

   1) Check damage of harness and terminals : Check terminals for contact resistance, corrosion and deformation.

   2) Check connecting condition of ECM and component connector : Check terminal seperation, damage of locking device and connecting condition between terminal and wiring.

   NOTE

   Disconnect the pin which requires checking at male connector and insert it to the terminal at female connector for checking connecting condition. (after checking, reconnect the pin at correct position.)

3. Is the problem found?

   YES

   ▶ Repair the trouble causing part and go to "Verification of Vehicle Repair".

   NO

   ▶ Go to "Signal Circuit Inspection ".

SIGNAL CIRCUIT INSPECTION EA1B1C97

1. Check signal circuit voltage

1) IG KEY "OFF", ENGINE "OFF"

2) Disconnect ECTS connector.

3) IG KEY "ON"

4) Measure the voltage of ECTS connector terminal 1.

Specification : 4.8V~5.1V

5) Is the measured voltage within the specification?

YES

▶ Go to "Component Inspection".

NO

▶ Go to "2.Check short to ground in signal circuit" as follows.

2. Check short to ground in signal circuit

1) IG KEY "OFF", ENGINE "OFF"

2) Disconnect ECTS connector and ECM connector.

3) Check continuity between ECTS connector terminal 1 and chassis ground.

Specification : Discontinuity (Infinite Ω)

4) Is the measured resistance within the specification?

YES

▶ Go to "Component Inspection".

NO

▶ Repair short to ground in signal circuit and go to "Verification of Vehicle Repair".

COMPONENT INSPECTION E9CA9562

1. IG KEY "OFF", ENGINE "OFF".

2. Disconnect ECTS connector.

3. Measure resistance between ECTS terminal 1 and 3, referring to resistance characteristic table of specification of General information.

Specification : Refer to Specification of General Information

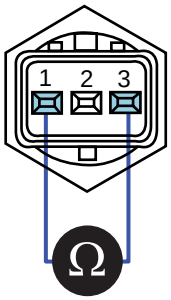

LFIG391A

4. Is the measured resistance at certain temperature within the specified resisance range at the temperature?

YES

▶ Go to "Verification of Vehicle Repair".

NO

▶ Replace ECTS and go to "Verification of Vehicle Repair".

VERIFICATION OF VEHICLE REPAIR EA8FE41C

After a repair, it is essential to verify that the fault is corrected.

1. After connecting Scantool select "DIAGNOSTIC TROUBLE CODES(DTCs)" mode.
2. Clear recorded DTC using Scantool.
3. Drive the vehicle within DTC "Enable conditions" in "General information".
4. After selecting "DIAGNOSTIC TROUBLE CODES(DTCs)" mode and check if DTC is recorded again.
5. Are any DTCs recorded ?

YES

▶ Go to the DTC guide of recorded NO. in Scantool.

NO

▶ System operates within specification.

DTC P0118 ENGINE COOLANT TEMPERATURE CIRCUIT HIGH INPUT

COMPONENT LOCATION EBBA68BC

Refer to DTC P0117.

GENERAL DESCRIPTION EA380FEE

Refer to DTC P0117.

DTC DESCRIPTION E9AFE60A

P0118 is set when the voltage above 4.965V - maximum output voltage of ECTS - is detected for more than 2.0 sec. This code is due to open or short to battery in signal circuit or open in ground circuit.

DTC DETECTING CONDITION E5E011D3

<table>
<tr><th>Item</th><th colspan="3">Detecting Condition</th><th>Possible Cause</th></tr>
<tr><td>DTC Strategy</td><td colspan="3">• Voltage monitoring</td><td rowspan="5">• ECTS circuit
• ECTS component</td></tr>
<tr><td>Enable Conditions</td><td colspan="3">• IG KEY "ON"</td></tr>
<tr><td>Threshold Value</td><td colspan="3">• Output signal above the maximum value(above 4.965V)</td></tr>
<tr><td>Diagnostic Time</td><td colspan="3">• 2.0 sec.</td></tr>
<tr><td rowspan="4">Fail Safe</td><td>Fuel cut</td><td>NO</td><td rowspan="4">• A/C condensor fan control operation based on engine coolant temperature inhibited.
• PTC heater inhibited.
• Cooling fan is fixed at HIGH-MODE.
• During engine operation : temperature is fixed at 80℃
• At cold and cranking : temperature is fixed at -10℃</td></tr>
<tr><td>EGR Off</td><td>YES</td></tr>
<tr><td>Fuel Limit</td><td>NO</td></tr>
<tr><td>Check Lamp</td><td>NO</td></tr>
</table>

SPECIFICATION E86F4553

Refer to DTC P0117.

SCHEMATIC DIAGRAM EB249A7C

Refer to DTC P0117.

SIGNAL WAVEFORM AND DATA EA21413F

Refer to DTC P0117.

MONITOR SCANTOOL DATA E9D1B2CA

Refer to DTC P0117.

TERMINAL AND CONNECTOR INSPECTION EE38B71D

Refer to DTC P0117.

SIGNAL CIRCUIT INSPECTION ECFE1A35

1. Check signal circuit voltage

   1) IG KEY "OFF", ENGINE "OFF"

   2) Disconnect ECTS connector.

   3) IG KEY "ON"

   4) Measure the voltage of ECTS connector terminal 1.

Specification : 4.8V~5.1V

   5) Is the measured voltage within the specification?

   YES

   ▶ Go to "Component Inspection".

   NO

   ▶ Go to "2.Check open in signal circuit" as follows.

2. Check open in signal circuit

   1) IG KEY "OFF", ENGINE "OFF"

   2) Disconnect ECTS connector and ECM connector.

   3) Check continuity between ECTS connector terminal 1 and ECM connector (C230-A) terminal 58.

Specification : continuity (below 1.0Ω)

   4) Is the measured resistance within the specification?

   YES

   ▶ Go to "3.Check short to battery in signal circuit" as follows.

   NO

   ▶ Repair open in signal circuit and go to "Verification of Vehicle Repair".

3. Check short to battery in signal circuit

   1) IG KEY "OFF", ENGINE "OFF"

   2) Disconnect ECTS connector and ECM connector.

   3) IG KEY "ON"

   4) Measure the voltage of ECTS connector terminal 1.

Specification : 0.0V~0.1V

5) Is the measured voltage within the specification?

YES

▶ Go to "Ground Circuit Inspection".

NO

▶ Repair short to battery in signal circuit and go to "Verification of Vehicle Repair".

GROUND CIRCUIT INSPECTION E33FEF79

1. IG KEY "OFF", ENGINE "OFF"
2. Disconnect ECTS connector.
3. IG KEY "ON"
4. Measure the voltage of ECTS connector terminal 1. [TEST "A"]
5. Measure the voltage between ECTS connector terminal 1 and 3. [TEST "B"]
   (terminal 1 : Check + prove , terminal 3 : Check - prove)

Specification : [TEST "A"] Voltage - [TEST "B"] Voltage = below 200mV

6. Is the measured voltage within the specification?

YES

▶ Go to "Component Inspection".

NO

▶ When "B" voltage is not detected : Repair open in ground circuit and go to "Verification of Vehicle Repair".
▶ When the voltage difference between "A" and "B" is above 200mV : Eliminate the causes of excessive resistance and go to "Verification of Vehicle Repair".

COMPONENT INSPECTION E1B394C1

1. IG KEY "OFF", ENGINE "OFF".
2. Disconnect ECTS connector.
3. Measure resistance between ECTS terminal 1 and 3, referring to resistance characteristic table of specification of General information.

Specification : Refer to Specification of General Information

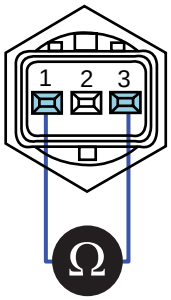

LFIG391A

4. Is the measured resistance at certain temperature within the specified resisance range at the temperature?

YES

▶ Go to "Verification of Vehicle Repair".

NO

▶ Replace ECTS and go to "Verification of Vehicle Repair".

VERIFICATION OF VEHICLE REPAIR E1DA77D4

Refer to DTC P0117.

DTC P0182 FUEL TEMP SENSOR A CIRCUIT LOW INPUT

COMPONENT LOCATION EDC6B4D4

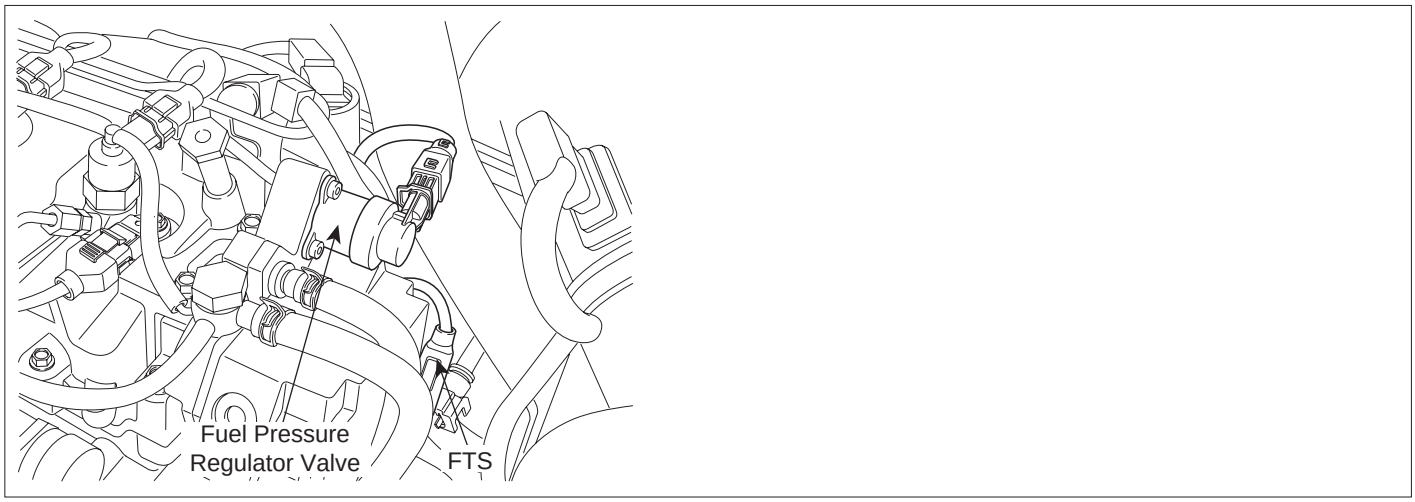

LFIG240A

GENERAL DESCRIPTION EA7FCF36

Fuel Temperature Sensor is NTC thermistor installed in fuel supplying line. It senses the temperature of fuel supplied to high pressure pump.Fuel temperature is limited (engine power is limited) to keep fuel temperature from reaching at 120℃.This limit is to protect fuel line such as high pressure pump and injectors from damages due to rapid deterioration by vapor-lock phenomenon which can occur at high temperature or destruction of oil membrane.

DTC DESCRIPTION EAA3ACA6

P0182 is set when the voltage below 0.053V - minimum voltage of FTS output - is detected for more than 2.0 sec.. This code is due to short to ground in FTS signal circuit.

DTC DETECTING CONDITION E8AA4FEC

<table>
<tr><th>Item</th><th colspan="3">Detecting Condition</th><th>Possible Cause</th></tr>
<tr><td>DTC Strategy</td><td colspan="3">• Voltage monitoring</td><td rowspan="6">• FTS circuit
• FTS component</td></tr>
<tr><td>Enable Conditions</td><td colspan="3">• IG KEY "ON"</td></tr>
<tr><td>Threshold Value</td><td colspan="3">• When output signal is below the minimum value.(below 0.053V)</td></tr>
<tr><td>Diagnostic Time</td><td colspan="3">• 2.0 sec.</td></tr>
<tr><td rowspan="4">Fail Safe</td><td>Fuel cut</td><td>NO</td><td rowspan="4">• Fuel temp. fixed at 85℃</td></tr>
<tr><td>EGR Off</td><td>NO</td></tr>
<tr><td>Fuel Limit</td><td>NO</td></tr>
<tr><td>Check Lamp</td><td>NO</td></tr>
</table>

SPECIFICATION E76FB9BC

Temperature	-30℃	-20℃	-10℃	0℃	20℃
Resistance	22.22~31.78㎏	13.24~18.10㎏	8.16~10.74㎏	5.18~6.60㎏	2.27~2.73㎏
Temperature	40℃	50℃	60℃	70℃	
Resistance	1.059~1.281㎏	0.748~0.904㎏	0.538~0.650㎏	0.392~0.476㎏	

SCHEMATIC DIAGRAM EFF8722D

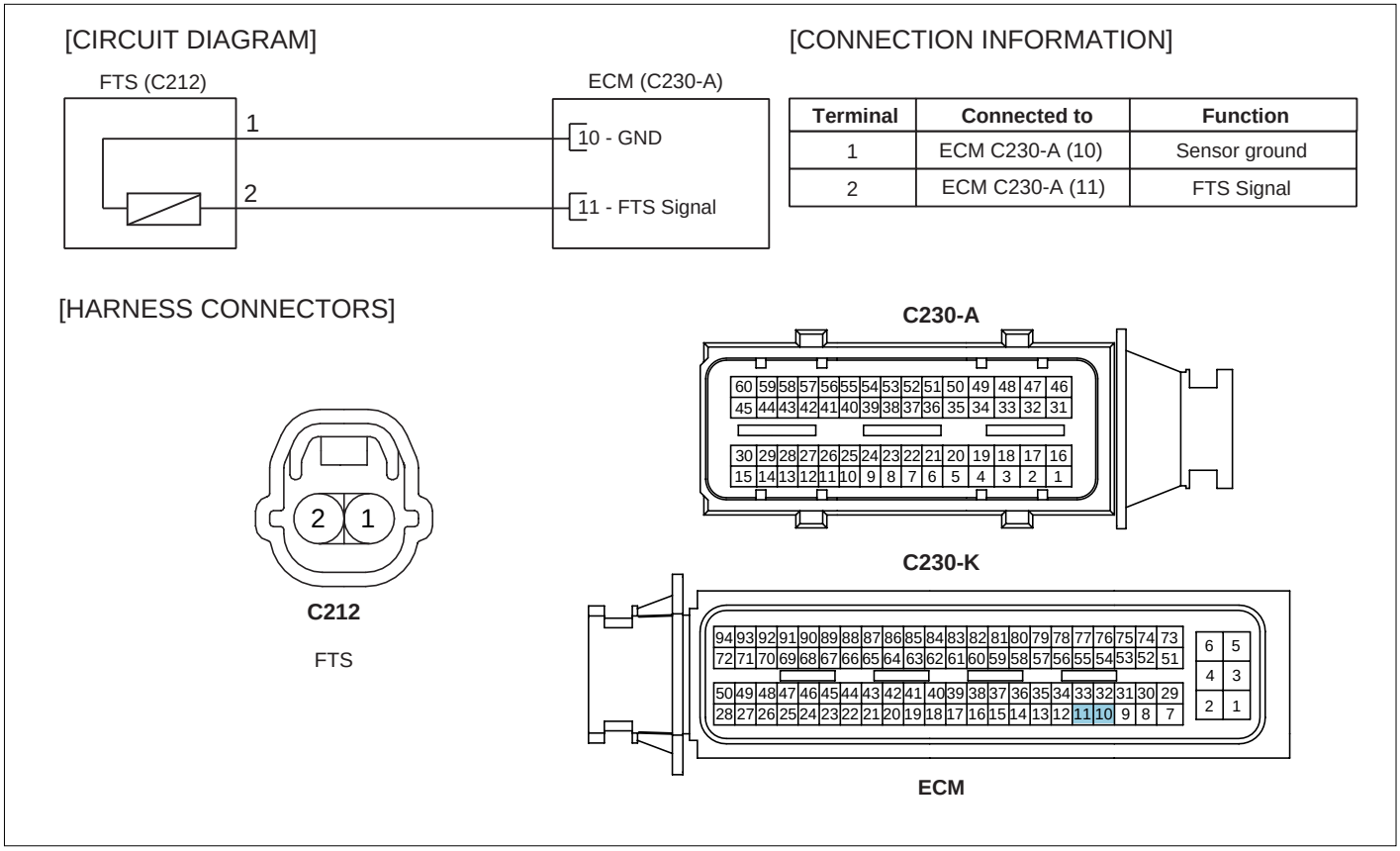

Terminal	Connected to	Function
1	ECM C230-A (10)	Sensor ground
2	ECM C230-A (11)	FTS Signal

SCMFL6127L

SIGNAL WAVEFORM AND DATA E237835A

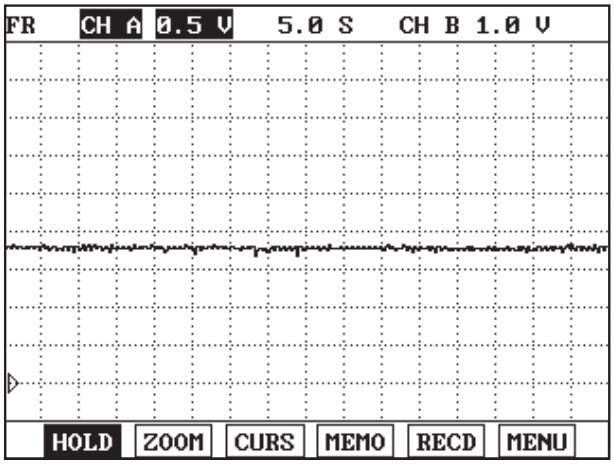

Fig.1

Fig.1) FTS output signal at 50℃.The higher temperature rises, the lower signal voltage becomes.

LFIG242A

MONITOR SCANTOOL DATA E9CDB7EE

1. Connect Scantool to Data Link Connector (DLC).
2. Warm engine up to normal operating temperature.
3. Turn "OFF" electrical devices and A/C.
4. Monitor "FUEL TEMPERATURE " parameter on the scantool.

Specification : Fuel temperature is displayed

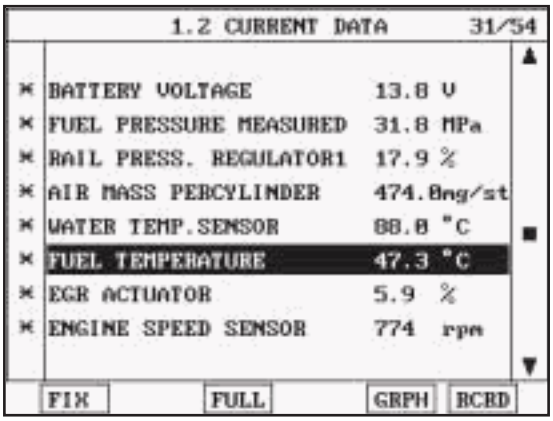

Fig.1

Fig.1) Check if too high or low temperature is displayed.(too high or low temperature is abnormal value.)

SCMFL6232L

TERMINAL AND CONNECTOR INSPECTION E237490F

1. Electrical systems consist of a lot of harness and connectors, poor connection of terminals can cause various problems and damge of component.
2. Perform checking procedure as follows.

1) Check damage of harness and terminals : Check terminals for contact resistance, corrosion and deformation.

2) Check connecting condition of ECM and component connector : Check terminal seperation, damage of locking device and connecting condition between terminal and wiring.

NOTE

Disconnect the pin which requires checking at male connector and insert it to the terminal at female connector for checking connecting condition. (after checking, reconnect the pin at correct position.)

3. Is the problem found?

YES

▶ Repair the trouble causing part and go to "Verification of Vehicle Repair".

NO

▶ Go to "Signal Circuit Inspection ".

SIGNAL CIRCUIT INSPECTION E86E55F0

1. Check signal circuit voltage

1) IG KEY "OFF", ENGINE "OFF".

2) Disconnect FTS connector.

3) IG KEY "ON"

4) Measure the voltage of terminal 2 of FTS connector.

Specification : 4.8V~5.1V

5) Is the measured voltage within the specification?

YES

▶ Go to "Component Inspection"

NO

▶ Go to "2.Check short to ground in signal circuit" as follows.

2. Check short to ground in signal circuit

1) IG KEY "OFF", ENGINE "OFF".

2) Disconnect FTS connector and ECM connector.

3) Check continuity between FTS connector terminal 2 and chassis ground.

Specification : Discontinuity (Infinite Ω)

4) Is the measured resistance within the specification?

YES

▶ Go to "Component Inspection".

NO

▶ Repair short to ground in signal circuit and go to "Verification of Vehicle Repair".

COMPONENT INSPECTION E7426B3E

1. IG KEY "OFF", ENGINE "OFF"
2. Disconnect FTS connector.
3. Measure resistance of FTS component terminal 1 and 2, referring to resistance characteristic table of specification of General information.

Specification : Refer to Specification of General Information.

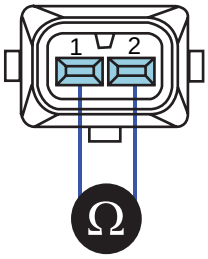

LFIG246A

4. Is the measured resistance at certain temperature within the specified resisance range at the temperature?

YES

▶ Go to "Verification of Vehicle Rapair"

NO

▶ Replace FTS and go to "Verification of Vehicle Rapair".

VERIFICATION OF VEHICLE REPAIR E5157BAD

After a repair, it is essential to verify that the fault is corrected.

1. After connecting Scantool select "DIAGNOSTIC TROUBLE CODES(DTCs)" mode.
2. Clear recorded DTC using Scantool.
3. Drive the vehicle within DTC "Enable conditions" in "General information".
4. After selecting "DIAGNOSTIC TROUBLE CODES(DTCs)" mode and check if DTC is recorded again.
5. Are any DTCs recorded ?

YES

▶ Go to the DTC guide of recorded NO. in Scantool.

NO

▶ System operates within specification.

DTC P0183 FUEL TEMP SENSOR A CIRCUIT HIGH INPUT

COMPONENT LOCATION ED9FFBA8

Refer to DTC P0182.

GENERAL DESCRIPTION E794CA13

Refer to DTC P0182.

DTC DESCRIPTION E994022B

P0183 is set when the voltage above 4.912V - maximum voltage of FTS output - is detected for more than 2.0 sec.. This code is due to 1)open or short to battery in FTS signal circuit or 2)open in ground circuit.

DTC DETECTING CONDITION E7551B39

<table>
<tr><th>Item</th><th colspan="3">Detecting Condition</th><th>Possible Cause</th></tr>
<tr><td>DTC Strategy</td><td colspan="3">• Voltage monitoring</td><td rowspan="5">• FTS circuit
• FTS component</td></tr>
<tr><td>Enable Conditions</td><td colspan="3">• IG KEY "ON"</td></tr>
<tr><td>Threshold Value</td><td colspan="3">• When output signal is above the maximum value.(above 4.912V)</td></tr>
<tr><td>Diagnostic Time</td><td colspan="3">• 2.0 sec.</td></tr>
<tr><td rowspan="4">Fail Safe</td><td>Fuel cut</td><td>NO</td><td rowspan="4">• Fuel temp. fixed at 85℃</td></tr>
<tr><td>EGR Off</td><td>NO</td></tr>
<tr><td>Fuel Limit</td><td>NO</td></tr>
<tr><td>Check Lamp</td><td>NO</td></tr>
</table>

SPECIFICATION E510A89A

Refer to DTC P0182.

SCHEMATIC DIAGRAM EA9250B0

Refer to DTC P0182.

SIGNAL WAVEFORM AND DATA E66075A6

Refer to DTC P0182.

MONITOR SCANTOOL DATA E1FAE76B

Refer to DTC P0182.

TERMINAL AND CONNECTOR INSPECTION E63D6AEF

Refer to DTC P0182.

SIGNAL CIRCUIT INSPECTION E7084471

1. Check signal circuit voltage

   1) IG KEY "OFF", ENGINE "OFF".

   2) Disconnect FTS connector.

   3) IG KEY "ON"

   4) Measure the voltage of terminal 2 of FTS connector.

Specification : 4.8V~5.1V

   5) Is the measured voltage within the specification?

   YES

   ▶ Go to "Ground Circuit Inspection".

   NO

   ▶ Go to "2.Check open in signal circuit" as follows.

2. Check open in signal circuit

   1) IG KEY "OFF", ENGINE "OFF".

   2) Disconnect FTS connector and ECM connector.

   3) Check continuity between FTS connector terminal 2 and ECM connector (C230-K) terminal 11.

Specification : Continuity (below 1.0Ω)

   4) Is the measured resistance within the specification?

   YES

   ▶ Go to "3. Check short to battery in signal circuit" as follows.

   NO

   ▶ Repair open in signal circuit and go to "Verification of Vehicle Repair".

3. Check short to battery in signal circuit

   1) IG KEY "OFF", ENGINE "OFF".

   2) Disconnect FTS connector and ECM connector

   3) IG KEY "ON"

   4) Measure the voltage of terminal 2 of FTS connector.

Specification : 0.0V~0.1V

   5) Is the measured resistance within the specification?

YES

▶ Go to "Ground Circuit Inspection".

NO

▶ Repair short to battery and go to "Verification of Vehicle Repair". .

GROUND CIRCUIT INSPECTION EACA4CC7

1. IG KEY "OFF", ENGINE "OFF".
2. Disconnect FTS connector and ECM connector
3. IG KEY "ON"
4. Measure the voltage of terminal 2 of FTS connector.[TEST "A"]
5. Measure the voltage between FTS connector terminal 2 and 1. [TEST "B"]
   (terminal 2 : Check + prove , terminal 1 : Check - prove)

Specification : [TEST "A"] Voltage - [TEST "B"] Voltage = below 200mV

6. Is the measured voltage within the specification?

YES

▶ Go to "Component Inspection".

NO

▶ When "B" voltage is not detected : Repair open in ground circuit and go to "Verification of Vehicle Repair".
▶ When the voltage difference between "A" and "B" is above 200mV : Eliminate the causes of excessive resistance and go to "Verification of Vehicle Repair".

COMPONENT INSPECTION E76F14E6

1. IG KEY "OFF", ENGINE "OFF"
2. Disconnect FTS connector.
3. Measure resistance of FTS component terminal 1 and 2, referring to resistance characteristic table of specification of General information.

Specification : Refer to Specification of General Information.

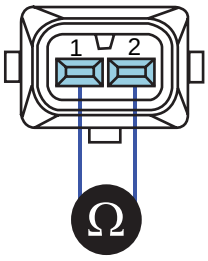

LFIG246A

4. Is the measured resistance at certain temperature within the specified resisance range at the temperature?

YES

▶ Go to "Verification of Vehicle Rapair"

NO

▶ Replace FTS and go to "Verification of Vehicle Rapair".

VERIFICATION OF VEHICLE REPAIR E879ADF7

Refer to DTC P0182.

DTC P0192 FUEL RAIL PRESS. SENSOR-LOW INPUT

COMPONENT LOCATION E739C00E

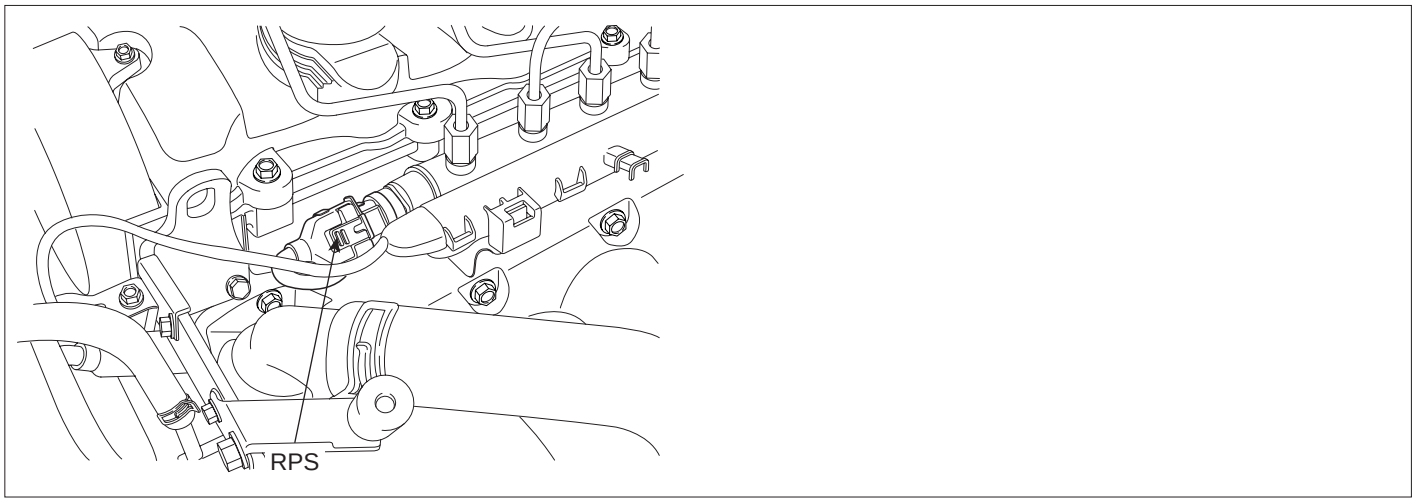

LFIG249A

GENERAL DESCRIPTION EEC13490

RPS(Rail Pressure Sensor), consists of piezzo electric element, measures rail pressure inside of common rail. ECM determines optimum fuel injection quantity at specific engine condition based on RPS signal. RPS signal is also used as rail pressure regualtor feed back signal in order to achieve optimum rail pressure at certain engine condition.

DTC DESCRIPTION E67297D6

P0192 is set when RPS output voltage is below the minimum value of 0.254V for more than 0.2 sec.. This code is due to the open in power circuit or the short to ground in signal circuit.

DTC DETECTING CONDITION EB5D921E

<table>
<tr><th>Item</th><th colspan="3">Detecting Condition</th><th>Possible Cause</th></tr>
<tr><td>DTC Strategy</td><td colspan="3">• Voltage monitoring</td><td rowspan="6">• RPS circuit
• RPS component</td></tr>
<tr><td>Enable Conditions</td><td colspan="3">• Engine running</td></tr>
<tr><td>Threshold Value</td><td colspan="3">• Output sinal below minimum value (below 0.254V)</td></tr>
<tr><td>Diagnostic Time</td><td colspan="3">• 0.2 sec.</td></tr>
<tr><td rowspan="4">Fail Safe</td><td>Fuel cut</td><td>NO</td><td rowspan="4">• Rail press. Sensor value fixed at 330bar</td></tr>
<tr><td>EGR Off</td><td>NO</td></tr>
<tr><td>Fuel Limit</td><td>YES</td></tr>
<tr><td>Check Lamp</td><td>YES</td></tr>
</table>

SPECIFICATION E0AA2EF8

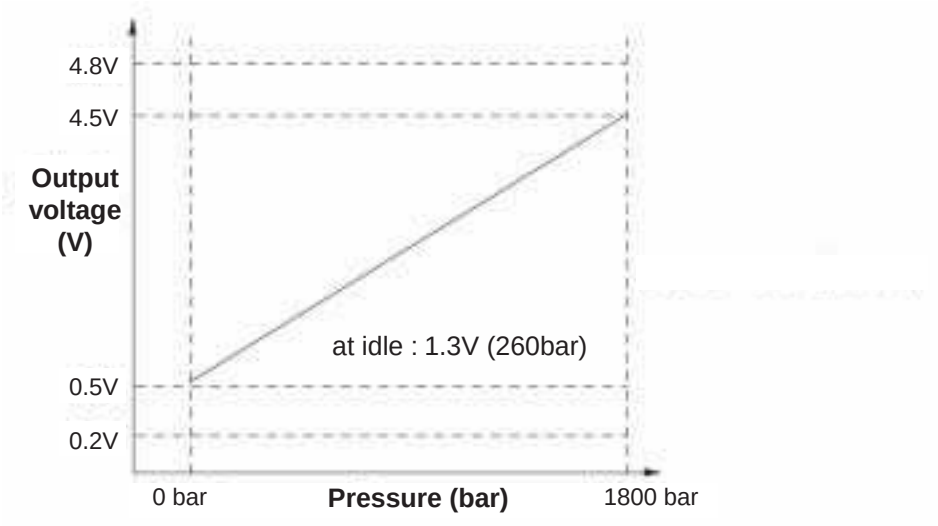

EGNG010O

SCHEMATIC DIAGRAM EB6FDAB0

[CIRCUIT DIAGRAM]

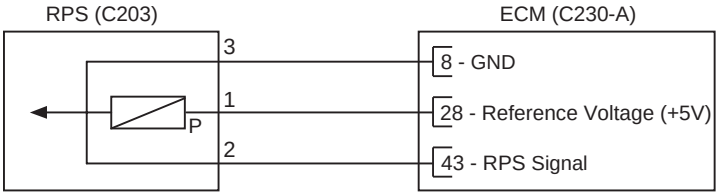

[CONNECTION INFORMATION]

Terminal	Connected to	Function
1	ECM C230-A (28)	Reference Voltage (+5V)
2	ECM C230-A (43)	RPS Signal
3	ECM C230-A (8)	Sensor Signal

[HARNESS CONNECTORS]

C203

RPS

C230-A

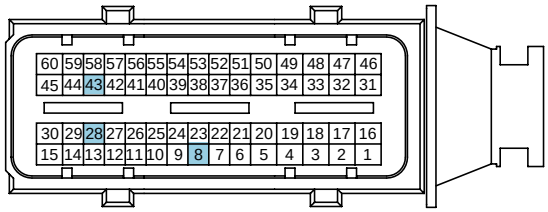

C230-K

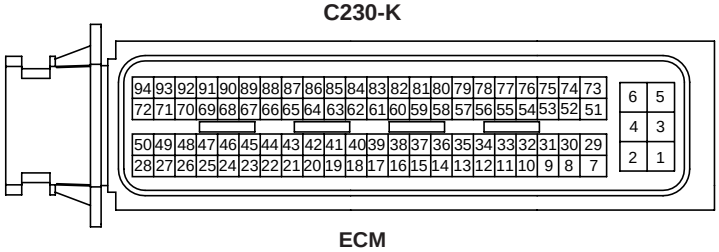

ECM

SCMFL6124L

SIGNAL WAVEFORM AND DATA E72D43DF

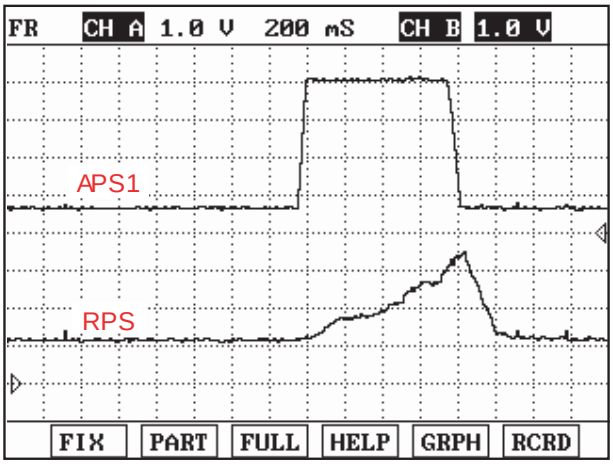

Fig.1

Fig.1) APS 1 and RPS signals are measured simultaneously.
This waveform shows the rise of RPS output voltage at rapid acceleration.

LFIG251A

MONITOR SCANTOOL DATA EE9EB2BC

1. Connect Scantool to Data Link Connector (DLC).
2. Warm engine up to normal operating temperature.
3. Turn "OFF" electrical devices and A/C.
4. Monitor "FUEL PRESSURE MEASURED", "INJ. PUMP REGULATOR","RAIL PRESS. REGULATOR1" parameter on the Scantool.

SPECIFICATION :

	Idle(without load)	Accelerating(stall test)	Diagnosis
FUEL PRESSURE MEASURED	27 ± 5 Mpa	above 75 Mpa	press. increases
INJ. PUMP REGULATOR	34 ± 3%	38 ± 3%	duty increases
RAIL PRESS. REGULATOR1	16 ± 3%	45 ± 3%	duty increases

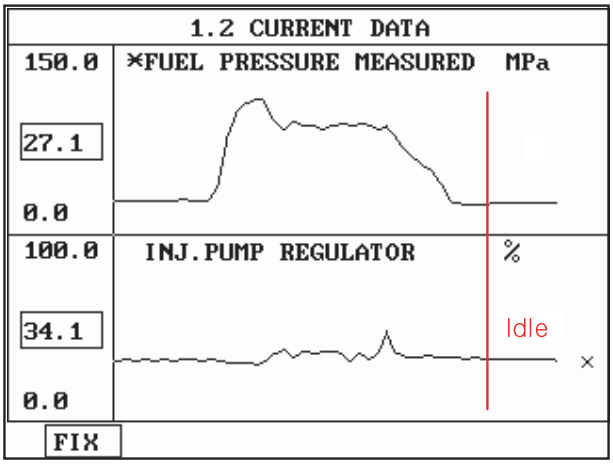

Fig.1

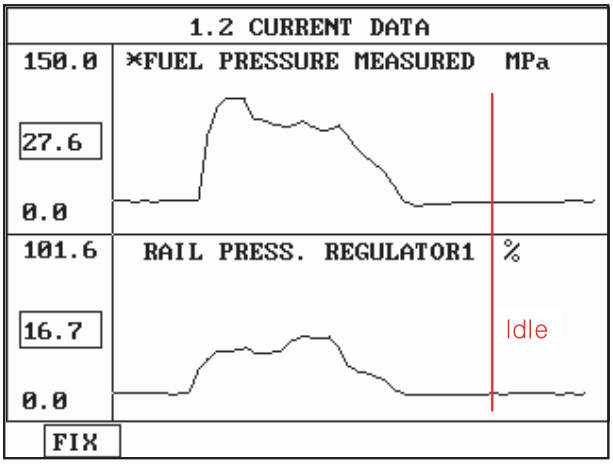

Fig.2

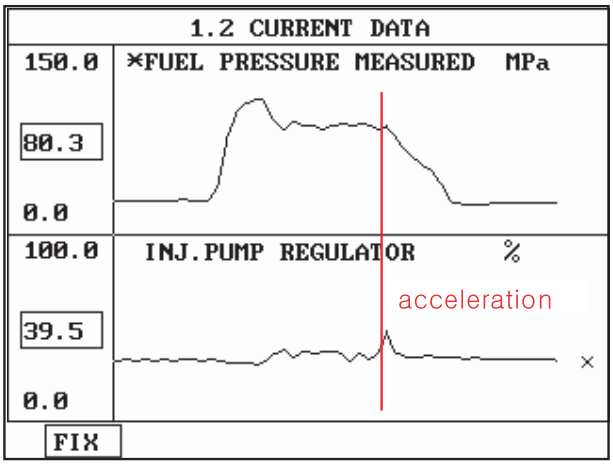

Fig.3

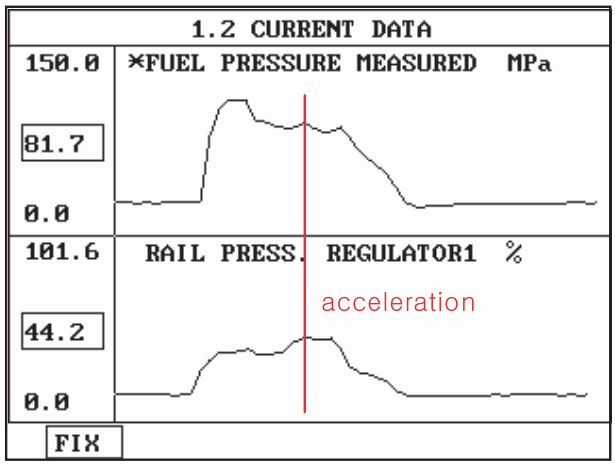

Fig.4

Fig.2) Fuel pressure and Fuel pressure regulator valve data at idle.
Fig.3) Fuel pressure and Rail pressure regulator valve data at idle.
Fig.4) Fuel pressure and Fuel pressure regulator valve data at acceleration.
Fig.5) Fuel pressure and Rail pressure regulator valve data at acceleration.

LFIG375A

NOTE

The waveform of fuel pressure regulator valve installed at high pressure pump(fuel detecting MPROP) shows 34 ± 3% duty at idle, duty rises to approx. 38% at acceleration to raise rail pressure.

The waveform of rail pressure regulator valve installed at common rail shows 16 ± 3% duty at idle, duty rises to approx. 45% at acceleration to raise rail pressure.

TERMINAL AND CONNECTOR INSPECTION E7C78F86

1. Electrical systems consist of a lot of harness and connectors, poor connection of terminals can cause various problems and damge of component.

2. Perform checking procedure as follows.

   1) Check damage of harness and terminals : Check terminals for contact resistance, corrosion and deformation.

   2) Check connecting condition of ECM and component connector : Check terminal seperation, damage of locking device and connecting condition between terminal and wiring.

NOTE

Disconnect the pin which requires checking at male connector and insert it to the terminal at female connector for checking connecting condition. (after checking, reconnect the pin at correct position.)

3. Is the problem found?

YES

▶ Repair the trouble causing part and go to "Verification of Vehicle Repair".

NO

▶ Go to "Power Circuit Inspection".

POWER CIRCUIT INSPECTION E82D2EB8

1. IG KEY "OFF", ENGINE "OFF".
2. Disconnect RPS connector.
3. IG KEY "ON".
4. Measure the voltage of RPS connector terminal "1".

Specification : 4.8V~5.1V

5. Is the measured voltage within the specification?

YES

▶ Go to "Signal Circuit Inspection".

NO

▶ Repair open in RPS power circuit and go to "Verification of Vehicle Repair".
[Check between RPS connector terminal 1 and ECM connector(C230-A) terminal 28.]

SIGNAL CIRCUIT INSPECTION E1A21937

1. Check signal circuit voltage
   1) IG KEY "OFF", ENGINE "OFF".
   2) Disconnect RPS connector.
   3) IG KEY "ON".
   4) Measure the voltage of RPS connector terminal 2.

Specification : 4.8V~5.1V

   5) Is the measured voltage within the specification?

YES

▶ Go to "Component Inspection".

NO

▶ Go to "2.Check short to ground in signal circuit" as follows.

2. Check short to ground in signal circuit

   1) IG KEY "OFF", ENGINE "OFF".

   2) Disconnect RPS connector and ECM connector.

   3) Check continuity between RPS connector terminal 2 and chassis ground.

Specification : Discontinuity (Infinite Ω)

   4) Is the measured resistance within the specification?

YES

▶ Go to "Component Inspection".

NO

▶ Repair short to ground in signal circuit and go to "Verification of Vehicle Repair".

COMPONENT INSPECTION EB0A9855

1. Visual Inspection of RPS

   1) IG KEY "OFF", ENGINE "OFF".

   2) Disconnect RPS connector.

   3) Check if corrosion or damage in RPS terminal is detected.

   4) Check RPS mounting torque and oil leakage.

   5) Are the problems relevant to RPS found?

YES

▶ Replace RPS if necessary and go to "Verification of Vehicle Repair".

NO

▶ Go to "RPS waveform Inspection".

2. RPS Waveform Inspection

   1) IG KEY "OFF", ENGINE "OFF".

   2) Connect RPS connector.

   3) Connect an Oscilloscope to RPS connector terminal 2.

   4) After turning engine "ON", Check waveform at idle and during acceleration.

Specification : Refer to "Signal Waveform & Data" of "General Information".

5) Does RPS waveform look similar to standard "Signal Waveform & Data"?

YES

▶ Go to "Verification of Vehicle Repair".

NO

▶ Replace RPS and go to "Verification of Vehicle Repair".

VERIFICATION OF VEHICLE REPAIR EC493B21

After a repair, it is essential to verify that the fault is corrected.

1. After connecting Scantool select "DIAGNOSTIC TROUBLE CODES(DTCs)" mode.
2. Clear recorded DTC using Scantool.
3. Drive the vehicle within DTC "Enable conditions" in "General information".
4. After selecting "DIAGNOSTIC TROUBLE CODES(DTCs)" mode and check if DTC is recorded again.
5. Are any DTCs recorded ?

YES

▶ Go to the DTC guide of recorded NO. in Scantool.

NO

▶ System operates within specification.

DTC P0193 FUEL RAIL PRESS. SENSOR-HIGH INPUT

COMPONENT LOCATION E28EC543

Refer to DTC P0192.

GENERAL DESCRIPTION EFC038E5

Refer to DTC P0192.

DTC DESCRIPTION EFFF1CB2

P0193 is set when RPS output voltage is above the maximum value of 4.75V for more than 0.2 sec.. This code is due to 1) short to battery in signal circuit 2) open in signal circuit or 3) open in ground circuit.

DTC DETECTING CONDITION EFB534E1

<table>
<tr><th>Item</th><th colspan="3">Detecting Condition</th><th>Possible Cause</th></tr>
<tr><td>DTC Strategy</td><td colspan="3">• Voltage monitoring</td><td rowspan="6">• RPS circuit
• RPS component</td></tr>
<tr><td>Enable Conditions</td><td colspan="3">• Engine running</td></tr>
<tr><td>Threshold Value</td><td colspan="3">• Output signal above the maximum value(above 4.75V)</td></tr>
<tr><td>Diagnostic Time</td><td colspan="3">• 0.2 sec.</td></tr>
<tr><td rowspan="4">Fail Safe</td><td>Fuel cut</td><td>NO</td><td rowspan="4">• Rail press. Sensor value fixed at 330bar</td></tr>
<tr><td>EGR Off</td><td>NO</td></tr>
<tr><td>Fuel Limit</td><td>YES</td></tr>
<tr><td>Check Lamp</td><td>YES</td></tr>
</table>

SPECIFICATION E876DB3D

Refer to DTC P0192.

SCHEMATIC DIAGRAM EDACB51F

Refer to DTC P0192.

SIGNAL WAVEFORM AND DATA EAC923AA

Refer to DTC P0192.

MONITOR SCANTOOL DATA E45B1C20

Refer to DTC P0192.

TERMINAL AND CONNECTOR INSPECTION E75ECF8B

Refer to DTC P0192.

POWER CIRCUIT INSPECTION E62DCA6E

1. IG KEY "OFF", ENGINE "OFF".
2. Disconnect RPS connector.
3. IG KEY "ON".
4. Measure the voltage of RPS connector terminal "1".

Specification : 4.8V~5.1V

5. Is the measured voltage within the specification?

YES

▶ Go to "Signal Circuit Inspection".

NO

▶ Repair open in RPS power circuit and go to "Verification of Vehicle Repair".
[Check open between RPS connector terminal 1 and ECM connector(C230-A) terminal 28.]

SIGNAL CIRCUIT INSPECTION EB449233

1. Check signal circuit voltage
   1) IG KEY "OFF", ENGINE "OFF".
   2) Disconnect RPS connector.
   3) IG KEY "ON".
   4) Measure the voltage of RPS connector terminal 2.

Specification : 4.8V~5.1V

   5) Is the measured voltage within the specification?

YES

▶ Go to "Ground Circuit Inspection".

NO

▶ Go to "2. Check open in signal circuit" as follows.

2. Check open in signal circuit
   1) IG KEY "OFF", ENGINE "OFF".
   2) Disconnect RPS connector and ECM connector.
   3) Check continuity between RPS connector terminal 2 and ECM connector (C230-A) terminal 43.

Specification : continuity (below 1.0Ω)

   4) Is the measured resistance within the specification?

YES

▶ Go to "3. Check short to battery in signal circuit" as follows.

NO

▶ Repair open in RPS signal circuit and go to "Verification of Vehicle Repair".
[Check the circuit between Rail Pressure sensor terminal 2 and ECM connector terminal 43.]

3. Check short to battery in signal circuit

   1) IG KEY "OFF", ENGINE "OFF".

   2) Disconnect RPS connector and ECM connector.

   3) IG KEY "ON".

   4) Measure the voltage of RPS connector terminal 2.

Specification : 0.0V~0.1V

   5) Is the measured resistance within the specification?

YES

▶ Go to "Ground Circuit Inspection".

NO

▶ Repair short to battery in signal circuit and go to "Verification of Vehicle Repair".

GROUND CIRCUIT INSPECTION EA17760C

1. IG KEY "OFF", ENGINE "OFF".

2. Disconnect RPS connector.

3. IG KEY "ON".

4. Measure the voltage of RPS connector terminal 2. [TEST "A"]

5. Measure the voltage between RPS connector terminal 2 and 3. [TEST "B"]
   (terminal 2 : Check + prove , terminal 3 : Check - prove)

Specification : [TEST "A"] Voltage - [TEST "B"] Voltage = below 200mV

6. Is the measured voltage within the specification?

YES

▶ Go to "Component Inspection".

NO

▶ When "B" voltage is not detected : Repair open in ground circuit and go to "Verification of Vehicle Repair".
▶ When the voltage difference between "A" and "B" is above 200mV : Eliminate the causes of excessive resistance and go to "Verification of Vehicle Repair".

COMPONENT INSPECTION E70011A5

1. Visual Inspection of RPS

   1) IG KEY "OFF", ENGINE "OFF".

   2) Disconnect RPS connector.

   3) Check if corrosion or damage in RPS terminal is detected.

   4) Check RPS mounting torque and oil leakage.

   5) Are the problems relevant to RPS found?

      YES

      ▶ Replace RPS if necessary and go to "Verification of Vehicle Repair".

      NO

      ▶ Go to "RPS waveform Inspection".

2. RPS Waveform Inspection

   1) IG KEY "OFF", ENGINE "OFF".

   2) Connect RPS connector.

   3) Connect an Oscilloscope to RPS connector terminal 2.

   4) After turning engine "ON", Check waveform at idle and during acceleration.

Specification : Refer to "Signal Waveform & Data" of "General Information".

   5) Does RPS waveform look similar to standard "Signal Waveform & Data"?

      YES

      ▶ Go to "Verification of Vehicle Repair".

      NO

      ▶ Replace RPS and go to "Verification of Vehicle Repair".

VERIFICATION OF VEHICLE REPAIR EA7E9B14

Refer to DTC P0192.

DTC P0201 CYLINDER 1-INJECTOR CIRCUIT/OPEN
DTC P0202 CYLINDER 2-INJECTOR CIRCUIT/OPEN
DTC P0203 CYLINDER 3-INJECTOR CIRCUIT/OPEN
DTC P0204 CYLINDER 4-INJECTOR CIRCUIT/OPEN

COMPONENT LOCATION EB5A36F5

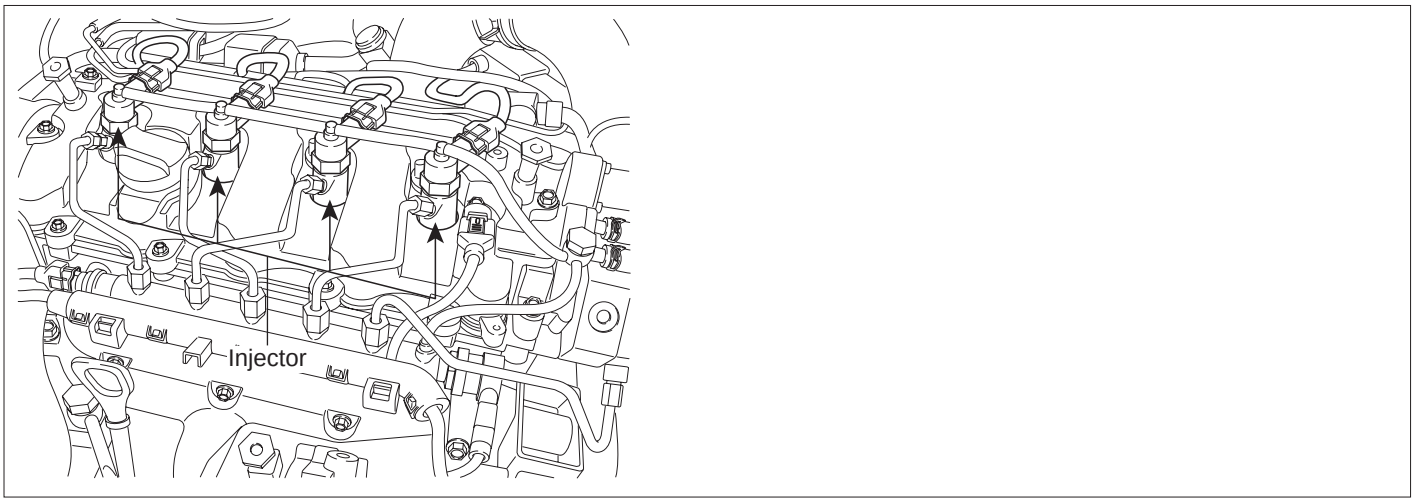

LFIG257A

GENERAL DESCRIPTION EAE7276C

Injectors spray fuel in the highly compressed combustion chamber, and power generates through combustion process. Fuel pressure is raised to 1600bar in common rail diesel engine for the purpose of making fuel into minute particles. And fuel devided into minute particles leads smoke reduction, high power generation, and improved fuel efficiency. To control pressure of 1600bar with solenoid, oil pressure servo is applied. And injector solenoids is actuated by solenoid operating voltage raised to 80V with the method of current control.

DTC DESCRIPTION ED92DC9D

P0201/P0202/P0203/P0204 is set when no current is detected in injector power and control circuit at injector #1/2/3/4 operating condition. This code is due to open in injector circuit or open in injector component coil.

DTC DETECTING CONDITION EB127AE5

<table>
<tr><th>Item</th><th colspan="3">Detecting Condition</th><th>Possible Cause</th></tr>
<tr><td>DTC Strategy</td><td colspan="3">• Current monitoring</td><td rowspan="6">• Open in injector circuit
• Injector component</td></tr>
<tr><td>Enable Conditions</td><td colspan="3">• IG KEY "ON"</td></tr>
<tr><td>Threshold Value</td><td colspan="3">• Open in injector circuit</td></tr>
<tr><td>Diagnostic Time</td><td colspan="3">• Immediately</td></tr>
<tr><td rowspan="4">Fail Safe</td><td>Fuel cut</td><td>NO</td><td rowspan="4">• Open circuit of More than 2 injectors : Engine OFF</td></tr>
<tr><td>EGR Off</td><td>NO</td></tr>
<tr><td>Fuel Limit</td><td>YES</td></tr>
<tr><td>Check Lamp</td><td>YES</td></tr>
</table>

SPECIFICATION EB15543C

Injector Component Resistance	Injector Operating Voltage	Injector Operating Current	Injector Control Type
0.330Ω (20±1°C)	80V	Peak current : 20±1A Hold in current : 12±1A Recharging current : 7A	Current control

SCHEMATIC DIAGRAM E1042F9F

[CIRCUIT DIAGRAM]

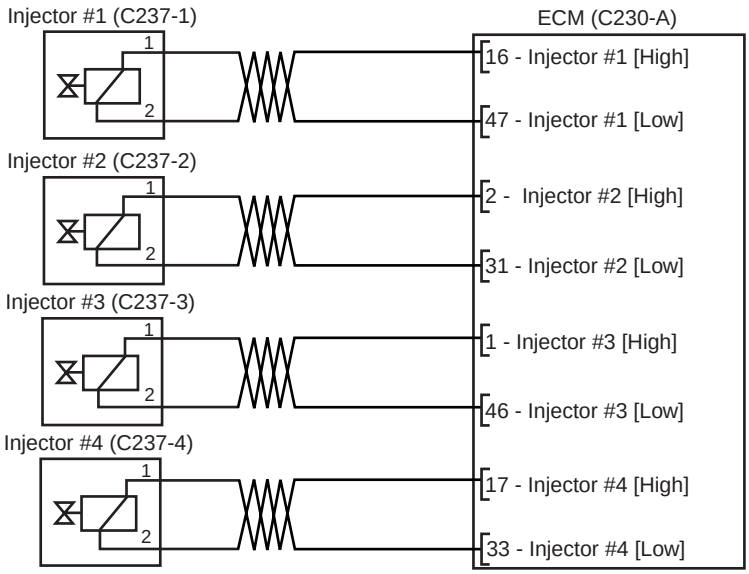

[CONNECTION INFORMATION]

[Injector #1]

Terminal	Connected to	Function
1	ECM C230-A (16)	Injector #1 High side
2	ECM C230-A (47)	Injector #1 Low side

[Injector #2]

Terminal	Connected to	Function
1	ECM C230-A (2)	Injector #2 High side
2	ECM C230-A (31)	Injector #2 Low side

[Injector #3]

Terminal	Connected to	Function
1	ECM C230-A (1)	Injector #3 High side
2	ECM C230-A (46)	Injector #3 Low side

[Injector #4]

Terminal	Connected to	Function
1	ECM C230-A (17)	Injector #4 High side
2	ECM C230-A (33)	Injector #4 Low side

[HARNESS CONNECTORS]

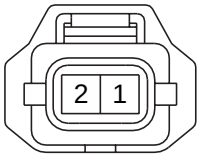

C237-1,2,3,4
INJECTOR #1,#2,#3,#4

C230-A

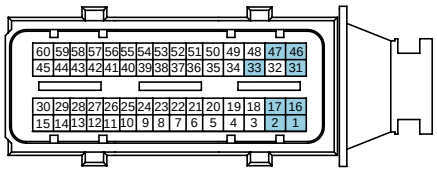

C230-K

ECM

SCMFL6397L

SIGNAL WAVEFORM AND DATA EF0042F8

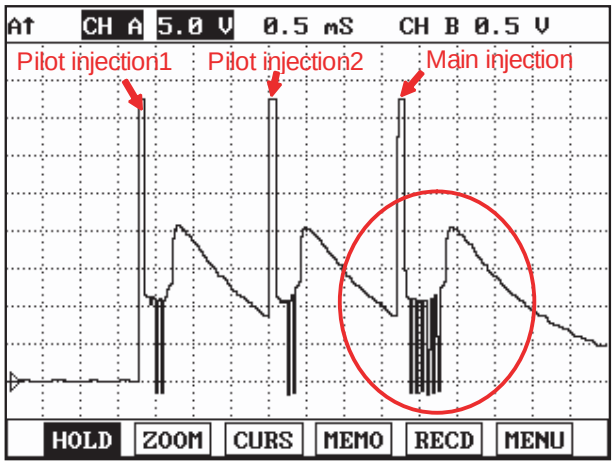

Fig.1

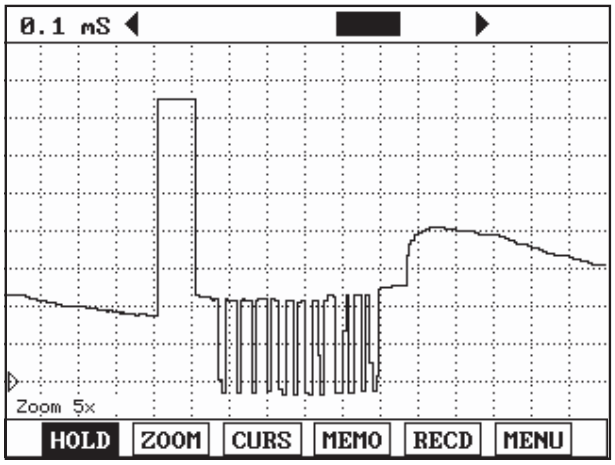

Fig.2

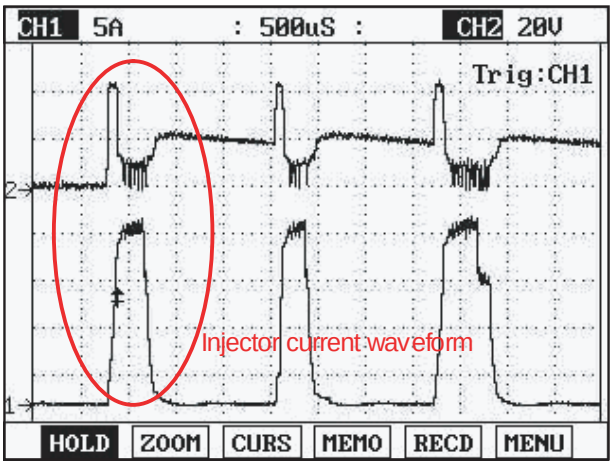

Fig.3

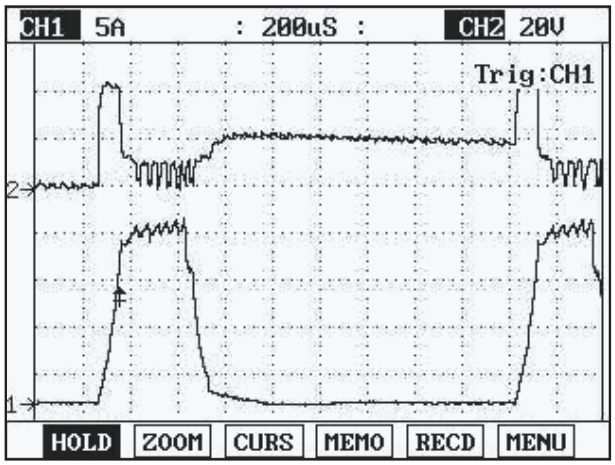

Fig.4

Fig.1) Injector operating waveform at Low side, It shows 2 pilot and 1 main injection.
Fig.2) Magnified waveform of main injection at Fig.1)
Fig.3) Injector voltage and current waveforms are measured at the same time using current prove of scope meter.
Fig.4) Magnified waveform of pilot injection at Fig.3)

LFIG259A

TERMINAL AND CONNECTOR INSPECTION E4982099

1. Electrical systems consist of a lot of harness and connectors, poor connection of terminals can cause various problems and damge of component.

2. Perform checking procedure as follows.

   1) Check damage of harness and terminals : Check terminals for contact resistance, corrosion and deformation.

   2) Check connecting condition of ECM and component connector : Check terminal seperation, damage of locking device and connecting condition between terminal and wiring.

   NOTE

   Disconnect the pin which requires checking at male connector and insert it to the terminal at female connector for checking connecting condition. (after checking, reconnect the pin at correct position.)

3. Is the problem found?

YES

▶ Repair the trouble causing part and go to "Verification of Vehicle Repair".

NO

▶ Go to "Power Circuit Inspection".

POWER CIRCUIT INSPECTION ED0A8269

1. Check open in power circuit(High side)

   1) IG KEY "OFF", ENGINE "OFF".

   2) Disconnect injector connector and ECM connector.

   3) [P0201] Check continuity between injector #1 connector terminal 1 and ECM connector (C230-A) terminal 16.
      [P0202] Check continuity between injector #2 connector terminal 1 and ECM connector (C230-A) terminal 2.
      [P0203] Check continuity between injector #3 connector terminal 1 and ECM connector (C230-A) terminal 1.
      [P0204] Check continuity between injector #4 connector terminal 1 and ECM connector (C230-A) terminal 17.

Specification : Continuity (below 1.0Ω)

   4) Is the measured resistance within the specification?

      YES

      ▶ Go to "Control Circuit Inspection".

      NO

      ▶ Repair open in injector #1 power circuit and go to "Verification of Vehicle Repair".

CONTROL CIRCUIT INSPECTION E6A03E03

1. Check open in control circuit(Low side)

   1) IG KEY "OFF", ENGINE "OFF".

   2) Disconnect injector connector and ECM connector.

   3) [P0201] Check continuity between injector #1 connector terminal 2 and ECM connector (C230-A) terminal 47.
      [P0202] Check continuity between injector #2 connector terminal 2 and ECM connector (C230-A) terminal 31.
      [P0203] Check continuity between injector #3 connector terminal 2 and ECM connector (C230-A) terminal 46.
      [P0204] Check continuity between injector #4 connector terminal 2 and ECM connector (C230-A) terminal 33.

Specification : Continuity (below 1.0Ω)

   4) Is the measured resistance within the specification?

      YES

      ▶ Go to "Component Inspection".

      NO

▶ Repair open in injector #1 control circuit and go to "Verification of Vehicle Repair".

COMPONENT INSPECTION E25144D3

1. Check injector component resistance

   1) IG KEY "OFF", ENGINE "OFF".

   2) Disconnect injector connector.

   3) Measure the resistance between injector component terminal 1 and 2.

Specification : 0.33Ω (20℃)

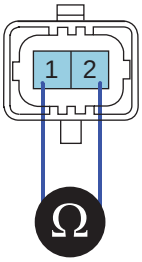

EGNG008I

   4) Is the measured resistance(of injector solenoid) within the specification?

   YES

   ▶ Go to "Verification of Vehicle Repair".

   NO

   ▶ Replace injector and go to "Verification of Vehicle Repair".

NOTE

Replacing injectors, peculiar IQA code of each injector should be inputted to ECM
Perform this process using "INJECTOR CORRECTION" function on scantool, Refer to P1670, P1671 for more detailed information.

VERIFICATION OF VEHICLE REPAIR E39AD433

After a repair, it is essential to verify that the fault is corrected.

1. After connecting Scantool select "DIAGNOSTIC TROUBLE CODES(DTCs)" mode.

2. Clear recorded DTC using Scantool.

3. Drive the vehicle within DTC "Enable conditions" in "General information".

4. After selecting "DIAGNOSTIC TROUBLE CODES(DTCs)" mode and check if DTC is recorded again.

5. Are any DTCs recorded ?

   YES

   ▶ Go to the DTC guide of recorded NO. in Scantool.

NO

▶ System operates within specification.

DTC P0231 ELECTRIC FUEL PUMP RELAY-OPEN OR SHORT CIRCUIT

COMPONENT LOCATION E8E43295

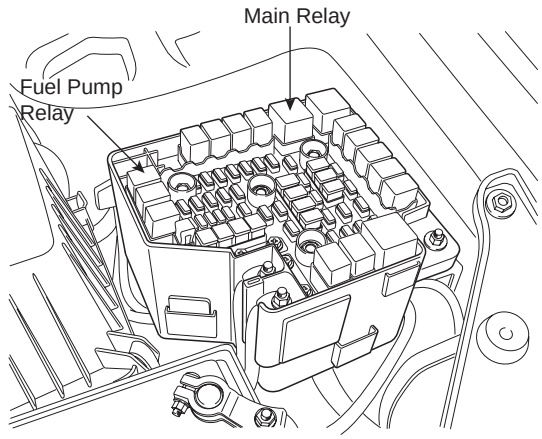

SCMFL6503L

GENERAL DESCRIPTION EE38D8C4

Vain pump type fuel pump which is driven by electric motor is applied to this vehicle. Fuel pump which is installed inside of fuel tank supplies fuel to high pressure pump. ECM controls Fuel pump relay to supply power to low pressure fuel pump. The relay operates for 1.5 sec. for the diagnosis fuel pump relay at IG KEY ON, then if engine speed above 45rpm is detected by CKPS, relay turns ON and fuel is supplied to high pressure pump.

DTC DESCRIPTION E251BDEA

P0231 is set when no current or excessively low current is detected in fuel pump relay control circuit for more than 1 sec. at Fuel pump relay ON condition. This code is due to open or short to ground in glow relay control circuit or internal open in Fuel pump relay component.

DTC DETECTING CONDITION E2A6ACE0

Item	Detecting Condition			Possible Cause
DTC Strategy	• Voltage monitoring			• Fuel pump relay control circuit • Fuel pump relay component
Enable Conditions	• IG KEY "ON" (monitoring only performed within relay operating condition)			
Threshold Value	• Short to GND, Wiring open			
Diagnostic Time	• 1.0 sec.			
Fail Safe	Fuel cut	NO		
	EGR Off	NO		
	Fuel Limit	NO		
	Check Lamp	NO		

SPECIFICATION EF3D2C62

Relay Coil Resistance	Motor Type	Pumping Pressure
85±10Ω (20°C)	Electric motor type vein pump	4 - 5 bar

SCHEMATIC DIAGRAM E850BADE

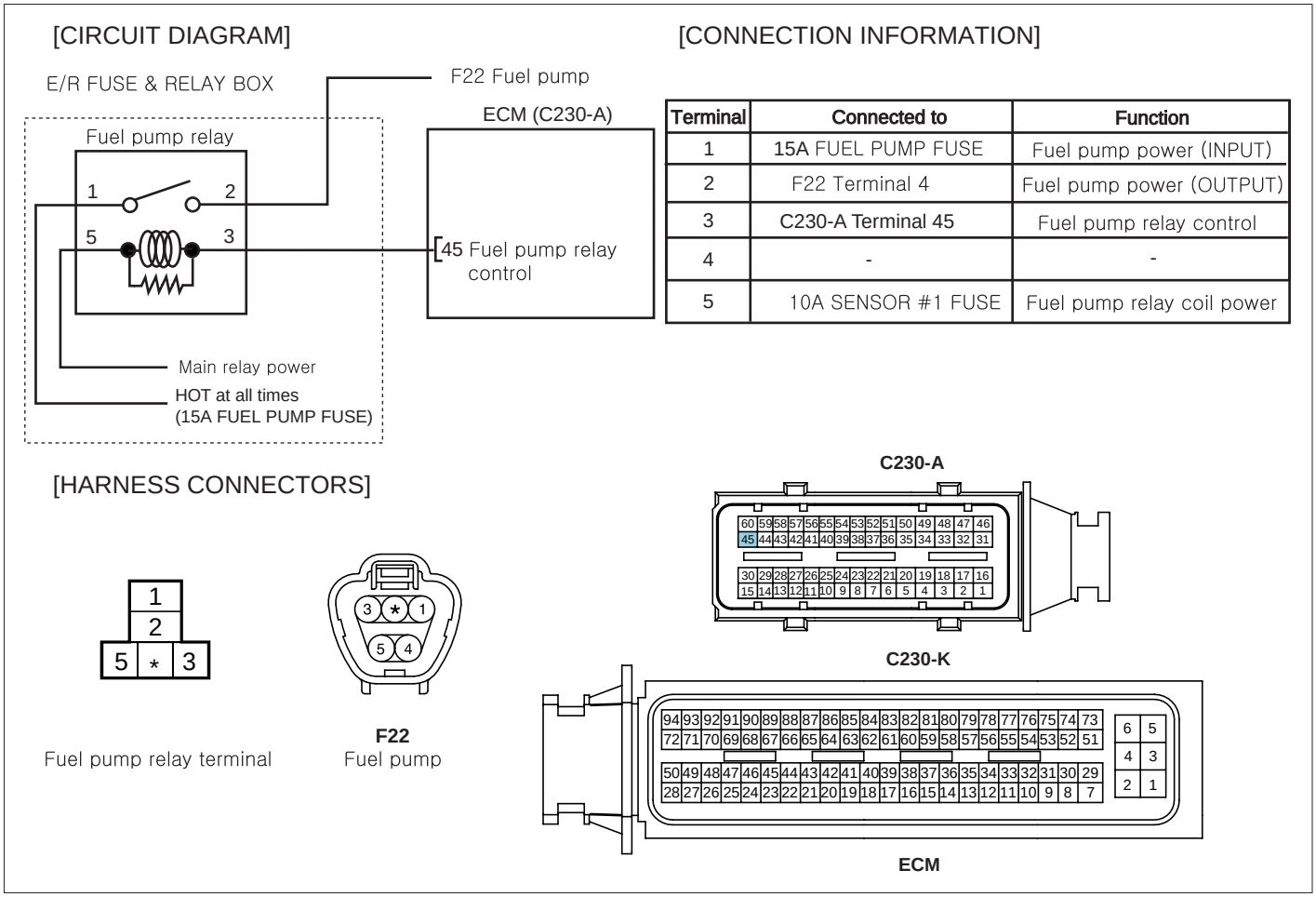

Terminal	Connected to	Function
1	15A FUEL PUMP FUSE	Fuel pump power (INPUT)
2	F22 Terminal 4	Fuel pump power (OUTPUT)
3	C230-A Terminal 45	Fuel pump relay control
4	-	-
5	10A SENSOR #1 FUSE	Fuel pump relay coil power

SCMFL6398L

TERMINAL AND CONNECTOR INSPECTION E66FC9AE

1. Electrical systems consist of a lot of harness and connectors, poor connection of terminals can cause various problems and damge of component.

2. Perform checking procedure as follows.

   1) Check damage of harness and terminals : Check terminals for contact resistance, corrosion and deformation.

   2) Check connecting condition of ECM and component connector : Check terminal seperation, damage of locking device and connecting condition between terminal and wiring.

   NOTE

   Disconnect the pin which requires checking at male connector and insert it to the terminal at female connector for checking connecting condition. (after checking, reconnect the pin at correct position.)

3. Is the problem found?

YES

▶ Repair the trouble causing part and go to "Verification of Vehicle Repair".

NO

▶ Go to "Power Circuit Inspection".

POWER CIRCUIT INSPECTION E5EFA67E

1. Check Relay coil power circuit voltage

   1) IG KEY "OFF", ENGINE "OFF".

   2) Disconnect fuel pump relay.

   3) Measure the voltage of fuel pump relay connector terminal 1.

Specification : 11.5V~13.0V

   4) Is the measured voltage within the specification?

   YES

   ▶ Go to "2. Check Fuel pump motor power(Input) voltage" as follows.

   NO

   ▶ Repair open in E/R FUSE & RELAY BOX Main relay component or related circuit and go to "Verification of Vehicle Repair".

2. Check Fuel pump motor power(Input) voltage

   1) IG KEY "OFF", ENGINE "OFF".

   2) Disconnect fuel pump relay.

   3) IG KEY "ON".

   4) Measure the voltage of fuel pump relay connector terminal 5.

Specification : 11.5V~13.0V

   5) Is the measured voltage within the specification?

   YES

   ▶ Go to "Control Circuit Inspection".

   NO

   ▶ Repair E/R FUSE & RELAY BOX 15A FUEL PUMP FUSE and related circuit and go to "Verification of Vehicle Repair".

CONTROL CIRCUIT INSPECTION EA267F34

1. Check short to ground in control circuit

1) IG KEY "OFF", ENGINE "OFF".

2) Disconnect fuel pump relay.

3) IG KEY "ON".

4) Measure the voltage of fuel pump relay connector terminal 3.

Specification : 3.2V~3.7V

5) Is the measured voltage within the specification?

YES

▶ Go to "Component Inspection".

NO

▶ When no value is detected : Go to "2. Check open in control circuit".
▶ When high voltage is detected : Repair short to battery in signal circuit and go to "Verification of Vehicle Repair".

2. Check open in control circuit

1) IG KEY "OFF", ENGINE "OFF".

2) Disconnect fuel pump relay and ECM connector.

3) Check continuity between fuel pump relay connector terminal 3 and ECM connector (C230-A) terminal 45.

specification : Continuity (below 1.0Ω)

4) Is the measured resistance within the specification?

YES

▶ Repair short to ground and go to "Verification of Vehicle Repair".

NO

▶ Repair open in control circuit and go to "Verification of Vehicle Repair".

COMPONENT INSPECTION ECB31A37

1. Check fuel pump relay component coil resistance

1) IG KEY "OFF", ENGINE "OFF".

2) Disconnect glow relay.

3) Measure the resistance of glow relay component coil.

Specification : 95±5 Ω (20℃)

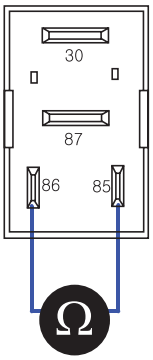

SCMFL6418L

4) Is the measured resistance within the specification?

YES

▶ Go to "2. Check glow relay component operation" as follows.

NO

▶ Replace glow relay and go to "Verification of Vehicle Repair".

2. Check glow relay component operation

1) IG KEY "OFF", ENGINE "OFF".

2) Disconnect glow relay.

3) Supplies random B+ and ground to coil sides of glow relay (terminal 85, terminal 86).

4) Check continuity between glow relay terminal 30 and terminal 87.

specification : When power is supplied : Continuity (below 1.0Ω)
When power is not supplied : Discontinuity (Infinite Ω)

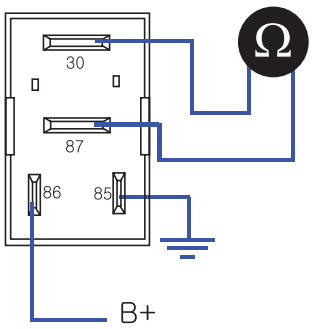

SCMFL6419L

5) Is the measured resistance within the specification?

YES

▶ Go to "Verification of Vehicle Repair".

NO

▶ Replace glow relay and go to "Verification of Vehicle Repair".

※ Repeat this process 2~3 times.

VERIFICATION OF VEHICLE REPAIR EF47981B

After a repair, it is essential to verify that the fault is corrected.

1. After connecting Scantool select "DIAGNOSTIC TROUBLE CODES(DTCs)" mode.
2. Clear recorded DTC using Scantool.
3. Drive the vehicle within DTC "Enable conditions" in "General information".
4. After selecting "DIAGNOSTIC TROUBLE CODES(DTCs)" mode and check if DTC is recorded again.
5. Are any DTCs recorded ?

YES

▶ Go to the DTC guide of recorded NO. in Scantool.

NO

▶ System operates within specification.

DTC P0232 ELECTRIC FUEL PUMP RELAY-SHORT CIRCUIT

COMPONENT LOCATION ECB826BF

Refer to DTC P0231.

GENERAL DESCRIPTION EAE261E3

Refer to DTC P0231.

DTC DESCRIPTION ED083760

P0232 is set when excessive voltage is detected in Fuel pump relay control circuit for more than 1 sec. at Fuel pump relay ON condition. This code is due to short to battery in Fuel pump relay control circuit.

DTC DETECTING CONDITION E79A2371

Item	Detecting Condition			Possible Cause
DTC Strategy	• Voltage monitoring			• Fuel pump relay control circuit • Fuel pump relay component
Enable Conditions	• IG KEY "ON" (monitoring only performed within relay operating condition)			
Threshold Value	• short to battery			
Diagnostic Time	• 1.0 sec.			
Fail Safe	Fuel cut	NO		
	EGR Off	NO		
	Fuel Limit	NO		
	Check Lamp	NO		

SPECIFICATION E86209F7

Refer to DTC P0231.

SCHEMATIC DIAGRAM E051A4CA

Refer to DTC P0231.

TERMINAL AND CONNECTOR INSPECTION E998FFCB

Refer to DTC P0231.

POWER CIRCUIT INSPECTION E1749BD3

1. Check Relay coil power circuit voltage
   1) IG KEY "OFF", ENGINE "OFF".
   2) Disconnect fuel pump relay.
   3) Measure the voltage of fuel pump relay connector terminal 1.

Specification : 11.5V~13.0V

4) Is the measured voltage within the specification?

YES

▶ Go to "2. Check Fuel pump motor power(Input) voltage" as follows.

NO

▶ Repair open in E/R FUSE & RELAY BOX Main relay component or related circuit and go to "Verification of Vehicle Repair".

2. Check Fuel pump motor power(Input) voltage

1) IG KEY "OFF", ENGINE "OFF".

2) Disconnect fuel pump relay.

3) IG KEY "ON".

4) Measure the voltage of fuel pump relay connector terminal 5.

Specification : 11.5V~13.0V

5) Is the measured voltage within the specification?

YES

▶ Go to "Control Circuit Inspection".

NO

▶ Repair E/R FUSE & RELAY BOX 15A FUEL PUMP FUSE and related circuit and go to "Verification of Vehicle Repair".

CONTROL CIRCUIT INSPECTION EDF8E4AB

1. Check short to ground in control circuit

1) IG KEY "OFF", ENGINE "OFF".

2) Disconnect fuel pump relay.

3) IG KEY "ON".

4) Measure the voltage of fuel pump relay connector terminal 3.

Specification : 3.2V~3.7V

5) Is the measured voltage within the specification?

YES

▶ Go to "Component Inspection".

NO

▶ When no value is detected : Go to "2. Check open in control circuit".
▶ When high voltage is detected : Repair short to battery in signal circuit and go to "Verification of Vehicle Repair".

2. Check open in control circuit

1) IG KEY "OFF", ENGINE "OFF".

2) Disconnect fuel pump relay and ECM connector.

3) Check continuity between fuel pump relay connector terminal 3 and ECM connector (C230-A) terminal 45.

specification : Continuity (below 1.0Ω)

4) Is the measured resistance within the specification?

YES

▶ Repair short to ground and go to "Verification of Vehicle Repair".

NO

▶ Repair open in control circuit and go to "Verification of Vehicle Repair".

COMPONENT INSPECTION E24AAB6F

1. Check fuel pump relay component coil resistance

1) IG KEY "OFF", ENGINE "OFF".

2) Disconnect glow relay.

3) Measure the resistance of glow relay component coil.

Specification : 95±5 Ω (20℃)

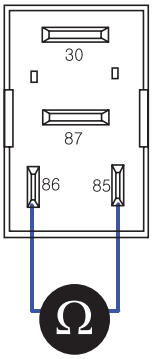

SCMFL6418L

4) Is the measured resistance within the specification?

YES

▶ Go to "2. Check glow relay component operation" as follows.

NO

▶ Replace glow relay and go to "Verification of Vehicle Repair".

2. Check glow relay component operation

   1) IG KEY "OFF", ENGINE "OFF".

   2) Disconnect glow relay.

   3) Supplies random B+ and ground to coil sides of glow relay (terminal 85, terminal 86).

   4) Check continuity between glow relay terminal 30 and terminal 87.

specification : When power is supplied : Continuity (below 1.0Ω)
When power is not supplied : Discontinuity (Infinite Ω)

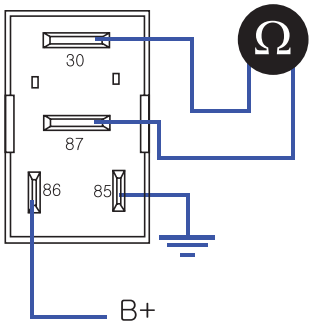

SCMFL6419L

   5) Is the measured resistance within the specification?

YES

▶ Go to "Verification of Vehicle Repair".

NO

▶ Replace glow relay and go to "Verification of Vehicle Repair".

※ Repeat this process 2~3 times.

VERIFICATION OF VEHICLE REPAIR E6420640

Refer to DTC P0231.

DTC P0234 TURBO/SUPER CHARGER OVERBOOST CONDITION

COMPONENT LOCATION ED0ED326

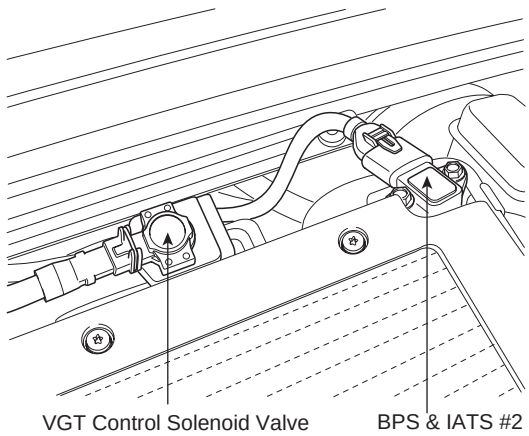

SCMFL6500L

GENERAL DESCRIPTION E31EB5D2

VGT(Variable Geometric Turbocharger) is the device which increases the efficiency of turbocharger at low rpm and lasts optimum turbo efficiency at high rpm as varying the cross sectional area through which exhaust gas passes turbocharger impeller. It relieves turbo lag at low speed and increse engine power generation.Engine speed, APS signal, MAFS and Boost pressure sensor information is inputted to ECM. ECM actuates vacuum diafragm which controls exhaust gas line as controlling VGT actuator duty to maintain optimum state of air compression.

DTC DESCRIPTION E306B38F

P0234 is set when real boost pressure is much higher than target boost pressure for more than 12 sec. at above 1750RPM and 22mg/hub of fuel injection quantity. This code is due to poor connection of VGT solenoid valve vacuum hose, vacuum leakage, clogging, VGT turbo charger component failure.

DTC DETECTING CONDITION E3E9A4DC

Item	Detecting Condition			Possible Cause
DTC Strategy	• Signal monitoring			• VGT solenoid component • VGT vacuum line • VGT turbo charger component
Enable Conditions	• Engine running(at above 1750RPM and 22mg/hub of fuel injection quantity)			
Threshold Value	• Real boost press. is much higher than target boost press.			
Diagnostic Time	• 12 sec.			
Fail Safe	Fuel cut	NO		
	EGR Off	YES		
	Fuel Limit	YES		
	Check Lamp	YES		

SPECIFICATION E920E0BD

VGT actuator component resistance	VGT actuator operating Hz	VGT actuator operating duty
14.7 ~ 16.1Ω (20℃)	300Hz	76% at idle, decreases as accelerating

SCHEMATIC DIAGRAM EE260480

[CIRCUIT DIAGRAM]

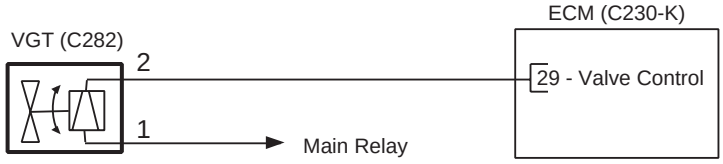

[CONNECTION INFORMATION]

Terminal	Connected to	Function
1	Main Relay	Battery Voltage (B+)
2	ECM C230-K (29)	Valve Control

[HARNESS CONNECTORS]

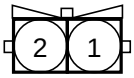

C282

VGT CONTROL SOLENOID VALVE

C230-A

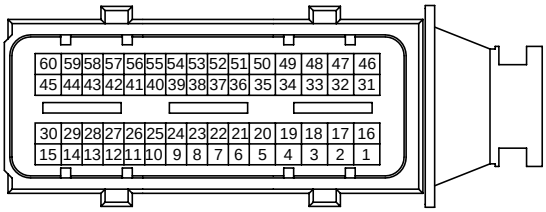

C230-K

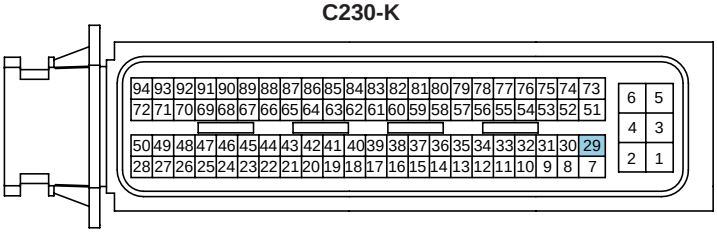

ECM

SCMFL6136L

SIGNAL WAVEFORM AND DATA E2F56275

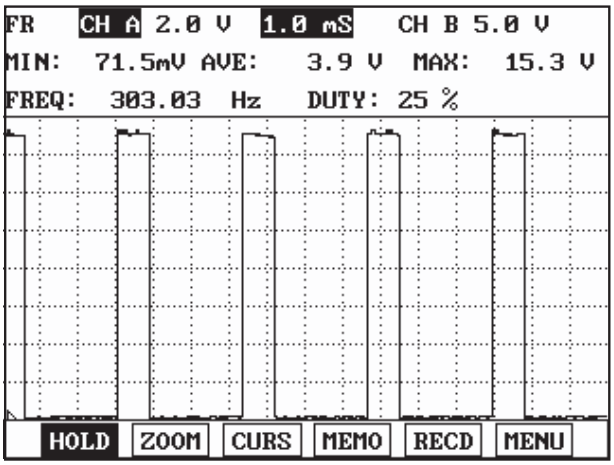

Fig.1

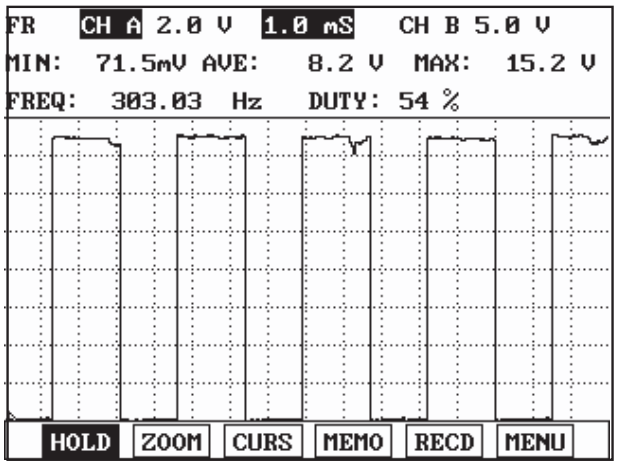

Fig.2

Fig.1) VGT actuator output waveform at 76% duty((-)duty). Duty decreases as boost pressure increases.
Fig.2) VGT actuator duty((-)duty) decreases as accelerating.

LFIG369A

MONITOR SCANTOOL DATA E177CE6C

1. Connect Scantool to Data Link Connector (DLC).
2. Warm engine up to normal operating temperature.
3. Turn "OFF" electrical devices and A/C.
4. Monitor "BOOST PRESSURE SENSOR" parameter on the Scantool.

Specification : 1000hpa ± 100hpa(VGT actuator : approx. 76%) at idle

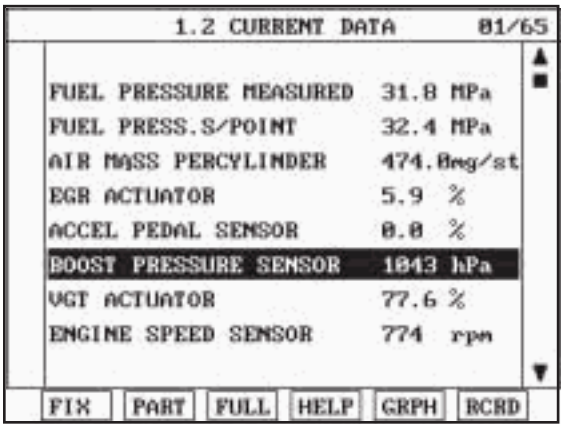

Fig.1

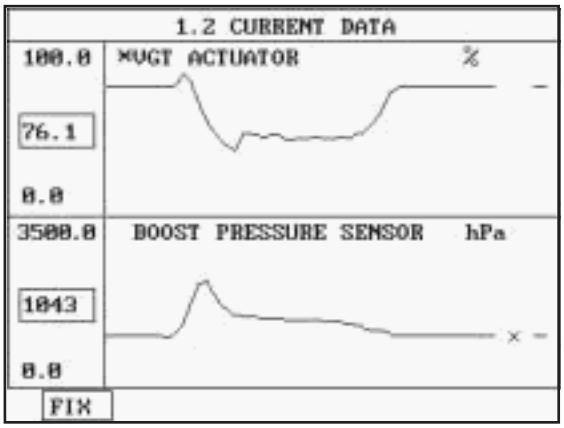

Fig.2

Fig1) Monitor "BOOST PRESSURE SENSOR" parameter on the Scantool at idle after warming engine up. 1000hpa±100hpa(approx. 1 atm) is correct value.
Fig.2) VGT actuator duty and boost pressure at acceleration is shown . If boost pressure rises and reaches certain value, VGT actuator duty stops to drop and keeps steady. Releasing accelerator pedal at this moment, VGT actuator duty drops to approx. 45%, then if RPM drops to idle range, duty returns to 76%.

SCMFL6253L

TERMINAL AND CONNECTOR INSPECTION E2E1D5E1

1. Electrical systems consist of a lot of harness and connectors, poor connection of terminals can cause various problems and damge of component.

2. Perform checking procedure as follows.

   1) Check damage of harness and terminals : Check terminals for contact resistance, corrosion and deformation.

   2) Check connecting condition of ECM and component connector : Check terminal seperation, damage of locking device and connecting condition between terminal and wiring.

   NOTE

   Disconnect the pin which requires checking at male connector and insert it to the terminal at female connector or checking connecting condition. (after checking, reconnect the pin at correct position.)

3. Is the problem found?

   YES

   ▶ Repair the trouble causing part and go to "Verification of Vehicle Repair".

   NO

   ▶ Go to "Component Inspection".

COMPONENT INSPECTION E8F6720A

1. Check VGT actuator component resistance

   1) IG KEY "OFF", ENGINE "OFF"

   2) Disconnect VGT actuator connector.

   3) Measure the resistance between VGT actuator component terminal 1 and 2.

Specification : 14.7 ~ 16.1Ω (20℃)

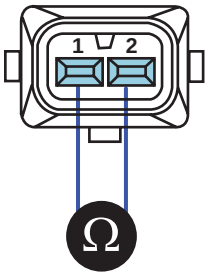

LFIG373A

   4) Is VGT actuator component resistance within the specification?

   YES

   ▶ Go to "2.Check VGT actuator operation" as follows.

   NO

   ▶ Replace VGT actuator and go to "Verification of Vehicle Repair".

2. Check VGT actuator operation

   1) IG KEY "ON", ENGINE "ON".

   2) Check that VGT actuator operating duty is 76% after warming engine up.

   3) Check if vacuum generates after disconnecting VGT valve vacuum hose.

   4) Check if vacuum generates when decelerating after rapid acceleration (Vacuum must not generates, correct VGT actuator operating duty is 45%).

Specification : VGT actuator duty 76% : vacuum generates VGT actuator duty 45% : vacuum does not generate

YES

▶ Go to "Verification of Vehicle Repair".

NO

▶ Replace VGT actuator and go to "Verification of Vehicle Repair".

※ Repeat this process 2~3 times.

VERIFICATION OF VEHICLE REPAIR E73800D6

After a repair, it is essential to verify that the fault is corrected.

1. After connecting Scantool select "DIAGNOSTIC TROUBLE CODES(DTCs)" mode.
2. Clear recorded DTC using Scantool.
3. Drive the vehicle within DTC "Enable conditions" in "General information".
4. After selecting "DIAGNOSTIC TROUBLE CODES(DTCs)" mode and check if DTC is recorded again.
5. Are any DTCs recorded ?

YES

▶ Go to the DTC guide of recorded NO. in Scantool.

NO

▶ System operates within specification.

DTC P0237 BOOST PRESSURE SENSOR CIRCUIT LOW INPUT

COMPONENT LOCATION EDAB9384

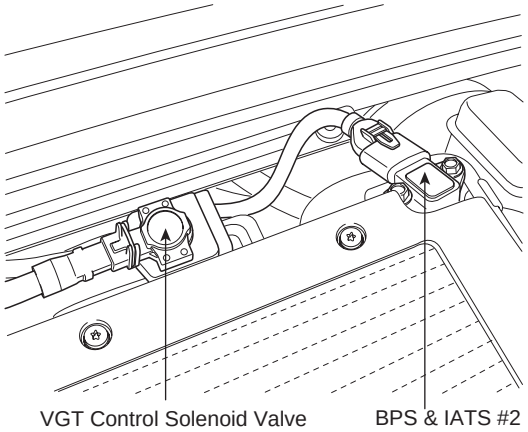

SCMFL6500L

GENERAL DESCRIPTION EAB17743

Boost Pressure Sensor(BPS) is installed in intake manifold and senses the pressure of air inside of intake manifold which is compressed by turbo charager.Measuring mass air flow accurately with the information of intake mainfold pressure, mass air flow and intake air temperature, ECM performs actuating correction of EGR and VGT.When excessive intake manifold pressure is detected, engine power generation is limited to protect engine because too highly compressed pressure due to turbo charger may harm engine.

DTC DESCRIPTION ECCB5E26

P0237 is set when the voltage below 0.2V - mimimum output voltage of BPS - is detected for more than 2 sec.. This code is due to open in power circuit or short to ground in signal circuit.

DTC DETECTING CONDITION EAF655CC

<table>
<tr><th>Item</th><th colspan="3">Detecting Condition</th><th>Possible Cause</th></tr>
<tr><td>DTC Strategy</td><td colspan="3">• Voltage monitoring</td><td rowspan="6">• BPS circuit
• BPS component</td></tr>
<tr><td>Enable Conditions</td><td colspan="3">• IG KEY "ON"</td></tr>
<tr><td>Threshold Value</td><td colspan="3">• Output signal below minimum value(below 200mV)</td></tr>
<tr><td>Diagnostic Time</td><td colspan="3">• 2 sec.</td></tr>
<tr><td rowspan="4">Fail Safe</td><td>Fuel cut</td><td>NO</td><td rowspan="4">• Boost pressure is fixed at 1000 hpa.</td></tr>
<tr><td>EGR Off</td><td>YES</td></tr>
<tr><td>Fuel Limit</td><td>YES</td></tr>
<tr><td>Check Lamp</td><td>YES</td></tr>
</table>

SPECIFICATION E86C9D22

Pressure [Kpa]	20	100	190	250
Output voltage [V]	0.4±0.077	1.878±0.063	3.541±0.063	4.650±0.077

SCHEMATIC DIAGRAM E069DAF8

[CIRCUIT DIAGRAM]

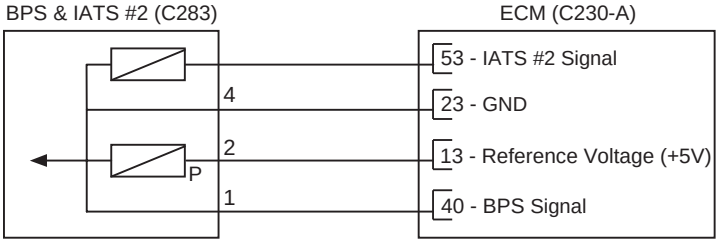

[CONNECTION INFORMATION]

Terminal	Connected to	Function
1	ECM C230-A (40)	BPS Signal
2	ECM C230-A (13)	Reference Voltage (+5V)
3	ECM C230-A (53)	IATS #2 Signal
4	ECM C230-A (23)	Sensor ground

[HARNESS CONNECTORS]

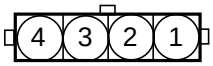

C283

BPS & IATS #2

C230-A

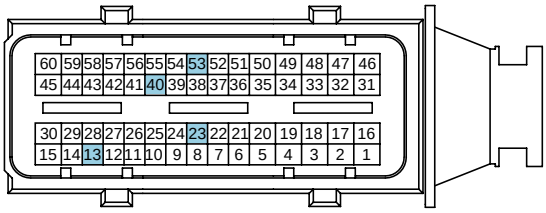

C230-K

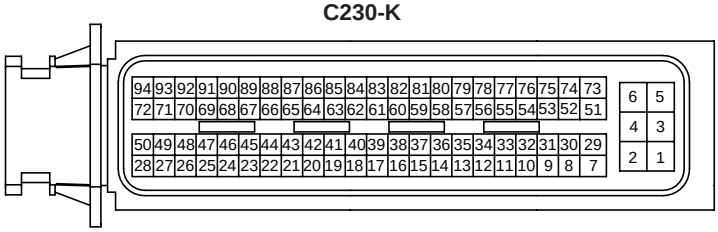

ECM

SCMFL6118L

SIGNAL WAVEFORM AND DATA EF4BFE1E

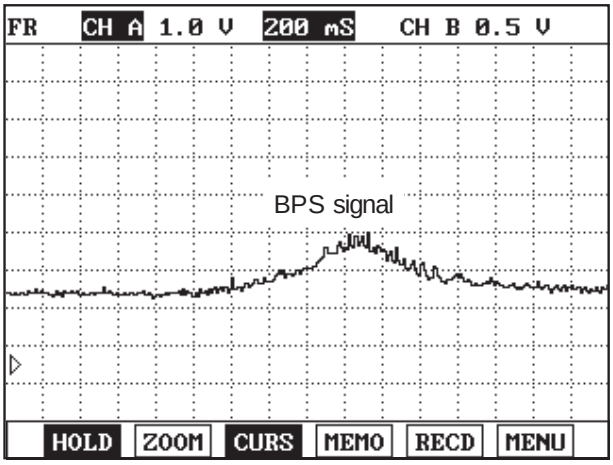

Fig.1

Fig1). This is the waveform of BPS as accelerating from idle state. Signal voltage rises as accelerating.

LFIG208A

MONITOR SCANTOOL DATA EBE79CFF

1. Connect Scantool to Data Link Connector (DLC).

2. Warm engine up to normal operating temperature.

3. Turn "OFF" electrical devices and A/C.

4. Monitor "BOOST PRESSURE SENSOR" parameter on the Scantool.

Specification : 1000hpa ± 100hpa(VGT actuator : approx. 76%) at idle

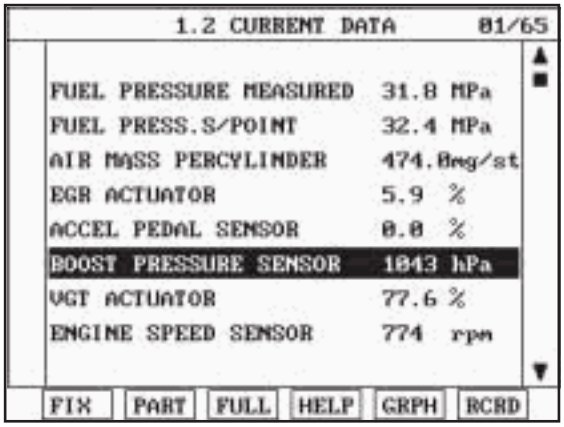

Fig.1

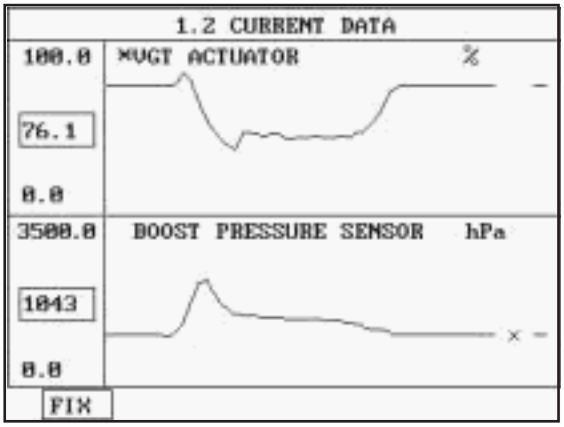

Fig.2

Fig1) Monitor "BOOST PRESSURE SENSOR" parameter on the Scantool at idle after warming engine up. 1000hpa±100hpa(approx. 1 atm) is correct value.

Fig.2) VGT actuator duty and boost pressure at acceleration is shown . If boost pressure rises and reaches certain value, VGT actuator duty stops to drop and keeps steady. Releasing accelerator pedal at this moment, VGT actuator duty drops to approx. 45%, then if RPM drops to idle range, duty returns to 76%.

SCMFL6253L

TERMINAL AND CONNECTOR INSPECTION EE30EC4D

1. Electrical systems consist of a lot of harness and connectors, poor connection of terminals can cause various problems and damge of component.

2. Perform checking procedure as follows.

   1) Check damage of harness and terminals : Check terminals for contact resistance, corrosion and deformation.

   2) Check connecting condition of ECM and component connector : Check terminal seperation, damage of locking device and connecting condition between terminal and wiring.

NOTE

Disconnect the pin which requires checking at male connector and insert it to the terminal at female connector for checking connecting condition. (after checking, reconnect the pin at correct position.)

3. Is the problem found?

YES

▶ Repair the trouble causing part and go to "Verification of Vehicle Repair".

NO

▶ Go to "Power Circuit Inspection".

POWER CIRCUIT INSPECTION E863B4E7

1. IG KEY "OFF", ENGINE "OFF".
2. Disconnect BPS connector.
3. IG KEY "ON".
4. Measure the voltage of BPS connector terminal 2.

Specification : 4.8V~5.1V

5. Is the measured voltage within the specification?

YES

▶ Go to "Signal Circuit Inspection".

NO

▶ Repair open in power circuit and go to "Verification of Vehicle Repair".

SIGNAL CIRCUIT INSPECTION EEE0DDF7

1. Check signal circuit voltage
   1) IG KEY "OFF", ENGINE "OFF".
   2) Disconnect BPS connector.
   3) IG KEY "ON"
   4) Measure the voltage of BPS connector terminal 1.

Specification : 4.8V~5.1V

   5) Is the measured voltage within the specification?

YES

▶ Go to "Component Inspection".

NO

▶ Go to "2. Check short to ground in signal circuit" as follows.

2. Check short to ground in signal circuit
   1) IG KEY "OFF", ENGINE "OFF"
   2) Disconnect BPS connector and ECM connector.
   3) Check continuity between BPS connector terminal 1 and chassis ground.

Specification : Discontinuity (Infinite Ω)

   4) Is the measured resistance within the specification?

YES

▶ Go to "Component Inspection".

NO

▶ Repair short to ground in signal circuit and go to "Verification of Vehicle Repair".

COMPONENT INSPECTION E0895801

1. BPS visual inspection

   1) IG KEY "OFF", ENGINE "OFF".

   2) Disconnect BPS connector.

   3) Check if corrosion and damage in BPS terminal is detected.

   4) Check BPS mounting state, leakage at O'ring, clogged carbon at pressure detecting hall.

   5) Are the problems relevant to BPS found?

   YES

   ▶ Replace BPS if necessary and go to "Verification of Vehicle Repair".

   NO

   ▶ Go to "2. Check VGT Turbo charger and leakage in intake system".

2. Check VGT turbo charger and leakage in intake system

   1) IG KEY "OFF", ENGINE "OFF".

   2) Check if VGT actuating rod which is connected to diaphragm of VGT turbo charger assy' is at the bottom position.

   3) IG KEY "ON"., ENGINE "ON".

   4) Check if VGT actuating rod is pulled upward Approx. 10mm when engine is about to start.

   5) As accelerating and decelerating, Check if VGT actuating rod moves upward and downward.

   6) Check if intake air leak is detected at intake hose at acceleration.
   (Check if intake hose inflates properly.)

   7) Are the problems relevant to VGT turbo charger and intake hose found?

   YES

   ▶ VGT actuating rod does not work.
   ☞ If any problem is not detected after checking connecting condition of VGT actuator vacuum hose and VGT actuator operating states(refer to "Component Inspection" of P0048), VGT actuator variable controlling part is considered to be stuck. Replace VGT turbo charger in this case.

   ▶ Intake air leak is detected.
   ☞ Checking intake hose is not damaged and band clamp is fastened well, repair trouble causing parts.

   If trouble causing parts are repaired, go to "Verification of Vehicle Repair".

NO

▶ Go to "3. BPS Waveform inspection".

3. BPS Waveform inspection

   1) IG KEY "ON", ENGINE "OFF".

   2) Connect BPS.

   3) Connect Oscilloscope to BPS connector terminal 1.

   4) Monitor the waveform at idle and acceleration.

Specification : Refer to "Signal Waveform & Data" of "General Information".

   5) Is BPS waveform displayed correctly?

YES

▶ Go to "Verification of Vehicle Repair".

NO

▶ Replace BPS and go to "Verification of Vehicle Repair".

VERIFICATION OF VEHICLE REPAIR E4D09EDB

After a repair, it is essential to verify that the fault is corrected.

1. After connecting Scantool select "DIAGNOSTIC TROUBLE CODES(DTCs)" mode.
2. Clear recorded DTC using Scantool.
3. Drive the vehicle within DTC "Enable conditions" in "General information".
4. After selecting "DIAGNOSTIC TROUBLE CODES(DTCs)" mode and check if DTC is recorded again.
5. Are any DTCs recorded ?

YES

▶ Go to the DTC guide of recorded NO. in Scantool.

NO

▶ System operates within specification.

DTC P0238 BOOST PRESSURE SENSOR CIRCUIT HIGH INPUT

COMPONENT LOCATION EB67C22E

Refer to DTC P0237.

GENERAL DESCRIPTION E75D5C0C

Refer to DTC P0237.

DTC DESCRIPTION EE30B4C5

P0238 is set when the voltage above 4.9V - maximum output voltage of BPS - is detected for more than 2 sec.. This code is due to 1) short to battery or open in signal circuit or 3) open in ground circuit.

DTC DETECTING CONDITION EFF0BEB4

<table>
<tr><th>Item</th><th colspan="3">Detecting Condition</th><th>Possible Cause</th></tr>
<tr><td>DTC Strategy</td><td colspan="3">• Voltage monitoring</td><td rowspan="6">• BPS circuit
• BPS component</td></tr>
<tr><td>Enable Conditions</td><td colspan="3">• IG KEY "ON"</td></tr>
<tr><td>Threshold Value</td><td colspan="3">• Output signal above maximum value(above 4.9V)</td></tr>
<tr><td>Diagnostic Time</td><td colspan="3">• 2 sec.</td></tr>
<tr><td rowspan="4">Fail Safe</td><td>Fuel cut</td><td>NO</td><td rowspan="4">• Boost pressure is fixed at 1000 hpa.</td></tr>
<tr><td>EGR Off</td><td>YES</td></tr>
<tr><td>Fuel Limit</td><td>YES</td></tr>
<tr><td>Check Lamp</td><td>NO</td></tr>
</table>

SPECIFICATION E36C5ED7

Refer to DTC P0237.

SCHEMATIC DIAGRAM EDED8AC0

Refer to DTC P0237.

SIGNAL WAVEFORM AND DATA EC06895A

Refer to DTC P0237.

MONITOR SCANTOOL DATA E950BDCB

Refer to DTC P0237.

TERMINAL AND CONNECTOR INSPECTION EBADE34C

Refer to DTC P0237.

POWER CIRCUIT INSPECTION EE9894CE

1. IG KEY "OFF", ENGINE "OFF".
2. Disconnect BPS connector.
3. IG KEY "ON".
4. Measure the voltage of BPS connector terminal 2.

Specification : 4.8V~5.1V

5. Is the measured voltage within the specification?

YES

▶ Go to "Signal Circuit Inspection".

NO

▶ Repair open in power circuit and go to "Verification of Vehicle Repair".

SIGNAL CIRCUIT INSPECTION E948D14B

1. Check signal circuit voltage
   1) IG KEY "OFF", ENGINE "OFF".
   2) Disconnect BPS connector.
   3) IG KEY "ON"
   4) Measure the voltage of BPS connector terminal 1.

Specification : 4.8V~5.1V

   5) Is the measured voltage within the specification?

YES

▶ Go to "Ground Circuit Inspection".

NO

▶ Go to "2. Check open in signal circuit" as follows.

2. Check open in signal circuit
   1) IG KEY "OFF", ENGINE "OFF"
   2) Disconnect BPS connector and ECM connector.
   3) Check continuity between BPS connector terminal 1 and ECM connector (C230-A) terminal 40.

Specification : continuity (below 1.0Ω)

   4) Is the measured resistance within the specification?

YES

▶ Repair short to battery in signal circuit and go to "Verification of Vehicle Repair".

NO

▶ Repair open in BPS signal circuit and go to "Verification of Vehicle Repair".

GROUND CIRCUIT INSPECTION E5201409

1. IG KEY "OFF", ENGINE "OFF".
2. Disconnect BPS connector.
3. IG KEY "ON".
4. Measure the voltage of BPS connector terminal 2. [TEST "A"]
5. Measure the voltage between BPS connector terminal 2 and 4. [TEST "B"]
   (terminal 2 : Check + prove , terminal 4 : Check - prove)

Specification : [TEST "A"] Voltage - [TEST "B"] Voltage = below 200mV

6. Is the measured voltage within the specification?

   YES

   ▶ Go to "Component Inspection".

   NO

   ▶ When "B" voltage is not detected : Repair open in ground circuit and go to "Verification of Vehicle Repair".
   ▶ When the voltage difference between "A" and "B" is above 200mV : Eliminate the causes of excessive resistance and go to "Verification of Vehicle Repair".

COMPONENT INSPECTION E3567416

1. BPS visual inspection
   1) IG KEY "OFF", ENGINE "OFF".
   2) Disconnect BPS connector.
   3) Check if corrosion and damage in BPS terminal is detected.
   4) Check BPS mounting state, leakage at O’ring, clogged carbon at pressure detecting hall.
   5) Are the problems relevant to BPS found?

      YES

      ▶ Replace BPS if necessary and go to "Verification of Vehicle Repair".

      NO

      ▶ Go to "2. Check VGT Turbo charger and leakage in intake system".
2. Check VGT turbo charger and leakage in intake system

1) IG KEY "OFF", ENGINE "OFF".

2) Check if VGT actuating rod which is connected to diaphragm of VGT turbo charger assy' is at the bottom position.

3) IG KEY "ON"., ENGINE "ON".

4) Check if VGT actuating rod is pulled upward Approx. 10mm when engine is about to start.

5) As accelerating and decelerating, Check if VGT actuating rod moves upward and downward.

6) Check if intake air leak is detected at intake hose at acceleration.
(Check if intake hose inflates properly.)

7) Are the problems relevant to VGT turbo charger and intake hose found?

YES

▶ VGT actuating rod does not work.
☞ If any problem is not detected after checking connecting condition of VGT actuator vacuum hose and VGT actuator operating states(refer to "Component Inspection" of P0048), VGT actuator variable controlling part is considered to be stuck. Replace VGT turbo charger in this case.

▶ Intake air leak is detected.
☞ Checking intake hose is not damaged and band clamp is fastened well, repair trouble causing parts.

If trouble causing parts are repaired, go to "Verification of Vehicle Repair".

NO

▶ Go to "3. BPS Waveform inspection".

3. BPS Waveform inspection

1) IG KEY "ON", ENGINE "OFF".

2) Connect BPS.

3) Connect Oscilloscope to BPS connector terminal 1.

4) Monitor the waveform at idle and acceleration.

Specification : Refer to "Signal Waveform & Data" of "General Information".

5) Is BPS waveform displayed correctly?

YES

▶ Go to "Verification of Vehicle Repair".

NO

▶ Replace BPS and go to "Verification of Vehicle Repair".

VERIFICATION OF VEHICLE REPAIR EB580DF1

Refer to DTC P0237.

DTC P0252 FUEL PRESSURE REGULATOR VALVE CIRCUIT OVER CURRENT

COMPONENT LOCATION EF46378F

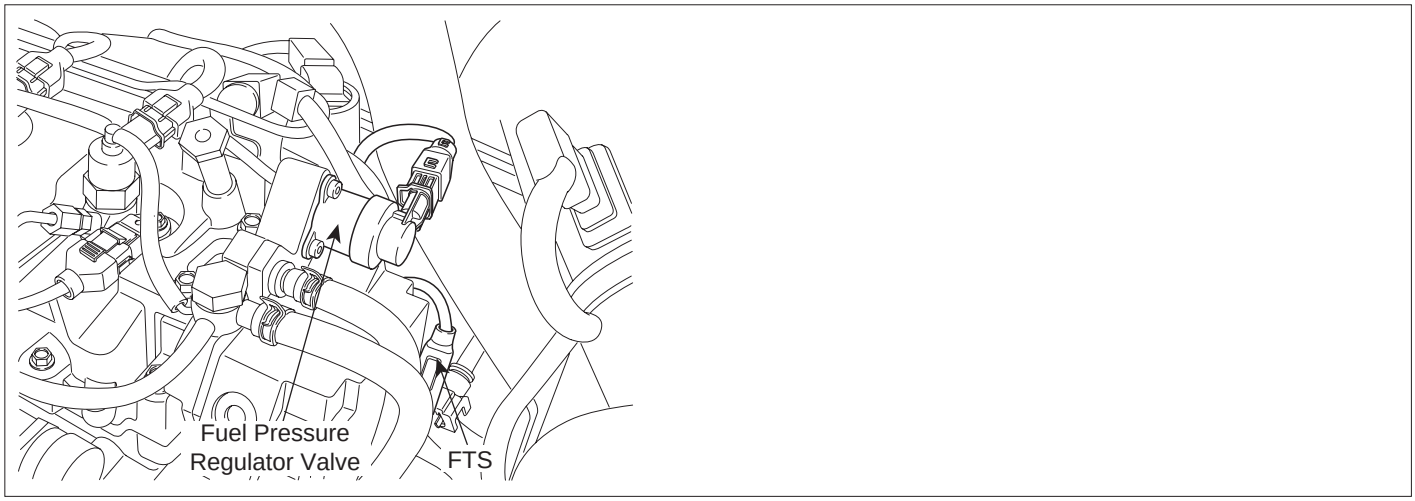

LFIG394A

GENERAL DESCRIPTION E5A5B14B

Fuel Pressure Regulator Valve(FPRV) is integrated with high pressure pump and controls common rail pressure as regulating the quantity of fuel which is delivered to common rail. In order to control rail pressure to be optimum to current driving condition, ECM controls fuel pressure regulator valve operating current(with the method of duty-control) using RPCV signal, RPM and APS signal.The lower Fuel pressure regulator valve current is, the more fuel is supplied to common rail. Thus it leads rail pressure to be high. On the contrary, the higher Fuel pressure regulator valve current is, the less fuel is supplied to common rail. Thus it leads rail pressure to be low. Therefore, when Fuel metering unit current becomes "0", as if there is open spot in Fuel metering unit circuit or connector is disconnected, maximum fuel quantity is supplied to common rail, so the pressure of common rail rise to maximum value.

DTC DESCRIPTION ECE5431D

P0252 is set when excessive current in control circuit of Fuel metering unit(integrated with high pressure pump) is detected for more than 0.22 sec.. This code is due to short to battery in control circuit or Fuel metering unit internal short.

DTC DETECTING CONDITION E49F55F3

Item	Detecting Condition			Possible Cause
DTC Strategy	• Voltage monitoring			• FPRV circuit • FPRV component
Enable Conditions	• IG KEY "ON"			
Threshold Value	• Short to battery (control circuit in FPRV)			
Diagnostic Time	• 0.22 sec.			
Fail Safe	Fuel cut	NO		
	EGR Off	NO		
	Fuel Limit	YES		
	Check Lamp	YES		

SPECIFICATION E4B5298A

Rail pressure regulator valve resistance	Operating frequancy
2.9 ~ 3.15Ω (20℃)	185 Hz

SCHEMATIC DIAGRAM E9A37367

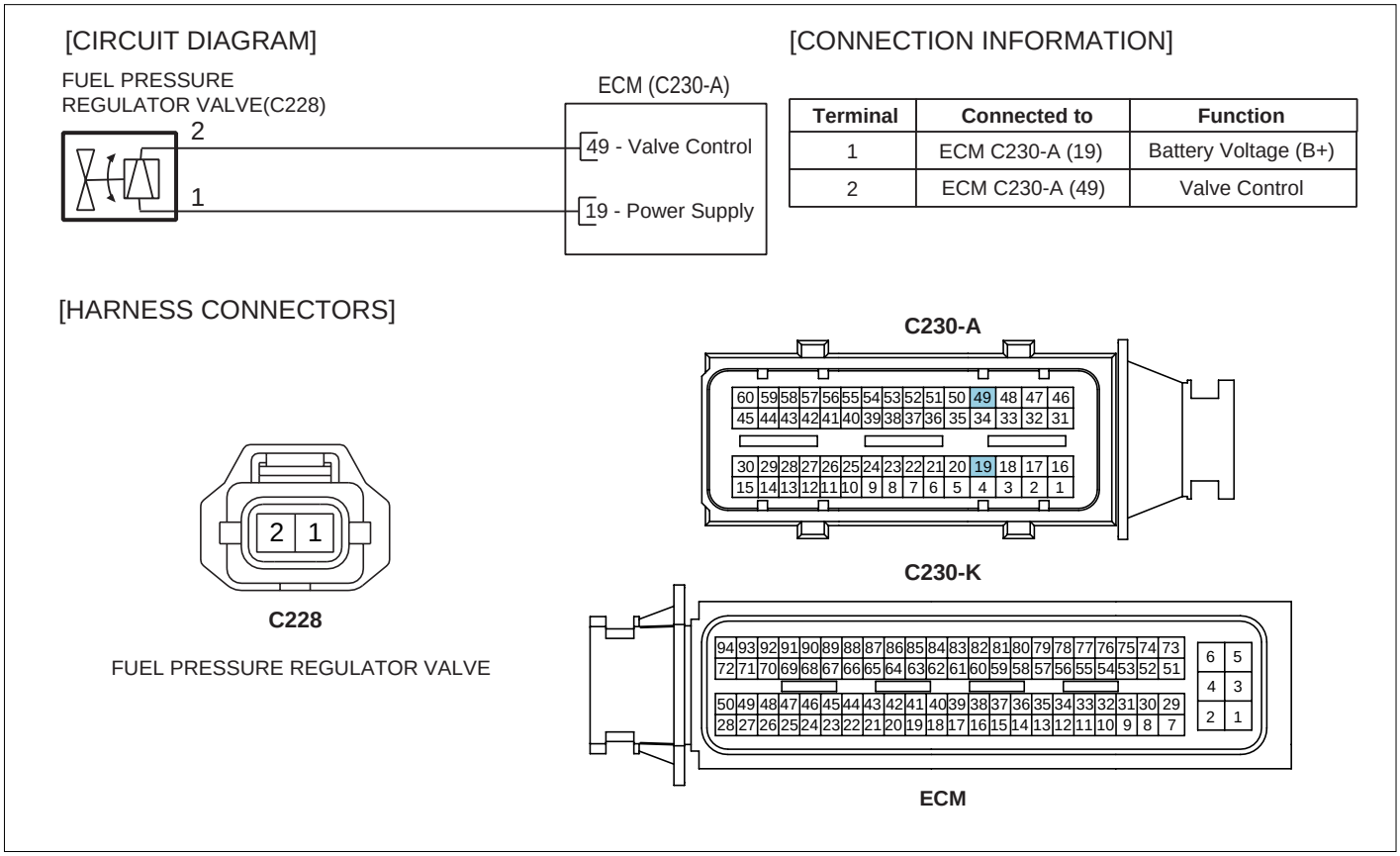

Terminal	Connected to	Function
1	ECM C230-A (19)	Battery Voltage (B+)
2	ECM C230-A (49)	Valve Control

SCMFL6128L

SIGNAL CIRCUIT INSPECTION EAAAEDF2

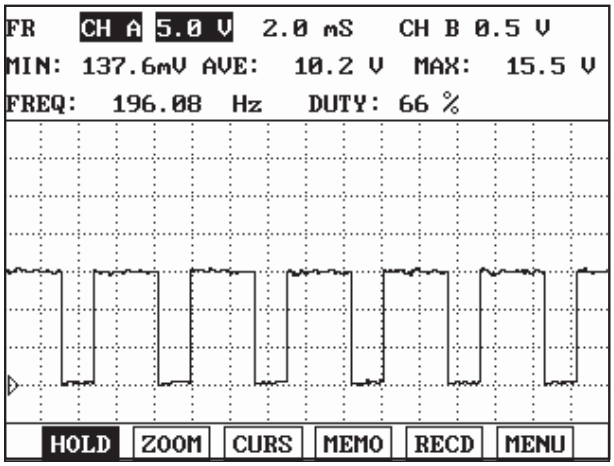

Fig.1

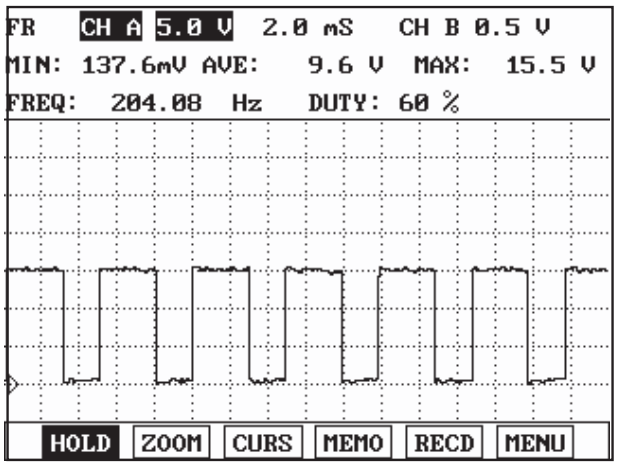

Fig.2

Fig.1) Waveform of fuel pressure regulator valve at idle. It shows approx. 34% duty((-)duty).
Fig.2) Waveform of fuel pressure regulator valve as accelerating. approx. 38% duty((-)duty) is outputted as engine load increases.

LFIG396A

MONITOR SCANTOOL DATA E98E8154

1. Connect Scantool to Data Link Connector (DLC).
2. Warm engine up to normal operating temperature.
3. Turn "OFF" electrical devices and A/C.
4. Monitor "FUEL PRESSURE MEASURED", "INJ. PUMP REGULATOR","RAIL PRESS. REGULATOR1" parameter on the Scantool.

SPECIFICATION :

	Idle(without load)	Accelerating(stall test)	Diagnosis
FUEL PRESSURE MEASURED	27 ± 5 Mpa	above 75 Mpa	press. increases
INJ. PUMP REGULATOR	34 ± 3%	38 ± 3%	duty increases
RAIL PRESS. REGULATOR1	16 ± 3%	45 ± 3%	duty increases

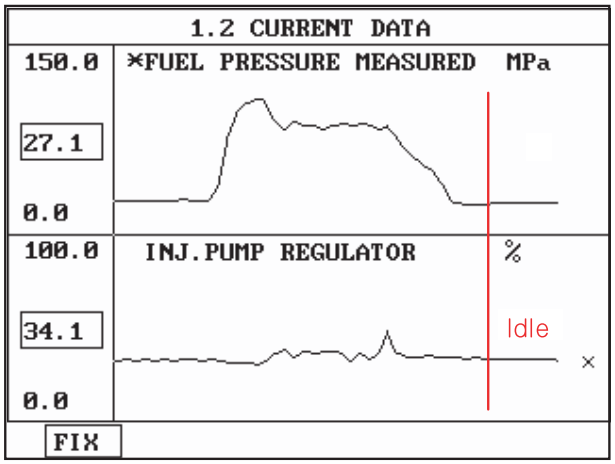

Fig.1

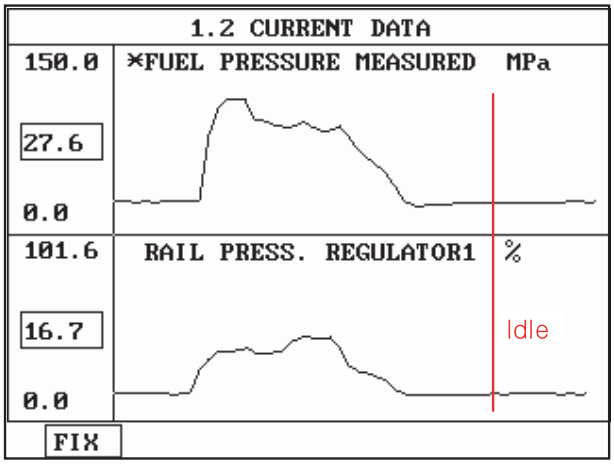

Fig.2

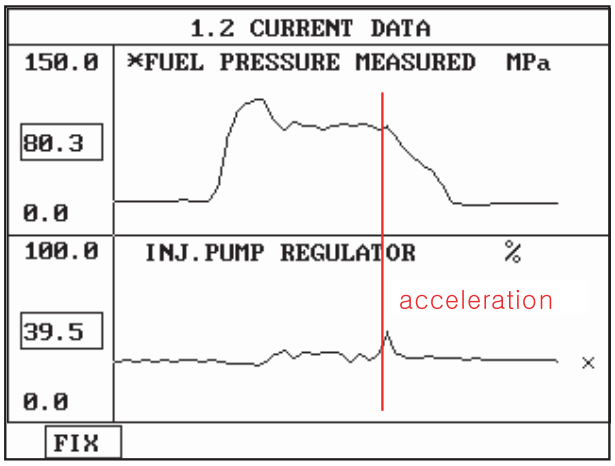

Fig.3

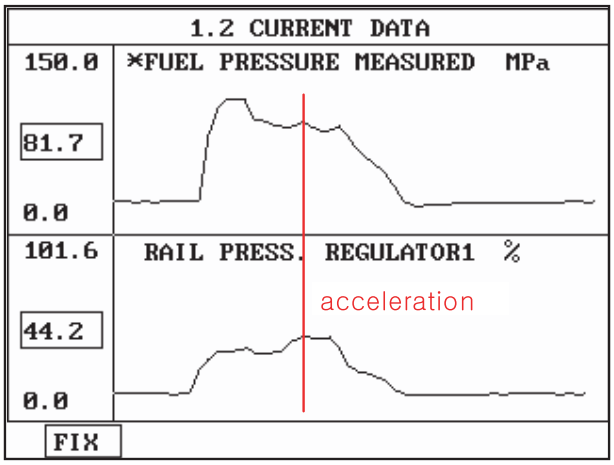

Fig.4

Fig.2) Fuel pressure and Fuel pressure regulator valve data at idle.
Fig.3) Fuel pressure and Rail pressure regulator valve data at idle.
Fig.4) Fuel pressure and Fuel pressure regulator valve data at acceleration.
Fig.5) Fuel pressure and Rail pressure regulator valve data at acceleration.

LFIG375A

NOTE

The waveform of fuel pressure regulator valve installed at high pressure pump(fuel detecting MPROP) shows 34 ± 3% duty at idle, duty rises to approx. 38% at acceleration to raise rail pressure.

The waveform of rail pressure regulator valve installed at common rail shows 16 ± 3% duty at idle, duty rises to approx. 45% at acceleration to raise rail pressure.

TERMINAL AND CONNECTOR INSPECTION E6D71921

1. Electrical systems consist of a lot of harness and connectors, poor connection of terminals can cause various problems and damge of component.

2. Perform checking procedure as follows.

   1) Check damage of harness and terminals : Check terminals for contact resistance, corrosion and deformation.

   2) Check connecting condition of ECM and component connector : Check terminal seperation, damage of locking device and connecting condition between terminal and wiring.

NOTE

Disconnect the pin which requires checking at male connector and insert it to the terminal at female connector for checking connecting condition. (after checking, reconnect the pin at correct position.)

3. Is the problem found?

YES

▶ Repair the trouble causing part and go to "Verification of Vehicle Repair".

NO

▶ Go to "Power Circuit Inspection".

POWER CIRCUIT INSPECTION E2F2B1D7

1. Check power circuit voltage

   1) IG KEY "OFF", ENGINE "OFF"

   2) Disconnect FPRV connector.

   3) IG KEY "ON"

   4) Measure the voltage of FPRV connector terminal 1.

specification : 11.5V~13.0V

   5) Is the measured voltage within the specification?

YES

▶ Go to "Control Circuit Inspection".

NO

▶ Repair open between FPRV connector terminal 1 and ECM connector(C230-A) terminal 19 and go to "Verification of Vehicle Repair".

CONTROL CIRCUIT INSPECTION E112BAF6

1. Check monitoring voltage in control circuit

   1) IG KEY "OFF", ENGINE "OFF"

   2) Disconnect FPRV connector.

   3) IG KEY "ON"

   4) Measure the voltage of FPRV connector terminal 2.

specification : 3.2V~3.7V

   5) Is the measured voltage within the specification?

   YES

   ▶ Go to "Component Inspection"

   NO

   ▶ When voltage is not detected : Go to "2. Check open in control circuit" as follows.
   ▶ When high voltage is detected : Repair short to battery and go to "Verification of Vehicle Repair".

2. Check open in control circuit

   1) IG KEY "OFF", ENGINE "OFF"

   2) Disconnect FPRV and ECM connector.

   3) Check continuity between FPRV connector terminal 2 and ECM connector (C230-A) terminal 49.

specification : Continuity (below 1.0Ω)

   4) Is the measured resistance within the specification?

   YES

   ▶ Repair short to ground in FPRV control circuit and go to "Verification of Vehicle Repair".

   NO

   ▶ Repair open in FPRV control circuit and go to "Verification of Vehicle Repair".

COMPONENT INSPECTION EA345771

1. Check FPRV component resistance

   1) IG KEY "OFF", ENGINE "OFF".

   2) Disconnect rail pressure regulator valve connector.

   3) Check FPRV component resistance.

Specification : 2.9 ~ 3.15Ω (20℃)

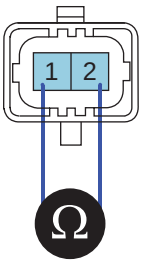

EGNG008I

4) Is FPRV component resistance within the specification?

YES

▶ Go to "Verification of Vehicle Repair".

NO

▶ Replace High pressure pump ass'y and go to "Verification of Vehicle Repair".

VERIFICATION OF VEHICLE REPAIR E62637B7

After a repair, it is essential to verify that the fault is corrected.

1. After connecting Scantool select "DIAGNOSTIC TROUBLE CODES(DTCs)" mode.
2. Clear recorded DTC using Scantool.
3. Drive the vehicle within DTC "Enable conditions" in "General information".
4. After selecting "DIAGNOSTIC TROUBLE CODES(DTCs)" mode and check if DTC is recorded again.
5. Are any DTCs recorded ?

YES

▶ Go to the DTC guide of recorded NO. in Scantool.

NO

▶ System operates within specification.

DTC P0253 FUEL PRESSURE REGULATOR VALVE CIRCUIT LOW

COMPONENT LOCATION E0C15A1C

Refer to DTC P0252.

GENERAL DESCRIPTION E61F2B67

Refer to DTC P0252.

DTC DESCRIPTION E6C7EAAA

P0253 is set when "0"A in control circuit of Fuel metering unit(integrated with high pressure pump) is detected for more than specified duration. This code is due to open or short to ground in control circuit or Fuel metering unit internal open.

DTC DETECTING CONDITION EAE87B60

<table>
<tr><th>Item</th><th colspan="3">Detecting Condition</th><th>Possible Cause</th></tr>
<tr><td>DTC Strategy</td><td colspan="3">• Voltage monitoring</td><td rowspan="5">• FPRV circuit
• FPRV component</td></tr>
<tr><td>Enable Conditions</td><td colspan="3">• IG KEY "ON"</td></tr>
<tr><td>Threshold Value</td><td colspan="3">• Short to GND - 0.28 sec.
• Wiring open - 0.22 sec.</td></tr>
<tr><td>Diagnostic Time</td><td colspan="3">• Refer to threshold value</td></tr>
<tr><td rowspan="4">Fail Safe</td><td>Fuel cut</td><td>NO</td><td rowspan="4"></td></tr>
<tr><td>EGR Off</td><td>NO</td></tr>
<tr><td>Fuel Limit</td><td>YES</td></tr>
<tr><td>Check Lamp</td><td>YES</td></tr>
</table>

SPECIFICATION E0330F4F

Refer to DTC P0252.

SCHEMATIC DIAGRAM E67C30ED

Refer to DTC P0252.

SIGNAL CIRCUIT INSPECTION E77EAE9B

Refer to DTC P0252.

MONITOR SCANTOOL DATA EA125B08

Refer to DTC P0252.

TERMINAL AND CONNECTOR INSPECTION E858EA64

Refer to DTC P0252.

POWER CIRCUIT INSPECTION E17EFB76

1. Check power circuit voltage

   1) IG KEY "OFF", ENGINE "OFF"

   2) Disconnect FPRV connector.

   3) IG KEY "ON"

   4) Measure the voltage of FPRV connector terminal 1.

specification : 11.5V~13.0V

   5) Is the measured voltage within the specification?

   YES

   ▶ Go to "Control Circuit Inspection".

   NO

   ▶ Repair open between FPRV connector terminal 1 and ECM connector(C230-A) terminal 19 and go to "Verification of Vehicle Repair".

CONTROL CIRCUIT INSPECTION EDC13CE2

1. Check monitoring voltage in control circuit

   1) IG KEY "OFF", ENGINE "OFF"

   2) Disconnect FPRV connector.

   3) IG KEY "ON"

   4) Measure the voltage of FPRV connector terminal 2.

specification : 3.2V~3.7V

   5) Is the measured voltage within the specification?

   YES

   ▶ Go to "Component Inspection"

   NO

   ▶ When voltage is not detected : Go to "2. Check open in control circuit" as follows.
   ▶ When high voltage is detected : Repair short to battery and go to "Verification of Vehicle Repair".

2. Check open in control circuit

   1) IG KEY "OFF", ENGINE "OFF"

   2) Disconnect FPRV and ECM connector.

   3) Check continuity between FPRV connector terminal 2 and ECM connector (C230-A) terminal 49.

specification : Continuity (below 1.0Ω)

4) Is the measured resistance within the specification?

YES

▶ Repair short to ground in FPRV control circuit and go to "Verification of Vehicle Repair".

NO

▶ Repair open in FPRV control circuit and go to "Verification of Vehicle Repair".

COMPONENT INSPECTION E340AEA1

1. Check FPRV component resistance

1) IG KEY "OFF", ENGINE "OFF".

2) Disconnect rail pressure regulator valve connector.

3) Check FPRV component resistance.

Specification : 2.9 ~ 3.15Ω (20℃)

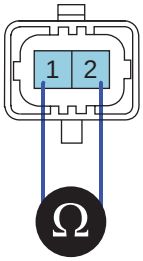

EGNG008I

4) Is FPRV component resistance within the specification?

YES

▶ Go to "Verification of Vehicle Repair".

NO

▶ Replace High pressure pump ass'y and go to "Verification of Vehicle Repair".

VERIFICATION OF VEHICLE REPAIR E75F43B9

Refer to DTC P0252.

DTC P0254 FUEL PRESSURE REGULATOR VALVE CIRCUIT HIGH

COMPONENT LOCATION E96A7D25

Refer to DTC P0252.

GENERAL DESCRIPTION EFCDF818

Refer to DTC P0252.

DTC DESCRIPTION EF088AC1

P0254 is set when excessive current in power circuit of Fuel metering unit(integrated with high pressure pump) is detected for more than 0.22 sec.. This code is due to short to battery in power circuit or Fuel metering unit internal short.

DTC DETECTING CONDITION E7B3B771

<table>
<tr><th>Item</th><th colspan="3">Detecting Condition</th><th>Possible Cause</th></tr>
<tr><td>DTC Strategy</td><td colspan="3">• Voltage monitoring</td><td rowspan="6">• FPRV circuit
• FPRV component</td></tr>
<tr><td>Enable Conditions</td><td colspan="3">• IG KEY "ON"</td></tr>
<tr><td>Threshold Value</td><td colspan="3">• Short to battery (power circuit in fuel pressure regulator valve)</td></tr>
<tr><td>Diagnostic Time</td><td colspan="3">• 0.22 sec.</td></tr>
<tr><td rowspan="4">Fail Safe</td><td>Fuel cut</td><td>NO</td><td rowspan="4"></td></tr>
<tr><td>EGR Off</td><td>NO</td></tr>
<tr><td>Fuel Limit</td><td>YES</td></tr>
<tr><td>Check Lamp</td><td>YES</td></tr>
</table>

SPECIFICATION E47A73AA

Refer to DTC P0252.

SCHEMATIC DIAGRAM E93891D0

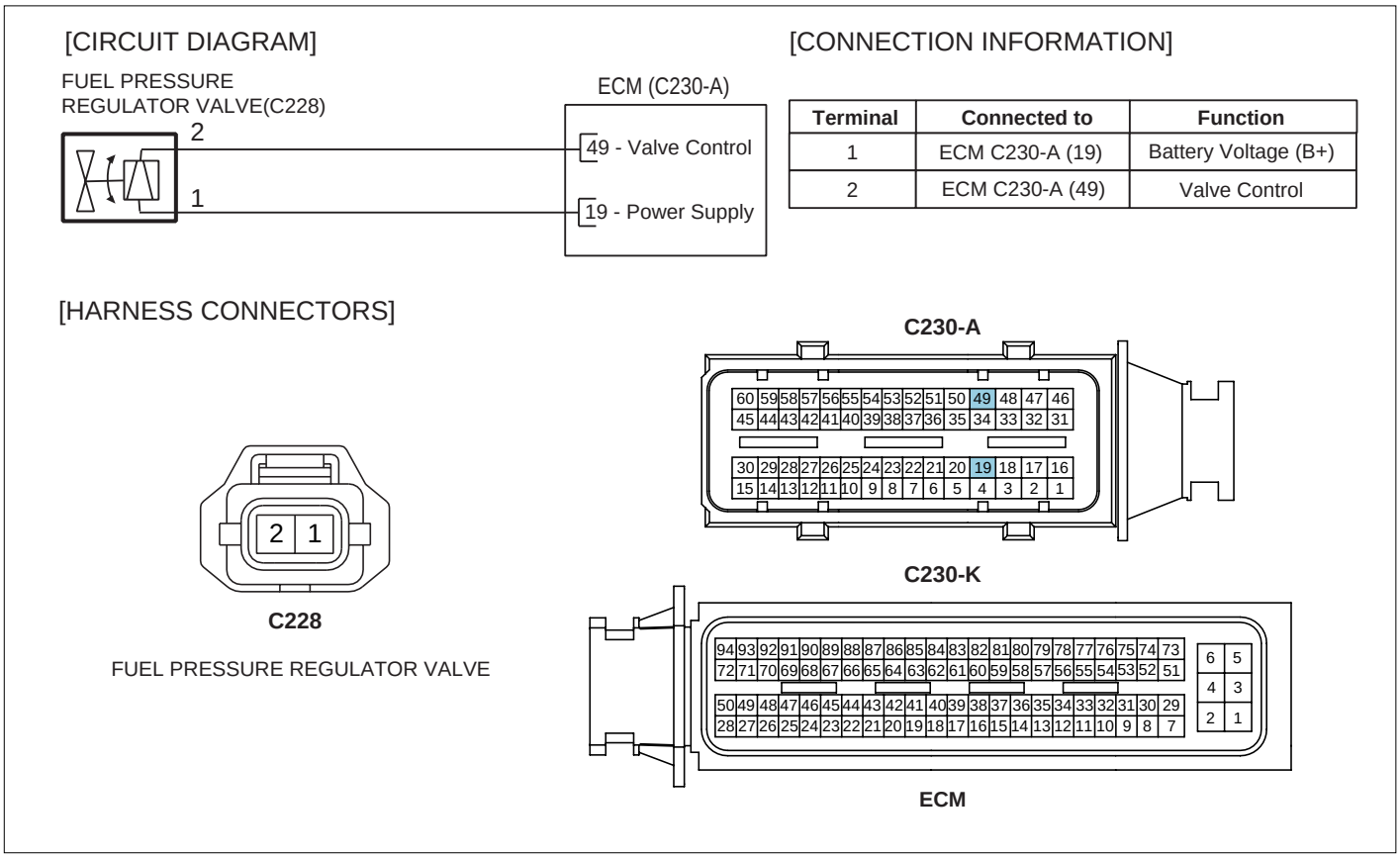

Terminal	Connected to	Function
1	ECM C230-A (19)	Battery Voltage (B+)
2	ECM C230-A (49)	Valve Control

SCMFL6128L

SIGNAL CIRCUIT INSPECTION E65CD8C3

Refer to DTC P0252.

MONITOR SCANTOOL DATA E1D2ED03

Refer to DTC P0252.

TERMINAL AND CONNECTOR INSPECTION EE35ED47

Refer to DTC P0252.

POWER CIRCUIT INSPECTION EF6C7AC2

1. Check power circuit voltage
   1) IG KEY "OFF", ENGINE "OFF"
   2) Disconnect FPRV connector.
   3) IG KEY "ON"
   4) Measure the voltage of FPRV connector terminal 1.

specification : 11.5V~13.0V

5) Is the measured voltage within the specification?

YES

▶ Go to "Control Circuit Inspection".

NO

▶ Repair open between FPRV connector terminal 1 and ECM connector(C230-A) terminal 19 and go to "Verification of Vehicle Repair".

CONTROL CIRCUIT INSPECTION E45E9811

1. Check monitoring voltage in control circuit

1) IG KEY "OFF", ENGINE "OFF"

2) Disconnect FPRV connector.

3) IG KEY "ON"

4) Measure the voltage of FPRV connector terminal 2.

specification : 3.2V~3.7V

5) Is the measured voltage within the specification?

YES

▶ Go to "Component Inspection"

NO

▶ When voltage is not detected : Go to "2. Check open in control circuit" as follows.
▶ When high voltage is detected : Repair short to battery and go to "Verification of Vehicle Repair".

2. Check open in control circuit

1) IG KEY "OFF", ENGINE "OFF"

2) Disconnect FPRV and ECM connector.

3) Check continuity between FPRV connector terminal 2 and ECM connector (C230-A) terminal 49.

specification : Continuity (below 1.0Ω)

4) Is the measured resistance within the specification?

YES

▶ Repair short to ground in FPRV control circuit and go to "Verification of Vehicle Repair".

NO

▶ Repair open in FPRV control circuit and go to "Verification of Vehicle Repair".

COMPONENT INSPECTION E705195E

1. Check FPRV component resistance

   1) IG KEY "OFF", ENGINE "OFF".

   2) Disconnect rail pressure regulator valve connector.

   3) Check FPRV component resistance.

Specification : 2.9 ~ 3.15Ω (20℃)

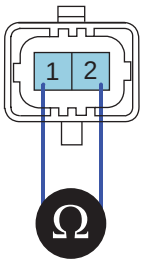

EGNG008I

   4) Is FPRV component resistance within the specification?

   YES

   ▶ Go to "Verification of Vehicle Repair".

   NO

   ▶ Replace High pressure pump ass'y and go to "Verification of Vehicle Repair".

VERIFICATION OF VEHICLE REPAIR E8D0F449

Refer to DTC P0252.

DTC P0262 CYLINDER 1-INJECTOR CIRCUIT HIGH
DTC P0265 CYLINDER 2-INJECTOR CIRCUIT HIGH
DTC P0268 CYLINDER 3-INJECTOR CIRCUIT HIGH
DTC P0271 CYLINDER 4-INJECTOR CIRCUIT HIGH

COMPONENT LOCATION EFBC7F1A

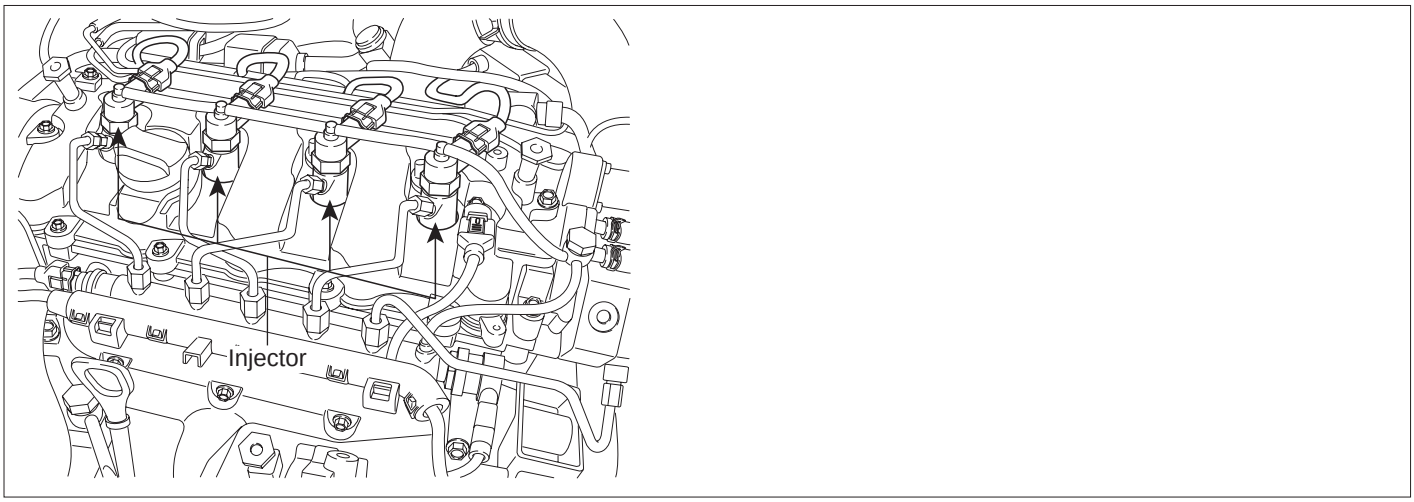

LFIG257A

GENERAL DESCRIPTION EE5BDFA6

Injectors spray fuel in the highly compressed combustion chamber, and power generates through combustion process. Fuel pressure is raised to 1600bar in common rail diesel engine for the purpose of making fuel into minute particles. And fuel devided into minute particles leads smoke reduction, high power generation, and improved fuel efficiency. To control pressure of 1600bar with solenoid, oil pressure servo is applied. And injector solenoids is actuated by solenoid operating voltage raised to 80V with the method of current control.

DTC DESCRIPTION E51F67F8

P0262/P0265/P0268/P0271 is set when 1)short between injector power circuit(High side) and control circuit(Low side) or 2)short between control circuit(Low side) and battery occurs at injector #1/2/3/4 operating condition.

DTC DETECTING CONDITION E18F5210

Item	Detecting Condition			Possible Cause
DTC Strategy	• Current monitoring			• Short in injector circuit • Injector component
Enable Conditions	• IG KEY "ON"			
Threshold Value	• Highside short to Lowside, Lowside short to battery			
Diagnostic Time	• Immediately			
Fail Safe	Fuel cut	YES	• Open circuit of More than 2 injectors : Engine OFF	
	EGR Off	NO		
	Fuel Limit	NO		
	Check Lamp	YES		

SPECIFICATION E2E599C4

Injector Component Resistance	Injector Operating Voltage	Injector Operating Current	Injector Control Type
0.330Ω (20±1°C)	80V	Peak current : 20±1A Hold in current : 12±1A Recharging current : 7A	Current control

SCHEMATIC DIAGRAM E4B91D5B

[CIRCUIT DIAGRAM]

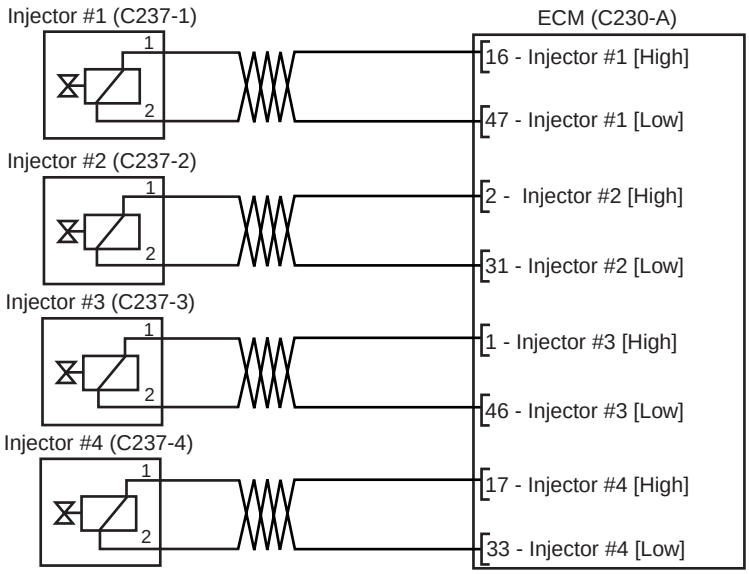

[CONNECTION INFORMATION]

[Injector #1]

Terminal	Connected to	Function
1	ECM C230-A (16)	Injector #1 High side
2	ECM C230-A (47)	Injector #1 Low side

[Injector #2]

Terminal	Connected to	Function
1	ECM C230-A (2)	Injector #2 High side
2	ECM C230-A (31)	Injector #2 Low side

[Injector #3]

Terminal	Connected to	Function
1	ECM C230-A (1)	Injector #3 High side
2	ECM C230-A (46)	Injector #3 Low side

[Injector #4]

Terminal	Connected to	Function
1	ECM C230-A (17)	Injector #4 High side
2	ECM C230-A (33)	Injector #4 Low side

[HARNESS CONNECTORS]

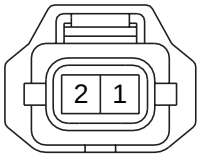

C237-1,2,3,4
INJECTOR #1,#2,#3,#4

C230-A

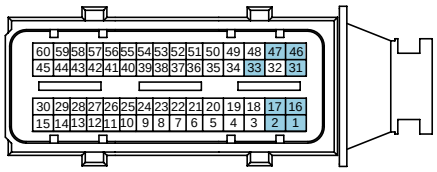

C230-K

ECM

SCMFL6397L

SIGNAL WAVEFORM AND DATA EBEE0C02

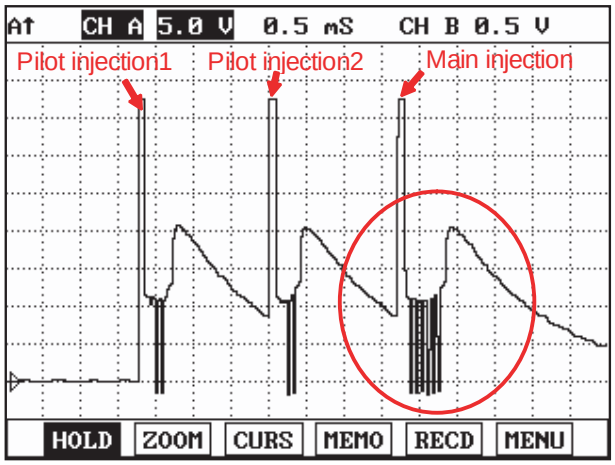

Fig.1

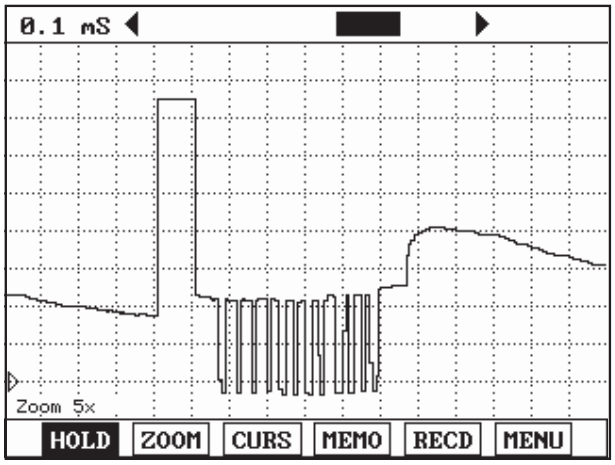

Fig.2

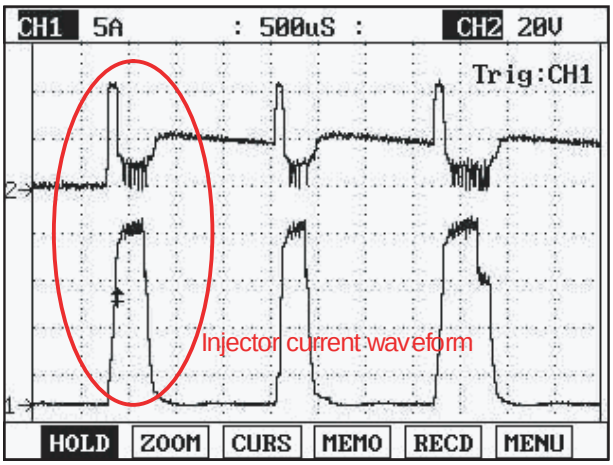

Fig.3

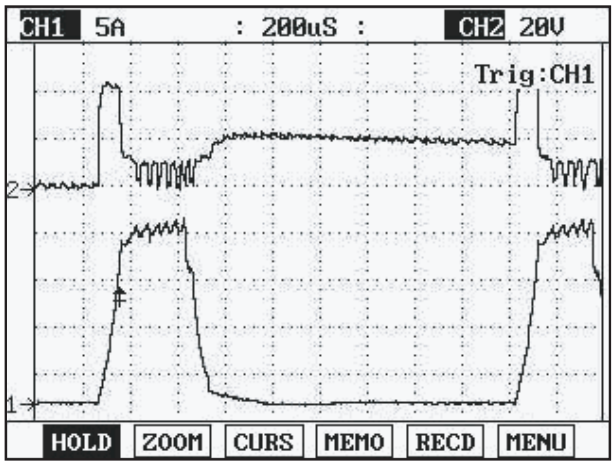

Fig.4

Fig.1) Injector operating waveform at Low side, It shows 2 pilot and 1 main injection.
Fig.2) Magnified waveform of main injection at Fig.1)
Fig.3) Injector voltage and current waveforms are measured at the same time using current prove of scope meter.
Fig.4) Magnified waveform of pilot injection at Fig.3)

LFIG259A

TERMINAL AND CONNECTOR INSPECTION E0F93F52

1. Electrical systems consist of a lot of harness and connectors, poor connection of terminals can cause various problems and damge of component.

2. Perform checking procedure as follows.

   1) Check damage of harness and terminals : Check terminals for contact resistance, corrosion and deformation.

   2) Check connecting condition of ECM and component connector : Check terminal seperation, damage of locking device and connecting condition between terminal and wiring.

   NOTE

   Disconnect the pin which requires checking at male connector and insert it to the terminal at female connector for checking connecting condition. (after checking, reconnect the pin at correct position.)

3. Is the problem found?

YES

▶ Repair the trouble causing part and go to "Verification of Vehicle Repair".

NO

▶ Go to "Power Circuit Inspection".

POWER CIRCUIT INSPECTION E87DA964

1. Check open in power circuit(High side)

   1) IG KEY "OFF", ENGINE "OFF"

   2) Disconnect injector connector and ECM connector.

   3) [P0262] Check continuity between injector #1 connector terminal 1 and ECM connector (C230-A) terminal 16.
      [P0265] Check continuity between injector #2 connector terminal 1 and ECM connector (C230-A) terminal 2.
      [P0268] Check continuity between injector #3 connector terminal 1 and ECM connector (C230-A) terminal 1.
      [P0271] Check continuity between injector #4 connector terminal 1 and ECM connector (C230-A) terminal 17.

Specification : Continuity (below 1.0Ω)

   4) Is the measured resistance within the specification?

      YES

      ▶ Go to "2. Check short between power circuit and control circuit" as follows.

      NO

      ▶ Repair open in injector power circuit and go to "Verification of Vehicle Repair".

2. Check short between power circuit and control circuit

   1) IG KEY "OFF", ENGINE "OFF".

   2) Disconnect injector #1 connector and ECM connector.

   3) Check continuity between injector #1 connector terminal 1 and 2.

Specification : Discontinuity (Infinite Ω)

   4) Is the measured resistance within the specification?

      YES

      ▶ Go to "Control Circuit Inspection".

      NO

      ▶ Repair short between injector power circuit and control circuit and go to "Verification of Vehicle Repair".

CONTROL CIRCUIT INSPECTION E3C92118

1. Check open in control circuit(Low side)

1) IG KEY "OFF", ENGINE "OFF"

2) Disconnect injector connector and ECM connector.

3) [P0262] Check continuity between injector #1 connector terminal 2 and ECM connector (C230-A) terminal 47.
[P0265] Check continuity between injector #2 connector terminal 2 and ECM connector (C230-A) terminal 31.
[P0268] Check continuity between injector #3 connector terminal 2 and ECM connector (C230-A) terminal 46.
[P0271] Check continuity between injector #4 connector terminal 2 and ECM connector (C230-A) terminal 33.

Specification : Continuity (below 1.0Ω)

4) Is the measured resistance within the specification?

YES

▶ Go to "Component Inspectiont".

NO

▶ Repair open in injector #1 control circuit and go to "Verification of Vehicle Repair".

COMPONENT INSPECTION E3ECB9CF

1. Check injector component resistance

1) IG KEY "OFF", ENGINE "OFF".

2) Disconnect injector connector.

3) Measure the resistance between injector component terminal 1 and 2.

Specification : 0.33Ω (20℃)

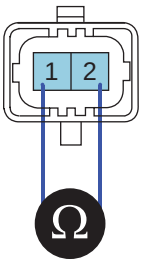

EGNG008I

4) Is the measured resistance(of injector solenoid) within the specification?

YES

▶ Go to "Verification of Vehicle Repair".

NO

▶ Replace injector and go to "Verification of Vehicle Repair".

NOTE

Replacing injectors, peculiar IQA code of each injector should be inputted to ECM

Perform this process using "INJECTOR CORRCTION" function on scantool, Refer to P1670, P1671 for more detailed information.

VERIFICATION OF VEHICLE REPAIR E6C81F9D

After a repair, it is essential to verify that the fault is corrected.

1. After connecting Scantool select "DIAGNOSTIC TROUBLE CODES(DTCs)" mode.
2. Clear recorded DTC using Scantool.
3. Drive the vehicle within DTC "Enable conditions" in "General information".
4. After selecting "DIAGNOSTIC TROUBLE CODES(DTCs)" mode and check if DTC is recorded again.
5. Are any DTCs recorded ?

YES

▶ Go to the DTC guide of recorded NO. in Scantool.

NO

▶ System operates within specification.

DTC P0299 TURBO/SUPER CHARGER UNDERBOOST CONDITION

COMPONENT LOCATION E22A62B7

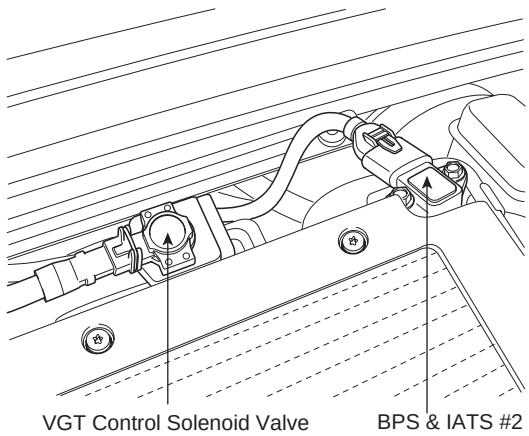

SCMFL6500L

GENERAL DESCRIPTION EE6DEDEF

VGT(Variable Geometric Turbocharger) is the device which increases the efficiency of turbocharger at low rpm and lasts optimum turbo efficiency at high rpm as varying the cross sectional area through which exhaust gas passes turbocharger impeller. It relieves turbo lag at low speed and increse engine power generation.Engine speed, APS signal, MAFS and Boost pressure sensor information is inputted to ECM. ECM actuates vacuum diafragm which controls exhaust gas line as controlling VGT actuator duty to maintain optimum state of air compression.

DTC DESCRIPTION E9634186

P0299 is set when real boost pressure is much lower than target boost pressure for more than 12 sec. at above 1750RPM and 22mg/hub of fuel injection quantity.This code is due to poor connection of VGT solenoid valve vacuum hose, vacuum leakage, clogging, VGT turbo charger component failure.

DTC DETECTING CONDITION E7B34F1D

Item	Detecting Condition			Possible Cause
DTC Strategy	• Signal monitoring			• VGT solenoid component • VGT vacuum line • VGT turbo charger component
Enable Conditions	• Engine running(at above 1750RPM and 22mg/hub of fuel injection quantity)			
Threshold Value	• Real boost press. is much lower than target boost press.			
Diagnostic Time	• 12 sec.			
Fail Safe	Fuel cut	NO		
	EGR Off	YES		
	Fuel Limit	YES		
	Check Lamp	YES		

SPECIFICATION E115195D

VGT actuator component resistance	VGT actuator operating Hz	VGT actuator operating duty
14.7 ~ 16.1Ω (20℃)	300Hz	76% at idle, decreases as accelerating

SCHEMATIC DIAGRAM E8203EA1

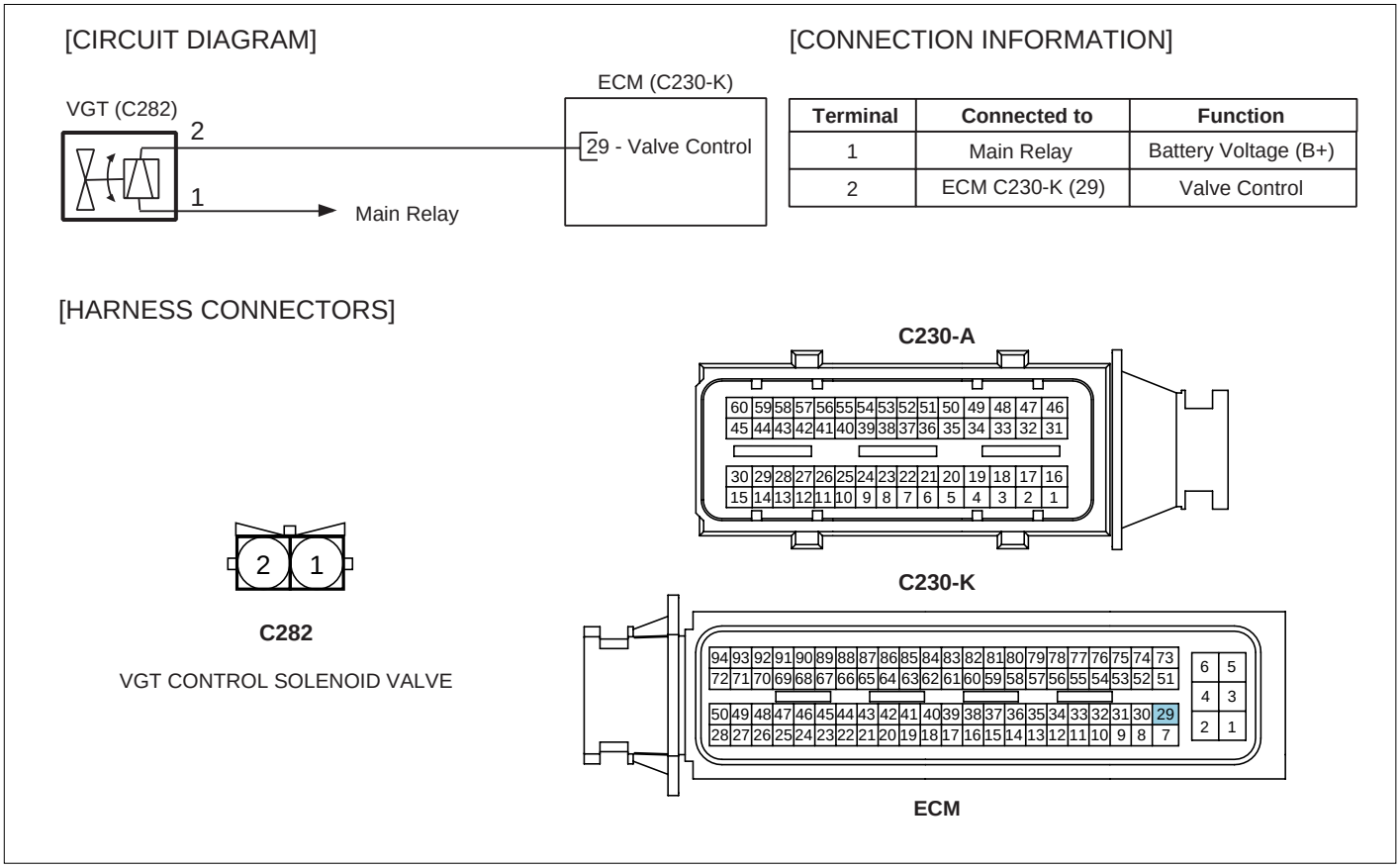

Terminal	Connected to	Function
1	Main Relay	Battery Voltage (B+)
2	ECM C230-K (29)	Valve Control

SCMFL6136L

SIGNAL WAVEFORM AND DATA E6E1F414

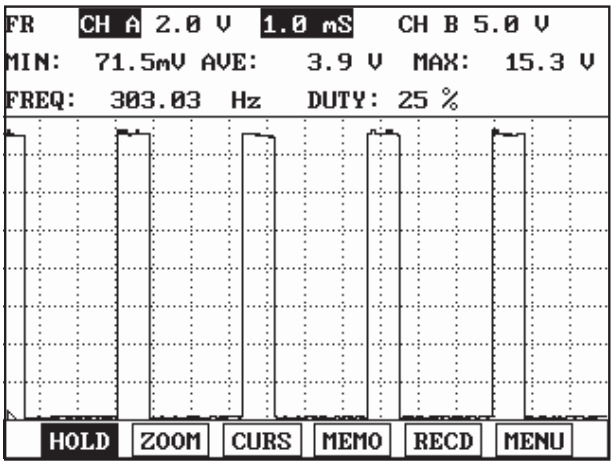

Fig.1

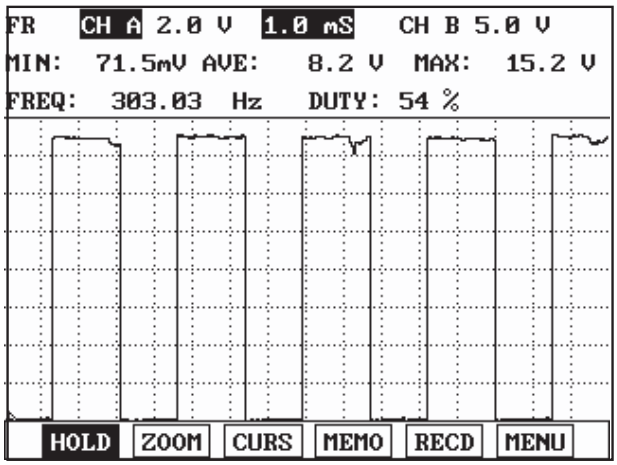

Fig.2

Fig.1) VGT actuator output waveform at 76% duty((-)duty). Duty decreases as boost pressure increases.
Fig.2) VGT actuator duty((-)duty) decreases as accelerating.

LFIG369A

MONITOR SCANTOOL DATA E17E5543

1. Connect Scantool to Data Link Connector (DLC).
2. Warm engine up to normal operating temperature.
3. Turn "OFF" electrical devices and A/C.
4. Monitor "BOOST PRESSURE SENSOR" parameter on the Scantool.

Specification : 1000hpa ± 100hpa(VGT actuator : approx. 76%) at idle

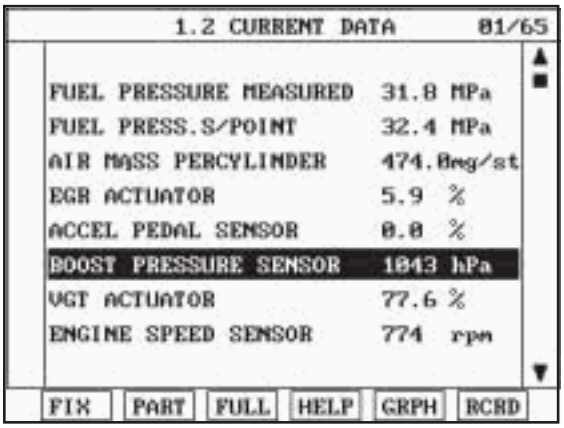

Fig.1

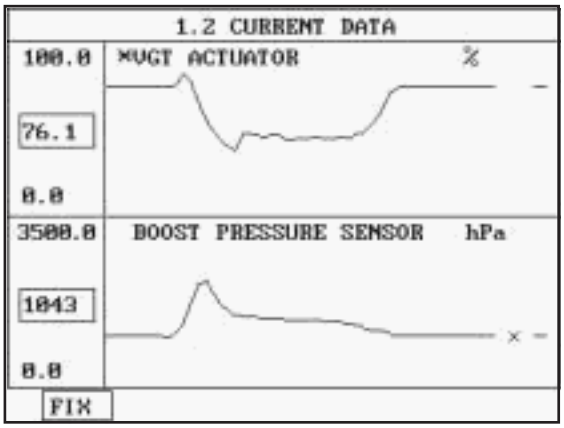

Fig.2

Fig1) Monitor "BOOST PRESSURE SENSOR" parameter on the Scantool at idle after warming engine up. 1000hpa±100hpa(approx. 1 atm) is correct value.
Fig.2) VGT actuator duty and boost pressure at acceleration is shown . If boost pressure rises and reaches certain value, VGT actuator duty stops to drop and keeps steady. Releasing accelerator pedal at this moment, VGT actuator duty drops to approx. 45%, then if RPM drops to idle range, duty returns to 76%.

SCMFL6253L

TERMINAL AND CONNECTOR INSPECTION E015498F

1. Electrical systems consist of a lot of harness and connectors, poor connection of terminals can cause various problems and damge of component.

2. Perform checking procedure as follows.

   1) Check damage of harness and terminals : Check terminals for contact resistance, corrosion and deformation.

   2) Check connecting condition of ECM and component connector : Check terminal seperation, damage of locking device and connecting condition between terminal and wiring.

   NOTE

   Disconnect the pin which requires checking at male connector and insert it to the terminal at female connector or checking connecting condition. (after checking, reconnect the pin at correct position.)

3. Is the problem found?

   YES

   ▶ Repair the trouble causing part and go to "Verification of Vehicle Repair".

   NO

   ▶ Go to "Component Inspection".

COMPONENT INSPECTION E274811D

1. Check VGT actuator component resistance

   1) IG KEY "OFF", ENGINE "OFF"

   2) Disconnect VGT actuator connector.

   3) Measure the resistance between VGT actuator component terminal 1 and 2.

Specification : 14.7 ~ 16.1Ω (20℃)

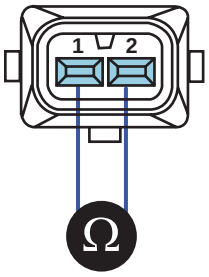

LFIG373A

   4) Is VGT actuator component resistance within the specification?

   YES

   ▶ Go to "2.Check VGT actuator operation" as follows.

   NO

   ▶ Replace VGT actuator and go to "Verification of Vehicle Repair".

2. Check VGT actuator operation

   1) IG KEY "ON", ENGINE "ON".

   2) Check that VGT actuator operating duty is 76% after warming engine up.

   3) Check if vacuum generates after disconnecting VGT valve vacuum hose.

   4) Check if vacuum generates when decelerating after rapid acceleration (Vacuum must not generates, correct VGT actuator operating duty is 45%).

Specification : VGT actuator duty 76% : vacuum generates VGT actuator duty 45% : vacuum does not generate

YES

▶ Go to "Verification of Vehicle Repair".

NO

▶ Replace VGT actuator and go to "Verification of Vehicle Repair".

※ Repeat this process 2~3 times.

VERIFICATION OF VEHICLE REPAIR E4067EAA

After a repair, it is essential to verify that the fault is corrected.

1. After connecting Scantool select "DIAGNOSTIC TROUBLE CODES(DTCs)" mode.
2. Clear recorded DTC using Scantool.
3. Drive the vehicle within DTC "Enable conditions" in "General information".
4. After selecting "DIAGNOSTIC TROUBLE CODES(DTCs)" mode and check if DTC is recorded again.
5. Are any DTCs recorded ?

YES

▶ Go to the DTC guide of recorded NO. in Scantool.

NO

▶ System operates within specification.

DTC P0335 CRANKSHAFT POSITION SENSOR A CIRCUIT

COMPONENT LOCATION E5A3953F

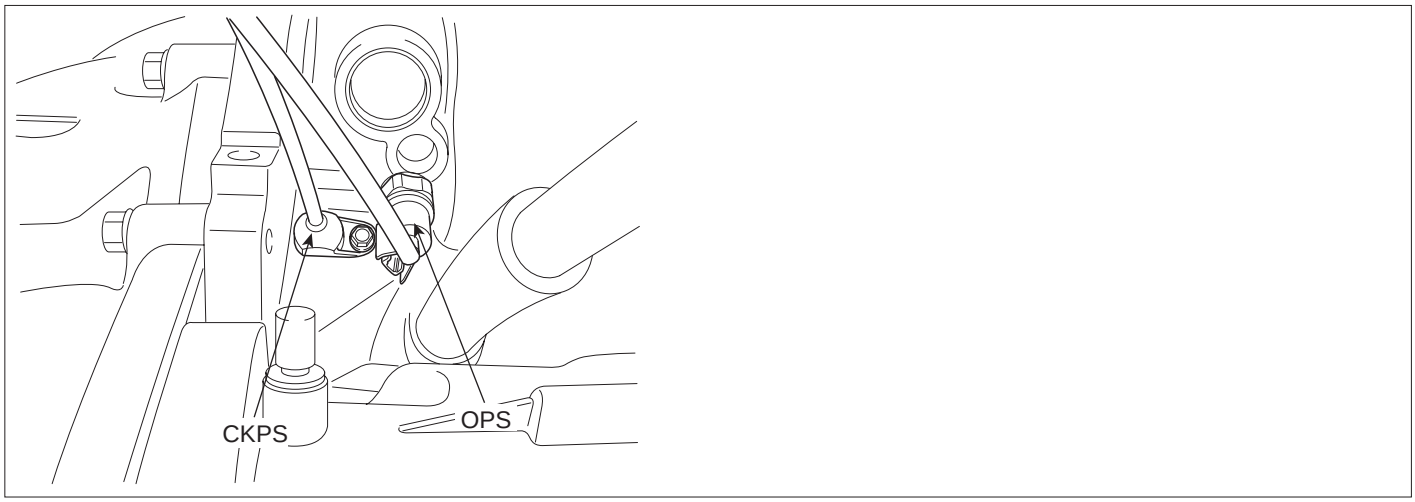

LFIG287A

GENERAL DESCRIPTION EE023A66

Crank Shaft Position Sensor(CKPS) is magnetic inductive type. Mounted on transaxle hausing, it senses tone wheel position of fly wheel.As tone wheel is devided with 58 teeth and 2 missing teeth (referrence point), 1 tooth corresponds to 6 degree.CKPS which calculates RPM and crank angle is important to determine fuel injection quantity and injection timing with APS.crank shaft position is closely related to engine starting.

DTC DESCRIPTION E39484BC

P0335 is set when CKPS signal does not generate for more than 0.7 sec. while CMPS signal is outputted. This code is due to CKPS circuit or component failure. If CKPS signal is not inputted during driving, RPM is calculated based on CMPS signal.

DTC DETECTING CONDITION E9232897

<table>
<tr><th>Item</th><th colspan="3">Detecting Condition</th><th>Possible Cause</th></tr>
<tr><td>DTC Strategy</td><td colspan="3">• Signal monitoring</td><td rowspan="6">• CKPS circuit
• CKPS component
• Abnormal deformation of Crank Shaft tone wheel</td></tr>
<tr><td>Enable Conditions</td><td colspan="3">• During accelerating and turning engine "ON"</td></tr>
<tr><td>Threshold Value</td><td colspan="3">• CMPS signal is outputted while CKPS signal does not generate.</td></tr>
<tr><td>Diagnostic Time</td><td colspan="3">• tone wheel rotates 4 times</td></tr>
<tr><td rowspan="4">Fail Safe</td><td>Fuel cut</td><td>YES</td><td rowspan="4">• RPM is considered as double speed of CAM rotation.</td></tr>
<tr><td>EGR Off</td><td>NO</td></tr>
<tr><td>Fuel Limit</td><td>NO</td></tr>
<tr><td>Check Lamp</td><td>YES</td></tr>
</table>

SPECIFICATION EF48BD49

Sensor Type	Output Signal Characteristic	Air Gab	Low RPM Minimum Detecting Voltage	High RPM Minimum Detecting Voltage
Magnetic inductive	A/C waveform	1.8mm	230mV	2769 mV

SCHEMATIC DIAGRAM EEA9BEB3

[CIRCUIT DIAGRAM]

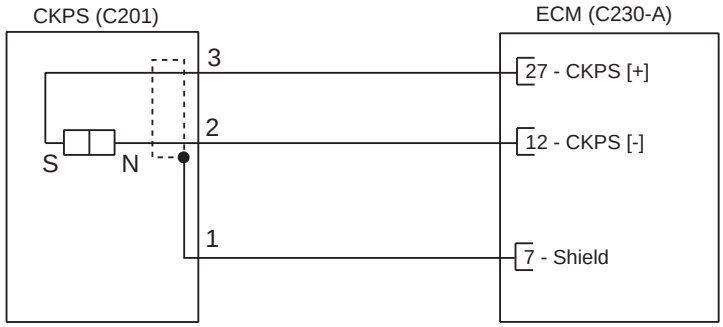

[CONNECTION INFORMATION]

Terminal	Connected to	Function
1	ECM C230-A (7)	Sensor Shield
2	ECM C230-A (12)	CKPS [-] Signal
3	ECM C230-A (27)	CKPS [+] Signal

[HARNESS CONNECTORS]

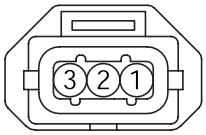

C201

CKPS

C230-A

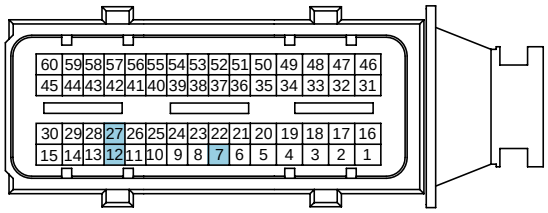

C230-K

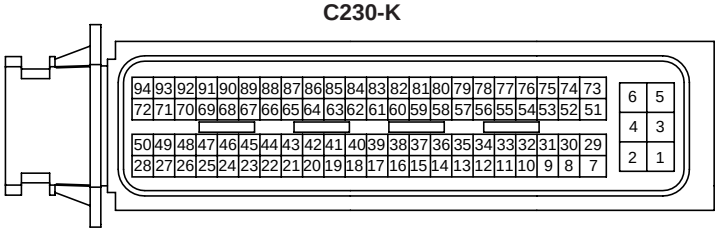

ECM

SCMFL6121L

SIGNAL WAVEFORM AND DATA E66D28CA

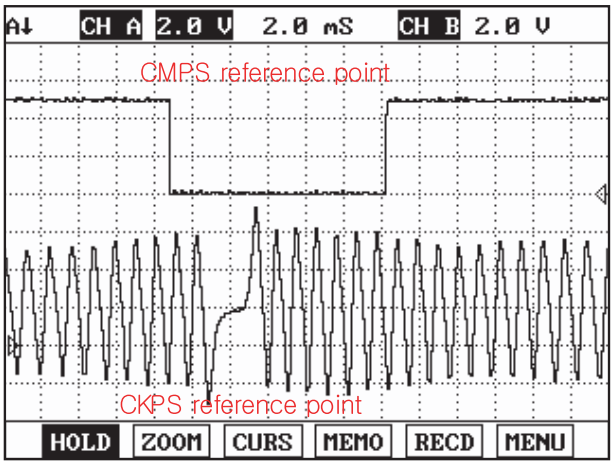

Fig.1

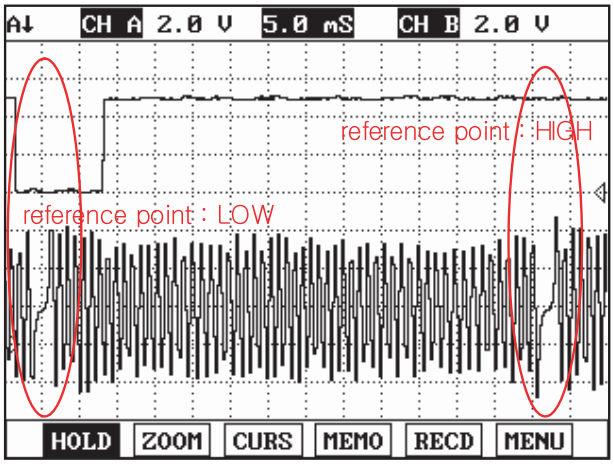

Fig.2

Fig.1) This shows waveform of Crank Shaft Position Sensor and Cam Shaft Position Sensor simulatneously. The middle area indicates reference points of Crank Shaft Position Sensor and Cam Shaft Position Sensor.

Fig.2) Crank Shaft Position Sensor and Cam Shaft Position Sensor signal are measured simultaneously.
Cam Shaft Position Sensor signal is outputted once when Crank Shaft Position sensor signal is outputted twice.
LOW and HIGH output of Cam Shaft Position sensor reference point is detected at Crank Shaft Position sensor reference point.
(Injection sequence is determined based on LOW and HIGH signal of Cam Shaft Position Sensor reference point as detecting cylinder position.)

LFIG289A

※ SIGNAL ANALYSIS

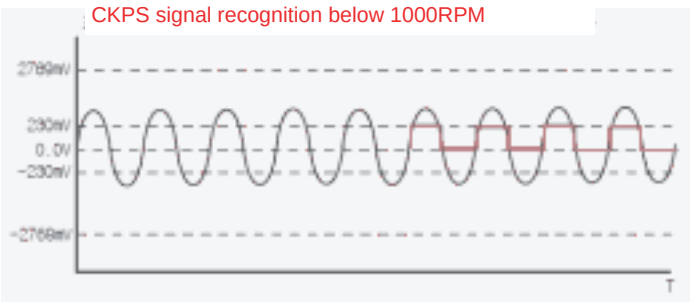

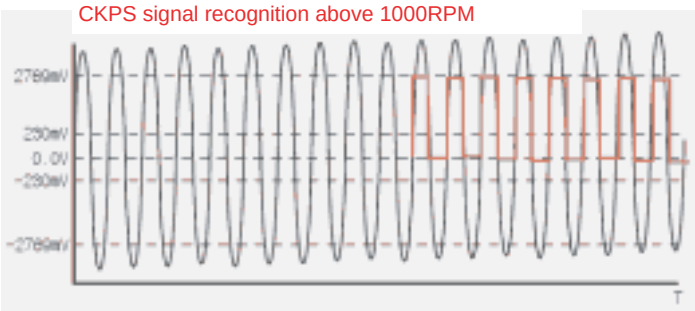

LFIG290A

1. The output voltage of CKPS signal varies according to rpm(the speed of tone wheel passing by sensor)
(low voltage is inducted for low speed and high voltage is inducted for high speed.)

2. CKPS should detect from low rpm at cranking to above 5000rpm. If minimum detecting voltage is set low for the ease of signal detection at low rpm, 1) the abnormal signal at high rpm from which high voltage generates or 2) electrical noise through circuit can be recognized as Crank signal. Thus minimum detecting voltages at low rpm and high rpm are set differently.

3. ECM convert analog signal like the waveform illustrated above into digital signal with A/D converter.The voltage above minimum detecting voltage of crank signal and "-"voltage below 0.0V is meaningless at converting process. RPM is detected as Hz.(signal detecting period)

MONITOR SCANTOOL DATA E979AAD7

1. Connect Scantool to Data Link Connector (DLC).

2. Warm engine up to normal operating temperature.

3. Turn "OFF" electrical devices and A/C.

4. Monitor "ENGINE SPEED SENSOR" parameter on the Scantool.

Specification : 750±50 RPM at idle

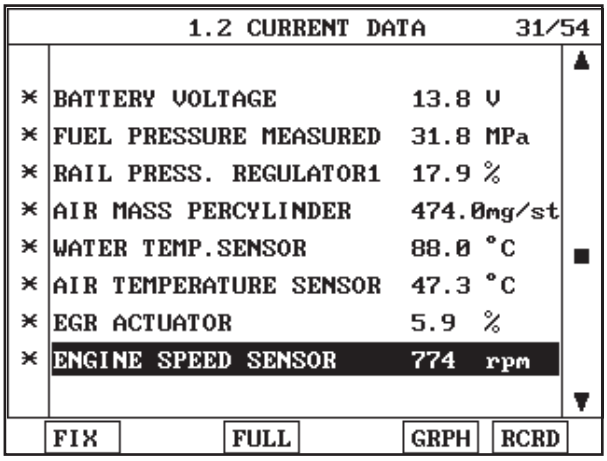

Fig.1

Fig.1) Check "ENGINE SPEED SENSOR" parameter carefully after warming engine up, also check engine stall and rpm instability or engine shut down.

SCMFL6277L

TERMINAL AND CONNECTOR INSPECTION E10B825D

1. Electrical systems consist of a lot of harness and connectors, poor connection of terminals can cause various problems and damge of component.

2. Perform checking procedure as follows.

   1) Check damage of harness and terminals : Check terminals for contact resistance, corrosion and deformation.

   2) Check connecting condition of ECM and component connector : Check terminal seperation, damage of locking device and connecting condition between terminal and wiring.

   NOTE

   Disconnect the pin which requires checking at male connector and insert it to the terminal at female connector for checking connecting condition. (after checking, reconnect the pin at correct position.)

3. Is the problem found?

   YES

   ▶ Repair the trouble causing part and go to "Verification of Vehicle Repair".

   NO

   ▶ Go to "Signal Circuit Inspection ".

SIGNAL CIRCUIT INSPECTION E5DB71CF

1. Check signal circuit voltage

1) IG KEY "OFF", ENGINE "OFF".

2) Disconnect CKPS connector.

3) IG KEY "ON".

4) Measure the voltage of CKPS connector terminal 2 and 3.

Specification : 2.4V~2.6V

5) Is the measured voltage within the specification?

YES

▶ Go to "3.Check short between signal circuits."

NO

▶ Go to "2.Check open in signal circuit" as follows.

2. Check open in signal circuit

1) IG KEY "OFF", ENGINE "OFF".

2) Disconnect CKPS connector and ECM connector.

3) Check continuity between CKPS connector terminal 2 and ECM connector (C230-A) terminal 12.

4) Check continuity between CKPS connector terminal 3 and ECM connector (C230-A) terminal 27.

Specification : continuity (below 1.0Ω)

5) Is the measured resistance within the specification?

YES

▶ Go to "3. Check short between signal circuits".

NO

▶ Repair open in signal circuit and go to "Verification of Vehicle Repair".

3. Check short between signal circuits

1) IG KEY "OFF", ENGINE "OFF".

2) Disconnect CKPS connector and ECM connector.

3) Check continuity between CKPS connector terminal 2 and 3.

Specification : Discontinuity (Infinite Ω)

4) Is the measured resistance within the specification?

YES

▶ Go to "4. Check short to ground in signal circuit" as follows.

NO

▶ Repair short between signal circuits and go to "Verification of Vehicle Repair".

4. Check short to ground in signal circuit

   1) IG KEY "OFF", ENGINE "OFF".

   2) Disconnect CKPS connector and ECM connector.

   3) Check continuity between CKPS connector terminal 1(shield ground) and 2,3(crank signal)

Specification : Discontinuity (Infinite Ω)

   4) Is the measured resistance within the specification?

YES

▶ Go to "Ground Circuit Inspection".

NO

▶ Repair the short between signal circuit and shield ground and go to "Verification of Vehicle Repair".

GROUND CIRCUIT INSPECTION E616F32A

1. IG KEY "OFF", ENGINE "OFF".
2. Disconnect CKPS connector.
3. Check continuity between CKPS connector terminal 1(shield ground) and chassis ground.

Specification : continuity (below 1.0Ω)

4. Is the measured resistance within the specification?

YES

▶ Go to "Component Inspection".

NO

▶ Repair open or poor connection in ground circuit and go to "Verification of Vehicle Repair".

COMPONENT INSPECTION EEBC9CC9

1. Check Resistance of CKPS component

   1) IG KEY "OFF", ENGINE "OFF".

   2) Disconnect CKPS connector.

   3) Check resistance between CKPS connector terminal 2 and 3 at component side.

Specification : 860Ω ±10% (20℃)

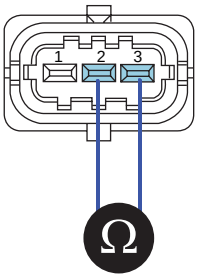

EGNG006B

4) Is the measured resistance within the specification?

YES

▶ Go to "Check short to ground in CKPS component" as follows.

NO

▶ Replace CKPS and go to "Verification of Vehicle Repair".

2. Check short to ground in CKPS component

1) IG KEY "OFF", ENGINE "OFF".

2) Disconnect CKPS connector.

3) Check resistance between CKPS connector terminal 1 and 3 at component side.

Specification : Discontinuity (Infinite Ω)

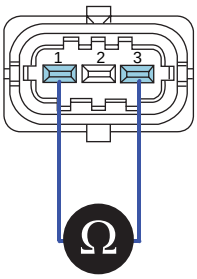

EGNG006C

4) Is the measured resistance within the specification? (Is the inside of component insulated correctly?)

YES

▶ Go to "Check CKPS waveform".

NO

▶ Replace CKPS and go to "Verification of Vehicle Repair".

3. Check CKPS waveform

1) IG KEY "OFF", ENGINE "OFF".

2) Connect CKPS connector.

3) Connect Oscilloscope to CKPS connector terminal 2.

4) Check if CKPS waveform is outputted correctly as cranking or turning engine on.

Specification : Refer to "Signal waveform & data" of "General Information".

5) Is CKPS waveform outputted correctly?

YES

▶ Go to "Verification of Vehicle Repair".

NO

▶ Replace CKPS and go to "Verification of Vehicle Repair".

VERIFICATION OF VEHICLE REPAIR ED949564

After a repair, it is essential to verify that the fault is corrected.

1. After connecting Scantool select "DIAGNOSTIC TROUBLE CODES(DTCs)" mode.
2. Clear recorded DTC using Scantool.
3. Drive the vehicle within DTC "Enable conditions" in "General information".
4. After selecting "DIAGNOSTIC TROUBLE CODES(DTCs)" mode and check if DTC is recorded again.
5. Are any DTCs recorded ?

YES

▶ Go to the DTC guide of recorded NO. in Scantool.

NO

▶ System operates within specification.

DTC P0336 CRANKSHAFT POSITION SENSOR A CIRCUIT RANGE/PERFORMANCE

COMPONENT LOCATION E7C0CD86

Refer to DTC P0335.

GENERAL DESCRIPTION EBE4B5BF

Refer to DTC P0335.

DTC DESCRIPTION E3CE13EE

P0336 is set when 1). engine speed detected by CKPS is above 6000RPM, or 2). CKPS signal pulse is abnormal. For repair, check temporary poor connection in CKPS circuit, component failure or deformation of tone wheel.

DTC DETECTING CONDITION E259CD3D

<table>
<tr><th>Item</th><th colspan="3">Detecting Condition</th><th>Possible Cause</th></tr>
<tr><td>DTC Strategy</td><td colspan="3">• Signal monitoring</td><td rowspan="5">• CKPS circuit
• CKPS component
• Abnormal deformation of Crank Shaft tone wheel</td></tr>
<tr><td>Enable Conditions</td><td colspan="3">• During accelerating and turning engine "ON"</td></tr>
<tr><td>Threshold Value</td><td colspan="3">• Engine speed sensed at CKPS above 6000RPM
• Abnormal crank signal pulse</td></tr>
<tr><td>Diagnostic Time</td><td colspan="3">• Immediately</td></tr>
<tr><td rowspan="4">Fail Safe</td><td>Fuel cut</td><td>YES</td><td rowspan="4"></td></tr>
<tr><td>EGR Off</td><td>NO</td></tr>
<tr><td>Fuel Limit</td><td>NO</td></tr>
<tr><td>Check Lamp</td><td>YES</td></tr>
</table>

SPECIFICATION E763E76E

Refer to DTC P0335.

SCHEMATIC DIAGRAM E90EA2AB

Refer to DTC P0335.

SIGNAL WAVEFORM AND DATA E5F982DE

Refer to DTC P0335.

MONITOR SCANTOOL DATA EE83BEE3

Refer to DTC P0335.

TERMINAL AND CONNECTOR INSPECTION EC699D59

Refer to DTC P0335.

SIGNAL CIRCUIT INSPECTION EF9AF39F

1. Check signal circuit voltage

   1) IG KEY "OFF", ENGINE "OFF".

   2) Disconnect CKPS connector.

   3) IG KEY "ON".

   4) Measure the voltage of CKPS connector terminal 2 and 3.

Specification : 2.4V~2.6V

   5) Is the measured voltage within the specification?

   YES

   ▶ Go to "3.Check short between signal circuits."

   NO

   ▶ Go to "2.Check open in signal circuit" as follows.

2. Check open in signal circuit

   1) IG KEY "OFF", ENGINE "OFF".

   2) Disconnect CKPS connector and ECM connector.

   3) Check continuity between CKPS connector terminal 2 and ECM connector (C230-A) terminal 12.

   4) Check continuity between CKPS connector terminal 3 and ECM connector (C230-A) terminal 27.

Specification : continuity (below 1.0Ω)

   5) Is the measured resistance within the specification?

   YES

   ▶ Go to "3. Check short between signal circuits".

   NO

   ▶ Repair open in signal circuit and go to "Verification of Vehicle Repair".

3. Check short between signal circuits

   1) IG KEY "OFF", ENGINE "OFF".

   2) Disconnect CKPS connector and ECM connector.

   3) Check continuity between CKPS connector terminal 2 and 3.

Specification : Discontinuity (Infinite Ω)

   4) Is the measured resistance within the specification?

YES

▶ Go to "4. Check short to ground in signal circuit" as follows.

NO

▶ Repair short between signal circuits and go to "Verification of Vehicle Repair".

4. Check short to ground in signal circuit

   1) IG KEY "OFF", ENGINE "OFF".

   2) Disconnect CKPS connector and ECM connector.

   3) Check continuity between CKPS connector terminal 1(shield ground) and 2,3(crank signal)

Specification : Discontinuity (Infinite Ω)

   4) Is the measured resistance within the specification?

YES

▶ Go to "Ground Circuit Inspection".

NO

▶ Repair the short between signal circuit and shield ground and go to "Verification of Vehicle Repair".

GROUND CIRCUIT INSPECTION ED539D75

1. IG KEY "OFF", ENGINE "OFF".

2. Disconnect CKPS connector.

3. Check continuity between CKPS connector terminal 1(shield ground) and chassis ground.

Specification : continuity (below 1.0Ω)

4. Is the measured resistance within the specification?

YES

▶ Go to "Component Inspection".

NO

▶ Repair open or poor connection in ground circuit and go to "Verification of Vehicle Repair".

COMPONENT INSPECTION EC395804

1. Check Resistance of CKPS component

   1) IG KEY "OFF", ENGINE "OFF".

   2) Disconnect CKPS connector.

   3) Check resistance between CKPS connector terminal 2 and 3 at component side.

Specification : 860Ω ±10% (20°C)

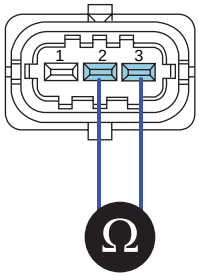

EGNG006B

4) Is the measured resistance within the specification?

YES

▶ Go to "Check short to ground in CKPS component" as follows.

NO

▶ Replace CKPS and go to "Verification of Vehicle Repair".

2. Check short to ground in CKPS component

1) IG KEY "OFF", ENGINE "OFF".

2) Disconnect CKPS connector.

3) Check resistance between CKPS connector terminal 1 and 3 at component side.

Specification : Discontinuity (Infinite Ω)

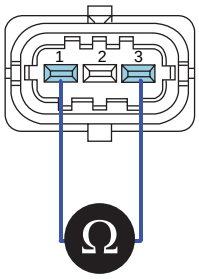

EGNG006C

4) Is the measured resistance within the specification? (Is the inside of component insulated correctly?)

YES

▶ Go to "Check CKPS waveform".

NO

▶ Replace CKPS and go to "Verification of Vehicle Repair".

3. Check CKPS waveform

1) IG KEY "OFF", ENGINE "OFF".

2) Connect CKPS connector.

3) Connect Oscilloscope to CKPS connector terminal 2.

4) Check if CKPS waveform is outputted correctly as cranking or turning engine on.

Specification : Refer to "Signal waveform & data" of "General Information".

5) Is CKPS waveform outputted correctly?

YES

▶ Go to "Verification of Vehicle Repair".

NO

▶ Replace CKPS and go to "Verification of Vehicle Repair".

VERIFICATION OF VEHICLE REPAIR E5914F6A

Refer to DTC P0335.

DTC P0340 CAMSHAFT POSITION SENSOR A CIRCUIT MALFUNCTION (BANK 1 OR SINGLE SENSOR)

COMPONENT LOCATION E96A3409

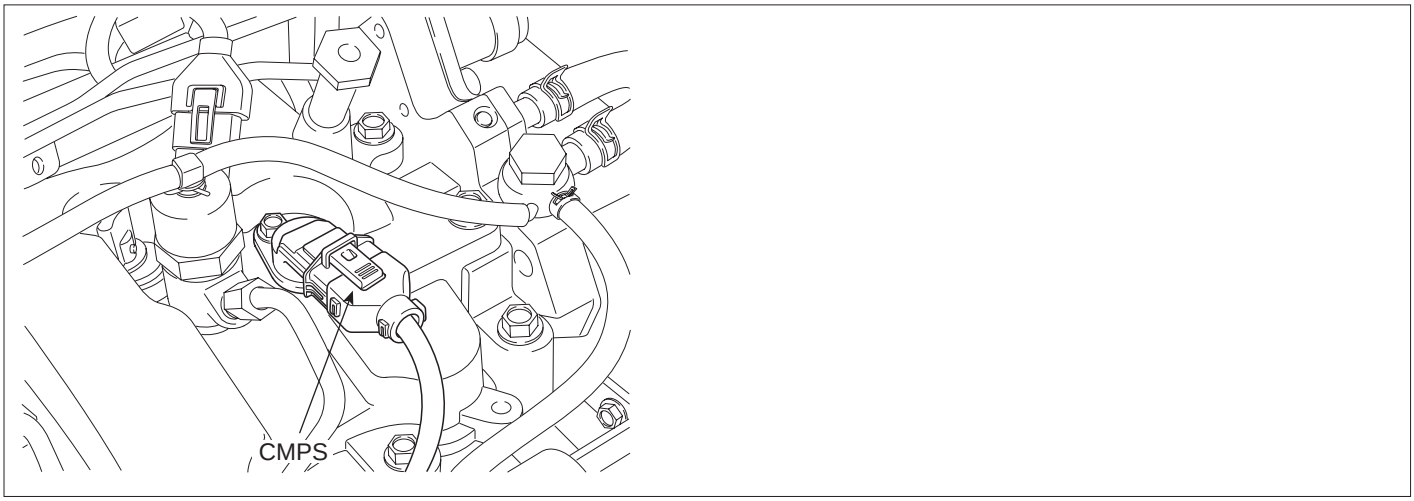

LFIG297A

GENERAL DESCRIPTION E8FD63BB

Cam Shaft Position Sensor(CMPS) is hall sensor type. Sensing the teeth attatch at the end of exhaust cam shaft, CMPS detects rotation of Cam shaft (1 signal per 1 lotation)As Cam shaft rotates once while Crank shaft does twice, CMPS referrence point generates once while CKPS' do twice.As this signal inputted to ECM, it distinguishes crank angle and the cylinder which requires fuel injection in order to determine injection sequence and duration.

DTC DESCRIPTION EC75AD9D

P0340 is set when CMPS signal does not generate while CKPS signal is outputted for the duration that crank shaft rotates 4 times. This code is due to the failure relevant to CMPS related circuit and sensor component.

DTC DETECTING CONDITION EC53A6C3

Item	Detecting Condition			Possible Cause
DTC Strategy	• Signal monitoring			• CMPS circuit • CMPS component
Enable Conditions	• During accelerating and turning engine "ON"			
Threshold Value	• CKPS signal is outputted while CMPS signal does not generate.			
Diagnostic Time	• Crank Shaft rotates 4 times			
Fail Safe	Fuel cut	YES		
	EGR Off	NO		
	Fuel Limit	NO		
	Check Lamp	YES		

SPECIFICATION E7EC0A4A

Sensor Type	Output Signal Characteristic	Air Gab	Low RPM Minimum Detecting Voltage	High RPM Minimum Detecting Voltage
Hall effect type	0V~5V Digital signal output	1.25mm	below 2.0V	above 3.8V

SCHEMATIC DIAGRAM E9AA72A7

[CIRCUIT DIAGRAM]

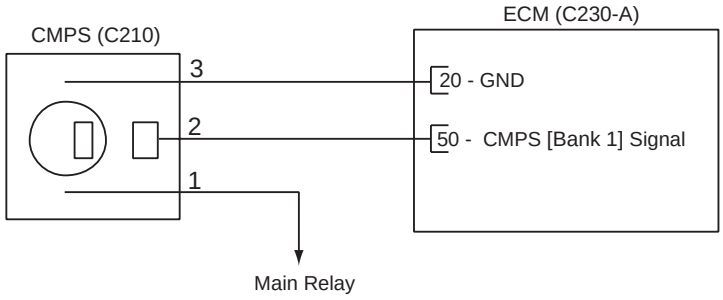

[CONNECTION INFORMATION]

Terminal	Connected to	Function
1	Main Relay	Battery Voltage
2	ECM C230-A (50)	CMPS Signal
3	ECM C230-A(20)	GND

[HARNESS CONNECTORS]

C210

CMPS

C230-A

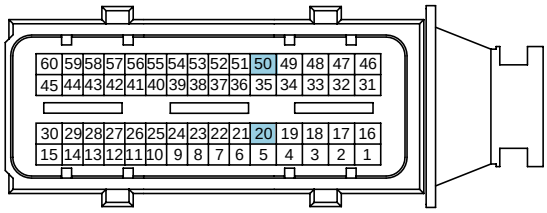

C230-K

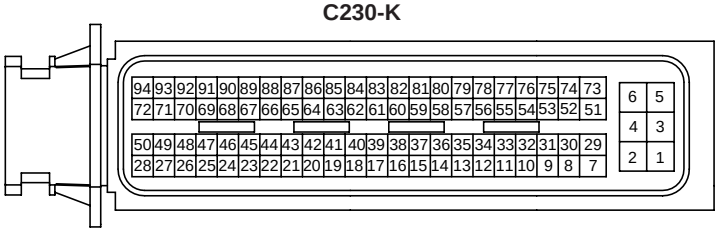

ECM

SCMFL6120L

SIGNAL WAVEFORM AND DATA EC12B23B

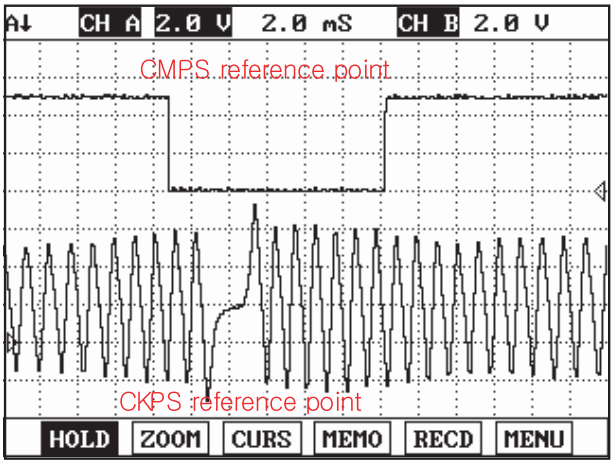

Fig.1

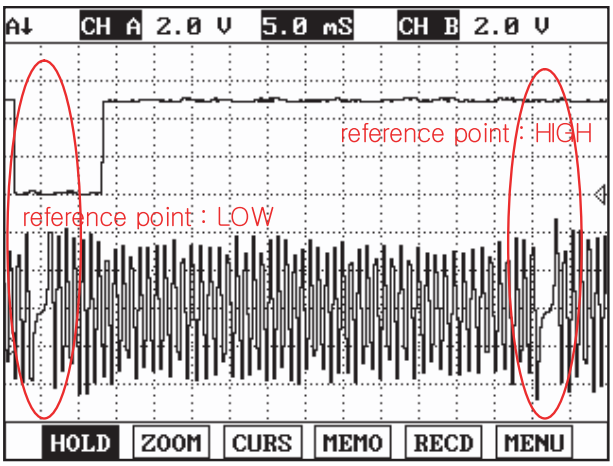

Fig.2

Fig.1) This shows waveform of Crank Shaft Position Sensor and Cam Shaft Position Sensor simulatneously. The middle area indicates reference points of Crank Shaft Position Sensor and Cam Shaft Position Sensor.

Fig.2) Crank Shaft Position Sensor and Cam Shaft Position Sensor signal are measured simultaneously.
Cam Shaft Position Sensor
signal is outputted once when Crank Shaft Position sensor signal is outputted twice. LOW and HIGH output of Cam Shaft Position sensor reference point is detected at Crank Shaft Position sensor reference point.
(Injection sequence is determined based on LOW and HIGH signal of Cam Shaft Position Sensor reference point as detecting cylinder position.)

LFIG299A

※ SIGNAL ANALYSIS

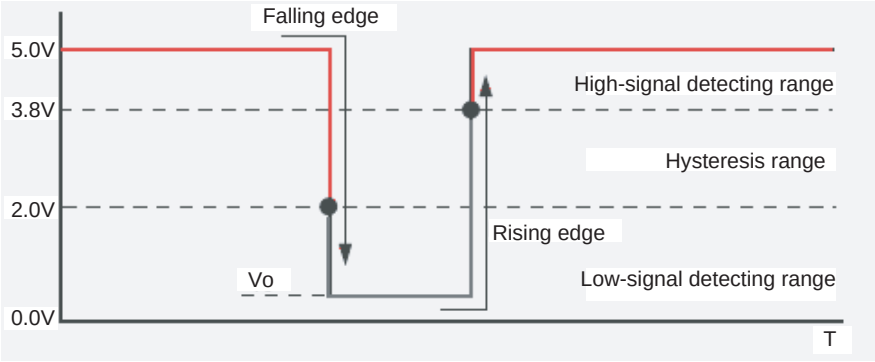

LFIG300A

1. ECM recognizes HIGH signal as LOW signal when CMPS signal drops below 2.0V and LOW signal as HIGH signal when CMPS signal rises above 3.8V.

2. V0 - the Minimum voltage of LOW signal does not drop below 0.0V due to the hall sensor inside resistance. When the Minimum voltage of LOW signal is above 0.6V during signal waveform inspection, check excessive resistance inside of CMPS component or in ground circuit.

MONITOR SCANTOOL DATA EB35BB16

1. Connect Scantool to Data Link Connector (DLC).

2. Warm engine up to normal operating temperature.

3. Turn "OFF" electrical devices and A/C.

4. Monitor "ENGINE SPEED SENSOR" parameter on the Scantool.

Specification : 750±50RPM at idle

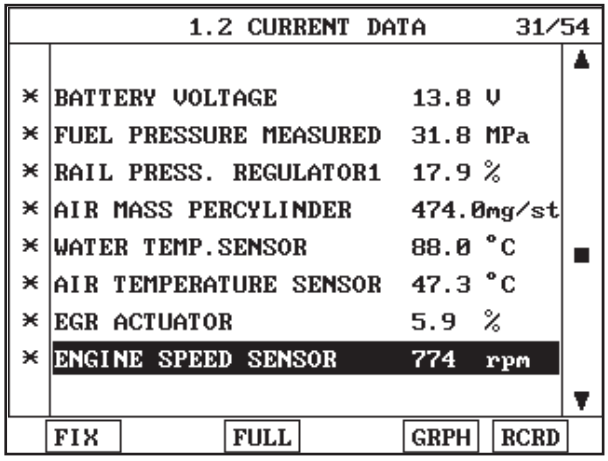

Fig.1

Fig.1) Check "ENGINE SPEED SENSOR" parameter carefully after warming engine up, also check engine stall and rpm instability or engine shut down.

SCMFL6277L

TERMINAL AND CONNECTOR INSPECTION E9A94F7B

1. Electrical systems consist of a lot of harness and connectors, poor connection of terminals can cause various problems and damge of component.

2. Perform checking procedure as follows.

   1) Check damage of harness and terminals : Check terminals for contact resistance, corrosion and deformation.

   2) Check connecting condition of ECM and component connector : Check terminal seperation, damage of locking device and connecting condition between terminal and wiring.

   NOTE

   Disconnect the pin which requires checking at male connector and insert it to the terminal at female connector for checking connecting condition. (after checking, reconnect the pin at correct position.)

3. Is the problem found?

   YES

   ▶ Repair the trouble causing part and go to "Verification of Vehicle Repair".

   NO

   ▶ Go to "Power Circuit Inspection".

POWER CIRCUIT INSPECTION E81DF3F4

1. IG KEY "OFF", ENGINE "OFF".

2. Disconnect CMPS connector.

3. IG KEY "ON".

4. Measure the voltage of CMPS connector terminal 1.

Specification : 11.0V~13.0V (Main relay "ON" power)

5. Is the measured voltage within the specification?

YES

▶ Go to "Signal Circuit Inspection".

NO

▶ Repair open in Main relay power circuit and fuse, and go to "Verification of Vehicle Repair".
[Check open in E/R FUSE & RELAY BOX 15A SENSOR #2 FUSE and related circuit.]
※ If the fuse is damaged again after replacing the damaged fuse, repair short to ground in Main relay power circuit.

SIGNAL CIRCUIT INSPECTION E78B31BB

1. Check CMPS signal voltage

   1) IG KEY "OFF", ENGINE "OFF".

   2) Disconnect CMPS connector.

   3) IG KEY "ON".

   4) Measure the voltage of CMPS connector terminal 2.

Specification : 4.8V~5.1V

   5) Is the measured voltage within the specification?

   YES

   ▶ Go to "Ground Circuit Inspection".

   NO

   ▶ Go to "Check open in signal circuit" as follows.

2. Check open in signal circuit

   1) IG KEY "OFF", ENGINE "OFF".

   2) Disconnect CMPS connector and ECM connector.

   3) Check continuity between CMPS connector terminal 2 and ECM connector (C230-A) terminal 50.

Specification : continuity (below 1.0Ω)

   4) Is the measured resistance within the specification? (Is continuity confirmed?)

   YES

   ▶ Go to "Check short to ground in signal circuit" as follows.

   NO

▶ Repair open in the circuit between CMPS connector terminal 2 and ECM connector terminal 50 and go to "Verification of Vehicle Repair".

3. Check short to ground in signal circuit

   1) IG KEY "OFF", ENGINE "OFF".

   2) Disconnect CMPS connector and ECM connector.

   3) Check continuity between CMPS connector terminal 2 and chassis ground.

Specification : Discontinuity (Infinite Ω)

   4) Is the measured resistance within the specification?

   YES

   ▶ Go to "Component Inspection".

   NO

   ▶ Repair short to ground in signal circuit and go to "Verification of Vehicle Repair".

GROUND CIRCUIT INSPECTION E109ED58

1. IG KEY "OFF", ENGINE "OFF".

2. Disconnect CMPS connector.

3. IG KEY "ON".

4. Check the voltage of CMPS connetor terminal 2. [TEST "A"]

5. Check the voltage between CMPS connetor terminal 2 and 3. [TEST "B"]
   (terminal 2 : Check + prove , terminal 3 : Check - prove)

Specification : [TEST "A"] Voltage - [TEST "B"] Voltage = below 200mV

6. Is the measured voltage within the specification?

   YES

   ▶ Go to "Component Inspection".

   NO

   ▶ When "B" voltage is not detected : Repair open in ground circuit and go to "Verification of Vehicle Repair".
   ▶ When the voltage difference between "A" and "B" is above 200mV : Eliminate the causes of excessive resistance and go to "Verification of Vehicle Repair".

COMPONENT INSPECTION E3BD4005

1. Cam shaft detecting teeth inspection

   1) IG KEY "OFF", ENGINE "OFF".

   2) Disconnect CMPS connector.

3) Disconnect CMPS.

4) Check the condition of Cam shaft detecting teeth through CMPS mounting hall.

5) Is abnormal deformation of Cam shaft detecting teeth found?

YES

▶ Replace Cam shaft assy' or Cylinder head assy' and go to "Verification of Vehicle Repair".

NO

▶ Go to "CMPS waveform Inspection" as follows.

2. CMPS waveform inspection

1) IG KEY "OFF", ENGINE "OFF".

2) Connect CMPS connector.

3) Connect Oscilloscope to CMPS connector terminal 2.

4) Monitor if CMPS waveform is outputted normally as cranking or turning engine "ON".

Specification : Refer to "Signal waveform & Data" of "General Information".

5) Is CMPS waveform displayed correctly?

YES

▶ Go to "Verification of Vehicle Repair".

NO

▶ Replace CMPS and go to "Verification of Vehicle Repair".

VERIFICATION OF VEHICLE REPAIR EC52C3CC

After a repair, it is essential to verify that the fault is corrected.

1. After connecting Scantool select "DIAGNOSTIC TROUBLE CODES(DTCs)" mode.
2. Clear recorded DTC using Scantool.
3. Drive the vehicle within DTC "Enable conditions" in "General information".
4. After selecting "DIAGNOSTIC TROUBLE CODES(DTCs)" mode and check if DTC is recorded again.
5. Are any DTCs recorded ?

YES

▶ Go to the DTC guide of recorded NO. in Scantool.

NO

▶ System operates within specification.

DTC P0341 CAMSHAFT POSITION SENSOR A CIRCUIT RANGE/PERFORMANCE (BANK 1 OR SINGLE SENSOR)

COMPONENT LOCATION E497B9B1

Refer to DTC P0340.

GENERAL DESCRIPTION E3DA2AFA

Refer to DTC P0340.

DTC DESCRIPTION EF450093

P0341 is set when CMPS reference point is detected more or less than twice while CKPS reference point is recognized 4 times. This code is due to temporary poor connection or short to ground in CMPS circuit. CMPS component failure.

DTC DETECTING CONDITION E532D45B

<table>
<tr><th>Item</th><th colspan="3">Detecting Condition</th><th>Possible Cause</th></tr>
<tr><td>DTC Strategy</td><td colspan="3">• Signal monitoring</td><td rowspan="6">• CMPS circuit
• CMPS component</td></tr>
<tr><td>Enable Conditions</td><td colspan="3">• During accelerating and turning engine "ON"</td></tr>
<tr><td>Threshold Value</td><td colspan="3">• When RPM from CMPS correlates with RPM from CKPS abnormally.</td></tr>
<tr><td>Diagnostic Time</td><td colspan="3">• Crank Shaft rotates 4 times</td></tr>
<tr><td rowspan="4">Fail Safe</td><td>Fuel cut</td><td>YES</td><td rowspan="4"></td></tr>
<tr><td>EGR Off</td><td>NO</td></tr>
<tr><td>Fuel Limit</td><td>NO</td></tr>
<tr><td>Check Lamp</td><td>YES</td></tr>
</table>

SPECIFICATION ED93DEBB

Refer to DTC P0340.

SCHEMATIC DIAGRAM EC8FAF5E

Refer to DTC P0340.

SIGNAL WAVEFORM AND DATA E1578F66

Refer to DTC P0340.

MONITOR SCANTOOL DATA ED19F1B9

Refer to DTC P0340.

TERMINAL AND CONNECTOR INSPECTION E1463867

Refer to DTC P0340.

POWER CIRCUIT INSPECTION E573AA3B

1. IG KEY "OFF", ENGINE "OFF".
2. Disconnect CMPS connector.
3. IG KEY "ON".
4. Measure the voltage of CMPS connector terminal 1.

Specification : 11.0V~13.0V (Main relay "ON" power)

5. Is the measured voltage within the specification?

YES

▶ Go to "Signal Circuit Inspection".

NO

▶ Repair open in Main relay power circuit and fuse, and go to "Verification of Vehicle Repair".
[Check open in E/R FUSE & RELAY BOX 15A SENSOR #2 FUSE and related circuit.]
※ If the fuse is damaged again after replacing the damaged fuse, repair short to ground in Main relay power circuit.

SIGNAL CIRCUIT INSPECTION E90982D5

1. Check CMPS signal voltage
   1) IG KEY "OFF", ENGINE "OFF".
   2) Disconnect CMPS connector.
   3) IG KEY "ON".
   4) Measure the voltage of CMPS connector terminal 2.

Specification : 4.8V~5.1V

   5) Is the measured voltage within the specification?

YES

▶ Go to "Ground Circuit Inspection".

NO

▶ Go to "Check open in signal circuit" as follows.

2. Check open in signal circuit
   1) IG KEY "OFF", ENGINE "OFF".
   2) Disconnect CMPS connector and ECM connector.
   3) Check continuity between CMPS connector terminal 2 and ECM connector (C230-A) terminal 50.

Specification : continuity (below 1.0Ω)

4) Is the measured resistance within the specification? (Is continuity confirmed?)

YES

▶ Go to "Check short to ground in signal circuit" as follows.

NO

▶ Repair open in the circuit between CMPS connector terminal 2 and ECM connector terminal 50 and go to "Verification of Vehicle Repair".

3. Check short to ground in signal circuit

1) IG KEY "OFF", ENGINE "OFF".

2) Disconnect CMPS connector and ECM connector.

3) Check continuity between CMPS connector terminal 2 and chassis ground.

Specification : Discontinuity (Infinite Ω)

4) Is the measured resistance within the specification?

YES

▶ Go to "Component Inspection".

NO

▶ Repair short to ground in signal circuit and go to "Verification of Vehicle Repair".

GROUND CIRCUIT INSPECTION EC63FFE9

1. IG KEY "OFF", ENGINE "OFF".

2. Disconnect CMPS connector.

3. IG KEY "ON".

4. Check the voltage of CMPS connetor terminal 2. [TEST "A"]

5. Check the voltage between CMPS connetor terminal 2 and 3. [TEST "B"]
(terminal 2 : Check + prove , terminal 3 : Check - prove)

Specification : [TEST "A"] Voltage - [TEST "B"] Voltage = below 200mV

6. Is the measured voltage within the specification?

YES

▶ Go to "Component Inspection".

NO

▶ When "B" voltage is not detected : Repair open in ground circuit and go to "Verification of Vehicle Repair".
▶ When the voltage difference between "A" and "B" is above 200mV : Eliminate the causes of excessive resistance and go to "Verification of Vehicle Repair".

COMPONENT INSPECTION E97380A2

1. Cam shaft detecting teeth inspection
   1) IG KEY "OFF", ENGINE "OFF".
   2) Disconnect CMPS connector.
   3) Disconnect CMPS.
   4) Check the condition of Cam shaft detecting teeth through CMPS mounting hall.
   5) Is abnormal deformation of Cam shaft detecting teeth found?

      YES

      ▶ Replace Cam shaft assy' or Cylinder head assy' and go to "Verification of Vehicle Repair".

      NO

      ▶ Go to "CMPS waveform Inspection" as follows.
2. CMPS waveform inspection
   1) IG KEY "OFF", ENGINE "OFF".
   2) Connect CMPS connector.
   3) Connect Oscilloscope to CMPS connector terminal 2.
   4) Monitor if CMPS waveform is outputted normally as cranking or turning engine "ON".

Specification : Refer to "Signal waveform & Data" of "General Information".

   5) Is CMPS waveform displayed correctly?

      YES

      ▶ Go to "Verification of Vehicle Repair".

      NO

      ▶ Replace CMPS and go to "Verification of Vehicle Repair".

VERIFICATION OF VEHICLE REPAIR ECC8BF2A

Refer to DTC P0340.

DTC P0381 GLOW INDICATOR LAMP - CIRCUIT MALFUNCTION

GENERAL DESCRIPTION E7427052

Heating combustion chamber, glow plug increases fuel ignitibility and makes fuel in the foggy state easily when engine is cold. Thus, glow plug makes engine starting easily and decreases exhaust gas produced just after turning engine on when engine is cold.ECM controls operation and operating duration of glow plug relay which supplies power to glow plug with ECTS signal, battery voltage and IG KEY ON signal.Through glow lamp in cluster, ECM let drivers know if glow plug is ON.

DTC DESCRIPTION E44CC376

P0381 is set when 1)excessive voltage is detected or 2)no current is detected like open or short to ground in glow lamp control circuit for more than 1 sec. at glow lamp ON condition. This code is due to open in glow lamp control circuit or internal open in filament of glow lamp component.

DTC DETECTING CONDITION E76CEDE3

<table>
<tr><th>Item</th><th colspan="3">Detecting Condition</th><th>Possible Cause</th></tr>
<tr><td>DTC Strategy</td><td colspan="3">• Voltage monitoring</td><td rowspan="5">• Open in glow lamp
• Glow lamp circuit</td></tr>
<tr><td>Enable Conditions</td><td colspan="3">• IG KEY "ON" (monitoring only performed within lamp operating condition)</td></tr>
<tr><td>Threshold Value</td><td colspan="3">• Short to battery
• Short to GND, Wiring open</td></tr>
<tr><td>Diagnostic Time</td><td colspan="3">• 1.0 sec.</td></tr>
<tr><td rowspan="4">Fail Safe</td><td>Fuel cut</td><td>NO</td><td rowspan="4"></td></tr>
<tr><td>EGR Off</td><td>NO</td></tr>
<tr><td>Fuel Limit</td><td>NO</td></tr>
<tr><td>Check Lamp</td><td>NO</td></tr>
</table>

SCHEMATIC DIAGRAM E1655D21

[CIRCUIT DIAGRAM]

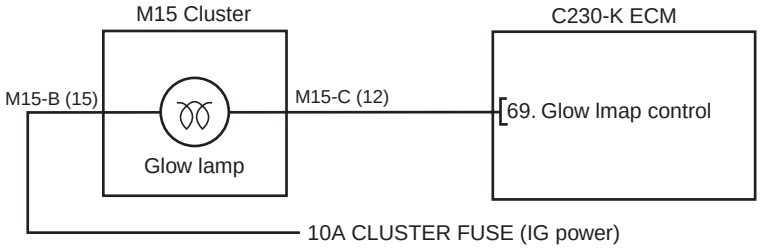

[CONNECTION INFORMATION]

Terminal	Connected to	Function
M15-B terminal 12	C230-K terminal 69	Glow lamp control
M15-C terminal 15	10A CLUSTER FUSE	IG power

[HARNESS CONNECTORS]

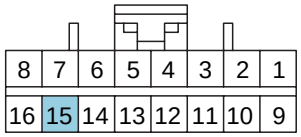

M15-B

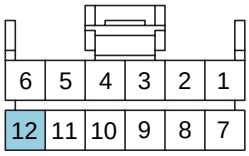

M15-C
Cluster

C230-A

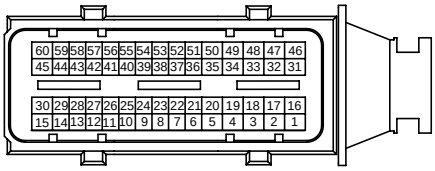

C230-K

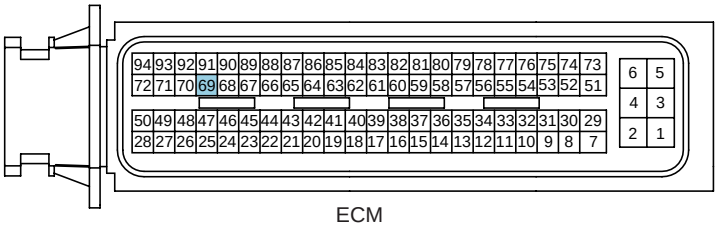

ECM

SCMFL6399L

MONITOR SCANTOOL DATA E2EC6B21

1. Connect Scantool to Data Link Connector (DLC).
2. Warm engine up to normal operating temperature.
3. Turn "OFF" electrical devices and A/C.
4. Select "ACTUATION TEST" parameter on the scantool.

specification : Lamp turns ON at ACTUATION TEST of Glow lamp

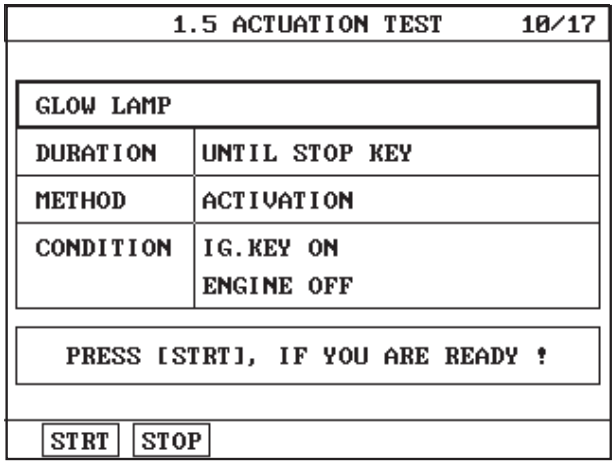

Fig.1

Fig.1) Diagnosing problem is convenient through ACTUATION TEST of glow lamp.

LFIG308A

TERMINAL AND CONNECTOR INSPECTION E8F21B48

1. Electrical systems consist of a lot of harness and connectors, poor connection of terminals can cause various problems and damge of component.

2. Perform checking procedure as follows.

   1) Check damage of harness and terminals : Check terminals for contact resistance, corrosion and deformation.

   2) Check connecting condition of ECM and component connector : Check terminal seperation, damage of locking device and connecting condition between terminal and wiring.

   NOTE

   Disconnect the pin which requires checking at male connector and insert it to the terminal at female connector for checking connecting condition. (after checking, reconnect the pin at correct position.)

3. Is the problem found?

   YES

   ▶ Repair the trouble causing part and go to "Verification of Vehicle Repair".

   NO

   ▶ Go to "Control Circuit Inspection".

CONTROL CIRCUIT INSPECTION E0EB1485

1. Check voltage in control circuit

   1) IG KEY "OFF", ENGINE "OFF".

   2) Disconnect ECM connector .

   3) IG KEY "ON".

   4) Measure the voltage of terminal 69 of ECM connector (C230-K).

Specification : 10.8V~13.0V

5) Is the measured voltage within the specification?

YES

▶ Go to "2. Grounding test of glow lamp control circuit"..

NO

▶ Check open in filament of glow lamp. (Refer to Component Inspection)
▶ Repair open between cluster connector(M15-C) terminal 12 and ECM connecotr(C230-K) terminal 69, and go to "Verification of Vehicle Repair".

2. Grounding test of glow lamp control circuit

1) IG KEY "OFF", ENGINE "OFF".

2) Disconnect ECM connector.

3) IG KEY "ON".

4) Ground ECM connector (C230-K) terminal 69 to chassis ground.

specification : Glow lamp turns ON.

5) Does glow lamp turn ON?

YES

▶ Go to "Verification of Vehicle Repair".

NO

▶ Repair short to battery in glow lamp control circuit and go to "Verification of Vehicle Repair".

COMPONENT INSPECTION E825953E

1. IG KEY "OFF", ENGINE "OFF".
2. Dismount cluster and disconnect glow lamp.
3. Check filament of glow lamp.
4. supply 12V to glow lamp to turn lamp ON.

specification : Lamp turns ON when 12V is supplied.

5. Does glow lamp turn ON?

YES

▶ Go to "Verification of Vehicle Repair".

NO

▶ Replace glow lamp and go to "Verification of Vehicle Repair".

VERIFICATION OF VEHICLE REPAIR EEDF802C

After a repair, it is essential to verify that the fault is corrected.

1. After connecting Scantool select "DIAGNOSTIC TROUBLE CODES(DTCs)" mode.
2. Clear recorded DTC using Scantool.
3. Drive the vehicle within DTC "Enable conditions" in "General information".
4. After selecting "DIAGNOSTIC TROUBLE CODES(DTCs)" mode and check if DTC is recorded again.
5. Are any DTCs recorded ?

YES

▶ Go to the DTC guide of recorded NO. in Scantool.

NO

▶ System operates within specification.

DTC P0489 EXHAUST GAS RECIRCULATION CONTROL CIRCUIT LOW VOLTAGE

COMPONENT LOCATION E3D6B455

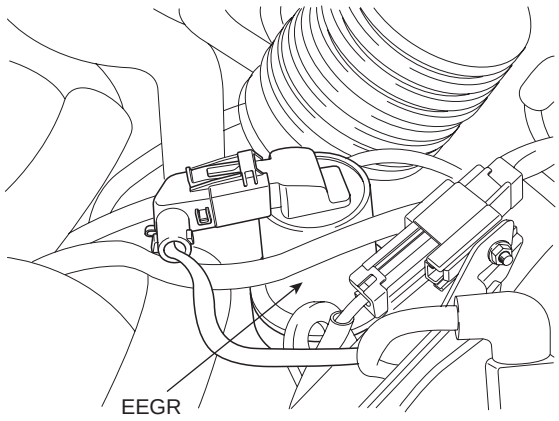

SCMFL6504L

GENERAL DESCRIPTION ED079CFB

Receiving ECM signal, linear solenoid type electronic EGR actuator operates EEGR valve directly.ECM performs EGR system feed back control with the information of measured mass air flow (The role of AFS in diesel engine is different from gasoline engine. Fuel injection quantity is decided by AFS signal in gasoline engine.)When EGR gas(contains no oxygen) flowing into combustion chamber increases, the air passing through AFS(contains oxygen) decreases. Thus, with the output signal change of AFS accompanied by EEGR actuator actuation, ECM determine the amount of recirculated EGR gas quantity.

NOTE

NOx is produced from the reaction of nitrogen and oxygen. Controlling EGR gas(contains no oxyger) which is recirculated to combustion chamber, if least intake air required for complete combustion flows into combustion chamber, NOx decreases because there is no supplementary oxygen to react with nitrogen.

DTC DESCRIPTION EC76B7FA

P0489 is set when ’0’A is detected in EEGR actuator circuit for more than 0.5 sec.. This code is due to open or short to ground in EEGR actuator circuit or internal open in EEGR component.

DTC DETECTING CONDITION E252D1F2

Item	Detecting Condition			Possible Cause
DTC Strategy	• Signal monitoring			• EGR actuator circuit • EGR actuator component
Enable Conditions	• Engine running			
Threshold Value	• short to GND, wiring open			
Diagnostic Time	• 0.5 sec.			
Fail Safe	Fuel cut	NO		
	EGR Off	YES		
	Fuel Limit	NO		
	Check Lamp	NO		

SPECIFICATION ED548F01

EGR actuatorcomponent resistance	EGR actuator operating Hz	EGR actuator operating duty
7.3~ 8.8Ω (30℃)	142Hz	approx.5%(closed)~40%(opened)

SCHEMATIC DIAGRAM EDC91FD1

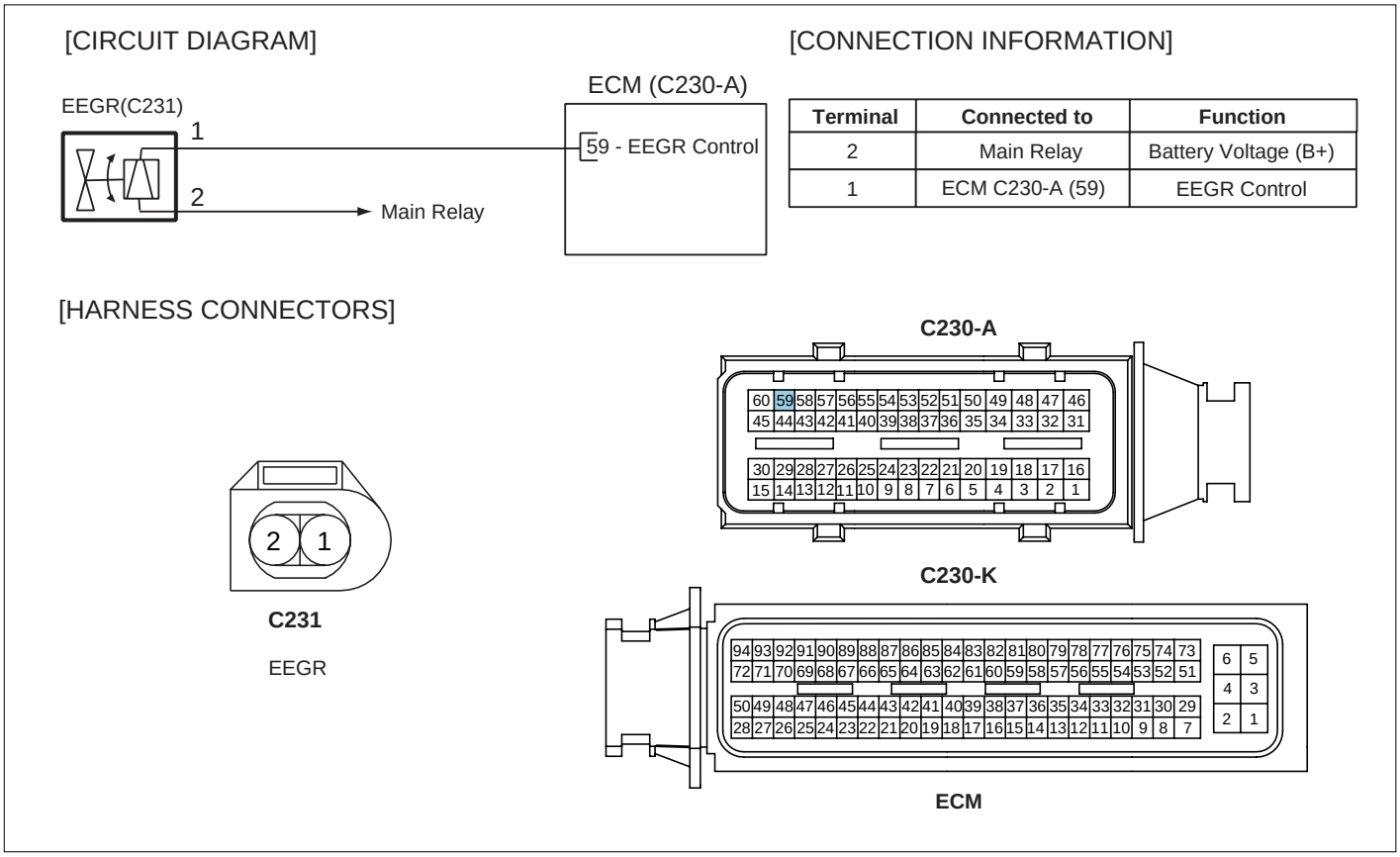

Terminal	Connected to	Function
2	Main Relay	Battery Voltage (B+)
1	ECM C230-A (59)	EEGR Control

SCMFL6130L

SIGNAL WAVEFORM AND DATA EC4F06EA

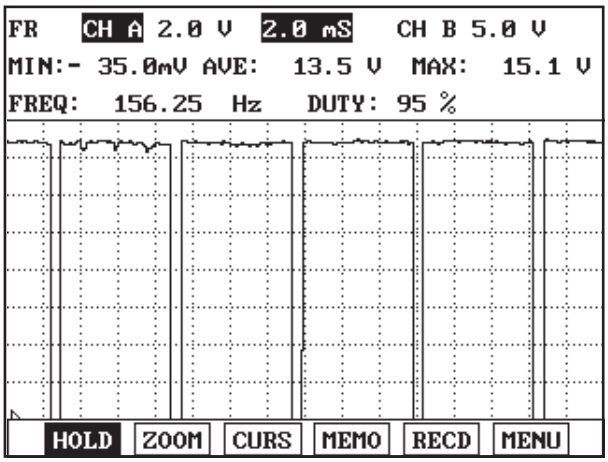

Fig.1

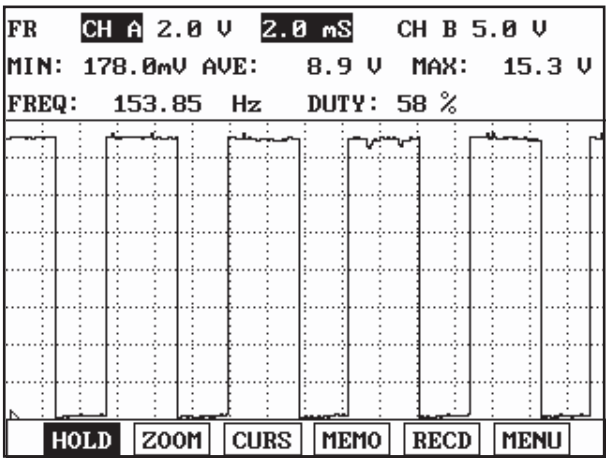

Fig.2

Fig.1) Approx. 5% duty((-)duty) signal waveform of EEGR actuator (with EEGR valve closed)
Fig.2) Approx. 40% duty((-)duty) signal waveform of EEGR actuator(with EEGR valve opened)

SCMFL6285L

NOTE

The output of approx. 5% duty is mainly for the diagnosis of EEGR actuator circuit than actuating EEGR.

MONITOR SCANTOOL DATA E29AB5B5

1. Connect Scantool to Data Link Connector (DLC).
2. Warm engine up to normal operating temperature.
3. Turn "OFF" electrical devices and A/C.
4. Monitor "AIR MASS PERCYLINDER" parameter on the Scantool.

Specification : When EEGR actuator does not operate 5% duty) at idle :	450mg/st ± 50 mg/st
When EEGR actuator operates(Approx. 45% duty) at idle :	400mg/st ± 50 mg/st

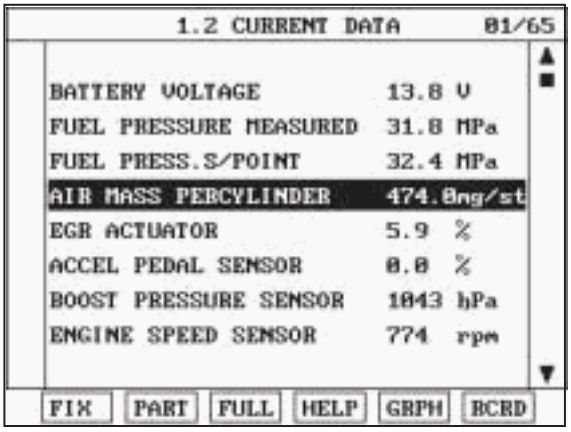

Fig.1

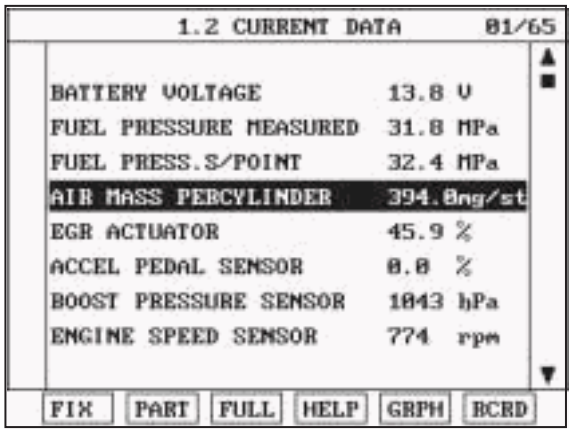

Fig.2

Fig.1) Check if "AIR MASS PERCYLINDER"l is 450mg/st ± 50mg/st without EEGR operation at warm idle (EEGR actuator 5% duty)
Fig.2) Check if "AIR MASS PERCYLINDER"l is 400mg/st ± 50mg/st with EEGR operation at warm idle (EEGR actuator approx. 45% duty)

SCMFL6391L

※EEGR actuator operates as decelerating after rapid acceleration when idle EEGR does not operate, EEGR actuator duty rises to approx. 45% at operating condition. This controlling process lasts for about 3 min. then EEGR actuator turns "OFF" (duty 5%).

NOTE

duty rises to approx. 45% at operating condition. This controlling process lasts for about 3 min. then EEGR actuator turns "OFF" (duty 5%).

TERMINAL AND CONNECTOR INSPECTION E42512D6

1. Electrical systems consist of a lot of harness and connectors, poor connection of terminals can cause various problems and damge of component.

2. Perform checking procedure as follows.

   1) Check damage of harness and terminals : Check terminals for contact resistance, corrosion and deformation.

   2) Check connecting condition of ECM and component connector : Check terminal seperation, damage of locking device and connecting condition between terminal and wiring.

NOTE

Disconnect the pin which requires checking at male connector and insert it to the terminal at female connector for checking connecting condition. (after checking, reconnect the pin at correct position.)

3. Is the problem found?

YES

▶ Repair the trouble causing part and go to "Verification of Vehicle Repair".

NO

▶ Go to "Power Circuit Inspection".

POWER CIRCUIT INSPECTION E8BFDA17

1. Check power circuit voltage

   1) IG KEY "OFF", ENGINE "OFF"

   2) Disconnect EGR actuator connector

   3) IG KEY "ON"

   4) Measure the voltage of terminal 2 of EGR actuator connector.

Specification : 11.5V~13.0V

   5) Is the measured voltage within the specification?

   YES

   ▶ Go to "Control Circuit Inspection".

   NO

   ▶ Repair E/R FUSE & RELAY BOX 15A SENSOR #2 FUSE and related circuit and go to "Verification of Vehicle Repair".

CONTROL CIRCUIT INSPECTION E44292FB

1. Check control circuit monitoring voltage

   1) IG KEY "OFF", ENGINE "OFF"

   2) Disconnect EGR actuator connector.

   3) IG KEY "ON"

   4) Measure the voltage of terminal 1 of EGR actuator connector.

Specification : 3.2V~3.7V

   5) Is the measured voltage within the specification?

   YES

   ▶ Go to "Component Inspection".

   NO

   ▶ When voltage is not detected : Go to "2. Check open in control circuit" as follows.
   ▶ When high voltage is detected : Repair short to battery and go to "Verification of Vehicle Repair".

2. Check open in control circuit

   1) IG KEY "OFF", ENGINE "OFF"

   2) Disconnect EGR actuator connector and ECM connector

   3) Check continuity between EGR actuator terminal 1 and ECM connector (C230-A) terminal 59.

specification : Continuity (below 1.0Ω)

4) Is the measured resistance within the specification?

YES

▶ Repair short to ground and go to "Verification of Vehicle Repair".

NO

▶ Repair open in control circuit and go to "Verification of Vehicle Repair".

COMPONENT INSPECTION E80FEECF

1. Check EGR actuator component resistance

   1) IG KEY "OFF", ENGINE "OFF".

   2) Disconnect EGR actuator.

   3) Measure the resistance between EGR actuator component terminal 1 and 2.

Specification : 7.3~ 8.8Ω (30℃)

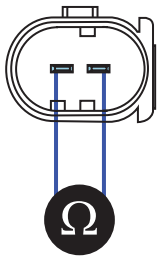

LFIG418A

4) Is EEGR actuator component resistance within the specification?

YES

▶ Go to "Verification of Vehicle Repair".

NO

▶ Replace EEGR actuator and go to "Verification of Vehicle Repair".

VERIFICATION OF VEHICLE REPAIR E6753BE9

After a repair, it is essential to verify that the fault is corrected.

1. After connecting Scantool select "DIAGNOSTIC TROUBLE CODES(DTCs)" mode.
2. Clear recorded DTC using Scantool.
3. Drive the vehicle within DTC "Enable conditions" in "General information".
4. After selecting "DIAGNOSTIC TROUBLE CODES(DTCs)" mode and check if DTC is recorded again.

5. Are any DTCs recorded ?

YES

▶ Go to the DTC guide of recorded NO. in Scantool.

NO

▶ System operates within specification.

DTC P0490 EXHAUST GAS RECIRCULATION CONTROL CIRCUIT HIGH VOLTAGE

COMPONENT LOCATION E92CCACE

Refer to DTC P0489.

GENERAL DESCRIPTION E26B51E6

Refer to DTC P0489.

DTC DESCRIPTION E9FEBBF5

P0490 is set when excessive current is detected in EEGR actuator circuit for more than 0.5 sec.. This code is due to short to battery in EEGR actuator control circuit or internal short in EEGR component.

DTC DETECTING CONDITION EEEBC657

<table>
<tr><th>Item</th><th colspan="3">Detecting Condition</th><th>Possible Cause</th></tr>
<tr><td>DTC Strategy</td><td colspan="3">• Signal monitoring</td><td rowspan="6">• EGR actuator circuit
• EGR actuator component</td></tr>
<tr><td>Enable Conditions</td><td colspan="3">• Engine running</td></tr>
<tr><td>Threshold Value</td><td colspan="3">• Short to battery</td></tr>
<tr><td>Diagnostic Time</td><td colspan="3">• 0.5 sec.</td></tr>
<tr><td rowspan="4">Fail Safe</td><td>Fuel cut</td><td>NO</td><td rowspan="4"></td></tr>
<tr><td>EGR Off</td><td>YES</td></tr>
<tr><td>Fuel Limit</td><td>NO</td></tr>
<tr><td>Check Lamp</td><td>NO</td></tr>
</table>

SPECIFICATION EE90B70B

Refer to DTC P0489.

SCHEMATIC DIAGRAM E2FE5EE9

Refer to DTC P0489.

SIGNAL WAVEFORM AND DATA E71CE5C0

Refer to DTC P0489.

MONITOR SCANTOOL DATA E7A64DBB

Refer to DTC P0489.

TERMINAL AND CONNECTOR INSPECTION E97F6D2D

Refer to DTC P0489.

POWER CIRCUIT INSPECTION E5791A48

1. Check power circuit voltage

   1) IG KEY "OFF", ENGINE "OFF"

   2) Disconnect EGR actuator connector

   3) IG KEY "ON"

   4) Measure the voltage of terminal 2 of EGR actuator connector.

Specification : 11.5V~13.0V

   5) Is the measured voltage within the specification?

   YES

   ▶ Go to "Control Circuit Inspection".

   NO

   ▶ Repair E/R FUSE & RELAY BOX 15A SENSOR #2 FUSE and related circuit and go to "Verification of Vehicle Repair".

CONTROL CIRCUIT INSPECTION EAE2BD4A

1. Check control circuit monitoring voltage

   1) IG KEY "OFF", ENGINE "OFF"

   2) Disconnect EGR actuator connector.

   3) IG KEY "ON"

   4) Measure the voltage of terminal 1 of EGR actuator connector.

Specification : 3.2V~3.7V

   5) Is the measured voltage within the specification?

   YES

   ▶ Go to "Component Inspection".

   NO

   ▶ When voltage is not detected : Go to "2. Check open in control circuit" as follows.
   ▶ When high voltage is detected : Repair short to battery and go to "Verification of Vehicle Repair".

2. Check open in control circuit

   1) IG KEY "OFF", ENGINE "OFF"

   2) Disconnect EGR actuator connector and ECM connector

   3) Check continuity between EGR actuator terminal 1 and ECM connector (C230-A) terminal 59.

specification : Continuity (below 1.0Ω)

4) Is the measured resistance within the specification?

YES

▶ Repair short to ground and go to "Verification of Vehicle Repair".

NO

▶ Repair open in control circuit and go to "Verification of Vehicle Repair".

COMPONENT INSPECTION E712E587

1. Check EGR actuator component resistance

1) IG KEY "OFF", ENGINE "OFF".

2) Disconnect EGR actuator.

3) Measure the resistance between EGR actuator component terminal 1 and 2.

Specification : 7.3~ 8.8Ω (30℃)

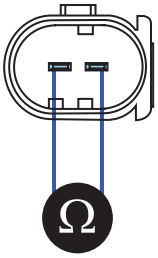

LFIG418A

4) Is EEGR actuator component resistance within the specification?

YES

▶ Go to "Verification of Vehicle Repair".

NO

▶ Replace EEGR actuator and go to "Verification of Vehicle Repair".

VERIFICATION OF VEHICLE REPAIR E932B6BA

Refer to DTC P0489.

DTC P0501 VEHICLE SPEED SENSOR A RANGE/PERFORMANCE

COMPONENT LOCATION EF2D198E

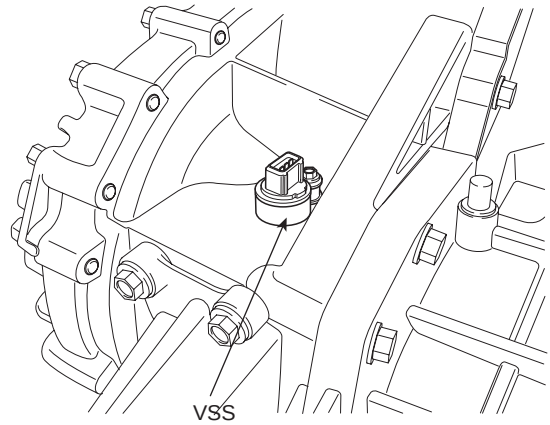

SCMFL6505L

GENERAL DESCRIPTION E6CA14C8

Vehicle Speed Sensor(VSS) is hall sensor type and senses the rotating speed of differential gear mounted on transaxle.Comparing engine speed with vehicle speed calculated based on vehicle speed sensor signal, ECM recognizes engaged gear. And based on the information about engaged gear, ECM performs optimum fuel injection quantity correction. VSS signal is also used in speed meter of cluster, ETACS(or BCM), aircon control module, navigation system, etc.

DTC DESCRIPTION E93D55D0

P0501 is set when vehicle speed below 15Km/h is detected for more than 1 sec. at above 3500RPM and above 38.25 mg/hub of fuel injection quantity

DTC DETECTING CONDITION EB992519

Item	Detecting Condition			Possible Cause
DTC Strategy	• Signal monitoring			• Vehicle speed sensor circuit • Vehicle speed sensor component
Enable Conditions	• Engine running			
Threshold Value	• When vehicle speed below 15Km/h is detected for more than 1.0 sec. at above 3500RPM and above 38.25 mg/hub of fuel injection quantity.			
Diagnostic Time	• Refer to threshold Value			
Fail Safe	Fuel cut	NO		
	EGR Off	NO		
	Fuel Limit	NO		
	Check Lamp	NO		

SPECIFICATION EDB7381D

Sensing Type	LOW Signal Voltage	HIGH Signal Voltage	Signal Duty
Hall sensor type	below 1.5V	above 3.5V	50±5%

SCHEMATIC DIAGRAM E9F53019

[CIRCUIT DIAGRAM]

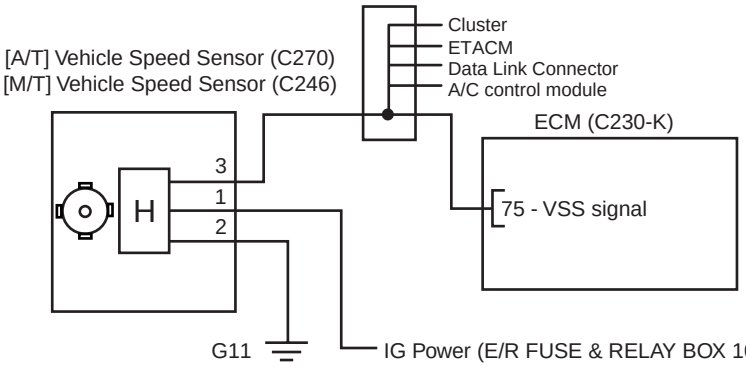

[CONNECTOR INFORMATION]

Terminal	Connected to	Function
1	U/H-C terminal 13	IG Power
2	G11 ground point	Chassis Ground
3	ECM C230-K (75)	VSS signal

[HARNESS CONNECTOR]

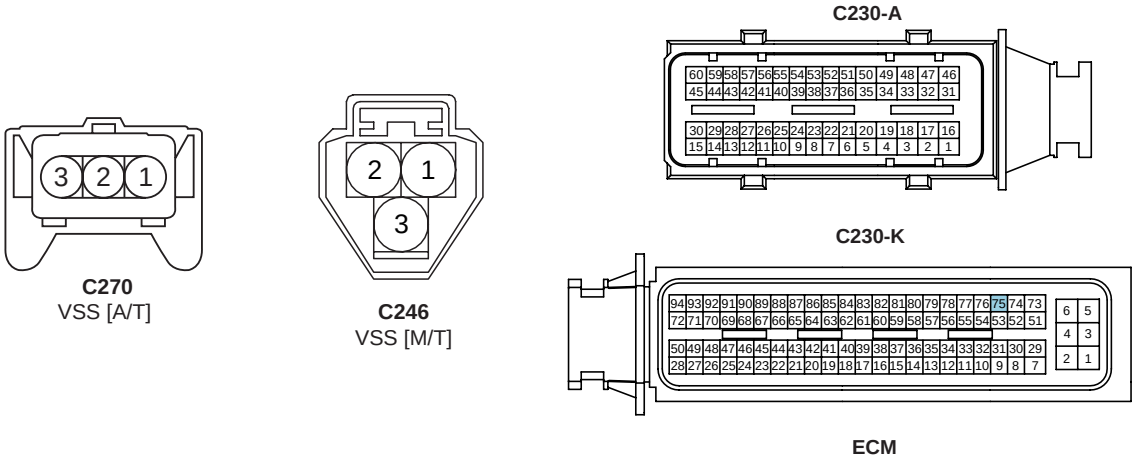

SCMFL6400L

SIGNAL WAVEFORM AND DATA ECE31503

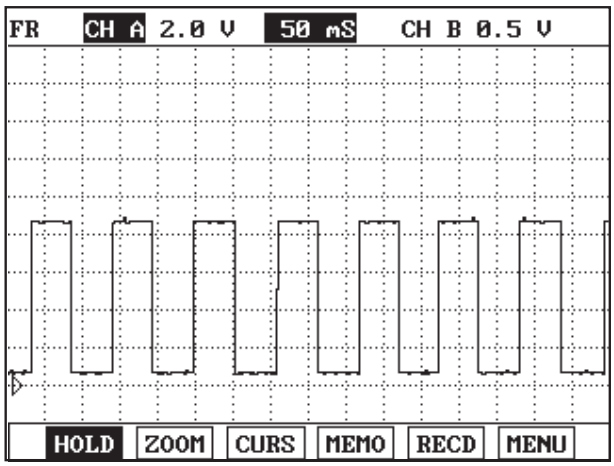

Fig.1

Fig.1) This is the signal waveform of vehicle speed sensor. Digital waveform, LOW 0.8V, HIGH : 10V with 50% duty is outputted. ECM detects vehicle speed, sensing this ON-OFF period (Hz).

LFIG432A

MONITOR SCANTOOL DATA EAB7AE87

1. Connect Scantool to Data Link Connector (DLC).
2. Warm engine up to normal operating temperature.
3. Turn "OFF" electrical devices and A/C.
4. Monitor "VEHICLE SPEED SENSOR " parameter on the Scantool.

specification : current vehicle speed is displayed.

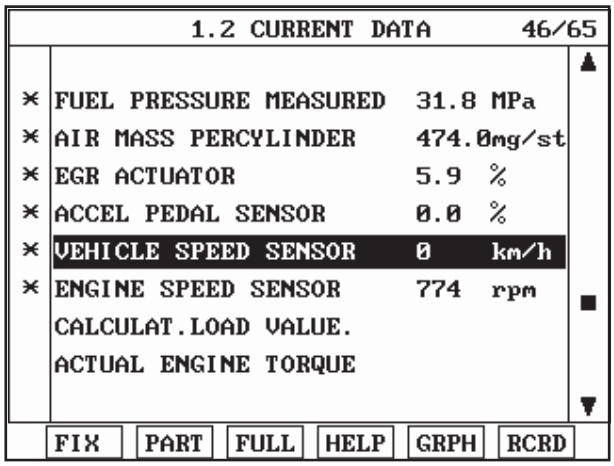

Fig.1

Fig.1) Check if current vehicle speed is same as vehicle speed displayed on the Scantool.

SCMFL6289L

TERMINAL AND CONNECTOR INSPECTION E3727CDC

1. Electrical systems consist of a lot of harness and connectors, poor connection of terminals can cause various problems and damge of component.

2. Perform checking procedure as follows.

   1) Check damage of harness and terminals : Check terminals for contact resistance, corrosion and deformation.

   2) Check connecting condition of ECM and component connector : Check terminal seperation, damage of locking device and connecting condition between terminal and wiring.

   NOTE

   Disconnect the pin which requires checking at male connector and insert it to the terminal at female connector for checking connecting condition. (after checking, reconnect the pin at correct position.)

3. Is the problem found?

   YES

   ▶ Repair the trouble causing part and go to "Verification of Vehicle Repair".

   NO

   ▶ Go to "Power Circuit Inspection".

POWER CIRCUIT INSPECTION E11C8A07

1. Check power circuit voltage

   1) IG KEY "OFF", ENGINE "OFF"

   2) Disconnect Vehicle Speed Sensor connector.

   3) IG KEY "ON"

   4) Measure the voltage of VSS connector terminal 1.

Specification : 11.5V~13.0V

   5) Is the measured voltage within the specification?

   YES

   ▶ Go to "Signal Circuit Inspection".

   NO

   ▶ Repair E/R FUSE & RELAY BOX 10A ECU FUSE and related circuit, and go to "Verification of Vehicle Repair".

SIGNAL CIRCUIT INSPECTION E7B8598C

1. IG KEY "OFF", ENGINE "OFF"

2. Disconnect VSS connector.

3. IG KEY "ON"

4. Measure the voltage of VSS connector terminal 3.

Specification : 8.0V~11.5V

5. Is the measured voltage within the specification?

YES

▶ Go to "Ground Circuit Inspection".

NO

▶ Repair poor connection or open between VSS connector terminal 3 and ECM connector(C230-K) terminal 75, and go to "Verification of Vehicle Repair".

GROUND CIRCUIT INSPECTION E8B95D68

1. IG KEY "OFF", ENGINE "OFF"
2. Disconnect VSS connector.
3. IG KEY "ON"
4. Measure the voltage of VSS connector terminal 3. [TEST "A"]
5. Measure the voltage between VSS connector terminal 3 and 2. [TEST "B"]
   (terminal 3 : Check + prove , terminal 2 : Check - prove)

Specification : [TEST "A"] Voltage - [TEST "B"] Voltage = below 200mV

6. Is the measured voltage within the specification?

YES

▶ Go to "Component Inspection".

NO

▶ When "B" voltage is not detected : Repair open in ground circuit and go to "Verification of Vehicle Repair".
▶ When the voltage difference between "A" and "B" is above 200mV : Eliminate the causes of excessive resistance and go to "Verification of Vehicle Repair".

COMPONENT INSPECTION E9450E59

1. IG KEY "OFF", ENGINE "OFF".
2. Disconnect VSS connector.
3. Disconnect VSS and Driven gear assy'.
4. Check rotating state of VSS driven gear.
5. Connect VSS connector and IG KEY "ON".
6. Rotate Driven gear with hand.

Specification : Vehicle Speed Signal generates.

7. Does vehicle speed signal generate?

YES

▶ Go to "Verification of Vehicle Repair".

NO

▶ Replace vehicle speed sensor and go to "Verification of Vehicle Repair".

VERIFICATION OF VEHICLE REPAIR EF4A4254

After a repair, it is essential to verify that the fault is corrected.

1. After connecting Scantool select "DIAGNOSTIC TROUBLE CODES(DTCs)" mode.
2. Clear recorded DTC using Scantool.
3. Drive the vehicle within DTC "Enable conditions" in "General information".
4. After selecting "DIAGNOSTIC TROUBLE CODES(DTCs)" mode and check if DTC is recorded again.
5. Are any DTCs recorded ?

YES

▶ Go to the DTC guide of recorded NO. in Scantool.

NO

▶ System operates within specification.

DTC P0504 BRAKE SWITCH "A"/"B" CORRELATION

GENERAL DESCRIPTION E54A7148

Brake switch is connected to brake pedal and transmits brake operating state to ECM.When the output signal of APS is higher than what driver intended during driving (e.g. short to high voltage line in APS circuit, false signal), driver depresses brake pedal.Like this, if driver's decelerating intension is transmitted to ECM (break pedal depressed)when APS output voltage is high, ECM recognizes APS trouble and Limp Home mode is activated.At Limp Home mode, engine speed is fixed at approx. 1000RPM and engine power generation is limitted.Even at Limp home mode, if correct APS signal is detected, Limp Home mode is deactivated. Brake switch, which monitors proper operation of APS, is devided 1 and 2 for the fidelity of brake switch.

DTC DESCRIPTION EC47044E

When brake switch operates correctly, switch 1 is OFF and switch 2 is ON when releasing brake pedal, while switch 1 is ON and switch 2 is OFF when depressing brake pedal. thus when the signal from a switch is different from the other's, brake switch is in good condition. When the signal from a switch is same as the other's, brake switch is fault.

DTC DETECTING CONDITION E3E7B167

<table>
<tr><th>Item</th><th colspan="3">Detecting Condition</th><th>Possible Cause</th></tr>
<tr><td>DTC Strategy</td><td colspan="3">• Signal monitoring</td><td rowspan="6">• Brake switch component
• Abnormal brake pedal height
• Brake switch circuit</td></tr>
<tr><td>Enable Conditions</td><td colspan="3">• IG KEY "ON"</td></tr>
<tr><td>Threshold Value</td><td colspan="3">• Wiring(ECM C230-K terminal 38,80) open or short</td></tr>
<tr><td>Diagnostic Time</td><td colspan="3">• 180 sec.</td></tr>
<tr><td rowspan="4">Fail Safe</td><td>Fuel cut</td><td>NO</td><td rowspan="4">• Cruise control inhibited</td></tr>
<tr><td>EGR Off</td><td>NO</td></tr>
<tr><td>Fuel Limit</td><td>NO</td></tr>
<tr><td>Check Lamp</td><td>NO</td></tr>
</table>

SPECIFICATION EB1C8246

Condition	Brake Pedal Released		Brake Pedal Depressed	
switch state	Switch 1	Switch 2	Switch 1	Switch 2
	Opened	Closed	Closed	Opened

SCHEMATIC DIAGRAM EA387AD9

[CIRCUIT DIAGRAM]

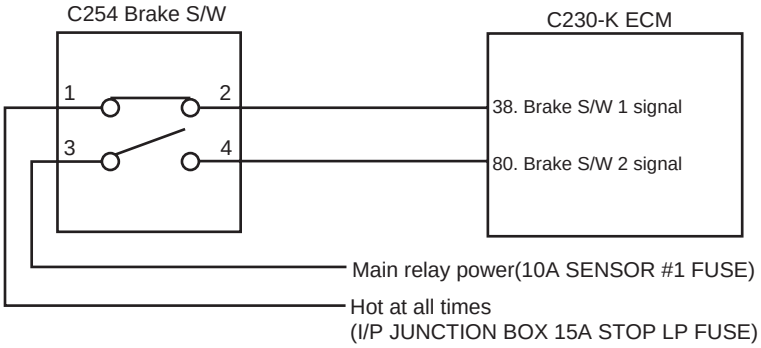

[CONNECTOR INFORMATION]

Terminal	Connected to	Function
1	15A STOP LP FUSE	Hot at all times
2	C230-K terminal 38	Brake S/W 1 signal
3	10A SENSOR #1 FUSE	Main relay power
4	C230-K terminal 80	Brake S/W 2 signal

[HARNESS CONNECTOR]

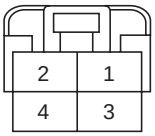

Brake S/W
C254

C230-A

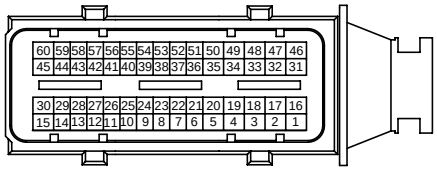

C230-K

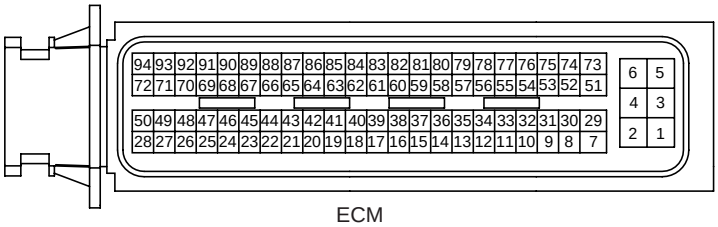

ECM

SCMFL6401L

SIGNAL WAVEFORM AND DATA EF4BE3CA

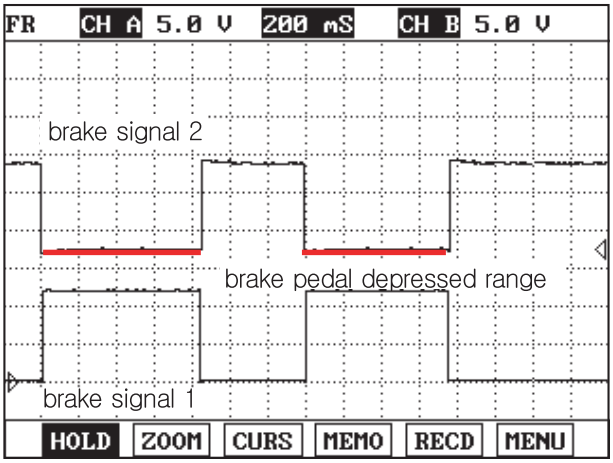

Fig.1

Fig.1) The waveform of brake signal 1 and 2 are measured simultaneously. Both waveforms are symmetrical.

LFIG313A

MONITOR SCANTOOL DATA E36704C3

1. Connect Scantool to Data Link Connector (DLC).
2. Warm engine up to normal operating temperature.
3. Turn "OFF" electrical devices and A/C.
4. Monitor "BRAKE SWITCH" and "REDUNDANT BRAKE SWITCH" parameter on the Scantool.

specification : When brake pedal is released : "BRAKE SWITCH" and "REDUNDANT BRAKE SWITCH" : OFF When brake pedal is depressed : "BRAKE SWITCH" and "REDUNDANT BRAKE SWITCH" : ON

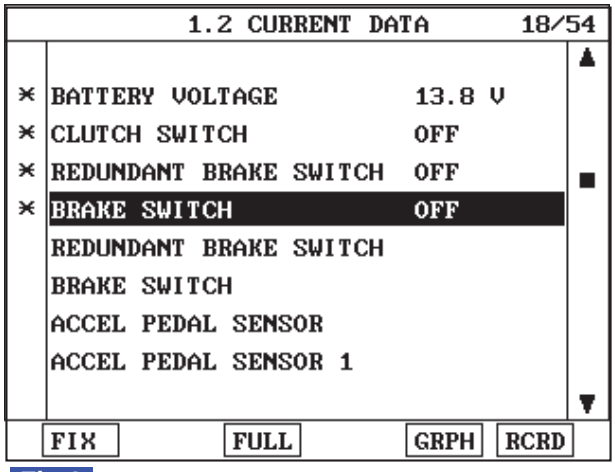

Fig.1

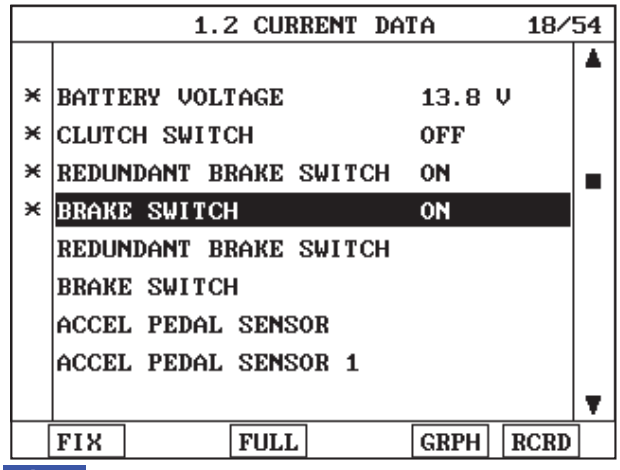

Fig.2

Fig.1) Data when brake switch(brake pedal) is deactivated(released) :
"BRAKE SWITCH" and "REDUNDANT BRAKE SWITCH" : OFF
Fig.2) Data when brake switch(brake pedal) is activated(depressed) :
"BRAKE SWITCH" and "REDUNDANT BRAKE SWITCH" : ON

LFIG314A

TERMINAL AND CONNECTOR INSPECTION E989CFB5

1. Electrical systems consist of a lot of harness and connectors, poor connection of terminals can cause various problems and damge of component.
2. Perform checking procedure as follows.
   1) Check damage of harness and terminals : Check terminals for contact resistance, corrosion and deformation.
   2) Check connecting condition of ECM and component connector : Check terminal seperation, damage of locking device and connecting condition between terminal and wiring.

NOTE

Disconnect the pin which requires checking at male connector and insert it to the terminal at female connector for checking connecting condition. (after checking, reconnect the pin at correct position.)

3. Is the problem found?

YES

▶ Repair the trouble causing part and go to "Verification of Vehicle Repair".

NO

▶ Go to "Power Circuit Inspection".

POWER CIRCUIT INSPECTION E369C6F6

1. Check brake switch 1 "HOT AT ALL TIMES"

   1) IG KEY "OFF", ENGINE "OFF".

   2) Disconnect brake switch connector.

   3) Measure the voltage of terminal 1 of brake switch connector.

Specification : 11.5V~13.0V

   4) Is the measured voltage within the specification?

   YES

   ▶ Go to "2.Check brake switch 2 main relay power" as follows.

   NO

   ▶ Repair I/P JUNCTION BOX 15A STOP LP FUSE and related circuit and go to "Verification of Vehicle Repair".

2. Check brake switch 2 main relay power

   1) IG KEY "OFF", ENGINE "OFF".

   2) Disconnect brake switch connector.

   3) IG KEY "ON".

   4) Measure the voltage of brake switch connector terminal 3.

Specification : 11.5V~13.0V

   5) Is the measured voltage within the specification?

   YES

   ▶ Go to "Signal Circuit Inspection".

   NO

   ▶ Repair E/R FUSE & RELAY BOX 10A SENSOR #1 FUSE and related circuit and go to "Verification of Vehicle Repair".

SIGNAL CIRCUIT INSPECTION EBEAD6E4

1. Check brake switch signal circuit voltage

   1) IG KEY "OFF", ENGINE "OFF".

   2) Disconnect ECM connector with brake switch connector connected.

   3) Disconnect E/R FUSE & RELAY BOX main relay, connect main relay terminal 1 and 5 using jump wire.

   4) Measure the voltage of ECM connector (C230-K) terminals 38 and 80 as depressing brake pedal.

SPECIFICATION :

	Brake Pedal Released	Brake Pedal Depressed
Brake switch 1 (terminal 38)	0.0V~0.1V	11.5V~13.0V
Brake switch 2 (terminal 80)	11.5V~13.0V	0.0V~0.1V

5) Is the measured voltage within the specification?

YES

▶ Go to "2. Check open in signal circuit".

NO

▶ Go to "Component Inspection".

2. Check open in signal circuit

1) IG KEY "OFF", ENGINE "OFF".

2) Disconnect brake switch connector and ECM connector.

3) Check continuity between brake switch connector terminal 2 and ECM connector (C230-K) terminal 38. (brake switch 1 circuit)

4) Check continuity between brake switch connector terminal 4 and ECM connector (C230-K) terminal 80. (brake switch 2 circuit)

specification : Continuity (below 1.0Ω)

5) Is the measured resistance within the specification?

YES

▶ Repair short in signal circuit and go to "Verification of Vehicle Repair".

NO

▶ Repair open in signal circuit and go to "Verification of Vehicle Repair".

COMPONENT INSPECTION E5469650

1. IG KEY "OFF", ENGINE "OFF".

2. Disconnect brake switch connector.

3. Check continuity between brake switch component terminal 1and 2 as depressing brake pedal. (brake switch 1)

4. Check continuity between brake switch component terminal 3and 4 as depressing brake pedal. (brake switch 2)

SPECIFICATION :

Brake Pedal Released		Brake Pedal Depressed	
Switch 1	**Switch 2**	**Switch 1**	**Switch 2**
Discontinuity	Continuity	Continuity	Discontinuity

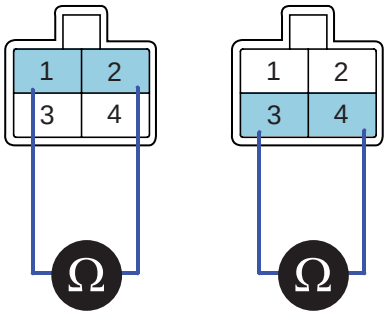

EGNG004B

5. Does brake switch operate correctly?

YES

▶ Go to "Verification of Vehicle Repair".

NO

▶ Unless any problem is detected after checking height of brake pedal, replace brake switch component and go to "Verification of Vehicle Repair".

VERIFICATION OF VEHICLE REPAIR E38D2612

After a repair, it is essential to verify that the fault is corrected.

1. After connecting Scantool select "DIAGNOSTIC TROUBLE CODES(DTCs)" mode.
2. Clear recorded DTC using Scantool.
3. Drive the vehicle within DTC "Enable conditions" in "General information".
4. After selecting "DIAGNOSTIC TROUBLE CODES(DTCs)" mode and check if DTC is recorded again.
5. Are any DTCs recorded ?

YES

▶ Go to the DTC guide of recorded NO. in Scantool.

NO

▶ System operates within specification.

DTC P0532 A/C REFRIGERANT PRESSURE SENSOR "A" CIRCUIT LOW INPUT

COMPONENT LOCATION E567B01B

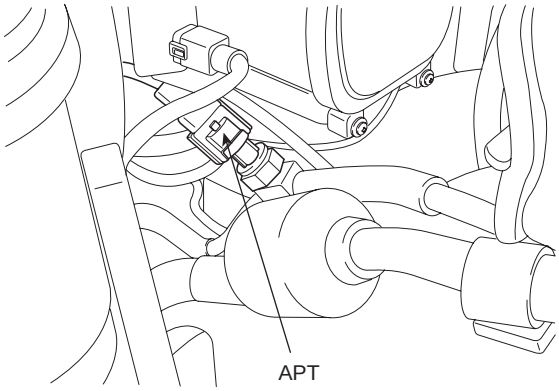

SCMFL6506L

GENERAL DESCRIPTION E0804A39

A/C pressure transducer consists of piezoelectric element and it detects aircon refrigerant pressure. Piezoeletric type is more advantageous to obtain linear data of pressure than existing switch type. Thus, optimum control of aircon compressor and fan is realized and improved fuel efficiency follows with it.

DTC DESCRIPTION E1FD20AE

P0532 is set when the voltage below 0.18V - minimum voltage of A/C pressure transducer signal - is detected for more than 0.6 sec.. This code is due to 1) open in power circuit or 2) open or short to ground in signal circuit of A/C pressure transducer.

DTC DETECTING CONDITION E4D0AD11

<table>
<tr><th>Item</th><th colspan="3">Detecting Condition</th><th>Possible Cause</th></tr>
<tr><td>DTC Strategy</td><td colspan="3">• Voltage monitoring</td><td rowspan="6">• A/C pressure transducer circuit
• A/C pressure transducer component</td></tr>
<tr><td>Enable Conditions</td><td colspan="3">• IG KEY "ON"</td></tr>
<tr><td>Threshold Value</td><td colspan="3">• When output voltage is below the minimum value (below 0.18V)</td></tr>
<tr><td>Diagnostic Time</td><td colspan="3">• 0.6 sec.</td></tr>
<tr><td rowspan="4">Fail Safe</td><td>Fuel cut</td><td>NO</td><td rowspan="4">• A/C pressure fixed at 50 hPa</td></tr>
<tr><td>EGR Off</td><td>NO</td></tr>
<tr><td>Fuel Limit</td><td>NO</td></tr>
<tr><td>Check Lamp</td><td>NO</td></tr>
</table>

SPECIFICATION EF7D07B1

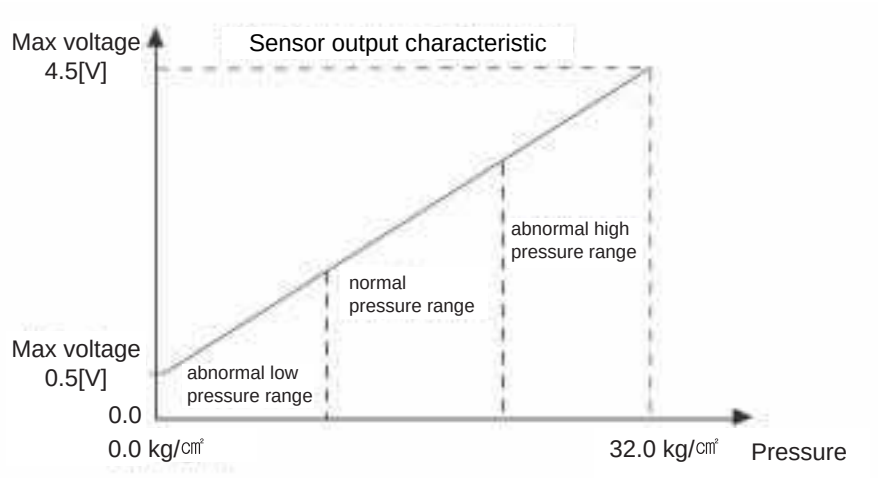

LFIG438A

SCHEMATIC DIAGRAM EA3F8DFC

[CIRCUIT DIAGRAM]

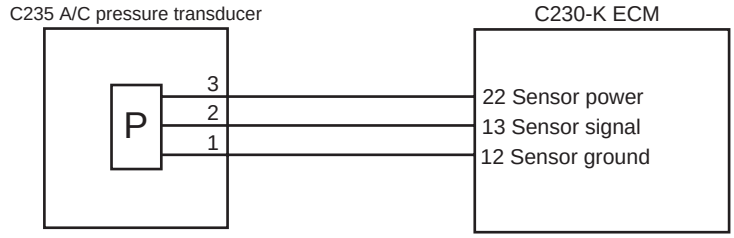

[CONNECTOR INFORMATION]

Terminal	Connected to	Function
1	C230-K terminal 12	Sensor ground
2	C230-K terminal 13	Sensor signal
3	C230-K terminal 22	Sensor power

[HARNESS CONNECTOR]

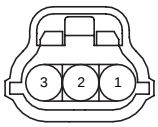

A/C pressure transducer
C235

C230-A

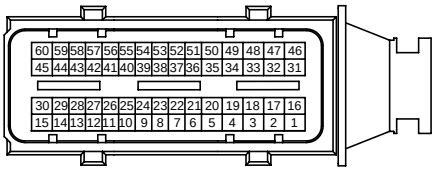

C230-K

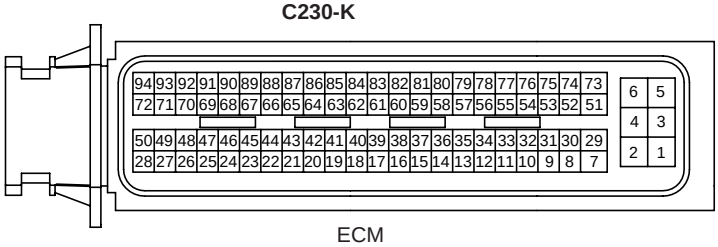

ECM

SCMFL6402L

SIGNAL WAVEFORM AND DATA EA9D3A88

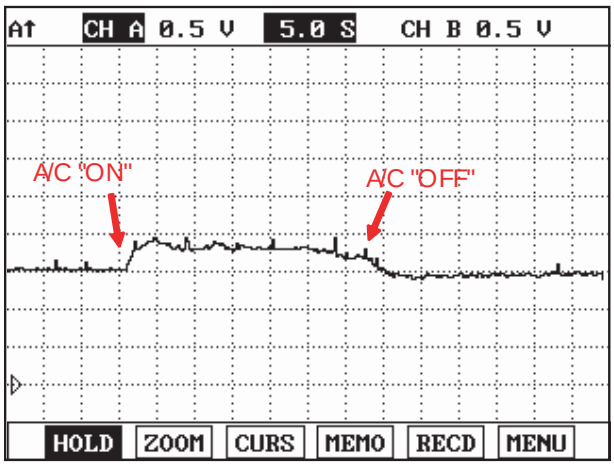

Fig.1

Fig.1) Waveform of A/C pressure transducer in accordance with aircon operation.(aircon compressor operation)

LFIG440A

NOTE

Output signal(voltage) changes in accordance with the amount of refrigerant and the change of weather. Check if normal pressure change occurs in accordance with aircon compressor operation at normal pressure range shown in "Specification".

MONITOR SCANTOOL DATA E0034705

1. Connect Scantool to Data Link Connector (DLC).
2. Warm engine up to normal operating temperature.
3. Turn "OFF" electrical devices and A/C.
4. Monitor " A/C PRESSURE SENSOR " parameter on the scantool.

Specification : A/C "OFF" : 1200mV~1800mV A/C "ON" : higher than A/C "OFF" pressure by more than 500mV

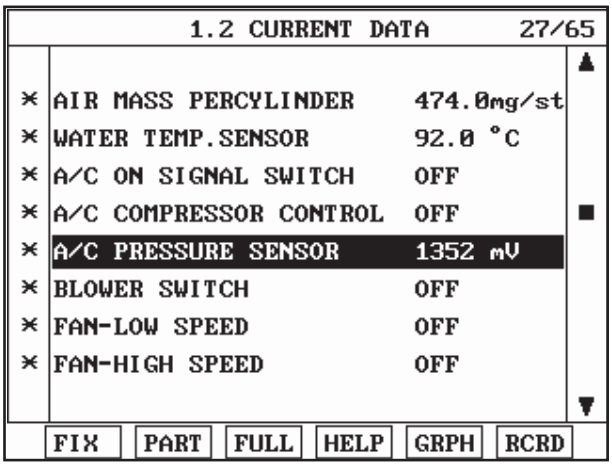

Fig.1

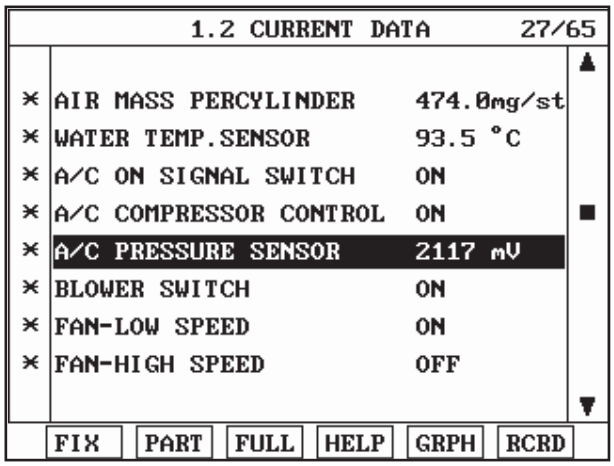

Fig.2

Fig.1) Data at idle and aircon "OFF", Aircon pressure sensor output voltage is 1352mV.
Fig.2) Data at idle and aircon "ON". Aircon pressure sensor output voltage increases as aircon compressor operates.
※ A/C Pressure sensor transducer voltage varies too much, therefore do not concern too much about the figure instead, check the rising tendancy of A/C Pressure transducer.

SCMFL6297L

TERMINAL AND CONNECTOR INSPECTION E93E9DD3

1. Electrical systems consist of a lot of harness and connectors, poor connection of terminals can cause various problems and damge of component.

2. Perform checking procedure as follows.

   1) Check damage of harness and terminals : Check terminals for contact resistance, corrosion and deformation.

   2) Check connecting condition of ECM and component connector : Check terminal seperation, damage of locking device and connecting condition between terminal and wiring.

   NOTE

   Disconnect the pin which requires checking at male connector and insert it to the terminal at female connector for checking connecting condition. (after checking, reconnect the pin at correct position.)

3. Is the problem found?

   YES

   ▶ Repair the trouble causing part and go to "Verification of Vehicle Repair".

   NO

   ▶ Go to "Power Circuit Inspection".

POWER CIRCUIT INSPECTION E99A2654

1. IG KEY "OFF", ENGINE "OFF"

2. Disconnect A/C pressure transducer connector.

3. IG KEY "ON"

4. Measure the voltage of A/C pressure transducer terminal 3.

Specification : 4.8V~5.1V

5. Is the measured voltage within the specification ?

YES

▶ Go to "Signal Circuit Inspection".

NO

▶ Repair open in power circuit of A/C pressure transducer and go to "Verification of Vehicle Repair".
[Check open between aircon pressure sensor connector terminal 3 and ECM connector(C230-K) terminal 22.]

SIGNAL CIRCUIT INSPECTION EA07A4BE

1. Check open in signal circuit

   1) IG KEY "OFF", ENGINE "OFF"

   2) Disconnect A/C pressure transducer connector and ECM connector.

   3) Check continuity between A/C pressure transducer connector terminal 2 and ECM connector (C230-K) terminal 13.

Specification : Continuity (below 1.0Ω)

   4) Is the measured resistance within the specification?

   YES

   ▶ Go to "2. Check short to ground in signal circuit" as follows.

   NO

   ▶ Repair open in signal circuit and go to "Verification of Vehicle Repair".

2. Check short to ground in signal circuit

   1) IG KEY "OFF", ENGINE "OFF"

   2) Disconnect A/C pressure transducer connector and ECM connector.

   3) Check continuity between A/C pressure transducer connector terminal 2 and chassis ground.

Specification : Discontinuity (Infinite Ω)

   4) Is the measured resistance within the specification?

   YES

   ▶ Go to "Component Inspection".

   NO

   ▶ Repair short to ground in signal circuit and go to "Verification of Vehicle Repair".

COMPONENT INSPECTION E3EB568E

1. Aircon pressure sensor visual inspection
   1) IG KEY "OFF", ENGINE "OFF"
   2) Disconnect A/C pressure transducer connector.
   3) Check if corrosion and contamination at aircon pressure sensor terminal is detected.
   4) Check aircon pressure sensor connecting torque and aircon refrigerant leakage.
   5) Does any problem is detected at aircon pressure sensor?

      YES

      ▶ Replace aircon pressure sensor and go to "Verification of Vehicle Repair".

      NO

      ▶ Go to "2. Check A/C pressure transducer waveform " as follows.
2. Check A/C pressure transducer waveform
   1) IG KEY "OFF", ENGINE "OFF"
   2) Connect A/C pressure transducer connector.
   3) Connect oscilloscope to A/C pressure transducer connector terminal 2.
   4) Monitor aircon pressure sensor waveform at idle as turning Aircon "ON".

Specification : Refer to "Signal waveform & data"

   5) Is A/C pressure transducer waveform outputted correctly?

      YES

      ▶ Go to "Verification of Vehicle Rapair".

      NO

      ▶ Replace A/C pressure transducer and go to "Verification of Vehicle Repair".

VERIFICATION OF VEHICLE REPAIR E152C1B2

After a repair, it is essential to verify that the fault is corrected.

1. After connecting Scantool select "DIAGNOSTIC TROUBLE CODES(DTCs)" mode.
2. Clear recorded DTC using Scantool.
3. Drive the vehicle within DTC "Enable conditions" in "General information".
4. After selecting "DIAGNOSTIC TROUBLE CODES(DTCs)" mode and check if DTC is recorded again.
5. Are any DTCs recorded ?

   YES

▶ Go to the DTC guide of recorded NO. in Scantool.

NO

▶ System operates within specification.

DTC P0533 A/C REFRIGERANT PRESSURE SENSOR "A" CIRCUIT HIGH INPUT

COMPONENT LOCATION E70CA3EA

Refer to DTC P0532.

GENERAL DESCRIPTION ECFA1EF0

Refer to DTC P0532.

DTC DESCRIPTION E209BD48

P0533 is set when the voltage above 4.7V - maximum voltage of A/C pressure transducer signal - is detected for more than 0.6 sec.. This code is due to short to battery in signal circuit or open in ground circuit of A/C pressure transducer.

DTC DETECTING CONDITION E0598DE6

<table>
<tr><th>Item</th><th colspan="3">Detecting Condition</th><th>Possible Cause</th></tr>
<tr><td>DTC Strategy</td><td colspan="3">• Voltage monitoring</td><td rowspan="6">• A/C pressure transducer circuit
• A/C pressure transducer component</td></tr>
<tr><td>Enable Conditions</td><td colspan="3">• IG KEY "ON"</td></tr>
<tr><td>Threshold Value</td><td colspan="3">• When output signal is above the maximum value (above 4.7V)</td></tr>
<tr><td>Diagnostic Time</td><td colspan="3">• 0.6 sec.</td></tr>
<tr><td rowspan="4">Fail Safe</td><td>Fuel cut</td><td>NO</td><td rowspan="4">• A/C pressure fixed at 50 hPa</td></tr>
<tr><td>EGR Off</td><td>NO</td></tr>
<tr><td>Fuel Limit</td><td>NO</td></tr>
<tr><td>Check Lamp</td><td>NO</td></tr>
</table>

SPECIFICATION EC722FD3

Refer to DTC P0532.

SCHEMATIC DIAGRAM E19C1803

Refer to DTC P0532.

SIGNAL WAVEFORM AND DATA EAE45C99

Refer to DTC P0532.

MONITOR SCANTOOL DATA E0380EF9

Refer to DTC P0532.

TERMINAL AND CONNECTOR INSPECTION E317A702

Refer to DTC P0532.

POWER CIRCUIT INSPECTION E83F3A58

1. IG KEY "OFF", ENGINE "OFF"
2. Disconnect A/C pressure transducer connector.
3. IG KEY "ON"
4. Measure the voltage of A/C pressure transducer terminal 3.

Specification : 4.8V~5.1V

5. Is the measured voltage within the specification ?

YES

▶ Go to "Signal Circuit Inspection".

NO

▶ Repair open in power circuit of A/C pressure transducer and go to "Verification of Vehicle Repair".
[Check open between A/C Pressure Sensor connector terminal 3 and ECM connector(C230-K) terminal 22.]

SIGNAL CIRCUIT INSPECTION EBEDE63B

1. Check short to battery in signal circuit
   1) IG KEY "OFF", ENGINE "OFF"
   2) Disconnect A/C pressure transducer connector and ECM connector.
   3) IG KEY "ON"
   4) Measure the voltage of A/C pressure transducer terminal 2.

Specification : 0.0V~0.1V

   5) Is abnormal voltage detected in the circuit with both connector disconnected?

YES

▶ Repair short to battery and go to "Verification of Vehicle Repair".

NO

▶ Go to "Ground Circuit Inspection".

GROUND CIRCUIT INSPECTION E47E4DDF

1. IG KEY "OFF", ENGINE "OFF"
2. Disconnect A/C pressure transducer connector.
3. IG KEY "ON"
4. Measure the voltage of A/C pressure transducer terminal 3. [TEST "A"]
5. Measure the voltage of A/C pressure transducer terminal 3 and terminal 1. [TEST "B"]

(terminal 3: Check + prove , terminal 1 : Check - prove)

Specification : the voltage difference between TEST "A" and TEST "B" is within 200mV

6. Is the measured voltage within the specification?

YES

▶ Go to "Component Inspection"

NO

▶ When "B" voltage is not detected : Repair open in ground circuit and go to "Verification of Vehicle Repair".
▶ When the voltage difference between "A" and "B" is above 200mV : Eliminate the causes of excessive resistance and go to "Verification of Vehicle Repair".

COMPONENT INSPECTION EDAC38F3

1. Aircon pressure sensor visual inspection

   1) IG KEY "OFF", ENGINE "OFF"

   2) Disconnect A/C pressure transducer connector.

   3) Check if corrosion and contamination at aircon pressure sensor terminal is detected.

   4) Check aircon pressure sensor connecting torque and aircon refrigerant leakage.

   5) Does any problem is detected at aircon pressure sensor?

      YES

      ▶ Replace aircon pressure sensor and go to "Verification of Vehicle Repair".

      NO

      ▶ Go to "2. Check A/C pressure transducer waveform " as follows.

2. Check A/C pressure transducer waveform

   1) IG KEY "OFF", ENGINE "OFF"

   2) Connect A/C pressure transducer connector.

   3) Connect oscilloscope to A/C pressure transducer connector terminal 2.

   4) Monitor aircon pressure sensor waveform at idle as turning Aircon "ON".

Specification : Refer to "Signal waveform & data"

   5) Is A/C pressure transducer waveform outputted correctly?

      YES

      ▶ Go to "Verification of Vehicle Rapair".

      NO

▶ Replace A/C pressure transducer and go to "Verification of Vehicle Repair".

VERIFICATION OF VEHICLE REPAIR EDCBC152

Refer to DTC P0532.

DTC P0562 SYSTEM VOLTAGE LOW

COMPONENT LOCATION EE4FD5BD

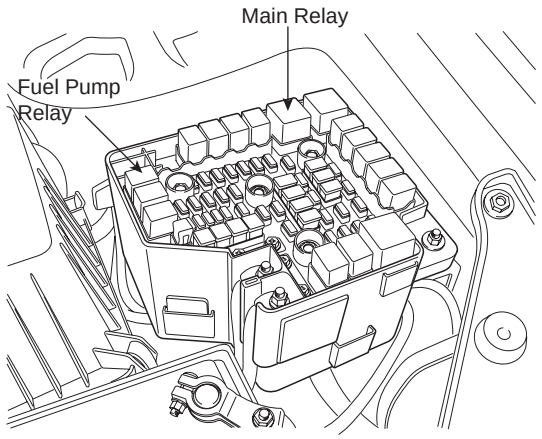

SCMFL6507L

GENERAL DESCRIPTION E927203F

Normally, battery voltage fluctuates from 11.5V to 14.5V. Especially at cranking, voltage can drop to 9.8V. Therefore, actuators which require 12V power supply meet fluctuation of power by 5V.A little change of voltage supply can shift controlling characteristic of actuators, such as injectors, RPCV and EGR actuator, which should be controlled delicately. To correct controlling characteristic change arrised from voltage fluctuation, ECM performs actuator operating correction according to voltage change as detecting battery voltage change.

DTC DESCRIPTION ED7E01EF

P0562 is set when battery voltage below 5.8V is detected for more than 5 sec. Check charging system.(charging circuit, alternator component)

▶ ECM senses battery voltage as monitoring the voltages in ECM(C230-K) connector terminal 1,3,5 which are transmitted from main relay.

DTC DETECTING CONDITION EF9B8A2E

<table>
<tr><th>Item</th><th colspan="3">Detecting Condition</th><th>Possible Cause</th></tr>
<tr><td>DTC Strategy</td><td colspan="3">• Voltage monitoring</td><td rowspan="6">• Charging circuit
• Alternator component</td></tr>
<tr><td>Enable Conditions</td><td colspan="3">• IG KEY "ON"</td></tr>
<tr><td>Threshold Value</td><td colspan="3">• when battery voltage is below 5.8V</td></tr>
<tr><td>Diagnostic Time</td><td colspan="3">• 5 sec.</td></tr>
<tr><td rowspan="4">Fail Safe</td><td>Fuel cut</td><td>NO</td><td rowspan="4">• Battery voltage is considered as 12V.</td></tr>
<tr><td>EGR Off</td><td>NO</td></tr>
<tr><td>Fuel Limit</td><td>NO</td></tr>
<tr><td>Check Lamp</td><td>NO</td></tr>
</table>

SCHEMATIC DIAGRAM E0138C7C

[CIRCUIT DIAGRAM]

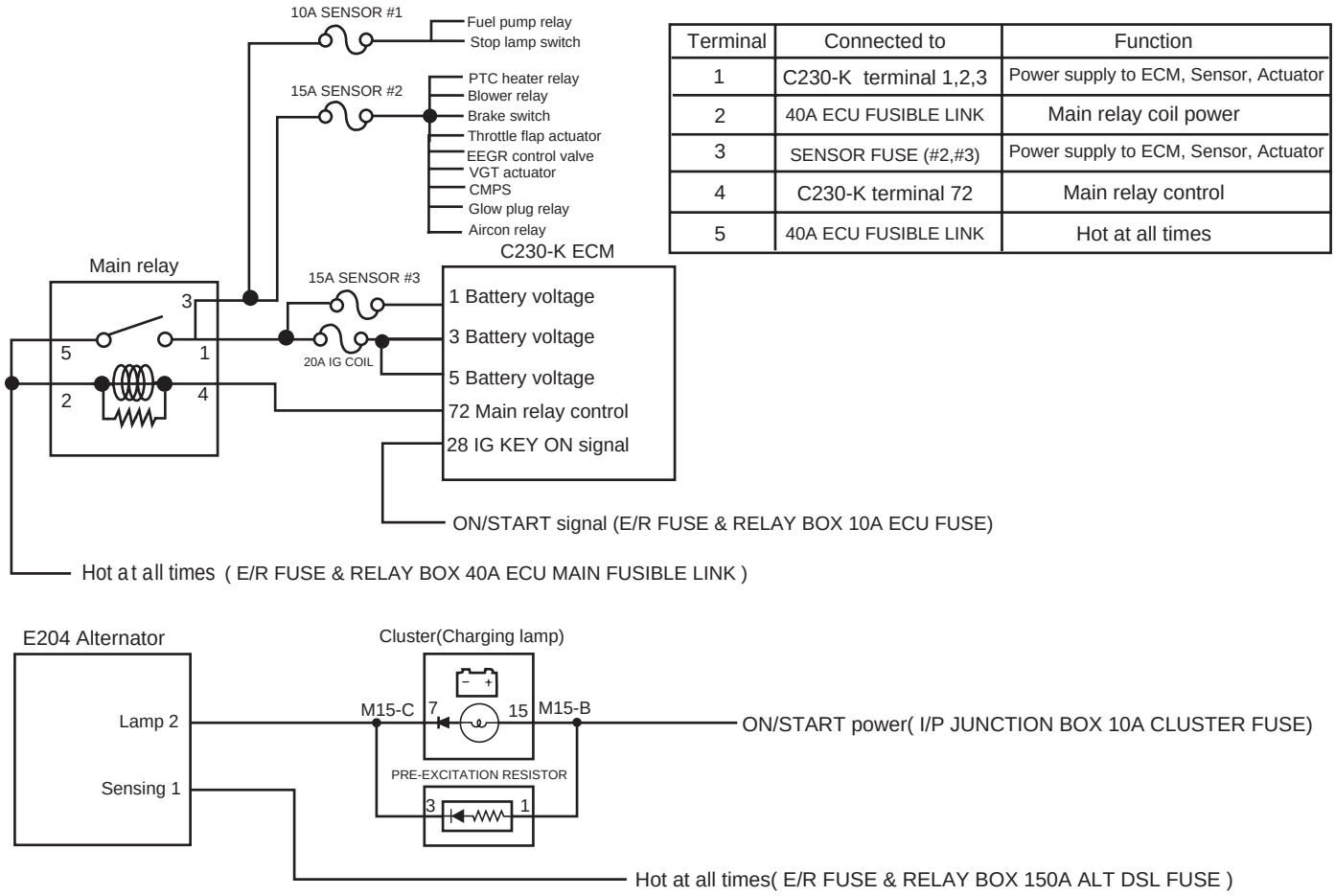

[CONNECTOR INFORMATION]

Terminal	Connected to	Function
1	C230-K terminal 1,2,3	Power supply to ECM, Sensor, Actuator
2	40A ECU FUSIBLE LINK	Main relay coil power
3	SENSOR FUSE (#2,#3)	Power supply to ECM, Sensor, Actuator
4	C230-K terminal 72	Main relay control
5	40A ECU FUSIBLE LINK	Hot at all times

[HARNESS CONNECTOR]

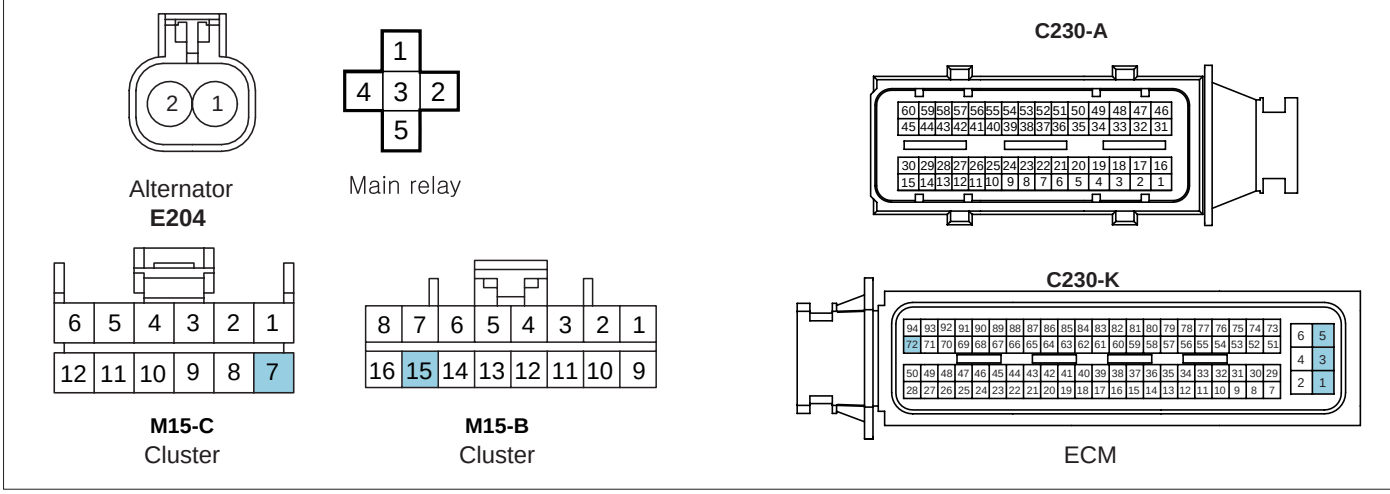

SCMFL6403L

SIGNAL WAVEFORM AND DATA EA8B40D5

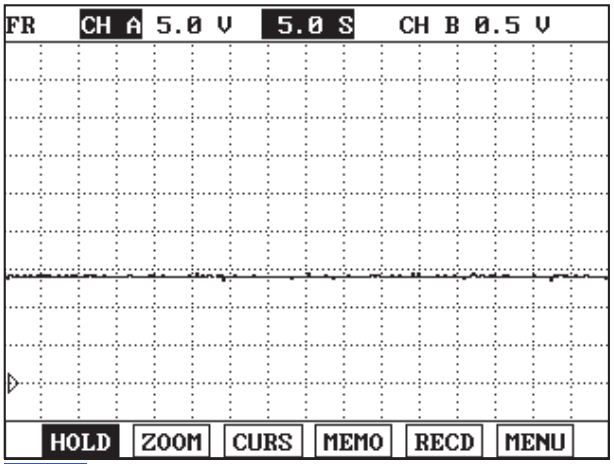

Fig.1

Fig.1) This is alternator charging waveform during engine running. Check if battery voltage drops dramatically as turning on the electrical device such as head lamp, defogger and A/C.

LFIG321A

MONITOR SCANTOOL DATA EB16879A

1. Connect Scantool to Data Link Connector (DLC).
2. Warm engine up to normal operating temperature.
3. Turn "OFF" electrical devices and A/C.
4. Monitor "BATTERY VOLTAGE" parameter on the Scantool.

specification :12.5V~14.5V at idle without any load(800RPM)

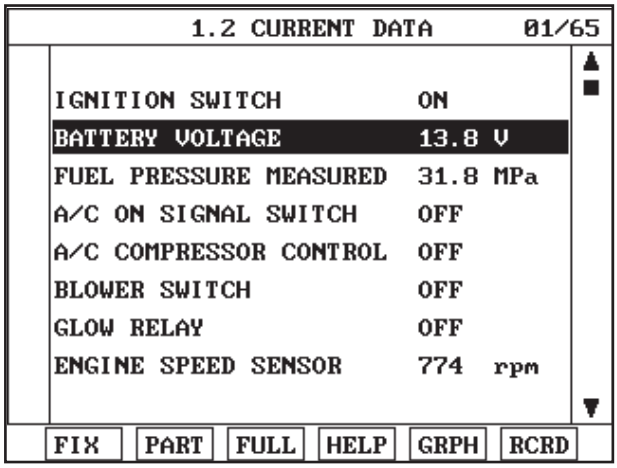

Fig.1

Fig 1) "BATTERY VOLTAGE" data at idle after warming engine up.
Check if the symptoms listed below occur as checking if battery voltage drops dramatically when turning on the electrical devices.

SCMFL6302L

※ The vehicles with the alternator of poor charging efficiency
1. Lamps are dim at idle, while lamps are bright at acceleration.
2. Intermitently RPM drops excessively or engine shut down at low RPM close to idle state at times.

3. Smooth cranking happens rarely. (Warning lamps in cluster turn dimmer excessively at cranking and poor crankinghappen.)
4. Charging lamp turns on during driving.

TERMINAL AND CONNECTOR INSPECTION EB6748B5

1. Electrical systems consist of a lot of harness and connectors, poor connection of terminals can cause various problems and damge of component.

2. Perform checking procedure as follows.

   1) Check damage of harness and terminals : Check terminals for contact resistance, corrosion and deformation.

   2) Check connecting condition of ECM and component connector : Check terminal seperation, damage of locking device and connecting condition between terminal and wiring.

   NOTE

   Disconnect the pin which requires checking at male connector and insert it to the terminal at female connector for checking connecting condition. (after checking, reconnect the pin at correct position.)

3. Is the problem found?

   YES

   ▶ Repair the trouble causing part and go to "Verification of Vehicle Repair".

   NO

   ▶ Go to "Power Circuit Inspection".

POWER CIRCUIT INSPECTION E24A7776

1. Check power supply in alternator connector

   1) IG KEY "ON", Turn engine "OFF".

   2) Disconnect alternator connector.

   3) Measure the voltage of terminal 2 of alternator connector.

Specification : 10.5V~12.0V

   4) Is the measured voltage within the specification?

   YES

   ▶ Go to "2. Check charging lamp operation".

   NO

   ▶ When no voltage is detected at terminal 2.
   ▶ Check charging lamp on cluster and charging lamp resistor and repair the open E/R FUSE & RELAY BOX 10A Alternator FUSE related circuit and go to "Verification of Vehicle Repair".

2. Check charging lamp operation

   1) IG KEY "ON", ENGINE "OFF".

2) Disconnect alternator connector.

3) Ground alternator connector terminal 2 to chassis ground using jump wire.

specification : charging lamp "ON" when grounded to chassis ground.

4) Does charging lamp turn ON?

YES

▶ Go to "3.Check voltage drop of aternator B+ cable".

NO

▶ Replace lamp and go to "Verification of Vehicle Repair".

3. Check voltage drop of aternator B+ cable

1) IG KEY "ON", Turn engine "ON".

2) Measure the voltage difference between alternator B+ terminal and battery + terminal.
(connect + terminal of multimeter to alternator B+ and connect - terminal of multimeter to battery +terminal.)

specification : below 0.2V (below 200mV)

3) Is the measured voltage within the specification? (Is the voltage drop in alternator B+ cable normal?)

YES

▶ Go to "Component Inspection".

NO

▶ After checking corrosion and deformation of alternator B+ cable and replace it if needed and go to "Verification of Vehicle Repair".

COMPONENT INSPECTION E732F286

1. IG KEY "OFF", ENGINE "OFF".
2. Check belt tension which operates alternator .
3. Check battery terminal and fusible link, poor connection or corrosion of alternator B+ terminal.
4. Turn Engien "ON".
5. Operate the electrical device such as head lamp,defroster and blower motor.
6. Check battery voltage at above 2000 RPM.

Specification : 12.5V~14.5V

7. Is the measured voltage within the specification?

YES

▶ Alternator is performing within the specification.

NO

▶ Replace alternator and go to "Verification of Vehicle Repair" .

VERIFICATION OF VEHICLE REPAIR E974E350

After a repair, it is essential to verify that the fault is corrected.

1. After connecting Scantool select "DIAGNOSTIC TROUBLE CODES(DTCs)" mode.
2. Clear recorded DTC using Scantool.
3. Drive the vehicle within DTC "Enable conditions" in "General information".
4. After selecting "DIAGNOSTIC TROUBLE CODES(DTCs)" mode and check if DTC is recorded again.
5. Are any DTCs recorded ?

YES

▶ Go to the DTC guide of recorded NO. in Scantool.

NO

▶ System operates within specification.

DTC P0563 SYSTEM VOLTAGE HIGH

COMPONENT LOCATION E35E17B0

Refer to DTC P0562.

GENERAL DESCRIPTION EB36C59A

Refer to DTC P0562.

DTC DESCRIPTION E09C125F

P0563 is set when battery voltage above 17.3V is detected for more than 5 sec.. Check alternator component. (over-charging of alternator)
▶ ECM senses battery voltage as monitoring the voltages in ECM(C230-K)connector terminal 1,3,5 which are transmitted from main relay.

DTC DETECTING CONDITION E6F65752

<table>
<tr><th>Item</th><th colspan="3">Detecting Condition</th><th>Possible Cause</th></tr>
<tr><td>DTC Strategy</td><td colspan="3">• Voltage monitoring</td><td rowspan="5">• Charging circuit
• Alternator component</td></tr>
<tr><td>Enable Conditions</td><td colspan="3">• IG KEY "ON"</td></tr>
<tr><td>Threshold Value</td><td colspan="3">• when battery voltage is above 17.3V</td></tr>
<tr><td>Diagnostic Time</td><td colspan="3">• 5 sec.</td></tr>
<tr><td rowspan="4">Fail Safe</td><td>Fuel cut</td><td>NO</td><td rowspan="4">• Battery voltage is considered as 12V.</td></tr>
<tr><td>EGR Off</td><td>NO</td></tr>
<tr><td>Fuel Limit</td><td>NO</td></tr>
<tr><td>Check Lamp</td><td>NO</td></tr>
</table>

SCHEMATIC DIAGRAM E64CC9F4

Refer to DTC P0562.

SIGNAL WAVEFORM AND DATA E26DF378

Refer to DTC P0562.

MONITOR SCANTOOL DATA EEBC41B1

Refer to DTC P0562.

TERMINAL AND CONNECTOR INSPECTION E02E898A

Refer to DTC P0562.

POWER CIRCUIT INSPECTION E844356A

1. Check power supply in alternator connector

1) IG KEY "ON", Turn engine "OFF".

2) Disconnect alternator connector.

3) Measure the voltage of terminal 2 of alternator connector.

Specification : 10.5V~12.0V

4) Is the measured voltage within the specification?

YES

▶ Go to "2. Check charging lamp operation".

NO

▶ When no voltage is detected at terminal 2.
▶ Check charging lamp on cluster and charging lamp resistor and repair the open E/R FUSE & RELAY BOX 10A Alternator FUSE related circuit and go to "Verification of Vehicle Repair".

2. Check charging lamp operation

1) IG KEY "ON", ENGINE "OFF".

2) Disconnect alternator connector.

3) Ground alternator connector terminal 2 to chassis ground using jump wire.

specification : charging lamp "ON" when grounded to chassis ground.

4) Does charging lamp turn ON?

YES

▶ Go to "3.Check voltage drop of aternator B+ cable".

NO

▶ Replace lamp and go to "Verification of Vehicle Repair".

3. Check voltage drop of aternator B+ cable

1) IG KEY "ON", Turn engine "ON".

2) Measure the voltage difference between alternator B+ terminal and battery + terminal.
(connect + terminal of multimeter to alternator B+ and connect - terminal of multimeter to battery +terminal.)

specification : below 0.2V (below 200mV)

3) Is the measured voltage within the specification? (Is the voltage drop in alternator B+ cable normal?)

YES

▶ Go to "Component Inspection".

NO

▶ After checking corrosion and deformation of alternator B+ cable and replace it if needed and go to "Verification of Vehicle Repair".

COMPONENT INSPECTION E8D527E5

1. IG KEY "OFF", ENGINE "OFF".
2. Check belt tension which operates alternator .
3. Check battery terminal and fusible link, poor connection or corrosion of alternator B+ terminal.
4. Turn Engien "ON".
5. Operate the electrical device such as head lamp,defroster and blower motor.
6. Check battery voltage at above 2000 RPM.

Specification : 12.5V~14.5V

7. Is the measured voltage within the specification?

YES

▶ Alternator is performing within the specification.

NO

▶ Replace alternator and go to "Verification of Vehicle Repair" .

VERIFICATION OF VEHICLE REPAIR E450729F

Refer to DTC P0562.

DTC P0602 EEPROM-PROGRAMING ERROR

GENERAL DESCRIPTION E16ACCF3

ECM is activated by power supply. Signals from several sensors, such as CKPS and APS, is inputted to ECM. Comparing inputted signals with control LOGIC saved at micro controller and EEPROM, ECM controlls engine as actuating injectors, solenoids and relays. To guarantee accurate control, ECM performs SELF TEST, DIAGNOSIS of several sensors and actuators. And if serious trouble which affects vehicle performance occurrs, ECM sets DTCs.At certain cases, ECM shuts down whole systems in order to prevent dangerous situation due to incorrect control.

DTC DESCRIPTION EF088B88

P0602 is set when data writing on EEPROM inside of ECM is impossible.This code is due to the failure of ECM(ECM hardware failure).

DTC DETECTING CONDITION EC8A9145

<table>
<tr><th>Item</th><th colspan="3">Detecting Condition</th><th>Possible Cause</th></tr>
<tr><td>DTC Strategy</td><td colspan="3">• EEPROM monitorting</td><td rowspan="6">• ECM component failure</td></tr>
<tr><td>Enable Conditions</td><td colspan="3">• Engine running</td></tr>
<tr><td>Threshold Value</td><td colspan="3">• Communication error between control modules inside of ECM
• Hardware related error control
• Timer(inside of ECM) monitoring error
• CPU error
• ECM hardware error</td></tr>
<tr><td>Diagnostic Time</td><td colspan="3">• Immediately</td></tr>
<tr><td rowspan="4">Fail Safe</td><td>Fuel cut</td><td>YES</td><td rowspan="4"></td></tr>
<tr><td>EGR Off</td><td>NO</td></tr>
<tr><td>Fuel Limit</td><td>NO</td></tr>
<tr><td>Check Lamp</td><td>NO</td></tr>
</table>

COMPONENT INSPECTION E64AC9F1

1. ECM Component Inspection

   1) IG KEY "OFF", ENGINE "OFF".

   2) Disconnect ECM.

   3) Replace ECM, check if abnormal operations disappear.

   4) If problems are corrected, replace ECM.

NOTE

Input injector IQA data(7 letters) using scantool at replacing ECM.
For immobilizer applied vehicle, input pin code.

VERIFICATION OF VEHICLE REPAIR E2C1C9FF

After a repair, it is essential to verify that the fault is corrected.

1. After connecting Scantool select "DIAGNOSTIC TROUBLE CODES(DTCs)" mode.
2. Clear recorded DTC using Scantool.
3. Drive the vehicle within DTC "Enable conditions" in "General information".
4. After selecting "DIAGNOSTIC TROUBLE CODES(DTCs)" mode and check if DTC is recorded again.
5. Are any DTCs recorded ?

YES

▶ Go to the DTC guide of recorded NO. in Scantool.

NO

▶ System operates within specification.

DTC P0605 INTERNAL CONTROL MODULE READ ONLY MEMORY(ROM) ERROR

GENERAL DESCRIPTION E7A43BB4

ECM is activated by power supply. Signals from several sensors, such as CKPS and APS, is inputted to ECM. Comparing inputted signals with control LOGIC saved at micro controller and EEPROM, ECM controlls engine as actuating injectors, solenoids and relays. To guarantee accurate control, ECM performs SELF TEST, DIAGNOSIS of several sensors and actuators. And if serious trouble which affects vehicle performance occurrs, ECM sets DTCs.At certain cases, ECM shuts down whole systems in order to prevent dangerous situation due to incorrect control.

DTC DESCRIPTION EA4B51C2

P0605 is set when 1)communication error between micro controller inside of ECM and EEP ROM is detected or 2)a different vesion of ECM is installed.

DTC DETECTING CONDITION E63BFEFD

<table>
<tr><th>Item</th><th colspan="3">Detecting Condition</th><th>Possible Cause</th></tr>
<tr><td>DTC Strategy</td><td colspan="3">• EEPROM monitorting</td><td rowspan="6">• Version difference between ECM and ECMcommunication module
• ECM component failure</td></tr>
<tr><td>Enable Conditions</td><td colspan="3">• Engine running</td></tr>
<tr><td>Threshold Value</td><td colspan="3">• (EEPROM communication error): communication failure between micro controller inside of ECM and EEPROM
• Each data range is activated abnormally.
• self test about optional devices(A/C, immobilizer, cruise control)</td></tr>
<tr><td>Diagnostic Time</td><td colspan="3">• Immediately</td></tr>
<tr><td rowspan="4">Fail Safe</td><td>Fuel cut</td><td>YES</td><td rowspan="4"></td></tr>
<tr><td>EGR Off</td><td>NO</td></tr>
<tr><td>Fuel Limit</td><td>NO</td></tr>
<tr><td>Check Lamp</td><td>NO</td></tr>
</table>

COMPONENT INSPECTION E49BD40C

1. ECM Component Inspection

   1) IG KEY "OFF", ENGINE "OFF".

   2) Disconnect ECM.

   3) Replace ECM, check if abnormal operations disappear.

   4) If problems are corrected, replace ECM.

NOTE

Input injector IQA data(7 letters) using scantool at replacing ECM.
For immobilizer applied vehicle, input pin code.

VERIFICATION OF VEHICLE REPAIR E7D3C8AE

After a repair, it is essential to verify that the fault is corrected.

1. After connecting Scantool select "DIAGNOSTIC TROUBLE CODES(DTCs)" mode.
2. Clear recorded DTC using Scantool.
3. Drive the vehicle within DTC "Enable conditions" in "General information".
4. After selecting "DIAGNOSTIC TROUBLE CODES(DTCs)" mode and check if DTC is recorded again.
5. Are any DTCs recorded ?

YES

▶ Go to the DTC guide of recorded NO. in Scantool.

NO

▶ System operates within specification.

DTC P0606 ECM/PCM PROCESSOR(ECM-SELF TEST FAILED)

GENERAL DESCRIPTION E9A500E2

ECM is activated by power supply. Signals from several sensors, such as CKPS and APS, is inputted to ECM. Comparing inputted signals with control LOGIC saved at micro controller and EEPROM, ECM controlls engine as actuating injectors, solenoids and relays. To guarantee accurate control, ECM performs SELF TEST, DIAGNOSIS of several sensors and actuators. And if serious trouble which affects vehicle performance occurrs, ECM sets DTCs.At certain cases, ECM shuts down whole systems in order to prevent dangerous situation due to incorrect control.

DTC DESCRIPTION E9272743

P0606 is set when 1) writing/reading error inside of ECM occurs. 2) error of APS 2 ground checking which is repeated every 0.2 sec. or 3) the voltage of sensor power supply 1 and 2 (the standard voltage of A/D converter) are below 4.7V or above 5.1V. This code is due to ECM internal failure.

DTC DETECTING CONDITION EDD416B5

<table>
<tr><th>Item</th><th colspan="3">Detecting Condition</th><th>Possible Cause</th></tr>
<tr><td>DTC Strategy</td><td colspan="3">• Signal monitoring</td><td rowspan="6">• ECM component failure</td></tr>
<tr><td>Enable Conditions</td><td colspan="3">• IG KEY "ON"</td></tr>
<tr><td>Threshold Value</td><td colspan="3">• writing/reading error inside of ECM
• APS 2 ground checking error
• APS 2 ground checking error</td></tr>
<tr><td>Diagnostic Time</td><td colspan="3">• Immediately</td></tr>
<tr><td rowspan="4">Fail Safe</td><td>Fuel cut</td><td>NO</td><td rowspan="4"></td></tr>
<tr><td>EGR Off</td><td>NO</td></tr>
<tr><td>Fuel Limit</td><td>NO</td></tr>
<tr><td>Check Lamp</td><td>YES</td></tr>
</table>

SIGNAL WAVEFORM AND DATA E245EC4A

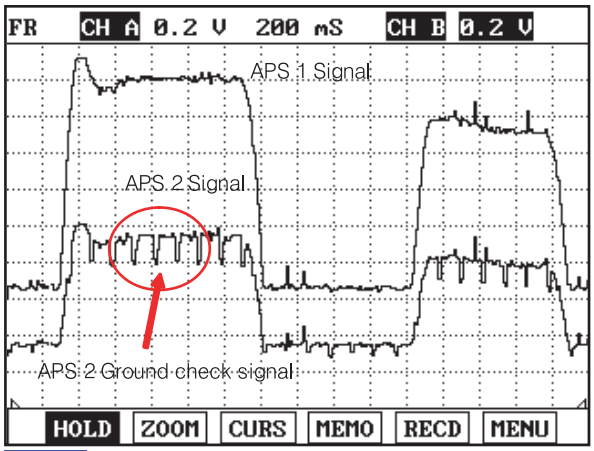

Fig.1

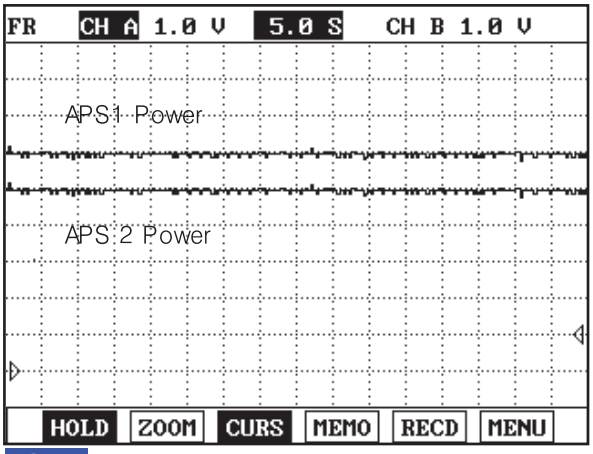

Fig.2

Fig.1) Ground checking signal of APS 2 signal is for ECM to monitor APS 2. This signal drops APS 2 output voltage to below 200.39mV every 200msec. If APS 2 output voltage does not drop to below 200.39mV, ECM sets DTC as recognizing ground circuit error of APS 2

※ The waveform below 200.39mV is not detectable in ground checking signal waveform of APS 2 signal. Instead, the waveform which drops a little is detected. If APS 2 data of "SERVICE DATA" on the Scantool varies from 350mV to 0mV periodically, it means it works normally.

Fig.2) APS 1 and APS 2 signals are measured simultaneously, Check if 5V sensor voltage(the standard voltage of A/D converter inside of ECM) is from 4.8V to 5.16V.

SCMFL6422L

COMPONENT INSPECTION E44F7A10

1. ECM Component Inspection

   1) IG KEY "OFF", ENGINE "OFF".

   2) Disconnect ECM.

   3) Replace ECM, check if abnormal operations disappear.

   4) If problems are corrected, replace ECM.

   NOTE

   Input injector IQA data(7 letters) using scantool at replacing ECM.
   For immobilizer applied vehicle, input pin code.

VERIFICATION OF VEHICLE REPAIR EC4492D6

After a repair, it is essential to verify that the fault is corrected.

1. After connecting Scantool select "DIAGNOSTIC TROUBLE CODES(DTCs)" mode.

2. Clear recorded DTC using Scantool.

3. Drive the vehicle within DTC "Enable conditions" in "General information".

4. After selecting "DIAGNOSTIC TROUBLE CODES(DTCs)" mode and check if DTC is recorded again.

5. Are any DTCs recorded ?

   YES

▶ Go to the DTC guide of recorded NO. in Scantool.

NO

▶ System operates within specification.

DTC P0611 INJECTOR CIRCUIT MALFUNCTION (MORE THAN TWO INJECTORS)

COMPONENT LOCATION ECDE1443

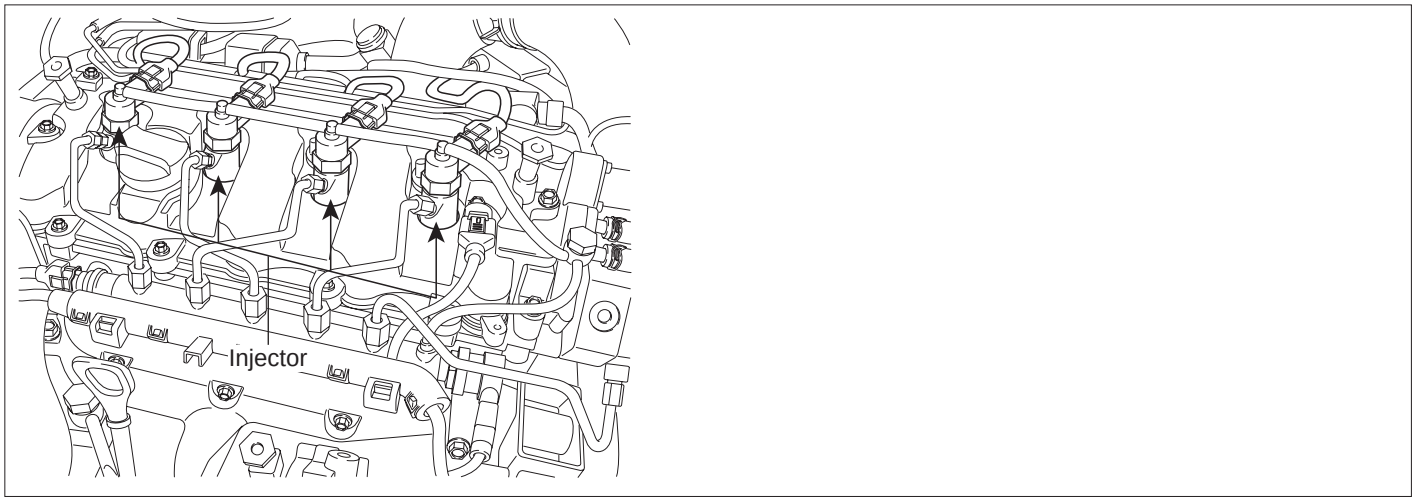

LFIG257A

GENERAL DESCRIPTION EB9B42E6

Injectors spray fuel in the highly compressed combustion chamber, and power generates through combustion process. Fuel pressure is raised to 1600bar in common rail diesel engine for the purpose of making fuel into minute particles. And fuel devided into minute particles leads smoke reduction, high power generation, and improved fuel efficiency. To control pressure of 1600bar with solenoid, oil pressure servo is applied. And injector solenoids is actuated by solenoid operating voltage raised to 80V with the method of current control.

DTC DESCRIPTION ED515DBC

P0611 is set when the problems of more than 2 injector circuits are detected thus, it is difficult to find abnormal injector. Check "Circuit Inspection" of all injectors

DTC DETECTING CONDITION E056E881

Item	Detecting Condition			Possible Cause
DTC Strategy	• Current monitoring			• Short in Injector circuit • Injector component
Enable Conditions	• IG KEY "ON"			
Threshold Value	• Failed cylinder recognition is impossible due to the failure more than 2 injectors.			
Diagnostic Time	• Immediately			
Fail Safe	Fuel cut	YES		
	EGR Off	NO		
	Fuel Limit	NO		
	Check Lamp	YES		

SPECIFICATION E530AC90

Injector Component Resistance	Injector Operating Voltage	Injector Operating Current	Injector Control Type
0.330Ω (20±1°C)	80V	Peak current : 20±1A Hold in current : 12±1A Recharging current : 7A	Current control

SCHEMATIC DIAGRAM EFD8DDF4

[CIRCUIT DIAGRAM]

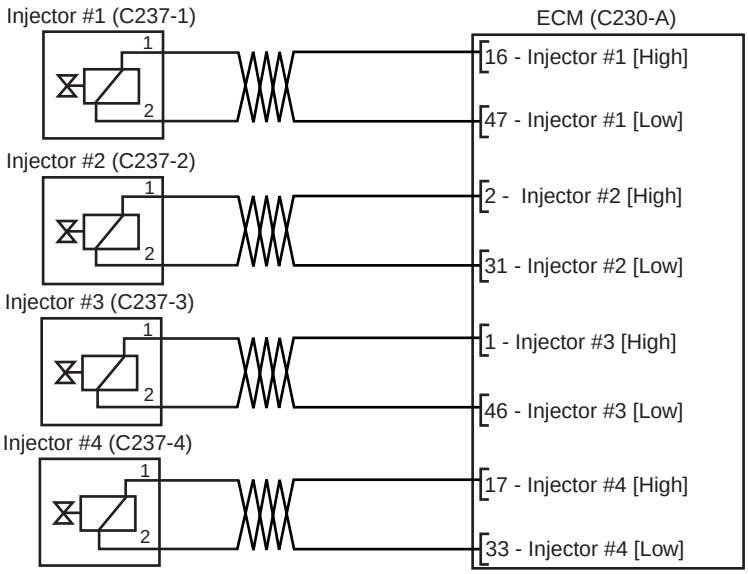

[CONNECTION INFORMATION]

[Injector #1]

Terminal	Connected to	Function
1	ECM C230-A (16)	Injector #1 High side
2	ECM C230-A (47)	Injector #1 Low side

[Injector #2]

Terminal	Connected to	Function
1	ECM C230-A (2)	Injector #2 High side
2	ECM C230-A (31)	Injector #2 Low side

[Injector #3]

Terminal	Connected to	Function
1	ECM C230-A (1)	Injector #3 High side
2	ECM C230-A (46)	Injector #3 Low side

[Injector #4]

Terminal	Connected to	Function
1	ECM C230-A (17)	Injector #4 High side
2	ECM C230-A (33)	Injector #4 Low side

[HARNESS CONNECTORS]

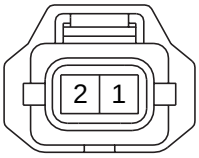

C237-1,2,3,4
INJECTOR #1,#2,#3,#4

C230-A

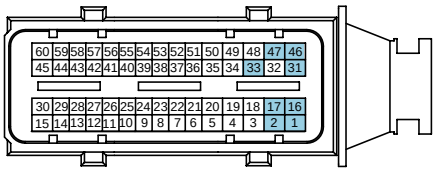

C230-K

ECM

SCMFL6397L

SIGNAL WAVEFORM AND DATA EC8D6DBA

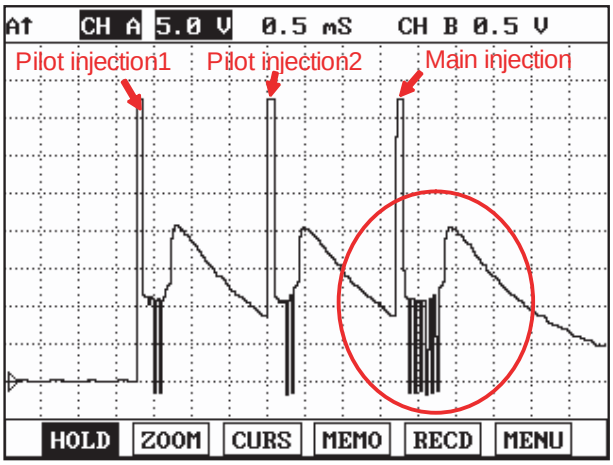

Fig.1

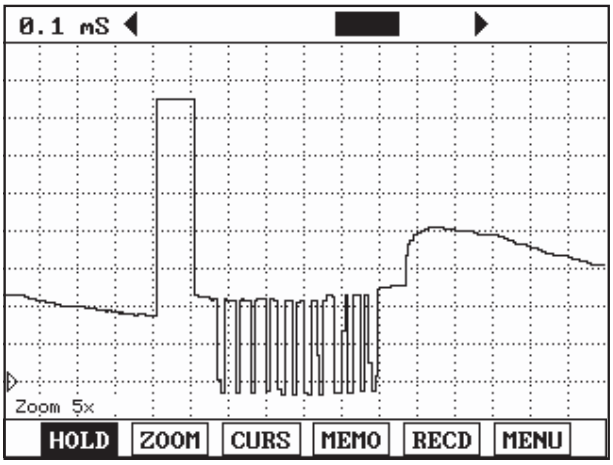

Fig.2

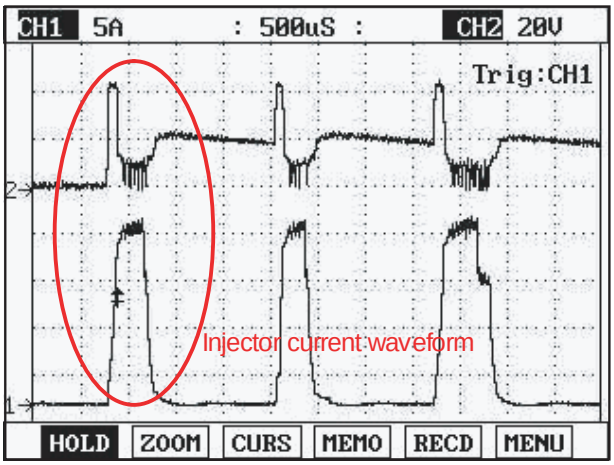

Fig.3

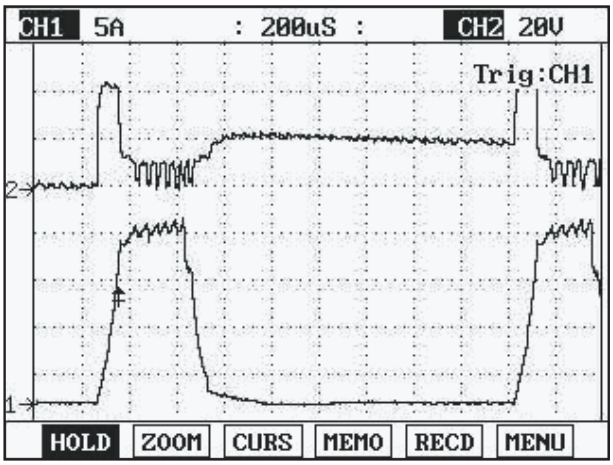

Fig.4

Fig.1) Injector operating waveform at Low side, It shows 2 pilot and 1 main injection.
Fig.2) Magnified waveform of main injection at Fig.1)
Fig.3) Injector voltage and current waveforms are measured at the same time using current prove of scope meter.
Fig.4) Magnified waveform of pilot injection at Fig.3)

LFIG259A

TERMINAL AND CONNECTOR INSPECTION EEE364CD

1. Electrical systems consist of a lot of harness and connectors, poor connection of terminals can cause various problems and damge of component.

2. Perform checking procedure as follows.

   1) Check damage of harness and terminals : Check terminals for contact resistance, corrosion and deformation.

   2) Check connecting condition of ECM and component connector : Check terminal seperation, damage of locking device and connecting condition between terminal and wiring.

   NOTE

   Disconnect the pin which requires checking at male connector and insert it to the terminal at female connector for checking connecting condition. (after checking, reconnect the pin at correct position.)

3. Is the problem found?

YES

▶ Repair the trouble causing part and go to "Verification of Vehicle Repair".

NO

▶ Go to "Power Circuit Inspection".

POWER CIRCUIT INSPECTION E60B9162

1. Check injector connector terminal voltage (failed injector analysis)

   1) IG KEY "OFF", ENGINE "OFF".

   2) Disconnect all injector connectors and ECM connector.

   3) IG KEY "ON".

   4) Check continuity between injector #1 connector terminal 1 and ECM connector(C230-A) terminal 16.
      Check continuity between injector #1 connector terminal 2 and ECM connector(C230-A) terminal 47.
      Check continuity between injector #2 connector terminal 1 and ECM connector(C230-A) terminal 2.
      Check continuity between injector #2 connector terminal 2 and ECM connector(C230-A) terminal 31.
      Check continuity between injector #3 connector terminal 1 and ECM connector(C230-A) terminal 1.
      Check continuity between injector #3 connector terminal 2 and ECM connector(C230-A) terminal 46.
      Check continuity between injector #4 connector terminal 1 and ECM connector(C230-A) terminal 17.
      Check continuity between injector #4 connector terminal 2 and ECM connector(C230-A) terminal 33.

Specification : Continuity (below 1.0Ω)

   5) Are continuity tests within the specification?

      YES

      ▶ Go to "Component Inspection".

      NO

      ▶ Refer to "DTC" guide corresponding to each problem occurred injector.

      Injector #1 related problem :
      Refer to P0201 for open in injector circuit.
      Refer to P0262 for short in injectoer circuit.

      Injector #2 related problem :
      Refer to P0202 for open in injector circuit.
      Refer to P0265 for short in injectoer circuit.

      Injector #3 related problem :
      Refer to P0203 for open in injector circuit.
      Refer to P0268 for short in injectoer circuit.

      Injector #4 related problem :
      Refer to P0204 for open in injector circuit.
      Refer to P0271 for short in injectoer circuit.

COMPONENT INSPECTION ED9E4369

1. Check injector component resistance

   1) IG KEY "OFF", ENGINE "OFF".

   2) Disconnect injector connector.

   3) Measure the resistance between injector component terminal 1 and 2.

Specification : 0.33Ω (20℃)

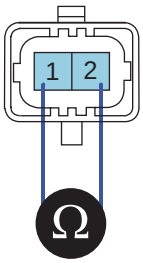

EGNG008I

   4) Is the measured resistance(of injector solenoid) within the specification?

   YES

   ▶ Go to "Verification of Vehicle Repair".

   NO

   ▶ Replace injector and go to "Verification of Vehicle Repair".

   NOTE

   Replacing injectors, peculiar IQA code of each injector should be inputted to ECM
   Perform this process using "INJECTOR CORRECTION" function on scantool, Refer to P1670, P1671 for more detailed information.

VERIFICATION OF VEHICLE REPAIR E62E741F

After a repair, it is essential to verify that the fault is corrected.

1. After connecting Scantool select "DIAGNOSTIC TROUBLE CODES(DTCs)" mode.

2. Clear recorded DTC using Scantool.

3. Drive the vehicle within DTC "Enable conditions" in "General information".

4. After selecting "DIAGNOSTIC TROUBLE CODES(DTCs)" mode and check if DTC is recorded again.

5. Are any DTCs recorded ?

   YES

   ▶ Go to the DTC guide of recorded NO. in Scantool.

NO

▶ System operates within specification.

DTC P0642 SENSOR REFERENCE VOLTAGE "A" CIRCUIT LOW

GENERAL DESCRIPTION EC7DA3AD

ECM is activated by power supply. Signals from several sensors, such as CKPS and APS, is inputted to ECM. Comparing inputted siganals with control LOGIC saved at micro controller and EEPROM, ECM controlls engine as actuating injectors, solenoids and relays. To guarantee accurate control, ECM performs SELF TEST, DIAGNOSIS of several sensors and actuators. And if serious trouble which affects vehicle performance occurrs, ECM sets DTCs.At certain cases, ECM shuts down whole systems in order to prevent dangerous situation due to incorrect control.

DTC DESCRIPTION E391557F

P0642 is set when the voltage below 4.7V - minimum voltage of sensor power supply 1 generates from ECM - is detected for more than 0.1 sec.. This code is due to the short to ground in sensor power circuit or the voltage problem inside of ECM.

DTC DETECTING CONDITION EA9F074F

<table>
<tr><th>Item</th><th colspan="3">Detecting Condition</th><th>Possible Cause</th></tr>
<tr><td>DTC Strategy</td><td colspan="3">• Voltage monitoring</td><td rowspan="6">• MAFS power supply circuit
• APS 1 power supply circuit
• ECM component</td></tr>
<tr><td>Enable Conditions</td><td colspan="3">• IG KEY "ON"</td></tr>
<tr><td>Threshold Value</td><td colspan="3">• when the voltage is below the minimum voltage of sensor power supply. (below 4.7V)</td></tr>
<tr><td>Diagnostic Time</td><td colspan="3">• 0.1 sec.</td></tr>
<tr><td rowspan="4">Fail Safe</td><td>Fuel cut</td><td>NO</td><td rowspan="4"></td></tr>
<tr><td>EGR Off</td><td>NO</td></tr>
<tr><td>Fuel Limit</td><td>YES</td></tr>
<tr><td>Check Lamp</td><td>NO</td></tr>
</table>

SPECIFICATION E3B931C6

Sensor power 1	Sensor power 2	Sensor power 3
MAFS, APS 1 4830mV~5158mV	RPS, APS 2,BPS 4830mV~5158mV	A/C pressure transducer,VSA position Sensor 4830mV~5158mV

SCHEMATIC DIAGRAM E82B0251

[CIRCUIT DIAGRAM]

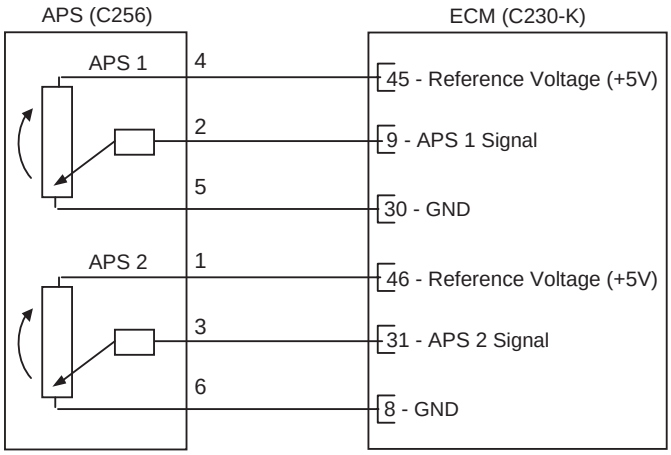

[CONNECTION INFORMATION]

Terminal	Connected to	Function
1	ECM C230-K (46)	APS 2 Reference Voltage (+5V)
2	ECM C230-K (9)	APS 1 Signal
3	ECM C230-K (31)	APS 2 Signal
4	ECM C230-K (45)	APS 1 Reference Voltage (+5V)
5	ECM C230-K (30)	APS 1 Ground
6	ECM C230-K (8)	APS 2 Ground

[HARNESS CONNECTORS]

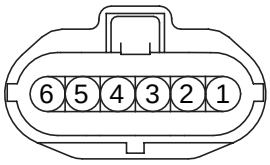

C256

APS

C230-A

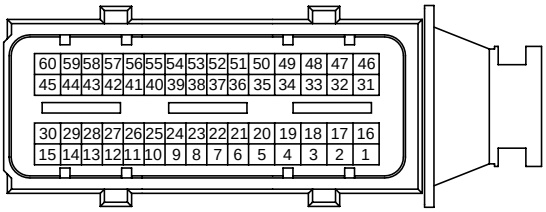

C230-K

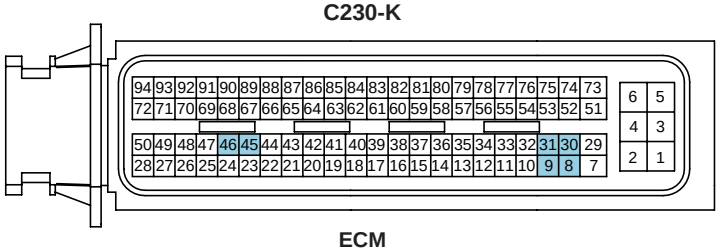

ECM

SCMFL6123L

[CIRCUIT DIAGRAM]

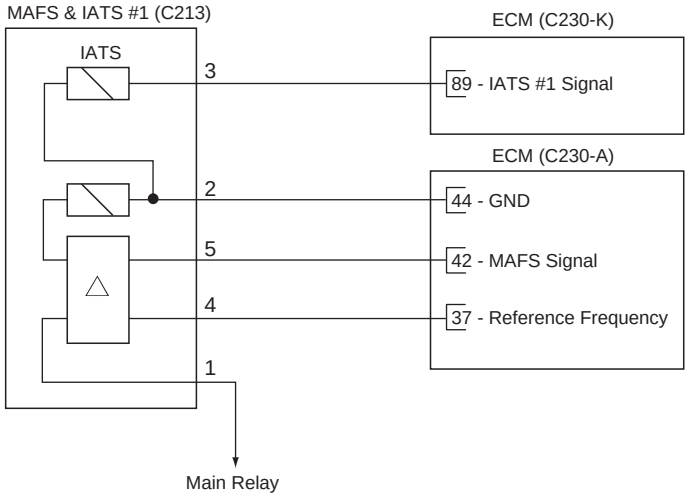

[CONNECTION INFORMATION]

Terminal	Connected to	Function
1	Main Relay	Battery Voltage (B+)
2	ECM C230-A (44)	Sensor Ground
3	ECM C230-K (89)	IATS #1 Signal
4	ECM C230-A (37)	Reference Frequency
5	ECM C230-A (42)	MAFS Signal

[HARNESS CONNECTORS]

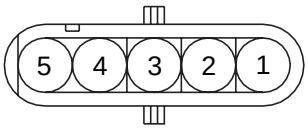

C213

MAFS & IATS #1

C230-A

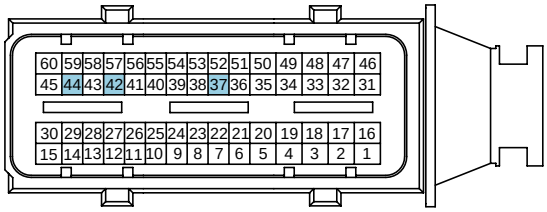

C230-K

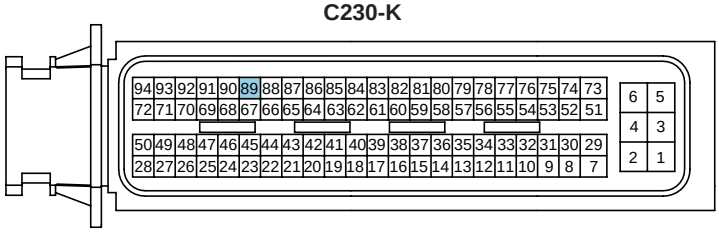

ECM

SCMFL6113L

SIGNAL WAVEFORM AND DATA E1662D85

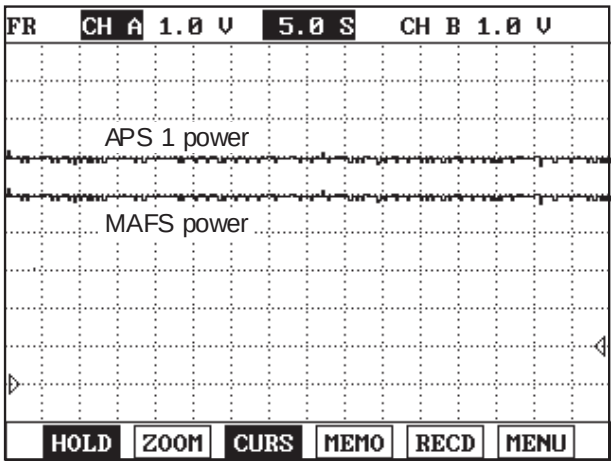

Fig.1

Fig.1) APS 1 and MAFS power supply is measured simultaneously , check if this waveform is within the specification (4.8~5.1V) when turning ignition "ON".

SCMFL6420L

TERMINAL AND CONNECTOR INSPECTION E527D191

1. Electrical systems consist of a lot of harness and connectors, poor connection of terminals can cause various problems and damge of component.

2. Perform checking procedure as follows.

   1) Check damage of harness and terminals : Check terminals for contact resistance, corrosion and deformation.

   2) Check connecting condition of ECM and component connector : Check terminal seperation, damage of locking device and connecting condition between terminal and wiring.

   NOTE

   Disconnect the pin which requires checking at male connector and insert it to the terminal at female connector for checking connecting condition. (after checking, reconnect the pin at correct position.)

3. Is the problem found?

   YES

   ▶ Repair the trouble causing part and go to "Verification of Vehicle Repair".

   NO

   ▶ Go to "Power Circuit Inspection".

POWER CIRCUIT INSPECTION ED0B5405

1. Check power circuit voltage

   1) IG KEY "OFF", ENGINE "OFF".

   2) Disconnector MAFS connector and APS connector.

   3) IG KEY "ON".

4) Measure the voltage between MAFS connector terminal 4 or APS connector terminal 4 and chassis ground.

Specification : 4.8V~5.1V

5) Is the measured voltage within the specification?

YES

▶ Go to "Component Inspection".

NO

▶ Go to "2. Check short to ground in power circuit" as follows.

2. Check short to ground in power circuit

1) IG KEY "OFF", ENGINE "OFF".

2) Disconnect MAFS connector, APS connector and ECM connectors.

3) Check continuity between MAFS connector terminal 4 or APS connector terminal 4 and chassis ground.

specification : Discontinuity (Infinite Ω)

4) Is the measured resistance within the specification?

YES

▶ If the circuit is insulated well and the sensor power supply from ECM is low, replace ECM and go to "Verification of Vehicle Repair".

NO

▶ Repair short to ground and go to "Verification of Vehicle Repair".

COMPONENT INSPECTION E64A5CBD

1. IG KEY "OFF", ENGINE "OFF".

2. Disconnect MAFS connector(C213) and APS connector(C256).

3. Check that sensor connector power supply is within the specification after turning IG KEY "ON".

4. Connect MAFS connector and APS connector in turn.

5. Measure the voltage of power circuit of each sensor with all connector connected.

Specification : sensor power supply should not change as connecting MAFS connector and APS connector. (If the change of sensor power supply occur as connecting sensor connector, this means the occurrence of short inside of sensor.)

6. Does change of sensor power supply occur as connecting sensor connector?

YES

▶ Replace MAFS or APS.

NO

▶ Go to "Verification of Vehicle Repair".

VERIFICATION OF VEHICLE REPAIR E0C30DE2

After a repair, it is essential to verify that the fault is corrected.

1. After connecting Scantool select "DIAGNOSTIC TROUBLE CODES(DTCs)" mode.
2. Clear recorded DTC using Scantool.
3. Drive the vehicle within DTC "Enable conditions" in "General information".
4. After selecting "DIAGNOSTIC TROUBLE CODES(DTCs)" mode and check if DTC is recorded again.
5. Are any DTCs recorded ?

YES

▶ Go to the DTC guide of recorded NO. in Scantool.

NO

▶ System operates within specification.

DTC P0643 SENSOR REFERENCE VOLTAGE "A" CIRCUIT HIGH

GENERAL DESCRIPTION E0BACFA5

Refer to DTC P0642.

DTC DESCRIPTION EBE58970

P0643 is set when the voltage above 5.158V - maximum voltage of sensor power supply 1 generates from ECM - is detected for more than 0.1 sec.. This code is due to the short to battery in sensor power circuit or the voltage problem inside of ECM.

DTC DETECTING CONDITION EEEBD270

Item	Detecting Condition			Possible Cause
DTC Strategy	• Voltage monitoring			• MAFS power supply circuit • APS 1 power supply circuit • ECM component
Enable Conditions	• IG KEY "ON"			
Threshold Value	• when the voltage is above the maximum voltage of sensor power supply.(above 5.158V)			
Diagnostic Time	• 0.1 sec.			
Fail Safe	Fuel cut	NO		
	EGR Off	NO		
	Fuel Limit	YES		
	Check Lamp	NO		

SPECIFICATION EA1AD87A

Refer to DTC P0642.

SCHEMATIC DIAGRAM ED600D9E

Refer to DTC P0642.

SIGNAL WAVEFORM AND DATA E90BC064

Refer to DTC P0642.

TERMINAL AND CONNECTOR INSPECTION E4EAEA04

Refer to DTC P0642.

POWER CIRCUIT INSPECTION E516470E

1. Check power circuit voltage

   1) IG KEY "OFF", ENGINE "OFF".

   2) Disconnector MAFS connector and APS connector.

3) IG KEY "ON".

4) Measure the voltage between MAFS connector terminal 4 or APS connector terminal 4 and chassis ground.

Specification : 4.8V~5.1V

5) Is the measured voltage within the specification?

YES

▶ Go to "Component Inspection".

NO

▶ Go to "2. Check open in power circuit" as follows.

2. Check open in power circuit

1) IG KEY "OFF", ENGINE "OFF".

2) Disconnector MAFS connector, APS connector and ECM connector.

3) Measure the registance between MAFS connector terminal 4 and ECM connector(C230-A) terminal 37.
Measure the registance between APS connector terminal 4 and ECM connector(C230-K) terminal 45.

Specification : Continuity (below 1.0Ω)

4) Is the measured resistance within the specification?

YES

▶ Go to "3. Check short to battery in power circuit" as follows.

NO

▶ Repair open in power circuit and go to "Verification of Vehicle Repair".

3. Check short to battery in power circuit

1) IG KEY "OFF", ENGINE "OFF".

2) Disconnector MAFS connector, APS connector and ECM connector.

3) IG KEY "ON".

4) Measure the voltage between MAFS connector terminal 4 or APS connector terminal 4 and chassis ground.

Specification : 0.0V~0.1V

5) Is the measured voltage within the specification?

YES

▶ If the circuit is insulated well and the sensor power supply from ECM is high, replace ECM and go to "Verification of Vehicle Repair".

NO

▶ Repair short to battery and go to "Verification of Vehicle Repair".

COMPONENT INSPECTION E87EEE95

1. IG KEY "OFF", ENGINE "OFF".
2. Disconnect MAFS connector(C213) and APS connector(C256).
3. Check that sensor connector power supply is within the specification after turning IG KEY "ON".
4. Connect MAFS connector and APS connector in turn.
5. Measure the voltage of power circuit of each sensor with all connector connected.

Specification : sensor power supply should not change as connecting MAFS connector and APS connector. (If the change of sensor power supply occur as connecting sensor connector, this means the occurrence of short inside of sensor.)

6. Does change of sensor power supply occur as connecting sensor connector?

YES

▶ Replace MAFS or APS.

NO

▶ Go to "Verification of Vehicle Repair".

VERIFICATION OF VEHICLE REPAIR E2280185

Refer to DTC P0642.

DTC P0646 A/C CLUTCH RELAY CONTROL CIRCUIT LOW

GENERAL DESCRIPTION E962F179

Aircon Relay which is controled by ECM supplies and cut electrical power to Aircon compressor. ECM activates or deactivates Aircon Relay based on inputted signal such as aircon switch siganl and Aircon switch signal.As controlling Aircon Relay, ECM 1)turns OFF aircon compressor at rapid acceleration to retain suffiecient capacity for acceleration, 2)actively performs idle-up function to cope with the change of engine load which happens during aircon compressor operation.

DTC DESCRIPTION EC208B40

P0646 is set when ’0A’ is detected in Aircon relay control circuit for more than 1 sec.. This code is due to open or short to ground in Aircon relay control circuit or internal open in relay component.

DTC DETECTING CONDITION E52A59E6

Item	Detecting Condition			Possible Cause
DTC Strategy	• Voltage monitoring			• A/C relay circuit • A/C relay component
Enable Conditions	• IG KEY "ON"			
Threshold Value	• Short to GND, Wiring open			
Diagnostic Time	• 1.0 sec.			
Fail Safe	Fuel cut	NO		
	EGR Off	NO		
	Fuel Limit	NO		
	Check Lamp	NO		

SCHEMATIC DIAGRAM EA097066

[CIRCUIT DIAGRAM]

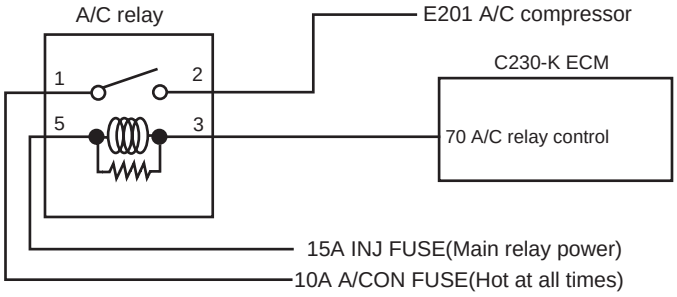

[CONNECTOR INFORMATION]

Terminal	Connected to	Function
1	10A A/CON FUSE(Hot at all times)	Relay power(INPUT)
2	A/C compressor	Relay power(OUTPUT)
3	C230-K terminal 70	Relay control
4	*	*
5	15A INJ FUSE(Main relay power)	Relay coil power

[HARNESS CONNECTOR]

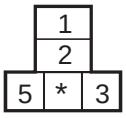

A/C relay

C230-A

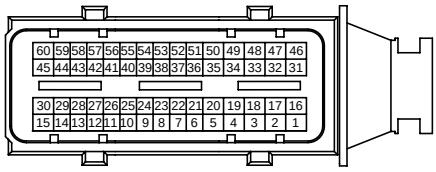

C230-K

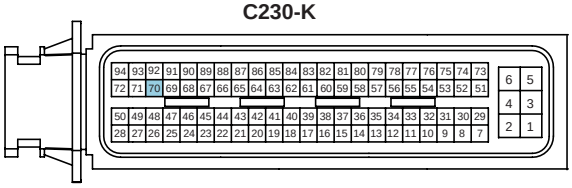

ECM

SCMFL6404L

MONITOR SCANTOOL DATA E2DFAF58

1. Connect scantool to Data Link Cable (DLC).
2. Warm engine up to normal operating temperature.
3. Turn "OFF" electrical devices and A/C.
4. Monitor "A/C COMPRESSOR CONTROL" parameter on the scantool.

specification : A/C switch "ON" : A/C RELAY "ON" (Aircon compressor turns ON and OFF periodically by Aircon pressure S/W.)
A/C switch "OFF" : A/C RELAY "OFF"

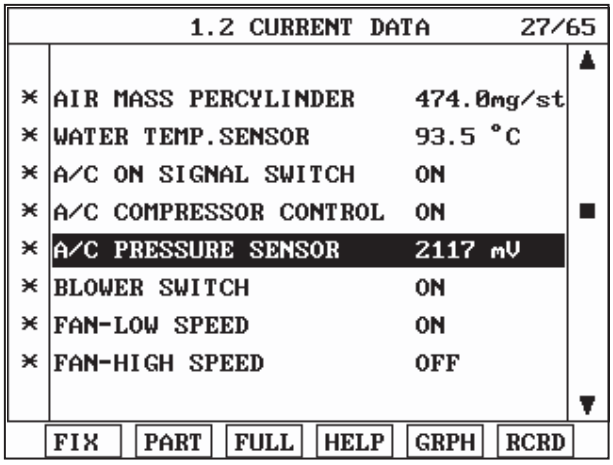

Fig.1

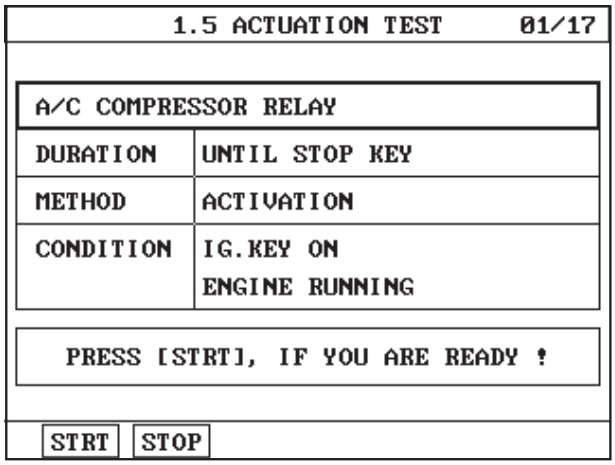

Fig.2

Fig.1) The operating condition of aircon relay is shown. Check if aircon compressor works properly when aircon switch is turning ON.

Fig.2) Diagnosing problem of "A/C RELAY" and "AIRCON COMPRESSOR" is convenient through ACTUATION TEST on the Scantool.

SCMFL6310L

TERMINAL AND CONNECTOR INSPECTION ECA5DD0F

1. Electrical systems consist of a lot of harness and connectors, poor connection of terminals can cause various problems and damge of component.

2. Perform checking procedure as follows.

   1) Check damage of harness and terminals : Check terminals for contact resistance, corrosion and deformation.

   2) Check connecting condition of ECM and component connector : Check terminal seperation, damage of locking device and connecting condition between terminal and wiring.

   NOTE

   Disconnect the pin which requires checking at male connector and insert it to the terminal at female connector for checking connecting condition. (after checking, reconnect the pin at correct position.)

3. Is the problem found?

   YES

   ▶ Repair the trouble causing part and go to "Verification of Vehicle Repair".

   NO

   ▶ Go to "Power Circuit Inspection".

POWER CIRCUIT INSPECTION E7FE6D95

1. Check power circuit voltage

   1) IG KEY "OFF", ENGINE "OFF".

   2) Disconnect A/CON relay.

   3) Measure the voltage of A/CON relay terminal 1.

specification : 11.5V~13.0V

4) Is the measured voltage within the specification?

YES

▶ Go to "2. Check IG KEY "ON" power circuit" .

NO

▶ Repair problems of E/R FUSE & RELAY BOX 15A A/CON FUSE and related circuit and go to "Verification of Vehicle Repair".

2. Check IG KEY "ON" power circuit

1) IG KEY "OFF", ENGINE "OFF".

2) Disconnect A/CON relay.

3) IG KEY "ON".

4) Measure the voltage of glow relay terminal 5.

specification : 11.5V~13.0V

5) Is the measured voltage within the specification?

YES

▶ Go to "Control Circuit Inspection".

NO

▶ Repair problems of Main relay component and Main relay related circuit and go to "Verification of Vehicle Repair".

CONTROL CIRCUIT INSPECTION E37EF207

1. Check monitoring voltage in control circuit

1) IG KEY "OFF", ENGINE "OFF".

2) Disconnect A/CON relay.

3) IG KEY "ON".

4) Measure the voltage of A/CON relay terminal 3.

specification : 3.2V~3.7V

5) Is the measured voltage within the specification?

YES

▶ Go to "Component Inspection".

NO

▶ When voltage is not detected : Go to "2. Check open in control circuit" as follows.
▶ When high voltage is detected : Repair short to battery and go to "Verification of Vehicle Repair".

2. Check open in control circuit

1) IG KEY "OFF", ENGINE "OFF".

2) Disconnect A/CON relay and ECM connector .

3) Check continuity between glow relay terminal 3 and ECM connector (C230-K) terminal 70.

specification : Continuity (below 1.0Ω)

4) Is the measured resistance within the specification?

YES

▶ Repair short to ground and go to "Verification of Vehicle Repair".

NO

▶ Repair open in control circuit and go to "Verification of Vehicle Repair".

COMPONENT INSPECTION E401C3B8

1. Check A/CON relay component resistance

1) IG KEY "OFF", ENGINE "OFF".

2) Disconnect A/CON relay.

3) Measure the coil resistance of A/CON relay.

specification : 85±5 Ω (20℃)

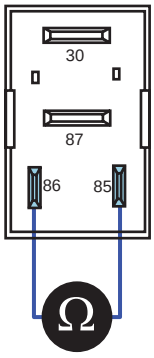

EGNG001H

4) Is the measured resistance within the specification?

YES

▶ Go to "2. Check A/CON relay component operation" as follows.

NO

▶ Replace A/CON relay and go to "Verification of Vehicle Repair".

2. Check A/CON relay component operation

   1) IG KEY "OFF", ENGINE "OFF".

   2) Disconnect A/CON relay.

   3) Supplies random B+ and ground to coil sides of A/C relay (terminal 85, terminal 86).

   4) Check continuity between A/C relay terminal 30 and terminal 87.

specification : When power is supplied : Continuity (below 1.0Ω)
When power is not supplied : Discontinuity (Infinite Ω)

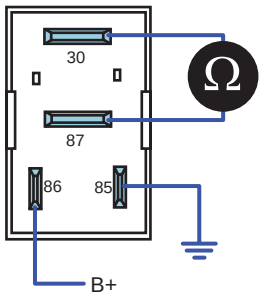

EGNG001I

   5) Is the continuity test within the specification?

   YES

   ▶ Go to "Verification of Vehicle Repair".

   NO

   ▶ Replace A/CON relay and go to "Verification of Vehicle Repair".

   ※ Repeat this process 2~3 times.

VERIFICATION OF VEHICLE REPAIR E505004D

After a repair, it is essential to verify that the fault is corrected.

1. After connecting Scantool select "DIAGNOSTIC TROUBLE CODES(DTCs)" mode.
2. Clear recorded DTC using Scantool.
3. Drive the vehicle within DTC "Enable conditions" in "General information".
4. After selecting "DIAGNOSTIC TROUBLE CODES(DTCs)" mode and check if DTC is recorded again.
5. Are any DTCs recorded ?

   YES

   ▶ Go to the DTC guide of recorded NO. in Scantool.

   NO

   ▶ System operates within specification.

DTC P0647 A/C CLUTCH RELAY CONTROL CIRCUIT HIGH

GENERAL DESCRIPTION E377A26F

Refer to DTC P0646.

DTC DESCRIPTION E71515B1

0647 is set when excessive current is detected in Aircon relay control circuit for more than 1 sec.. This code is due to short to battery in Aircon relay control circuit or internal short in relay component.

DTC DETECTING CONDITION E4F44700

<table>
<tr><th>Item</th><th colspan="3">Detecting Condition</th><th>Possible Cause</th></tr>
<tr><td>DTC Strategy</td><td colspan="3">• Voltage monitoring</td><td rowspan="6">• A/C relay circuit
• A/C relay component</td></tr>
<tr><td>Enable Conditions</td><td colspan="3">• IG KEY "ON"</td></tr>
<tr><td>Threshold Value</td><td colspan="3">• Short to battery</td></tr>
<tr><td>Diagnostic Time</td><td colspan="3">• 1.0 sec.</td></tr>
<tr><td rowspan="4">Fail Safe</td><td>Fuel cut</td><td>NO</td><td rowspan="4"></td></tr>
<tr><td>EGR Off</td><td>NO</td></tr>
<tr><td>Fuel Limit</td><td>NO</td></tr>
<tr><td>Check Lamp</td><td>NO</td></tr>
</table>

SCHEMATIC DIAGRAM ED516334

Refer to DTC P0646.

MONITOR SCANTOOL DATA E7BA72E3

Refer to DTC P0646.

TERMINAL AND CONNECTOR INSPECTION E7DE28D1

Refer to DTC P0646.

POWER CIRCUIT INSPECTION E0DA793D

1. Check power circuit voltage

   1) IG KEY "OFF", ENGINE "OFF".

   2) Disconnect A/CON relay.

   3) Measure the voltage of A/CON relay terminal 1.

specification : 11.5V~13.0V

   4) Is the measured voltage within the specification?

YES

▶ Go to "2. Check IG KEY "ON" power circuit" .

NO

▶ Repair problems of E/R FUSE & RELAY BOX 15A A/CON FUSE and related circuit and go to "Verification of Vehicle Repair".

2. Check IG KEY "ON" power circuit

1) IG KEY "OFF", ENGINE "OFF".

2) Disconnect A/CON relay.

3) IG KEY "ON".

4) Measure the voltage of glow relay terminal 5.

specification : 11.5V~13.0V

5) Is the measured voltage within the specification?

YES

▶ Go to "Control Circuit Inspection".

NO

▶ Repair problems of Main relay component and Main relay related circuit and go to "Verification of Vehicle Repair".

CONTROL CIRCUIT INSPECTION E00E7754

1. Check monitoring voltage in control circuit

1) IG KEY "OFF", ENGINE "OFF".

2) Disconnect A/CON relay.

3) IG KEY "ON".

4) Measure the voltage of A/CON relay terminal 3.

specification : 3.2V~3.7V

5) Is the measured voltage within the specification?

YES

▶ Go to "Component Inspection".

NO

▶ When voltage is not detected : Go to "2. Check open in control circuit" as follows.
▶ When high voltage is detected : Repair short to battery and go to "Verification of Vehicle Repair".

2. Check open in control circuit

1) IG KEY "OFF", ENGINE "OFF".

2) Disconnect A/CON relay and ECM connector .

3) Check continuity between glow relay terminal 3 and ECM connector (C230-K) terminal 70.

specification : Continuity (below 1.0Ω)

4) Is the measured resistance within the specification?

YES

▶ Repair short to ground and go to "Verification of Vehicle Repair".

NO

▶ Repair open in control circuit and go to "Verification of Vehicle Repair".

COMPONENT INSPECTION ECDBE7D6

1. Check A/CON relay component resistance

1) IG KEY "OFF", ENGINE "OFF".

2) Disconnect A/CON relay.

3) Measure the coil resistance of A/CON relay.

specification : 85±5 Ω (20℃)

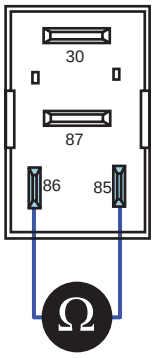

EGNG001H

4) Is the measured resistance within the specification?

YES

▶ Go to "2. Check A/CON relay component operation" as follows.

NO

▶ Replace A/CON relay and go to "Verification of Vehicle Repair".

2. Check A/CON relay component operation

1) IG KEY "OFF", ENGINE "OFF".

2) Disconnect A/CON relay.

3) Supplies random B+ and ground to coil sides of A/C relay (terminal 85, terminal 86).

4) Check continuity between A/C relay terminal 30 and terminal 87.

specification : When power is supplied : Continuity (below 1.0Ω)
When power is not supplied : Discontinuity (Infinite Ω)

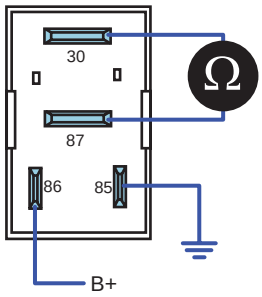

EGNG001I

5) Is the continuity test within the specification?

YES

▶ Go to "Verification of Vehicle Repair".

NO

▶ Replace A/CON relay and go to "Verification of Vehicle Repair".

※ Repeat this process 2~3 times.

VERIFICATION OF VEHICLE REPAIR E33F5D68

Refer to DTC P0646.

DTC P0650 MALFUNCTION INDICATOR LAMP(MIL) CONTROL CIRCUIT

GENERAL DESCRIPTION E3CFDE6C

As monitoring the errors of several sensors and actuator circuit, TCM related problem and ECM error, if any problem occurs, ECM turns Engine Check Lamp ON at cluster to notify driver the occurence of a problem. Generally, Engine Check Lamp turns ON at Ignition ON and turns OFF within couple of seconds after turning engine ON. If engine check lamp turns on during driving, perform diagnosis of engine system and auto-transaxle system.

DTC DESCRIPTION E01ACF53

P0650 is set when 1)excessive current is detected in engine check lamp control circuit for more than 2 sec.. at engine check lamp ON condition or 2)like open or short to ground, no current is detected. This code is due to open in control circuit or opened filament of lamp component.

DTC DETECTING CONDITION EF1E1552

<table>
<tr><th>Item</th><th colspan="3">Detecting Condition</th><th>Possible Cause</th></tr>
<tr><td>DTC Strategy</td><td colspan="3">• Voltage monitoring</td><td rowspan="6">• Open in engine check lamp
• Engine check lamp circuit.</td></tr>
<tr><td>Enable Conditions</td><td colspan="3">• IG KEY "ON" (Monitoring only performed within lamp operating condition)</td></tr>
<tr><td>Threshold Value</td><td colspan="3">• Short to battery
• Short to GND, Wiring open</td></tr>
<tr><td>Diagnostic Time</td><td colspan="3">• 2 sec.</td></tr>
<tr><td rowspan="4">Fail Safe</td><td>Fuel cut</td><td>NO</td><td rowspan="4"></td></tr>
<tr><td>EGR Off</td><td>NO</td></tr>
<tr><td>Fuel Limit</td><td>NO</td></tr>
<tr><td>Check Lamp</td><td>NO</td></tr>
</table>

SCHEMATIC DIAGRAM E20DEEC4

[CIRCUIT DIAGRAM]

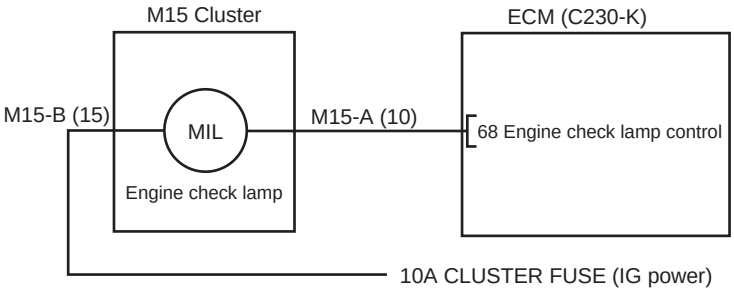

[CONNECTOR INFORMATION]

Terminal	Connected to	Function
M15-B terminal 15	10A CLUSTER FUSE	IG power
M15-A terminal 10	C230-K terminal 68	Engine check lamp control

[HARNESS CONNECTOR]

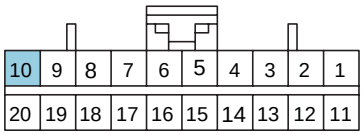

M15-A Cluster

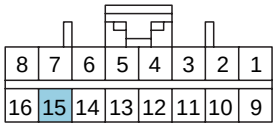

M15-B Cluster

C230-A

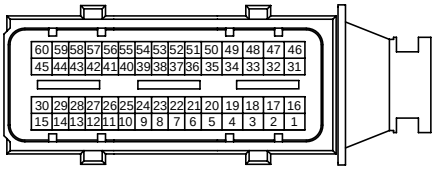

C230-K

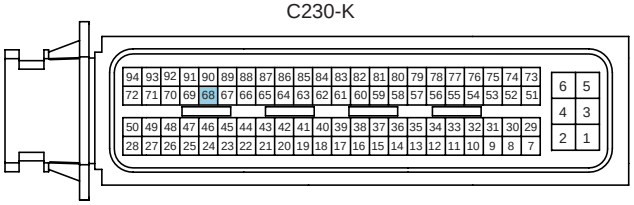

ECM

SCMFL6405L

TERMINAL AND CONNECTOR INSPECTION E5CAECA4

1. Electrical systems consist of a lot of harness and connectors, poor connection of terminals can cause various problems and damge of component.

2. Perform checking procedure as follows.

   1) Check damage of harness and terminals : Check terminals for contact resistance, corrosion and deformation.

   2) Check connecting condition of ECM and component connector : Check terminal seperation, damage of locking device and connecting condition between terminal and wiring.

   NOTE

   Disconnect the pin which requires checking at male connector and insert it to the terminal at female connector for checking connecting condition. (after checking, reconnect the pin at correct position.)

3. Is the problem found?

   YES

   ▶ Repair the trouble causing part and go to "Verification of Vehicle Repair".

   NO

▶ Go to "Control Circuit Inspection".

CONTROL CIRCUIT INSPECTION E7DF2DCD

1. Check control circuit voltage

   1) IG KEY "OFF", ENGINE "OFF".

   2) Disconnect ECM connector.

   3) IG KEY "ON".

   4) Measure the voltage of terminal 68 of ECM connector (C230-K).

Specification : 10.8V~13.0V

   5) Is the measured voltage within the specification?

   YES

   ▶ Go to "2. Grounding test of check lamp control circuit" as follows.

   NO

   ▶ Check open in filament of check lamp. (Refer to Component Inspection)
   ▶ Repair open between cluster connector(M15-A) terminal 10 and ECM connector(C230-K) terminal 68 and go to "Verification of Vehicle Repair",

2. Grounding test of check lamp control circuit

   1) IG KEY "OFF", ENGINE "OFF".

   2) Disconnect ECM connector.

   3) IG KEY "ON".

   4) Ground ECM connector (C230-K) terminal 68 to chassis ground.

specification : check lamp turns ON.

   5) Does check lamp turn ON?

   YES

   ▶ Go to "Verification of Vehicle Repair".

   NO

   ▶ Repair short to battery in check lamp control circuit and go to "Verification of Vehicle Repair".

COMPONENT INSPECTION ECE5AC65

1. IG KEY "OFF", ENGINE "OFF".

2. Dismount cluster and disconnect check lamp.

3. Check filament of check lamp.

4. supply 12V to "check lamp" to turn lamp ON

specification : lamp turns ON when 12V is supplied.

5. Does check lamp turn ON?

YES

▶ Go to "Verification of Vehicle Repair".

NO

▶ Replace check lamp and go to "Verification of Vehicle Repair".

VERIFICATION OF VEHICLE REPAIR E779A0FA

After a repair, it is essential to verify that the fault is corrected.

1. After connecting Scantool select "DIAGNOSTIC TROUBLE CODES(DTCs)" mode.
2. Clear recorded DTC using Scantool.
3. Drive the vehicle within DTC "Enable conditions" in "General information".
4. After selecting "DIAGNOSTIC TROUBLE CODES(DTCs)" mode and check if DTC is recorded again.
5. Are any DTCs recorded ?

YES

▶ Go to the DTC guide of recorded NO. in Scantool.

NO

▶ System operates within specification.

DTC P0652 SENSOR REFERENCE VOLTAGE "B" CIRCUIT LOW

GENERAL DESCRIPTION E16D8AB6

As monitoring the errors of several sensors and actuator circuit, TCM related problem and ECM error, if any problem occurs, ECM turns Engine Check Lamp ON at cluster to notify driver the occurence of a problem.Generally, Engine Check Lamp turns ON at Ignition ON and turns OFF within couple of seconds after turning engine ON. If engine check lamp turns on during driving, perform diagnosis of engine system and auto-transaxle system.

DTC DESCRIPTION E77C406A

P0652 is set when the voltage below 4.7V - minimum voltage of sensor power supply 2 generates from ECM - is detected for more than 0.1 sec.. This code is due to the short to ground in sensor power circuit or the voltage problem inside of ECM.

DTC DETECTING CONDITION E422D052

<table>
<tr><th>Item</th><th colspan="3">Detecting Condition</th><th>Possible Cause</th></tr>
<tr><td>DTC Strategy</td><td colspan="3">• Voltage monitoring</td><td rowspan="6">• RPS power supply circuit
• APS 2 power supply circuit
• BPS power supply circuit
• ECM component</td></tr>
<tr><td>Enable Conditions</td><td colspan="3">• IG KEY "ON"</td></tr>
<tr><td>Threshold Value</td><td colspan="3">• when the voltage is below the minimum voltage of sensor power supply (below 4.7V)</td></tr>
<tr><td>Diagnostic Time</td><td colspan="3">• 0.1 sec.</td></tr>
<tr><td rowspan="4">Fail Safe</td><td>Fuel cut</td><td>NO</td><td rowspan="4"></td></tr>
<tr><td>EGR Off</td><td>NO</td></tr>
<tr><td>Fuel Limit</td><td>YES</td></tr>
<tr><td>Check Lamp</td><td>NO</td></tr>
</table>

SPECIFICATION E71043FC

Sensor power 1	Sensor power 2	Sensor power 3
AFS, APS 1 4830mV~5158mV	RPS, APS 2,BPS 4830mV~5158mV	A/C pressure transducer,VSA position Sensor 4830mV~5158mV

SCHEMATIC DIAGRAM E127962D

[CIRCUIT DIAGRAM]

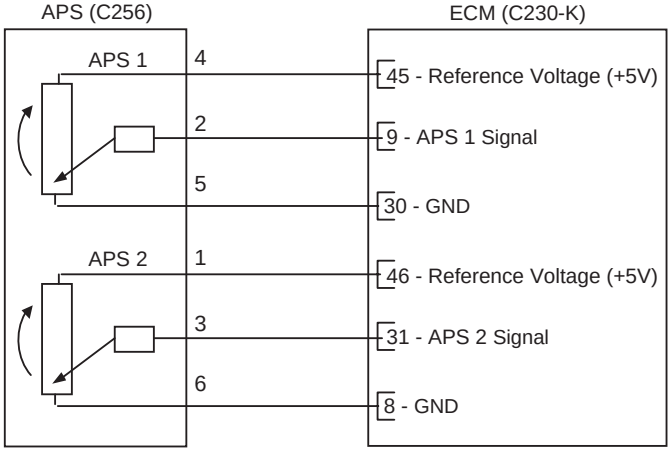

[CONNECTION INFORMATION]

Terminal	Connected to	Function
1	ECM C230-K (46)	APS 2 Reference Voltage (+5V)
2	ECM C230-K (9)	APS 1 Signal
3	ECM C230-K (31)	APS 2 Signal
4	ECM C230-K (45)	APS 1 Reference Voltage (+5V)
5	ECM C230-K (30)	APS 1 Ground
6	ECM C230-K (8)	APS 2 Ground

[HARNESS CONNECTORS]

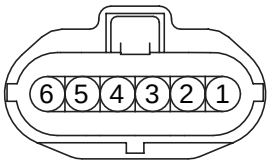

C256

APS

C230-A

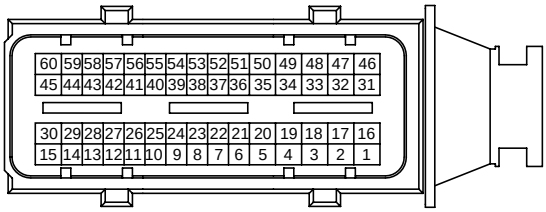

C230-K

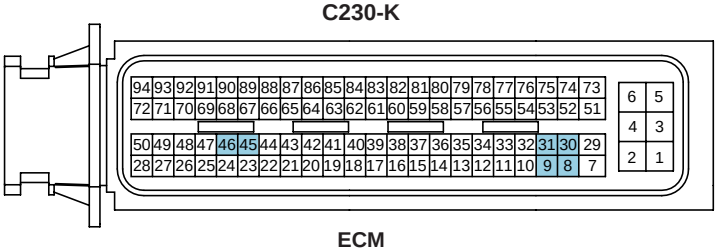

ECM

SCMFL6123L

[CIRCUIT DIAGRAM]

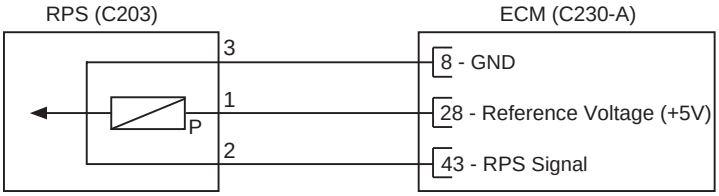

[CONNECTION INFORMATION]

Terminal	Connected to	Function
1	ECM C230-A (28)	Reference Voltage (+5V)
2	ECM C230-A (43)	RPS Signal
3	ECM C230-A (8)	Sensor Signal

[HARNESS CONNECTORS]

C203

RPS

C230-A

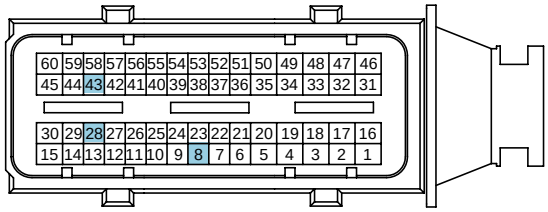

C230-K

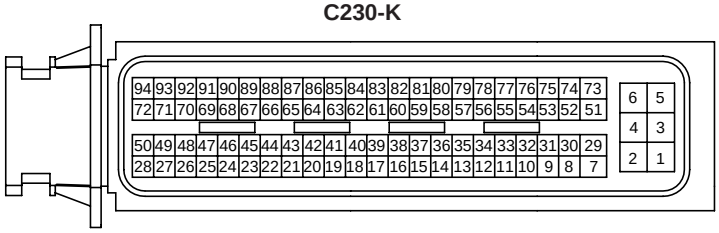

ECM

SCMFL6124L

[CIRCUIT DIAGRAM]

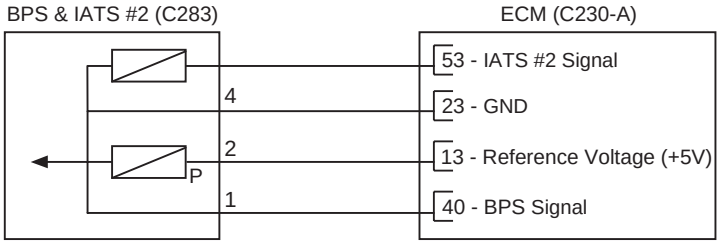

[CONNECTION INFORMATION]

Terminal	Connected to	Function
1	ECM C230-A (40)	BPS Signal
2	ECM C230-A (13)	Reference Voltage (+5V)
3	ECM C230-A (53)	IATS #2 Signal
4	ECM C230-A (23)	Sensor ground

[HARNESS CONNECTORS]

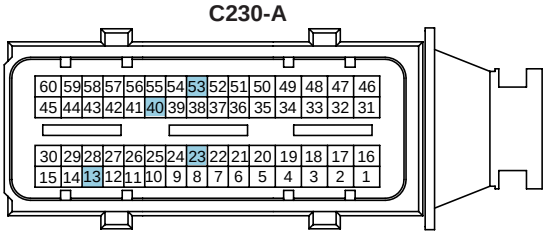

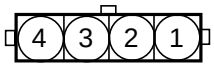

C283

BPS & IATS #2

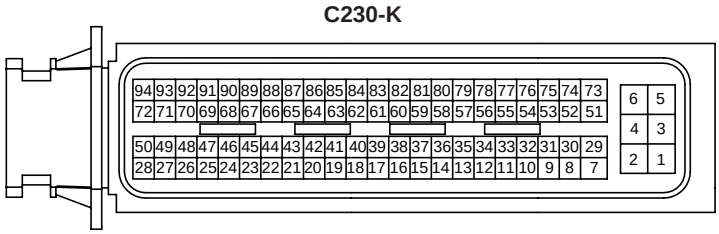

SCMFL6118L

SIGNAL WAVEFORM AND DATA E9902EF6

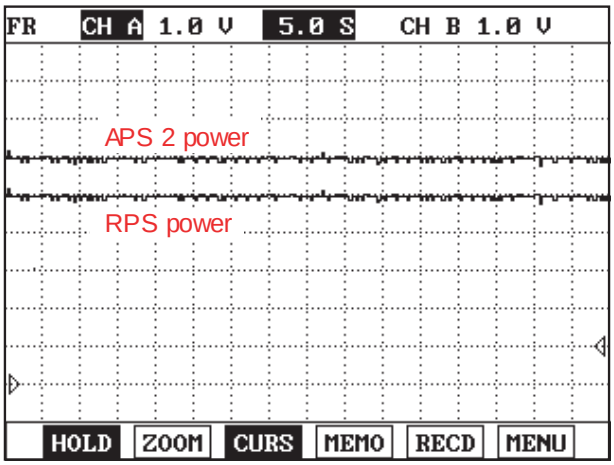

Fig.1

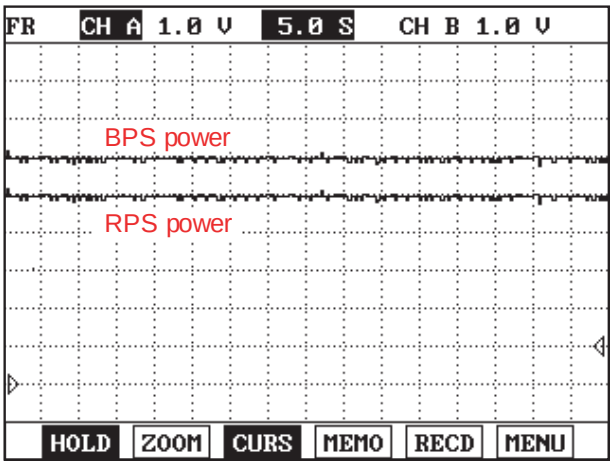

Fig.2

Fig.1) APS2 and RPS power supply signals are measured simultaneously. Check if the voltages are within the specification (4.8~5.1V) at IG KEY "ON".

Fig.2) BPS and RPS power supply signals are measured simultaneously. Check if the voltages are within the specification (4.8~5.1V) at IG KEY "ON".

LFIG347A

TERMINAL AND CONNECTOR INSPECTION EBF273D1

1. Electrical systems consist of a lot of harness and connectors, poor connection of terminals can cause various problems and damge of component.

2. Perform checking procedure as follows.

   1) Check damage of harness and terminals : Check terminals for contact resistance, corrosion and deformation.

   2) Check connecting condition of ECM and component connector : Check terminal seperation, damage of locking device and connecting condition between terminal and wiring.

   NOTE

   Disconnect the pin which requires checking at male connector and insert it to the terminal at female connector for checking connecting condition. (after checking, reconnect the pin at correct position.)

3. Is the problem found?

   YES

   ▶ Repair the trouble causing part and go to "Verification of Vehicle Repair".

   NO

   ▶ Go to "Power Circuit Inspection".

POWER CIRCUIT INSPECTION E66EC9F6

1. Check power circuit voltage

   1) IG KEY "OFF", ENGINE "OFF".

   2) Disconnector RPS connector, APS connector and BPS connector.

   3) IG KEY "ON".

   4) Measure the voltage of RPS connector terminal 1, APS connector terminal 1 and BPS terminal 2.

Specification : 4.8V~5.1V

   5) Is the measured voltage within the specification?

   YES

   ▶ Go to "Component Inspection".

   NO

   ▶ Go to "2. Check short to ground in power circuit" as follows.

2. Check short to ground in power circuit

   1) IG KEY "OFF", ENGINE "OFF".

   2) Disconnect RPS connector, APS connector, BPS connector and ECM connectors.

   3) Check continuity between RPS connector terminal 1(APS connector terminal 1, BPS terminal 2) and chassis ground.

specification : Discontinuity (Infinite Ω)

4) Is the measured resistance within the specification?

YES

▶ If the circuit is insulated well and the sensor power supply from ECM is low, replace ECM and go to "Verification of Vehicle Repair".

NO

▶ Repair short to ground and go to "Verification of Vehicle Repair".

COMPONENT INSPECTION ECB1AE5B

1. IG KEY "OFF", ENGINE "OFF".
2. Disconnect RPS connector, APS connector, BPS connector.
3. Check that sensor connector power supply is within the specification after turning IG KEY "ON".
4. Connect RPS connector and APS connector in turn.
5. Measure the voltage of power circuit of each sensor with all connector connected.

Specification : sensor power supply should not change as connecting RPS connector, APS connector, BPS connector.
(If the change of sensor power supply occur as connecting sensor connector, this means the occurrence of short inside of sensor.)

6. Does change of sensor power supply occur as connecting sensor connector?

YES

▶ Replace related sensors.(rail pressure sensor, accel pedal sensor, boost pressure sensor)

NO

▶ Go to "Verification of Vehicle Repair".

VERIFICATION OF VEHICLE REPAIR EB460508

After a repair, it is essential to verify that the fault is corrected.

1. After connecting Scantool select "DIAGNOSTIC TROUBLE CODES(DTCs)" mode.
2. Clear recorded DTC using Scantool.
3. Drive the vehicle within DTC "Enable conditions" in "General information".
4. After selecting "DIAGNOSTIC TROUBLE CODES(DTCs)" mode and check if DTC is recorded again.
5. Are any DTCs recorded ?

YES

▶ Go to the DTC guide of recorded NO. in Scantool.

NO

▶ System operates within specification.

DTC P0653 SENSOR REFERENCE VOLTAGE "B" CIRCUIT HIGH

GENERAL DESCRIPTION E6E1BFEF

Refer to DTC P0652.

DTC DESCRIPTION EBEA1843

P0653 is set when the voltage above 5.158V - maximum voltage of sensor power supply 2 generates from ECM - is detected for more than 0.1 sec.. This code is due to the short to battery in sensor power circuit or the voltage problem inside of ECM.

DTC DETECTING CONDITION E1037AE3

<table>
<tr><th>Item</th><th colspan="3">Detecting Condition</th><th>Possible Cause</th></tr>
<tr><td>DTC Strategy</td><td colspan="3">• Voltage monitoring</td><td rowspan="6">• RPS power supply circuit
• APS 2 power supply circuit
• BPS power supply circuit
• ECM component</td></tr>
<tr><td>Enable Conditions</td><td colspan="3">• IG KEY "ON"</td></tr>
<tr><td>Threshold Value</td><td colspan="3">• when the voltage is above the maximum voltage of sensor power supply.(above 5.158V)</td></tr>
<tr><td>Diagnostic Time</td><td colspan="3">• 0.1 sec.</td></tr>
<tr><td rowspan="4">Fail Safe</td><td>Fuel cut</td><td>NO</td><td rowspan="4"></td></tr>
<tr><td>EGR Off</td><td>NO</td></tr>
<tr><td>Fuel Limit</td><td>YES</td></tr>
<tr><td>Check Lamp</td><td>NO</td></tr>
</table>

SPECIFICATION E88D96CE

Refer to DTC P0652.

SCHEMATIC DIAGRAM E9721A2D

Refer to DTC P0652.

SIGNAL WAVEFORM AND DATA E3F156DC

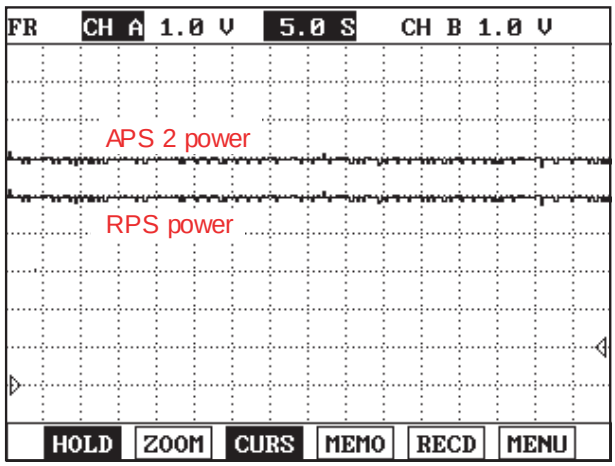

Fig.1

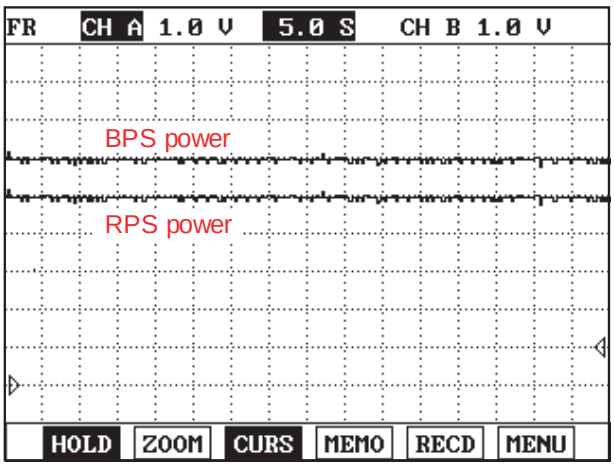

Fig.2

Fig.1) APS2 and RPS power supply signals are measured simultaneously. Check if the voltages are within the specification (4.8~5.1V) at IG KEY "ON".
Fig.2) BPS and RPS power supply signals are measured simultaneously. Check if the voltages are within the specification (4.8~5.1V) at IG KEY "ON".

LFIG347A

TERMINAL AND CONNECTOR INSPECTION E40BAF73

Refer to DTC P0652.

POWER CIRCUIT INSPECTION EF4E87F8

1. Check power circuit voltage

   1) IG KEY "OFF", ENGINE "OFF".

   2) Disconnector RPS connector, APS connector and BPS connector.

   3) IG KEY "ON".

   4) Measure the voltage of RPS connector terminal 1, APS connector terminal 1 and BPS terminal 2.

Specification : 4.8V~5.1V

   5) Is the measured voltage within the specification?

   YES

   ▶ Go to "Component Inspection".

   NO

   ▶ Go to "2. Check open in power circuit" as follows

2. Check open in power circuit

   1) IG KEY "OFF", ENGINE "OFF".

   2) Disconnector RPS connector, APS connector, BPS connector and ECM connector.

3) Measure the registance between RPS connector terminal 1 and ECM connector(C230-A) terminal 28.
Measure the registance between APS connector terminal 1 and ECM connector(C230-K) terminal 46.
Measure the registance between BPS connector terminal 2 and ECM connector(C230-A) terminal 13.

Specification : Continuity (below 1.0Ω)

4) Is the measured resistance within the specification?

YES

▶ Go to "3. Check short to battery in power circuit" as follows.

NO

▶ Repair open in power circuit and go to "Verification of Vehicle Repair".

3. Check short to battery in power circuit

1) IG KEY "OFF", ENGINE "OFF".

2) Disconnector RPS connector, APS connector, BPS connector and ECM connector.

3) IG KEY "ON".

4) Measure the voltage between RPS connector terminal 1 or APS connector terminal 1 or BPS connector terminal 2 and chassis ground.

Specification : 0.0V~0.1V

5) Is the measured voltage within the specification?

YES

▶ If the circuit is insulated well and the sensor power supply from ECM is high, replace ECM and go to "Verification of Vehicle Repair".

NO

▶ Repair short to battery and go to "Verification of Vehicle Repair".

COMPONENT INSPECTION E89CFEE5

1. IG KEY "OFF", ENGINE "OFF".

2. Disconnect RPS connector, APS connector, BPS connector.

3. Check that sensor connector power supply is within the specification after turning IG KEY "ON".

4. Connect RPS connector and APS connector in turn.

5. Measure the voltage of power circuit of each sensor with all connector connected.

Specification : sensor power supply should not change as connecting RPS connector, APS connector, BPS connector. (If the change of sensor power supply occur as connecting sensor connector, this means the occurrence of short inside of sensor.)

6. Does change of sensor power supply occur as connecting sensor connector?

YES

▶ Replace related sensors.(rail pressure sensor, accel pedal sensor, boost pressure sensor)

NO

▶ Go to "Verification of Vehicle Repair".

VERIFICATION OF VEHICLE REPAIR E4C6AA40

Refer to DTC P0652.

DTC P0670 GLOW RELAY CIRCUIT MALFUNCTION

COMPONENT LOCATION ED0542EA

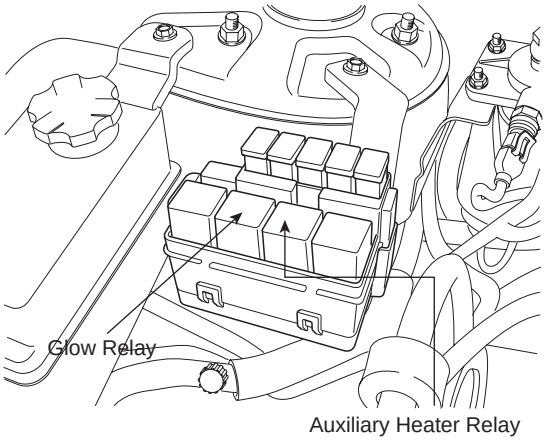

SCMFL6508L

GENERAL DESCRIPTION ED2AA0E4

Heating combustion chamber, glow plug increases fuel ignitibility and makes fuel in the foggy state easily when engine is cold. Thus, glow plug makes engine starting easily and decreases exhaust gas produced just after turning engine on when engine is cold.ECM controls operation and operating duration of glow plug relay which supplies power to glow plug with ECTS signal, battery voltage and IG KEY ON signal.Through glow lamp in cluster, ECM let drivers know if glow plug is ON.

DTC DESCRIPTION E7020BF3

P0670 is set when 1)excessive voltage is detected or 2)no current is detected like open or short to ground in glow relay control circuit for more than 1 sec. at glow relay ON condition. This code is due to open in glow relay control circuit or internal open in glow relay component.

DTC DETECTING CONDITION EF4807F1

Item	Detecting Condition			Possible Cause
DTC Strategy	• Voltage monitoring			• Glow relay control circuit • Glow relay component
Enable Conditions	• IG KEY "ON" (monitoring only performed within relay operating condition)			
Threshold Value	• short to battery • Short to GND, Wiring open			
Diagnostic Time	• 1.0 sec.			
Fail Safe	Fuel cut	NO		
	EGR Off	NO		
	Fuel Limit	NO		
	Check Lamp	NO		

SPECIFICATION E971562A

※ **RELAY OPERATING TIME**

	- 20℃	-10℃	10℃	50℃
10V	16sec	10sec	4sec	2.0sec
14.9V	16sec	10sec	4sec	2.0sec

SCHEMATIC DIAGRAM E832E495

[CIRCUIT DIAGRAM]

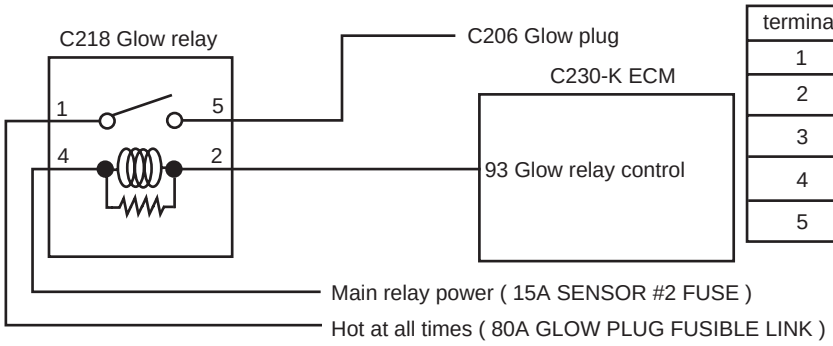

[CONNECTOR INFORMATION]

terminal	Connected to	Function
1	80A GLOW PLUG FUSIBLE LINK	Glow plug power(INPUT)
2	C230-K terminal 93	Glow relay control
3	-	-
4	15A SENSOR #2 FUSE	Glow relay coil power
5	C206 terminal 1	Glow plug power(OUTPUT)

[HARNESS CONNECTOR]

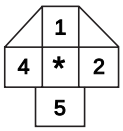

Glow relay
C218

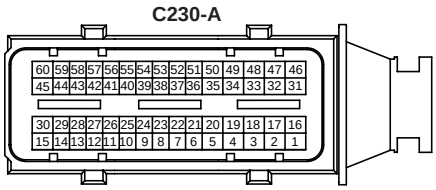

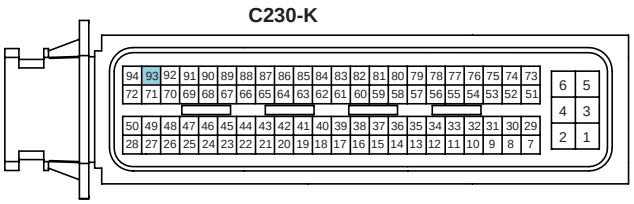

ECM

SCMFL6406L

MONITOR SCANTOOL DATA EFD64FA9

1. Connect Scantool to Data Link Connector (DLC).
2. Warm engine up to normal operating temperature.
3. Turn "OFF" electrical devices and A/C.
4. Monitor "GLOW RELAY" parameter on the Scantool.

specification : After operating according to engine coolant temperature and battery voltage, Glow relay turns "OFF". at IG KEY "ON". (Refer to Specification)

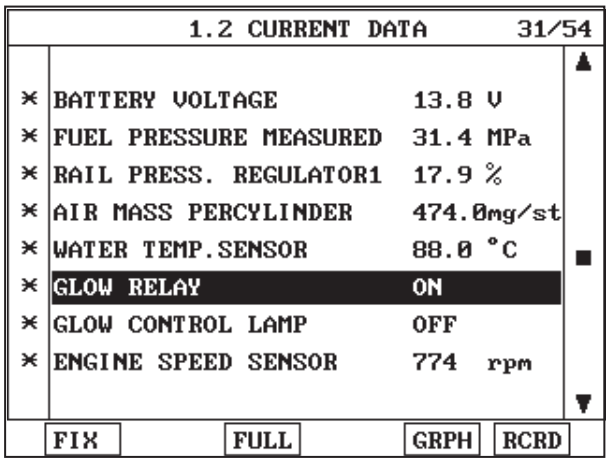

Fig.1

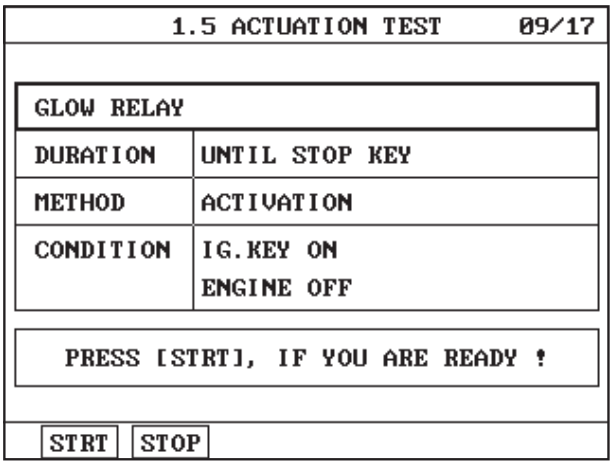

Fig.2

Fig 1) Operating state of Glow relay is shown. However, it is difficult to check operating state because Glow relay turns OFF 2~3 sec. after operation at normal temp.
Fig.2) Checking glow relay operation and power supply to glow plug using "ACTUATION TEST" on Scantool is convenient.

SCMFL6320L

TERMINAL AND CONNECTOR INSPECTION ED7D66C4

1. Electrical systems consist of a lot of harness and connectors, poor connection of terminals can cause various problems and damge of component.

2. Perform checking procedure as follows.

   1) Check damage of harness and terminals : Check terminals for contact resistance, corrosion and deformation.

   2) Check connecting condition of ECM and component connector : Check terminal seperation, damage of locking device and connecting condition between terminal and wiring.

   NOTE

   Disconnect the pin which requires checking at male connector and insert it to the terminal at female connector for checking connecting condition. (after checking, reconnect the pin at correct position.)

3. Is the problem found?

   YES

   ▶ Repair the trouble causing part and go to "Verification of Vehicle Repair".

   NO

   ▶ Go to "Power Circuit Inspection".

POWER CIRCUIT INSPECTION E7CB40A7

1. Check HOT AT ALL TIMES power circuit voltage

   1) IG KEY "OFF", ENGINE "OFF".

   2) Disconnect glow relay.

   3) Measure the voltage of glow relay connector terminal 1.

Specification : 11.5V~13.0V

4) Is the measured voltage within the specification?

YES

▶ Go to "2. Check IG KEY "ON" power circuit voltage" as follows.

NO

▶ Repair FUSIBLE LINK BOX 80A GLOW PLUG FUSIBLE LINK and related circuit and go to "Verification of Vehicle Repair".

2. Check IG KEY "ON" power circuit voltage

1) IG KEY "OFF", ENGINE "OFF".

2) Disconnect glow relay.

3) IG KEY "ON".

4) Measure the voltage of glow relay connector terminal 4.

Specification : 11.5V~13.0V

5) Is the measured voltage within the specification?

YES

▶ Go to "Control Circuit Inspection".

NO

▶ Repair E/R FUSE & RELAY BOX 15A SENSOR #2 FUSE and related circuit and go to "Verification of Vehicle Repair".

CONTROL CIRCUIT INSPECTION ECEF7E5F

1. Check control circuit monitoring voltage

1) IG KEY "OFF", ENGINE "OFF".

2) Disconnect glow relay.

3) IG KEY "ON".

4) Measure the voltage of glow relay connector terminal 2.

Specification : 3.2V~3.7V

5) Is the measured voltage within the specification?

YES

▶ Go to "Component Inspection".

NO

▶ When no value is detected : Go to "2. Check open in control circuit".
▶ When high voltage is detected : Repair short to battery in signal circuit and go to "Verification of Vehicle Repair".

2. Check open in control circuit

1) IG KEY "OFF", ENGINE "OFF".

2) Disconnect glow relay and ECM connector.

3) Check continuity between glow relay connector terminal 2 and ECM connector (C230-K) terminal 93.

specification : Continuity (below 1.0Ω)

4) Is the measured resistance within the specification?

YES

▶ Repair short to ground and go to "Verification of Vehicle Repair".

NO

▶ Repair open in control circuit and go to "Verification of Vehicle Repair".

COMPONENT INSPECTION E0118EC9

1. Check golw relay component coil resistance

1) IG KEY "OFF", ENGINE "OFF".

2) Disconnect glow relay.

3) Measure the resistance of glow relay component coil.

Specification : 55±5 Ω (20°C)

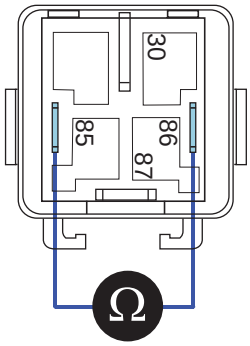

EGNG007M

4) Is the measured resistance within the specification?

YES

▶ Go to "2. Check glow relay component operation" as follows.

NO

▶ Replace glow relay and go to "Verification of Vehicle Repair".

2. Check glow relay component operation

   1) IG KEY "OFF", ENGINE "OFF".

   2) Disconnect glow relay.

   3) Supplies random B+ and ground to coil sides of glow relay (terminal 85, terminal 86).

   4) Check continuity between glow relay terminal 30 and terminal 87.

specification : When power is supplied : Continuity (below 1.0Ω)
When power is not supplied : Discontinuity (Infinite Ω)

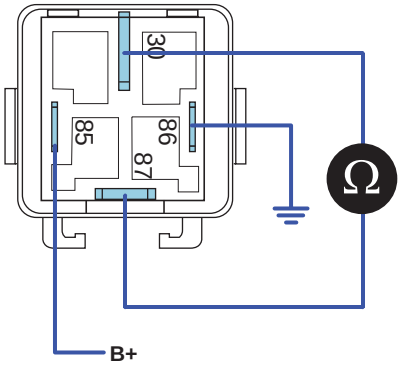

EGNG007N

   5) Is the measured resistance within the specification?

   YES

   ▶ Go to "Verification of Vehicle Repair".

   NO

   ▶ Replace glow relay and go to "Verification of Vehicle Repair".

   ※ Repeat this process 2~3 times.

VERIFICATION OF VEHICLE REPAIR E5386DA9

After a repair, it is essential to verify that the fault is corrected.

1. After connecting Scantool select "DIAGNOSTIC TROUBLE CODES(DTCs)" mode.
2. Clear recorded DTC using Scantool.
3. Drive the vehicle within DTC "Enable conditions" in "General information".
4. After selecting "DIAGNOSTIC TROUBLE CODES(DTCs)" mode and check if DTC is recorded again.
5. Are any DTCs recorded ?

   YES

   ▶ Go to the DTC guide of recorded NO. in Scantool.

NO

▶ System operates within specification.

DTC P0685 ECM/PCM POWER RELAY CONTROL CIRCUIT /OPEN

COMPONENT LOCATION E84BCA07

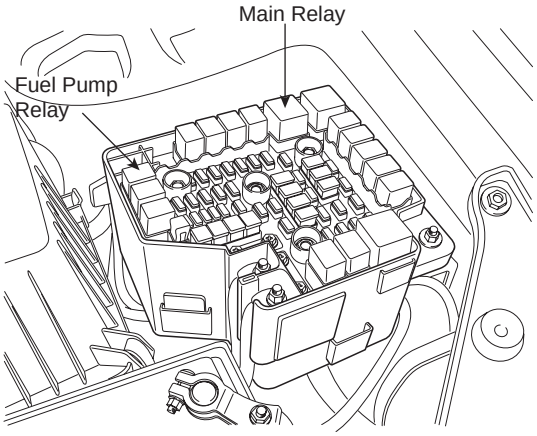

SCMFL6507L

GENERAL DESCRIPTION ED9CFAB0

Main relay operates when Ignition ON signal is inputted to ECM connector(C230-K) terminal 28 and it supplies power to ECM, fuel pump relay, CMP, EGR actuator, throttle flap actuator, PTC heater relay and brake switch, etc. Especially, the power supplied to ECM is used as a main power of injectors, rail pressure control valve and ECM operation.When IG KEY ON signal is shut off during turning engine OFF, ECM stops injector operation then engine turns OFF. Approx. after 16 sec., ECM shuts OFF main relay and system turns OFF. Main relay is very important for engine operation, so careful inspection is strongly required.

DTC DESCRIPTION E3790076

When IG KEY OFF signal is imputted to ECM. ECM stops injector operation and engine turns OFF. Then, After-run(turning off process of ECM internal system) is performed in order to shut system down. During this process, if main relay power supply is cut too late or power supply is cut too early before After-run process completes, ECM detect main relay error and P0685 is set.

DTC DETECTING CONDITION E6C9ECE0

Item	Detecting Condition			Possible Cause
DTC Strategy	• Voltage monitoring			• Main relay circuit • Main relay component
Enable Conditions	• Engine running			
Threshold Value	• When main relay responds to IG KEY - ON/OFF signal too fast or slow (After-run finished and it requires more than 2 sec. for Main relay to be deactivated.Main relay deactivated before After-run finished more than 3 times.)			
Diagnostic Time	• Immediately			
Fail Safe	Fuel cut	NO		
	EGR Off	NO		
	Fuel Limit	NO		
	Check Lamp	NO		

SPECIFICATION E402657B

Main Relay Coil Resistance	85±10 Ω (20°C)

SCHEMATIC DIAGRAM EB7ED8A6

[CIRCUIT DIAGRAM]

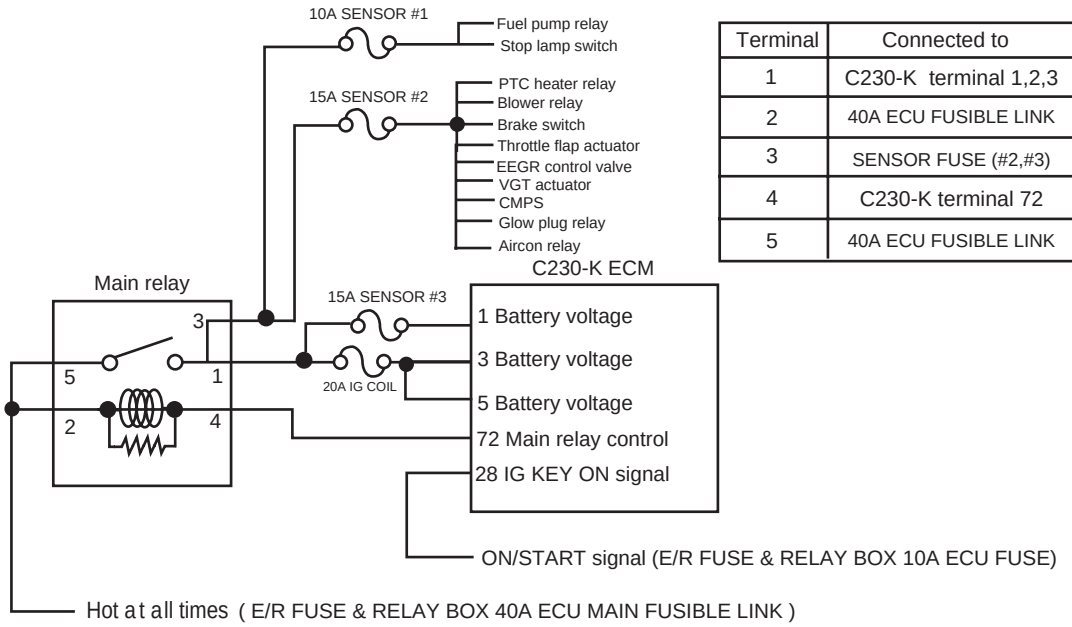

[CONNECTOR INFORMATION]

Terminal	Connected to	Function
1	C230-K terminal 1,2,3	Power supply to ECM, Sensor, Actuator
2	40A ECU FUSIBLE LINK	Main relay coil power
3	SENSOR FUSE (#2,#3)	Power supply to ECM, Sensor, Actuator
4	C230-K terminal 72	Main relay control
5	40A ECU FUSIBLE LINK	Hot at all times

[HARNESS CONNECTOR]

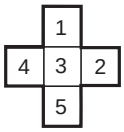

Main relay

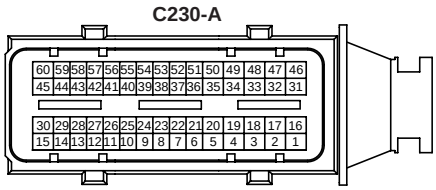

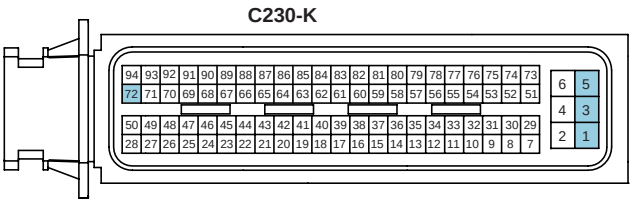

ECM

SCMFL6407L

SIGNAL WAVEFORM AND DATA EE4A0870

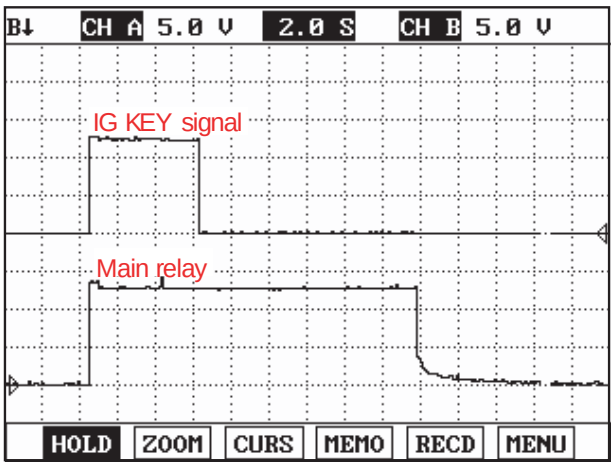

Fig.1

Fig.1) Main relay operates when IG KEY "ON" (C230-K terminal 28 ON signal), it turns "OFF" in 16 sec. after IG KEY "OFF".

SCMFL6392L

TERMINAL AND CONNECTOR INSPECTION E0B082ED

1. Electrical systems consist of a lot of harness and connectors, poor connection of terminals can cause various problems and damge of component.

2. Perform checking procedure as follows.

   1) Check damage of harness and terminals : Check terminals for contact resistance, corrosion and deformation.

   2) Check connecting condition of ECM and component connector : Check terminal seperation, damage of locking device and connecting condition between terminal and wiring.

   NOTE

   Disconnect the pin which requires checking at male connector and insert it to the terminal at female connector for checking connecting condition. (after checking, reconnect the pin at correct position.)

3. Is the problem found?

   YES

   ▶ Repair the trouble causing part and go to "Verification of Vehicle Repair".

   NO

   ▶ Go to "Power Circuit Inspection".

POWER CIRCUIT INSPECTION E6CF3DDE

1. Check power circuit voltage

   1) IG KEY "OFF", ENGINE "OFF".

   2) Disconnect main relay.

   3) Measure the voltage of main relay terminal 2 and 5.

Specification : 11.5V~13.0V

4) Is the measured voltage within the specification?

YES

▶ Go to "Check power supply line(relay→actuator)" as follows.

NO

▶ Repair E/R FUSE & RELAY BOX 40A ECU MAIN FUSIBLE LINK and related circuit and go to "Verification of Vehicle Repair".

2. Check power supply line(relay→actuator)

1) IG KEY "OFF", ENGINE "OFF".

2) Disconnect main relay and ECM connector.

3) Connect main relay terminal 5 and 1 using jump wire.

4) Measure the voltage of ECM connector (C230-K) terminal 1,3,5.

specification : 11.5V~13.0V

5) Is the measured voltage within the specification?

YES

▶ Go to "Control Circuit Inspection".

NO

▶ Repair open in the circuit from which no voltage is detected, and go to "Verification of Vehicle Repair".

CONTROL CIRCUIT INSPECTION E02B93DD

1. Check open in control circuit

1) IG KEY "OFF", ENGINE "OFF".

2) Disconnect main relay and ECM connector.

3) Check continuity between main relay terminal 4 and ECM connector (C230-K) 72.

specification : Continuity (below 1.0Ω)

4) Is the measured resistance within the specification?

YES

▶ Go to "2. Check short to ground in control circuit" as follows.

NO

▶ Repair open in control circuit and go to "Verification of Vehicle Repair".

2. Check short to ground in control circuit

   1) IG KEY "OFF", ENGINE "OFF".

   2) Disconnect main relay and ECM connector.

   3) Check continuity between main relay terminal 4 and chassis ground.

specification : Discontinuity (Infinite Ω)

   4) Is the measured resistance within the specification?

   YES

   ▶ Go to "3.Check short to battery in control circuit" as follows.

   NO

   ▶ Repair short to ground in control circuit and go to "Verification of Vehicle Repair".

3. Check short to battery in control circuit

   1) IG KEY "OFF", ENGINE "OFF".

   2) Disconnect main relay and ECM connector.

   3) IG KEY "ON".

   4) Measure the voltage of main relay connector terminal 4.

specification : 0.0V~0.1V

   5) Is the measured resistance within the specification?

   YES

   ▶ Go to "Component Inspection".

   NO

   ▶ Repair short to battery in signal circuit and go to "Verification of Vehicle Repair".

COMPONENT INSPECTION E23A6338

1. Check main relay component resistance

   1) IG KEY "OFF", ENGINE "OFF".

   2) Disconnect main relay.

   3) Measure the resistance between main relay coil component terminal 85 and 86.

Specification : 85±10 Ω (20℃)

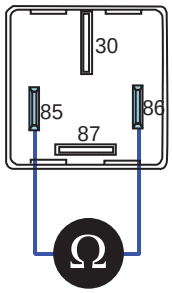

EGNG010F

4) Is the measured resistance within the specification?

YES

▶ Go to "2. Check main relay component operation" as follows.

NO

▶ Replace main relay and go to "Verification of Vehicle Repair".

2. Check main relay component operation

1) IG KEY "OFF", ENGINE "OFF".

2) Disconnect main relay.

3) Supplies random B+ and ground to coil sides of main relay. (terminal 85, terminal 86)

4) Check continuity between main relay component terminal 30 and 87.

specification : When power is supplied : Continuity (below 1.0Ω)
When power is not supplied : Discontinuity (Infinite Ω)

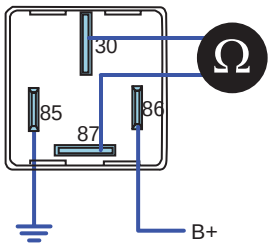

EGNG010G

5) Is the continuity test within the specification?

YES

▶ Go to "Verification of Vehicle Repair".

NO

▶ Replace main relay and go to "Verification of Vehicle Repair".

※ Repeat this process 2~3 times.

VERIFICATION OF VEHICLE REPAIR EFBCBCD3

After a repair, it is essential to verify that the fault is corrected.

1. After connecting Scantool select "DIAGNOSTIC TROUBLE CODES(DTCs)" mode.
2. Clear recorded DTC using Scantool.
3. Drive the vehicle within DTC "Enable conditions" in "General information".
4. After selecting "DIAGNOSTIC TROUBLE CODES(DTCs)" mode and check if DTC is recorded again.
5. Are any DTCs recorded ?

YES

▶ Go to the DTC guide of recorded NO. in Scantool.

NO

▶ System operates within specification.

DTC P0698 SENSOR REFERENCE VOLTAGE "C" CIRCUIT LOW

GENERAL DESCRIPTION EDE30970

ECM is activated by power supply. Signals from several sensors, such as CKPS and APS, is inputted to ECM. Comparing inputted siganals with control LOGIC saved at micro controller and EEPROM, ECM controlls engine as actuating injectors, solenoids and relays. To guarantee accurate control, ECM performs SELF TEST, DIAGNOSIS of several sensors and actuators. And if serious trouble which affects vehicle performance occurrs, ECM sets DTCs.At certain cases, ECM shuts down whole systems in order to prevent dangerous situation due to incorrect control.

DTC DESCRIPTION E9F08875

P0698 is set when the voltage below 4.7V - minimum voltage of sensor power supply 3 generates from ECM - is detected for more than 0.1 sec.. This code is due to the short to ground in sensor power circuit or the voltage problem inside of ECM.

DTC DETECTING CONDITION E2C2A9A5

<table>
<tr><th>Item</th><th colspan="3">Detecting Condition</th><th>Possible Cause</th></tr>
<tr><td>DTC Strategy</td><td colspan="3">• Voltage monitoring</td><td rowspan="6">• A/C pressure transducer power supply circuit
• variable swirl control actuator power supply circuit
• ECM component</td></tr>
<tr><td>Enable Conditions</td><td colspan="3">• IG KEY "ON"</td></tr>
<tr><td>Threshold Value</td><td colspan="3">• when the voltage is below the minimum voltage of sensor power supply (below 4.7V)</td></tr>
<tr><td>Diagnostic Time</td><td colspan="3">• 0.1 sec.</td></tr>
<tr><td rowspan="4">Fail Safe</td><td>Fuel cut</td><td>NO</td><td rowspan="4"></td></tr>
<tr><td>EGR Off</td><td>NO</td></tr>
<tr><td>Fuel Limit</td><td>YES</td></tr>
<tr><td>Check Lamp</td><td>NO</td></tr>
</table>

SPECIFICATION EF3F308F

Sensor power 1	Sensor power 2	Sensor power 3
MAFS, APS 1 4830mV~5158mV	RPS, APS 2,BPS 4830mV~5158mV	A/C pressure transducer,VSA position Sensor 4830mV~5158mV

SCHEMATIC DIAGRAM E8A07FC2

[CIRCUIT DIAGRAM]

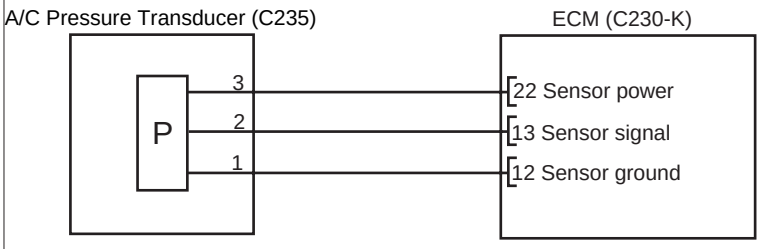

[CONNECTOR INFORMATION]

Terminal	Connected to	Function
1	ECM C230-K (12)	Sensor ground
2	ECM C230-K (13)	Sensor signal
3	ECM C230-K (22)	Sensor power

[HARNESS CONNECTOR]

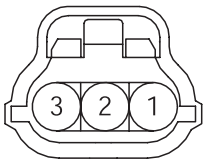

C235
A/C pressure transducer

C230-A

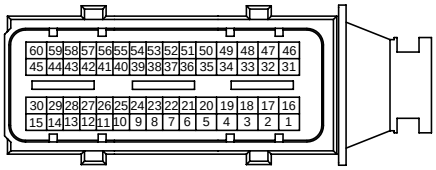

C230-K

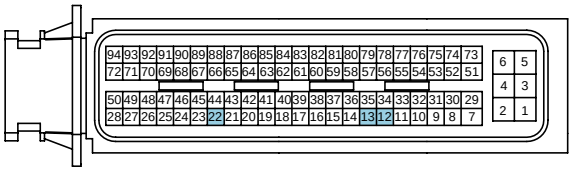

ECM

SCMFL6408L

[CIRCUIT DIAGRAM]

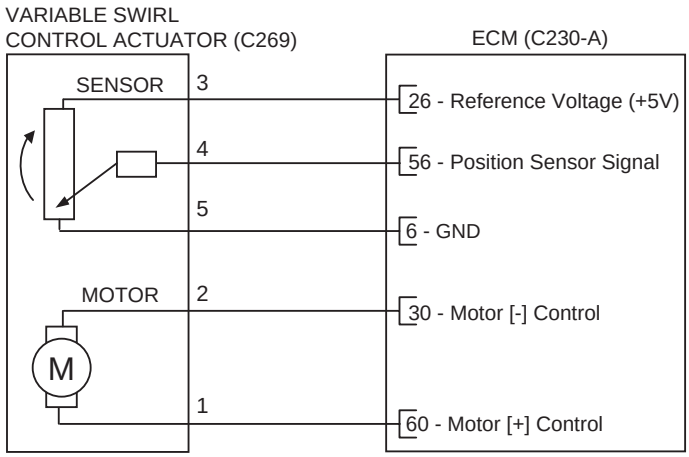

[CONNECTION INFORMATION]

Terminal	Connected to	Function
1	ECM C230-A (60)	Motor [+] Control
2	ECM C230-A (30)	Motor [-] Control
3	ECM C230-A (26)	Reference Voltage (+5V)
4	ECM C230-A (56)	Position Signal
5	ECM C230-A (6)	Sensor Ground

[HARNESS CONNECTORS]

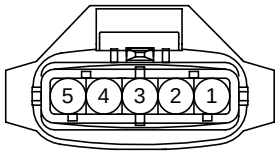

C269

VARIABLE SWIRL CONTROL ACTUATOR

C230-A

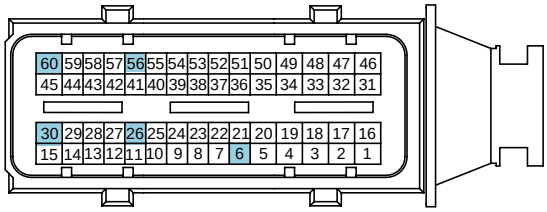

C230-K

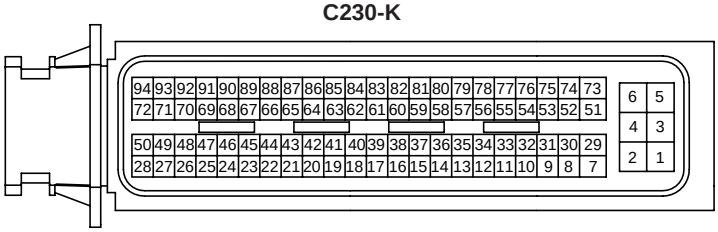

ECM

SCMFL6132L

SIGNAL WAVEFORM AND DATA E2B9B3AE

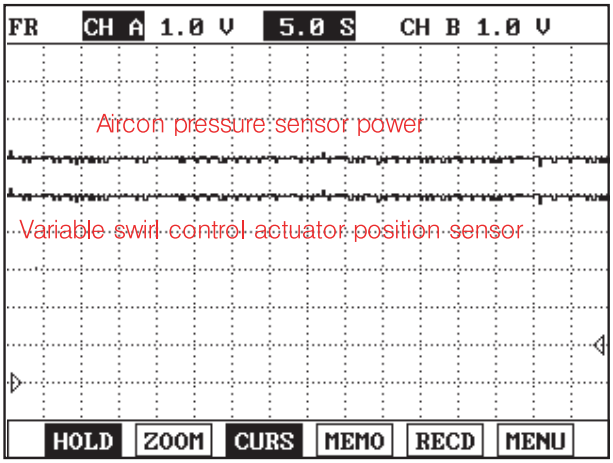

Fig.1

Fig.1) A/C pressure transducer and VSA position Sensor power supply signals are measured simultaneously.
Check if the voltages are within the specification (4.8~5.1V) at IG KEY "ON"

LFIG455A

TERMINAL AND CONNECTOR INSPECTION EC175D89

1. Electrical systems consist of a lot of harness and connectors, poor connection of terminals can cause various problems and damge of component.

2. Perform checking procedure as follows.

   1) Check damage of harness and terminals : Check terminals for contact resistance, corrosion and deformation.

   2) Check connecting condition of ECM and component connector : Check terminal seperation, damage of locking device and connecting condition between terminal and wiring.

   NOTE

   Disconnect the pin which requires checking at male connector and insert it to the terminal at female connector for checking connecting condition. (after checking, reconnect the pin at correct position.)

3. Is the problem found?

   YES

   ▶ Repair the trouble causing part and go to "Verification of Vehicle Repair".

   NO

   ▶ Go to "Power Circuit Inspection".

POWER CIRCUIT INSPECTION EC2CF9CF

1. Check power circuit voltage

   1) IG KEY "OFF", ENGINE "OFF"

   2) Disconnect A/C pressure transducer connector and variable swirl control actuator connector.

   3) IG KEY "ON"

   4) Measure the voltage between A/C pressure transducer connector terminal 3 or variable swirl control actuator connector terminal 3 and chassis ground.

specification : 4.8V~5.1V

   5) Is the measured voltage within the specification?

   YES

   ▶ Go to "Component Inspection".

   NO

   ▶ Go to "2. Check short to ground in power circuit" as follows.

2. Check short to ground in power circuit

   1) IG KEY "OFF", ENGINE "OFF"

   2) Disconnect A/C pressure transducer connector, variable swirl control actuator connector, ECM connectors.

3) Check continuity between A/C pressure transducer connector terminal 3 or variable swirl control actuator connector terminal 3 and chassis ground.

specification : Discontinuity (Infinite Ω)

4) Is the measured resistance within the specification?

YES

▶ If the circuit is insulated well and the sensor power supply from ECM is low, replace ECM and go to "Verification of Vehicle Repair".

NO

▶ Repair short to ground and go to "Verification of Vehicle Repair".

COMPONENT INSPECTION E66A05E8

1. IG KEY "OFF", ENGINE "OFF"
2. Disconnect A/C pressure transducer connector and variable swirl control actuator connector.
3. Check that sensor connector power supply is within the specification after turning IG KEY "ON".
4. Connect A/C pressure transducer connector and variable swirl control actuator connector in turn.
5. Measure the voltage of power circuit of each sensor with all connector connected.

Specification : sensor power supply should not change as connecting A/C pressure transducer connector and variable swirl control actuator connector. (If the change of sensor power supply occur as connecting sensor connector, this means the occurrence of short inside of sensor.)

6. Does change of sensor power supply occur as connecting sensor connector?

YES

▶ Replace A/C pressure transducer or variable swirl control actuator.

NO

▶ Go to "Verification of Vehicle Repair".

VERIFICATION OF VEHICLE REPAIR EE2EADFB

After a repair, it is essential to verify that the fault is corrected.

1. After connecting Scantool select "DIAGNOSTIC TROUBLE CODES(DTCs)" mode.
2. Clear recorded DTC using Scantool.
3. Drive the vehicle within DTC "Enable conditions" in "General information".
4. After selecting "DIAGNOSTIC TROUBLE CODES(DTCs)" mode and check if DTC is recorded again.
5. Are any DTCs recorded ?

YES

▶ Go to the DTC guide of recorded NO. in Scantool.

NO

▶ System operates within specification.

DTC P0699 SENSOR REFERENCE VOLTAGE "C" CIRCUIT HIGH

GENERAL DESCRIPTION E6EB821A

Refer to DTC P0698.

DTC DESCRIPTION E8533693

P0699 is set when the voltage above 5.158V - maximum voltage of sensor power supply 3 generates from ECM - is detected for more than 0.1 sec.. This code is due to the short to battery in sensor power circuit or the voltage problem inside of ECM.

DTC DETECTING CONDITION E7645EBA

<table>
<tr><th>Item</th><th colspan="3">Detecting Condition</th><th>Possible Cause</th></tr>
<tr><td>DTC Strategy</td><td colspan="3">• Voltage monitoring</td><td rowspan="5">• A/C pressure transducer power supply circuit
• variable swirl control actuator power supply circuit
• ECM component</td></tr>
<tr><td>Enable Conditions</td><td colspan="3">• IG KEY "ON"</td></tr>
<tr><td>Threshold Value</td><td colspan="3">• when the voltage is above the maximum voltage of sensor power supply(above 5.158V)</td></tr>
<tr><td>Diagnostic Time</td><td colspan="3">• 0.1 sec.</td></tr>
<tr><td rowspan="4">Fail Safe</td><td>Fuel cut</td><td>NO</td><td rowspan="4"></td></tr>
<tr><td>EGR Off</td><td>NO</td></tr>
<tr><td>Fuel Limit</td><td>YES</td></tr>
<tr><td>Check Lamp</td><td>NO</td></tr>
</table>

SPECIFICATION E1291B6F

Refer to DTC P0698.

SCHEMATIC DIAGRAM EA7E13E7

Refer to DTC P0698.

SIGNAL WAVEFORM AND DATA E71B02FB

Refer to DTC P0698.

TERMINAL AND CONNECTOR INSPECTION ED0D429C

Refer to DTC P0698.

POWER CIRCUIT INSPECTION E0F941F7

1. Check power circuit voltage

   1) IG KEY "OFF", ENGINE "OFF"

   2) Disconnect A/C pressure transducer connector and variable swirl control actuator connector.

3) IG KEY "ON"

4) Measure the voltage between A/C pressure transducer connector terminal 3 or variable swirl control actuator connector terminal 3 and chassis ground.

specification : 4.8V~5.1V

5) Is the measured voltage within the specification?

YES

▶ Go to "Component Inspection".

NO

▶ Go to "2. Check short to ground in power circuit" as follows.

2. Check open in power circuit

1) IG KEY "OFF", ENGINE "OFF"

2) Disconnect A/C pressure transducer connector, variable swirl control actuator connector and ECM connector.

3) Measure the registance between A/C pressure transducer connector terminal 3 and ECM connector(C230-K) terminal 22.
Measure the registance between variable swirl control actuator connector terminal 3 and ECM connector(C230-A) terminal 26.

Specification : Continuity (below 1.0Ω)

4) Is the measured resistance within the specification?

YES

▶ Go to "3. Check short to battery in power circuit" as follows.

NO

▶ Repair open in power circuit and go to "Verification of Vehicle Repair".

3. Check short to battery in power circuit

1) IG KEY "OFF", ENGINE "OFF"

2) Disconnect A/C pressure transducer connector, variable swirl control actuator connector and ECM connector.

3) IG KEY "ON"

4) Measure the voltage between A/C pressure transducer connector terminal 3 or variable swirl control actuator connector terminal 3 and chassis ground.

Specification : 0.0V~0.1V

5) Is the measured voltage within the specification?

YES

▶ If the circuit is insulated well and the sensor power supply from ECM is high, replace ECM and go to "Verification of Vehicle Repair".

NO

▶ Repair short to battery and go to "Verification of Vehicle Repair".

COMPONENT INSPECTION E3E2A5C8

1. IG KEY "OFF", ENGINE "OFF"
2. Disconnect A/C pressure transducer connector and variable swirl control actuator connector.
3. Check that sensor connector power supply is within the specification after turning IG KEY "ON".
4. Connect A/C pressure transducer connector and variable swirl control actuator connector in turn.
5. Measure the voltage of power circuit of each sensor with all connector connected.

Specification : sensor power supply should not change as connecting A/C pressure transducer connector and variable swirl control actuator connector. (If the change of sensor power supply occur as connecting sensor connector, this means the occurrence of short inside of sensor.)

6. Does change of sensor power supply occur as connecting sensor connector?

YES

▶ Replace A/C pressure transducer or variable swirl control actuator.

NO

▶ Go to "Verification of Vehicle Repair".

VERIFICATION OF VEHICLE REPAIR E30F29AE

Refer to DTC P0698.

DTC P0820 NEUTRAL S/W MALFUNCTION

GENERAL DESCRIPTION E4EA39B2

Neutral Gear Switch is installed in M/T vehicle and senses driver's intension to shift gear(driver's intension to drive).ECM recognizes engaged gear based on vehicle speed sensor signal and engine RPM in M/T vehicle. And Black Smoke limiting fuel quantity value varies according to engaged gear.(As higher gear shift is engaged, maximum possible fuel injection quantity increases to raise power generation.)The recognition of engaged gear is available when vehicle speed reachs to 2Km/h - the minimum speed for ECM to detect. When vehicle starts to move after standing for a while and vehicle speed does not reach to 2Km/h, fuel quantity mapping value at neutral gear is adopted to vehicle. Moreover, this phenomenon is more serious when vehicle requires high power generation such as the situation when vehicle is on the slope. To cope with this problem, neutral gear switch which senses driver's intension of starting to move is applied. And fuel injection quantity mapping value suitable for 1st gear is adopted immediately.

NOTE

To reduce black smoke produced during rapid acceleration when no load is applied, fuel injection quantity at none load condition is 70% of that at 1st gear.

DTC DESCRIPTION EB1D0877

P0820 is set when 1)gear is engaged at engine ON, but clutch signal is not detected or 2)only neutral signal is detected at above 80Km/h. for more than 5 sec.. This code is due to open, short to battery or ground in neutral gear switch circuit.

DTC DETECTING CONDITION E27AF4E6

Item	Detecting Condition			Possible Cause
DTC Strategy	• Signal monitoring			• Nertral gear switch component • Nertral gear switch circuit
Enable Conditions	• Engine running			
Threshold Value	• gear is engaged at engine ON, but clutch signal is not detected • Only neutral signal is detected at above 80Km/h			
Diagnostic Time	• 5.0sec			
Fail Safe	Fuel cut	NO		
	EGR Off	NO		
	Fuel Limit	NO		
	Check Lamp	NO		

SPECIFICATION E5BDB6EE

Signal Voltage	Neutral Position	Except Neutral Position
11.0V~13.5V	0.0V~0.2V(LOW)	11.0V~13.5V(HIGH)

SCHEMATIC DIAGRAM E93A62F3

[CIRCUIT DIAGRAM]

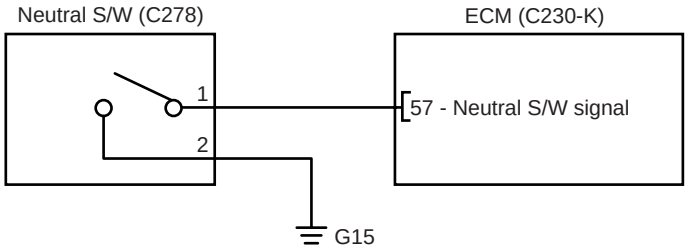

[CONNECTOR INFORMATION]

Terminal	Connected to	Function
1	ECM C230-K (57)	Neutral S/W signal
2	G15 Ground point	Chassis ground

[HARNESS CONNECTOR]

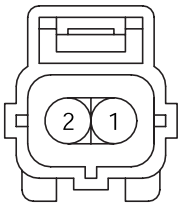

C278
Neutral S/W

C230-A

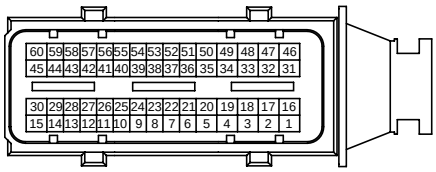

C230-K

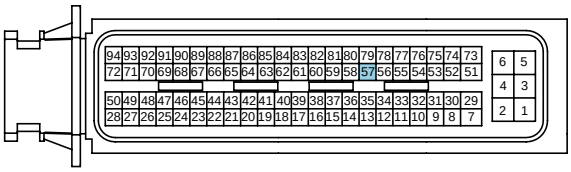

ECM

SCMFL6409L

SIGNAL WAVEFORM AND DATA EC9226B5

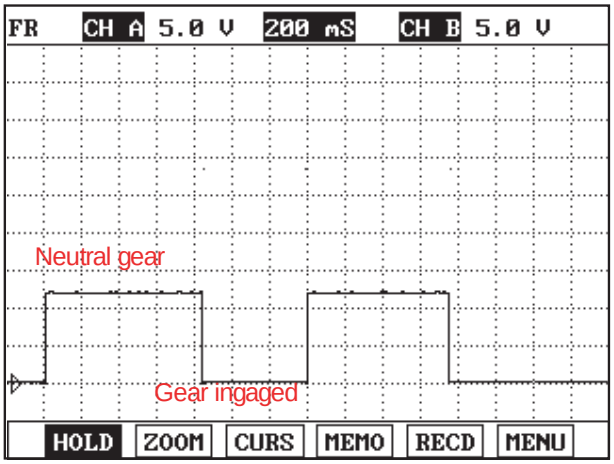

Fig.1

Fig 1) 12V at neutral gear position, 0V at any gear position except neutral position.

LFIG462A

TERMINAL AND CONNECTOR INSPECTION E26DFBE2

1. Electrical systems consist of a lot of harness and connectors, poor connection of terminals can cause various problems and damge of component.

2. Perform checking procedure as follows.

   1) Check damage of harness and terminals : Check terminals for contact resistance, corrosion and deformation.

   2) Check connecting condition of ECM and component connector : Check terminal seperation, damage of locking device and connecting condition between terminal and wiring.

   NOTE

   Disconnect the pin which requires checking at male connector and insert it to the terminal at female connector for checking connecting condition. (after checking, reconnect the pin at correct position.)

3. Is the problem found?

   YES

   ▶ Repair the trouble causing part and go to "Verification of Vehicle Repair".

   NO

   ▶ Go to "Signal Circuit Inspection".

SIGNAL CIRCUIT INSPECTION EC583E92

1. Neutral gear switch Voltage Inspection

   1) IG KEY "OFF", ENGINE "OFF"

   2) Disconnect neutral gear switch connector.

   3) IG KEY "ON"

   4) Check the voltage of neutral gear switch connector terminal 1.

Specification : 11.5V~13.0V

   5) Is the measured voltage within the specification?

   YES

   ▶ Go to "Ground Circuit Inspection".

   NO

   ▶ Go to "2. Check open in neutral gear switch signal cicuit" as follows.

2. Check open in neutral gear switch signal cicuit

   1) IG KEY "OFF", ENGINE "OFF"

   2) Disconnect neutral gear switch connector and ECM connector.

   3) Check the continuity between neutral gear switch connector terminal 1 and ECM connector (C230-K) terminal 57.

specification : Continuity (below 1.0Ω)

   4) Is the continuity test within within the specification?

YES

▶ Repair short to ground in signal circuit and go to "Verification of Vehicle Repair".

NO

▶ Repair open in signal circuit and go to "Verification of Vehicle Repair".

GROUND CIRCUIT INSPECTION E56122CD

1. IG KEY "OFF", ENGINE "OFF"
2. Disconnect neutral gear switch connector and ECM connector.
3. IG KEY "ON"
4. Measure the voltage of neutral gear switch connector terminal 1. [TEST "A"]
5. Measure the voltage between neutral gear switch connector terminal 1 and terminal 2. [TEST "B"]
   (Terminal 1 : Check + prove , terminal 2 : Check - prove)

Specification : [TEST "A"] Voltage - [TEST "B"] Voltage = below 200mV

6. Is the measured voltage within the specification?

YES

▶ Go to "Component Inspection".

NO

▶ When "B" voltage is not detected : Repair open in ground circuit and go to "Verification of Vehicle Repair".
▶ When the voltage difference between "A" and "B" is above 200mV : Eliminate the causes of excessive resistance and go to "Verification of Vehicle Repair".

COMPONENT INSPECTION E3414D89

1. IG KEY "OFF", ENGINE "OFF"
2. Disconnect neutral gear switch connector and ECM connector.
3. Check the contituity between neutral gear switch component terminal 1 and 2 as shifting gear lever two or three times.

specifications : The measured resistance varies from below 1.0Ω (Continuity) to infinite Ω (Discontinuity) in accordance with gear shifting.

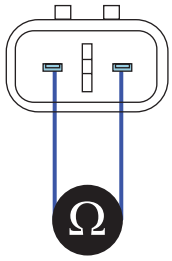

LFIG466A

4. Is the measured resistance within the specification?

YES

▶ Go to "Verification of Vehicle Repair".

NO

▶ Replace neutral gear switch and go to Verification of Vehicle Repair".

VERIFICATION OF VEHICLE REPAIR ECB80C0D

After a repair, it is essential to verify that the fault is corrected.

1. After connecting Scantool select "DIAGNOSTIC TROUBLE CODES(DTCs)" mode.
2. Clear recorded DTC using Scantool.
3. Drive the vehicle within DTC "Enable conditions" in "General information".
4. After selecting "DIAGNOSTIC TROUBLE CODES(DTCs)" mode and check if DTC is recorded again.
5. Are any DTCs recorded ?

YES

▶ Go to the DTC guide of recorded NO. in Scantool.

NO

▶ System operates within specification.

DTC P0830 CLUTCH PEDAL SWITCH "A" CIRCUIT

GENERAL DESCRIPTION E75EDA1B

Clutch switch is connected to clutch pedal and transmits clutch operating state to ECM.When clutch pedal is depressed during driving, engine load changes from loaded to none loaded condition. However, ECM considers vehicle to be loaded becuase VSS signal is still inputted to it. therefore, ECM controls none loaded engine with the condition suitable for loaded engine.Accordingly, optimum fuel injection control is not performed then, RPM becomes unstable and smoke is produced. Clutch operation is detected through clutch switch signal. This signal enables ECM to cope with instant change of load condition. Besides, clutch switch signal is used to detect engaged gear with vehicle speed and engine speed.

DTC DESCRIPTION E32611C9

P0830 is set when no clutch switch signal change is detected while gear shifts 3 times at above 1500rpm. This code is due to 1) clutch switch component failure or 2) open or short in circuit 3) improper height of clutch pedal.
※ECM recognizes ingaged gear with rpm and vehicle speed sensor signal.

DTC DETECTING CONDITION E260193B

<table>
<tr><th>Item</th><th colspan="3">Detecting Condition</th><th>Possible Cause</th></tr>
<tr><td>DTC Strategy</td><td colspan="3">• Signal monitoring</td><td rowspan="6">• Clutch S/W circuit
• Clutch S/W component
• Clutch S/W pedal hight</td></tr>
<tr><td>Enable Conditions</td><td colspan="3">• Engine running</td></tr>
<tr><td>Threshold Value</td><td colspan="3">• No clutch switch signal change is detected until gear shifts 3 times at above 1500rpm</td></tr>
<tr><td>Diagnostic Time</td><td colspan="3">• immediately</td></tr>
<tr><td rowspan="4">Fail Safe</td><td>Fuel cut</td><td>NO</td><td rowspan="4"></td></tr>
<tr><td>EGR Off</td><td>NO</td></tr>
<tr><td>Fuel Limit</td><td>NO</td></tr>
<tr><td>Check Lamp</td><td>NO</td></tr>
</table>

SPECIFICATION E507992F

Condition	Clutch Pedal Depressed	Clutch Pedal Released
Switch Operation	Switch ON	Switch OFF

SCHEMATIC DIAGRAM EF1072D3

[CIRCUIT DIAGRAM]

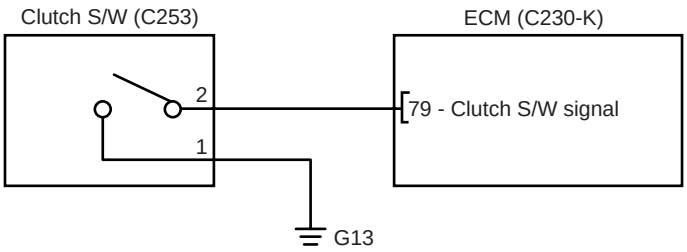

[CONNECTOR INFORMATION]

Terminal	Connected to	Function
1	G13 Ground point	Chassis ground
2	ECM C230-K (79)	Clutch S/W signal

[HARNESS CONNECTOR]

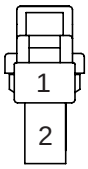

C253
Clutch S/W

C230-A

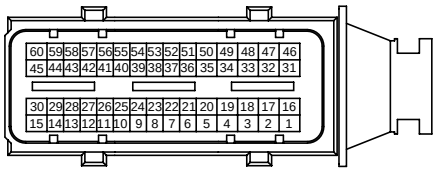

C230-K

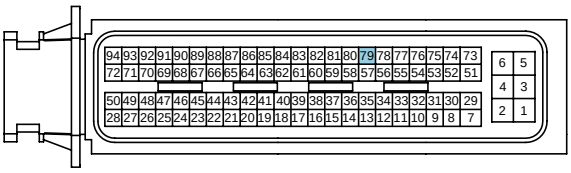

ECM

SCMFL6410L

SIGNAL WAVEFORM AND DATA EA044C63

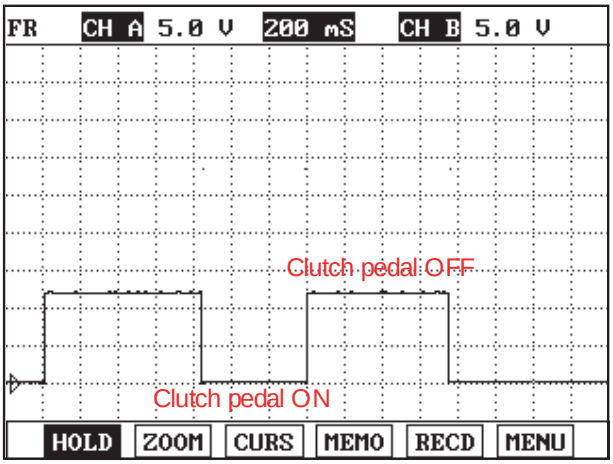

Fig.1

Fig.1) The waveform of clutch switch when clutch pedal is depressed. The output voltage of clutch pedal is 0V when clutch pedal is depressed and 12V when released.

Even though clutch pedal is not depressed just after turning engine on, signal voltage is outputted as 0V. Therefore even if clutch pedal is not depressed, engine can be turned on. However, if pedal is depressed once, clutch switch signal is no more 0V. In this case, turning engine on is possible only when clutch pedal is depressed.

LFIG469A

MONITOR SCANTOOL DATA E7F21DC5

1. Connect Scantool to Data Link Connector (DLC).
2. Warm engine up to normal operating temperature.
3. Turn "OFF" electrical devices and A/C.
4. Select "CLUTCH SWITCH" parameter on the Scantool.

Specification : When clutch switch released : "CLUTCH SWITCH" : OFF When clutch switch depressed : "CLUTCH SWITCH" : ON

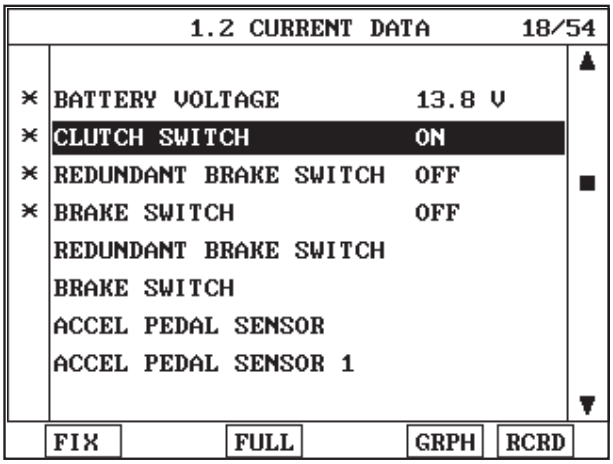

Fig.1

Fig. 1) Check if "CLUTCH SWITCH" parameter changes correctly from "ON" to "OFF" and vice versa as activating clutch pedal.

LFIG470A

TERMINAL AND CONNECTOR INSPECTION E3922764

1. Electrical systems consist of a lot of harness and connectors, poor connection of terminals can cause various problems and damge of component.
2. Perform checking procedure as follows.
   1) Check damage of harness and terminals : Check terminals for contact resistance, corrosion and deformation.
   2) Check connecting condition of ECM and component connector : Check terminal seperation, damage of locking device and connecting condition between terminal and wiring.

   NOTE

   Disconnect the pin which requires checking at male connector and insert it to the terminal at female connector for checking connecting condition. (after checking, reconnect the pin at correct position.)

3. Is the problem found?

   YES

   ▶ Repair the trouble causing part and go to "Verification of Vehicle Repair".

   NO

   ▶ Go to "Signal Circuit Inspection".

SIGNAL CIRCUIT INSPECTION E01CA26E

1. Check clutch switch pull-up voltage
   1) IG KEY "OFF", ENGINE "OFF"
   2) Disconnect clutch switch connector.
   3) IG KEY "ON"
   4) Measure the voltage of terminal 2 of clutch switch connector.

Specification : 11.5V~13.0V

   5) Is the measured voltage within the specification?

YES

▶ Go to "Ground Circuit Inspection".

NO

▶ Go to "2.Check open in clutch switch signal circuit" as follows.

2. Check open in clutch switch signal circuit
   1) IG KEY "OFF", ENGINE "OFF"
   2) Disconnect clutch switch connector and ECM connector.
   3) Check continuity between clutch switch connector terminal 2 and ECM connector (C230-K) terminal 79.

specification : Continuity (below 1.0Ω)

   4) Is the measured resistance within the specification?

YES

▶ Repair short to ground in signal circuit and go to "Verification of Vehicle Repair".

NO

▶ Repair open in signal circuit and go to "Verification of Vehicle Repair".

GROUND CIRCUIT INSPECTION E7BB632C

1. IG KEY "OFF", ENGINE "OFF"
2. Disconnect clutch switch connector and ECM connector.
3. IG KEY "ON"
4. Measure the voltage of clutch switch connector terminal 2. [TEST "A"]
5. Measure the voltage between clutch switch connector terminal 2 and terminal 1. [TEST "B"]
   (Terminal 2 : Check + prove , terminal 1 : Check - prove)

Specification : [TEST "A"] Voltage - [TEST "B"] Voltage = below 200mV

6. Is the measured voltage within the specification?

YES

▶ Go to "Component Inspection".

NO

▶ When "B" voltage is not detected : Repair open in ground circuit and go to "Verification of Vehicle Repair".
▶ When the voltage difference between "A" and "B" is above 200mV : Eliminate the causes of excessive resistance and go to "Verification of Vehicle Repair".

COMPONENT INSPECTION EEFE74DD

1. IG KEY "OFF", ENGINE "OFF"
2. Disconnect clutch switch connector.
3. Check continuity between clutch switch component terminal 1 and 2 as depressing clutch pedal.

Clutch pedal depressed :	Continuity (below 1Ω)
Clutch pedal depressed :	Discontinuity (Infinite Ω)

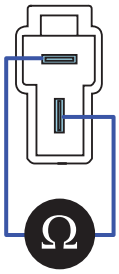

LFIG474A

4. Is the measured resistance within the specification?

YES

▶ Go to "Verification of Vehicle Repair".

NO

▶ After checking height of clutch pedal, if therer is no problem, replace clutch switch and go to "Verification of Vehicle Repair".

VERIFICATION OF VEHICLE REPAIR E7CCE96F

After a repair, it is essential to verify that the fault is corrected.

1. After connecting Scantool select "DIAGNOSTIC TROUBLE CODES(DTCs)" mode.
2. Clear recorded DTC using Scantool.
3. Drive the vehicle within DTC "Enable conditions" in "General information".
4. After selecting "DIAGNOSTIC TROUBLE CODES(DTCs)" mode and check if DTC is recorded again.
5. Are any DTCs recorded ?

YES

▶ Go to the DTC guide of recorded NO. in Scantool.

NO

▶ System operates within specification.

DTC P1145 OVERRUN MONITORING ERROR

GENERAL DESCRIPTION E5F490AB

ECM is activated by power supply. Signals from several sensors, such as CKPS and APS, is inputted to ECM. Comparing inputted signals with control LOGIC saved at micro controller and EEPROM, ECM controlls engine as actuating injectors, solenoids and relays. To guarantee accurate control, ECM performs SELF TEST, DIAGNOSIS of several sensors and actuators. And if serious trouble which affects vehicle performance occurrs, ECM sets DTCs.At certain cases, ECM shuts down whole systems in order to prevent dangerous situation due to incorrect control.

DTC DESCRIPTION EE63CE3D

P1145 is set if fuel supplied to injector is not limited(fuel cut disabled) and injector operates when accelerator pedal is released(when vehicle coasts). This code is due to the case that ECM fails to cut power of injector operating system inside of ECM.

DTC DETECTING CONDITION E44DC5E9

<table>
<tr><th>Item</th><th colspan="3">Detecting Condition</th><th>Possible Cause</th></tr>
<tr><td>DTC Strategy</td><td colspan="3">• Software monitoring</td><td rowspan="6">• ECM internal error</td></tr>
<tr><td>Enable Conditions</td><td colspan="3">• Engine running</td></tr>
<tr><td>Threshold Value</td><td colspan="3">• Injector operating signal duration exceeds max value for more than 12 times.
• The difference between engins speed and segment speed is above 320rpm. - 0.8 sec.</td></tr>
<tr><td>Diagnostic Time</td><td colspan="3">• Refer to Threshold value</td></tr>
<tr><td rowspan="4">Fail Safe</td><td>Fuel cut</td><td>NO</td><td rowspan="4"></td></tr>
<tr><td>EGR Off</td><td>NO</td></tr>
<tr><td>Fuel Limit</td><td>NO</td></tr>
<tr><td>Check Lamp</td><td>NO</td></tr>
</table>

COMPONENT INSPECTION E9099A5F

1. ECM Component Inspection

   1) IG KEY "OFF", ENGINE "OFF".

   2) Disconnect ECM.

   3) Replace ECM, check if abnormal operations disappear.

   4) If problems are corrected, replace ECM.

   NOTE

   Input injector IQA data(7 letters) using scantool at replacing ECM.
   For immobilizer applied vehicle, input pin code.

VERIFICATION OF VEHICLE REPAIR E0710F7C

After a repair, it is essential to verify that the fault is corrected.

1. After connecting Scantool select "DIAGNOSTIC TROUBLE CODES(DTCs)" mode.
2. Clear recorded DTC using Scantool.
3. Drive the vehicle within DTC "Enable conditions" in "General information".
4. After selecting "DIAGNOSTIC TROUBLE CODES(DTCs)" mode and check if DTC is recorded again.
5. Are any DTCs recorded ?

YES

▶ Go to the DTC guide of recorded NO. in Scantool.

NO

▶ System operates within specification.

DTC P1171 MINIMUM RAIL PRESSURE EXCEEDED

COMPONENT LOCATION E58ECD38

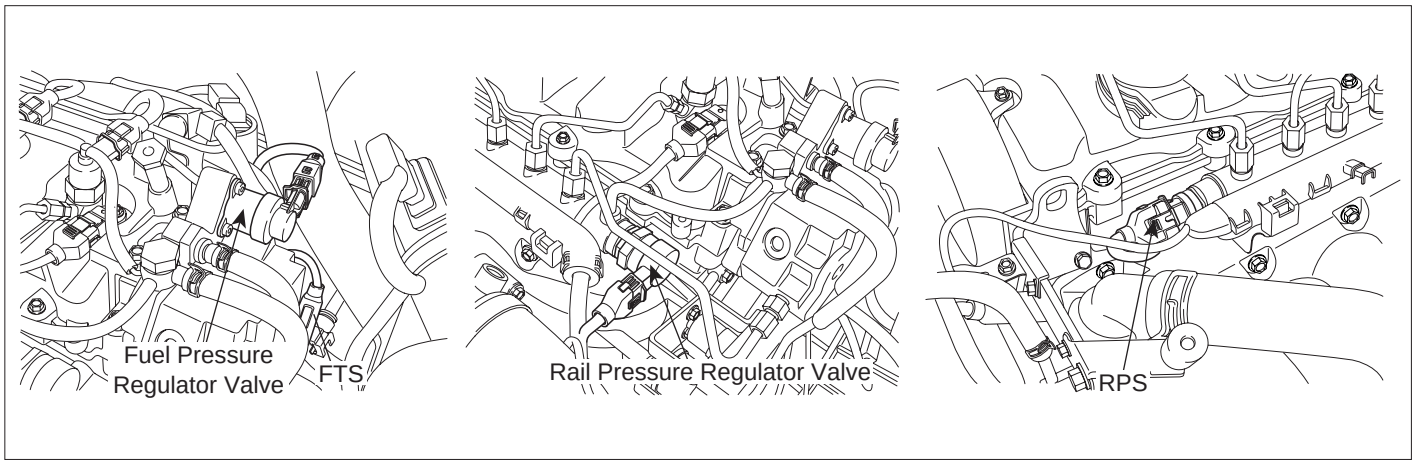

LFIG475A

GENERAL DESCRIPTION E3669CDD

As inputted rail pressure sensor signal, ECM of Commom rail diesel engine controls fuel metering unit(FPRV-intergrated with high press. pump) and rail pressure control valve(RPRV-integrated with common rail) in order to maintain optimum rail pressure according to current engine rpm and load. However when the problem that leads rail pressure to out of target value intended by ECM occurs due to mechanical or electronical reason, ECM limits engine performance and sets DTC by limiting fuel (stops injector operation) in order to prevent engine from being controlled abnormally. "rail pressure monitoring error" is the DTC which diagnoses 1) supplying state of low pressure fuel and 2) mechanical operating conditions of high pressure pump and 3). RPRV indirectly based on RPS output voltage and RPS duty. Thus, repair relavant to this DTC requires mechanics the total understand of fuel system.

DTC DESCRIPTION E54C6EAC

Rail pressure is controlled by 1)only RPRV or 2)both RPRV and FPRV or 3)only RPRV depending on engine condition. These three modes are called 'CPC mode'. During transition from one mode to another mode, if rail pressure is below the minimum rail pressure for each certain engine condition for more than 300ms. P1171 is set then, rail pressure is controlled by RPRV alone.

DTC DETECTING CONDITION E8E237BC

<table>
<tr><th>Item</th><th colspan="3">Detecting Condition</th><th>Possible Cause</th></tr>
<tr><td>DTC Strategy</td><td colspan="3">• Signal monitoring</td><td rowspan="6">• ECM internal error
• RPRV component
• FPRV component
• RPS componet</td></tr>
<tr><td>Enable Conditions</td><td colspan="3">• Engine running</td></tr>
<tr><td>Threshold Value</td><td colspan="3">• If rail pressure is below the minimum rail pressure for each certain engine condition</td></tr>
<tr><td>Diagnostic Time</td><td colspan="3">• 0.3 sec.</td></tr>
<tr><td rowspan="4">Fail Safe</td><td>Fuel cut</td><td>NO</td><td rowspan="4">• Rail press. is controlled by RPRV</td></tr>
<tr><td>EGR Off</td><td>NO</td></tr>
<tr><td>Fuel Limit</td><td>NO</td></tr>
<tr><td>Check Lamp</td><td>NO</td></tr>
</table>

MONITOR SCANTOOL DATA EE0FFC84

1. Monitoring rail pressure data

   1) Connect Scantool to Data Link Connector (DLC).

   2) Warm engine up to normal operating temperature.

   3) Turn "OFF" electrical devices and A/C.

   4) Monitor "FUEL PRESSURE MEASURED", "FUEL PRESS. S/POINT", "RAIL PRESS. REGULATOR1", "INJ. PUMP REGULATOR" parameter on the Scantool.

Specification : FUEL PRESSURE MEASURED similar to "FUEL PRESS. S/POINT"
FUEL PRESS. S/POINT : 27 ± 5 Mpa
RAIL PRESS. REGULATOR1 : 16 ± 3%
INJ. PUMP REGULATOR : 34 ± 3%

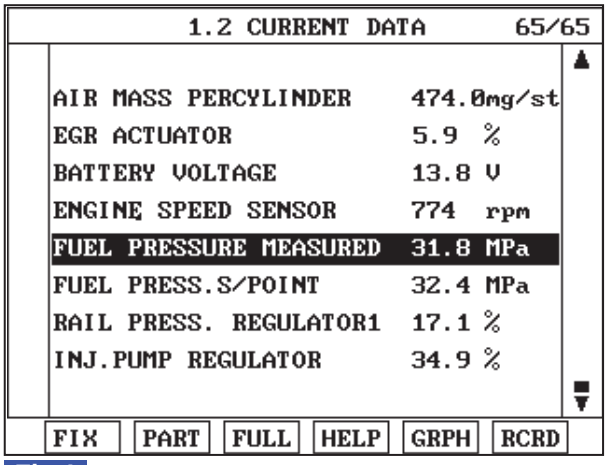

Fig.1

Fig.1) Monitor "FUEL PRESSURE MEASURED" at idle after warming engine up.

SCMFL6339L

Check if "FUEL PRESSURE MEASURED"data is similar to "FUEL PRESS. S/POINT". Not only former two data but also "RAIL PRESS. REGULATOR1" and "INJ. PUMP REGULATOR"should be monitored carefully. Although "FUEL PRESSURE MEASURED" is similar to "FUEL PRESS. S/POINT", if "RAIL PRESS. REGULATOR1" and "INJ. PUMP REGULATOR" is out of specification, it means wear, leakage, stuck of fuel system.

2. Monitoring rail pressure data at acceleration(loading condition).

   1) Connect Scantool to Data Link Connector (DLC).

   2) Warm engine up to normal operating temperature.

   3) Turn "OFF" electrical devices and A/C.

   4) Monitor "FUEL PRESSURE MEASURED", "INJ. PUMP REGULATOR","RAIL PRESS. REGULATOR1" parameter on the Scantool.

SPECIFICATION :

	Idle(without load)	Accelerating(stall test)	Diagnosis
FUEL PRESSURE MEASURED	27 ± 5 Mpa	above 75 Mpa	press. increases
INJ. PUMP REGULATOR	34 ± 3%	38 ± 3%	duty increases
RAIL PRESS. REGULATOR1	16 ± 3%	45 ± 3%	duty increases

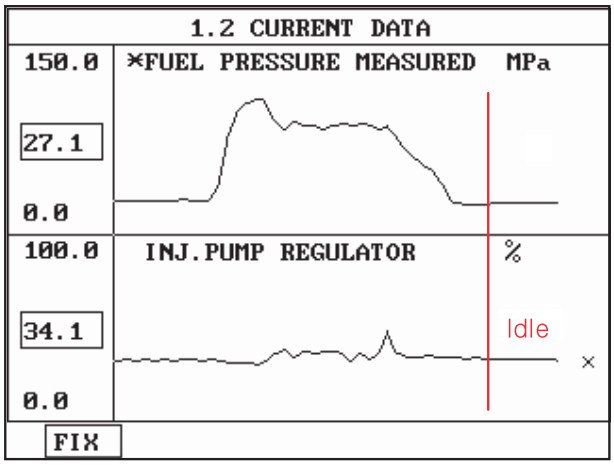

Fig.1

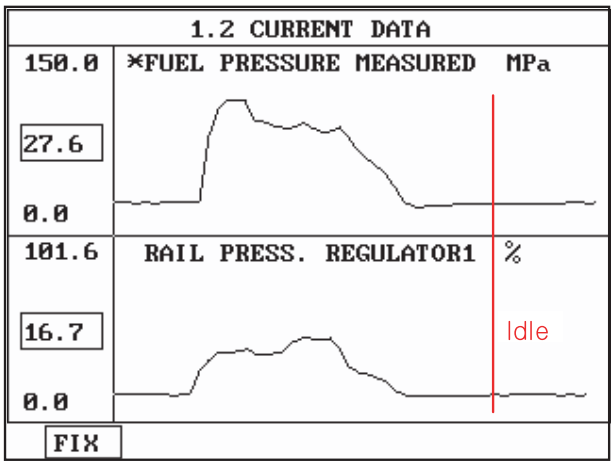

Fig.2

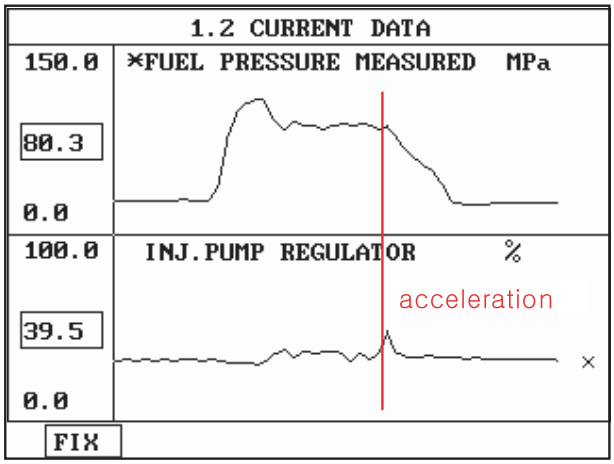

Fig.3

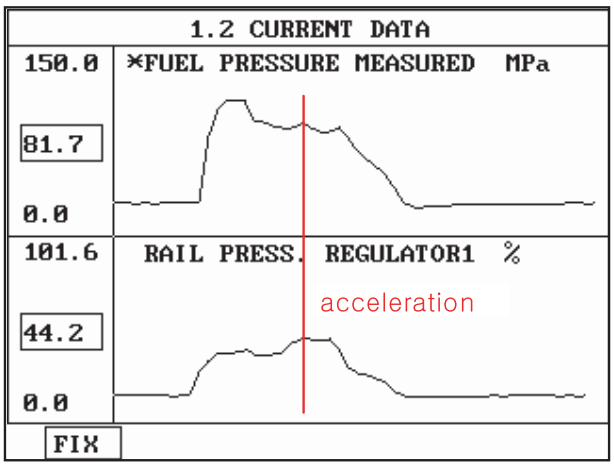

Fig.4

Fig.2) Fuel pressure and Fuel pressure regulator valve data at idle.
Fig.3) Fuel pressure and Rail pressure regulator valve data at idle.
Fig.4) Fuel pressure and Fuel pressure regulator valve data at acceleration.
Fig.5) Fuel pressure and Rail pressure regulator valve data at acceleration.

LFIG375A

NOTE

The waveform of fuel pressure regulator valve installed at high pressure pump(fuel detecting MPROP) shows 34 ± 3% duty at idle, duty rises to approx. 38% at acceleration to raise rail pressure.

The waveform of rail pressure regulator valve installed at common rail shows 16 ± 3% duty at idle, duty rises to approx. 45% at acceleration to raise rail pressure.

VERIFICATION OF VEHICLE REPAIR E9C74079

After a repair, it is essential to verify that the fault is corrected.

1. After connecting Scantool select "DIAGNOSTIC TROUBLE CODES(DTCs)" mode.
2. Clear recorded DTC using Scantool.
3. Drive the vehicle within DTC "Enable conditions" in "General information".
4. After selecting "DIAGNOSTIC TROUBLE CODES(DTCs)" mode and check if DTC is recorded again.
5. Are any DTCs recorded ?

YES

▶ Go to the DTC guide of recorded NO. in Scantool.

NO

▶ System operates within specification.

DTC P1172 MAXIMUM RAIL PRESSURE EXCEEDED

COMPONENT LOCATION EDBFC90B

Refer to DTC P1171.

GENERAL DESCRIPTION E6C5B1E8

Refer to DTC P1171.

DTC DESCRIPTION ED4E77F8

Rail pressure is controlled by 1)only RPRV or 2)both RPRV and FPRV or 3)only RPRV depending on engine condition. These three modes are called 'CPC mode'. During transition from one mode to another mode, if rail pressure is above the maximum rail pressure for each certain engine condition for more than 240ms. P1172 is set then, rail pressure is controlled by RPRV alone.

DTC DETECTING CONDITION ED2B0C07

<table>
<tr><th>Item</th><th colspan="3">Detecting Condition</th><th>Possible Cause</th></tr>
<tr><td>DTC Strategy</td><td colspan="3">• Signal monitoring</td><td rowspan="5">• ECM internal error
• RPRV component
• FPRV component
• RPS componet</td></tr>
<tr><td>Enable Conditions</td><td colspan="3">• Engine running</td></tr>
<tr><td>Threshold Value</td><td colspan="3">• If rail pressure is above the maximum rail pressure for each certain engine condition</td></tr>
<tr><td>Diagnostic Time</td><td colspan="3">• 0.24 sec.</td></tr>
<tr><td rowspan="4">Fail Safe</td><td>Fuel cut</td><td>NO</td><td rowspan="4">• Rail press. is controlled by RPRV</td></tr>
<tr><td>EGR Off</td><td>NO</td></tr>
<tr><td>Fuel Limit</td><td>NO</td></tr>
<tr><td>Check Lamp</td><td>NO</td></tr>
</table>

MONITOR SCANTOOL DATA EDEB0A0E

Refer to DTC P1171.

VERIFICATION OF VEHICLE REPAIR E745FE2D

Refer to DTC P1171.

DTC P1173 IMPROPER MOTER VOLTAGE-ETS (GASOLINE) / SET VALUE OF RAIL PRESSURE NOT IN PLAUSIBILITY RANGE (DIESEL)

COMPONENT LOCATION EA44DDC9

Refer to DTC P1171.

GENERAL DESCRIPTION E81E91F5

Refer to DTC P1171.

DTC DESCRIPTION E11D3DB1

When too many correction signals are loaded to PCV, PCV fails to be controlled and its governing voltage is fixed to certain value. If this condition lasts for more than 5 sec. P1173 is set then, rail pressure is controlled by FPRV alone.

DTC DETECTING CONDITION E6082719

<table>
<tr><th>Item</th><th colspan="3">Detecting Condition</th><th>Possible Cause</th></tr>
<tr><td>DTC Strategy</td><td colspan="3">• Signal monitoring</td><td rowspan="5">• ECM internal error
• RPRV component
• FPRV component
• RPS componet</td></tr>
<tr><td>Enable Conditions</td><td colspan="3">• Engine running</td></tr>
<tr><td>Threshold Value</td><td colspan="3">• PCV fails to be controlled and its governing voltage is fixed to certain value</td></tr>
<tr><td>Diagnostic Time</td><td colspan="3">• 5 sec.</td></tr>
<tr><td rowspan="4">Fail Safe</td><td>Fuel cut</td><td>NO</td><td rowspan="4">• Rail press. is controlled by FPRV</td></tr>
<tr><td>EGR Off</td><td>NO</td></tr>
<tr><td>Fuel Limit</td><td>NO</td></tr>
<tr><td>Check Lamp</td><td>NO</td></tr>
</table>

MONITOR SCANTOOL DATA E4EF877B

Refer to DTC P1171.

VERIFICATION OF VEHICLE REPAIR EA43A592

Refer to DTC P1171.

DTC P1185 FUEL PRESSURE MONITORING-MAXIMUM PRESSURE EXCEEDED

COMPONENT LOCATION E4ADC0C3

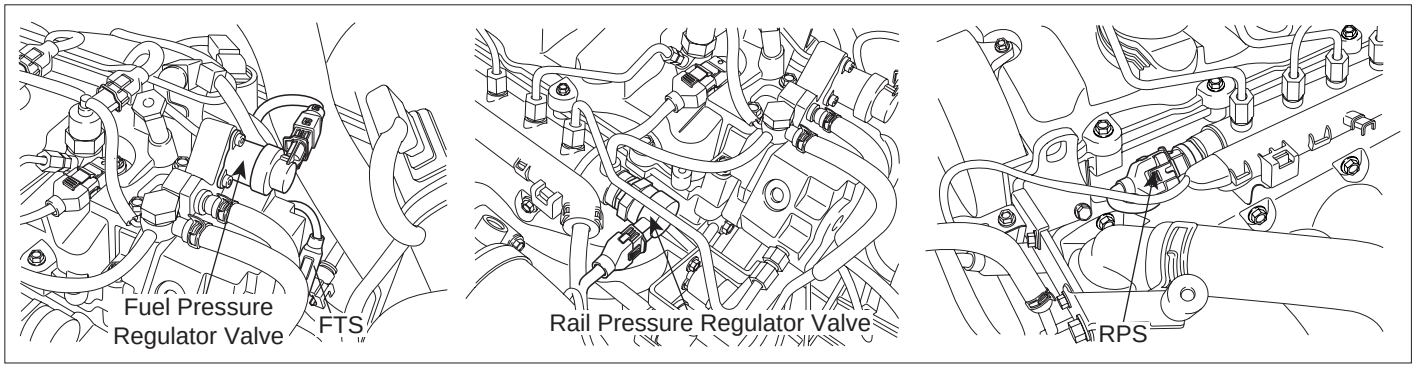

LFIG476A

GENERAL DESCRIPTION E83AD4C5

As inputted rail pressure sensor signal, ECM of Commom rail diesel engine controls fuel metering unit(MPROP-intergrated with high press. pump) and rail pressure control valve(PCV-integrated with common rail) in order to maintain optimum rail pressure according to current engine rpm and load. However when the problem that leads rail pressure to out of target value intended by ECM occurs due to mechanical or electronical reason, ECM limits engine performance and sets DTC by limiting fuel (stops injector operation) in order to prevent engine from being controlled abnormally. "rail pressure monitoring error" is the DTC which diagnose 1).supplying state of low pressure fuel and 2).mechanical operating conditions of high pressure pump and 3). RPCV indirectly based on RPS output voltage and RPS duty. thus, repair relavant to this DTC requires mechanics the total understand of fuel system.

DTC DESCRIPTION EF4165F7

P1185 is set when 1)rail press. is higher than target rail press. by 150bar in condition that rail press. is controlled by fuel metering unit(MPROP) or 2)rail press. exceeds maximum limiting value. This code is due to 1)more than intended fuel supply to common rail or 2)poor return of fuel supplied to common rail or 3)short to high voltage line in fuel press. sensor.

DTC DETECTING CONDITION E129418D

Item	Detecting Condition			Possible Cause
DTC Strategy	• Voltage monitoring			• Fuel pressure regulator valve(open stuck) • Rail pressure regulator valve(close stuck) • Rail pressure sensor(Output fixed at high voltage line)
Enable Conditions	• Engine running			
Threshold Value	• (Case1) Rail pressure is above maximum limiting value(1750bar) at fuel pressure regulator valve(MPROP) operating condition. - 0.24 sec. • (Case2) Actual rail press. is above the maximum posible rail press. at certain temp. at fuel pressure regulator valve(MPROP) operating condition. - 0.8 sec. • (Case3) Rail pressure is above target rail pressure by more than 150bar at fuel pressure regulator valve(MPROP) operating condition.- 0.75 sec.			
Diagnostic Time	• Refer to threshold Value			
Fail Safe	Fuel cut	NO		
	EGR Off	NO		
	Fuel Limit	Case1,2: YES Case 3: NO		
	Check Lamp	Case1,2: YES Case 3: NO		

MONITOR SCANTOOL DATA EE9D7AAD

1. Monitoring rail pressure data

   1) Connect Scantool to Data Link Connector (DLC).

   2) Warm engine up to normal operating temperature.

   3) Turn "OFF" electrical devices and A/C.

   4) Monitor "FUEL PRESSURE MEASURED", "FUEL PRESS. S/POINT", "RAIL PRESS. REGULATOR1", "INJ. PUMP REGULATOR" parameter on the Scantool.

Specification : FUEL PRESSURE MEASURED similar to "FUEL PRESS. S/POINT"
FUEL PRESS. S/POINT : 27 ± 5 Mpa
RAIL PRESS. REGULATOR1 : 16 ± 3%
INJ. PUMP REGULATOR : 34 ± 3%

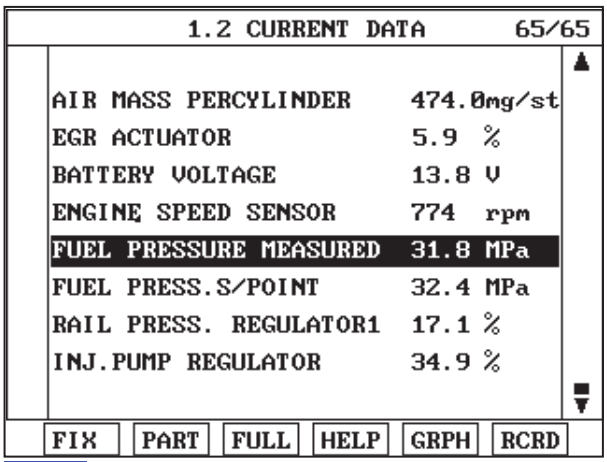

Fig.1

Fig.1) Monitor "FUEL PRESSURE MEASURED" at idle after warming engine up.

SCMFL6339L

Check if "FUEL PRESSURE MEASURED"data is similar to "FUEL PRESS. S/POINT". Not only former two data but also "RAIL PRESS. REGULATOR1" and "INJ. PUMP REGULATOR"should be monitored carefully. Although "FUEL PRESSURE MEASURED" is similar to "FUEL PRESS. S/POINT", if "RAIL PRESS. REGULATOR1" and "INJ. PUMP REGULATOR" is out of specification, it means wear, leakage, stuck of fuel system.

2. Monitoring rail pressure data at acceleration(loading condition).

   1) Connect Scantool to Data Link Connector (DLC).

   2) Warm engine up to normal operating temperature.

   3) Turn "OFF" electrical devices and A/C.

   4) Monitor "FUEL PRESSURE MEASURED", "INJ. PUMP REGULATOR","RAIL PRESS. REGULATOR1" parameter on the Scantool.

SPECIFICATION :

	Idle(without load)	Accelerating(stall test)	Diagnosis
FUEL PRESSURE MEASURED	27 ± 5 Mpa	above 75 Mpa	press. increases
INJ. PUMP REGULATOR	34 ± 3%	38 ± 3%	duty increases
RAIL PRESS. REGULATOR1	16 ± 3%	45 ± 3%	duty increases

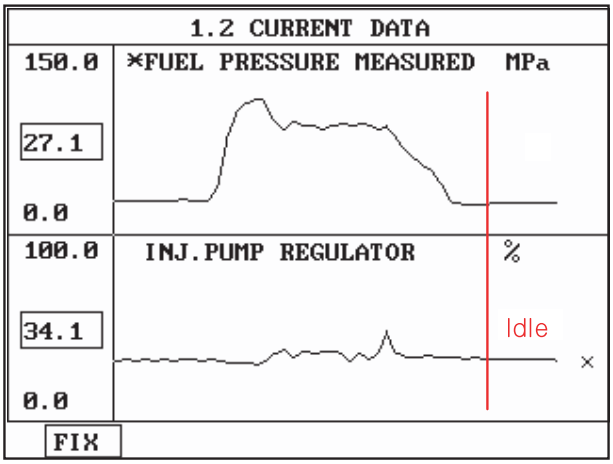

Fig.1

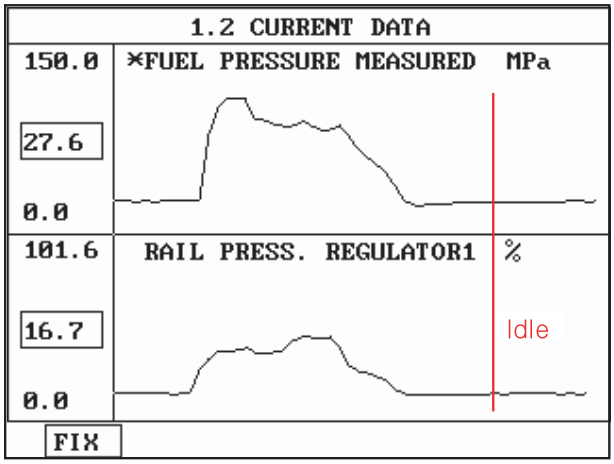

Fig.2

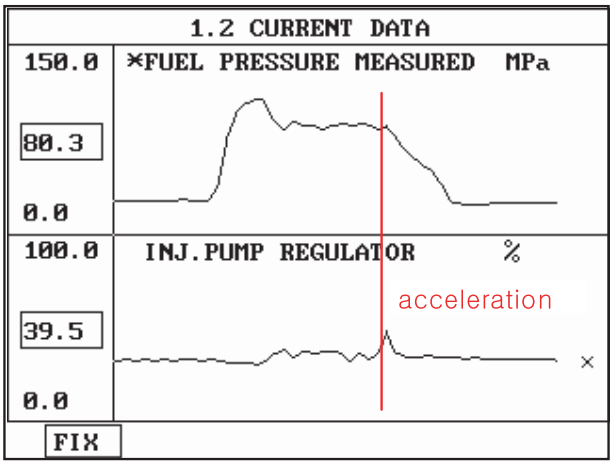

Fig.3

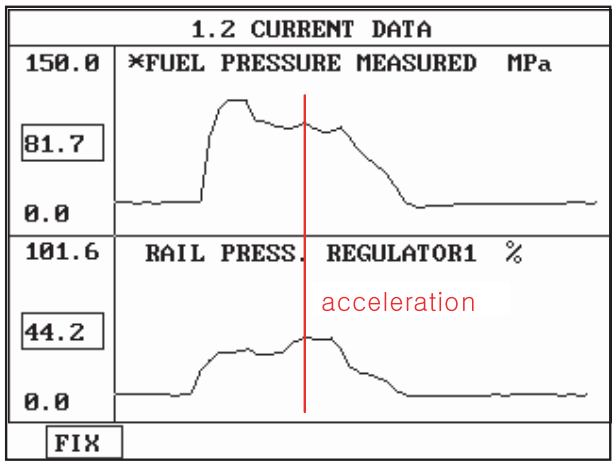

Fig.4

Fig.2) Fuel pressure and Fuel pressure regulator valve data at idle.
Fig.3) Fuel pressure and Rail pressure regulator valve data at idle.
Fig.4) Fuel pressure and Fuel pressure regulator valve data at acceleration.
Fig.5) Fuel pressure and Rail pressure regulator valve data at acceleration.

LFIG375A

NOTE

The waveform of fuel pressure regulator valve installed at high pressure pump(fuel detecting MPROP) shows 34 ± 3% duty at idle, duty rises to approx. 38% at acceleration to raise rail pressure.

The waveform of rail pressure regulator valve installed at common rail shows 16 ± 3% duty at idle, duty rises to approx. 45% at acceleration to raise rail pressure.

VERIFICATION OF VEHICLE REPAIR EA2EA934

After a repair, it is essential to verify that the fault is corrected.

1. After connecting Scantool select "DIAGNOSTIC TROUBLE CODES(DTCs)" mode.
2. Clear recorded DTC using Scantool.
3. Drive the vehicle within DTC "Enable conditions" in "General information".
4. After selecting "DIAGNOSTIC TROUBLE CODES(DTCs)" mode and check if DTC is recorded again.
5. Are any DTCs recorded ?

YES

▶ Go to the DTC guide of recorded NO. in Scantool.

NO

▶ System operates within specification.

DTC P1186 FUEL PRESSURE MONITORING-MINIMUM PRESSURE AT ENGINE SPEED TOO LOW

COMPONENT LOCATION E68C7240

Refer to DTC P1185.

GENERAL DESCRIPTION E556BA91

Refer to DTC P1185.

DTC DESCRIPTION E9E4EDB4

P1186 is set when rail press. is lower than target rail press. by 200bar in condition that rail press. is controlled by fuel metering unit(MPROP) and fuel flow quantity in High pressure pump reaches to the upper limit value. This code is due to 1)less than intended fuel supply to common rail or 2)excessive return of fuel supplied to common rail or 3)short to low voltage line in fuel press. sensor.

DTC DETECTING CONDITION E0647F0A

<table>
<tr><th>Item</th><th colspan="3">Detecting Condition</th><th>Possible Cause</th></tr>
<tr><td>DTC Strategy</td><td colspan="3">• Voltage monitoring</td><td rowspan="6">• Fuel pressure regulator valve(close stuck)
• Rail pressure control valve(open stuck)
• Rail pressure sensor(Output fixed at high voltage line)</td></tr>
<tr><td>Enable Conditions</td><td colspan="3">• Engine running</td></tr>
<tr><td>Threshold Value</td><td colspan="3">• (Case1) Actual rail press. is below the minimum posible rail press. at certain temp. at fuel pressure regulator valve(MPROP) operating condition. - 0.3 sec.
• (Case2) Actual rail press. is below the minimum posible rail press. at certain temp. at fuel pressure regulator valve(MPROP) operating condition and target high press. pump flow is below min value(-990㎣/s) - 2 sec.</td></tr>
<tr><td>Diagnostic Time</td><td colspan="3">• 2 sec.</td></tr>
<tr><td rowspan="4">Fail Safe</td><td>Fuel cut</td><td>NO</td><td rowspan="4"></td></tr>
<tr><td>EGR Off</td><td>NO</td></tr>
<tr><td>Fuel Limit</td><td>Case1: YES Case 2: NO</td></tr>
<tr><td>Check Lamp</td><td>Case1: YES Case 3: NO</td></tr>
</table>

MONITOR SCANTOOL DATA E9BA4B25

Refer to DTC P1185.

VERIFICATION OF VEHICLE REPAIR EE9206BE

Refer to DTC P1185.

DTC P1586 MT/AT ENCODING

GENERAL DESCRIPTION E44E6A14

Because both A/T and M/T fuel control map is inputted in one type of ECM and selecting option is possible, one type is applied to both A/T and M/T option.When ECM is installed to vehicle, A/T and M/T recognition is performed by ECM automatically as checking whether ground line(ECM connector C230-K terminal 81) is grounded or opened.(A/T and M/T recognition is performed every IG KEY ON process.) If A/T, M/T recognition is not fulfilled well or any error occurs during the process, engine power generation is not sufficient and glow lamp on cluster blinks.

A/T : ECM connector C230-K erminal 81 is grounded
M/T : ECM connector C230-K terminal 81 is opened(no wiring exists)

DTC DESCRIPTION EE52DB1E

P1586 is set when recognized A/T, M/T data based on ECM 230-K terminal 81 state(grounded or opened) is not readable or writable at EEP ROM. This code is due to ECM failure.

DTC DETECTING CONDITION E1241E39

<table>
<tr><th>Item</th><th colspan="3">Detecting Condition</th><th>Possible Cause</th></tr>
<tr><td>DTC Strategy</td><td colspan="3">• software monitoring</td><td rowspan="6">• ECM component failure</td></tr>
<tr><td>Enable Conditions</td><td colspan="3">• IG KEY "ON"</td></tr>
<tr><td>Threshold Value</td><td colspan="3">• A/T, M/T learning error
(when data writing on EEPROM inside of ECM is impossible)</td></tr>
<tr><td>Diagnostic Time</td><td colspan="3">• At the point of ECU initialization</td></tr>
<tr><td rowspan="4">Fail Safe</td><td>Fuel cut</td><td>NO</td><td rowspan="4">• Glow Lamp blinks.</td></tr>
<tr><td>EGR Off</td><td>NO</td></tr>
<tr><td>Fuel Limit</td><td>NO</td></tr>
<tr><td>Check Lamp</td><td>NO</td></tr>
</table>

SCHEMATIC DIAGRAM EC1B59F5

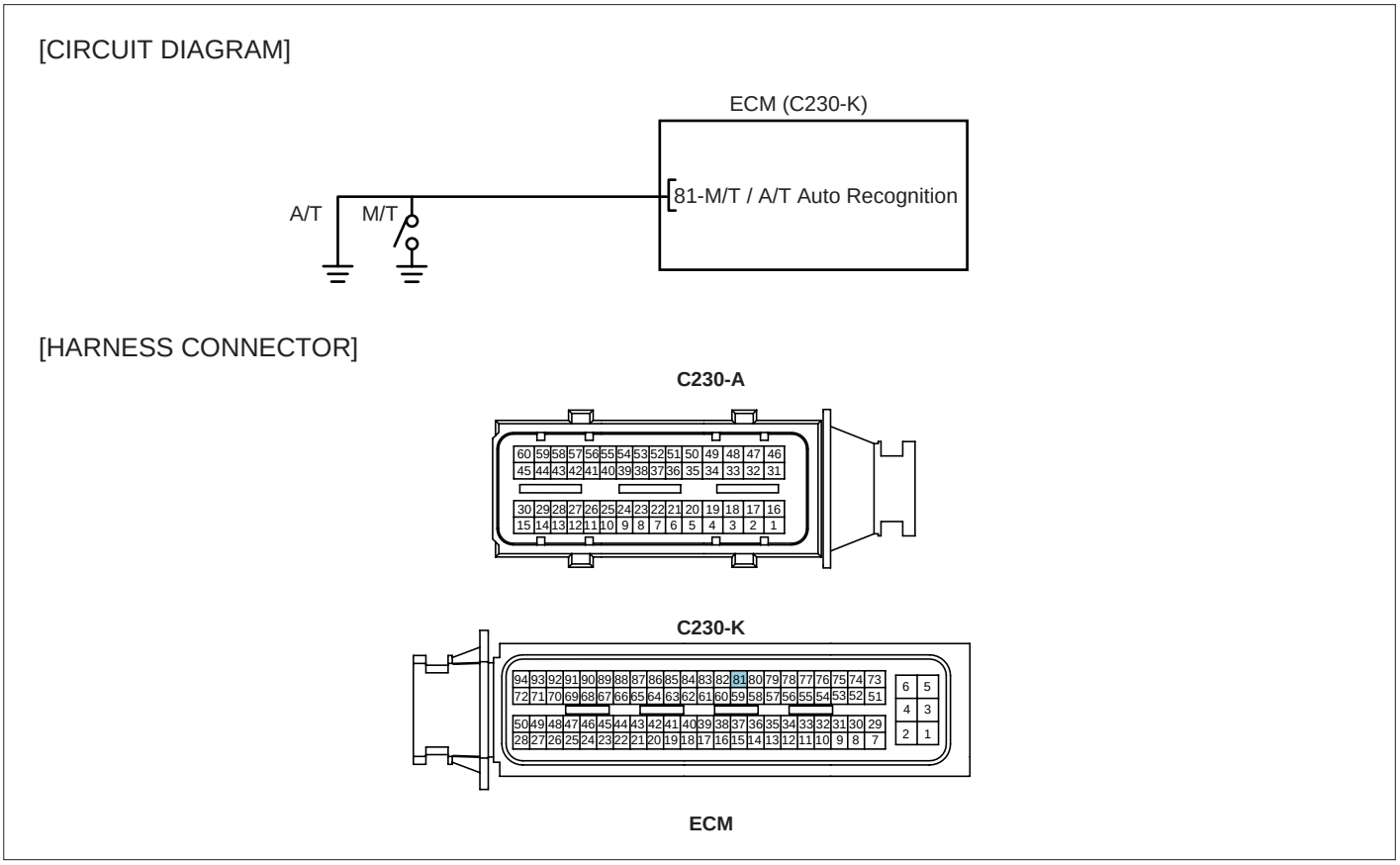

SCMFL6411L

COMPONENT INSPECTION EFE2D4E7

1. ECM Component Inspection
   1) IG KEY "OFF", ENGINE "OFF".
   2) Disconnect ECM.
   3) Replace ECM, check if abnormal operations disappear.
   4) If problems are corrected, replace ECM.

NOTE

Input injector IQA data(7 letters) using scantool at replacing ECM.
For immobilizer applied vehicle, input pin code.

VERIFICATION OF VEHICLE REPAIR E41007B8

After a repair, it is essential to verify that the fault is corrected.

1. After connecting Scantool select "DIAGNOSTIC TROUBLE CODES(DTCs)" mode.
2. Clear recorded DTC using Scantool.
3. Drive the vehicle within DTC "Enable conditions" in "General information".
4. After selecting "DIAGNOSTIC TROUBLE CODES(DTCs)" mode and check if DTC is recorded again.

5. Are any DTCs recorded ?

YES

▶ Go to the DTC guide of recorded NO. in Scantool.

NO

▶ System operates within specification.

DTC P1587 CAN COMMUNICATION ERROR (MT/AT RECOGNITION ERROR)

GENERAL DESCRIPTION EA2971F0

Because both A/T and M/T fuel control map is inputted in one type of ECM and selecting option is possible, one type is applied to both A/T and M/T option.When ECM is installed to vehicle, A/T and M/T recognition is performed by ECM automatically as checking whether ground line(ECM connector C230-K terminal 81) is grounded or opened.(A/T and M/T recognition is performed every IG KEY ON process.) If A/T, M/T recognition is not fulfilled well or any error occurs during the process, engine power generation is not sufficient and glow lamp on cluster blinks.

A/T : ECM connector C230-K terminal 81 is grounded
M/T : ECM connector C230-K terminal 81 is opened(no wiring exists)

DTC DESCRIPTION EA904FAB

P1587 is set when ECM is recognized as 1)A/T but CAN communication signal is not transmitted from TCM 2)M/T but CAN communication signal is transmitted from TCM. After checking if A/T, M/T auto recognition terminal is correct for each vehicle option, if no problem is detected, check poor connection in CAN communication circuit or CAN communication problem of TCM.

DTC DETECTING CONDITION E0D1E93B

<table>
<tr><th>Item</th><th colspan="3">Detecting Condition</th><th>Possible Cause</th></tr>
<tr><td>DTC Strategy</td><td colspan="3">• Voltage monitoring</td><td rowspan="6">• A/T, M/T recognition terminal circuit
• CAN communication line circuit
• TCM component failure
• ECM component failure</td></tr>
<tr><td>Enable Conditions</td><td colspan="3">• Engine running</td></tr>
<tr><td>Threshold Value</td><td colspan="3">• TCM signal is not detected at A/T vehicle
TCM signal is detected at M/T vehicle</td></tr>
<tr><td>Diagnostic Time</td><td colspan="3">• 1.0 sec.</td></tr>
<tr><td rowspan="4">Fail Safe</td><td>Fuel cut</td><td>NO</td><td rowspan="4">• Glow Lamp blinks.</td></tr>
<tr><td>EGR Off</td><td>NO</td></tr>
<tr><td>Fuel Limit</td><td>NO</td></tr>
<tr><td>Check Lamp</td><td>NO</td></tr>
</table>

SCHEMATIC DIAGRAM E9C6CAAD

[CIRCUIT DIAGRAM]

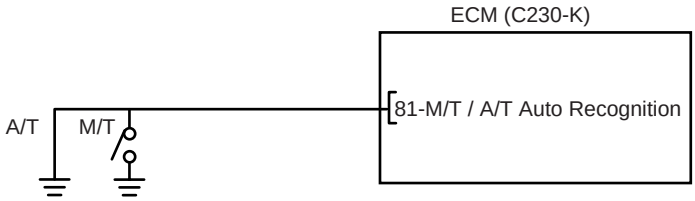

[HARNESS CONNECTOR]

C230-A

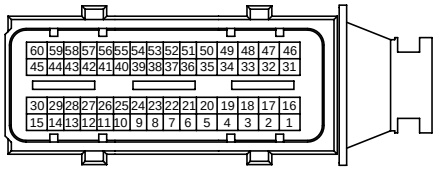

C230-K

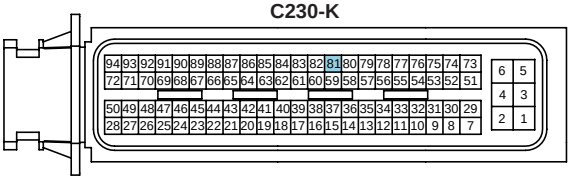

ECM

SCMFL6411L

[CIRCUIT DIAGRAM]

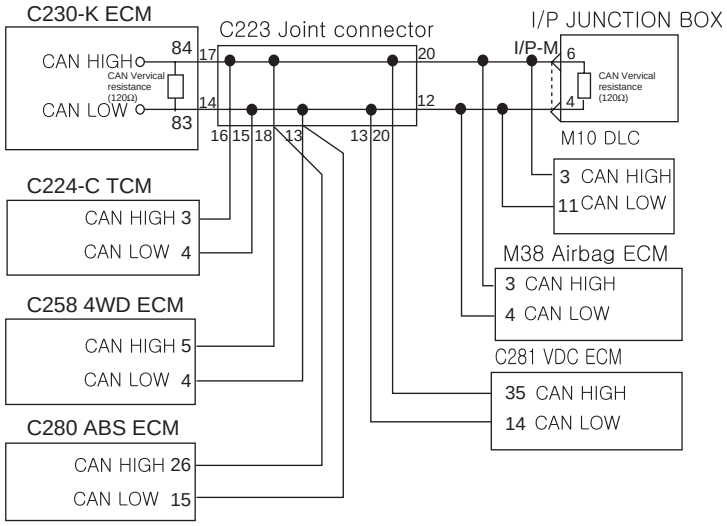

[CONNECTOR INFORMATION]

terminal	Connected to	Function
84	I/P-M terminal 4 C224-C terminal 3 C258 terminal 5 C280 terminal 26 C281 terminal 35 M38 terminal 3 M24 terminal 3	CAN HIGH
83	I/P-M terminal 6 C224-C terminal 4 C258 terminal 4 C280 terminal 15 C281 terminal 14 M38 terminal 4 M24 terminal 11	CAN LOW

[HARNESS CONNECTOR]

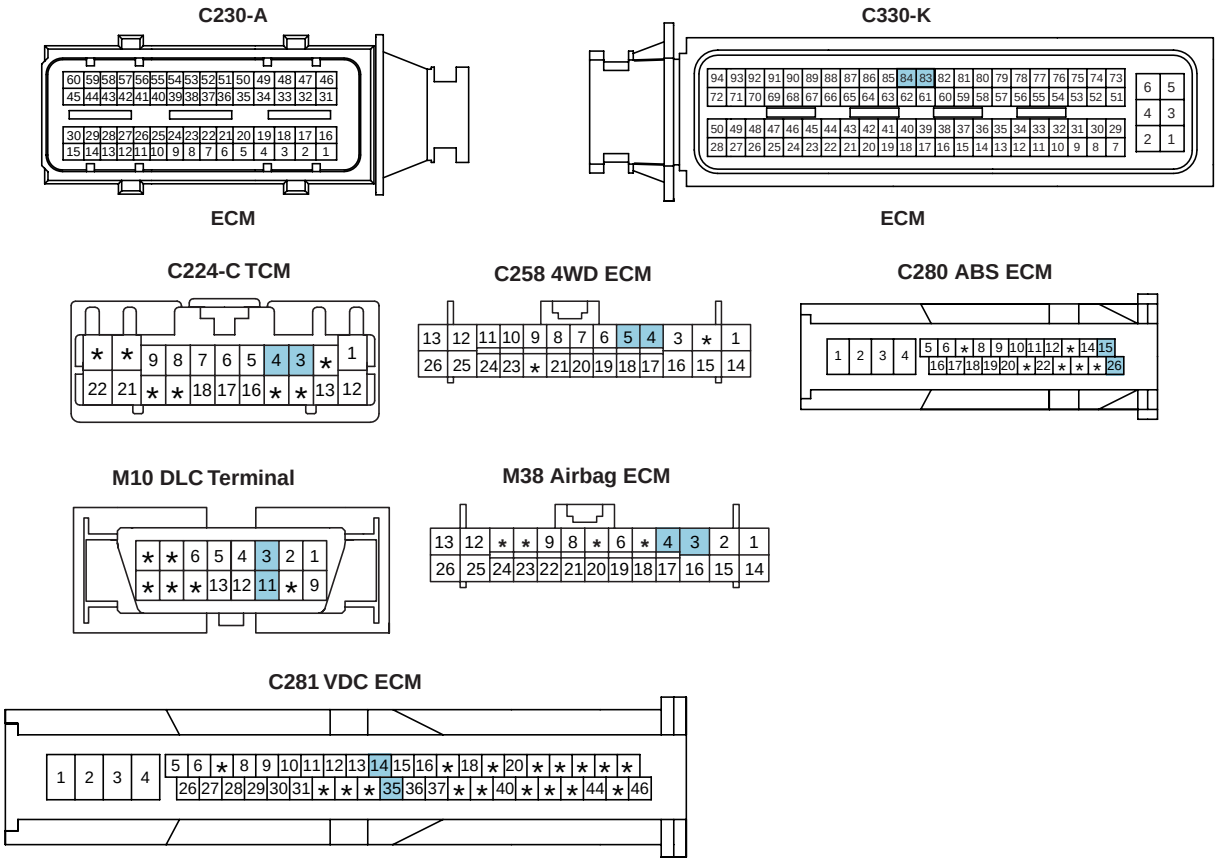

SCMFL6412L

TERMINAL AND CONNECTOR INSPECTION EE2299F2

1. Electrical systems consist of a lot of harness and connectors, poor connection of terminals can cause various problems and damge of component.

2. Perform checking procedure as follows.

   1) Check damage of harness and terminals : Check terminals for contact resistance, corrosion and deformation.

2) Check connecting condition of ECM and component connector : Check terminal seperation, damage of locking device and connecting condition between terminal and wiring.

NOTE

Disconnect the pin which requires checking at male connector and insert it to the terminal at female connector for checking connecting condition. (after checking, reconnect the pin at correct position.)

3. Is the problem found?

YES

▶ Repair the trouble causing part and go to "Verification of Vehicle Repair".

NO

▶ Go to "Ground Circuit Inspection".

GROUND CIRCUIT INSPECTION E47C0B26

1. IG KEY "OFF", ENGINE "OFF".
2. Disconnect ECM connector.
3. Check continuity between ECM connector(C230-K) terminal 81 and chassis ground.

Specification : Continuity (below 1.0Ω)

4. Is A/T, M/T auto recognition terminal grounded well?

YES

▶ Go to "CAN communication line inspection".

NO

▶ Repair poor connection or open in G15 ground point related circuit and go to "Verification of Vehicle Repair".

CAN COMMUNICATION LINE INSPECTION

1. Check CAN BUS vertical resistance

1) IG KEY "OFF", ENGINE "OFF"

2) Measure the resistance between DLC terminal 3 and 11.

3) Disconnect ECM connector.

4) Measure the resistance between DLC terminal 3 and 11.

Specification : Both ECM and TCM are connected : 60 ± 3Ω Both ECM and TCM are disconnected : 120 ± 3Ω

5) Is measured CAN BUS vertical resistance value within the specification?

YES

▶ Go to "2. Check short to ground in CAN BUS" as follows.

NO

▶ When measured resistances for both cases are below 10Ω : Repair short between one CAN BUS CAN and another one, and go to "Verification of Vehicle Repair".
▶ When measured resistances for both cases are 120Ω : Go to"4. CAN BUS continuity test"
▶ When measured resistances for both cases are infiniteΩ :Repair open in CAN communication circuit between DLC terminal box.When measured resistances for both cases are infiniteΩ :Repair open in CAN communication circuit between DLC terminal box.

2. Check short to ground in CAN BUS

   1) IG KEY "OFF", ENGINE "OFF"

   2) Disconnect ECM connector and TCM connector.

   3) Check the continuity between DLC terminal 3 and chassis ground. (CAN HIGH)

   4) Check the continuity between DLC terminal 11 and chassis ground. (CAN LOW)

Specification : Discontinuity (Infinite Ω)

   5) Is CAN BUS insulated with ground correctly?

YES

▶ Go to "3. Check short to battery in CAN BUS" as follows.

NO

▶ Repair short to ground and go to "Verification of Vehicle Repair".

3. Check short to battery in CAN BUS

   1) IG KEY "OFF", ENGINE "OFF"

   2) Disconnect ECM connector and TCM connector.

   3) IG KEY "ON"

   4) Measure the voltage of DLC terminal 3.(CAN HIGH)

   5) Measure the voltage of DLC terminal 11.(CAN LOW)

Specification : 0.0V~0.1V

   6) Is abnormal voltage detected with both connectors disconnected?

YES

▶ Repair short to battery and go to "Verification of Vehicle Repair".

NO

▶ Go to "4. CAN BUS continuity test" as follows.

4. CAN BUS continuity test

   1) IG KEY "OFF", ENGINE "OFF"

2) Disconnect ECM connector and TCM connector.(Disconnect "CAN communication" related connectors.)

3) Check continuity between DLC terminal 3 and CAN HIGH terminal or each module.
(CAN HIGH : ECM connector terminal 84, TCM connector terminal 3, ABS connector terminal 3, VDC connector terminal 35, 4WD ECM connector terminal 5, Airbag ECM connector terminal 3)

4) Check continuity between DLC terminal 11 and CAN LOW terminal or each module.
(CAN HIGH : ECM connector terminal 83, TCM connector terminal 4, ABS connector terminal 15, VDC connector terminal 14, 4WD ECM connector terminal 4, Airbag ECM connector terminal 4)

Specification : Continuity(below 1.0Ω)

5) Is continuity of CAN BUS line confirmed?

YES

▶ Go to "Component Inspection".

NO

▶ Repair open in CAN communication line and go to "verification of Vehicle Repair".

COMPONENT INSPECTION EDA8FACB

1. CAN communication waveform inspection

1) IG KEY "OFF", ENGINE "OFF".

2) Connect 2 channel scope to DLC terminal 3(CAN HIGH) and 11(CAN LOW),

3) Connect only ECM connector to CAN BUS and turn IG KEY "ON".

4) Connect only TCM connector to CAN BUS and turn IG KEY "ON".

Specification : The waveform similar to the waveform above is displayed at "IG KEY "ON".

※ If both CAN High and Low signals are fixed at 2.5V or High signal is 3.5V and Low signal, this means communicaiton error of each module.

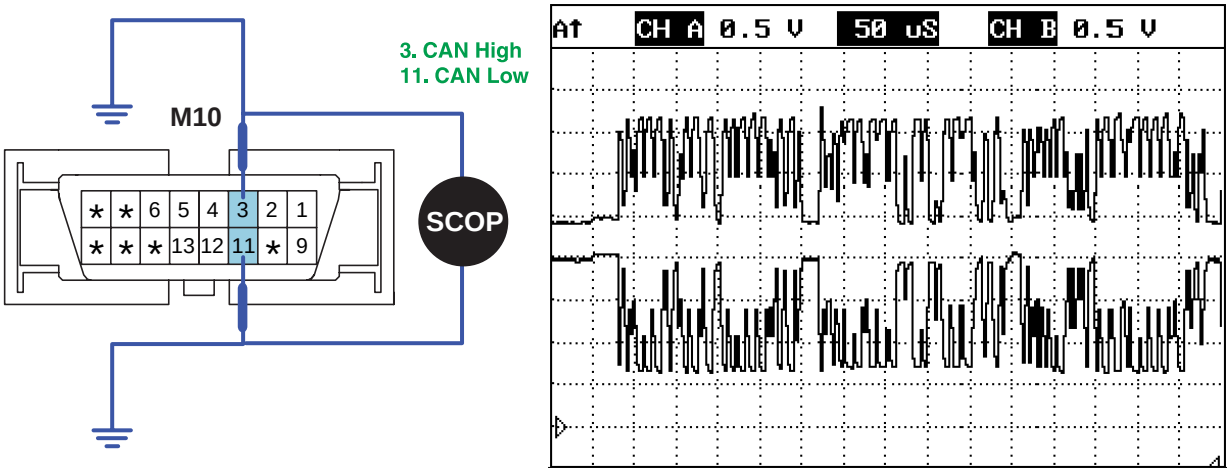

SCMFL6345L

5) Is waveform similar to above waveform displayed?

YES

▶ Go to "Verification of vehicle Repair.

NO

▶ Replace the module from which abnormal waveform is outputted, and go to "Verification of Vehicle Repair".

VERIFICATION OF VEHICLE REPAIR EC87E8C8

After a repair, it is essential to verify that the fault is corrected.

1. After connecting Scantool select "DIAGNOSTIC TROUBLE CODES(DTCs)" mode.
2. Clear recorded DTC using Scantool.
3. Drive the vehicle within DTC "Enable conditions" in "General information".
4. After selecting "DIAGNOSTIC TROUBLE CODES(DTCs)" mode and check if DTC is recorded again.
5. Are any DTCs recorded ?

YES

▶ Go to the DTC guide of recorded NO. in Scantool.

NO

▶ System operates within specification.

DTC P1588 SIGNAL CHANGE THROUGH MT/AT LINE (DURING ENGINE RUNNING)

GENERAL DESCRIPTION E77B2569

Because both A/T and M/T fuel control map is inputted in one type of ECM and selecting option is possible, one type is applied to both A/T and M/T option.When ECM is installed to vehicle, A/T and M/T recognition is performed by ECM automatically as checking whether ground line(ECM connector C230-K terminal 81) is grounded or opened.(A/T and M/T recognition is performed every IG KEY ON process.) If A/T, M/T recognition is not fulfilled well or any error occurs during the process, engine power generation is not sufficient and glow lamp on cluster blinks.

A/T : ECM connector C230-K terminal 81 is grounded
M/T : ECM connector C230-K terminal 81 is opened(no wiring exists)

DTC DESCRIPTION E75757F4

P1588 is set when the signal from A/T, M/T auto recognition terminal(ECM C230-K terminal 81) changes during engine running. This code is due to open in terminal for A/T option, grounded condition for M/T option. This code is normally arises from A/T option vehicle. Check the grounding condition of A/T, M/T auto recognition terminal.

DTC DETECTING CONDITION EBFD9D32

<table>
<tr><th>Item</th><th colspan="3">Detecting Condition</th><th>Possible Cause</th></tr>
<tr><td>DTC Strategy</td><td colspan="3">• Voltage monitoring</td><td rowspan="6">• A/T, M/T recognition terminal circuit
• ECM component failure</td></tr>
<tr><td>Enable Conditions</td><td colspan="3">• Engine running</td></tr>
<tr><td>Threshold Value</td><td colspan="3">• A/T, M/T auto recognition signal changes at engine ON.</td></tr>
<tr><td>Diagnostic Time</td><td colspan="3">• 0.6 sec.</td></tr>
<tr><td rowspan="4">Fail Safe</td><td>Fuel cut</td><td>NO</td><td rowspan="4">• Glow Lamp blinks.</td></tr>
<tr><td>EGR Off</td><td>NO</td></tr>
<tr><td>Fuel Limit</td><td>NO</td></tr>
<tr><td>Check Lamp</td><td>NO</td></tr>
</table>

SCHEMATIC DIAGRAM EA62BD0E

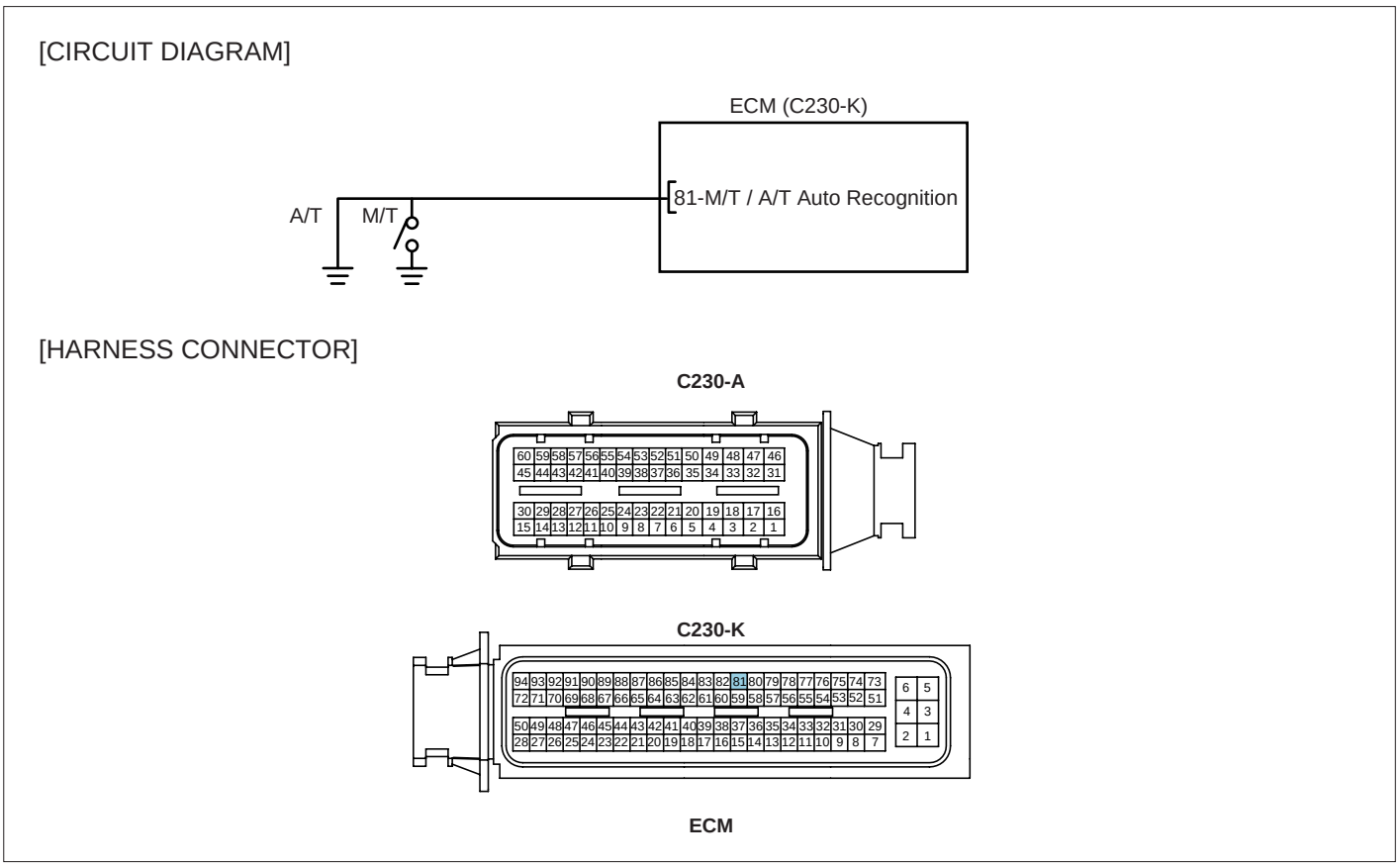

SCMFL6411L

TERMINAL AND CONNECTOR INSPECTION EBC79C67

1. Electrical systems consist of a lot of harness and connectors, poor connection of terminals can cause various problems and damge of component.

2. Perform checking procedure as follows.

   1) Check damage of harness and terminals : Check terminals for contact resistance, corrosion and deformation.

   2) Check connecting condition of ECM and component connector : Check terminal seperation, damage of locking device and connecting condition between terminal and wiring.

   NOTE

   Disconnect the pin which requires checking at male connector and insert it to the terminal at female connector for checking connecting condition. (after checking, reconnect the pin at correct position.)

3. Is the problem found?

   YES

   ▶ Repair the trouble causing part and go to "Verification of Vehicle Repair".

   NO

   ▶ Go to "Ground Circuit Inspection".

GROUND CIRCUIT INSPECTION EF29C5CD

1. IG KEY "OFF", ENGINE "OFF".
2. Disconnect ECM connector.
3. Check continuity between ECM connector(C230-K) terminal 81 and chassis ground.

Specification : Continuity (below 1.0Ω)

4. Is A/T, M/T auto recognition terminal grounded well?

YES

▶ Go to "Component Inspection".

NO

▶ Repair poor connection or open in G15 ground point related circuit and go to "Verification of Vehicle Repair".

COMPONENT INSPECTION E1FAA4BD

1. ECM Component Inspection
   1) IG KEY "OFF", ENGINE "OFF".
   2) Disconnect ECM.
   3) Replace ECM, check if abnormal operations disappear.
   4) If problems are corrected, replace ECM.

NOTE

Input injector IQA data(7 letters) using scantool at replacing ECM.
For immobilizer applied vehicle, input pin code.

VERIFICATION OF VEHICLE REPAIR E5E8DCBD

After a repair, it is essential to verify that the fault is corrected.

1. After connecting Scantool select "DIAGNOSTIC TROUBLE CODES(DTCs)" mode.
2. Clear recorded DTC using Scantool.
3. Drive the vehicle within DTC "Enable conditions" in "General information".
4. After selecting "DIAGNOSTIC TROUBLE CODES(DTCs)" mode and check if DTC is recorded again.
5. Are any DTCs recorded ?

YES

▶ Go to the DTC guide of recorded NO. in Scantool.

NO

▶ System operates within specification.

DTC P1634 AUX. HEATER MALFUNCTION

COMPONENT LOCATION EACE7ED0

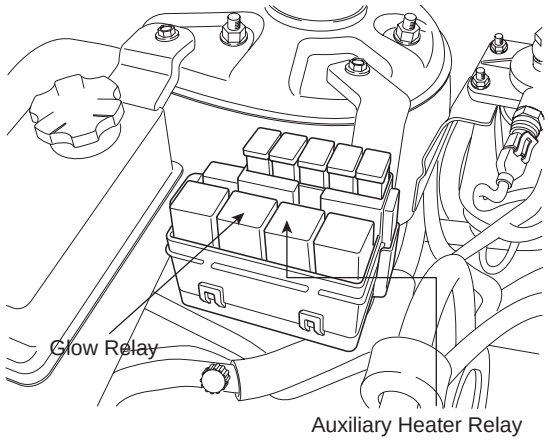

SCMFL6508L

GENERAL DESCRIPTION E39F3A0D

Because thermal efficiency of electronically controlled diesel engine is higher than that of gasoline engine, heat loss to cylinder wall is lower. This enables electronically controlled diesel engine to generate high power and have high fuel efficiency. However in other point of view, due to low engine coolant temperature, heating efficiency lowered then, driver is unsatisfied with the heating. To cope with this situation, PTC heater is installed in coolant line and it raises heating efficiency and raise coolant temperature.

※ Heater relay operating condition : When all the following condition are met.Blower ON, Engine speed below 700RPM, Battery voltage above 12.5V, Aircon OFF, Air temperature below 5℃, engine coolant temperature below 70℃ - Maximum operating duration is limited to 40 min.

DTC DESCRIPTION EDEFAF51

P1634 is set when excessive current or "0"A is detected in heater relay control circuit for more than 1.0 sec. at heater relay operating condition. This code is due to 1)open or 2)short to battery or ground in heater relay control circuit or 3)component problem.

DTC DETECTING CONDITION EFEA2E97

Item	Detecting Condition			Possible Cause
DTC Strategy	• Voltage monitoring			• PTC heater relay #1control circuit • Heater relay component
Enable Conditions	• IG KEY "ON" (monitoring only performed at relay operating condition)			
Threshold Value	• Short to Battery • short to GND, wiring open			
Diagnostic Time	• 1.0 sec.			
Fail Safe	Fuel cut	NO		
	EGR Off	NO		
	Fuel Limit	NO		
	Check Lamp	NO		

SPECIFICATION EC5C3A00

Heater relay coil resistance	PTC heater operating temperature	PTC heater operating condition
80±5Ω (20℃)	Refer to "General Information"	Refer to "General Information"

SCHEMATIC DIAGRAM EEEEA097

[CIRCUIT DIAGRAM]

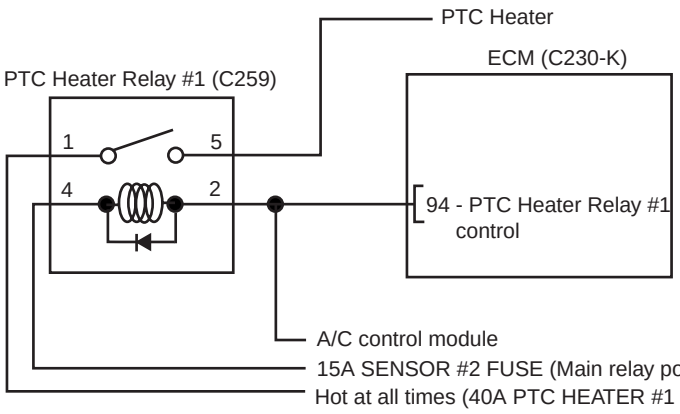

[CONNECTOR INFORMATION]

Terminal	Connected to	Function
1	40A PTC HTR #1 FUSIBLE LINK	PTC Heater Relay power(INPUT)
2	ECM C230-K (94)	PTC Heater Relay #1 control
3	-	-
4	15A SENSOR #2 FUSE	PTC Heater Relay coil power
5	C259 terminal 3	PTC Heater Relay power(OUTPUT)

[HARNESS CONNECTOR]

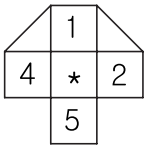

C214
PTC Heater Relay #1

C230-A

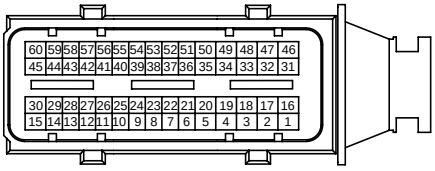

C230-K

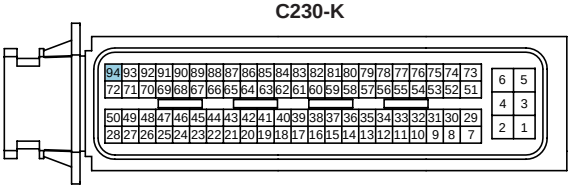

ECM

SCMFL6413L

MONITOR SCANTOOL DATA E7D014EC

1. Connect Scantool to Data Link Connector (DLC).

2. ENGINE "ON".(Engine coolant temp. below 70℃,Intake air temp. below 5℃)

3. Blower switch "ON".

4. Monitor "AUXILIARY HEATER" parameter on the Scantool.
   (As soon as turning engine ON "AUXILIARY HEATER" parameter turns "ON". Check if the parameter turns "OFF" after engine is warmed up.)

specification : Engine coolant temp. below 70℃(Intake air temp. below 5℃) : "AUXILIARY HEATER" "ON"
Engine coolant temp. above 70℃ : "AUXILIARY HEATER" "OFF"

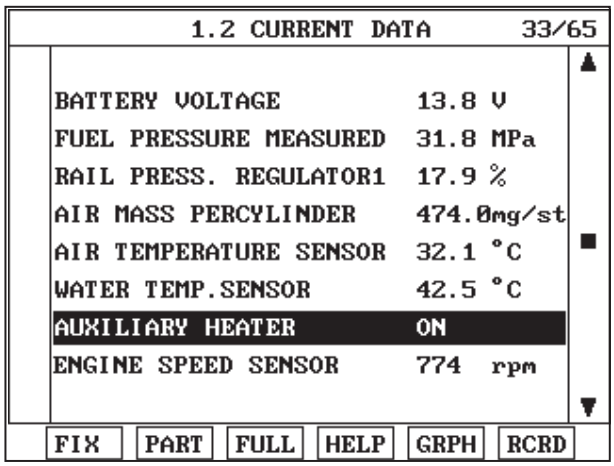

Fig.1

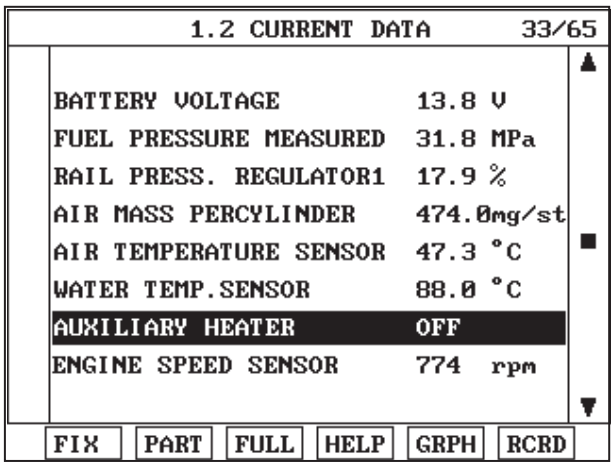

Fig.2

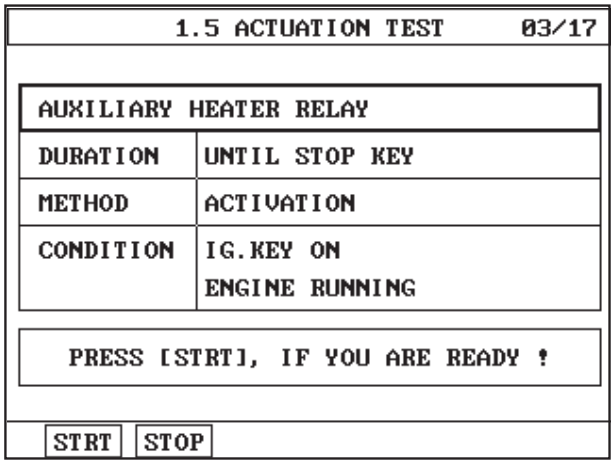

Fig.3

Fig.1) "AUXILIARY HEATER" operates only when Intake air temp. is below 5℃ and Engine coolant temp. is below 70℃.
"ON" state of "AUXILIARY HEATER" lasts till Engine coolant temp. reaches 70℃.
Fig.2) "AUXILIARY HEATER" turns "OFF" as soon as engine coolant temp. reaches 70℃.
Fig.3) If it is difficult to cool engine when current condition does not meat "AUXILIARY HEATER" operating condition, check relay operation using "ACTUATION TEST" function on the Scantool.

SCMFL6347L

TERMINAL AND CONNECTOR INSPECTION EE5C6C40

1. Electrical systems consist of a lot of harness and connectors, poor connection of terminals can cause various problems and damge of component.

2. Perform checking procedure as follows.

   1) Check damage of harness and terminals : Check terminals for contact resistance, corrosion and deformation.

   2) Check connecting condition of ECM and component connector : Check terminal seperation, damage of locking device and connecting condition between terminal and wiring.

NOTE

Disconnect the pin which requires checking at male connector and insert it to the terminal at female connector for checking connecting condition. (after checking, reconnect the pin at correct position.)

3. Is the problem found?

YES

▶ Repair the trouble causing part and go to "Verification of Vehicle Repair".

NO

▶ Go to "Power Circuit Inspection".

POWER CIRCUIT INSPECTION E3849909

1. Check HOT AT ALL TIMES power circuit voltage

   1) IG KEY "OFF", ENGINE "OFF"

   2) Disconnect PTC heater relay #1.

   3) Measure the voltage of PTC heater relay #1 connector terminal 1.

Specification : 11.5V~13.0V

   4) Is the measured voltage within the specification?

   YES

   ▶ Go to "2. Check IG KEY "ON" power circuit voltage" as follows.

   NO

   ▶ Repair FUSIBLE LINK BOX 40A PTC HEATER #1 FUSIBLE LINK and related circuit and go to "Verification of Vehicle Repair".

2. Check IG KEY "ON" power circuit voltage

   1) IG KEY "OFF", ENGINE "OFF"

   2) Disconnect PTC heater relay #1.

   3) IG KEY "ON"

   4) Measure the voltage of PTC heater relay #1 connector terminal 4.

Specification : 11.5V~13.0V

   5) Is the measured voltage within the specification?

   YES

   ▶ Go to "Control Circuit Inspection".

   NO

   ▶ Repair E/R FUSE & RELAY BOX 15A SENSOR #2 FUSE and related circuit and go to "Verification of Vehicle Repair".

CONTROL CIRCUIT INSPECTION EF7657E4

1. Check control circuit monitoring voltage

1) IG KEY "ON", ENGINE "OFF".

2) Disconnect PTC heater relay #1.

3) IG KEY "ON"

4) Measure the voltage of PTC heater relay #1connector terminal 2.

Specification : 8.0V~10.0V

5) Is the measured voltage within the specification?

YES

▶ Go to "2. Check open in control circuit" as follows.

NO

▶ Repair short to battery in control circuit and go to "Verification of Vehicle Repair".

2. Check open in control circuit

1) IG KEY "OFF", ENGINE "OFF"

2) Disconnect PTC heater relay #1 and ECM connector.

3) Check continuity between PTC heater relay #1 connector terminal 2 and ECM connector (C230-K) terminal 94.

specification : Continuity (below 1.0Ω)

4) Is the measured resistance within the specification?

YES

▶ Go to "3. Check short to ground in control circuit" as follows.

NO

▶ Repair open in control circuit and go to "Verification of Vehicle Repair".

3. Check short to ground in control circuit

1) IG KEY "OFF", ENGINE "OFF"

2) Disconnect PTC heater relay #1 and ECM connector.

3) Measure the resistance of PTC heater relay #1 connector terminal 2.

specification : Discontinuity (Infinite Ω)

4) Is the measured resistance within the specification?

YES

▶ Go to "Component Inspection".

NO

▶ Repair short to ground in control circuit and go to "Verification of Vehicle Repair".

COMPONENT INSPECTION EFFBE24C

1. Check PTC heater relay #1 component coil resistance

   1) IG KEY "OFF", ENGINE "OFF".

   2) Disconnect PTC heater relay #1.

   3) Measure the resistance of PTC heater relay #1 component coil.

Specification : 80±5 Ω (20℃)

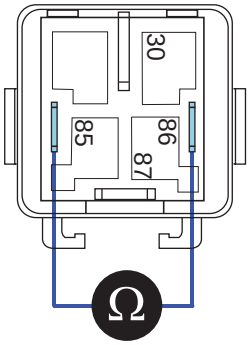

EGNG007M

   4) Is the measured resistance within the specification?

   YES

   ▶ Go to "2. Check PTC heater relay #1 component operation" as follows.

   NO

   ▶ Replace PTC heater relay #1 and go to "Verification of Vehicle Repair".

2. Check PTC heater relay #1 component operation

   1) IG KEY "OFF", ENGINE "OFF"

   2) Disconnect PTC heater relay #1.

   3) Supplies random B+ and ground to coil sides of PTC heater relay #1. (terminal 85, 86)

   4) Check continuity between PTC heater relay #1 terminal 30 and terminal 87.

specification : When power is supplied : Continuity (below 1.0Ω) When power is not supplied : Discontinuity (Infinite Ω)

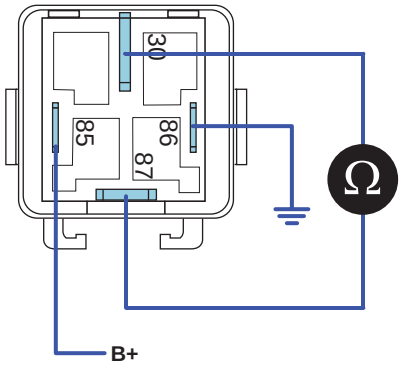

EGNG007N

5) Is the measured resistance within the specification?

YES

▶ Go to "Verification of Vehicle Repair".

NO

▶ Replace PTC heater relay #1 and go to "Verification of Vehicle Repair".

※ Repeat this process 2~3 times.

VERIFICATION OF VEHICLE REPAIR E032A36B

After a repair, it is essential to verify that the fault is corrected.

1. After connecting Scantool select "DIAGNOSTIC TROUBLE CODES(DTCs)" mode.
2. Clear recorded DTC using Scantool.
3. Drive the vehicle within DTC "Enable conditions" in "General information".
4. After selecting "DIAGNOSTIC TROUBLE CODES(DTCs)" mode and check if DTC is recorded again.
5. Are any DTCs recorded ?

YES

▶ Go to the DTC guide of recorded NO. in Scantool.

NO

▶ System operates within specification.

DTC P1652 IGNITION SWITCH CIRCUIT MALFUNCTION

GENERAL DESCRIPTION E642BD67

When a driver turns on IG KEY, IG KEY ON signal is inputted to ECM connector(C230-K) terminal 28 through IG KEY switch. This signal initializes(boots) ECM accordingly, main relay operates. Main relay supplies powers for ECM, sensors and actuators in order to enable engine to start.When IG KEY ON signal is shut off during turning engine OFF, ECM stops injector operation then engine turns OFF. Approx. after 16 sec., ECM shuts OFF main relay and system turns OFF.

DTC DESCRIPTION EA1CA742

When the condition that IG KEY ON signal turns OFF while ECM, to which IG signal inputted, is initialized (booting, Approx. 25ms is required), IG KEY switch error is recognized and P1652 is set (monitored only once every IG KEY ON initialization process). This code is due to poor connection in IG KEY ON signal circuit.

DTC DETECTING CONDITION E12F403E

<table>
<tr><th>Item</th><th colspan="3">Detecting Condition</th><th>Possible Cause</th></tr>
<tr><td>DTC Strategy</td><td colspan="3">• Voltage monitoring</td><td rowspan="6">• IG KEY "ON"signal circuit
• IG KEY switch</td></tr>
<tr><td>Enable Conditions</td><td colspan="3">• Engine running</td></tr>
<tr><td>Threshold Value</td><td colspan="3">• No signal through IG line after IG KEY "ON"</td></tr>
<tr><td>Diagnostic Time</td><td colspan="3">• Immediately</td></tr>
<tr><td rowspan="4">Fail Safe</td><td>Fuel cut</td><td>NO</td><td rowspan="4"></td></tr>
<tr><td>EGR Off</td><td>NO</td></tr>
<tr><td>Fuel Limit</td><td>NO</td></tr>
<tr><td>Check Lamp</td><td>NO</td></tr>
</table>

SCHEMATIC DIAGRAM E4EEBE7A

[CIRCUIT DIAGRAM]

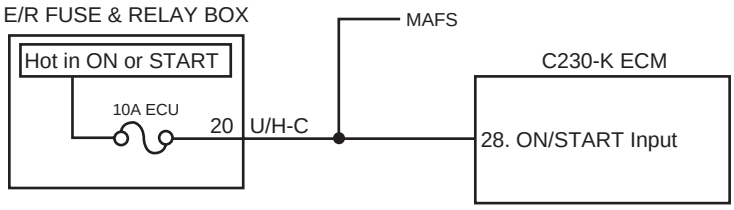

[CONNECTION INFORMATION]

Terminal	Connected to	Function
28	U/H-C terminal 20	ON/START Input

[HARNESS CONNECTOR]

C230-A

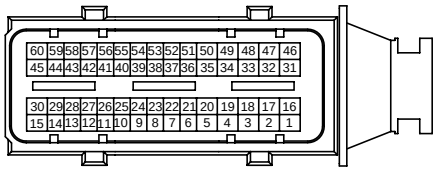

C230-K

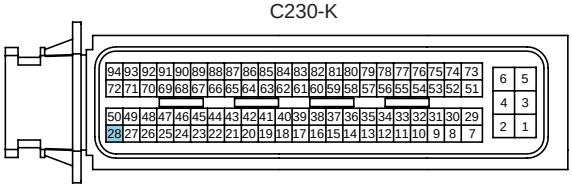

ECM

SCMFL6414L

SIGNAL WAVEFORM AND DAT E8C889F7

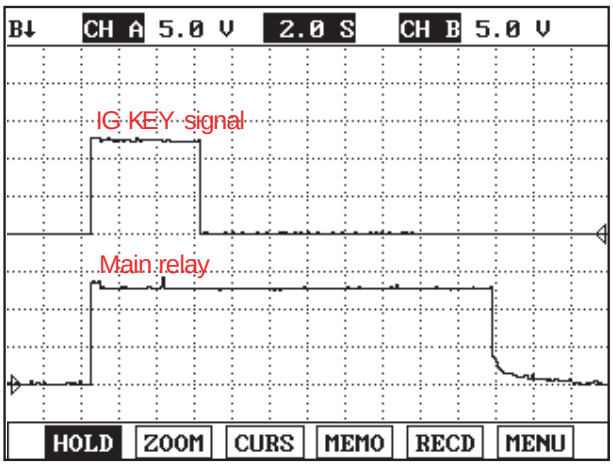

Fig.1

Fig.1) The waveforms of IG KEY "ON" signal and main relay operation are measured simultaneously.
Check poor connection at the point of IG KEY "ON".

LFIG501A

TERMINAL AND CONNECTOR INSPECTION EAB886D1

1. Electrical systems consist of a lot of harness and connectors, poor connection of terminals can cause various problems and damge of component.

2. Perform checking procedure as follows.

   1) Check damage of harness and terminals : Check terminals for contact resistance, corrosion and deformation.

   2) Check connecting condition of ECM and component connector : Check terminal seperation, damage of locking device and connecting condition between terminal and wiring.

   NOTE

   Disconnect the pin which requires checking at male connector and insert it to the terminal at female connector for checking connecting condition. (after checking, reconnect the pin at correct position.)

3. Is the problem found?

   YES

   ▶ Repair the trouble causing part and go to "Verification of Vehicle Repair".

   NO

   ▶ Go to "Signal Circuit Inspection".

SIGNAL CIRCUIT INSPECTION E622514F

1. IG KEY "OFF", ENGINE "OFF"

2. Connect Oscilloscope to ECM connector terminal 28 with ECM connector being connected.

3. Check IG KEY "ON" signal waveform at IG KEY "ON".

specification : The signals indicate poor connection should not exist at IG KEY "ON" range.

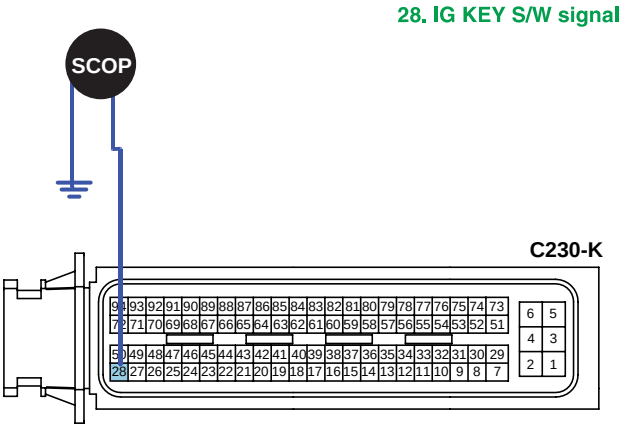

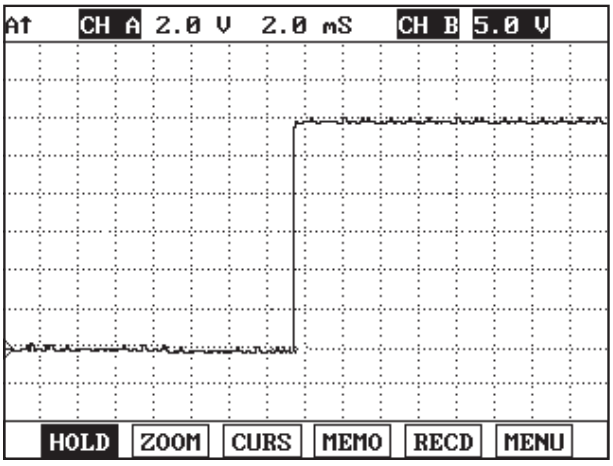

SCMFL6353L

4. Does abnormal waveform generate at IG KEY "ON" range?

   YES

   ▶ Repair IG KEY S/W and poor connection of I/P JUNCTION BOX 10A ECU FUSE and related circuit, and go to "Verification of Vehicle Repair".

   NO

▶ Go to "Verification of Vehicle Repair".

※ Repeat this process 2~3 times.

VERIFICATION OF VEHICLE REPAIR E8AFD11E

After a repair, it is essential to verify that the fault is corrected.

1. After connecting Scantool select "DIAGNOSTIC TROUBLE CODES(DTCs)" mode.
2. Clear recorded DTC using Scantool.
3. Drive the vehicle within DTC "Enable conditions" in "General information".
4. After selecting "DIAGNOSTIC TROUBLE CODES(DTCs)" mode and check if DTC is recorded again.
5. Are any DTCs recorded ?

YES

▶ Go to the DTC guide of recorded NO. in Scantool.

NO

▶ System operates within specification.

DTC P1670 INJECTOR SPECIFIC DATA ERROR

GENERAL DESCRIPTION E59E39E4

IQA (Injector Quantity Adjustment) means adjusting fuel injection quantity difference between injectors which occurs inevitably at manufacturing process as allotting serial number consists of 7 letters to each injectors.Inputting IQA code of injectors installed in each cylinder to ECM, ECM recognizes the fuel injection quantity difference between each injectors. ECM adjusts every injector to have same fuel injecting characteristic as recognizing specific fuel injection map which is different for each serial number.

DTC DESCRIPTION E7BCED66

P1670 is set when 'IQA read or write error' occurs in EEP ROM where IQA data is saved. This code is due to incorrect input of IQA code to ECM.

DTC DETECTING CONDITION EC1B54FF

<table>
<tr><th>Item</th><th colspan="3">Detecting Condition</th><th>Possible Cause</th></tr>
<tr><td>DTC Strategy</td><td colspan="3">• EEP ROM monitoring</td><td rowspan="6">• ECM internal error</td></tr>
<tr><td>Enable Conditions</td><td colspan="3">• IG KEY "ON"</td></tr>
<tr><td>Threshold Value</td><td colspan="3">• incorrect input of IQA code to ECM.</td></tr>
<tr><td>Diagnostic Time</td><td colspan="3">• Immediately</td></tr>
<tr><td rowspan="4">Fail Safe</td><td>Fuel cut</td><td>NO</td><td rowspan="4">• Engine Check Lamp blinks.</td></tr>
<tr><td>EGR Off</td><td>NO</td></tr>
<tr><td>Fuel Limit</td><td>NO</td></tr>
<tr><td>Check Lamp</td><td>BLINK</td></tr>
</table>

COMPONENT INSPECTION E918A224

1. Check injector class input state

   1) IG KEY "OFF", ENGINE "OFF".

   2) Using Scantool, select "ENGINE CONTROL" - "INJECTOR CORRECTION".

   3) Check currently inputted "injector class input state".

Specification : IQA data inputted to ECM should be identical with IQA data of injector.

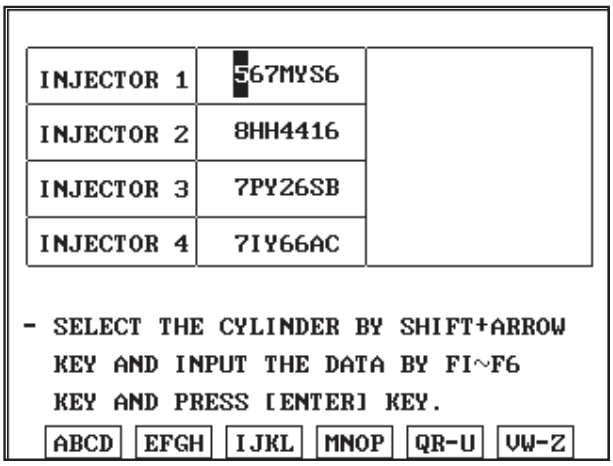

LFIG504A

4) Are both data identical?

YES

▶ Go to "Verification of Vehicle Repair".

NO

▶ If error is not corrected after reperforming "INJECTOR CORRECTION" procedure, replace ECM.

NOTE

Input IQA data of injector mounted at cylinder at replacing ECM using scantool.
If this process is not performed, engine check lamp on cluster blinks and normal engine power generation is impossible.

VERIFICATION OF VEHICLE REPAIR E02F40D4

After a repair, it is essential to verify that the fault is corrected.

1. After connecting Scantool select "DIAGNOSTIC TROUBLE CODES(DTCs)" mode.
2. Clear recorded DTC using Scantool.
3. Drive the vehicle within DTC "Enable conditions" in "General information".
4. After selecting "DIAGNOSTIC TROUBLE CODES(DTCs)" mode and check if DTC is recorded again.
5. Are any DTCs recorded ?

YES

▶ Go to the DTC guide of recorded NO. in Scantool.

NO

▶ System operates within specification.

DTC P1671 CHECK-SUM ERROR

GENERAL DESCRIPTION E0471CED

IQA (Injector Quantity Adjustment) means adjusting fuel injection quantity difference between injectors which occurs inevitably at manufacturing process as allotting serial number consists of 7 letters to each injectors.Inputting IQA code of injectors installed in each cylinder to ECM, ECM recognizes the fuel injection quantity difference between each injectors. ECM adjusts every injector to have same fuel injecting characteristic as recognizing specific fuel injection map which is different for each serial number.

DTC DESCRIPTION EA89C6FE

P1671 is set when IQA data is not inputted to ECM during initialization of ECM.

DTC DETECTING CONDITION E8CC34CE

Item	Detecting Condition			Possible Cause
DTC Strategy	• EEP ROM monitoring			• IQA not inputted to ECM
Enable Conditions	• IG KEY "ON"			
Threshold Value	• IQA code not inputted to ECM			
Diagnostic Time	• Immediately			
Fail Safe	Fuel cut	NO	• Engine Check Lamp blinks.	
	EGR Off	NO		
	Fuel Limit	NO		
	Check Lamp	BLINK		

COMPONENT INSPECTION EEA2B9A6

1. Check injector class input state
   1) IG KEY "OFF", ENGINE "OFF".
   2) Using Scantool, select "ENGINE CONTROL" - "INJECTOR CORRECTION".
   3) Check currently inputted "injector class input state".

Specification : IQA data inputted to ECM should be identical with IQA data of injector.

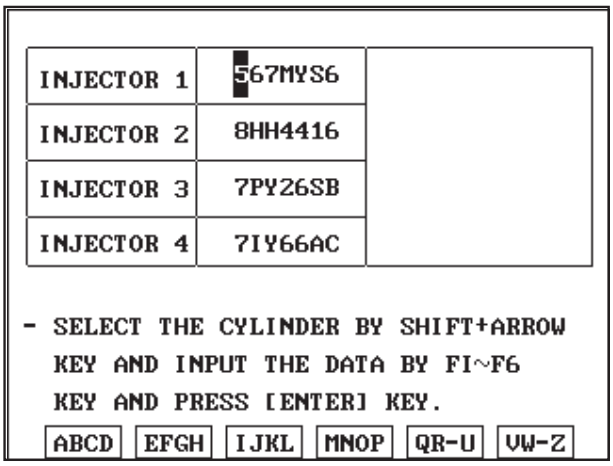

LFIG504A

4) Are both data identical?

YES

▶ Go to "Verification of Vehicle Repair".

NO

▶ If error is not corrected after reperforming "INJECTOR CORRECTION" procedure, replace ECM.

NOTE

Input IQA data of injector mounted at cylinder at replacing ECM using scantool.
If this process is not performed, engine check lamp on cluster blinks and normal engine power generation is impossible.

VERIFICATION OF VEHICLE REPAIR EF565CD3

After a repair, it is essential to verify that the fault is corrected.

1. After connecting Scantool select "DIAGNOSTIC TROUBLE CODES(DTCs)" mode.
2. Clear recorded DTC using Scantool.
3. Drive the vehicle within DTC "Enable conditions" in "General information".
4. After selecting "DIAGNOSTIC TROUBLE CODES(DTCs)" mode and check if DTC is recorded again.
5. Are any DTCs recorded ?

YES

▶ Go to the DTC guide of recorded NO. in Scantool.

NO

▶ System operates within specification.

DTC P2009 INTAKE MANIFOLD RUNNER CONTROL CIRCUIT LOW(BANK 1)

COMPONENT LOCATION EFE7A7B3

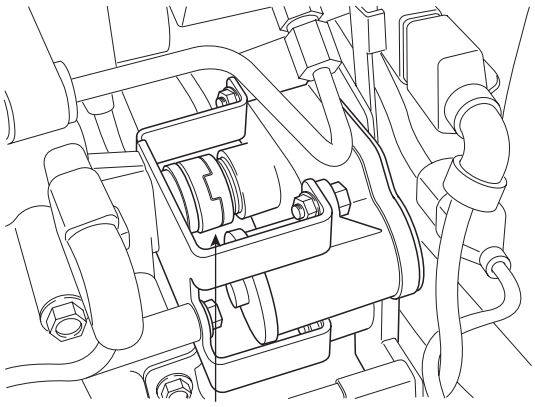

SCMFL6509L

GENERAL DESCRIPTION E6F57131

Variable swirl control actuator consists of DC motor and motor position sensor(potentiometer) which detects the position of swirl valve.As closing one intake port out of two at idle and below 3000RPM, swirl effect is taken on intake air. This swirl effect increases air flow rate.

However, because air flow rate is too high, swirl effect is neglectable thus, swirl valve is opened for efficiency of intake air.

To prevent swirl valve and shaft form being stuck by foreign metarial, and to learn max opening and closing position of swirl valve, it is fully opened and closed twice at turning engine OFF.

※Swirl
The air flow which indicates Intake air swirls with respect to the axis passing through the centre of piston with length-direction by intake port which is eccentric from the centre of combustion chamber.

DTC DESCRIPTION E52AFD3E

P2009 is set when 1) short to ground in variable swirl actuator driving motor (+) or (-) output terminal. or 2) tiny open in motor (-) output terminal for a long period occurs.The polarity of (+) and (-) lines shift each other in accordance with the condition of swirl valve(opened or closed) thus, checking both (+) and (-) circuits is required.

DTC DETECTING CONDITION E37B62CE

Item	Detecting Condition			Possible Cause
DTC Strategy	• Voltage monitoring			• Variable swirl valve motor circuit
Enable Conditions	• IG KEY "ON"			
Threshold Value	• Short to ground in motor output terminal - 0.2 sec. • Tiny open in motor circuit - 0.3 sec.			
Diagnostic Time	• Refer to Threshold value			
Fail Safe	Fuel cut	NO	• Swirl valve opened at variable swirl control actuator failure	
	EGR Off	NO		
	Fuel Limit	NO		
	Check Lamp	NO		

SPECIFICATION E045EB87

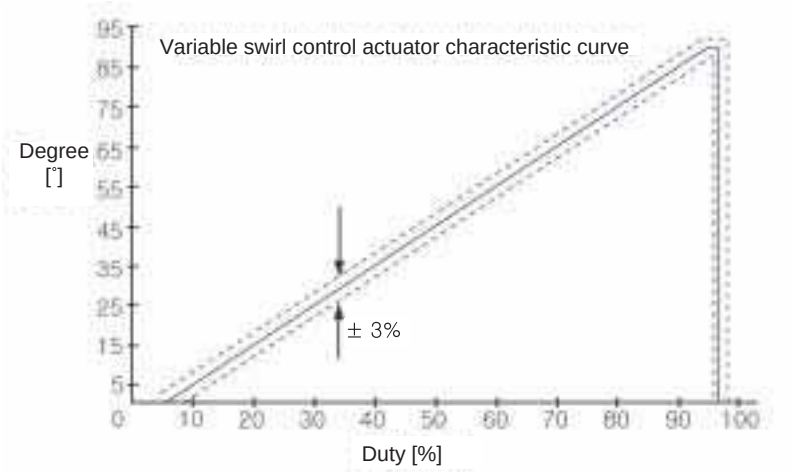

LFIG510A

SCHEMATIC DIAGRAM E70B0D6D

[CIRCUIT DIAGRAM]

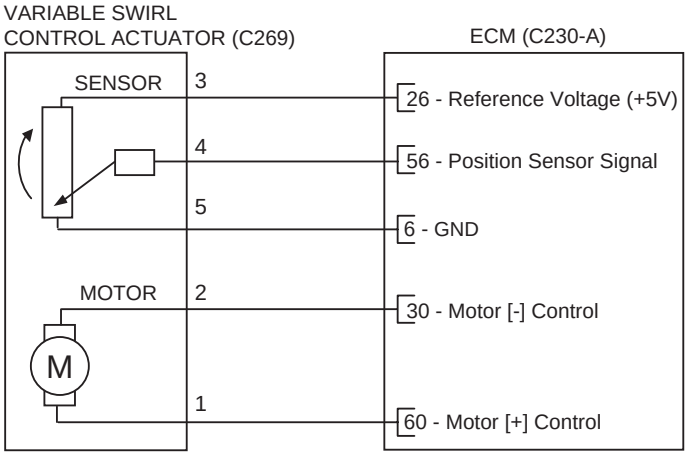

[CONNECTION INFORMATION]

Terminal	Connected to	Function
1	ECM C230-A (60)	Motor [+] Control
2	ECM C230-A (30)	Motor [-] Control
3	ECM C230-A (26)	Reference Voltage (+5V)
4	ECM C230-A (56)	Position Signal
5	ECM C230-A (6)	Sensor Ground

[HARNESS CONNECTORS]

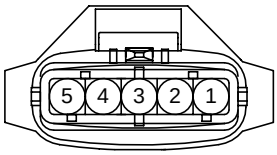

C269

VARIABLE SWIRL CONTROL ACTUATOR

C230-A

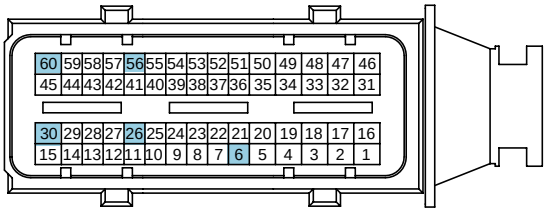

C230-K

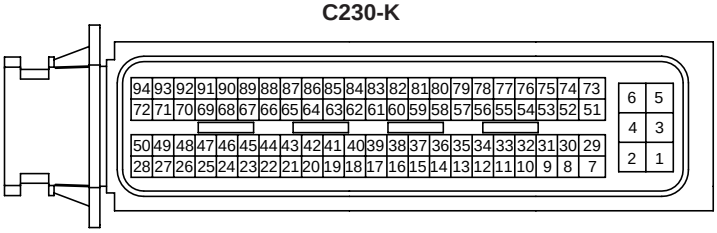

ECM

SCMFL6132L

SIGNAL WAVEFORM AND DATA E5AED65D

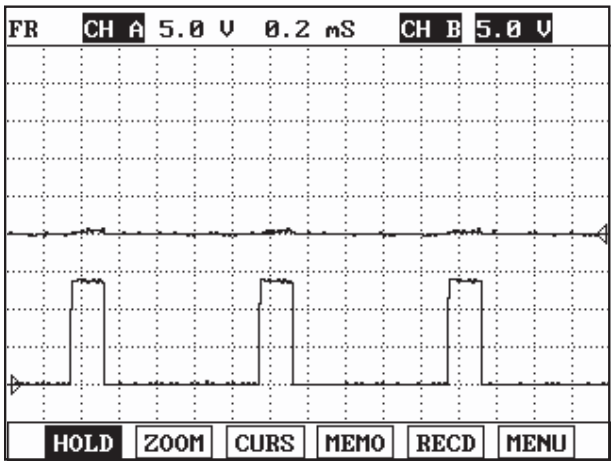

Fig.1

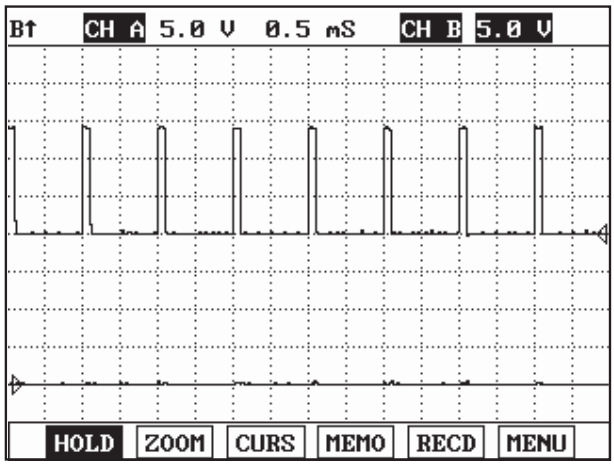

Fig.2

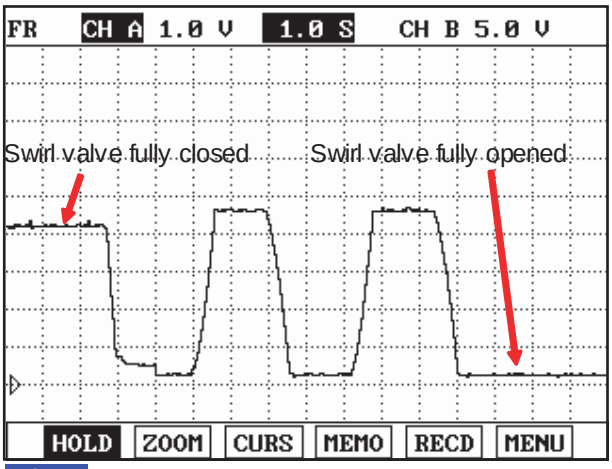

Fig.3

Fig.1) Waveform when variable swirl valve closed at idle. Terminal 1 is (+) and 2 is (-).
Fig. 2) Waveform when variable swirl valve opened at above 3000RPM. Terminal 1 is (-) and 2 is (+).
Fig. 3) Waveform of variable swirl control actuator motor position sensor at the point of turning engine OFF.
4.3V at swirl valve closed and 0.3V at swirl valve opened. Swirl valve is opened and closed twice at engine "OFF".
(Measured at terminal 4)

SCMFL6421L

TERMINAL AND CONNECTOR INSPECTION E41E065B

1. Electrical systems consist of a lot of harness and connectors, poor connection of terminals can cause various problems and damge of component.

2. Perform checking procedure as follows.

   1) Check damage of harness and terminals : Check terminals for contact resistance, corrosion and deformation.

   2) Check connecting condition of ECM and component connector : Check terminal seperation, damage of locking device and connecting condition between terminal and wiring.

   NOTE

   Disconnect the pin which requires checking at male connector and insert it to the terminal at female connector for checking connecting condition. (after checking, reconnect the pin at correct position.)

3. Is the problem found?

YES

▶ Repair the trouble causing part and go to "Verification of Vehicle Repair".

NO

▶ Go to "Control Circuit Inspection".

CONTROL CIRCUIT INSPECTION EC7554F9

1. Check short to ground in control circuit

   1) IG KEY "OFF", ENGINE "OFF"

   2) Disconnect variable swirl control actuator connector and ECM connector.

   3) Check continuity between variable swirl control actuator connector terminal 1(or 2) and chassis ground.

Specification : Discontinuity(Infinite Ω)

   4) Is the measured resistance within the specification?

   YES

   ▶ Go to "2.Check open in motor circuit" as follows.

   NO

   ▶ Repair short to ground in variable swirl control actuator motor circuit and go to "Verification of Vehicle Repair".

2. Check open in motor circuit

   1) IG KEY "OFF", ENGINE "OFF"

   2) Disconnect variable swirl control actuator connector and ECM connector.

   3) Check continuity between variable swirl control actuator connector terminal 1 and ECM connecor (C230-A) terminal 60.

   4) Check continuity between variable swirl control actuator connector terminal 2 and ECM connecor (C230-A) terminal 30.

Specification : Continuity (below 1.0Ω)

   5) Is the measured resistance within the specification?

   YES

   ▶ Go to "Component Inspection".

   NO

   ▶ Repair open in variable swirl control actuator motor circuit and go to "Verification of Vehicle Repair".

COMPONENT INSPECTION E9387396

1. Check motor coil resistance

1) IG KEY "OFF", ENGINE "OFF"

2) Disconnect variable swirl control actuator connector.

3) Measure the resistance between variable swirl control actuator component terminal 1 and 2.

Specification : 15.0 ± 3 Ω (20℃)

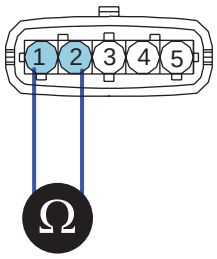

LFIG514A

4) Is the measured resistance within the specification?

YES

▶ Go to "2. Check motor operation".

NO

▶ Replace variable swirl control actuator assy'.

2. Check motor operation

1) IG KEY "ON" , ENGINE "ON".

2) Keep engine at idle state.

3) Monitor the waveform of variable swirl control actuator terminal 1and 2 with two channel oscilloscope.

4) Accelerating engine to above 3000RPM, let variable swirl control actuator be opened(operates).

Specification : Refer to Signal Waveform & Data Fig.1 & 2

5) Does variable swirl control actuator operate correctly?

YES

▶ Go to "Verification of Vehicle Repair".

NO

▶ Replace variable swirl control actuator assy' and go to "Verification of Vehicle Repair".

VERIFICATION OF VEHICLE REPAIR EAF94093

After a repair, it is essential to verify that the fault is corrected.

1. After connecting Scantool select "DIAGNOSTIC TROUBLE CODES(DTCs)" mode.

2. Clear recorded DTC using Scantool.

3. Drive the vehicle within DTC "Enable conditions" in "General information".
4. After selecting "DIAGNOSTIC TROUBLE CODES(DTCs)" mode and check if DTC is recorded again.
5. Are any DTCs recorded ?

YES

▶ Go to the DTC guide of recorded NO. in Scantool.

NO

▶ System operates within specification.

DTC P2010 INTAKE MANIFOLD RUNNER CONTROL CIRCUIT HIGH(BANK 1)

COMPONENT LOCATION EEDFACA0

Refer to DTC P2009.

GENERAL DESCRIPTION E49CCADB

Refer to DTC P2009.

DTC DESCRIPTION EF654F44

P2010 is set when 1) short to battery in variable swirl actuator driving motor (+) or (-) output terminal. or 2) tiny short in motor (-) output terminal for a long period occurs.The polarity of (+) and (-) lines shift each other in accordance with the condition of swirl valve(opened or closed) thus, checking both (+) and (-) circuits is required.

DTC DETECTING CONDITION E44CD13C

<table>
<tr><th>Item</th><th colspan="3">Detecting Condition</th><th>Possible Cause</th></tr>
<tr><td>DTC Strategy</td><td colspan="3">• Voltage monitoring</td><td rowspan="6">• Variable swirl valve motor circuit</td></tr>
<tr><td>Enable Conditions</td><td colspan="3">• IG KEY "ON"</td></tr>
<tr><td>Threshold Value</td><td colspan="3">• Short to battery in motor output terminal
• Tiny short to ground in motor circuit</td></tr>
<tr><td>Diagnostic Time</td><td colspan="3">• 0.2 sec.</td></tr>
<tr><td rowspan="4">Fail Safe</td><td>Fuel cut</td><td>NO</td><td rowspan="4">• Swirl valve opened at variable swirl control actuator failure</td></tr>
<tr><td>EGR Off</td><td>NO</td></tr>
<tr><td>Fuel Limit</td><td>NO</td></tr>
<tr><td>Check Lamp</td><td>NO</td></tr>
</table>

SPECIFICATION E9C79534

Refer to DTC P2009.

SCHEMATIC DIAGRAM EDF132A7

Refer to DTC P2009.

SIGNAL WAVEFORM AND DATA E8445959

Refer to DTC P2009.

TERMINAL AND CONNECTOR INSPECTION EAADC0F4

Refer to DTC P2009.

CONTROL CIRCUIT INSPECTION E15F7283

1. Check control circuit voltage

   1) IG KEY "OFF", ENGINE "OFF"

   2) Disconnect variable swirl control actuator connector.

   3) IG KEY "ON"

   4) Measure the voltage of variable swirl control actuator connector terminal 1 and 2.

Specification : 0.0V~0.1V

   5) Is the measured voltage within the specification?

   YES

   ▶ Check "2. Check short to ground in motor circuit" as follows.

   NO

   ▶ Repair short to battery in variable swirl control actuator motor circuit and go to "Verification of Vehicle Repair".

2. Check short to ground in motor circuit

   1) IG KEY "OFF", ENGINE "OFF"

   2) Disconnect variable swirl control actuator connector and ECM connector.

   3) Check continuity between variable swirl control actuator connector terminal 1(or 2) and chassis ground.

Specification : Discontinuity(Infinite Ω)

   4) Is the measured resistance within the specification?

   YES

   ▶ Go to "Component Inspection".

   NO

   ▶ Repair short to ground in variable swirl control actuator motor circuit and go to "Verification of Vehicle Repair".

COMPONENT INSPECTION E2271805

1. Check motor coil resistance

   1) IG KEY "OFF", ENGINE "OFF"

   2) Disconnect variable swirl control actuator connector.

   3) Measure the resistance between variable swirl control actuator component terminal 1 and 2.

Specification : 15.0 ± 3 Ω (20℃)

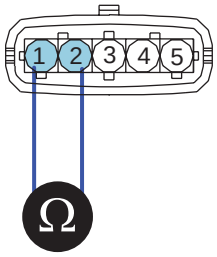

LFIG514A

4) Is the measured resistance within the specification?

YES

▶ Go to "2. Check motor operation".

NO

▶ Replace variable swirl control actuator assy'.

2. Check motor operation

1) IG KEY "ON" , ENGINE "ON".

2) Keep engine at idle state.

3) Monitor the waveform of variable swirl control actuator terminal 1and 2 with two channel oscilloscope.

4) Accelerating engine to above 3000RPM, let variable swirl control actuator be opened(operates).

Specification : Refer to Signal Waveform & Data "Fig.1)", " Fig.2)".

5) Does variable swirl control actuator operate correctly?

YES

▶ Go to "Verification of Vehicle Repair".

NO

▶ Replace variable swirl control actuator assy' and go to "Verification of Vehicle Repair".

VERIFICATION OF VEHICLE REPAIR E11F06B8

Refer to DTC P2009.

DTC P2015 INTAKE MANIFOLD RUNNER POSITION SENSOR/SWITCH CIRCUIT RANGE/PERFORMANCE(BANK 1)

COMPONENT LOCATION EA2B3D8F

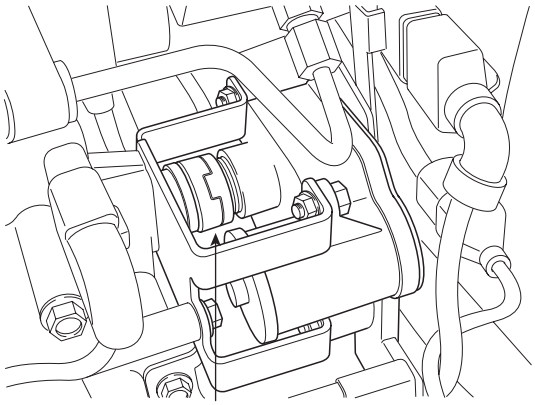

Variable Swirl Control Actuater

SCMFL6509L

GENERAL DESCRIPTION E5F64157

Variable swirl control actuator consists of DC motor and motor position sensor(potentiometer) which detects the position of swirl valve.As closing one intake port out of two at idle and below 3000RPM, swirl effect is taken on intake air. This swirl effect increases air flow rate.

However, because air flow rate is too high, swirl effect is neglectable thus, swirl valve is opened for efficiency of intake air.

To prevent swirl valve and shaft form being stuck by foreign metarial, and to learn max opening and closing position of swirl valve, it is fully opened and closed twice at turning engine OFF.

※Swirl
The air flow which indicates Intake air swirls with respect to the axis passing through the centre of piston with length-direction by intake port which is eccentric from the centre of combustion chamber.

DTC DESCRIPTION E1BFA188

P2015 is set if variable swirl valve position fails to reach target position within 1 sec. while ECM already outputted motor driving signal(swirl valve fully open or close signal). This code is due to 1)swirl valve shaft stuck or problem of link device or 2)variable swirl valve position sensor output value stuck.

DTC DETECTING CONDITION E5E34C80

<table>
<tr><th>Item</th><th colspan="3">Detecting Condition</th><th>Possible Cause</th></tr>
<tr><td>DTC Strategy</td><td colspan="3">• Voltage monitoring</td><td rowspan="7">• Variable swirl valve shaft stuck
• Variable swirl valve link device problem
• Variable swirl valve position sensor component</td></tr>
<tr><td>Enable Conditions</td><td colspan="3">• Engine running</td></tr>
<tr><td>Threshold Value</td><td colspan="3">• (Case 1) VSCA real value is higher than VSCA target value by more than 5%.
• (Case 2) VSCA real value is lower than VSCA target value by more than 7%.
• (Case 3) Variable swirl valve operating motor is mechanically stuck during operation
• (Case 4) Variable swirl valve operating motor is mechanically stuck during learning ’closing’ process.</td></tr>
<tr><td>Diagnostic Time</td><td colspan="3">• (Case 1,2,3) 1 sec.
• (Case 4) 3 sec.</td></tr>
<tr><td rowspan="4">Fail Safe</td><td>Fuel cut</td><td>NO</td><td rowspan="4">• Swirl valve opened at variable swirl control actuator failure</td></tr>
<tr><td>EGR Off</td><td>(Case1,2) : NO
(Case3,4) : YES</td></tr>
<tr><td>Fuel Limit</td><td>NO</td></tr>
<tr><td>Check Lamp</td><td>NO</td></tr>
</table>

SPECIFICATION E5DFC840

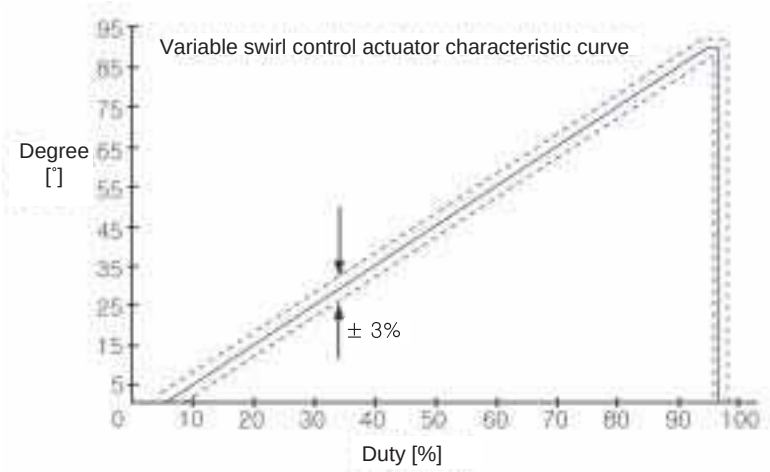

LFIG510A

SCHEMATIC DIAGRAM E89AC280

[CIRCUIT DIAGRAM]

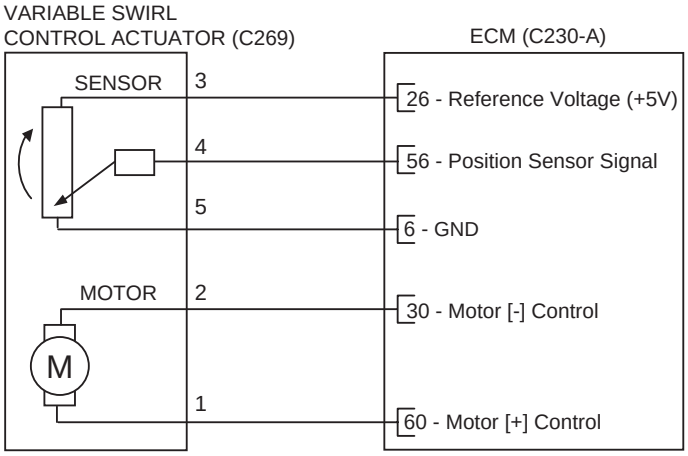

[CONNECTION INFORMATION]

Terminal	Connected to	Function
1	ECM C230-A (60)	Motor [+] Control
2	ECM C230-A (30)	Motor [-] Control
3	ECM C230-A (26)	Reference Voltage (+5V)
4	ECM C230-A (56)	Position Signal
5	ECM C230-A (6)	Sensor Ground

[HARNESS CONNECTORS]

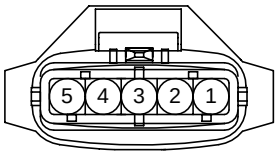

C269

VARIABLE SWIRL CONTROL ACTUATOR

C230-A

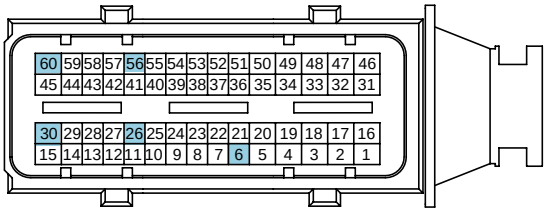

C230-K

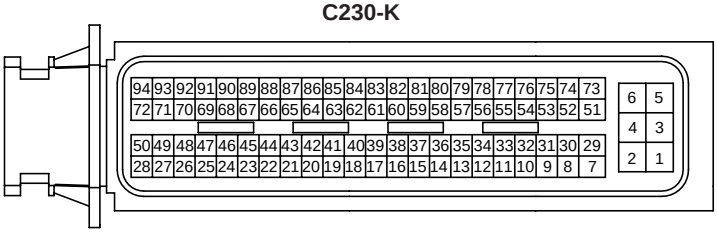

ECM

SCMFL6132L

SIGNAL WAVEFORM AND DATA EE057353

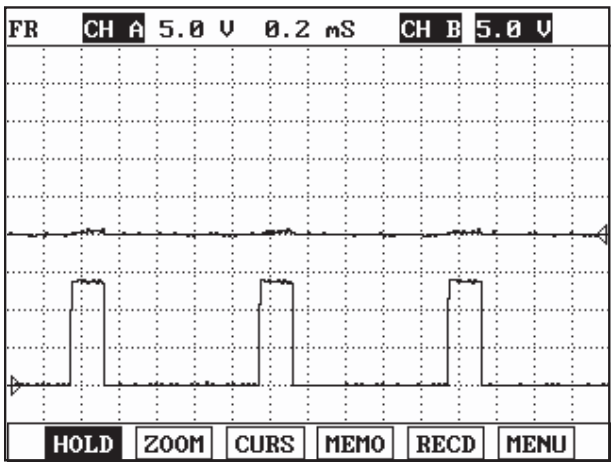

Fig.1

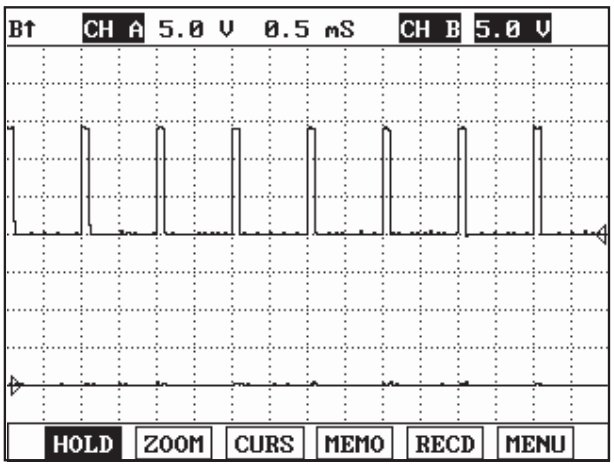

Fig.2

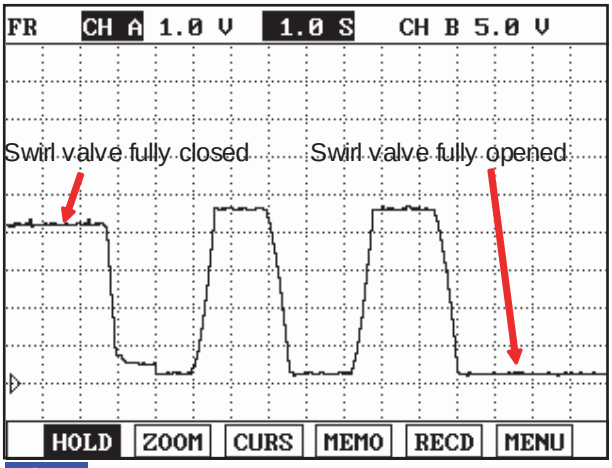

Fig.3

Fig.1) Waveform when variable swirl valve closed at idle. Terminal 1 is (+) and 2 is (-).
Fig. 2) Waveform when variable swirl valve opened at above 3000RPM. Terminal 1 is (-) and 2 is (+).
Fig. 3) Waveform of variable swirl control actuator motor position sensor at the point of turning engine OFF.
4.3V at swirl valve closed and 0.3V at swirl valve opened. Swirl valve is opened and closed twice at engine "OFF".
(Measured at terminal 4)

SCMFL6421L

COMPONENT INSPECTION E52F7BF8

1. Check variable swirl control actuator link device operation

   1) IG KEY "OFF", ENGINE "OFF"

   2) Wait for approx. 16 sec. and check that Main relay turns "OFF".

   3) Disconnect variable swirl control actuator connector.

   4) Pressing variable swirl control actuator link with hands, check if shaft stuck, tightness or problem of link device is detected.

Specification : variable swirl control actuator link device should move smoothly.

   5) Does variable swirl control actuator move slowly?

YES

▶ Go to "2. Check motor coil resistance".

NO

▶ Replace stuck or too tight parts of component(intake manifold assy' or swirl actuator) and go to "Verification of Vehicle Repair".

2. Check motor coil resistance

1) IG KEY "OFF", ENGINE "OFF"

2) Disconnect variable swirl control actuator.

3) Measure the resistance between variable swirl control actuator component terminal 1 and 2.

Specification : 15.0 ± 3 Ω (20℃)

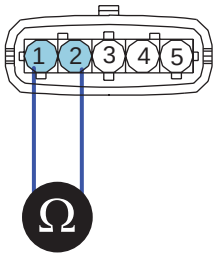

1. MTR(+)
2. MTR(-)
3. VSCA position Sensor power
4. VSCA position Sensor signal
5. VSCA position Sensor ground

SCMFL6394L

4) Is the measured resistance within the specification?

YES

▶ Go to "3. Check variable swirl control actuator position sensor resistance".

NO

▶ Replace variable swirl control actuator and go to "Verification of Vehicle Repair".

3. Check variable swirl control actuator position sensor resistance

1) IG KEY "OFF", ENGINE "OFF"

2) Disconnect variable swirl control actuator.

3) Measure the resistance of variable swirl control actuator component terminal 3,4,5 referring "Terminal resistance table" as follows.

SPECIFICATION : TERMINAL RESISTANCE TABLE

	Detecting terminal	Resistance (KΩ 20℃)		Characteristic	Component connector shape
		valve fully opend	valve fully closed		
variable swirl control actuator position sensor	3(power)-5(ground)	4.47±0.1KΩ	4.47±0.1KΩ	stable	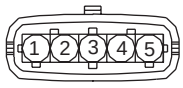 LFIG515A
	3(power)-4(signal)	4.81±0.1KΩ	0.85±0.1KΩ	resistance drops	
	4(signal)-5(ground)	0.75±0.1KΩ	4.71±0.1KΩ	resistance rises	

4) Is the measured resistance within the specification?

YES

▶ Go to "4. Check motor operation" as follows.

NO

▶ Replace variable swirl control actuator assy' and go to "Verification of Vehicle Repair".

4. Check motor operation

1) IG KEY "ON" , ENGINE "ON".

2) Keep engine at idle state.

3) Monitor the waveform of variable swirl control actuator terminal 1and 2 with two channel oscilloscope.

4) Accelerating engine to above 3000RPM, let variable swirl control actuator be opened(operates).

Specification : Refer to Signal Waveform & Data "Fig.1)", " Fig.2)".

5) Does variable swirl control actuator operate correctly?

YES

▶ Go to "5. Check variable swirl control actuator position sensor operation".

NO

▶ Replace variable swirl control actuator assy' and go to "Verification of Vehicle Repair".

5. Check variable swirl control actuator position sensor operation

1) IG KEY "ON", ENGINE "ON".

2) Keep engine at idle state.

3) Monitor the waveform of variable swirl control actuator terminal 4 with oscilloscope.

4) Turning off engine, monitor the waveform of variable swirl control actuator at the point of operation stop.

Specification : Refer to Signal Waveform & Data "Fig.3)"

5) Does variable swirl control actuator and position sensor operations are OK?

YES

▶ Go to "Verification of Vehicle Repair".

NO

▶ Replace variable swirl control actuator assy' and go to "Verification of Vehicle Repair".

VERIFICATION OF VEHICLE REPAIR E0179541

After a repair, it is essential to verify that the fault is corrected.

1. After connecting Scantool select "DIAGNOSTIC TROUBLE CODES(DTCs)" mode.
2. Clear recorded DTC using Scantool.
3. Drive the vehicle within DTC "Enable conditions" in "General information".
4. After selecting "DIAGNOSTIC TROUBLE CODES(DTCs)" mode and check if DTC is recorded again.
5. Are any DTCs recorded ?

YES

▶ Go to the DTC guide of recorded NO. in Scantool.

NO

▶ System operates within specification.

DTC P2016 INTAKE MANIFOLD RUNNER POSITION SENSOR/SWITCH CIRCUIT LOW(BANK 1)

COMPONENT LOCATION E9AACE7C

Refer to DTC P2015.

GENERAL DESCRIPTION E3D6528E

Refer to DTC P2015.

DTC DESCRIPTION E14A7F8B

P2016 is set when variable swirl valve position sensor output voltage below 0.18V is detected for more than 0.6 sec. This code is due to open in power circuit or short to ground in signal circuit.

DTC DETECTING CONDITION E65F18F8

<table>
<tr><th>Item</th><th colspan="3">Detecting Condition</th><th>Possible Cause</th></tr>
<tr><td>DTC Strategy</td><td colspan="3">• Voltage monitoring</td><td rowspan="6">• Variable swirl valve position sensor circuit
• Variable swirl valve position sensor component</td></tr>
<tr><td>Enable Conditions</td><td colspan="3">• IG KEY "ON"</td></tr>
<tr><td>Threshold Value</td><td colspan="3">• Output voltage below minimum value(below 180mV)</td></tr>
<tr><td>Diagnostic Time</td><td colspan="3">• 0.6 sec.</td></tr>
<tr><td rowspan="4">Fail Safe</td><td>Fuel cut</td><td>NO</td><td rowspan="4">• Swirl valve opened at variable swirl control actuator failure</td></tr>
<tr><td>EGR Off</td><td>NO</td></tr>
<tr><td>Fuel Limit</td><td>NO</td></tr>
<tr><td>Check Lamp</td><td>NO</td></tr>
</table>

SPECIFICATION E639AC6F

Refer to DTC P2015.

SCHEMATIC DIAGRAM E94BD04B

Refer to DTC P2015.

SIGNAL WAVEFORM AND DATA EE62AB6C

Refer to DTC P2015.

TERMINAL AND CONNECTOR INSPECTION EE274E69

Refer to DTC P2015.

POWER CIRCUIT INSPECTION EA348F51

1. Check power circuit voltage

1) IG KEY "OFF", ENGINE "OFF"

2) Disconnect variable swirl control actuator connector.

3) IG KEY "ON"

4) Measure the voltage of variable swirl control actuator connector terminal 3.

Specification : 4.8V~5.1V

5) Is the measured voltage within the specification?

YES

▶ Go to "Signal Circuit Inspection".

NO

▶ Repair open in power circuit and go to "Verification of Vehicle Repair".

SIGNAL CIRCUIT INSPECTION EFC18B64

1. Check signal circuit voltage

1) IG KEY "OFF", ENGINE "OFF"

2) Disconnect variable swirl control actuator connector.

3) IG KEY "ON"

4) Measure the voltage of variable swirl control actuator connector terminal 4.

Specification : 4.8V~5.1V

5) Is the measured voltage within the specification?

YES

▶ Go to "Component Inspection".

NO

▶ Go to "2. Check short to ground in signal circuit" as follows.

2. Check short to ground in signal circuit

1) IG KEY "OFF", ENGINE "OFF"

2) Disconnect variable swirl control actuator connector and ECM connector.

3) Check continuity between variable swirl control actuator connector terminal 4 and chassis ground.

Specification : Discontinuity(Infinite Ω)

4) Is the measured resistance within the specificaiton?

YES

▶ Go to "Component Inspection".

NO

▶ Repair short to ground in signal circuit and go to "Verification of Vehicle Repair".

COMPONENT INSPECTION E2DFC158

1. Check variable swirl control actuator position sensor resistance

   1) IG KEY "OFF", ENGINE "OFF"

   2) Disconnect variable swirl control actuator.

   3) Measure the resistance of variable swirl control actuator component terminal 3,4,5 referring "Terminal resistance table" as follows.

SPECIFICATION : TERMINAL RESISTANCE TABLE

	Detecting terminal	Resistance (KΩ 20℃)		Characteristic	Component connector shape
		valve fully opend	valve fully closed		
variable swirl control actuator position sensor	3(power)-5(ground)	4.47±0.1KΩ	4.47±0.1KΩ	stable	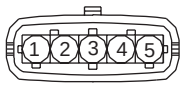 LFIG515A
	3(power)-4(signal)	4.81±0.1KΩ	0.85±0.1KΩ	resistance drops	
	4(signal)-5(ground)	0.75±0.1KΩ	4.71±0.1KΩ	resistance rises	

   4) Is the measured resistance within the specification?

YES

▶ Go to "2. Check variable swirl control actuator position sensor operation" as follows.

NO

▶ Replace variable swirl control actuator assy' and go to "Verification of Vehicle Repair".

2. Check variable swirl control actuator position sensor operation

   1) IG KEY "ON", ENGINE "ON".

   2) Keep engine at idle state.

   3) Monitor the waveform of variable swirl control actuator terminal 4 with oscilloscope.

   4) Turning off engine, monitor the waveform of variable swirl control actuator at the point of operation stop.

Specification : Refer to Signal Waveform & Data "Fig.3)"

   5) Does variable swirl control actuator and position sensor operations are OK?

YES

▶ Go to "Verification of Vehicle Repair".

NO

▶ Replace variable swirl control actuator assy' and go to "Verification of Vehicle Repair".

VERIFICATION OF VEHICLE REPAIR E883AB14

Refer to DTC P2015.

DTC P2017 INTAKE MANIFOLD RUNNER POSITION SENSOR/SWITCH CIRCUIT HIGH(BANK 1)

COMPONENT LOCATION EA2FD03A

Refer to DTC P2015.

GENERAL DESCRIPTION E8244E54

Refer to DTC P2015.

DTC DESCRIPTION EA66DCC8

P2017 is set when variable swirl valve position sensor output voltage above 4.9V is detected for more than 0.6 sec. This code is due to 1)open in signal circuit or ground circuit or 2)short to battery in power circuit or signal circuit.

DTC DETECTING CONDITION EA06271E

<table>
<tr><th>Item</th><th colspan="3">Detecting Condition</th><th>Possible Cause</th></tr>
<tr><td>DTC Strategy</td><td colspan="3">• Voltage monitoring</td><td rowspan="5">• Variable swirl valve position sensor circuit
• Variable swirl valve position sensor component</td></tr>
<tr><td>Enable Conditions</td><td colspan="3">• IG KEY "ON"</td></tr>
<tr><td>Threshold Value</td><td colspan="3">• Output voltage above minimum value(above 4900mV)</td></tr>
<tr><td>Diagnostic Time</td><td colspan="3">• 0.6 sec.</td></tr>
<tr><td rowspan="4">Fail Safe</td><td>Fuel cut</td><td>NO</td><td rowspan="4">• Swirl valve opened at variable swirl control actuator failure</td></tr>
<tr><td>EGR Off</td><td>NO</td></tr>
<tr><td>Fuel Limit</td><td>NO</td></tr>
<tr><td>Check Lamp</td><td>NO</td></tr>
</table>

SPECIFICATION E146C4CD

Refer to DTC P2015.

SCHEMATIC DIAGRAM EAF0B058

Refer to DTC P2015.

SIGNAL WAVEFORM AND DATA E0786455

Refer to DTC P2015.

TERMINAL AND CONNECTOR INSPECTION E838F660

Refer to DTC P2015.

POWER CIRCUIT INSPECTION E0AD542B

1. Check power circuit voltage

1) IG KEY "OFF", ENGINE "OFF"

2) Disconnect variable swirl control actuator connector.

3) IG KEY "ON"

4) Measure the voltage of variable swirl control actuator connector terminal 3.

Specification : 4.8V~5.1V

5) Is the measured voltage within the specification?

YES

▶ Go to "Signal Circuit Inspection".

NO

▶ Repair open in power circuit and go to "Verification of Vehicle Repair".

SIGNAL CIRCUIT INSPECTION ED08E1E3

1. Check signal circuit voltage

1) IG KEY "OFF", ENGINE "OFF"

2) Disconnect variable swirl control actuator connector.

3) IG KEY "ON"

4) Measure the voltage of variable swirl control actuator connector terminal 4.

Specification : 4.8V~5.1V

5) Is the measured voltage within the specification?

YES

▶ Go to "Ground Circuit Inspection".

NO

▶ Go to "2. Check open in signal circuit" as follows.

2. Check open in signal circuit

1) IG KEY "OFF", ENGINE "OFF"

2) Disconnect variable swirl control actuator connector and ECM connector.

3) Check continuity between variable swirl control actuator connector terminal 4 and ECM connector (C230-A) terminal 56.

Specification : Discontinuity(Infinite Ω)

4) Is the measured resistance within the specificaiton?

YES

▶ Go to "Ground Circuit Inspection".

NO

▶ Repair open in signal circuit and go to "Verification of Vehicle Repair".

GROUND CIRCUIT INSPECTION E6B6E0CD

1. IG KEY "OFF", ENGINE "OFF"
2. Disconnect variable swirl control actuator connector.
3. IG KEY "ON"
4. Measure the voltage of variable swirl control actuator connector terminal 3. [TEST "A"]
5. Measure the voltage between variable swirl control actuator connector terminal 3 and 5. [TEST "B"]
   (terminal 3 : Check + prove , terminal 5 : Check - prove)

Specification : [TEST "A"] Voltage - [TEST "B"] Voltage = below 200mV

6. Is the measured voltage within the specification?

YES

▶ Go to "Component Inspection".

NO

▶ When "B" voltage is not detected : Repair open in ground circuit and go to "Verification of Vehicle Repair".
▶ When the voltage difference between "A" and "B" is above 200mV : Eliminate the causes of excessive resistance and go to "Verification of Vehicle Repair".

COMPONENT INSPECTION E4687A25

1. Check variable swirl control actuator position sensor resistance
   1) IG KEY "OFF", ENGINE "OFF"
   2) Disconnect variable swirl control actuator.
   3) Measure the resistance of variable swirl control actuator component terminal 3,4,5 referring "Terminal resistance table" as follows.

SPECIFICATION : TERMINAL RESISTANCE TABLE

	Detecting terminal	Resistance (KΩ 20℃)		Characteristic	Component connector shape
		valve fully opend	valve fully closed		
variable swirl control actuator position sensor	3(power)-5(ground)	4.47±0.1KΩ	4.47±0.1KΩ	stable	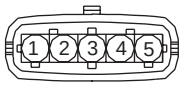 LFIG515A
	3(power)-4(signal)	4.81±0.1KΩ	0.85±0.1KΩ	resistance drops	
	4(signal)-5(ground)	0.75±0.1KΩ	4.71±0.1KΩ	resistance rises	

4) Is the measured resistance within the specification?

YES

▶ Go to "2. Check variable swirl control actuator position sensor operation".

NO

▶ Replace variable swirl control actuator assy' and go to "Verification of Vehicle Repair".

2. Check variable swirl control actuator position sensor operation

1) IG KEY "ON", ENGINE "ON".

2) Keep engine at idle state.

3) Monitor the waveform of variable swirl control actuator terminal 4 with oscilloscope.

4) Turning off engine, monitor the waveform of variable swirl control actuator at the point of operation stop.

Specification : Refer to Signal Waveform & Data "Fig.3)"

5) Does variable swirl control actuator and position sensor operations are OK?

YES

▶ Go to "Verification of Vehicle Repair".

NO

▶ Replace variable swirl control actuator assy' and go to "Verification of Vehicle Repair".

VERIFICATION OF VEHICLE REPAIR E291FD79

Refer to DTC P2015.

DTC P2111 THROTTLE CONTROL ACTUATOR CIRCUIT HIGH

COMPONENT LOCATION E38EFF63

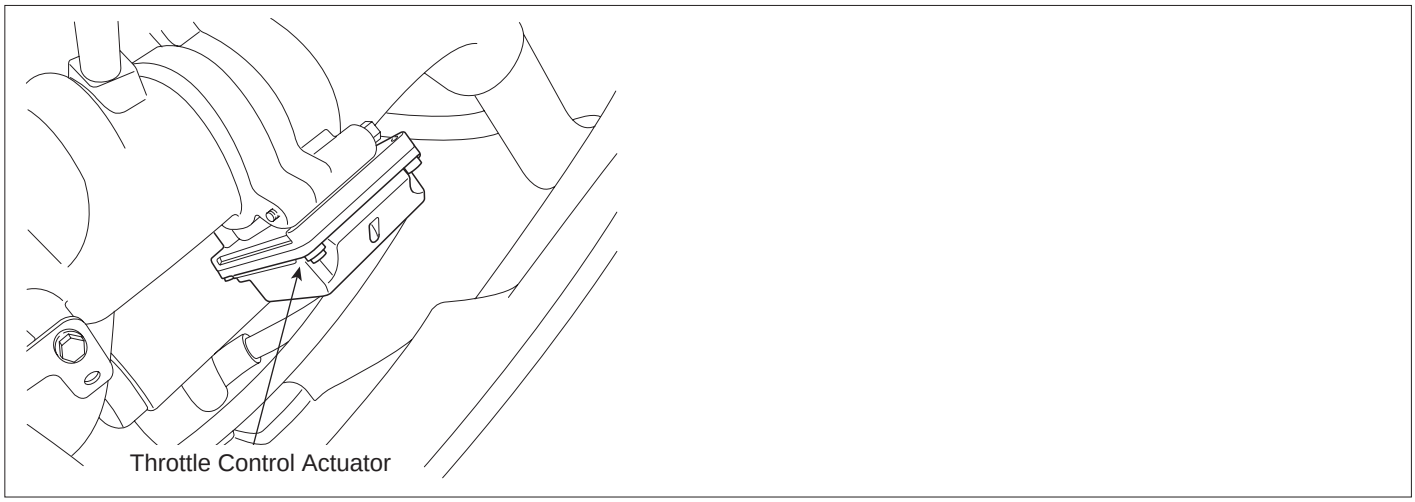

LFIG527A

GENERAL DESCRIPTION EE8F95DA

The Throttle Control Actuator is mounted on throttle body of diesel engine and controls throttle valve according to PWM (Pulse With Modulation) signal from ECM.
It consists of;

- a DC motor which actuates the throttle valve,
- a 2-step gear (transmission ratio = 1:40) which is located in between the DC motor and the throttle valve and increases torque of the DC motor,
- a position sensor which is a hall-effect sensor and detects status of the throttle valve,
- an electric control unit which is a micro-controller and drives the DC motor by the PWM (Pulse With Modulation) signal from the ECM,
- and a reset spring which resets the de-energized throttle valve to its open position.

Its function is described below:

1. Anti-judder function: When engine is shut off, the ECM can prevent intake air from entering to intake manifold by fully closing the throttle valve for 1.5 seconds (95% < Duty <97%) to reduce engine vibration.

2. Intake air control for EGR: When exhaust gas pressure is equal to or lower than intake air pressure (for example, when low engine speed), the exhaust gas would not enter to the intake manifold. At this time, the ECM partially closes the throttle valve (5% < Duty < 94%) to reduce the intake air quantity. The intake air pressure thus is lower than the exhaust gas pressure.

3. Exhaust gas temperature control for CPF regeneration: When the Catalyzed Particulate Filter (CPF) is need to regenerate, the ECM partially closes the throttle valve (5% < Duty < 94%) to reduce the intake air quantity. At this time, the air-fuel ratio would become rich and the exhaust gas temperature would be high enough to burn the soot inside the CPF.

DTC DESCRIPTION E2D105F3

P2111 is set when excessive current in throttle control actuator is detected for more than 1 sec. this code is due to short to battery in control circuit or internal short of actuator component.

DTC DETECTING CONDITION E124CCFF

Item	Detecting Condition			Possible Cause
DTC Strategy	• Voltage monitoring			• Throttle Control Actuator circuit • Throttle Control Actuator component
Enable Conditions	• IG KEY "ON"			
Threshold Value	• Short to battery			
Diagnostic Time	• 1 sec.			
Fail Safe	Fuel cut	NO		
	EGR Off	YES		
	Fuel Limit	NO		
	Check Lamp	NO		

SPECIFICATION E8392C38

Throttle control actuator fully opened	Throttle control actuator fully closed	Throttle control actuator operating Hz
5%	95%	250±7.5 Hz

SCHEMATIC DIAGRAM E7AB2F9E

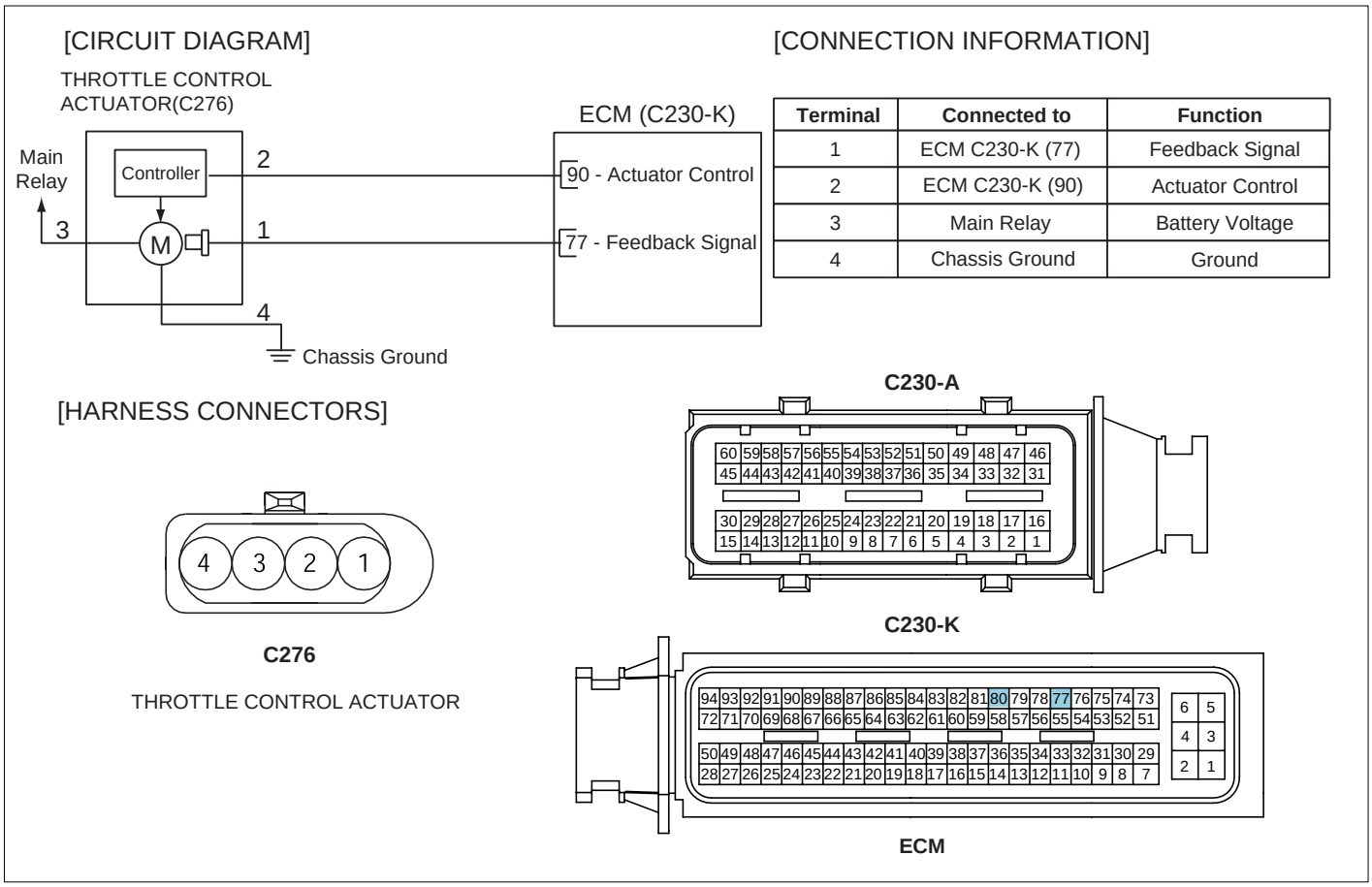

Terminal	Connected to	Function
1	ECM C230-K (77)	Feedback Signal
2	ECM C230-K (90)	Actuator Control
3	Main Relay	Battery Voltage
4	Chassis Ground	Ground

SCMFL6131L

SIGNAL WAVEFORM AND DATA E533D69D

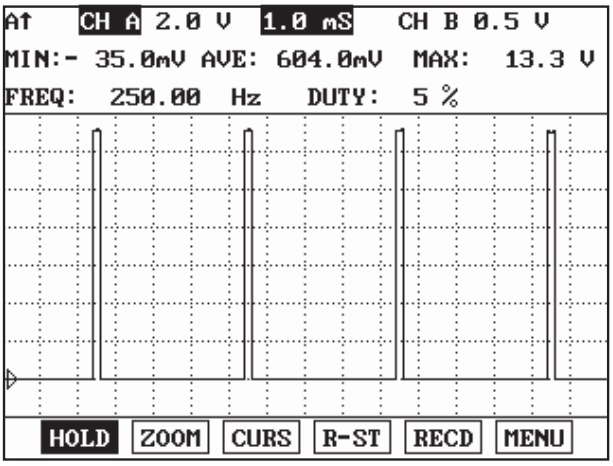

Fig.1

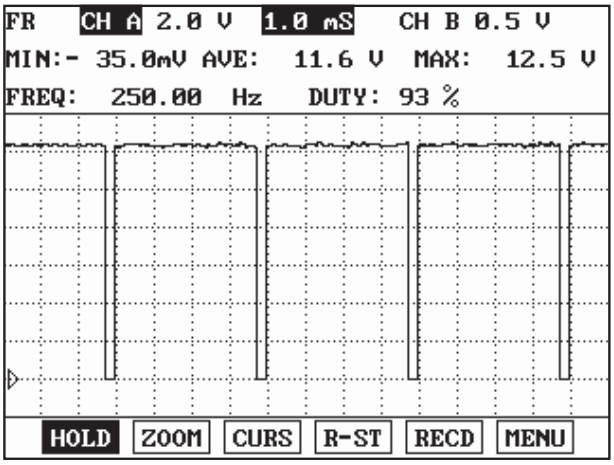

Fig.2

Fig.1) Waveform of Throttle control actuator at wide open(at idle) : At IG KEY "ON", ENGINE "ON", 5% duty is outputted continuously.
Fig.2) Waveform of Throttle control actuator at closed position : At IG KEY "OFF", 93% duty is outputted for about 1 sec.

LFIG529A

MONITOR SCANTOOL DATA EE6C6BF4

1. Connect Scantool to Data Link Connector (DLC).
2. Warm engine up to normal operating temperature.
3. Turn "OFF" electrical devices and A/C.
4. Monitor "INLET THROTTLE ACTUATOR." parameter on the Scantool.

Specification : 4.7% duty outputted except the operation of throttle flap
95% duty outputted at the operation of throttle flap

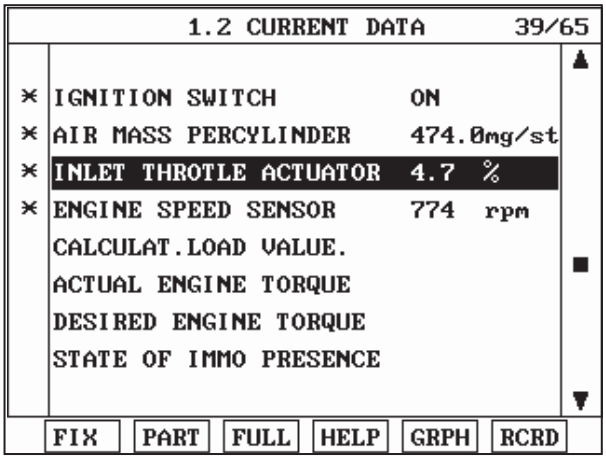

Fig.1

Fig 1) The duty of "INLET THROTTLE ACTUATOR." is 4.7% at IG KEY "ON" and ENGINE "ON".
The duty of "INLET THROTTLE ACTUATOR." is 95% at the point of turning IG KEY "OFF".

SCMFL6363L

※Monitoring if the state of throttle control actuator changes at turning engine OFF because the communication through Scantool is comleted 3 sec. after turning engine ON. It is the easiest way to check if throttle control actuator is closed for about 1 sec. and opened again with eyes(visually) or ears(sound) in order to inspect component operation.

TERMINAL AND CONNECTOR INSPECTION ED3A94F2

1. Electrical systems consist of a lot of harness and connectors, poor connection of terminals can cause various problems and damge of component.

2. Perform checking procedure as follows.

   1) Check damage of harness and terminals : Check terminals for contact resistance, corrosion and deformation.

   2) Check connecting condition of ECM and component connector : Check terminal seperation, damage of locking device and connecting condition between terminal and wiring.

   NOTE

   Disconnect the pin which requires checking at male connector and insert it to the terminal at female connector for checking connecting condition. (after checking, reconnect the pin at correct position.)

3. Is the problem found?

   YES

   ▶ Repair the trouble causing part and go to "Verification of Vehicle Repair".

   NO

   ▶ Go to "Power Circuit Inspection".

POWER CIRCUIT INSPECTION ED97A04A

1. IG KEY "OFF", ENGINE "OFF"

2. Disconnect Throttle control actuator.

3. IG KEY "ON"

4. Measure the voltage of Throttle control actuator connector terminal 3.

Specification : 11.5V~13.0V

5. Is the measured voltage within the specification?

   YES

   ▶ Go to "Control Circuit Inspection".

   NO

   ▶ Repair E/R FUSE & RELAY BOX 15A SENSOR #2 FUSE and related circuit and go to "Verification of Vehicle Repair".

CONTROL CIRCUIT INSPECTION E0C9A313

1. Check control circuit voltage

   1) IG KEY "OFF", ENGINE "OFF"

   2) Disconnect Throttle control actuator connector.

   3) IG KEY "ON"

   4) Measure the voltage of Throttle control actuator connector terminal 2.

specification : 0.0V~0.1V

   5) Is the measured voltage within the specification?

   YES

   ▶ Go to "2.Check open in control circuit".

   NO

   ▶ Repair short to battery in control circuit and go to "Verification of Vehicle Repair".

2. Check open in control circuit

   1) IG KEY "OFF", ENGINE "OFF"

   2) Disconnect Throttle control actuator connector and ECM connector.

   3) Check continuity between throttle control actuator connector terminal 2 and ECM connector (C230-K) terminal 90.

specification : Continuity (below 1.0Ω)

   4) Is the measured resistance within the specification? (Is continuity confirmed?)

   YES

   ▶ Go to "3. Check short to ground in control circuit" as follows.

   NO

   ▶ Repair open in throttle control actuator control circuit and go to "Varification of Vehicle Repair".

3. Check short to ground in control circuit

   1) IG KEY "OFF", ENGINE "OFF"

   2) Disconnect Throttle control actuator connector.

   3) Check continuity between throttle control actuator connector terminal 2 and chassis ground.

specification : Discontinuity (Infinite Ω)

   4) Is the measured resistance within the specification? (Is control circuit insulated with ground?)

   YES

▶ Go to "Ground Circuit Inspection".

NO

▶ Repair short to ground in control circuit and go to "Verification of Vehicle Repair".

GROUND CIRCUIT INSPECTION ED251993

1. IG KEY "OFF", ENGINE "OFF"
2. Disconnect Throttle control actuator connector.
3. IG KEY "ON"
4. Measure the voltage of Throttle control actuator connector terminal 3. [TEST "A"]
5. Measure the voltage between Throttle control actuator connector terminal 3 and 4. [TEST "B"]
   (terminal 3 : Check + prove , terminal 4 : Check - prove)

Specification : [TEST "A"] Voltage - [TEST "B"] Voltage = below 200mV

6. Is the measured voltage within the specification?

YES

▶ Go to "Component Inspection".

NO

▶ When "B" voltage is not detected : Repair open in ground circuit(G15 ground point related circuit) and go to "Verification of Vehicle Repair".
▶ When the voltage difference between "A" and "B" is above 200mV : Eliminate the causes of excessive resistance and go to "Verification of Vehicle Repair".

COMPONENT INSPECTION EA699941

1. Throttle control actuator component visual inspection
   1) IG KEY "OFF", ENGINE "OFF"
   2) Disconnect intake hose connected to throttle control actuator.
   3) Check if throttle control actuator is contaminated with carbon fraction.
   4) Check if throttle flap moves smoothly as touching it with hand (perform this process at IG KEY "OFF" state.)
      ※ Check if abnormal noise, valve shaft stuck, too much wear are detected.

Specification : Flap moves smoothly and carbon fraction, too much wear, abnormal noise are not detected.

   5) Is throttle control actuator is OK after performing visual inspection?

YES

▶ Go to "2. Throttle control actuator operating test" as follows.

NO

▶ If same symptom is detected after clear carbon fraction up, replace throttle control actuator and go to "Verification of Vehicle Repair".

2. Throttle control actuator operating test

   1) IG KEY "OFF", ENGINE "OFF"

   2) Disconnect intake hose connected to throttle control actuator.

   3) ENGINE "ON"

   4) Check if throttle control actuator is in wide open state during engine running.

   5) ENGINE "OFF"

   6) Check if throttle flap is closed once and opened again at the point of turning engine OFF.
      ※ Check if abnormal noise or irregular moving of flap is detected.

Specification : Throttle flap moves smoothly. at engine ON : Throttle control actuator opened at the point of turning engine OFF : Throttle flap is closed once and opened again

   7) Is throttle flap moves smoothly?

      YES

      ▶ Go to "Verification of Vehicle Repair".

      NO

      ▶ Replace throttle control actuator and go to "Verification of Vehicle Repair".

VERIFICATION OF VEHICLE REPAIR EC673E59

After a repair, it is essential to verify that the fault is corrected.

1. After connecting Scantool select "DIAGNOSTIC TROUBLE CODES(DTCs)" mode.
2. Clear recorded DTC using Scantool.
3. Drive the vehicle within DTC "Enable conditions" in "General information".
4. After selecting "DIAGNOSTIC TROUBLE CODES(DTCs)" mode and check if DTC is recorded again.
5. Are any DTCs recorded ?

   YES

   ▶ Go to the DTC guide of recorded NO. in Scantool.

   NO

   ▶ System operates within specification.

DTC P2112 THROTTLE CONTROL ACTUATOR CIRCUIT LOW

COMPONENT LOCATION EBE9595E

Refer to DTC P2111.

GENERAL DESCRIPTION ED51D372

Refer to DTC P2111.

DTC DESCRIPTION ECD1FA6B

P2112 is set when "0"A in throttle control actuator is detected for more than 1 sec. this code is due to 1)open or short to ground in control circuit or 2)internal open in actuator component.

DTC DETECTING CONDITION EC050951

<table>
<tr><th>Item</th><th colspan="3">Detecting Condition</th><th>Possible Cause</th></tr>
<tr><td>DTC Strategy</td><td colspan="3">• Voltage monitoring</td><td rowspan="6">• Throttle Control Actuator circuit
• Throttle Control Actuator component</td></tr>
<tr><td>Enable Conditions</td><td colspan="3">• IG KEY "ON"</td></tr>
<tr><td>Threshold Value</td><td colspan="3">• Short to GND, Wiring open</td></tr>
<tr><td>Diagnostic Time</td><td colspan="3">• 1 sec.</td></tr>
<tr><td rowspan="4">Fail Safe</td><td>Fuel cut</td><td>NO</td><td rowspan="4"></td></tr>
<tr><td>EGR Off</td><td>YES</td></tr>
<tr><td>Fuel Limit</td><td>NO</td></tr>
<tr><td>Check Lamp</td><td>NO</td></tr>
</table>

SPECIFICATION ED3A85AF

Refer to DTC P2111.

SCHEMATIC DIAGRAM E6F11D73

Refer to DTC P2111.

SIGNAL WAVEFORM AND DATA E387F5E0

Refer to DTC P2111.

MONITOR SCANTOOL DATA EAE1DE42

Refer to DTC P2111.

TERMINAL AND CONNECTOR INSPECTION E3B7B7CB

Refer to DTC P2111.

POWER CIRCUIT INSPECTION EEAB65F4

1. IG KEY "OFF", ENGINE "OFF"
2. Disconnect Throttle control actuator.
3. IG KEY "ON"
4. Measure the voltage of Throttle control actuator connector terminal 3.

Specification : 11.5V~13.0V

5. Is the measured voltage within the specification?

YES

▶ Go to "Control Circuit Inspection".

NO

▶ Repair E/R FUSE & RELAY BOX 15A SENSOR #2 FUSE and related circuit and go to "Verification of Vehicle Repair".

CONTROL CIRCUIT INSPECTION EB9D339C

1. Check control circuit voltage
   1) IG KEY "OFF", ENGINE "OFF"
   2) Disconnect Throttle control actuator connector.
   3) IG KEY "ON"
   4) Measure the voltage of Throttle control actuator connector terminal 2.

specification : 0.0V~0.1V

   5) Is the measured voltage within the specification?

YES

▶ Go to "2.Check open in control circuit".

NO

▶ Repair short to battery in control circuit and go to "Verification of Vehicle Repair".

2. Check open in control circuit
   1) IG KEY "OFF", ENGINE "OFF"
   2) Disconnect Throttle control actuator connector and ECM connector.
   3) Check continuity between throttle control actuator connector terminal 2 and ECM connector (C230-K) terminal 90.

specification : Continuity (below 1.0Ω)

4) Is the measured resistance within the specification? (Is continuity confirmed?)

YES

▶ Go to "3. Check short to ground in control circuit" as follows.

NO

▶ Repair open in throttle control actuator control circuit and go to "Varification of Vehicle Repair".

3. Check short to ground in control circuit

1) IG KEY "OFF", ENGINE "OFF"

2) Disconnect Throttle control actuator connector.

3) Check continuity between throttle control actuator connector terminal 2 and chassis ground.

specification : Discontinuity (Infinite Ω)

4) Is the measured resistance within the specification? (Is control circuit insulated with ground?)

YES

▶ Go to "Ground Circuit Inspection".

NO

▶ Repair short to ground in control circuit and go to "Verification of Vehicle Repair".

GROUND CIRCUIT INSPECTION EC1DB582

1. IG KEY "OFF", ENGINE "OFF"
2. Disconnect Throttle control actuator connector.
3. IG KEY "ON"
4. Measure the voltage of Throttle control actuator connector terminal 3. [TEST "A"]
5. Measure the voltage between Throttle control actuator connector terminal 3 and 4. [TEST "B"]
(terminal 3 : Check + prove , terminal 4 : Check - prove)

Specification : [TEST "A"] Voltage - [TEST "B"] Voltage = below 200mV

6. Is the measured voltage within the specification?

YES

▶ Go to "Component Inspection".

NO

▶ When "B" voltage is not detected : Repair open in ground circuit(G15 ground point related circuit) and go to "Verification of Vehicle Repair".
▶ When the voltage difference between "A" and "B" is above 200mV : Eliminate the causes of excessive resistance and go to "Verification of Vehicle Repair".

COMPONENT INSPECTION E8FF1122

1. Throttle control actuator component visual inspection

   1) IG KEY "OFF", ENGINE "OFF"

   2) Disconnect intake hose connected to throttle control actuator.

   3) Check if throttle control actuator is contaminated with carbon fraction.

   4) Check if throttle flap moves smoothly as touching it with hand (perform this process at IG KEY "OFF" state.)
      ※ Check if abnormal noise, valve shaft stuck, too much wear are detected.

Specification : Flap moves smoothly and carbon fraction, too much wear, abnormal noise are not detected.

   5) Is throttle control actuator is OK after performing visual inspection?

      YES

      ▶ Go to "2. Throttle control actuator operating test" as follows.

      NO

      ▶ If same symptom is detected after clear carbon fraction up, replace throttle control actuator and go to "Verification of Vehicle Repair".

2. Throttle control actuator operating test

   1) IG KEY "OFF", ENGINE "OFF"

   2) Disconnect intake hose connected to throttle control actuator.

   3) ENGINE "ON"

   4) Check if throttle control actuator is in wide open state during engine running.

   5) ENGINE "OFF"

   6) Check if throttle flap is closed once and opened again at the point of turning engine OFF.
      ※ Check if abnormal noise or irregular moving of flap is detected.

Specification : Throttle flap moves smoothly. at engine ON : Throttle control actuator opened at the point of turning engine OFF : Throttle flap is closed once and opened again

   7) Is throttle flap moves smoothly?

      YES

      ▶ Go to "Verification of Vehicle Repair".

      NO

      ▶ Replace throttle control actuator and go to "Verification of Vehicle Repair".

VERIFICATION OF VEHICLE REPAIR EC565060

Refer to DTC P2111.

DTC P2113 THROTTLE CONTROL ACTUATOR CIRCUIT MALFUNCTION - RANGE/PERFORMANCE

COMPONENT LOCATION E5AC6BA2

Refer to DTC P2111.

GENERAL DESCRIPTION E12D6C63

Refer to DTC P2111.

DTC DESCRIPTION E5D7EAAD

P2113 is set when 1)throttle control actuator error or 2)open or short of Feedback line is detected for more than 5 sec. This code is due to throttle control actuator stuck, open or short in feed back signal circuit.

DTC DETECTING CONDITION E1936057

<table>
<tr><th>Item</th><th colspan="3">Detecting Condition</th><th>Possible Cause</th></tr>
<tr><td>DTC Strategy</td><td colspan="3">• Voltage monitoring</td><td rowspan="6">• Throttle Control Actuator circuit
• Throttle Control Actuator component</td></tr>
<tr><td>Enable Conditions</td><td colspan="3">• IG KEY "ON"</td></tr>
<tr><td>Threshold Value</td><td colspan="3">• Short to GND, Wiring open</td></tr>
<tr><td>Diagnostic Time</td><td colspan="3">• 5 sec.</td></tr>
<tr><td rowspan="4">Fail Safe</td><td>Fuel cut</td><td>NO</td><td rowspan="4"></td></tr>
<tr><td>EGR Off</td><td>NO</td></tr>
<tr><td>Fuel Limit</td><td>NO</td></tr>
<tr><td>Check Lamp</td><td>NO</td></tr>
</table>

SPECIFICATION EF22E9DB

Refer to DTC P2111.

SCHEMATIC DIAGRAM EF04C5F9

Refer to DTC P2111.

SIGNAL WAVEFORM AND DATA E9D4DE2D

Refer to DTC P2111.

MONITOR SCANTOOL DATA E0ADC05D

Refer to DTC P2111.

TERMINAL AND CONNECTOR INSPECTION EAB64BF3

Refer to DTC P2111.

SIGNAL CIRCUIT INSPECTION E44F6A4E

1. Check feed back signal circuit voltage

   1) IG KEY "OFF", ENGINE "OFF"

   2) Disconnect Throttle control actuator connector.

   3) IG KEY "ON"

   4) Measure the voltage of Throttle control actuator connector terminal 1.

specification : 0.0V~0.1V

   5) Is the measured voltage within the specification?

   YES

   ▶ Go to "2.Check open in feed back signal circuit".

   NO

   ▶ Repair short to battery in feed back signal circuit and go to "Verification of Vehicle Repair".

2. Check open in feed back signal circuit

   1) IG KEY "OFF", ENGINE "OFF"

   2) Disconnect Throttle control actuator connector and ECM connector.

   3) Check continuity between throttle control actuator connector terminal 1 and ECM connector (C230-K) terminal 77.

specification : Continuity (below 1.0Ω)

   4) Is the measured resistance within the specification? (Is continuity confirmed?)

   YES

   ▶ Go to "3. Check short to ground in feed back signal circuit" as follows.

   NO

   ▶ Repair open in throttle control actuator feed back signal circuit and go to "Varification of Vehicle Repair".

3. Check short to ground in feed back signal circuit

   1) IG KEY "OFF", ENGINE "OFF"

   2) Disconnect Throttle control actuator connector.

   3) Check continuity between throttle control actuator connector terminal 1 and chassis ground.

specification : Discontinuity (Infinite Ω)

   4) Is the measured resistance within the specification? (Is feed back signal circuit insulated with ground?)

   YES

▶ Go to "Ground Circuit Inspection".

NO

▶ Repair short to ground in feed back signal circuit and go to "Verification of Vehicle Repair".

GROUND CIRCUIT INSPECTION E5F5FFFD

1. IG KEY "OFF", ENGINE "OFF"
2. Disconnect Throttle control actuator connector.
3. IG KEY "ON"
4. Measure the voltage of Throttle control actuator connector terminal 3. [TEST "A"]
5. Measure the voltage between Throttle control actuator connector terminal 3 and 4. [TEST "B"]
   (terminal 3 : Check + prove , terminal 4 : Check - prove)

Specification : [TEST "A"] Voltage - [TEST "B"] Voltage = below 200mV

6. Is the measured voltage within the specification?

YES

▶ Go to "Component Inspection".

NO

▶ When "B" voltage is not detected : Repair open in ground circuit(G15 ground point related circuit) and go to "Verification of Vehicle Repair".
▶ When the voltage difference between "A" and "B" is above 200mV : Eliminate the causes of excessive resistance and go to "Verification of Vehicle Repair".

COMPONENT INSPECTION ED512F85

1. Throttle control actuator component visual inspection
   1) IG KEY "OFF", ENGINE "OFF"
   2) Disconnect intake hose connected to throttle control actuator.
   3) Check if throttle control actuator is contaminated with carbon fraction.
   4) Check if throttle flap moves smoothly as touching it with hand (perform this process at IG KEY "OFF" state.)
      ※ Check if abnormal noise, valve shaft stuck, too much wear are detected.

Specification : Flap moves smoothly and carbon fraction, too much wear, abnormal noise are not detected.

   5) Is throttle control actuator is OK after performing visual inspection?

YES

▶ Go to "2. Throttle control actuator operating test" as follows.

NO

▶ If same symptom is detected after clear carbon fraction up, replace throttle control actuator and go to "Verification of Vehicle Repair".

2. Throttle control actuator operating test

   1) IG KEY "OFF", ENGINE "OFF"

   2) Disconnect intake hose connected to throttle control actuator.

   3) ENGINE "ON"

   4) Check if throttle control actuator is in wide open state during engine running.

   5) ENGINE "OFF"

   6) Check if throttle flap is closed once and opened again at the point of turning engine OFF.
      ※ Check if abnormal noise or irregular moving of flap is detected.

Specification : Throttle flap moves smoothly. at engine ON : Throttle control actuator opened at the point of turning engine OFF : Throttle flap is closed once and opened again

   7) Is throttle flap moves smoothly?

      YES

      ▶ Go to "Verification of Vehicle Repair".

      NO

      ▶ Replace throttle control actuator and go to "Verification of Vehicle Repair".

VERIFICATION OF VEHICLE REPAIR E33F6F74

Refer to DTC P2111.

DTC P2123 THROTTLE/PEDAL POSITION SENSOR/SWITCH "D" CIRCUIT HIGH INPUT

COMPONENT LOCATION EB2AF71B

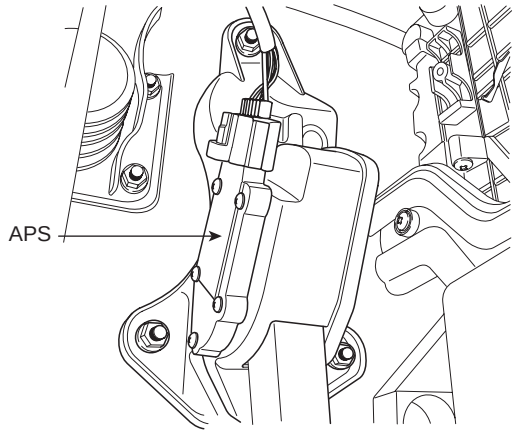

SCMFL6510L

GENERAL DESCRIPTION ED829AA8

Driver's intension to accelerate is transmitted to ECM through Accelerator Pedal Sensor(APS) . And APS, whose mechanism is same as TPS, is required for ECM to determine optimum fuel injection quantity. As fidelity of APS is strongly required, APS is devided into two. One is APS1, which outputs main signals and the other is APS2, which monitors APS1 performance.APS1 and 2 do not share power supply and ground. Normally, APS2 output voltage is the half of APS1 and if the ratio of two signal is out of specified value, error is recognized then, Limp Home mode is activated.When Limp Home mode is activated, engine speed is fixed at 1200RPM and driving performance is limited to prevent excessive power generation due to APS false signal.

DTC DESCRIPTION ECD47C82

P2123 is set when output voltage of APS 1 is above the maximum value of 4.79V for more than 0.18 sec. This code is due to the short to battery in APS 1 power circuit and signal circuit or open in sensor ground circuit.

DTC DETECTING CONDITION E5C0DED3

<table>
<tr><th>Item</th><th colspan="3">Detecting Condition</th><th>Possible Cause</th></tr>
<tr><td>DTC Strategy</td><td colspan="3">• Voltage monitoring</td><td rowspan="6">• APS 1 Circuit
• APS component</td></tr>
<tr><td>Enable Conditions</td><td colspan="3">• IG KEY "ON"</td></tr>
<tr><td>Threshold Value</td><td colspan="3">• When output signal is above the maximum value (above 4.79V)</td></tr>
<tr><td>Diagnostic Time</td><td colspan="3">• 0.18 sec.</td></tr>
<tr><td rowspan="4">Fail Safe</td><td>Fuel cut</td><td>NO</td><td rowspan="4">• APS standard value is 0%.
• Limp home idle is fixed at (1200RPM)
• A/C operation stops according to Vehicle/Engine speed
• Cruise control deactivated (for Cruise control option applied vehicle)</td></tr>
<tr><td>EGR Off</td><td>NO</td></tr>
<tr><td>Fuel Limit</td><td>YES</td></tr>
<tr><td>Check Lamp</td><td>YES</td></tr>
</table>

SPECIFICATION E53B94F4

	Pedal released	Pedal depressed	Sensor Type
APS 1	0.7V~0.8V	3.8V~4.4V	Variable resistance type(Potentiometer)
APS 2	0.275V~0.475V	1.75V~2.35V	

SCHEMATIC DIAGRAM E15919E5

[CIRCUIT DIAGRAM]

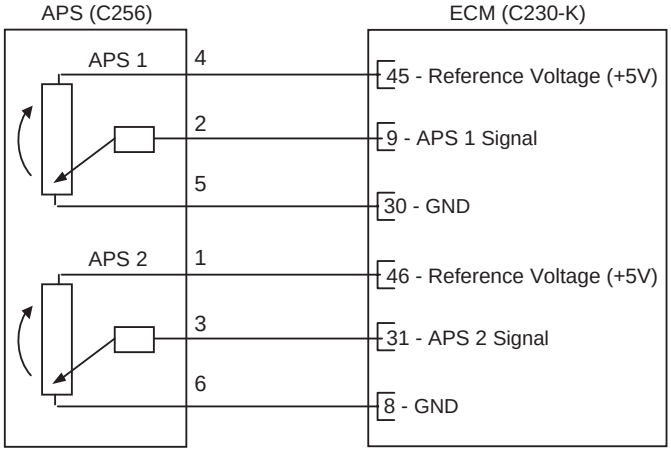

[CONNECTION INFORMATION]

Terminal	Connected to	Function
1	ECM C230-K (46)	APS 2 Reference Voltage (+5V)
2	ECM C230-K (9)	APS 1 Signal
3	ECM C230-K (31)	APS 2 Signal
4	ECM C230-K (45)	APS 1 Reference Voltage (+5V)
5	ECM C230-K (30)	APS 1 Ground
6	ECM C230-K (8)	APS 2 Ground

[HARNESS CONNECTORS]

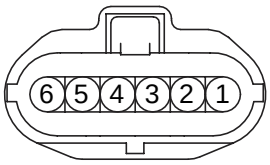

C256
APS

C230-A

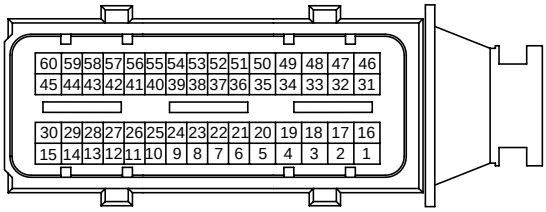

C230-K

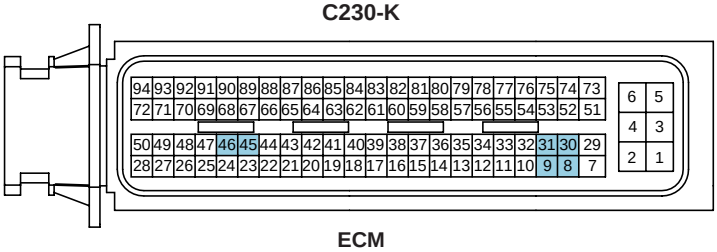

ECM

SCMFL6123L

SIGNAL WAVEFORM AND DATA EB6B7FB2

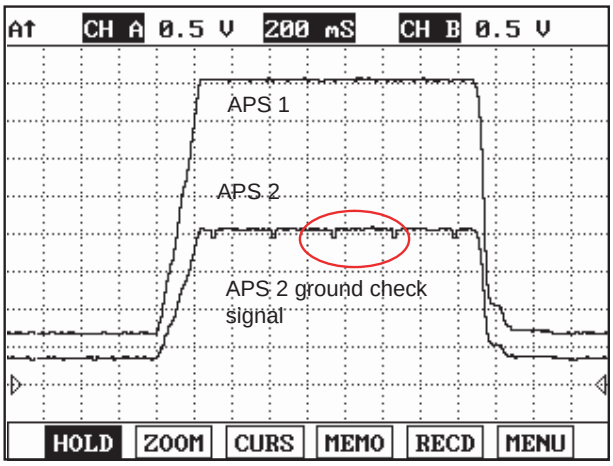

Fig.1

Fig.1) APS 1 and APS 2 signals are measured simultaneously, Check if output value is rising and APS 2 is 1/2 of APS 1 signal.

LFIG541A

NOTE

APS 2 Ground checking signal is for ECM to monitor APS 2. This signal drops APS 2 output voltage to below 200.39mV per 200msec. If APS 2 output voltage does not drop to below 200.39mV, ECM sets DTC as recognizing ground circuit error of APS 2 .

※ The waveform below 200.39mV is not detectable in Ground checking signal waveform of APS 2 signal. Instead, the waveform which drops a little is detected. If APS 2 data of "SERVICE DATA" on the Scantool varies from 350mV to 0mV periodically, it means it works well.

MONITOR SCANTOOL DATA E16F3322

1. Connect Scantool to Data Link Connector (DLC).
2. Warm engine up to normal operating temperature.
3. Turn "OFF" electrical devices and A/C.
4. Monitor "Accelerator position sensor", "Accelerator position sensor 1", "Accelerator position sensor 2 " parameter on the scantool.

Specification : at idle(0%) Accelerator position sensor 1 : 600mV~800mV Accelerator position sensor 2 : 1/2 of Accelerator position sensor 1

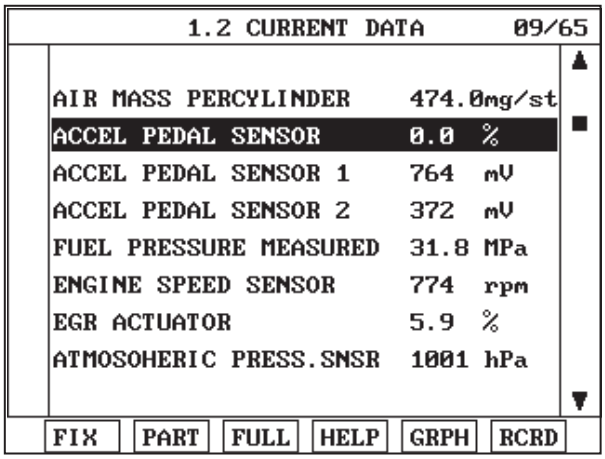

Fig.1

Fig.1) APS output data at warm idle. Check if output value is rising and "Accelerator position sensor 2" is 1/2 of "Accelerator position sensor 1" signal.

SCMFL6371L

TERMINAL AND CONNECTOR INSPECTION E3725B2E

1. Electrical systems consist of a lot of harness and connectors, poor connection of terminals can cause various problems and damge of component.

2. Perform checking procedure as follows.

   1) Check damage of harness and terminals : Check terminals for contact resistance, corrosion and deformation.

   2) Check connecting condition of ECM and component connector : Check terminal seperation, damage of locking device and connecting condition between terminal and wiring.

   NOTE

   Disconnect the pin which requires checking at male connector and insert it to the terminal at female connector for checking connecting condition. (after checking, reconnect the pin at correct position.)

3. Is the problem found?

   YES

   ▶ Repair the trouble causing part and go to "Verification of Vehicle Repair".

   NO

   ▶ Go to "Power Circuit Inspection" as follows.

POWER CIRCUIT INSPECTION EFDB4451

1. IG KEY "OFF", ENGINE "OFF"

2. Disconnect APS connector.

3. IG KEY "ON"

4. Measure the voltage of terminal 4 of APS connector.

Specification : 4.8V~5.1V

5. Is the measured voltage within the specification?

YES

▶ Go to "Signal Circuit Inspection".

NO

▶ If the measured voltage is not within the specified value, find and repair short to battery in APS 1 power circuit and go to "Verification of Vehicle Repair".

SIGNAL CIRCUIT INSPECTION E475F142

1. Check open in signal circuit

   1) IG KEY "OFF", ENGINE "OFF"

   2) Disconnect APS connector and ECM connector.

   3) Check continuity between APS connector terminal 2 and ECM connector (C230-K) terminal 9

Specification : Continuity (below 1.0Ω)

   4) Is the measured resistance within the specification?

   YES

   ▶ Go to "Check short to battery in signal circuit" as follows.

   NO

   ▶ Repair open in signal circuit and go to "Verification of Vehicle Repair".

2. Check short to battery in signal circuit

   1) IG KEY "OFF", ENGINE "OFF"

   2) Disconnect APS connector and ECM connector.

   3) IG KEY "ON"

   4) Measure the voltage of terminal 2 of APS connector.

Specification : 0.0V~0.1V

   5) Is the measured voltage within the specification?

   YES

   ▶ Go to "Ground Circuit Inspection".

   NO

   ▶ Repair short to battery and go to "Verification of Vehicle Repair".

GROUND CIRCUIT INSPECTION E1D944BB

1. IG KEY "OFF", ENGINE "OFF"
2. Disconnect APS connector.
3. IG KEY "ON"
4. Measure the voltage of APS terminal 4. [TEST "A"]
5. Measure the voltage of APS terminal 4 and terminal 5. [TEST "B"]
   (terminal 4 : Check + prove , terminal 5 : Check - prove)

Specification : [TEST "A"] Voltage - [TEST "B"] Voltage = below 200mV

6. Is the measured voltage within the specification?

YES

▶ Go to "Component Inspection".

NO

▶ When "B" voltage is not detected : Repair open in ground circuit and go to "Verification of Vehicle Repair".
▶ When the voltage difference between "A" and "B" is above 200mV : Eliminate the causes of excessive resistance and go to "Verification of Vehicle Repair".

COMPONENT INSPECTION E351FBBE

1. IG KEY "OFF", ENGINE "OFF".
2. Disconnect APS connector (C256).
3. Check resistance for each terminal refering to Resistance characteristic table.

SPECIFICATION : RESISTANCE CHARACTERISTIC TABLE FOR EACH TERMINAL

	checking point	Resistance(KΩ 20℃)		Characteristic	Component Connector Shape
		Pedal Depressed	Pedal released		
APS 1	4(power)-5(ground)	1.0±0.1KΩ	1.0±0.1KΩ	Unchanged	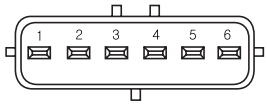 SCMFL6395L
	4(power)-2(signal)	1.8±0.1KΩ	1.1±0.1KΩ	Resistance drops	
	2(signal)-5(ground)	1.1±0.1KΩ	1.8±0.1KΩ	Resistance rises	
APS 2	1(power)-6(ground)	2.0±0.1KΩ	2.0±0.1KΩ	Unchanged	
	1(power)-3(signal)	2.9±0.1KΩ	2.1±0.1KΩ	Resistance drops	
	3(signal)-6(ground)	1.1±0.1KΩ	1.8±0.1KΩ	Resistance rises	

4. Are resistances for each terminal measured correctly?

YES

▶ Go to "Verification of Vehicle Rapair".

NO

▶ Replace APS and go to "Verification of Vehicle Rapair".

VERIFICATION OF VEHICLE REPAIR EAC51234

After a repair, it is essential to verify that the fault is corrected.

1. After connecting Scantool select "DIAGNOSTIC TROUBLE CODES(DTCs)" mode.
2. Clear recorded DTC using Scantool.
3. Drive the vehicle within DTC "Enable conditions" in "General information".
4. After selecting "DIAGNOSTIC TROUBLE CODES(DTCs)" mode and check if DTC is recorded again.
5. Are any DTCs recorded ?

YES

▶ Go to the DTC guide of recorded NO. in Scantool.

NO

▶ System operates within specification.

DTC P2128 THROTTLE/PEDAL POSITION SENSOR/SWITCH "E" CIRCUIT HIGH INPUT

COMPONENT LOCATION E004DBE2

Refer to DTC P2123.

GENERAL DESCRIPTION EA08D8FF

Refer to DTC P2123.

DTC DESCRIPTION E8F8F8E8

P2128 is set when output voltage of APS 2 is above the maximum value of 2.463V for more than 0.18 sec. This code is due to the short to battery in APS 2 power circuit and signal circuit or open in sensor ground circuit.

DTC DETECTING CONDITION E25721DC

<table>
<tr><th>Item</th><th colspan="3">Detecting Condition</th><th>Possible Cause</th></tr>
<tr><td>DTC Strategy</td><td colspan="3">• Voltage monitoring</td><td rowspan="5">• APS 2 Circuit
• APS component</td></tr>
<tr><td>Enable Conditions</td><td colspan="3">• IG KEY "ON"</td></tr>
<tr><td>Threshold Value</td><td colspan="3">• When output signal is above the maximum value (above 2.463V)</td></tr>
<tr><td>Diagnostic Time</td><td colspan="3">• 0.18 sec.</td></tr>
<tr><td rowspan="4">Fail Safe</td><td>Fuel cut</td><td>NO</td><td rowspan="4">• APS standard value is 0%.
• Limp home idle is fixed at (1200RPM)
• A/C operation stops according to Vehicle/Engine speed
• Cruise control deactivated (for Cruise control option applied vehicle)</td></tr>
<tr><td>EGR Off</td><td>NO</td></tr>
<tr><td>Fuel Limit</td><td>YES</td></tr>
<tr><td>Check Lamp</td><td>YES</td></tr>
</table>

SPECIFICATION E2D40DF9

Refer to DTC P2123.

SCHEMATIC DIAGRAM E6DC1215

Refer to DTC P2123.

SIGNAL WAVEFORM AND DATA E345F746

Refer to DTC P2123.

MONITOR SCANTOOL DATA E646E8EC

Refer to DTC P2123.

TERMINAL AND CONNECTOR INSPECTION EF3928C7

Refer to DTC P2123.

POWER CIRCUIT INSPECTION EEBAE6DF

1. IG KEY "OFF", ENGINE "OFF"
2. Disconnect APS connector.
3. IG KEY "ON"
4. Measure the voltage of terminal 1 of APS connector.

Specification : 4.8V~5.1V

5. Is the measured voltage within the specification?

YES

▶ Go to "Signal Circuit Inspection".

NO

▶ If the measured voltage is not within the specified value, find and repair short to battery in APS 2 power circuit and go to "Verification of Vehicle Repair".

SIGNAL CIRCUIT INSPECTION EF45BD9E

1. Check open in signal circuit
   1) IG KEY "OFF", ENGINE "OFF"
   2) Disconnect APS connector and ECM connector.
   3) Check continuity between APS connector terminal 3 and ECM connector (C230-K) terminal 31.

Specification : Continuity (below 1.0Ω)

   4) Is the measured resistance within the specification?

YES

▶ Go to "Check short to battery in signal circuit" as follows.

NO

▶ Repair open in signal circuit and go to "Verification of Vehicle Repair".

2. Check short to battery in signal circuit
   1) IG KEY "OFF", ENGINE "OFF"
   2) Disconnect APS connector and ECM connector.
   3) IG KEY "ON"
   4) Measure the voltage of terminal 3 of APS connector.

Specification : 0.0V~0.1V

5) Is abnormal voltage detected in signal circuit with both connector disconnected?

YES

▶ Repair short to battery and go to "Verification of Vehicle Repair".

NO

▶ Go to "Ground Circuit Inspection".

GROUND CIRCUIT INSPECTION E31BE44D

1. IG KEY "OFF", ENGINE "OFF"
2. Disconnect APS connector.
3. IG KEY "ON"
4. Measure the voltage of APS terminal 1. [TEST "A"]
5. Measure the voltage of APS terminal 1 and terminal 6. [TEST "B"]
   (terminal 1 : Check + prove , terminal 6 : Check - prove)

Specification : [TEST "A"] Voltage - [TEST "B"] Voltage = below 200mV

6. Is the measured voltage within the specification?

YES

▶ Go to "Component Inspection".

NO

▶ When "B" voltage is not detected : Repair open in ground circuit and go to "Verification of Vehicle Repair".
▶ When the voltage difference between "A" and "B" is above 200mV : Eliminate the causes of excessive resistance and go to "Verification of Vehicle Repair".

COMPONENT INSPECTION E186656E

1. IG KEY "OFF", ENGINE "OFF".
2. Disconnect APS connector (C256).
3. Check resistance for each terminal refering to Resistance characteristic table.

SPECIFICATION : RESISTANCE CHARACTERISTIC TABLE FOR EACH TERMINAL

	checking point	Resistance(KΩ 20℃)		Characteristic	Component Connector Shape
		Pedal Depressed	Pedal released		
APS 1	4(power)-5(ground)	1.0±0.1KΩ	1.0±0.1KΩ	Unchanged	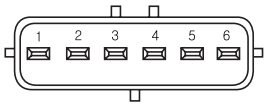 SCMFL6395L
	4(power)-2(signal)	1.8±0.1KΩ	1.1±0.1KΩ	Resistance drops	
	2(signal)-5(ground)	1.1±0.1KΩ	1.8±0.1KΩ	Resistance rises	
APS 2	1(power)-6(ground)	2.0±0.1KΩ	2.0±0.1KΩ	Unchanged	
	1(power)-3(signal)	2.9±0.1KΩ	2.1±0.1KΩ	Resistance drops	
	3(signal)-6(ground)	1.1±0.1KΩ	1.8±0.1KΩ	Resistance rises	

4. Are resistances for each terminal measured correctly?

YES

▶ Go to "Verification of Vehicle Rapair".

NO

▶ Replace APS and go to "Verification of Vehicle Rapair".

VERIFICATION OF VEHICLE REPAIR EE983AD1

Refer to DTC P2123.

DTC P2138 THROTTLE/PEDAL POSITION SENSOR/SWITCH "D" / "E" VOLTAGE CORRELATION

COMPONENT LOCATION E8B3F1F5

Refer to DTC P2123.

GENERAL DESCRIPTION E6846744

Refer to DTC P2123.

DTC DESCRIPTION E8FA412A

P2138 is set when APS 2 output voltage which is not 1/2 of APS 1 output voltage is detected for more than 0.24 sec. Careful inspection of poor connection between APS 1 and APS 2, resistance characteristic of APS component is needed.

DTC DETECTING CONDITION EB1C4BF0

<table>
<tr><th>Item</th><th colspan="3">Detecting Condition</th><th>Possible Cause</th></tr>
<tr><td>DTC Strategy</td><td colspan="3">• Voltage monitoring</td><td rowspan="6">• APS 1 Circuit
• APS 2 Circuit
• APS component</td></tr>
<tr><td>Enable Conditions</td><td colspan="3">• IG KEY "ON"(APS depressed)</td></tr>
<tr><td>Threshold Value</td><td colspan="3">• When APS 1,2 is depressed approx. 7%, the difference between APS1 and 2 is above 308mV
• When APS 1,2 is depressed above 7%, the difference between APS 1and 2 is above 406mV</td></tr>
<tr><td>Diagnostic Time</td><td colspan="3">• 0.24 sec.</td></tr>
<tr><td rowspan="4">Fail Safe</td><td>Fuel cut</td><td>NO</td><td rowspan="4">• APS standard value is 0%.
• Limp home idle is fixed at (1200RPM)
• A/C operation stops according to Vehicle/Engine speed
• Cruise control deactivated (for Cruise control option applied vehicle)</td></tr>
<tr><td>EGR Off</td><td>NO</td></tr>
<tr><td>Fuel Limit</td><td>YES</td></tr>
<tr><td>Check Lamp</td><td>YES</td></tr>
</table>

SPECIFICATION EBB21B42

Refer to DTC P2123.

SCHEMATIC DIAGRAM EAD04A1D

Refer to DTC P2123.

SIGNAL WAVEFORM AND DATA E74E39CB

Refer to DTC P2123.

MONITOR SCANTOOL DATA E0E7D465

Refer to DTC P2123.

TERMINAL AND CONNECTOR INSPECTION E5BA0617

Refer to DTC P2123.

POWER CIRCUIT INSPECTION E00EEDCB

1. IG KEY "OFF", ENGINE "OFF"
2. Disconnect APS connector.
3. IG KEY "ON"
4. Measure the voltage of terminal 1 and 4 of APS connector.

Specification : 4.8V~5.1V

5. Is the measured voltage within the specification?

YES

▶ Go to "Signal Circuit Inspection".

NO

▶ If the measured voltage is not within the specified value, find and repair trouble causing part in circuits and go to "Verification of Vehicle Repair".
When the measured voltage is higher than the specified value :
Refer to P0643 Circuit Inspection. (APS1)
Refer to P0653 Circuit Inspection.(APS2)
When the measured voltage is lower than the specified value :
Refer to P0642 Circuit Inspection.(APS1)
Refer to P0652 Circuit Inspection.(APS2)

SIGNAL CIRCUIT INSPECTION EA5B1C47

1. Check open in signal circuit
   1) IG KEY "OFF", ENGINE "OFF"
   2) Disconnect APS connector and ECM connector.
   3) Check continuity between APS connector terminal 2 and ECM connector (C230-K) terminal 9. (APS 1)
      Check continuity between APS connector terminal 3 and ECM connector (C230-K) terminal 31. (APS 2)

Specification : Continuity (below 1.0Ω)

   4) Is the measured resistance within the specification?

YES

▶ Go to "Check short in signal circuit".

NO

▶ Repair open in signal circuit and go to "Verification of Vehicle Repair".

2. Check short in signal circuit (APS 1)

1) IG KEY "OFF", ENGINE "OFF"

2) Disconnect APS connector and ECM connector.

3) IG KEY "ON"

4) Check continuity between APS connector terminal 2 and chassis ground. (check short to ground)
Measure the voltage of terminal 2 of APS connector. (check short to battery)

Specification : Check short to ground : Discontinuity (Infinite Ω) Check short to battery : 0.0V~0.1V

5) Is APS 1 signal circuit insulated well?

YES

▶ Go to "3.Signal Circuit Inspection (APS 2)" as follows.

NO

▶ Repair short in circuit and go to "Verification of Vehicle Repair".

3. Signal Circuit Inspection (APS 2)

1) IG KEY "OFF", ENGINE "OFF"

2) Disconnect APS connector and ECM connector.

3) IG KEY "ON"

4) Check continuity between APS connector terminal 3 and chassis ground. (check short to ground)
Measure the voltage of terminal 3 of APS connector. (check short to battery)

Specification : Check short to ground : Discontinuity (Infinite Ω) Check short to battery : 0.0V~0.1V

5) Is APS 2 signal circuit insulated well?

YES

▶ Go to "Ground Circuit Inspection".

NO

▶ Repair short in circuit and go to "Verification of Vehicle Repair".

GROUND CIRCUIT INSPECTION EE6B60FA

1. Check ground circuit (APS1)

1) IG KEY "OFF", ENGINE "OFF"

2) Disconnect APS connector.

3) IG KEY "ON"

4) Measure the voltage of APS terminal 4. [TEST "A"]

5) Measure the voltage of APS terminal 4 and terminal 5. [TEST "B"]
(terminal 4: Check + prove , terminal 5 : Check - prove)

Specification : [TEST "A"] Voltage - [TEST "B"] Voltage = below 200mV

6) Is the measured voltage within the specification?

YES

▶ Go to "2. Check ground circuit (APS2)".

NO

▶ When "B" voltage is not detected : Repair open in ground circuit and go to "Verification of Vehicle Repair".
▶ When the voltage difference between "A" and "B" is above 200mV : Eliminate the causes of excessive resistance and go to "Verification of Vehicle Repair".

2. Check ground circuit (APS2)

1) IG KEY "OFF", ENGINE "OFF"

2) Disconnect APS connector.

3) IG KEY "ON"

4) Measure the voltage of APS terminal 1. [TEST "A"]

5) Measure the voltage of APS terminal 1 and terminal 6. [TEST "B"]
(terminal 1 : Check + prove , terminal 6 : Check - prove)

Specification : [TEST "A"] Voltage - [TEST "B"] Voltage = below 200mV

6) Is the measured voltage within the specification?

YES

▶ Go to "Component Inspection".

NO

▶ When "B" voltage is not detected : Repair open in ground circuit and go to "Verification of Vehicle Repair".
▶ When the voltage difference between "A" and "B" is above 200mV : Eliminate the causes of excessive resistance and go to "Verification of Vehicle Repair".

COMPONENT INSPECTION E4BBE2B6

1. IG KEY "OFF", ENGINE "OFF".

2. Disconnect APS connector (C256).

3. Check resistance for each terminal refering to Resistance characteristic table.

SPECIFICATION : RESISTANCE CHARACTERISTIC TABLE FOR EACH TERMINAL

	checking point	Resistance(KΩ 20℃)		Characteristic	Component Connector Shape
		Pedal Depressed	Pedal released		
APS 1	4(power)-5(ground)	1.0±0.1KΩ	1.0±0.1KΩ	Unchanged	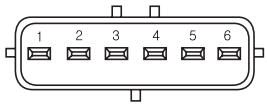 SCMFL6395L
	4(power)-2(signal)	1.8±0.1KΩ	1.1±0.1KΩ	Resistance drops	
	2(signal)-5(ground)	1.1±0.1KΩ	1.8±0.1KΩ	Resistance rises	
APS 2	1(power)-6(ground)	2.0±0.1KΩ	2.0±0.1KΩ	Unchanged	
	1(power)-3(signal)	2.9±0.1KΩ	2.1±0.1KΩ	Resistance drops	
	3(signal)-6(ground)	1.1±0.1KΩ	1.8±0.1KΩ	Resistance rises	

4. Are resistances for each terminal measured correctly?

YES

▶ Go to "Verification of Vehicle Rapair".

NO

▶ Replace APS and go to "Verification of Vehicle Rapair".

VERIFICATION OF VEHICLE REPAIR E7A1E718

Refer to DTC P2123.

DTC P2264 DETECTION OF WATER IN FUEL

COMPONENT LOCATION EFA8FD0B

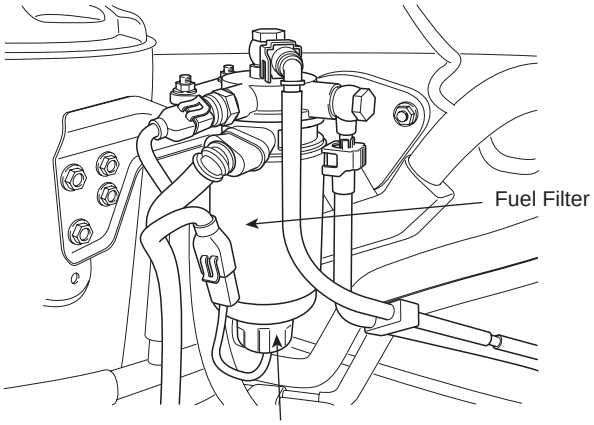

SCMFL6511L

GENERAL DESCRIPTION E3D65CEF

Diesel fuel filter can seperate water from fuel. If water more than specified amount is detected by "water in fuel sensor" installed at the bottom of fuel filter, "Fuel warning lamp" on cluster turns ON.Especially for high pressure pump and injectors of common rail diesel engine water is fatal. because water causes poor lubrication and corrosion in such accurate devices, furthermore, it leads engine hesitation. In order to prevent this harsh condition to engine, "Water warning lamp" turns ON to let driver relief the gathered water from the filter and engine power generation is limited .

NOTE

If sensing prove of water in fuel sensor contacts with water, impressed voltage on prove is grounded to chassis ground, then 12V is outputted from signal line. With this method, ECM recognizes the amount of water.

DTC DESCRIPTION E4F1A423

P2264 is set when water in fuel sensor operates for more than 4 sec. Water warning lamp turns on and engine power generation is limited in this condition. When this code is set, water in the filter should be removed to prevent engine from water contained fuel. If same code is set even after removing water, check short to battery in water in fuel sensor signal circuit or component failure.

DTC DETECTING CONDITION E442E3BD

Item	Detecting Condition			Possible Cause
DTC Strategy	• Voltage monitoring			• Water stored inside of fuel filter(remove water inside of filter) • Water sensor circuit(short to battery) • Water sensor component
Enable Conditions	• IG KEY "ON"			
Threshold Value	• Signal voltage detected at Water sensor			
Diagnostic Time	• 4.0 sec.			
Fail Safe	Fuel cut	NO		
	EGR Off	NO		
	Fuel Limit	YES		
	Check Lamp	NO		

SCHEMATIC DIAGRAM E43E0DF6

[CIRCUIT DIAGRAM]

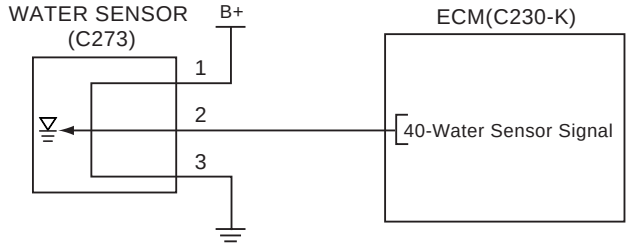

[CONNECTION INFORMATION]

Terminal	Connected to	Function
1	Main Relay	Battery voltage(B+)
2	ECM C230-K (40)	Sensor Signal
3	Chassis ground	Sensor ground

[HARNESS CONNECTOR]

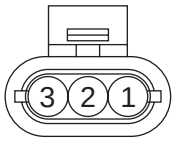

C273
WATER SENSOR

C230-A

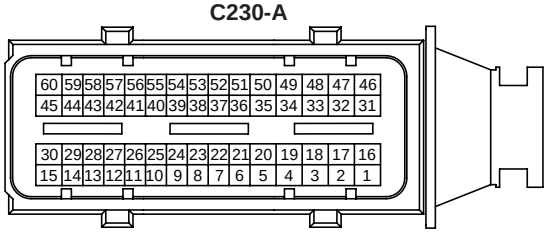

C230-K

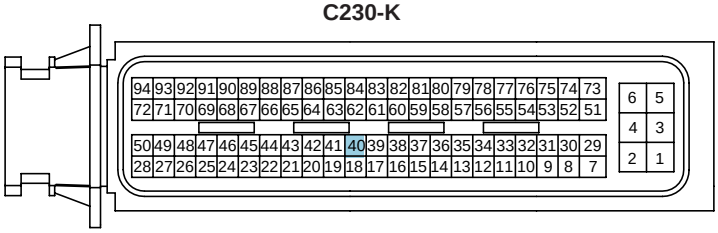

ECM

SCMFL6135L

TERMINAL AND CONNECTOR INSPECTION E048B963

1. Electrical systems consist of a lot of harness and connectors, poor connection of terminals can cause various problems and damge of component.

2. Perform checking procedure as follows.

   1) Check damage of harness and terminals : Check terminals for contact resistance, corrosion and deformation.

   2) Check connecting condition of ECM and component connector : Check terminal seperation, damage of locking device and connecting condition between terminal and wiring.

   NOTE

   Disconnect the pin which requires checking at male connector and insert it to the terminal at female connector for checking connecting condition. (after checking, reconnect the pin at correct position.)

3. Is the problem found?

   YES

   ▶ Repair the trouble causing part and go to "Verification of Vehicle Repair".

   NO

▶ Go to "Power Circuit Inspection" as follows.

POWER CIRCUIT INSPECTION E70F622C

1. IG KEY "OFF", ENGINE "OFF".
2. Disconnect Water sensor connector.
3. IG KEY "ON"
4. Measure the voltage of terminal 1 of Water sensor connector.

Specification : 11.0V~12.5V

5. Is the measured voltage within the specification?

YES

▶ Go to "Signal Circuit Inspection".

NO

▶ Repair open in I/P JUNCTION BOX 10A ABS FUSE and related circuit and go to "Verification of Vehicle Repair".

SIGNAL CIRCUIT INSPECTION EC353D94

1. Check signal circuit voltage
   1) IG KEY "OFF", ENGINE "OFF".
   2) Disconnect Water sensor connector.
   3) IG KEY "ON"
   4) Measure the voltage of terminal 2 of Water sensor connector.

Specification : 0.0V~0.1V

   5) Is the measured voltage within the specification?

YES

▶ Go to "2. Water warning lamp operation test" as follows.

NO

▶ Repair short to battery and go to "Verification of Vehicle Repair".

2. Water warning lamp operation test
   1) IG KEY "OFF", ENGINE "OFF".
   2) Disconnect Water sensor connector .
   3) IG KEY "ON"
   4) Connect Water sensor connector terminal 1 and 2 using jump wire.

Specification : Water warning lamp on cluster turns ON. 12V battery voltage is detected at ECM connector(C230-K) terminal 40.

5) Does water warning lamp turn ON? And is 12V battery voltage detected at ECM connector(C230-K) terminal 40?

YES

▶ Go to "Ground Circuit Inspection".

NO

▶ Repair open in water warning lamp filament and related circuit and go to "Verification of Vehicle Repair".

GROUND CIRCUIT INSPECTION E8C42CFA

1. IG KEY "OFF", ENGINE "OFF".
2. Disconnect Water sensor connector
3. Check continuity between Water sensor connector terminal 3 and chassis ground.

Specification : Discontinuity (Infinite Ω)

4. Is the measured resistance within the specification?

YES

▶ Go to "Component Inspection".

NO

▶ Repair short to ground in signal circuit and go to "Verification of Vehicle Repair".

COMPONENT INSPECTION E99CBD5F

1. Check water inside of fuel filter

1) IG KEY "OFF", ENGINE "OFF"

2) Disconnect fuel filter assy' from vehicle. (note : fuel filter should be maintained to stand up vertically at disconnecting.)

3) Set up clean vessel like beaker to collect fuel outflowed from filter.

4) Disconnect Water sensor and collect fuel and water mixed to it.

Specification : Outflowed fuel must not contain much water.

5) Does fuel contains much water?

YES

▶ Checking odometer and filter used duration, replace fuel filter if needed. If too much water flowed to fuel filter, check if water flowed into fuel tank and clean up inside of fuel tank.
▶ After replacing filter and clean up fuel tank and go to "Verification of Vehicle Repair".

NO

▶ Go to "2.Check Water sensor component" as follows.

2. Check Water sensor component

   1) IG KEY "OFF", ENGINE "OFF"

   2) Disconnect fuel filter assy' from vehicle. (note : fuel filter should be maintained to stand up vertically at disconnecting.)

   3) Set up clean vessel like beaker to collect fuel outflowed from filter.

   4) Disconnect fuel warning sensor from disconnected fuel filter.

   5) Connect Water sensor to disconnected wiring connector.

   6) IG KEY "ON".

   7) Touch water sensing prove of Water sensor to chassis ground.

Specification : Water warning lamp turns ON when touching water sensing prove to chassis ground.

   8) Does water warning lamp operate well?

   YES

   ▶ Go to "Verification of Vehicle Repair".

   NO

   ▶ Replace Water sensor and go to "Verification of Vehicle Repair".

VERIFICATION OF VEHICLE REPAIR EF82566D

After a repair, it is essential to verify that the fault is corrected.

1. After connecting Scantool select "DIAGNOSTIC TROUBLE CODES(DTCs)" mode.
2. Clear recorded DTC using Scantool.
3. Drive the vehicle within DTC "Enable conditions" in "General information".
4. After selecting "DIAGNOSTIC TROUBLE CODES(DTCs)" mode and check if DTC is recorded again.
5. Are any DTCs recorded ?

   YES

   ▶ Go to the DTC guide of recorded NO. in Scantool.

   NO

   ▶ System operates within specification.

DTC P2299 BRAKE PEDAL POSITION / ACCELERATOR PEDAL POSITION INCOMPATIBLE

COMPONENT LOCATION E671B891

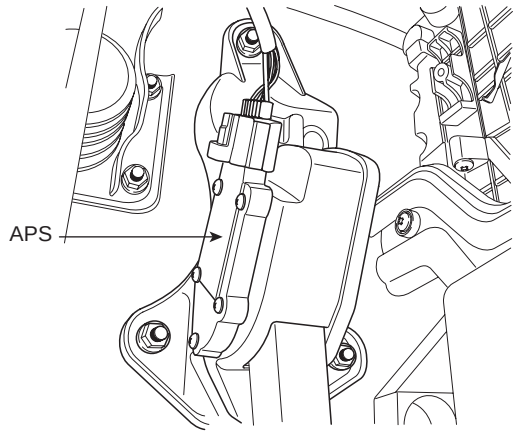

SCMFL6510L

GENERAL DESCRIPTION E864BC89

Brake switch monitors malfunction of accel pedal sensor(APS).Drivers depress brake pedal when 1).the voltage higher than driver's intension is detected due to APS malfunction(signal circuit short to high voltage) 2).engine power generates excessively due to fault signal.Like previous example, if driver's intension to decelerate is transmitted to ECM(brake pedal depressed) when APS signal is high, ECM consider APS to be fault and Limp Home mode is activated.When Limp Home mode is activated, engine speed is fixed at 1200RPM and driving performance is limited, later, if correct APS signal is detected, Limp Home mode is deactivated immediately.

DTC DESCRIPTION E626EDFA

P2299 is set when brake signal is inputted to ECM for more than 0.5 sec. while APS is depressed more than 5% at below 770RPM and 4Km/h. And Limp Home mode is activated with the DTC code occurence. Later, if correct APS signal is detected, Limp Home mode is deactivated immediately. This code is set when APS signal is a bit higher than the voltage at accelerator released position and driver's pedal manipulation, therefore careful inspection of APS and checking driver's pedal depressing habit is required.

DTC DETECTING CONDITION EE8CB550

<table>
<tr><th>Item</th><th colspan="3">Detecting Condition</th><th>Possible Cause</th></tr>
<tr><td>DTC Strategy</td><td colspan="3">• Voltage monitoring</td><td rowspan="6">• APS 1 Circuit
• APS 2 Circuit
• APS component</td></tr>
<tr><td>Enable Conditions</td><td colspan="3">• Engine running (engine speed below 770RPM, vehicle speed below 4Km/h)</td></tr>
<tr><td>Threshold Value</td><td colspan="3">• Brake pedal singal inputted at APS output voltage above 5%(Error disappears when brake pedal released or accelerator pedal depressed 200% per sec.)</td></tr>
<tr><td>Diagnostic Time</td><td colspan="3">• 0.5 sec.</td></tr>
<tr><td rowspan="4">Fail Safe</td><td>Fuel cut</td><td>NO</td><td rowspan="4">• APS standard value is 0%.
• Limp home idle is fixed at (1200RPM)
• A/C operation stops according to Vehicle/Engine speed
• Cruise control deactivated (for Cruise control option applied vehicle)</td></tr>
<tr><td>EGR Off</td><td>NO</td></tr>
<tr><td>Fuel Limit</td><td>YES</td></tr>
<tr><td>Check Lamp</td><td>NO</td></tr>
</table>

SPECIFICATION E86A2630

	Pedal released	Pedal depressed	Sensor Type
APS 1	0.7V~0.8V	3.8V~4.4V	Variable resistance type(Potentiometer)
APS 2	0.275V~0.475V	1.75V~2.35V	

SCHEMATIC DIAGRAM EFFA706D

[CIRCUIT DIAGRAM]

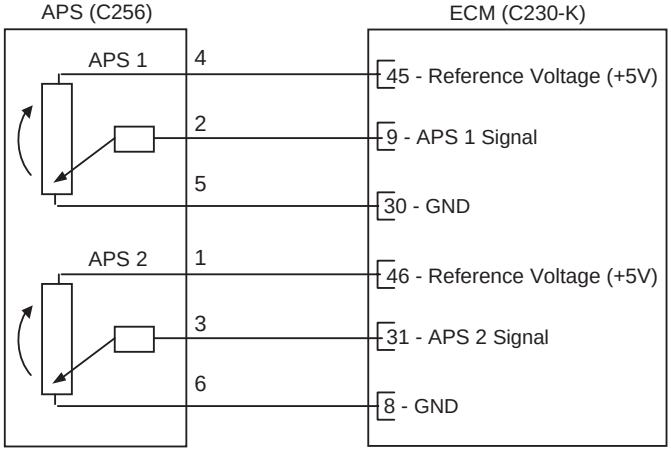

[CONNECTION INFORMATION]

Terminal	Connected to	Function
1	ECM C230-K (46)	APS 2 Reference Voltage (+5V)
2	ECM C230-K (9)	APS 1 Signal
3	ECM C230-K (31)	APS 2 Signal
4	ECM C230-K (45)	APS 1 Reference Voltage (+5V)
5	ECM C230-K (30)	APS 1 Ground
6	ECM C230-K (8)	APS 2 Ground

[HARNESS CONNECTORS]

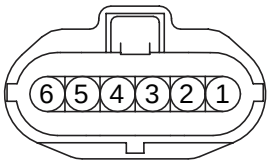

C256

APS

C230-A

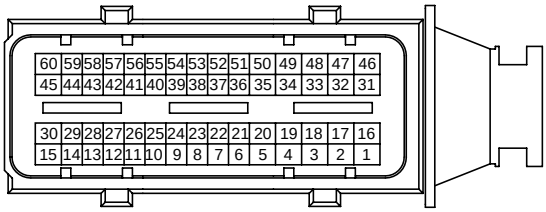

C230-K

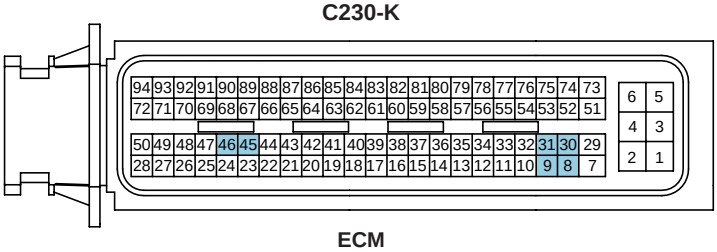

ECM

SCMFL6123L

SIGNAL WAVEFORM AND DATA E4BA1C5F

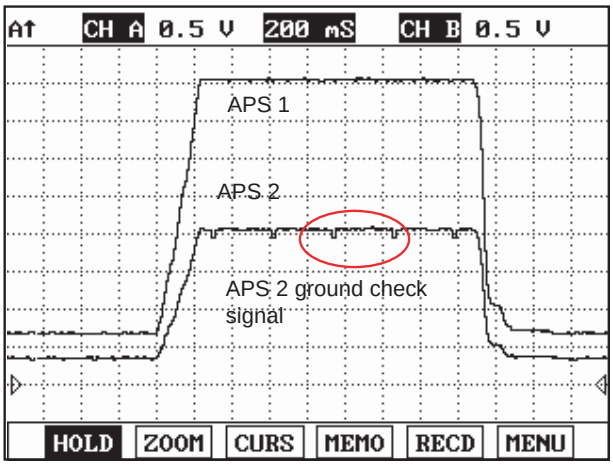

Fig.1

Fig.1) APS 1 and APS 2 signals are measured simultaneously, Check if output value is rising and APS 2 is 1/2 of APS 1 signal.

LFIG541A

NOTE

APS 2 Ground checking signal is for ECM to monitor APS 2. This signal drops APS 2 output voltage to below 200.39mV per 200msec. If APS 2 output voltage does not drop to below 200.39mV, ECM sets DTC as recognizing ground circuit error of APS 2 .

※ The waveform below 200.39mV is not detectable in Ground checking signal waveform of APS 2 signal. Instead, the waveform which drops a little is detected. If APS 2 data of "SERVICE DATA" on the Scantool varies from 350mV to 0mV periodically, it means it works well.

MONITOR SCANTOOL DATA E548F419

1. Connect Scantool to Data Link Connector (DLC).
2. Warm engine up to normal operating temperature.
3. Turn "OFF" electrical devices and A/C.
4. Monitor "Accelerator position sensor", "Accelerator position sensor 1", "Accelerator position sensor 2 " parameter on the scantool.

Specification : at idle(0%) Accelerator position sensor 1 : 600mV~800mV Accelerator position sensor 2 : 1/2 of Accelerator position sensor 1

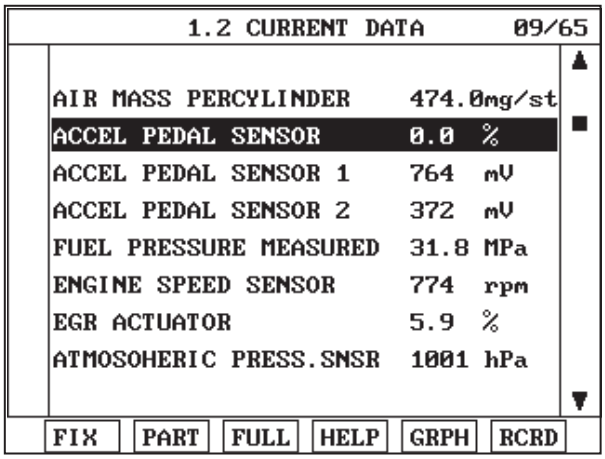

Fig.1

Fig.1) APS output data at warm idle. Check if output value is rising and "Accelerator position sensor 2" is 1/2 of "Accelerator position sensor 1" signal.

SCMFL6371L

TERMINAL AND CONNECTOR INSPECTION E166C946

1. Electrical systems consist of a lot of harness and connectors, poor connection of terminals can cause various problems and damge of component.

2. Perform checking procedure as follows.

   1) Check damage of harness and terminals : Check terminals for contact resistance, corrosion and deformation.

   2) Check connecting condition of ECM and component connector : Check terminal seperation, damage of locking device and connecting condition between terminal and wiring.

   NOTE

   Disconnect the pin which requires checking at male connector and insert it to the terminal at female connector for checking connecting condition. (after checking, reconnect the pin at correct position.)

3. Is the problem found?

   YES

   ▶ Repair the trouble causing part and go to "Verification of Vehicle Repair".

   NO

   ▶ Go to "Power Circuit Inspection" as follows.

POWER CIRCUIT INSPECTION EF179E48

1. IG KEY "OFF", ENGINE "OFF"

2. Disconnect APS connector.

3. IG KEY "ON"

4. Measure the voltage of terminal 1 and 4 of APS connector.

Specification : 4.8V~5.1V

5. Is the measured voltage within the specification?

YES

▶ Go to "Signal Circuit Inspection".

NO

▶ If the measured voltage is not within the specified value, find and repair trouble causing part in circuits and go to "Verification of Vehicle Repair".
When the measured voltage is higher than the specified value :
Refer to P0643 Circuit Inspection. (APS1)
Refer to P0653 Circuit Inspection.(APS2)
When the measured voltage is lower than the specified value :
Refer to P0642 Circuit Inspection.(APS1)
Refer to P0652 Circuit Inspection.(APS2)

SIGNAL CIRCUIT INSPECTION EC930780

1. Check open in signal circuit

   1) IG KEY "OFF", ENGINE "OFF"

   2) Disconnect APS connector and ECM connector.

   3) Check continuity between APS connector terminal 2 and ECM connector (C230-K) terminal 9. (APS 1)
      Check continuity between APS connector terminal 3 and ECM connector (C230-K) terminal 31. (APS 2)

Specification : Continuity (below 1.0Ω)

   4) Is the measured resistance within the specification?

   YES

   ▶ Go to "Check short in signal circuit".

   NO

   ▶ Repair open in signal circuit and go to "Verification of Vehicle Repair".

2. Check short in signal circuit (APS 1)

   1) IG KEY "OFF", ENGINE "OFF"

   2) Disconnect APS connector and ECM connector.

   3) IG KEY "ON"

   4) Check continuity between APS connector terminal 2 and chassis ground. (check short to ground)
      Measure the voltage of terminal 2 of APS connector. (check short to battery)

Specification : Check short to ground : Discontinuity (Infinite Ω)
Check short to battery : 0.0V~0.1V

   5) Is APS 1 signal circuit insulated normally?

   YES

▶ Go to "3.Signal Circuit Inspection (APS 2)" as follows.

NO

▶ Repair short in circuit and go to "Verification of Vehicle Repair".

3. Signal Circuit Inspection (APS 2)

1) IG KEY "OFF", ENGINE "OFF"

2) Disconnect APS connector and ECM connector.

3) IG KEY "ON"

4) Check continuity between APS connector terminal 3 and chassis ground. (check short to ground)
Measure the voltage of terminal 3 of APS connector. (check short to battery)

Specification : Check short to ground : Discontinuity (Infinite Ω)
Check short to battery : 0.0V~0.1V

5) Is APS 2 signal circuit insulated normally?

YES

▶ Go to "Ground Circuit Inspection".

NO

▶ Repair short in circuit and go to "Verification of Vehicle Repair".

GROUND CIRCUIT INSPECTION E1384424

1. Check ground circuit (APS1)

1) IG KEY "OFF", ENGINE "OFF"

2) Disconnect APS connector.

3) IG KEY "ON"

4) Measure the voltage of APS terminal 4. [TEST "A"]

5) Measure the voltage of APS terminal 4 and terminal 5. [TEST "B"]
(terminal 4: Check + prove , terminal 5 : Check - prove)

Specification : [TEST "A"] Voltage - [TEST "B"] Voltage = below 200mV

6) Is the measured voltage within the specification?

YES

▶ Go to "2. Check ground circuit (APS2)".

NO

▶ When "B" voltage is not detected : Repair open in ground circuit and go to "Verification of Vehicle Repair".
▶ When the voltage difference between "A" and "B" is above 200mV : Eliminate the causes of excessive resistance and go to "Verification of Vehicle Repair".

2. Check ground circuit (APS2)

   1) IG KEY "OFF", ENGINE "OFF"

   2) Disconnect APS connector.

   3) IG KEY "ON"

   4) Measure the voltage of APS terminal 1. [TEST "A"]

   5) Measure the voltage of APS terminal 1 and terminal 6. [TEST "B"]
      (terminal 1 : Check + prove , terminal 6 : Check - prove)

Specification : [TEST "A"] Voltage - [TEST "B"] Voltage = below 200mV

   6) Is the measured voltage within the specification?

YES

▶ Go to "Component Inspection".

NO

▶ When "B" voltage is not detected : Repair open in ground circuit and go to "Verification of Vehicle Repair".
▶ When the voltage difference between "A" and "B" is above 200mV : Eliminate the causes of excessive resistance and go to "Verification of Vehicle Repair".

COMPONENT INSPECTION EA5E101C

1. IG KEY "OFF", ENGINE "OFF".

2. Disconnect APS connector (C256).

3. Check resistance for each terminal refering to Resistance characteristic table.

SPECIFICATION : RESISTANCE CHARACTERISTIC TABLE FOR EACH TERMINAL

	checking point	Resistance(KΩ 20℃)		Characteristic	Component Connector Shape
		Pedal Depressed	Pedal released		
APS 1	4(power)-5(ground)	1.0±0.1KΩ	1.0±0.1KΩ	Unchanged	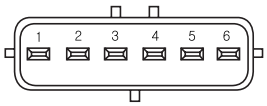 SCMFL6395L
	4(power)-2(signal)	1.8±0.1KΩ	1.1±0.1KΩ	Resistance drops	
	2(signal)-5(ground)	1.1±0.1KΩ	1.8±0.1KΩ	Resistance rises	
APS 2	1(power)-6(ground)	2.0±0.1KΩ	2.0±0.1KΩ	Unchanged	
	1(power)-3(signal)	2.9±0.1KΩ	2.1±0.1KΩ	Resistance drops	
	3(signal)-6(ground)	1.1±0.1KΩ	1.8±0.1KΩ	Resistance rises	

4. Are resistances for each terminal measured correctly?

YES

▶ Go to "Verification of Vehicle Rapair".

NO

▶ Replace APS and go to "Verification of Vehicle Rapair".

VERIFICATION OF VEHICLE REPAIR E7FDC3EA

After a repair, it is essential to verify that the fault is corrected.

1. After connecting Scantool select "DIAGNOSTIC TROUBLE CODES(DTCs)" mode.
2. Clear recorded DTC using Scantool.
3. Drive the vehicle within DTC "Enable conditions" in "General information".
4. After selecting "DIAGNOSTIC TROUBLE CODES(DTCs)" mode and check if DTC is recorded again.
5. Are any DTCs recorded ?

YES

▶ Go to the DTC guide of recorded NO. in Scantool.

NO

▶ System operates within specification.

FUEL DELIVERY SYSTEM-DIESEL

COMPONENT LOCATION E10AFDE9

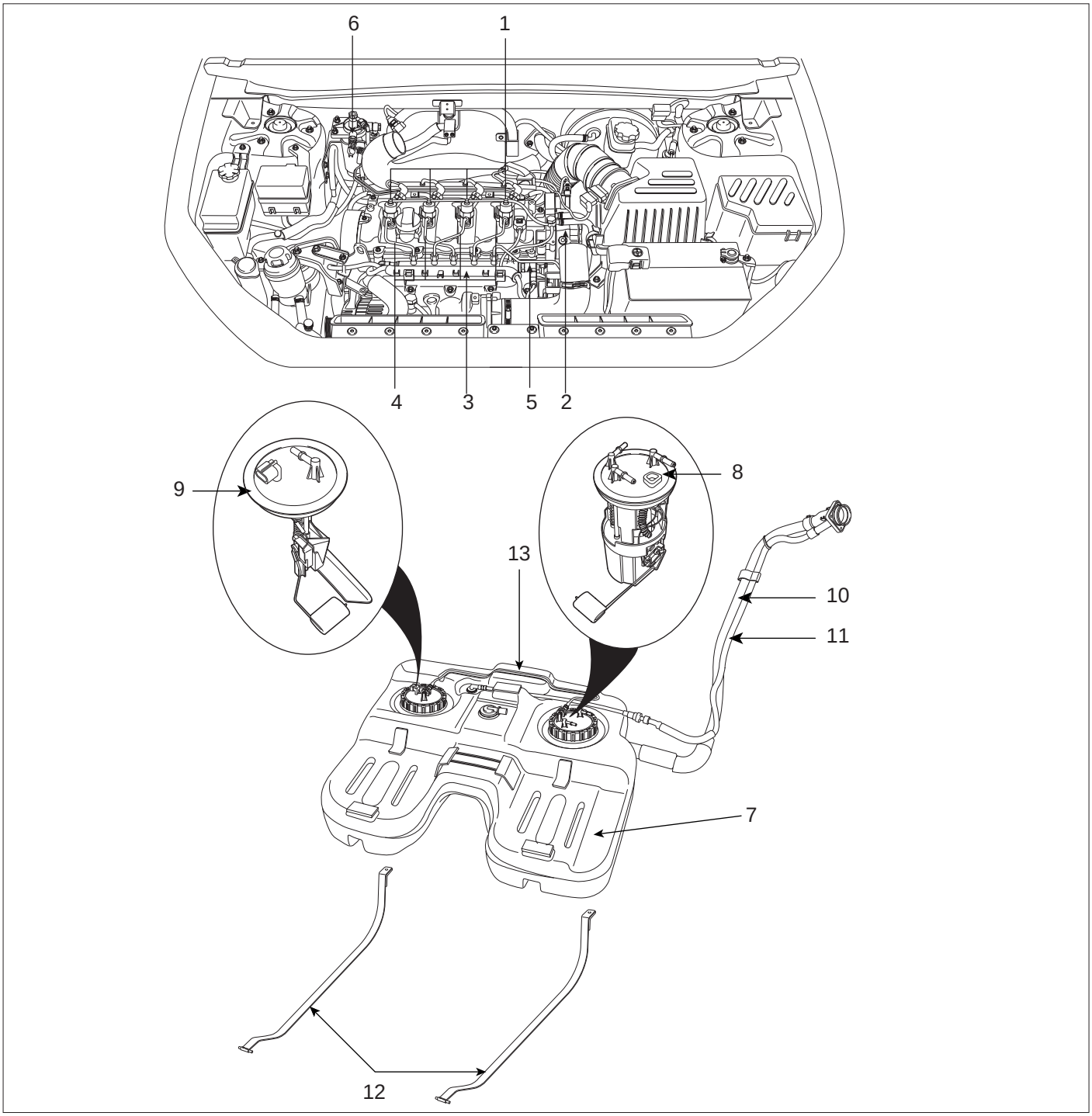

1. Injector
2. High Pressure Fuel Pump
3. Common Rail
4. High Pressure Pipe (Injector → Common Rail)
5. High Pressure Pipe (Common Rail → High Pressure Fuel Pump)
6. Fuel Filter
7. Fuel Tank
8. Fuel Pump (Low Pressure)
9. Sub Fuel Sender
10. Fuel Filler Hose
11. Leveling Hose
12. Fuel Tank Band
13. Suction Tube

SCMFL6137L

CAUTION

- ***Common Rail Fuel Injection System is subject to extremely high pressure (Approximately 1,600 bar)***
- ***Never perform any work on injection system with engine running or within 30 seconds after the engine stops.***
- ***Always pay attention to safety precaution.***
- ***Ensure the absolute cleanliness.***
- ***It is not recommended to remove the injectors without any notice.***

SCHEMATIC DIAGRAM E61F31CB

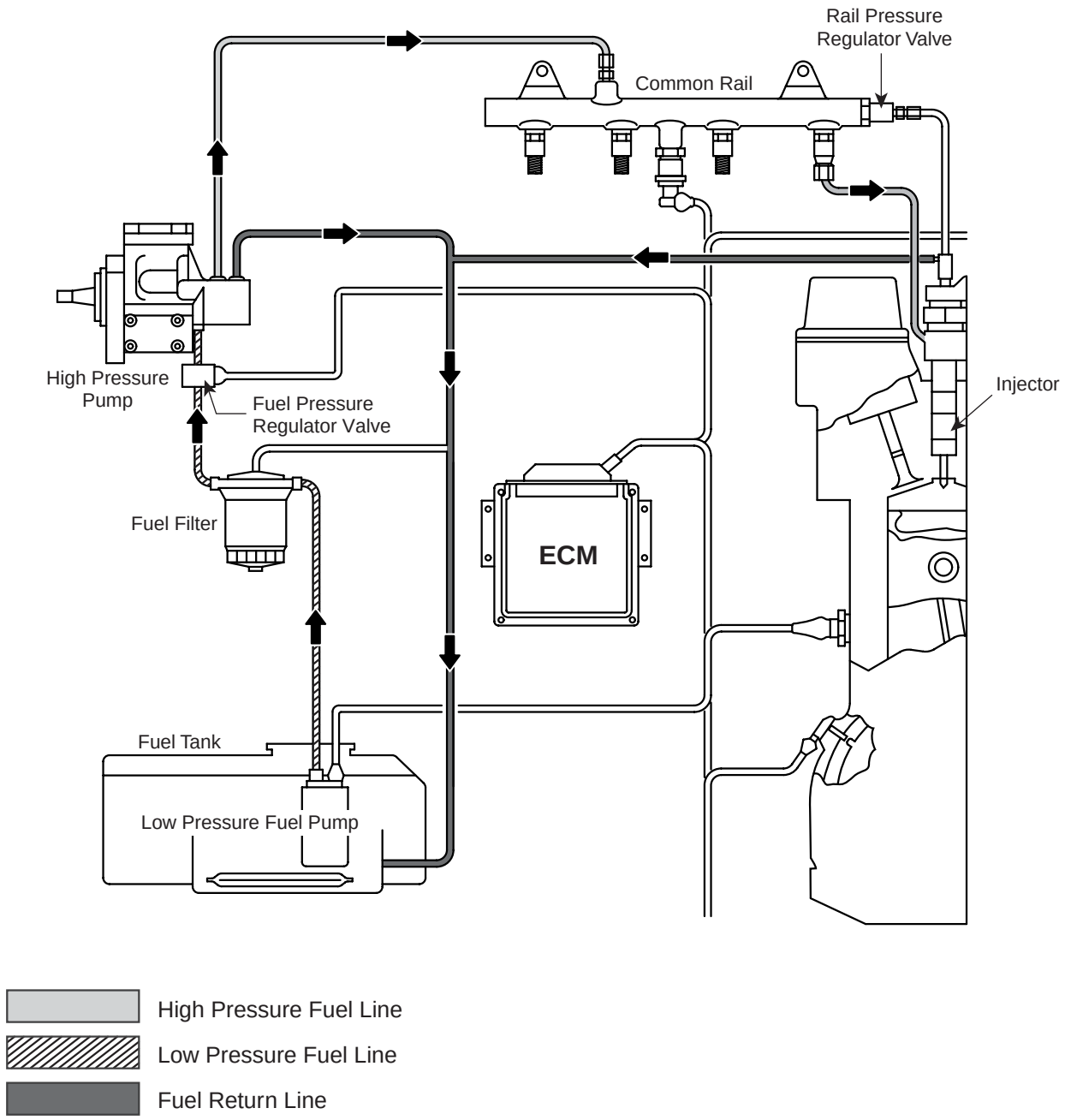

EFQG701A

COMPONENTS

● LOW PRESSURE FUEL SYSTEM COMPONENTS

FUEL PUMP
The fuel pump is either an electric fuel pump with pre-filter, or a gear-type fuel pump. The pump draws the fuel from the fuel tank and continually delivers the required quantity of fuel in the direction of the high-pressure pump.

FUEL FILTER
Inadequate filtering can lead to damage at the pump components, delivery valves, and injector nozzles. The fuel filter cleans the fuel before it reaches the high-pressure pump, and thereby prevents premature wear at the pump's sensitive components.

● HIGH PRESSURE FUEL SYSTEM COMPONENTS

HIGH PRESSURE FUEL PUMP

The high-pressure pump pressurizes the fuel to a system pressure of up to 1,600bar. This pressurized fuel then passes through a high-pressure line and into the tubular common rail.

COMMON RAIL (HIGH PRESSURE ACCUMULATOR)

Even after an injector has taken fuel from the rail in order to inject it, the fuel pressure inside the rail remains practically constant. This is due to the accumulator effect arising from the fuel's inherent elasticity. Fuel pressure is measured by the rail pressure sensor and maintained at the desired level by the pressure-control valve.

INJECTORS

The nozzles of these injectors open when the solenoid valve is triggered and permit the flow of fuel. They inject the fuel directly into the engine's combustion chamber. The excess fuel which was needed for opening the injector nozzles flows back to the tank through a collector line. The return fuel from the fuel pressure control valve and from the low-pressure stage is also led into this collector line together with the fuel used to lubricate the high-pressure pump.

HIGH PRESSURE PIPE

These High Pressure Pipes carry the high-pressure fuel. They must therefore be able to permanently withstand the maximum system pressure and, during the pauses in injection, the sometimes high-frequency pressure fluctuations which occur. They are therefore manufactured from steel tubing.

Normally, they have an outside diameter of about 6.35mm and an internal diameter of about 3.0mm. The injection lines between the common rail and the injectors must all be of the same length. The differences in length between the common rail and the individual injectors are compensated for by using slight or pronounced bends in the individual lengths of tubing. Nevertheless, the injection lines should be kept as short as possible.

FUEL TANK

REMOVAL E0CEE39C

1. Turn ignition switch OFF and disconnet the negative (-) battery cable.
2. Remove the 2nd seat (Refer to group "BD" in this Shop Manual).
3. Open the carpet (A) for the fuel pump and the carpet (B) for the sub fuel sender.

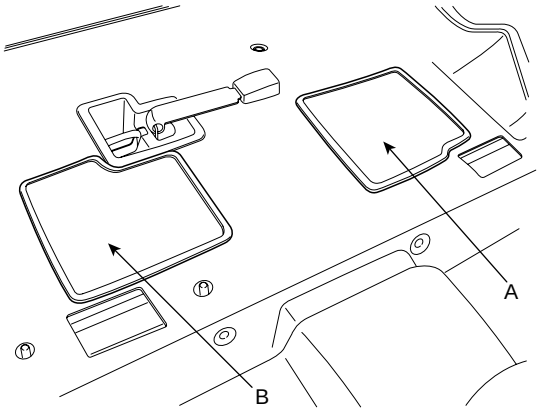

SCMFL6635D

4. Remove the fuel pump service cover (A) and the sub fuel sender service cover (B).

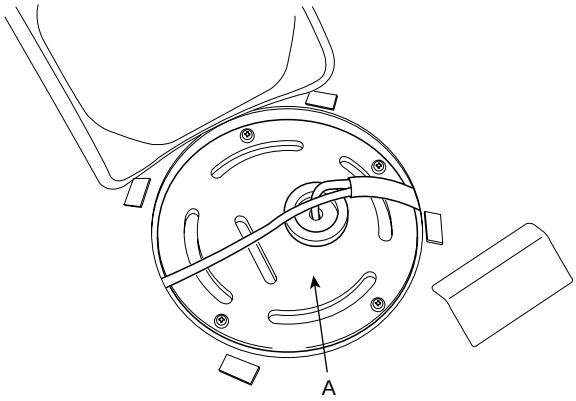

SCMFL6636D

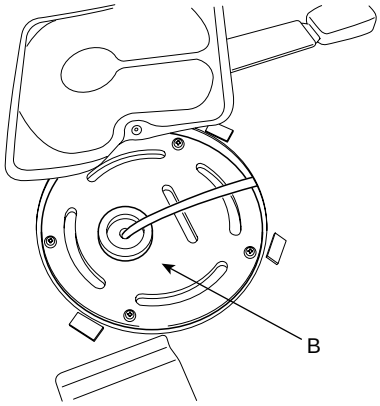

SCMFL6637D

5. Disconnect the fuel pump connector (A), the fuel feed tube quick - connector (B), the fuel return tube quick - connector (C) and the sub fuel sender connector (D).

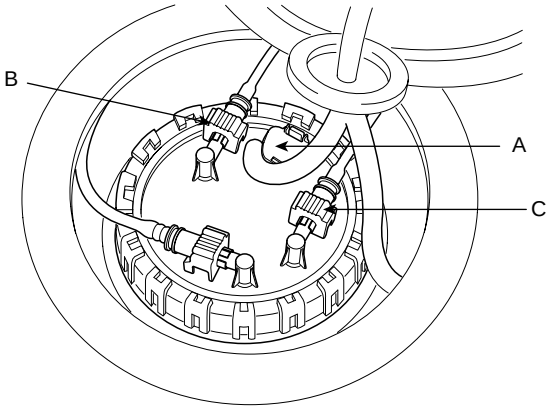

SCMFL6638D

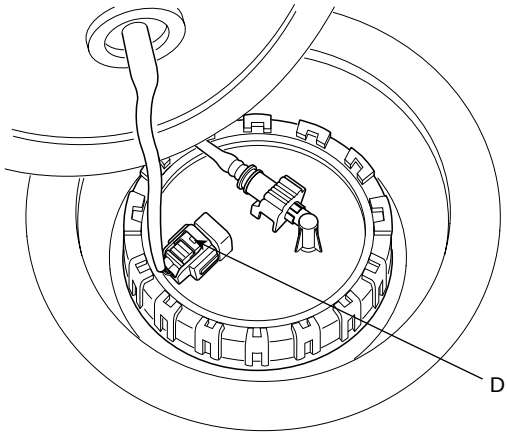

SCMFL6639D

6. Lift the vehicle and support the fuel tank with a jack.
7. Remove the muffler assembly and the propeller shaft (4WD). (Refer to group "EM" and "DS" in this Shop Manual.)
8. Disconnect the fuel filler hose (A).

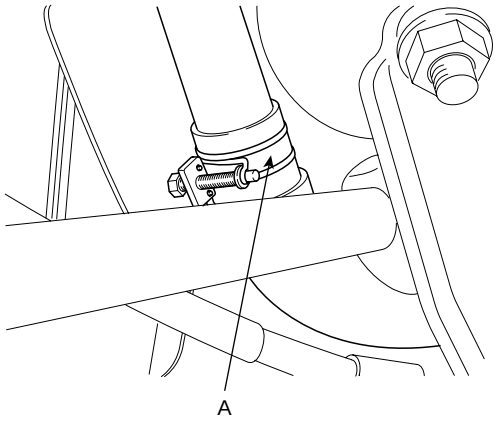

SCMFL6640D

9. Disconnect the leveling tube quick - connector (A).

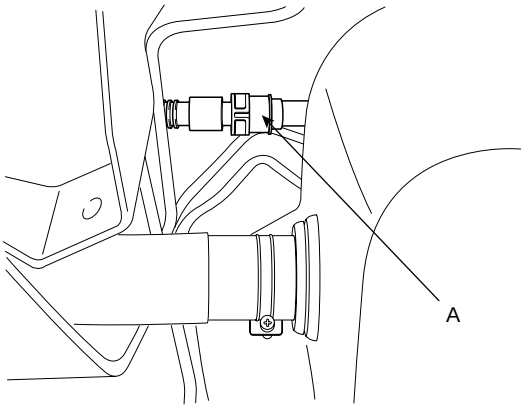

SCMFL6641D

10. Remove the coupling control wiring (A) for 4WD from the fuel tank cover.

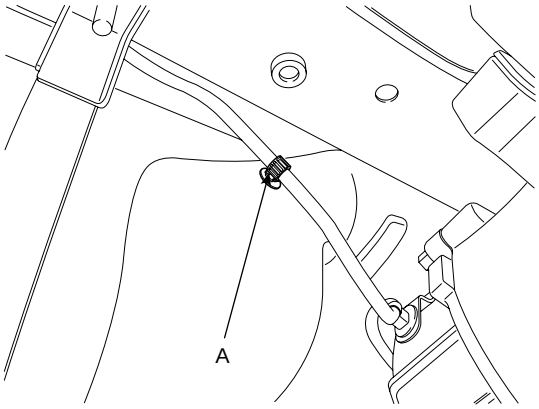

SCMFL6642D

11. Remove the fuel tank from the vehicle after unscrewing the fuel tank band mounting nuts (A).

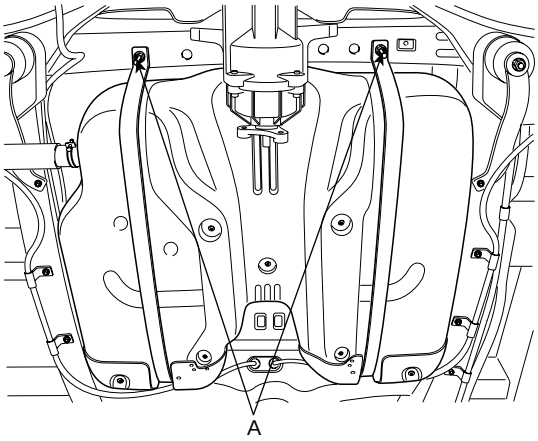

SCMFL6643D

INSTALLATION E1FD378A

1. Install the fuel tank according to the reverse order of "REMOVAL" procedure.

Fuel tank band mounting nuts: 39.2 ~ 53.9 N·m (4.0 ~ 5.5 kgf·m, 28.9 ~ 39.8 lbf·ft)

FUEL PUMP

REMOVAL E39D5211

1. Turn ignition switch OFF and disconnet the negative (-) battery cable.
2. Remove the 2nd seat (Refer to group "BD" in this Shop Manual).
3. Open the carpet (A) for the fuel pump.

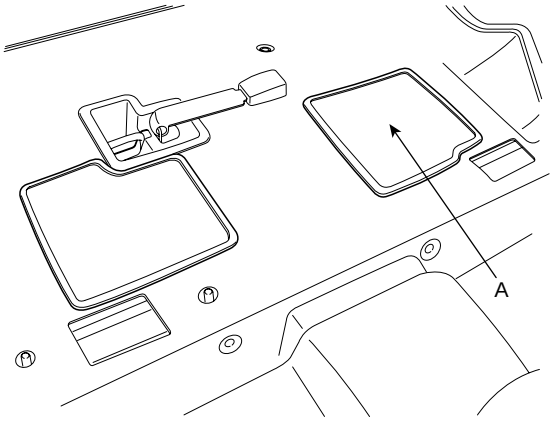

SCMFL6644D

4. Remove the fuel pump service cover (A).

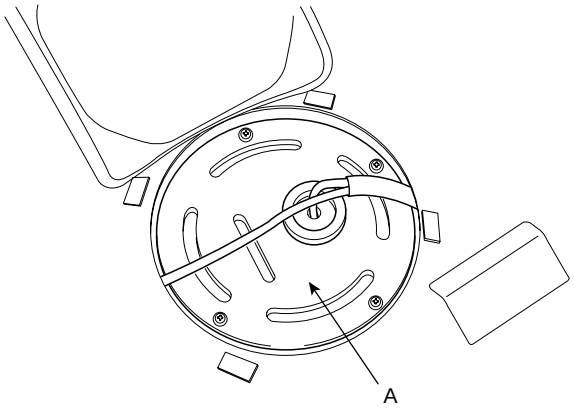

SCMFL6645D

5. Disconnect the fuel pump connector (A), the fuel feed tube quick - connector (B), the fuel return tube quick - connector (C) and the suction tube quick - connector (D).

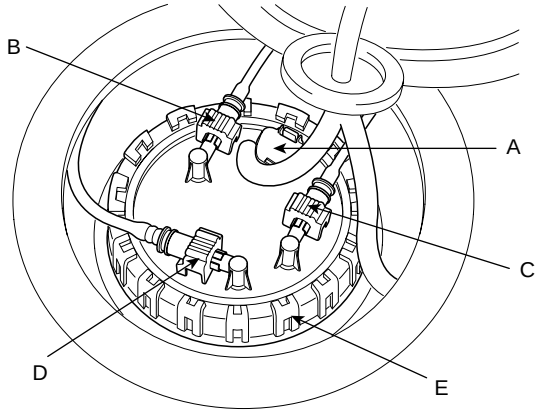

SCMFL6646D

6. Remove the fuel pump after removing the fuel pump plate cover (E) with SST (No.:09310-2B100).

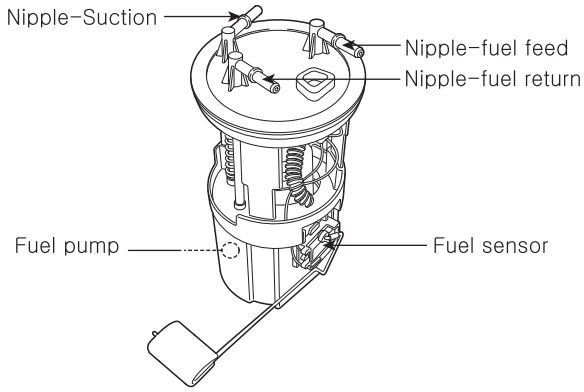

SCMFL6138L

INSTALLATION ECB2D8E5

1. Install the fuel pump according to the reverse order of "REMOVAL" procedure.

Fuel pump plate cover tightening : 5.9 ~ 6.9 N·m (0.6 ~ 0.7 kgf·m, 4.3 ~ 5.1 lbf·ft)

FILLER-NECK ASSEMBLY

REMOVAL ED541232

1. Disconnect the fuel filler hose (A).

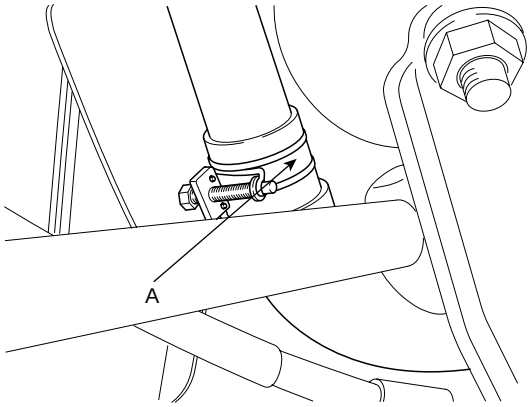

SCMFL6652D

2. Disconnect the leveling tube quick - connnector (A).

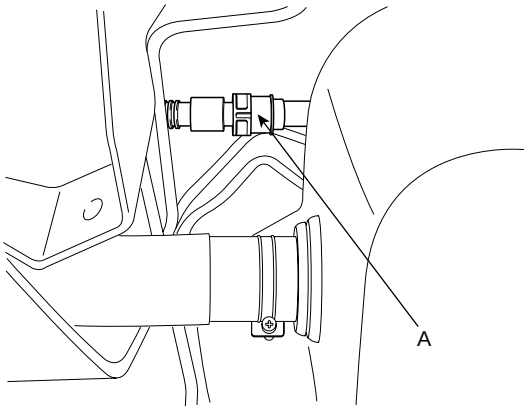

SCMFL6653D

3. Open the fuel filler door, unscrew filler - neck assembly mounting screws (A).

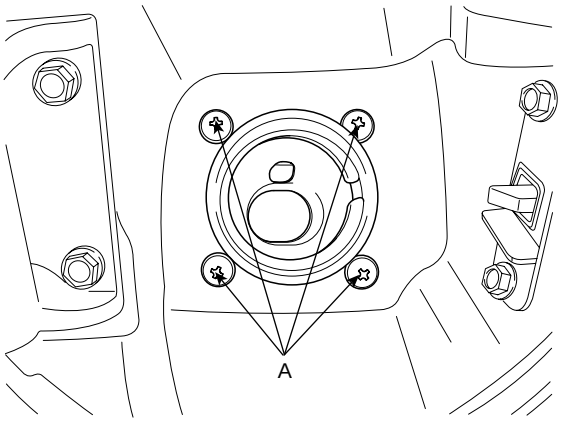

SCMFL6655D

4. Remove the left - rear wheel & tire and the wheel house.
   (Refer to group "DS" in this Shop Manual.)

5. Remove the filler - neck assembly after unscrewing the bracket mounting nuts (A).

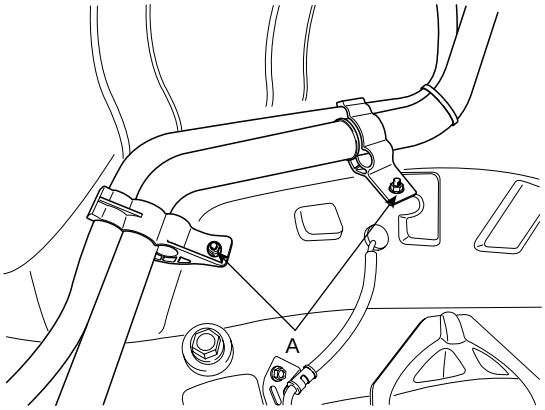

SCMFL6654D

INSTALLATION E58AAF48

1. Install the filler - neck assembly according to the reverse order of "REMOVAL" procedure.

ACCELERATION PEDAL

REMOVAL EDFEF6B5

1. Turn ignition switch OFF and disconnet the negative (-) battery cable.
2. Disconnect the accelerator position sensor connector (A).
3. Remove the accelerator assembly from the vehicle after unscrewing the accelerator mounting bolts (B).

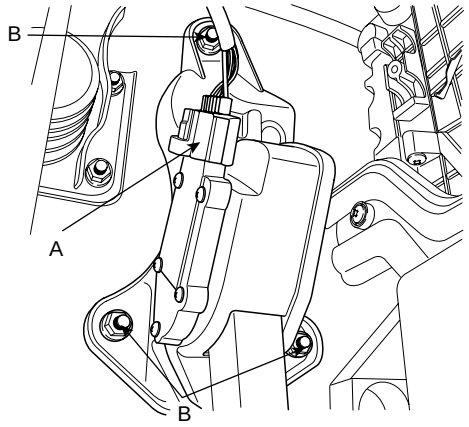

SCMFL6656D

INSTALLATION EBB5B0CD

1. Install the accelerator assembly according to the reverse order of "REMOVAL" procedure.

Accelerator assembly mounting bolt: 16.7 ~ 25.5 N.m (1.7 ~2.6 kgf.m, 12.3 ~ 18.8 lbf.ft)

SUB FUEL SENDER

REMOVAL E9F8FB7C

1. Turn ignition switch OFF and disconnet the negative (-) battery cable.
2. Remove the 2nd seat (Refer to group "BD" in this Shop Manual).
3. Open the carpet (A) for the sub fuel sender.

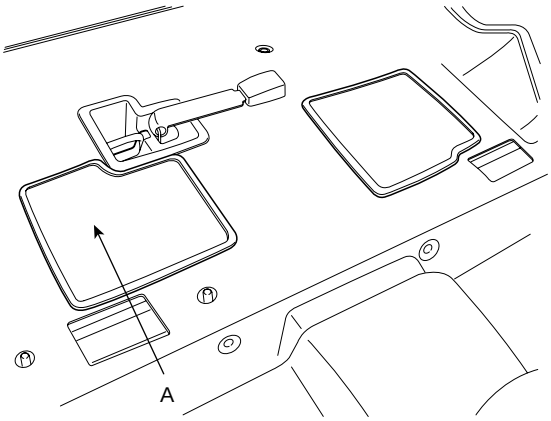

SCMFL6648D

4. Remove the sub fuel sender service cover (A).

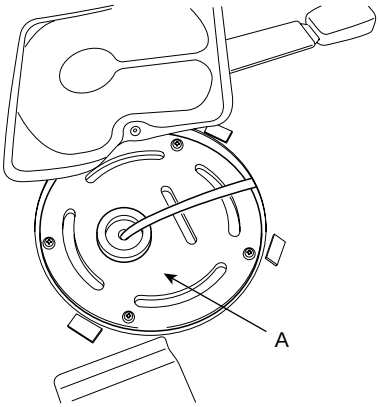

SCMFL6649D

5. Disconnect the sub fuel sender connector (A) and the suction tube quick - connector (B).

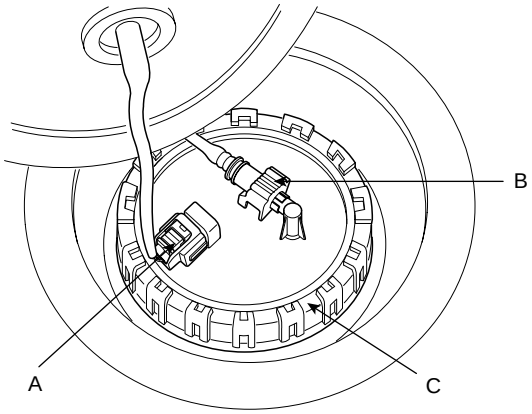

SCMFL6650D

6. Remove the sub fuel sender after removing the fuel pump plate cover (C) with SST (No.:09310-2B100).

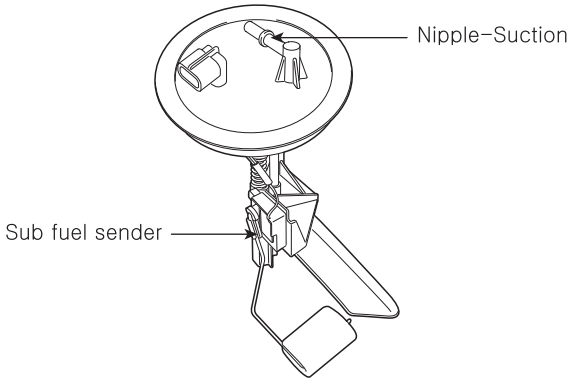

SCMFL6139L

INSTALLATION E8184A8C

1. Install the sub fuel sender according to the reverse order of "REMOVAL" procedure.

Sub fuel sender plate cover tightening : 5.9 ~ 6.9 N·m (0.6 ~ 0.7 kgf·m, 4.3 ~ 5.1 lbf·ft)

FUEL FILTER

COMPONENTS EF4C20BD

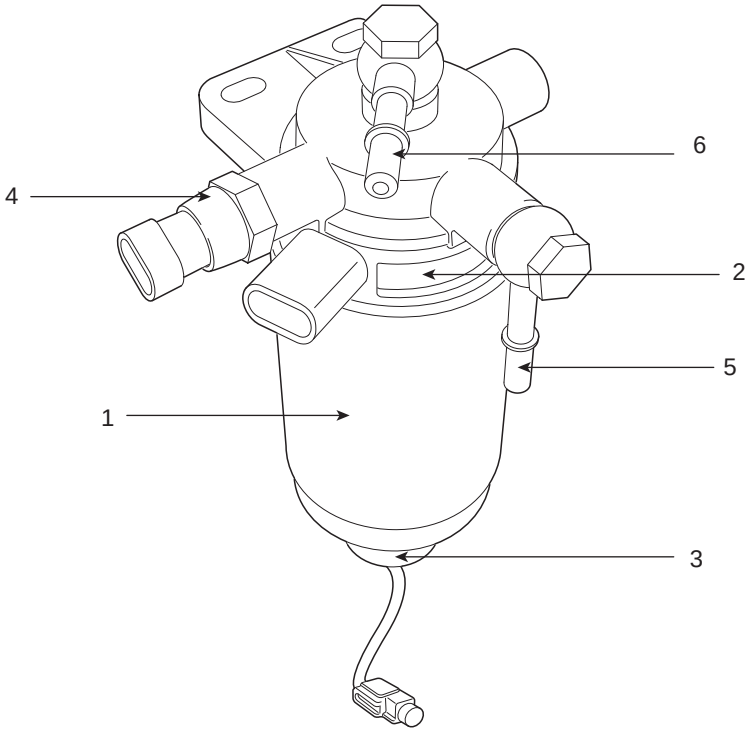

1. Fuel Filter
2. Heater
3. Water Sensor
4. Thermostat
5. Nipple (Fuel input from Fuel Tank)
6. Nipple (Fuel output to High Pressure Pump)

SCMFL6140L

REMOVAL EB3C2386

1. Disconnect the water sensor connector (A), the thermostat connector (B) and the heater connector (C).

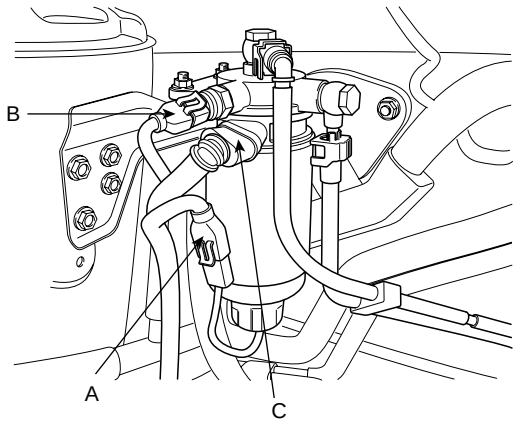

SCMFL6658D

2. Disconnet the fuel input tube quick-connector (A) and the output quick-connector (B).

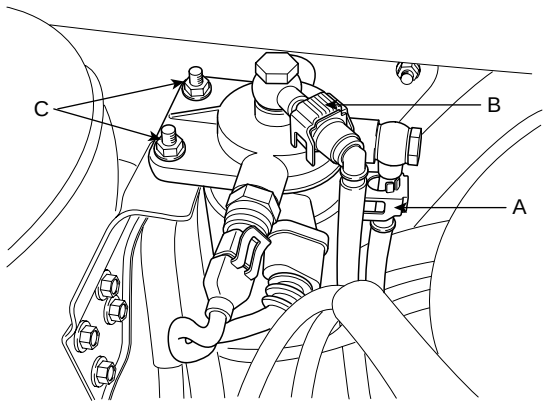

SCMFL6659D

3. Remove the fuel filter after unscrewing the fuel filter bracket mounting bolts (C).

INSTALLATION EB836034

1. Install the fuel filter according to the reverse order of "REMOVAL" procedure.

HIGH PRESSURE FUEL PUMP

DESCRIPTION E1846D0A

The high-pressure pump is the interface between the low pressure fuel system and the high-pressure fuel system. Under all operating conditions, it is responsible for providing adequate high-pressure fuel through out the vehicle's complete service life. This also includes the provision of extra as needed for rapid starting and for rapid build-up of pressure in the rail. The high pressure pump continually generates the system pressure as needed in the high pressure accumulator (common rail). This means therefore, that in contrast to conventional systems, the fuel does not have to be specially compressed for each individual injection process.

REMOVAL E124AF9F

WARNING

- **Common Rail Fuel Injection System is subject to extremely high pressure (Approximately 1,600 bar)**
- **Never perform any work on injection system with engine running or within 30 seconds after the engine stops.**
- **Always pay attention to safety precaution.**
- **Ensure the absolute cleanliness.**
- **It is not recommended to remove the injectors without any notice.**

1. Remove the air cleaner assembly (Refer to group "EM" in this Shop Manual).

2. Disconnect the return hoses (A,B) connected with the injectors and the common rail.

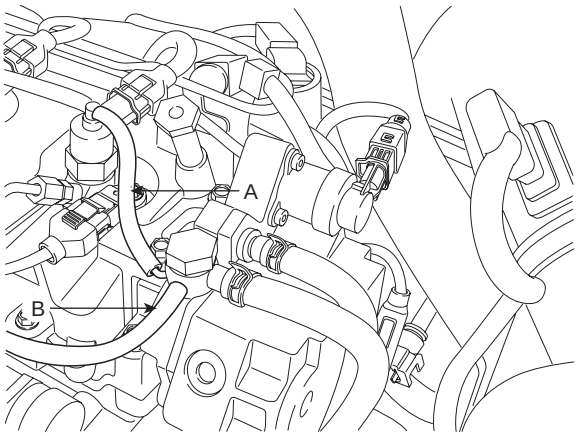

SCMFL6660D

3. Disconnet the fuel feed tube quick-connector (A) and the return tube quick-connector (B).

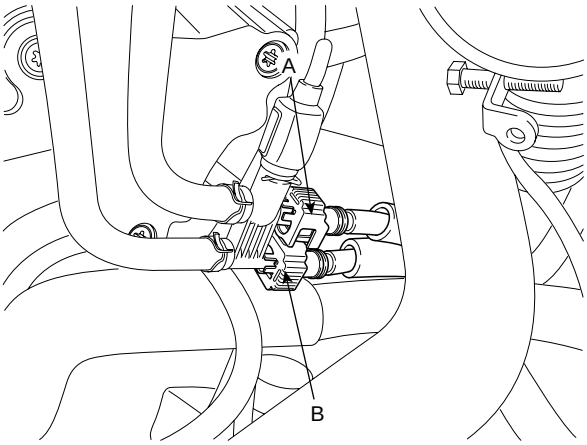

EFQG077A

4. Disconnect the fuel pressure regulator valve connector (A) and the fuel temperature sensor connector (B).

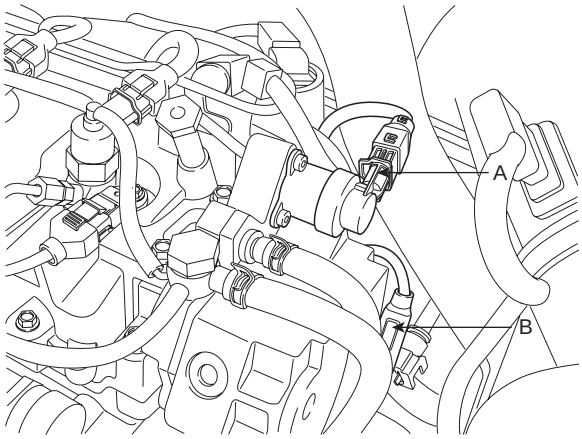

SCMFL6661D

5. Disconenct the high pressure pipe (A) connecting the common rail with the high pressure pump.

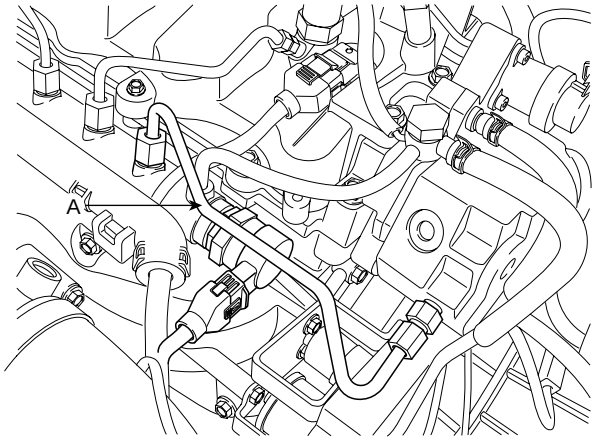

EFQG079A

6. Unscrew the mounting bolts (A) and remove the high pressure pump (B).

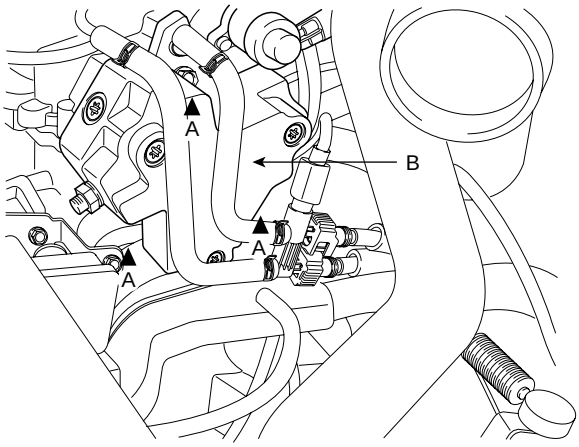

EFQG080A

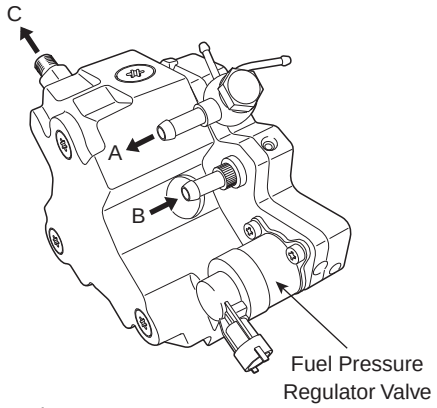

A : To Fuel Tank
(Return Line)
B : From Fuel Tank
C : To Common Rail

SCMFL6141L

INSTALLATION E6B56913

1. Install the high pressure fuel pump according to the reverse order of "REMOVAL" procedure.

NOTE

When installing the high pressure pipe, apply the specified tightening torques to the flange nuts of the high pressure pipe side and the common rail side with SST (Refer to below table).

Item	Dimension	SST No.
Flange Nut (HP Pump Side)	14 mm (0.551 in)	09314-27110
Flange Nut (Common Rail Side)	17 mm (0.669 in)	09314-27120

High pressure fuel pump mounting bolts: 19.6 ~ 26.5 N·m (2.0 ~ 2.7 kgf·m, 14.5 ~ 19.5 lbf·ft)
High pressure pipe flange nuts (Common Rail ↔ HP Pump): 24.5 ~ 28.4 N·m (2.5 ~ 2.9 kgf·m, 18.1 ~ 20.1 lbf·ft)

COMMON RAIL

DESCRIPTION EDCDAA09

The common rail stores the fuel at high pressure. At the same time, the pressure oscillations which are generated due to the high-pressure pump delivery and the injection of fuel are damped by the rail volume. This common rail is common to all cylinders, hence its name "common rail". Even when large quantities of fuel are extracted, the common rail maintains its inner pressure practically constant from the moment the injector opens.

In order to comply with the wide variety of engine installation conditions, the common rail with its flow limiters and the provistions for attaching rail pressure sensor, fuel pressure control valve, and pressure limiter valve is available in a number of different designs.
The available common rail volume is permanently filled with pressurized fuel. The compressibility of the fuel resulting from the high pressure is utilized to achieve the accumulator effect. When fuel leaves the rail for injection, the pressure variations resulting from the pulsating fuel supply from the high-pressure pump are compensated for.

REMOVAL E0F2CC99

WARNING

- **Common Rail Fuel Injection System is subject to extremely high pressure (Approximately 1,600 bar)**
- **Never perform any work on injection system with engine running or within 30 seconds after the engine stops.**
- **Always pay attention to safety precaution.**
- **Ensure the absolute cleanliness.**
- **It is not recommended to remove the injectors without any notice.**

1. Disconnect the rail pressure sensor connector (A) and rail pressure regulator valve connector (B).

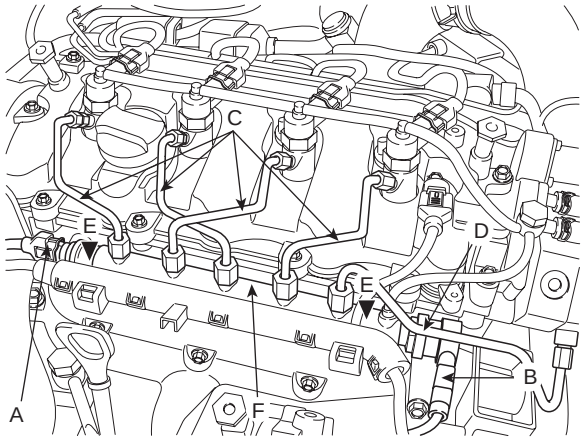

EFQG082A

2. Disconnect the high pressure pipe (C) connecting the injectors with the common rail.
3. Disconnect the high pressure pipe (D) connecting the common rail with the high pressure fuel pump.
4. Unscrew the two mounting bolts (E) and remove the common rail (F).

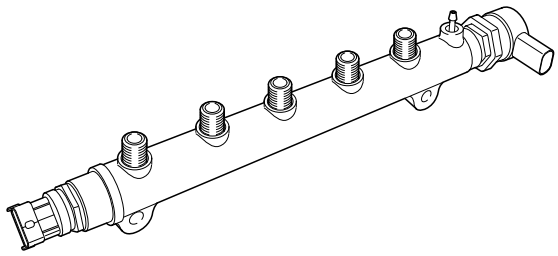

EFQG083A

INSTALLATION EDD55345

1. Install the common rail according to the reverse order of "REMOVAL" procedure.

NOTE

When installing the high pressure pipe, apply the specified tightening torques to the flange nuts of the injectors, the high pressure pipe, and the common rail side with SST (Refer to below table).

Item	Dimension	SST No.
Flange Nut (Injector Side)	14 mm (0.551 in)	09314-27110
Flange Nut (HP Pump Side)		
Flange Nut (Common Rail Side)	17 mm (0.669 in)	09314-27120

· Common rail mounting bolts: 19.6 ~ 26.5 N·m (2.0 ~ 2.7 kgf·m, 14.5 ~ 19.5 lbf·ft)
· High pressure pipe flange nuts (Injectors ↔ Common Rail): 24.5 ~ 28.4 N·m (2.5 ~ 2.9 kgf·m, 18.1 ~ 20.1 lbf·ft)
· High pressure pipe flange nuts (Common Rail ↔ HP Pump): 24.5 ~ 28.4 N·m (2.5 ~ 2.9 kgf·m, 18.1 ~ 20.1 lbf·ft)

INJECTOR

DESCRIPTION EE4DD145

The start of injection and the injected fuel quantity are adjusted by electrically triggered injectors. These injectors supersede the nozzle-and-holder assembly (nozzle and nozzle-holder). Similar to the already existing nozzle-holder assemblies in direct-injection (DI) diesel engines, clamps are preferably used for installing the injectors in the cylinder head. This means that the Common Rail injectors can be installed in already existing DI diesel engines without major modifications to the cylinder head.

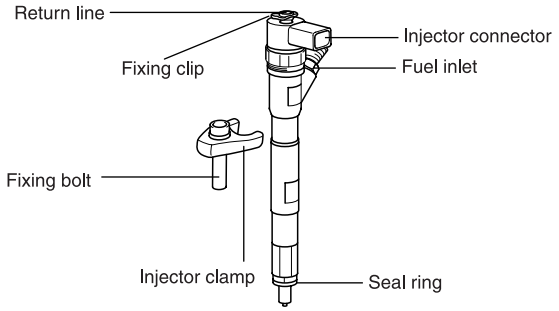

EFQG101A

REMOVAL E99E9BCE

WARNING

- **Common Rail Fuel Injection System is subject to extremely high pressure (Approximately 1,600 bar)**
- **Never perform any work on injection system with engine running or within 30 seconds after the engine stops.**
- **Always pay attention to safety precaution.**
- **Ensure the absolute cleanliness.**
- **It is not recommended to remove the injectors without any notice.**

1. Disconnect the injector connector (A).

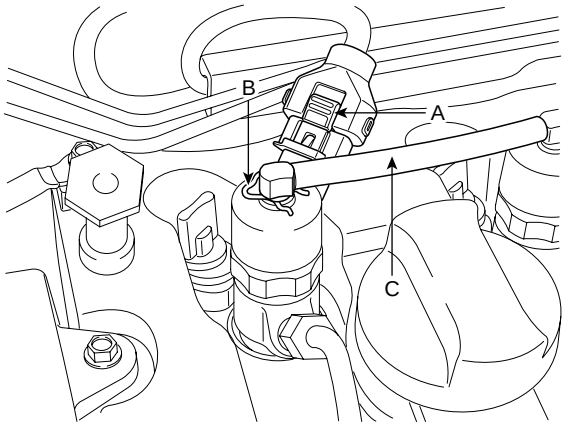

EFQG084A

2. After removing the clip (B), disconnect the retun hose (C) from the injectors

3. Disconnect the high pressure pipe (A) connecting the injectors with the common rail.

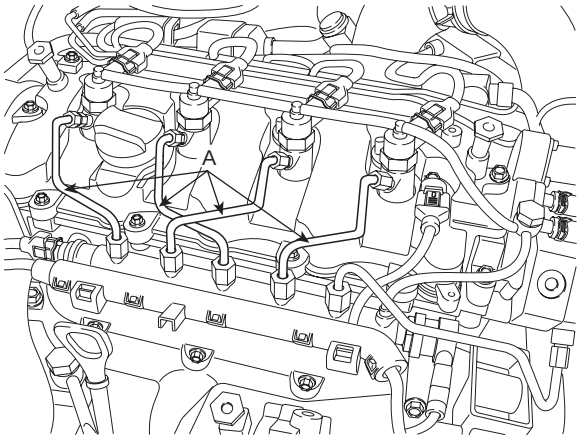

EFQG085A

4. Rotate the lever (A) clockwise and pull it upward.

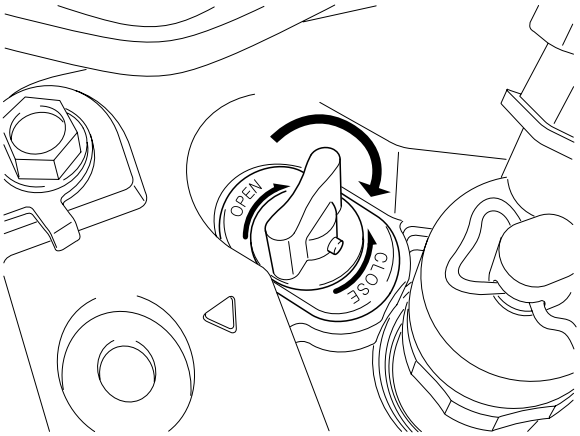

EFQG086A

5. Unscrew the clamp tightening bolt (A) and pull the injector upward with the "Injector Remover" and the "Injector Remover Adapter" (Refer to "SPECIAL SERVICE TOOL" section).

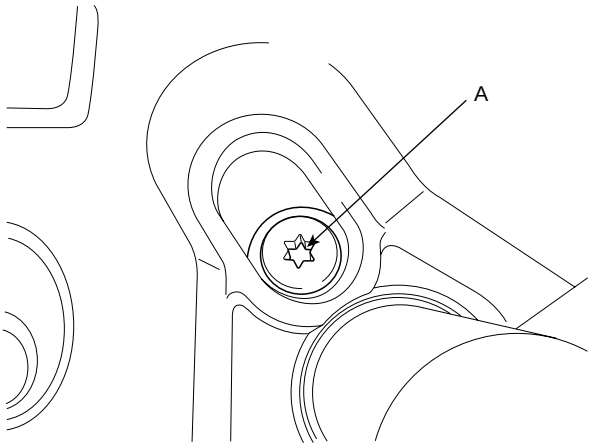

EFQG087A

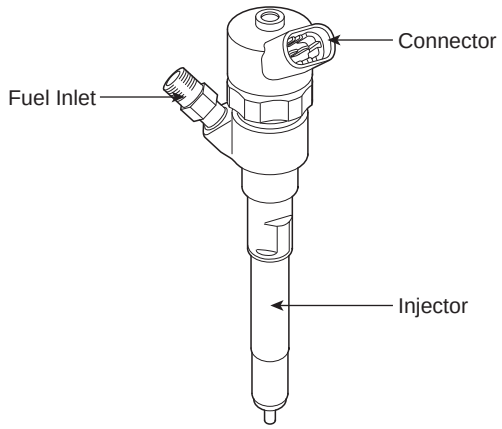

EFQG088A

INSTALLATION E63E0B78

1. Install the injector according to the reverse order of "REMOVAL" procedure.

NOTE

When installing the injector, MUST REPLACE the O-ring (A) and apply a grease to that.

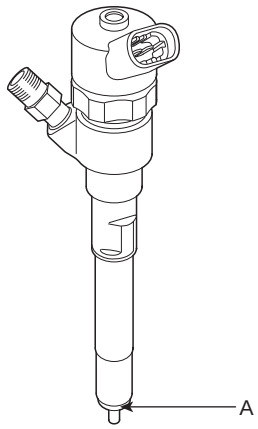

EFQG089A

NOTE

When installing the high pressure pipe, apply the specified tightening torques to the flange nuts of the injectors and the common rail side with SST (Refer to below table).

Item	Dimension	SST No.
Flange Nut (Injector Side)	14 mm (0.551 in)	09314-27110
Flange Nut (Common Rail Side)	17 mm (0.669 in)	09314-27120

· Injector clamp mounting bolts: 24.5 ~ 28.4 N·m (2.5 ~ 2.9 kgf·m, 18.1 ~ 20.1 lbf·ft)
· High pressure pipe flange nuts (Injectors ↔ Common Rail): 24.5 ~ 28.4 N·m (2.5 ~ 2.9 kgf·m, 18.1 ~ 20.1 lbf·ft)

REPLACEMENT E16A29BC

CAUTION

After replacing (an) injector(s), MUST input the injector data (7 digit) into the ECM.

1. Turn ignition switch OFF.
2. Disconnect the negative (-) battery cable.
3. Replace the injector with a new one according to the "REMOVAL" and "INSTALLATION" procedures.
4. Connect a scan tool to Data Link Connector (DLC).
5. Connect the negative (-) battery cable.
6. Turn ignition switch on.
7. Select "ENGINE (DIESEL)".

```
1. HYUNDAI VEHICLE DIAGNOSIS ▼
MODEL  : SANTAFE(CM)06-

  01. ENGINE(GASOLINE)
  02. ENGINE(DIESEL)
  03. AUTOMATIC TRANSAXLE
  04. ABS/ESP
  05. SRS-AIRBAG
  06. ELEC.POWER STEERING
  07. FULL AUTO AIR/CON.
  08. BODY CONTROL MODULE
```

SCMFL6114L

8. Select "INJECTOR SPECIFIC DATA".

```
1. HYUNDAI VEHICLE DIAGNOSIS ▲
MODEL  : SANTAFE(CM)06-
SYSTEM : ENGINE(DIESEL)
         EURO-4 VGT(KWP)
  04. ACTUATION TEST
  05. SIMU-SCAN
  06. IDENTIFICATION CHECK
  07. ENGINE TEST FUNCTION
  08. CPF SERVICE REGENERATION
  09. COMPONENT CHANGE ROUTINE
  10. INJECTOR SPECIFIC DATA
  11. DATA SETUP(UNIT CONV.)
```

SCMFL6142L

9. Press "ENTER" key.

1. HYUNDAL VEHICLE DIAGNOSIS

```
* CONDITION: IG. KEY ON(ENGINE STOP)

1. IF THE INJ. IS CHANGED, THE INJ.
   CORRECTION FUNC SHOULD BE PERFORM
   TO CONTROL THE NOR.FUEL INJ.

2. TO INPUT THE INJECTOR NUMBER, PRESS
   SHIFT KEY AND SELECT THE CYL. BY
   ARROW KEY AT THE SAME TIME. AND
   INPUT THE INJ. DATA BY [F1]-[F6],
   DIGIT KEY. PRESS [ENTER].

3. AFTER COMPLETE, TURN THE IG. KEY OFF
   AND CHECK THE SYSTEM AFTER 10 SEC.
```

SCMFL6143L

10. Input the injector data (7 digit) written on the top of each injector with function keys ([F1] ~ [F6]) and number keys.

1.10. INJECTOR SPECIFIC DATA

```
INJECTOR 1   AAAAAAA
INJECTOR 2   AAAAAAA
INJECTOR 3   AAAAAAA
INJECTOR 4   AAAAAAA

- SELECT THE CYLINDER BY SHIFT+ARROW
  KEY AND INPUT THE DATA BY F1~F6
  KEY AND PRESS [ENTER] KEY.

ABCD EFGH IJKL MNOP QR-U VW-Z
```

1.10. INJECTOR SPECIFIC DATA

```
INJECTOR 1   AAAAAAA
INJECTOR 2   AAAAAAA
INJECTOR 3   AAAAAAA
INJECTOR 4   AAAAAAA

WRITING COMPLETE

ABCD EFGH IJKL MNOP QR-U VW-Z
```

SCMFL6144L

11. Wait 10 seconds after displaying "WRITING COMPLETE", turn ignition switch OFF.

NOTE

When "WRITING FAIL" is displayed on the scan tool, input injector data (7 digits) of each cylinder into a new ECM again starting from 6th step.

1.10. INJECTOR SPECIFIC DATA

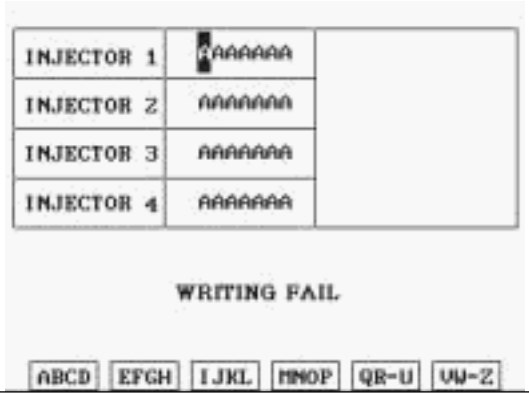

SCMFL6145L

INSPECTION E67C26FA

USING HI-SCAN(PRO)

TEST MODE

- COMPRESSION TEST
- IDLE SPEED COMPARISON
- INJECT QUANTITY COMPARISON

TEST PROCEDURE

1. Connect Scan tool to the DLC and select "Vehicle" and "Engine Test Function".

```
1. HYUNDAI/KIA VEHICLE DIAGNOSIS

MODEL   : VEHICLE NAME
SYSTEM  : ENGINE(DIESEL)

01. DIAGNOSISTIC TROUBLE CODE
02. CURRENT DATA
03. FLIGHT RECORD
04. ACTUATION TEST
05. SIMU-SCAN
06. IDENTIFICATION CHECK
07. ENGINE TEST FUNCTION
08. DATA SETUP(UNIT CONV.)
```

EFQG090A

2. Information for ECM version is displayed as below.

```
1.7.  COMPRESSION TEST

SYSTEM IMFORMATION
P/N : ***** - *****
S/W : ********

This function is available

If you ready, press [ENTER].
```

<Available system>

```
1.7.  COMPRESSION TEST

SYSTEM IMFORMATION
P/N : ***** - *****
S/W : ********

This function is not available.
Not all ECM version support
this function
If you ready, press [ENTER].
```

<Not available system>

LFIF660B

3. After pressing "[ENTER]" select "COMPRESSION TEST" mode and press "[ENTER]".

```
1.7.  COMPRESSION TEST

01. COMPRESSION TEST
02. IDLE SPEED COMPARISON
03. INJECT. QUANTITY COMPARISON
```

LFIF660D

4. Set the test condition described as below screen and then, crank engine. When engine stop message being appeared, stop cranking.

7.1. COMPRESSION TEST

This test is used for detecting
cylinder specific engine speed
without injection.
* Test condition
- Shift lever : P or N
- Engine : Stop (IGN. ON)
- Electrical Load : OFF
If you ready, now cranking, and stop
cranking when stop message appear on
the screen. Press [ENTER].

LFIF660E

5. Press "ANAL" and the test result is appeared.

7.1 COMPRESSION TEST

Cylinder engine speed(RPM)

#1	#2	#3	#4
356	355	355	355
356	356	357	356
356	356	356	355
356	356	356	356
357	356	355	356
356	355	355	355
355	356	355	355

ANAL

When the stop message appear, stop cranking.

LFIF660F

NOTE

During cranking engine does not start.

7.1 COMPRESSION TEST

Cylinder engine speed(RPM)

#1	#2	#3	#4
356	355	355	355
356	356	357	356
356	356	356	355
356	356	356	356
357	356	355	356
356	355	355	355
355	356	355	355

◀ ▶ AVG HELP

Data scanning button

LFIF660G

6. Press "AVG" and the data average of each cylinder is appeared.
   Press "HELP" and description of the data is appeared.

Cylinder engine speed(RPM)

Speed(RPM)	200	250	300	350	AvG
#1 CYL.					355
#2 CYL.					355
#3 CYL.					355
#4 CYL.					355

PREV HELP

7.1 COMPRESSION TEST

*The higher cylinder engine speed:
- >The low compression pressure.
*It can help to identify the mechanical defects.

PREV

LFIF660H

7. After pressing "ESC", select "IDLE SPEED COMPARISON" and press "[ENTER]".

7.1 COMPRESSION TEST

01. COMPRESSION TEST
02. IDLE SPEED COMPARISON
03. INJECT. QUANTITY COMPARISON

LFIF002A

8. Set the test condition described as below screen and press "[ENTER]".

7.2. IDLE SPEED COMPARISON

This test is used for detecting cylinder specific engine speed with injector energizing.
(Cylinder balancing function is deactivated.)

* Test condition
- Compression test : Normal
- Shift lever : P or N
- Engine : Idle
- Electrical Load : OFF

If you ready, Press [ENTER].

LFIF660J

9. The rpm data of each cylinder is appeared.

7.2 IDLE SPEED COMPARISON

Cylinder engine speed(RPM)

#1	#2	#3	#4
790	800	752	770
796	798	756	772
794	800	752	770
794	802	754	772
794	802	754	770
794	802	756	774
792	802	752	772

Analyze the test result.

ANAL

7.2 IDLE SPEED COMPARISON

Cylinder engine speed(RPM)

#1	#2	#3	#4
784	774	788	764
786	778	788	766
786	776	788	766
788	780	790	768
784	776	786	764
788	780	792	770
786	776	788	766

◀ ▶ AVG HELP

LFIF660K

10. Press "AVG" and teh data average of each cylinder is appeared.

    Press "HELP" and description of the data is appeared.

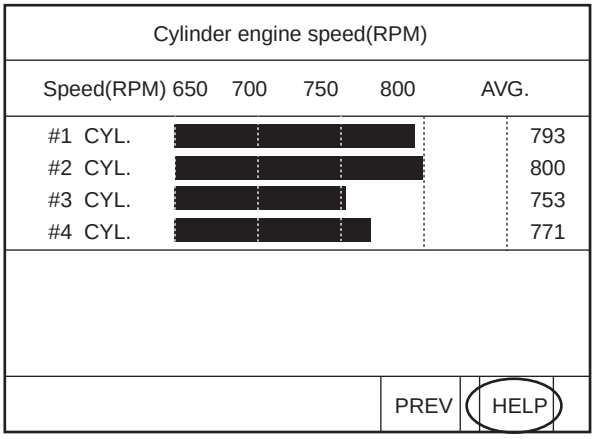

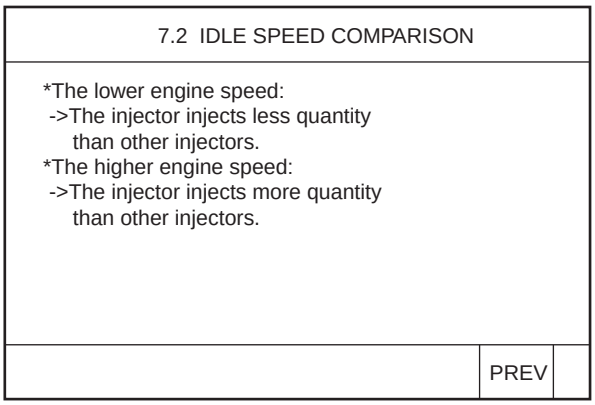

LFIF660M

11. After pressing "ESC", select "INJECT QUANTITY COMPARISON" and press "[ENTER]".

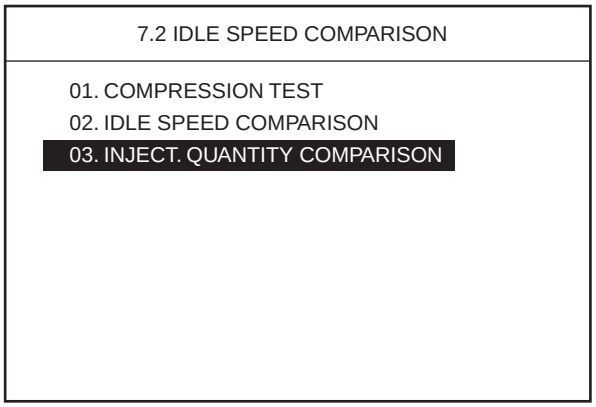

LFIF700A

12. Set the test condition described as below screen and press "[ENTER]".

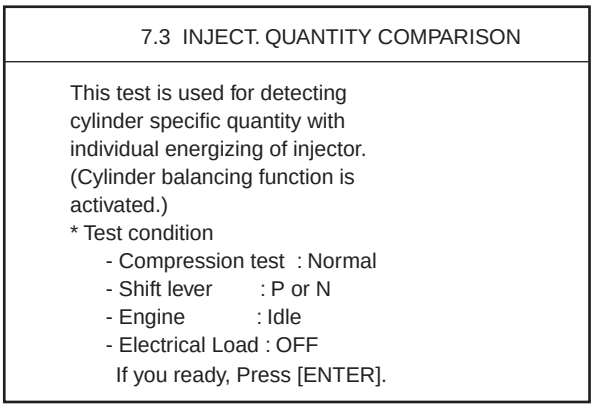

LFIF660O

13. The data of each cylinder about RPM and compensating injection quantity is appeared.

7.3 INJECT. QUANTITY COMPARISON

Eng. Speed(RPM)				Injection quantity(mm3)			
#1	#2	#3	#4	#1	#2	#3	#4
792	800	758	774	4.0	-2.9	-2.8	-2.4
788	798	760	774	4.0	-2.9	-2.7	-2.4
794	802	758	776	4.0	-2.9	-2.7	-2.4
792	798	758	774	4.0	-2.8	-2.7	-2.4
788	798	758	772	4.0	-2.8	-2.6	-2.4
794	802	758	772	4.0	-2.8	-2.8	-2.5
790	798	754	770	4.0	-2.9	-2.8	-2.5

Analyze the test result.

ANAL

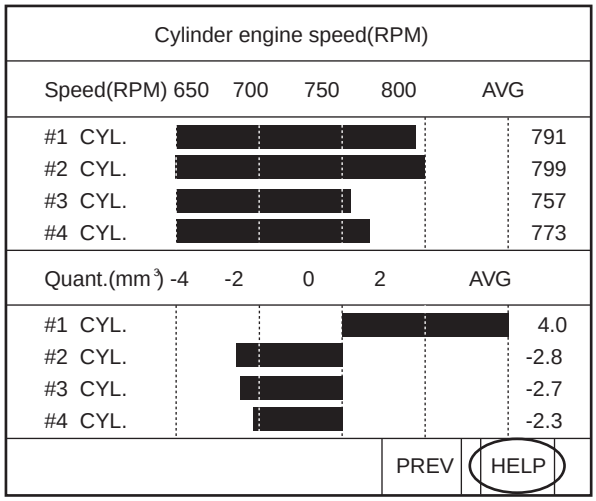

<Abnormal state>

LFIF660P

14. Press "HELP" and description of the data is displayed as below.

7.3 INJECT. QUANTITY COMPARISON
*The positive correction value: ->The fuel injection of the cylinder is less than that of other cylinder. *The negative correction value: ->The fuel injection of the cylinder is more than that of other cylinder. *Extreme correction value identifies a problematic injector. After replacinga injector with new one, reset & confirm the engine condition.

LFIF660R

15. Replace the default injector, and then repeat previous test modes to check if the injector is normal.