Engine Electrical System

GENERAL

IGNITION SYSTEM

CHARGING SYSTEM

ALTERNATOR
BATTERY

STARTING SYSTEM

STARTER
STARTER RELAY

GENERAL

SPECIFICATION EA14A9D5

IGNITION SYSTEM

Items		Specification
Ignition coil	Primary resistance	0.715 ± 0.015Ω
	Secondary resistance	-
Spark plugs	NGK	ILFR5B11
	Plugs Gap	1.0 ~ 1.1 mm (0.0394 ~ 0.0433 in)

STARTING SYSTEM

Items			Specification
Starter	Rated voltage		12 V, 1.2 kW
	No. of pinion teeth		8
	No-load characteristics	Voltage	11 V
		Ampere	90A, MAX
		Speed	2,800 rpm, MIN

CHARGING SYSTEM

Items		Specification
Alternator	Type	Battery voltage sensing
	Rate voltage	13.5 V, 110A
	Speed in use	1,000 ~ 18,000 rpm
	Voltage regulator	Electronic built-in type
	Regulator setting voltage	14.2 ~ 14.8 V
	Temperature compensation	-4 ± 4mV/°C
Battery	Type	MF 68AH
	Cold cranking amperage [at -18°C(-0.4°F)]	600 A
	Reserve capacity	110 min
	Specific gravity [at 20°C(68°F)]	1.280 ± 0.01

NOTE

- *COLD CRANKING AMPERAGE is the amperage a battery can deliver for 30 seconds and maintain a terminal voltage of 7.2V or greater at a specified temperature.*
- *RESERVE CAPACITY RATING is amount of time a battery can deliver 25A and maintain a minimum terminal voltage of 10.5V at 26.7°C(80.1°F).*

TROUBLE SHOOTING EFA63C2C

IGNITION SYSTEM

Symptom	Suspect area	Remedy
Engine will not start or is hard to start (Cranks OK)	Ignition lock switch	Inspect ignition lock switch, or replace as required
	Ignition coil	Inspect ignition coil, or replace as required
	Spark plugs	Inspect spark plugs, or replace as required
	Ignition wiring disconnected or broken	Repair wiring, or replace as required
Rough idle or stalls	Ignition wiring	Repair wiring, or replace as required
	Ignition coil	Inspect ignition coil, or replace as required
Engine hesitates/poor acceleration	Spark plugs and spark plug cables	Inspect spark plugs / cable, or replace as required
	Ignition wiring	Repair wiring, or replace as required
Poor mileage	Spark plugs and spark plug cables	Inspect spark plugs / cable, or replace as required

CHARGING SYSTEM

Symptom	Suspect area	Remedy
Charging warning indicator does not light with ignition switch "ON" and engine off.	Fuse blown	Check fuses
	Light burned out	Replace light
	Wiring connection loose	Tighten loose connection
	Electronic voltage regulator	Replace voltage regulator
Charging warning indicator does not go out with engine running. (Battery requires frequent recharging)	Drive belt loose or worn	Adjust belt tension or replace belt
	Battery cable loose, corroded or worn	Inspect cable connection, repair or replace cable
	Electronic voltage regulator or alternator	Replace voltage regulator or alternator
	Wiring	Repair or replace wiring
Overcharge	Electronic voltage regulator	Replace voltage regulator
	Voltage sensing wire	Repair or replace wiring
Discharge	Drive belt loose or worn	Adjust belt tension or replace belt
	Wiring connection loose or short circuit	Inspect wiring connection, repair or replace wiring
	Electronic voltage regulator or alternator	Replace voltage regulator or alternator
	Poor grounding	Inspect ground or repair
	Worn battery	Replace battery

STARTING SYSTEM

Symptom	Suspect area	Remedy
Engine will not crank	Battery charge low	Charge or replace battery
	Battery cables loose, corroded or worn out	Repair or replace cables
	Transaxle range switch (Vehicle with automatic transaxle only)	Refer to TR group-automatic transaxle
	Fuse blown	Replace fuse
	Starter motor faulty	Replace
	Ignition switch faulty	Replace
Engine cranks slowly	Battery charge low	Charge or replace battery
	Battery cables loose, corroded or worn out	Repair or replace cables
	Starter motor faulty	Replace
Starter keeps running	Starter motor	Replace
	Ignition switch	Replace
Starter spins but engine will not crank	Short in wiring	Repair wiring
	Pinion gear teeth broken or starter motor	Replace
	Ring gear teeth broken	Replace fly wheel or torque converter

SPECIAL SERVICE TOOL ECC7A874

Tool (Number and name)	Illustration	Use
Alternator pulley remover wrench (09373–27000)	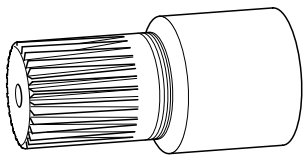 EBDD700A	Removal and installation of alternator pulley

REFERENCE SERVICE TOOLS

Tool (Number and name)	Illustration	Use
MCR-570 KIT Battery checker	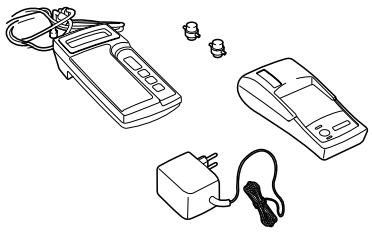 LBLG001A	For testing 12-volt automotive staring battery and for testing 12-volt charging system. (Using with Terminal Pinter_182-003A)

THE MICRO 570 ANALYZER E427CDBF

The MICRO 570 Analyzer provides the ability to test the charging and starting systems, including the battery, starter and generator.

CAUTION

Because of the possibility of personal injury, always use extreme caution and appropriate eye protection when working with batteries.

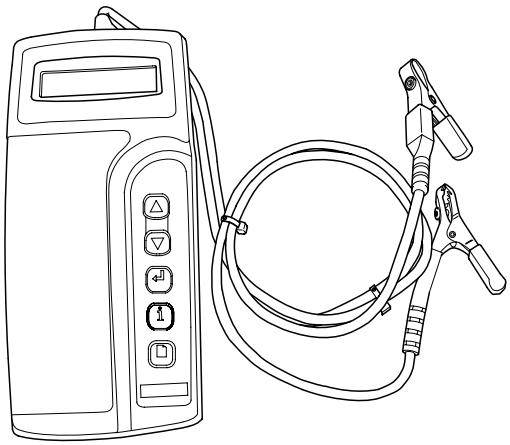

EBRF004A

KEYPAD

The MICRO570 button on the key pad provides the following functions :

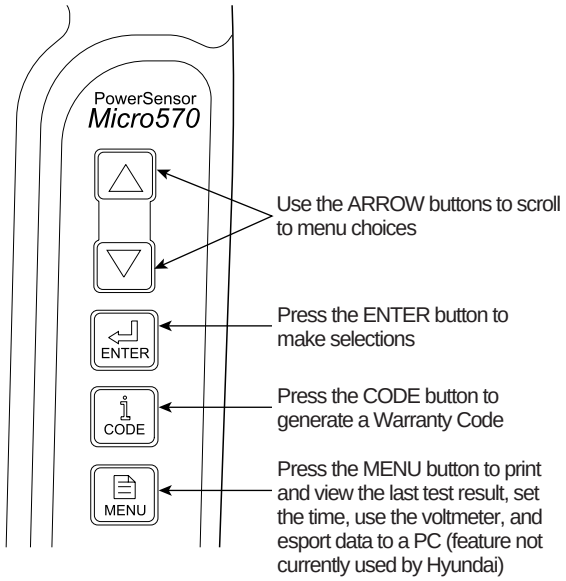

EBRF005A

BATTERY TEST PROCEDURE

1. Connect the tester to the battery.
   - Red clamp to battery positive (+) terminal.
   - Black clamp to battery negative (-) terminal.

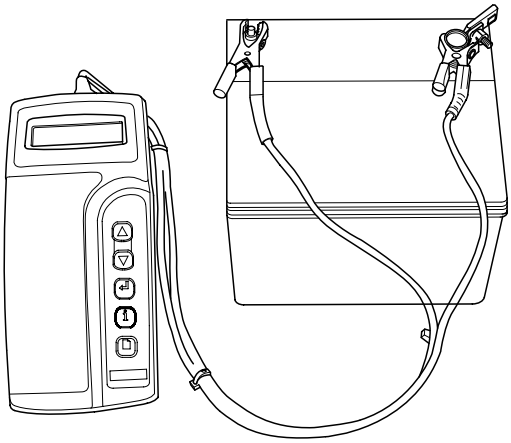

EBRF006A

CAUTION

Connect clamps securely. If "CHECK CONNECTION" message is displayed on the screen, reconnect clamps securely.

2. The tester will ask if the battery is connected "IN A VEHICLE" or "OUT OF A VEHICLE". Make your selection by pressing the arrow buttons; then press ENTER.

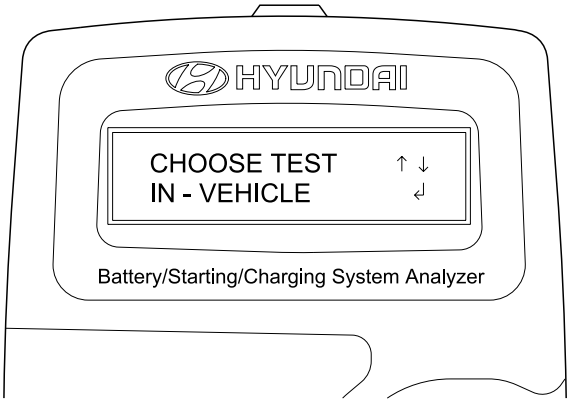

SCMEE6100L

3. Choose either CCA or CCP and press the ENTER button.

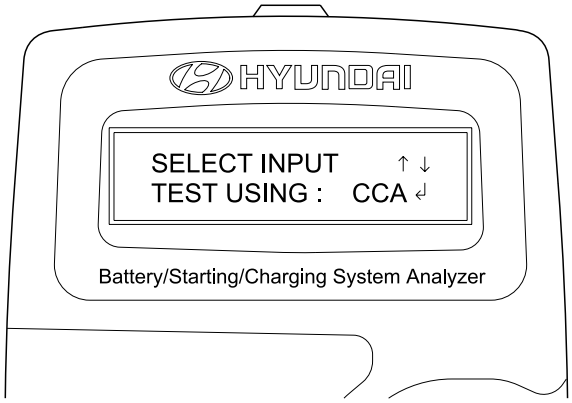

SCMEE6101L

NOTE

- *CCA : Cold cranking amps, is an SAE specification for cranking batteries at -18°C (0°F).*
- *CCP : Cold cranking amps, is an SAE specification for korean manufacturer's for cranking batteries at -18°C (0°F).*

4. Set the CCA value displayed on the screen to the CCA value marked on the battery label by pressing up and down buttons and press ENTER.

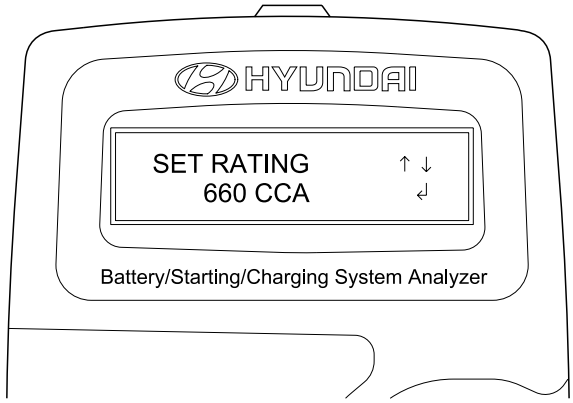

SCMEE6102L

NOTE

The battery ratings(CCA) displayed on the tester must be identical to the ratings marked on battery label.

5. The tester (Micro570) displays battery test results including voltage and battery ratings.
   A relevant action must be given according to the test results by referring to the battery test results as shown in the table below.

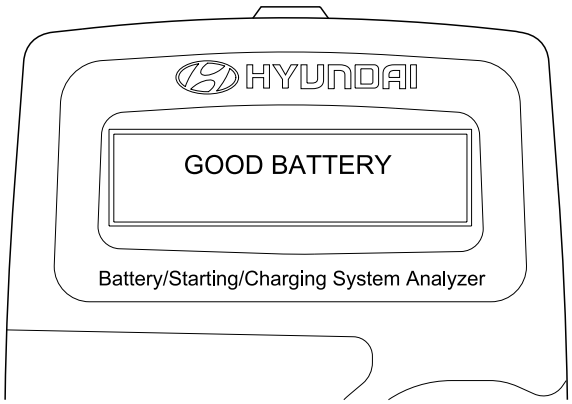

SCMEE6103L

NOTE

The battery ratings (CCA) displayed on the tester must be identical to the ratings marked on battery label.

6. To conduct starter test, press ENTER.

BATTERY TEST RESULTS

RESULT ON PRINTER	REMEDY
Good battery	No action is required
Good recharge	Battery is in a good state Recharge the battery and use
Charge & Retest	Battery is not charged properly => Charge and test the battery again (Failure to charge the battery fully may read incorrect measurement value)
Replace battery	=> Replace battery and recheck the charging system. (Improper connection between battery and vehicle cables may cause "REPLACE BATTERY", retest the battery after removing cables and connecting the tester to the battery terminal directly prior to replacing the battery)
Bad cell-replace	=> Charge and retest the battery. And then, test results may cause "REPLACE BATTERY", replace battery and recheck the charging system

WARNING

Whenever filing a claim for battery, the print out of the battery test results must be attached.

STARTER TEST PROCEDURE

1. After the battery test, press ENTER immediately for the starter test.

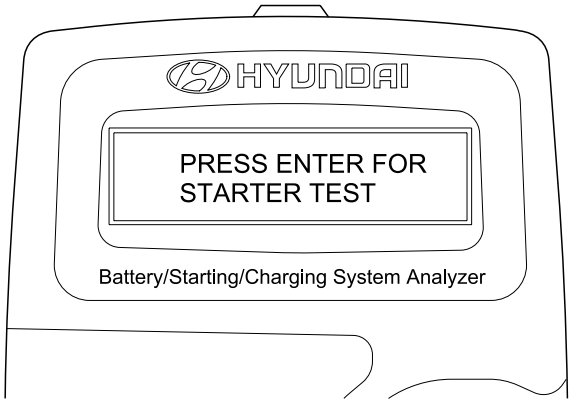

SCMEE6104L

2. After pressing ENTER key, start the engine.

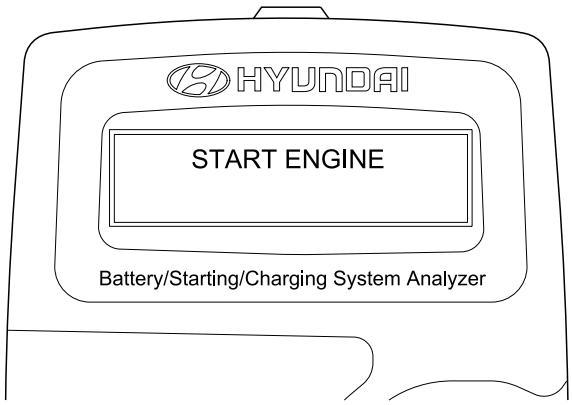

SCMEE6105L

3. Cranking voltage and starter test results will be displayed on the screen.
   Take a relevant action according to the test results by referring to the starter test results as given below.

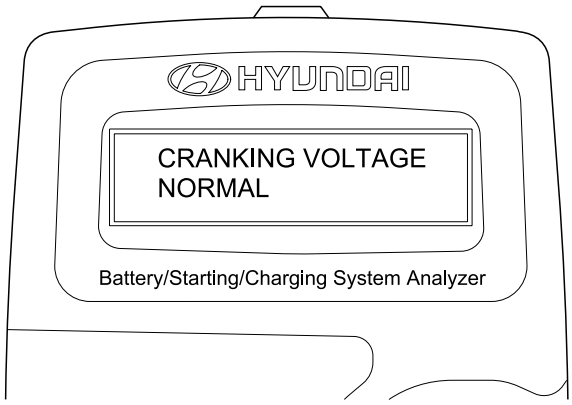

SCMEE6106L

4. To continue charging system test, press ENTER.

STARTER TEST RESULTS

RESULT ON PRINTER	REMEDY
Cranking voltage normal	System shows a normal starter draw
Cranking voltage low	Cranking voltage is lower than normal level => Check starter
Charge battery	The state of battery charge is too low to test => Charge the battery and retest
Replace battery	=> Replace battery => If the vehicle is not started though the battery condition of "Good and fully charged" is displayed. => Check wiring for open circuit, battery cable connection, starter and repair or replace as necessary.

CHARGING SYSTEM TEST PROCEDURE

1. Press ENTER to begin charging system test.

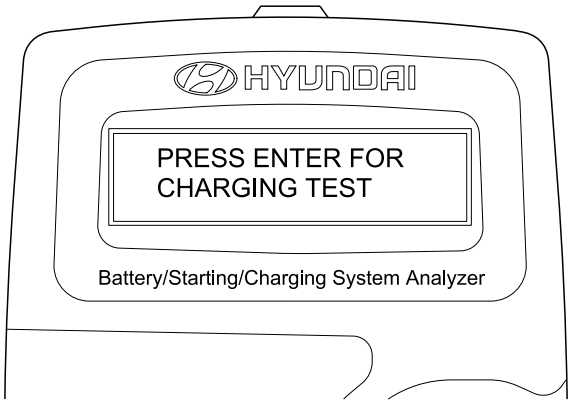

SCMEE6107L

2. ENTER button is pressed, the tester displays the actual voltage of generator.
   Press ENTER to test the charging system.

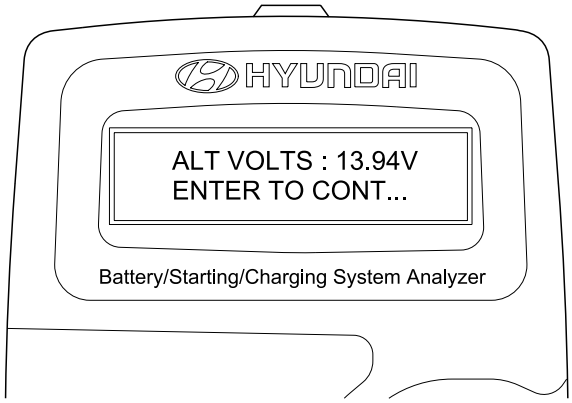

SCMEE6108L

3. The MICRO 570 will prompt you to rev the engine until the rev is detected. It will then collect the data.

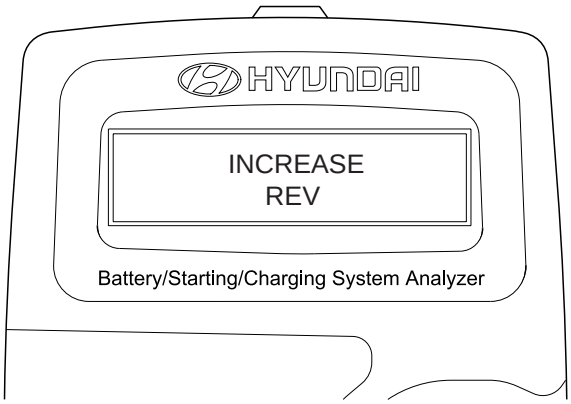

SCMEE6109L

4. Press ENTER.

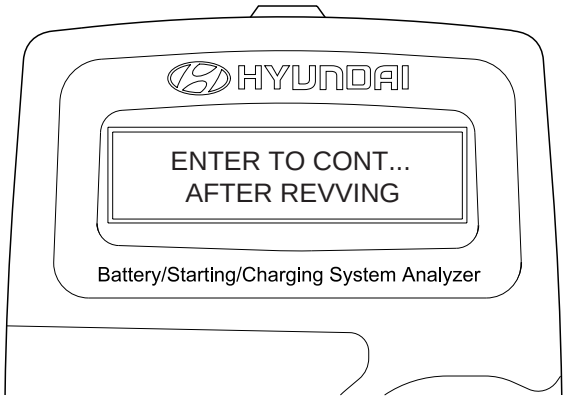

SCMEE6110L

5. The MICRO 570 will analyze the charging system output at idle for comparison to other readings.

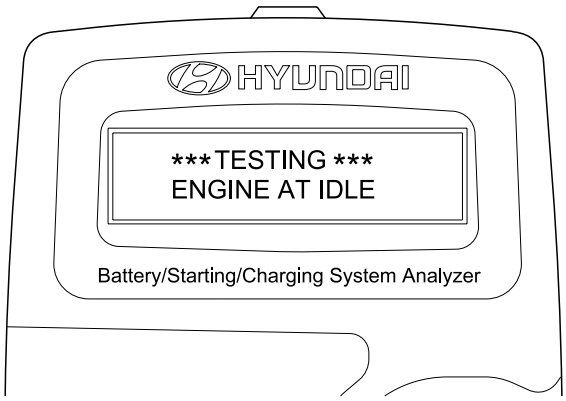

SCMEE6111L

6. The MICRO 570 will detect the amount of ripple from the charging system to the battery. Excessive ripple usually means the stator is damaged or that one or more generator diodes have failed.

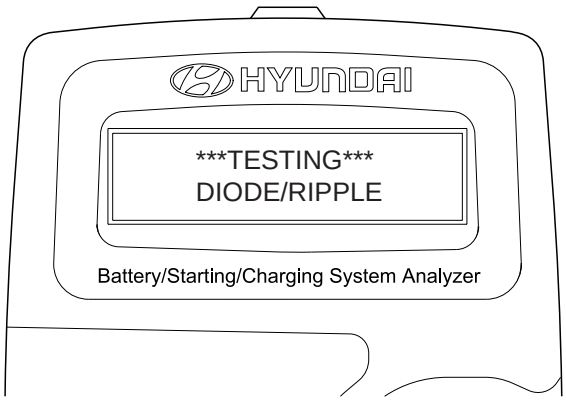

SCMEE6112L

7. The MICRO 570 will prompt you to turn on accessary loads. It will then test at idle and prompt you to rev the engine. The analyzer will determine if the charging system can provide enough current for the demands of the vehicle's electrical system.

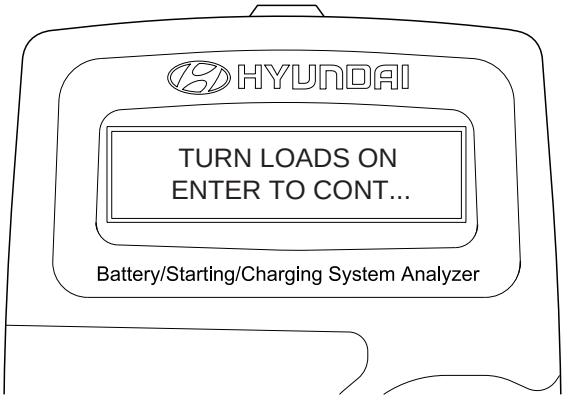

SCMEE6113L

NOTE

When asked to turn on the accessory loads, turn on the blower to high(heater), the high beam headlights, and rear defogger. DO NOT use cyclical loads such as air conditioning or wind-shield wipers.

8. After the test, the MICRO 570 will display the idle voltage, load voltage and the state results.

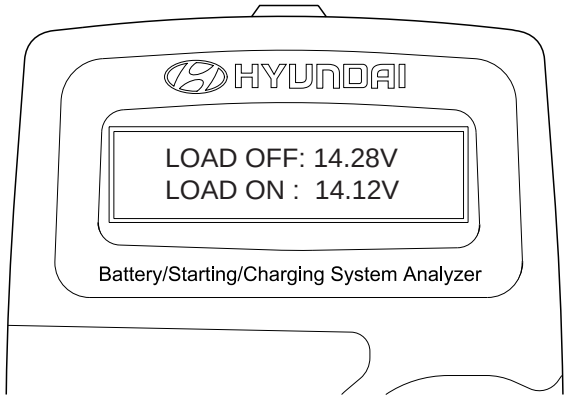

SCMEE6114L

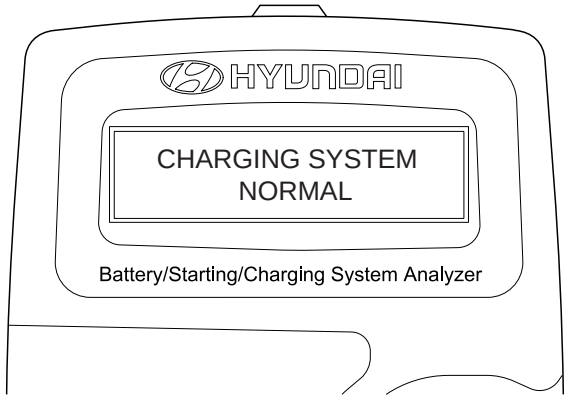

SCMEE6115L

CHARGING SYSTEM TEST RESULTS

RESULT ON PRINTER	REMEDY
Charging system normal/Diode ripple normal	Charging system is normal
No charging voltage	Generator does not supply charging current to battery => Check belts, connection between generator and battery Replace belts or cable or generator as necessary
Low charging voltage	Generator does not supply charging current to battery and electrical load to system fully => Check belts and generator and replace as necessary
High charging voltage	The voltage from generator to battery is higher than normal limit during voltage regulating. => Check connection and ground and replace regulator as necessary => Check electrolyte level in the battery
Excess ripple detected	One or more diodes in the generator is not functioning properly => Check generator mounting and belts and replace as necessary

IGNITION SYSTEM

DESCRITION E28927EF

Ignition timing is controlled by the electronic control ignition timing system. The standard reference ignition timing data for the engine operating conditions are preprogrammed in the memory of the ECM (Engine Control Module).

The engine operating conditions (speed, load, warm-up condition, etc.) are detected by the various sensors. Based on these sensor signals and the ignition timing data, signals to interrupt the primary current are sent to the ECM. The ignition coil is activated, and timing is controlled.

ON-VEHICLE INSPECTION EB0BB3A7

SPARK TEST

1. Remove the ignition coil connector(A).

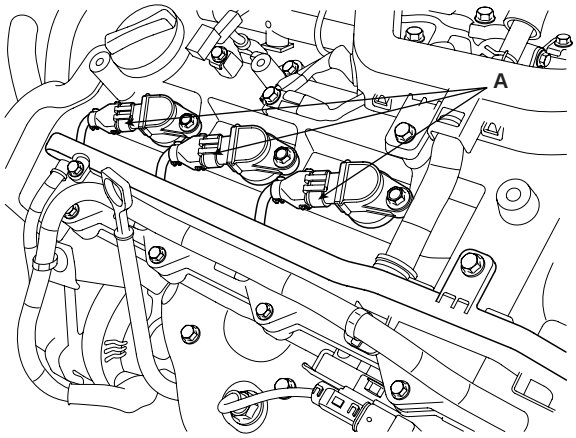

KCBF156A

NOTE

Disconnect the iguition coil connector while pulling up tre connector lock.

2. Remove the ignition coil.
3. Using a spark plug socket, remove the spark plug.
4. Install the spark plug to the ignition coil.

5. Ground the spark plug to the engine.

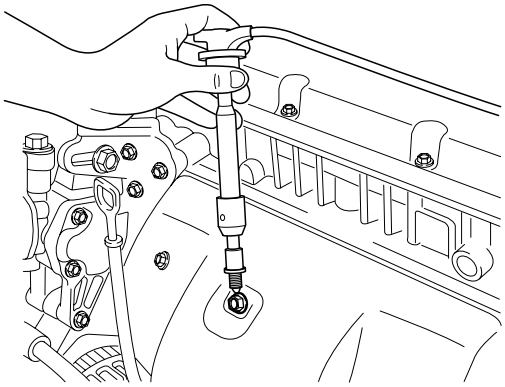

ABGE001A

6. Check is spark occurs while engine is being cranked.

   NOTE

   To prevent fuel being injected from injectors while the engine is being cranked, remove the fuel pump(A) relay from the fuse box.
   Crank the engine for no more than 5 ~ 10 seconds.

7. Inspect all the spark plugs.

8. Using a spark plug socket, install the spark plug.

9. Install the ignition coil.

10. Reconnect the ignition coil connector.

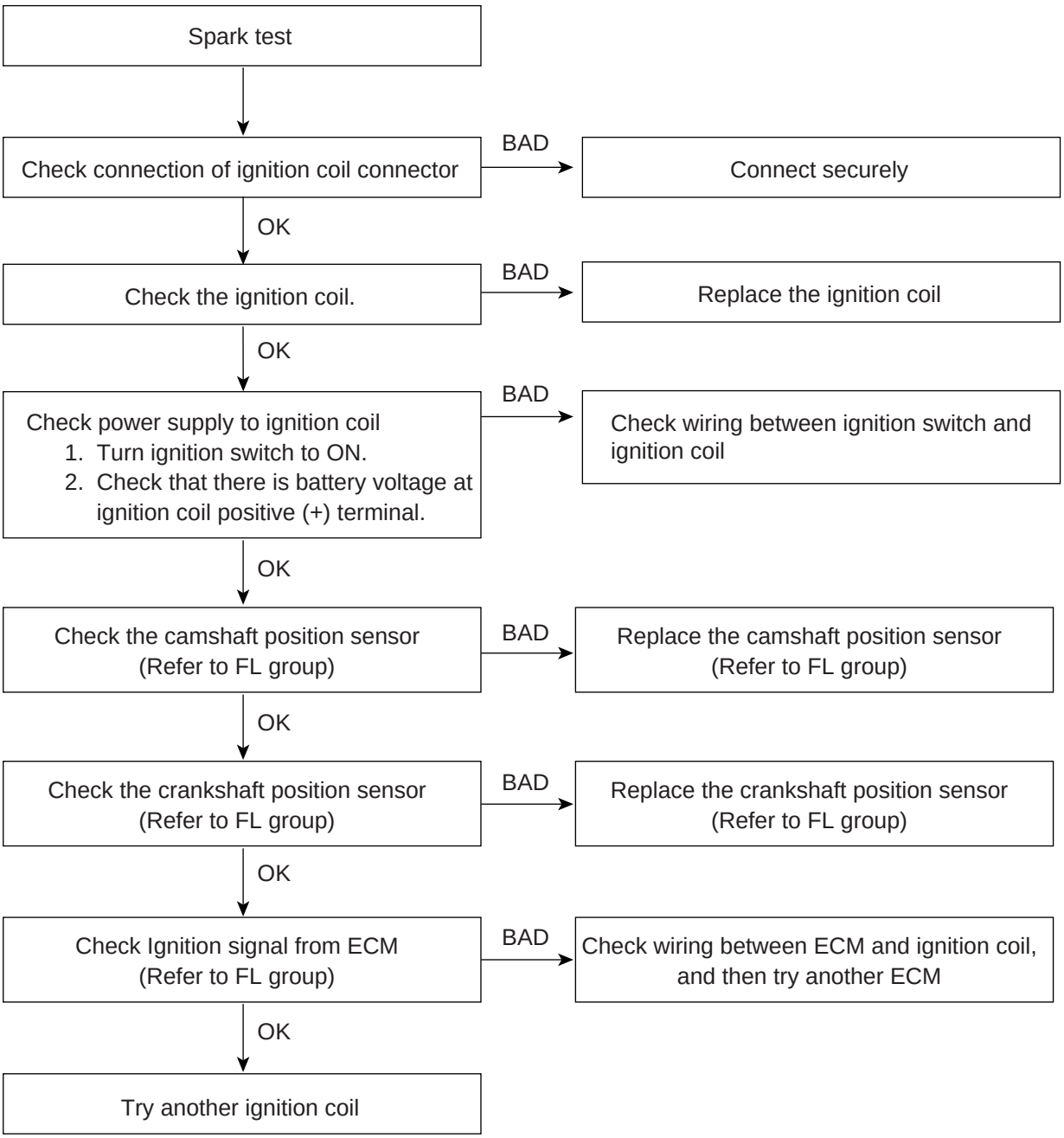
Spark test
Check connection of ignition coil connector
BAD
Connect securely
OK
Check the ignition coil.
BAD
Replace the ignition coil
OK
Check power supply to ignition coil
1. Turn ignition switch to ON.
2. Check that there is battery voltage at ignition coil positive (+) terminal.
BAD
Check wiring between ignition switch and ignition coil
OK
Check the camshaft position sensor (Refer to FL group)
BAD
Replace the camshaft position sensor (Refer to FL group)
OK
Check the crankshaft position sensor (Refer to FL group)
BAD
Replace the crankshaft position sensor (Refer to FL group)
OK
Check Ignition signal from ECM (Refer to FL group)
BAD
Check wiring between ECM and ignition coil, and then try another ECM
OK
Try another ignition coil

EBRF001A

INSPECT SPARK PLUG

1. Inspect the electrodes (A) and ceramic insulator (B).

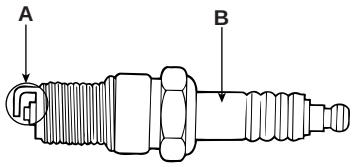

EBKD002K

INSPECTION OF ELECTRODES

Condition	Dark deposits	White deposits
Description	- Fuel mixture too rich - Low air intake	- Fuel mixture too lean - Advanced ignition timing - Insufficient plug tightening torque

2. Check the electrode gap (A).

Standard : 1.0 ~ 1.1 mm (0.0394 ~ 0.0433 in.)

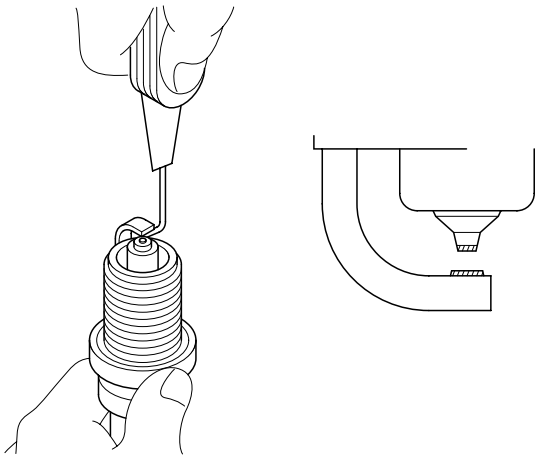

EBKE002L

INSPECT IGNITION COIL

1. Measure the primary coil resistance between terminals (+) and (-).

Standard : 00715 ± 0.015Ω

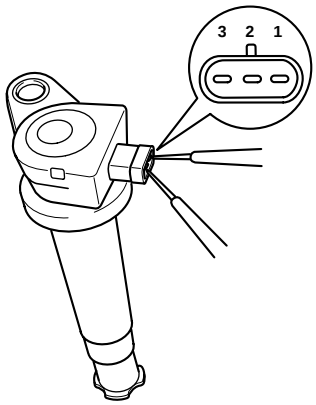

KBBF002A

NOTE

Mesure the resistance between the terminals No.1 and No.3.

REMOVAL E5CED4D1

IGNITION COIL

1. Remove the engine cover.
2. Remove the ignition coil connector(A).

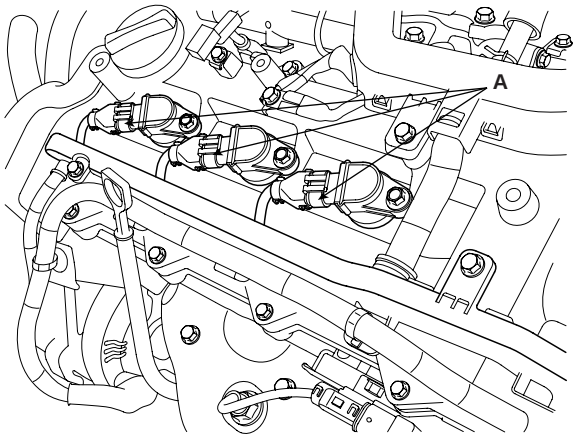

KCBF156A

3. 3. Remove the ignition coil.
4. Installation is the reverse of removal.

REPLACEMENT E5CED4D2

SPARK PLUC

1. Remove the ignition coil connector(A).

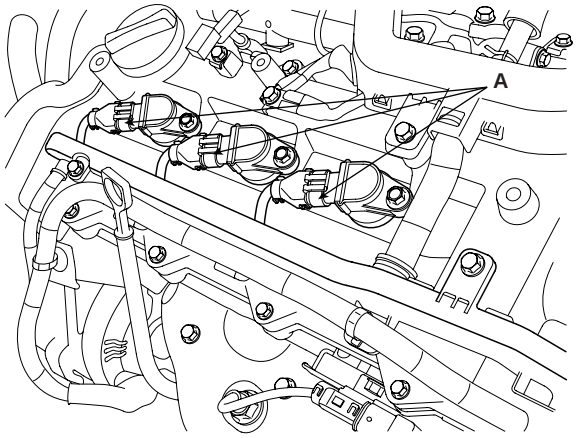

KCBF156A

2. Remove the ignition coil.
3. Using a spark plug socket, remove the spark plug.

   CAUTION

   Be careful that no contaminates enter through the spark plug holes..

4. When replacing the spark plug, always use the long reach type spark plug.
   Do not use a short reach type.

   1) Color Marking (Tip).

   - [2.7L]
     Unleaded : Yellow Marking
     Leaded : Green Marking
   - [Others]
     Marking Color is different or does not exist

   2) Length(Tip-Tip / PT Length).

   - 2.7L: 83.2mm/ 26.5mm
   - [Others]
     The length is different from the specification above.

   3) Part ID.

   - [2.7L]
     Unleaded : ILFR5B11
     Leaded : LFR5A

CHARGING SYSTEM

DESCRIPTION ECC3DBD3

The charging system included a battery, an alternator with a built-in regulator, and the charging indicator light and wire.
The Alternator has built-in diodes, each rectifying AC current to DC current.
Therefore, DC current appears at alternator "B" terminal.
In addition, the charging voltage of this alternator is regulated by the battery voltage detection system.
The alternator is regulated by the battery voltage detection system. The main components of the alternator are the rotor, stator, rectifier, capacitor brushes, bearings and V-ribbed belt pulley. The brush holder contains a built-in electronic voltage regulator.

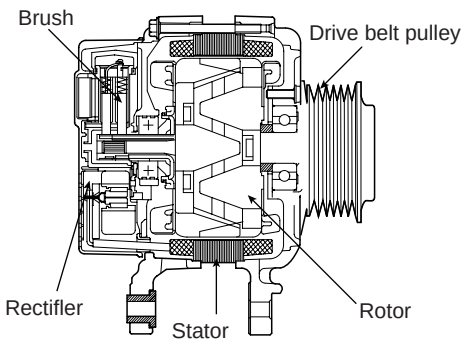

LBKG001B

ON-VEHICLE INPECTION E87FA4FF

CAUTION

- ***Check that the battery cables are connected to the correct terminals.***
- ***Disconnect the battery cables when the battery is given a quick charge.***
- ***Never disconnect the battery while the engine is running.***

CHECK BATTERY VOLTAGE

1. If 20 minutes have not passed since the engine was stopped, turn the ignition switch ON and turn on the electrical system (headlamp, blower motor, rear defogger etc.) for 60 seconds to remove the surface charge.

2. Turn the ignition switch OFF and turn off the electrical systems.

3. Measure the battery voltage between the negative (-) and positive (+) terminals of the battery.

Standard voltage : 12.5 ~ 12.9V at 20°C(68°F)

If the voltage is less than specification, charge the battery.

CHECK THE BATTERY TERMINALS AND FUSES

1. Check that the battery terminals are not loose or corroded.

2. Check the fuses for continuity.

INSPECT DRIVE BELT

Visually check the belt for excessive wear, frayed cords etc.
If any defect has been found, replace the drive belt.

> ***NOTE***
>
> *Cracks on the rib side of a belt are considered acceptable. If the belt has chunks missing from the ribs, it should be replaced.*

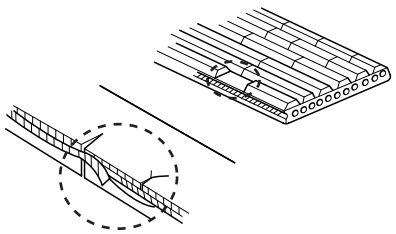

EBKD004B

VISUALLY CHECK ALTERNATOR WIRING AND LISTEN FOR ABNORMAL NOISES

1. Check that the wiring is in good condition.
2. Check that there is no abnormal noise from the alternator while the engine is running.

CHECK DISCHARGE WARNING LIGHT CIRCUIT

1. Warm up the engine and then turn it off.
2. Turn off all accessories.
3. Turn the ignition switch "ON". Check that the discharge warning light is lit.
4. Start the engine. Check that the light is lit.
   If the light does not go off as specified, troubleshoot the discharge light circuit.

INSPECT CHARGING SYSTEM

VOLTAGE DROP TEST OF ALTERNATOR OUTPUT WIRE

This test determines whether or not the wiring between the alternator "B" terminal and the battery (+) terminal is good by the voltage drop method.

PREPARATION

1. Turn the ignition switch to "OFF".
2. Disconnect the output wire from the alternator "B" terminal. Connect the (+) lead wire of ammeter to the "B" terminal of alternator and the (-) lead wire of ammeter to the output wire. Connect the (+) lead wire of voltmeter to the "B" terminal of alternator and the (-) lead wire of voltmeter to the (+) terminal of battery.

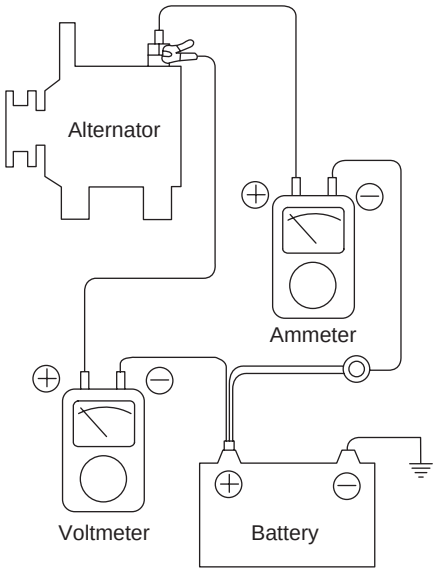

BBGE002A

TEST

1. Start the engine.
2. Turn on the headlamps and blower motor, and set the engine speed until the ammeter indicates 20A.
   And then, read the voltmeter at this time.

RESULT

1. The voltmeter may indicate the standard value.

Standard value: 0.2V max

2. If the value of the voltmeter is higher than expected (above 0.2V max.), poor wiring is suspected. In this case check the wiring from the alternator "B" terminal to the battery (+) terminal. Check for loose connections, color change due to an over-heated harness, etc. Correct them before testing again.

3. Upon completion of the test, set the engine speed at idle.
   Turn off the headlamps, blower motor and the ignition switch.

OUTPUT CURRENT TEST

This test determines whether or not the alternator gives an output current that is equivalent to the normal output.

PREPARATION

1. Prior to the test, check the following items and correct as necessary.
   Check the battery installed in the vehicle to ensure that it is good condition. The battery checking method is described in the section "Battery".
   The battery that is used to test the output current should be one that has been partially discharged. With a fully charged battery, the test may not be conducted correctly due to an insufficient load.
   Check the tension of the alternator drive belt. The belt tension check method is described in the section "Inspect drive belt".

2. Turn off the ignition switch.

3. Disconnect the battery ground cable.

4. Disconnect the alternator output wire from the alternator "B" terminal.

5. Connect a DC ammeter (0 to 150A) in series between the "B" terminal and the disconnected output wire. Be sure to connect the (-) lead wire of the ammeter to the disconnected output wire.

   NOTE

   Tighten each connection securely, as a heavy current will flow. Do not rely on clips.

6. Connect a voltmeter (0 to 20V) between the "B" terminal and ground. Connect the (+) lead wire to the alternator "B" terminal and (-) lead wire to a good ground.

7. Attach an engine tachometer and connect the battery ground cable.

8. Leave the engine hood open.

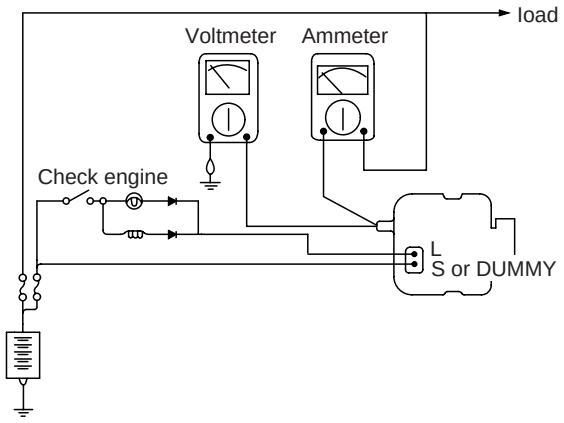

EBRF020A

TEST

1. Check to see that the voltmeter reads as the same value as the battery voltage. If the voltmeter reads 0V, and the open circuit in the wire between alternator "B" terminal and battery (-) terminal or poor grounding is suspected.

2. Start the engine and turn on the headlamps.

3. Set the headlamps to high beam and the heater blower switch to HIGH, quickly increase the engine speed to 2,500 rpm and read the maximum output current value indicated by the ammeter.

   NOTE

   After the engine start up, the charging current quickly drops.
   Therefore, the above operation must be done quickly to read the maximum current value correctly.

RESULT

1. The ammeter reading must be higher than the limit value. If it is lower but the alternator output wire is in good condition, remove the alternator from the vehicle and test it.

Limit value : 70% of the rated current

   NOTE

   - *The nominal output current value is shown on the nameplate affixed to the alternator body.*
   - *The output current value changes with the electrical load and the temperature of the alternator itself.*
     Therefore, the nominal output current may not be obtained. If such is the case, keep the headlamps on the cause discharge of the battery, or use the lights of another vehicle to increase the electrical load.
     The nominal output current may not be obtained if the temperature of the alternator itself or ambient temperature is too high.
     In such a case, reduce the temperature before testing again.

2. Upon completion of the output current test, lower the engine speed to idle and turn off the ignition switch.

3. Disconnect the battery ground cable.

4. Remove the ammeter and voltmeter and the engine tachometer.

5. Connect the alternator output wire to the alternator "B" terminal.

6. Connect the battery ground cable.

REGULATED VOLTAGE TEST

The purpose of this test is to check that the electronic voltage regulator controls voltage correctly.

PREPARATION

1. Prior to the test, check the following items and correct if necessary.
   Check that the battery installed on the vehicle is fully charged. The battery checking method is described in the section "Battery".
   Check the alternator drive belt tension. The belt tension check method is described in the section "Inspect drive belt".

2. Turn ignition switch to "OFF".

3. Disconnect the battery ground cable.

4. Connect a digital voltmeter between the "B" terminal of the alternator and ground. Connect the (+) lead of the voltmeter to the "B" terminal of the alternator. Connect the (-) lead to good ground or the battery (-) terminal.

5. Disconnect the alternator output wire from the alternator "B" terminal.

6. Connect a DC ammeter (0 to 150A) in series between the "B" terminal and the disconnected output wire. Connect the (-) lead wire of the ammeter to the disconnected output wire.

7. Attach the engine tachometer and connect the battery ground cable.

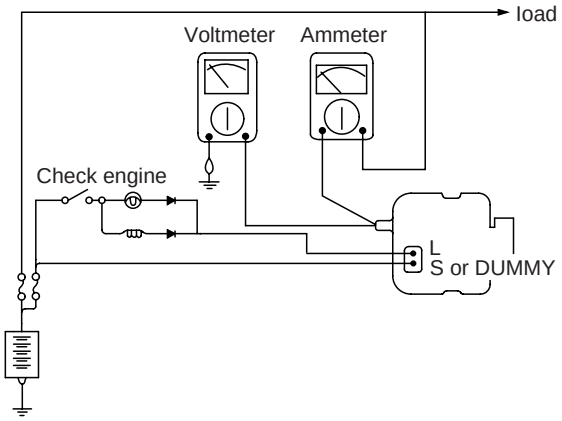

EBRF020A

TEST

1. Turn on the ignition switch and check to see that the voltmeter indicates the following value.

Voltage: Battery voltage

   If it reads 0V, there is an open circuit in the wire between the alternator "B" terminal and the battery and the battery (-) terminal.

2. Start the engine. Keep all lights and accessories off.

3. Run the engine at a speed of about 2,500 rpm and read the voltmeter when the alternator output current drops to 10A or less

RESULT

1. If the voltmeter reading agrees with the value listed in the regulating voltage table below, the voltage regulator is functioning correctly. If the reading is other than the standard value, the voltage regulator or the alternator is faulty.

REGULATING VOLTAGE TABLE

Voltage regulator ambient temperature °C (°F)	Regulating voltage (V)
-20 (-4)	14.2 ~ 15.4
20 (68)	14.0 ~ 15.0
60 (140)	13.7 ~ 14.9
80 (176)	13.5 ~ 14.7

2. Upon completion of the test, reduce the engine speed to idle, and turn off the ignition switch.

3. Disconnect the battery ground cable.

4. Remove the voltmeter and ammeter and the engine tachometer.

5. Connect the alternator output wire to the alternator "B" terminal.

6. Connect the battery ground cable.

ALTERNATOR

COMPONENTS EEEFA0CD

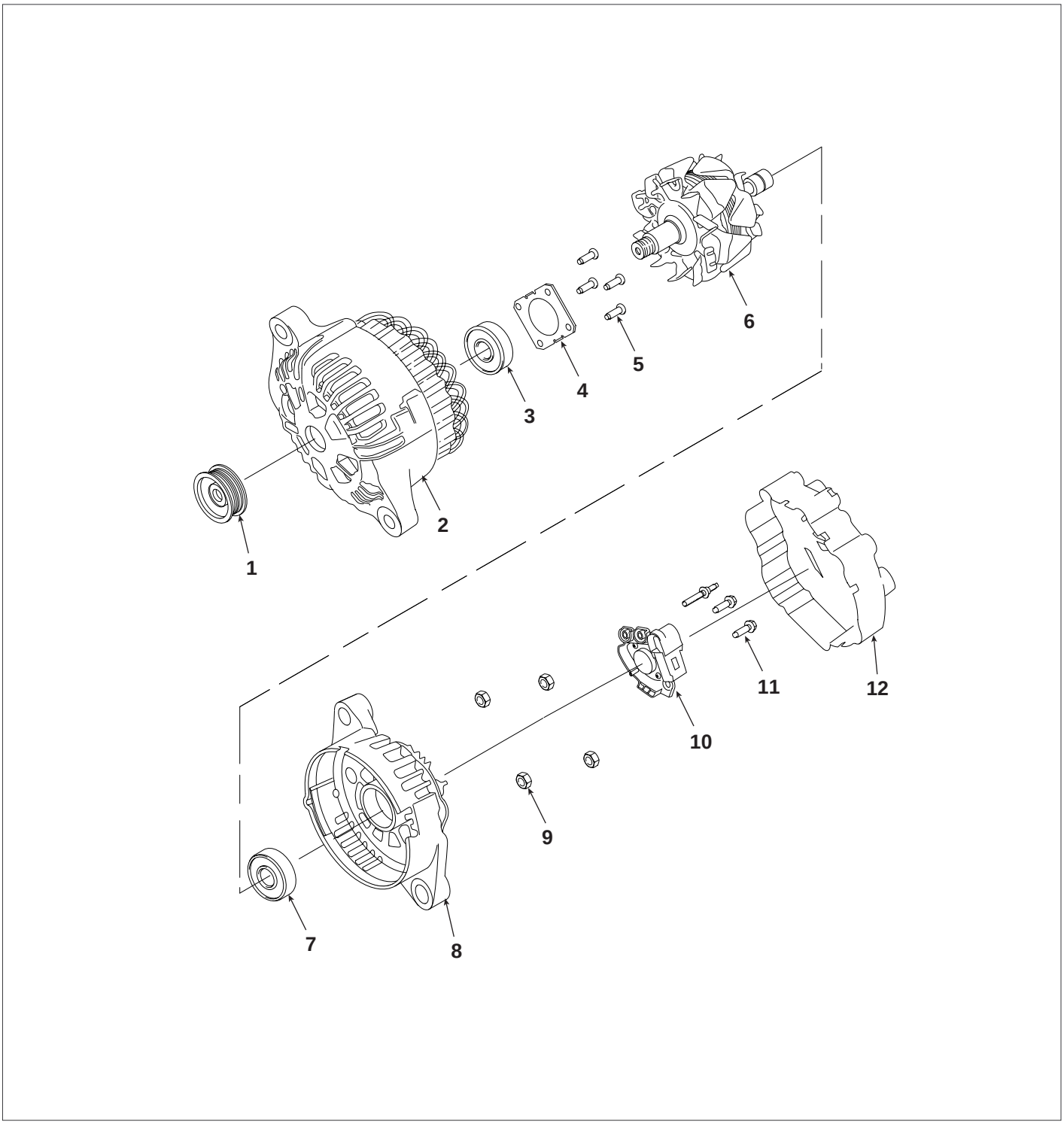

1. Pulley
2. Front bracket
3. Front bearing
4. Bearing cover
5. Bearing cover bolt
6. Rotor coil
7. Rear bearing
8. Rear bracket
9. Nut
10. Brush holder assembly
11. Brush holder bolt
12. Rear cover

EBBF001A

REMOVAL E743E5F6

1. Disconnect the battery negative terminal first, then the positive terminal.
2. Disconnect the alternator connector, and remove the cable from alternator "B" terminal.
3. Remove the drive belt.
4. Pull out the through bolt and then remove the alternator(A).

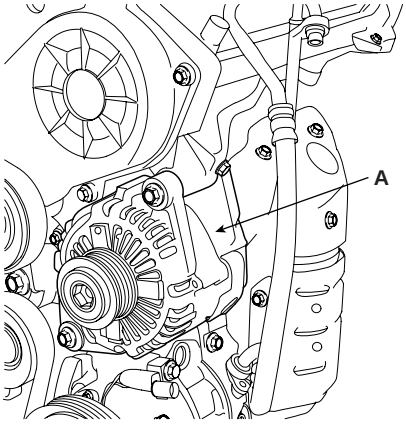

KBBF003A

5. Installation is the reverse of removal.

DISASSEMBLY E1EC0C79

1. Remove the alternator cover(A) using a screw driver(B).

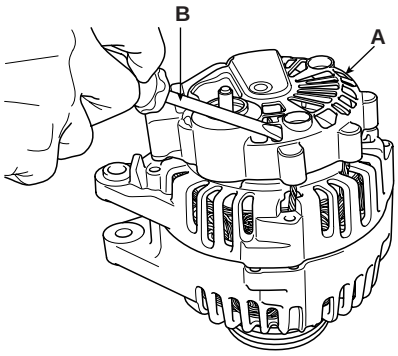

EBKD301A

2. Remove the slip ring guide(A).
3. Loosen the mounting bolts(B) and disconnect the brush holder assembly(C).

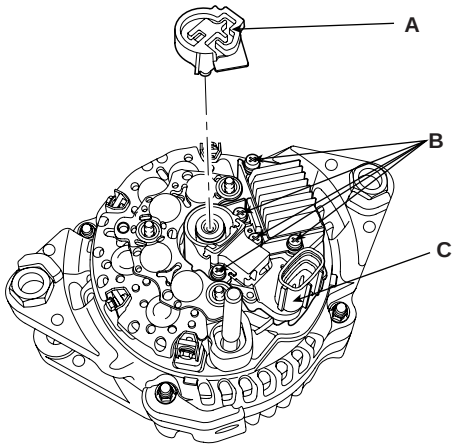

KBBF101A

4. Remove the rectifler(A) with 4 screws.

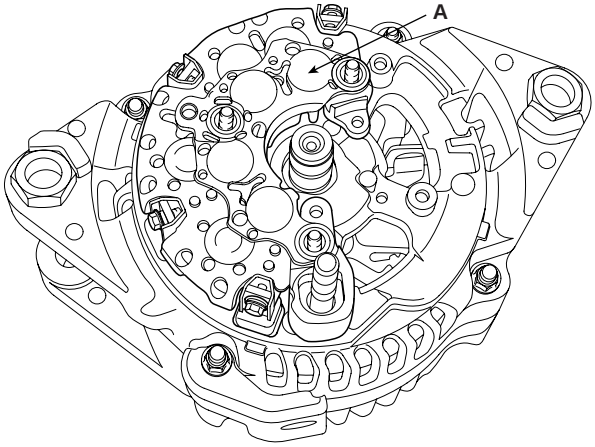

KBBF102A

5. Remove the nut, pulley(A) and spacer.

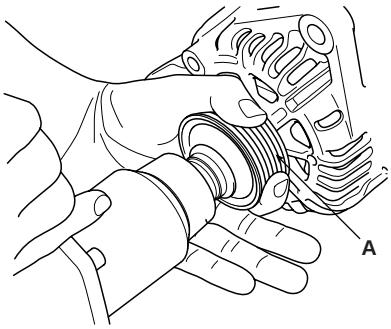

EBKD301D

6. Loosen the 4 through bolts(A).

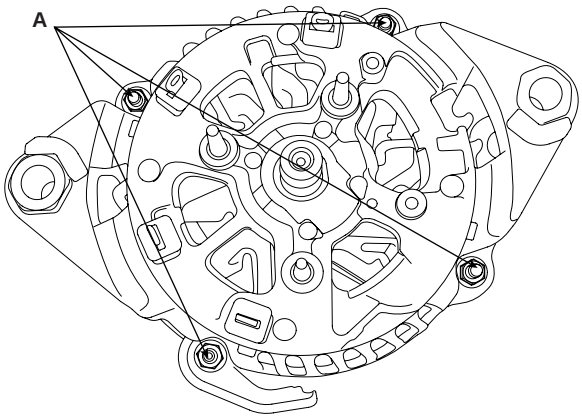

KBBF103A

7. Disconnect the rotor(A) and cover(B).

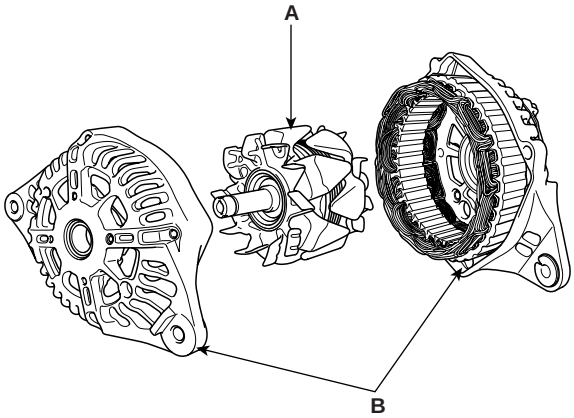

EBKD301G

8. Reassembly is the reverse order of disassembly.

INSPECTION EE34298B

INSPECT ROTOR

1. Check that there is continuity between the slip rings (A).

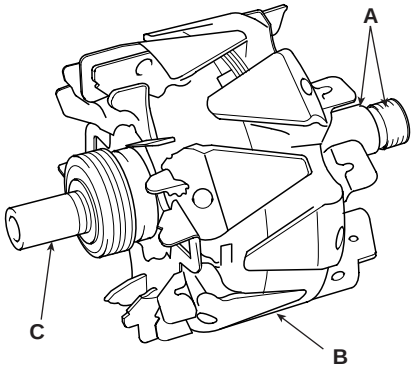

EBKD008A

2. Check that there is no continuity between the slip rings and the rotor (B) or rotor shaft (C).

3. If the rotor fails either continuity check, replace the alternator.

INSPECT STATOR

1. Check that there is continuity between each pair of leads (A).

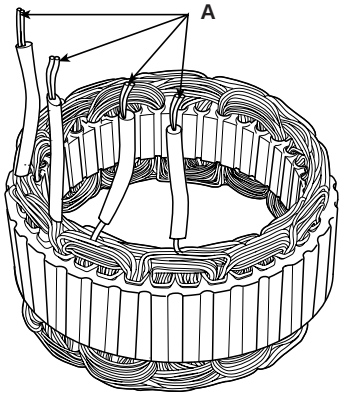

EBKD008B

2. Check that there is no continuity between each lead and the coil core.

3. If the coil fails either continuity check, replace the alternator.

BATTERY

DESCRIPTION EDA1FE6F

1. The maintenance-free battery is, as the name implies, totally maintenance free and has no removable battery cell caps.
2. Water never needs to be added to the maintenance-free battery.
3. The battery is completely sealed, except for small vent holes in the cover.

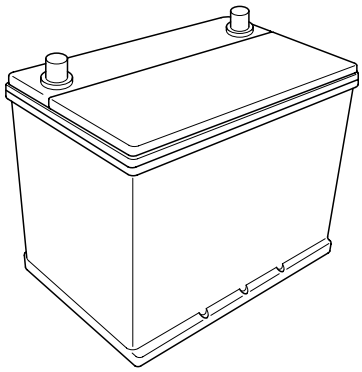

EBJD008A

INSPECTION EBDD0AA2

BATTERY DIAGNOSTIC TEST (1)

CHECKING FLOW

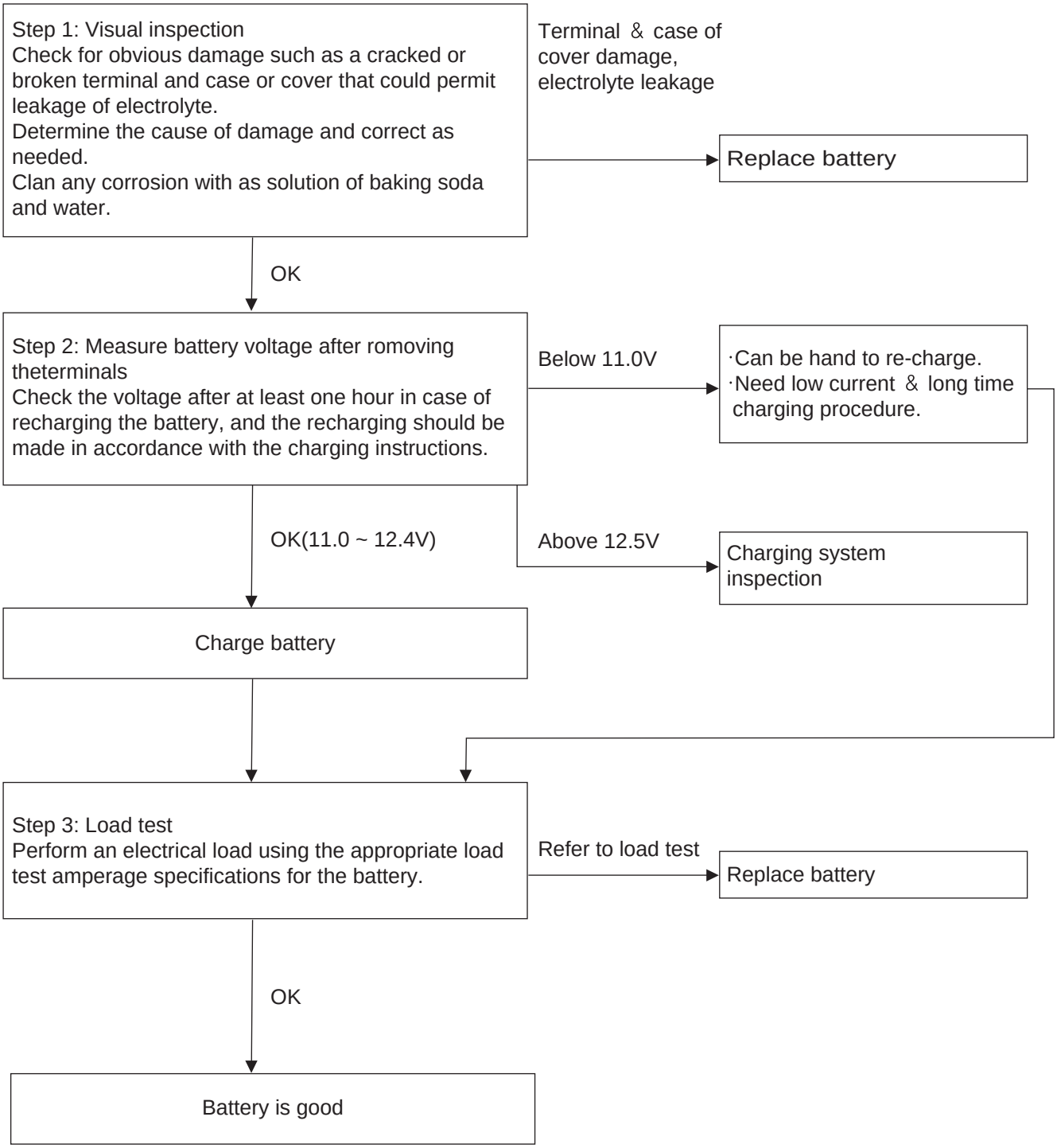

SKMEE6001D

LOAD TEST

1. Perform the following steps to complete the load test procedure for maintenance free batteries.

2. Connect the load tester clamps to the terminals and proceed with the test as follow:

   1) If the battery has been on charge, remove the surface charge by connect a 300ampere load for 15 seconds.

   2) Connect the voltmeter and apply the specified load.

   3) Read the voltage after the load has been applied for 15 seconds.

   4) Disconnect the load.

   5) Compare the voltage reading with the minimum and replace the battery if battery test voltage is below that shown in the voltage table.

Voltage	Temperature
9.6V	20°C (68.0°F) and above
9.5V	16°C (60.8°F)
9.4V	10°C (50.0°F)
9.3V	4°C (39.2°F)
9.1V	-1°C (30.2°F)
8.9V	-7°C (19.4°F)
8.7V	-12°C (10.4°F)
8.5V	-18°C (-0.4°F)

NOTE

- *If the voltage is greater shown in the table, the battery is good.*
- *If the voltage is less than shown in the table, replace the battery.*

BATTERY DIAGNOSTIC TEST (2)

1. Make sure the ignition switch and all accessories are in the OFF position.

2. Disconnect the battery cables (negative first).

3. Remove the battery from the vehicle.

   CAUTION

   Care should be taken in the event the battery case is cracked or leaking, to protect your skin from the electrolyte.
   Heavy rubber gloves (not the household type) should be wore when removing the battery.

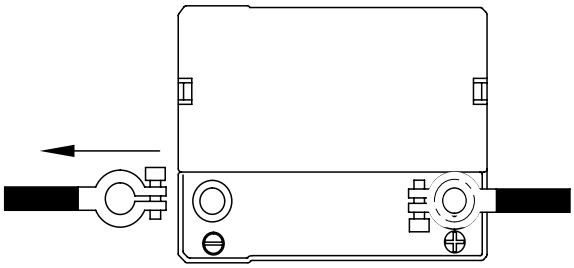

EBJD008B

4. Inspect the battery tray for damage caused by the loss of electrolyte. If acid damage is present, it will be necessary to clean the area with a solution of clean warm water and baking soda. Scrub the area with a stiff brush and wipe off with a cloth moistened with baking soda and water.

5. Clean the top of the battery with the same solution as described above.

6. Inspect the battery case and cover for cracks. If cracks are present, the battery must be replaced.

7. Clean the battery posts with a suitable battery post tool.

8. Clean the inside surface of the terminal clamps with a suitable battery cleaning tool. Replace damaged or frayed cables and broken terminal clamps.

9. Install the battery in the vehicle.

10. Connect the cable terminals to the battery post, making sure tops of the terminals are flush with the tops of the posts.

11. Tighten the terminal nuts securely.

12. Coat all connections with light mineral grease after tightening.

CAUTION

When batteries are being charged, an explosive gas forms beneath the cover of each cell. Do not smoke near batteries being charged or which have recently been charged. Do not break live circuit at the terminals of batteries being charged. A spark will occur when the circuit is broken. Keep open flames away form battery.

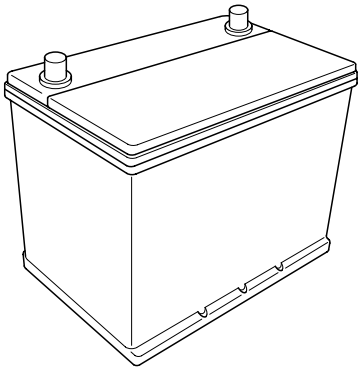

EBJD008A

STARTING SYSTEM

DESCRIPTION E1CE0D47

The starting system includes the battery, starter, solenoid switch, ignition switch, inhibitor switch (A/T), ignition lock switch, connection wires and the battery cable.
When the ignition key is turned to the start position, current flows and energizes the starter motor's solenoid coil.
The solenoid plunger and clutch shift lever are activated, and the clutch pinion engages the ring gear.
The contacts close and the starter motor cranks. In order to prevent damage caused by excessive rotation of the starter armature when the engine starts, the clutch pinion gear overruns.

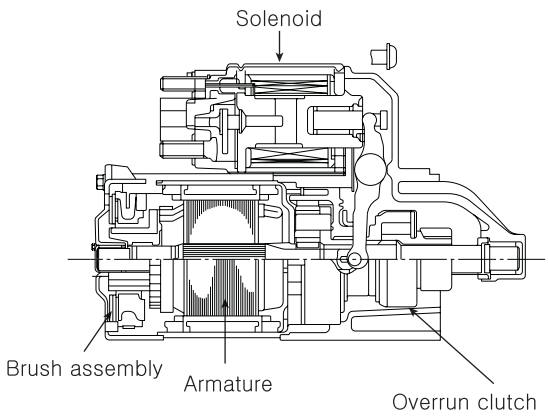

LBKG001C

STARTER CIRCUIT TROUBLESHOOTING ED0E08BF

NOTE

The battery must be in good condition and fully charged.

1. Remove the fuel pump relay(A) from the fuse box.

2. With the shift lever in N or P (A/T) or clutch pedal pressed (M/T), turn the ignition switch to "START"

   If the starter normally cranks the engine, starting system is OK. If the starter will not crank the engine at all, go to next step.

   If it won't disengage from the ring gear when you release key, check for the following until you find the cause.

   - Solenoid plunger and switch malfunction.
   - Dirty pinion gear or damaged overrunning clutch.

3. Check the battery condition. Check electrical connections at the battery, battery negative cable connected to the body, engine ground cables, and the starter for looseness and corrosion. Then try starting the engine again.

   If the starter cranks normally the engine, repairing the loose connection repaired the problem. The starting system is now OK.

   If the starter still does not crank the engine, go to next step.

4. Disconnect the connector from the S-terminal of solenoid. Connect a jumper wire from the B-terminal of solenoid to the S-terminal of solenoid.

   If the starter cranks the engine, go to next step.
   If the starter still does not crank the engine, remove the starter, and repair or replace as necessary.

5. Check the following items in the order listed until you find the open circuit.

   - Check the wire and connectors between the driver's under-dash fuse/relay box and the ignition switch, and between the driver's under-dash fuse/relay box and the starter.
   - Check the ignition switch (Refer to BE group - ignition system)
   - Check the transaxle range switch connector or ignition lock switch connector.
   - Inspect the starter relay.

STATER SOLENOID TEST

1. Disconnect the field coil wire from the M-terminal of solenoid switch.

2. Connect the battery as shown. If the starter pinion pops out, it is working properly. To avoid damaging the starter, do not leave the battery connected for more than 10 seconds.

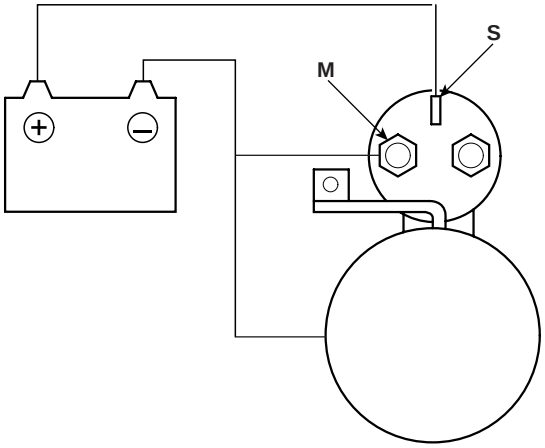

KBSE203D

3. Disconnect the battery from the M terminal.
If the pinion does not retract, the hold-in coil is working properly. To avoid damaging the starter, do not leave the battery connected for more than 10 seconds.

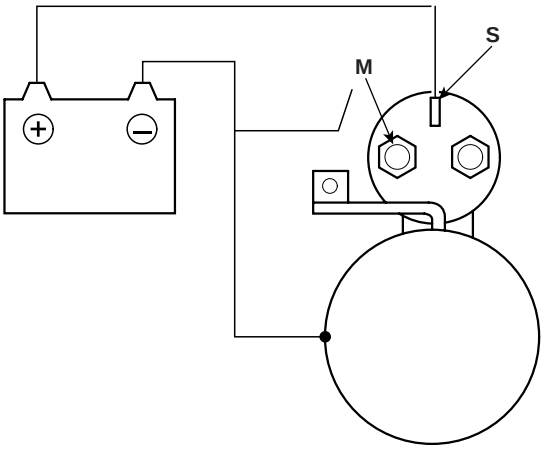

KBSE203E

4. Disconnect the battery also from the body. If the pinion retracts immediately, it is working properly. To avoid damaging the starter, do not leave the battery connected for more than 10 seconds.

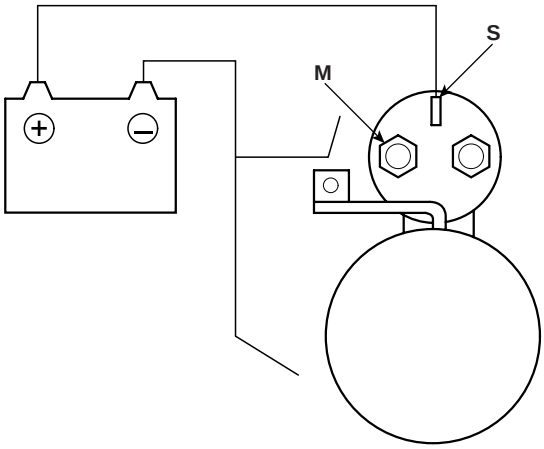

KBSE203F

FREE RUNNING TEST

1. Place the starter motor in a vise equipped with soft jaws and connect a fully-charged 12-volt battery to starter motor as follows.

2. Connect a test ammeter (100-ampere scale) and carbon pile rheostats shown is the illustration.

3. Connect a voltmeter (15-volt scale) across starter motor.

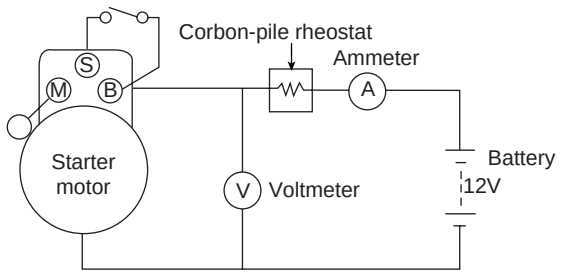

BBGE005A

4. Rotate carbon pile to the off position.

5. Connect the battery cable from battery's negative post to the starter motor body.

6. Adjust until battery voltage shown on the voltmeter reads 11volts.

7. Confirm that the maximum amperage is within the specifications and that the starter motor turns smoothly and freely.

Current : 90A max speed : 2,800 rpm

STARTER

COMPONENTS EEDAEEB0

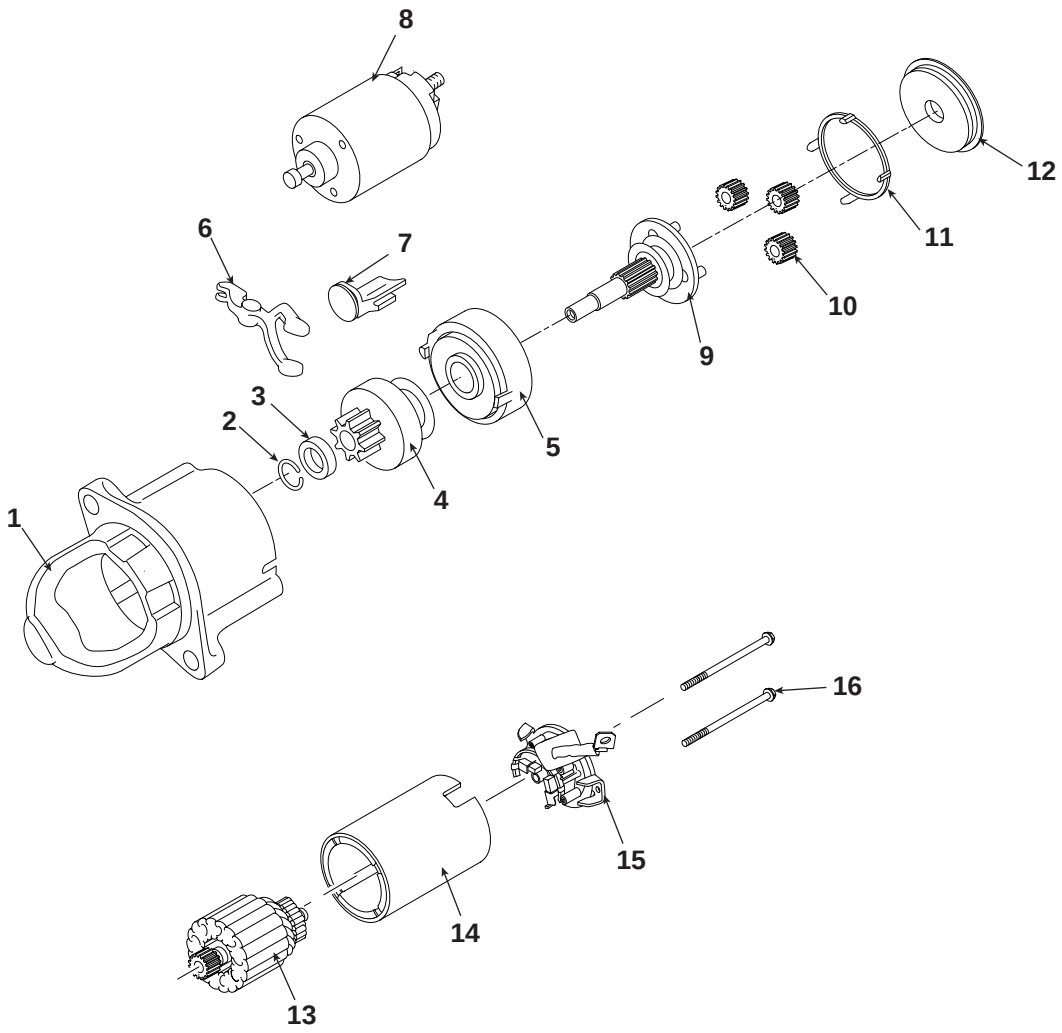

1. Front bracket
2. Stop ring
3. Stopper
4. Overrun clutch assembly
5. Internal gear assembly
6. Lever
7. Lever packing
8. Magnet switch assembly
9. Planet shaft assembly
10. Planetary gear assembly
11. Packing
12. Shield
13. Armature assembly
14. Yoke assembly
15. Brush holder assembly
16. Through bolt

EBRF003A

REMOVAL E2DAEAB6

1. Disconnect the battery negative cable.
2. Disconnect the starter cable (A) from the B terminal (B) on the solenoid (C), then disconnect the connector (D) from the S terminal (E).

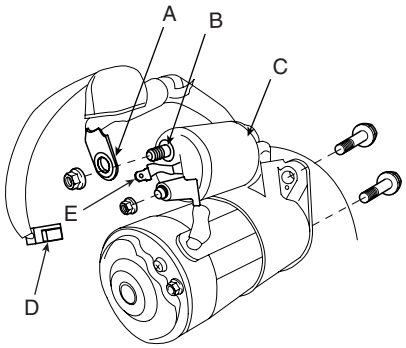

ABGE024A

3. Remove the 2 bolts holding the starter, then remove the starter.
4. Installation is the reverse of removal.
5. Connect the battery negative cable to the battery.

DISASSEMBLY EBCFFF4B

1. Disconnect the M-terminal (A) on the magnet switch assembly (B).

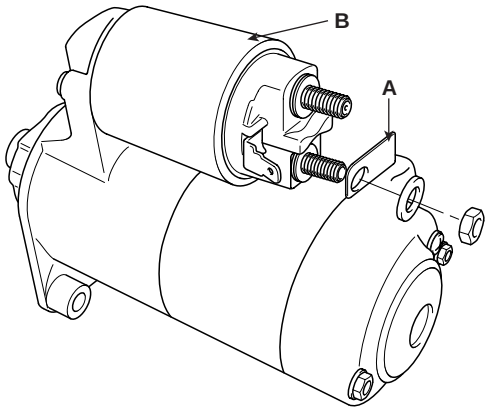

EBKD011C

2. After loosening the 3 screws (A), detach the magnet switch assembly (B).

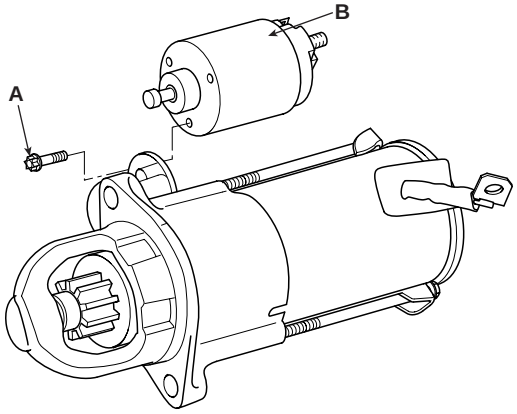

KBRF010A

3. Loosen the through bolts (A).

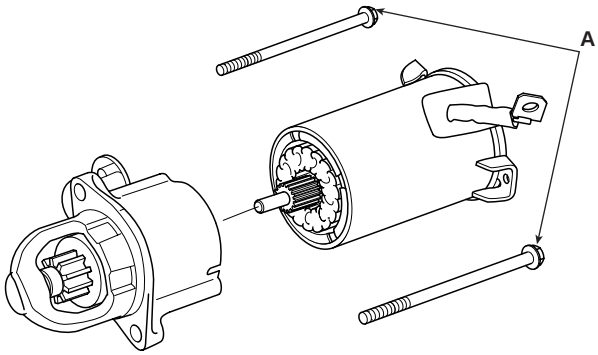

KBRF011A

4. Remove the brush holder assembly (A), yoke (b) and armature (C).

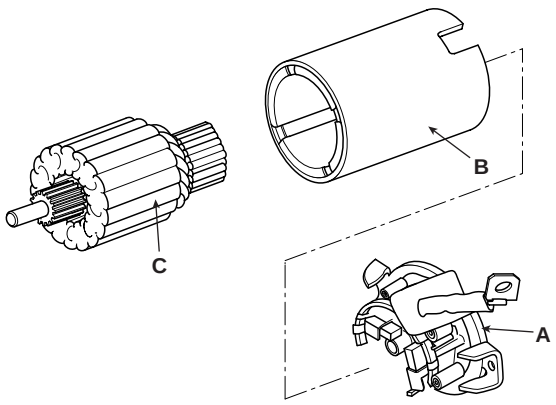

KBRF012A

5. Remove the shield (A) and packing (B).

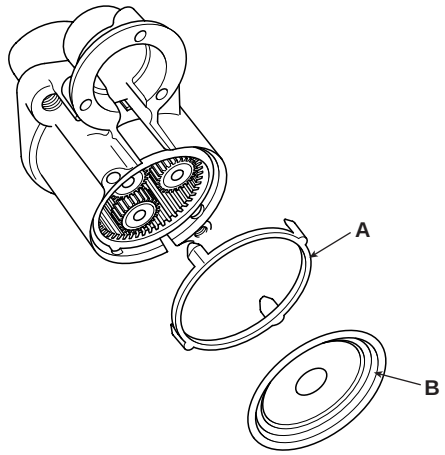

KBRF014A

6. Remove the lever plate (A) and lever packing (B).

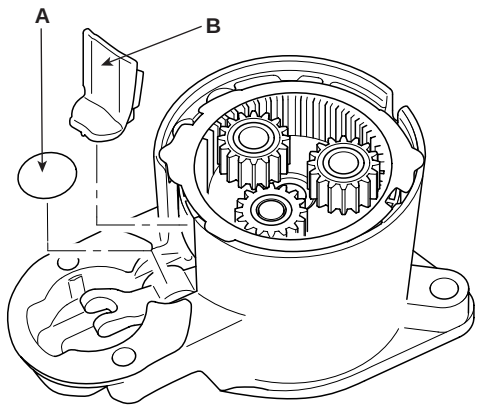

EBKD011H

7. Disconnect the planet gear (A).

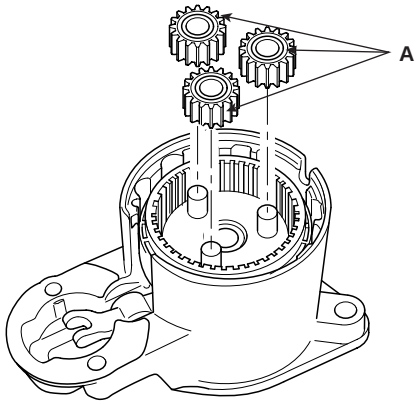

EBKD011I

8. Disconnect the planet shaft assembly (A) and lever (B).

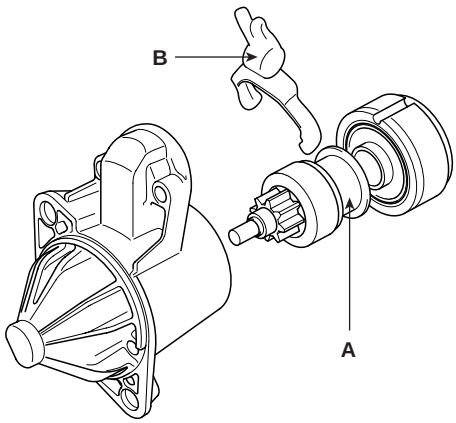

EBKD011J

9. Press the stop ring (A) using a socket (B).

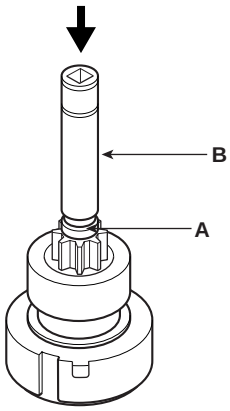

EBKD011K

10. After removing the stopper (A) using stopper pliers (B).

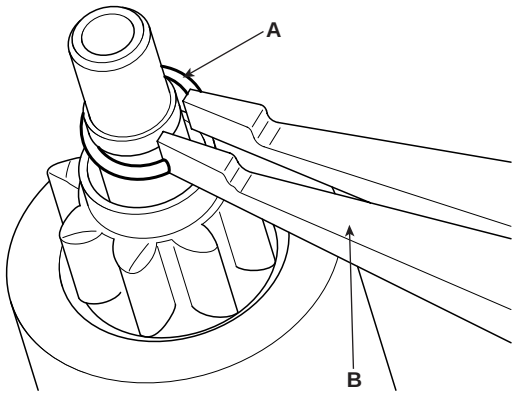

EBKD011L

11. Disconnect the stop ring (A), overrunning clutch (B), internal gear (C) and planet shaft (D).

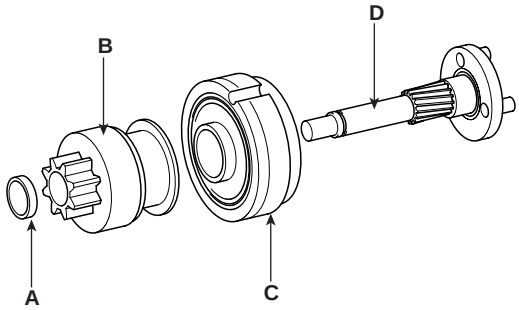

EBKD011M

12. Reassembly is the reverse of disassembly.

NOTE

Using a suitable pulling tool (A), pull the overrunning clutch stop ring (B) over the stopper (C).

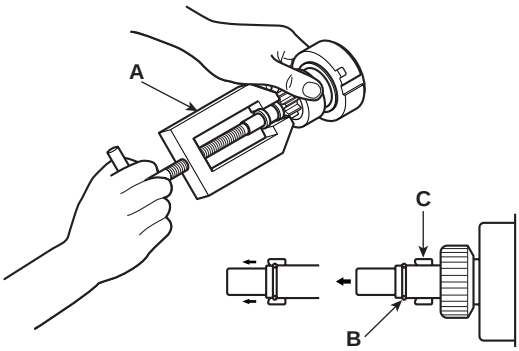

EBKD011O

INSPECTION E6EB24DE

ARMATURE INSPECTION AND TEST

1. Remove the starter.
2. Disassemble the starter as shown at the beginning of this procedure.
3. Inspect the armature for wear or damage from contact with the permanent magnet. If there is wear or damage, replace the armature.

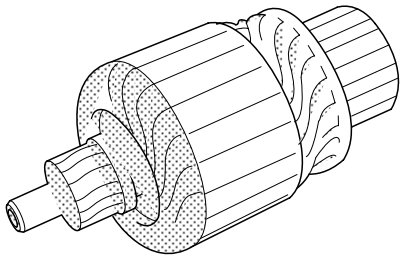

EBKD012A

4. Check the commutator (A) surface. If the surface is dirty or burnt, resurface with emery cloth or a lathe within the following specifications, or recondition with #500 or #600 sandpaper (B).

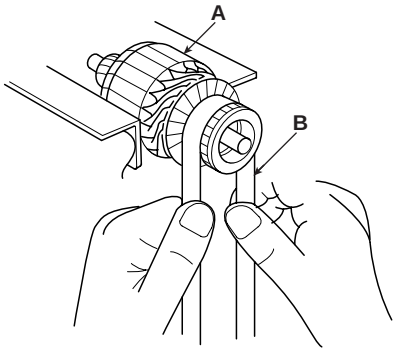

EBKD012B

5. Measure the commutator (A) runout.
   - If the commutator runout is within the service limit, check the commutator for carbon dust or brass chips between the segments.
   - If the commutator run out is not within the service limit, replace the armature.

Commutator runout Standard (New): 0.02mm (0.0008in.) max Service limit: 0.05mm (0.0020in.)

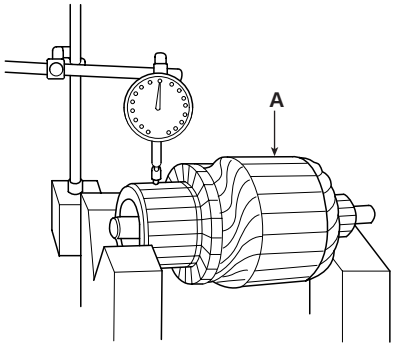

EBKD012D

6. Check the mica depth (A). If the mica is too high (B), undercut the mica with a hacksaw blade to the proper depth. Cut away all the mica (C) between the commutator segments. The undercut should not be too shallow, too narrow, or v-shaped (D).

Commutator mica depth Standard (New) : 0.5 mm (0.0197 in.) Limit : 0.2mm (0.0079 in.)

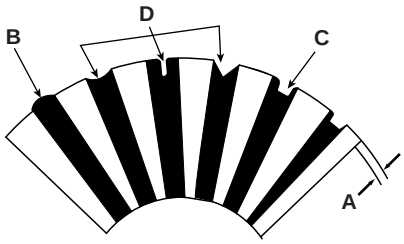

EBKD012E

7. Check for continuity between the segments of the commutator. If an open circuit exists between any segments, replace the armature.

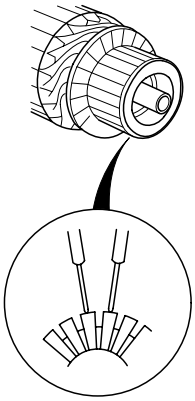

EBKD012F

8. Check with an ohmmeter that no continuity exists between the commutator (A) and armature coil core (B), and between the commutator and armature shaft (C). If continuity exists, replace the armature.

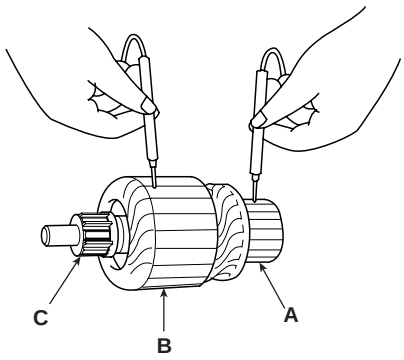

EBKD012G

INSPECT STARTER BRUSH

Brushes that are worm out, or oil-soaked, should be replaced.

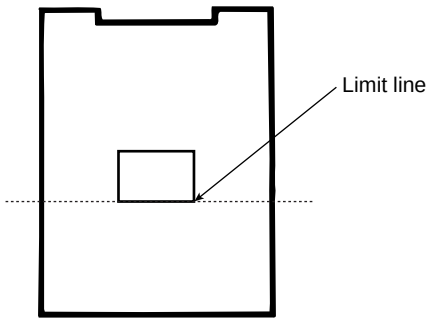

EBRF022A

STARTER BRUSH HOLDER TEST

1. Check that there is no continuity between the (+) brush holder (A) and (-) brush holder (B). If there is no continuity, replace the brush holder assembly.

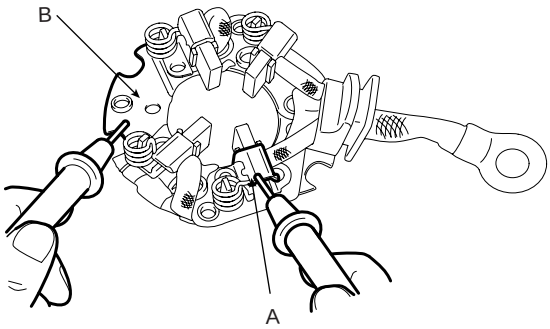

EBBD330A

2. Pry back each brush spring (A) with a screwdriver, then position the brush (B) about halfway out of its holder, and release the spring to hold it there.

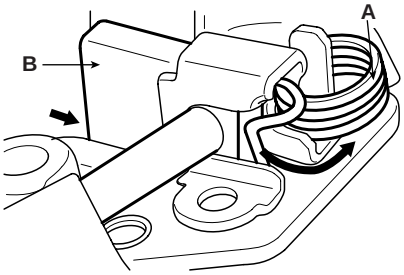

EBKD012K

3. Install the armature in the housing, and install the brush holder. Next, pry back each brush spring again, and push the brush down until it seats against the commutator, then release the spring against the end of the brush.

NOTE

To seat new brushes, slip a strip of #500 or #600 sandpaper, with the grit side up, between the commutator and each brush, and smoothly rotate the armature. The contact surface of the brushes will be sanded to the same contour as the commutator.

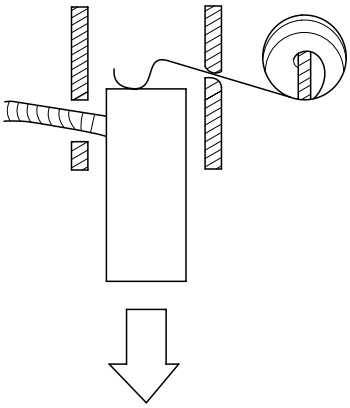

EBKD012I

INSPECT OVERRUNNING CLUTCH

1. Slide the overrunning clutch along the shaft. Replace it if does not slide smoothly.

2. Rotate the overrunning clutch both ways. Does it lock in one direction and rotate smoothly in reverse? If it does not lock in either direction of it locks in both directions, replace it.

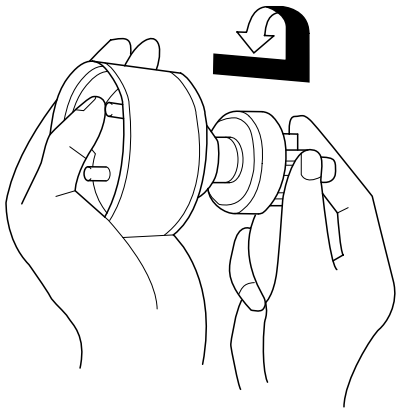

EBKD012J

3. If the starter drive gear is worn or damaged, replace the overrunning clutch assembly. (the gear is not available separately).
   Check the condition of the flywheel or torque converter ring gear if the starter drive gear teeth are damaged.

CLEANING

1. Do not immerse parts in cleaning solvent. Immersing the yoke assembly and/or armature will damage the insulation. Wipe these parts with a cloth only.

2. Do not immerse the drive unit in cleaning solvent. The overrun clutch is pre-lubricated at the factory and solvent will wash lubrication from the clutch.

3. The drive unit may be cleaned with a brush moistened with cleaning solvent and wiped dry with a cloth.

STARTER RELAY

INSPECTION EE48CFAA

1. Remove the fuse box cover.
2. Remove the starter relay.
3. Using an ohmmeter, check that there is continuity between each terminal.

Terminal	Continuity
30 - 87	NO
85 - 86	YES

4. Apply 12V to terminal 85 and ground to terminal 86. Check for continuity between terminals 30 and 87.

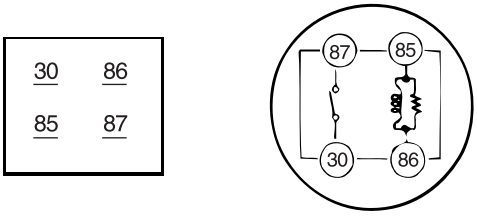

LDAD510B

5. If there is no continuity, replace the starter relay.
6. Install the starter relay.
7. Install the fuse box cover.