2010 GMC Sierra Owner Manual

In Brief 1-1
Instrument Panel 1-2
Initial Drive Information 1-6
Vehicle Features 1-23
Performance and Maintenance 1-32

Seats and Restraint System 2-1
Head Restraints 2-3
Front Seats 2-4
Rear Seats 2-14
Safety Belts 2-16
Child Restraints 2-39
Airbag System 2-73
Restraint System Check 2-94

Features and Controls 3-1
Keys 3-3
Doors and Locks 3-10
Windows 3-16
Theft-Deterrent Systems 3-19
Starting and Operating Your Vehicle 3-23
Mirrors 3-60
Object Detection Systems 3-64
Universal Home Remote System 3-73
Storage Areas 3-80
Sunroof 3-83

Instrument Panel 4-1
Instrument Panel Overview 4-3
Climate Controls 4-19
Warning Lights, Gauges, and Indicators 4-29
Driver Information Center (DIC) 4-50
Audio System(s) 4-85

Driving Your Vehicle 5-1
Your Driving, the Road, and the Vehicle 5-2
Towing 5-48

Service and Appearance Care 6-1
Service 6-4
Fuel 6-6
Checking Things Under the Hood 6-14
Rear Axle 6-54
Four-Wheel Drive 6-56
Front Axle 6-58
Noise Control System 6-59

Headlamp Aiming 6-60
Bulb Replacement 6-63
Windshield Wiper Blade Replacement 6-69
Tires 6-70
Appearance Care 6-121
Vehicle Identification 6-128
Electrical System 6-129
Capacities and Specifications 6-137

Maintenance Schedule 7-1
Maintenance Schedule 7-2

Customer Assistance Information 8-1
Customer Assistance and Information 8-2
Reporting Safety Defects 8-16
Vehicle Data Recording and Privacy 8-19

Index i-1

GENERAL MOTORS, GM, the GM Emblem, GMC, the GMC Truck Emblem, and the name SIERRA are registered trademarks of General Motors.

This manual describes features that may or may not be on your specific vehicle either because they are options that you did not purchase or due to changes subsequent to the printing of this owner manual. Please refer to the purchase documentation relating to your specific vehicle to confirm each of the features found on your vehicle. For vehicles first sold in Canada, substitute the name “General Motors of Canada Limited” for GMC Division wherever it appears in this manual.

If the vehicle has the DURAMAX® Diesel engine, refer to the DURAMAX® Diesel supplement for additional and specific information on this engine.

Keep this manual in the vehicle for quick reference.

Litho in U.S.A.
Part No. 25854759 B Second Printing

©2009 General Motors. All Rights Reserved.

Canadian Owners

Propriétaires Canadiens

A French language copy of this manual can be obtained from your dealer or from:

On peut obtenir un exemplaire de ce guide en français auprès du concessionnaire ou à l'adresse suivante:

Helm, Incorporated
P.O. Box 07130
Detroit, MI 48207

1-800-551-4123

Numéro de poste 6438 de langue française

www.helminc.com

Index

To quickly locate information about the vehicle, use the index in the back of the manual. It is an alphabetical list of what is in the manual and the page number where it can be found.

Safety Warnings and Symbols

Warning messages found on vehicle labels and in this manual describe hazards and what to do to avoid or reduce them.

Danger indicates a hazard with a high level of risk which will result in serious injury or death.

Warning or **Caution** indicates a hazard that could result in injury or death.

> ⚠ **WARNING:**
>
> These mean there is something that could hurt you or other people.

Notice: **This means there is something that could result in property or vehicle damage. This would not be covered by the vehicle's warranty.**

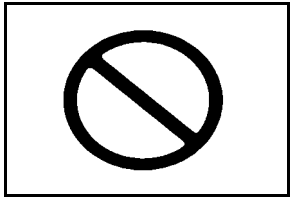

A circle with a slash through it is a safety symbol which means “Do Not,” “Do not do this,” or “Do not let this happen.”

Vehicle Symbols

The vehicle has components and labels that use symbols instead of text. Symbols are shown along with the text describing the operation or information relating to a specific component, control, message, gauge, or indicator.

: This symbol is shown when you need to see your owner manual for additional instructions or information.

: This symbol is shown when you need to see a service manual for additional instructions or information.

Vehicle Symbol Chart

Here are some additional symbols that may be found on the vehicle and what they mean. For more information on the symbol, refer to the index.

: Adjustable Pedals

: Airbag Readiness Light

: Air Conditioning

: Antilock Brake System (ABS)

: Audio Steering Wheel Controls or OnStar®

: Brake System Warning Light

: Charging System

: Cruise Control

: Engine Coolant Temperature

: Exterior Lamps

: Fog Lamps

: Fuel Gauge

: Fuses

: Headlamp High/Low-Beam Changer

: LATCH System Child Restraints

: Malfunction Indicator Lamp

: Oil Pressure

: Outside Power Foldaway Mirrors

: Power

: Remote Vehicle Start

: Safety Belt Reminders

: Tire Pressure Monitor

: Tow/Haul Mode

: Traction Control

: Windshield Washer Fluid

✍ NOTES

Section 1 In Brief

Instrument Panel 1-2
Instrument Panel (Base/Uplevel Version) 1-2
Instrument Panel (Premium Version) 1-4

Initial Drive Information 1-6
Remote Keyless Entry (RKE) System 1-6
Remote Vehicle Start 1-6
Door Locks 1-7
Windows 1-7
Seat Adjustment 1-9
Heated Seats 1-12
Head Restraint Adjustment 1-12
Safety Belt 1-13
Sensing System for Passenger Airbag 1-13
Mirror Adjustment 1-14
Steering Wheel Adjustment 1-16
Throttle and Brake Pedal Adjustment 1-16
Interior Lighting 1-17
Exterior Lighting 1-17
Windshield Wiper/Washer 1-18
Climate Controls 1-19
Transmission 1-20
Four-Wheel Drive 1-21

Vehicle Features 1-23
Radio(s) 1-23
Satellite Radio 1-25
Portable Audio Devices 1-25
Steering Wheel Controls 1-25
Bluetooth® 1-26
Navigation System 1-26
Driver Information Center (DIC) 1-27
Cruise Control 1-28
Rear Vision Camera (RVC) 1-29
Ultrasonic Parking Assist 1-29
Power Outlets 1-29
Universal Remote System 1-30
Sunroof 1-30

Performance and Maintenance 1-32
StabiliTrak® 1-32
Tire Pressure Monitor 1-32
Engine Oil Life System 1-33
Fuel E85 (85% Ethanol) 1-33
Driving for Better Fuel Economy 1-34
Roadside Assistance Program 1-34
OnStar® 1-35

Instrument Panel

Instrument Panel (Base/Uplevel Version)

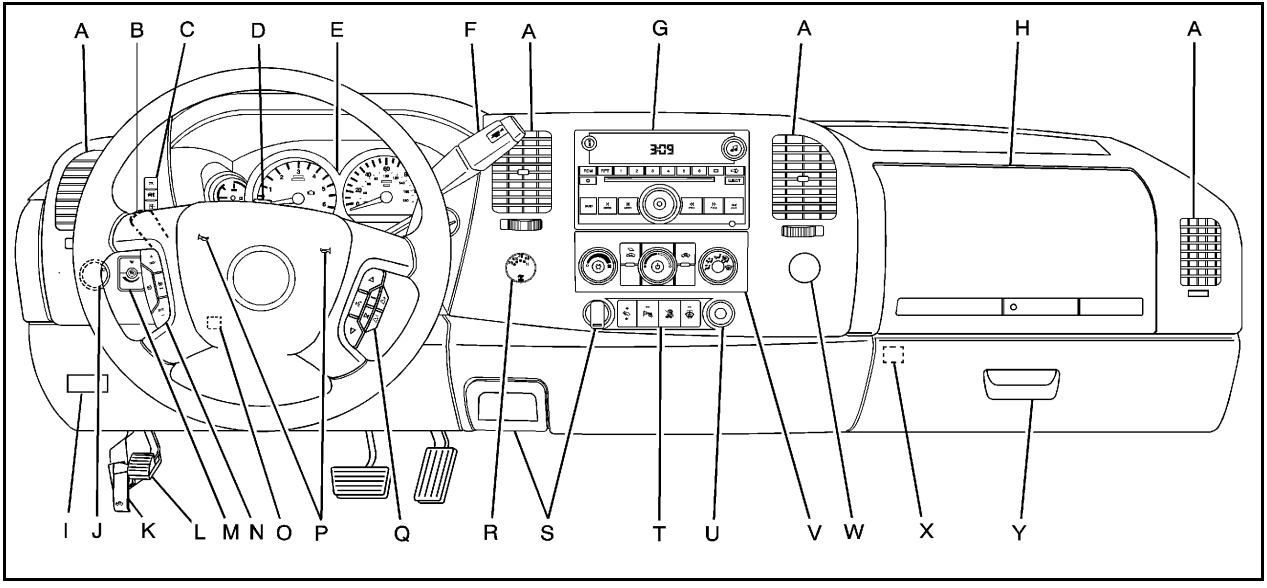

A. *Outlet Adjustment on page 4-29*.

B. *Turn Signal/Multifunction Lever on page 4-4*.

C. Driver Information Center (DIC) Buttons. See *Driver Information Center (DIC) on page 4-50*.

D. *Hazard Warning Flashers on page 4-3*.

E. *Instrument Panel Cluster on page 4-30*.

F. Shift Lever. See *Automatic Transmission Operation on page 3-30*. Tow/Haul Selector Button (If Equipped). See *Tow/Haul Mode on page 3-36*. Range Selection Mode (Allison Transmission and Hydra-Matic® 6-Speed Button (If Equipped). See *Automatic Transmission Operation on page 3-30*.

G. *Audio System(s) on page 4-85*.

H. *Instrument Panel Storage on page 3-81*.

I. Integrated Trailer Brake Controller (If Equipped). See *Towing a Trailer on page 5-55*.

J. *Exterior Lamps on page 4-10*.

K. *Hood Release on page 6-15*.

L. *Parking Brake on page 3-54*.

M. *Dome Lamp Override on page 4-15*. *Dome Lamps on page 4-15*. *Fog Lamps on page 4-14* (If Equipped).

N. *Cruise Control on page 4-7*.

O. *Tilt Wheel on page 4-3*.

P. *Horn on page 4-3*.

Q. *Audio Steering Wheel Controls on page 4-148* (If Equipped).

R. Automatic Transfer Case Control (If Equipped). See *Four-Wheel Drive on page 3-39*.

S. Ashtray (If Equipped). See *Ashtray(s) and Cigarette Lighter on page 4-19*.

T. *StabiliTrak® System on page 5-6* (If Equipped). *Ultrasonic Rear Parking Assist (URPA) on page 3-64* (If Equipped). Pedal Adjust Button (If Equipped). See *Adjustable Throttle and Brake Pedal on page 3-28*. Heated Windshield Washer Fluid Button (If Equipped). *Windshield Washer on page 4-7*.

U. *Accessory Power Outlet(s) on page 4-17*.

V. *Climate Control System (With Heater Only) on page 4-19* or *Climate Control System (With Air Conditioning) on page 4-20* and *Dual Automatic Climate Control System on page 4-23*.

W. Power Take Off (PTO) Control (If Equipped). See Power Take Off (PTO) in the Duramax Diesel Supplement Index.

X. Passenger Airbag Off Control (If Equipped). See *Airbag Off Switch on page 2-83*.

Y. *Glove Box on page 3-80*.

Instrument Panel (Premium Version)

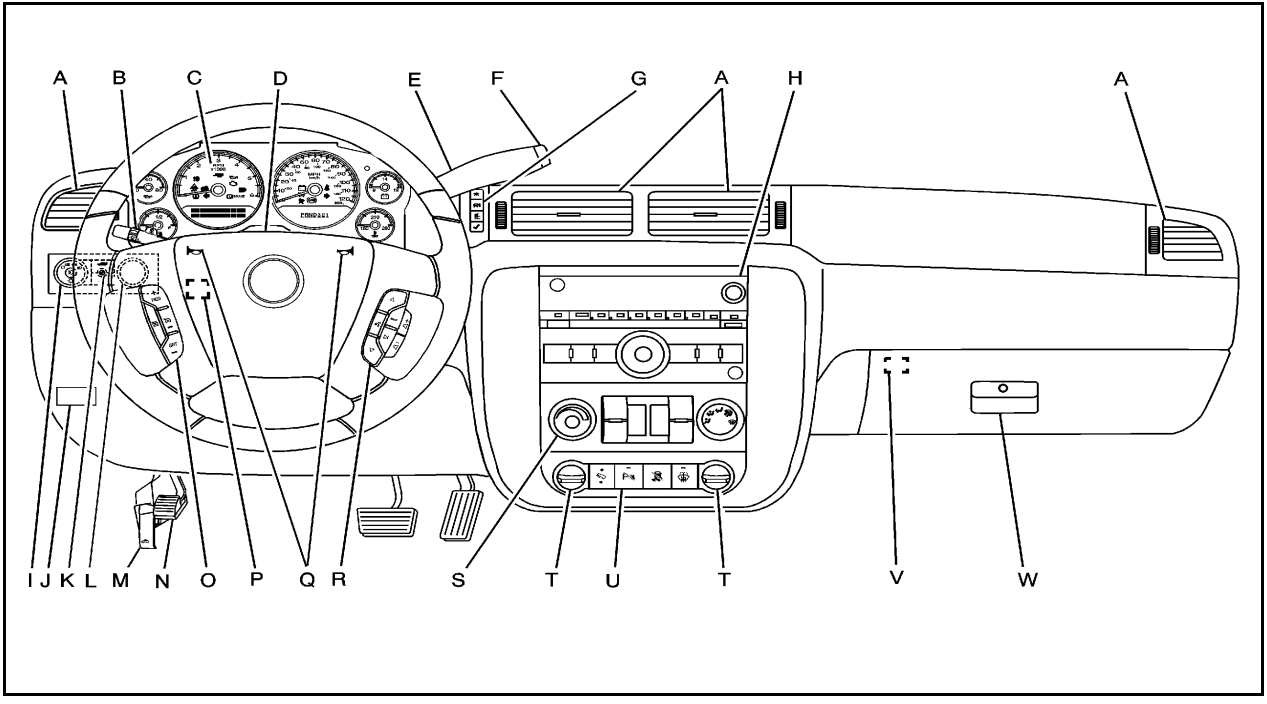

A. *Outlet Adjustment on page 4-29*.

B. *Turn Signal/Multifunction Lever on page 4-4*.

C. *Instrument Panel Cluster on page 4-30*.

D. *Hazard Warning Flashers on page 4-3*.

E. Shift Lever. See *Automatic Transmission Operation on page 3-30*.

F. *Tow/Haul Mode on page 3-36* (If Equipped).

G. Driver Information Center (DIC) Buttons. See *Driver Information Center (DIC) on page 4-50*.

H. *Audio System(s) on page 4-85*.

I. *Exterior Lamps on page 4-10*.

J. Integrated Trailer Brake Controller (If Equipped). See *Towing a Trailer on page 5-55*.

K. *Dome Lamp Override on page 4-15*. *Dome Lamps on page 4-15*.

L. Automatic Transfer Case Control. (If Equipped). See *Four-Wheel Drive on page 3-39*.

M. *Hood Release on page 6-15*.

N. *Parking Brake on page 3-54*.

O. *Cruise Control on page 4-7*.

P. *Tilt Wheel on page 4-3*.

Q. *Horn on page 4-3*.

R. *Audio Steering Wheel Controls on page 4-148*.

S. *Climate Control System (With Heater Only) on page 4-19* or *Climate Control System (With Air Conditioning) on page 4-20* or *Dual Automatic Climate Control System on page 4-23* (If Equipped).

T. *Accessory Power Outlet(s) on page 4-17*. Cigarette Lighter (If Equipped). See *Ashtray(s) and Cigarette Lighter on page 4-19*.

U. *StabiliTrak® System on page 5-6* (If Equipped). Pedal Adjust Button (If Equipped). See *Adjustable Throttle and Brake Pedal on page 3-28*. *Ultrasonic Rear Parking Assist (URPA) on page 3-64* (If Equipped). Heated Windshield Washer Fluid Button (If Equipped). See *Windshield Washer on page 4-7*.

V. Passenger Airbag Off Control (If Equipped). See *Airbag Off Switch on page 2-83*.

W. *Glove Box on page 3-80*.

Initial Drive Information

This section provides a brief overview about some of the important features that may or may not be on your specific vehicle.

For more detailed information, refer to each of the features which can be found later in this owner manual.

Remote Keyless Entry (RKE) System

The RKE transmitter is used to remotely lock and unlock the doors from up to 60 m (195 feet) away from the vehicle.

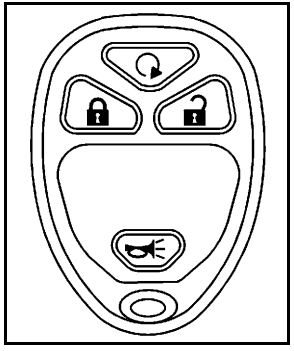

Press to unlock the driver door.
Press again within three seconds to unlock all remaining doors.

Press to lock all doors.

Lock and unlock feedback can be personalized.

Press and release to locate the vehicle.

Press and hold for more than two seconds to sound the panic alarm.

Press again to cancel the panic alarm.

See *Keys on page 3-3* and *Remote Keyless Entry (RKE) System Operation on page 3-5*.

Remote Vehicle Start

With this feature the engine can be started from outside of the vehicle.

Starting the Vehicle

1. Aim the RKE transmitter at the vehicle.
2. Press .
3. Immediately after completing Step 2, press and hold until the turn signal lamps flash.

When the vehicle starts, the parking lamps will turn on and remain on as long as the engine is running. The doors will be locked and the climate control system may come on.

The engine will continue to run for 10 minutes. Repeat the steps for a 10-minute time extension. Remote start can be extended only once.

Canceling a Remote Start

To cancel a remote start:

- Aim the RKE transmitter at the vehicle and press and hold until the parking lamps turn off.
- Turn on the hazard warning flashers.
- Turn the ignition on and then back off.

See *Remote Vehicle Start on page 3-7*.

Door Locks

There are several ways to lock and unlock the vehicle.

From outside, use the Remote Keyless Entry (RKE) transmitter or the key in the driver door. From inside, use the power door locks or the manual door locks. To lock or unlock the door with the manual locks, push down or pull up on the manual lock knob.

Power Door Locks

If available, these switches are located on the front doors.

: Press to unlock the doors.

: Remove the key from the ignition and press to lock the doors.

For more information, see:

- *Programmable Automatic Door Locks on page 3-11*.
- *Rear Door Security Locks on page 3-12*.

Windows

Turn the hand crank on each door to manually raise or lower the manual windows.

Power Windows

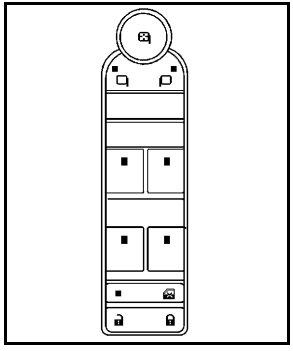

Crew Cab Shown

If available, the power window switches are located on each of the side doors in the front and rear, if equipped.

The driver door has a switch for the passenger window and rear windows as well.

Press the switch to lower the window. Pull the switch up to raise it.

For more information, see:

- *Windows on page 3-16*.
- *Power Windows on page 3-17*.

Power Sliding Rear Window

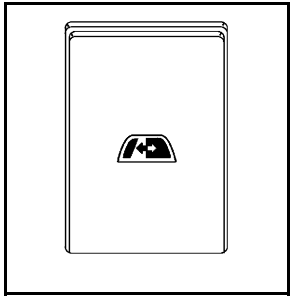

On vehicles with a power sliding rear window, the switch is located in the overhead console.

The power sliding rear window cannot be operated manually. Push or pull the switch to open or close the window.

Seat Adjustment

Front Seats

Manual Seats

If the vehicle has a manual seat, it can be moved forward or rearward.

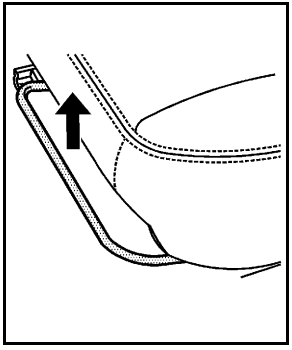

1. Lift the bar to unlock the seat.
2. Slide the seat to the desired position and release the bar.

Try to move the seat with your body to be sure the seat is locked in place.

See *Manual Seats on page 2-4*.

Power Seats

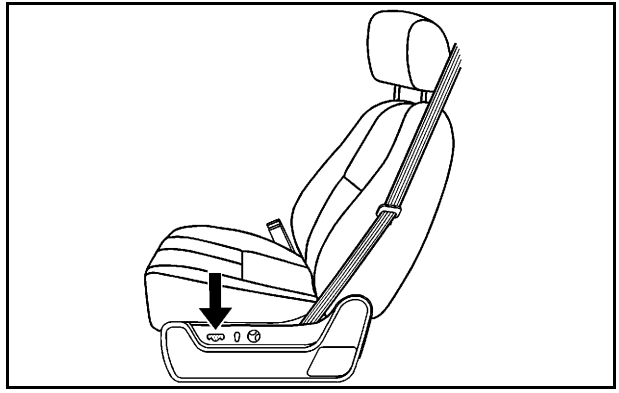

If equipped, the power seat controls are located on the outboard side of the front seats.

Move the seat forward or rearward by sliding the control forward or rearward.

Raise or lower the front or rear part of the cushion by moving the front or rear part of the control up or down.

Raise or lower the entire seat by moving the entire control up or down.

See *Power Seats on page 2-5*.

Manual Lumbar

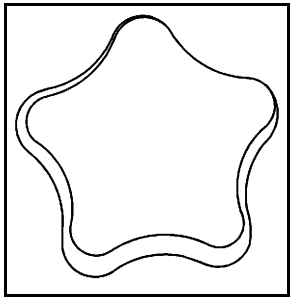

If equipped, this control is located on the outboard side of the seat.

Increase or decrease lumbar support by turning the knob forward or rearward.

Power Lumbar

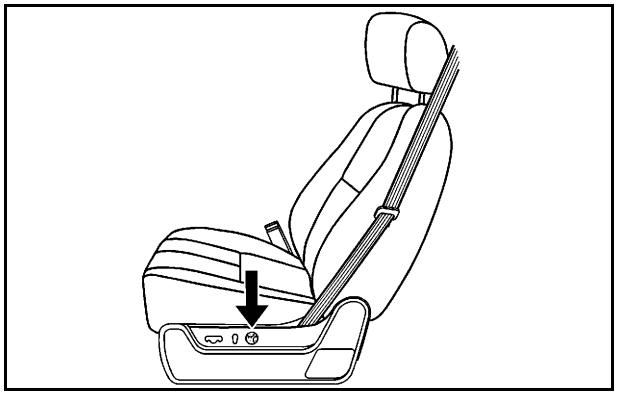

If equipped, this control is located on the outboard side of the seat.

On vehicles with two-way lumbar, press and hold the top of the control to increase lumbar support. To decrease, press and hold the bottom of the control.

On vehicles with four-way lumbar, press and hold the front of the control to increase lumbar support. To decrease, press and hold the rear of the control. To raise the height of the support, press and hold the top of the control. To lower, press and hold the bottom of the control. See *Power Lumbar on page 2-7*.

Manual Reclining Seatbacks

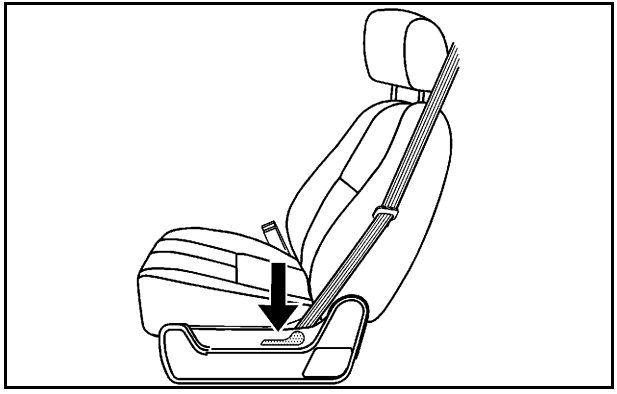

If equipped, this control is located on the outboard side of the seat.

To recline the seatback:

1. Lift the recline lever.
2. Move the seatback to the desired position, then release the lever to lock the seatback in place.
3. Push and pull on the seatback to make sure it is locked.

See *Reclining Seatbacks on page 2-10*.

Power Reclining Seatbacks

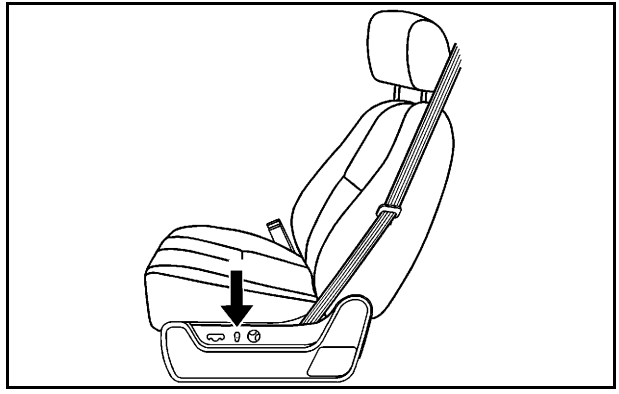

If available, this control is located on the outboard side of the seat.

To recline the seatback, tilt the top of the control rearward.

To bring the seatback forward, tilt the top of the control forward.

See *Reclining Seatbacks on page 2-10*.

Memory Features

This vehicle may have the memory package.

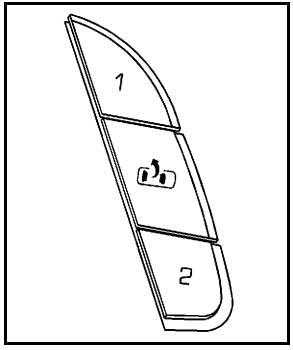

The controls for this feature are located on the driver door, and are used to program and recall memory settings for the driver seat, outside mirrors, and the adjustable throttle and brake pedal feature.

For more information, see *Memory Seat, Mirrors, and Pedals on page 2-8*.

Heated Seats

On vehicles with heated front seats, the controls are located on the driver and passenger doors.

: Press to heat the seatback only.

: Press to heat the seat and seatback.

The light on the button will come on to indicate that the feature is working. Press the button to cycle through the temperature settings of high, medium, and low and to turn the heat to the seat off. Indicator lights will show the level of heat selected: three for high, two for medium, and one for low.

See *Heated Seats on page 2-8*.

Head Restraint Adjustment

Do not drive until the head restraints for all occupants are installed and adjusted properly.

For more information see *Head Restraints on page 2-3*.

Safety Belt

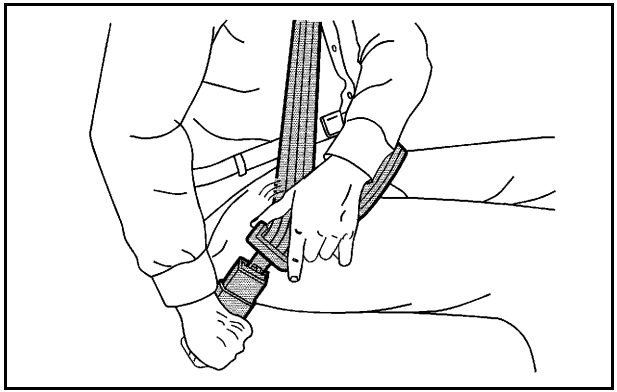

Refer to the following sections for important information on how to use safety belts properly.

- *Safety Belts: They Are for Everyone on page 2-16*.
- *How to Wear Safety Belts Properly on page 2-21*.
- *Lap-Shoulder Belt on page 2-30*.
- *Lower Anchors and Tethers for Children (LATCH) on page 2-49*.

Sensing System for Passenger Airbag

The passenger sensing system, if equipped, turns off the right front passenger frontal airbag under certain conditions. The driver airbags, seat-mounted side impact airbags and roof-rail airbags are not affected by this.

If the vehicle has one of the indicators pictured in the following illustrations, then the vehicle has a passenger sensing system for the right front passenger position unless there is an airbag off switch located in the glove box.

If there is an airbag off switch, the vehicle does not have a passenger sensing system. See *Airbag Off Switch on page 2-83* for more information.

The passenger airbag status indicator will be visible on the overhead console when the vehicle is started.

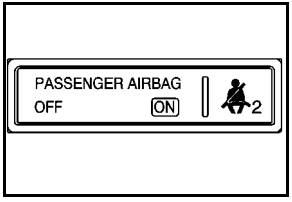

United States

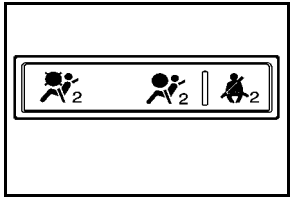

Canada

See *Passenger Sensing System on page 2-86* for important information.

Mirror Adjustment

Exterior Mirrors

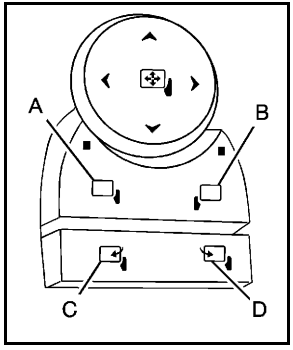

Vehicles with outside power mirrors and foldaway mirrors have controls located on the driver door.

1. Press (A) or (B) to select the driver or passenger side mirror.
2. Press one of the four arrows located on the control pad to adjust the mirror.
3. Press either (A) or (B) again to deselect the mirror.

Power Foldaway Mirrors

To fold the mirrors:

1. Press (C) to fold the mirrors out to the driving position.
2. Press (D) to fold the mirrors in to the folded position.

Vehicles with manual outside mirrors can be adjusted for a clearer view.

If the vehicle has towing mirrors, they can be adjusted for a clearer view of the objects behind you. Manually pull out the mirror head to extend it for better visibility when towing a trailer. See *Outside Towing Mirrors on page 3-61*.

Manual Foldaway Mirrors

Manually fold the mirrors inward to prevent damage when going through an automatic car wash. To fold, push the mirror toward the vehicle. Push the mirror outward, to return to its original position.

Interior Mirror

Vehicles with a manual rearview mirror can be adjusted to see clearly behind the vehicle. Hold the mirror in the center to move it up or down and side to side. To reduce headlamp glare during nighttime use, push the tab forward for daytime use and pull it for nighttime use.

Vehicles with the automatic dimming feature will automatically reduce the glare of lights from behind the vehicle. The dimming feature comes on and the indicator light illuminates each time the vehicle is started.

See *Automatic Dimming Rearview Mirror on page 3-60* for more information.

Steering Wheel Adjustment

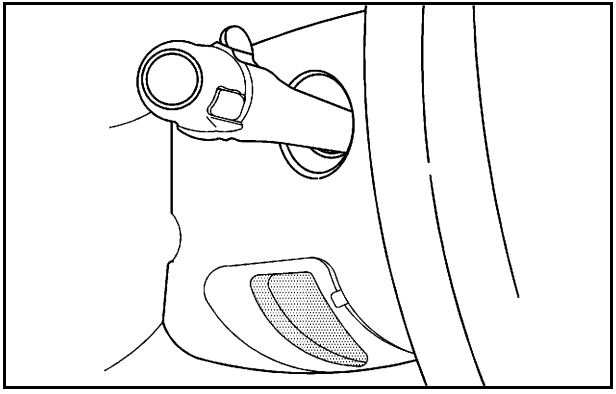

The tilt lever is located on the lower left side of the steering column.

To adjust the steering wheel:

1. Hold the steering wheel and pull the lever.
2. Move the steering wheel to a comfortable position.
3. Release the lever to lock the wheel in place.

See *Tilt Wheel on page 4-3*.

Throttle and Brake Pedal Adjustment

On vehicles with this feature, you can change the position of the throttle and brake pedals.

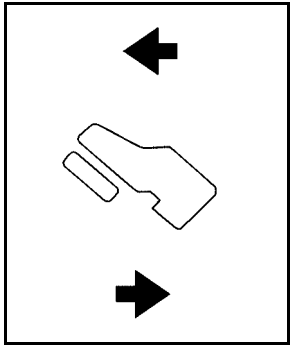

The switch used to adjust the pedals is located on the instrument panel below the climate control system.

Press the arrow at the bottom of the switch to move the pedals closer to your body. Press the arrow at the top of the switch to move the pedals away from your body.

See *Adjustable Throttle and Brake Pedal on page 3-28*.

Interior Lighting

Dome Lamps

The dome lamps come on when any door is opened. They turn off after all the doors are closed.

The dome lamps can also be turned on by turning the instrument panel brightness knob, located on the instrument panel to the left of the steering column, clockwise to the farthest position. In this position, the dome lamps remain on whether a door is opened or closed.

DOME OFF **:** The dome lamp override button is located next to the exterior lamps control.

Press the button in and the dome lamps remain off when a door is opened. Press the button again to return it to the extended position so that the dome lamps come on when a door is opened.

Reading Lamps

For vehicles with reading lamps in the overhead console, press the button located next to the lamp to turn it on or off.

The vehicle may also have reading lamps in other locations. The lamps cannot be adjusted.

For more information about interior lamps, see:

- *Dome Lamps on page 4-15*.
- *Reading Lamps on page 4-16*.
- *Instrument Panel Brightness on page 4-15*.

Exterior Lighting

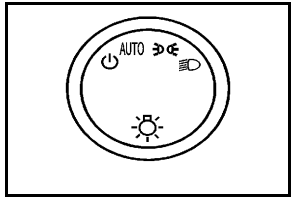

The exterior lamps control is located on the instrument panel to the left of the steering wheel.

⏻ **:** Turns off the automatic headlamps and daytime running lamps (DRL). Turn the headlamp control to the off position again to turn the automatic headlamps or DRL back on.

For vehicles first sold in Canada, the off position will only work when the vehicle is shifted into P (Park).

AUTO: Automatically turns on the headlamps, parking lamps, taillamps, instrument panel lights, and license plate lamps.

: Turns on the parking lamps, taillamps, instrument panel lights, and license plate lamps.

: Turns on the headlamps, parking lamps, taillamps, instrument panel lights, and license plate lamps.

For more information, see:

- *Exterior Lamps on page 4-10*.
- *Daytime Running Lamps (DRL) on page 4-12*.
- *Fog Lamps on page 4-14*.

Windshield Wiper/Washer

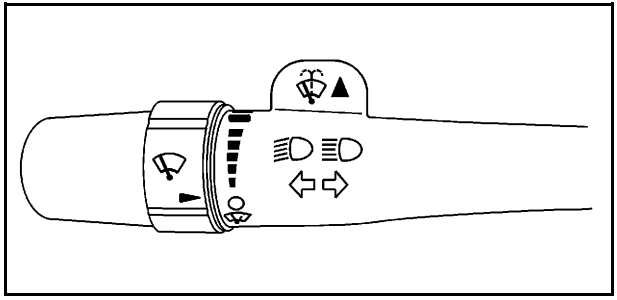

: Single wipe, turn to , then release. Several wipes, hold the band on longer.

: Turns the windshield wipers off.

: Turn the band up for more frequent wipes or down for less frequent wipes.

: Slow wipes.

: Fast wipes.

(Washer Fluid): Push the paddle at the top of the lever to spray washer fluid on the windshield.

See *Windshield Wipers on page 4-6* and *Windshield Washer on page 4-7*.

Climate Controls

These systems control the heating, cooling, and ventilation.

Climate Control System (With Air Conditioning)

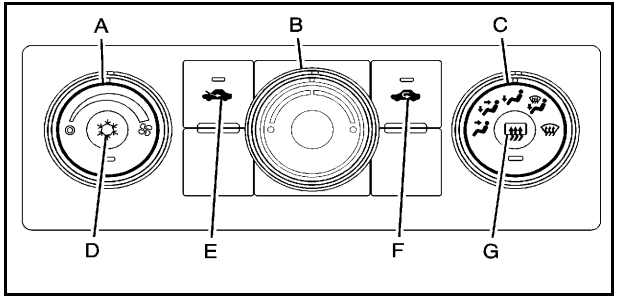

A. Fan Control
B. Temperature Control
C. Air Delivery Mode Control
D. Air Conditioning
E. Outside Air
F. Air Recirculation
G. Rear Window Defogger

Climate Control System (With Heater Only)

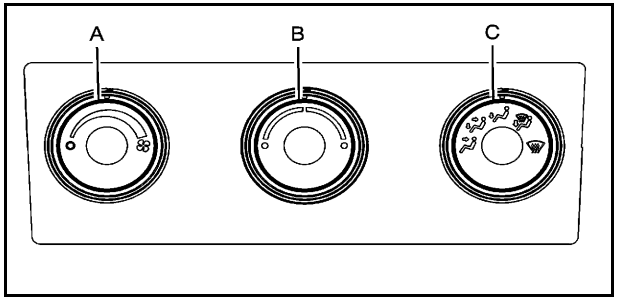

A. Fan Control
B. Temperature Control
C. Air Delivery Mode Control

Dual Automatic Climate Control System

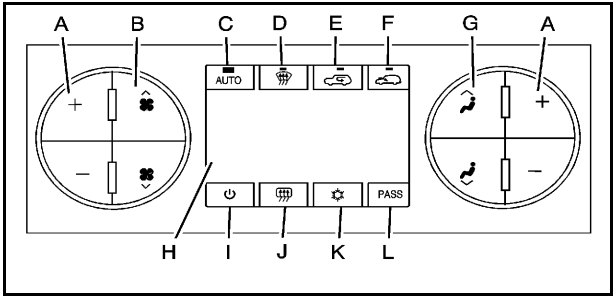

A. Driver and Passenger Temperature Controls
B. Fan Control
C. AUTO
D. Defrost
E. Air Recirculation
F. Outside Air
G. Air Delivery Mode Control
H. Display
I. Power Button
J. Rear Window Defogger
K. Air Conditioning
L. PASS (Passenger)

See *Climate Control System (With Heater Only) on page 4-19* or *Climate Control System (With Air Conditioning) on page 4-20* and *Dual Automatic Climate Control System on page 4-23*.

Transmission

Range Selection Mode

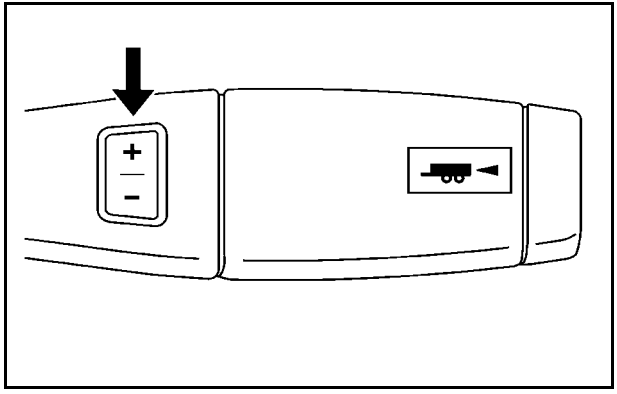

The Range Selection Mode switch is located on the shift lever. To enable the Range Selection feature, move the column shift lever to the M (Manual) position. The current range will appear next to the M. This is the highest attainable range with all lower gears accessible. As an example, when 4 (Fourth) gear is selected, 1 (First) through 4 (Fourth) gears are available.

Press the plus/minus buttons, located on the steering column shift lever, to select the desired range of gears for current driving conditions. See *Automatic Transmission Operation on page 3-30*.

While using Range Selection Mode, cruise control and the Tow/Haul mode can be used.

Grade Braking is not available when Range Selection Mode is active. See *Tow/Haul Mode on page 3-36*.

Four-Wheel Drive

If the vehicle has Four-Wheel Drive, you can send the engine's driving power to all four wheels for extra traction.

Transfer Case Buttons

The vehicle will have one of these three styles of transfer case controls. Use these controls to shift into and out of the different Four-Wheel Drive modes.

Manual Transfer Case

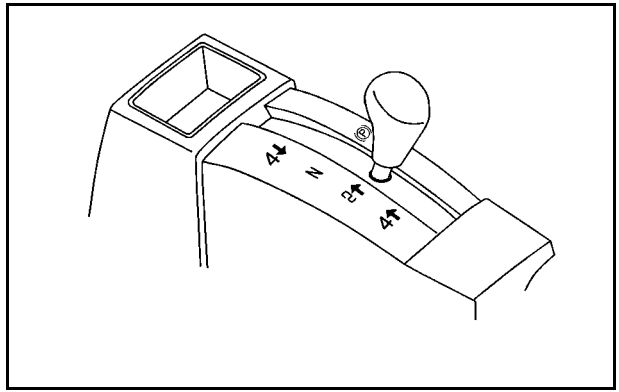

This transfer case shift lever is on the floor to the right of the driver.

Electronic Transfer Case

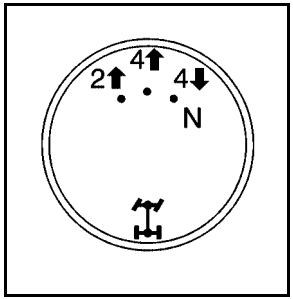

This transfer case knob is located next to the steering column.

Automatic Transfer Case

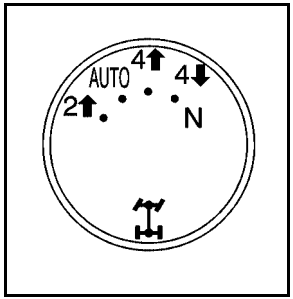

This transfer case knob is located next to the steering column.

Each transfer case design offers different drive options. The list below described the different drive options that may be available.

2 ↑ (Two-Wheel-Drive High): This setting is used for driving in most street and highway situations.

AUTO (Automatic Four-Wheel Drive): This setting is ideal for use when road surface traction conditions are variable.

4 ↑ (Four-Wheel High): Use the Four-Wheel-Drive High position when extra traction is needed, such as on snowy or icy roads or in most off-road situations.

N (Neutral): Shift the transfer case to Neutral only when towing the vehicle. See *Recreational Vehicle Towing on page 5-49* or *Towing a Trailer on page 5-55*.

4 ↓ (Four-Wheel-Drive Low): This setting sends maximum power to all four wheels. You might choose Four-Wheel-Drive Low if you are driving off-road in deep sand, deep mud, deep snow, and while climbing or descending steep hills.

See *Four-Wheel Drive on page 3-39*.

Vehicle Features

Radio(s)

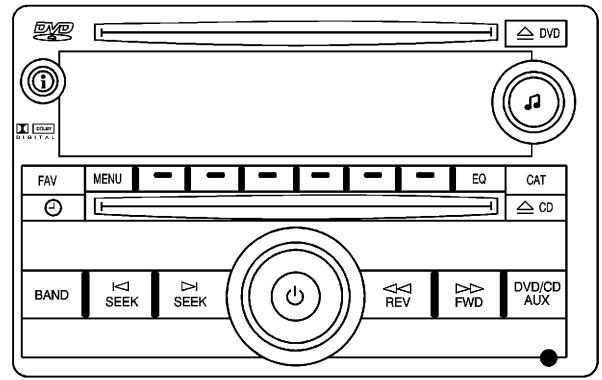

Radio with CD, DVD, and USB Port

⏻ **:** Press to turn the system on and off. Turn to increase or decrease the volume.

BAND: Press to choose between FM, AM, or XM™, if equipped.

♫ : Select radio stations.

⏮ ⏭ : Seek or scan stations.

ℹ : Press to display additional text information related to the current FM-RDS or XM station; or CD, MP3 or WMA song. If information is available during XM, CD, MP3 or WMA playback, the song title information displays on the top line of the display and artist information displays on the bottom line. When information is not available, “NO INFO” displays.

For more information about these and other radio features, see *Radio(s) on page 4-88*.

For vehicles with a Rear Seat Entertainment System (RSE) and Rear Seat Audio System (RSA) see, *Rear Seat Entertainment (RSE) System on page 4-136* and *Rear Seat Audio (RSA) on page 4-145* for more information.

Storing a Favorite Station

A maximum of 36 stations can be stored as favorites using the six softkeys located below the radio station frequency tabs and by using the radio FAV button. Press FAV to go through up to six pages of favorites, each having six favorite stations available per page. Each page of favorites can contain any combination of AM, FM, or XM stations.

For more information, see *Radio(s) on page 4-88*.

Setting the Clock

To set the time and date for the radio with CD, DVD, and USB Port:

1. Turn the ignition key to ACC/ACCESSORY or ON/RUN, then press ⏻, to turn the radio on.
2. Press 🕘 to display HR, MIN, MM, DD, YYYY (hour, minute, month, day, and year).
3. Press the softkey located under any one of the labels to be changed.
4. To increase or decrease the time or date, turn ♫ clockwise or counter-clockwise.

For detailed instructions on setting the clock for the vehicle's specific audio system, see *Setting the Clock on page 4-86*.

Satellite Radio

XM is a satellite radio service that is based in the 48 contiguous United States and 10 Canadian provinces. XM satellite radio has a wide variety of programming and commercial-free music, coast-to-coast, and in digital-quality sound.

A fee is required to receive the XM service.

For more information, refer to:

- www.xmradio.com or call 1-800-929-2100 (U.S.)
- www.xmradio.ca or call 1-877-438-9677 (Canada)

See “XM Satellite Radio Service” under *Radio(s) on page 4-88*.

Portable Audio Devices

This vehicle may have an auxiliary input located on the radio faceplate and a USB port located in the center console or the dashboard. External devices such as iPod®, laptop computers, MP3 players, CD changers, USB storage device, etc. can be connected to the auxiliary port using a 3.5 mm (1/8 in) input cable or the USB port depending on the audio system.

See “Using the Auxiliary Input Jack” and “Using the USB Port” under *Radio(s) on page 4-88*.

Steering Wheel Controls

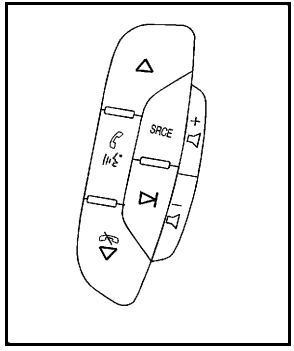

For vehicles with audio steering wheel controls, some audio controls can be adjusted at the steering wheel.

△ / ▽ : Press to change favorite radio stations, select tracks on a CD/DVD, or to navigate tracks or folders on an iPod® or USB device.

: Press to silence the vehicle speakers only. Press again to turn the sound on. Press and hold longer than two seconds to interact with OnStar® or Bluetooth systems, if equipped.

+ – : Increases or decreases volume.

: Press to reject an incoming call, or to end a call.

SRCE: Press to switch between the radio, CD, and for vehicles with, DVD, front auxiliary, and rear auxiliary.

: Press to seek the next radio station, the next track or chapter while sourced to the CD or DVD slot, or to select tracks and folders on an iPod® or USB device.

For more information, see *Audio Steering Wheel Controls on page 4-148*.

Bluetooth®

For vehicles with an in-vehicle Bluetooth system, it allows users with a Bluetooth enabled cell phone to make and receive hands-free calls using the vehicle's audio system and controls.

The Bluetooth enabled cell phone must be paired with the in-vehicle Bluetooth system before it can be used in the vehicle. Not all phones will support all functions. For more information visit www.gm.com/bluetooth.

For more information, see *Bluetooth® on page 4-125*.

Navigation System

The vehicle's navigation system provides detailed maps of most major freeways and roads throughout the United States and Canada. After a destination has been set, the system provides turn-by-turn instructions for reaching the destination. In addition, the system can help locate a variety of points of interest (POI), such as banks, airports, restaurants, and more.

See the vehicle's Navigation System manual for more information.

Driver Information Center (DIC)

The DIC display is located at the bottom of the instrument panel cluster. It shows the status of many vehicle systems and enables access to the personalization menu.

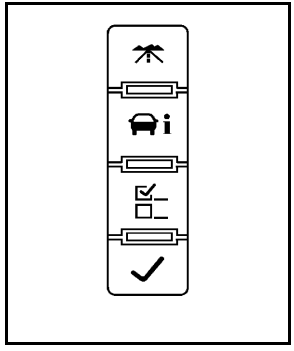

The DIC buttons are located on the instrument panel, next to the steering wheel.

Some vehicles do not have the buttons shown, however some of the menus can be viewed by using the trip odometer reset stem.

: Press this button to display the odometer, trip odometer, fuel range, average economy, fuel used, timer, and transmission temperature. The compass and outside air temperature will also be shown in the display. The temperature will be shown in °F or °C depending on the units selected.

: Press this button to display the oil life, units, tire pressure readings for vehicles with the Tire Pressure Monitor System (TPMS), trailer brake gain and output information for vehicles with the Integrated Trailer Brake Control (ITBC) system, engine hours, Remote Keyless Entry (RKE) transmitter programming, compass zone setting, and compass recalibration.

: Press this button to customize the feature settings on your vehicle. See *DIC Vehicle Customization (With DIC Buttons) on page 4-76* for more information.

✓ : Press this button to set or reset certain functions and to turn off or acknowledge messages on the DIC.

For more information, see *Driver Information Center (DIC) on page 4-50*.

Vehicle Customization

Some vehicle features can be programmed by using the DIC buttons next to the steering wheel. These features include:

- Language
- Door Lock and Unlock Settings
- RKE Lock and Unlock Feedback
- Lighting
- Chime Volume
- Memory Features
- Remote Start
- Digital Speedometer Display

See *DIC Vehicle Customization (With DIC Buttons) on page 4-76*.

Cruise Control

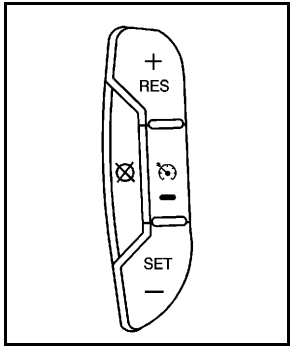

The cruise control buttons are located on left side of the steering wheel.

: Turns the system on or off. The indicator light is on when cruise control is on and turns off when cruise control is off.

+ RES : Press briefly to make the vehicle resume to a previously set speed, or press and hold to accelerate.

SET − : Press to set the speed and activate cruise control or make the vehicle decelerate.

: Press to disengage cruise control without erasing the set speed from memory.

See *Cruise Control on page 4-7*.

Rear Vision Camera (RVC)

The rear vision camera displays a view of the area behind the vehicle when the vehicle is shifted into R (Reverse) on the inside rear view mirror or the navigation screen, if equipped.

To clean the camera lens, located in the bezel for the tailgate handle, rinse it with water and wipe it with a soft cloth.

For more information, see *Rear Vision Camera (RVC) on page 3-67*.

Ultrasonic Parking Assist

This feature uses sensors on the rear bumper to detect objects while parking the vehicle. URPA comes on automatically when the shift lever is moved into R (Reverse) and operates at speeds less than 8 km/h (5 mph). URPA uses audio beeps to provide distance and system information.

Keep the sensors on the vehicle's rear bumper clean to ensure proper operation.

The system can be disabled by pressing the rear park aid disable button located next to the radio.

See *Ultrasonic Rear Parking Assist (URPA) on page 3-64* for more information.

Power Outlets

Accessory power outlets can be used to connect auxiliary electrical equipment, such as a cellular telephone.

The vehicle may have two accessory power outlets located below the climate control system, or may have one accessory power outlet and one cigarette lighter. The cigarette lighter is designed to fit only in the receptacle closest to the driver.

There may be another accessory power outlet in the rear cargo area. If the vehicle has a floor console, there is an accessory power outlet inside the storage bin and one on the rear of the floor console.

The accessory power outlets are powered, even when the ignition is in LOCK/OFF. Continuing to use power outlets while the ignition is in LOCK/OFF may cause the vehicle's battery to run down.

See *Accessory Power Outlet(s) on page 4-17*.

Universal Remote System

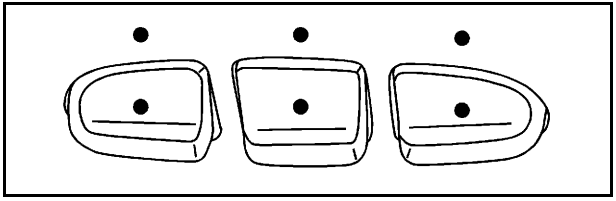

The Universal Home Remote System allows for garage door openers, security systems, and home automation devices to be programmed to work with these buttons in the vehicle.

See *Universal Home Remote System on page 3-73*.

Sunroof

Extended Cab

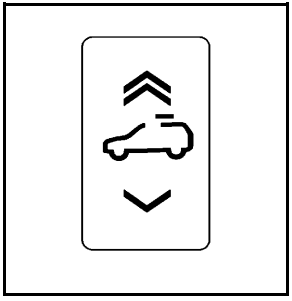

The sunroof switch is located on the headliner above the rearview mirror.

Vent: From the closed position, press and hold the rear of the switch to vent the sunroof.

Open: From the vent position, press and hold the rear of the switch to open the sunroof.

Close: Press and hold the front of the switch to close the sunroof.

The sunroof also has a roller sunshade that can be used to block the rays of the sun. To open the sunshade, press and unlatch it, and roll it back. To close, pull it forward and latch it into the closed position.

Crew Cab

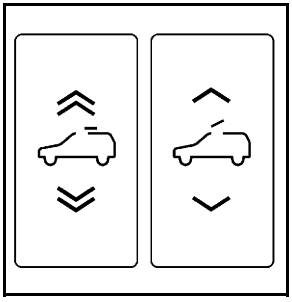

There are two sunroof switches located in the overhead console above the rearview mirror.

Vent: From the closed position, press the rear of the passenger side switch to vent the sunroof.

Manual-Open/Manual-Close: To open the sunroof, press and hold the rear of the driver side switch until the sunroof reaches the desired position. Press and hold the front of the driver side switch to close it.

Express-Open/Express-Close: To express-open the sunroof, fully press and release the rear of the driver side switch until the sunroof reaches the desired position. To express-close the sunroof, fully press and release the front of the driver side switch. Press the switch again to stop it.

The sunroof also has a sunshade that you can pull forward to block the rays of the sun. The sunshade must be opened and closed manually.

See *Sunroof on page 3-83*.

Performance and Maintenance

StabiliTrak®

The vehicle may have a traction control system that limits wheel spin and the StabiliTrak system that assists with directional control of the vehicle in difficult driving conditions. Both systems turn on automatically every time the vehicle is started.

- To turn off traction control, press and release on the instrument panel. illuminates and the appropriate DIC message displays. See *DIC Warnings and Messages on page 4-66*.
- To turn off both traction control and Electronic Stability Control, press and hold until illuminates and the appropriate DIC message displays. See *DIC Warnings and Messages on page 4-66*.
- Press and release the button again to turn on both systems.

For more information, see *StabiliTrak® System on page 5-6*.

Tire Pressure Monitor

This vehicle may have a Tire Pressure Monitor System (TPMS).

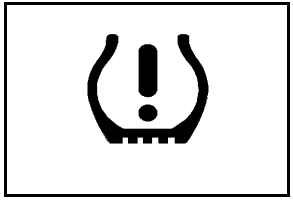

The Tire Pressure Monitor alerts you when a significant reduction in pressure occurs in one or more of the vehicle's tires by illuminating the low tire pressure warning light on the instrument cluster.

If the warning light comes on, stop as soon as possible and inflate the tires to the recommended pressure shown on the tire loading information label located on the driver side center pillar (B pillar). See *Loading the Vehicle on page 5-33*. The warning light will remain on until the tire pressure is corrected.

You may notice during cooler conditions that the low tire pressure warning light will appear when the vehicle is first started and then turn off as you drive. This may be an early indicator that your tire pressures are getting low and the tires need to be inflated to the proper pressure.

The Tire Pressure Monitor can alert you about low tire pressure, but it does not replace normal monthly tire maintenance. It is the driver's responsibility to maintain correct tire pressures.

See *Tire Pressure Monitor System on page 6-83* and *Tire Pressure Monitor Operation on page 6-84*.

Engine Oil Life System

The engine oil life system calculates engine oil life based on vehicle use and, on most vehicles, displays a DIC message when it is necessary to change the engine oil and filter. The oil life system should be reset to 100% only following an oil change.

Resetting the Oil Life System

To reset the Engine Oil Life System on most vehicles:

1. Display the OIL LIFE REMAINING on the DIC. If the vehicle does not have DIC buttons, the vehicle must be in P (Park) to access this display.
2. Press and hold the SET/RESET button on the DIC, or the trip odometer reset stem if the vehicle does not have DIC buttons, for more than five seconds. The oil life will change to 100%.

On all vehicles, the Engine Oil Life System can be reset as follows:

1. Turn the ignition to ON/RUN with the engine off
2. Fully press the accelerator pedal slowly three times within five seconds.
3. Display the OIL LIFE REMAINING on the DIC. If the display shows 100%, the system is reset.

See *Engine Oil Life System on page 6-20*.

Fuel E85 (85% Ethanol)

Vehicles that have the 5.3L V8 engine (VIN Code 0), the 5.3L V8 engine (VIN Code 3), the 6.0L V8 engine (VIN Code J), or the 6.2L V8 engine (VIN Code 2) have a yellow fuel cap and can use either unleaded gasoline or ethanol fuel containing up to 85% ethanol (E85).
See *Gasoline Octane on page 6-7* and *Fuel E85 (85% Ethanol) on page 6-10*.

Driving for Better Fuel Economy

Driving habits can affect fuel mileage. Here are some driving tips to get the best fuel economy possible.

- Avoid fast starts and accelerate smoothly.
- Brake gradually and avoid abrupt stops.
- Avoid idling the engine for long periods of time.
- When road and weather conditions are appropriate, use cruise control, if equipped.
- Always follow posted speed limits or drive more slowly when conditions require.
- Keep vehicle tires properly inflated.
- Combine several trips into a single trip.
- Replace the vehicle's tires with the same TPC Spec number molded into the tire's sidewall near the size.
- Follow recommended scheduled maintenance.

Roadside Assistance Program

U.S.: **1-800-GMC-8782 (462-8782)**

TTY Users: **1-888-889-2438**

Canada: **1-800-268-6800**

As the owner of a new GMC, you are automatically enrolled in the Roadside Assistance program. This program provides technically trained advisors who are available 24 hours a day, 365 days a year, minor repair information or towing arrangements.

For more information see *Roadside Assistance Program on page 8-7*.

Roadside Assistance and OnStar

If you have a current OnStar subscription, press the OnStar button and the current GPS location will be sent to an OnStar Advisor who will assess your problem, contact Roadside Assistance, and relay exact location to get you the help you need.

Online Owner Center

The Online Owner Center is a complimentary service that includes online service reminders, vehicle maintenance tips, online owner manual, special privileges and more.

Sign up today at: **www.gmownercenter.com/gmc** (U.S.) or **www.gm.ca** (Canada).

OnStar®

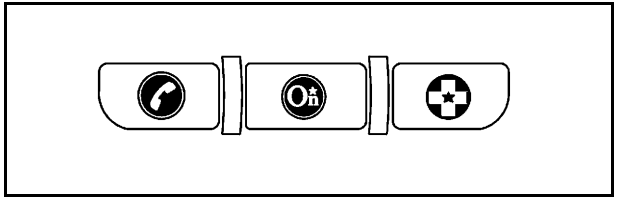

OnStar® uses several innovative technologies and live advisors to provide a wide range of safety, security, navigation, diagnostics, and calling services.

Automatic Crash Response

In a crash, built in sensors can automatically alert an OnStar advisor who is immediately connected to the vehicle to see if you need help.

How OnStar Service Works

: This blue button connects you to a specially trained OnStar advisor to verify your account information and to answer questions.

: Push this red emergency button to get priority help from specially trained OnStar emergency advisors.

: Push this button for hands-free, voice-activated calling and to give voice commands for turn-by-turn navigation.

Crisis Assist, Stolen Vehicle Assistance, Vehicle Diagnostics, Remote Door Unlock, Roadside Assistance, Turn-by-Turn Navigation and Hands-Free Calling are available on most vehicles. Not all OnStar services are available on all vehicles. For more information see the OnStar Owner's Guide or visit www.onstar.com (U.S.) or www.onstar.ca (Canada), contact OnStar at 1-888-4-ONSTAR (1-888-466-7827) or TTY 1-877-248-2080, or press to speak with an OnStar advisor 24 hours a day, 7 days a week.

For a full description of OnStar services and system limitations, see the OnStar Owner's Guide in the glove box.

OnStar service is subject to the OnStar terms and conditions included in the OnStar Subscriber Information.

OnStar service cannot work unless the vehicle is in a place where OnStar has an agreement with a wireless service provider for service in that area. OnStar service also cannot work unless the vehicle is in a place where the wireless service provider OnStar has hired for that area has coverage, network capacity and reception when the service is needed, and technology that is compatible with the OnStar service. Not all services are available everywhere, particularly in remote or enclosed areas, or at all times.

The OnStar system can record and transmit vehicle information. This information is automatically sent to an OnStar call center when is pressed, is pressed, or if the airbags or ACR system deploy. This information usually includes the vehicle's GPS location and, in the event of a crash, additional information regarding the crash that the vehicle was involved in (e.g. the direction from which the vehicle was hit). When the virtual advisor feature of OnStar hands-free calling is used, the vehicle also sends OnStar the vehicle's GPS location so they can provide services where it is located.

Location information about the vehicle is only available if the GPS satellite signals are unobstructed and available.

The vehicle must have a working electrical system, including adequate battery power, for the OnStar equipment to operate. There are other problems OnStar cannot control that may prevent OnStar from providing OnStar service at any particular time or place. Some examples are damage to important parts of the vehicle in a crash, hills, tall buildings, tunnels, weather or wireless phone network congestion.

OnStar Steering Wheel Controls

This vehicle may have a Talk/Mute button that can be used to interact with OnStar hands-free calling. See *Audio Steering Wheel Controls on page 4-148* for more information.

On some vehicles, the mute button can be used to dial numbers into voice mail systems, or to dial phone extensions. See the OnStar Owner's Guide for more information.

Your Responsibility

Increase the volume of the radio if the OnStar advisor cannot be heard.

If the light next to the OnStar buttons is red, the system may not be functioning properly. Press and request a vehicle diagnostic. If the light appears clear (no light is appearing), your OnStar subscription has expired and all services have been deactivated. Press to confirm that the OnStar equipment is active.

Section 2 Seats and Restraint System

Head Restraints 2-3

Front Seats 2-4
- Manual Seats 2-4
- Power Seats 2-5
- Manual Lumbar 2-6
- Power Lumbar 2-7
- Heated Seats 2-8
- Memory Seat, Mirrors, and Pedals 2-8
- Reclining Seatbacks 2-10
- Seatback Latches 2-13
- Center Seat 2-13

Rear Seats 2-14
- Rear Seat Operation (Extended Cab Full Bench) 2-14
- Rear Seat Operation (All Split Bench and Hybrid Full Bench) 2-15

Safety Belts 2-16
- Safety Belts: They Are for Everyone 2-16
- How to Wear Safety Belts Properly 2-21
- Lap-Shoulder Belt 2-30
- Safety Belt Use During Pregnancy 2-37
- Lap Belt (Crew and Extended Cab) 2-37
- Safety Belt Extender 2-38

Child Restraints 2-39
- Older Children 2-39
- Infants and Young Children 2-42
- Child Restraint Systems 2-45
- Where to Put the Restraint 2-47
- Lower Anchors and Tethers for Children (LATCH) 2-49
- Securing a Child Restraint in a Rear Seat Position 2-58
- Securing a Child Restraint in the Center Front Seat Position 2-61
- Securing a Child Restraint in the Right Front Seat Position (With Passenger Sensing System) 2-62
- Securing a Child Restraint in the Right Front Seat Position (With Airbag Off Switch) 2-66
- Securing a Child Restraint in the Right Front Seat Position (Heavy Duty Crew Cab Only) 2-70

Section 2 Seats and Restraint System

Airbag System 2-73
Where Are the Airbags? 2-75
When Should an Airbag Inflate? 2-78
What Makes an Airbag Inflate? 2-80
How Does an Airbag Restrain? 2-80
What Will You See After an Airbag Inflates? ... 2-81
Airbag Off Switch 2-83
Passenger Sensing System 2-86
Servicing Your Airbag-Equipped Vehicle 2-92
Adding Equipment to Your Airbag-Equipped Vehicle 2-92
Restraint System Check 2-94
Checking the Restraint Systems 2-94
Replacing Restraint System Parts After a Crash 2-95

Head Restraints

The front seats have adjustable head restraints in the outboard seating positions.

⚠ WARNING:

With head restraints that are not installed and adjusted properly, there is a greater chance that occupants will suffer a neck/spinal injury in a crash. Do not drive until the head restraints for all occupants are installed and adjusted properly.

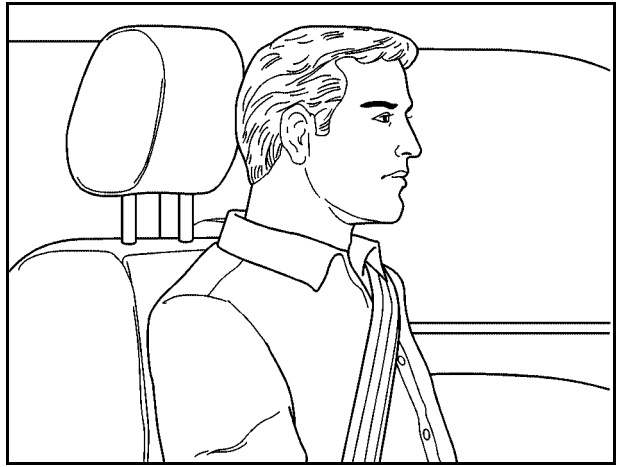

Adjust the head restraint so that the top of the restraint is at the same height as the top of the occupant's head. This position reduces the chance of a neck injury in a crash.

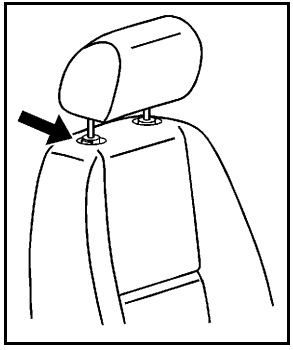

Pull the head restraint up to raise it. To lower the head restraint, press the button, located on the top of the seatback, and push the restraint down.

Push down on the head restraint after the button is released to make sure that it is locked in place.

The head restraints are not designed to be removed.

The rear seat has head rests that can be adjusted up and down.

Front Seats

Manual Seats

⚠ WARNING:

You can lose control of the vehicle if you try to adjust a manual driver's seat while the vehicle is moving. The sudden movement could startle and confuse you, or make you push a pedal when you do not want to. Adjust the driver's seat only when the vehicle is not moving.

If the vehicle has a manual seat, it can be moved forward or rearward.

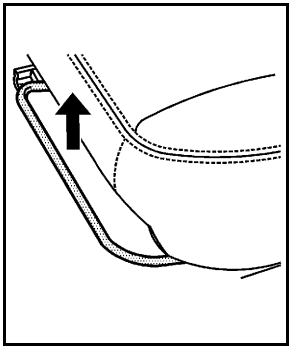

1. Lift the bar to unlock the seat.
2. Slide the seat to the desired position and release the bar.

Try to move the seat with your body to be sure the seat is locked in place.

Power Seats

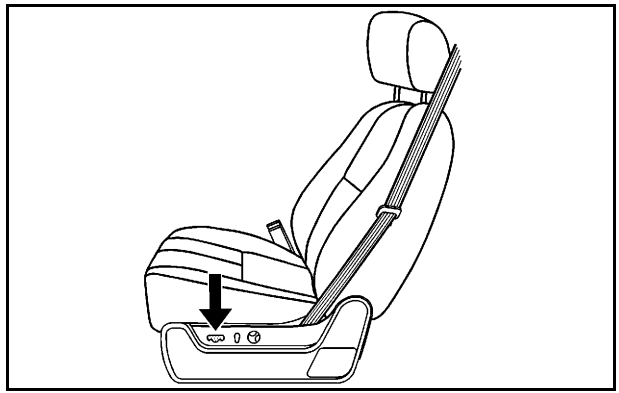

Driver's Seat with Power Seat Control, Power Recline, and Power Lumbar shown

On a vehicle with power seats, the controls used to operate them are located on the outboard side of the seats.

Move the seat forward or rearward by sliding the control forward or rearward.

Your vehicle may have additional features to adjust your vehicle's power seat:

- Raise or lower the front part of the seat cushion by moving the front of the control up or down.
- Raise or lower the rear part of the seat cushion by moving the rear of the control up or down.
- Raise or lower the entire seat by moving the entire control up or down.

On seats with power reclining seatbacks, the control is located behind the power seat control on the outboard side of the seats. See “Power Reclining Seatbacks” under *Reclining Seatbacks on page 2-10*.

A vehicle with a memory function allows seat settings to be saved and recalled. See *Memory Seat, Mirrors, and Pedals on page 2-8* for more information.

Manual Lumbar

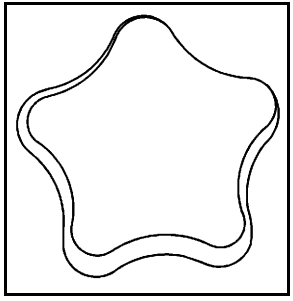

On vehicles with this feature the control is located on the outboard side of the seat.

Increase or decrease lumbar support by turning the knob forward or rearward.

Power Lumbar

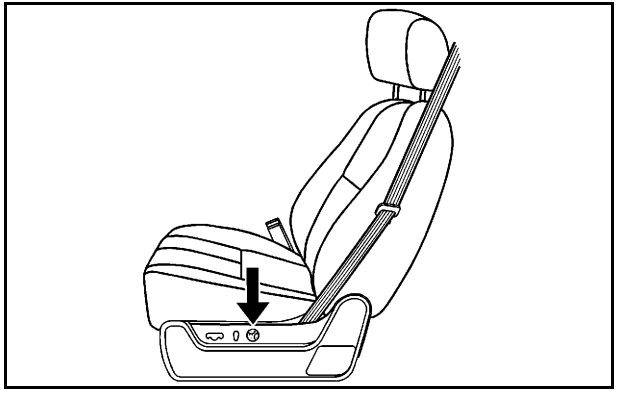

On seats with power lumbar, the controls used to operate this feature are located on the outboard side of the seats.

This vehicle may have 2–way lumbar.

- To increase lumbar support, press and hold the top of the control.
- To decrease lumbar support, press and hold the bottom of the control.

The vehicle may have 4–way lumbar.

- To increase lumbar support, press and hold the front of the control.
- To decrease lumbar support, press and hold the rear of the control.
- To raise the height of the lumbar support, press and hold the top of the control.
- To lower the height of the lumbar support, press and hold the bottom of the control.

Release the control when the lower seatback reaches the desired level of lumbar support.

Your vehicle may have a memory function which allows seat settings to be saved and recalled. See *Memory Seat, Mirrors, and Pedals on page 2-8* for more information.

Keep in mind that as your seating position changes, as it may during long trips, so should the position of your lumbar support. Adjust the seat as needed.

Heated Seats

⚠ WARNING:

If you cannot feel temperature change or pain to the skin, the seat heater may cause burns even at low temperatures. To reduce the risk of burns, people with such a condition should use care when using the seat heater, especially for long periods of time. Do not place anything on the seat that insulates against heat, such as a blanket, cushion, cover or similar item. This may cause the seat heater to overheat. An overheated seat heater may cause a burn or may damage the seat.

On vehicles with heated front seats, the controls are located on the driver and passenger doors.

(Heated Seatback): Press to turn on the heated seatback.

(Heated Seat and Seatback): Press to turn on the heated seat and seatback.

The light on the button will come on to indicate that the feature is working. Press the button to cycle through the temperature settings of high, medium, and low and to turn the heat to the seat off. Indicator lights will show the level of heat selected: three for high, two for medium, and one for low.

The heated seats will be canceled 10 seconds after the ignition is turned off. To use the heated seat feature after restarting the vehicle, press the heated seat or seatback button again.

Memory Seat, Mirrors, and Pedals

Your vehicle may have the memory package.

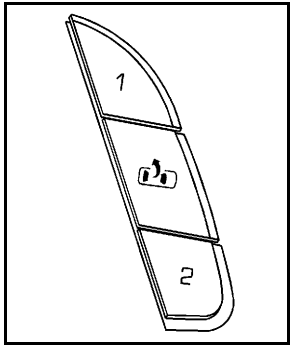

The controls for this feature are located on the driver's door panel, and are used to program and recall memory settings for the driver's seat, outside mirrors, and the adjustable throttle and brake pedal.

To save seating positions in memory:

1. Adjust the driver's seatback recliner, both outside mirrors, and the throttle and brake pedals to a comfortable position.

   See *Outside Power Mirrors on page 3-61* and *Adjustable Throttle and Brake Pedal on page 3-28* for more information.

   Not all mirrors, adjustable throttles and brake pedals will have the ability to save and recall their positions.

2. Press and hold button 1 until two beeps sound to indicate that the position has been stored.

A second seating, mirror, and throttle and brake pedal position can be programmed by repeating the above steps and pressing button 2.

To recall the memory positions, the vehicle must be in P (Park). Press and release either button 1 or button 2 corresponding to the desired driving position. The seat, outside mirrors, and adjustable throttle and brake pedals will move to the position previously stored. You will hear a single beep.

If you use the remote keyless entry transmitter to enter your vehicle and the remote recall memory feature is on, automatic seat, adjustable mirror, and adjustable pedal movements will occur. See “MEMORY SEAT RECALL” under *DIC Vehicle Customization (With DIC Buttons) on page 4-76* for more information.

To stop recall movement of the memory function at any time, press one of the power seat controls, memory buttons, power mirror buttons, or adjustable pedal switch.

If something has blocked the driver’s seat and/or the adjustable pedals while recalling a memory position, the driver’s seat and/or the adjustable pedals recall may stop working. If this happens, remove the obstruction and press the appropriate control for the area that is not responding for two seconds. Try recalling the memory position again by pressing the appropriate memory button. If the memory position is still not recalling, see your dealer for service.

Easy Exit Seat

The control for this feature is located on the driver's door panel between buttons 1 and 2.

With the vehicle in P (Park), the driver's seat exit position can be recalled by pressing the exit button. You will hear a single beep, and the driver's seat will move back approxiamately 8 cm (3 in). To move the seat back further, press the exit button again until the seat is all the way back.

If the easy exit seat feature is programmed in the Driver Information Center (DIC), automatic seat movement will occur when the key is removed from the ignition. See "EASY EXIT SEAT" under *DIC Vehicle Customization (With DIC Buttons) on page 4-76* for more information.

The memory seat and easy exit features can also be programmed using the DIC.

For programming information, see *DIC Vehicle Customization (With DIC Buttons) on page 4-76*.

Reclining Seatbacks

⚠ WARNING:

You can lose control of the vehicle if you try to adjust a manual driver's seat while the vehicle is moving. The sudden movement could startle and confuse you, or make you push a pedal when you do not want to. Adjust the driver's seat only when the vehicle is not moving.

⚠ WARNING:

If either seatback is not locked, it could move forward in a sudden stop or crash. That could cause injury to the person sitting there. Always push and pull on the seatbacks to be sure they are locked.

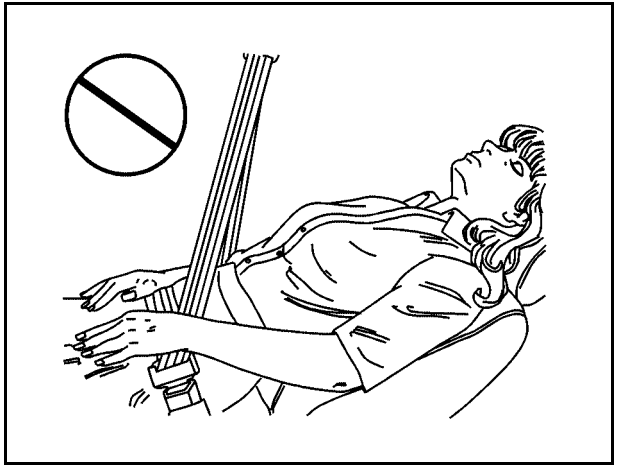

⚠ WARNING:

Sitting in a reclined position when your vehicle is in motion can be dangerous. Even if you buckle up, your safety belts cannot do their job when you are reclined like this.

The shoulder belt cannot do its job. In a crash, you could go into it, receiving neck or other injuries.

The lap belt cannot do its job either. In a crash the belt could go up over your abdomen. The belt forces would be there, not at your pelvic bones. This could cause serious internal injuries.

For proper protection when the vehicle is in motion, have the seatback upright. Then sit well back in the seat and wear your safety belt properly.

Manual Reclining Seatbacks

On seats with manual reclining seatbacks, the lever used to operate them is located on the outboard side of the seat(s).

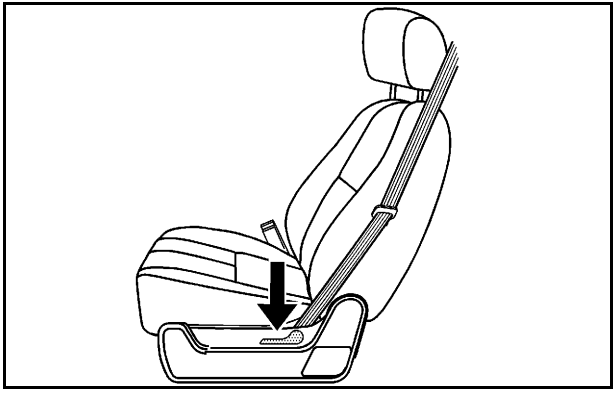

To recline the seatback:

1. Lift the recline lever.
2. Move the seatback to the desired position, then release the lever to lock the seatback in place.
3. Push and pull on the seatback to make sure it is locked.

To return the seatback to an upright position, do the following:

1. Lift the lever fully without applying pressure to the seatback and the seatback will return to the upright position.
2. Push and pull on the seatback to make sure it is locked.

Power Reclining Seatbacks

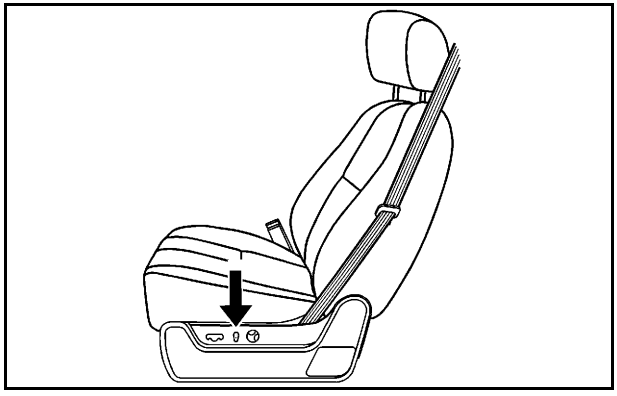

If the seats have power reclining seatbacks, the control used to recline them is located on the outboard side of the seat behind the power seat control.

- To recline the seatback, tilt the top of the control rearward.
- To bring the seatback forward, tilt the top of the control forward.

Do not have a seatback reclined if your vehicle is moving.

Seatback Latches

The front seatbacks tilt forward to allow access to the rear of the cab.

To tilt the seatback forward, lift the lever located on the outboard side of the seat cushion.

⚠ WARNING:

If either seatback is not locked, it could move forward in a sudden stop or crash. That could cause injury to the person sitting there. Always push and pull on the seatbacks to be sure they are locked.

To return the seatback to the upright position, push the seatback rearward until it latches. After returning the seatback to its upright position, push and pull on the seatback to make sure it is locked.

Center Seat

Your vehicle may have a front center seat. The seatback doubles as an armrest and cupholder/storage area for the driver and passenger when the center seat is not used. Do not use it as a seating position when the seatback is folded down.

Rear Seats

Rear Seat Operation (Extended Cab Full Bench)

Folding the Rear Seat

To fold the seat up, do the following:

Notice: **Folding a rear seat with the safety belts still fastened may cause damage to the seat or the safety belts. Always unbuckle the safety belts and return them to their normal stowed position before folding a rear seat.**

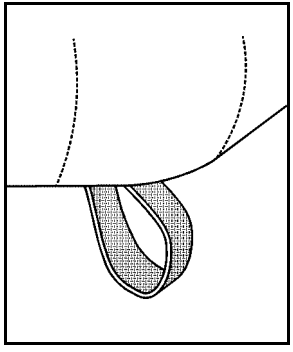

1. Pull up on the front of the seat cushion while pulling down on the release strap, located under the seat cushion.
2. Pull the seat cushion up until it latches with the seatback.
3. After latching the seat cushion up, pull forward on it to make sure it is locked.

To fold the seat down, do the following:

1. Push the seat cushion rearward while pulling the release strap, located under the seat cushion. Pull the seat cushion down until it latches.
2. After latching the seat cushion, pull up on it to make sure it is locked.

Rear Seat Operation (All Split Bench and Hybrid Full Bench)

Folding Rear Seat

On a vehicle with a second row 60/40 split seat either side of the rear seat may be folded for added cargo space.

Notice: **Folding a rear seat with the safety belts still fastened may cause damage to the seat or the safety belts. Always unbuckle the safety belts and return them to their normal stowed position before folding a rear seat.**

Make sure that nothing is on the seat.

To fold the seat, slowly pull the seat cushion up.

To return the seat to the normal seating position, slowly pull the seat cushion down.

⚠ WARNING:

A safety belt that is improperly routed, not properly attached, or twisted will not provide the protection needed in a crash. The person wearing the belt could be seriously injured. After raising the rear seatback, always check to be sure that the safety belts are properly routed and attached, and are not twisted.

Safety Belts

Safety Belts: They Are for Everyone

This part of the manual tells you how to use safety belts properly. It also tells you some things you should not do with safety belts.

⚠ WARNING:

Do not let anyone ride where a safety belt cannot be worn properly. In a crash, if you or your passenger(s) are not wearing safety belts, the injuries can be much worse. You can hit things inside the vehicle harder or be ejected from the vehicle. You and your passenger(s) can be seriously injured or killed. In the same crash, you might not be, if you are buckled up. Always fasten your safety belt, and check that your passenger(s) are restrained properly too.

⚠ WARNING:

People riding on the tailgate (if equipped) can easily lose their balance and fall even when the vehicle is operated at low speeds. Falling from a moving vehicle may result in serious injuries or death.

⚠ WARNING:

It is extremely dangerous to ride in a cargo area, inside or outside of a vehicle. In a collision, people riding in these areas are more likely to be seriously injured or killed. Do not allow people to ride in any area of your vehicle that is not equipped with seats and safety belts. Be sure everyone in your vehicle is in a seat and using a safety belt properly.

Your vehicle has indicators as a reminder to buckle your safety belts. See *Safety Belt Reminders on page 4-32*.

In most states and in all Canadian provinces, the law requires wearing safety belts. Here is why:

You never know if you will be in a crash. If you do have a crash, you do not know if it will be a serious one.

A few crashes are mild, and some crashes can be so serious that even buckled up, a person would not survive. But most crashes are in between. In many of them, people who buckle up can survive and sometimes walk away. Without belts they could have been badly hurt or killed.

After more than 40 years of safety belts in vehicles, the facts are clear. In most crashes buckling up does matter ... a lot!

Why Safety Belts Work

When you ride in or on anything, you go as fast as it goes.

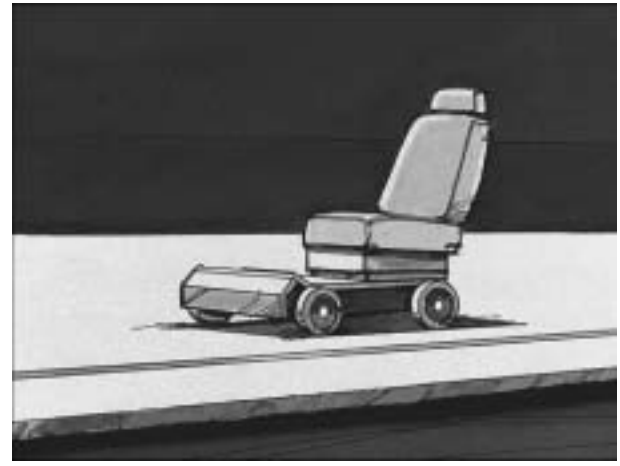

Take the simplest vehicle. Suppose it is just a seat on wheels.

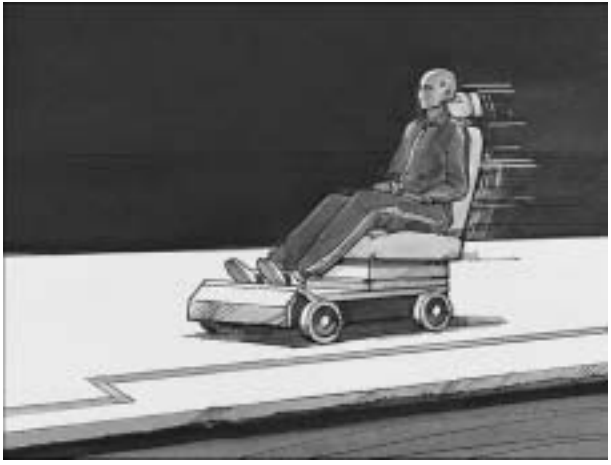

Put someone on it.

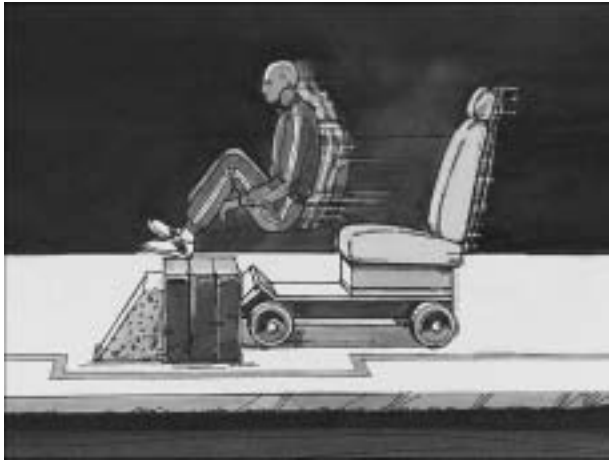

Get it up to speed. Then stop the vehicle. The rider does not stop.

The person keeps going until stopped by something. In a real vehicle, it could be the windshield...

or the instrument panel...

or the safety belts!

With safety belts, you slow down as the vehicle does. You get more time to stop. You stop over more distance, and your strongest bones take the forces. That is why safety belts make such good sense.

Questions and Answers About Safety Belts

Q: Will I be trapped in the vehicle after a crash if I am wearing a safety belt?

A: You *could* be — whether you are wearing a safety belt or not. But your chance of being conscious during and after an accident, so you can unbuckle and get out, is *much* greater if you are belted. And you can unbuckle a safety belt, even if you are upside down.

Q: If my vehicle has airbags, why should I have to wear safety belts?

A: Airbags are supplemental systems only; so they work *with* safety belts — not instead of them. Whether or not an airbag is provided, all occupants still have to buckle up to get the most protection. That is true not only in frontal collisions, but especially in side and other collisions.

Q: If I am a good driver, and I never drive far from home, why should I wear safety belts?

A: You may be an excellent driver, but if you are in a crash — even one that is not your fault — you and your passenger(s) can be hurt. Being a good driver does not protect you from things beyond your control, such as bad drivers.

Most accidents occur within 25 miles (40 km) of home. And the greatest number of serious injuries and deaths occur at speeds of less than 40 mph (65 km/h).

Safety belts are for everyone.

How to Wear Safety Belts Properly

This section is only for people of adult size.

Be aware that there are special things to know about safety belts and children. And there are different rules for smaller children and infants. If a child will be riding in the vehicle, see *Older Children on page 2-39* or *Infants and Young Children on page 2-42*. Follow those rules for everyone's protection.

It is very important for all occupants to buckle up. Statistics show that unbelted people are hurt more often in crashes than those who are wearing safety belts.

Occupants who are not buckled up can be thrown out of the vehicle in a crash. And they can strike others in the vehicle who are wearing safety belts.

First, before you or your passenger(s) wear a safety belt, there is important information you should know.

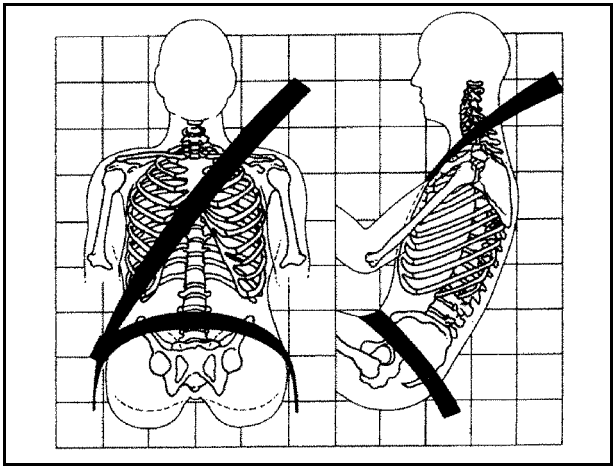

Sit up straight and always keep your feet on the floor in front of you. The lap part of the belt should be worn low and snug on the hips, just touching the thighs.

In a crash, this applies force to the strong pelvic bones and you would be less likely to slide under the lap belt. If you slid under it, the belt would apply force on your abdomen. This could cause serious or even fatal injuries. The shoulder belt should go over the shoulder and across the chest. These parts of the body are best able to take belt restraining forces.

The shoulder belt locks if there is a sudden stop or crash.

Q: What is wrong with this?

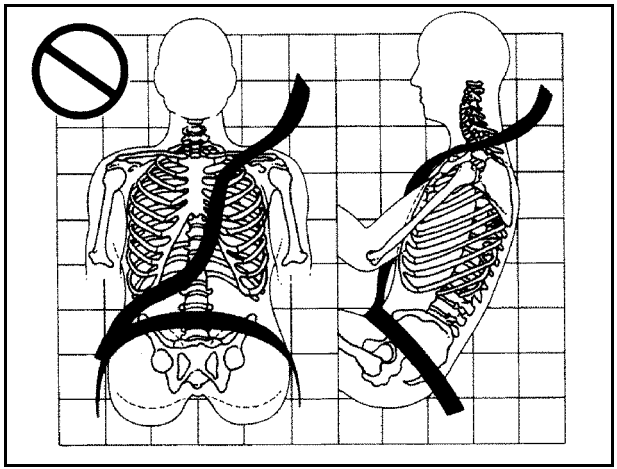

A: The shoulder belt is too loose. It will not give as much protection this way.

⚠ WARNING:

You can be seriously hurt if your shoulder belt is too loose. In a crash, you would move forward too much, which could increase injury. The shoulder belt should fit snugly against your body.

Q: What is wrong with this?

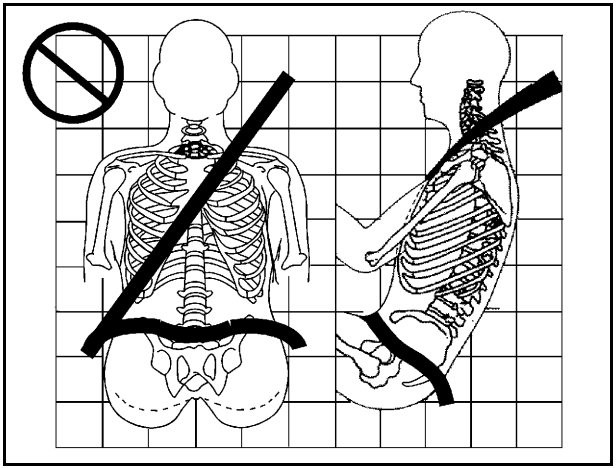

A: The lap belt is too loose. It will not give nearly as much protection this way.

⚠ WARNING:

You can be seriously hurt if your lap belt is too loose. In a crash, you could slide under the lap belt and apply force on your abdomen. This could cause serious or even fatal injuries. The lap belt should be worn low and snug on the hips, just touching the thighs.

Q: What is wrong with this?

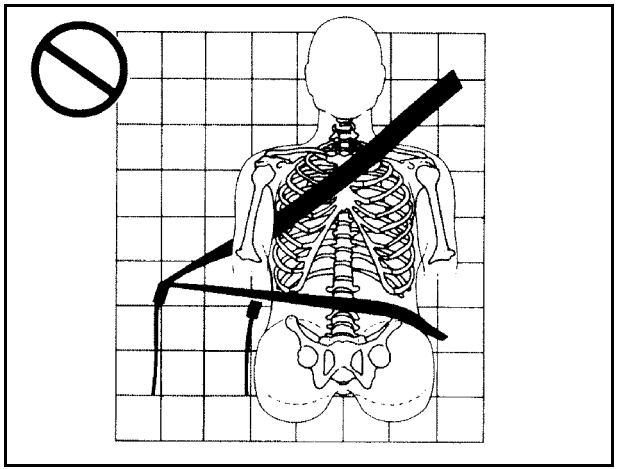

A: The belt is buckled in the wrong buckle.

⚠ WARNING:

You can be seriously injured if your belt is buckled in the wrong place like this. In a crash, the belt would go up over your abdomen. The belt forces would be there, not on the pelvic bones. This could cause serious internal injuries. Always buckle your belt into the buckle nearest you.

Q: What is wrong with this?

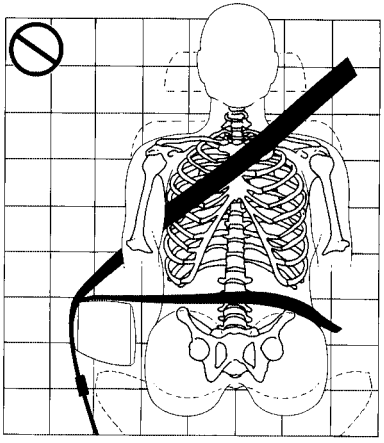

A: The belt is over an armrest.

⚠ WARNING:

You can be seriously injured if your belt goes over an armrest like this. The belt would be much too high. In a crash, you can slide under the belt. The belt force would then be applied on the abdomen, not on the pelvic bones, and that could cause serious or fatal injuries. Be sure the belt goes under the armrests.

Q: What is wrong with this?

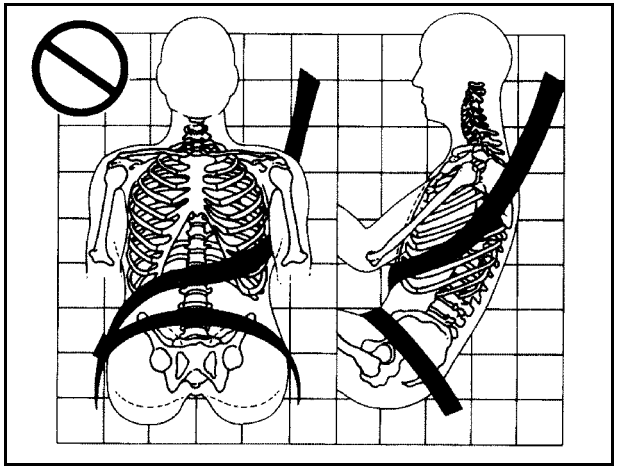

A: The shoulder belt is worn under the arm. It should be worn over the shoulder at all times.

⚠ WARNING:

You can be seriously injured if you wear the shoulder belt under your arm. In a crash, your body would move too far forward, which would increase the chance of head and neck injury. Also, the belt would apply too much force to the ribs, which are not as strong as shoulder bones. You could also severely injure internal organs like your liver or spleen. The shoulder belt should go over the shoulder and across the chest.

Q: What is wrong with this?

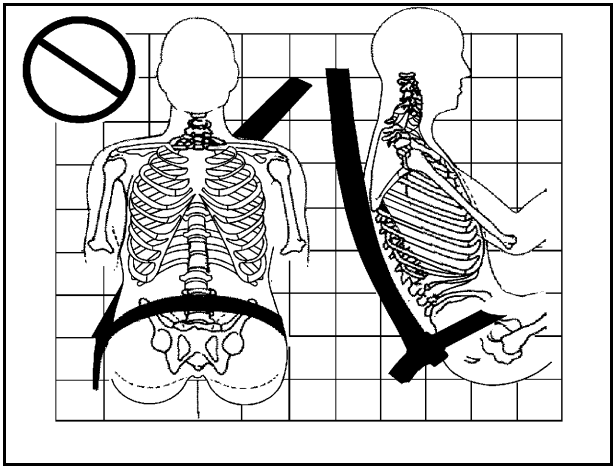

A: The belt is behind the body.

⚠ WARNING:

You can be seriously injured by not wearing the lap-shoulder belt properly. In a crash, you would not be restrained by the shoulder belt. Your body could move too far forward increasing the chance of head and neck injury. You might also slide under the lap belt. The belt force would then be applied right on the abdomen. That could cause serious or fatal injuries. The shoulder belt should go over the shoulder and across the chest.

Q: What is wrong with this?

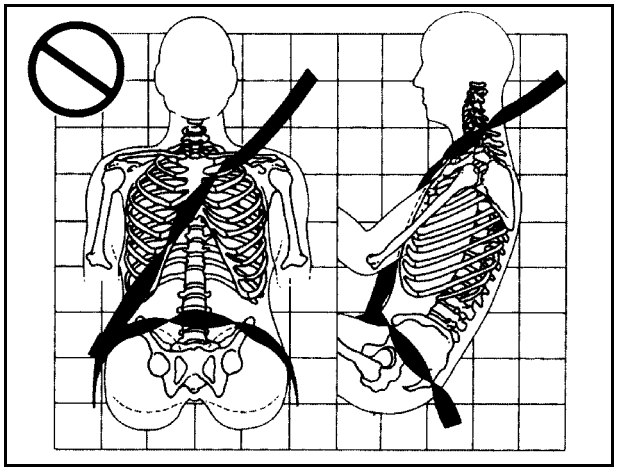

A: The belt is twisted across the body.

⚠ WARNING:

You can be seriously injured by a twisted belt. In a crash, you would not have the full width of the belt to spread impact forces. If a belt is twisted, make it straight so it can work properly, or ask your dealer to fix it.

Lap-Shoulder Belt

If the vehicle is a regular cab, then all seating positions in the vehicle have a lap-shoulder belt. If the vehicle is a crew or extended cab, then all seating positions in the vehicle have a lap-shoulder belt except for the center front passenger position (if equipped), which has a lap belt. See *Lap Belt (Crew and Extended Cab) on page 2-37* for more information.

The following instructions explain how to wear a lap-shoulder belt properly.

1. Adjust the seat, if the seat is adjustable, so you can sit up straight. To see how, see “Seats” in the Index.
2. Pick up the latch plate and pull the belt across you. Do not let it get twisted.

   The lap-shoulder belt may lock if you pull the belt across you very quickly. If this happens, let the belt go back slightly to unlock it. Then pull the belt across you more slowly.

   If the shoulder portion of a passenger belt is pulled out all the way, the child restraint locking feature may be engaged. If this happens, let the belt go back all the way and start again.

   Engaging the child restraint locking feature may affect the passenger sensing system, if equipped. See *Passenger Sensing System on page 2-86* for more information.

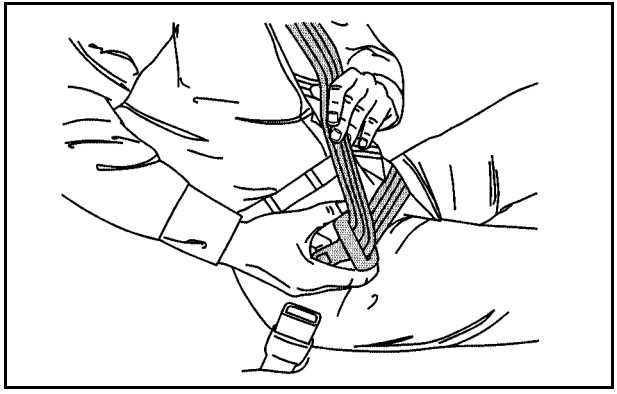

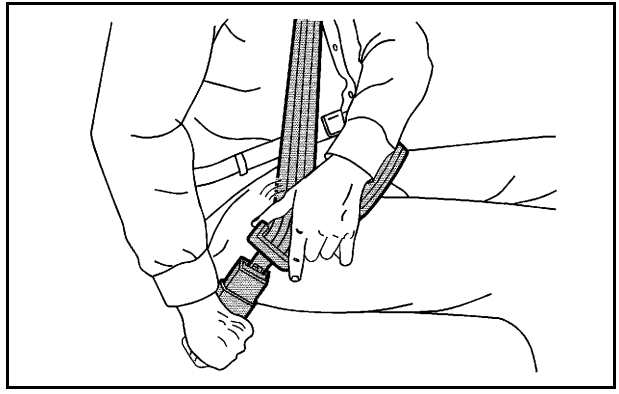

If the belt stops before it reaches the buckle, when using the lap-shoulder belt in a rear center seating position of a crew-cab, tilt the latch plate and keep pulling the safety belt until it can be buckled.

3. Push the latch plate into the buckle until it clicks.

   Pull up on the latch plate to make sure it is secure. If the belt is not long enough, see *Safety Belt Extender on page 2-38*.

   If the latch plate will not go fully into the buckle, check if the correct buckle is being used.

   Position the release button on the buckle so that the safety belt could be quickly unbuckled if necessary.

4. If equipped with a shoulder belt height adjuster, move it to the height that is right for you. See “Shoulder Belt Height Adjustment” later in this section.

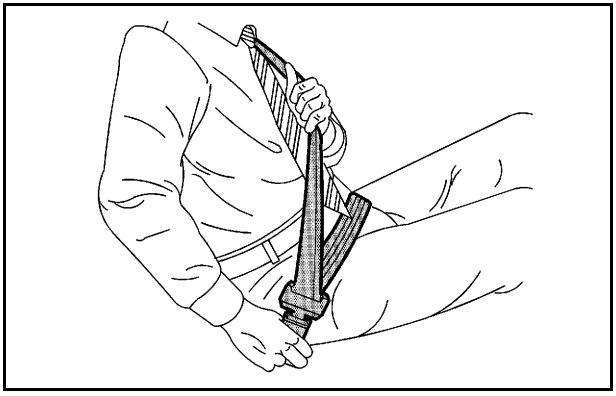

5. To make the lap part tight, pull up on the shoulder belt.

   It may be necessary to pull stitching on the safety belt through the latch plate to fully tighten the lap belt on smaller occupants.

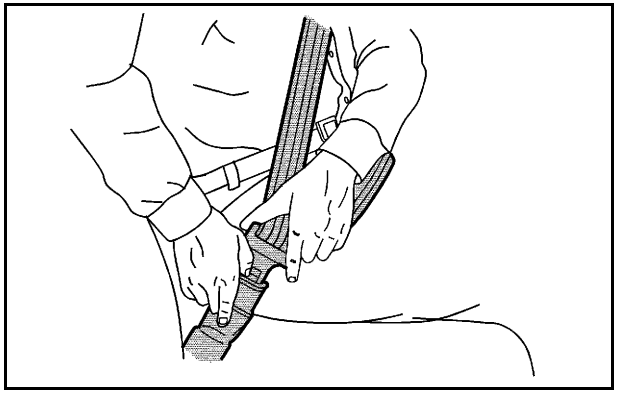

To unlatch the belt, push the button on the buckle. The belt should return to its stowed position.

Before a door is closed, be sure the safety belt is out of the way. If a door is slammed against a safety belt, damage can occur to both the safety belt and the vehicle.

Shoulder Belt Height Adjuster

The vehicle has a shoulder belt height adjuster for the driver and right front passenger.

Adjust the height so that the shoulder portion of the belt is centered on the shoulder. The belt should be away from the face and neck, but not falling off the shoulder. Improper shoulder belt height adjustment could reduce the effectiveness of the safety belt in a crash.

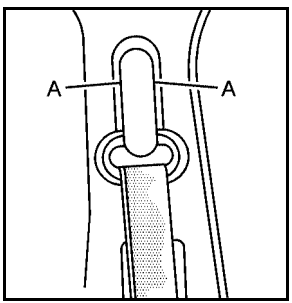

Regular and Crew Cab

To move the adjuster down for the regular and crew cabs, squeeze the buttons (A) on the sides of the height adjuster and move the height adjuster to the desired position.

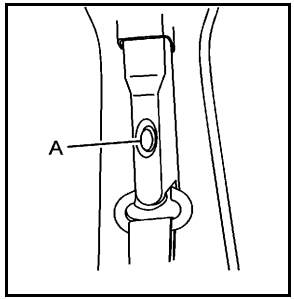

Extended Cab

On the extended cab, push down on the release button (A) and move the height adjuster to the desired position.

You can move the adjuster up just by pushing up on the shoulder belt guide.

After you move the adjuster to where you want it, try to move it down, without squeezing the buttons for the regular and crew cabs, or without pushing the release button for extended cabs, to make sure it has locked into position.

Safety Belt Pretensioners

This vehicle has safety belt pretensioners for front outboard occupants. Although the safety belt pretensioners cannot be seen, they are part of the safety belt assembly. They can help tighten the safety belts during the early stages of a moderate to severe frontal, near frontal, or rear crash if the threshold conditions for pretensioner activation are met. And, if your vehicle has side impact airbags, safety belt pretensioners can help tighten the safety belts in a side crash or a rollover event.

Pretensioners work only once. If the pretensioners activate in a crash, they will need to be replaced, and probably other new parts for the vehicle's safety belt system. See *Replacing Restraint System Parts After a Crash on page 2-95*.

Rear Safety Belt Comfort Guides

This vehicle may have rear shoulder belt comfort guides. If not, they are available through your dealer. The guides may provide added safety belt comfort for older children who have outgrown booster seats and for some adults. When installed and properly adjusted, the comfort guide positions the belt away from the neck and head.

Here is how to install a comfort guide to the shoulder belt:

1. Remove the guide from its storage clip on the interior body.

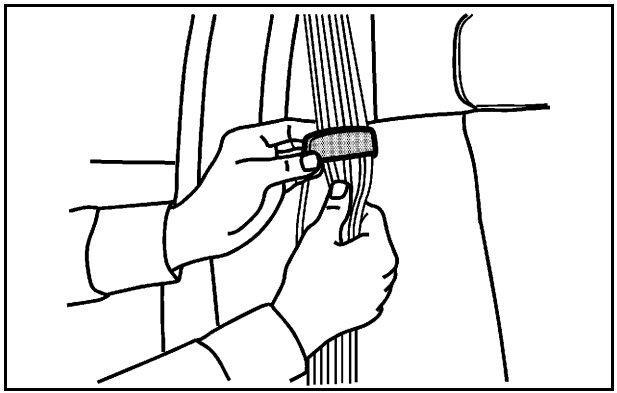

2. Place the guide over the belt and insert the two edges of the belt into the slots of the guide.

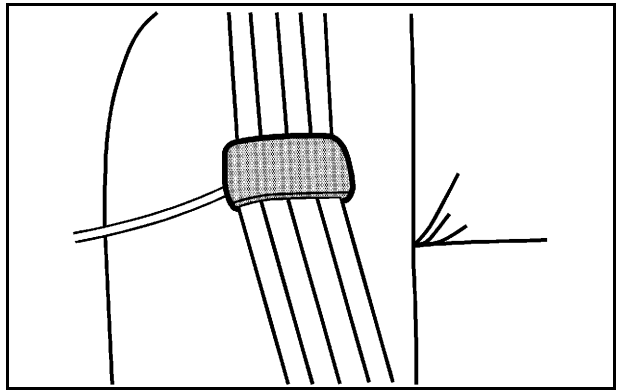

3. Be sure that the belt is not twisted and it lies flat. The elastic cord must be under the belt and the guide on top.

⚠ WARNING:

A safety belt that is not properly worn may not provide the protection needed in a crash. The person wearing the belt could be seriously injured. The shoulder belt should go over the shoulder and across the chest. These parts of the body are best able to take belt restraining forces.

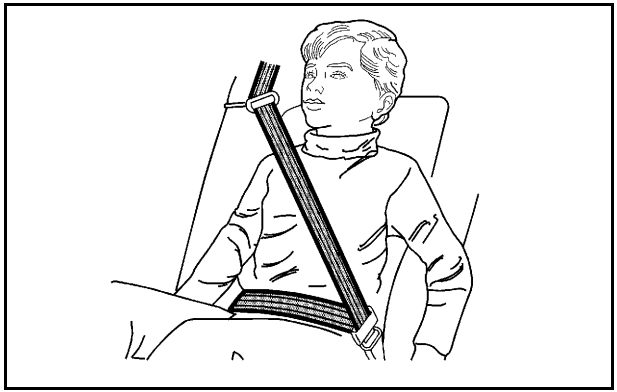

4. Buckle, position, and release the safety belt as described previously in this section. Make sure that the shoulder belt crosses the shoulder.

To remove and store the comfort guide, squeeze the belt edges together so that the safety belt can be removed from the guide. Slide the guide onto the storage clip.

Safety Belt Use During Pregnancy

Safety belts work for everyone, including pregnant women. Like all occupants, they are more likely to be seriously injured if they do not wear safety belts.

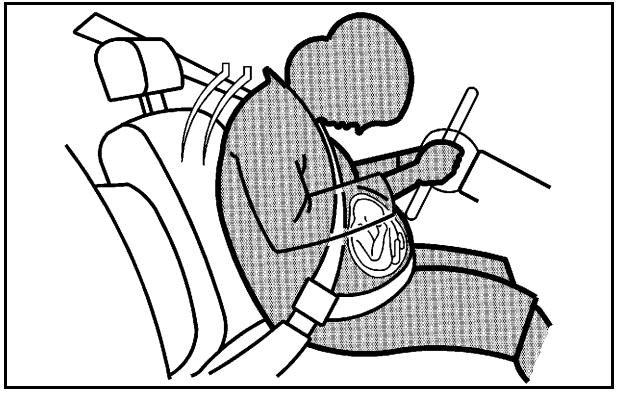

A pregnant woman should wear a lap-shoulder belt, and the lap portion should be worn as low as possible, below the rounding, throughout the pregnancy.

The best way to protect the fetus is to protect the mother. When a safety belt is worn properly, it is more likely that the fetus will not be hurt in a crash. For pregnant women, as for anyone, the key to making safety belts effective is wearing them properly.

Lap Belt (Crew and Extended Cab)

This section is only for the lap belt. To learn how to wear a lap-shoulder belt, see *Lap-Shoulder Belt on page 2-30*.

Your vehicle may have a center seating position. When you sit in the center front seating position, you have a lap safety belt, which has no retractor.

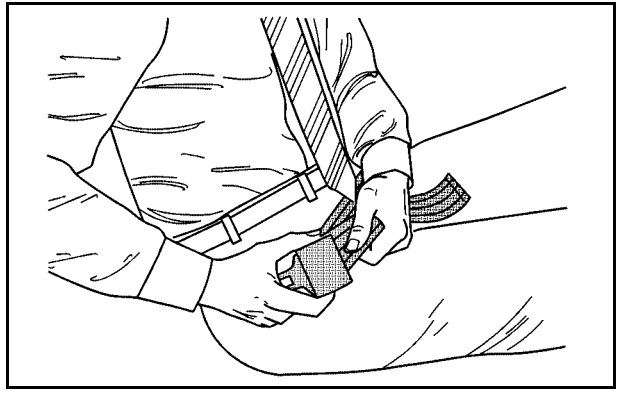

To make the belt longer, tilt the latch plate and pull it along the belt.

Buckle, position, and release it the same way as the lap part of a lap-shoulder belt.

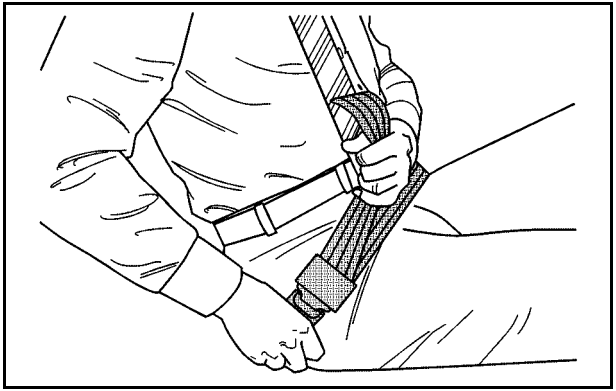

To make the belt shorter, pull its free end as shown until the belt is snug.

If the belt is not long enough, see *Safety Belt Extender on page 2-38*.

Make sure the release button on the buckle is positioned so you would be able to unbuckle the safety belt quickly if necessary.

Safety Belt Extender

If the vehicle's safety belt will fasten around you, you should use it.

But if a safety belt is not long enough, your dealer will order you an extender. When you go in to order it, take the heaviest coat you will wear, so the extender will be long enough for you. To help avoid personal injury, do not let someone else use it, and use it only for the seat it is made to fit. The extender has been designed for adults. Never use it for securing child seats. To wear it, attach it to the regular safety belt. For more information, see the instruction sheet that comes with the extender.

Child Restraints

Older Children

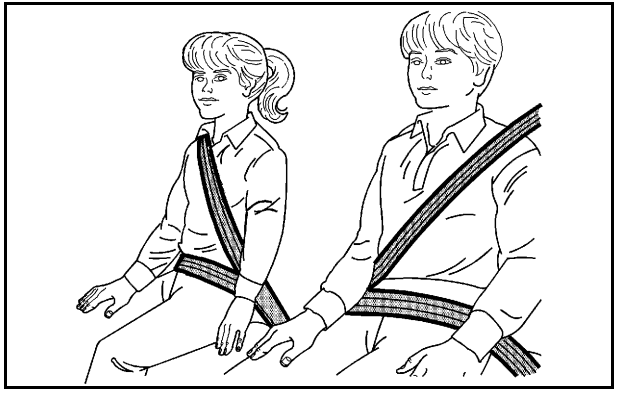

Older children who have outgrown booster seats should wear the vehicle's safety belts.

The manufacturer's instructions that come with the booster seat state the weight and height limitations for that booster. Use a booster seat with a lap-shoulder belt until the child passes the below fit test:

- Sit all the way back on the seat. Do the knees bend at the seat edge? If yes, continue. If no, return to the booster seat.
- Buckle the lap-shoulder belt. Does the shoulder belt rest on the shoulder? If yes, continue. If no, try using the rear safety belt comfort guide. See “Rear Safety Belt Comfort Guides” under *Lap-Shoulder Belt on page 2-30* for more information. If the shoulder belt still does not rest on the shoulder, then return to the booster seat.
- Does the lap belt fit low and snug on the hips, touching the thighs? If yes, continue. If no, return to the booster seat.
- Can proper safety belt fit be maintained for the length of the trip? If yes, continue. If no, return to the booster seat.
- If you have the choice, a child should sit in a position with a lap-shoulder belt and get the additional restraint a shoulder belt can provide.

Q: What is the proper way to wear safety belts?

A: An older child should wear a lap-shoulder belt and get the additional restraint a shoulder belt can provide. The shoulder belt should not cross the face or neck. The lap belt should fit snugly below the hips, just touching the top of the thighs. This applies belt force to the child's pelvic bones in a crash. It should never be worn over the abdomen, which could cause severe or even fatal internal injuries in a crash.

Also see “Rear Safety Belt Comfort Guides” under *Lap-Shoulder Belt on page 2-30*.

According to accident statistics, children and infants are safer when properly restrained in a child restraint system or infant restraint system secured in a rear seating position.

In a crash, children who are not buckled up can strike other people who are buckled up, or can be thrown out of the vehicle. Older children need to use safety belts properly.

⚠ WARNING:

Never do this.

Never allow two children to wear the same safety belt. The safety belt can not properly spread the impact forces. In a crash, the two children can be crushed together and seriously injured. A safety belt must be used by only one person at a time.

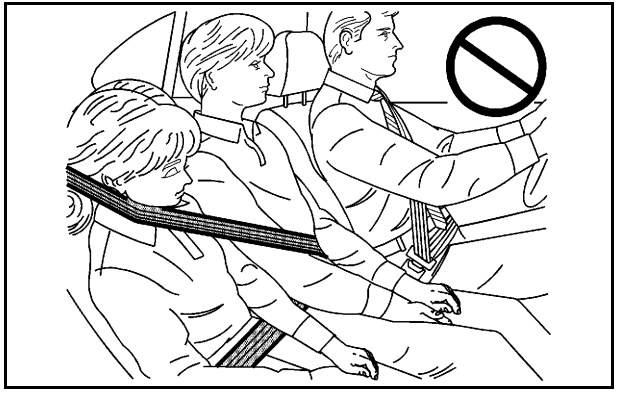

⚠ WARNING:

Never do this.

Never allow a child to wear the safety belt with the shoulder belt behind their back. A child can be seriously injured by not wearing the lap-shoulder belt properly. In a crash, the child would not be restrained by the shoulder belt. The child could move too far forward increasing the chance of head and neck injury. The child might also slide under the lap belt. The belt force would then be applied right on the abdomen. That could cause serious or fatal injuries. The shoulder belt should go over the shoulder and across the chest.

Infants and Young Children

Everyone in a vehicle needs protection! This includes infants and all other children. Neither the distance traveled nor the age and size of the traveler changes the need, for everyone, to use safety restraints. In fact, the law in every state in the United States and in every Canadian province says children up to some age must be restrained while in a vehicle.

⚠ WARNING:

Children can be seriously injured or strangled if a shoulder belt is wrapped around their neck and the safety belt continues to tighten. Never leave children unattended in a vehicle and never allow children to play with the safety belts.

Airbags plus lap-shoulder belts offer protection for adults and older children, but not for young children and infants. Neither the vehicle's safety belt system nor its airbag system is designed for them. Every time infants and young children ride in vehicles, they should have the protection provided by appropriate child restraints.

Children who are not restrained properly can strike other people, or can be thrown out of the vehicle.

⚠ WARNING:

Never do this.

Never hold an infant or a child while riding in a vehicle. Due to crash forces, an infant or a child will become so heavy it is not possible to hold it during a crash. For example, in a crash at only 40 km/h (25 mph), a 5.5 kg (12 lb) infant will suddenly become a 110 kg (240 lb) force on a person's arms. An infant should be secured in an appropriate restraint.

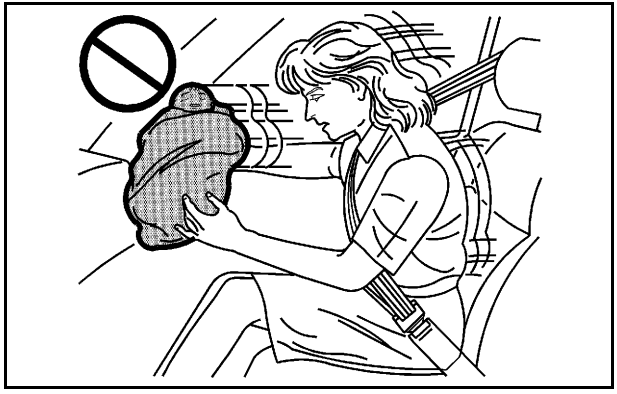

⚠ WARNING:

Never do this.

Children who are up against, or very close to, any airbag when it inflates can be seriously injured or killed. Never put a rear-facing child restraint in the right front seat. Secure a rear-facing child restraint in a rear seat. It is also better to secure a

(Continued)

WARNING: (Continued)

forward-facing child restraint in a rear seat. If you must secure a forward-facing child restraint in the right front seat, always move the front passenger seat as far back as it will go.

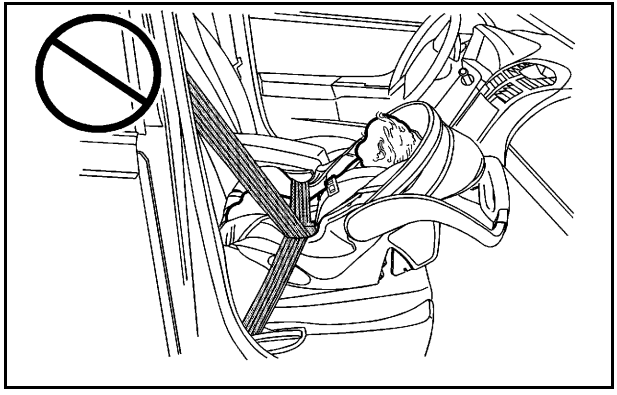

Q: What are the different types of add-on child restraints?

A: Add-on child restraints, which are purchased by the vehicle's owner, are available in four basic types. Selection of a particular restraint should take into consideration not only the child's weight, height, and age but also whether or not the restraint will be compatible with the motor vehicle in which it will be used.

For most basic types of child restraints, there are many different models available. When purchasing a child restraint, be sure it is designed to be used in a motor vehicle. If it is, the restraint will have a label saying that it meets federal motor vehicle safety standards.

The restraint manufacturer's instructions that come with the restraint state the weight and height limitations for a particular child restraint. In addition, there are many kinds of restraints available for children with special needs.

⚠ WARNING:

To reduce the risk of neck and head injury during a crash, infants need complete support. This is because an infant's neck is not fully developed

(Continued)

WARNING: (Continued)

and its head weighs so much compared with the rest of its body. In a crash, an infant in a rear-facing child restraint settles into the restraint, so the crash forces can be distributed across the strongest part of an infant's body, the back and shoulders. Infants should always be secured in rear-facing child restraints.

⚠ WARNING:

A young child's hip bones are still so small that the vehicle's regular safety belt may not remain low on the hip bones, as it should. Instead, it may settle up around the child's abdomen. In a crash, the belt would apply force on a body area that is unprotected by any bony structure. This alone could cause serious or fatal injuries. To reduce the risk of serious or fatal injuries during a crash, young children should always be secured in appropriate child restraints.

Child Restraint Systems

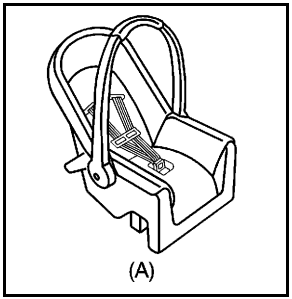

A rear-facing infant seat (A) provides restraint with the seating surface against the back of the infant.

The harness system holds the infant in place and, in a crash, acts to keep the infant positioned in the restraint.

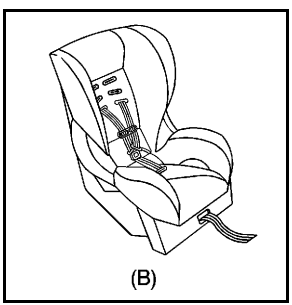

A forward-facing child seat (B) provides restraint for the child's body with the harness.

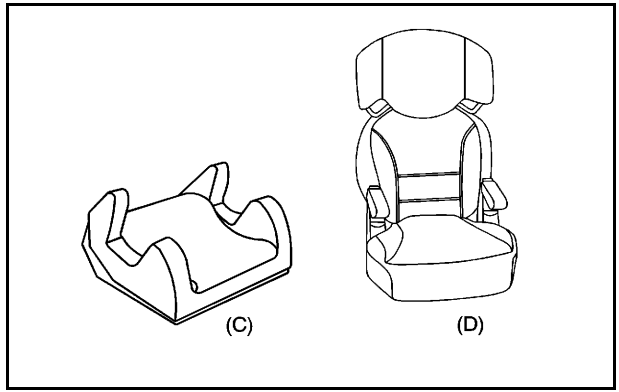

A booster seat (C-D) is a child restraint designed to improve the fit of the vehicle's safety belt system. A booster seat can also help a child to see out the window.

Securing an Add-On Child Restraint in the Vehicle

⚠ WARNING:

A child can be seriously injured or killed in a crash if the child restraint is not properly secured in the vehicle. Secure the child restraint properly in the vehicle using the vehicle's safety belt or LATCH system, following the instructions that came with that child restraint and the instructions in this manual.

To help reduce the chance of injury, the child restraint must be secured in the vehicle. Child restraint systems must be secured in vehicle seats by lap belts or the lap belt portion of a lap-shoulder belt, or by the LATCH system. See *Lower Anchors and Tethers for Children (LATCH) on page 2-49* for more information. A child can be endangered in a crash if the child restraint is not properly secured in the vehicle.

When securing an add-on child restraint, refer to the instructions that come with the restraint which may be on the restraint itself or in a booklet, or both, and to this manual. The child restraint instructions are important, so if they are not available, obtain a replacement copy from the manufacturer.

Keep in mind that an unsecured child restraint can move around in a collision or sudden stop and injure people in the vehicle. Be sure to properly secure any child restraint in the vehicle — even when no child is in it.

Securing the Child Within the Child Restraint

⚠ WARNING:

A child can be seriously injured or killed in a crash if the child is not properly secured in the child restraint. Secure the child properly following the instructions that came with that child restraint.

Where to Put the Restraint

According to accident statistics, children and infants are safer when properly restrained in a child restraint system or infant restraint system secured in a rear seating position.

We recommend that children and child restraints be secured in a rear seat, including: an infant or a child riding in a rear-facing child restraint; a child riding in a forward-facing child seat; an older child riding in a booster seat; and children, who are large enough, using safety belts.

If a child restraint is secured in the right front passenger seat, and the vehicle has a switch in the glove box to manually turn off the right front passenger airbag, see *Airbag Off Switch on page 2-83* and *Securing a Child Restraint in the Right Front Seat Position (With Passenger Sensing System) on page 2-62* or *Securing a Child Restraint in the Right Front Seat Position (With Airbag Off Switch) on page 2-66* or *Securing a Child Restraint in the Right Front Seat Position (Heavy Duty Crew Cab Only) on page 2-70* for more information, including important safety information.

A label on the sun visor says, “Never put a rear-facing child seat in the front.” This is because the risk to the rear-facing child is so great, if the airbag deploys.

⚠ WARNING:

A child in a rear-facing child restraint can be seriously injured or killed if the right front passenger airbag inflates. This is because the back of the rear-facing child restraint would be very close to the inflating airbag. A child in a forward-facing child restraint can be seriously injured or killed if the right front passenger airbag inflates and the passenger seat is in a forward position.

Even if the passenger sensing system or airbag switch has turned off the right front passenger frontal airbag, no system is fail-safe. No one can guarantee that an airbag will not deploy under some unusual circumstance, even though it is turned off.

(Continued)

WARNING: (Continued)

Secure rear-facing child restraints in a rear seat, even if the airbag is off. If you secure a forward-facing child restraint in the right front seat, always move the front passenger seat as far back as it will go. It is better to secure the child restraint in a rear seat.

⚠ WARNING:

A child in a child restraint in the center front seat can be badly injured or killed by the frontal airbags if they inflate. Never secure a child restraint in the center front seat. It is always better to secure a child restraint in a rear seat.

Do not use child restraints in the center front seat position.

When securing a child restraint in a rear seating position, study the instructions that came with your child restraint to make sure it is compatible with this vehicle.

If the vehicle does not have a rear seat that will accommodate a rear-facing child restraint, a rear-facing child restraint should not be installed in the vehicle, even if the airbag is off.

Wherever a child restraint is installed, be sure to secure the child restraint properly.

Keep in mind that an unsecured child restraint can move around in a collision or sudden stop and injure people in the vehicle. Be sure to properly secure any child restraint in your vehicle — even when no child is in it.

Lower Anchors and Tethers for Children (LATCH)

The LATCH system holds a child restraint during driving or in a crash. This system is designed to make installation of a child restraint easier. The LATCH system uses anchors in the vehicle and attachments on the child restraint that are made for use with the LATCH system.

Make sure that a LATCH-compatible child restraint is properly installed using the anchors, or use the vehicle's safety belts to secure the restraint, following the instructions that came with that restraint, and also the instructions in this manual. When installing a child restraint with a top tether, you must also use either the lower anchors or the safety belts to properly secure the child restraint. A child restraint must never be installed using only the top tether and anchor.

In order to use the LATCH system in your vehicle, you need a child restraint that has LATCH attachments. The child restraint manufacturer will provide you with instructions on how to use the child restraint and its attachments. The following explains how to attach a child restraint with these attachments in your vehicle.

Not all vehicle seating positions or child restraints have lower anchors and attachments or top tether anchors and attachments.

Lower Anchors

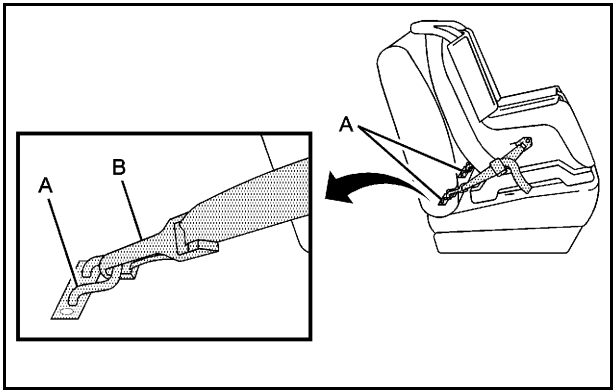

Lower anchors (A) are metal bars built into the vehicle. There are two lower anchors for each LATCH seating position that will accommodate a child restraint with lower attachments (B).

Top Tether Anchor

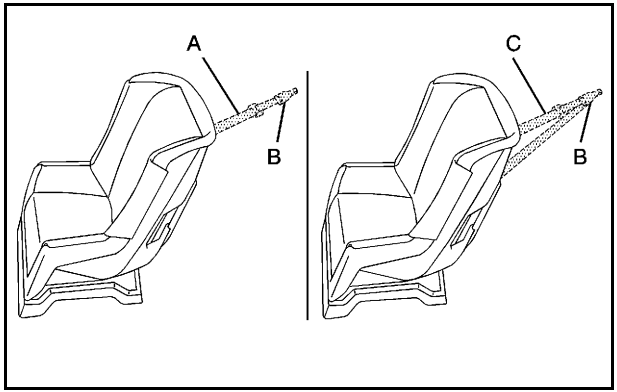

A top tether (A, C) anchors the top of the child restraint to the vehicle. A top tether anchor is built into the vehicle. The top tether attachment (B) on the child restraint connects to the top tether anchor in the vehicle in order to reduce the forward movement and rotation of the child restraint during driving or in a crash.

Your child restraint may have a single tether (A) or a dual tether (C). Either will have a single attachment (B) to secure the top tether to the anchor.

Some child restraints that have a top tether are designed for use with or without the top tether being attached. Others require the top tether always to be attached. In Canada, the law requires that forward-facing child restraints have a top tether, and that the tether be attached. Be sure to read and follow the instructions for your child restraint.

If the child restraint does not have a top tether, one can be obtained, in kit form, for many child restraints. Ask the child restraint manufacturer whether or not a kit is available.

Lower Anchor and Top Tether Anchor Locations

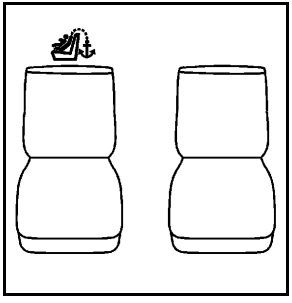

Regular Cab — Two-Passenger Front Seat

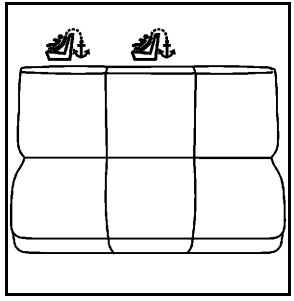

Regular Cab — Three-Passenger Front Seat

(Top Tether Anchor): Seating positions with top tether anchors.

Do not install a child restraint in the center front seat position. See *Securing a Child Restraint in the Center Front Seat Position on page 2-61* for more information.

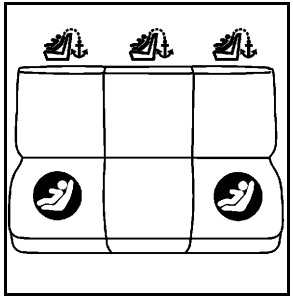

Crew and Extended Cab Rear Seat

(Top Tether Anchor): Seating positions with top tether anchors.

(Lower Anchor): Seating positions with two lower anchors.

For crew and extended cab models, the rear outboard seating positions have exposed metal lower anchors located in the crease between the seatback and the seat cushion.

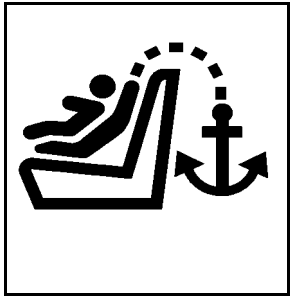

For regular cab models, there is an anchor symbol on the covers to assist you in locating the top tether anchors.

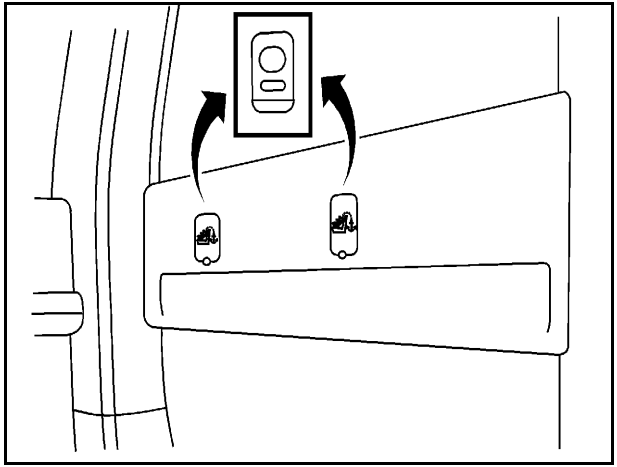

Regular Cab

Do not install a child restraint in the center seat position. See *Securing a Child Restraint in the Center Front Seat Position on page 2-61* for more information.

For regular cab models, the top tether anchors are located under covers on the back panel behind the passenger seat. Remove the trim plug to access the anchor. Be sure to use an anchor located on the same side of the vehicle as the seating position where the child restraint will be placed.

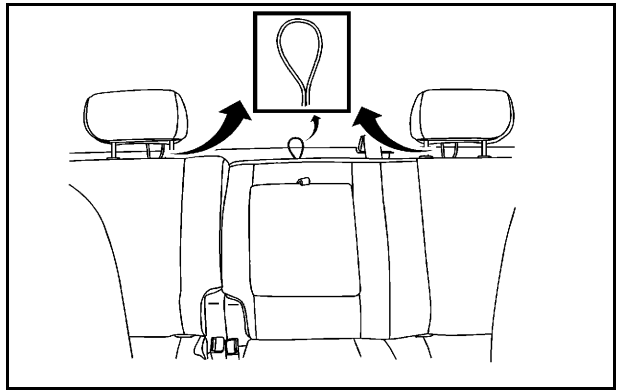

Crew Cab Shown, Extended Cab Similar

For crew and extended cab models, the top tether anchors are the loops located near the top of the seatback for each rear seating position. These loops will be used to route the top tether through, as well as, to secure the top tether in the vehicle. Be sure to use an anchor (loop) located on the same side of the vehicle as the seating position where the child restraint will be placed.

Be sure to read the instructions following to properly install a child restraint using these loops.

Do not secure a child restraint in a position without a top tether anchor if a national or local law requires that the top tether be attached, or if the instructions that come with the child restraint say that the top tether must be attached.

According to accident statistics, children and infants are safer when properly restrained in a child restraint system or infant restraint system secured in a rear seating position. See *Where to Put the Restraint on page 2-47* for additional information.

Securing a Child Restraint Designed for the LATCH System

⚠ WARNING:

If a LATCH-type child restraint is not attached to anchors, the child restraint will not be able to protect the child correctly. In a crash, the child could be seriously injured or killed. Install a LATCH-type child restraint properly using the anchors, or use the vehicle's safety belts to secure the restraint, following the instructions that came with the child restraint and the instructions in this manual.

⚠ WARNING:

Do not attach more than one child restraint to a single anchor, except for the center top tether anchors in the crew and extended cabs. Attaching more than one child restraint to a single anchor could cause the anchor or attachment to come loose or even break during a crash. A child or others could be injured. To reduce the risk of serious or fatal injuries during a crash, attach only one child restraint per anchor.

⚠ WARNING:

Children can be seriously injured or strangled if a shoulder belt is wrapped around their neck and the safety belt continues to tighten. Buckle any unused safety belts behind the child restraint so children cannot reach them. Pull the shoulder belt all the way out of the retractor to set the lock, if your vehicle has one, after the child restraint has been installed.

Notice: **Do not let the LATCH attachments rub against the vehicle's safety belts. This may damage these parts. If necessary, move buckled safety belts to avoid rubbing the LATCH attachments.**

Do not fold the empty rear seat with a safety belt buckled. This could damage the safety belt or the seat. Unbuckle and return the safety belt to its stowed position, before folding the seat.

Regular Cab Models

1. If the child restraint manufacturer recommends that the top tether be attached, attach and tighten the top tether to the top tether anchor, if your vehicle has one. Refer to the child restraint instructions and the following steps:

   1.1. Pull the passenger seatback forward by pulling the recliner handle upward to access the top tether anchor. See *Reclining Seatbacks on page 2-10* for additional information.

   1.2. Find the top tether anchor.

   1.3. Remove the cover to expose the anchor.

   1.4. Route, attach, and tighten the top tether according to your child restraint instructions and the following instructions:

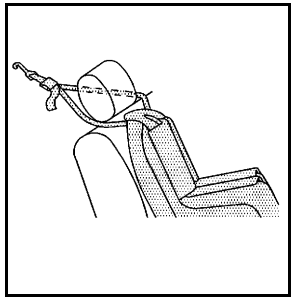

If the position you are using has an adjustable headrest or head restraint and you are using a dual tether, route the tether around the headrest or head restraint.

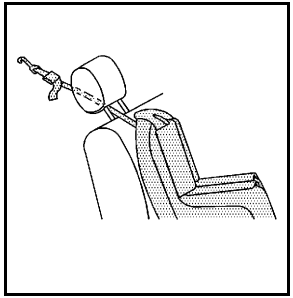

If the position you are using has an adjustable headrest or head restraint and you are using a single tether, raise the headrest or head restraint and route the tether under the headrest or head restraint and in between the headrest or head restraint posts.

2. See *Securing a Child Restraint in the Right Front Seat Position (With Passenger Sensing System) on page 2-62* or *Securing a Child Restraint in the Right Front Seat Position (With Airbag Off Switch) on page 2-66* or *Securing a Child Restraint in the Right Front Seat Position (Heavy Duty Crew Cab Only) on page 2-70* for instructions on installing the child restraint using the safety belts.
3. Push and pull the child restraint in different directions to be sure it is secure.

Crew and Extended Cab Models

1. Attach and tighten the lower attachments to the lower anchors. If the child restraint does not have lower attachments or the desired seating position does not have lower anchors, secure the child restraint with the top tether and the safety belts. Refer to your child restraint manufacturer instructions and the instructions in this manual.
   1.1. Find the lower anchors for the desired seating position.
   1.2. Put the child restraint on the seat.
   1.3. Attach and tighten the lower attachments on the child restraint to the lower anchors.

2. If the child restraint manufacturer recommends that the top tether be attached, attach and tighten the top tether to the top tether anchor (loop), if your vehicle has one. Refer to the child restraint instructions and the following steps:

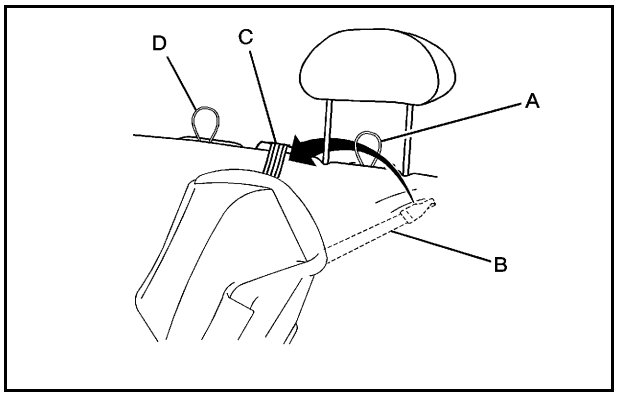

Example — Rear Driver's Side Position

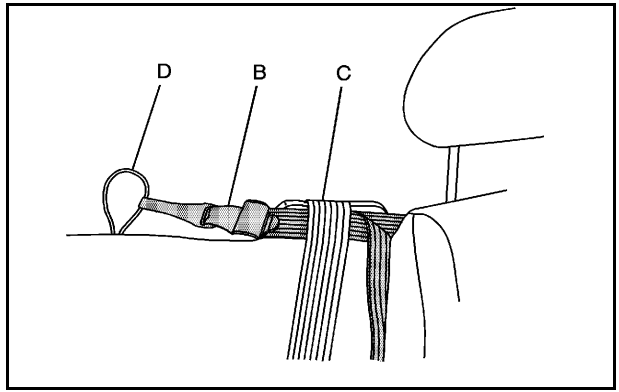

Example — Rear Driver's Side Position

2.1. When using a child restraint with a top tether in the rear driver side position:

A. Raise the headrest or head restraint.

B. Route the top tether (B) between the headrest or head restraint posts, through the loop (A), behind the inboard headrest or head restraint post, and under the center shoulder belt (C).

C. Attach the top tether (B) to the top tether anchor (loop) (D) at the center rear seating position.

2.2. When using a child restraint with a top tether in the rear center position:

A. Route the top tether (B) through the center loop (D), and behind the inboard passenger side headrest or head restraint post.

B. Attach the top tether (B) to the top tether anchor (loop) at the rear passenger side seating position.

2.3. When using a child restraint with a top tether in the rear passenger position:

A. Raise the headrest or head restraint.

B. Route the top tether (B) between the headrest or head restraint posts, through the loop on the passenger side and behind the inboard headrest or head restraint post.

C. Attach the top tether (B) to the top tether anchor (loop) (D) at the center rear seating position.

2.4. Tighten the top tether when and as the child restraint manufacturer's instructions say.

When the top tether is tightened, the anchor (loop) may bend. This is normal and will not damage the vehicle.

3. Push and pull the child restraint in different directions to be sure it is secure.

Securing a Child Restraint in a Rear Seat Position

When securing a child restraint in a rear seating position, study the instructions that came with the child restraint to make sure it is compatible with this vehicle.

If the child restraint has the LATCH system, see *Lower Anchors and Tethers for Children (LATCH) on page 2-49* for how and where to install the child restraint using LATCH. If a child restraint is secured in the vehicle using a safety belt and it uses a top tether, see *Lower Anchors and Tethers for Children (LATCH) on page 2-49* for top tether anchor locations.

Do not secure a child seat in a position without a top tether anchor if a national or local law requires that the top tether be anchored, or if the instructions that come with the child restraint say that the top strap must be anchored.

In Canada, the law requires that forward-facing child restraints have a top tether, and that the tether be attached.

If the child restraint does not have the LATCH system, you will be using the safety belt to secure the child restraint in this position. Be sure to follow the instructions that came with the child restraint. Secure the child in the child restraint when and as the instructions say.

If more than one child restraint needs to be installed in the rear seat, be sure to read *Where to Put the Restraint on page 2-47*.

1. Put the child restraint on the seat.
2. Pick up the latch plate, and run the lap and shoulder portions of the vehicle's safety belt through or around the restraint. The child restraint instructions will show you how.

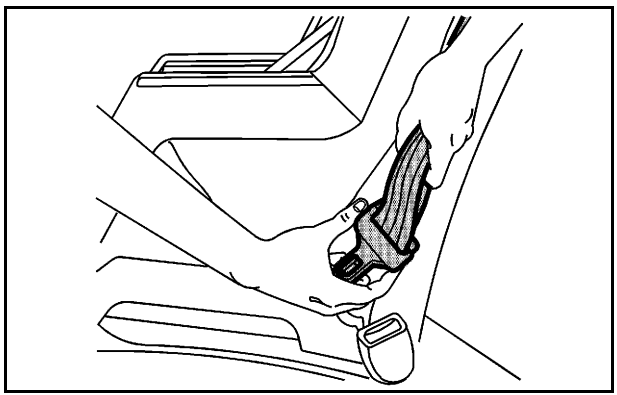

For crew cab second row seatings positions, tilt the latch plate to adjust the belt if needed.

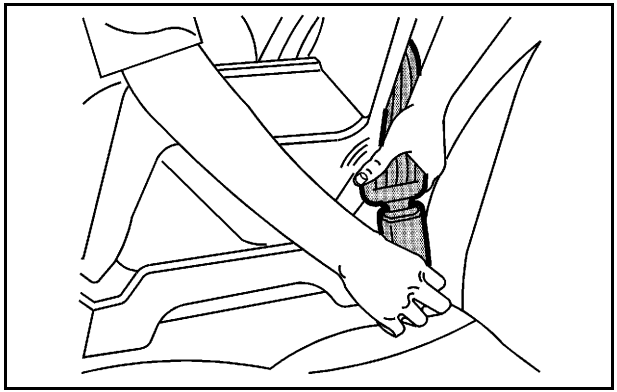

3. Push the latch plate into the buckle until it clicks.

   Position the release button on the buckle so that the safety belt could be quickly unbuckled if necessary.

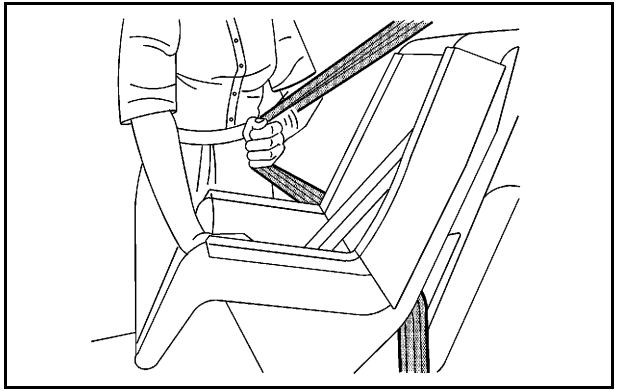

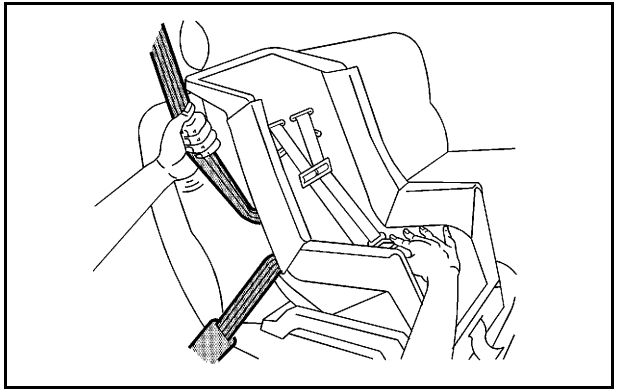

4. Pull the rest of the shoulder belt all the way out of the retractor to set the lock.

5. To tighten the belt, push down on the child restraint, pull the shoulder portion of the belt to tighten the lap portion of the belt and feed the shoulder belt back into the retractor. When installing a forward-facing child restraint, it may be helpful to use your knee to push down on the child restraint as you tighten the belt.

6. If the child restraint has a top tether, follow the child restraint manufacturer's instructions regarding the use of the top tether. See *Lower Anchors and Tethers for Children (LATCH) on page 2-49* for more information.
7. Push and pull the child restraint in different directions to be sure it is secure.

To remove the child restraint, unbuckle the vehicle safety belt and let it return to the stowed position. If the top tether is attached to a top tether anchor, disconnect it.

Securing a Child Restraint in the Center Front Seat Position

⚠ WARNING:

A child in a child restraint in the center front seat can be badly injured or killed by the frontal airbags if they inflate. Never secure a child restraint in the center front seat. It is always better to secure a child restraint in a rear seat.

Do not use child restraints in the center front seat position.

Securing a Child Restraint in the Right Front Seat Position (With Passenger Sensing System)

This vehicle has airbags. A rear seat is a safer place to secure a forward-facing child restraint. See *Where to Put the Restraint on page 2-47*.

In addition, the vehicle may have a passenger sensing system which is designed to turn off the right front passenger frontal airbag under certain conditions. See *Passenger Sensing System on page 2-86* and *Passenger Airbag Status Indicator on page 4-36* for more information on this, including important safety information.

A label on the sun visor says, “Never put a rear-facing child seat in the front.” This is because the risk to the rear-facing child is so great, if the airbag deploys.

⚠ WARNING:

A child in a rear-facing child restraint can be seriously injured or killed if the right front passenger airbag inflates. This is because the back of the rear-facing child restraint would be very close to the inflating airbag. A child in a

(Continued)

WARNING: (Continued)

forward-facing child restraint can be seriously injured or killed if the right front passenger airbag inflates and the passenger seat is in a forward position.

The vehicle may have a passenger sensing system which is designed to turn off the right front passenger frontal airbag under certain conditions.

Even if the passenger sensing system, if equipped, has turned off the right front passenger frontal airbag, no system is fail-safe. No one can guarantee that an airbag will not deploy under some unusual circumstance, even though it is turned off.

Secure rear-facing child restraints in a rear seat, even if the airbag is off. If you secure a forward-facing child restraint in the right front seat, always move the front passenger seat as far back as it will go. It is better to secure the child restraint in a rear seat.

See *Passenger Sensing System on page 2-86* for additional information.

If the vehicle does not have a rear seat that will accommodate a rear-facing child restraint, a rear-facing child restraint should not be installed in the vehicle, even if the airbag is off.

If your child restraint has the LATCH system, see *Lower Anchors and Tethers for Children (LATCH) on page 2-49* for how and where to install your child restraint using LATCH. If you secure a child restraint using a safety belt and it uses a top tether, see *Lower Anchors and Tethers for Children (LATCH) on page 2-49* for top tether anchor locations.

Do not secure a child seat in a position without a top tether anchor if a national or local law requires that the top tether be anchored, or if the instructions that come with the child restraint say that the top strap must be anchored.

In Canada, the law requires that forward-facing child restraints have a top tether, and that the tether be attached.

You will be using the lap-shoulder belt to secure the child restraint in this position. Follow the instructions that came with the child restraint.

1. Move the seat as far back as it will go before securing the forward-facing child restraint.

   When the passenger sensing system, if equipped, has turned off the right front passenger frontal airbag, the off indicator in the passenger airbag status indicator should light and stay lit when you start the vehicle. See *Passenger Airbag Status Indicator on page 4-36*.

2. Put the child restraint on the seat.
3. Pick up the latch plate, and run the lap and shoulder portions of the vehicle's safety belt through or around the restraint. The child restraint instructions will show you how.

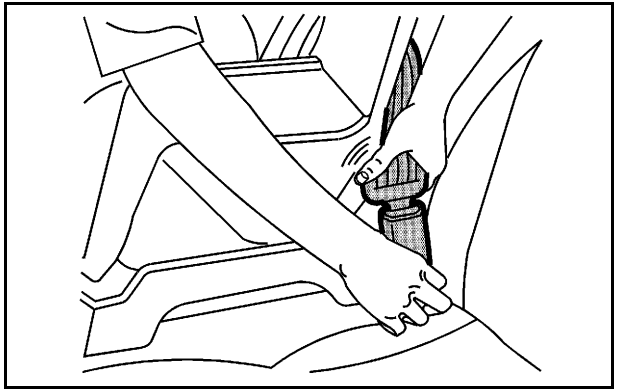

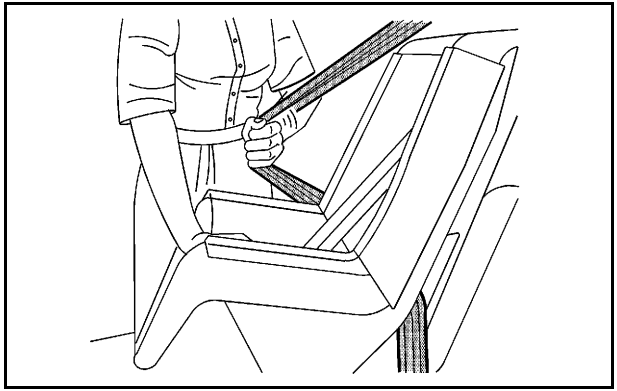

4. Push the latch plate into the buckle until it clicks.

   Position the release button so that the safety belt could be quickly unbuckled if necessary.

5. Pull the rest of the shoulder belt all the way out of the retractor to set the lock.

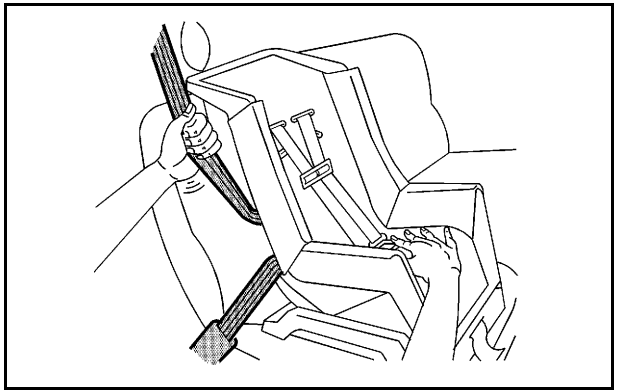

6. To tighten the belt, push down on the child restraint, pull the shoulder portion of the belt to tighten the lap portion of the belt and feed the shoulder belt back into the retractor. When installing a forward-facing child restraint, it may be helpful to use your knee to push down on the child restraint as you tighten the belt.
7. If the vehicle does not have a rear seat and the child restraint has a top tether, follow the child restraint manufacturer's instructions regarding the use of the top tether. See *Lower Anchors and Tethers for Children (LATCH) on page 2-49* for more information.
8. Push and pull the child restraint in different directions to be sure it is secure.

If the vehicle is equipped with a passenger sensing system, and when the passenger sensing system has turned off the right front passenger frontal airbag, the off indicator in the passenger airbag status indicator should light and stay lit when you start the vehicle.

If a child restraint has been installed and the on indicator is lit, see “If the On Indicator is Lit for a Child Restraint” under *Passenger Sensing System on page 2-86* for more information.

To remove the child restraint, unbuckle the vehicle safety belt and let it return to the stowed position. If the top tether is attached to a top tether anchor, disconnect it.

Securing a Child Restraint in the Right Front Seat Position (With Airbag Off Switch)

This vehicle has airbags. A rear seat is a safer place to secure a forward-facing child restraint. See *Where to Put the Restraint on page 2-47*.

There may be a switch in the glove box that you can use to turn off the right front passenger frontal airbag. See *Airbag Off Switch on page 2-83* for more information, including important safety information.

A label on the sun visor says, “Never put a rear-facing child seat in the front unless airbag is off.” This is because the risk to the rear-facing child is so great, if the airbag deploys.

⚠ WARNING:

A child in a rear-facing child restraint can be seriously injured or killed if the right front passenger airbag inflates. This is because the back of the rear-facing child restraint would be very close to the inflating airbag. A child in a forward-facing child restraint can be seriously

(Continued)

WARNING: (Continued)

injured or killed if the right front passenger airbag inflates and the passenger seat is in a forward position.

Even if the airbag switch has turned off the right front passenger frontal airbag, no system is fail-safe. No one can guarantee that an airbag will not deploy under some unusual circumstance, even though it is turned off.

Secure rear-facing child restraints in a rear seat, even if the airbag is off. If you secure a forward-facing child restraint in the right front seat, always move the front passenger seat as far back as it will go. It is better to secure the child restraint in a rear seat.

⚠ WARNING:

If the airbag readiness light ever comes on and stays on, it means that something may be wrong with the airbag system. For example, the right front passenger airbag could inflate even though the airbag on-off switch is turned off.

To help avoid injury to yourself or others, have the vehicle serviced right away. See *Airbag Readiness Light on page 4-33* for more information, including important safety information.

If the vehicle does not have a rear seat that will accommodate a rear-facing child restraint, a rear-facing child restraint should not be installed in the vehicle, even if the airbag is off.

If the child restraint has the LATCH system, see *Lower Anchors and Tethers for Children (LATCH) on page 2-49* for how and where to install the child restraint using LATCH. If a child restraint is secured using a safety belt and it uses a top tether, see *Lower Anchors and Tethers for Children (LATCH) on page 2-49* for top tether anchor locations.

Do not secure a child restraint in a position without a top tether anchor if a national or local law requires that the top tether be anchored, or if the instructions that come with the child restraint say that the top strap must be anchored.

In Canada, the law requires that forward-facing child restraints have a top tether, and that the tether be attached.

You will be using the lap-shoulder belt to secure the child restraint in this position. Follow the instructions that came with the child restraint.

1. Move the seat as far back as it will go before securing the forward-facing child restraint.

   If you have no other choice but to install a rear-facing child restraint in this seat, make sure the airbag is off once the child restraint has been installed.

   When the airbag off switch has turned off the right front passenger frontal airbag, the off indicator in the airbag off light should light and stay lit when you start the vehicle. See *Airbag Off Light on page 4-34*.

2. Put the child restraint on the seat.
3. Pick up the latch plate, and run the lap and shoulder portions of the vehicle's safety belt through or around the restraint. The child restraint instructions will show you how.

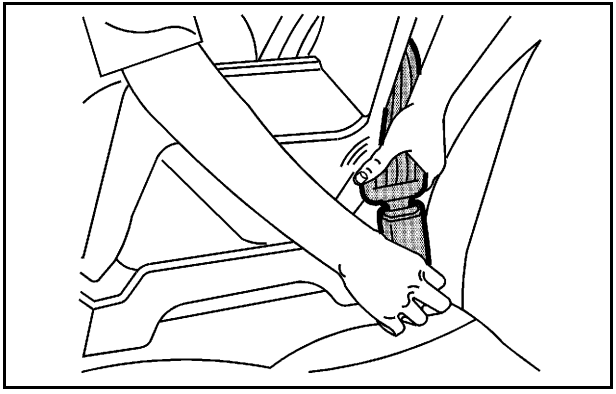

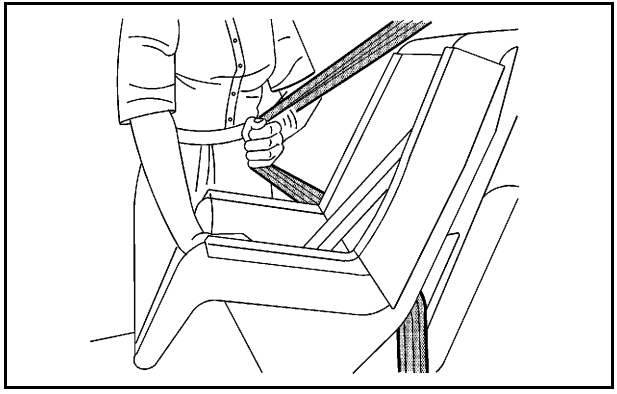

4. Push the latch plate into the buckle until it clicks.

   Position the release button so that the safety belt could be quickly unbuckled if necessary.

5. Pull the rest of the shoulder belt all the way out of the retractor to set the lock.

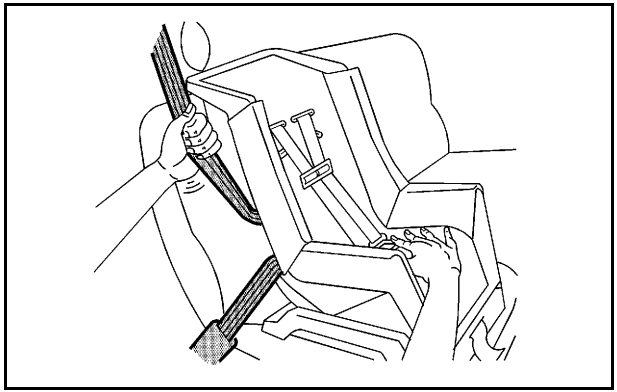

6. To tighten the belt, push down on the child restraint, pull the shoulder portion of the belt to tighten the lap portion of the belt and feed the shoulder belt back into the retractor. When installing a forward-facing child restraint, it may be helpful to use your knee to push down on the child restraint as you tighten the belt.
7. If your vehicle does not have a rear seat and your child restraint has a top tether, follow the child restraint manufacturer's instructions regarding the use of the top tether. See *Lower Anchors and Tethers for Children (LATCH) on page 2-49*.
8. Push and pull the child restraint in different directions to be sure it is secure.

To remove the child restraint, unbuckle the vehicle safety belt and let it return to the stowed position. If the top tether is attached to a top tether anchor, disconnect it.

If you turned the airbag off with the switch, turn on the right front passenger airbag when you remove the child restraint from the vehicle unless the person who will be sitting there is a member of a passenger airbag risk group. See *Airbag Off Switch on page 2-83*.

Securing a Child Restraint in the Right Front Seat Position (Heavy Duty Crew Cab Only)

Your vehicle has airbags. A rear seat is a safer place to secure a forward-facing child restraint. See *Where to Put the Restraint on page 2-47*.

A label on the sun visor says, “Never put a rear-facing child seat in the front.” This is because the risk to the rear-facing child is so great, if the airbag deploys.

Never put a rear-facing child restraint in the right front passenger seat. Here is why:

⚠ WARNING:

A child in a rear-facing child restraint can be seriously injured or killed if the right front passenger's airbag inflates. This is because the back of the rear-facing child restraint would be very close to the inflating airbag. Always secure a rear-facing child restraint in a rear seat.

If the vehicle does not have a rear seat that will accommodate a rear-facing child restraint, a rear-facing child restraint should not be installed in the vehicle, even if the airbag is off.

If your child restraint has the LATCH system, see *Lower Anchors and Tethers for Children (LATCH) on page 2-49* for how and where to install your child restraint using LATCH. If you secure a child restraint using a safety belt and it uses a top tether, see *Lower Anchors and Tethers for Children (LATCH) on page 2-49* for top tether anchor locations.

Do not secure a child seat in a position without a top tether anchor if a national or local law requires that the top tether be anchored, or if the instructions that come with the child restraint say that the top strap must be anchored.

In Canada, the law requires that forward-facing child restraints have a top tether, and that the tether be attached.

You will be using the lap-shoulder belt to secure the child restraint in this position. Follow the instructions that came with the child restraint.

1. Move the seat as far back as it will go before securing the forward-facing child restraint.
2. Put the child restraint on the seat.

3. Pick up the latch plate, and run the lap and shoulder portions of the vehicle's safety belt through or around the restraint. The child restraint instructions will show you how.

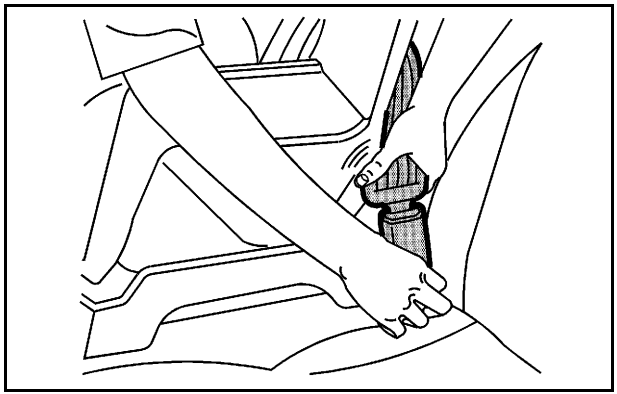

4. Push the latch plate into the buckle until it clicks.

   Make sure the release button is positioned so you would be able to unbuckle the safety belt quickly if necessary.

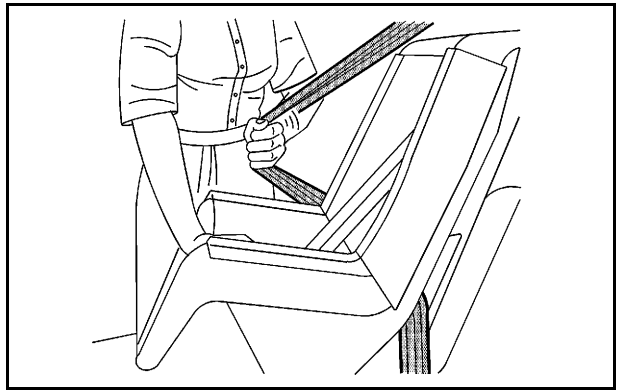

5. Pull the rest of the shoulder belt all the way out of the retractor to set the lock.

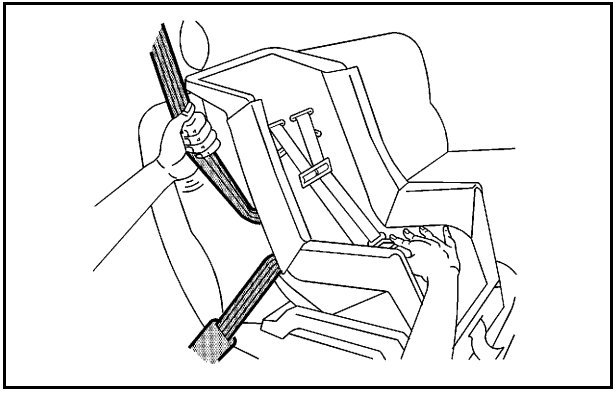

6. To tighten the belt, push down on the child restraint, pull the shoulder portion of the belt to tighten the lap portion of the belt and feed the shoulder belt back into the retractor. If you are using a forward-facing child restraint, you may find it helpful to use your knee to push down on the child restraint as you tighten the belt.

7. If your child restraint has a top tether, follow the child restraint manufacturer's instructions regarding the use of the top tether. See *Lower Anchors and Tethers for Children (LATCH) on page 2-49* for more information.

8. Push and pull the child restraint in different directions to be sure it is secure.

To remove the child restraint, unbuckle the vehicle safety belt and let it return to the stowed position. If the top tether is attached to a top tether anchor, disconnect it.

Airbag System

The vehicle has the following airbags:

- A frontal airbag for the driver.
- A frontal airbag for the right front passenger.

The vehicle may have the following airbags:

- A seat-mounted side impact airbag for the driver.
- A seat-mounted side impact airbag for the right front passenger.
- A roof-rail airbag for the driver and the passenger seated directly behind the driver.
- A roof-rail airbag for the right front passenger and the person seated directly behind the right front passenger.

All of the airbags in the vehicle will have the word AIRBAG embossed in the trim or on an attached label near the deployment opening.

For frontal airbags, the word AIRBAG will appear on the middle part of the steering wheel for the driver and on the instrument panel for the right front passenger.

With seat-mounted side impact airbags, the word AIRBAG will appear on the side of the seatback closest to the door.

With roof-rail airbags, the word AIRBAG will appear along the headliner or trim.

Airbags are designed to supplement the protection provided by safety belts. Even though today's airbags are also designed to help reduce the risk of injury from the force of an inflating bag, all airbags must inflate very quickly to do their job.

Here are the most important things to know about the airbag system:

⚠ WARNING:

You can be severely injured or killed in a crash if you are not wearing your safety belt — even if you have airbags. Airbags are designed to work with safety belts, but do not replace them. Also, airbags are not designed to deploy in every crash. In some crashes safety belts are your only restraint. See *When Should an Airbag Inflate? on page 2-78*.

Wearing your safety belt during a crash helps reduce your chance of hitting things inside the vehicle or being ejected from it. Airbags are “supplemental restraints” to the safety belts. Everyone in your vehicle should wear a safety belt properly — whether or not there is an airbag for that person.

⚠ WARNING:

Airbags inflate with great force, faster than the blink of an eye. Anyone who is up against, or very close to, any airbag when it inflates can be seriously injured or killed. Do not sit unnecessarily close to the airbag, as you would be if you were sitting on the edge of your seat or leaning forward. Safety belts help keep you in position before and during a crash. Always wear your safety belt, even with airbags. The driver should sit as far back as possible while still maintaining control of the vehicle.

Occupants should not lean on or sleep against the door or side windows in seating positions with seat-mounted side impact airbags and/or roof-rail airbags.

⚠ WARNING:

Children who are up against, or very close to, any airbag when it inflates can be seriously injured or killed. Airbags plus lap-shoulder belts offer protection for adults and older children, but not for young children and infants. Neither the vehicle's safety belt system nor its airbag system is designed for them. Young children and infants need the protection that a child restraint system can provide. Always secure children properly in your vehicle. To read how, see *Older Children on page 2-39* or *Infants and Young Children on page 2-42*.

There is an airbag readiness light on the instrument panel cluster, which shows the airbag symbol.

The system checks the airbag electrical system for malfunctions. The light tells you if there is an electrical problem. See *Airbag Readiness Light on page 4-33* for more information.

Where Are the Airbags?

The driver airbag is in the middle of the steering wheel.

The right front passenger airbag is in the instrument panel on the passenger's side.

Driver Side Shown, Passenger Side Similar

If the vehicle has seat-mounted side impact airbags for the driver and right front passenger, they are in the side of the seatbacks closest to the door.

Driver Side shown, Passenger Side similar

If the vehicle has roof-rail airbags for the driver, right front passenger, and second row outboard passengers, they are in the ceiling above the side windows.

⚠ WARNING:

If something is between an occupant and an airbag, the airbag might not inflate properly or it might force the object into that person causing severe injury or even death. The path of an inflating airbag must be kept clear. Do not put anything between an occupant and an airbag, and do not attach or put anything on the steering wheel hub or on or near any other airbag covering.

Do not use seat accessories that block the inflation path of a seat-mounted side impact airbag.

Never secure anything to the roof of a vehicle with roof-rail airbags by routing a rope or tie down through any door or window opening. If you do, the path of an inflating roof-rail airbag will be blocked.

When Should an Airbag Inflate?

Frontal airbags are designed to inflate in moderate to severe frontal or near-frontal crashes to help reduce the potential for severe injuries mainly to the driver's or right front passenger's head and chest. However, they are only designed to inflate if the impact exceeds a predetermined deployment threshold. Deployment thresholds are used to predict how severe a crash is likely to be in time for the airbags to inflate and help restrain the occupants.

Whether the frontal airbags will or should deploy is not based on how fast your vehicle is traveling. It depends largely on what you hit, the direction of the impact, and how quickly your vehicle slows down.

Frontal airbags may inflate at different crash speeds. For example:

- If the vehicle hits a stationary object, the airbags could inflate at a different crash speed than if the vehicle hits a moving object.
- If the vehicle hits an object that deforms, the airbags could inflate at a different crash speed than if the vehicle hits an object that does not deform.
- If the vehicle hits a narrow object (like a pole), the airbags could inflate at a different crash speed than if the vehicle hits a wide object (like a wall).
- If the vehicle goes into an object at an angle, the airbags could inflate at a different crash speed than if the vehicle goes straight into the object.

Thresholds can also vary with specific vehicle design.

Frontal airbags are not intended to inflate during vehicle rollovers, rear impacts, or in many side impacts.

If the GVWR (Gross Vehicle Weight Rating) of your vehicle is 8,500 lb (3 855 kg) or above, the vehicle has single stage airbags. If the GVWR is below 8,500 lb (3 855 kg) then the vehicle has dual stage airbags. You can find the GVWR on the certification label on the rear edge of the driver's door. See *Loading the Vehicle on page 5-33* for more information.

The vehicle may have dual-stage frontal airbags. Dual-stage airbags adjust the restraint according to crash severity. The vehicle has electronic frontal sensors, which help the sensing system distinguish between a moderate frontal impact and a more severe frontal impact. For moderate frontal impacts, dual-stage airbags inflate at a level less than full deployment. For more severe frontal impacts, full deployment occurs.

Vehicles with dual stage airbags also have a driver's seat position sensor which enables the sensing system to monitor the position of the driver seat (all models). The seat position sensor provides information that is used to determine if the airbags should deploy at a reduced level or at full deployment.

The vehicle may or may not have seat-mounted side impact and roof-rail airbags. See *Airbag System on page 2-73*. Seat-mounted side impact and roof-rail airbags are intended to inflate in moderate to severe side crashes. In addition, these roof-rail airbags are intended to inflate during a rollover or in a severe frontal impact. Seat-mounted side impact and roof-rail airbags will inflate if the crash severity is above the system's designed threshold level. The threshold level can vary with specific vehicle design.

Roof-rail airbags are not intended to inflate in rear impacts. A seat-mounted side impact airbag is intended to deploy on the side of the vehicle that is struck. Both roof-rail airbags will deploy when either side of the vehicle is struck, or if the sensing system predicts that the vehicle is about to roll over, or in a severe frontal impact.

In any particular crash, no one can say whether an airbag should have inflated simply because of the damage to a vehicle or because of what the repair costs were. For frontal airbags, inflation is determined by what the vehicle hits, the angle of the impact, and how quickly the vehicle slows down. For seat-mounted side impact and roof-rail airbags, deployment is determined by the location and severity of the side impact. In a rollover event, roof-rail airbag deployment is determined by the direction of the roll.

What Makes an Airbag Inflate?

In a deployment event, the sensing system sends an electrical signal triggering a release of gas from the inflator. Gas from the inflator fills the airbag causing the bag to break out of the cover and deploy. The inflator, the airbag, and related hardware are all part of the airbag module.

Frontal airbag modules are located inside the steering wheel and instrument panel. For vehicles with seat-mounted side impact airbags, there are airbags modules in the side of the front seatbacks closest to the door. For vehicles with roof-rail airbags, there are airbag modules in the ceiling of the vehicle, near the side windows that have occupant seating positions.

How Does an Airbag Restrain?

In moderate to severe frontal or near frontal collisions, even belted occupants can contact the steering wheel or the instrument panel. In moderate to severe side collisions, even belted occupants can contact the inside of the vehicle.

Airbags supplement the protection provided by safety belts. Frontal airbags distribute the force of the impact more evenly over the occupant's upper body, stopping the occupant more gradually. Seat-mounted side impact and roof-rail airbags distribute the force of the impact more evenly over the occupant's upper body.

Rollover capable roof-rail airbags are designed to help contain the head and chest of occupants in the outboard seating positions in the first and second rows. The rollover capable roof-rail airbags are designed to help reduce the risk of full or partial ejection in rollover events, although no system can prevent all such ejections.

But airbags would not help in many types of collisions, primarily because the occupant's motion is not toward those airbags. See *When Should an Airbag Inflate? on page 2-78* for more information.

Airbags should never be regarded as anything more than a supplement to safety belts.

What Will You See After an Airbag Inflates?

After the frontal airbags and seat-mounted side impact airbags inflate, they quickly deflate, so quickly that some people may not even realize an airbag inflated. Roof-rail airbags may still be at least partially inflated for some time after they deploy. Some components of the airbag module may be hot for several minutes. For location of the airbag modules, see *What Makes an Airbag Inflate? on page 2-80*.

The parts of the airbag that come into contact with you may be warm, but not too hot to touch. There may be some smoke and dust coming from the vents in the deflated airbags. Airbag inflation does not prevent the driver from seeing out of the windshield or being able to steer the vehicle, nor does it prevent people from leaving the vehicle.

⚠ WARNING:

When an airbag inflates, there may be dust in the air. This dust could cause breathing problems for people with a history of asthma or other breathing trouble. To avoid this, everyone in the vehicle should get out as soon as it is safe to do so.
If you have breathing problems but cannot get out of the vehicle after an airbag inflates, then get fresh air by opening a window or a door. If you experience breathing problems following an airbag deployment, you should seek medical attention.

The vehicle has a feature that may automatically unlock the doors, turn on the interior lamps and hazard warning flashers, and shut off the fuel system after the airbags inflate. You can lock the doors, turn off the interior lamps and hazard warning flashers by using the controls for those features.

⚠ WARNING:

A crash severe enough to inflate the airbags may have also damaged important functions in the vehicle, such as the fuel system, brake and steering systems, etc. Even if the vehicle appears to be drivable after a moderate crash, there may be concealed damage that could make it difficult to safely operate the vehicle.

Use caution if you should attempt to restart the engine after a crash has occurred.

In many crashes severe enough to inflate the airbag, windshields are broken by vehicle deformation. Additional windshield breakage may also occur from the right front passenger airbag.

- Airbags are designed to inflate only once. After an airbag inflates, you will need some new parts for the airbag system. If you do not get them, the airbag system will not be there to help protect you in another crash. A new system will include airbag modules and possibly other parts. The service manual for your vehicle covers the need to replace other parts.
- The vehicle has a crash sensing and diagnostic module which records information after a crash. See *Vehicle Data Recording and Privacy on page 8-19* and *Event Data Recorders on page 8-20*.
- Let only qualified technicians work on the airbag systems. Improper service can mean that an airbag system will not work properly. See your dealer for service.

Airbag Off Switch

If one of the switches pictured in the following illustrations is located in the glove box, the vehicle has an airbag on-off switch that you can use to manually turn on or off the right front passenger airbag.

United States

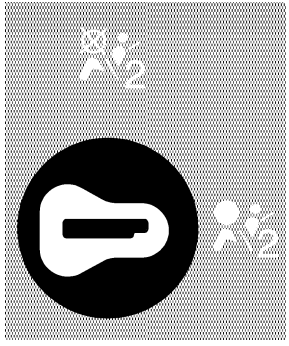

Canada

If the vehicle does not have an airbag off switch, it may have a passenger sensing system. See *Passenger Sensing System on page 2-86*.

This switch should only be turned to the off position if the person in the right front passenger position is a member of a passenger risk group identified by the national government as follows:

Infant. An infant (less than 1 year old) must ride in the front seat because:

- *My vehicle has no rear seat;*
- *My vehicle has a rear seat too small to accommodate a rear-facing infant seat; or*
- *The infant has a medical condition which, according to the infant's physician, makes it necessary for the infant to ride in the front seat so that the driver can constantly monitor the child's condition.*

Child age 1 to 12. A child age 1 to 12 must ride in the front seat because:

- *My vehicle has no rear seat;*
- *Although children ages 1 to 12 ride in the rear seat(s) whenever possible, children ages 1 to 12 sometimes must ride in the front because no space is available in the rear seat(s) of my vehicle; or*
- *The child has a medical condition which, according to the child's physician, makes it necessary for the child to ride in the front seat so that the driver can constantly monitor the child's condition.*

Medical Condition. A passenger has a medical condition which, according to his or her physician:

- *Causes the passenger airbag to pose a special risk for the passenger; and*
- *Makes the potential harm from the passenger airbag in a crash greater than the potential harm from turning off the airbag and allowing the passenger, even if belted, to hit the dashboard or windshield in a crash.*

⚠ WARNING:

If the right front passenger's airbag is turned off for a person who is not in a risk group identified by the national government, that person will not have the extra protection of an airbag. In a crash, the airbag will not be able to inflate and help protect the person sitting there. Do not turn off the passenger's airbag unless the person sitting there is in a risk group.

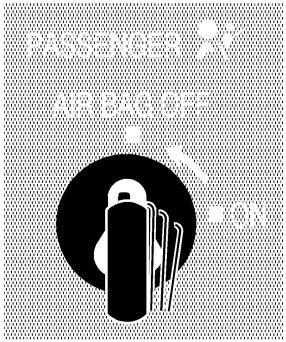

United States

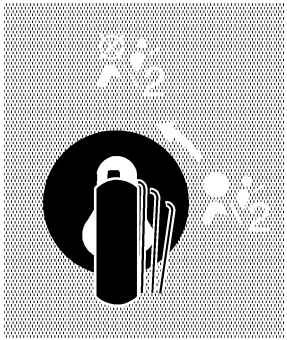

Canada

To turn off the right front passenger airbag, insert the ignition key into the switch, push in, and move the switch to the off position.

The word OFF or the off symbol will come on in the passenger airbag status indicator located in the overhead console to let you know that the right front passenger airbag is off, after the system check is completed. The airbag off light will come on and stay on to let you know that the right front passenger's airbag is off. See *Airbag Off Light on page 4-34*.

⚠ WARNING:

If the airbag readiness light ever comes on and stays on, it means that something may be wrong with the airbag system. For example, the right front passenger airbag could inflate even though the airbag on-off switch is turned off.

To help avoid injury to yourself or others, have the vehicle serviced right away. See *Airbag Readiness Light on page 4-33* for more information, including important safety information.

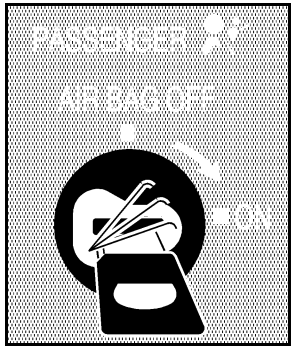

United States

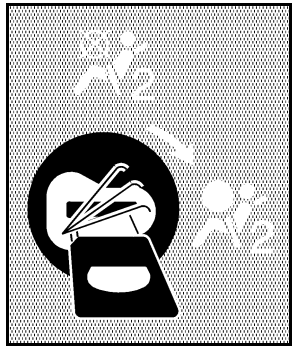

Canada

To turn the right front passenger airbag on again, insert the ignition key into the switch, push in, and move the switch to the on position.

The right front passenger frontal airbag is now enabled (may inflate). See *Airbag Off Light on page 4-34* for more information.

Passenger Sensing System

If the vehicle has one of the indicators pictured in the following illustrations, then the vehicle has a passenger sensing system for the right front passenger position, unless there is an airbag off switch located in the glove box. If there is an airbag off switch, the vehicle does not have a passenger sensing system. See *Airbag Off Switch on page 2-83* for more information.

The passenger airbag status indicator will be visible on the overhead console when the vehicle is started.

In addition, if the vehicle has a passenger sensing system for the right front passenger position, the label on the vehicle's sun visors refers to “ADVANCED AIRBAGS”.

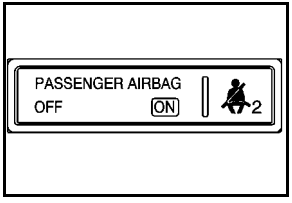

United States

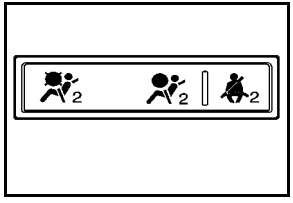

Canada

The words ON and OFF, or the symbol for on and off, will be visible during the system check. If you are using remote start to start the vehicle from a distance, if equipped, you may not see the system check. When the system check is complete, either the word ON or OFF, or the symbol for on or off, will be visible. See *Passenger Airbag Status Indicator on page 4-36*.

The passenger sensing system will turn off the right front passenger frontal airbag under certain conditions. The driver airbag, seat-mounted side impact airbags (if equipped), and the roof-rail airbags (if equipped) are not affected by the passenger sensing system.

The passenger sensing system works with sensors that are part of the right front passenger seat and safety belt. The sensors are designed to detect the presence of a properly-seated occupant and determine if the right front passenger frontal airbag should be enabled (may inflate) or not.

According to accident statistics, children are safer when properly secured in a rear seat in the correct child restraint for their weight and size.

We recommend that children be secured in a rear seat, including: an infant or a child riding in a rear-facing child restraint; a child riding in a forward-facing child seat; an older child riding in a booster seat; and children, who are large enough, using safety belts.

A label on the sun visor says, “Never put a rear-facing child seat in the front.” This is because the risk to the rear-facing child is so great, if the airbag deploys.

⚠ WARNING:

A child in a rear-facing child restraint can be seriously injured or killed if the right front passenger airbag inflates. This is because the back of the rear-facing child restraint would be very close to the inflating airbag. A child in a forward-facing child restraint can be seriously injured or killed if the right front passenger airbag inflates and the passenger seat is in a forward position.

Even if the passenger sensing system has turned off the right front passenger frontal airbag, no system is fail-safe. No one can guarantee that an airbag will not deploy under some unusual circumstance, even though the airbag is turned off.

Secure rear-facing child restraints in a rear seat, even if the airbag is off. If you secure a forward-facing child restraint in the right front seat, always move the front passenger seat as far back as it will go. It is better to secure the child restraint in a rear seat.

If the vehicle does not have a rear seat that will accommodate a rear-facing child restraint, a rear-facing child restraint should not be installed in the vehicle, even if the airbag is off.

The passenger sensing system is designed to turn off the right front passenger frontal airbag if:

- The right front passenger seat is unoccupied.
- The system determines an infant is present in a child restraint.
- A right front passenger takes his/her weight off of the seat for a period of time.
- Or, if there is a critical problem with the airbag system or the passenger sensing system.

When the passenger sensing system has turned off the right front passenger frontal airbag, the off indicator will light and stay lit to remind you that the airbag is off. See *Passenger Airbag Status Indicator on page 4-36*.

The passenger sensing system is designed to turn on (may inflate) the right front passenger frontal airbag anytime the system senses that a person of adult size is sitting properly in the right front passenger seat.

When the passenger sensing system has allowed the airbag to be enabled, the on indicator will light and stay lit to remind you that the airbag is active.

For some children, including children in child restraints, and for very small adults, the passenger sensing system may or may not turn off the right front passenger frontal airbag, depending upon the person's seating posture and body build. Everyone in your vehicle who has outgrown child restraints should wear a safety belt properly — whether or not there is an airbag for that person.

⚠ WARNING:

If the airbag readiness light ever comes on and stays on, it means that something may be wrong with the airbag system. To help avoid injury to yourself or others, have the vehicle serviced right away. See *Airbag Readiness Light on page 4-33* for more information, including important safety information.

If the On Indicator is Lit for a Child Restraint

If a child restraint has been installed and the on indicator is lit:

1. Turn the vehicle off.
2. Remove the child restraint from the vehicle.
3. Remove any additional items from the seat such as blankets, cushions, seat covers, seat heaters, or seat massagers.
4. Reinstall the child restraint following the directions provided by the child restraint manufacturer and refer to *Securing a Child Restraint in the Right Front Seat Position With Passenger Sensing System* in the Index.
5. If, after reinstalling the child restraint and restarting the vehicle, the on indicator is still lit, turn the vehicle off. Then slightly recline the vehicle seatback and adjust the seat cushion, if adjustable, to make sure that the vehicle seatback is not pushing the child restraint into the seat cushion.

   Also make sure the child restraint is not trapped under the vehicle head restraint. If this happens, adjust the head restraint. See *Head Restraints on page 2-3*.
6. Restart the vehicle.

   The passenger sensing system may or may not turn off the airbag for a child in a child restraint depending upon the child's seating posture and body build. It is better to secure the child restraint in a rear seat.

If the Off Indicator is Lit for an Adult-Size Occupant

If a person of adult-size is sitting in the right front passenger seat, but the off indicator is lit, it could be because that person is not sitting properly in the seat.

If this happens, use the following steps to allow the system to detect that person and enable the right front passenger frontal airbag:

1. Turn the vehicle off.
2. Remove any additional material from the seat, such as blankets, cushions, seat covers, seat heaters, or seat massagers.
3. Place the seatback in the fully upright position.
4. Have the person sit upright in the seat, centered on the seat cushion, with legs comfortably extended.
5. Restart the vehicle and have the person remain in this position for two to three minutes after the on indicator is lit.

Additional Factors Affecting System Operation

Safety belts help keep the passenger in position on the seat during vehicle maneuvers and braking, which helps the passenger sensing system maintain the passenger airbag status. See “Safety Belts” and “Child Restraints” in the Index for additional information about the importance of proper restraint use.

If the shoulder portion of the belt is pulled out all the way, the child restraint locking feature will be engaged. This may unintentionally cause the passenger sensing system to turn the airbag off for some adult size occupants. If this happens, let the belt go back all the way and start again.

A thick layer of additional material, such as a blanket or cushion, or aftermarket equipment such as seat covers, seat heaters, and seat massagers can affect how well the passenger sensing system operates. We recommend that you not use seat covers or other aftermarket equipment except when approved by GM for your specific vehicle. See *Adding Equipment to Your Airbag-Equipped Vehicle on page 2-92* for more information about modifications that can affect how the system operates.

The on indicator may be lit if an object, such as a briefcase, handbag, grocery bag, laptop or other electronic device, is put on an unoccupied seat. If this is not desired, remove the object from the seat.

⚠ WARNING:

Stowing of articles under the passenger seat or between the passenger seat cushion and seatback may interfere with the proper operation of the passenger sensing system.

Servicing Your Airbag-Equipped Vehicle

Airbags affect how the vehicle should be serviced. There are parts of the airbag system in several places around the vehicle. Your dealer and the service manual have information about servicing the vehicle and the airbag system. To purchase a service manual, see *Service Publications Ordering Information on page 8-18*.

⚠ WARNING:

For up to 10 seconds after the ignition is turned off and the battery is disconnected, an airbag can still inflate during improper service. You can be injured if you are close to an airbag when it inflates. Avoid yellow connectors. They are probably part of the airbag system. Be sure to follow proper service procedures, and make sure the person performing work for you is qualified to do so.

Adding Equipment to Your Airbag-Equipped Vehicle

Q: Is there anything I might add to or change about the vehicle that could keep the airbags from working properly?

A: Yes. If you add things that change your vehicle's frame, bumper system, height, front end or side sheet metal, they may keep the airbag system from working properly. Changing or moving any parts of the front seats, safety belts, the airbag sensing and diagnostic module, steering wheel, instrument panel, roof-rail airbag modules, ceiling headliner or pillar garnish trim, overhead console, front sensors, side impact sensors, rollover sensor module, or airbag wiring can affect the operation of the airbag system.

In addition, the vehicle may have a passenger sensing system for the right front passenger's position, which includes sensors that are part of the passenger's seat. The passenger sensing system may not operate properly if the original seat trim is replaced with non-GM covers, upholstery or trim, or with GM covers, upholstery or trim designed for a different vehicle. Any object, such as an aftermarket seat heater or a comfort enhancing pad or device, installed under or on top of the seat fabric, could also interfere with the operation of the passenger sensing system. This could either prevent proper deployment of the passenger airbag(s) or prevent the passenger sensing system from properly turning off the passenger airbag(s). See *Passenger Sensing System on page 2-86*.

If you have any questions about this, you should contact Customer Assistance before you modify your vehicle. The phone numbers and addresses for Customer Assistance are in Step Two of the Customer Satisfaction Procedure in this manual. See *Customer Satisfaction Procedure on page 8-2*.

If the vehicle has rollover roof-rail airbags, see *Different Size Tires and Wheels on page 6-93* for additional important information.

Q: What if I added a snow plow? Will it keep the airbags from working properly?

A: We have designed our airbag systems to work properly under a wide range of conditions, including snow plowing with vehicles that have the optional Snow Plow Prep Package (RPO VYU). But do not change or defeat the snow plow's “tripping mechanism.” If you do, it can damage your snow plow and your vehicle, and it may cause an airbag inflation.

Q: Because I have a disability, I have to get my vehicle modified. How can I find out whether this will affect my airbag system?

A: If you have questions, call Customer Assistance. The phone numbers and addresses for Customer Assistance are in Step Two of the Customer Satisfaction Procedure in this manual. See *Customer Satisfaction Procedure on page 8-2*.

In addition, your dealer and the service manual have information about the location of the airbag sensors, sensing and diagnostic module and airbag wiring.

Restraint System Check

Checking the Restraint Systems

Safety Belts

Now and then, check that the safety belt reminder light, safety belts, buckles, latch plates, retractors, and anchorages are all working properly.

Look for any other loose or damaged safety belt system parts that might keep a safety belt system from doing its job. See your dealer to have it repaired. Torn or frayed safety belts may not protect you in a crash. They can rip apart under impact forces. If a belt is torn or frayed, get a new one right away.

Make sure the safety belt reminder light is working. See *Safety Belt Reminders on page 4-32* for more information.

Keep safety belts clean and dry. See *Care of Safety Belts on page 6-124*.

Airbags

The airbag system does not need regularly scheduled maintenance or replacement. Make sure the airbag readiness light is working. See *Airbag Readiness Light on page 4-33* for more information.

Notice: **If an airbag covering is damaged, opened, or broken, the airbag may not work properly. Do not open or break the airbag coverings. If there are any opened or broken airbag covers, have the airbag covering and/or airbag module replaced. For the location of the airbag modules, see *What Makes an Airbag Inflate? on page 2-80*. See your dealer for service.**

Replacing Restraint System Parts After a Crash

⚠ WARNING:

A crash can damage the restraint systems in your vehicle. A damaged restraint system may not properly protect the person using it, resulting in serious injury or even death in a crash. To help make sure your restraint systems are working properly after a crash, have them inspected and any necessary replacements made as soon as possible.

If the vehicle has been in a crash, do you need new safety belts or LATCH system (if equipped) parts?

After a very minor crash, nothing may be necessary. But the safety belt assemblies that were used during any crash may have been stressed or damaged. See your dealer to have the safety belt assemblies inspected or replaced.

If the vehicle has the LATCH system and it was being used during a crash, you may need new LATCH system parts.

New parts and repairs may be necessary even if the safety belt or LATCH system (if equipped), was not being used at the time of the crash.

If an airbag inflates, you will need to replace airbag system parts. See the part on the airbag system earlier in this section.

Have the safety belt pretensioners checked if the vehicle has been in a crash, if the airbag readiness light stays on after the vehicle is started, or while you are driving. See *Airbag Readiness Light on page 4-33*.

✍ NOTES

Section 3 Features and Controls

Keys 3-3
Remote Keyless Entry (RKE) System 3-4
Remote Keyless Entry (RKE) System Operation 3-5
Remote Vehicle Start 3-7

Doors and Locks 3-10
Door Locks 3-10
Power Door Locks 3-11
Delayed Locking 3-11
Programmable Automatic Door Locks 3-11
Rear Door Security Locks 3-12
Lockout Protection 3-13
Rear Doors 3-13
Tailgate 3-14

Windows 3-16
Manual Windows 3-17
Power Windows 3-17
Power Sliding Rear Window 3-18
Sun Visors 3-19

Theft-Deterrent Systems 3-19
Content Theft-Deterrent 3-19
PASS-Key® III+ Electronic Immobilizer 3-21
PASS-Key® III+ Electronic Immobilizer Operation 3-21

Starting and Operating Your Vehicle 3-23
New Vehicle Break-In 3-23
Ignition Positions 3-24
Retained Accessory Power (RAP) 3-25
Starting the Engine 3-26
Fast Idle System 3-27
Adjustable Throttle and Brake Pedal 3-28
Engine Coolant Heater 3-29
Active Fuel Management™ 3-30
Automatic Transmission Operation 3-30
Tow/Haul Mode 3-36
Four-Wheel Drive 3-39
Parking Brake 3-54
Shifting Into Park 3-55
Shifting Out of Park 3-57
Parking Over Things That Burn 3-58
Engine Exhaust 3-58
Running the Vehicle While Parked 3-59

Mirrors 3-60
Manual Rearview Mirror 3-60
Automatic Dimming Rearview Mirror 3-60
Outside Manual Mirrors 3-60
Outside Towing Mirrors 3-61
Outside Power Mirrors 3-61
Outside Power Foldaway Mirrors 3-62

Park Tilt Mirrors 3-63
Outside Convex Mirror 3-63
Outside Heated Mirrors 3-63
Object Detection Systems 3-64
Ultrasonic Rear Parking Assist (URPA) 3-64
Rear Vision Camera (RVC) 3-67
Universal Home Remote System 3-73
Universal Home Remote System Operation (With Three Round LED) 3-73
Storage Areas 3-80
Glove Box 3-80
Cupholders 3-80
Instrument Panel Storage 3-81
Center Console Storage 3-81
Roof Rack System 3-82
Rear Seat Armrest 3-83
Sunroof 3-83

Keys

⚠ WARNING:

Leaving children in a vehicle with the ignition key is dangerous for many reasons, children or others could be badly injured or even killed. They could operate the power windows or other controls or even make the vehicle move. The windows will function with the keys in the ignition and children could be seriously injured or killed if caught in the path of a closing window. Do not leave the keys in a vehicle with children.

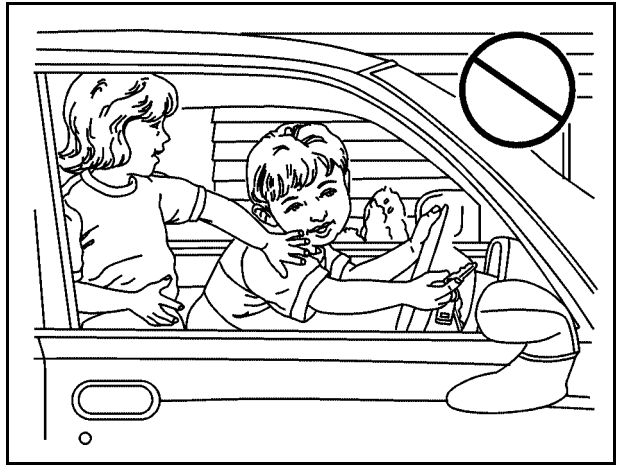

The key is used for the ignition and all door locks.

The key has a bar-coded key tag that the dealer or qualified locksmith can use to make new keys. Store this information in a safe place, not in the vehicle.

See your dealer if a replacement key or additional key is needed.

Notice: **If you ever lock your keys in the vehicle, you may have to damage the vehicle to get in. Be sure you have spare keys.**

If you are locked out of the vehicle, call the Roadside Assistance Center. See *Roadside Assistance Program on page 8-7*.

Remote Keyless Entry (RKE) System

See *Radio Frequency Statement on page 8-21* for information regarding Part 15 of the Federal Communications Commission (FCC) Rules and RSS-210/211 of Industry Canada.

Changes or modifications to this system by other than an authorized service facility could void authorization to use this equipment.

If there is a decrease in the RKE operating range, try this:

- Check the distance. The transmitter may be too far from the vehicle. Stand closer during rainy or snowy weather.
- Check the location. Other vehicles or objects may be blocking the signal. Take a few steps to the left or right, hold the transmitter higher, and try again.
- Check the transmitter's battery. See “Battery Replacement” later in this section.
- If the transmitter is still not working correctly, see your dealer or a qualified technician for service.

Remote Keyless Entry (RKE) System Operation

The Remote Keyless Entry (RKE) transmitter functions work up to 195 feet (60 m) away from the vehicle.

There are other conditions which can affect the performance of the transmitter. See *Remote Keyless Entry (RKE) System on page 3-4*.

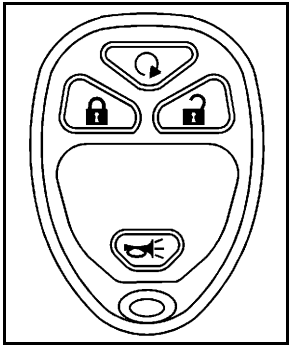

With Remote Start (Without Remote Start Similar)

(Remote Vehicle Start): For vehicles with this feature, press to start the engine from outside the vehicle using the RKE transmitter. See *Remote Vehicle Start on page 3-7* for additional information.

(Lock): Press to lock all the doors.

If enabled through the Driver Information Center (DIC), the turn signal lamps flash once to indicate locking has occurred. If enabled through the DIC, the horn chirps when is pressed again within three seconds. See *DIC Vehicle Customization (With DIC Buttons) on page 4-76* for additional information.

Pressing arms the content theft-deterrent system. See *Content Theft-Deterrent on page 3-19*.

(Unlock): Press once to unlock only the driver door. If is pressed again within three seconds, all remaining doors unlock. The interior lamps may come on and stay on for 20 seconds or until the ignition is turned on.

If enabled through the DIC, the turn signal lamps flash twice to indicate unlocking has occurred. See *DIC Vehicle Customization (With DIC Buttons) on page 4-76*. If enabled through the DIC, the exterior lights may turn on. See “APPROACH LIGHTING” under *DIC Vehicle Customization (With DIC Buttons) on page 4-76*.

Pressing on the RKE transmitter disarms the content theft-deterrent system. See *Content Theft-Deterrent on page 3-19*.

(Vehicle Locator/Panic Alarm): Press and release to locate the vehicle. The turn signal lamps flash and the horn sounds three times.

Press and hold for more than two seconds to activate the panic alarm. The turn signal lamps flash and the horn sounds repeatedly for 30 seconds. The alarm turns off when the ignition is moved to ON/RUN or is pressed again. The ignition must be in LOCK/OFF for the panic alarm to work.

The vehicle comes with two transmitters. Each transmitter will have a number on it, “1” or “2”. These numbers correspond to the driver of the vehicle. For example, the memory seat position for driver 1 will be recalled when using the transmitter labeled “1”, if enabled through the DIC. See *Memory Seat, Mirrors, and Pedals on page 2-8* and *DIC Vehicle Customization (With DIC Buttons) on page 4-76* for more information.

Programming Transmitters to the Vehicle

Only RKE transmitters programmed to this vehicle will work. If a transmitter is lost or stolen, a replacement can be purchased and programmed through your dealer. When the replacement transmitter is programmed to this vehicle, all remaining transmitters must also be reprogrammed. Any lost or stolen transmitters will no longer work once the new transmitter is programmed. Each vehicle can have up to eight transmitters programmed to it. See “Relearn Remote Key” under *DIC Operation and Displays (With DIC Buttons) on page 4-50* or *DIC Operation and Displays (Without DIC Buttons) on page 4-59* for instructions on how to match RKE transmitters to your vehicle.

Battery Replacement

Replace the battery if the REPLACE BATTERY IN REMOTE KEY message displays in the DIC. See “REPLACE BATTERY IN REMOTE KEY” under *DIC Warnings and Messages on page 4-66* for additional information.

Notice: **When replacing the battery, do not touch any of the circuitry on the transmitter. Static from your body could damage the transmitter.**

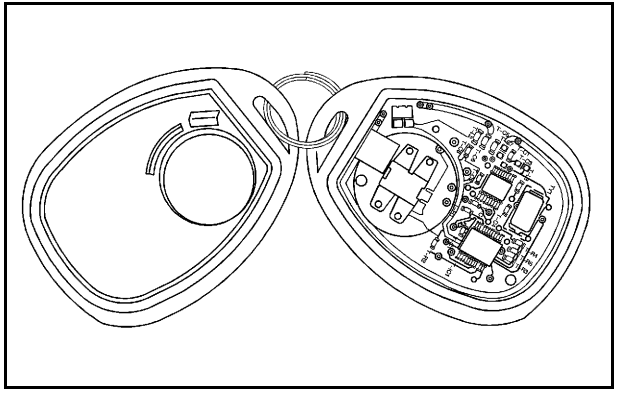

To replace the battery:

1. Separate the transmitter with a flat, thin object, such as a flat head screwdriver.
   - Carefully insert the tool into the notch located along the parting line of the transmitter. Do not insert the tool too far. Stop as soon as resistance is felt.
   - Twist the tool until the transmitter is separated.
2. Remove the old battery. Do not use a metal object.
3. Insert the new battery, positive side facing down. Replace with a CR2032 or equivalent battery.
4. Snap the transmitter back together.

Remote Vehicle Start

Your vehicle may have a remote starting feature. This feature allows you to start the engine from outside of the vehicle. It may also start up the vehicle's heating or air conditioning systems and rear window defogger. Normal operation of the system will return after the key is turned to the ON/RUN position.

If your vehicle has an automatic climate control system, the climate control system will default to a heating or cooling mode depending on the outside temperatures. If your vehicle does not have an automatic climate control system, the system will turn on at the setting the vehicle was set to when the vehicle was last turned off.

During a remote start, if your vehicle has an automatic climate control system and heated seats, the heated seats will turn on during colder outside temperatures and will shut off when the key is turned to ON/RUN. If your vehicle does not have an automatic climate control system, during remote start, you will need to manually turn the heated seats on and off. See *Heated Seats on page 2-8* for additional information.

Laws in some communities may restrict the use of remote starters. For example, some laws may require a person using the remote start to have the vehicle in view when doing so. Check local regulations for any requirements on remote starting of vehicles.

Do not use the remote start feature if your vehicle is low on fuel. Your vehicle may run out of fuel.

If your vehicle has the remote start feature, the RKE transmitter functions will have an increased range of operation. However, the range may be less while the vehicle is running.

There are other conditions which can affect the performance of the transmitter, see *Remote Keyless Entry (RKE) System on page 3-4* for additional information.

(Remote Start): This button will be on the RKE transmitter if you have remote start.

To start the vehicle using the remote start feature:

1. Aim the transmitter at the vehicle.
2. Press and release the transmitter's lock button. The vehicle's doors will lock. Immediately press and hold the transmitter's remote start button until the turn signal lights flash. If you cannot see the vehicle's lights, press and hold the remote start button for two to four seconds. Pressing the remote start button again after the vehicle has started will turn the engine off.

   When the vehicle starts, the parking lamps will turn on and remain on while the vehicle is running.

   If the vehicle is left running it will automatically shut off after 10 minutes unless a time extension has been done.
3. If it is the first remote start since the vehicle has been driven, repeat these steps, while the engine is still running, to extend the engine running time by 10 minutes. Remote start can be extended one time.

After entering the vehicle during a remote start, insert and turn the key to RUN to drive the vehicle.

To manually shut off a remote start, do any of the following:

- Aim the RKE transmitter at the vehicle and press the remote start button until the parking lamps turn off.
- Turn on the hazard warning flashers.
- Turn the ignition switch on and then off.

The vehicle can be remote started two separate times between driving sequences. The engine will run for 10 minutes after each remote start.

Or, you can extend the engine run time by another 10 minutes within the first 10 minute remote start time frame, and before the engine stops.

For example, if the lock button and then the remote start buttons are pressed again after the vehicle has been running for five minutes, 10 minutes are added, allowing the engine to run for 15 minutes.

The additional ten minutes are considered a second remote vehicle start.

Once two remote starts, or a single remote start with one time extension has been done, the vehicle must be started with the key. After the key is removed from the ignition, the vehicle can be remote started again.

The vehicle cannot be remote started if the key is in the ignition, the hood is not closed, or if there is an emission control system malfunction and the check engine light comes on.

Also, the engine will turn off during a remote vehicle start if the coolant temperature gets too high or if the oil pressure gets low.

Vehicles that have the remote vehicle start feature are shipped from the factory with the remote vehicle start system enabled. The system may be enabled or disabled through the DIC. See “REMOTE START” under *DIC Vehicle Customization (With DIC Buttons) on page 4-76* for additional information. If your vehicle does not have DIC buttons, see your dealer to enable or disable the remote vehicle start system.

Remote Start Ready

If your vehicle does not have the remote vehicle start feature, it may have the remote start ready feature. This feature allows your dealer to add the manufacturer's remote vehicle start feature.

See your dealer if you would like to add the manufacturer's remote vehicle start feature to your vehicle.

Doors and Locks

Door Locks

⚠ WARNING:

Unlocked doors can be dangerous.

- Passengers, especially children, can easily open the doors and fall out of a moving vehicle. When a door is locked, the handle will not open it. The chance of being thrown out of the vehicle in a crash is increased if the doors are not locked. So, all passengers should wear safety belts properly and the doors should be locked whenever the vehicle is driven.

(Continued)

WARNING: (Continued)

- Young children who get into unlocked vehicles may be unable to get out. A child can be overcome by extreme heat and can suffer permanent injuries or even death from heat stroke. Always lock the vehicle whenever leaving it.
- Outsiders can easily enter through an unlocked door when you slow down or stop your vehicle. Locking your doors can help prevent this from happening.

There are several ways to lock and unlock your vehicle.

From the outside, use the Remote Keyless Entry (RKE) transmitter or the key in the driver's door.

From the inside, use the power door locks or manual door locks. To lock or unlock the door with the manual locks, push down or pull up on the manual lock knob.

Power Door Locks

With power door locks, the switches on the front doors can be used to lock and unlock the vehicle.

(Unlock): Press to unlock the doors.

(Lock): Remove the key from the ignition and press to lock the doors.

Delayed Locking

The vehicle may have the delayed locking feature. When locking the doors with the power lock switch and a door is open, the doors will lock five seconds after the last door is closed. You will hear three chimes to signal that the delayed locking feature is in use.

Pressing the power lock switch twice will override the delayed locking feature and immediately lock all the doors.

This feature will not operate if the key is in the ignition.

You can program this feature using the Driver Information Center (DIC). See DELAY DOOR LOCK under *DIC Vehicle Customization (With DIC Buttons) on page 4-76*.

Programmable Automatic Door Locks

Vehicles with an automatic lock/unlock feature enable you to program the vehicle's power door locks. You can program this feature through the Driver Information Center (DIC). See *DIC Vehicle Customization (With DIC Buttons) on page 4-76* for more information on DIC programming.

Rear Door Security Locks

Your vehicle has rear door security locks. These prevent passengers from opening the rear doors from the inside.

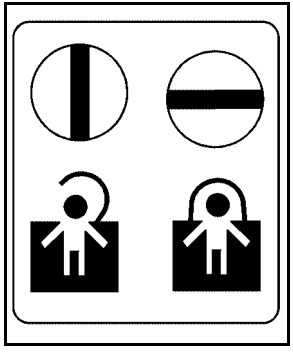

The rear door security locks are located on the inside edge of each rear door.

The rear doors must be open to access them. The label showing lock and unlock positions is located near the lock.

To set the locks, do the following:

1. Insert the key into the security lock slot and turn it so the slot is in the horizontal position.
2. Close the door.

When you want to open a rear door when the security lock is on, do the following:

1. Unlock the door by lifting the rear door manual lock, using the power door lock switch, or the Remote Keyless Entry (RKE) transmitter, if the vehicle has one.
2. Open the door from the outside.

To cancel the rear door security lock, do the following:

1. Unlock the door and open it from the outside.
2. Insert the key into the security lock slot and turn it so the slot is in the vertical position.

Lockout Protection

This feature protects you from locking the key in the vehicle when the key is in the ignition and a front door is open.

If the driver's side power door lock switch is pressed when the driver's door is open and the key is in the ignition, all of the doors will lock and then the driver's door will unlock.

If the passenger's side power door lock switch is pressed when the front passenger's door is open and the key is in the ignition, all of the doors will lock and then the front passenger's door will unlock.

Rear Doors

Extended Cab

Your vehicle may have a rear access door(s) that allows easier access to the rear area of the extended cab.

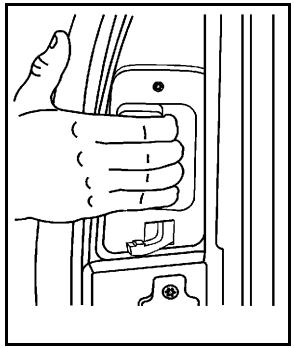

To open a rear access door from the outside, first open the front door. Then, use the handle located on the front edge of the rear access door to open it.

You must fully close a rear access door before you can close the front door.

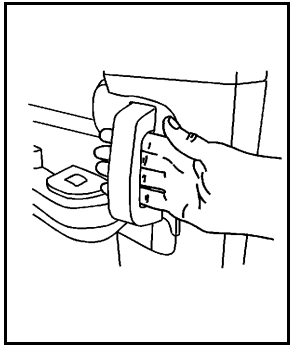

To open a rear access door from the inside, the front door must be opened first. Then, use the handle located on the inside of the rear access door to open.

Crew Cabs

If your vehicle is a crew cab, you can open your doors from the inside or outside. Your vehicle may also have a feature which prevents children from opening the rear doors. See *Rear Door Security Locks on page 3-12* for more information.

Tailgate

⚠ WARNING:

It is extremely dangerous to ride on the tailgate, even when the vehicle is operated at low speeds. People riding on the tailgate can easily lose their balance and fall in response to vehicle maneuvers. Falling from a moving vehicle may result in serious injuries or death. Do not allow people to ride on the tailgate. Be sure everyone in your vehicle is in a seat and using a safety belt properly.

On vehicles with a lock on the tailgate, use the key to lock or unlock the tailgate.

Open the tailgate by lifting up on its handle while pulling the tailgate toward you.

To shut the tailgate, firmly push it upward until it latches.

After you put the tailgate back up, pull it back towards you to be sure it latches securely.

Tailgate Removal

The tailgate can be removed to allow for different loading situations. Although the tailgate can be removed without assistance, you may want someone to assist you with the removal to avoid possible damage to the vehicle.

On vehicles with a rear vision camera, it must be disconnected before removing the tailgate. See *Rear Vision Camera (RVC) on page 3-67* for more information.

To remove the tailgate, do the following:

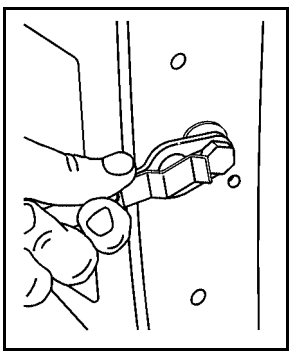

1. Raise the tailgate slightly and release both retaining cable clips. To release the retaining cable clips, lift the cable so it points straight out. Lift the clip over the bolt, and push the cable forward then rotate down.
2. With the tailgate about halfway open, lift the right edge of the tailgate from the lower pivot.

   On vehicles with the tailgate assist feature, raise the tailgate nearly all the way to the closed position prior to removing the left edge.
3. Move the tailgate to the right to release the left edge.

Reverse this procedure to reinstall the tailgate. Make sure the tailgate is secure.

Windows

⚠ WARNING:

Leaving children, helpless adults, or pets in a vehicle with the windows closed is dangerous. They can be overcome by the extreme heat and suffer permanent injuries or even death from heat stroke. Never leave a child, a helpless adult, or a pet alone in a vehicle, especially with the windows closed in warm or hot weather.

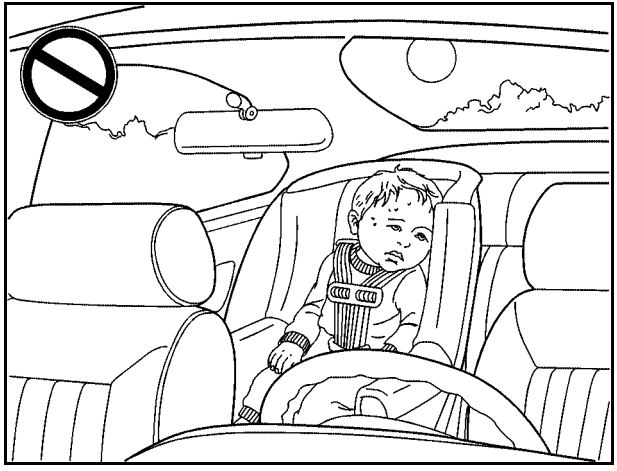

Manual Windows

Turn the hand crank on each door to manually raise or lower the manual windows.

Power Windows

⚠ WARNING:

Leaving children in a vehicle with the keys is dangerous for many reasons, children or others could be badly injured or even killed. They could operate the power windows or other controls or even make the vehicle move. The windows will function and they could be seriously injured or killed if caught in the path of a closing window. Do not leave keys in a vehicle with children.

When there are children in the rear seat use the window lockout button to prevent unintentional operation of the windows.

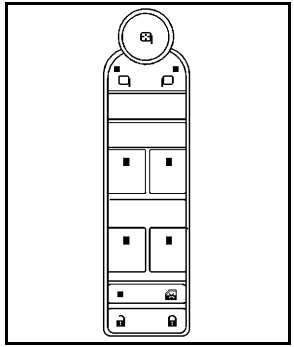

Crew Cab shown

If your vehicle has power windows, the controls are located on each of the side doors in the front and rear for crew cab and extended cab models.

The driver's door has a switch for the passenger's and rear windows as well. Your power windows will work when the ignition has been turned to ACCESSORY or RUN or when Retained Accessory Power (RAP) is active. See *Retained Accessory Power (RAP) on page 3-25*.

Press the switch down to lower the window, and pull up the front of the switch to raise the window.

Express Down Windows

Vehicles with the express down feature allow the driver and front passenger windows to be lowered without holding the switch. Press down fully on the window switch, then release, to activate the express down mode. The express down mode can be canceled at any time by pulling up on the switch. To open the window partway, press the switch to the first depression position, until the window is at the desired position.

Window Lockout

(Window Lockout): If your crew cab or extended cab vehicle has power windows, the driver's door power window switch has a lockout feature. The lockout switch is located in front of the window switches. This feature prevents the rear windows from operating, except from the driver's position. Press the switch to engage or disengage the lockout feature. An indicator light on the switch will come on when the lockout feature is engaged, and will go off when disengaged.

Power Sliding Rear Window

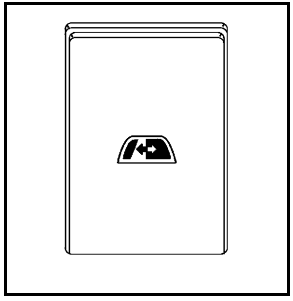

On vehicles with a power sliding rear window, the switch is located in the overhead console.

The power sliding rear window works when the ignition has been turned to ACC/ACCESSORY, ON/RUN, or when Retained Accessory Power (RAP) is active. See *Retained Accessory Power (RAP) on page 3-25* for more information.

The power sliding rear window cannot be operated manually.

>: Push to open the window.

<: Pull to close the window.

Sun Visors

Pull the sun visor down to block glare. Swing the sun visor to the side to cover the side window.

The passenger's side sun visor may have a vanity mirror.

Theft-Deterrent Systems

Vehicle theft is big business, especially in some cities. This vehicle has theft-deterrent features, however, they do not make it impossible to steal.

Content Theft-Deterrent

Your vehicle may have a content theft-deterrent alarm system.

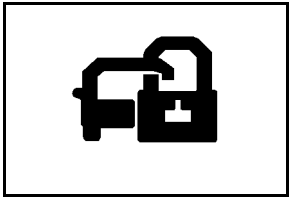

This is the security light.

To arm the theft-deterrent system:

1. Open the door.
2. Lock the door with the Remote Keyless Entry (RKE) transmitter. The security light should come on and flash.

   If the delayed locking feature is active, the alarm will not be activated until all doors are closed and the security light goes off.
3. Close all doors. The security light will stop flashing and go off after approximately 30 seconds. The content theft deterrent alarm is not armed until the security light goes off.

If a locked driver door is opened without using the RKE transmitter, a ten second pre-alarm will occur. The horn will chirp and the lights will flash. If the key is not placed in the ignition and turned to START or the door is not unlocked by pressing the unlock button on the RKE transmitter during the ten second pre-alarm, the alarm will go off. Your vehicle's headlamps will flash and the horn will sound for about 30 seconds, then will turn off to save the battery power.

The theft-deterrent system will not activate if the doors are locked with the vehicle's key or the manual door lock. It activates only if you use the power door lock switch with the door open or the RKE transmitter. You should also remember that you can start your vehicle with the correct ignition key if the alarm has been set off.

To avoid setting off the alarm by accident:

- If you do not want to activate the theft-deterrent system, the vehicle should be locked with the door key after the doors are closed.
- Always unlock a door with the RKE transmitter. Unlocking a door any other way will set off the alarm if the system has been armed.

If you set off the alarm by accident, press unlock on the RKE transmitter or place the key in the ignition and turn it to START to turn it off.

Testing the Alarm

To test the alarm:

1. From inside the vehicle, lower the driver's window and open the driver's door.
2. Activate the system by locking the doors with the RKE transmitter.
3. Get out of the vehicle, close the door and wait for the security light to go out.
4. Then reach in through the window, unlock the door with the manual door lock and open the door. This should set off the alarm.

If the alarm does not sound when it should but the headlamps flash, check to see if the horn works. The horn fuse may be blown. To replace the fuse, see *Fuses and Circuit Breakers on page 6-130*.

If the alarm does not sound or the headlamps do not flash, see your dealer for service.

PASS-Key® III+ Electronic Immobilizer

See *Radio Frequency Statement on page 8-21* for information regarding Part 15 of the Federal Communications Commission (FCC) Rules and RSS-210/211 of Industry Canada.

PASS-Key® III+ Electronic Immobilizer Operation

Your vehicle has PASS-Key® III+ (Personalized Automotive Security System) theft-deterrent system. PASS-Key® III+ is a passive theft-deterrent system.

The system is automatically armed when the key is removed from the ignition.

The system is automatically disarmed when the key is turned to ON/RUN, ACC/ACCESSORY or START from the LOCK/OFF position.

You do not have to manually arm or disarm the system.

The security light will come on if there is a problem with arming or disarming the theft-deterrent system.

When the PASS-Key® III+ system senses that someone is using the wrong key, it prevents the vehicle from starting. Anyone using a trial-and-error method to start the vehicle will be discouraged because of the high number of electrical key codes.

If the engine does not start and the security light on the instrument panel cluster comes on when trying to start the vehicle, there may be a problem with your theft-deterrent system. Turn the ignition off and try again.

If the engine still does not start, and the key appears to be undamaged, try another ignition key. At this time, you may also want to check the fuse, see *Fuses and Circuit Breakers on page 6-130*. If the engine still does not start with the other key, your vehicle needs service. If your vehicle does start, the first key may be faulty. See your dealer who can service the PASS-Key® III+ to have a new key made. In an emergency, contact Roadside Assistance.

It is possible for the PASS-Key® III+ decoder to learn the transponder value of a new or replacement key. Up to 10 keys may be programmed for the vehicle. The following procedure is for programming additional keys only. If all the currently programmed keys are lost or do not operate, you must see your dealer or a locksmith who can service PASS-Key® III+ to have keys made and programmed to the system.

See your dealer or a locksmith who can service PASS-Key® III+ to get a new key blank that is cut exactly as the ignition key that operates the system.

To program the new additional key:

1. Verify that the new key has a ⊕ stamped on it.
2. Insert the original, already programmed, key in the ignition and start the engine. If the engine will not start, see your dealer for service.
3. After the engine has started, turn the key to LOCK/OFF, and remove the key.
4. Insert the new key to be programmed and turn it to the ON/RUN position within five seconds of turning the ignition to the LOCK/OFF position in Step 3.

   The security light will turn off once the key has been programmed.
5. Repeat Steps 1 through 4 if additional keys are to be programmed.

If you lose or damage your PASS-Key® III+ key, see your dealer or a locksmith who can service PASS-Key® III+ to have a new key made.

Do not leave the key or device that disarms or deactivates the theft deterrent system in the vehicle.

Starting and Operating Your Vehicle

New Vehicle Break-In

Notice: **The vehicle does not need an elaborate break-in. But it will perform better in the long run if you follow these guidelines:**

- **Keep your speed at 55 mph (88 km/h) or less for the first 500 miles (805 km).**
- **Do not drive at any one constant speed, fast or slow, for the first 500 miles (805 km). Do not make full-throttle starts. Avoid downshifting to brake or slow the vehicle.**
- **Avoid making hard stops for the first 200 miles (322 km) or so. During this time the new brake linings are not yet broken in. Hard stops with new linings can mean premature wear and earlier replacement. Follow this breaking-in guideline every time you get new brake linings.**
- **Do not tow a trailer during break-in. See *Towing a Trailer on page 5-55* for the trailer towing capabilities of the vehicle and more information.**

Following break-in, engine speed and load can be gradually increased.

Ignition Positions

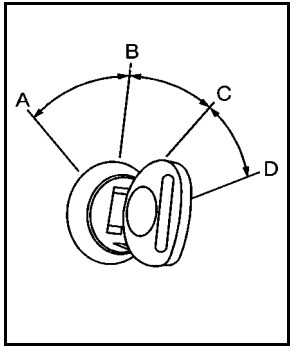

The ignition switch has four different positions.

To shift out of P (Park), the ignition must be in ON/RUN or ACC/ACCESSORY and the regular brake pedal must be applied.

A (LOCK/OFF): This position locks the ignition. It also locks the transmission on automatic transmission vehicles. The key can be removed in LOCK/OFF.

On vehicles with an automatic transmission, the shift lever must be in P (Park) to turn the ignition switch to LOCK/OFF.

The steering can bind with the wheels turned off center. If this happens, move the steering wheel from right to left while turning the key to ACC/ACCESSORY. If this doesn't work, then the vehicle needs service.

Notice: **Using a tool to force the key to turn in the ignition could cause damage to the switch or break the key. Use the correct key, make sure it is all the way in, and turn it only with your hand. If the key cannot be turned by hand, see your dealer.**

B (ACC/ACCESSORY): This position lets things like the radio and the windshield wipers operate while the engine is off. Use this position if the vehicle must be pushed or towed.

C (ON/RUN): This position can be used to operate the electrical accessories and to display some instrument panel cluster warning and indicator lights. The switch stays in this position when the engine is running. The transmission is also unlocked in this position on automatic transmission vehicles.

If you leave the key in the ACC/ACCESSORY or ON/RUN position with the engine off, the battery could be drained. You may not be able to start the vehicle if the battery is allowed to drain for an extended period of time.

D (START): This is the position that starts the engine. When the engine starts, release the key. The ignition switch returns to ON/RUN for driving.

A warning tone will sound when the driver door is opened, the ignition is in ACC/ACCESSORY or LOCK/OFF and the key is in the ignition.

Retained Accessory Power (RAP)

The following vehicle accessories can be used for up to 10 minutes after the engine is turned off:

- Audio System
- Power Windows
- OnStar® System (if equipped)
- Sunroof (if equipped)

These features work when the key is in ON/RUN or ACC/ACCESSORY. Once the key is turned from ON/RUN to LOCK/OFF, the windows and sunroof continue to work up to 10 minutes until any door is opened. The radio continues to work for up to 10 minutes or until the driver door is opened.

Starting the Engine

If the vehicle has the DURAMAX® Diesel engine, see the DURAMAX® Diesel manual for more information.

If the vehicle is a Two-mode Hybrid, see the Two-mode Hybrid manual for more information.

Notice: **Do not try to shift to P (Park) if the vehicle is moving. If you do, you could damage the transmission. Shift to P (Park) only when the vehicle is stopped.**

Move the shift lever to P (Park) or N (Neutral). The engine will not start in any other position. To restart the engine when the vehicle is already moving, use N (Neutral) only.

Starting Procedure

1. With your foot off the accelerator pedal, turn the ignition key to START. When the engine starts, let go of the key. The idle speed will go down as your engine gets warm. Do not race the engine immediately after starting it. Operate the engine and transmission gently to allow the oil to warm up and lubricate all moving parts.

   The vehicle has a Computer-Controlled Cranking System. This feature assists in starting the engine and protects components. If the ignition key is turned to the START position, and then released when the engine begins cranking, the engine will continue cranking for a few seconds or until the vehicle starts. If the engine does not start and the key is held in START for many seconds, cranking will be stopped after 15 seconds to prevent cranking motor damage. To prevent gear damage, this system also prevents cranking if the engine is already running. Engine cranking can be stopped by turning the ignition switch to the ACC/ACCESSORY or LOCK/OFF position.

Notice: **Cranking the engine for long periods of time, by returning the key to the START position immediately after cranking has ended, can overheat and damage the cranking motor, and drain the battery. Wait at least 15 seconds between each try, to let the cranking motor cool down.**

2. If the engine does not start after 5-10 seconds, especially in very cold weather (below 0°F or −18°C), it could be flooded with too much gasoline. Try pushing the accelerator pedal all the way to the floor and holding it there as you hold the key in START for up to 15 seconds. Wait at least 15 seconds between each try, to allow the cranking motor to cool down. When the engine starts, let go of the key and accelerator. If the vehicle starts briefly but then stops again, do the same thing. This clears the extra gasoline from the engine. Do not race the engine immediately after starting it. Operate the engine and transmission gently until the oil warms up and lubricates all moving parts.

Notice: **The engine is designed to work with the electronics in the vehicle. If you add electrical parts or accessories, you could change the way the engine operates. Before adding electrical equipment, check with your dealer. If you do not, the engine might not perform properly. Any resulting damage would not be covered by the vehicle warranty.**

Fast Idle System

Fast Idle System with Switch

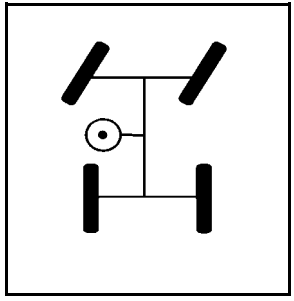

If the vehicle has this feature it is available only with cruise control. The manual fast idle switch is operated using the cruise control buttons located on the left hand side of the steering wheel.

This system can be used to increase engine idle speed whenever the following conditions are met:

- The park brake is set.
- The brake pedal is not pressed.
- The vehicle must not be moving and the accelerator must not be pressed.

To control the fast idle:

- To Enable the Fast idle, press and release the Cruise Control On/Off button and ensure that the LED is lit.
- For the preset Fast Idle, press and release the cruise set switch. This will set the preset fast idle speed.
- For the variable fast idle, press and hold the accelerator at the desired RPM, then press and release the cruise control cruise set switch to set the desired idle speed.

When the fast idle is active the Driver Information Center (DIC) will display “FAST IDLE ON.”

One of the following actions will turn off the fast idle:

- Pressing the brake.
- Selecting the Cancel button.
- Releasing the Parking Brake.
- The transmission shifter is moved out of P (Park) or N (Neutral).
- Selecting the cruise control on/off button when it was previously on.

Adjustable Throttle and Brake Pedal

On vehicles with this feature, you can change the position of the throttle and brake pedals.

No adjustment to the pedals can be made when the vehicle is in R (Reverse) or while using the cruise control.

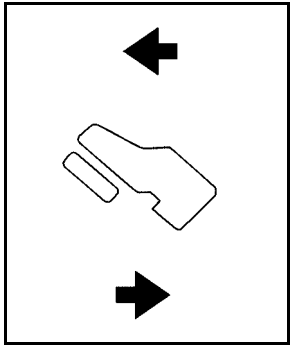

The switch used to adjust the pedals is located on the instrument panel below the climate control system.

Press the arrow at the bottom of the switch to move the pedals closer to your body. Press the arrow at the top of the switch to move the pedals away from your body.

Before you start driving, fully press the brake pedal to confirm the adjustment is right for you. While driving, make only small adjustments.

The vehicle may have a memory function which lets pedal settings be saved and recalled. See *Memory Seat, Mirrors, and Pedals on page 2-8* for more information.

Engine Coolant Heater

The engine heater can provide easier starting and better fuel economy during engine warm-up in cold weather conditions at or below − 18°C (0°F). Vehicles with an engine heater should be plugged in at least four hours before starting. An internal thermostat in the plug-end of the cord may exist which will prevent engine coolant heater operation at temperatures above −18°C (0°F).

If the vehicle has the DURAMAX® Diesel engine, see the DURAMAX® Diesel manual for more information.

To Use the Engine Coolant Heater

1. Turn off the engine.
2. Open the hood and unwrap the electrical cord. The cord is secured to the Engine Compartment Fuse Block with a clip. Carefully remove the wire tie which bundles the electrical plug. Do not cut the electrical cord.
3. Plug the cord into a normal, grounded 110-volt AC outlet.

⚠ WARNING:

Plugging the cord into an ungrounded outlet could cause an electrical shock. Also, the wrong kind of extension cord could overheat and cause a fire. You could be seriously injured. Plug the cord into a properly grounded three-prong 110-volt AC outlet. If the cord will not reach, use a heavy-duty three-prong extension cord rated for at least 15 amps.

4. Before starting the engine, be sure to unplug and store the cord as it was before to keep it away from moving engine parts. If you do not, it could be damaged.

The length of time the heater should remain plugged in depends on several factors. Ask a dealer in the area where you will be parking the vehicle for the best advice on this.

Active Fuel Management™

Vehicles with V8 engines may have Active Fuel Management™. This system allows the engine to operate on either all or half of its cylinders, depending on the driving conditions.

When less power is required, such as cruising at a constant vehicle speed, the system will operate in the half cylinder mode, allowing the vehicle to achieve better fuel economy. When greater power demands are required, such as accelerating from a stop, passing, or merging onto a freeway, the system will maintain full-cylinder operation.

If the vehicle has an Active Fuel Management™ indicator, see *DIC Operation and Displays (With DIC Buttons) on page 4-50* or *DIC Operation and Displays (Without DIC Buttons) on page 4-59* for more information on using this display.

Automatic Transmission Operation

If the vehicle is a Two-mode Hybrid, see the Two-mode Hybrid manual for more information.

Vehicles with an automatic transmission have an electronic shift position indicator within the instrument panel cluster. This display comes on when the ignition key is turned to the ON/RUN position.

There are several different positions for the shift lever.

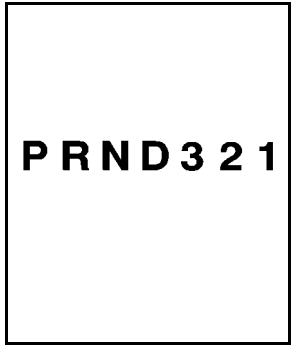

Hydra-Matic® 4-Speed Automatic Transmission

Heavy Duty 6-Speed Automatic Transmission Shown (Light Duty 6 Speed Similar)

See “Range Selection Mode” later in this section.

P (Park): This position locks the rear wheels. It is the best position to use when starting the engine because the vehicle cannot move easily. When parked on a hill, especially when the vehicle has a heavy load, you might notice an increase in the effort to shift out of P (Park). See Torque Lock (Automatic Transmission) under *Shifting Into Park on page 3-55* for more information.

⚠ WARNING:

It is dangerous to get out of the vehicle if the shift lever is not fully in P (Park) with the parking brake firmly set. The vehicle can roll.

Do not leave the vehicle when the engine is running unless you have to. If you have left the engine running, the vehicle can move suddenly. You or others could be injured. To be sure the vehicle will not move, even when you are on fairly level ground, always set the parking brake and move the shift lever to P (Park). See *Shifting Into Park on page 3-55*. If you are pulling a trailer, see *Towing a Trailer on page 5-55*.

⚠ WARNING:

If you have Four-Wheel Drive, the vehicle will be free to roll — even if the shift lever is in P (Park) — if the transfer case is in Neutral. So, be sure the transfer case is in a drive gear, Two-Wheel Drive High or Four-Wheel Drive High or Four-Wheel Drive Low — not in Neutral. See *Shifting Into Park on page 3-55*.

R (Reverse): Use this gear to back up.

Notice: **Shifting to R (Reverse) while the vehicle is moving forward could damage the transmission. The repairs would not be covered by the vehicle warranty. Shift to R (Reverse) only after the vehicle is stopped.**

To rock the vehicle back and forth to get out of snow, ice, or sand without damaging the transmission, see *If Your Vehicle is Stuck in Sand, Mud, Ice, or Snow on page 5-31*.

N (Neutral): In this position, the engine does not connect with the wheels. To restart when you are already moving, use N (Neutral) only. Also, use N (Neutral) when the vehicle is being towed.

> **⚠ WARNING:**
>
> Shifting into a drive gear while the engine is running at high speed is dangerous. Unless your foot is firmly on the brake pedal, the vehicle could move very rapidly. You could lose control and hit people or objects. Do not shift into a drive gear while the engine is running at high speed.

Notice: **Shifting out of P (Park) or N (Neutral) with the engine running at high speed may damage the transmission. The repairs would not be covered by the vehicle warranty. Be sure the engine is not running at high speed when shifting the vehicle.**

D (Drive): This position is for normal driving. It provides the best fuel economy. If you need more power for passing, and you are:

- Going less than about 35 mph (55 km/h), push the accelerator pedal about halfway down.
- Going about 35 mph (55 km/h) or more, push the accelerator all the way down.

  By doing this, the vehicle shifts down to the next gear and has more power.

D (Drive) can be used when towing a trailer, carrying a heavy load, driving on steep hills, or for off-road driving. You might want to shift the transmission to a lower gear selection if the transmission shifts too often.

Downshifting the transmission in slippery road conditions could result in skidding. See Skidding under *Loss of Control on page 5-11*.

The vehicle has a shift stabilization feature that adjusts the transmission shifting to the current driving conditions in order to reduce rapid upshifts and downshifts. This shift stabilization feature is designed to determine, before making an upshift, if the engine is able to maintain vehicle speed by analyzing things such as vehicle speed, throttle position, and vehicle load. If the shift stabilization feature determines that a current vehicle speed cannot be maintained, the transmission does not upshift and instead holds the current gear. In some cases, this could appear to be a delayed shift, however the transmission is operating normally.

The transmission uses adaptive shift controls. Adaptive shift controls continually compares key shift parameters to pre-programmed ideal shifts stored in the transmissions computer. The transmission constantly makes adjustments to improve vehicle performance according to how the vehicle is being used, such as with a heavy load or when temperature changes. During this adaptive shift control process, shifting might feel different as the transmission determines the best settings.

When temperatures are very cold, the Allison Transmission® and Hydra-Matic® 6-Speed transmission's gear shifting could be delayed providing more stable shifts until the engine warms up. Shifts could be more noticeable with a cold transmission. This difference in shifting is normal.

M (Manual Mode): This position is available on vehicles with the Allison Transmission® or Hydra-Matic® 6-Speed transmission. It lets drivers select the range of gears appropriate for current driving conditions. If the vehicle has this feature, see Range Select Mode (Allison Transmission® or Hydra-Matic® 6-Speed transmission) later in this section.

3 (Third): This position is also used for normal driving. It reduces vehicle speed more than D (Drive) without using the brakes. You might choose 3 (Third) instead of D (Drive) when driving on hilly, winding roads, when towing a trailer, so there is less shifting between gears and when going down a steep hill.

2 (Second): This position reduces vehicle speed even more than 3 (Third) without using the brakes. You can use 2 (Second) on hills. It can help control vehicle speed as you go down steep mountain roads, but then you would also want to use the brakes off and on.

If you manually select 2 (Second) in an automatic transmission, the transmission will start in second gear. You can use this feature for reducing the speed of the rear wheels when you are trying to start the vehicle from a stop on slippery road surfaces.

1 (First): For the Hydra-Matic® 4-Speed transmission this position reduces vehicle speed even more than 2 (Second) without using the brakes. You can use it on very steep hills, or in deep snow or mud. If the shift lever is put in 1 (First) while the vehicle is moving forward, the transmission does not shift into first gear until the vehicle is going slowly enough.

For an Allison Transmission® or Hydra-Matic® 6-Speed transmission, this position reduces vehicle speed without using the brakes. You can use it for major/severe downgrades and off-road driving where the vehicle would otherwise accelerate due to steepness of grade. When you shift to 1 (First) it provides the lowest gear appropriate to current road speed and continues to downshift as the vehicle slows, eventually downshifting to 1 (First) gear.

Notice: **Spinning the tires or holding the vehicle in one place on a hill using only the accelerator pedal may damage the transmission. The repair will not be covered by the vehicle warranty. If you are stuck, do not spin the tires. When stopping on a hill, use the brakes to hold the vehicle in place.**

Range Selection Mode (Allison® or Hydra-Matic® 6-Speed Transmission)

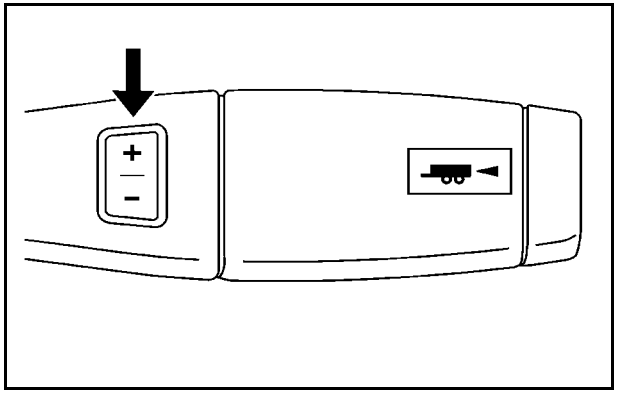

The vehicle may have a Range Selection Mode. The Range Selection Mode helps control the vehicle's transmission and vehicle speed while driving down hill or towing a trailer by letting you select a desired range of gears.

To use this feature, do the following:

1. Move the shift lever to M (Manual Mode).
2. Press the plus/minus buttons, located on the steering column shift lever, to select the desired range of gears for current driving conditions.

When M (Manual Mode) is selected a number displays next to the M, indicating the current gear.

This number is the highest gear that can be used. However, the vehicle can automatically shift to lower gears as it adjusts to driving conditions. This means that all gears below that number are available. When 5 (Fifth) is selected, 1 (First) through 5 (Fifth) gears are automatically shifted by the vehicle, but 6 (Sixth) cannot be used until the plus/minus button located on the steering column lever is used to change to the gear.

Grade Braking is not available when Range Selection Mode is active. See *Tow/Haul Mode on page 3-36*.

While using Range Selection Mode, cruise control and the Tow/Haul mode can be used.

Notice: **Spinning the tires or holding the vehicle in one place on a hill using only the accelerator pedal may damage the transmission. The repair will not be covered by the vehicle warranty. If you are stuck, do not spin the tires. When stopping on a hill, use the brakes to hold the vehicle in place.**

Low Traction Mode

If your vehicle has the Allison Transmission®, or the Hydra-Matic® 6-Speed Automatic Transmission, it has a Low Traction Mode that can assist in vehicle acceleration when road conditions are slippery, such as with ice or snow. While the vehicle is at a stop, select the second gear range using Range Selection Mode. This will limit torque to the wheels after it detects wheel slip, preventing the tires from spinning.

Tow/Haul Mode

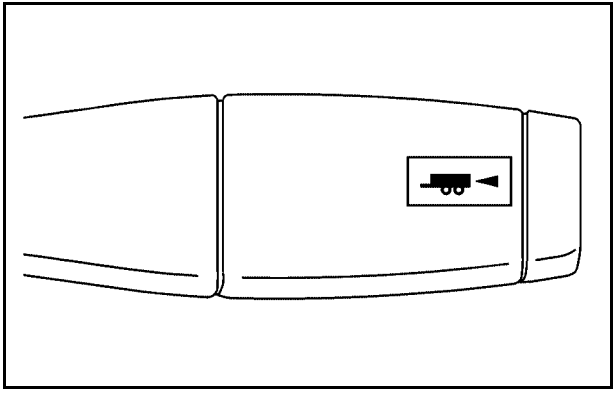

Vehicles with an automatic transmission have a tow/haul mode. The tow/haul mode adjusts the transmission shift pattern to reduce shift cycling, providing increased performance, vehicle control, and transmission cooling when towing or hauling heavy loads.

The selector button is located on the end of the shift lever. Turn the tow/haul on and off by pressing the button. When the tow/haul is on, a light on the instrument panel cluster will come on.

See *Tow/Haul Mode Light on page 4-48* for more information.

Also see Tow Haul Mode under *Towing a Trailer on page 5-55* for more information.

Tow/Haul Mode (Allison Transmission® or Hydra-Matic® 6-Speed Automatic Transmission)

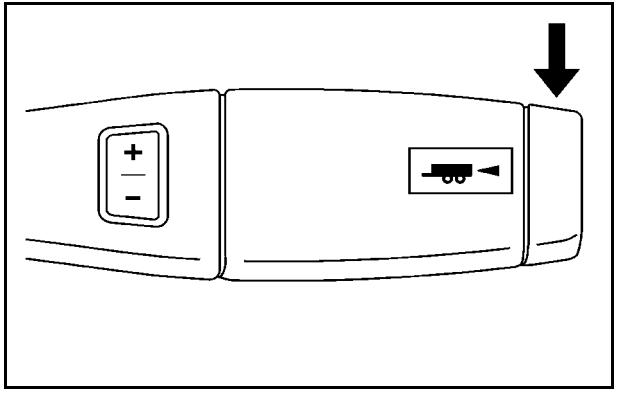

Vehicles with an Allison or Hydra-Matic® 6-speed automatic transmission® have a tow/haul mode. The tow/haul mode adjusts the transmission shift pattern to reduce shift cycling, providing increased performance, vehicle control, and transmission cooling when towing or hauling heavy loads.

Turn the tow/haul mode on and off by pressing the button, located on the end of the shift lever. When the tow/haul is on, a light on the instrument panel cluster will come on.

See *Tow/Haul Mode Light on page 4-48* for more information.

Also see “Tow Haul Mode” under *Towing a Trailer on page 5-55* for more information.

Grade Braking (Allison Transmission® or Hydra-Matic® 6-Speed Automatic Transmission)

The Grade Braking shift modes can be activated by pressing the button on the end of the shift control lever. While in Range Selection Mode , Grade Braking is deactivated allowing the driver to select a desired range of gears.

Grade Braking is only active while the Tow/Haul Mode is selected and you are not in the Range Selection Mode. See “Tow/Haul Mode listed previously and *Automatic Transmission Operation on page 3-30* for more information on the Range Selection Mode. Grade Braking assists in maintaining desired vehicle speeds when driving on downhill grades by automatically implementing a shift schedule that utilizes the engine and transmission to slow the vehicle. This reduces wear on the braking system and increases control of the vehicle. Grade Braking monitors vehicle speed, acceleration, engine torque and brake pedal usage. Using this information, it detects when the truck is on a downhill grade and the driver desires to slow the vehicle by pressing the brake.

Also see *Towing a Trailer on page 5-55* for more information.

Cruise Grade Braking (Allison Transmission® or Hydra-Matic® 6-Speed Automatic Transmission)

Cruise Grade Braking assists when driving on a downhill grade. It maintains vehicle speed by automatically implementing a shift schedule that uses the engine and the transmission to slow the vehicle. Cruise Grade Braking operates while Cruise Control is engaged in Tow/Haul mode to assist in maintaining vehicle speed under loaded vehicle conditions.
It utilizes vehicle acceleration and deviation from desired speed to determine the correct gear for the operating condition. If vehicle speed is above the desired speed the transmission will downshift to slow the vehicle. If vehicle speed is near or below desired speed the trans will upshift, allowing vehicle speed to increase.

While in the Range Select Mode (RSM) mode, cruise grade braking is not available.

See *Automatic Transmission Operation on page 3-30*.

Four-Wheel Drive

If the vehicle has Four-Wheel Drive, you can send the engine's driving power to all four wheels for extra traction. To get the most satisfaction out of Four-Wheel Drive, you must be familiar with its operation. Read the following before using Four-Wheel Drive. See the appropriate text for the transfer case in the vehicle.

Notice: **Driving on clean, dry pavement in Four-Wheel Drive High or Four-Wheel Drive Low for an extended period of time may cause premature wear on your vehicle's powertrain. Do not drive on clean, dry pavement in Four-Wheel Drive High or Four-Wheel Drive Low for extended periods of time.**

While driving on clean dry pavement and during tight turns, you may experience vibration in the steering system.

If the vehicle has StabiliTrak®, shifting into Four-Wheel-Drive Low will turn Traction Control and StabiliTrak® off. See *StabiliTrak® System on page 5-6*.

Front Axle

The front axle engages and disengages automatically when you shift the transfer case. Some delay for the axle to engage or disengage is normal.

Manual Transfer Case

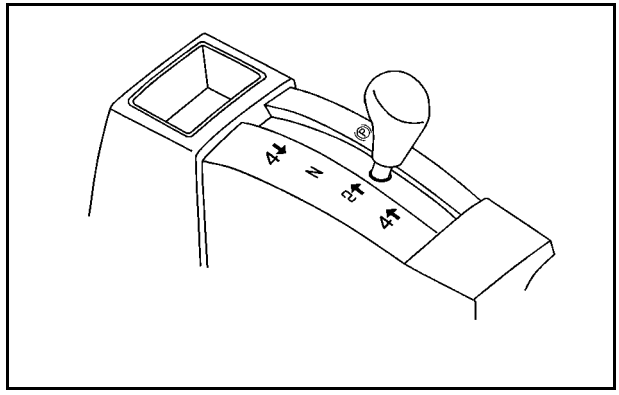

The transfer case shift lever is on the floor to the right of the driver. Use this lever to shift into and out of Four-Wheel Drive.

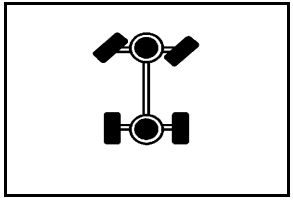

A Four-Wheel Drive indicator light comes on when you shift into four-wheel drive and the front axle engages. See *Four-Wheel-Drive Light on page 4-48*.

Some delay between shifting and when the indicator light comes on is normal.

Recommended Transfer Case Settings

Driving Conditions	Transfer Case Settings			
	2↑	**4↑**	**4↓**	**N**
Normal	YES			
Severe		YES		
Extreme			YES	
Vehicle in Tow*				YES
*See *Recreational Vehicle Towing on page 5-49* or *Towing Your Vehicle on page 5-48*				

Notice: **Driving on clean, dry pavement in four-wheel drive for an extended period of time can cause premature wear on the vehicle's powertrain. Do not drive on clean, dry pavement in Four-Wheel Drive for extended periods of time.**

4 ↓ (Four-Wheel-Drive Low): This setting also engages the front axle and delivers extra torque. You may never need Four-Wheel-Drive Low. It sends maximum power to all four wheels. You might choose Four-Wheel-Drive Low if you are driving off-road in deep sand, deep mud, deep snow, and while climbing or descending steep hills.

If the vehicle has StabiliTrak®, shifting into Four-Wheel-Drive Low will turn Traction Control and StabiliTrak® off. See *StabiliTrak® System on page 5-6*.

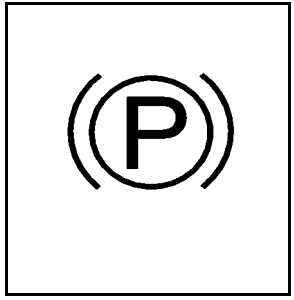

A parking brake symbol is located next to the N (Neutral) symbol as a reminder to set the parking brake before shifting the transfer case into N (Neutral).

⚠ WARNING:

Shifting the transfer case to Neutral can cause the vehicle to roll even if the transmission is in P (Park). You or someone else could be seriously injured. Be sure to set the parking brake before placing the transfer case in Neutral. See *Parking Brake on page 3-54*.

N (Neutral): Shift to this setting only when the vehicle needs to be towed. See *Recreational Vehicle Towing on page 5-49* or *Towing Your Vehicle on page 5-48*.

2 ↑ (Two-Wheel-Drive High): This setting is used for driving in most street and highway situations. The front axle is not engaged in two-wheel drive. This setting also provides the best fuel economy.

4 ↑ (Four-Wheel-Drive High): Use this setting when you need extra traction, such as on snowy or icy roads or in most off-road situations. This setting also engages the front axle to help drive your vehicle. This is the best setting to use when plowing snow.

You can shift from Two-Wheel-Drive High to Four-Wheel-Drive High or Four-Wheel-Drive High to Two-Wheel-Drive High while the vehicle is moving. In extremely cold weather, it may be necessary to stop or slow the vehicle to shift into Four-Wheel-Drive High.

When Using the Manual Transfer Case

- Shifting should be made using quick motions. Shifting slowly may make it more difficult to shift.
- You may notice that it is harder to shift when the vehicle is cold. After the vehicle warms up the shifting will return to normal.
- While in Four-Wheel High or Four-Wheel-Drive Low you may experience reduced fuel economy.
- Avoid driving in Four-Wheel Drive on clean, dry pavement. It may cause your tires to wear faster, make the transfer case harder to shift, and run noisier.
- If the transfer case shifter is in the N (Neutral) position and you have difficulty reaching the selected transfer case mode, with the engine running, shift the transmission momentarily to drive and then back to N (Neutral). This will realign the gear teeth in the transfer case and allow you to complete the shift.

Shifting from Two-Wheel-Drive High to Four-Wheel-Drive High

- Shifts between Two-Wheel-Drive High and Four-Wheel-Drive High can be made at any vehicle speed.
- Shift the transfer case lever in one continuous motion into either the Four-Wheel-Drive High or Two-Wheel-Drive High position.
- In extremely cold weather, it may be necessary to slow or stop the vehicle to shift into Four-Wheel-Drive High until the vehicle has warmed up.
- While in Four-Wheel-Drive High, the vehicle can be driven at any posted legal speed limit.

Shifting In or Out of Four-Wheel-Drive Low

Notice: **Shifting the transfer case into Four-Wheel-Drive Low while moving at speeds faster than 5 km/h (3 mph) may cause premature wear to the transfer case, and may cause the gears to grind. To avoid causing premature wear, and grinding the gears, do not shift the transfer case into Four-Wheel-Drive Low while the vehicle is moving faster than 5 km/h (3 mph).**

Shifting into Four-Wheel-Drive Low should be done, if possible, with the vehicle at a slight roll, 3 mph (5 km/h) or less.

- Shift the transmission into N (Neutral).

⚠ WARNING:

Shifting the transfer case to Neutral can cause the vehicle to roll even if the transmission is in P (Park). You or someone else could be seriously

(Continued)

WARNING: (Continued)

injured. Be sure to set the parking brake before placing the transfer case in Neutral. See *Parking Brake on page 3-54*.

- Shifting into Four-Wheel-Drive Low with the vehicle at a stop may be more difficult. You may be unable to complete the shift to Four-Wheel-Drive Low, and the transfer case will end up in N (Neutral). This is normal, and is a function of the gear teeth aligning in the transfer case. When this happens, make sure the engine is on, shift the transmission momentarily to D (Drive) and back to N (Neutral), and then complete the transfer case shift.
- Shift the transfer case shift lever in one continuous motion into the Four-Wheel-Drive Low position.
- When Four-Wheel-Drive Low do not drive faster than 45 mph. This will reduce wear and extend the life of your transfer case.

Shifting In or Out of Neutral

1. With the vehicle running and the engine at an idle set the parking brake.
2. Place the transmission into N (Neutral).

Shift the transfer case in one continuous motion into or out of the N (Neutral) position.

Electronic Transfer Case

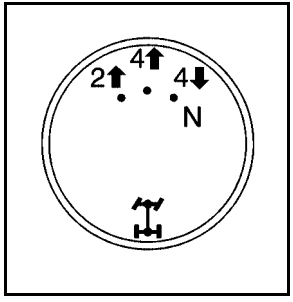

The transfer case knob is located next to the steering column.

Use the dial to shift into and out of four-wheel drive.

Recommended Transfer Case Settings

Driving Conditions	Transfer Case Settings			
	2↑	4↑	4↓	N
Normal	YES			
Severe		YES		
Extreme			YES	
Vehicle in Tow*				YES
*See *Recreational Vehicle Towing on page 5-49* or *Towing Your Vehicle on page 5-48*				

You can choose among four driving settings:

Indicator lights in the dial show which setting you are in. The indicator lights will come on briefly when you turn on the ignition and one will stay on. If the lights do not come on, you should take the vehicle to your dealer for service. An indicator light flashes while shifting the transfer case and remains illuminated when the shift is complete. If for some reason the transfer case cannot make a requested shift, it will return to the last chosen setting.

2 ↑ (Two-Wheel-Drive High): This setting is used for driving in most street and highway situations. The front axle is not engaged in Two-Wheel Drive. This setting also provides the best fuel economy.

4 ↑ (Four-Wheel-Drive High): Use the Four-Wheel-Drive High position when extra traction is needed, such as on snowy or icy roads or in most off-road situations. This setting also engages the front axle to help drive the vehicle. This is the best setting to use when plowing snow.

4 ↓ (Four-Wheel-Drive Low): This setting also engages the front axle and delivers extra torque. You may never need this setting. It sends maximum power to all four wheels. You might choose Four-Wheel-Drive Low while driving off-road in deep sand, deep mud, deep snow, and while climbing or descending steep hills.

If the vehicle has StabiliTrak®, shifting into Four-Wheel-Drive Low will turn Traction Control and StabiliTrak® off. See *StabiliTrak® System on page 5-6*.

⚠ WARNING:

Shifting the transfer case to N (Neutral) can cause the vehicle to roll even if the transmission is in P (Park). You or someone else could be seriously injured. Be sure to set the parking brake before placing the transfer case in N (Neutral). See *Parking Brake on page 3-54*.

N (Neutral): Shift the vehicle's transfer case to N (Neutral) only when towing the vehicle. See *Recreational Vehicle Towing on page 5-49* or *Towing Your Vehicle on page 5-48* for more information.

If the SERVICE 4–WHEEL DRIVE message stays on, you should take the vehicle to your dealer for service. See “Service 4–Wheel Drive message” under *DIC Warnings and Messages on page 4-66*.

Shifting Into Two-Wheel-Drive High

Turn the knob to the Two-Wheel-Drive High position. This can be done at any speed, except when shifting from Four-Wheel-Drive Low. See Shifting Out of Four-Wheel-Drive Low for more information.

Shifting Into Four-Wheel Drive Low

When Four-Wheel-Drive Low is engaged, vehicle speed should be kept below 45 mph. Extended high-speed operation in Four-Wheel-Drive Low may damage or shorten the life of the drivetrain.

To shift to the Four-Wheel-Drive Low position, the ignition must be in ON/RUN and the vehicle must be stopped or moving less than 3 mph (5 km/h) with the transmission in N (Neutral). The preferred method for shifting into Four-Wheel-Drive Low is to have the vehicle moving 1 to 2 mph (1.6 to 3.2 km/h). Turn the knob to the Four-Wheel-Drive Low position. You must wait for the Four-Wheel-Drive Low indicator light to stop flashing and remain on before shifting the transmission in gear.

Notice: **Shifting the transmission into gear before the requested mode indicator light has stopped flashing could damage the transfer case. To help avoid damaging the vehicle, always wait for the mode indicator lights to stop flashing before shifting the transmission into gear.**

It is typical for the vehicle to exhibit significant engagement noise and bump when shifting between Four-Wheel-Drive Low and Four-Wheel-Drive High ranges or from transfer case N (Neutral) with the engine running.

If the knob is turned to the Four-Wheel-Drive Low position when the vehicle is in gear and/or moving, the Four-Wheel-Drive Low indicator light will flash for 30 seconds and not complete the shift unless the vehicle is moving less than 3 mph (5 km/h) and the transmission is in N (Neutral). After 30 seconds the transfer case will shift to Four-Wheel-Drive High mode.

Shifting Out of Four-Wheel-Drive Low

To shift from Four-Wheel-Drive Low to Four-Wheel-Drive High, or Two-Wheel-Drive High, the vehicle must be stopped or moving less than 3 mph (5 km/h) with the transmission in N (Neutral) and the ignition in ON/RUN. The preferred method for shifting out of Four-Wheel-Drive Low is to have the vehicle moving 1 to 2 mph (1.6 to 3.2 km/h). Turn the knob to the Four-Wheel-Drive High, or Two-Wheel-Drive High position. You must wait for the Four-Wheel-Drive High, or Two-Wheel-Drive High indicator light to stop flashing and remain on before shifting the transmission into gear.

Notice: **Shifting the transmission into gear before the requested mode indicator light has stopped flashing could damage the transfer case. To help avoid damaging the vehicle, always wait for the mode indicator lights to stop flashing before shifting the transmission into gear.**

It is typical for the vehicle to exhibit significant engagement noise and bump when shifting between Four-Wheel-Drive Low and Four-Wheel-Drive High ranges or from transfer case N (Neutral) with the engine running.

If the knob is turned to the Four-Wheel-Drive High, or Two-Wheel-Drive High switch position when the vehicle is in gear and/or moving, the Four-Wheel-Drive High, or Two-Wheel-Drive High indicator light will flash for 30 seconds but will not complete the shift unless your vehicle is moving less than 3 mph (5 km/h) and the transmission is in N (Neutral).

Shifting into Neutral

To shift the transfer case to N (Neutral) do the following:

1. Make sure the vehicle is parked so that it will not roll.
2. Set the parking brake and press and hold the regular brake pedal. See *Parking Brake on page 3-54* for more information.
3. Start the vehicle or turn the ignition to ON/RUN.
4. Shift the transmission to N (Neutral).
5. Shift the transfer case to Two-Wheel-Drive High.
6. Turn the transfer case dial clockwise to N (Neutral) until it stops and hold it there until the Neutral light starts blinking. This will take at least 10 seconds. Then slowly release the dial to the four low position. The N (Neutral) light will come on when the transfer case shift to N (Neutral) is complete.

7. If the engine is running, verify that the transfer case is in N (Neutral) by shifting the transmission to R (Reverse) for one second, then shift the transmission to D (Drive) for one second.
8. Turn the ignition to ACC/ACCESSORY, which will turn the engine off.
9. Place the transmission shift lever in P (Park).
10. Release the parking brake prior to moving the vehicle.
11. Turn the ignition to LOCK/OFF.

Shifting Out of Neutral

To shift the transfer case out of N (Neutral) do the following:

1. Set the parking brake and apply the regular brake pedal.
2. Turn the ignition to ON/RUN with the engine off, and shift the transmission to N (Neutral).
3. Turn the transfer case dial to Two-Wheel-Drive High.

   After the transfer case has shifted out of N (Neutral), the N (Neutral) light will go out.
4. Release the parking brake prior to moving the vehicle.

Notice: **Shifting the transmission into gear before the requested mode indicator light has stopped flashing could damage the transfer case. To help avoid damaging the vehicle, always wait for the mode indicator lights to stop flashing before shifting the transmission into gear.**

5. Start the engine and shift the transmission to the desired position.

Excessively shifting the transfer case into or out of the different modes may cause the transfer case to enter the shift protection mode. This will protect the transfer case from possible damage and will only allow the transfer case to respond to one shift per 10 seconds. The transfer case may stay in this mode for up to three minutes.

Automatic Transfer Case

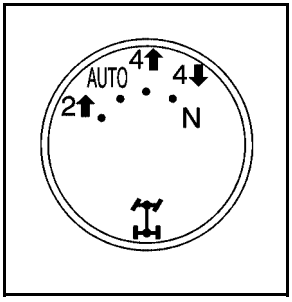

The transfer case knob is located next to the steering column.

Use the dial to shift into and out of Four-Wheel Drive.

You can choose among five driving settings:

Indicator lights in the dial show which setting you are in. The indicator lights will come on briefly when you turn on the ignition and one will stay on. If the lights do not come on, you should take the vehicle to your dealer for service. An indicator light will flash while shifting the transfer case. It will remain illuminated when the shift is complete. If for some reason the transfer case cannot make a requested shift, it will return to the last chosen setting.

2 ↑ (Two-Wheel-Drive High): This setting is used for driving in most street and highway situations. The front axle is not engaged in Two-Wheel Drive. This setting also provides the best fuel economy.

AUTO (Automatic Four-Wheel Drive): This setting is ideal for use when road surface traction conditions are variable. When driving the vehicle in AUTO, the front axle is engaged, but the vehicle's power is sent only to the front and rear wheels automatically based on driving conditions. Driving in this mode results in slightly lower fuel economy than Two-Wheel-Drive High.

4 ↑ (Four-Wheel-Drive High): Use the Four-Wheel-Drive High position when extra traction is needed, such as on snowy or icy roads or in most off-road situations. This setting also engages the front axle to help drive the vehicle. This is the best setting to use when plowing snow.

4 ↓ (Four-Wheel-Drive Low): This setting also engages the front axle and delivers extra torque. You may never need this setting. It sends maximum power to all four wheels. You might choose Four-Wheel-Drive Low if you are driving off-road in deep sand, deep mud, deep snow, and while climbing or descending steep hills.

If the vehicle has StabiliTrak®, shifting into Four-Wheel-Drive Low will turn Traction Control and StabiliTrak® off. See *StabiliTrak® System on page 5-6*.

⚠ WARNING:

Shifting the transfer case to N (Neutral) can cause the vehicle to roll even if the transmission is in P (Park). You or someone else could be seriously injured. Be sure to set the parking brake before placing the transfer case in N (Neutral). See *Parking Brake on page 3-54*.

N (Neutral): Shift the vehicle's transfer case to N (Neutral) only when towing the vehicle. See *Recreational Vehicle Towing on page 5-49* or *Towing Your Vehicle on page 5-48* for more information.

If the SERVICE 4–Wheel Drive message stays on, you should take the vehicle to your dealer for service. See "Service 4–Wheel Drive message" under *DIC Warnings and Messages on page 4-66*.

Shifting Into Four-Wheel-Drive High or AUTO (Automatic Four-Wheel Drive)

Turn the knob to the Four-Wheel-Drive High or AUTO position. This can be done at any speed, except when shifting from Four-Wheel-Drive Low. The indicator light will flash while shifting. It will remain on when the shift is completed.

Shifting Into Two-Wheel-Drive High

Turn the knob to the Two-Wheel-Drive High position. This can be done at any speed, except when shifting from Four-Wheel-Drive Low. The indicator light will flash while shifting. It will remain on when the shift is completed.

Shifting Into Four-Wheel-Drive Low

When Four-Wheel-Drive Low is engaged, vehicle speed should be kept below 45 mph. Extended high-speed operation in Four-Wheel-Drive Low may damage or shorten the life of the drivetrain.

To shift to the Four-Wheel-Drive Low position, the ignition must be in ON/RUN and the vehicle must be stopped or moving less than 3 mph (5 km/h) with the transmission in N (Neutral). The preferred method for shifting into Four-Wheel-Drive Low is to have the vehicle moving 1 to 2 mph (1.6 to 3.2 km/h). Turn the knob to the Four-Wheel-Drive Low position. You must wait for the Four-Wheel-Drive Low indicator light to stop flashing and remain on before shifting the transmission into gear.

Notice: **Shifting the transmission into gear before the requested mode indicator light has stopped flashing could damage the transfer case. To help avoid damaging the vehicle, always wait for the mode indicator lights to stop flashing before shifting the transmission into gear.**

It is typical for the vehicle to exhibit significant engagement noise and bump when shifting between Four-Wheel-Drive Low and Four-Wheel-Drive High ranges or from N (Neutral) with the engine running.

If the knob is turned to the Four-Wheel-Drive Low position when the vehicle is in gear and/or moving, the Four-Wheel-Drive Low indicator light will flash for 30 seconds and not complete the shift unless the vehicle is moving less than 3 mph (5 km/h) and the transmission is in N (Neutral). After 30 seconds the transfer case will shift to Four-Wheel-Drive High mode.

Shifting Out of Four-Wheel-Drive Low

To shift from Four-Wheel-Drive Low to Four-Wheel-Drive High, AUTO or Two-Wheel-Drive High, the vehicle must be stopped or moving less than 3 mph (5 km/h) with the transmission in N (Neutral) and the ignition in ON/RUN. The preferred method for shifting out of Four-Wheel-Drive Low is to have the vehicle moving 1 to 2 mph (1.6 to 3.2 km/h). Turn the knob to the Four-Wheel-Drive High, AUTO or Two-Wheel-Drive High position. You must wait for the Four-Wheel-Drive High, AUTO or Two-Wheel-Drive High indicator light to stop flashing and remain on before shifting the transmission into gear.

Notice: **Shifting the transmission into gear before the requested mode indicator light has stopped flashing could damage the transfer case. To help avoid damaging the vehicle, always wait for the mode indicator lights to stop flashing before shifting the transmission into gear.**

It is typical for the vehicle to exhibit significant engagement noise and bump when shifting between Four-Wheel-Drive Low and Four-Wheel-Drive High ranges or from N (Neutral) with the engine running.

If the knob is turned to the Four-Wheel-Drive High, AUTO, or Two-Wheel-Drive High switch position when the vehicle is in gear and/or moving, the Four-Wheel-Drive High, AUTO or Two-Wheel-Drive High indicator light will flash for 30 seconds but will not complete the shift unless the vehicle is moving less than 3 mph (5 km/h) and the transmission is in N (Neutral).

Shifting into Neutral

To shift the transfer case to N (Neutral) do the following:

1. Make sure the vehicle is parked so that it will not roll.
2. Set the parking brake and apply the regular brake pedal. See *Parking Brake on page 3-54* for more information.
3. Shifting the transfer case into N (Neutral) can be done with or without the engine running. Shifting without the engine running should be done with the ignition in ON/RUN.
4. Put the transmission in N (Neutral).
5. Shift the transfer case to Two-Wheel Drive High.
6. Turn the transfer case dial clockwise to N (Neutral) until it stops and hold it there until the N (Neutral) light starts blinking. This will take at least 10 seconds. Then slowly release the dial to the four low position. The N (Neutral) light will come on when the transfer case shift to N (Neutral) is complete.
7. If the engine is running, make sure that the transfer case is in N (Neutral) by shifting the transmission to R (Reverse) for one second, then shift the transmission to D (Drive) for one second.
8. Turn the ignition to ACC/ACCESSORY, which will turn the engine off.
9. Place the transmission shift lever in P (Park).
10. Release the parking brake prior to moving the vehicle.
11. Turn the ignition to LOCK/OFF.

Shifting Out of Neutral

To shift out of N (Neutral) do the following:

1. Set the parking brake and apply the regular brake pedal.
2. Turn the ignition to ON/RUN with the engine off, and shift the transmission to N (Neutral).
3. Turn the transfer case dial to Two-Wheel-Drive High, Four-Wheel-Drive High, AUTO.

   After the transfer case has shifted out of N (Neutral), the N (Neutral) light will go out.
4. Release the parking brake prior to moving the vehicle.

Notice: **Shifting the transmission into gear before the requested mode indicator light has stopped flashing could damage the transfer case. To help avoid damaging the vehicle, always wait for the mode indicator lights to stop flashing before shifting the transmission into gear.**

5. Start the engine and shift the transmission to the desired position.

Parking Brake

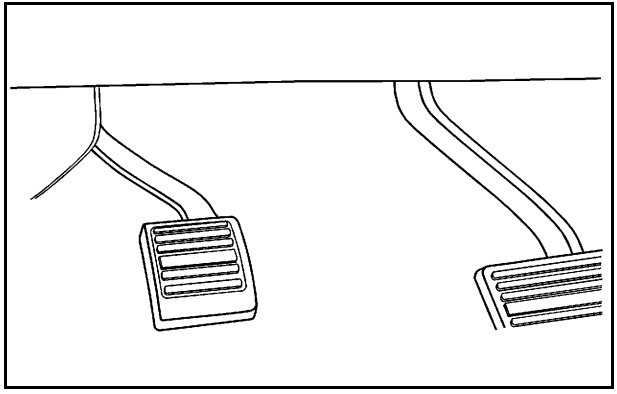

Set the parking brake by holding the regular brake pedal down, then pushing down the parking brake pedal.

If the ignition is on, the brake system warning light will come on. See *Brake System Warning Light on page 4-38*.

Notice: **Driving with the parking brake on can overheat the brake system and cause premature wear or damage to brake system parts. Make sure that the parking brake is fully released and the brake warning light is off before driving.**

To release the parking brake, hold the regular brake pedal down, then push down momentarily on the parking brake pedal until you feel the pedal release. Slowly pull your foot up off the park brake pedal. If the parking brake is not released when you begin to drive, the brake system warning light will flash and a chime will sound warning you that the parking brake is still on.

If you are towing a trailer and are parking on a hill, see *Towing a Trailer on page 5-55*.

Shifting Into Park

⚠ WARNING:

It can be dangerous to get out of the vehicle if the shift lever is not fully in P (Park) with the parking brake firmly set. The vehicle can roll. If you have left the engine running, the vehicle can move suddenly. You or others could be injured. To be sure the vehicle will not move, even when you are

(Continued)

WARNING: (Continued)

on fairly level ground, use the steps that follow. With four-wheel drive, if the transfer case is in N (Neutral), the vehicle will be free to roll, even if the shift lever is in P (Park). So, be sure the transfer case is in a drive gear — not in N (Neutral). If you are pulling a trailer, see *Towing a Trailer on page 5-55*.

1. Hold the brake pedal down, then set the parking brake.

   See *Parking Brake on page 3-54* for more information.
2. Move the shift lever into the P (Park) position by pulling the shift lever toward you and moving it up as far as it will go.
3. Be sure the transfer case is in a drive gear — not in N (Neutral).
4. Turn the ignition key to LOCK/OFF.
5. Remove the key and take it with you. If you can leave the vehicle with the ignition key in your hand, the vehicle is in P (Park).

Leaving the Vehicle With the Engine Running

⚠ WARNING:

It can be dangerous to leave the vehicle with the engine running. The vehicle could move suddenly if the shift lever is not fully in P (Park) with the parking brake firmly set.

If you have four-wheel drive and the transfer case is in N (Neutral), the vehicle will be free to roll, even if the shift lever is in P (Park). So be sure the transfer case is in a drive gear — not in N (Neutral).

And, if you leave the vehicle with the engine running, it could overheat and even catch fire. You or others could be injured. Do not leave the vehicle with the engine running unless you have to.

If you have to leave the vehicle with the engine running, be sure your vehicle is in P (Park) and the parking brake is firmly set before you leave it. After you move the shift lever into P (Park), hold the regular brake pedal down. Then, see if you can move the shift lever away from P (Park) without first pulling it toward you. If you can, it means that the shift lever was not fully locked into P (Park).

Torque Lock

If you are parking on a hill and you do not shift your transmission into P (Park) properly, the weight of the vehicle may put too much force on the parking pawl in the transmission. You may find it difficult to pull the shift lever out of P (Park). This is called torque lock. To prevent torque lock, set the parking brake and then shift into P (Park) properly before you leave the driver seat. To find out how, see *Shifting Into Park on page 3-55*.

When you are ready to drive, move the shift lever out of P (Park) before you release the parking brake.

If torque lock does occur, you may need to have another vehicle push yours a little uphill to take some of the pressure from the parking pawl in the transmission, then you will be able to pull the shift lever out of P (Park).

Shifting Out of Park

This vehicle is equipped with an electronic shift lock release system. The shift lock release is designed to:

- Prevent ignition key removal unless the shift lever is in P (Park) with the shift lever button fully released, and
- Prevent movement of the shift lever out of P (Park), unless the ignition is in ON/RUN or ACC/ ACCESSORY and the regular brake pedal is applied.

The shift lock release is always functional except in the case of an uncharged or low voltage (less than 9 volt) battery.

If the vehicle has an uncharged battery or a battery with low voltage, try charging or jump starting the battery. See *Jump Starting on page 6-49* for more information.

To shift out of P (Park) use the following:

1. Apply the brake pedal.
2. Move the shift lever to the desired position.

If you still are unable to shift out of P (Park):

1. Ease the pressure on the shift lever.
2. While holding down the brake pedal, press the shift lever all the way into P (Park).
3. Move the shift lever to the desired position.

If you are still having a problem shifting, then have the vehicle serviced soon.

Parking Over Things That Burn

⚠ WARNING:

Things that can burn could touch hot exhaust parts under the vehicle and ignite. Do not park over papers, leaves, dry grass, or other things that can burn.

Engine Exhaust

⚠ WARNING:

Engine exhaust contains Carbon Monoxide (CO) which cannot be seen or smelled. Exposure to CO can cause unconsciousness and even death.

Exhaust may enter the vehicle if:

- The vehicle idles in areas with poor ventilation (parking garages, tunnels, deep snow that may block underbody airflow or tail pipes).
- The exhaust smells or sounds strange or different.

(Continued)

WARNING: (Continued)

- The exhaust system leaks due to corrosion or damage.
- The vehicle's exhaust system has been modified, damaged or improperly repaired.
- There are holes or openings in the vehicle body from damage or after-market modifications that are not completely sealed.

If unusual fumes are detected or if it is suspected that exhaust is coming into the vehicle:

- Drive it only with the windows completely down.
- Have the vehicle repaired immediately.

Never park the vehicle with the engine running in an enclosed area such as a garage or a building that has no fresh air ventilation.

Running the Vehicle While Parked

It is better not to park with the engine running. But if you ever have to, here are some things to know.

⚠ WARNING:

Idling a vehicle in an enclosed area with poor ventilation is dangerous. Engine exhaust may enter the vehicle. Engine exhaust contains Carbon Monoxide (CO) which cannot be seen or smelled. It can cause unconsciousness and even death. Never run the engine in an enclosed area that has no fresh air ventilation. For more information, see *Engine Exhaust on page 3-58*.

⚠ WARNING:

It can be dangerous to get out of the vehicle if the automatic transmission shift lever is not fully in P (Park) with the parking brake firmly set. The vehicle can roll. Do not leave the vehicle when the engine is running unless you have to. If you have

(Continued)

WARNING: (Continued)

left the engine running, the vehicle can move suddenly. You or others could be injured. To be sure the vehicle will not move, even when you are on fairly level ground, always set the parking brake and move the shift lever to P (Park).

⚠ WARNING:

Four-wheel drive vehicles with the transfer case in N (Neutral) will allow the vehicle to roll, even if the automatic transmission shift lever is in P (Park). So, be sure the transfer case is in a drive gear — not in N (Neutral). Always set the parking brake.

Follow the proper steps to be sure the vehicle will not move. See *Shifting Into Park on page 3-55*.

If pulling a trailer, see *Towing a Trailer on page 5-55*.

Mirrors

Manual Rearview Mirror

Hold the inside rearview mirror in the center to move it for a clearer view behind your vehicle. Adjust the mirror to avoid glare from the headlamps behind you. Push the tab forward for daytime use and pull it for nighttime use.

Automatic Dimming Rearview Mirror

The vehicle may have an automatic dimming inside rearview mirror.

Vehicles with OnStar® have three additional control buttons for the OnStar® system. See your dealer for more information about OnStar® and how to subscribe to it. See the OnStar® owner guide for more information about the services OnStar® provides.

⏻ **(On/Off):** Press to turn the dimming feature on or off.

The vehicle may also have a Rear Vision Camera (RVC). See *Rear Vision Camera (RVC) on page 3-67* for more information.

If the vehicle has RVC, the ⏻ button may not be available.

Automatic Dimming Mirror Operation

Automatic dimming reduces the glare from the headlamps of the vehicle behind you. The dimming feature comes on and the indicator light illuminates each time the ignition is turned to start.

Cleaning the Mirror

Do not spray glass cleaner directly on the mirror. Use a soft towel dampened with water.

Outside Manual Mirrors

Adjust the outside mirror for a clearer view.

Manually fold the mirrors inward to prevent damage when going through an automatic car wash. To fold, push the mirror toward the vehicle. Push the mirror outward, to return to its original position.

Using hood-mounted air deflectors and add-on convex mirror attachments could decrease mirror performance.

Outside Towing Mirrors

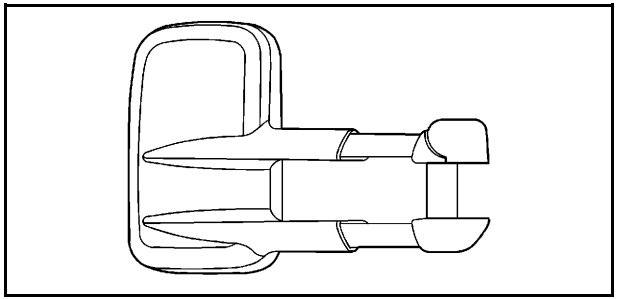

If the vehicle has towing mirrors, they can be adjusted for a clearer view of the objects behind you. Manually pull out the mirror head to extend it for better visibility when towing a trailer.

Manually fold the mirrors forward or rearward. The lower portion of the mirror is convex. A convex mirror's surface is curved to see more from the driver seat. The convex mirror can be adjusted manually to the driver preferred position for better vision.

The mirror may have a turn signal arrow that flashes in the direction of the turn or lane change.

Outside Power Mirrors

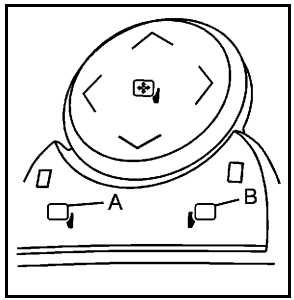

Vehicles with outside power mirrors have controls located on the driver door.

To adjust each mirror:

1. Press (A) or (B) to select the driver or passenger side mirror.
2. Press one of the four arrows located on the control pad to adjust the mirror.
3. Adjust the outside mirror so that the side of the vehicle and the area behind are seen.
4. Press either (A) or (B) again to deselect the mirror.

Manually fold the mirrors inward to prevent damage when going through an automatic car wash. To fold, push the mirror toward the vehicle. Push the mirror outward, to return to its original position.

Outside Power Foldaway Mirrors

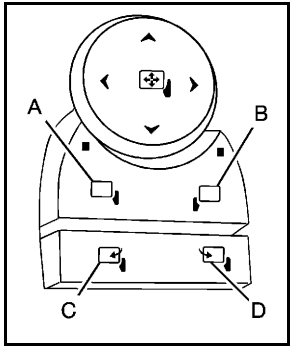

Vehicles with outside power foldaway mirrors have controls located on the driver door.

Mirror Adjustment

1. Press (C) to fold the mirrors out to the driving position.
2. Press (D) to fold the mirrors in to the folded position.

Resetting the Power Foldaway Mirrors

Reset the power foldaway mirrors if:

- The mirrors are accidentally obstructed while folding.
- They are accidentally manually folded/unfolded.
- The mirrors will not stay in the unfolded position.
- The mirrors vibrate at normal driving speeds.

Fold and unfold the mirrors one time using the mirror controls to reset them to their normal position.
A popping noise may be heard during the resetting of the power foldaway mirrors. This sound is normal after a manual folding operation.

Automatic Dimming

The driver outside mirror adjusts for the glare of the headlamps behind you. See *Automatic Dimming Rearview Mirror on page 3-60* for more information.

Turn Signal Indicator

The vehicle may also have a turn signal indicator on the mirror. An arrow on the mirror flashes in the direction of the turn or lane change.

Park Tilt Mirrors

If the vehicle has the memory package, the passenger and/or driver mirror tilts to a preselected position when the vehicle is in R (Reverse). This feature lets the driver view the curb when parallel parking. The mirror(s) return to the original position when the vehicle is shifted out of R (Reverse), or the ignition is turned off or to OFF/LOCK.

Turn this feature on or off through the Driver Information Center (DIC). See *DIC Vehicle Customization (With DIC Buttons) on page 4-76* for more information.

Outside Convex Mirror

⚠ WARNING:

A convex mirror can make things, like other vehicles, look farther away than they really are. If you cut too sharply into the right lane, you could hit a vehicle on the right. Check the inside mirror or glance over your shoulder before changing lanes.

The passenger side mirror is convex shaped. A convex mirror's surface is curved so more can be seen from the driver seat.

Outside Heated Mirrors

For vehicles with heated mirrors:

(Rear Window Defogger): Press to heat the mirrors. If the vehicle has a towing mirror, only the upper glass of the mirror is heated. The lower convex part of the towing mirror is not heated.

Depending on the vehicle's features, see “Rear Window Defogger” under, *Climate Control System (With Heater Only) on page 4-19* or *Climate Control System (With Air Conditioning) on page 4-20* or *Dual Automatic Climate Control System on page 4-23* for more information.

Object Detection Systems

Ultrasonic Rear Parking Assist (URPA)

For vehicles with the Ultrasonic Rear Parking Assist (URPA) system, it operates at speeds less than 8 km/h (5 mph), and assists the driver with parking and avoiding objects while in R (Reverse). The sensors on the rear bumper are used to detect the distance to an object up to 2.5 m (8 ft) behind the vehicle, and at least 25.4 cm (10 in) off the ground.

⚠ WARNING:

The Ultrasonic Rear Parking Assist (URPA) system does not replace driver vision. It cannot detect:

- Objects that are below the bumper, underneath the vehicle, or if they are too close or far from the vehicle
- Children, pedestrians, bicyclists, or pets.

If you do not use proper care before and while backing; vehicle damage, injury, or death could occur. Even with URPA, always check behind the vehicle before backing up. While backing, be sure to look for objects and check the vehicle's mirrors.

How the System Works

URPA comes on automatically when the shift lever is moved into R (Reverse). A single tone sounds to indicate the system is working.

URPA operates only at speeds less than 5 mph (8 km/h).

An obstacle is indicated by audible beeps. The interval between the beeps becomes shorter as the vehicle gets closer to the obstacle. When the distance is less than 30 cm (12 in) the beeps are continuous.

To be detected, objects must be at least 25.4 cm (10 in) off the ground and below tailgate level. Objects must also be within 2.5 m (8 ft) from the rear bumper. This distance may be less during warmer or humid weather.

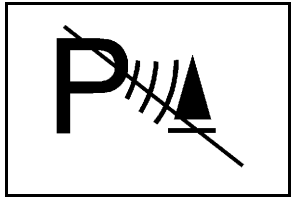

The system can be disabled by pressing the rear park aid disable button located next to the radio.

The indicator light will come on and PARK ASSIST OFF displays on the Driver Information Center (DIC) to indicate that URPA is off, see *DIC Warnings and Messages on page 4-66*.

Notice: **If you use URPA while the tailgate is lowered, it may not detect an object behind your vehicle, and you might back into the object and damage your vehicle. Always verify the tailgate is closed when using URPA or turn off URPA when driving with the tailgate lowered.**

When the System Does Not Seem to Work Properly

If the URPA system will not activate due to a temporary condition, the messages PARK ASSIST OFF or PARK ASST BLOCKED SEE OWNERS MANUAL will be displayed on the DIC.

SERVICE PARK ASSIST: If this message occurs, take the vehicle to your dealer to repair the system.

PARK ASSIST OFF: This message occurs if the driver disables the system.

PARK ASST BLOCKED SEE OWNERS MANUAL: This message can occur under the following conditions:

- The ultrasonic sensors are not clean. Keep the vehicle's rear bumper free of mud, dirt, snow, ice and slush. For cleaning instructions, see *Washing Your Vehicle on page 6-124*.
- The park assist sensors are covered by frost or ice. Frost or ice can form around and behind the sensors and may not always be seen; this can occur after washing the vehicle in cold weather. The message may not clear until the frost or ice has melted.
- A trailer was attached to the vehicle, or a bicycle or an object was hanging out of the tailgate during the last drive cycle. Once the attached object is removed and the tailgate is raised, URPA will return to normal operation.
- A tow bar is attached to the vehicle.
- The vehicle's bumper is damaged. Take the vehicle to your dealer to repair the system.
- Other conditions may affect system performance, such as vibrations from a jackhammer or the compression of air brakes on a very large truck.

If the system is still disabled, after driving forward at least 40 km/h (25 mph), take the vehicle to your dealer.

Rear Vision Camera (RVC)

This vehicle may have a Rear Vision Camera system. Read this entire section before using it.

⚠ WARNING:

The Rear Vision Camera (RVC) system does not replace driver vision. RVC does not:

- Detect objects that are outside the camera's field of view, below the bumper, or underneath the vehicle.
- Detect children, pedestrians, bicyclists, or pets.

Do not back the vehicle by only looking at the RVC screen, or use the screen during longer, higher speed backing maneuvers or where there could be cross-traffic. Your judged distances using the screen will differ from actual distances.

So if you do not use proper care before backing up, you could hit a vehicle, child, pedestrian, bicyclist, or pet, resulting in vehicle damage, injury, or death. Even though the vehicle has the RVC system, always check carefully before backing up by checking behind and around the vehicle.

Vehicles Without Navigation System

The rear vision camera system is designed to help the driver when backing up by displaying a view of the area behind the vehicle. When the key is in the ON/RUN position and the driver shifts the vehicle into R (Reverse), the video image automatically appears on the inside rear view mirror. Once the driver shifts out of R (Reverse), the video image automatically disappears from the inside rear view mirror.

Turning the Rear Vision Camera System Off or On

To turn off the rear vision camera system, press and hold ⏻, located on the inside rearview mirror, until the left indicator light turns off. The rear camera vision display is now disabled.

To turn the rear vision camera system on again, press and hold ⏻ until the left indicator light illuminates. The rear vision camera system display is now enabled and the display will appear in the mirror normally.

Vehicles With Navigation System

The rear vision camera system is designed to help the driver when backing up by displaying a view of the area behind the vehicle. When the driver shifts the vehicle into R (Reverse), the video image automatically appears on the navigation screen. Once the driver shifts out of R (Reverse), the navigation screen will go back to the last screen that had been displayed, after a delay.

Turning the Rear Vision Camera System On or Off

To turn the rear vision camera system on or off:

1. Shift into P (Park).
2. Press the MENU button to enter the configure menu options, then press the MENU hard key to select Display or touch the Display screen button.
3. Select the Rear Camera Options screen button. The Rear Camera Options screen will display.

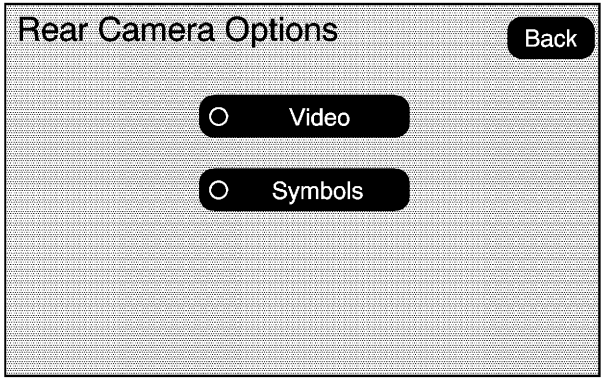

4. Select the Video screen button. When the Video screen button is highlighted the RVC system is on.

The delay that is received after shifting out of R (Reverse) is approximately 10 seconds. The delay can be cancelled by performing one of the following:

- Pressing a hard key on the navigation system.
- Shifting in to P (Park).
- Reach a vehicle speed of 5 mph (8 km/h).

There is a message on the rear vision camera screen that states “Check Surroundings for Safety”.

Adjusting the Brightness and Contrast of the Screen

To adjust the brightness and contrast of the screen, press the MENU button while the rear vision camera image is on the display. Any adjustments made will only affect the rear vision camera screen.

☼ **(Brightness) :** Touch the + (plus) or – (minus) screen buttons to increase or decrease the brightness of the screen.

◑ **(Contrast) :** Touch the + (plus) or – (minus) screen buttons to increase or decrease the contrast of the screen.

Symbols

The navigation system may have a feature that lets the driver view symbols on the navigation screen while using the rear vision camera. The Ultrasonic Rear Park Assist (URPA) system must not be disabled to use the caution symbols. If URPA has been disabled and the symbols have been turned on, the Rear Parking Assist Symbols Unavailable error message may display. See *Ultrasonic Rear Parking Assist (URPA) on page 3-64*.

The symbols appear when an object has been detected by the URPA system. The symbol may cover the object when viewing the navigation screen.

To turn the symbols on or off:

1. Make sure that URPA has not been disabled.
2. Shift into P (Park).
3. Press the MENU hard key to enter the configure menu options, then press the MENU hard key repeatedly until Display is selected or touch the Display screen button.
4. Select the Rear Camera Options screen button. The Rear Camera Options screen will display.
5. Touch the Symbols screen button. The screen button will be highlighted when on.

Rear Vision Camera Error Messages

Service Rear Vision Camera System: This message can display when the system is not receiving information it requires from other vehicle systems.

If any other problem occurs or if a problem persists, see your dealer.

Rear Vision Camera Location

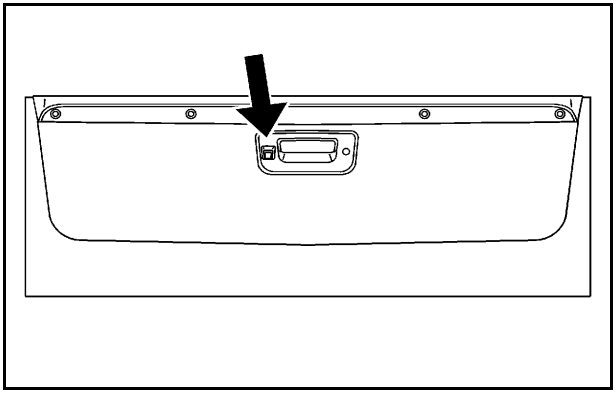

The image is provided by the camera located in the bezel for the tailgate handle.

The camera uses a special lens. The distance of the image that appears on the screen differs from the actual distance. The area displayed by the camera is limited. The camera does not display objects which are close to either corner of the bumper or under the bumper. The area displayed on the screen can vary according to vehicle orientation or road conditions.

The following illustration shows the field of view that the camera provides.

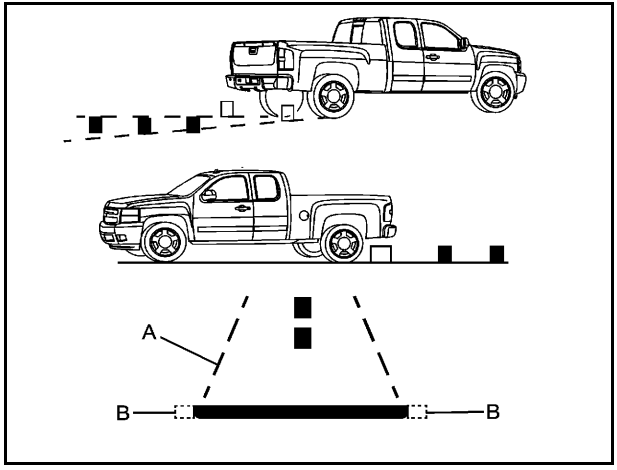

A. View displayed by the camera.

B. Corner of the rear bumper.

Disconnecting the Rear Vision Camera

To disconnect the camera:

1. Remove the license plate.
2. Disconnect the camera connectors from the chassis harness, located behind the license plate, by pressing on the release tab on each connector.

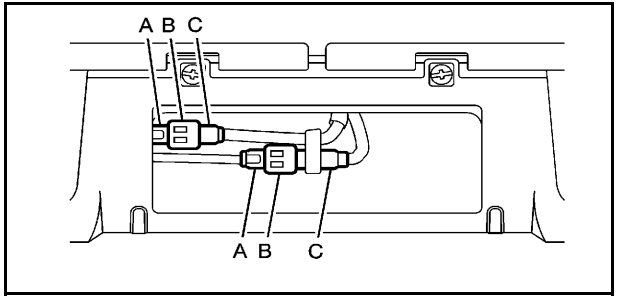

A. Chassis harness connector
B. Release tab
C. Camera connector

3. Plug the two exposed chassis harness connectors together to prevent contamination.

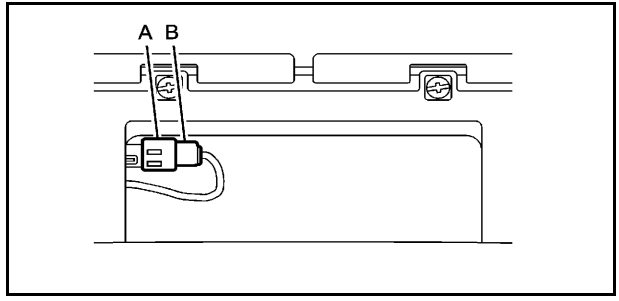

A. Chassis harness connector
B. Release tab

4. Feed the wiring harness through the pickup box, then plug the camara connectors together to prevent contamination.
5. Remove the tailgate. See *Tailgate on page 3-14* for more information.
6. Re-install the license plate.

Reverse this procedure to reinstall the rear vision camera and make sure the grommet and connection is secure.

When the System Does Not Seem To Work Properly

The rear vision camera system might not work properly or display a clear image if:

- The RVC is turned off. See “Turning the Rear Camera System On or Off” earlier in this section.
- It is dark.
- The sun or the beam of headlights is shining directly into the camera lens.
- Ice, snow, mud, or anything else builds up on the camera lens. Clean the lens, rinse it with water, and wipe it with a soft cloth.
- The back of the vehicle is in an accident, the position and mounting angle of the camera can change or the camera can be affected. Be sure to have the camera and its position and mounting angle checked at your dealer.

The rear vision camera system display in the rearview mirror may turn off or not appear as expected due to one of the following conditions. If this occurs the left indicator light on the mirror will flash.

- A slow flash may indicate a loss of video signal, or no video signal present during the reverse cycle.
- A fast flash may indicate that the display has been on for the maximum allowable time during a reverse cycle, or the display has reached an Over Temperature limit.

  The fast flash conditions are used to protect the video device from high temperature conditions. Once conditions return to normal the device will reset and the green indicator will stop flashing.

During any of these fault conditions, the display will be blank and the indicator will continue to flash as long as the vehicle is in R (Reverse) or until the conditions return to normal.

Pressing and holding ⏻ when the left indicator light is flashing will turn off the video display along with the left indicator light.

Universal Home Remote System

See *Radio Frequency Statement on page 8-21* for information regarding Part 15 of the Federal Communications Commission (FCC) Rules and RSS-210/211 of Industry Canada.

Universal Home Remote System Operation (With Three Round LED)

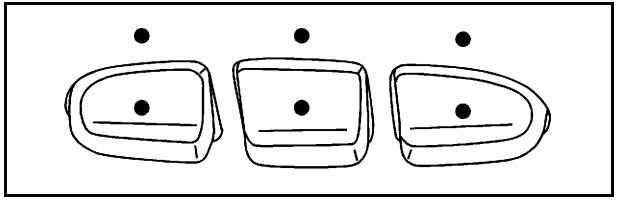

This vehicle may have the Universal Home Remote System. If there are three round Light Emitting Diode (LED) indicator lights above the Universal Home Remote buttons, follow the instructions below.

This system provides a way to replace up to three remote control transmitters used to activate devices such as garage door openers, security systems, and home automation devices.

Do not use this system with any garage door opener that does not have the stop and reverse feature. This includes any garage door opener model manufactured before April 1, 1982.

Read the instructions completely before attempting to program the transmitter. Because of the steps involved, it may be helpful to have another person assist with programming the transmitter.

Be sure to keep the original remote control transmitter for use in other vehicles, as well as, for future programming. Only the original remote control transmitter is needed for Fixed Code programming. The programmed buttons should be erased when the vehicle is sold or the lease ends. See “Erasing Universal Home Remote Buttons” later in this section.

Park the vehicle outside of the garage when programming a garage door. Be sure that people and objects are clear of the garage door or gate that is being programmed.

Programming Universal Home Remote — Rolling Code

For questions or help programming the Universal Home Remote System, call 1-866-572-2728 or go to learcar2u.com.

Most garage door openers sold after 1996 are Rolling Code units.

Programming a garage door opener involves time-sensitive actions, so read the entire procedure before starting. Otherwise, the device will time out and the procedure will have to be repeated.

To program up to three devices:

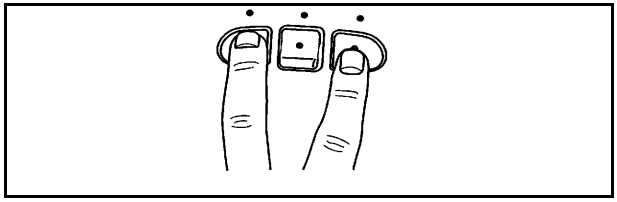

1. From inside the vehicle, press the two outside buttons at the same time for one to two seconds, and immediately release them.

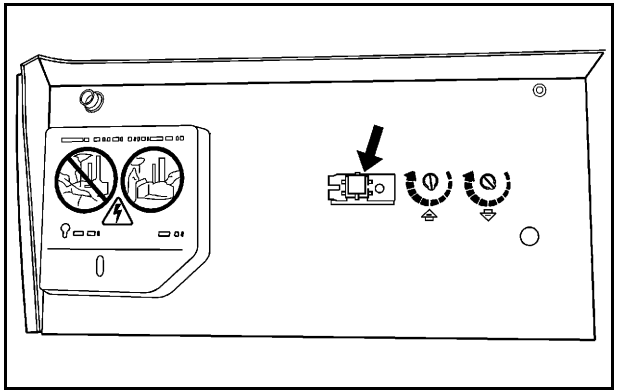

2. Locate in the garage, the garage door opener receiver (motor-head unit). Locate the “Learn” or “Smart” button. It can usually be found where the hanging antenna wire is attached to the motor-head unit and may be a colored button. Press this button. After pressing this button, complete the following steps in less than 30 seconds.
3. Immediately return to the vehicle. Press and hold the Universal Home Remote button that will be used to control the garage door until the garage door moves. The indicator light, above the selected button, should slowly blink. This button may need to be held for up to 20 seconds.
4. Immediately, within one second, release the button when the garage door moves. The indicator light will blink rapidly until programming is complete.
5. Press and release the same button again. The garage door should move, confirming that programming is successful and complete.

To program another Rolling Code device such as an additional garage door opener, a security device, or home automation device, repeat Steps 1 through 5, choosing a different function button in Step 3 than what was used for the garage door opener.

If these instructions do not work, the garage door opener is probably a Fixed Code unit. Follow the Programming instructions that follow for a Fixed Code garage door opener.

Programming Universal Home Remote — Fixed Code

For questions or help programming the Universal Home Remote System, call 1-866-572-2728 or go to learcar2u.com.

Most garage door openers sold before 1996 are Fixed Code units.

Programming a garage door opener involves time-sensitive actions, so read the entire procedure before starting. Otherwise, the device will time out and the procedure will have to be repeated.

To program up to three devices:

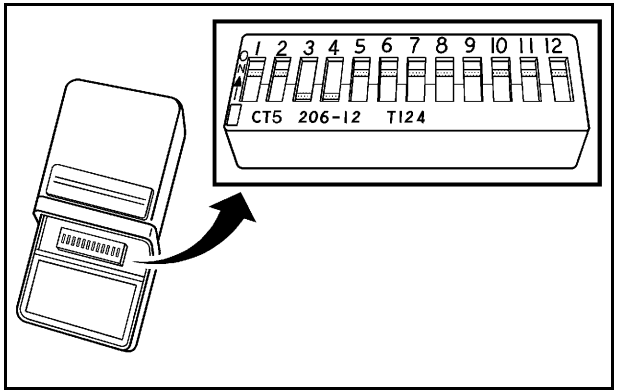

1. To verify that the garage door opener is a Fixed Code unit, remove the battery cover on the hand held transmitter supplied by the manufacturer of the garage door opener motor. If there are a row of dip switches similar to the graphic above, the garage door opener is a Fixed Code unit. If you do not see a row of dip switches, return to the previous section for Programming Universal Home Remote – Rolling Code.

   Your hand held transmitter can have between eight to 12 dip switches depending on the brand of transmitter.

The garage door opener receiver (motor head unit) could also have a row of dip switches that can be used when programming the Universal Home Remote. If the total number of switches on the motor head and hand held transmitter are different, or if the dip switch settings are different, use the dip switch settings on the motor head unit to program the Universal Home Remote. The motor head dip switch settings can also be used when the original hand held transmitter is not available.

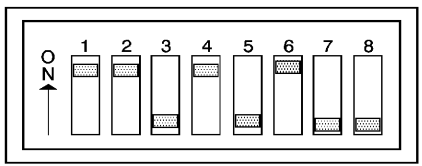

Switch Number	1	2	3	4	5	6	7	8
Switch Position	On	On	Off	On	Off	On	Off	Off
Your Universal Home Remote Button	Left	Left	Right	Left	Right	Left	Right	Right

Example of Eight Dip Switches with Two Positions

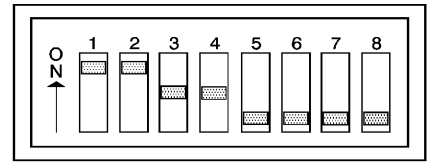

Switch Number	1	2	3	4	5	6	7	8
Switch Position	On	On	Neutral	Neutral	Off	Off	Off	Off
Your Universal Home Remote Button	Left	Left	Middle	Middle	Right	Right	Right	Right

Example of Eight Dip Switches with Three Positions

The panel of switches might not appear exactly as they do in the examples above, but they should be similar.

The switch positions on the hand-held transmitter could be labeled, as follows:

- A switch in the up position could be labeled as “Up,” “+,” or “On.”
- A switch in the down position could be labeled as “Down,” “−,” or “Off.”
- A switch in the middle position could be labeled as “Middle,” “0,” or “Neutral.”

2. Write down the eight to 12 switch settings from left to right as follows:
   - When a switch is in the up position, write “Left.”
   - When a switch is in the down position, write “Right.”
   - If a switch is set between the up and down position, write “Middle.”

     The switch settings written down in Step 2 now become the button strokes to be entered into the Universal Home Remote in Step 4. Be sure to enter the switch settings written down in Step 2, in order from left to right, into the Universal Home Remote, when completing Step 4.
3. From inside your vehicle, first firmly press all three buttons at the same time for about three seconds. Release the buttons to put the Universal Home Remote into programming mode.

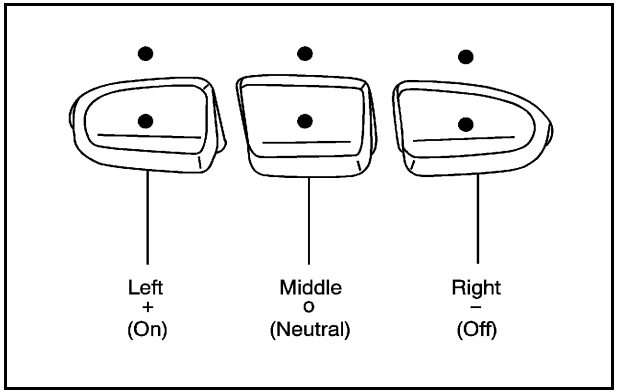

4. The indicator lights will blink slowly. Enter each switch setting from Step 2 into your vehicle's Universal Home Remote. You will have two and one-half minutes to complete Step 4. Now press one button on the Universal Home Remote for each switch setting as follows:
   - If you wrote “Left,” press the left button in the vehicle.
   - If you wrote “Right,” press the right button in the vehicle.
   - If you wrote “Middle,” press the middle button in the vehicle.

5. After entering all of the switch positions, again, firmly press and release all three buttons at the same time. The indicator lights will turn on.
6. Press and hold the button that will be used to control the garage door until the garage door moves. The indicator light above the selected button should slowly blink. This button may need to be held for up to 55 seconds.
7. Immediately release the button when the garage door moves. The indicator light will blink rapidly until programming is complete.
8. Press and release the same button again. The garage door should move, confirming that programming is successful and complete.

To program another Fixed Code device such as an additional garage door opener, a security device, or home automation device, repeat Steps 1-8, choosing a different button in Step 6 than what was used for the garage door opener.

Using Universal Home Remote

Press and hold the appropriate button for at least half of a second. The indicator light will come on while the signal is being transmitted.

Reprogramming Universal Home Remote Buttons

Any of the three buttons can be reprogrammed by repeating the instructions.

Erasing Universal Home Remote Buttons

The programmed buttons should be erased when the vehicle is sold or the lease ends.

To erase either Rolling Code or Fixed Code on the Universal Home Remote device:

1. Press and hold the two outside buttons at the same time for approximately 20 seconds, until the indicator lights, located directly above the buttons, begin to blink rapidly.
2. Once the indicator lights begin to blink, release both buttons. The codes from all buttons will be erased.

For help or information on the Universal Home Remote System, call the customer assistance phone number under *Customer Assistance Offices on page 8-6*.

Storage Areas

Glove Box

Lift up on the glove box lever to open it.

Cupholders

Vehicles with cupholders have them located on and behind the center console and in the rear seat armrest. Pull the loop down on the rear seat armrest to access the cupholders.

Pull downward on the cover to access the cupholders behind the center console.

Instrument Panel Storage

For vehicles equipped with an instrument panel storage area, it is located above the glove box.

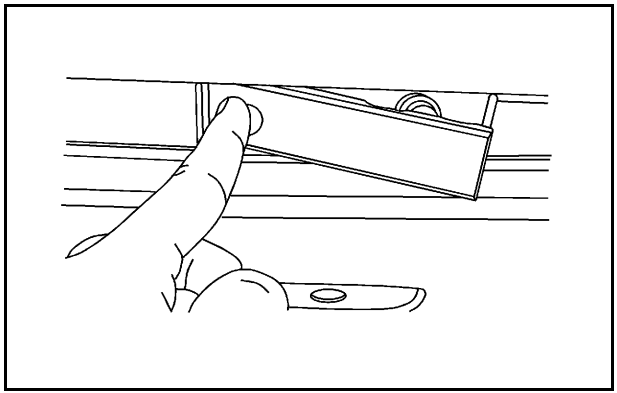

Access the storage area by pressing and holding in the driver side of the handle and pull out on the exposed portion of the handle.

Center Console Storage

Vehicles with an upper and lower center console storage area have cupholders included.

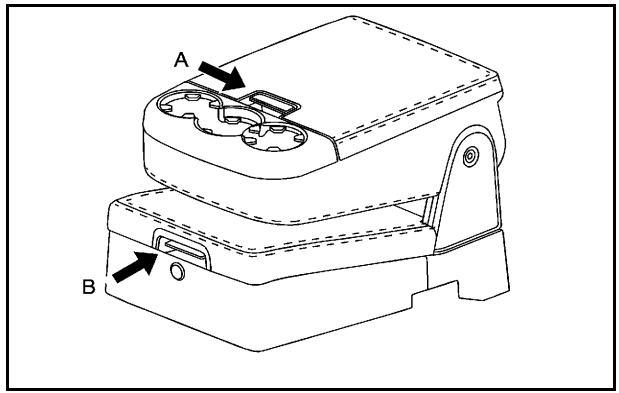

Pull the lever (A) up to access the upper storage area. Raise the upper storage bin, then pull the lever (B) up to access the lower storage area. Use the key to lock and unlock the lower storage area.

Roof Rack System

⚠ WARNING:

If something is carried on top of the vehicle that is longer or wider than the roof rack— like paneling, plywood, or a mattress— the wind can catch it while the vehicle is being driven. The item being carried could be violently torn off, and this could cause a collision, and damage the vehicle. Never carry something longer or wider than the roof rack on top of the vehicle unless using a GM Certified accessory carrier.

For vehicles with a roof rack, the rack can be used to load items. For roof racks that do not have crossrails included, GM Certified crossrails can be purchased as an accessory. See your dealer for additional information.

Notice: **Loading cargo on the roof rack that weighs more than 91 kg (200 lbs) or hangs over the rear or sides of the vehicle may damage the vehicle. Load cargo so that it rests evenly between the crossrails, making sure to fasten cargo securely.**

To prevent damage or loss of cargo when driving, check to make sure crossrails and cargo are securely fastened. Loading cargo on the roof rack will make the vehicle's center of gravity higher. Avoid high speeds, sudden starts, sharp turns, sudden braking or abrupt maneuvers, otherwise it may result in loss of control. If driving for a long distance, on rough roads, or at high speeds, occasionally stop the vehicle to make sure the cargo remains in its place.

Do not exceed the maximum vehicle capacity when loading the vehicle. For more information on vehicle capacity and loading, see *Loading the Vehicle on page 5-33*.

- If small heavy objects are placed on the roof, cut a piece of 3/8 inch plywood to fit inside the crossrails and siderails to spread the load. Tie the plywood to the siderail supports.
- Tie the load and secure it to the crossrails or the siderail supports. Use the crossrails only to keep the load from sliding. To move a crossrail, lift the release lever up, on both sides of the rail. Then slide the crossrail to the desired position balancing the force side to side. Press the release lever down on both sides of the rail, down to tighten it. Try to slide the crossrail back and forth slightly to make sure it is tight.
- To carry long items, move the crossrails as far apart as possible. Tie the load to the crossrails and the siderails or siderail supports. Also tie the load to the bumpers, but do not tie the load so tightly that the crossrails or siderails are damaged.
- After moving a crossrail, be sure it is securely locked into the siderail.

A Center High-Mounted Stoplamp (CHMSL) is located above the rear window glass.

Make sure items loaded on the roof of the vehicle do not block or damage the CHMSL.

Rear Seat Armrest

Vehicles with a rear seat armrest have two cupholders. Pull the armrest down from the rear seatback to access the cupholders.

Sunroof

On vehicles with a power sliding sunroof, the ignition needs to be turned to RUN, or the Retained Accessory Power (RAP) must be activated to open or close the sunroof. When RAP is active, the sunroof will work for 10 minutes after the ignition is turned off, or until the driver's door is opened. See *Retained Accessory Power (RAP) on page 3-25* for more information.

Do not leave the sunroof open for long periods of time while the vehicle is not in use. Debris can collect in the tracks and damage the sunroof operation and plug the water draining system.

Extended Cab

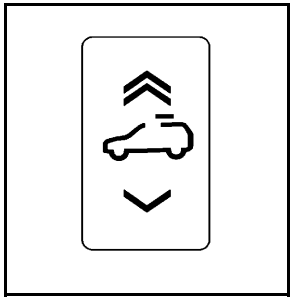

If your vehicle is an extended cab, the sunroof switch is located on the headliner above the rearview mirror.

Vent: From the closed position, press and hold the rear of the switch to vent the sunroof. To close the sunroof, press and hold the front of the switch.

Open: From the vent position, the sunroof can be fully opened either manually or by using the express-open feature. To open manually, press the rear of the switch to the first depression and hold until the sunroof has reached the desired position. To open using express-open, press the rear of the switch fully and release. The sunroof will move to the full open position. To stop the sunroof partway, press the switch a second time.

Close: From the vent, or open position, press and hold the front of the switch to close the sunroof.

The sunroof also has a roller sunshade that can be used to block the rays of the sun. The roller sunshade can be manually operated with the sunroof in an open or closed position. To open the sunshade, press and unlatch it, and roll it back. To close, pull it forward and latch it into the closed position.

When the sunroof is opened, an air deflector will automatically raise. The air deflector will retract when the sunroof is closed.

Crew Cab

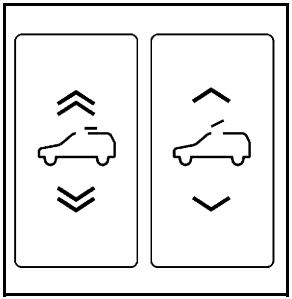

If your vehicle is a crew cab, there are two sunroof switches located in the overhead console above the rearview mirror.

Vent: From the closed position, press the rear of the passenger's side switch to vent the sunroof. To close the sunroof, press and hold the front of the passenger's side switch.

Manual-Open/Manual-Close: To open the sunroof press and hold the rear of the driver's side switch until the sunroof reaches the desired position. To close the sunroof, press and hold the front of the driver's side switch until the sunroof reaches the desired position.

When the sunroof is opened, an air deflector will automatically raise. The air deflector will retract when the sunroof is closed.

Express-Open/Express-Close: To express-open the sunroof, fully press and release the rear of the driver's side switch. The sunroof will open automatically. To stop the sunroof partway, press the switch a second time. To express-close the sunroof, fully press and release the front of the driver's side switch. The sunroof will close automatically. To stop the sunroof partway, press the switch a second time.

The sunroof also has a sunshade which you can pull forward to block sun rays. The sunshade must be opened and closed manually.

Anti-Pinch Feature (Crew Cab Only): If an object is in the path of the sunroof while it is closing, the anti-pinch feature will detect the object and stop the sunroof from closing at the point of the obstruction. The sunroof will then open halfway, and the air deflector will raise. To close the sunroof once it has re-opened, refer to the Express-Close or Manual-Close functions described previously. If the sunroof is in the vent position, and there is an object in the path of the sunroof when it closing, the anti-pinch feature will detect the object and stop the sunroof. To close the sunroof once it has stopped, refer to the Vent functions described previously.

Do not leave the sunroof open for long periods of time while the vehicle is not in use. Debris can collect in the tracks and damage the sunroof operation and plug the water draining system.

✍ NOTES

Section 4 Instrument Panel

Instrument Panel Overview 4-3
Hazard Warning Flashers 4-3
Horn 4-3
Tilt Wheel 4-3
Turn Signal/Multifunction Lever 4-4
Turn and Lane-Change Signals 4-4
Headlamp High/Low-Beam Changer 4-5
Flash-to-Pass 4-5
Windshield Wipers 4-6
Windshield Washer 4-7
Cruise Control 4-7
Exterior Lamps 4-10
Headlamps on Reminder 4-12
Daytime Running Lamps (DRL) 4-12
Automatic Headlamp System 4-12
Fog Lamps 4-14
Auxiliary Roof-Mounted Lamp 4-14
Instrument Panel Brightness 4-15
Dome Lamps 4-15
Dome Lamp Override 4-15
Entry Lighting 4-15
Exit Lighting 4-15
Reading Lamps 4-16
Cargo Lamp 4-16
Electric Power Management 4-16
Battery Run-Down Protection 4-17
Accessory Power Outlet(s) 4-17
Ashtray(s) and Cigarette Lighter 4-19
Climate Controls 4-19
Climate Control System (With Heater Only) 4-19
Climate Control System (With Air Conditioning) 4-20
Dual Automatic Climate Control System 4-23
Outlet Adjustment 4-29
Warning Lights, Gauges, and Indicators 4-29
Instrument Panel Cluster 4-30
Speedometer and Odometer 4-31
Trip Odometer 4-31
Tachometer 4-31
Safety Belt Reminders 4-32
Airbag Readiness Light 4-33
Airbag Off Light 4-34
Passenger Airbag Status Indicator 4-36
Charging System Light 4-37
Voltmeter Gauge 4-38
Brake System Warning Light 4-38
Antilock Brake System (ABS) Warning Light ... 4-40
StabiliTrak® Indicator Light 4-40
Engine Coolant Temperature Gauge 4-41
Tire Pressure Light 4-41
Malfunction Indicator Lamp 4-42

Oil Pressure Gauge 4-45
Oil Pressure Light 4-46
Security Light 4-47
Fog Lamp Light 4-47
Cruise Control Light 4-47
Highbeam On Light 4-47
Four-Wheel-Drive Light 4-48
Tow/Haul Mode Light 4-48
Fuel Gauge 4-48
Low Fuel Warning Light 4-49

Driver Information Center (DIC) 4-50
DIC Operation and Displays (With DIC Buttons) 4-50
DIC Operation and Displays (Without DIC Buttons) 4-59
DIC Compass 4-63
DIC Warnings and Messages 4-66
DIC Vehicle Customization (With DIC Buttons) 4-76

Audio System(s) 4-85
Setting the Clock 4-86
Radio(s) 4-88
Using an MP3 (Radios with CD) 4-109
Using an MP3 (Radios with CD and DVD) 4-116
XM Radio Messages 4-123
Navigation/Radio System 4-125
Bluetooth® 4-125
Rear Seat Entertainment (RSE) System 4-136
Rear Seat Audio (RSA) 4-145
Theft-Deterrent Feature 4-148
Audio Steering Wheel Controls 4-148
Radio Reception 4-150
Fixed Mast Antenna 4-151
XM™ Satellite Radio Antenna System 4-151

Instrument Panel Overview

Hazard Warning Flashers

(Hazard Warning Flasher): Press this button located on top of the steering column, to make the front and rear turn signal lamps flash on and off. This warns others that you are having trouble. Press again to turn the flashers off.

When the hazard warning flashers are on, the vehicle's turn signals will not work.

Horn

To sound the horn, press the horn symbols located on the steering wheel.

Tilt Wheel

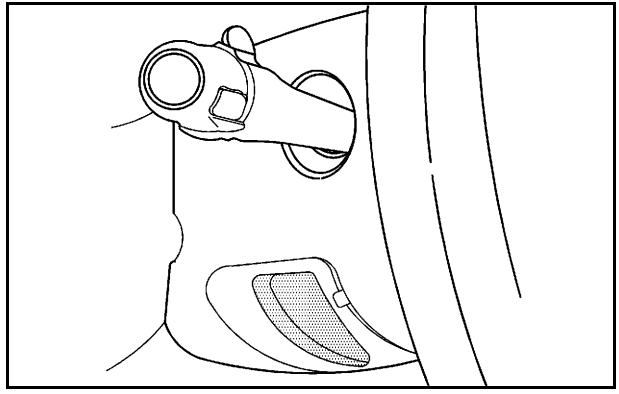

The tilt lever is located on the lower left side of the steering column.

To adjust the steering wheel:

1. Hold the steering wheel and pull the lever.
2. Move the steering wheel to a comfortable position.
3. Release the lever to lock the wheel in place.

Do not adjust the steering wheel while driving.

Turn Signal/Multifunction Lever

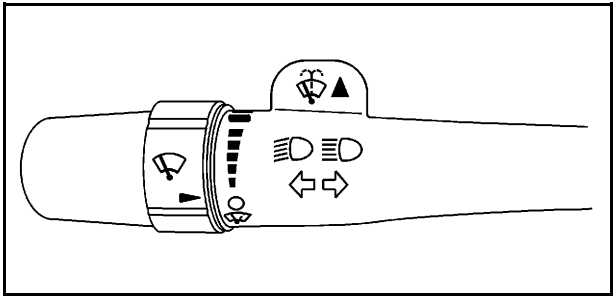

The lever on the left side of the steering column includes the following:

⇦⇨ **:** Turn and Lane Change Signals

: Headlamp High/Low-Beam Changer

: Windshield Wipers

: Windshield Washer

Flash-to-Pass.

Exterior Lamps.

Information for these features is on the pages following.

Turn and Lane-Change Signals

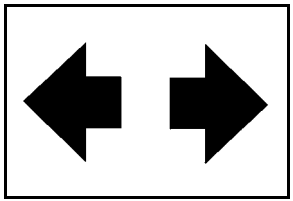

An arrow on the instrument panel cluster flashes in the direction of the turn or lane change.

Move the lever all the way up or down to signal a turn.

Raise or lower the lever for less than one second until the arrow starts to flash to signal a lane change. This causes the turn signals to automatically flash three times. It will flash six times if tow-haul mode is active. Holding the turn signal lever for more than one second will cause the turn signals to flash until you release the lever.

The lever returns to its starting position whenever it is released.

If after signaling a turn or a lane change the arrows flash rapidly or do not come on, a signal bulb could be burned out.

Have the bulbs replaced. If the bulb is not burned out, check the fuse. See *Fuses and Circuit Breakers on page 6-130*.

Turn Signal On Chime

If the turn signal is left on for more than 3/4 of a mile (1.2 km), a chime will sound at each flash of the turn signal and the message TURN SIGNAL ON will also appear in the Driver Information Control (DIC). To turn the chime and message off, move the turn signal lever to the off position.

Headlamp High/Low-Beam Changer

(Headlamp High/Low Beam Changer): To change the headlamps from low to high beam, push the lever toward the instrument panel. To return to low-beam headlamps, pull the multifunction lever toward you. Then release it.

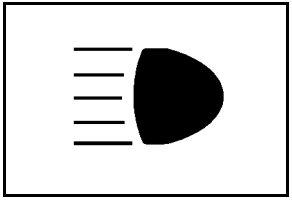

When the high beams are on, this indicator light on the instrument panel cluster will also be on.

Flash-to-Pass

This feature lets you use the high-beam headlamps to signal a driver in front of you that you want to pass. It works even if the headlamps are in the automatic position.

To use it, pull the turn signal lever toward you, then release it.

If the headlamps are in the automatic position or on low beam, the high-beam headlamps will turn on. They will stay on as long as you hold the lever toward you. The high-beam indicator on the instrument panel cluster will come on. Release the lever to return to normal operation.

Windshield Wipers

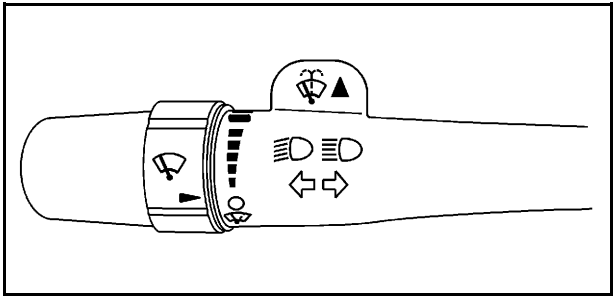

Turn the band with the wiper symbol to control the windshield wipers.

(Mist): Single wipe, turn to , then release. Several wipes, hold the band on longer.

(Off): Turns the windshield wipers off.

(Adjustable Interval Wipes): Turn the band up for more frequent wipes or down for less frequent wipes.

(Low Speed): Slow wipes.

(High Speed): Fast wipes.

Clear ice and snow from the wiper blades before using them. If frozen to the windshield, carefully loosen or thaw them. Damaged wiper blades should be replaced. See *Windshield Wiper Blade Replacement on page 6-69*.

Heavy snow or ice can overload the wiper motor. A circuit breaker will stop the motor until it cools down.

Windshield Washer

⚠ WARNING:

In freezing weather, do not use your washer until the windshield is warmed. Otherwise the washer fluid can form ice on the windshield, blocking your vision.

(Washer Fluid): Push the paddle marked with the windshield washer symbol at the top of the multifunction lever, to spray washer fluid on the windshield. The wipers clear the window and then either stop or return to the preset speed.

Cruise Control

⚠ WARNING:

Cruise control can be dangerous where you cannot drive safely at a steady speed. So, do not use the cruise control on winding roads or in heavy traffic.

Cruise control can be dangerous on slippery roads. On such roads, fast changes in tire traction can cause excessive wheel slip, and you could lose control. Do not use cruise control on slippery roads.

For vehicles with cruise control, a speed of about 40 km/h (25 mph) or more can be maintained without keeping your foot on the accelerator. Cruise control does not work at speeds below about 40 km/h (25 mph).

When the brakes are applied, cruise control is turned off.

For vehicles with an Allison® or Hydra-Matic 6-speed automatic transmission, see “Grade Braking and Cruise Grade Braking (Allison Transmission) under *Tow/Haul Mode on page 3-36* for an explanation of how cruise control interacts with the Range Selection Mode, tow/haul and grade braking systems.

For vehicles with the StabiliTrak® system that begins to limit wheel spin while you are using cruise control, the cruise control will automatically disengage. See *StabiliTrak® System on page 5-6*. When road conditions allow the cruise control to be safely used again, it can be turned back on.

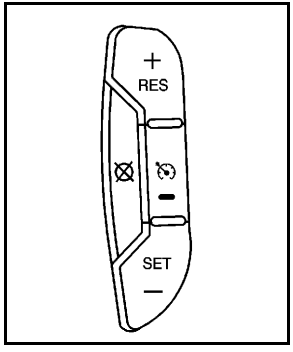

The cruise control buttons are located on left side of the steering wheel.

(On/Off): Turns the system on or off. The indicator light is on when cruise control is on and turns off when cruise control is off.

+ RES (Resume/Accelerate): Press briefly to make the vehicle resume to a previously set speed, or press and hold to accelerate.

SET − (Set/Coast): Press to set the speed and activate cruise control or make the vehicle decelerate.

(Cancel): Press to disengage cruise control without erasing the set speed from memory.

Setting Cruise Control

If the cruise button is on when not in use, it could get bumped and go into cruise when not desired. Keep the cruise control switch off when cruise is not being used.

The cruise control light on the instrument panel cluster will come on after the cruise control has been set to the desired speed.

1. Press button to turn the cruise control on.
2. Get up to the desired speed.
3. Press and release the SET− button located on the steering wheel.
4. Take your foot off the accelerator.

Resuming a Set Speed

If the cruise control is set at a desired speed and then the brakes are applied, the cruise control is disengaged without erasing the set speed from memory.

Once the vehicle speed reaches about 40 km/h (25 mph) or more, press the +RES button on the steering wheel. The vehicle returns to the previous set speed and stays there.

Increasing Speed While Using Cruise Control

If the cruise control system is already activated,

- Press and hold the +RES button on the steering wheel until the desired speed is reached, then release it.
- To increase vehicle speed in small amounts, press the +RES button. Each time this is done, the vehicle goes about 1.6 km/h (1 mph) faster.

Reducing Speed While Using Cruise Control

If the cruise control system is already activated,

- Press and hold the SET– button on the steering wheel until the desired lower speed is reached, then release it.
- To slow down in small amounts, press the SET– button on the steering wheel briefly. Each time this is done, the vehicle goes about 1.6 km/h (1 mph) slower.

Passing Another Vehicle While Using Cruise Control

Use the accelerator pedal to increase the vehicle speed. When you take your foot off the pedal, the vehicle will slow down to the previous set cruise speed.

Using Cruise Control on Hills

How well the cruise control will work on hills depends upon the vehicle speed, load, and the steepness of the hills. When going up steep hills, you might have to step on the accelerator pedal to maintain the vehicle speed. When going downhill, you might have to brake or shift to a lower gear to keep the vehicle speed down. When the brakes are applied the cruise control is disengaged.

Ending Cruise Control

There are three ways to end cruise control:

- To disengage cruise control; step lightly on the brake pedal.
- Press ⊗ on the steering wheel.
- To turn off the cruise control, press on the steering wheel.

Erasing Speed Memory

The cruise control set speed is erased from memory by pressing the button or if the ignition is turned off.

Exterior Lamps

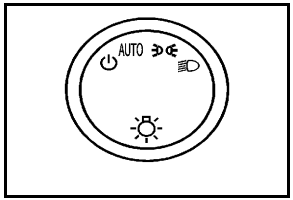

The exterior lamps control is located on the instrument panel to the left of the steering wheel.

It controls the following systems:

- Headlamps
- Taillamps
- Parking Lamps
- License Plate Lamps
- Instrument Panel Lights

The exterior lamps control has four positions:

(Off): Turns off the automatic headlamps and daytime running lamps (DRL). Turn the headlamp control to the off position again to turn the automatic headlamps or DRL back on.

For vehicles first sold in Canada, the off position will only work when the vehicle is shifted into P (Park).

AUTO (Automatic): Automatically turns on the headlamps at normal brightness, together with the following:

- Parking Lamps
- Instrument Panel Lights
- Taillamps
- License Plate Lamps

When the vehicle is turned off and the headlamps are in AUTO, the headlamps may automatically remain on for a set time. The time of the delay can be changed using the DIC. See *Driver Information Center (DIC) on page 4-50* (If Equipped).

(Parking Lamps): Turns on the parking lamps together with the following:

- Instrument Panel Lights
- Taillamps
- License Plate Lamps

(Headlamps): Turns on the headlamps together with the following:

- Parking Lamps
- Instrument Panel Lights
- Taillamps
- License Plate Lamps

When the headlamps are turned on while the vehicle is on, the headlamps turn off automatically 10 minutes after the ignition is turned off. When the headlamps are turned on while the vehicle is off, the headlamps will stay on for 10 minutes before automatically turning off to prevent the battery from being drained. Turn the headlamp control to off and then back to the headlamp on position to make the headlamps stay on for an additional 10 minutes.

Push the turn signal/multifunction lever toward the instrument panel to change the headlamps from low beam to high beam.

Headlamps on Reminder

For vehicles with a radio, a reminder chime sounds when the headlamps or parking lamps are manually turned on, the ignition is off and a door is open. To disable the chime, turn the light off.

Daytime Running Lamps (DRL)

Daytime Running Lamps (DRL) can make it easier for others to see the front of your vehicle during the day. Fully functional daytime running lamps are required on all vehicles first sold in Canada.

The DRL system comes on when the following conditions are met:

- The ignition is on.
- The exterior lamps control is in AUTO.
- The engine is running.
- The light sensor determines it is daytime.

When the DRL system is on, only the DRL lamps are on. The taillamps, sidemarker, instrument panel lights, and other lamps will not be on.

When it begins to get dark, the automatic headlamp system switches from DRL to the headlamps.

To turn off the DRL lamps, turn the exterior lamps control to the OFF position and then release. For vehicles first sold in Canada, the transmission must be in the P (Park) position, before the DRL lamps can be turned off.

Automatic Headlamp System

When it is dark enough outside, the automatic headlamp system turns on the headlamps at the normal brightness, along with the taillamps, sidemarker, parking lamps, and the instrument panel lights. The radio lights will also be dim.

To turn off the automatic headlamp system, turn the exterior lamps switch to the off position and then release it. For vehicles first sold in Canada, the transmission must be in the P (Park) position, before the automatic headlamp system can be turned off.

The vehicle has a light sensor located on the top of the instrument panel in the defroster grille that regulates when the automatic headlamps turn on. Do not cover the sensor or the headlamps will come on whenever the ignition is on.

The system may also turn on the headlamps when driving through a parking garage or heavy overcast weather. This is normal.

There is a delay in the transition between the daytime and nighttime operation of the Daytime Running Lamps (DRL) and the automatic headlamp systems so that driving under bridges or bright overhead street lights does not affect the system. The DRL and automatic headlamp system is only affected when the light sensor detects a change in lighting lasting longer than the delay.

If the vehicle is started in a dark garage, the automatic headlamp system comes on immediately. Once the vehicle leaves the garage, it takes approximately one minute for the automatic headlamp system to change to DRL if it is bright enough outside. During that delay, the instrument panel cluster may not be as bright as usual. Make sure the instrument panel brightness control is in the full bright position. See *Instrument Panel Brightness on page 4-15*.

To idle the vehicle with the automatic headlamp system off, turn the control to the off position.

The headlamps will also stay on after you exit the vehicle. This feature can be programmed using the Driver Information Center (DIC), if equipped. See *DIC Vehicle Customization (With DIC Buttons) on page 4-76*.

If the vehicle is not equipped with DIC buttons, exit lighting is automatic. When it is dark enough outside, the exterior lamps remain on for 30 seconds after the ignition is moved from ON/RUN to LOCK/OFF.

For vehicles without a radio, the instrument panel light remains on for 30 seconds with the driver's door closed. For vehicles with a radio, the instrument panel light remains on for 10 minutes with the driver's door closed. See *Retained Accessory Power (RAP) on page 3-25*.

The regular headlamp system can be turned on when needed.

Fog Lamps

For vehicles with fog lamps, the control is located next to the exterior lamps control on the instrument panel, to the left of the steering column.

The ignition must be in the ON/RUN position for the fog lamps to come on.

(Fog Lamps): Press to turn the fog lamps on or off. A light will come on in the instrument panel cluster.

When the fog lamps are turned on, the parking lamps automatically turn on.

When the headlamps are changed to high-beam, the fog lamps also go off. When the high-beam headlamps are turned off, the fog lamps will come on again.

Some localities have laws that require the headlamps to be on along with the fog lamps.

Auxiliary Roof-Mounted Lamp

If the vehicle has this feature, this button includes wiring provisions for a dealer or a qualified service center to install an auxiliary roof lamp.

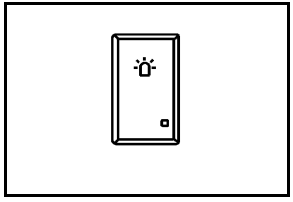

This button is located on the overhead console.

When the wiring is connected to an auxiliary roof mounted lamp, pressing the bottom of the button will activate the lamp and illuminate an indicator light at the bottom of this button. Pressing the top of the button will turn off the roof mounted lamp and indicator.

The emergency roof lamp circuit is fused at 30 amps, so the total current draw of the attached lamps should be less than this value. The attachment points for the roof lamp circuits are two blunt cut wires located above the overhead console, a dark green switched power wire and a black ground wire.

For further information on roof mount emergency lamp installation, please visit the GM Upfitter website at www.gmupfitters.com or contact your dealer.

If the vehicle has this button, the vehicle may have the snow plow prep package. For further information see *Adding a Snow Plow or Similar Equipment on page 5-41*.

Instrument Panel Brightness

(Instrument Panel Brightness): This feature controls the brightness of the instrument panel lights and is located next to the exterior lamp control.

Push the knob to extend out and then it can be turned.

Turn the knob clockwise or counterclockwise to brighten or dim the instrument panel lights. Turning the knob to the farthest clockwise position turns on the dome lamps.

Dome Lamps

The dome lamps come on when any door is opened. They turn off after all the doors are closed.

The dome lamps can also be turned on by turning the instrument panel brightness knob, located on the instrument panel to the left of the steering column, clockwise to the farthest position. In this position, the dome lamps remain on whether a door is opened or closed.

Dome Lamp Override

The dome lamp override button is located next to the exterior lamps control.

DOME OFF **(Dome Off):** Press the button in and the dome lamps remain off when a door is opened. Press the button again to return it to the extended position so that the dome lamps come on when a door is opened.

Entry Lighting

The vehicle has an illuminated entry feature.

When the doors are opened, the dome lamps will come on if the dome override button is in the extended position. If the dome override button is pressed in, the lamps will not come on.

Exit Lighting

The interior lamps come on when the key is removed from the ignition. They turn off automatically in 20 seconds. The lights do not come on if the dome override button is pressed in.

Reading Lamps

For vehicles with reading lamps, they are located on the overhead console.

To turn on the reading lamps, press the button located next to each lamp. To turn them off, press the button again.

The vehicle may also have reading lamps in other locations. To turn the lamps on or off, press the button located next to the lamp.

If the vehicle has a DVD Rear Seat Entertainment (RSE) system, press the lamp lenses to turn the lamps on or off.

The lamps are fixed and cannot be adjusted.

Cargo Lamp

The cargo lamps come on by turning the instrument panel brightness control knob to the farthest clockwise position. This knob is located on the instrument panel and also turns on the dome lamps.

The cargo lamp can be used if more light is needed in the cargo area of the vehicle or in the top-box storage units.

Electric Power Management

The vehicle has Electric Power Management (EPM) that estimates the battery's temperature and state of charge. It then adjusts the voltage for best performance and extended life of the battery.

When the battery's state of charge is low, the voltage is raised slightly to quickly bring the charge back up. When the state of charge is high, the voltage is lowered slightly to prevent overcharging. If the vehicle has a voltmeter gauge or a voltage display on the Driver Information Center (DIC), you may see the voltage move up or down. This is normal. If there is a problem, an alert will be displayed.

The battery can be discharged at idle if the electrical loads are very high. This is true for all vehicles. This is because the generator (alternator) may not be spinning fast enough at idle to produce all the power that is needed for very high electrical loads.

A high electrical load occurs when several of the following are on, such as: headlamps, high beams, fog lamps, rear window defogger, climate control fan at high speed, heated seats, engine cooling fans, trailer loads, and loads plugged into accessory power outlets.

EPM works to prevent excessive discharge of the battery. It does this by balancing the generator's output and the vehicle's electrical needs. It can increase engine idle speed to generate more power, whenever needed. It can temporarily reduce the power demands of some accessories.

Normally, these actions occur in steps or levels, without being noticeable. In rare cases at the highest levels of corrective action, this action may be noticeable to the driver. If so, a Driver Information Center (DIC) message might be displayed, such as BATTERY SAVER ACTIVE, BATTERY VOLTAGE LOW, or LOW BATTERY. If this message is displayed, it is recommended that the driver reduce the electrical loads as much as possible. See *DIC Warnings and Messages on page 4-66*.

Battery Run-Down Protection

This feature shuts off the dome and reading lamps, if they are left on for more than 10 minutes after the ignition is turned off. The cargo lamp shuts off after 20 minutes. This prevents the battery from running down.

Accessory Power Outlet(s)

Accessory power outlets can be used to connect auxiliary electrical equipment, such as a cellular telephone.

The vehicle may have two accessory power outlets located below the climate control system, or may have one accessory power outlet and one cigarette lighter. The cigarette lighter is designed to fit only in the receptacle closest to the driver.

There may be another accessory power outlet in the rear cargo area. If the vehicle has a floor console, there is an accessory power outlet inside the storage bin and one on the rear of the floor console.

To use an accessory power outlet, remove the protective cap. When not in use, always cover the accessory power outlet with the protective cap.

Notice: **Leaving electrical equipment plugged in for an extended period of time while the vehicle is off will drain the battery. Power is always supplied to the outlets. Always unplug electrical equipment when not in use and do not plug in equipment that exceeds the maximum 20 ampere rating.**

Certain power accessory plugs may not be compatible to the accessory power outlet and could result in blown vehicle or adapter fuses. If you experience a problem, see your dealer for additional information on the accessory power plugs.

The accessory power outlets are powered, even when the ignition is in LOCK/OFF. Continuing to use power outlets while the ignition is in LOCK/OFF may cause the vehicle's battery to run down.

Notice: **Adding any electrical equipment to the vehicle can damage it or keep other components from working as they should. The repairs would not be covered by the vehicle warranty. Do not use equipment exceeding maximum amperage rating of 20 amperes. Check with your dealer before adding electrical equipment.**

When adding electrical equipment, be sure to follow the proper installation instructions included with the equipment.

Notice: **Improper use of the power outlet can cause damage not covered by the vehicle warranty. Do not hang any type of accessory or accessory bracket from the plug because the power outlets are designed for accessory power plugs only.**

Ashtray(s) and Cigarette Lighter

The vehicle may have a front ashtray located near the center of the instrument panel. Pull on the door to open it. The ashtray may have a cigarette lighter.

Notice: **If papers, pins, or other flammable items are put in the ashtray, hot cigarettes or other smoking materials could ignite them and possibly damage the vehicle. Never put flammable items in the ashtray.**

To remove the ashtray, open the door and pull the ashtray bin toward you. To replace the ashtray, insert the ashtray bin inside the ashtray door and press down until it engages. To use the cigarette lighter, push it in all the way, and let go. When it is ready for use, the lighter pops back out.

Notice: **Holding a cigarette lighter in while it is heating does not let the lighter back away from the heating element when it is hot. Damage from overheating can occur to the lighter or heating element, or a fuse could be blown. Do not hold a cigarette lighter in while it is heating.**

Climate Controls

Climate Control System (With Heater Only)

With this system the heating and ventilation can be controlled.

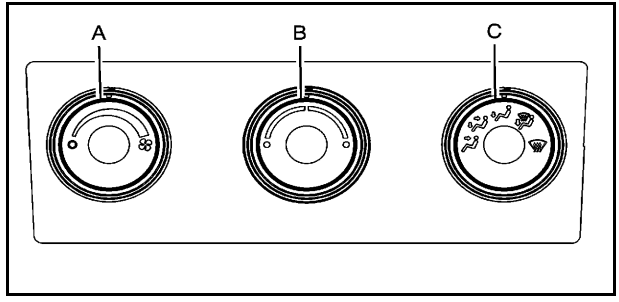

A. Fan Control

B. Temperature Control

C. Air Delivery Mode Control

Temperature Control: Turn clockwise or counterclockwise to increase or decrease the temperature inside the vehicle.

(Fan Control): Turn clockwise or counterclockwise to increase or decrease the fan speed. Turn the knob all the way counterclockwise to turn the front system off.

Air Delivery Mode Control: Turn clockwise or counterclockwise to increase or decrease the temperature inside the vehicle. The knob can be positioned between two modes to select a combination of those modes.

Select from the following:

(Vent): Air is directed to the instrument panel outlets.

(Bi-Level): Air is divided between the instrument panel and floor outlets.

(Floor): Air is directed to the floor outlets, with some air directed to the windshield, side window, and second row floor outlets. In this mode, the system automatically selects outside air.

(Defog): This mode clears the windows of fog or moisture. Air is directed to the windshield, floor outlets, and side window vents.

(Defrost): This mode removes fog or frost from the windshield more quickly. Air is directed to the windshield and the side window vents, with some air directed to the floor vents. The system automatically forces outside air into the vehicle.

Do not drive the vehicle until all the windows are clear.

Climate Control System (With Air Conditioning)

With this system the heating, cooling, and ventilation can be controlled.

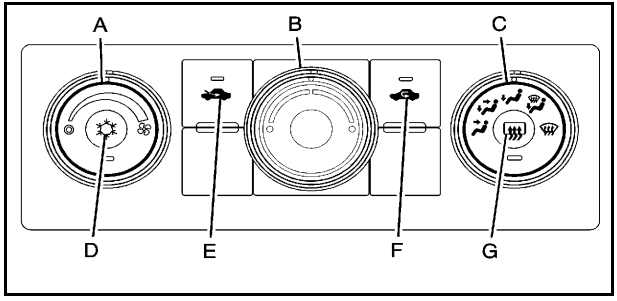

A. Fan Control
B. Temperature Control
C. Air Delivery Mode Control
D. Air Conditioning
E. Outside Air
F. Recirculation
G. Rear Window Defogger

Temperature Control: Turn clockwise or counterclockwise to increase or decrease the temperature inside the vehicle.

(Fan Control): Turn clockwise or counterclockwise to increase or decrease the fan speed. Turn the knob all the way counterclockwise to turn the front system off.

Air Delivery Mode Control: Turn clockwise or counterclockwise to change the direction of the airflow inside the vehicle. The knob can be positioned between two modes to select a combination of those modes.

Select from the following:

(Vent): Air is directed to the instrument panel outlets.

(Bi-Level): Air is divided between the instrument panel and floor outlets.

(Floor): Air is directed to the floor outlets, with some air directed to the windshield and side window outlets. In this mode, the system automatically selects outside air. Recirculation cannot be selected in floor mode.

(Defog): This mode clears the windows of fog or moisture. Air is directed to the windshield, floor outlets, and side window vents.

(Defrost): This mode removes fog or frost from the windshield more quickly. Air is directed to the windshield and the side window vents, with some air directed to the floor vents. The system automatically forces outside air into the vehicle.

The recirculation mode cannot be selected in the defog or defrost mode. When either mode is selected, the system runs the air conditioning compressor, unless the outside temperature is close to freezing.

Do not drive the vehicle until all the windows are clear.

(Outside Air): Press to turn the outside air mode on. An indicator light comes on to show that outside air is on. In this mode outside air circulates throughout the vehicle. The outside air mode can be used with all modes, but it cannot be used with the recirculation mode.

(Recirculation): Press to turn the recirculation mode on. An indicator light comes on to show that recirculation is on.

This mode recirculates and helps to quickly cool the air inside the vehicle. It can be used to help prevent outside air and odors from entering the vehicle.

The recirculation mode cannot be used with floor, defog or defrost modes. If recirculation is selected with one of these modes, the indicator light flashes three times and then turns off. While in recirculation mode the windows may fog when the weather is cold and damp. To clear the fog, select either the defog or defrost mode and increase the fan speed.

The recirculation mode can be turned off by pressing the outside air button, or by turning off the ignition.

(Air Conditioning): Press to turn the air conditioning system on or off. An indicator light comes on to show that the air conditioning is on. The air conditioning can be selected in any mode as long as the fan switch is on.

The air conditioning system removes moisture from the air, so a small amount of water might drip under the vehicle while idling or after turning off the engine. This is normal.

Rear Window Defogger

For vehicles with a rear window defogger, a warming grid is used to remove fog from the rear window.

(Rear): Press to turn the rear window defogger on or off. An indicator light on the button comes on to show that the rear window defogger is on.

The rear window defogger only works when the ignition is in ON/RUN. The rear window defogger stays on for approximately 10 minutes after the button is pressed, unless the ignition is turned to ACC/ACCESSORY or LOCK/OFF. The defogger can also be turned off by turning off the engine.

Notice: **Do not use anything sharp on the inside of the rear window. If you do, you could cut or damage the warming grid, and the repairs would not be covered by the vehicle warranty. Do not attach a temporary vehicle license, tape, a decal or anything similar to the defogger grid.**

Dual Automatic Climate Control System

The heating, cooling, and ventilation in the vehicle can be controlled with this system. The vehicle also has a flow-through ventilation system described later in this section.

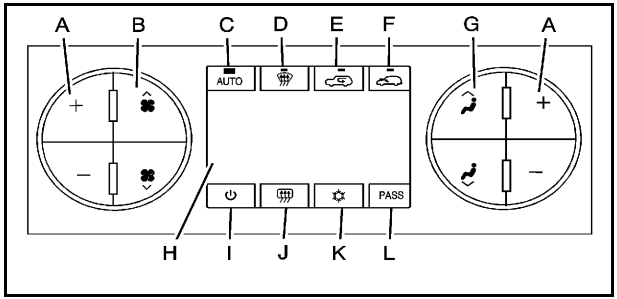

A. Driver and Passenger Temperature Controls
B. Fan Control
C. AUTO
D. Defrost
E. Recirculation
F. Outside Air
G. Air Delivery Mode Control
H. Display
I. Power Button
J. Rear Window Defogger
K. Air Conditioning
L. PASS (Passenger)

(On/Off): Press to turn the climate control system on or off. Outside air still enters the vehicle, and is directed to the floor. This direction can be changed by pressing the mode button. Recirculation can be selected once you have selected vent or bi-level mode. The temperature can also be adjusted using either temperature button. If the air delivery mode or temperature settings are adjusted with the system off, the display illuminates briefly to show the settings and then returns to off. The system can be turned back on by pressing either , , , , the defrost or the AUTO button.

Driver and Passenger Side Temperature Controls

The driver and passenger side temperature buttons are used to adjust the temperature of the air coming through the system on the driver or passenger's side of the vehicle. The temperature can be adjusted even if the system is turned off. This is possible since outside air always flows through the system as the vehicle is moving forward unless it is set to recirculation mode. See “Recirculation” later in this section.

Press the + or − buttons to increase or decrease the cabin temperature. The driver side or passenger side temperature display shows the temperature setting decreasing or increasing.

The passenger's temperature setting can be set to match the driver's temperature setting by pressing the PASS button and turning off the PASS indicator. When the passenger's temperature setting is set different than the driver's setting, the indicator on the PASS button illuminates and both the driver side and passenger side temperature displays are shown.

When in defrost mode the passenger temperature setting cannot be changed.

Automatic Operation

AUTO (Automatic): When automatic operation is active the system controls the inside temperature, the air delivery, and the fan speed.

Use the steps below to place the entire system in automatic mode:

1. Press the AUTO button.

   When AUTO is selected, the display changes to show the current temperature(s) and AUTO is lit on the display. The current air delivery mode and fan speed are also displayed for about 5 seconds.

   When AUTO is selected, the air conditioning operation and air inlet are automatically controlled. The air conditioning compressor may run when the outside temperature is above freezing. The air inlet will normally be set to outside air. If it is hot outside, the air inlet may automatically switch to the recirculate mode to help quickly cool down the air inside the vehicle. The light on the button comes on in recirculation.

2. Set the driver's and passenger's temperature.

   To find your comfort setting, start with a 23°C (74°F) temperature setting and allow about 20 minutes for the system to regulate. Use the driver or passenger temperature buttons to adjust the temperature setting as necessary. If a temperature setting of 15°C (60°F) is chosen, the system remains at the maximum cooling setting. If a temperature setting of 32°C (90°F) is chosen, the system remains at the maximum heat setting. Choosing either maximum setting will not cause the vehicle to heat or cool any faster.

Do not cover the solar sensor located on the top of the instrument panel near the windshield. This sensor regulates air temperature based on sun load. For more information on the solar sensor, see “Sensors” later in this section.

To avoid blowing cold air in cold weather, the system delays turning the fan on until warm air is available. The length of delay depends on the engine coolant temperature. Pressing the fan switch overrides this delay and changes the fan to a selected speed.

Manual Operation

(Fan Control): Press these buttons to increase or decrease the fan speed.

Pressing either fan button while in automatic control places the fan under manual control. The fan setting remains displayed and the AUTO light turns off. The air delivery mode remains under automatic control.

(Air Delivery Mode Control): Press these buttons to change the direction of the airflow in the vehicle. Repeatedly press either button until the desired mode appears on the display. Pressing either mode button while the system is off changes the air delivery mode without turning the system on. Pressing either mode button while in automatic control places the mode under manual control.

The air delivery mode setting is displayed and the AUTO light turns off. The fan remains under automatic control.

(Vent): Air is directed to the instrument panel outlets.

(Bi-Level): Air is divided between the instrument panel and floor outlets. Some air is directed towards the windshield and side window outlets.

(Floor): Air is directed to the floor outlets, with some to the windshield, side window outlets, and second row floor outlets. In this mode, the system automatically selects outside air.

(Defog): This mode clears the windows of fog or moisture. Air is directed to the windshield, floor outlets, and side window vents. In this mode, the system turns off recirculation and runs the air conditioning compressor unless the outside temperature is close to freezing. The recirculation mode cannot be selected while in the defrost mode.

(Defrost): This mode removes fog or frost from the windshield more quickly. Air is directed to the windshield and side window vents, with some directed to the floor vents. In this mode, the system automatically forces outside air into the vehicle and runs the air conditioning compressor unless the outside temperature is close to freezing. The recirculation mode cannot be selected while in the defrost mode.

The passenger temperature control cannot be activated while in defrost mode. If the PASS button is pressed, the button indicator flashes three times and will not work. If the passenger temperature buttons are adjusted, the driver temperature indicator changes. The passenger temperature will not be displayed.

If vent, bi-level, or floor mode is selected again, the climate control system displays the previous temperature settings.

Do not drive the vehicle until all the windows are clear.

(Air Conditioning): Press to turn the air conditioning (A/C) compressor on and off. An indicator light comes on to show that the air conditioning is on.

If this button is pressed when the air conditioning compressor is unavailable due to outside conditions, the indicator flashes three times and then turns off. If the air conditioning is on and the outside temperature drops below a temperature which is too cool for air conditioning to be effective, the air conditioning light turns off to show that the air conditioning mode has been canceled.

On hot days, open the windows long enough to let hot inside air escape. This helps to reduce the time it takes for the vehicle to cool down. It also helps the system to operate more efficiently.

The air conditioning system removes moisture from the air, so a small amount of water might drip under the vehicle while idling or after turning off the engine. This is normal.

(Recirculation): Press to turn the recirculation mode on. An indicator light comes on to show that the recirculation is on.

This mode recirculates and helps to quickly cool the air inside the vehicle. It can be used to help prevent outside air and odors from entering the vehicle.

The recirculation mode cannot be used with floor, defog, or defrost modes. If recirculation is selected with one of those modes, the indicator light flashes three times and then turns off. The air conditioning compressor also comes on when this mode is activated. While in recirculation mode the windows may fog when the weather is cold and damp. To clear the fog, select either the defog or defrost mode and increase the fan speed.

The recirculation mode can be turned off by pressing the outside air button, or by turning off the ignition.

(Outside Air): Press to turn the outside air mode on. An indicator light on the button comes on to show that outside is on. When selected, air from outside the vehicle circulates throughout the vehicle. The outside air mode can be used with all modes, but it cannot be used with the recirculation mode.

Rear Window Defogger

The rear window defogger uses a warming grid to remove fog from the rear window.

(Rear Window Defogger): For vehicles with this feature, press to turn the defogger on or off. It automatically turns off several minutes after it has been activated. The defogger can also be turned off by turning the engine off. Do not drive the vehicle until all the windows are clear.

Notice: **Do not use a razor blade or sharp object to clear the inside rear window. Do not adhere anything to the defogger grid lines in the rear glass. These actions may damage the rear defogger. Repairs would not be covered by your warranty.**

Heated Mirror: For vehicles with heated outside rearview mirrors, the mirrors heat to help clear fog or frost from the surface of the mirror when the rear window defog button is pressed. See *Outside Power Mirrors on page 3-61*.

Sensors

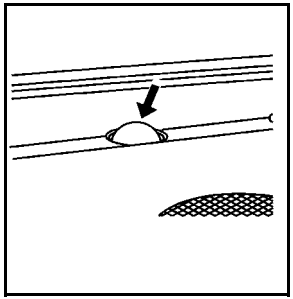

The solar sensor, located in the defrost grille, in the middle of the instrument panel, monitors the solar heat. Do not cover the solar sensor or the system will not work properly.

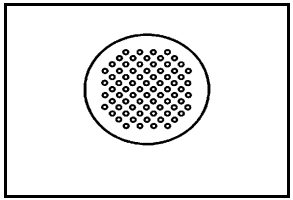

The interior temperature sensor, located in the headliner, measures the temperature of the air inside the vehicle.

There is also an exterior temperature sensor located behind the front grille. This sensor reads the outside air temperature and helps maintain the temperature inside the vehicle. Any cover on the front of the vehicle could cause a false reading in the displayed temperature.

The climate control system uses the information from these sensors to maintain your comfort setting by adjusting the outlet temperature, fan speed, and the air delivery mode. The system may also supply cooler air to the side of the vehicle facing the sun. The recirculation mode will also be used as needed to maintain cool outlet temperatures.

Outlet Adjustment

Use the air outlets located in the center and on the side of the instrument panel to direct the airflow. Use the thumbwheels near the air outlets to open or close off the airflow.

Operation Tips

- Clear away any ice, snow, or leaves from air inlets at the base of the windshield that could block the flow of air into the vehicle.
- Keep the path under the front seats clear of objects to help circulate the air inside of the vehicle more effectively.
- Use of non-GM approved hood deflectors can adversely affect the performance of the system. Check with your dealer before adding equipment to the outside of the vehicle.

Warning Lights, Gauges, and Indicators

Warning lights and gauges can signal that something is wrong before it becomes serious enough to cause an expensive repair or replacement. Paying attention to the warning lights and gauges could prevent injury.

Warning lights come on when there might be or there is a problem with one of the vehicle's functions. Some warning lights come on briefly when the engine is started to indicate they are working.

Gauges can indicate when there might be or there is a problem with one of the vehicle's functions. Often gauges and warning lights work together to indicate a problem with the vehicle.

When one of the warning lights comes on and stays on while driving, or when one of the gauges shows there could be a problem, check the section that explains what to do. Follow this manual's advice. Waiting to do repairs can be costly and even dangerous.

Instrument Panel Cluster

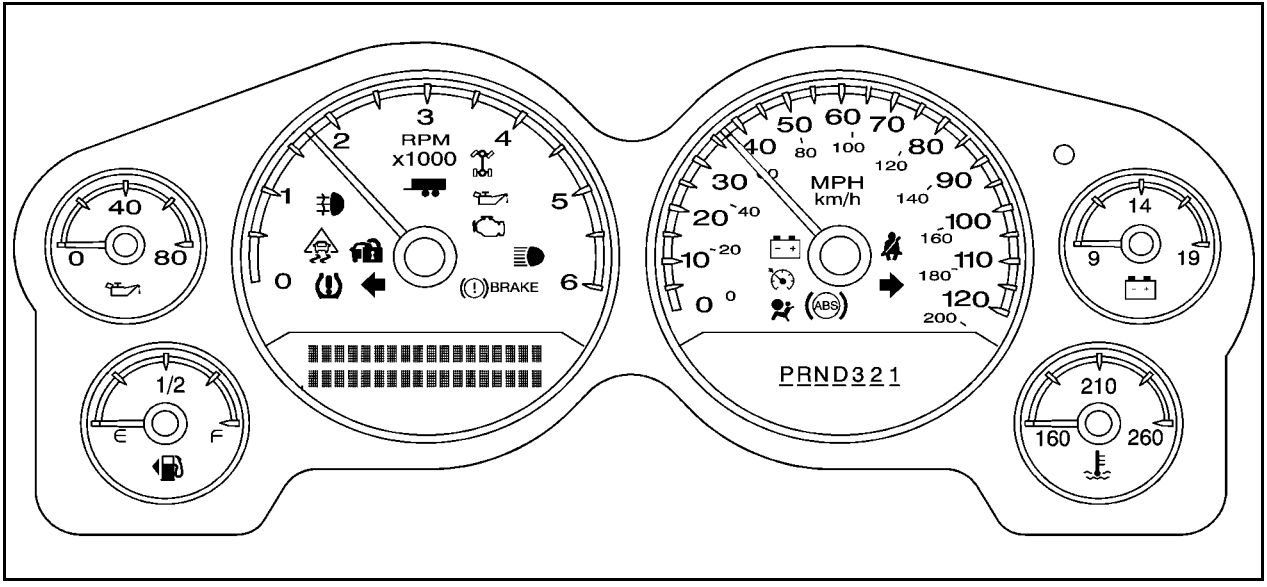

United States Light Duty Premium version shown. Canada, Uplevel, Base, Heavy Duty Clusters similar.

For vehicles with a DURAMAX® Diesel engine, see the DURAMAX® Diesel manual for more information.

Speedometer and Odometer

The speedometer shows the vehicle speed in both miles per hour (mph) and kilometers per hour (km/h). The odometer shows how far the vehicle has been driven, in either miles (used in the United States) or kilometers (used in Canada).

Engine Hour Meter Display

The Driver Information Center (DIC) can also display the number of hours the engine has run. To display the engine hours, turn the ignition off, press and hold the reset button for at least four seconds. The hour meter displays for up to 30 seconds, or until the ignition is turned on. See *DIC Operation and Displays (With DIC Buttons) on page 4-50* or *DIC Operation and Displays (Without DIC Buttons) on page 4-59* for more information.

Trip Odometer

The trip odometer shows how far the vehicle has been driven since the trip odometer was last set to zero.

Press the reset button, located on the instrument panel cluster next to the voltmeter, to toggle between the trip odometer and the regular odometer. Holding the reset button for approximately one second while the trip odometer is displayed will reset it.

To display the odometer reading with the ignition off, press the reset button.

See *DIC Operation and Displays (With DIC Buttons) on page 4-50* or *DIC Operation and Displays (Without DIC Buttons) on page 4-59* for more information.

Tachometer

The tachometer displays the engine speed in revolutions per minute (rpm). For a description of how Grade Braking affects vehicle speed while the Tow/Haul Mode is activated, see “Grade Braking (Allison Transmission®)” under *Tow/Haul Mode on page 3-36* for more information.

Safety Belt Reminders

Driver Safety Belt Reminder Light

When the engine is started, a chime sounds for several seconds to remind a driver to fasten the safety belt, unless the driver safety belt is already buckled.

The safety belt light flashes for several seconds, then comes on solid for several more.

This chime and light sequence are repeated if the driver remains unbuckled and the vehicle is in motion. If the driver safety belt is already buckled, neither the chime nor the light comes on.

Passenger Safety Belt Reminder Light

For vehicles equipped with the passenger safety belt reminder light, several seconds after the engine is started, a chime sounds for several seconds to remind the front passenger to buckle their safety belt. The passenger safety belt light, located on the overhead console, comes on and stays on for several seconds, flashes for several more seconds and then comes on solid for several more.

This chime and light sequence is repeated if the passenger remains unbuckled and the vehicle is in motion.

If the passenger safety belt is buckled, neither the chime nor the light comes on.

The front passenger safety belt warning light and chime may turn on if an object is put on the seat such as a briefcase, handbag, grocery bag, laptop or other electronic device. To turn off the warning light and or chime, remove the object from the seat or buckle the safety belt.

Airbag Readiness Light

The system checks the airbag's electrical system for possible malfunctions. If the light stays on it indicates there is an electrical problem. The system check includes the airbag sensor, the pretensioners, the airbag modules, the wiring and the crash sensing and diagnostic module. For more information on the airbag system, see *Airbag System on page 2-73*.

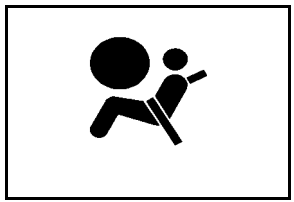

The airbag readiness light comes on solid for a few seconds when the engine is started. If the light does not come on then, have it fixed immediately.

⚠ WARNING:

If the airbag readiness light stays on after the vehicle is started or comes on while driving, it means the airbag system might not be working properly. The airbags in the vehicle might not inflate in a crash, or they could even inflate without a crash. To help avoid injury, have the vehicle serviced right away.

If there is a problem with the airbag system, an airbag Driver Information Center (DIC) message can also come on. See *DIC Warnings and Messages on page 4-66* for more information.

Airbag Off Light

If the vehicle has an airbag on-off switch, it also has a passenger airbag status indicator located in the overhead console.

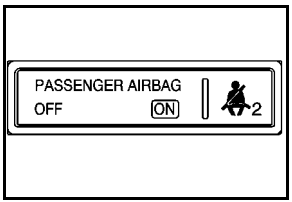

United States

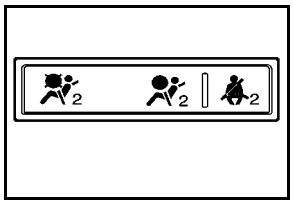

Canada

When the vehicle is started, the passenger airbag status indicator will light ON and OFF, or the symbol for on and off, will light for several seconds as a system check. Then, after several more seconds, the status indicator ON or OFF, or either the on or off symbol, will light to let you know the status of the right front passenger frontal airbag.

When the right front passenger airbag is manually turned off using the airbag on-off switch in the glove box, the indicator light OFF or the off symbol will come on and stay on as a reminder that the airbag has been turned off. This light will go off when the airbag has been turned on. See *Airbag Off Switch on page 2-83* for more information, including important safety information.

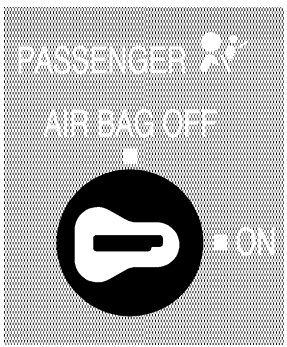

United States

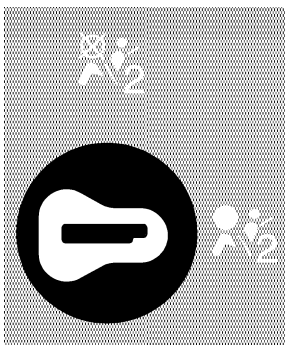

Canada

⚠ WARNING:

If the right front passenger's airbag is turned off for a person who is not in a risk group identified by the national government, that person will not have the extra protection of an airbag. In a crash, the airbag will not be able to inflate and help protect the person sitting there.

Do not turn off the passenger's airbag unless the person sitting there is in a risk group identified by the national government. See *Airbag Off Switch on page 2-83* for more on this, including important safety information.

⚠ WARNING:

If the airbag readiness light ever comes on and stays on, it means that something may be wrong with the airbag system. For example, the right front passenger airbag could inflate even though the airbag on-off switch is turned off.

To help avoid injury to yourself or others, have the vehicle serviced right away. See *Airbag Readiness Light on page 4-33* for more information, including important safety information.

If the word ON or the on symbol is lit, it means that the right front passenger frontal airbag is enabled (may inflate). See *Airbag Off Switch on page 2-83* for more information, including important safety information.

If, after several seconds, both status indicator lights remain on, or if there are no lights at all, there may be a problem with the lights or the airbag on-off switch. See your dealer for service.

Passenger Airbag Status Indicator

If the vehicle has one of the indicators pictured in the following illustrations, then the vehicle has a passenger sensing system for the right front passenger position unless there is an airbag off switch located in the glove box. If there is an airbag off switch, the vehicle does not have a passenger system system. See *Airbag Off Switch on page 2-83*.

The passenger airbag status indicator is on the overhead console. See *Passenger Sensing System on page 2-86* for important safety information.

In addition, if the vehicle has a passenger sensing system for the right front passenger position, the label on the vehicle's sun visor refers to “ADVANCED AIRBAGS”.

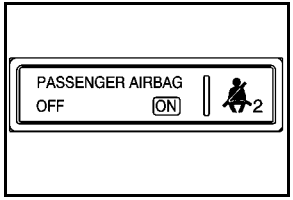

United States

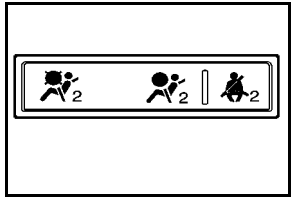

Canada

When the vehicle is started, the passenger airbag status indicator will light ON and OFF, or the symbol for on and off, for several seconds as a system check. Then, after several more seconds, the status indicator will light either ON or OFF, or either the on or off symbol to let you know the status of the right front passenger frontal airbag.

If the word ON or the on symbol is lit on the passenger airbag status indicator, it means that the right front passenger frontal airbag is enabled (may inflate).

If the word OFF or the off symbol is lit on the airbag status indicator, it means that the passenger sensing system has turned off the right front passenger frontal airbag.

If, after several seconds, both status indicator lights remain on, or if there are no lights at all, there may be a problem with the lights or the passenger sensing system. See your dealer for service.

⚠ WARNING:

If the airbag readiness light ever comes on and stays on, it means that something may be wrong with the airbag system. To help avoid injury to yourself or others, have the vehicle serviced right away. See *Airbag Readiness Light on page 4-33* for more information, including important safety information.

Charging System Light

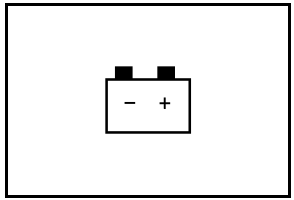

This light comes on briefly when the ignition key is turned to START, but the engine is not running, as a check to show it is working.

If it does not, have the vehicle serviced by your dealer.

The light should go out once the engine starts. If it stays on, or comes on while driving, there could be a problem with the charging system. A charging system message in the Driver Information Center (DIC) can also appear. See *DIC Warnings and Messages on page 4-66* for more information. This light could indicate that there are problems with a generator drive belt, or that there is an electrical problem. Have it checked right away. If the vehicle must be driven a short distance with the light on, turn off accessories, such as the radio and air conditioner.

Voltmeter Gauge

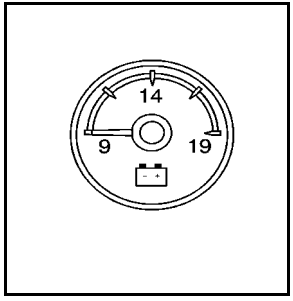

For vehicles with a voltmeter gauge, this gauge indicates the battery voltage when the ignition is turned on.

When the ignition is on, this gauge indicates the battery voltage.

When the engine is running, this gauge shows the condition of the charging system. The gauge can transition from a higher to lower or a lower to higher reading. This is normal. If the vehicle is operating outside the normal operating range, the charging system light comes on. See *Charging System Light on page 4-37* for more information. The voltmeter gauge may also read lower when in fuel economy mode. This is normal.

Readings outside the normal operating range can also occur when a large number of electrical accessories are operating in the vehicle and the engine is left idling for an extended period. This condition is normal since the charging system is not able to provide full power at engine idle. As engine speeds are increased, this condition should correct itself as higher engine speeds allow the charging system to create maximum power.

The vehicle can only be driven for a short time with the readings outside the normal operating range. If the vehicle must be driven, turn off all accessories, such as the radio and air conditioner.

Readings outside the normal operating range indicate a possible problem in the electrical system. Have the vehicle serviced as soon as possible.

Brake System Warning Light

With the ignition on, the brake system warning light comes on when the parking brake is set. If the vehicle is driven with the parking brake engaged, a chime sounds when the vehicle speed is greater than 5 mph (8 km/h).

The vehicle's hydraulic brake system is divided into two parts. If one part is not working, the other part can still work and stop the vehicle. For good braking, both parts need to be working well.

If the warning light comes on and a chime sounds there could be a brake problem. Have the brake system inspected right away.

This light can also come on due to low brake fluid. See *Brakes on page 6-45* for more information.

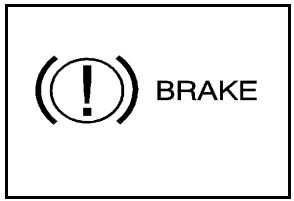

United States

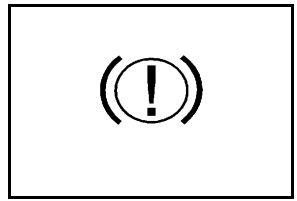

Canada

This light comes on briefly when the ignition key is turned to ON/RUN. If it does not come on then, have it fixed so it is ready to warn if there is a problem.

⚠ WARNING:

The brake system might not be working properly if the brake system warning light is on. Driving with the brake system warning light on can lead to a crash. If the light is still on after the vehicle has been pulled off the road and carefully stopped, have the vehicle towed for service.

If the light comes on while driving, pull off the road and stop carefully. The pedal might be harder to push or might go closer to the floor. It can take longer to stop. If the light is still on, have the vehicle towed for service. See *Towing Your Vehicle on page 5-48*.

Antilock Brake System (ABS) Warning Light

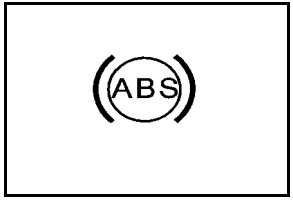

For vehicles with the Antilock Brake System (ABS), this light comes on briefly when the engine is started.

If it does not, have the vehicle serviced by your dealer. If the system is working normally the indicator light then goes off.

If the ABS light stays on, turn the ignition off. If the light comes on while driving, stop as soon as it is safely possible and turn the ignition off. Then start the engine again to reset the system. If the ABS light stays on, or comes on again while driving, the vehicle needs service. If the regular brake system warning light is not on, the vehicle still has brakes, but not antilock brakes. If the regular brake system warning light is also on, the vehicle does not have antilock brakes and there is a problem with the regular brakes. See *Brake System Warning Light on page 4-38*.

For vehicles with a Driver Information Center (DIC), see *DIC Warnings and Messages on page 4-66* for all brake related DIC messages.

StabiliTrak® Indicator Light

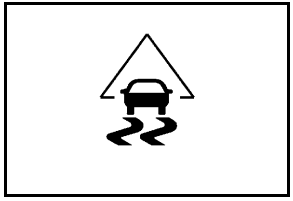

For vehicles with the StabiliTrak® system, this light comes on briefly while starting the engine.

If it does not, have the vehicle serviced by your dealer. If the system is working normally the indicator light then goes off.

If the light comes on and stays on while driving, there could be a problem with the StabiliTrak® system and the vehicle might need service. When this warning light is on, the StabiliTrak® system is off and does not limit wheel spin.

The light flashes if the system is active and is working to assist the driver with directional control of the vehicle in difficult driving conditions.

See *StabiliTrak® System on page 5-6* for more information.

Engine Coolant Temperature Gauge

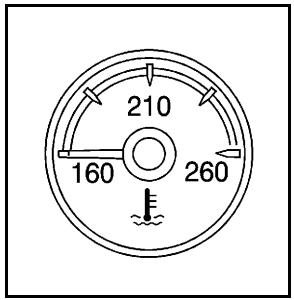

United States

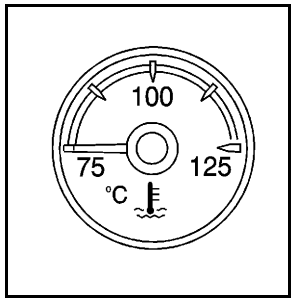

Canada

This gauge shows the engine coolant temperature.

It also provides an indicator of how hard the vehicle is working. During a majority of the operation, the gauge will read 210°F (100°C) or less. If the vehicle is pulling a load or going up hills, it is normal for the temperature to fluctuate and go over the 235°F (113°C) mark. However, if the gauge reaches the 260°F (125°C) mark, it indicates that the cooling system is working beyond its capacity.

See *Engine Overheating on page 6-39*.

Tire Pressure Light

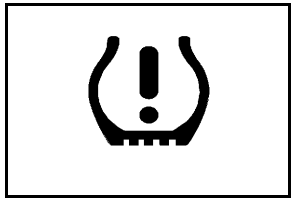

For vehicles with a tire pressure monitoring system, this light comes on briefly when the engine is started. It provides information about tire pressures and the Tire Pressure Monitoring System.

When the Light is On Steady

This indicates that one or more of the tires is significantly underinflated.

A tire pressure message in the Driver Information Center (DIC), can accompany the light. See *Driver Information Center (DIC) on page 4-50* for more information. Stop and check the tires as soon as it is safe to do so. If underinflated, inflate to the proper pressure. See *Inflation - Tire Pressure on page 6-80* for more information.

When the Light Flashes First and Then is On Steady

This indicates that there may be a problem with the Tire Pressure Monitor System. The light flashes for about a minute and stays on steady for the remainder of the ignition cycle. This sequence repeats with every ignition cycle. See *Tire Pressure Monitor Operation on page 6-84* for more information.

Malfunction Indicator Lamp

Check Engine Light

A computer system called OBD II (On-Board Diagnostics-Second Generation) monitors operation of the fuel, ignition, and emission control systems. It ensures that emissions are at acceptable levels for the life of the vehicle, helping to produce a cleaner environment.

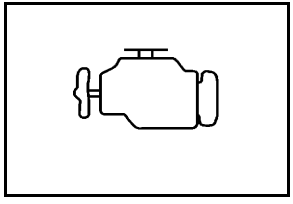

This light should come on when the ignition is on, but the engine is not running, as a check to show it is working. If it does not, have the vehicle serviced by your dealer.

If the check engine light comes on and stays on, while the engine is running, this indicates that there is an OBD II problem and service is required.

Malfunctions often are indicated by the system before any problem is apparent. Being aware of the light can prevent more serious damage to the vehicle. This system assists the service technician in correctly diagnosing any malfunction.

Notice: **If the vehicle is continually driven with this light on, after a while, the emission controls might not work as well, the vehicle's fuel economy might not be as good, and the engine might not run as smoothly. This could lead to costly repairs that might not be covered by the vehicle warranty.**

Notice: **Modifications made to the engine, transmission, exhaust, intake, or fuel system of the vehicle or the replacement of the original tires with other than those of the same Tire Performance Criteria (TPC) can affect the vehicle's emission controls and can cause this light to come on. Modifications to these systems could lead to costly repairs not covered by the vehicle warranty. This could also result in a failure to pass a required Emission Inspection/Maintenance test. See *Accessories and Modifications on page 6-4*.**

This light comes on during a malfunction in one of two ways:

Light Flashing: A misfire condition has been detected. A misfire increases vehicle emissions and could damage the emission control system on the vehicle. Diagnosis and service might be required.

To prevent more serious damage to the vehicle:

- Reduce vehicle speed.
- Avoid hard accelerations.
- Avoid steep uphill grades.
- If towing a trailer, reduce the amount of cargo being hauled as soon as it is possible.

If the light continues to flash, when it is safe to do so, stop the vehicle. Find a safe place to park the vehicle. Turn the vehicle off, wait at least 10 seconds, and restart the engine. If the light is still flashing, follow the previous steps and see your dealer for service as soon as possible.

Light On Steady: An emission control system malfunction has been detected on the vehicle. Diagnosis and service might be required.

An emission system malfunction might be corrected by doing the following:

- Make sure the fuel cap is fully installed. See *Filling the Tank on page 6-12*. The diagnostic system can determine if the fuel cap has been left off or improperly installed. A loose or missing fuel cap allows fuel to evaporate into the atmosphere. A few driving trips with the cap properly installed should turn the light off.
- If the vehicle has been driven through a deep puddle of water, the vehicle's electrical system might be wet. The condition is usually corrected when the electrical system dries out. A few driving trips should turn the light off.
- Make sure to fuel the vehicle with quality fuel. Poor fuel quality causes the engine not to run as efficiently as designed and can cause: stalling after start-up, stalling when the vehicle is changed into gear, misfiring, hesitation on acceleration, or stumbling on acceleration. These conditions might go away once the engine is warmed up.

  If one or more of these conditions occurs, change the fuel brand used. It will require at least one full tank of the proper fuel to turn the light off.

  See *Gasoline Octane on page 6-7*.

If none of the above have made the light turn off, your dealer can check the vehicle. The dealer has the proper test equipment and diagnostic tools to fix any mechanical or electrical problems that might have developed.

Emissions Inspection and Maintenance Programs

Some state/provincial and local governments may have programs to inspect the on-vehicle emission control equipment For the inspection, the emission system test equipment is connected to the vehicle's Data Link Connector (DLC).

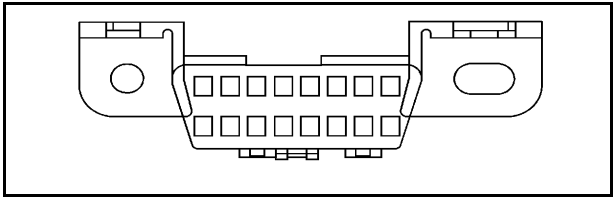

The DLC is under the instrument panel to the left of the steering wheel. See your dealer if assistance is needed.

The vehicle may not pass inspection if:

- the check engine light is on with the engine running, or if the light does not come on when the ignition is turned to ON/RUN while the engine is off.
- the critical emission control systems have not been completely diagnosed by the system. This can happen if the battery has recently been replaced or if the battery has run down. The diagnostic system evaluates critical emission control systems during normal driving. This can take several days of routine driving. If this has been done and the vehicle still does not pass the inspection, your dealer can prepare the vehicle for inspection.

Oil Pressure Gauge

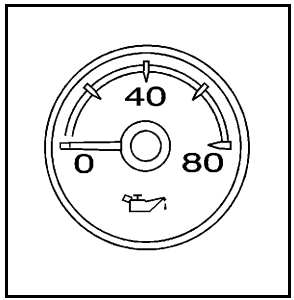

United States

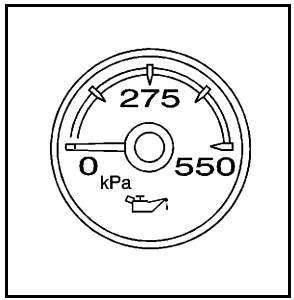

Canada

For vehicles with an engine oil pressure gauge, it shows the engine oil pressure in psi (pounds per square inch) when the engine is running. Canadian vehicles indicate pressure in kPa (kilopascals).

Oil pressure can vary with engine speed, outside temperature and oil viscosity, but if readings are outside the normal operating range, the oil pressure light comes on. See *Oil Pressure Light on page 4-46* for more information.

A reading outside the normal operating range can be caused by a dangerously low oil level or some other problem causing low oil pressure. Check the vehicle's oil as soon as possible. See “OIL PRESSURE LOW” under *DIC Warnings and Messages on page 4-66* and *Engine Oil on page 6-17*.

⚠ WARNING:

Do not keep driving if the oil pressure is low. The engine can become so hot that it catches fire. Someone could be burned. Check the oil as soon as possible and have the vehicle serviced.

Notice: **Lack of proper engine oil maintenance can damage the engine. The repairs would not be covered by the vehicle warranty. Always follow the maintenance schedule in this manual for changing engine oil.**

Oil Pressure Light

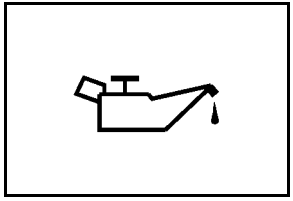

⚠ WARNING:

Do not keep driving if the oil pressure is low. The engine can become so hot that it catches fire. Someone could be burned. Check the oil as soon as possible and have the vehicle serviced.

Notice: **Lack of proper engine oil maintenance can damage the engine. The repairs would not be covered by the vehicle warranty. Always follow the maintenance schedule in this manual for changing engine oil.**

This light comes on briefly while starting the engine. If it does not, have the vehicle serviced by your dealer. If the system is working normally the indicator light then goes off.

If the light comes on and stays on, it means that oil is not flowing through the engine properly. The vehicle could be low on oil and it might have some other system problem.

Security Light

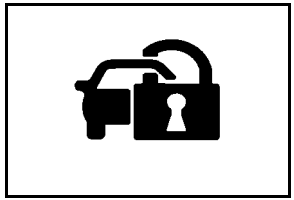

For information regarding this light and the vehicle's security system, see *Content Theft-Deterrent on page 3-19*.

Fog Lamp Light

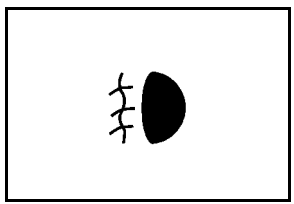

The fog lamp light comes on when the fog lamps are in use.

The light goes out when the fog lamps are turned off. See *Fog Lamps on page 4-14* for more information.

Cruise Control Light

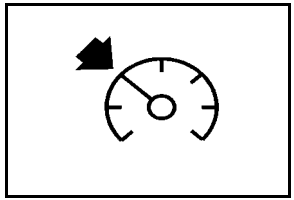

The cruise control light comes on whenever the cruise control is set.

The light goes out when the cruise control is turned off. See *Cruise Control on page 4-7* for more information.

Highbeam On Light

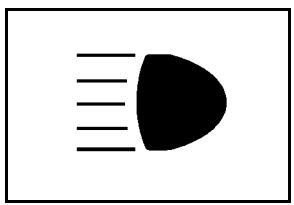

This light comes on when the high-beam headlamps are in use.

See *Headlamp High/Low-Beam Changer on page 4-5* for more information.

Four-Wheel-Drive Light

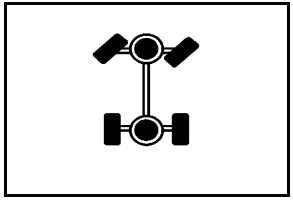

The four-wheel-drive light comes on when a vehicle with a manual transfer case is shifted into four-wheel drive and the front axle engages.

Some delay between the shifting and the light coming on is normal.

See *Four-Wheel Drive on page 3-39* for more information.

Tow/Haul Mode Light

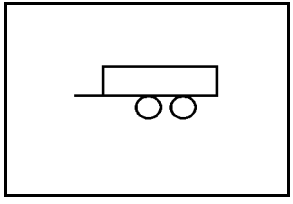

For vehicles with the tow/haul mode feature, this light comes on when the Tow/Haul mode has been activated.

For more information, see *Tow/Haul Mode on page 3-36*.

Fuel Gauge

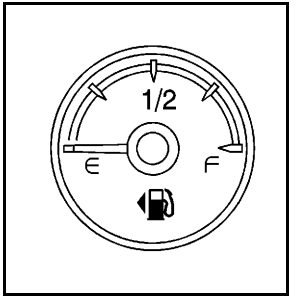

United States

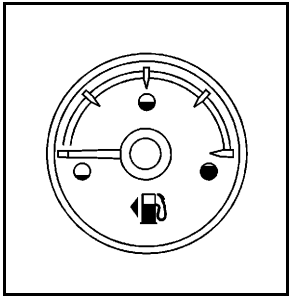

Canada

When the ignition is on, the fuel gauge shows about how much fuel is left in the fuel tank.

An arrow on the fuel gauge indicates the side of the vehicle the fuel door is on.

The gauge will first indicate empty before the vehicle is out of fuel, but the vehicle's fuel tank should be filled soon.

When the fuel tank is low the FUEL LEVEL LOW message appears. See *DIC Warnings and Messages on page 4-66* for more information.

Here are some situations owners can experience with the fuel gauge. None of these indicate a problem with the fuel gauge.

- At the gas station, the fuel pump shuts off before the gauge reads full.
- It takes a little more or less fuel to fill up than the fuel gauge indicated. For example, the gauge may have indicated the tank was half full, but it actually took a little more or less than half the fuel tank's capacity to fill it.
- The gauge goes back to empty when the ignition is turned off.

For a diesel engine, see “Fuel Gauge” in the Diesel Engine Supplement.

Low Fuel Warning Light

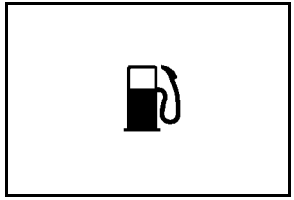

This light, under the fuel gauge, comes on briefly while the engine is being started.

This light and a chime comes on when the fuel tank is low on fuel. The Driver Information Center also displays a “FUEL LEVEL LOW” message. See *DIC Warnings and Messages on page 4-66* for more information. When fuel is added this light and message should go off. If it does not, have the vehicle serviced by your dealer.

Driver Information Center (DIC)

Your vehicle has a Driver Information Center (DIC).

The DIC displays information about your vehicle. It also displays warning messages if a system problem is detected.

All messages will appear in the DIC display located below the tachometer in the instrument panel cluster.

The DIC comes on when the ignition is on. After a short delay, the DIC will display the information that was last displayed before the engine was turned off.

If your vehicle has DIC buttons, see “DIC Operation and Displays (With DIC Buttons)” later in this section and *DIC Vehicle Customization (With DIC Buttons) on page 4-76* for the displays available.

If your vehicle does not have DIC buttons, see “DIC Operation and Displays (Without DIC Buttons)” later in this section for the displays available.

DIC Operation and Displays (With DIC Buttons)

If your vehicle has DIC buttons, the information below explains the operation of this system.

The DIC has different displays which can be accessed by pressing the DIC buttons located on the instrument panel, next to the steering wheel.

The DIC displays trip, fuel, and vehicle system information, and warning messages if a system problem is detected.

The DIC also allows some features to be customized. See *DIC Vehicle Customization (With DIC Buttons) on page 4-76* for more information.

If the vehicle has DIC buttons, you can also use the trip odometer reset stem to view some of the DIC displays. See “Trip Odometer Reset Stem Menu Items” later in this section.

DIC Buttons

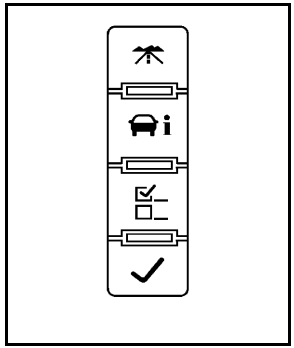

The buttons are the trip/fuel, vehicle information, customization, and set/reset buttons. The button functions are detailed in the following pages.

(Trip/Fuel): Press this button to display the odometer, trip odometer, fuel range, average economy, fuel used, timer, instantaneous economy and Active Fuel Management™ indicator, and transmission temperature. The compass and outside temperature will also be shown in the display. The temperature will be shown in °F or °C depending on the units selected.

(Vehicle Information): Press this button to display the oil life, units, tire pressure readings for vehicles with the Tire Pressure Monitor System (TPMS), trailer brake gain and output information for vehicles with the Integrated Trailer Brake Control (ITBC) system, engine hours, Remote Keyless Entry (RKE) transmitter programming, compass zone setting, and compass recalibration.

(Customization): Press this button to customize the feature settings on your vehicle. See *DIC Vehicle Customization (With DIC Buttons) on page 4-76* for more information.

(Set/Reset): Press this button to set or reset certain functions and to turn off or acknowledge messages on the DIC.

Trip/Fuel Menu Items

(Trip/Fuel): Press this button to scroll through the following menu items:

Odometer

Press the trip/fuel button until ODOMETER displays. This display shows the distance the vehicle has been driven in either miles (mi) or kilometers (km). Pressing the trip odometer reset stem will also display the odometer.

To switch between English and metric measurements, see “Units” later in this section.

Trip Odometer

Press the trip/fuel button until TRIP displays. This display shows the current distance traveled in either miles (mi) or kilometers (km) since the last reset for the trip odometer. Pressing the trip odometer reset stem will also display the trip odometer.

The trip odometer can be reset to zero by pressing the set/reset button while the trip odometer is displayed. You can also reset the trip odometer while it is displayed by pressing and holding the trip odometer reset stem.

The trip odometer has a feature called the retro-active reset. This can be used to set the trip odometer to the number of miles (kilometers) driven since the ignition was last turned on. This can be used if the trip odometer is not reset at the beginning of the trip.

To use the retro-active reset feature, press and hold the set/reset button for at least four seconds. The trip odometer will display the number of miles (mi) or kilometers (km) driven since the ignition was last turned on and the vehicle was moving. Once the vehicle begins moving, the trip odometer will accumulate mileage. For example, if the vehicle was driven 5 miles (8 km) before it is started again, and then the retro-active reset feature is activated, the display will show 5 miles (8 km). As the vehicle begins moving, the display will then increase to 5.1 miles (8.2 km), 5.2 miles (8.4 km), etc.

Fuel Range

Press the trip/fuel button until FUEL RANGE displays. This display shows the approximate number of remaining miles (mi) or kilometers (km) the vehicle can be driven without refueling. The display will show LOW if the fuel level is low.

The fuel range estimate is based on an average of the vehicle's fuel economy over recent driving history and the amount of fuel remaining in the fuel tank. This estimate will change if driving conditions change. For example, if driving in traffic and making frequent stops, this display may read one number, but if the vehicle is driven on a freeway, the number may change even though the same amount of fuel is in the fuel tank. This is because different driving conditions produce different fuel economies. Generally, freeway driving produces better fuel economy than city driving. Fuel range cannot be reset.

Average Economy

Press the trip/fuel button until AVG ECONOMY displays. This display shows the approximate average miles per gallon (mpg) or liters per 100 kilometers (L/100 km). This number is calculated based on the number of mpg (L/100 km) recorded since the last time this menu item was reset. To reset AVG ECONOMY, press and hold the set/reset button.

Fuel Used

Press the trip/fuel button until FUEL USED displays. This display shows the number of gallons (gal) or liters (L) of fuel used since the last reset of this menu item. To reset the fuel used information, press and hold the set/reset button while FUEL USED is displayed.

Timer

Press the trip/fuel button until TIMER displays. This display can be used as a timer.

To start the timer, press the set/reset button while TIMER is displayed. The display will show the amount of time that has passed since the timer was last reset, not including time the ignition is off. Time will continue to be counted as long as the ignition is on, even if another display is being shown on the DIC. The timer will record up to 99 hours, 59 minutes and 59 seconds (99:59:59) after which the display will return to zero.

To stop the timer, press the set/reset button briefly while TIMER is displayed.

To reset the timer to zero, press and hold the set/reset button while TIMER is displayed.

Transmission Temperature

Press the trip/fuel button until TRANS TEMP displays. This display shows the temperature of the automatic transmission fluid in either degrees Fahrenheit (°F) or degrees Celsius (°C).

Instantaneous Economy and Active Fuel Management™ Indicator

If your vehicle has this display, press the trip/fuel button until INST ECON V8 displays. This display shows the current fuel economy at a particular moment and will change frequently as driving conditions change. This display shows the instantaneous fuel economy in miles per gallon (mpg) or liters per 100 kilometers (L/100 km). Unlike average economy, this screen cannot be reset.

An Active Fuel Management indicator will display on the right side of the DIC, while INST ECON displays on the left side. Active Fuel Management allows the engine to operate on either four or eight cylinders, depending on your driving demands. When Active Fuel Management is active, V4 will display on the DIC. When Active Fuel Management is inactive, V8 will display. See *Active Fuel Management™ on page 3-30* for more information.

Blank Display

This display shows no information.

Vehicle Information Menu Items

(Vehicle Information): Press this button to scroll through the following menu items:

Oil Life

Press the vehicle information button until OIL LIFE REMAINING displays. This display shows an estimate of the oil's remaining useful life. If you see 99% OIL LIFE REMAINING on the display, that means 99% of the current oil life remains. The engine oil life system will alert you to change the oil on a schedule consistent with your driving conditions.

When the remaining oil life is low, the CHANGE ENGINE OIL SOON message will appear on the display. See “CHANGE ENGINE OIL SOON” under *DIC Warnings and Messages on page 4-66*. You should change the oil as soon as you can. See *Engine Oil on page 6-17*. In addition to the engine oil life system monitoring the oil life, additional maintenance is recommended in the Maintenance Schedule in this manual. See *Scheduled Maintenance on page 7-3* for more information.

Remember, you must reset the OIL LIFE display yourself after each oil change. It will not reset itself. Also, be careful not to reset the OIL LIFE display accidentally at any time other than when the oil has just been changed. It cannot be reset accurately until the next oil change. To reset the engine oil life system, see *Engine Oil Life System on page 6-20*.

Units

Press the vehicle information button until UNITS displays. This display allows you to select between English or Metric units of measurement. Once in this display, press the set/reset button to select between ENGLISH or METRIC units. All of the vehicle information will then be displayed in the unit of measurement selected.

Tire Pressure

If your vehicle has the Tire Pressure Monitor System (TPMS), the pressure for each tire can be viewed in the DIC. The tire pressure will be shown in either pounds per square inch (psi) or kilopascals (kPa). Press the vehicle information button until the DIC displays FRONT TIRES PSI (kPa) LEFT ## RIGHT ##. Press the vehicle information button again until the DIC displays REAR TIRES PSI (kPa) LEFT ## RIGHT ##.

If a low tire pressure condition is detected by the system while driving, a message advising you to add pressure in a specific tire will appear in the display. See *Inflation - Tire Pressure on page 6-80* and *DIC Warnings and Messages on page 4-66* for more information.

If the tire pressure display shows dashes instead of a value, there may be a problem with your vehicle. If this consistently occurs, see your dealer for service.

Trailer Gain and Output

On vehicles with the Integrated Trailer Brake Control (ITBC) system, the trailer brake display appears in the DIC. Press the vehicle information button until TRAILER GAIN and OUTPUT display.

TRAILER GAIN shows the trailer gain setting. This setting can be adjusted from 0.0 to 10.0 with either a trailer connected or disconnected. To adjust this setting, see “Integrated Trailer Brake Control System” under *Towing a Trailer on page 5-55* for more information.

OUTPUT shows the power output to the trailer anytime a trailer with electric brakes is connected. Output is displayed in 0 to 10 bars. Dashes may appear in the OUTPUT display. See “Integrated Trailer Brake Control System” under *Towing a Trailer on page 5-55* for more information.

Engine Hours

Press the vehicle information button until ENGINE HOURS displays. This display shows the total number of hours the engine has run.

Relearn Remote Key

This display allows you to match Remote Keyless Entry (RKE) transmitters to your vehicle. This procedure will erase all previously learned transmitters. Therefore, they must be relearned as additional transmitters.

To match an RKE transmitter to your vehicle:

1. Press the vehicle information button until PRESS ✓ TO RELEARN REMOTE KEY displays.
2. Press the set/reset button until REMOTE KEY LEARNING ACTIVE is displayed.
3. Press and hold the lock and unlock buttons on the first transmitter at the same time for about 15 seconds.

   On vehicles with memory recall seats, the first transmitter learned will match driver 1 and the second will match driver 2.

   A chime will sound indicating that the transmitter is matched.
4. To match additional transmitters at this time, repeat Step 3.

   Each vehicle can have a maximum of eight transmitters matched to it.
5. To exit the programming mode, you must cycle the key to LOCK/OFF.

Compass Zone Setting

This display allows for setting the compass zone. See *DIC Compass on page 4-63* for more information.

Compass Recalibration

This display allows for calibrating the compass. See *DIC Compass on page 4-63* for more information.

Blank Display

This display shows no information.

Trip Odometer Reset Stem Menu Items

Use the trip odometer reset stem to view the odometer and trip odometer. The Language selection and Engine Hours display can also be accessed with the trip odometer reset stem.

Odometer

Press the trip odometer reset stem until ODOMETER displays. This display shows the distance the vehicle has been driven in either miles (mi) or kilometers (km).

Trip Odometer

Press the trip odometer reset stem until TRIP displays. This display shows the current distance traveled in either miles (mi) or kilometers (km) since the last reset for the trip odometer.

The trip odometer can be reset to zero by pressing and holding the trip odometer reset stem while the trip odometer is displayed.

The trip odometer has a feature called the retro-active reset. This can be used to set the trip odometer to the number of miles (kilometers) driven since the ignition was last turned on. This can be used if the trip odometer is not reset at the beginning of the trip.

To use the retro-active reset feature, press and hold the trip odometer reset stem for at least four seconds. The trip odometer will display the number of miles (mi) or kilometers (km) driven since the ignition was last turned on and the vehicle was moving. Once the vehicle begins moving, the trip odometer will accumulate mileage. For example, if the vehicle was driven 5 miles (8 km) before it is started again, and then the retro-active reset feature is activated, the display will show 5 miles (8 km). As the vehicle begins moving, the display will then increase to 5.1 miles (8.2 km), 5.2 miles (8.4 km), etc.

Language

This display allows you to select the language in which the DIC messages will appear. To select a language:

1. Press the trip odometer reset stem until ODOMETER displays.
2. While in the ODOMETER display, press and hold the trip odometer reset stem for three seconds until the currently set language displays.
3. Continue to press and hold the trip odometer reset stem to scroll through all of the available languages.

   The available selections are ENGLISH (default), FRANCAIS (French), ESPANOL (Spanish), and NO CHANGE.
4. Once the desired language is displayed, release the trip odometer reset stem to set your choice.

Engine Hours

To display the ENGINE HOURS, place the ignition in LOCK/OFF or ACC/ACCESSORY, then press and hold the trip odometer reset stem for four seconds while viewing the ODOMETER. This display shows the total number of hours the engine has run.

DIC Operation and Displays (Without DIC Buttons)

If your vehicle does not have DIC buttons, the information below explains the operation of this system.

The DIC has different displays which can be accessed by pressing the trip odometer reset stem located on the instrument panel cluster. Pressing the trip odometer reset stem will also turn off, or acknowledge, DIC messages.

The DIC displays trip and vehicle system information, and warning messages if a system problem is detected.

If the vehicle does not have DIC buttons, you can use the trip odometer reset stem to view the following displays: language selection, trip odometer, transmission temperature, trailer brake gain and output information for vehicles with the Integrated Trailer Brake Control (ITBC) system, compass zone setting, compass recalibration, oil life, Tire Pressure Monitor System (TPMS) programming for vehicles with the TPMS, and Remote Keyless Entry (RKE) transmitter programming.

Trip Odometer Reset Stem Menu Items

Language

This display allows you to select the language in which the DIC messages will appear. To select a language:

1. Press the trip odometer reset stem until ODOMETER displays.
2. While in the ODOMETER display, press and hold the trip odometer reset stem for three seconds until the currently set language displays.
3. Continue to press and hold the trip odometer reset stem to scroll through all of the available languages.

   The available languages are ENGLISH (default), FRANCAIS (French), ESPANOL (Spanish), and NO CHANGE.
4. Once the desired language is displayed, release the trip odometer reset stem to set your choice.

Trip Odometer

Press the trip odometer reset stem until TRIP displays. This display shows the current distance traveled in either miles (mi) or kilometers (km) since the last reset for the trip odometer.

The trip odometer can be reset to zero by pressing and holding the trip odometer reset stem while the trip odometer is displayed.

The trip odometer has a feature called the retro-active reset. This can be used to set the trip odometer to the number of miles (kilometers) driven since the ignition was last turned on. This can be used if the trip odometer is not reset at the beginning of the trip.

To use the retro-active reset feature, press and hold the trip odometer reset stem for at least four seconds. The trip odometer will display the number of miles (mi) or kilometers (km) driven since the ignition was last turned on and the vehicle was moving. Once the vehicle begins moving, the trip odometer will accumulate mileage. For example, if the vehicle was driven 5 miles (8 km) before it is started again, and then the retro-active reset feature is activated, the display will show 5 miles (8 km). As the vehicle begins moving, the display will then increase to 5.1 miles (8.2 km), 5.2 miles (8.4 km), etc.

Transmission Temperature

Press the trip odometer reset stem until TRANS TEMP displays. This display shows the temperature of the automatic transmission fluid in either degrees Fahrenheit (°F) or degrees Celsius (°C).

Trailer Gain and Output

On vehicles with the Integrated Trailer Brake Control (ITBC) system, the trailer brake display appears in the DIC. Press the trip odometer reset stem until TRAILER GAIN and OUTPUT display.

TRAILER GAIN shows the trailer gain setting. This setting can be adjusted from 0.0 to 10.0 with either a trailer connected or disconnected. To adjust this setting, see “Integrated Trailer Brake Control System” under *Towing a Trailer on page 5-55* for more information.

OUTPUT shows the power output to the trailer anytime a trailer with electric brakes is connected. Output is displayed in 0 to 10 bars. Dashes may appear in the OUTPUT display. See “Integrated Trailer Brake Control System” under *Towing a Trailer on page 5-55* for more information.

Compass Zone Setting

This display allows for setting the compass zone. See *DIC Compass on page 4-63* for more information.

Compass Recalibration

This display allows for calibrating the compass. See *DIC Compass on page 4-63* for more information.

Oil Life

To access this display, the vehicle must be in P (Park). Press the trip odometer reset stem until OIL LIFE REMAINING displays. This display shows an estimate of the oil's remaining useful life. If you see 99% OIL LIFE REMAINING on the display, that means 99% of the current oil life remains. The engine oil life system will alert you to change the oil on a schedule consistent with your driving conditions.

When the remaining oil life is low, the CHANGE ENGINE OIL SOON message will appear on the display. See “CHANGE ENGINE OIL SOON” under *DIC Warnings and Messages on page 4-66*. You should change the oil as soon as you can. See *Engine Oil on page 6-17*. In addition to the engine oil life system monitoring the oil life, additional maintenance is recommended in the Maintenance Schedule in this manual. See *Scheduled Maintenance on page 7-3* for more information.

Remember, you must reset the OIL LIFE display yourself after each oil change. It will not reset itself. Also, be careful not to reset the OIL LIFE display accidentally at any time other than when the oil has just been changed. It cannot be reset accurately until the next oil change. To reset the engine oil life system, see *Engine Oil Life System on page 6-20*.

Relearn Tire Positions

Your vehicle may have this display. To access this display, the vehicle must be in P (Park). If your vehicle has the Tire Pressure Monitor System (TPMS), after rotating the tires or after replacing a tire or sensor, the system must re-learn the tire positions. To re-learn the tire positions, see *Tire Pressure Monitor System on page 6-83*. See *Tire Inspection and Rotation on page 6-88* and *DIC Warnings and Messages on page 4-66* for more information.

Relearn Remote Key

To access this display, the vehicle must be in P (Park). This display allows you to match Remote Keyless Entry (RKE) transmitters to your vehicle. This procedure will erase all previously learned transmitters. Therefore, they must be relearned as additional transmitters.

To match an RKE transmitter to your vehicle:

1. Press the trip odometer reset stem until RELEARN REMOTE KEY displays.
2. Press and hold the trip odometer reset stem for three seconds.

   The message REMOTE KEY LEARNING ACTIVE will display.
3. Press and hold the lock and unlock buttons on the first transmitter at the same time for about 15 seconds.

   On vehicles with memory recall seats, the first transmitter learned will match driver 1 and the second will match driver 2.

   A chime will sound indicating that the transmitter is matched.
4. To match additional transmitters at this time, repeat Step 3.

   Each vehicle can have a maximum of eight transmitters matched to it.
5. To exit the programming mode, you must cycle the key to LOCK/OFF.

DIC Compass

Your vehicle may have a compass in the Driver Information Center (DIC).

Compass Zone

The zone is set to zone eight upon leaving the factory. Your dealer will set the correct zone for your location.

Under certain circumstances, such as during a long distance cross-country trip or moving to a new state or province, it will be necessary to compensate for compass variance by resetting the zone through the DIC if the zone is not set correctly.

Compass variance is the difference between the earth's magnetic north and true geographic north. If the compass is not set to the zone where you live, the compass may give false readings. The compass must be set to the variance zone in which the vehicle is traveling.

To adjust for compass variance, use the following procedure:

Compass Variance (Zone) Procedure

1. Do not set the compass zone when the vehicle is moving. Only set it when the vehicle is in P (Park).

   Press the vehicle information button until PRESS ✓ TO CHANGE COMPASS ZONE displays. Or, if the vehicle does not have DIC buttons, press the trip odometer reset stem until CHANGE COMPASS ZONE displays.

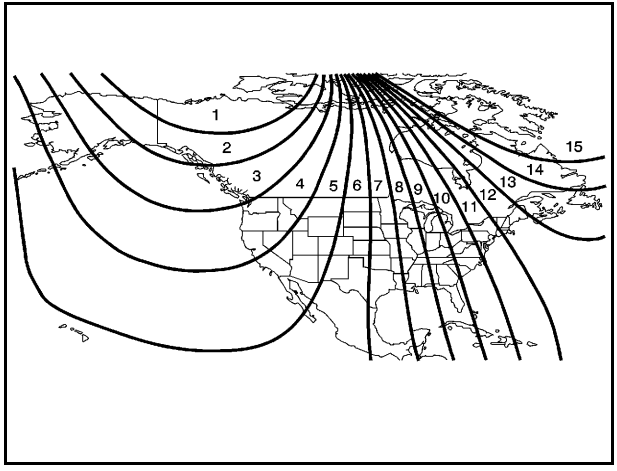

2. Find the vehicle's current location and variance zone number on the map.

   Zones 1 through 15 are available.

3. Press the set/reset button to scroll through and select the appropriate variance zone.

4. Press the trip/fuel button until the vehicle heading, for example, N for North, is displayed in the DIC. Or, if the vehicle does not have DIC buttons, press and hold the trip odometer reset stem for two seconds to select the next available variance zone. Repeat this step until the appropriate variance zone is displayed.
5. If calibration is necessary, calibrate the compass. See “Compass Calibration Procedure” following.

Compass Calibration

The compass can be manually calibrated. Only calibrate the compass in a magnetically clean and safe location, such as an open parking lot, where driving the vehicle in circles is not a danger. It is suggested to calibrate away from tall buildings, utility wires, manhole covers, or other industrial structures, if possible.

If CAL should ever appear in the DIC display, the compass should be calibrated.

If the DIC display does not show a heading, for example, N for North, or the heading does not change after making turns, there may be a strong magnetic field interfering with the compass. Such interference may be caused by a magnetic CB or cell phone antenna mount, a magnetic emergency light, magnetic note pad holder, or any other magnetic item. Turn off the vehicle, move the magnetic item, then turn on the vehicle and calibrate the compass.

To calibrate the compass, use the following procedure:

Compass Calibration Procedure

1. Before calibrating the compass, make sure the compass zone is set to the variance zone in which the vehicle is located. See “Compass Variance (Zone) Procedure” earlier in this section.

   Do not operate any switches such as window, sunroof, climate controls, seats, etc. during the calibration procedure.
2. Press the vehicle information button until PRESS √ TO CALIBRATE COMPASS displays. Or, if the vehicle does not have DIC buttons, press the trip odometer reset stem until CALIBRATE COMPASS displays.
3. Press the set/reset button to start the compass calibration. Or, if the vehicle does not have DIC buttons, press and hold the trip odometer reset stem for two seconds to start the compass calibration.
4. The DIC will display CALIBRATING: DRIVE IN CIRCLES. Drive the vehicle in tight circles at less than 5 mph (8 km/h) to complete the calibration. The DIC will display CALIBRATION COMPLETE for a few seconds when the calibration is complete. The DIC display will then return to the previous menu.

DIC Warnings and Messages

Messages are displayed on the DIC to notify the driver that the status of the vehicle has changed and that some action may be needed by the driver to correct the condition. Multiple messages may appear one after another.

Some messages may not require immediate action, but you can press any of the DIC buttons on the instrument panel or the trip odometer reset stem on the instrument panel cluster to acknowledge that you received the messages and to clear them from the display.

Some messages cannot be cleared from the DIC display because they are more urgent. These messages require action before they can be cleared. You should take any messages that appear on the display seriously and remember that clearing the messages will only make the messages disappear, not correct the problem.

The following are the possible messages that can be displayed and some information about them.

If your vehicle has the DURAMAX® Diesel engine, see the DURAMAX Diesel manual for more information.

BATTERY LOW START VEHICLE

When the vehicle's battery is severely discharged, this message will display and four chimes may sound. Start the vehicle immediately. If the vehicle is not started and the battery continues to discharge, the climate controls, heated seats, and audio systems will shut off and the vehicle may require a jump start. These systems will function again after the vehicle is started.

CHANGE ENGINE OIL SOON

This message displays when the engine oil needs to be changed. When you change the engine oil, be sure to reset the CHANGE ENGINE OIL SOON message. See *Engine Oil Life System on page 6-20* for information on how to reset the message. See *Engine Oil on page 6-17* and *Scheduled Maintenance on page 7-3* for more information.

CHECK TRAILER WIRING

On vehicles with the Integrated Trailer Brake Control (ITBC) system, this message may display and a chime may sound when one of the following conditions exists:

- A trailer with electric brakes becomes disconnected from the vehicle.
  - If the disconnect occurs while the vehicle is stopped, this message clears itself after a short time.
  - If the disconnect occurs while the vehicle is moving, this message stays on until the ignition is turned off.
- There is a short in the wiring to the electric trailer brakes.

When this message displays, power is no longer available to the trailer brakes.

As soon as it is safe to do so, carefully pull your vehicle over to the side of the road and turn the ignition off. Check the wiring connection to the trailer and turn the ignition back on. This message clears if the trailer is reconnected. This message also clears if you acknowledge it. If this message still displays, either your vehicle or the trailer needs service. See your dealer.

See “Integrated Trailer Brake Control System” under *Towing a Trailer on page 5-55* for more information.

DRIVER DOOR OPEN

This message displays and a chime may sound if the driver door is not fully closed and the vehicle is shifted out of P (Park). Stop and turn off the vehicle, check the door for obstructions, and close the door again. Check to see if the message still appears on the DIC.

ENGINE HOT A/C (Air Conditioning) TURNED OFF

This message displays when the engine coolant becomes hotter than the normal operating temperature. See *Engine Coolant Temperature Gauge on page 4-41*. To avoid added strain on a hot engine, the air conditioning compressor automatically turns off. When the coolant temperature returns to normal, the air conditioning compressor turns back on. You can continue to drive your vehicle.

If this message continues to appear, have the system repaired by your dealer as soon as possible to avoid damage to the engine.

ENGINE OIL HOT IDLE ENGINE

This message displays when the engine oil becomes hotter than the normal operating temperature. Stop and allow the vehicle to idle until it cools down. See *Engine Coolant Temperature Gauge on page 4-41*.

ENGINE OVERHEATED IDLE ENGINE

Notice: **If you drive your vehicle while the engine is overheating, severe engine damage may occur. If an overheat warning appears on the instrument panel cluster and/or DIC, stop the vehicle as soon as possible. See *Engine Overheating on page 6-39* for more information.**

This message displays when the engine coolant temperature is too hot. Stop and allow the vehicle to idle until it cools down. See *Engine Coolant Temperature Gauge on page 4-41*.

See *Overheated Engine Protection Operating Mode on page 6-41* for information on driving to a safe place in an emergency.

ENGINE OVERHEATED STOP ENGINE

Notice: **If you drive your vehicle while the engine is overheating, severe engine damage may occur. If an overheat warning appears on the instrument panel cluster and/or DIC, stop the vehicle as soon as possible. See *Engine Overheating on page 6-39* for more information.**

This message displays and a chime may sound if the engine cooling system reaches unsafe temperatures for operation. Stop and turn off the vehicle as soon as it is safe to do so to avoid severe damage. This message clears when the engine has cooled to a safe operating temperature.

ENGINE POWER IS REDUCED

This message displays and a chime may sound when the cooling system temperature gets too hot and the engine further enters the engine coolant protection mode. See *Engine Overheating on page 6-39* for further information.

This message also displays when the vehicle's engine power is reduced. Reduced engine power can affect the vehicle's ability to accelerate. If this message is on, but there is no reduction in performance, proceed to your destination. The performance may be reduced the next time the vehicle is driven. The vehicle may be driven at a reduced speed while this message is on, but acceleration and speed may be reduced. Anytime this message stays on, the vehicle should be taken to your dealer for service as soon as possible.

FAST IDLE ON

If your vehicle has this feature, this message displays when the fast idle feature is on. See *Fast Idle System on page 3-27* for more information.

FUEL LEVEL LOW

This message displays and a chime may sound if the fuel level is low. Refuel as soon as possible. See *Fuel Gauge on page 4-48* and *Fuel on page 6-6* for more information.

HOOD OPEN

This message displays and a chime may sound if the hood is not fully closed. Stop and turn off the vehicle, check the hood for obstructions, and close the hood again. Check to see if the message still appears on the DIC.

ICE POSSIBLE DRIVE WITH CARE

This message displays when ice conditions are possible.

LEFT REAR DOOR OPEN (Crew Cab)

This message displays and a chime may sound if the driver side rear door is not fully closed and the vehicle is shifted out of P (Park). Stop and turn off the vehicle, check the door for obstructions, and close the door again. Check to see if the message still appears on the DIC.

OIL PRESSURE LOW STOP ENGINE

Notice: **If you drive your vehicle while the engine oil pressure is low, severe engine damage may occur. If a low oil pressure warning appears on the Driver Information Center (DIC), stop the vehicle as soon as possible. Do not drive the vehicle until the cause of the low oil pressure is corrected. See *Engine Oil on page 6-17* for more information.**

This message displays if low oil pressure levels occur. Stop the vehicle as soon as safely possible and do not operate it until the cause of the low oil pressure has been corrected. Check the oil as soon as possible and have your vehicle serviced by your dealer. See *Engine Oil on page 6-17*.

PARK ASST BLOCKED SEE OWNERS MANUAL

If your vehicle has the Ultrasonic Rear Parking Assist (URPA) system, this message displays if there is something interfering with the park assist system. See *Ultrasonic Rear Parking Assist (URPA) on page 3-64* for more information.

PARK ASSIST OFF

If your vehicle has the Ultrasonic Rear Parking Assist (URPA) system, after the vehicle has been started, this message displays to remind the driver that the URPA system has been turned off. Press the set/reset button or the trip odometer reset stem to acknowledge this message and clear it from the DIC display. To turn the URPA system back on, see *Ultrasonic Rear Parking Assist (URPA) on page 3-64*.

PASSENGER DOOR OPEN

This message displays and a chime may sound if the front passenger door is not fully closed and the vehicle is shifted out of P (Park). Stop and turn off the vehicle, check the door for obstructions, and close the door again. Check to see if the message still appears on the DIC.

REMOTE KEY LEARNING ACTIVE

This message may display while you are matching a Remote Keyless Entry (RKE) transmitter to your vehicle. See “Matching Transmitter(s) to Your Vehicle” under *Remote Keyless Entry (RKE) System Operation on page 3-5* and *DIC Operation and Displays (With DIC Buttons) on page 4-50* or *DIC Operation and Displays (Without DIC Buttons) on page 4-59* for more information.

REPLACE BATTERY IN REMOTE KEY

This message displays if a Remote Keyless Entry (RKE) transmitter battery is low. The battery needs to be replaced in the transmitter. See “Battery Replacement” under *Remote Keyless Entry (RKE) System Operation on page 3-5*.

RIGHT REAR DOOR OPEN (Crew Cab)

This message displays and a chime may sound if the passenger side rear door is not fully closed and the vehicle is shifted out of P (Park). Stop and turn off the vehicle, check the door for obstructions, and close the door again. Check to see if the message still appears on the DIC.

SERVICE 4 WHEEL DRIVE

If the vehicle has four-wheel drive, this message may display if a problem occurs with the four-wheel-drive system. If this message appears, stop as soon as possible and turn off the vehicle. Make sure the key is in the LOCK/OFF position for at least one minute and then restart the vehicle and check for the message on the DIC display. If the message is still displayed or appears again when you begin driving, the four-wheel-drive system needs service. See your dealer.

SERVICE AIR BAG

This message displays if there is a problem with the airbag system. Have your dealer inspect the system for problems. See *Airbag Readiness Light on page 4-33* and *Airbag System on page 2-73* for more information.

SERVICE BATTERY CHARGING SYSTEM

On some vehicles, this message displays if there is a problem with the battery charging system. Under certain conditions, the charging system light may also turn on in the instrument panel cluster. See *Charging System Light on page 4-37*. Driving with this problem could drain the battery. Turn off all unnecessary accessories. Have the electrical system checked as soon as possible. See your dealer.

SERVICE BRAKE SYSTEM

This message displays along with the brake system warning light if there is a problem with the brake system. See *Brake System Warning Light on page 4-38*. If this message appears, stop as soon as possible and turn off the vehicle. Restart the vehicle and check for the message on the DIC display. If the message is still displayed or appears again when you begin driving, the brake system needs service as soon as possible. See your dealer.

SERVICE BRAKES SOON

On some vehicles, this message displays if there is a problem with the brake system. If this message appears, stop as soon as possible and turn off the vehicle. Restart the vehicle and check for the message on the DIC display. If the message is still displayed or appears again when you begin driving, the brake system needs service. See your dealer.

SERVICE PARK ASSIST

If your vehicle has the Ultrasonic Rear Parking Assist (URPA) system, this message displays if there is a problem with the URPA system. Do not use this system to help you park. See *Ultrasonic Rear Parking Assist (URPA) on page 3-64* for more information. See your dealer for service.

SERVICE STABILITRAK

If your vehicle has StabiliTrak® and this message displays, it means there may be a problem with the StabiliTrak system. If you see this message, try to reset the system. Stop; turn off the engine for at least 15 seconds; then start the engine again. If this message still comes on, it means there is a problem. You should see your dealer for service. The vehicle is safe to drive, however, you do not have the benefit of StabiliTrak, so reduce your speed and drive accordingly.

SERVICE THEFT DETERRENT SYSTEM

This message displays when there is a problem with the theft-deterrent system. The vehicle may or may not restart so you may want to take the vehicle to your dealer before turning off the engine. See *PASS-Key® III+ Electronic Immobilizer Operation on page 3-21* for more information.

SERVICE TIRE MONITOR SYSTEM

If your vehicle has the Tire Pressure Monitor System (TPMS), this message displays if a part on the system is not working properly. The tire pressure light also flashes and then remains on during the same ignition cycle. See *Tire Pressure Light on page 4-41*. Several conditions may cause this message to appear. See *Tire Pressure Monitor Operation on page 6-84* for more information. If the warning comes on and stays on, there may be a problem with the TPMS. See your dealer.

SERVICE TRACTION CONTROL

If your vehicle has StabiliTrak, this message displays when there is a problem with the Traction Control System (TCS). When this message displays, the system will not limit wheel spin. Adjust your driving accordingly. See your dealer for service. See *StabiliTrak® System on page 5-6* for more information.

SERVICE TRAILER BRAKE SYSTEM

On vehicles with the Integrated Trailer Brake Control (ITBC) system, this message displays and a chime may sound when there is a problem with the ITBC system.

When this message displays, power is no longer available to the trailer brakes.

As soon as it is safe to do so, carefully pull your vehicle over to the side of the road and turn the ignition off. Check the wiring connection to the trailer and turn the ignition back on. If this message still displays, either your vehicle or the trailer needs service. See your dealer.

See “Integrated Trailer Brake Control System” under *Towing a Trailer on page 5-55* for more information.

STABILITRAK OFF

If your vehicle has StabiliTrak, this message displays when you turn off StabiliTrak, or when the stability control has been automatically disabled. To limit wheel spin and realize the full benefits of the stability enhancement system, you should normally leave StabiliTrak on. However, you should turn StabiliTrak off if your vehicle gets stuck in sand, mud, ice, or snow and you want to rock your vehicle to attempt to free it, or if you are driving in extreme off-road conditions and require more wheel spin. See *If Your Vehicle is Stuck in Sand, Mud, Ice, or Snow on page 5-31*. To turn the StabiliTrak system on or off, see *StabiliTrak® System on page 5-6*.

There are several conditions that can cause this message to appear.

- One condition is overheating, which could occur if StabiliTrak® activates continuously for an extended period of time.
- The message also displays if the brake system warning light is on. See *Brake System Warning Light on page 4-38*.
- The message could display if the stability system takes longer than usual to complete its diagnostic checks due to driving conditions.
- The message displays if an engine or vehicle related problem has been detected and the vehicle needs service. See your dealer.
- The message also displays if the vehicle is shifted into 4LO.

The message turns off as soon as the conditions that caused the message to be displayed are no longer present.

TIGHTEN GAS CAP

This message may display along with the check engine light on the instrument panel cluster if the vehicle's fuel cap is not tightened properly. See *Malfunction Indicator Lamp on page 4-42*. Reinstall the fuel cap fully. See *Filling the Tank on page 6-12*. The diagnostic system can determine if the fuel cap has been left off or improperly installed. A loose or missing fuel cap allows fuel to evaporate into the atmosphere. A few driving trips with the cap properly installed should turn this light and message off.

TIRE LEARNING ACTIVE

If your vehicle has the Tire Pressure Monitor System (TPMS), this message displays when the system is re-learning the tire positions on your vehicle. See “DIC Operation and Displays (Without DIC Buttons)” earlier in this section for more information. The tire positions must be re-learned after rotating the tires or after replacing a tire or sensor. See *Tire Inspection and Rotation on page 6-88*, *Tire Pressure Monitor System on page 6-83*, and *Inflation - Tire Pressure on page 6-80* for more information.

TIRE LOW ADD AIR TO TIRE

If your vehicle has the Tire Pressure Monitor System (TPMS), this message displays when the pressure in one or more of the vehicle's tires is low. This message also displays LEFT FRT (left front), RIGHT FRT (right front), LEFT RR (left rear), or RIGHT RR (right rear) to indicate the location of the low tire. The low tire pressure warning light will also come on. See *Tire Pressure Light on page 4-41*. You can receive more than one tire pressure message at a time. To read the other messages that may have been sent at the same time, press the set/reset button or the trip odometer reset stem. If a tire pressure message appears on the DIC, stop as soon as you can. Have the tire pressures checked and set to those shown on the Tire Loading Information label. See *Tires on page 6-70*, *Loading the Vehicle on page 5-33*, and *Inflation - Tire Pressure on page 6-80*. The DIC also shows the tire pressure values. See “DIC Operation and Displays (With DIC Buttons)” earlier in this section.

TRACTION CONTROL OFF

If your vehicle has StabiliTrak, this message displays when the Traction Control System (TCS) is turned off. Adjust your driving accordingly. See *StabiliTrak® System on page 5-6* for more information.

TRAILER CONNECTED

On vehicles with the Integrated Trailer Brake Control (ITBC) system, this message displays briefly when a trailer with electric brakes is first connected to the vehicle.

This message clears itself after several seconds. This message also clears if you acknowledge it. After this message clears, the TRAILER GAIN/OUTPUT display appears in the DIC.

See “TRAILER GAIN/OUTPUT” under *DIC Operation and Displays (With DIC Buttons) on page 4-50* or *DIC Operation and Displays (Without DIC Buttons) on page 4-59* and “Integrated Trailer Brake Control System” under *Towing a Trailer on page 5-55* for more information.

TRANSMISSION HOT IDLE ENGINE

Notice: **If you drive your vehicle while the transmission fluid is overheating and the transmission temperature warning is displayed on the instrument panel cluster and/or DIC, you can damage the transmission. This could lead to costly repairs that would not be covered by your warranty. Do not drive your vehicle with overheated transmission fluid or while the transmission temperature warning is displayed.**

This message displays and a chime may sound if the transmission fluid in the vehicle gets hot. Driving with the transmission fluid temperature high can cause damage to the vehicle. Stop the vehicle and let it idle to allow the transmission to cool. This message clears and the chime stops when the fluid temperature reaches a safe level.

TURN SIGNAL ON

This message displays and a chime may sound if a turn signal is left on for 3/4 of a mile (1.2 km). Move the turn signal/multifunction lever to the off position.

WASHER FLUID LOW ADD FLUID

This message displays when the windshield washer fluid is low. Fill the windshield washer fluid reservoir as soon as possible. See *Engine Compartment Overview on page 6-16* for the location of the windshield washer fluid reservoir. Also, see *Windshield Washer Fluid on page 6-43* for more information.

DIC Vehicle Customization (With DIC Buttons)

Your vehicle may have customization capabilities that allow you to program certain features to one preferred setting. Customization features can only be programmed to one setting on the vehicle and cannot be programmed to a preferred setting for two different drivers.

All of the customization options may not be available on your vehicle. Only the options available will be displayed on the DIC.

The default settings for the customization features were set when your vehicle left the factory, but may have been changed from their default state since then.

The customization preferences are automatically recalled.

To change customization preferences, use the following procedure.

Entering the Feature Settings Menu

1. Turn the ignition on and place the vehicle in P (Park).

   To avoid excessive drain on the battery, it is recommended that the headlamps are turned off.
2. Press the customization button to scroll through the available customizable options.

Feature Settings Menu Items

The following are customization features that allow you to program settings to the vehicle:

DISPLAY IN ENGLISH

This feature will only display if a language other than English has been set. This feature allows you to change the language in which the DIC messages appear to English.

Press the customization button until the PRESS ✓ TO DISPLAY IN ENGLISH screen appears on the DIC display. Press the set/reset button once to display all DIC messages in English.

DISPLAY LANGUAGE

This feature allows you to select the language in which the DIC messages will appear.

Press the customization button until the DISPLAY LANGUAGE screen appears on the DIC display. Press the set/reset button once to access the settings for this feature. Then press the customization button to scroll through the following settings:

ENGLISH (default): All messages will appear in English.

FRANCAIS: All messages will appear in French.

ESPANOL: All messages will appear in Spanish.

NO CHANGE: No change will be made to this feature. The current setting will remain.

To select a setting, press the set/reset button while the desired setting is displayed on the DIC.

You can also change the language by pressing the trip odometer reset stem. See “Language” under DIC Operation and Displays (Without DIC Buttons) earlier in this section for more information.

AUTO DOOR LOCK

This feature allows you to select when the vehicle's doors will automatically lock. See *Programmable Automatic Door Locks on page 3-11* for more information.

Press the customization button until AUTO DOOR LOCK appears on the DIC display. Press the set/reset button once to access the settings for this feature. Then press the customization button to scroll through the following settings:

SHIFT OUT OF PARK (default): The doors will automatically lock when the vehicle is shifted out of P (Park).

AT VEHICLE SPEED: The doors will automatically lock when the vehicle speed is above 8 mph (13 km/h) for three seconds.

NO CHANGE: No change will be made to this feature. The current setting will remain.

To select a setting, press the set/reset button while the desired setting is displayed on the DIC.

AUTO DOOR UNLOCK

This feature allows you to select whether or not to turn off the automatic door unlocking feature. It also allows you to select which doors and when the doors will automatically unlock. See *Programmable Automatic Door Locks on page 3-11* for more information.

Press the customization button until AUTO DOOR UNLOCK appears on the DIC display. Press the set/reset button once to access the settings for this feature. Then press the customization button to scroll through the following settings:

OFF: None of the doors will automatically unlock.

DRIVER AT KEY OUT: Only the driver's door will unlock when the key is taken out of the ignition.

DRIVER IN PARK: Only the driver's door will unlock when the vehicle is shifted into P (Park).

ALL AT KEY OUT: All of the doors will unlock when the key is taken out of the ignition.

ALL IN PARK (default): All of the doors will unlock when the vehicle is shifted into P (Park).

NO CHANGE: No change will be made to this feature. The current setting will remain.

To select a setting, press the set/reset button while the desired setting is displayed on the DIC.

REMOTE DOOR LOCK

This feature allows you to select the type of feedback you will receive when locking the vehicle with the Remote Keyless Entry (RKE) transmitter. You will not receive feedback when locking the vehicle with the RKE transmitter if the doors are open. See *Remote Keyless Entry (RKE) System Operation on page 3-5* for more information.

Press the customization button until REMOTE DOOR LOCK appears on the DIC display. Press the set/reset button once to access the settings for this feature. Then press the customization button to scroll through the following settings:

OFF: There will be no feedback when you press the lock button on the RKE transmitter.

LIGHTS ONLY: The exterior lamps will flash when you press the lock button on the RKE transmitter.

HORN ONLY: The horn will sound on the second press of the lock button on the RKE transmitter.

HORN & LIGHTS (default): The exterior lamps will flash when you press the lock button on the RKE transmitter, and the horn will sound when the lock button is pressed again within five seconds of the previous command.

NO CHANGE: No change will be made to this feature. The current setting will remain.

To select a setting, press the set/reset button while the desired setting is displayed on the DIC.

REMOTE DOOR UNLOCK

This feature allows you to select the type of feedback you will receive when unlocking the vehicle with the Remote Keyless Entry (RKE) transmitter. You will not receive feedback when unlocking the vehicle with the RKE transmitter if the doors are open. See *Remote Keyless Entry (RKE) System Operation on page 3-5* for more information.

Press the customization button until REMOTE DOOR UNLOCK appears on the DIC display. Press the set/reset button once to access the settings for this feature. Then press the customization button to scroll through the following settings:

LIGHTS OFF: The exterior lamps will not flash when you press the unlock button on the RKE transmitter.

LIGHTS ON (default): The exterior lamps will flash when you press the unlock button on the RKE transmitter.

NO CHANGE: No change will be made to this feature. The current setting will remain.

To select a setting, press the set/reset button while the desired setting is displayed on the DIC.

DELAY DOOR LOCK

On vehicles with a crew cab, this feature allows you to select whether or not the locking of the vehicle's doors will be delayed. When locking the doors with the power door lock switch and a door is open, this feature will delay locking the doors until five seconds after the last door is closed. You will hear three chimes to signal that the delayed locking feature is in use. The key must be out of the ignition for this feature to work. You can temporarily override delayed locking by pressing the power door lock switch twice. See *Delayed Locking on page 3-11* for more information.

Press the customization button until DELAY DOOR LOCK appears on the DIC display. Press the set/reset button once to access the settings for this feature. Then press the customization button to scroll through the following settings:

OFF: There will be no delayed locking of the vehicle's doors.

ON (default): The doors will not lock until five seconds after the last door is closed.

NO CHANGE: No change will be made to this feature. The current setting will remain.

To select a setting, press the set/reset button while the desired setting is displayed on the DIC.

EXIT LIGHTING

This feature allows you to select the amount of time you want the exterior lamps to remain on when it is dark enough outside. This happens after the key is turned from ON/RUN to LOCK/OFF.

Press the customization button until EXIT LIGHTING appears on the DIC display. Press the set/reset button once to access the settings for this feature. Then press the customization button to scroll through the following settings:

OFF: The exterior lamps will not turn on.

30 SECONDS (default): The exterior lamps will stay on for 30 seconds.

1 MINUTE: The exterior lamps will stay on for one minute.

2 MINUTES: The exterior lamps will stay on for two minutes.

NO CHANGE: No change will be made to this feature. The current setting will remain.

To select a setting, press the set/reset button while the desired setting is displayed on the DIC.

APPROACH LIGHTING

This feature allows you to select whether or not to have the exterior lights turn on briefly during low light periods after unlocking the vehicle using the Remote Keyless Entry (RKE) transmitter.

Press the customization button until APPROACH LIGHTING appears on the DIC display. Press the set/reset button once to access the settings for this feature. Then press the customization button to scroll through the following settings:

OFF: The exterior lights will not turn on when you unlock the vehicle with the RKE transmitter.

ON (default): If it is dark enough outside, the exterior lights will turn on briefly when you unlock the vehicle with the RKE transmitter.

The lights will remain on for 20 seconds or until the lock button on the RKE transmitter is pressed, or the vehicle is no longer off. See *Remote Keyless Entry (RKE) System Operation on page 3-5* for more information.

NO CHANGE: No change will be made to this feature. The current setting will remain.

To select a setting, press the set/reset button while the desired setting is displayed on the DIC.

CHIME VOLUME

If available, this feature allows you to select the volume level of the chime.

Press the customization button until CHIME VOLUME appears on the DIC display. Press the set/reset button once to access the settings for this feature. Then press the customization button to scroll through the following settings:

NORMAL: The chime volume will be set to a normal level.

LOUD: The chime volume will be set to a loud level.

NO CHANGE: No change will be made to this feature. The current setting will remain.

There is no default for chime volume. The volume will stay at the last known setting.

To select a setting, press the set/reset button while the desired setting is displayed on the DIC.

PARK TILT MIRRORS

If your vehicle has this feature, it allows you to select whether or not the outside mirror(s) will automatically tilt down when the vehicle is shifted into R (Reverse). See *Outside Power Foldaway Mirrors on page 3-62* for more information.

Press the customization button until PARK TILT MIRRORS appears on the DIC display. Press the set/reset button once to access the settings for this feature. Then press the customization button to scroll through the following settings:

OFF (default): Neither outside mirror will be tilted down when the vehicle is shifted into R (Reverse).

DRIVER MIRROR: The driver's outside mirror will be tilted down when the vehicle is shifted into R (Reverse).

PASSENGER MIRROR: The passenger's outside mirror will be tilted down when the vehicle is shifted into R (Reverse).

BOTH MIRRORS: The driver's and passenger's outside mirrors will be tilted down when the vehicle is shifted into R (Reverse).

NO CHANGE: No change will be made to this feature. The current setting will remain.

To select a setting, press the set/reset button while the desired setting is displayed on the DIC.

EASY EXIT RECALL

If your vehicle has this feature, it allows you to select your preference for the automatic easy exit seat feature. See *Memory Seat, Mirrors, and Pedals on page 2-8* for more information.

Press the customization button until EASY EXIT RECALL appears on the DIC display. Press the set/reset button once to access the settings for this feature. Then press the customization button to scroll through the following settings:

DOOR BUTTON ONLY: No automatic seat exit recall will occur. The recall will only occur after pressing the easy exit seat button.

BUTTON & KEY OUT (default): If the features are enabled through the EASY EXIT SETUP menu, the driver's seat will move back when the key is removed from the ignition or after pressing the easy exit seat button.

The automatic easy exit seat movement will only occur one time after the key is removed from the ignition. If the automatic movement has already occurred, and you put the key back in the ignition and remove it again, the seat will stay in the original exit position, unless a memory recall took place prior to removing the key again.

NO CHANGE: No change will be made to this feature. The current setting will remain.

To select a setting, press the set/reset button while the desired setting is displayed on the DIC.

EASY EXIT SETUP

If your vehicle has this feature, it allows you to select which areas will recall with the automatic easy exit seat feature. It also allows you to turn off the automatic easy exit feature. See *Memory Seat, Mirrors, and Pedals on page 2-8* and “EASY EXIT RECALL” earlier for more information.

Press the customization button until EASY EXIT SETUP appears on the DIC display. Press the set/reset button once to access the settings for this feature. Then press the menu up/down button to scroll through the following settings:

OFF: No automatic seat exit will recall.

SEAT ONLY (default): The driver's seat will recall.

NO CHANGE: No change will be made to this feature. The current setting will remain.

To select a setting, press the set/reset button while the desired setting is displayed on the DIC.

MEMORY SEAT RECALL

If your vehicle has this feature, it allows you to select your preference for the remote memory seat recall feature. See *Memory Seat, Mirrors, and Pedals on page 2-8* for more information.

Press the customization button until MEMORY SEAT RECALL appears on the DIC display. Press the set/reset button once to access the settings for this feature. Then press the customization button to scroll through the following settings:

OFF (default): No remote memory seat recall will occur.

ON: The driver's seat and, on some vehicles, the outside mirrors will automatically move to the stored driving position when the unlock button on the Remote Keyless Entry (RKE) transmitter is pressed. On some vehicles with the adjustable throttle and brake pedal feature, the pedals will also automatically move. See “Relearn Remote Key” under *DIC Operation and Displays (With DIC Buttons) on page 4-50* or *DIC Operation and Displays (Without DIC Buttons) on page 4-59* for more information on matching transmitters to driver ID numbers.

NO CHANGE: No change will be made to this feature. The current setting will remain.

To select a setting, press the set/reset button while the desired setting is displayed on the DIC.

REMOTE START

If your vehicle has this feature, it allows you to turn the remote start off or on. The remote start feature allows you to start the engine from outside of the vehicle using the Remote Keyless Entry (RKE) transmitter. See *Remote Vehicle Start on page 3-7* for more information.

Press the customization button until REMOTE START appears on the DIC display. Press the set/reset button once to access the settings for this feature. Then press the customization button to scroll through the following settings:

OFF: The remote start feature will be disabled.

ON (default): The remote start feature will be enabled.

NO CHANGE: No change will be made to this feature. The current setting will remain.

To select a setting, press the set/reset button while the desired setting is displayed on the DIC.

FACTORY SETTINGS

This feature allows you to set all of the customization features back to their factory default settings.

Press the customization button until FACTORY SETTINGS appears on the DIC display. Press the set/reset button once to access the settings for this feature. Then press the customization button to scroll through the following settings:

RESTORE ALL (default): The customization features will be set to their factory default settings.

DO NOT RESTORE: The customization features will not be set to their factory default settings.

To select a setting, press the set/reset button while the desired setting is displayed on the DIC.

EXIT FEATURE SETTINGS

This feature allows you to exit the feature settings menu.

Press the customization button until PRESS ✓ TO EXIT FEATURE SETTINGS appears in the DIC display. Press the set/reset button once to exit the menu.

If you do not exit, pressing the customization button again will return you to the beginning of the feature settings menu.

Exiting the Feature Settings Menu

The feature settings menu will be exited when any of the following occurs:

- The vehicle is no longer in ON/RUN.
- The trip/fuel or vehicle information DIC buttons are pressed.
- The end of the feature settings menu is reached and exited.
- A 40 second time period has elapsed with no selection made.

Audio System(s)

Determine which radio the vehicle has and read the following pages to become familiar with its features.

⚠ WARNING:

Taking your eyes off the road for extended periods could cause a crash resulting in injury or death to you or others. Do not give extended attention to entertainment tasks while driving.

This system provides access to many audio and non audio listings.

To minimize taking your eyes off the road while driving, do the following while the vehicle is parked:

- Become familiar with the operation and controls of the audio system.
- Set up the tone, speaker adjustments, and preset radio stations.

For more information, see *Defensive Driving on page 5-2*.

Notice: **Contact your dealer before adding any equipment.**

Adding audio or communication equipment could interfere with the operation of the vehicle's engine, radio, or other systems, and could damage them. Follow federal rules covering mobile radio and telephone equipment.

The vehicle has Retained Accessory Power (RAP). With RAP, the audio system can be played even after the ignition is turned off. See *Retained Accessory Power (RAP) on page 3-25* for more information.

Setting the Clock

AM-FM Radio

To set the time:

1. Turn the ignition key to ACC/ACCESSORY or ON/RUN, then press the ⏻ button to turn the radio on.
2. Press the ◷ button until the hour numbers begin to flash, then turn the ♫ knob to increase or decrease the hour.
3. Press the ◷ button until the minute numbers begin to flash, then turn the ♫ knob to increase or decrease the minutes.
4. Press the ◷ button until the 12HR or 24HR time format begins to flash, then turn the ♫ knob to change the time format.
5. Press the ◷ button again until the clock display stops flashing to set the currently displayed time, or wait until the flashing stops after five seconds and the current time displayed automatically sets.

MP3 Radios with a Single CD or a Single CD and DVD Player

To set the time and date:

1. Turn the ignition key to ACC/ACCESSORY or ON/RUN, then press the ⏻ button to turn the radio on.
2. Press the ◷ button to display HR, MIN, MM, DD, YYYY (hour, minute, month, day, and year).
3. Press the softkey located under any one of the tabs to change that setting.
4. To increase the time or date, do one of the following:
   - Press the softkey below the selected tab.
   - Press the ⏭ SEEK button.
   - Press the ▷▷ FWD button.
   - Turn the ♫ knob clockwise.
5. To decrease the time or date, do one of the following:
   - Press the ⏮ SEEK button.
   - Press the ◁◁ REV button.
   - Turn the ♫ knob counterclockwise.

To change the time default setting from 12 hour to 24 hour or to change the date default setting from month/day/year to day/month/year:

1. Press the button and then the softkey located below the forward arrow tab. 12H, 24H, the date MM/DD (month and day), and DD/MM (day and month) displays.
2. Press the softkey located below the desired option.
3. Press the button again to apply the desired option, or let the screen time out.

MP3 Radio with a Six-Disc CD Player

To set the time and date:

1. Turn the ignition key to ACC/ACCESSORY or ON/RUN, then press the button to turn the radio on.
2. Press the MENU button.
3. Press the button to display HR, MIN, MM, DD, YYYY (hour, minute, month, day, and year).
4. Press the softkey located under any one of the tabs to change that setting.
5. To increase the time or date, do one of the following:
   - Press the softkey below the selected tab.
   - Press the SEEK button.
   - Press the FWD button.
   - Turn the knob clockwise.
6. To decrease the time or date, do one of the following:
   - Press the SEEK button.
   - Press the REV button.
   - Turn the knob counterclockwise.

To change the time default setting from 12 hour to 24 hour or to change the date default setting from month/day to day/month:

1. Press the MENU button and then the softkey under the tab.
2. Press the softkey located below the forward arrow tab. 12H, 24H, the date MM/DD (month and day), and DD/MM/ (day and month) displays.
3. Press the softkey located below the desired option.
4. Press the MENU button again to apply the desired option, or let the screen time out.

Radio(s)

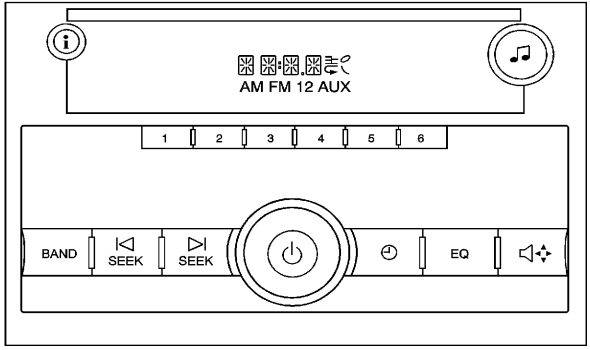

AM-FM Radio

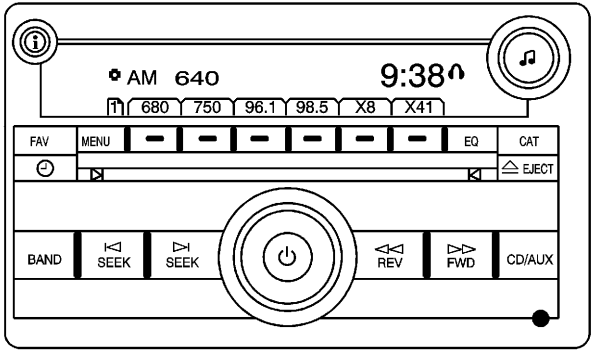

Radio with CD (MP3) shown, Radio with USB and CD (MP3), and Radio with USB and Six-Disc CD (MP3) similar

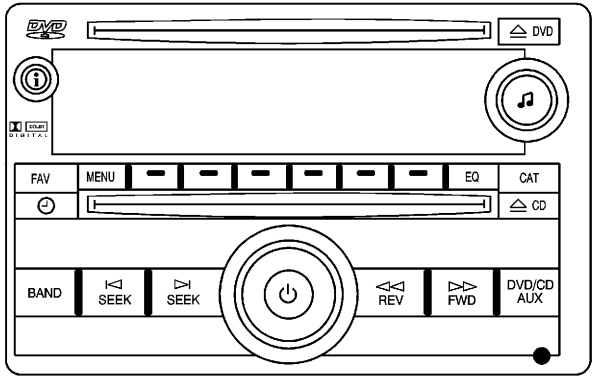

Radio with USB, CD, and DVD (MP3)

The vehicle has one of these radios as its audio system.

Radios with CD and DVD

Radios with CD and DVD have a Bose® Surround Sound System. Some of its features are explained later in this section under, “Adjusting the Speakers (Balance/Fade)”.

If the vehicle has a Rear Seat Entertainment (RSE) system, it has a CD/DVD radio. See *Rear Seat Entertainment (RSE) System on page 4-136* for more information on the vehicle's RSE system.

The DVD player is the top slot on the radio faceplate. The player is capable of reading the DTS programmed DVD Audio or DVD Video media, (DTS and DTS Digital Surround are registered trademarks of Digital Theater Systems, Inc.).

Manufactured under license from Dolby Laboratories. Dolby and the double-D symbol are trademarks of Dolby Laboratories.

Radio Data System (RDS)

For radios with the Radio Data System (RDS) feature, it only works with FM stations that broadcast RDS information. This system relies upon receiving specific information from these stations and only works when the information is available. While the radio is tuned to an FM-RDS station, the station name or call letters displays. In rare cases, a radio station could broadcast incorrect information that causes the radio features to work improperly. If this happens, contact the radio station.

Playing the Radio

⏻ **(Power/Volume):** Press to turn the system on and off.

Turn clockwise or counterclockwise to increase or decrease the volume.

(Information) (AM-FM Radio): Press to switch the display between the radio station frequency and the time. While the ignition is off, press this button to display the time.

Speed Compensated Volume (SCV): Radios with Speed Compensated Volume (SCV) automatically adjusts the radio volume to compensate for road and wind noise as the vehicle's speed changes while driving, so that the volume level stays consistent.

To activate SCV:

1. Set the radio volume to the desired level.
2. Press the MENU button to display the radio setup menu.
3. Press the softkey under the AUTO VOLUM (automatic volume) tab on the radio display.
4. Press the softkey under the desired Speed Compensated Volume setting (OFF, Low, Med, or High) to select the level of radio volume compensation. The display times out after approximately 10 seconds. Each higher setting allows for more radio volume compensation at faster vehicle speeds.

Finding a Station

BAND: Press to switch between AM, FM, or XM™, if equipped.

♫ (Tune): Turn to select radio stations.

⏮ SEEK ⏭ : Press either arrow to go to the previous or to the next station and stay there. The radio only seeks and scans stations with a strong signal that are in the selected band.

To scan stations, press and hold either arrow for a few seconds until a beep sounds. The radio goes to a station, plays for a few seconds, then goes to the next station.

Press either arrow again to stop scanning.

For the AM-FM Radio, the station frequency flashes while the radio is in the scan mode.

For the AM-FM Radio, scan presets within the current selected band by pressing and holding either seek arrow for four seconds until a double beep sounds. The radio goes to a stored preset, plays for a few seconds if a strong signal is present, then goes to the next stored preset. The station frequency flashes while the radio is in the scan mode.

ℹ (Information) (XM Satellite Radio Service, MP3, and RDS Features): Press to switch the display between the radio station frequency and the time. When the ignition is in the OFF position, press ℹ to display the time. For vehicles with XM, MP3, WMA or RDS features, press ℹ to display additional text information related to the current FM-RDS or XM station; or CD, MP3 or WMA song. If information is available during XM, CD, MP3 or WMA playback, the song title information displays on the top line of the display and artist information displays on the bottom line. When information is not available, “NO INFO” displays.

Setting Preset Stations

If the radio does not have a FAV button, up to 18 stations (six FM1, six FM2, and six AM), can be programmed on the six numbered pushbuttons.
To program presets:

1. Turn the radio on.
2. Press BAND to select FM1, FM2, or AM.
3. Tune in the desired station.
4. Press and hold one of the six numbered pushbuttons for three seconds until a beep sounds. Whenever that pushbutton is pressed and released, the station that was set, returns.
5. Repeat the Steps 2 through 4 for each pushbutton.

Storing a Radio Station as a Favorite

Radios that have a FAV button store radio stations as favorites.

Drivers are encouraged to set up their radio station favorites while the vehicle is parked. Tune to favorite stations using the presets, favorites button, and steering wheel controls, if the vehicle has this feature. See *Defensive Driving on page 5-2*.

FAV (Favorites): If the vehicle has a FAV button, a maximum of 36 stations can be programmed as favorites using the six softkeys below the radio station frequency tabs and by using the FAV button. Press the FAV button to go through up to six pages of favorites, each having six favorite stations available per page. Each page of favorites can contain any combination of AM, FM, or XM, if equipped, stations.

The balance/fade and tone settings that were previously adjusted, are stored with the favorite stations.

To store a station as a favorite:

1. Tune to the desired radio station.
2. Press the FAV button to display the page where the station will be stored.
3. Press and hold one of the six softkeys until a beep sounds. When that softkey is pressed and released, the station that was set, returns.
4. Repeat the steps for each softkey radio station to store as a favorite.

The number of favorites pages can be setup using the MENU button. To setup the number of favorites pages:

1. Press the MENU button to display the radio setup menu.
2. Press the softkey located below the FAV 1-6 tab.
3. Select the desired number of favorites pages by pressing the softkey located below the displayed page numbers.
4. Press the FAV button, or let the menu time out, to return to the original main radio screen showing the radio station frequency tabs and to begin the process of programming favorites for the chosen amount of numbered pages.

Setting the Tone (Bass/Treble) (AM-FM Radio)

Bass/Treble: To adjust the bass or treble, press the tune knob or the EQ button until the desired tone control tab displays. Turn the tune knob clockwise or counterclockwise to increase or decrease the setting. The display shows the current bass or treble level. If a station's frequency is weak, or if there is static, decrease the treble.

Setting the Tone (Bass/Midrange/Treble) (All Except AM-FM Radio)

BASS/MID/TREB (Bass, Midrange, or Treble): To adjust bass, midrange, or treble:

1. Press the ♫ knob until the tone control tabs display.
2. Highlight the desired tone control tab by doing one of the following:
   - Pressing the ♫ knob.
   - Press the softkey under the desired tab.
3. Adjust the setting by doing one of the following:
   - Turn the ♫ knob clockwise or counterclockwise.
   - Press the ⊳| SEEK, or |⊲ SEEK button.
   - Press the ▷▷ FWD, or ◁◁ REV button.

If a station's frequency is weak or if there is static, decrease the treble.

To quickly adjust bass, midrange, or treble to the middle position, press the softkey positioned under the BASS, MID, or TREB tab for more than two seconds. A beep sounds and the level adjusts to the middle position.

To quickly adjust all tone and speaker controls to the middle position, press the ♫ knob for more than two seconds until a beep sounds.

EQ (Equalization): Press this button to choose bass and treble equalization settings designed for different types of music. The choices are pop, rock, country, talk, jazz, and classical. Selecting MANUAL or changing bass or treble, returns the EQ to the manual bass and treble settings.

Unique EQ settings can be saved for each source.

If the radio has a Bose® audio system, the EQ settings are either MANUAL or TALK.

Adjusting the Speakers (Balance/Fade)

BAL/FADE (Balance/Fade): To adjust balance or fade on radios without a button, press the knob until the speaker control tabs display. Continue pressing to highlight the desired tab, or press the softkey under the desired tab. Turn the knob clockwise or counterclockwise to adjust the highlighted setting, or adjust the highlighted setting by pressing either SEEK arrow, FWD, or REV button until the desired levels are obtained.

To quickly adjust balance or fade to the middle position, press the softkey positioned under the BAL or FADE tab for more than two seconds. A beep sounds and the level adjusts to the middle position.

To quickly adjust all speaker and tone controls to the middle position, press the knob for more than two seconds.

If the Rear Seat Audio (RSA) is turned on, the radio disables FADE and mutes the rear speakers.

(Balance/Fade): To adjust the balance or fade for radios with a button, press this button or the tune knob until the desired speaker control tab displays. Turn the tune knob clockwise or counterclockwise to adjust the setting.

The setting can also be adjusted by pressing the seek arrows.

Finding a Category (CAT) Station

CAT (Category): The CAT button is used to find XM stations when the radio is in the XM mode. To find XM channels within a desired category:

1. Press the BAND button until the XM frequency displays. Press the CAT button to display the category tabs. Continue pressing the CAT button until the desired category name displays.
   - Radios with CD and DVD can also navigate the category list by pressing the FWD or the REV button.
2. Press either of the two buttons below the desired category tab to immediately tune to the first XM station associated with that category.
3. Turn the knob, press the buttons below the right or left arrows displayed, or press either SEEK arrow to go to the previous or to the next XM station within the selected category.
4. To exit the category search mode, press the FAV button or BAND button to display the favorites again.

Undesired XM categories can be removed through the setup menu. To remove an undesired category:

1. Press the MENU button to display the radio setup menu.
2. Press the softkey located below the XM CAT tab.
3. Turn the ♫ knob to display the category to be removed.
4. Press the softkey located under the Remove tab until the category name along with the word Removed displays.
5. Repeat the steps to remove more categories.

Removed categories can be restored by pressing the softkey under the Add tab when a removed category is displayed or by pressing the softkey under the Restore All tab.

Categories cannot be removed or added while the vehicle is moving faster than 5 mph (8 km/h).

Radio Messages

Calibration Error: The audio system has been calibrated for the vehicle from the factory. If Calibration Error displays, it means that the radio has not been configured properly for the vehicle and it must be returned to your dealer for service.

Locked or Loc: One of these messages will display when the THEFTLOCK® system has locked up the radio. Take the vehicle to your dealer for service.

If any error occurs repeatedly or if an error cannot be corrected, contact your dealer.

XM™ Satellite Radio Service

XM is a satellite radio service that is based in the 48 contiguous United States and 10 Canadian provinces. XM Satellite Radio has a wide variety of programming and commercial-free music, coast-to-coast, and in digital-quality sound. A service fee is required to receive the XM service. For more information, contact XM at www.xmradio.com or call 1-800-929-2100 in the U.S. and www.xmradio.ca or call 1-877-438-9677 in Canada.

Radio Messages for XM Only

See *XM Radio Messages on page 4-123* later in this section for further detail.

Care of the CD and DVD Player

Do not add any label to a CD. It could get caught in the CD or DVD player. If a CD is recorded on a personal computer and a description label is needed, try labeling the top of the recorded CD with a marking pen.

The use of CD lens cleaners for CDs is not advised, due to the risk of contaminating the lens of the CD optics with lubricants internal to the CD and DVD player mechanism.

Notice: **If a label is added to a CD, or more than one CD is inserted into the slot at a time, or an attempt is made to play scratched or damaged CDs, the CD player could be damaged. While using the CD player, use only CDs in good condition without any label, load one CD at a time, and keep the CD player and the loading slot free of foreign materials, liquids, and debris.**

If an error displays, see “CD Messages” later in this section.

Care of CDs and DVDs

If playing a CD-R, the sound quality can be reduced due to CD-R or CD-RW quality, the method of recording, the quality of the music that has been recorded, and the way the CD-R or CD-RW has been handled. Handle them carefully. Store CD-R(s) or CD-RW(s) in their original cases or other protective cases and away from direct sunlight and dust. The CD or DVD player scans the bottom surface of the disc. If the surface of a CD or DVD is damaged, such as cracked, broken, or scratched, the CD or DVD does not play properly or not at all. Do not touch the bottom side of a CD or DVD while handling it; this could damage the surface. Pick up CDs by grasping the outer edges or the edge of the hole and the outer edge.

If the surface of a CD or DVD is soiled, clean it with a soft, lint free cloth or dampen a clean, soft cloth in a mild, neutral detergent solution mixed with water. Make sure the wiping process starts from the center to the edge.

Inserting a CD (Single CD Player)

Insert a CD partway into the slot, label side up. The player pulls it in and the CD should begin playing.

Inserting a CD(s) (Six-Disc CD Player)

LOAD ▽ : Press to load CDs into the CD player. This CD player holds up to six CDs.

To insert one CD:

1. Press and release the ▽ button.
2. Wait for the message to insert the disc.
3. Load a CD. Insert the CD partway into the slot, label side up. The player pulls the CD in.

To insert multiple CDs:

1. Press and hold the ▽ button for two seconds. A beep sounds and Load All Discs displays.
2. Follow the displayed instruction on when to insert the discs. The CD player takes up to six CDs.
3. Press the ▽ button again to cancel loading more CDs.

Insert a CD partway into the slot, label side up. The player pulls it in and the CD should begin playing. To insert a CD with the ignition off, first press the ⏏ button or the DISP knob.

If the ignition or radio is turned off with a CD in the player it stays in the player. When the ignition or radio is turned on, the CD starts to play where it stopped, if it was the last selected audio source.

When the CD is inserted, the CD symbol displays. As each new track starts to play, the track number displays.

The CD player can play the smaller 3 inch (8 cm) single CDs with an adapter ring. Full-size CDs and the smaller CDs are loaded in the same manner.

Ejecting a Disc

⏏ EJECT or CD (Eject): Press and release to eject the disc that is currently playing. A CD ejecting from a radio with CD/MP3/DVD and USB, ejects from the bottom slot. A beep sounds and Ejecting Disc displays. Once the disc is ejected, Remove Disc displays. The disc can be removed. If the disc is not removed, after several seconds, the disc automatically pulls back into the player.

⏏ DVD (Eject): Press and release to eject the disc that is currently playing in the top slot. A beep sounds and Ejecting Disc displays.

If loading and reading of a disc cannot be completed, such as unknown format, etc., and the disc fails to eject, press and hold for more than five seconds to force the disc to eject.

Playing a CD (In Either the DVD or CD Slot)

Insert a CD partway into the slot, label side up. The player pulls it in and the CD should begin playing (loading a disc into the system, depending on media type and format ranges from 5 to 20 seconds for a CD, and up to 30 seconds for a DVD to begin playing).

If the ignition or radio is turned off, with a CD in the player, it stays in the player. When the ignition or radio is turned on, the CD starts playing where it stopped, if it was the last selected audio source. The CD is controlled by the buttons on the radio faceplate or by the RSA unit. See *Rear Seat Audio (RSA) on page 4-145* for more information. The DVD/CD decks, (upper slot is the DVD deck and the lower slot is the CD deck) of the radio are compatible with most audio CDs, CD-R, CD-RW, and MP3s.

When a CD is inserted, the text tab DVD or CD symbol displays on the left side of the radio display. As each new track starts to play, the track number displays.

The CD player can play the smaller 3 inch (8 cm) single CDs with an adapter ring. Full-size CDs and the smaller CDs are loaded in the same manner.

⏏ **EJECT or CD (Eject):** Press and release to eject the disc that is currently playing. A CD ejecting from a radio with CD and DVD, ejects from the bottom slot. A beep sounds and Ejecting Disc displays. Once the disc is ejected, Remove Disc displays. The disc can be removed. If the disc is not removed, after several seconds, the disc automatically pulls back into the player.

For the Six-Disc CD player, press and hold for two seconds to eject all discs.

⏏ **DVD (Eject):** Press and release to eject the disc that is currently playing in the top slot. A beep sounds and Ejecting Disc displays.

If loading and reading of a disc cannot be completed, such as with an unknown format error, etc., and the disc fails to eject, press and hold for more than five seconds to force the disc to eject.

♫ **(Tune):** Turn to select tracks on the CD that is currently playing.

⏮ **SEEK** ⏭ **:** Press the left arrow to go to the start of the current track, if more than ten seconds on the CD have played. Press the right arrow to go to the next track.

For Radios with CD and DVD, Press the left arrow to go to the start of the current track, if more than five seconds on the CD have played. If less than five seconds on the CD have played, the previous track plays. Press the right arrow to go to the next track.

If either arrow is held, or pressed multiple times, the player continues moving backward or forward through the tracks on the CD.

◁◁ **REV (Fast Reverse):** Press and hold to reverse playback quickly within a track. Sound will be heard at a reduced volume. Release to resume playing the track. The elapsed time of the track displays.

▷▷ **FWD (Fast Forward):** Press and hold to advance playback quickly within a track. Sound will be heard at a reduced volume. Release to resume playing the track. The elapsed time of the track displays.

RDM (Random): With the random setting, the tracks can be listened to in random, rather than sequential order. To use random, do one of the following:

For the AM-FM Radio with CD:

1. Press the RDM button to play tracks from the CD in random order. The random icon displays.
2. Press the RDM button again to turn off random play. The random icon disappears from the display.

For the Radio with CD (MP3), Radio with USB and CD (MP3), and the Radio with USB, CD and DVD (MP3):

1. Press the CD/AUX or DVD/CD AUX button when not sourced to the CD, or insert a disc partway into the slot of the CD player. A RDM tab displays.
2. Press the softkey positioned under the RDM tab until Random Current Disc displays.
3. Press the softkey again to turn off random play.

For the Radio with USB and Six-Disc CD (MP3):

1. Press the CD/AUX button when not sourced to the CD, or press and hold the ▽ button. A beep sounds and Load All Discs displays. Insert one or more discs partway into the slot of the CD player.
2. Press the softkey positioned under the RDM tab until Randomize All Discs displays to play tracks from all CDs loaded in random order.
3. Press the softkey positioned under the RDM tab until Random Current Disc displays to play tracks from a single CD in random order.
4. Press the same softkey again to turn off random play.

RPT (Repeat): For the AM-FM Radio with CD, press and release the RPT button to repeat the current track. An arrow symbol displays. Press RPT again to turn off repeat play.

BAND: Press to listen to the radio when a CD is playing. The CD remains inside the radio for future listening.

For the radio with CD and DVD, press to listen to the radio when a CD or DVD is playing. The CD or DVD remains inside the radio for future listening or for viewing entertainment.

CD/AUX (CD/Auxiliary): Press to play a CD when listening to the radio. The CD icon and a message showing the disc and/or track number displays when a CD is in the player. Press again and the system automatically searches for an auxiliary input device, such as a portable audio player. If a portable audio player is not connected, “No Input Device Found” displays.

DVD/CD AUX (Auxiliary): Press this button to cycle through DVD, CD, or Auxiliary when listening to the radio. The DVD/CD text tab and a message showing the track or chapter number displays when a disc is in either slot. Press this button again and the system automatically searches for an auxiliary input device, such as a portable audio player. If a portable audio player is not connected, “No Aux Input Device” displays. If a disc is in both the DVD slot and the CD slot the DVD/CD AUX button cycles between the two sources and does not indicate “No Aux Input Device”. If a front auxiliary device is connected, the DVD/CD AUX button cycles through all available options, such as: DVD slot, CD slot, Front Auxiliary, and Rear Auxiliary (if available). See “Using the Auxiliary Input Jack(s)” later in this section, or “Audio/Video (A/V) Jacks” under, *Rear Seat Entertainment (RSE) System on page 4-136* for more information.

If a disc is inserted into top DVD slot, the rear seat operator can turn on the video screen and use the remote control to navigate the CD (tracks only) through the remote control.

Radios with CD and DVD Audio Output

Only one audio source can be heard through the speakers at one time. An audio source is defined as DVD slot, CD slot, XM, FM/AM, Front Auxiliary Jack, or Rear Auxiliary Jack.

Press the ⏻ button to turn the radio on. The radio can be heard through all of the vehicle speakers.

Front seat passengers can listen to the radio (AM, FM, or XM) by pressing the BAND button or the DVD/CD AUX button to select CD slot, DVD slot, front or rear auxiliary input (if available).

If a playback device is plugged into the radio's front auxiliary input jack or the rear auxiliary jack, the front seat passengers are able to listen to playback from this source through the vehicle speakers. See "Using the Auxiliary Input Jack(s)" later in this section, or "Audio/Video (A/V) Jacks" under, *Rear Seat Entertainment (RSE) System on page 4-136* for more information.

In some vehicles, depending on audio options, the rear speakers can be muted when the RSA power is turned on. See *Rear Seat Audio (RSA) on page 4-145* for more information.

Playing an MP3 CD-R or CD-RW Disc

The Radio with CD (MP3), Radio with USB and CD (MP3), and Radio with USB and Six-Disc CD (MP3) have the capability of playing an MP3 CD-R or CD-RW disc. For more information on how to play an MP3 CD-R or CD-RW disc, see *Using an MP3 (Radios with CD) on page 4-109* or *Using an MP3 (Radios with CD and DVD) on page 4-116* for more information.

Playing an MP3/WMA CD-R or CD-RW Disc

Radios with CD and DVD has the capability of playing an MP3/WMA CD-R or CD-RW disc. For more information on how to play an MP3/WMA CD-R or CD-RW disc, see *Using an MP3 (Radios with CD) on page 4-109* or *Using an MP3 (Radios with CD and DVD) on page 4-116* for more information.

CD Messages

CHECK DISC: Radios with a Single CD player or radios with a Six-Disc player displays CHECK DISC and/or ejects the CD if an error occurs.

Radios with a CD and DVD player may display other messages when an error occurs:

Optical Error: The disc was inserted upside down.

Disk Read Error: A disc was inserted with an invalid or unknown format.

Player Error: There are disc LOAD or disc EJECT problems.

- It is very hot. When the temperature returns to normal, the CD should play.
- The road is very rough. When the road becomes smoother, the CD should play.
- The CD is dirty, scratched, wet, or upside down.
- The air is very humid. If so, wait about an hour and try again.
- There could have been a problem while burning the CD.
- The label could be caught in the CD player.

If the CD is not playing correctly, for any other reason, try a known good CD.

If any error occurs repeatedly or if an error cannot be corrected, contact your dealer. If the radio displays an error message, write it down and provide it to your dealer when reporting the problem.

Using the DVD Player

The DVD player is controlled by the buttons on the remote control, or by the RSA system, or by the buttons on the radio faceplate. See “Remote Control”, under *Rear Seat Entertainment (RSE) System on page 4-136* and *Rear Seat Audio (RSA) on page 4-145* for more information.

The DVD player is only compatible with DVDs of the appropriate region code that is printed on the jacket of most DVDs.

The DVD slot of the radio is compatible with most audio CDs, CD-R, CD-RW, DVD-Video, DVD-Audio, DVD-R/RW, DVD+R/RW media along with MP3 and WMA formats.

If an error message displays on the video screen or the radio, see “DVD Display Error Messages” under, *Rear Seat Entertainment (RSE) System on page 4-136* and “DVD Radio Error Messages” in this section for more information.

Playing a DVD

DVD/CD AUX (Auxiliary): Press this button to cycle through DVD, CD, or Auxiliary when listening to the radio. The DVD/CD text tab and a message showing track or chapter number displays when a disc is in either slot. Press this button again and the system automatically searches for an auxiliary input device, such as a portable audio player. If a portable audio player is not connected, “No Aux Input Device” displays. If a disc is in both the DVD slot and the CD slot the DVD/CD AUX button cycles between the two sources and not indicate “No Aux Input Device”. If a front auxiliary device is connected, the DVD/CD AUX button cycles through all available options, such as: DVD slot, CD slot, Front Auxiliary, and Rear Auxiliary (if available). See “Using the Auxiliary Input Jack(s)” later in this section, or “Audio/Video (A/V) Jacks” under, *Rear Seat Entertainment (RSE) System on page 4-136* for more information.

⏻ **(Power):** Press to turn the radio on or off. Turn this knob clockwise or counterclockwise to increase or decrease the volume. Press and hold for more than two seconds to turn off the entire radio and Rear Seat Entertainment (RSE) system and to start the parental control feature. Parental control prevents the rear seat occupant from operating the Rear Seat Audio (RSA) system or remote control.

A lock symbol displays next to the clock display. The parental control feature remains on until the knob is pressed and held for more than two seconds again, or until the driver turns the ignition off and exits the vehicle.

♫ **(Tune):** Turn to change tracks on a CD or DVD, to manually tune a radio station, or to change clock or date settings, while in the clock or date setting mode. See the information given earlier in this section specific to the radio, CD, and the DVD. Also, see “Setting the Time” in the index, for setting the clock and date.

⏮ **SEEK (Previous Track/Chapter):** Press the left arrow to return to the start of the current track or chapter. Press the left arrow again to go to the previous track or chapter. This button might not work when the DVD is playing the copyright information or the previews.

SEEK ⊳| (Next Track/Chapter): Press the right arrow to go to the next track or chapter. This button might not work when the DVD is playing the copyright information or the previews.

◁◁ REV (Fast Reverse): Press to quickly reverse the CD or DVD at five times the normal speed. The radio displays the elapsed time while in fast reverse. To stop fast reversing, press again. This button might not work when the DVD is playing the copyright information or the previews.

▷▷ FWD (Fast Forward): Press to fast forward the CD or DVD. The radio displays the elapsed time and fast forwards five times the normal speed. To stop fast forwarding, press again. This button might not work when the DVD is playing the copyright information or the previews.

⏏ (Eject): Press to eject a CD or DVD. If a CD or DVD is ejected, but not removed, the player automatically pulls it back in after 15 seconds.

If loading and reading of a CD cannot be completed, because of an unknown format, etc., and the disc fails to eject, press and hold for more than five seconds to force the disc to eject.

DVD-V (Video) Display Buttons

Once a DVD-V is inserted, the radio display menu shows several tag options for DVD playing. Press the softkey located under any desired tag option during DVD playback. See the tag options listed after, for more information.

The rear seat passenger can navigate the DVD-V menus and controls through the remote control. See “Remote Control”, under *Rear Seat Entertainment (RSE) System on page 4-136* for more information. The Video Screen automatically turns on when the DVD-V is inserted into the DVD slot.

▶ / ❚❚ (Play/Pause): Press either the play or pause icon displayed on the radio system, to toggle between pausing or restarting playback of a DVD. If the forward arrow is showing on display, the system is in pause mode. If the pause icon is showing on display, the system is in playback mode. If the DVD screen is off, press the play button to turn the screen on.

Some DVDs begin playing after the previews have finished, although there could be a delay of up to 30 seconds. If the DVD does not begin playing the movie automatically, press the softkey located under the play/pause symbol tag displayed on the radio. If the DVD still does not play, refer to the on-screen instructions, if available.

■ **(Stop):** Press to stop playing, rewinding, or fast forwarding a DVD.

◄┘ **(Enter):** Press to select the choices that are highlighted in any menu.

▤ **(Menu):** Press to access the DVD menu. The DVD menu is different on every DVD. Use the softkeys located under the navigation arrows to navigate the cursor through the DVD menu. After making a selection press this button. This button only operates when using a DVD.

Nav (Navigate): Press to display directional arrows for navigating through the menus.

↶● **(Return):** Press to exit the current active menu and return to the previous menu. This button operates only when a DVD is playing and a menu is active.

DVD-A (Audio) Display Buttons

Once a DVD-A is inserted, radio display menu shows several tag options for DVD playing. Press the softkeys located under any desired tag option during DVD playback. See the tag options listed after, for more information.

The rear seat operator can navigate the DVD-A menus and controls through the remote control. See “Remote Control”, under *Rear Seat Entertainment (RSE) System on page 4-136* for more information. The Video Screen does not automatically power on when the DVD-A is inserted into the DVD slot. It must be manually turned on by the rear seat occupant through the remote control power button.

▶ / ❚❚ **(Play/Pause):** Press either the play or pause icon displayed on the radio system, to toggle between pausing or restarting playback of a DVD. If the forward arrow is showing on the display, the system is in pause mode. If the pause icon is showing on the display, the system is in playback mode.

◀ **Group** ▶ **:** Press to cycle through musical groupings on the DVD-A disc.

Nav (Navigate): Press to display directional arrows for navigating through the menus.

♪ **(Audio Stream):** Press to cycle through audio stream formats located on the DVD-A disc. The video screen shows the audio stream changing.

Inserting a Disc

To play a disc, gently insert the disc, with the label side up, into the loading slot. The DVD player might not accept some paper labeled media. The player starts loading the disc into the system and show “Loading Disc” on the radio display. At the same time, the radio displays a softkey menu of option(s). Some discs automatically play the movie while others default to the softkey menu display, which requires the Play, Enter, or Navigation softkeys to be pressed; either by softkey or by the rear seat passenger using the remote control.

Loading a disc into the system, depending on media type and format, ranges from 5 to 20 seconds for a CD, and up to 30 seconds for a DVD.

Stopping and Resuming Playback

To stop playing a DVD without turning off the system, press the ■ button on the remote control, or press the softkey located under the stop or the play/pause symbol tags displayed on the radio. If the radio head is sourced to something other than DVD-V, press the DVD/CD AUX button to make DVD-V the active source.

To resume DVD playback, press the ▶ / ❚❚ button on the remote control, or press the softkey located under the play/pause symbol tag displayed on the radio. The DVD should resume play from where it last stopped if the disc has not been ejected and the stop button has not been pressed twice on the remote control. If the disc has been ejected or the stop button has been pressed twice on the remote control, the disc resumes playing at the beginning of the disc.

Ejecting a Disc

Press the ⏏ button on the radio to eject the disc. If a disc is ejected from the radio, but not removed, the radio reloads the disc after a short period of time. The disc is stored in the radio. The radio does not resume play of the disc automatically. If the RSA system is sourced to the DVD, the movie when reloaded into the DVD player begins to play again. In case loading and reading of a DVD or CD cannot be completed (unknown format, etc.), and the disc fails to eject, press and hold the DVD ⏏ button more than five seconds to force the disc to eject.

DVD Radio Error Messages

Player Error: This message displays when there are disc load or eject problems.

Disc Format Error: This message displays, if the disc is inserted with the disc label wrong side up, or if the disc is damaged.

Disc Region Error: This message displays, if the disc is not from a correct region.

No Disc Inserted: This message displays, if no disc is present when the ⏏ or DVD/CD AUX button is pressed on the radio.

Using the Auxiliary Input Jack

The radio system has an auxiliary input jack located on the lower right side of the faceplate. This is not an audio output; do not plug the headphone set into the front auxiliary input jack. An external audio device such as an iPod, laptop computer, MP3 player, CD player, etc. can be connected to the auxiliary input jack for use as another source for audio listening.

Drivers are encouraged to set up any auxiliary device while the vehicle is in P (Park). See *Defensive Driving on page 5-2* for more information on driver distraction.

To use a portable audio player, connect a 3.5 mm (1/8 in) cable to the radio's front auxiliary input jack. When a device is connected, press the radio CD/AUX button to begin playing audio from the device over the vehicle speakers.

For optimal sound quality, increase the portable audio device's volume to the loudest level.

It is always best to power the portable audio device through its own battery while playing.

⏻ **(Power/Volume):** Turn clockwise or counterclockwise to increase or decrease the volume of the portable player. Additional volume adjustments might have to be made from the portable device if the volume is not loud or soft enough.

BAND: Press to listen to the radio when a portable audio device is playing. The portable audio device continues playing.

CD/AUX (CD/Auxiliary): Press to play a CD when a portable audio device is playing. Press again and the system begins playing audio from the connected portable audio player. If a portable audio player is not connected, “No Input Device Found” displays.

DVD/CD AUX (CD/Auxiliary): Press to cycle through DVD, CD, or Auxiliary when listening to the radio. The DVD/CD text tab and a message showing track or chapter number displays when a disc is in either slot. Press again and the system automatically searches for an auxiliary input device, such as a portable audio player. If a portable audio player is not connected, “No Aux Input Device” displays. If a disc is in both the DVD slot and the CD slot the DVD/CD AUX button cycles between the two sources and not indicate “No Aux Input Device”. If a front auxiliary device is connected, the DVD/CD AUX button cycles through all available options, such as: DVD slot, CD slot, Front Auxiliary, and Rear Auxiliary (if available). See “Using the Auxiliary Input Jack(s)” later in this section, or “Audio/Video (A/V) Jacks” under, *Rear Seat Entertainment (RSE) System on page 4-136* for more information.

Using the USB Port

Radios with a USB port can control a USB storage device or an iPod® using the radio buttons and knobs. See *Using an MP3 (Radios with CD) on page 4-109* or *Using an MP3 (Radios with CD and DVD) on page 4-116* for information about how to connect and control a USB storage device or an iPod.

USB Support

The USB connector is located on the dashboard or in the center console, and uses the USB 2.0 standard.

USB Supported Devices

- USB Flash Drives
- Portable USB Hard Drives
- Fifth generation or later iPod
- iPod nanos
- iPod touch
- iPod classic

Not all iPods and USB Drives are compatible with the USB port.

Make sure the iPod has the latest firmware from Apple® for proper operation. iPod firmware can be updated using the latest iTunes® application. See www.apple.com/itunes.

For help with identifying your iPod, go to www.apple.com/support.

Using an MP3 (Radios with CD)

Format

Radios that have the capability of playing MP3s can play .mp3 or .wma files that were recorded onto a CD-R or CD-RW disc. The files can be recorded with the following fixed bit rates: 32 kbps, 40 kbps, 56 kbps, 64 kbps, 80 kbps, 96 kbps, 112 kbps, 128 kbps, 160 kbps, 192 kbps, 224 kbps, 256 kbps, and 320 kbps or a variable bit rate.

Radios that have a USB port can play .mp3 and .wma files that are stored on a USB storage device as well as AAC files that are stored on an iPod®.

Compressed Audio or Mixed Mode Discs

The radio can play discs that contain both uncompressed CD audio and MP3 files. If both formats are on the disc, the radio reads all MP3 files first, then the uncompressed CD audio files.

CD-R or CD-RW Supported File and Folder Structure

The radio supports:

- Up to 50 folders.
- Up to 8 folders in depth.
- Up to 50 playlists.
- Up to 255 files.
- Playlists with an .m3u or .wpl extension.
- Files with an .mp3, .wma, or .cda file extension.

USB Supported File and Folder Structure

The radio supports:

- Up to 700 folders.
- Up to 8 folders in depth.
- Up to 65,535 files.
- Folder and file names up to 64 bytes.
- Files with an .mp3 or .wma file extension.
- AAC files stored on an iPod.
- FAT16
- FAT32

Root Directory

The root directory is treated as a folder. Files are stored in the root directory when the disc or storage device does not contain folders. Files accessed from the root directory of a CD display as F1 ROOT.

Empty Folder

Folders that do not contain files are skipped, and the player advances to the next folder that contains files.

Order of Play

Compressed audio files are accessed in the following order:

- Playlists (Px).
- Files stored in the root directory.
- Files stored in folders in the root directory.

Tracks are played in the following order:

- Play begins from the first track in the first playlist and continues sequentially through all tracks in each playlist. When the last track of the last playlist has played, play continues from the first track of the first playlist.
- Play begins from the first track in the first folder and continues sequentially through all tracks in each folder. When the last track of the last folder has played, play continues from the first track of the first folder.

File System and Naming

The song name that displays is the song name that is contained in the ID3 tag. If the song name is not present in the ID3 tag, then the radio displays the file name without the extension (such as .mp3) as the track name.

Track names longer than 32 characters or four pages are shortened. The display does not show parts of words on the last page of text and the extension of the filename is not displayed.

Preprogrammed Playlists

CDs that have preprogrammed playlists that were created using WinAmp™, MusicMatch™, or Real Jukebox™ software can be accessed, however, there is no playlist editing capability using the radio. These playlists are treated as special folders containing compressed audio song files.

Playlists that have an .m3u or .pls file extension and are stored on a USB device may be supported by the radio with a USB port.

Playlists can be changed by using the < (previous) and > (next) folder buttons, the ♫ knob, or the SEEK arrows. MP3 CD-R or CD-RW that have been recorded without using file folders can be played. If a CD-R or CD-RW contains more than the maximum of 50 folders, 15 playlists, and 512 folders and files, the player allows access and navigates up to the maximum, but all items over the maximum are not accessible.

Playing a CD-R or CD-RW MP3

♫ (Tune): Turn to select MP3 files on the CD currently playing.

SEEK: Press to go to the start of the track, if more than ten seconds have played. Press and hold or press multiple times to continue moving backward through tracks.

SEEK: Press to go to the next track. Press and hold or press multiple times to continue moving forward through tracks.

REV (Reverse): Press and hold to reverse playback quickly. Sound is heard at a reduced volume and the elapsed time of the file displays. Release REV to resume playing.

FWD (Fast Forward): Press and hold to advance playback quickly. Sound is heard at a reduced volume and the elapsed time of the file displays. Release FWD to resume playing. The elapsed time of the file displays.

< (Previous Folder): Press the softkey below < to go to the first track in the previous folder.

> (Next Folder): Press the softkey below > to go to the first track in the next folder.

RDM (Random): MP3 files on the CD-R or CD-RW can be listened to in random, rather than sequential order, on one CD-R or CD-RW or all discs in a six-disc CD player. To use random, press the softkey under the RDM tab until Random Current Disc or Randomize All Discs displays to play songs from the current CD or all CDs in random order. Press the same softkey again to turn off random play.

(Music Navigator): Press the softkey below to have the files played in order by artist or album. The player scans the disc to sort the files by artist and album ID3 tag information. It can take several minutes to scan the disc depending on the number of files on the disc. The radio may begin playing while it is scanning in the background.

When the scan is finished, the disc begins playing files in order by artist. The current artist playing is shown on the second line of the display. Once all songs by that artist are played, the player moves to the next artist in alphabetical order and begins playing files by that artist.

To listen to files by another artist, press the softkey located below either arrow tab. The disc goes to the next or previous artist in alphabetical order. Continue pressing either softkey below the arrow tab until the desired artist displays.

To change from playback by artist to playback by album:

1. Press the softkey located below the Sort By tab.
2. Press one of the softkeys below the album tab from the sort screen.
3. Press the softkey below the back tab to return to the main music navigator screen.

The album name displays on the second line between the arrows and songs from the current album begins to play. Once all songs from that album have played, the player moves to the next album in alphabetical order on the CD and begins playing MP3 files from that album.

To exit music navigator mode, press the softkey below the Back tab to return to normal MP3 playback.

Connecting a USB Storage Device or iPod®

The USB Port can be used to control an iPod or a USB storage device.

To connect a USB storage device, connect the device to the USB port located in the center console or on the instrument panel.

To connect an iPod, connect one end of the USB cable that came with the iPod to the iPod's dock connector and connect the other end to the USB port located in the center console or on the instrument panel. If the vehicle is on and the USB connection works, "OK to disconnect" and a GM logo may appear on the iPod and iPod appears on the radio display. The iPod music appears on the radio's display and begins playing.

The iPod charges while it is connected to the vehicle if the vehicle is in the ACC/ACCESSORY or ON/RUN position. When the vehicle is turned off, the iPod automatically powers off and will not charge or draw power from the vehicle's battery.

If you have an older iPod model that is not supported, it can still be used by connecting it to the Auxiliary Input Jack using a standard 3.5 mm (1/8 in) stereo cable. See "Using the Auxiliary Input Jack" earlier for more information.

Using the Radio to Control a USB Storage Device or iPod

The radio can control a USB storage device or an iPod using the radio buttons and knobs and display song information on the radio's display.

♫ **(Tune):** Turn to select files.

⏮ **SEEK:** Press to go to the start of the track, if more than ten seconds have played. Press and hold or press multiple times to continue moving backward through tracks.

⏭ **SEEK:** Press to go to the next track. Press and hold or press multiple times to continue moving forward through tracks.

◁◁ **REV (Reverse):** Press and hold to reverse playback quickly. Sound is heard at a reduced volume. Release ◁◁ REV to resume playing. The elapsed time of the file displays.

▷▷ **FWD (Fast Forward):** Press and hold to advance playback quickly. Sound is heard at a reduced volume. Release ▷▷ FWD to resume playing. The elapsed time of the file displays.

i (Information): Press to display additional information about the selected track.

Using Softkeys to Control a USB Storage Device or iPod

The five softkeys below the radio display are used to control the functions listed below.

To use the softkeys:

1. Press the first or fifth softkey below the radio display to display the functions listed below, or press the softkey below the function if it is currently displayed.
2. Press the softkey below the tab with the function on it to use that function.

❚❚ (Pause): Press the softkey below ❚❚ to pause the track. The tab appears raised when pause is being used. Press the softkey below ❚❚ again to resume playback.

Back: Press the softkey below the back tab to go back to the main display screen on an iPod, or the root directory on a USB storage device.

(Folder View): Press the softkey below to view the contents of the current folder on the USB drive. To browse and select files:

1. Press the softkey below .
2. Turn to scroll through the list of folders.
3. Press to select the desired folder. If there is more then one folder, repeat Steps 1 and 2 until the desired folder is reached.
4. Turn to scroll through the files in the selected folder.
5. Press to select the desired file to be played.

To skip through large lists, the five softkeys can be used to navigate in the following order:

- First softkey, first item in the list.
- Second softkey, 1% through the list each time the softkey is pressed.
- Third softkey, 5% through the list each time the softkey is pressed.
- Fourth softkey, 10% through the list each time the softkey is pressed.
- Fifth softkey, end of the list.

(Music Navigator): Press the softkey below to view and select a file on an iPod, using the iPod's menu system. Files are sorted by:

- Playlists
- Artists
- Albums
- Genres
- Songs
- Composers

To select files:

1. Press the softkey below .
2. Turn to scroll through the list of menus.
3. Press to select the desired menu.
4. Turn to scroll through the folders or files in the selected menu.
5. Press to select the desired file to be played.

To skip through large lists, the five softkeys can be used to navigate in the following order:

- First softkey, first item in the list.
- Second softkey, 1% through the list each time the softkey is pressed.
- Third softkey, 5% through the list each time the softkey is pressed.
- Fourth softkey, 10% through the list each time the softkey is pressed.
- Fifth softkey, end of the list.

Repeat Functionality

To use Repeat:

Press the softkey below 🔁 or 🔁1 to select between Repeat All and Repeat Track.

🔁 **(Repeat All):** Press the softkey below 🔁 to repeat all tracks. The tab appears lowered when Repeat All is being used. This is the default mode when a USB storage device or iPod is first connected.

🔁1 **(Repeat Track):** Press the softkey below 🔁1 to repeat one track. The tab appears raised when Repeat Track is being used.

Shuffle Functionality

To use Shuffle:

Press the softkey below ⇉, 🔀S, 🔀A or 🔀F to select between Shuffle Off, Shuffle All Songs/Shuffle Songs, Shuffle Album, or Shuffle Folder.

⇉ **(Shuffle Off):** Press the softkey below 🔀S to turn shuffle off. This is the default mode when a USB storage device or iPod is first connected.

🔀S **(Shuffle All Songs / Shuffle Songs):** Press the softkey below 🔀F or 🔀A to shuffle all songs on the USB storage device or iPod.

🔀A **(Shuffle Album):** Press the softkey below ⇉ to shuffle all songs in the current album on an iPod.

🔀F **(Shuffle Folder):** Press the softkey below ⇉ to shuffle all songs in the current folder on a USB storage device.

Using an MP3 (Radios with CD and DVD)

Format

The radio can play .mp3 or .wma files that were recorded onto a CD-R or CD-RW disc.

The USB port can play .mp3 and .wma files that are stored on a USB storage device as well as AAC files that are stored on an iPod®.

Compressed Audio or Mixed Mode Discs

The radio plays discs that contain both uncompressed CD audio and MP3/WMA files depending on which slot the disc is loaded into.

The DVD Player only reads uncompressed audio and ignores MP3/WMA files on a mixed mode disc.

The CD Player reads both uncompressed audio and MP3/WMA files on a mixed mode disc. Uncompressd audio is played before MP3/WMA files. Press the CAT (category) button to toggle between uncompressed audio and MP3/WMA files.

CD-R or CD-RW Supported File and Folder Structure

The DVD Player supports:

- Up to 255 folders.
- Up to 8 folders in depth.
- Up to 15 playlists.
- Up to 40 sessions.
- Playlists with an .m3u or .wpl extension.
- Files with an .mp3, .wma, or .cda file extension.

The CD Player supports:

- Up to 512 files and folders.
- Up to 8 folders in depth.
- Playlists with an .m3u or .wpl extension.
- Files with an .mp3, .wma, or .cda file extension.

USB Supported File and Folder Structure

The radio supports:

- Up to 700 folders.
- Up to 8 folders in depth.
- Up to 65,535 files.
- Folder and file names up to 64 bytes.
- Files with an .mp3 or .wma file extension.
- AAC files stored on an iPod.
- FAT16
- FAT32

Root Directory

The root directory of the disc is treated as a folder. If the root directory has compressed audio files, the directory displays as F1 ROOT on the radio.

If a disc contains both uncompressed CD audio and MP3/WMA files, a folder under the root directory called CD accesses all of the CD audio tracks on the disc.

Empty Folder

Folders that do not contain files are skipped, and the player advances to the next folder that contains files.

No Folder

When the disc contains only compressed files, the files are located under the root folder. The next and previous folder function does not function on a disc that was recorded without folders or playlists. When displaying the name of the folder the radio displays ROOT.

When the disc contains only playlists and compressed audio files, but no folders, all files are located under the root folder. The folder down and the folder up buttons search playlists first and then goes to the root folder. When the radio displays the name of the folder the radio displays ROOT.

Order of Play

Compressed audio files are accessed in the following order:

- Playlists.
- Files stored in the root directory.
- Files stored in folders in the root directory.

Tracks are played in the following order:

- Play begins from the first track in the first playlist and continues sequentially through all tracks in each playlist. When the last track of the last playlist has played, play continues from the first track of the first playlist.
- Play begins from the first track in the first folder and continues sequentially through all tracks in each folder. When the last track of the last folder has played, play continues from the first track of the first folder.

When play enters a new folder, the display does not automatically show the new folder name unless the folder mode has been chosen as the default display. The new track name displays.

File System and Naming

The song name that displays is the song name that is contained in the ID3 tag. If the song name is not present in the ID3 tag, then the radio displays the file name without the extension (such as .mp3) as the track name.

Track names longer than 32 characters or four pages are shortened. Parts of words on the last page of text and the extension of the filename does not display.

Preprogrammed Playlists

Preprogrammed playlists that were created using WinAmp™, MusicMatch™, or Real Jukebox™ software can be accessed, however, they cannot be edited using the radio. These playlists are treated as special folders containing compressed audio song files.

Playlists that have an .m3u or .pls file extension and are stored on a USB device may be supported by the radio with a USB port.

Playing an MP3/WMA File From a Disc (In Either the DVD or CD Slot)

If a disc is inserted into the top DVD slot, the rear seat operator can turn on the video screen and use the remote control to navigate the CD (tracks only).

(Tune): Turn to select MP3/WMA files.

SEEK: Press to go to the start of the track, if less than five seconds have played. Press and hold or press multiple times, if more than five seconds have played, to continue moving backward through tracks.

SEEK: Press to go to the next track. Press and hold or press multiple times to continue moving forward through tracks.

REV (Reverse): Press and hold to reverse playback quickly. Sound is heard at a reduced volume and the elapsed time of the file displays. Release REV to resume playing.

FWD (Fast Forward): Press and hold to advance playback quickly. Sound is heard at a reduced volume and the elapsed time of the file displays. Release FWD to resume playing. The elapsed time of the file displays.

(Previous Folder): Press the softkey below to go to the first track in the previous folder.

(Next Folder): Press the softkey below to go to the first track in the next folder.

RDM (Random): Files on the disc can be listened to in random, rather than sequential order. To use random, press the softkey under the RDM tab until Random Current Disc displays to play songs in random order. Press the same softkey again to turn off random play.

(Music Navigator): Press the softkey below to play files in order by artist or album.

The player scans the disc to sort the files by artist and album ID3 tag information. It can take several minutes to scan the disc depending on the number of files on the disc. The radio may begin playing while it is scanning in the background.

When the scan is finished, the disc begins playing files in order by artist. The current artist playing is shown on the second line of the display. Once all songs by that artist are played, the player moves to the next artist in alphabetical order and begins playing files by that artist.

To listen to files by another artist, press the softkey located below either arrow tab. The disc goes to the next or previous artist in alphabetical order. Continue pressing either softkey below the arrow tab until the artist displays.

To change from playback by artist to playback by album:

1. Press the softkey located below the Sort By tab.
2. Press one of the softkeys below the album tab from the sort screen.
3. Press the softkey below the back tab to return to the main music navigator screen.

The album name displays on the second line between the arrows and songs from the current album begin to play. Once all songs from that album have played, the player moves to the next album in alphabetical order on the CD and begins playing MP3 files from that album.

To exit music navigator mode, press the softkey below the Back tab to return to normal MP3 playback.

Connecting a USB Storage Device or iPod®

The USB Port can be used to control an iPod or a USB storage device.

To connect a USB storage device, connect the device to the USB port located in the center console or on the instrument panel.

To connect an iPod, connect one end of the USB cable that came with the iPod to the iPod's dock connector and connect the other end to the USB port located in the center console or on the instrument panel. If the vehicle is on and the USB connection works, "OK to disconnect" and a GM logo may appear on the iPod and iPod appears on the radio display. The iPod music appears on the radio's display and begins playing.

The iPod charges while it is connected to the vehicle if the vehicle is in the ACC/ACCESSORY or ON/RUN position. When the vehicle is turned off, the iPod automatically powers off and will not charge or draw power from the vehicle's battery.

If you have an older iPod model that is not supported, it can still be used by connecting it to the Auxiliary Input Jack using a standard 3.5 mm (1/8 in) stereo cable. See "Using the Auxiliary Input Jack" earlier for more information.

Using the Radio to Control a USB Storage Device or iPod

The radio can control a USB storage device or an iPod using the radio buttons and knobs and display song information on the radio's display.

♫ **(Tune):** Turn to select files.

⏮ **SEEK:** Press to go to the start of the track, if more than ten seconds have played. Press and hold or press multiple times to continue moving backward through tracks.

⏭ **SEEK:** Press to go to the next track. Press and hold or press multiple times to continue moving forward through tracks.

◁◁ **REV (Reverse):** Press and hold to reverse playback quickly. Sound is heard at a reduced volume. Release ◁◁ REV to resume playing. The elapsed time of the file displays.

▷▷ **FWD (Fast Forward):** Press and hold to advance playback quickly. Sound is heard at a reduced volume. Release ▷▷ FWD to resume playing. The elapsed time of the file displays.

i (Information): Press to display additional information about the selected track.

Using Softkeys to Control a USB Storage Device or iPod

The five softkeys below the radio display are used to control the functions listed below.

To use the softkeys:

1. Press the first or fifth softkey below the radio display to display the functions listed below, or press the softkey below the function if it is currently displayed.
2. Press the softkey below the tab with the function on it to use that function.

❚❚ (Pause): Press the softkey below ❚❚ to pause the track. The tab appears raised when pause is being used. Press the softkey below ❚❚ again to resume playback.

Back: Press the softkey below the back tab to go back to the main display screen on an iPod, or the root directory on a USB storage device.

(Folder View): Press the softkey below to view the contents of the current folder on the USB drive. To browse and select files:

1. Press the softkey below .
2. Turn to scroll through the list of folders.
3. Press to select the folder. If there is more than one folder, repeat Steps 1 and 2 until the folder is reached.
4. Turn to scroll through the files in the selected folder.
5. Press to select the file to be played.

To skip through large lists, the five softkeys can be used to navigate in the following order:

- First softkey, first item in the list.
- Second softkey, 1% through the list each time the softkey is pressed.
- Third softkey, 5% through the list each time the softkey is pressed.
- Fourth softkey, 10% through the list each time the softkey is pressed.
- Fifth softkey, end of the list.

(Music Navigator): Press the softkey below to view and select a file on an iPod, using the iPod's menu system. Files are sorted by:

- Playlists
- Artists
- Albums
- Genres
- Songs
- Composers

To select files:

1. Press the softkey below .
2. Turn to scroll through the list of menus.
3. Press to select the menu.
4. Turn to scroll through the folders or files in the selected menu.
5. Press to select the file to be played.

To skip through large lists, the five softkeys can be used to navigate in the following order:

- First softkey, first item in the list.
- Second softkey, 1% through the list each time the softkey is pressed.
- Third softkey, 5% through the list each time the softkey is pressed.
- Fourth softkey, 10% through the list each time the softkey is pressed.
- Fifth softkey, end of the list.

Repeat Functionality

To use Repeat:

Press the softkey below or 1 to select between Repeat All and Repeat Track.

(Repeat All): Press the softkey below to repeat all tracks. The tab appears lowered when Repeat All is being used. This is the default mode when a USB storage device or iPod is first connected.

1 **(Repeat Track):** Press the softkey below 1 to repeat one track. The tab appears raised when Repeat Track is being used.

Shuffle Functionality

To use Shuffle:

Press the softkey below , S, A or F to select between Shuffle Off, Shuffle All Songs/Shuffle Songs, Shuffle Album, or Shuffle Folder.

(Shuffle Off): This is the default mode when a USB storage device or iPod is first connected.

S **(Shuffle All Songs / Shuffle Songs):** Shuffles all songs on the USB storage device or iPod.

A **(Shuffle Album):** Shuffles all songs in the current album on an iPod.

F **(Shuffle Folder):** Shuffles all songs in the current folder on a USB storage device.

XM Radio Messages

XL (Explicit Language Channels): These channels, or any others, can be blocked at a customer's request, by calling 1-800-852-XMXM (9696).

XM Updating: The encryption code in the receiver is being updated, and no action is required. This process should take no longer than 30 seconds.

No XM Signal: The system is functioning correctly, but the vehicle is in a location that is blocking the XM™ signal. When the vehicle is moved into an open area, the signal should return.

Loading XM: The audio system is acquiring and processing audio and text data. No action is needed. This message should disappear shortly.

Channel Off Air: This channel is not currently in service. Tune in to another channel.

Channel Unauth: This channel is blocked or cannot be received with your XM Subscription package.

Channel Unavail: This previously assigned channel is no longer assigned. Tune to another station. If this station was one of the presets, choose another station for that preset button.

No Artist Info: No artist information is available at this time on this channel. The system is working properly.

No Title Info: No song title information is available at this time on this channel. The system is working properly.

No CAT Info: No category information is available at this time on this channel. The system is working properly.

No Information: No text or informational messages are available at this time on this channel. The system is working properly.

CAT Not Found: There are no channels available for the selected category. The system is working properly.

XM Theftlocked: The XM receiver in the vehicle could have previously been in another vehicle. For security purposes, XM receivers cannot be swapped between vehicles. If this message is received after having the vehicle serviced, check with your dealer.

XM Radio ID: If tuned to channel 0, this message alternates with the XM™ Radio 8 digit radio ID label. This label is needed to activate the service.

Unknown: If this message is received when tuned to channel 0, there could be a receiver fault. Consult with your dealer.

Check XM Receivr: If this message does not clear within a short period of time, the receiver could have a fault. Consult with your dealer.

XM Not Available: If this message does not clear within a short period of time, the receiver could have a fault. Consult with your dealer.

Navigation/Radio System

For vehicles with a navigation radio system, see the separate Navigation System manual.

Bluetooth®

Vehicles with a Bluetooth system can use a Bluetooth capable cell phone with a Hands Free Profile to make and receive phone calls. The system can be used while the key is in ON/RUN or ACC/ACCESSORY position. The range of the Bluetooth system can be up to 9.1 m (30 ft). Not all phones support all functions, and not all phones are guaranteed to work with the in-vehicle Bluetooth system. See www.gm.com/bluetooth for more information on compatible phones.

Voice Recognition

The Bluetooth system uses voice recognition to interpret voice commands to dial phone numbers and name tags.

Noise: Keep interior noise levels to a minimum. The system may not recognize voice commands if there is too much background noise.

When to Speak: A short tone sounds after the system responds indicating when it is waiting for a voice command. Wait until the tone and then speak.

How to Speak: Speak clearly in a calm and natural voice.

Audio System

When using the in-vehicle Bluetooth system, sound comes through the vehicle's front audio system speakers and overrides the audio system. Use the audio system volume knob, during a call, to change the volume level. The adjusted volume level remains in memory for later calls. To prevent missed calls, a minimum volume level is used if the volume is turned down too low.

Bluetooth Controls

Use the buttons located on the steering wheel to operate the in-vehicle Bluetooth system. See *Audio Steering Wheel Controls on page 4-148* for more information.

(Push To Talk) : Press to answer incoming calls, to confirm system information, and to start speech recognition.

(Phone On Hook): Press to end a call, reject a call, or to cancel an operation.

Pairing

A Bluetooth enabled cell phone must be paired to the in-vehicle Bluetooth system first and then connected to the vehicle before it can be used. See the cell phone manufacturers user guide for Bluetooth functions before pairing the cell phone. If a Bluetooth phone is not connected, calls will be made using OnStar® Hands-Free Calling, if available. Refer to the OnStar owner's guide for more information.

Pairing Information:

- Up to five cell phones can be paired to the in-vehicle Bluetooth system.
- The pairing process is disabled when the vehicle is moving.
- The in-vehicle Bluetooth system automatically links with the first available paired cell phone in the order the phone was paired.
- Only one paired cell phone can be connected to the in-vehicle Bluetooth system at a time.
- Pairing should only need to be completed once, unless changes to the pairing information have been made or the phone is deleted.

To link to a different paired phone, see Linking to a Different Phone later in this section.

Pairing a Phone

1. Press and hold for two seconds. The system responds with “Ready” followed by a tone.
2. Say “Bluetooth”. The system responds with “Bluetooth ready” followed by a tone.
3. Say “Pair”. The system responds with instructions and a four digit PIN number. The PIN number will be used in Step 4.
4. Start the Pairing process on the cell phone that will be paired to the vehicle. Reference the cell phone manufacturers user guide for information on this process.

   Locate the device named “General Motors” in the list on the cellular phone and follow the instructions on the cell phone to enter the four digit PIN number that was provided in Step 3.
5. The system prompts for a name for the phone. Use a name that best describes the phone. This name will be used to indicate which phone is connected. The system then confirms the name provided.
6. The system responds with “<Phone name> has been successfully paired” after the pairing process is complete.
7. Repeat Steps 1 through 7 for additional phones to be paired.

Listing All Paired and Connected Phones

1. Press and hold ✆ for two seconds. The system responds with “Ready” followed by a tone.
2. Say “Bluetooth”. The system responds with “Bluetooth ready” followed by a tone.
3. Say “List”. The system lists all the paired Bluetooth devices. If a phone is connected to the vehicle, the system will say “Is connected” after the connected phone.

Deleting a Paired Phone

1. Press and hold ✆ for two seconds. The system responds with “Ready” followed by a tone.
2. Say “Bluetooth”. The system responds with “Bluetooth ready” followed by a tone.
3. Say “Delete”. The system asks which phone to delete followed by a tone.
4. Say the name of the phone to be deleted. If the phone name is unknown, use the “List” command for a list of all paired phones. The system responds with “Would you like to delete <phone name>? Yes or No” followed by a tone.
5. Say “Yes” to delete the phone. The system responds with “OK, deleting <phone name>”.

Linking to a Different Phone

1. Press and hold ✆ for two seconds. The system responds with “Ready” followed by a tone.
2. Say “Bluetooth”. The system responds with “Bluetooth ready” followed by a tone.
3. Say “Change phone”. The system responds with “Please wait while I search for other phones”.
   - If another phone is found, the response will be “<Phone name> is now connected”.
   - If another phone is not found, the original phone remains connected.

Storing Name Tags

The system can store up to thirty phone numbers as name tags that are shared between the Bluetooth and OnStar systems.

The system uses the following commands to store and retrieve phone numbers:

- Store
- Digit Store
- Directory

Using the Store Command

The store command allows a phone number to be stored without entering the digits individually.

1. Press and hold ✆ for two seconds. The system responds with “Ready” followed by a tone.
2. Say “Store”. The system responds with “Store, number please” followed by a tone.
3. Say the complete phone number to be stored at once with no pauses.
   - If the system recognizes the number it responds with “OK, Storing” and repeats the phone number.
   - If the system is unsure it recognizes the phone number, it responds with “Store” and repeats the number followed by “Please say yes or no”. If the number is correct, say “Yes”. If the number is not correct, say “No”. The system will ask for the number to be re-entered.
4. After the system stores the phone number, it responds with “Please say the name tag” followed by a tone.
5. Say a name tag for the phone number. The name tag is recorded and the system responds with “About to store <name tag>. Does that sound OK?”.
   - If the name tag does not sound correct, say “No” and repeat Step 5.
   - If the name tag sounds correct, say “Yes” and the name tag is stored. After the number is stored the system returns to the main menu.

Using the Digit Store Command

The digit store command allows a phone number to be stored by entering the digits individually.

1. Press and hold ✆ for two seconds. The system responds with “Ready” followed by a tone.
2. Say “Digit Store”. The system responds with “Please say the first digit to store” followed by a tone.

3. Say the first digit to be stored. The system will repeat back the digit it heard followed by a tone. Continue entering digits until the number to be stored is complete.
   - If an unwanted number is recognized by the system, say “Clear” at any time to clear the last number.
   - To hear all of the numbers recognized by the system, say “Verify” at any time and the system will repeat them.
4. After the complete number has been entered, say “Store”. The system responds with “Please say the name tag” followed by a tone.
5. Say a name tag for the phone number. The name tag is recorded and the system responds with “About to store <name tag>. Does that sound OK?”.
   - If the name tag does not sound correct, say “No” and repeat Step 5.
   - If the name tag sounds correct, say “Yes” and the name tag is stored. After the number is stored the system returns to the main menu.

Using the Directory Command

The directory command lists all of the name tags stored by the system. To use the directory command:

1. Press and hold for two seconds. The system responds with “Ready” followed by a tone.
2. Say “Directory”. The system responds with “Directory” and then plays back all of the stored name tags. When the list is complete, the system returns to the main menu.

Deleting Name Tags

The system uses the following commands to delete name tags:

- Delete
- Delete all name tags

Using the Delete Command

The delete command allows specific name tags to be deleted.

To use the delete command:

1. Press and hold ✆ for two seconds. The system responds with “Ready” followed by a tone.
2. Say “Delete”. The system responds with “Delete, please say the name tag” followed by a tone.
3. Say the name tag to be deleted. The system responds with “Would you like to delete, <name tag>? Please say yes or no”.
   - If the name tag is correct, say “Yes” to delete the name tag. The system responds with “OK, deleting <name tag>, returning to the main menu.”
   - If the name tag is incorrect, say “No”. The system responds with “No. OK, let's try again, please say the name tag.”

Using the Delete All Name Tags Command

The delete all name tags command deletes all stored phone book name tags and route name tags for OnStar (if present).

To use the delete all name tags command:

1. Press and hold ✆ for two seconds. The system responds with “Ready” followed by a tone.
2. Say “Delete all name tags”. The system responds with “You are about to delete all name tags stored in your phone directory and your route destination directory. Are you sure you want to do this? Please say yes or no.”
   - Say “Yes” to delete all name tags.
   - Say “No” to cancel the function and return to the main menu.

Making a Call

Calls can be made using the following commands:

- Dial
- Digit Dial
- Call
- Re-dial

Using the Dial Command

1. Press and hold ✆ for two seconds. The system responds with “Ready” followed by a tone.
2. Say “Dial”. The system responds with “Dial using <phone name>”. “Number please” followed by a tone.
3. Say the entire number without pausing.
   - If the system recognizes the number, it responds with “OK, Dialing” and dials the number.
   - If the system does not recognize the number, it confirms the numbers followed by a tone. If the number is correct, say “Yes”. The system responds with “OK, Dialing” and dials the number. If the number is not correct, say “No”. The system will ask for the number to be re-entered.

Using the Digit Dial Command

1. Press and hold ✆ for two seconds. The system responds with “Ready” followed by a tone.
2. Say “Digit Dial”. The system responds with “Digit dial using <phone name>, please say the first digit to dial” followed by a tone.
3. Say the digit to be dialed one at a time. Following each digit, the system will repeat back the digit it heard followed by a tone.
4. Continue entering digits until the number to be dialed is complete. After the whole number has been entered, say “Dial”. The system responds with “OK, Dialing” and dials the number.
   - If an unwanted number is recognized by the system, say “Clear” at any time to clear the last number.
   - To hear all of the numbers recognized by the system, say “Verify” at any time and the system will repeat them.

Using the Call Command

1. Press and hold ✆ for two seconds. The system responds with “Ready” followed by a tone.
2. Say “Call”. The system responds with “Call using <phone name>. Please say the name tag” followed by a tone.
3. Say the name tag of the person to call.
   - If the system clearly recognizes the name tag it responds with “OK, calling, <name tag>” and dials the number.
   - If the system is unsure it recognizes the right name tag, it confirms the name tag followed by a tone. If the name tag is correct, say “Yes”. The system responds with “OK, calling, <name tag>” and dials the number. If the name tag is not correct, say “No”. The system will ask for the name tag to be re-entered.

Once connected, the person called will be heard through the audio speakers.

Using the Re-dial Command

1. Press and hold ✆ for two seconds. The system responds with “Ready” followed by a tone.
2. After the tone, say “Re-dial”. The system responds with “Re-dial using <phone name>” and dials the last number called from the connected Bluetooth phone.

Once connected, the person called will be heard through the audio speakers.

Receiving a Call

When an incoming call is received, the audio system mutes and a ring tone is heard in the vehicle.

- Press ✆ and begin speaking to answer the call.
- Press ▽ to ignore a call.

Call Waiting

Call waiting must be supported on the Bluetooth phone and enabled by the wireless service carrier to work.

- Press to answer an incoming call when another call is active. The original call is placed on hold.
- Press again to return to the original call.
- To ignore the incoming call, continue with the original call with no action.
- Press to disconnect the current call and switch to the call on hold.

Three-Way Calling

Three-Way Calling must be supported on the Bluetooth phone and enabled by the wireless service carrier to work.

1. While on a call press . The system responds with “Ready” followed by a tone.
2. Say “Three-way call”. The system responds with “Three-way call, please say dial or call”.
3. Use the dial or call command to dial the number of the third party to be called.
4. Once the call is connected, press to link all the callers together.

Ending a Call

Press to end a call.

Muting a Call

During a call, all sounds from inside the vehicle can be muted so that the person on the other end of the call cannot hear them.

To Mute a call

1. Press . The system responds with “Ready” followed by a tone.
2. Say “Mute Call”. The system responds with “Call muted”.

To Cancel Mute

1. Press . The system responds with “Ready” followed by a tone.
2. After the tone, say “Mute Call”. The system responds with “Resuming call”.

Transferring a Call

Audio can be transferred between the in-vehicle Bluetooth system and the cell phone.

To Transfer Audio to the Cell Phone

During a call with the audio in the vehicle:

1. Press . The system responds with “Ready” followed by a tone.
2. Say “Transfer Call.” The system responds with “Transferring call” and the audio will switch from the vehicle to the cell phone.

To Transfer Audio to the In-Vehicle Bluetooth System

The cellular phone must be paired and connected with the Bluetooth system before a call can be transferred. The connection process can take up to two minutes after the key is turned to the ON/RUN or ACC/ ACCESSORY position.

During a call with the audio on the cell phone, press for more than two seconds. The audio switches from the cell phone to the vehicle.

Voice Pass-Thru

Voice Pass-Thru allows access to the voice recognition commands on the cell phone. See the cell phone manufacturers user guide to see if the cell phone supports this feature. This feature can be used to verbally access contacts stored in the cell phone.

1. Press and hold for two seconds. The system responds with “Ready” followed by a tone.
2. Say “Bluetooth”. The system responds with “Bluetooth ready” followed by a tone.
3. Say “Voice”. The system responds with “OK, accessing <phone name>”.
   - The cell phone's normal prompt messages will go through its cycle according to the phone's operating instructions.

Dual Tone Multi-Frequency (DTMF) Tones

The in-vehicle Bluetooth system can send numbers and numbers stored as name tags during a call. This is used when calling a menu driven phone system. Account numbers can be programmed into the phonebook for retrieval during menu driven calls.

Sending a Number During a Call

1. Press . The system responds with “Ready” followed by a tone.
2. Say “Dial”. The system responds with “Say a number to send tones” followed by a tone.
3. Say the number to send.
   - If the system clearly recognizes the number it responds with “OK, Sending Number” and the dial tones are sent and the call continues.
   - If the system is not sure it recognized the number properly, it responds “Dial Number, Please say yes or no?” followed by a tone. If the number is correct, say “Yes”. The system responds with “OK, Sending Number” and the dial tones are sent and the call continues.

Sending a Stored Name Tag During a Call

1. Press . The system responds with “Ready” followed by a tone.
2. Say “Send name tag.” The system responds with “Say a name tag to send tones” followed by a tone.
3. Say the name tag to send.
   - If the system clearly recognizes the name tag it responds with “OK, Sending <name tag>” and the dial tones are sent and the call continues.
   - If the system is not sure it recognized the name tag properly, it responds “Dial <name tag>, Please say yes or no?” followed by a tone. If the name tag is correct, say “Yes”. The system responds with “OK, Sending <name tag>” and the dial tones are sent and the call continues.

Clearing the System

Unless information is deleted out of the in-vehicle Bluetooth system, it will be retained indefinitely. This includes all saved name tags in the phonebook and phone pairing information. For information on how to delete this information, see the above sections on Deleting a Paired Phone and Deleting Name Tags.

Other Information

The Bluetooth® word mark and logos are owned by the Bluetooth® SIG, Inc. and any use of such marks by General Motors is under license. Other trademarks and trade names are those of their respective owners.

See *Radio Frequency Statement on page 8-21* for FCC information.

Rear Seat Entertainment (RSE) System

The vehicle may have a DVD Rear Seat Entertainment (RSE) system. The RSE system works with the vehicle's audio system. The DVD player is part of the front radio. The RSE system includes a radio with a DVD player, a video display screen, audio/video jacks, two wireless headphones, and a remote control. See *Radio(s) on page 4-88* for more information on the vehicle's audio/DVD system.

Before Driving

The RSE is designed for rear seat passengers only. The driver cannot safely view the video screen while driving and should not try to do so.

In severe or extreme weather conditions the RSE system might not work until the temperature is within the operating range. The operating range for the RSE system is above −4°F (−20°C) or below 140°F (60°C). If the temperature of the vehicle is outside of this range, heat or cool the vehicle until the temperature is within the operating range of the RSE system.

Parental Control

The RSE system may have a Parental Control feature, depending on which radio the vehicle has. To start Parental Control, press and hold the radio power button for more than two seconds to stop all system features such as: radio, video screen, RSA, DVD and/or CD. While Parental Control is on, a padlock icon displays.

The radio can be turned back on with a single press of the power button, but the RSE system will remain under Parental Control.

To turn Parental Control off, press and hold the radio power button for more than two seconds. The RSE returns from where it was previously left and the padlock icon disappears from the radio display.

Parental Control can also be turned off by inserting or ejecting any disc, pressing the play icon on the radio DVD display menu, or changing an ignition position.

Headphones

The RSE includes two 2-channel wireless headphones that are dedicated to this system. Channel 1 is dedicated to the video screen, while Channel 2 is dedicated to RSA selections. These headphones can used to listen to the radio, CDs, DVDs, MP3s, DVDAs, any auxiliary source connected to A/V jacks, or the auxiliary input jack, if the vehicle has this feature. The wireless headphones have an On/Off button, channel 1/2 switch, and a volume control.

Push the power button to turn on the headphones. An indicator light located on the headphones comes on. If the light comes on but, there is intermittent sound and/or static on the headphones, or if the indicator light does not come on, the batteries might need to be replaced. See “Battery Replacement” later in this section for more information. Switch the headphones to Off when not in use.

Infrared transmitters are located at the rear of the overhead console. The headphones shut off automatically to save the battery power if the RSE system and RSA are shut off or if the headphones are out of range of the transmitters for more than three minutes. If you move too far forward or step out of the vehicle, the headphones lose the audio signal.

The headphones may automatically turn off after four hours of continuous use.

To adjust the volume on the headphones, use the volume control located on the right side.

For optimal audio performance, the headphones must be worn correctly. Headphones should be worn with headband over the top of the head for best audio reception. The symbol L (Left) appears on the upper left side, above the ear pad and should be positioned on the left ear. The symbol R (Right) appears on the upper right side, above the ear pad and should be positioned on the right ear.

Notice: **Do not store the headphones in heat or direct sunlight. This could damage the headphones and repairs will not be covered by the warranty. Storage in extreme cold can weaken the batteries. Keep the headphones stored in a cool, dry place.**

If the foam ear pads attached to the headphones become worn or damaged, the pads can be replaced separately from the headphone set. Refer to your dealer for more information.

Battery Replacement

To change the batteries on the headphones, do the following:

1. Turn the screw to loosen the battery door located on the left side of the headphones. Slide the battery door open.
2. Replace the two batteries in the compartment. Make sure that they are installed correctly, using the diagram on the inside of the battery compartment.
3. Replace the battery door and tighten the door screw.

If the headphones are to be stored for a long period of time, remove the batteries and keep them in a cool, dry place.

Audio/Video (A/V) Jacks

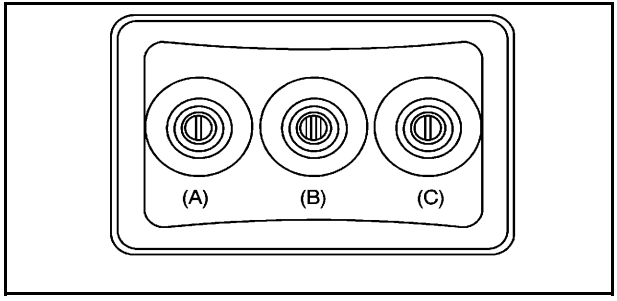

The A/V jacks, located on the rear of the floor console, allow audio or video signals to be connected from an auxiliary device such as a camcorder or a video game unit to the RSE system. Adapter connectors or cables (not included) may be required to connect the auxiliary device to the A/V jacks. Refer to the manufacturer's instructions for proper usage.

The A/V jacks are color coded to match typical home entertainment system equipment. The yellow jack (A) is for the video input. The white jack (B) is for the left audio input. The red jack (C) is for the right audio input.

Power for auxiliary devices is not supplied by the radio system.

To use the auxiliary inputs of the RSE system, connect an external auxiliary device to the color-coded A/V jacks and turn both the auxiliary device and the video screen power on. If the video screen is in the DVD player mode, pressing the AUX (auxiliary) button on the remote control switches the video screen from the DVD player mode to the auxiliary device. The radio can listen to the audio of the connected auxiliary device by sourcing to auxiliary. See *Radio(s) on page 4-88* for more information.

How to Change the RSE Video Screen Settings

The screen display mode (normal, full, and zoom), screen brightness, and setup menu language can be changed from the on screen setup menu. To change any feature, do the following:

1. Press the ▢ (display) menu button on the remote control.
2. Use the remote control menu ▲, ▼, ◀, ▶ (navigation) arrows and the ◀┘ (enter) button to use the setup menu.
3. Press the ▢ button again to remove the setup menu from the screen.

Audio Output

Audio from the DVD player or auxiliary inputs can be heard through the following possible sources:

- Wireless Headphones
- Vehicle Speakers
- Vehicle wired headphone jacks on the rear seat audio system, if the vehicle has this feature.

The RSE system always transmits the audio signal to the wireless headphones, if there is audio available. See “Headphones” earlier in this section for more information.

The DVD player is capable of outputting audio to the wired headphone jacks on the RSA system, if the vehicle has this feature. The DVD player can be selected as an audio source on the RSA system. See *Rear Seat Audio (RSA) on page 4-145* for more information.

When a device is connected to the A/V jacks, or the radio's auxiliary input jack, if the vehicle has this feature, the rear seat passengers are able to hear audio from the auxiliary device through the wireless or wired headphones. The front seat passengers are able to listen to playback from this device through the vehicle speakers by selecting AUX as the source on the radio.

Video Screen

The video screen is located in the overhead console.

To use the video screen, do the following:

1. Push the release button located on the overhead console.
2. Move the screen to the desired position.

When the video screen is not in use, push it up into its locked position.

If a DVD is playing and the screen is raised to its locked position, the screen remains on. This is normal, and the DVD continues to play through the previous audio source. Use the remote control power button or eject the disc to turn off the screen.

The overhead console contains the infrared transmitters for the wireless headphones and the infrared receivers for the remote control. They are located at the rear of the console.

Notice: **Avoid directly touching the video screen, as damage may occur. See "Cleaning the Video Screen" later in this section for more information.**

Remote Control

To use the remote control, aim it at the transmitter window at the rear of the RSE overhead console and press the desired button. Direct sunlight or very bright light could affect the ability of the RSE transmitter to receive signals from the remote control. If the remote control does not seem to be working, the batteries might need to be replaced. See "Battery Replacement" later in this section. Objects blocking the line of sight could also affect the function of the remote control.

If a CD or DVD is in the Radio DVD slot, the remote control ⏻ (power) button can be used to turn on the video screen display and start the disc. The radio can also turn on the video screen display. See *Radio(s) on page 4-88* for more information.

Notice: **Storing the remote control in a hot area or in direct sunlight can damage it, and the repairs will not be covered by the warranty. Storage in extreme cold can weaken the batteries. Keep the remote control stored in a cool, dry place.**

If the remote control becomes lost or damaged, a new universal remote control can be purchased. If this happens, make sure the universal remote control uses a code set of Toshiba®.

Remote Control Buttons

(Power): Press this button to turn the video screen on and off.

(Illumination): Press this button to turn the remote control backlight on. The backlight automatically times out after seven to ten seconds if no other button is pressed while the backlight is on.

(Title): Press this button to return the DVD to the main menu of the DVD. This function could vary for each disc.

(Main Menu): Press this button to access the DVD menu. The DVD menu is different on every DVD. Use the navigation arrows to move the cursor around the DVD menu. After making a selection press the enter button. This button only operates when using a DVD.

, , , (Menu Navigation Arrows): Use the arrow buttons to navigate through a menu.

(Enter): Press this button to select the choice that is highlighted in any menu.

(Display Menu): Press this button to adjust the brightness, screen display mode (normal, full, or zoom), and display the language menu.

(Return): Press this button to exit the current active menu and return to the previous menu. This button operates only when the display menu or a DVD menu is active.

(Stop): Press this button to stop playing, fast reversing, or fast forwarding a DVD. Press this button twice to return to the beginning of the DVD.

(Play/Pause): Press this button to start playing a DVD. Press this button while a DVD is playing to pause it. Press it again to continue playing the DVD.

While the DVD is playing, the DVD can be played slowly by pressing the play/pause button then pressing the fast forward button. The DVD continues playing in a slow play mode. Also, reverse can be played slowly by pressing the play/pause button and then pressing the fast reverse button. To cancel slow play mode, press the play/pause button.

(Previous Track/Chapter): Press this button to return to the start of the current track or chapter. Press this button again to go to the previous track or chapter. This button might not work when the DVD is playing the copyright information or the previews.

(Next Track/Chapter): Press this button to go to the beginning of the next chapter or track. This button might not work while the DVD is playing the copyright information or the previews.

(Fast Reverse): Press this button to quickly reverse the DVD or CD. To stop fast reversing a DVD video, press the play/pause button. To stop fast reversing a DVD audio or CD, release the fast reverse button. This button might not work when the DVD is playing the copyright information or the previews.

(Fast Forward): Press this button to fast forward the DVD or CD. To stop fast forwarding a DVD video, press the play/pause button. To stop fast forwarding a DVD audio or CD, release the fast forward button. This button might not work while the DVD is playing the copyright information or the previews.

(Audio): Press this button to change audio tracks on DVDs that have this feature when the DVD is playing. The format and content of this function vary for each disc.

(Subtitles): Press this button to turn ON/OFF subtitles and to move through subtitle options when a DVD is playing. The format and content of this function vary for each disc.

AUX (Auxiliary): Press this button to switch the system between the DVD player and an auxiliary source.

(Camera): Press this button to change camera angles on DVDs that have this feature while a DVD is playing. The format and content of this function vary for each disc.

1 through 0 (Numeric Keypad): The numeric keypad provides the capability of direct chapter or track number selection.

(Clear): Press this button within three seconds after entering a numeric selection, to clear all numerical inputs.

≧ 10 (Double Digit Entries): Press this button to select chapter or track numbers greater than nine. Press this button before entering the number.

Battery Replacement

To change the remote control batteries, do the following:

1. Slide the rear cover back on the remote control.
2. Replace the two batteries in the compartment. Make sure they are installed correctly using the diagram on the inside of the remote control.
3. Replace the battery cover.

If the remote control is to be stored for a long period of time, remove the batteries and keep them in a cool, dry place.

Tips and Troubleshooting Chart

Problem	Recommended Action
No power.	The ignition might not be turned ON/RUN or in ACC/ACCESSORY.
The picture does not fill the screen. There are black borders on the top and bottom or on both sides or it looks stretched out.	Check the display mode settings in the setup menu by pressing the display menu button on the remote control.
In auxiliary mode, the picture moves or scrolls.	Check the auxiliary input connections at both devices.

Tips and Troubleshooting Chart (cont'd)

Problem	Recommended Action
The remote control does not work.	Check to make sure there is no obstruction between the remote control and the transmitter window. Check the batteries to make sure they are not dead or installed incorrectly.
After stopping the player, I push Play but sometimes the DVD starts where I left off and sometimes at the beginning.	If the stop button was pressed one time, the DVD player resumes playing where the DVD was stopped. If the stop button was pressed two times the DVD player begins to play from the beginning of the DVD.
The auxiliary source is running but there is no picture or sound.	Check that the RSE video screen is in the auxiliary source mode. Check the auxiliary input connections at both devices.

Tips and Troubleshooting Chart (cont'd)

Problem	Recommended Action
Sometimes the wireless headphone audio cuts out or buzzes.	Check for obstructions, low batteries, reception range, and interference from cellular telephone towers or by using a cellular telephone in the vehicle. Check that the headphones are on correctly using the L (left) and R (right) on the headphones.
I lost the remote and/or the headphones.	See your dealer for assistance.
The DVD is playing, but there is no picture or sound.	Check that the RSE video screen is sourced to the DVD player.

DVD Display Error Messages

The DVD display error message depends on the radio that is in the vehicle. The video screen can display one of the following:

Disc Load/Eject Error: This message displays when there are disc load or eject problems.

Disc Format Error: This message displays, if the disc is inserted with the disc label wrong side up, or if the disc is damaged.

Disc Region Error: This message displays, if the disc is not from a correct region.

No Disc Inserted: This message displays, if no disc is present when EJECT or DVD AUX is pressed on the radio.

DVD Distortion

Video distortion can occur when operating cellular phones, scanners, CB radios, Global Position Systems (GPS)*, two-way radios, mobile fax, or walkie talkies.

It might be necessary to turn off the DVD player when operating one of these devices in or near the vehicle.

*Excludes the OnStar® System.

Cleaning the RSE Overhead Console

When cleaning the RSE overhead console surface, use only a clean cloth dampened with clean water.

Cleaning the Video Screen

When cleaning the video screen, use only a clean cloth dampened with clean water. Use care when directly touching or cleaning the screen, as damage could result.

Rear Seat Audio (RSA)

Vehicles with this feature allow the rear seat passengers to listen to and control any of the music sources: radio, CDs, DVDs, or other auxiliary sources. However, the rear seat passengers can only control the music sources the front seat passengers are not listening to (except on some radios where dual control is allowed). For example, rear seat passengers can control and listen to a CD through the headphones, while the driver listens to the radio through the front speakers. The rear seat passengers have control of the volume for each set of headphones.

The radio functionality is controlled by both the RSA and the front radio. Only one band can be tuned to at one time. Changing the band on the RSA or the front radio will change the band on the other system, if they are both sourced to the radio.

The RSA functions can be used even while the main radio is off. The front audio system will display the headphone icon when the RSA is on, and will disappear from the display when it is off.

Audio can be heard through wired headphones (not included) plugged into the jacks on the RSA. If the vehicle has this feature, audio can also be heard on Channel 2 of the wireless headphones.

Depending on the audio system, the rear speakers may continue to play when the RSA audio is active through the headphones.

To listen to an iPod or portable audio device through the RSA, attach the iPod or portable audio device to the front auxiliary input (if available), located on the front audio system. Turn the iPod on, then choose the front auxiliary input with the RSA SRCE button.

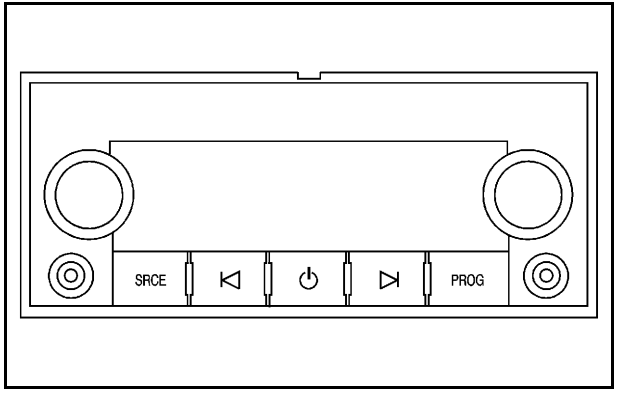

(Power): Press this button to turn the RSA on or off.

Volume: Turn the volume knob to increase or to decrease the volume of the wired headphones. The left knob controls the left headphones and the right knob controls the right headphones.

SRCE (Source): Press this button to switch between the radio (AM/FM), XM™ (if equipped), CD, and if the vehicle has these features, DVD, front auxiliary, and rear auxiliary.

⊲ ⊳ **(Seek):** When listening to FM, AM, or XM™ (if equipped), press the seek arrows to go to the previous or to the next station or channels and stay there. This function is inactive, with some radios, if the front seat passengers are listening to the radio.

Press and hold either seek arrow until the display flashes, to tune to an individual station. The display stops flashing after the buttons have not been pushed for more than two seconds. This function is inactive, with some radios, if the front seat passengers are listening to the radio.

While listening to a disc, press the left seek arrow to go back to the start of the current track or chapter (if more than ten seconds have played). Press the right seek arrow to go the next track or chapter on the disc. This function is inactive, with some radios, if the front seat passengers are listening to the disc.

While a DVD video menu is being displayed, press either seek arrow to perform a cursor up or down on the menu. Hold either seek arrow to perform a cursor left or right on the menu.

PROG (Program): Press this button to go to the next preset radio station or channel set on the main radio. This function is inactive, with some radios, if the front seat passengers are listening to the radio.

While a CD or DVD audio disc is playing, press this button to go to the beginning of the CD or DVD audio. This function is inactive, with some radios, if the front seat passengers are listening to the CD or DVD audio.

While a disc is playing in the CD or DVD changer, press this button to select the next disc, if multiple discs are loaded. This function is inactive, with some radios, if the front seat passengers are listening to the disc.

While a DVD video menu is being displayed, press the PROG button to perform the menu function, Enter.

Theft-Deterrent Feature

THEFTLOCK® is designed to discourage theft of the vehicle's radio by learning a portion of the Vehicle Identification Number (VIN). The radio does not operate if it is stolen or moved to a different vehicle.

Audio Steering Wheel Controls

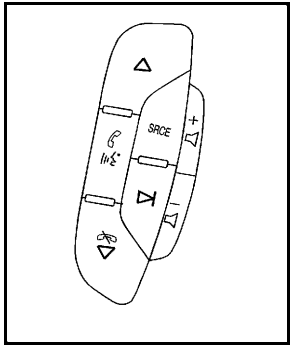

Vehicles with audio steering wheel controls could differ depending on the vehicle's options. Some audio controls can be adjusted at the steering wheel.

△ / ▽ **(Next / Previous):** Press to select preset or favorite radio stations, select tracks on a CD/DVD, or to navigate an iPod® or USB device.

Radio

To select preset or favorite radio stations:

Press and release △ or ▽ to go to the next or previous radio station stored as a preset or favorite.

CD/DVD

To select tracks on a CD/DVD:

Press and release △ or ▽ to go to the next or previous track.

Select tracks on an iPod or USB Device (Vehicles without a Navigation System)

1. Press and hold △ or ▽ while listening to a song until the contents of the current folder display on the radio display.
2. Press and release △ or ▽ to scroll up or down the list, then press and hold △, or press ⊳| to play the highlighted track.

Navigating folders on an iPod or USB Device (Vehicles without a Navigation System):

1. Press and hold △ or ▽ while listening to a song until the contents of the current folder display on the radio display.
2. Press and hold ▽ to go back to the previous folder list.
3. Press and release △ or ▽ to scroll up or down the list.
   - To select a folder, press and hold △, or press ⊳| when the folder is highlighted.
   - To go back further in the folder list, press and hold ▽.

Navigating an iPod or USB Device on the Main Audio Screen (Vehicles with a Navigation System)

Press and release △ or ▽ to select the next or previous track within the selected category.

Press and hold △ or ▽ to move quickly through the tracks.

Press and release ⊳| to move up one track within the selected category.

Navigating an iPod or USB Device on the Music Navigator Screen (Vehicles with a Navigation System)

Press and release △ or ▽ to select the next or previous track within the selected category.

Press and hold △ or ▽ to move quickly through the tracks within the selected category.

Press and release ⊳| to move up one track within the selected category.

(Mute/Push to Talk): Press to silence the vehicle speakers only. Press again to turn the sound on.

For vehicles with Bluetooth or OnStar® systems, press and hold for longer than two seconds to interact with those systems. See *Bluetooth® on page 4-125* and the OnStar Owner's Guide for more information.

(End): Press to reject an incoming call, or end a current call.

SRCE (Source/Voice Recognition): Press to switch between the radio, CD, and for vehicles with, DVD, front auxiliary, and rear auxiliary.

For vehicles with the navigation system, press and hold this button for longer than one second to initiate voice recognition. See “Voice Recognition” in the Navigation System manual for more information.

⊳| **(Seek):** Press to go to the next radio station while in AM, FM, or XM™.

For vehicles with or without a navigation system:

Press ⊳| to go to the next track or chapter while sourced to the CD or DVD slot.

Press ⊳| to select a track or a folder when navigating folders on an iPod or USB device.

For vehicles with a navigation system:

1. Press and hold ⊳| until a beep is heard, to place the radio into SCAN mode, a station will play for five seconds before moving to the next station.
2. To stop the SCAN function, press ⊳| again.

While listening to a CD/DVD, press and hold ⊳| to quickly move forward through the tracks. Release to stop on the desired track.

+ ◁ − ◁ (Volume): Press to increase or to decrease the volume.

Radio Reception

Frequency interference and static can occur during normal radio reception if items such as cell phone chargers, vehicle convenience accessories, and external electronic devices are plugged into the accessory power outlet. If there is interference or static, unplug the item from the accessory power outlet.

AM

The range for most AM stations is greater than for FM, especially at night. The longer range can cause station frequencies to interfere with each other. For better radio reception, most AM radio stations boost the power levels during the day, and then reduce these levels during the night. Static can also occur when things like storms and power lines interfere with radio reception. When this happens, try reducing the treble on the radio.

FM Stereo

FM signals only reach about 10 to 40 miles (16 to 65 km). Although the radio has a built-in electronic circuit that automatically works to reduce interference, some static can occur, especially around tall buildings or hills, causing the sound to fade in and out.

XM™ Satellite Radio Service

XM Satellite Radio Service gives digital radio reception from coast-to-coast in the 48 contiguous United States, and in Canada. Just as with FM, tall buildings or hills can interfere with satellite radio signals, causing the sound to fade in and out. In addition, traveling or standing under heavy foliage, bridges, garages, or tunnels may cause loss of the XM signal for a period of time.

Cellular Phone Usage

Cellular phone usage may cause interference with the vehicle's radio. This interference may occur when making or receiving phone calls, charging the phone's battery, or simply having the phone on. This interference causes an increased level of static while listening to the radio. If static is received while listening to the radio, unplug the cellular phone and turn it off.

Fixed Mast Antenna

The fixed mast antenna can withstand most car washes without being damaged as long as it is securely attached to the base. If the mast becomes slightly bent, straighten it out by hand. If the mast is badly bent, replace it.

Occasionally check to make sure the antenna is tightened to its base. If tightening is required, tighten by hand until fully seated plus one quarter turn.

XM™ Satellite Radio Antenna System

The XM Satellite Radio antenna is located on the roof of the vehicle. Keep the antenna clear of obstructions for clear radio reception.

If the vehicle has a sunroof, the performance of the XM system may be affected if the sunroof is open.

✍ NOTES

Section 5 Driving Your Vehicle

Your Driving, the Road, and the Vehicle 5-2
Defensive Driving 5-2
Drunk Driving 5-2
Control of a Vehicle 5-3
Braking 5-3
Antilock Brake System (ABS) 5-4
Braking in Emergencies 5-5
StabiliTrak® System 5-6
Locking Rear Axle 5-9
Steering 5-9
Off-Road Recovery 5-11
Passing 5-11
Loss of Control 5-11
Off-Road Driving 5-13
Driving at Night 5-25
Driving in Rain and on Wet Roads 5-26
Before Leaving on a Long Trip 5-27
Highway Hypnosis 5-27
Hill and Mountain Roads 5-28
Winter Driving 5-29
If Your Vehicle is Stuck in Sand, Mud, Ice, or Snow 5-31
Rocking Your Vehicle to Get It Out 5-32
Recovery Hooks 5-32
Loading the Vehicle 5-33
Adding a Snow Plow or Similar Equipment 5-41
Truck-Camper Loading Information 5-45
Pickup Conversion to Chassis Cab 5-48
Towing 5-48
Towing Your Vehicle 5-48
Recreational Vehicle Towing 5-49
Towing a Trailer 5-55
Trailer Recommendations 5-84

Your Driving, the Road, and the Vehicle

Defensive Driving

Defensive driving means “always expect the unexpected.” The first step in driving defensively is to wear your safety belt — See *Safety Belts: They Are for Everyone on page 2-16*.

⚠ WARNING:

Assume that other road users (pedestrians, bicyclists, and other drivers) are going to be careless and make mistakes. Anticipate what they might do and be ready. In addition:

- Allow enough following distance between you and the driver in front of you.
- Focus on the task of driving.

Driver distraction can cause collisions resulting in injury or possible death. These simple defensive driving techniques could save your life.

Drunk Driving

⚠ WARNING:

Drinking and then driving is very dangerous. Your reflexes, perceptions, attentiveness, and judgment can be affected by even a small amount of alcohol. You can have a serious — or even fatal — collision if you drive after drinking. Do not drink and drive or ride with a driver who has been drinking. Ride home in a cab; or if you are with a group, designate a driver who will not drink.

Death and injury associated with drinking and driving is a global tragedy.

Alcohol affects four things that anyone needs to drive a vehicle: judgment, muscular coordination, vision, and attentiveness.

Police records show that almost 40 percent of all motor vehicle-related deaths involve alcohol. In most cases, these deaths are the result of someone who was drinking and driving. In recent years, more than 17,000 annual motor vehicle-related deaths have been associated with the use of alcohol, with about 250,000 people injured.

For persons under 21, it is against the law in every U.S. state to drink alcohol. There are good medical, psychological, and developmental reasons for these laws.

The obvious way to eliminate the leading highway safety problem is for people never to drink alcohol and then drive.

Medical research shows that alcohol in a person's system can make crash injuries worse, especially injuries to the brain, spinal cord, or heart. This means that when anyone who has been drinking — driver or passenger — is in a crash, that person's chance of being killed or permanently disabled is higher than if the person had not been drinking.

Control of a Vehicle

The following three systems help to control the vehicle while driving — brakes, steering, and accelerator. At times, as when driving on snow or ice, it is easy to ask more of those control systems than the tires and road can provide. Meaning, you can lose control of the vehicle. See *StabiliTrak® System on page 5-6*.

Adding non-dealer/non-retailer accessories can affect vehicle performance. See *Accessories and Modifications on page 6-4*.

Braking

See *Brake System Warning Light on page 4-38*.

Braking action involves perception time and reaction time. Deciding to push the brake pedal is perception time. Actually doing it is reaction time.

Average reaction time is about three-fourths of a second. But that is only an average. It might be less with one driver and as long as two or three seconds or more with another. Age, physical condition, alertness, coordination, and eyesight all play a part. So do alcohol, drugs, and frustration. But even in three-fourths of a second, a vehicle moving at 100 km/h (60 mph) travels 20 m (66 feet). That could be a lot of distance in an emergency, so keeping enough space between the vehicle and others is important.

And, of course, actual stopping distances vary greatly with the surface of the road, whether it is pavement or gravel; the condition of the road, whether it is wet, dry, or icy; tire tread; the condition of the brakes; the weight of the vehicle; and the amount of brake force applied.

Avoid needless heavy braking. Some people drive in spurts, heavy acceleration followed by heavy braking, rather than keeping pace with traffic. This is a mistake. The brakes might not have time to cool between hard stops. The brakes will wear out much faster with a lot of heavy braking. Keeping pace with the traffic and allowing realistic following distances eliminates a lot of unnecessary braking. That means better braking and longer brake life.

If the engine ever stops while the vehicle is being driven, brake normally but do not pump the brakes. If the brakes are pumped, the pedal could get harder to push down. If the engine stops, there will still be some power brake assist but it will be used when the brake is applied. Once the power assist is used up, it can take longer to stop and the brake pedal will be harder to push.

Adding non-dealer/non-retailer accessories can affect vehicle performance. See *Accessories and Modifications on page 6-4*.

Antilock Brake System (ABS)

This vehicle has the Antilock Brake System (ABS), an advanced electronic braking system that helps prevent a braking skid.

When the engine is started and the vehicle begins to drive away, ABS checks itself. A momentary motor or clicking noise might be heard while this test is going on. This is normal.

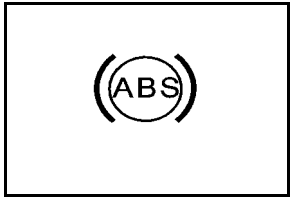

If there is a problem with ABS, this warning light stays on. See *Antilock Brake System (ABS) Warning Light on page 4-40*.

Along with ABS, the vehicle has a Dynamic Rear Proportioning (DRP) system. If there is a DRP problem, both the brake and ABS warning lights come on accompanied by a 10-second chime. The lights and chime will come on each time the ignition is turned on until the problem is repaired. See your dealer for service.

Let us say the road is wet and you are driving safely. Suddenly, an animal jumps out in front of you. You slam on the brakes and continue braking. Here is what happens with ABS:

A computer senses that the wheels are slowing down. If one of the wheels is about to stop rolling, the computer will separately work the brakes at each front wheel and at both rear wheels.

ABS can change the brake pressure to each wheel, as required, faster than any driver could. This can help the driver steer around the obstacle while braking hard.

As the brakes are applied, the computer keeps receiving updates on wheel speed and controls braking pressure accordingly.

Remember: ABS does not change the time needed to get a foot up to the brake pedal or always decrease stopping distance. If you get too close to the vehicle in front of you, there will not be enough time to apply the brakes if that vehicle suddenly slows or stops. Always leave enough room up ahead to stop, even with ABS.

Using ABS

Do not pump the brakes. Just hold the brake pedal down firmly and let antilock work. The brakes might vibrate or some noise might be heard, but this is normal.

Braking in Emergencies

ABS allows the driver to steer and brake at the same time. In many emergencies, steering can help more than even the very best braking.

Brake Assist (Except With 4.3L V6 Engine)

If this vehicle has StabiliTrak®, it also has a Brake Assist feature designed to assist the driver in stopping or decreasing vehicle speed in emergency driving conditions. This feature uses the stability system hydraulic brake control module to supplement the power brake system under conditions where the driver has quickly and forcefully applied the brake pedal in an attempt to quickly stop or slow down the vehicle. The stability system hydraulic brake control module increases brake pressure at each corner of the vehicle until the ABS activates. Minor brake pedal pulsations or pedal movement during this time is normal and the driver should continue to apply the brake pedal as the driving situation dictates The Brake Assist feature will automatically disengage when the brake pedal is released or brake pedal pressure is quickly decreased.

StabiliTrak® System

The vehicle may have a vehicle stability enhancement system called StabiliTrak. It is an advanced computer controlled system that assists the driver with directional control of the vehicle in difficult driving conditions.

StabiliTrak activates when the computer senses a discrepancy between the intended path and the direction the vehicle is actually traveling. StabiliTrak selectively applies braking pressure at any one of the vehicle's brakes to assist the driver with keeping the vehicle on the intended path.

When the vehicle is started and begins to move, the system performs several diagnostic checks to insure there are no problems. The system may be heard or felt while it is working. This is normal and does not mean there is a problem with the vehicle. The system should initialize before the vehicle reaches 20 mph (32 km/h). In some cases, it may take approximately two miles of driving before the system initializes.

If cruise control is being used when StabiliTrak activates, the cruise control automatically disengages. The cruise control can be re-engaged when road conditions allow. See *Cruise Control on page 4-7* for more information.

If the system fails to turn on or activate, the StabiliTrak light along with one of the following messages will be displayed on the Driver Information Center (DIC): TRACTION CONTROL OFF, SERVICE TRACTION CONTROL, STABILITRAK OFF, SERVICE STABILITRAK. If these DIC messages appear, make sure the StabiliTrak system has not been turned off using the StabiliTrak on/off button. Then turn the steering wheel clockwise from the nine o'clock position to the three o'clock position. If this clears the message(s), the vehicle does not need servicing. If this does not clear the message(s), then turn the vehicle off, wait 15 seconds, and then turn it back on again to reset the system. If any of these messages still appear on the DIC, the vehicle should be taken in for service. For more information on the DIC messages, see *DIC Warnings and Messages on page 4-66*.

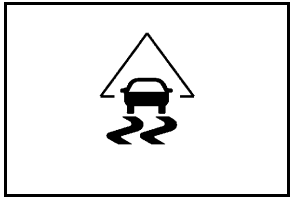

The StabiliTrak light will flash on the instrument panel cluster when the system is both on and activated.

The system may be heard or felt while it is working; this is normal.

The traction control disable button is located on the instrument panel below the climate controls.

The traction control part of StabiliTrak can be turned off by pressing and releasing the StabiliTrak button if both systems (traction control and StabiliTrak) were previously on. To disable both TCS and StabiliTrak, press and hold the button for five seconds.

TCS and StabiliTrak can be turned on by pressing and releasing the StabiliTrak button if not automatically shut off for any other reason.

When TCS or StabiliTrak is turned off, the StabiliTrak light and the appropriate message will be displayed on the DIC to warn the driver. The vehicle will still have brake-traction control when traction control is off, but will not be able to use the engine speed management system. See “Traction Control Operation” next for more information.

When the traction control system has been turned off, system noises may still be heard as a result of the brake-traction control coming on.

It is recommended to leave the system on for normal driving conditions, but it may be necessary to turn the system off if the vehicle is stuck in sand, mud, ice or snow, and you want to “rock” the vehicle to attempt to free it. It may also be necessary to turn off the system when driving in extreme off-road conditions where high wheel spin is required. See *If Your Vehicle is Stuck in Sand, Mud, Ice, or Snow on page 5-31*.

When the transfer case is in 4LO, the stability system is automatically disabled, the StabiliTrak light comes on and the STABILITRAK OFF message will appear on the DIC. Both traction control and StabiliTrak are automatically disabled in this condition.

Traction Control Operation

The traction control system is part of the StabiliTrak system. Traction control limits wheel spin by reducing engine power to the wheels (engine speed management) and by applying brakes to each individual wheel (brake-traction control) as necessary.

The traction control system is enabled automatically when the vehicle is started. It will activate and the StabiliTrak light will flash if it senses that any of the wheels are spinning or beginning to lose traction while driving. If traction control is turned off, only the brake-traction control portion of traction control will work. The engine speed management will be disabled. In this mode, engine power is not reduced automatically and the driven wheels can spin more freely. This can cause the brake-traction control to activate constantly.

Notice: **If the wheel(s) of one axle is allowed to spin excessively while the StabiliTrak, ABS and brake warning lights and any relevant DIC messages are displayed, the transfer case could be damaged. The repairs would not be covered by the vehicle warranty. Reduce engine power and do not spin the wheel(s) excessively while these lights and messages are displayed.**

The traction control system may activate on dry or rough roads or under conditions such as heavy acceleration while turning or abrupt upshifts/downshifts of the transmission. When this happens, a reduction in acceleration may be noticed, or a noise or vibration may be heard. This is normal.

If cruise control is being used when the system activates, the StabiliTrak light will flash and cruise control will automatically disengage. Cruise control may be reengaged when road conditions allow. See *Cruise Control on page 4-7*.

StabiliTrak may also turn off automatically if it determines that a problem exists with the system. If the problem does not clear itself after restarting the vehicle, see your dealer for service.

Locking Rear Axle

Vehicles with a locking rear axle can give more traction on snow, mud, ice, sand or gravel. It works like a standard axle most of the time, but when traction is low, this feature will allow the rear wheel with the most traction to move the vehicle.

Steering

Power Steering

If the vehicle is a Two-mode Hybrid, see the Two-mode Hybrid manual for more information.

If power steering assist is lost because the engine stops or the system is not functioning, the vehicle can be steered but it will take more effort.

Steering Tips

It is important to take curves at a reasonable speed.

Traction in a curve depends on the condition of the tires and the road surface, the angle at which the curve is banked, and vehicle speed. While in a curve, speed is the one factor that can be controlled.

If there is a need to reduce speed, do it before entering the curve, while the front wheels are straight.

Try to adjust the speed so you can drive through the curve. Maintain a reasonable, steady speed. Wait to accelerate until out of the curve, and then accelerate gently into the straightaway.

Steering in Emergencies

There are times when steering can be more effective than braking. For example, you come over a hill and find a truck stopped in your lane, or a car suddenly pulls out from nowhere, or a child darts out from between parked cars and stops right in front of you. These problems can be avoided by braking — if you can stop in time. But sometimes you cannot stop in time because there is no room. That is the time for evasive action — steering around the problem.

The vehicle can perform very well in emergencies like these. First, apply the brakes. See *Braking on page 5-3*. It is better to remove as much speed as possible from a collision. Then steer around the problem, to the left or right depending on the space available.

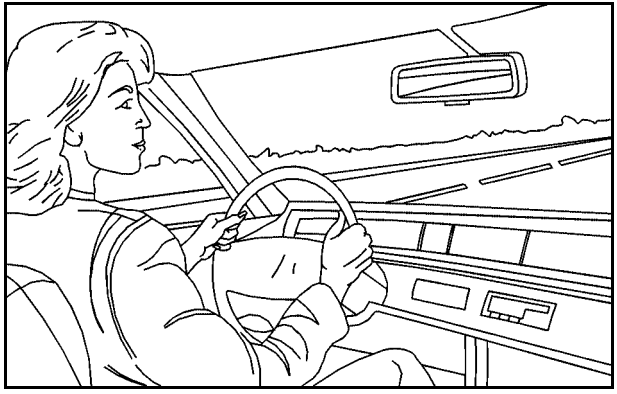

An emergency like this requires close attention and a quick decision. If holding the steering wheel at the recommended 9 and 3 o'clock positions, it can be turned a full 180 degrees very quickly without removing either hand. But you have to act fast, steer quickly, and just as quickly straighten the wheel once you have avoided the object.

The fact that such emergency situations are always possible is a good reason to practice defensive driving at all times and wear safety belts properly.

Off-Road Recovery

The vehicle's right wheels can drop off the edge of a road onto the shoulder while driving.

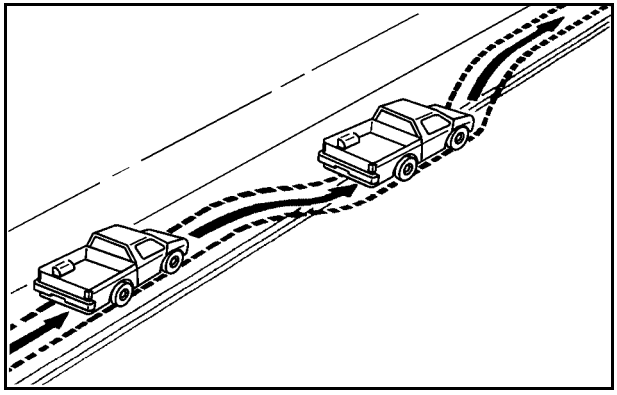

If the level of the shoulder is only slightly below the pavement, recovery should be fairly easy. Ease off the accelerator and then, if there is nothing in the way, steer so that the vehicle straddles the edge of the pavement. Turn the steering wheel 8 to 13 cm (3 to 5 inches), about one-eighth turn, until the right front tire contacts the pavement edge. Then turn the steering wheel to go straight down the roadway.

Passing

Passing another vehicle on a two-lane road can be dangerous. To reduce the risk of danger while passing:

- Look down the road, to the sides, and to crossroads for situations that might affect a successful pass. If in doubt, wait.
- Watch for traffic signs, pavement markings, and lines that could indicate a turn or an intersection. Never cross a solid or double-solid line on your side of the lane.
- Do not get too close to the vehicle you want to pass. Doing so can reduce your visibility.
- Wait your turn to pass a slow vehicle.
- When you are being passed, ease to the right.

Loss of Control

Let us review what driving experts say about what happens when the three control systems — brakes, steering, and acceleration — do not have enough friction where the tires meet the road to do what the driver has asked.

In any emergency, do not give up. Keep trying to steer and constantly seek an escape route or area of less danger.

Skidding

In a skid, a driver can lose control of the vehicle. Defensive drivers avoid most skids by taking reasonable care suited to existing conditions, and by not overdriving those conditions. But skids are always possible.

The three types of skids correspond to the vehicle's three control systems. In the braking skid, the wheels are not rolling. In the steering or cornering skid, too much speed or steering in a curve causes tires to slip and lose cornering force. And in the acceleration skid, too much throttle causes the driving wheels to spin.

Remember: StabiliTrak® helps avoid only the acceleration skid. See *StabiliTrak® System on page 5-6*. If the StabiliTrak® System is off, then an acceleration skid is best handled by easing your foot off the accelerator pedal.

If the vehicle starts to slide, ease your foot off the accelerator pedal and quickly steer the way you want the vehicle to go. If you start steering quickly enough, the vehicle may straighten out. Always be ready for a second skid if it occurs.

Of course, traction is reduced when water, snow, ice, gravel, or other material is on the road. For safety, slow down and adjust your driving to these conditions. It is important to slow down on slippery surfaces because stopping distance will be longer and vehicle control more limited.

While driving on a surface with reduced traction, try your best to avoid sudden steering, acceleration, or braking, including reducing vehicle speed by shifting to a lower gear. Any sudden changes could cause the tires to slide. You may not realize the surface is slippery until the vehicle is skidding. Learn to recognize warning clues — such as enough water, ice, or packed snow on the road to make a mirrored surface — and slow down when you have any doubt.

Remember: Antilock brakes help avoid only the braking skid.

Off-Road Driving

Vehicles with four-wheel drive can be used for off-road driving. Vehicles without four-wheel drive and vehicles with 20-inch tire/wheel assemblies should not be driven off-road except on a level, solid surface.

The airbag system is designed to work properly under a wide range of conditions, including off-road usage. Always wear your safety belt and observe safe driving speeds, especially on rough terrain.

Drinking and driving can be very dangerous on any road and this is certainly true for off-road driving. At the very time you need special alertness and driving skills, your reflexes, perceptions, and judgment can be affected by even a small amount of alcohol. You could have a serious — or even fatal — accident if you drink and drive or ride with a driver who has been drinking.

Off-roading can be great fun but has some definite hazards. The greatest of these is the terrain itself. When off-road driving, traffic lanes are not marked, curves are not banked, and there are no road signs. Surfaces can be slippery, rough, uphill, or downhill.

Avoid sharp turns and abrupt maneuvers. Failure to operate the vehicle correctly off-road could result in loss of vehicle control or vehicle rollover.

Off-roading involves some new skills. That is why it is very important that you read these driving tips and suggestions to help make off-road driving safer and more enjoyable.

Before You Go Off-Roading

- Have all necessary maintenance and service work done.
- Make sure there is enough fuel, that fluid levels are where they should be, and that the spare tire is fully inflated.
- Be sure to read all the information about four-wheel-drive vehicles in this manual.
- Make sure all underbody shields, if the vehicle has them, are properly attached.
- Know the local laws that apply to off-roading where you will be driving or check with law enforcement people in the area.
- Be sure to get the necessary permission if you will be on private land.

If you think you will need some more ground clearance at the front of your vehicle, you can remove the front fascia lower air dam. The air dam is held in place by two bolts and 10 snaps accessible from underneath the front fascia.

To remove the air dam:

1. Remove the two outboard air dam bolts.
2. With a flat-blade tool, disengage the snaps.
3. After the bolts are removed and the snaps are disengaged, push forward on the air dam until it is free.

Notice: **Operating your vehicle for extended periods without the front fascia lower air dam installed can cause improper air flow to the engine. Always be sure to replace the front fascia air dam when you are finished off-road driving.**

After off-roading, be sure to reinstall the air dam:

1. Line up the snaps and push the air dam rearward to engage the snaps.
2. Install the two outboard bolts.

Loading Your Vehicle for Off-Road Driving

⚠ WARNING:

- Cargo on the load floor piled higher than the seatbacks can be thrown forward during a sudden stop. You or your passengers could be injured. Keep cargo below the top of the seatbacks.
- Unsecured cargo on the load floor can be tossed about when driving over rough terrain. You or your passengers can be struck by flying objects. Secure the cargo properly.
- Heavy loads on the roof raise the vehicle's center of gravity, making it more likely to roll over. You can be seriously or fatally injured if the vehicle rolls over. Put heavy loads inside the cargo area, not on the roof. Keep cargo in the cargo area as far forward and low as possible.

There are some important things to remember about how to load your vehicle.

- The heaviest things should be on the floor, forward of the rear axle. Put heavier items as far forward as you can.
- Be sure the load is properly secured, so things are not tossed around.

You will find other important information under *Loading the Vehicle on page 5-33* and *Tires on page 6-70*.

Environmental Concerns

Off-road driving can provide wholesome and satisfying recreation. However, it also raises environmental concerns. We recognize these concerns and urge every off-roader to follow these basic rules for protecting the environment:

- Always use established trails, roads, and areas that have been specially set aside for public off-road recreational driving and obey all posted regulations.
- Avoid any driving practice that could damage shrubs, flowers, trees, or grasses or disturb wildlife. This includes wheel-spinning, breaking down trees, or unnecessary driving through streams or over soft ground.
- Always carry a litter bag and make sure all refuse is removed from any campsite before leaving.
- Take extreme care with open fires (where permitted), camp stoves, and lanterns.
- Never park your vehicle over dry grass or other combustible materials that could catch fire from the heat of the vehicle's exhaust system.

Traveling to Remote Areas

It makes sense to plan your trip, especially when going to a remote area. Know the terrain and plan your route. Get accurate maps of trails and terrain. Check to see if there are any blocked or closed roads.

It is also a good idea to travel with at least one other vehicle in case something happens to one of them.

For vehicles with a winch, be sure to read the winch instructions. In a remote area, a winch can be handy if you get stuck but you will want to know how to use it properly.

Getting Familiar with Off-Road Driving

It is a good idea to practice in an area that is safe and close to home before you go into the wilderness. Off-roading requires some new and different skills.

Tune your senses to different kinds of signals. Your eyes need to constantly sweep the terrain for unexpected obstacles. Your ears need to listen for unusual tire or engine sounds. Use your arms, hands, feet, and body to respond to vibrations and vehicle bounce.

Controlling the vehicle is the key to successful off-road driving. One of the best ways to control the vehicle is to control the speed. At higher speeds:

- You approach things faster and have less time to react.
- There is less time to scan the terrain for obstacles.
- The vehicle has more bounce when driving over obstacles.
- More braking distance is needed, especially on an unpaved surface.

⚠ WARNING:

When you are driving off-road, bouncing and quick changes in direction can easily throw you out of position. This could cause you to lose control and crash. So, whether you are driving on or off the road, you and your passengers should wear safety belts.

Scanning the Terrain

Off-road driving can take you over many different kinds of terrain. Be familiar with the terrain and its many different features.

Surface Conditions: Off-roading surfaces can be hard-packed dirt, gravel, rocks, grass, sand, mud, snow, or ice. Each of these surfaces affects the vehicle's steering, acceleration, and braking in different ways. Depending on the surface, slipping, sliding, wheel spinning, delayed acceleration, poor traction, and longer braking distances can occur.

Surface Obstacles: Unseen or hidden obstacles can be hazardous. A rock, log, hole, rut, or bump can startle you if you are not prepared for them. Often these obstacles are hidden by grass, bushes, snow, or even the rise and fall of the terrain itself.

Some things to consider:

- Is the path ahead clear?
- Will the surface texture change abruptly up ahead?
- Does the travel take you uphill or downhill?
- Will you have to stop suddenly or change direction quickly?

When driving over obstacles or rough terrain, keep a firm grip on the steering wheel. Ruts, troughs, or other surface features can jerk the wheel out of your hands.

When driving over bumps, rocks, or other obstacles, the wheels can leave the ground. If this happens, even with one or two wheels, you cannot control the vehicle as well or at all.

Because you will be on an unpaved surface, it is especially important to avoid sudden acceleration, sudden turns, or sudden braking.

Off-roading requires a different kind of alertness from driving on paved roads and highways. There are no road signs, posted speed limits, or signal lights. Use good judgment about what is safe and what is not.

Driving on Hills

Off-road driving often takes you up, down, or across a hill. Driving safely on hills requires good judgment and an understanding of what the vehicle can and cannot do. There are some hills that simply cannot be driven, no matter how well built the vehicle.

⚠ WARNING:

Many hills are simply too steep for any vehicle. If you drive up them, you will stall. If you drive down them, you cannot control your speed. If you drive across them, you will roll over. You could be seriously injured or killed. If you have any doubt about the steepness, do not drive the hill.

Approaching a Hill

When you approach a hill, decide if it is too steep to climb, descend, or cross. Steepness can be hard to judge. On a very small hill, for example, there may be a smooth, constant incline with only a small change in elevation where you can easily see all the way to the top. On a large hill, the incline may get steeper as you near the top, but you might not see this because the crest of the hill is hidden by bushes, grass, or shrubs.

Consider this as you approach a hill:

- Is there a constant incline, or does the hill get sharply steeper in places?
- Is there good traction on the hillside, or will the surface cause tire slipping?
- Is there a straight path up or down the hill so you will not have to make turning maneuvers?
- Are there obstructions on the hill that can block your path, such as boulders, trees, logs, or ruts?
- What is beyond the hill? Is there a cliff, an embankment, a drop-off, a fence? Get out and walk the hill if you do not know. It is the smart way to find out.
- Is the hill simply too rough? Steep hills often have ruts, gullies, troughs, and exposed rocks because they are more susceptible to the effects of erosion.

Driving Uphill

Once you decide it is safe to drive up the hill:

- Use a low gear and get a firm grip on the steering wheel.
- Get a smooth start up the hill and try to maintain speed. Not using more power than needed can avoid spinning the wheels or sliding.

⚠ WARNING:

Turning or driving across steep hills can be dangerous. You could lose traction, slide sideways, and possibly roll over. You could be seriously injured or killed. When driving up hills, always try to go straight up.

- Try to drive straight up the hill if at all possible. If the path twists and turns, you might want to find another route.
- Ease up on the speed as you approach the top of the hill.
- Attach a flag to the vehicle to be more visible to approaching traffic on trails or hills.
- Sound the horn as you approach the top of the hill to let opposing traffic know you are there.
- Use headlamps even during the day to make the vehicle more visible to oncoming traffic.

⚠ WARNING:

Driving to the top (crest) of a hill at full speed can cause an accident. There could be a drop-off, embankment, cliff, or even another vehicle. You could be seriously injured or killed. As you near the top of a hill, slow down and stay alert.

If the vehicle stalls, or is about to stall, and you cannot make it up the hill:

- Push the brake pedal to stop the vehicle and keep it from rolling backwards and apply the parking brake.
- If the engine is still running, shift the transmission to R (Reverse), release the parking brake, and slowly back down the hill in R (Reverse).

- If the engine has stopped running, you need to restart it. With the brake pedal pressed and the parking brake still applied, shift the transmission to P (Park) and restart the engine. Then, shift to R (Reverse), release the parking brake, and slowly back down the hill as straight as possible in R (Reverse).
- While backing down the hill, put your left hand on the steering wheel at the 12 o'clock position so you can tell if the wheels are straight and can maneuver as you back down. It is best to back down the hill with the wheels straight rather than in the left or right direction. Turning the wheel too far to the left or right will increase the possibility of a rollover.

Things not to do if the vehicle stalls, or is about to stall, when going up a hill:

- Never attempt to prevent a stall by shifting into N (Neutral) to rev-up the engine and regain forward momentum. This will not work. The vehicle can roll backward very quickly and could go out of control.
- Never try to turn around if about to stall when going up a hill. If the hill is steep enough to stall the vehicle, it is steep enough to cause it to roll over. If you cannot make it up the hill, back straight down the hill.

If, after stalling, you try to back down the hill and decide you just cannot do it, set the parking brake, put your transmission in P (Park), and turn off the engine. Leave the vehicle and go get some help. Exit on the uphill side and stay clear of the path the vehicle would take if it rolled downhill. Do not shift the transfer case to Neutral when you leave the vehicle. Leave it in some gear.

⚠ WARNING:

Shifting the transfer case to Neutral can cause your vehicle to roll even if the transmission is in P (Park). This is because the Neutral position on the transfer case overrides the transmission. You or someone else could be injured. If you are going to leave your vehicle, set the parking brake and shift the transmission to P (Park). But do not shift the transfer case to Neutral.

Driving Downhill

When off-roading takes you downhill, consider:

- How steep is the downhill? Will I be able to maintain vehicle control?
- What is the surface like? Smooth? Rough? Slippery? Hard-packed dirt? Gravel?
- Are there hidden surface obstacles? Ruts? Logs? Boulders?
- What is at the bottom of the hill? Is there a hidden creek bank or even a river bottom with large rocks?

If you decide you can go down a hill safely, try to keep the vehicle headed straight down. Use a low gear so engine drag can help the brakes so they do not have to do all the work. Descend slowly, keeping the vehicle under control at all times.

⚠ WARNING:

Heavy braking when going down a hill can cause your brakes to overheat and fade. This could cause loss of control and a serious accident. Apply the brakes lightly when descending a hill and use a low gear to keep vehicle speed under control.

Things not to do when driving down a hill:

- When driving downhill, avoid turns that take you across the incline of the hill. A hill that is not too steep to drive down might be too steep to drive across. The vehicle could roll over.
- Never go downhill with the transmission in N (Neutral), called free-wheeling. The brakes will have to do all the work and could overheat and fade.

Vehicles are much more likely to stall when going uphill, but if it happens when going downhill:

1. Stop the vehicle by applying the regular brakes and apply the parking brake.
2. Shift to P (Park) and, while still braking, restart the engine.
3. Shift back to a low gear, release the parking brake, and drive straight down.
4. If the engine will not start, get out and get help.

Driving Across an Incline

An off-road trail will probably go across the incline of a hill. To decide whether to try to drive across the incline, consider the following:

⚠ WARNING:

Driving across an incline that is too steep will make your vehicle roll over. You could be seriously injured or killed. If you have any doubt about the steepness of the incline, do not drive across it. Find another route instead.

- A hill that can be driven straight up or down might be too steep to drive across. When going straight up or down a hill, the length of the wheel base — the distance from the front wheels to the rear wheels — reduces the likelihood the vehicle will tumble end over end. But when driving across an incline, the narrower track width — the distance between the left and right wheels — might not prevent the vehicle from tilting and rolling over. Driving across an incline puts more weight on the downhill wheels which could cause a downhill slide or a rollover.
- Surface conditions can be a problem. Loose gravel, muddy spots, or even wet grass can cause the tires to slip sideways, downhill. If the vehicle slips sideways, it can hit something that will trip it — a rock, a rut, etc. — and roll over.
- Hidden obstacles can make the steepness of the incline even worse. If you drive across a rock with the uphill wheels, or if the downhill wheels drop into a rut or depression, the vehicle can tilt even more.

For these reasons, carefully consider whether to try to drive across an incline. Just because the trail goes across the incline does not mean you have to drive it. The last vehicle to try it might have rolled over.

If you feel the vehicle starting to slide sideways, turn downhill. This should help straighten out the vehicle and prevent the side slipping. The best way to prevent this is to “walk the course” first, so you know what the surface is like before driving it.

Stalling on an Incline

⚠ WARNING:

Getting out on the downhill (low) side of a vehicle stopped across an incline is dangerous. If the vehicle rolls over, you could be crushed or killed. Always get out on the uphill (high) side of the vehicle and stay well clear of the rollover path.

If the vehicle stalls when crossing an incline, be sure you, and any passengers, get out on the uphill side, even if the door there is harder to open. If you get out on the downhill side and the vehicle starts to roll over, you will be right in its path.

If you have to walk down the slope, stay out of the path the vehicle will take if it does roll over.

Driving in Mud, Sand, Snow, or Ice

When you drive in mud, snow, or sand, the wheels do not get good traction. Acceleration is not as quick, turning is more difficult, and braking distances are longer.

It is best to use a low gear when in mud — the deeper the mud, the lower the gear. In really deep mud, keep the vehicle moving so it does not get stuck.

When driving on sand, wheel traction changes. On loosely packed sand, such as on beaches or sand dunes, the tires will tend to sink into the sand. This affects steering, accelerating, and braking. Drive at a reduced speed and avoid sharp turns or abrupt maneuvers.

Hard packed snow and ice offer the worst tire traction. On these surfaces, it is very easy to lose control. On wet ice, for example, the traction is so poor that you will have difficulty accelerating. And, if the vehicle does get moving, poor steering and difficult braking can cause it to slide out of control.

⚠ WARNING:

Driving on frozen lakes, ponds, or rivers can be dangerous. Underwater springs, currents under the ice, or sudden thaws can weaken the ice. Your vehicle could fall through the ice and you and your passengers could drown. Drive your vehicle on safe surfaces only.

Driving in Water

⚠ WARNING:

Driving through rushing water can be dangerous. Deep water can sweep your vehicle downstream and you and your passengers could drown. If it is only shallow water, it can still wash away the ground from under your tires, and you could lose traction and roll the vehicle over. Do not drive through rushing water.

Heavy rain can mean flash flooding, and flood waters demand extreme caution.

Find out how deep the water is before driving through it. Do not try it if it is deep enough to cover the wheel hubs, axles, or exhaust pipe — you probably will not get through. Deep water can damage the axle and other vehicle parts.

If the water is not too deep, drive slowly through it. At faster speeds, water splashes on the ignition system and the vehicle can stall. Stalling can also occur if you get the tailpipe under water. If the tailpipe is under water, you will never be able to start the engine. When going through water, remember that when the brakes get wet, it might take longer to stop. See *Driving in Rain and on Wet Roads on page 5-26*.

After Off-Road Driving

Remove any brush or debris that has collected on the underbody, chassis, or under the hood. These accumulations can be a fire hazard.

After operation in mud or sand, have the brake linings cleaned and checked. These substances can cause glazing and uneven braking. Check the body structure, steering, suspension, wheels, tires, and exhaust system for damage and check the fuel lines and cooling system for any leakage.

The vehicle requires more frequent service due to off-road use. Refer to the Maintenance Schedule for additional information.

Driving at Night

Night driving is more dangerous than day driving because some drivers are likely to be impaired — by alcohol or drugs, with night vision problems, or by fatigue.

Night driving tips include:

- Drive defensively.
- Do not drink and drive.
- Reduce headlamp glare by adjusting the inside rearview mirror.
- Slow down and keep more space between you and other vehicles because headlamps can only light up so much road ahead.
- Watch for animals.
- When tired, pull off the road.
- Do not wear sunglasses.
- Avoid staring directly into approaching headlamps.
- Keep the windshield and all glass on your vehicle clean — inside and out.
- Keep your eyes moving, especially during turns or curves.

No one can see as well at night as in the daytime. But, as we get older, these differences increase. A 50-year-old driver might need at least twice as much light to see the same thing at night as a 20-year-old.

Driving in Rain and on Wet Roads

Rain and wet roads can reduce vehicle traction and affect your ability to stop and accelerate. Always drive slower in these types of driving conditions and avoid driving through large puddles and deep-standing or flowing water.

⚠ WARNING:

Wet brakes can cause crashes. They might not work as well in a quick stop and could cause pulling to one side. You could lose control of the vehicle.

After driving through a large puddle of water or a car/vehicle wash, lightly apply the brake pedal until the brakes work normally.

Flowing or rushing water creates strong forces. Driving through flowing water could cause your vehicle to be carried away. If this happens, you and other vehicle occupants could drown. Do not ignore police warnings and be very cautious about trying to drive through flowing water.

Hydroplaning

Hydroplaning is dangerous. Water can build up under your vehicle's tires so they actually ride on the water. This can happen if the road is wet enough and you are going fast enough. When your vehicle is hydroplaning, it has little or no contact with the road.

There is no hard and fast rule about hydroplaning. The best advice is to slow down when the road is wet.

Other Rainy Weather Tips

Besides slowing down, other wet weather driving tips include:

- Allow extra following distance.
- Pass with caution.
- Keep windshield wiping equipment in good shape.
- Keep the windshield washer fluid reservoir filled.
- Have good tires with proper tread depth. See *Tires on page 6-70*.
- Turn off cruise control.

Before Leaving on a Long Trip

To prepare your vehicle for a long trip, consider having it serviced by your dealer before departing.

Things to check on your own include:

- *Windshield Washer Fluid:* Reservoir full? Windows clean — inside and outside?
- *Wiper Blades:* In good shape?
- *Fuel, Engine Oil, Other Fluids:* All levels checked?
- *Lamps:* Do they all work and are lenses clean?
- *Tires:* Are treads good? Are tires inflated to recommended pressure?
- *Weather and Maps:* Safe to travel? Have up-to-date maps?

Highway Hypnosis

Always be alert and pay attention to your surroundings while driving. If you become tired or sleepy, find a safe place to park your vehicle and rest.

Other driving tips include:

- Keep the vehicle well ventilated.
- Keep interior temperature cool.
- Keep your eyes moving — scan the road ahead and to the sides.
- Check the rearview mirror and vehicle instruments often.

Hill and Mountain Roads

Driving on steep hills or through mountains is different than driving on flat or rolling terrain. Tips for driving in these conditions include:

- Keep the vehicle serviced and in good shape.
- Check all fluid levels and brakes, tires, cooling system, and transmission.
- Going down steep or long hills, shift to a lower gear.

⚠ WARNING:

If you do not shift down, the brakes could get so hot that they would not work well. You would then have poor braking or even none going down a hill. You could crash. Shift down to let the engine assist the brakes on a steep downhill slope.

⚠ WARNING:

Coasting downhill in N (Neutral) or with the ignition off is dangerous. The brakes will have to do all the work of slowing down and they could get so hot that they would not work well. You would then have poor braking or even none going down a hill. You could crash. Always have the engine running and the vehicle in gear when going downhill.

- Stay in your own lane. Do not swing wide or cut across the center of the road. Drive at speeds that let you stay in your own lane.
- Top of hills: Be alert — something could be in your lane (stalled car, accident).
- Pay attention to special road signs (falling rocks area, winding roads, long grades, passing or no-passing zones) and take appropriate action.

See *Off-Road Driving on page 5-13* for information about driving off-road.

Winter Driving

Driving on Snow or Ice

Drive carefully when there is snow or ice between the tires and the road, creating less traction or grip. Wet ice can occur at about 0°C (32°F) when freezing rain begins to fall, resulting in even less traction. Avoid driving on wet ice or in freezing rain until roads can be treated with salt or sand.

Drive with caution, whatever the condition. Accelerate gently so traction is not lost. Accelerating too quickly causes the wheels to spin and makes the surface under the tires slick, so there is even less traction.

Try not to break the fragile traction. If you accelerate too fast, the drive wheels will spin and polish the surface under the tires even more.

The *StabiliTrak® System on page 5-6* improves the ability to accelerate on slippery roads, but slow down and adjust your driving to the road conditions. When driving through deep snow, turn off the traction control part of the StabiliTrak® System to help maintain vehicle motion at lower speeds.

The *Antilock Brake System (ABS) on page 5-4* improves vehicle stability during hard stops on slippery roads, but apply the brakes sooner than when on dry pavement.

Allow greater following distance on any slippery road and watch for slippery spots. Icy patches can occur on otherwise clear roads in shaded areas. The surface of a curve or an overpass can remain icy when the surrounding roads are clear. Avoid sudden steering maneuvers and braking while on ice.

Turn off cruise control, if equipped, on slippery surfaces.

Blizzard Conditions

Being stuck in snow can be in a serious situation. Stay with the vehicle unless there is help nearby. If possible, use the *Roadside Assistance Program on page 8-7*. To get help and keep everyone in the vehicle safe:

- Turn on the *Hazard Warning Flashers on page 4-3*.
- Tie a red cloth to an outside mirror.

⚠ WARNING:

Snow can trap engine exhaust under the vehicle. This may cause exhaust gases to get inside. Engine exhaust contains carbon monoxide (CO) which cannot be seen or smelled. It can cause unconsciousness and even death.

If the vehicle is stuck in the snow:

- Clear away snow from around the base of your vehicle, especially any that is blocking the exhaust pipe.
- Check again from time to time to be sure snow does not collect there.

(Continued)

WARNING: (Continued)

- Open a window about 5 cm (two inches) on the side of the vehicle that is away from the wind to bring in fresh air.
- Fully open the air outlets on or under the instrument panel.
- Adjust the Climate Control system to a setting that circulates the air inside the vehicle and set the fan speed to the highest setting. See Climate Control System in the Index.

For more information about carbon monoxide, see *Engine Exhaust on page 3-58*.

Snow can trap exhaust gases under your vehicle. This can cause deadly CO (carbon monoxide) gas to get inside. CO could overcome you and kill you. You cannot see it or smell it, so you might not know it is in your vehicle. Clear away snow from around the base of your vehicle, especially any that is blocking the exhaust.

Run the engine for short periods only as needed to keep warm, but be careful.

To save fuel, run the engine for only short periods as needed to warm the vehicle and then shut the engine off and close the window most of the way to save heat. Repeat this until help arrives but only when you feel really uncomfortable from the cold. Moving about to keep warm also helps.

If it takes some time for help to arrive, now and then when you run the engine, push the accelerator pedal slightly so the engine runs faster than the idle speed. This keeps the battery charged to restart the vehicle and to signal for help with the headlamps. Do this as little as possible to save fuel.

If Your Vehicle is Stuck in Sand, Mud, Ice, or Snow

Slowly and cautiously spin the wheels to free the vehicle when stuck in sand, mud, ice, or snow. See *Rocking Your Vehicle to Get It Out on page 5-32*.

If the vehicle has a traction system, it can often help to free a stuck vehicle. Refer to the vehicle's traction system in the Index. If stuck too severely for the traction system to free the vehicle, turn the traction system off and use the rocking method.

⚠ WARNING:

If the vehicle's tires spin at high speed, they can explode, and you or others could be injured. The vehicle can overheat, causing an engine compartment fire or other damage. Spin the wheels as little as possible and avoid going above 55 km/h (35 mph) as shown on the speedometer.

For information about using tire chains on the vehicle, see *Tire Chains on page 6-98*.

Rocking Your Vehicle to Get It Out

Turn the steering wheel left and right to clear the area around the front wheels. For four-wheel-drive vehicles, shift into Four-Wheel High. For vehicles with StabiliTrak®, turn the traction control part of the system off. Shift back and forth between R (Reverse) and a forward gear, spinning the wheels as little as possible. To prevent transmission wear, wait until the wheels stop spinning before shifting gears. Release the accelerator pedal while shifting, and press lightly on the accelerator pedal when the transmission is in gear. Slowly spinning the wheels in the forward and reverse directions causes a rocking motion that could free the vehicle. If that does not get the vehicle out after a few tries, it might need to be towed out. Recovery hooks can be used, if the vehicle has them. If the vehicle does need to be towed out, see *Towing Your Vehicle on page 5-48*.

Recovery Hooks

⚠ WARNING:

These hooks, when used, are under a lot of force. Always pull the vehicle straight out. Never pull on the hooks at a sideways angle. The hooks could break off and you or others could be injured from the chain or cable snapping back.

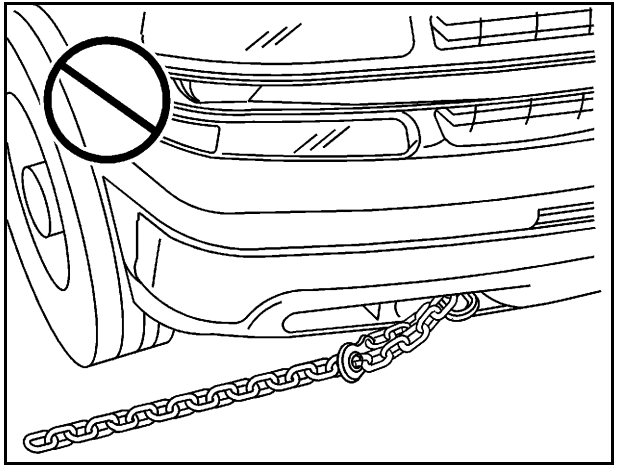

Notice: **Never use recovery hooks to tow the vehicle. Your vehicle could be damaged and it would not be covered by warranty.**

For vehicles with recovery hooks at the front of the vehicle, you can use them if you are stuck off-road and need to be pulled to some place where you can continue driving.

Loading the Vehicle

It is very important to know how much weight your vehicle can carry. This weight is called the vehicle capacity weight and includes the weight of all occupants, cargo, and all nonfactory-installed options. Two labels on your vehicle show how much weight it was designed to carry, the Tire and Loading Information label and the Certification/Tire label.

⚠ WARNING:

Do not load the vehicle any heavier than the Gross Vehicle Weight Rating (GVWR), or either the maximum front or rear Gross Axle Weight Rating (GAWR). If you do, parts on the vehicle can break, and it can change the way the vehicle handles. These could cause you to lose control and crash. Also, overloading can shorten the life of the vehicle.

Tire and Loading Information Label

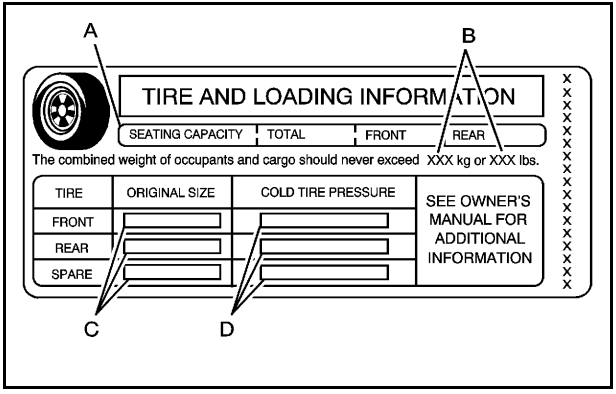

Label Example

A vehicle specific Tire and Loading Information label is attached to the center pillar (B-pillar). With the driver's door open, you will find the label attached below the door lock post (striker).

The tire and loading information label shows the number of occupant seating positions (A), and the maximum vehicle capacity weight (B) in kilograms and pounds.

The Tire and Loading Information label also shows the size of the original equipment tires (C) and the recommended cold tire inflation pressures (D). For more information on tires and inflation see *Tires on page 6-70* and *Inflation - Tire Pressure on page 6-80*.

There is also important loading information on the vehicle Certification/Tire label. It tells you the Gross Vehicle Weight Rating (GVWR) and the Gross Axle Weight Rating (GAWR) for the front and rear axles. See “Certification/Tire Label” later in this section.

Steps for Determining Correct Load Limit

1. Locate the statement “The combined weight of occupants and cargo should never exceed XXX kg or XXX lbs” on your vehicle's placard.
2. Determine the combined weight of the driver and passengers that will be riding in your vehicle.
3. Subtract the combined weight of the driver and passengers from XXX kg or XXX lbs.
4. The resulting figure equals the available amount of cargo and luggage load capacity. For example, if the “XXX” amount equals 1400 lbs and there will be five 150 lb passengers in your vehicle, the amount of available cargo and luggage load capacity is 650 lbs (1400 − 750 (5 x 150) = 650 lbs).
5. Determine the combined weight of luggage and cargo being loaded on the vehicle. That weight may not safely exceed the available cargo and luggage load capacity calculated in Step 4.
6. If your vehicle will be towing a trailer, the load from your trailer will be transferred to your vehicle. Consult this manual to determine how this reduces the available cargo and luggage load capacity of your vehicle. See *Towing a Trailer on page 5-55* for important information on towing a trailer, towing safety rules and trailering tips.

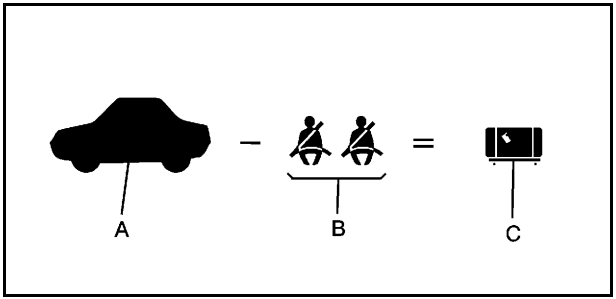

Example 1

Item	Description	Total
A	Vehicle Capacity Weight for Example 1 =	1,000 lbs (453 kg)
B	Subtract Occupant Weight @ 150 lbs (68 kg) × 2 =	300 lbs (136 kg)
C	Available Occupant and Cargo Weight =	700 lbs (317 kg)

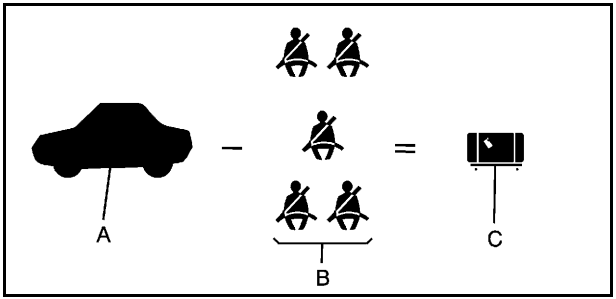

Example 2

Item	Description	Total
A	Vehicle Capacity Weight for Example 2 =	1,000 lbs (453 kg)
B	Subtract Occupant Weight @ 150 lbs (68 kg) × 5 =	750 lbs (340 kg)
C	Available Cargo Weight =	250 lbs (113 kg)

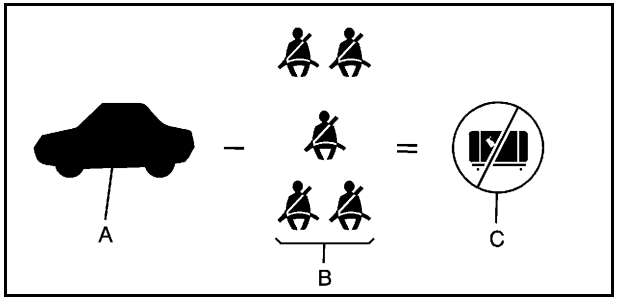

Example 3

Item	Description	Total
A	Vehicle Capacity Weight for Example 3 =	1,000 lbs (453 kg)
B	Subtract Occupant Weight @ 200 lbs (91 kg) × 5 =	1000 lbs (453 kg)
C	Available Cargo Weight =	0 lbs (0 kg)

Refer to your vehicle's tire and loading information label for specific information about your vehicle's capacity weight and seating positions. The combined weight of the driver, passengers, and cargo should never exceed your vehicle's capacity weight.

Certification/Tire Label

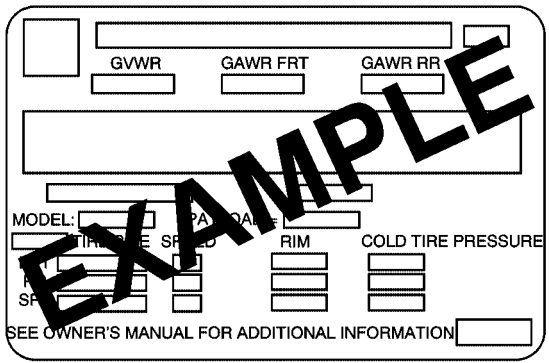

A vehicle specific Certification/Tire label is found on the rear edge of the driver's door. The label shows the size of your vehicle's original tires and the inflation pressures needed to obtain the gross weight capacity of your vehicle. This is called Gross Vehicle Weight Rating (GVWR). The GVWR includes the weight of the vehicle, all occupants, fuel, and cargo.

The Certification/Tire label also tells you the maximum weights for the front and rear axles, called Gross Axle Weight Rating (GAWR). To find out the actual loads on your front and rear axles, you need to go to a weigh station and weigh your vehicle. Your dealer can help you with this. Be sure to spread out your load equally on both sides of the centerline.

Never exceed the GVWR for your vehicle, or the GAWR for either the front or rear axle.

The Certification/Tire label also contains important information about your Front Axle Reserve Capacity. See “What is front axle reserve capacity, and how do I calculate it?” under *Adding a Snow Plow or Similar Equipment on page 5-41*.

⚠ WARNING:

In the case of a sudden stop or collision, things carried in the bed of your truck could shift forward and come into the passenger area, injuring you and others. If you put things in the bed of your truck, you should make sure they are properly secured.

⚠ WARNING:

Do not load the vehicle any heavier than the Gross Vehicle Weight Rating (GVWR), or either the maximum front or rear Gross Axle Weight Rating (GAWR). If you do, parts on the vehicle can break, and it can change the way the vehicle handles. These could cause you to lose control and crash. Also, overloading can shorten the life of the vehicle.

Notice : **Overloading the vehicle may cause damage. Repairs would not be covered by the vehicle warranty. Do not overload the vehicle.**

Using heavier suspension components to get added durability might not change your weight ratings. Ask your dealer to help you load your vehicle the right way.

If you put things inside your vehicle — like suitcases, tools, packages, or anything else — they go as fast as the vehicle goes. If you have to stop or turn quickly, or if there is a crash, they will keep going.

⚠ WARNING:

Things you put inside your vehicle can strike and injure people in a sudden stop or turn, or in a crash.

- Put things in the cargo area of your vehicle. Try to spread the weight evenly.
- Never stack heavier things, like suitcases, inside the vehicle so that some of them are above the tops of the seats.
- Do not leave an unsecured child restraint in your vehicle.
- When you carry something inside the vehicle, secure it whenever you can.
- Do not leave a seat folded down unless you need to.

There is also important loading information for off-road driving in this manual. See “Loading Your Vehicle for Off-Road Driving“ under *Off-Road Driving on page 5-13*.

Two-Tiered Loading

Depending on the model of your pick-up, you can create an upper load platform by positioning two or four 2 inches (5 cm) by 6 inches (15 cm) wooden planks across the width of the pickup box. The planks must be inserted in the pickup box depressions. The length of the planks must allow for at least a 3/4 inch (2 cm) bearing surface on each end of the plank.

When using this upper load platform, be sure the load is securely tied down to prevent it from shifting. The load's center of gravity should be positioned in a zone over the rear axle. The zone is located in the area between the front of each wheel well and the rear of each wheel well. The center of gravity height must not extend above the top of the pickup box flareboard.

Any load that extends beyond the vehicle's taillamp area must be properly marked according to local laws and regulations.

Remember not to exceed the Gross Axle Weight Rating (GAWR) of the front or rear axle.

Add-On Equipment

When you carry removable items, you may need to put a limit on how many people you carry inside your vehicle. Be sure to weigh your vehicle before you buy and install the new equipment.

Notice: **Overloading the vehicle may cause damage. Repairs would not be covered by the vehicle warranty. Do not overload the vehicle.**

Remember not to exceed the Gross Axle Weight Rating (GAWR) of the front or rear axle.

* Equipment	Maximum Weight
Ladder Rack and Cargo	750 lbs (340 kg)
Cross Toolbox and Cargo	400 lbs (181 kg)
Side Boxes and Cargo	250 lbs per side (113 kg per side)
* The combined weight for all rail-mounted equipment should not exceed 1,000 lbs (454 kg).	

Loading Points

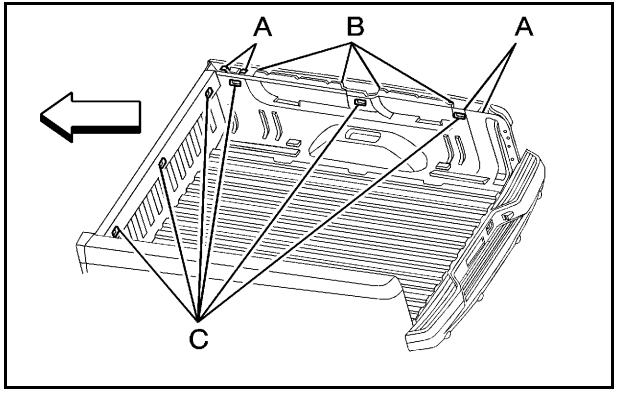

A. Primary Load Points

B. Secondary Load Areas

C. Cargo Management Option Holes

Structural members (A) and (B) are included in the pick-up box design. Additional accessories should use these load points. Depending on the accessory design, use a spacer under the accessory at the load points to remove gap. The holes for the Cargo Management System (C) are not intended for attachment of

aftermarket equipment. See gmupfitter.com for additional pick-up box load bearing structural information.

Adding a Snow Plow or Similar Equipment

Before installing a snow plow on the vehicle, here are some things you need to know:

Notice: **If your vehicle does not have the snow plow prep package, adding a plow can damage your vehicle, and the repairs would not be covered by warranty. Unless your vehicle was built to carry a snow plow, do not add one to your vehicle. If your vehicle has the snow plow prep package, called RPO VYU, then the payload your vehicle can carry will be reduced when a snow plow is installed. Your vehicle can be damaged if either the front or rear axle ratings or the Gross Vehicle Weight (GVW) are exceeded.**

Some vehicles are built with a special snow plow prep package, called RPO VYU. If your vehicle has this option, you can add a plow to it, provided certain weights, such as the weights on the vehicle's axles and the Gross Vehicle Weight (GVW), are not exceeded.

The plow the vehicle can carry depends on many things, such as:

- The options the vehicle came with, and the weight of those options.
- The weight and number of passengers you intend to carry.
- The weight of items added to the vehicle, like a tool box or truck cap.
- The total weight of any additional cargo you intend to carry.

Say, for example, you have a 318 kg (700 lb) snow plow. The total weight of all occupants and cargo inside the cab should not exceed 135 kg (300 lb). This means that you may only be able to carry one passenger. But, even this may be too much if you have got other equipment already adding to the weight of the vehicle.

Here are some guidelines for safely carrying a snow plow on the vehicle:

- Make sure the weight on the front and rear axles does not exceed the axle rating for each.
- For the front axle, if more cargo or passengers must be carried, appropriate counter ballast must be installed rear of the rear axle. Counter ballast must be properly secured so it will not move during driving.
- Follow the snow plow manufacturer's recommendations regarding rear ballast. Rear ballast may be required to ensure a proper front and rear weight distribution ratio, even though the actual weight at the front axle may be less than the front axle rating.
- The snow plow manufacturer or installer can assist you in determining the amount of rear ballast required, to help make sure the snowplow/vehicle combination does not exceed the GVW rating, the front and rear axle ratings, and the front and rear weight distribution ratio.
- The total vehicle must not exceed the GVW rating.

Front axle reserve capacity is the difference between your the Gross Axle Weight Rating (GAWR) and the front axle weight of the vehicle with full fuel and passengers. Basically, it is the amount of weight that can be added to the front axle before reaching the front GAWR.

The front axle reserve capacity for the vehicle can be found in the lower right corner of the Certification/Tire label, as shown.

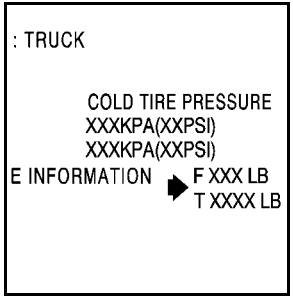

United States

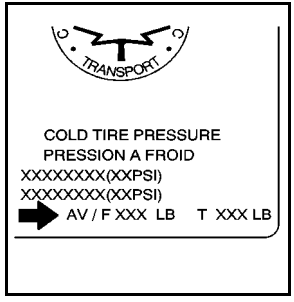

Canada

In order to calculate the amount of weight any front accessory, such as a snow plow, is adding to the front axle, use the following formula:

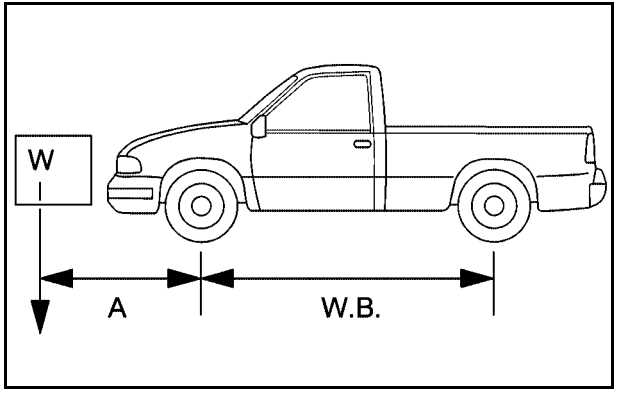

(W x (A + W.B.)) /W.B.= Weight the accessory is adding to the front axle.

Where:

W = Weight of added accessory
A = Distance that the accessory is in front of the front axle
W.B. = Vehicle Wheelbase

For example, adding a 318 kg (700 lb) snow plow actually adds more than 318 kg (700 lbs) to the front axle. Using the formula, if the snow plow is 122 cm (4 ft) in front of the front axle and the wheel base is 305 cm (10 ft), then:

W = 318 kg (700 lb)
A = 122 cm (4 ft)
W.B. = 305 cm (10 ft)

(W x (A + W.B.))/W.B. = (700 x (4 + 10))/10 = 445 kg (980 lbs)

So, if the front axle reserve capacity is more than 445 kg (980 lbs), you could add the snow plow without exceeding the front GAWR.

You can add heavier equipment on the front of the vehicle if you compensate for it by carrying fewer passengers, less cargo, or by positioning cargo toward the rear. This has the effect of reducing the load on the front. However, the front GAWR, rear GAWR, and the Gross Vehicle Weight Rating (GVWR) must never be exceeded.

⚠ WARNING:

On some vehicles that have certain front mounted equipment, such as a snow plow, it may be possible to load the front axle to the front gross axle weight rating (GAWR) but not have enough weight on the rear axle to have proper braking performance. If your brakes can not work properly, you could have a crash. To help your brakes work properly when a snow plow is installed, always follow the snow plow manufacturer or installer's recommendation for rear ballast to ensure a proper front and rear weight distribution ratio, even though the actual front weight may be less than the front GAWR, and the total vehicle weight is less than the gross vehicle weight rating (GVWR). Maintaining a proper front and rear weight distribution ratio is necessary to provide proper braking performance.

Total vehicle reserve capacity is the difference between the GVWR and the weight of the truck with full fuel and passengers. It is the amount of weight that can be added to the vehicle before reaching the GVWR. Keep in mind that reserve capacity numbers are intended as a guide when selecting the amount of equipment or cargo the truck can carry. If unsure of the vehicle's front, rear, or total weight, go to a weigh station and weigh the vehicle. Your dealer can also help with this.

The total vehicle reserve capacity for the vehicle can be found in the lower right corner of the Certification/Tire label as shown previously.

See your dealer for additional advice and information about using a snow plow on the vehicle. Also, see *Loading the Vehicle on page 5-33*.

Emergency Roof Lamp Provisions

Vehicles with the RPO VYU snow plow prep package also have an emergency roof lamp provision package, RPO TRW. Wiring for the emergency roof lamp is provided above the overhead console. See *Auxiliary Roof-Mounted Lamp on page 4-14* for switch location.

Truck-Camper Loading Information

A vehicle specific Truck-Camper Loading information label is attached to the inside of your vehicle's glove box. This label will tell you if your vehicle can carry a slide-in camper, how much of a load your vehicle can carry, and how to correctly spread out the load. Also, it will help you match the right slide-in camper to your vehicle.

When you carry a slide-in camper, the total cargo load of your vehicle is the weight of the camper, plus the following:

- Everything else added to the camper after it left the factory
- Everything in the camper
- All the people inside

The Cargo Weight Rating (CWR) is the maximum weight of the load your vehicle can carry. It does not include the weight of the people inside. But, you can figure about 150 lbs (68 kg) for each seat.

The total cargo load must not be more than your vehicle's CWR.

Refer to the Truck-Camper Loading Information label in the glove box for dimensions A and B as shown in the following illustration.

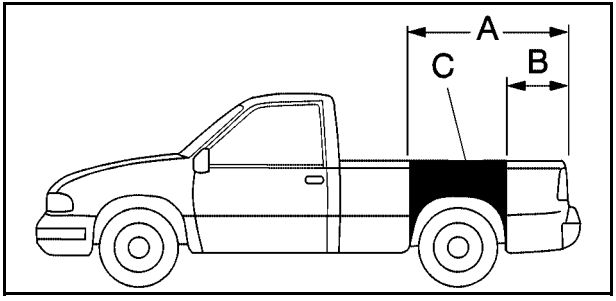

Use the rear edge of the load floor for measurement purposes. The recommended location for the cargo center of gravity is at point C for the CWR. It is the point where the mass of a body is concentrated and, if suspended at that point, would balance the front and rear.

Here is an example of proper truck and camper match:

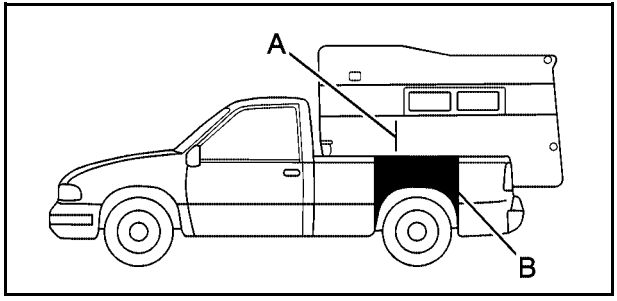

A. Camper Center of Gravity

B. Recommended Center of Gravity Location Zone

When the truck is used to carry a slide-in camper, the total cargo load of the truck consists of the manufacturer's camper weight figure, the weight of installed additional camper equipment not included in the manufacturer's camper weight

figure, the weight of camper cargo, and the weight of passengers in the camper. The total cargo load should not exceed the truck's cargo weight rating and the camper's center of gravity (A) should fall within the truck's recommended center of gravity zone (B) when installed.

You must weigh any accessories or other equipment that you add to your vehicle. Then, subtract this extra weight from the CWR. This extra weight may shorten the center of gravity zone of your vehicle. Your dealer can help you with this.

If your slide-in camper and its load weighs less than the CWR, the center of gravity zone for your vehicle may be larger.

Your dealer can help you make a good vehicle-camper match and help you determine the CWR.

After you have loaded your vehicle and camper, drive to a weigh station and weigh the front and rear wheels separately. This will tell you the loads on the axles. The loads on the front and rear axles should not be more than either of the Gross Axle Weight Ratings (GAWR). The total of the axle loads should not be more than the Gross Vehicle Weight Rating (GVWR).

Open the driver's door and look at the Certification/Tire label to find out your vehicle's GAWRs and GVWR.

If your vehicle has gone over the weight ratings, move or take out some things until all the weight falls below the ratings.

Secure loose items to prevent weight shifts that could affect the balance of your vehicle. When the truck-camper is loaded, drive to a scale and weigh on the front and on the rear wheels separately to determine axle loads. Individual axle loads should not exceed either of the gross axle weight ratings (GAWR). The total axle loads should not exceed your vehicle's gross vehicle weight rating (GVWR). These ratings are given on the vehicle certification label attached to the rear edge of the driver's door. See “Certification/Tire Label” under *Loading the Vehicle on page 5-33*. If weight ratings are exceeded, move or remove items to bring all weights below the ratings.

When you install and load your slide-in camper, check the manufacturer's instructions.

If you want more information on curb weights, cargo weights, Cargo Weight Rating and the correct center of gravity zone for your vehicle, your dealer can help you. Just ask for a copy of “Consumer Information, Truck-Camper Loading.”

Pickup Conversion to Chassis Cab

We are aware that some vehicle owners might consider having the pickup box removed and a commercial or recreational body installed. Owners should be aware that, as manufactured, there are differences between a chassis cab and a pickup with the box removed which could affect vehicle safety. The components necessary to adapt a pickup to permit its safe use with a specialized body should be installed by the body builder.

Towing

Towing Your Vehicle

To avoid damage, the disabled vehicle should be towed with all four wheels off the ground. Consult your dealer or a professional towing service if the disabled vehicle must be towed. See *Roadside Assistance Program on page 8-7*.

To tow the vehicle behind another vehicle for recreational purposes, such as behind a motorhome, see “Recreational Vehicle Towing” following.

Recreational Vehicle Towing

If the vehicle has a two–mode hybrid engine, see the Two–mode Hybrid manual for more information.

Recreational vehicle towing means towing the vehicle behind another vehicle – such as behind a motorhome. The two most common types of recreational vehicle towing are known as dinghy towing and dolly towing. Dinghy towing is towing the vehicle with all four wheels on the ground. Dolly towing is towing the vehicle with two wheels on the ground and two wheels up on a device known as a dolly.

Here are some important things to consider before recreational vehicle towing:

- What is the towing capacity of the towing vehicle? Be sure to read the tow vehicle manufacturer's recommendations.
- What is the distance that will be travelled? Some vehicles have restrictions on how far and how long they can tow.
- Is the proper towing equipment going to be used? See your dealer or trailering professional for additional advice and equipment recommendations.
- Is the vehicle ready to be towed? Just as preparing the vehicle for a long trip, make sure the vehicle is prepared to be towed. See *Before Leaving on a Long Trip on page 5-27*.

Dinghy Towing

Two-Wheel-Drive Vehicles

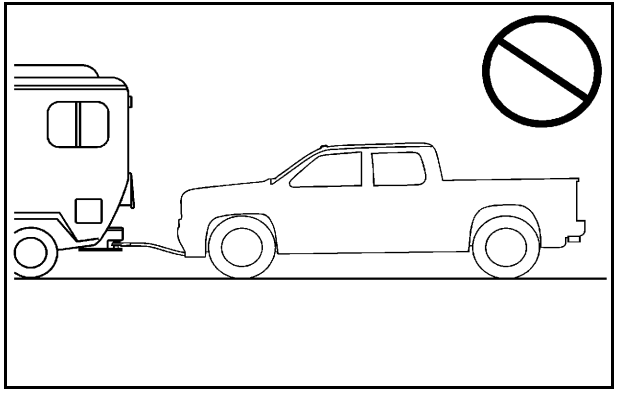

Notice: **If the vehicle is towed with all four wheels on the ground, the drivetrain components could be damaged. The repairs would not be covered by the vehicle warranty. Do not tow the vehicle with all four wheels on the ground.**

Two-wheel-drive vehicles should not be towed with all four wheels on the ground. Two-wheel-drive transmissions have no provisions for internal lubrication while being towed.

Four-Wheel-Drive Vehicles

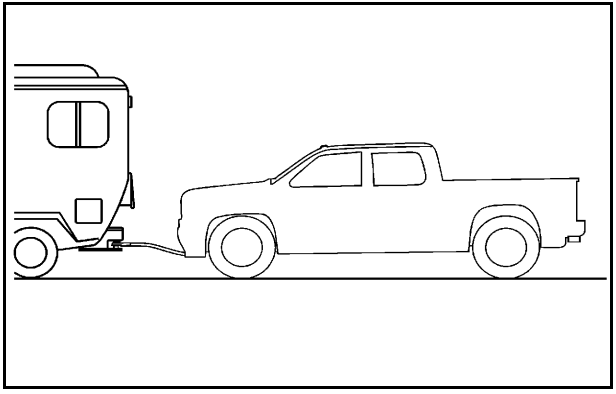

Use the following procedure to dinghy tow a four-wheel-drive vehicle:

1. Position the vehicle being towed behind the tow vehicle and shift the transmission to P (Park).
2. Turn the engine off and firmly set the parking brake.
3. Securely attach the vehicle being towed to the tow vehicle.

⚠ WARNING:

Shifting a four-wheel-drive vehicle's transfer case into N (Neutral) can cause the vehicle to roll even if the transmission is in P (Park). The driver or others could be injured. Make sure the parking brake is firmly set before the transfer case is shifted to N (Neutral).

4. Shift the transfer case to N (Neutral). See “Shifting into Neutral” under *Four-Wheel Drive on page 3-39* for the proper procedure to select the Neutral position for the vehicle.
5. Release the parking brake only after the vehicle being towed is firmly attached to the towing vehicle.
6. Turn the ignition to LOCK/OFF and remove the key — the steering wheel will still turn.

After towing, see “Shifting Out of Neutral” under *Four-Wheel Drive on page 3-39* for the proper procedure to take the vehicle out of the Neutral position.

Dolly Towing

Front Towing (Front Wheels Off the Ground)

Two-Wheel-Drive Vehicles

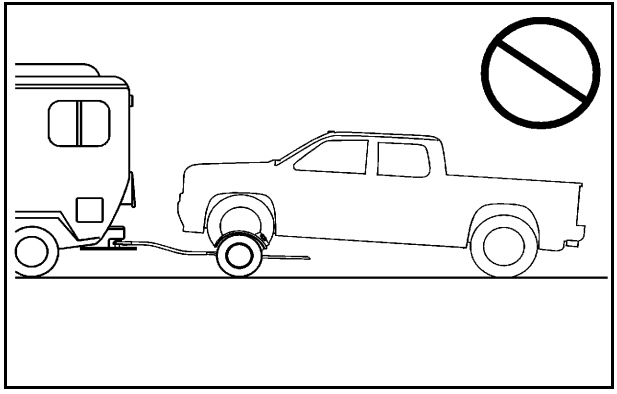

Notice: **If a two-wheel-drive vehicle is towed with the rear wheels on the ground, the transmission could be damaged. The repairs would not be covered by the vehicle warranty. Never tow the vehicle with the rear wheels on the ground.**

Two-wheel-drive vehicles should not be towed with the rear wheels on the ground. Two-wheel-drive transmissions have no provisions for internal lubrication while being towed.

To dolly tow a two-wheel-drive vehicle, the vehicle must be towed with the rear wheels on the dolly. See “Rear Towing (Rear Wheels Off the Ground)” later in this section for more information.

Four-Wheel-Drive Vehicles

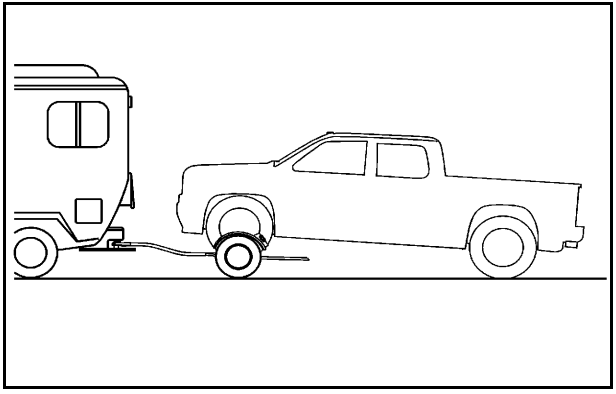

Use the following procedure to dolly tow a four-wheel-drive vehicle from the front:

1. Attach the dolly to the tow vehicle following the dolly manufacturer's instructions.
2. Drive the front wheels onto the dolly.
3. Shift the transmission to P (Park).
4. Firmly set the parking brake.

⚠ WARNING:

Shifting a four-wheel-drive vehicle's transfer case into N (Neutral) can cause the vehicle to roll even if the transmission is in P (Park). The driver or others could be injured. Make sure the parking brake is firmly set before the transfer case is shifted to N (Neutral).

5. Use an adequate clamping device designed for towing to ensure that the front wheels are locked into the straight position.
6. Secure the vehicle to the dolly following the manufacturer's instructions.
7. Shift the transfer case to N (Neutral). See “Shifting into Neutral” under *Four-Wheel Drive on page 3-39* for the proper procedure to select the neutral position for the vehicle.
8. Release the parking brake only after the vehicle being towed is firmly attached to the towing vehicle.
9. Turn the ignition to LOCK/OFF.

After towing, see “Shifting Out of Neutral” under *Four-Wheel Drive on page 3-39*.

Rear Towing (Rear Wheels Off the Ground)

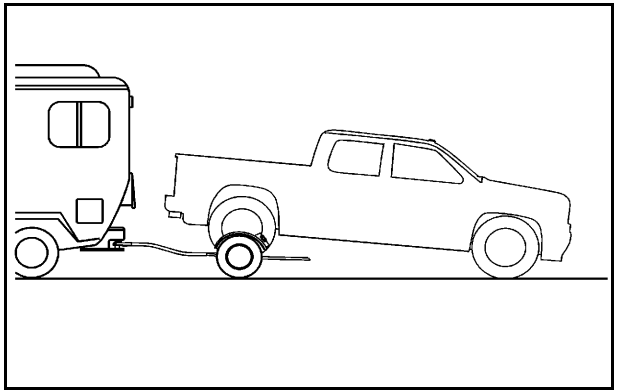

Two-Wheel-Drive Vehicles

Use the following procedure to dolly tow a two-wheel-drive vehicle from the rear:

1. Attach the dolly to the tow vehicle following the dolly manufacturer's instructions.
2. Drive the rear wheels onto the dolly.
3. Firmly set the parking brake. See *Parking Brake on page 3-54*.
4. Put the transmission in P (Park).
5. Secure the vehicle to the dolly following the manufacturer's instructions.
6. Use an adequate clamping device designed for towing to ensure that the front wheels are locked into the straight position.
7. Turn the ignition to LOCK/OFF.

Four-Wheel-Drive Vehicles

Use the following procedure to dolly tow a four-wheel-drive vehicle from the rear:

1. Attach the dolly to the tow vehicle following the dolly manufacturer's instructions.
2. Drive the rear wheels onto the dolly.
3. Firmly set the parking brake. See *Parking Brake on page 3-54*.
4. Put the transmission in P (Park).
5. Secure the vehicle to the dolly following the manufacturer's instructions.
6. Use an adequate clamping device designed for towing to ensure that the front wheels are locked into the straight position.

⚠ WARNING:

Shifting a four-wheel-drive vehicle's transfer case into N (Neutral) can cause the vehicle to roll even if the transmission is in P (Park). The driver or others could be injured. Make sure the parking brake is firmly set before the transfer case is shifted to N (Neutral).

7. Shift the transfer case to N (Neutral). See “Shifting into Neutral” under *Four-Wheel Drive on page 3-39* for the proper procedure to select the neutral position for the vehicle.
8. Turn the ignition to LOCK/OFF.

After towing, see “Shifting Out of Neutral” under *Four-Wheel Drive on page 3-39*.

Towing a Trailer

If the vehicle has a diesel engine, see the DURAMAX® Diesel manual for more information.

If the vehicle has a two–mode hybrid engine, see the Two–mode Hybrid manual for more information.

Do not tow a trailer during break-in. See *New Vehicle Break-In on page 3-23* for more information.

⚠ WARNING:

The driver can lose control when pulling a trailer if the correct equipment is not used or the vehicle is not driven properly. For example, if the trailer is too heavy, the brakes may not work well or even at all. The driver and passengers could be seriously injured. The vehicle may also be damaged; the resulting repairs would not be covered by the vehicle warranty. Pull a trailer only if all the steps in this section have been followed. Ask your dealer for advice and information about towing a trailer with the vehicle.

Notice: **Pulling a trailer improperly can damage the vehicle and result in costly repairs not covered by the vehicle warranty. To pull a trailer correctly, follow the advice in this section and see your dealer for important information about towing a trailer with the vehicle.**

To identify the trailering capacity of the vehicle, read the information in “Weight of the Trailer” that appears later in this section.

Trailering is different than just driving the vehicle by itself. Trailering means changes in handling, acceleration, braking, durability and fuel economy. Successful, safe trailering takes correct equipment, and it has to be used properly.

The following information has many time-tested, important trailering tips and safety rules. Many of these are important for your safety and that of your passengers. So please read this section carefully before pulling a trailer.

Pulling A Trailer

Here are some important points:

- There are many different laws, including speed limit restrictions, having to do with trailering. Make sure the rig will be legal, not only where you live but also where you will be driving. A good source for this information can be state or provincial police.
- Consider using a sway control. See “Hitches” later in this section.
- Do not tow a trailer at all during the first 500 miles (800 km) the new vehicle is driven. The engine, axle or other parts could be damaged.
- During the first 500 miles (800 km) that a trailer is towed, do not drive over 50 mph (80 km/h) and do not make starts at full throttle. This helps the engine and other parts of the vehicle wear in at the heavier loads.
- Vehicles can tow in D (Drive). Shift the transmission to a lower gear if the transmission shifts too often under heavy loads and/or hilly conditions.

Important considerations that have to do with weight:

- The weight of the trailer
- The weight of the trailer tongue
- The weight on the vehicle's tires
- And the weight of the trailering combination

Weight of the Trailer

How heavy can a trailer safely be?

It depends on how the rig is used. Speed, altitude, road grades, outside temperature and how much the vehicle is used to pull a trailer are all important. It can depend on any special equipment on the vehicle, and the amount of tongue weight the vehicle can carry. See “Weight of the Trailer Tongue” later in this section for more information.

Trailer weight rating (TWR) is calculated assuming the tow vehicle has only the driver but all required trailering equipment. Weight of additional optional equipment, passengers and cargo in the tow vehicle must be subtracted from the trailer weight rating.

Use the following chart to determine how much the vehicle can weigh, based upon the vehicle model and options.

Weights listed apply for conventional trailers and fifth-wheel trailers unless otherwise noted.

Vehicle	Axle Ratio	Maximum Trailer Weight	GCWR (a)
1500 Series 2WD Regular Cab Standard Box (b)			
4.3L V6 (c)	3.23	4,800 lbs (2 177 kg)	9,500 lbs (4 309 kg)
4.3L V6 (c)	3.73	5,400 lbs (2 449 kg)	10,000 lbs (4 536 kg)
4.8L V8 (c)	3.23	4,700 lbs (2 132 kg)	9,500 lbs (4 309 kg)
4.8L V8	3.73	7,200 lbs (3 266 kg)	12,000 lbs (5 443 kg)
5.3L LMG V8	3.08	6,600 lbs (2 994 kg)	11,500 lbs (5 216 kg)
5.3L LMG V8, K5L HD Cooling Pkg	3.08	7,400 lbs (3 357 kg)	12,200 lbs (5 534 kg)
5.3L LMG V8 K5L HD Cooling Pkg	3.42	9,100 lbs (4 128 kg)	14,000 lbs (6 350 kg)
1500 Series 2WD Extended Cab Standard Box (b)			
4.3L V6 (c)	3.23	4,400 lbs (1 996 kg)	9,500 lbs (4 309 kg)
4.8L V8 (c)	3.23	4,700 lbs (2 132 kg)	10,000 lbs (4 536 kg)
4.8L V8	3.73	6,700 lbs (3 039 kg)	12,000 lbs (5 443 kg)
5.3L V8	3.08	6,200 lbs (2 812 kg)	11,500 lbs (5 216 kg)
5.3L V8 K5L HD Cooling Pkg	3.08	6,900 lbs (3 130 kg)	12,200 lbs (5 534 kg)
5.3L V8 K5L HD Cooling Pkg — Fifth-Wheel Trailer	3.42	9,200 lbs (4 173 kg)	15,000 lbs (6 804 kg)
5.3L V8 K5L HD Cooling Pkg — Conventional Trailer	3.42	9,700 lbs (4 400 kg)	15,000 lbs (6 804 kg)
6.2L V8	3.42	6,700 lbs (3 039 kg)	12,000 lbs (5 443 kg)
6.2L V8 K5L HD Cooling Pkg — Fifth-Wheel Trailer	3.42	9,300 lbs (4 218 kg)	15,000 lbs (6 804 kg)

Vehicle	Axle Ratio	Maximum Trailer Weight	GCWR (a)
6.2L V8 K5L HD Cooling Pkg — Conventional Trailer	3.42	9,700 lbs (4 400 kg)	15,000 lbs (6 804 kg)
6.2L V8 NHT Max Trailering Pkg — Fifth-Wheel Trailer	3.73	10,200 lbs (4 627 kg)	16,000 lbs (7 257 kg)
6.2L V8 NHT Max Trailering Pkg — Conventional Trailer	3.73	10,700 lbs (4 853 kg)	16,000 lbs (7 257 kg)
1500 Series 2WD Crew Cab Short Box (c)			
4.8L V8	3.23	4,700 lbs (2 132 kg)	10,000 lbs (4 536 kg)
4.8L V8	3.73	6,700 lbs (3 039 kg)	12,000 lbs (5 443 kg)
5.3L V8 (LMG)	3.08	6,100 lbs (2 767 kg)	11,500 lbs (5 216 kg)
5.3L V8 (LMG) K5L HD Cooling Pkg	3.08	6,800 lbs (3 084 kg)	12,200 lbs (5 534 kg)
5.3L V8 K5L HD Cooling Pkg (XFE)	3.08	7,000 lbs (3 175 kg)	12,200 lbs (5 534 kg)
5.3L V8 K5L HD Cooling Pkg	3.42	9,600 lbs (4 355 kg)	15,000 lbs (6 804 kg)
6.2L V8	3.42	6,600 lbs (2 994 kg)	12,000 lbs (5 443 kg)
6.2L V8 K5L HD Cooling Pkg	3.42	9,600 lbs (4 355 kg)	15,000 lbs (6 804 kg)
6.2L V8 NHT Max Trailering Pkg	3.73	10,600 lbs (4 808 kg)	16,000 lbs (7 257 kg)
1500 Series 2WD Regular Cab Long Box (b)			
4.3L V6 (c)	3.23	4,700 lbs (2 132 kg)	9,500 lbs (4 309 kg)
4.3L V6 (c)	3.73	5,200 lbs (2 359 kg)	10,000 lbs (4 536 kg)
4.8L V8 (c)	3.23	5,100 lbs (2 313 kg)	10,000 lbs (4 536 kg)
4.8L V8	3.73	7,100 lbs (3 221 kg)	12,000 lbs (5 443 kg)
5.3L V8	3.08	6,500 lbs (2 948 kg)	11,500 lbs (5 216 kg)

Vehicle	Axle Ratio	Maximum Trailer Weight	GCWR (a)
5.3L V8 K5L HD Cooling Pkg	3.08	7,200 lbs (3 266 kg)	12,200 lbs (5 534 kg)
5.3L V8 6 Speed Automatic	3.42	6,500 lbs (2 948 kg)	11,500 lbs (5 216 kg)
5.3L V8 K5L HD Cooling Pkg — Fifth-Wheel Trailer	3.42	8,800 lbs (3 992 kg)	15,000 lbs (6 804 kg)
5.3L V8 K5L HD Cooling Pkg — Conventional Trailer	3.42	10,000 lbs (4 536 kg)	15,000 lbs (6 804 kg)
1500 Series 2WD Extended Cab Long Box (b)			
5.3L V8	3.08	6,000 lbs (2 722 kg)	11,500 lbs (5 216 kg)
5.3L V8 K5L HD Cooling Pkg	3.08	6,700 lbs (3 039 kg)	12,200 lbs (5 534 kg)
5.3L V8 K5L HD Cooling Pkg — Fifth-Wheel Trailer	3.42	8,900 lbs (4 037 kg)	15,000 lbs (6 804 kg)
5.3L V8 K5L HD Cooling Pkg — Conventional Trailer	3.42	9,500 lbs (4 309 kg)	15,000 lbs (6 804 kg)
1500 Series 4WD Regular Cab Standard Box (b)			
4.3L V6 (c)	3.73	5,100 lbs (2 313 kg)	10,000 lbs (4 536 kg)
4.8L V8 (c)	3.42	6,000 lbs (2 722 kg)	11,000 lbs (4 990 kg)
5.3L V8 — Fifth-Wheel Trailer	3.08	6,400 lbs (2 903 kg)	11,500 lbs (5 216 kg)
5.3L V8 — Conventional Trailer	3.08	6,400 lbs (2 903 kg)	11,500 lbs (5 216 kg)
5.3L V8 K5L HD Cooling Pkg	3.08	7,100 lbs (3 221 kg)	12,200 lbs (5 534 kg)
5.3L V8 K5L HD Cooling Pkg — Fifth-Wheel Trailer	3.42	8,100 lbs (3 674 kg)	14,000 lbs (6 350 kg)
5.3L V8 K5L HD Cooling Pkg — Conventional Trailer	3.42	8,900 lbs (4 037 kg)	14,000 lbs (6 350 kg)

Vehicle	Axle Ratio	Maximum Trailer Weight	GCWR (a)
1500 Series 4WD Extended Cab Standard Box (b)			
4.8L V8 (c)	3.42	5,500 lbs (2 495 kg)	11,000 lbs (4 990 kg)
5.3L V8 — Fifth-Wheel Trailer	3.08	6,100 lbs (2 767 kg)	11,500 lbs (5 216 kg)
5.3L V8 — Conventional Trailer	3.08	6,100 lbs (2 767 kg)	11,500 lbs (5 216 kg)
5.3L V8 K5L HD Cooling Pkg	3.08	6,800 lbs (3 084 kg)	12,200 lbs (5 534 kg)
5.3L V8 K5L HD Cooling Pkg	3.42	9,600 lbs (4 354 kg)	15,000 lbs (6 804 kg)
6.2L V8 (c)	3.42	6,400 lbs (2 903 kg)	12,000 lbs (5 443 kg)
6.2L V8 K5L HD Cooling Pkg — Fifth-Wheel Trailer	3.42	8,900 lbs (4 037 kg)	15,000 lbs (6 804 kg)
6.2L V8 K5L HD Cooling Pkg — Conventional Trailer	3.42	9,400 lbs (4 264 kg)	15,000 lbs (6 804 kg)
6.2L V8 NHT Max Trailering Pkg — Fifth-Wheel Trailer	3.73	9,900 lbs (4 491 kg)	16,000 lbs (7 257 kg)
6.2L V8 NHT Max Trailering Pkg — Conventional Trailer	3.73	10,400 lbs (4 717 kg)	16,000 lbs (7 257 kg)
1500 Series 4WD Crew Cab Short Box (c)			
4.8L V8	3.42	5,500 lbs (2 495 kg)	11,000 lbs (4 990 kg)
5.3L V8	3.08	6,000 lbs (2 722 kg)	11,500 lbs (5 216 kg)
5.3L V8 K5L HD Cooling Pkg	3.08	6,700 lbs (3 039 kg)	12,200 lbs (5 534 kg)
5.3L V8 K5L HD Cooling Pkg	3.42	9,500 lbs (4 309 kg)	15,000 lbs (6 804 kg)
6.2L V8	3.42	6,400 lbs (2 903 kg)	12,000 lbs (5 443 kg)

Vehicle	Axle Ratio	Maximum Trailer Weight	GCWR (a)
6.2L V8 K5L HD Cooling Pkg	3.42	9,400 lbs (4 264 kg)	15,000 lbs (6 804 kg)
6.2L V8 NHT Max Trailering Pkg — Conventional Trailer	3.73	10,400 lbs (4 717 kg)	16,000 lbs (7 257 kg)
1500 Series 4WD Regular Cab Long Box (b)			
4.3L V6 (c)	3.73	5,000 lbs (2 268 kg)	10,000 lbs (4 536 kg)
4.8L V8 (c)	3.42	5,800 lbs (2 631 kg)	11,000 lbs (4 990 kg)
5.3L V8	3.08	6,300 lbs (2 858 kg)	11,500 lbs (5 216 kg)
5.3L V8 K5L HD Cooling Pkg	3.08	7,000 lbs (3 175 kg)	12,200 lbs (5 534 kg)
5.3L V8 K5L HD Cooling Pkg — Fifth-Wheel Trailer	3.42	9,700 lbs (4 400 kg)	15,000 lbs (6 804 kg)
5.3L V8 K5L HD Cooling Pkg — Conventional Trailer	3.42	9,800 lbs (4 445 kg)	15,000 lbs (6 804 kg)
1500 Series 4WD Extended Cab Long Box (b)			
5.3L V8 (c)	3.08	5,800 lbs (2 631 kg)	11,500 lbs (5 216 kg)
5.3L V8 K5L HD Cooling Pkg	3.08	6,500 lbs (2 948 kg)	12,200 lbs (5 534 kg)
5.3L V8 K5L HD Cooling Pkg — Fifth-Wheel Trailer	3.42	8,000 lbs (3 629 kg)	15,000 lbs (6 804 kg)
5.3L V8 K5L HD Cooling Pkg — Conventional Trailer	3.42	9,300 lbs (4 218 kg)	15,000 lbs (6 804 kg)
2500 Series 2WD Extended Cab Standard Box HD (d)			
6.0L V8	3.73 4.10	10,200 lbs (4 627 kg) 12,700 lbs (5 761 kg)	16,000 lbs (7 257 kg) 18,500 lbs (8 391 kg)

Vehicle	Axle Ratio	Maximum Trailer Weight	GCWR (a)
2500 Series 2WD Crew Cab Standard Box HD (d)			
6.0L V8	3.73 4.10	10,000 lbs (4 536 kg) 12,500 lbs (5 670 kg)	16,000 lbs (7 257 kg) 18,500 lbs (8 391 kg)
2500 Series 2WD Regular Cab Long Box HD (d)			
6.0L V8	3.73 4.10	10,500 lbs (4 763 kg) 13,000 lbs (5 897 kg)	16,000 lbs (7 257 kg) 18,500 lbs (8 391 kg)
2500 Series 2WD Extended Cab Long Box HD (d)			
6.0L V8	3.73 4.10	10,000 lbs (4 536 kg) 12,500 lbs (5 670 kg)	16,000 lbs (7 257 kg) 18,500 lbs (8 391 kg)
2500 Series 2WD Crew Cab Long Box HD (d)			
6.0L V8	3.73 4.10	9,900 lbs (4 491 kg) 12,400 lbs (5 625 kg)	16,000 lbs (7 257 kg) 18,500 lbs (8 391 kg)
2500 Series 4WD Extended Cab Standard Box HD (d)			
6.0L V8	3.73 4.10	9,900 lbs (4 491 kg) 12,400 lbs (5 625 kg)	16,000 lbs (7 257 kg) 18,500 lbs (8 391 kg)
2500 Series 4WD Crew Cab Standard Box HD (d)			
6.0L V8	3.73 4.10	9,800 lbs (4 445 kg) 12,300 lbs (5 579 kg)	16,000 lbs (7 257 kg) 18,500 lbs (8 391 kg)
2500 Series 4WD Regular Cab Long Box HD (d)			
6.0L V8	3.73 4.10	10,200 lbs (4 627 kg) 12,700 lbs (5 761 kg)	16,000 lbs (7 257 kg) 18,500 lbs (8 391 kg)

Vehicle	Axle Ratio	Maximum Trailer Weight	GCWR (a)
2500 Series 4WD Extended Cab Long Box HD (d)			
6.0L V8	3.73 4.10	9,800 lbs (4 445 kg) 12,300 lbs (5 579 kg)	16,000 lbs (7 257 kg) 18,500 lbs (8 391 kg)
2500 Series 4WD Crew Cab Long Box HD (d)			
6.0L V8	3.73 4.10	9,600 lbs (4 355 kg) 12,100 lbs (5 489 kg)	16,000 lbs (7 257 kg) 18,500 lbs (8 391 kg)
3500 Series 2WD Extended Cab (e)			
6.0L V8 (Single Rear Wheels)	3.73 4.10	9,900 lbs (4 491 kg) 12,400 lbs (5 625 kg)	16,000 lbs (7 257 kg) 18,500 lbs (8 391 kg)
6.0L V8 (Dual Rear Wheels)	3.73 4.10	9,500 lbs (4 309 kg) 12,000 lbs (5 443 kg)	16,000 lbs (7 257 kg) 18,500 lbs (8 391 kg)
3500 Series 2WD Crew Cab (e)			
6.0L V8 (Single Rear Wheels)	3.73 4.10	9,700 lbs (4 400 kg) 12,200 lbs (5 534 kg)	16,000 lbs (7 257 kg) 18,500 lbs (8 391 kg)
6.0L V8 (Dual Rear Wheels)	3.73 4.10	9,300 lbs (4 218 kg) 11,800 lbs (5 352 kg)	16,000 lbs (7 257 kg) 18,500 lbs (8 391 kg)
3500 Series 4WD Regular Cab (e)			
6.0L V8 (Single Rear Wheels)	3.73 4.10	10,000 lbs (4 536 kg) 12,500 lbs (5 670 kg)	16,000 lbs (7 257 kg) 18,500 lbs (8 391 kg)
6.0L V8 (Dual Rear Wheels)	3.73 4.10	9,700 lbs (4 400 kg) 12,200 lbs (5 534 kg)	16,000 lbs (7 257 kg) 18,500 lbs (8 391 kg)

Vehicle	Axle Ratio	Maximum Trailer Weight	GCWR (a)
3500 Series 4WD Extended Cab (e)			
6.0L V8 (Single Rear Wheels)	3.73 4.10	9,600 lbs (4 355 kg) 12,100 lbs (5 489 kg)	16,000 lbs (7 257 kg) 18,500 lbs (8 391 kg)
6.0L V8 (Dual Rear Wheels)	3.73 4.10	9,200 lbs (4 173 kg) 11,700 lbs (5 307 kg)	16,000 lbs (7 257 kg) 18,500 lbs (8 391 kg)
3500 Series 4WD Crew Cab (e)			
6.0L V8 (Single Rear Wheels)	3.73 4.10	9,400 lbs (4 264 kg) 11,900 lbs (5 398 kg)	16,000 lbs (7 257 kg) 18,500 lbs (8 391 kg)
6.0L V8 (Dual Rear Wheels)	3.73 4.10	9,100 lbs (4 128 kg) 11,600 lbs (5 262 kg)	16,000 lbs (7 257 kg) 18,500 lbs (8 391 kg)

(a) The Gross Combination Weight Rating (GCWR) is the total allowable weight of the completely loaded vehicle and trailer including any passengers, cargo, equipment and conversions. The GCWR for the vehicle should not be exceeded.
(b) Fifth-wheel or gooseneck kingpin weight 15 percent to 25 percent of trailer weight up to 1,500 lbs (680 kg) maximum.
(c) This model is neither designed nor intended to tow fifth-wheel or gooseneck trailers.
(d) Fifth-wheel or gooseneck kingpin weight should be 15 percent to 25 percent of trailer weight up to 3,000 lbs (1 361 kg) maximum.
(e) Fifth-wheel or gooseneck kingpin weight should be 15 percent to 25 percent of trailer weight up to 3,500 lbs (1 587 kg) maximum.

Ask your dealer for trailering information or advice, or write us at our Customer Assistance Offices. See *Customer Assistance Offices on page 8-6* for more information.

Weight of the Trailer Tongue

The tongue load (A) of any trailer is very important because it is also part of the vehicle weight. The Gross Vehicle Weight (GVW) includes the curb weight of the vehicle, any cargo carried in it, and the people who will be riding in the vehicle as well as trailer tongue weight. Vehicle options, equipment, passengers and cargo in the vehicle reduce the amount of tongue weight the vehicle can carry, which will also reduce the trailer weight the vehicle can tow. See “Loading the Vehicle” for more information about the vehicle's maximum load capacity.

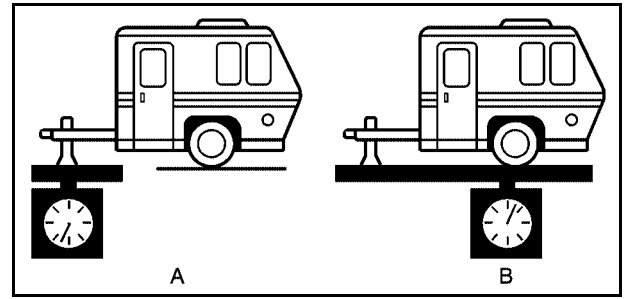

Trailer tongue weight (A) should be 10 percent to 15 percent and fifth wheel or gooseneck kingpin weight should be 15 to 25 percent of the loaded trailer weight up to the maximums for vehicle series and hitch type shown below:

Vehicle Series	Hitch Type	Maximum Tongue Weight
1500	Weight Carrying	272 kg (600 lbs)
2500HD/3500	Weight Carrying	453 kg (1,000 lbs)
1500	Weight Distributing	499 kg (1,100 lbs)
2500HD/3500	Weight Distributing	680 kg (1,500 lbs)

Vehicle Series	Hitch Type	Maximum Tongue Weight
1500	Fifth Wheel Gooseneck	680 kg (1,500 lbs)
2500HD	Fifth Wheel Gooseneck	1 134 kg (2,500 lbs)
3500 Single Rear Wheels	Fifth Wheel Gooseneck	1 360 kg (3,000 lbs)
3500 Dual Rear Wheels	Fifth Wheel Gooseneck	1 587 kg (3,500 lbs)

Do not exceed the maximum allowable tongue weight for the vehicle. Choose the shortest hitch extension that will position the hitch ball closest to the vehicle. This will help reduce the effect of trailer tongue weight on the rear axle.

Trailering may be limited by the vehicle's ability to carry tongue weight. Tongue or kingpin weight cannot cause the vehicle to exceed the GVWR (Gross Vehicle Weight Rating) or the RGAWR (Rear Gross Axle Weight Rating). See “Total Weight on the Vehicle's Tires” later in this section for more information.

After loading the trailer, weigh the trailer and then the tongue, separately, to see if the weights are proper. If they are not, adjustments might be made by moving some items around in the trailer.

Total Weight on the Vehicle's Tires

Be sure the vehicle's tires are inflated to the inflation pressures found on the Certification label on the drivers door or see *Loading the Vehicle on page 5-33* for more information. Make sure not to exceed the GVWR limit for the vehicle, or the RGAWR, with the tow vehicle and trailer fully loaded for the trip including the weight of the trailer tongue. If using a weight distributing hitch, make sure not to exceed the RGAWR before applying the weight distribution spring bars.

Weight of the Trailering Combination

It is important that the combination of the tow vehicle and trailer does not exceed any of its weight ratings — GCWR, GVWR, RGAWR, Trailer Weight Rating or Tongue Weight. The only way to be sure it is not exceeding any of these ratings is to weigh the tow vehicle and trailer combination, fully loaded for the trip, getting individual weights for each of these items.

Hitches

The correct hitch equipment helps maintain combination control. Most small-to-medium trailers can be towed with a weight carrying hitch which simply features a coupler latched to the hitch ball. Larger trailers may require a weight distributing hitch that uses spring bars to distribute the trailer tongue weight among the two vehicle and trailer axles. Fifth wheel and gooseneck hitches may also be used. See “Weight of the Trailer Tongue” earlier in this section for rating limits with various hitch types.

If a step-bumper hitch will be used, the bumper could be damaged in sharp turns. Make sure there is ample room when turning to avoid contact between the trailer and the bumper.

Consider using sway controls with any trailer. Ask a trailering professional about sway controls or refer to the trailer manufacturer's recommendations and instructions.

Weight-Distributing Hitch Adjustment

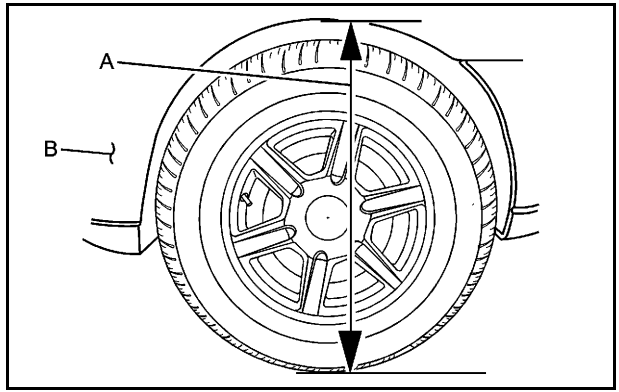

A: Body to Ground Distance

B: Front of Vehicle

When using a weight-distributing hitch, the spring bars should be adjusted so the distance (A) is the same after coupling the trailer to the tow vehicle and adjusting the hitch.

Fifth Wheel and Gooseneck Trailering

Fifth wheel and gooseneck trailers can be used with many pickup models. These trailers place a larger percentage of the weight (kingpin weight) on the tow vehicle than conventional trailers. Make sure this weight does not cause the vehicle to exceed GAWR or GVWR.

Fifth wheel or gooseneck kingpin weight should be 15 to 25 percent of the trailer weight up to the maximum amount specified in the trailering chart for the vehicle. See “Weight of the Trailer” in this section for more information.

The hitch should be located in the pickup bed so that its centerline is over or slightly in front of the rear axle. Take care that it is not so far forward that it will contact the back of the cab in sharp turns. This is especially important for short box pickups. Trailer pin box extensions and sliding fifth wheel hitch assemblies can help this condition. There should be at least six inches of clearance between the top of the pickup box and the bottom of the trailer shelf that extends over the box.

Make sure the hitch is attached to the tow vehicle frame rails. Do not use the pickup box for support.

Safety Chains

Always attach chains between the vehicle and the trailer. Cross the safety chains under the tongue of the trailer to help prevent the tongue from contacting the road if it becomes separated from the hitch. Instructions about safety chains may be provided by the hitch manufacturer or by the trailer manufacturer. If the trailer being towed weighs up to 5,000 lbs (2 271 kg) with a factory-installed step bumper, safety chains may be attached to the attaching points on the bumper, otherwise, safety chains should be attached to holes on the trailer hitch platform. Always leave just enough slack so the combination can turn. Never allow safety chains to drag on the ground.

Tow/Haul Mode

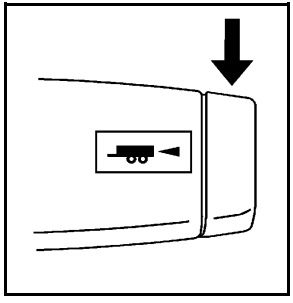

Pressing this button at the end of the shift lever turns on and off the tow/haul mode.

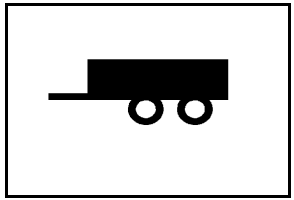

This indicator light on the instrument panel cluster comes on when the tow/haul mode is on.

Tow/Haul is a feature that assists when pulling a heavy trailer or a large or heavy load. See *Tow/Haul Mode on page 3-36* for more information.

Tow/Haul is designed to be most effective when the vehicle and trailer combined weight is at least 75 percent of the vehicle's Gross Combined Weight Rating (GCWR). See “Weight of the Trailer” later in the section. Tow/Haul is most useful under the following driving conditions:

- When pulling a heavy trailer or a large or heavy load through rolling terrain.
- When pulling a heavy trailer or a large or heavy load in stop and go traffic.
- When pulling a heavy trailer or a large or heavy load in busy parking lots where improved low speed control of the vehicle is desired.

Operating the vehicle in Tow/Haul when lightly loaded or with no trailer at all will not cause damage. However, there is no benefit to the selection of Tow/Haul when the vehicle is unloaded. Such a selection when unloaded may result in unpleasant engine and transmission driving characteristics and reduced fuel economy. Tow/Haul is recommended only when pulling a heavy trailer or a large or heavy load.

Trailer Brakes

A loaded trailer that weighs more than 2,000 lbs (900 kg) needs to have its own brake system that is adequate for the weight of the trailer. Be sure to read and follow the instructions for the trailer brakes so they are installed, adjusted and maintained properly.

If the vehicle is equipped with StabiliTrak®, the trailer cannot tap into the vehicle's hydraulic brake system.

The trailer brake system can tap into the vehicle's hydraulic brake system only if:

- The trailer parts can withstand 3,000 psi (20 650 kPa) of pressure.
- The trailer's brake system will use less than 0.02 cubic inch (0.3 cc) of fluid from the vehicle's master cylinder. Otherwise, both braking systems will not work well or at all.

If everything checks out this far, make the brake tap at the port on the master cylinder that sends the fluid to the rear brakes. Use only steel brake tubing to make the tap.

Integrated Trailer Brake Control System

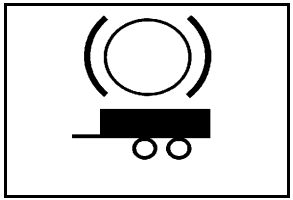

The vehicle may have an Integrated Trailer Brake Control (ITBC) system for electric trailer brakes.

This symbol is located on the Trailer Brake Control Panel on vehicles with an Integrated Trailer Brake Control System. The power output to the trailer brakes is based on the amount of brake pressure being applied by the vehicle’s brake system. This available power output to the trailer brakes can be adjusted to a wide range of trailering situations.

The ITBC system is integrated with the vehicle’s brake, anti-lock brake and StabiliTrak (if equipped) systems. In trailering conditions that cause the vehicle’s anti-lock brake or StabiliTrak systems to activate, power sent to the trailer's brakes will be automatically adjusted to minimize trailer wheel lock-up. This does not imply that the trailer has the StabiliTrak system.

If the vehicle’s brake, anti-lock brake or StabiliTrak systems are not functioning properly, the ITBC system may not be fully functional or may not function at all. Make sure all of these systems are fully operational to ensure full functionality of the ITBC system.

The ITBC system is powered through the vehicle's electrical system. Turning the ignition off will also turn off the ITBC system. The ITBC system is fully functional only when the ignition is in ON or in RUN.

The ITBC system can only be used with trailers with electric brakes.

⚠ WARNING:

Connecting a trailer that is not compatible with the ITBC system may result in reduced or complete loss of trailer braking. There may be an increase in stopping distance or trailer instability which could result in personal injury or damage to the vehicle, trailer, or other property. An aftermarket controller may be available for use with trailers with surge, air or electric-over-hydraulic trailer brake systems. To determine the type of brakes on the trailer and the availability of controllers, check with your trailer manufacturer or dealer.

When trailering, make sure of the following:

- The ITBC system is used only with trailers that are equipped with electric brakes.
- All applicable local and federal laws and regulations are followed.
- All electrical and mechanical connections to the trailer are made correctly.
- The trailer's brakes are in proper working condition.
- The trailer and vehicle are properly loaded for the towing condition.

The ITBC system is a factory installed item. Out-of-factory installation of this system should not be attempted. GM is not responsible for warranty or performance of the system resulting from out-of-factory installation.

Trailer Brake Control Panel

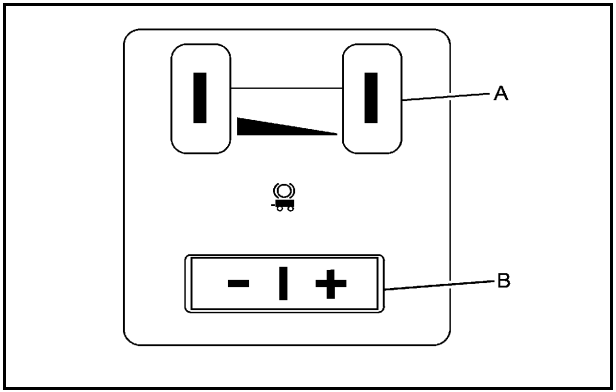

A. Manual Trailer Brake Apply Lever

B. Trailer Gain Adjustment Buttons

The ITBC system has a control panel located on the instrument panel to the left of the steering column. See *Instrument Panel (Base/Uplevel Version) on page 1-2* or *Instrument Panel (Premium Version) on page 1-4*. The control panel allows adjustment to the amount of output, referred to as trailer gain, available to the electric trailer brakes and allows manual application of the trailer brakes. The Trailer Brake Control Panel is used along with the Trailer Brake Display Page on the DIC to adjust and display power output to the trailer brakes.

Trailer Brake DIC Display Page

The ITBC system displays messages into the vehicle's Driver Information Center (DIC). See *DIC Warnings and Messages on page 4-66* for more information.

The display page indicates Trailer Gain setting, power output to the electric trailer brakes, trailer connection and system operational status.

The Trailer Brake Display Page can be displayed by performing any of the following actions:

- Scrolling through the DIC menu pages using the odometer trip stem or the DIC Vehicle Information button (if equipped).
- Pressing a Trailer Gain button – If the Trailer Brake Display Page is not currently displayed, pressing a Trailer Gain button will first recall the current Trailer Gain setting. After the Trailer Brake Display Page is displayed, each press and release of the gain buttons will then cause the Trailer Gain setting to change.
- Activating the Manual Trailer Brake Apply lever
- Connecting a trailer equipped with electric trailer brakes

All DIC warning and service messages must first be acknowledged by the driver by pressing the odometer trip stem or the DIC Vehicle Information button (if equipped) before the Trailer Brake Display Page can be displayed and Trailer Gain can be adjusted.

TRAILER GAIN – This setting is displayed anytime the Trailer Brake Display Page is active. This setting can be adjusted from 0.0 to 10.0 with either a trailer connected or disconnected. To adjust the Trailer Gain, press one of the Trailer Gain adjustment buttons located on the Trailer Brake Control Panel. Press and hold a gain button to cause the Trailer Gain to continuously adjust. To turn the output to the trailer off, adjust the Trailer Gain setting to 0.0 (zero).

0.0 (zero) gain is the factory default setting. To properly adjust trailer gain, see the Trailer Gain Adjustment Procedure later in this section.

TRAILER OUTPUT – This is displayed any time a trailer with electric brakes is connected. Output to the electric brakes is based on the amount of vehicle braking present and relative to the Trailer Gain setting. Output is displayed from 0 to 10 bars for each gain setting.

The Trailer Output will indicate “- - - - - -“ on the Trailer Brake Display Page whenever the following occur:

- No trailer is connected.
- A trailer without electric brakes is connected (no DIC message is displayed).
- A trailer with electric brakes has become disconnected (a CHECK TRAILER WIRING message will also be displayed on the DIC).
- There is a fault present in the wiring to the electric trailer brakes (a CHECK TRAILER WIRING message will also be displayed on the DIC).
- There is a fault in the ITBC system (a SERVICE TRAILER BRAKE SYSTEM message will also be displayed in the DIC).

Manual Trailer Brake Apply

The Manual Trailer Brake Apply Lever is located on the Trailer Brake Control Panel and is used to apply the trailer's electric brakes independent of the vehicle's brakes. This lever is used in the Trailer Gain Adjustment Procedure to properly adjust the power output to the trailer brakes. Sliding the lever to the left will apply only the trailer brakes. The power output to the trailer is indicated in the Trailer Brake Display Page in the DIC. If the vehicle's service brakes are applied while using the Manual Trailer Brake Apply Lever, the trailer output power will be the greater of the two.

The trailer and the vehicle's brake lamps will come on when either vehicle braking or manual trailer brakes are applied.

Trailer Gain Adjustment Procedure

Trailer Gain should be set for a specific trailering condition and must be adjusted any time vehicle loading, trailer loading or road surface conditions change.

Setting the Trailer Gain properly is needed for the best trailer stopping performance. A trailer that is over-gained may result in locked trailer brakes. A trailer that is under-gained may result in not enough trailer braking. Both of these conditions may result in poorer stopping and stability of the vehicle and trailer.

Use the following procedure to correctly adjust Trailer Gain for each towing condition:

1. Make sure the trailer brakes are in proper working condition.
2. Connect a properly loaded trailer to the vehicle and make all necessary mechanical and electrical connections. See *Loading the Vehicle on page 5-33* for more information.

3. After the electrical connection is made to a trailer equipped with electric brakes:
   - A TRAILER CONNECTED message will be briefly displayed on the DIC display.
   - The Trailer Brake Display Page will appear on the DIC showing TRAILER GAIN and TRAILER OUTPUT.
   - In the Trailer Output display on the DIC, “- - - - - -“ will disappear if there is no error present. Connecting a trailer without electric brakes will not clear the six dashed lines.
4. Adjust the Trailer Gain by using the gain adjustment (+ / -) buttons on the Trailer Brake Control Panel.
5. Drive the vehicle with the trailer attached on a level road surface representative of the towing condition and free of traffic at about 20 to 25 mph (32 to 40 km/h) and fully apply the Manual Trailer Brake Apply lever.

   Adjusting trailer gain at speeds lower than 20 to 25 mph (32 to 40 km/h) may result in an incorrect gain setting.
6. Adjust the Trailer Gain to just below the point of trailer wheel lock-up, indicated by trailer wheel squeal or tire smoke when a trailer wheel locks.

   Trailer wheel lock-up may not occur if towing a heavily loaded trailer. In this case, adjust the Trailer Gain to the highest allowable setting for the towing condition.
7. Re-adjust Trailer Gain any time vehicle loading, trailer loading or road surface conditions change or if trailer wheel lock-up is noticed at any time while towing.

Other ITBC Related DIC Messages

In addition to displaying TRAILER GAIN and TRAILER OUTPUT through the DIC, trailer connection and ITBC system status is displayed in the DIC.

TRAILER CONNECTED – This message will be briefly displayed when a trailer with electric brakes is first connected to the vehicle. This message will automatically turn off in about ten seconds. The driver can also acknowledge this message before it automatically turns off.

CHECK TRAILER WIRING – This message will be displayed if:

1. The ITBC system first determines connection to a trailer with electric brakes and then the trailer harness becomes disconnected from the vehicle.

   If the disconnect occurs while the vehicle is stationary, this message will automatically turn off in about thirty seconds. This message will also turn off if the driver acknowledges this message off or if the trailer harness is re-connected.

   If the disconnect occurs while the vehicle is moving, this message will continue until the ignition is turned off. This message will also turn off if the driver acknowledges this message off or if the trailer harness is re-connected.

2. There is an electrical fault in the wiring to the electric trailer brakes. This message will continue as long as there is an electrical fault in the trailer wiring. This message will also turn off if the driver acknowledges this message off.

To determine if the electrical fault is on the vehicle side or trailer side of the trailer wiring harness connection, do the following:

1. Disconnect the trailer wiring harness from the vehicle.
2. Turn the ignition OFF.
3. Wait ten seconds, then turn the ignition back to RUN.
4. If the CHECK TRAILER WIRING message re-appears, the electrical fault is on the vehicle side.

   If the CHECK TRAILER WIRING message only re-appears when connecting the trailer wiring harness to the vehicle, the electrical fault is on the trailer side.

SERVICE TRAILER BRAKE SYSTEM – This message will be displayed when there is a problem with the ITBC system. If this message persists over multiple ignition cycles there is a problem with the ITBC system. Take the vehicle to an authorized GM dealer to have the ITBC system diagnosed and repaired.

If either the CHECK TRAILER WIRING or SERVICE TRAILER BRAKE SYSTEM message is displayed while driving the vehicle, power is no longer available to the trailer brakes. When traffic conditions allow, carefully pull the vehicle over to the side of the road and turn the ignition off. Check the wiring connection to the trailer and turn the ignition back on. If either of these messages continues, either the vehicle or trailer needs service.

An authorized GM dealer may be able to diagnose and repair problems with the trailer. However, any diagnosis and repair of the trailer is not covered under the vehicle warranty. Please contact your trailer dealer for assistance with trailer repairs and trailer warranty information.

Driving with a Trailer

⚠ WARNING:

When towing a trailer, exhaust gases may collect at the rear of the vehicle and enter if the liftgate, trunk/hatch, or rear-most window is open.

Engine exhaust contains carbon monoxide (CO) which cannot be seen or smelled. It can cause unconsciousness and even death.

(Continued)

WARNING: (Continued)

To maximize safety when towing a trailer:

- Have the exhaust system inspected for leaks and make necessary repairs before starting a trip.
- Never drive with the liftgate, trunk/hatch, or rear-most window open.
- Fully open the air outlets on or under the instrument panel.
- Adjust the Climate Control system to a setting that brings in only outside air and set the fan speed to the highest setting. See Climate Control System in the Index.

For more information about carbon monoxide, see *Engine Exhaust on page 3-58*.

Towing a trailer requires a certain amount of experience. The combination you are driving is longer and not as responsive as the vehicle itself. Get acquainted with the handling and braking of the rig before setting out for the open road.

Before starting, check all trailer hitch parts and attachments, safety chains, electrical connectors, lamps, tires and mirrors. If the trailer has electric brakes, start the combination moving and then apply the trailer brake controller by hand to be sure the brakes work.

During the trip, check occasionally to be sure that the load is secure and the lamps and any trailer brakes still work.

Following Distance

Stay at least twice as far behind the vehicle ahead as you would when driving the vehicle without a trailer. This can help to avoid heavy braking and sudden turns.

Passing

More passing distance is needed when towing a trailer. The combination will not accelerate as quickly and is longer so it is necessary to go much farther beyond the passed vehicle before returning to the lane.

Backing Up

Hold the bottom of the steering wheel with one hand. To move the trailer to the left, move that hand to the left. To move the trailer to the right, move your hand to the right. Always back up slowly and, if possible, have someone guide you.

Making Turns

Notice: **Making very sharp turns while trailering could cause the trailer to come in contact with the vehicle. The vehicle could be damaged. Avoid making very sharp turns while trailering.**

When turning with a trailer, make wider turns than normal. Do this so the trailer will not strike soft shoulders, curbs, road signs, trees or other objects. Avoid jerky or sudden maneuvers. Signal well in advance.

If the trailer turn signal bulbs burn out, the arrows on the instrument panel will still flash for turns. It is important to check occasionally to be sure the trailer bulbs are still working.

Driving On Grades

Reduce speed and shift to a lower gear *before* starting down a long or steep downgrade. If the transmission is not shifted down, the brakes might get hot and no longer work well.

Vehicles can tow in D (Drive). Shift the transmission to a lower gear if the transmission shifts too often under heavy loads and/or hilly conditions.

The tow/haul mode may be used if the transmission shifts too often. See *Tow/Haul Mode on page 3-36*.

When towing at high altitude on steep uphill grades, consider the following: Engine coolant will boil at a lower temperature than at normal altitudes. If the engine is turned off immediately after towing at high altitude on steep uphill grades, the vehicle may show signs similar to engine overheating. To avoid this, let the engine run while parked, preferably on level ground, with the automatic transmission in P (Park) for a few minutes before turning the engine off. If the overheat warning comes on, see *Engine Overheating on page 6-39*.

Parking on Hills

⚠ WARNING:

Parking the vehicle on a hill with the trailer attached can be dangerous. If something goes wrong, the rig could start to move. People can be injured, and both the vehicle and the trailer can be damaged. When possible, always park the rig on a flat surface.

If parking the rig on a hill:

1. Press the brake pedal, but do not shift into P (Park) yet. Turn the wheels into the curb if facing downhill or into traffic if facing uphill.
2. Have someone place chocks under the trailer wheels.
3. When the wheel chocks are in place, release the regular brakes until the chocks absorb the load.

4. Reapply the brake pedal. Then apply the parking brake and shift into P (Park).
5. If the vehicle is four-wheel-drive, be sure the transfer case is in a drive gear and not in N (Neutral).
6. Release the brake pedal.

⚠ WARNING:

It can be dangerous to get out of the vehicle if the shift lever is not fully in P (Park) with the parking brake firmly set. The vehicle can roll.

If the engine has been left running, the vehicle can move suddenly. You or others could be injured. To be sure the vehicle will not move, even when on fairly level ground, use the steps that follow.

Always put the shift lever fully in P (Park) with the parking brake firmly set.

If the transfer case on a four-wheel-drive vehicle is in N (Neutral), the vehicle will be free to roll, even if the shift lever is in P (Park). Be sure the transfer case is in a drive gear — not in N (Neutral).

Leaving After Parking on a Hill

1. Apply and hold the brake pedal.
2. Start the engine
3. Shift into a gear
4. Release the parking brake
5. Let up on the brake pedal.
6. Drive slowly until the trailer is clear of the chocks.
7. Stop and have someone pick up and store the chocks.

Maintenance When Trailer Towing

The vehicle needs service more often when pulling a trailer. See this manual's Maintenance Schedule or Index for more information. Things that are especially important in trailer operation are automatic transmission fluid, engine oil, axle lubricant, belts, cooling system and brake system. It is a good idea to inspect these before and during the trip.

Check periodically to see that all hitch nuts and bolts are tight.

Trailer Wiring Harness

The vehicle is equipped with one of the following wiring harnesses for towing a trailer or hauling a slide-in camper.

Basic Trailer Wiring

All regular, extended cab and crew cab pickups have a seven-wire trailer towing harness.

For vehicles not equipped with heavy duty trailering, the harness is secured to the vehicle's frame behind the spare tire mount. The harness requires the installation of a trailer connector, which is available through your dealer.

If towing a light-duty trailer with a standard four-way round pin connector, an adapter is available from your dealer.

Heavy-DutyTrailer Wiring Harness Package

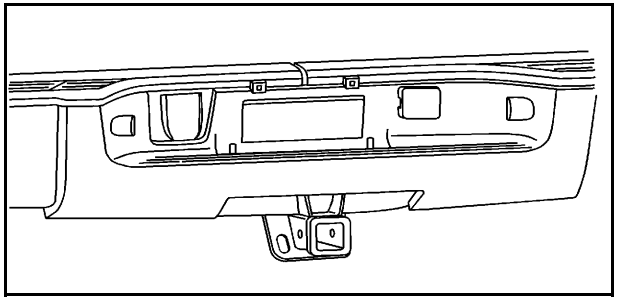

For vehicles equipped with heavy duty trailering, the harness is connected to a bracket on the hitch platform. The seven-wire harness contains the following trailer circuits:

- Yellow: Left Stop/Turn Signal
- Dark Green: Right Stop/Turn Signal
- Brown: Taillamps
- White: Ground
- Light Green: Back-up Lamps
- Red: Battery Feed*
- Dark Blue: Trailer Brake*

*The fuses for these two circuits are installed in the underhood electrical center, but the wires are not connected. They should be connected by your dealer or a qualified service center. The fuse and wire for the ITBC is factory installed and connected if the vehicle is equipped with an ITBC. The fuse for the battery feed is not required if the vehicle has an auxiliary battery. If the vehicle does not have an auxiliary battery, have your dealer or authorized service center install the required fuse.

If charging a remote (non-vehicle) battery, press the Tow/Haul mode button, if equipped, located at the end of the shift lever. This will boost the vehicle system voltage and properly charge the battery. If the trailer is too light for Tow/Haul mode, or the vehicle is not equipped with Tow/Haul, turn on the headlamps as a second way to boost the vehicle system and charge the battery.

Camper/Fifth-Wheel Trailer Wiring Package

The seven-wire camper harness is located under the front edge of the pickup box on the drivers side of the vehicle, attached to the frame bracket. A connector must be added to the wiring harness which connects to the camper.

The harness contains the following camper/trailer circuits:

- Yellow: Left Stop/Turn Signal
- Dark Green: Right Stop/Turn Signal
- Brown: Taillamps
- White: Ground
- Light Green: Back-up Lamps
- Red: Battery Feed
- Dark Blue: Trailer Brake

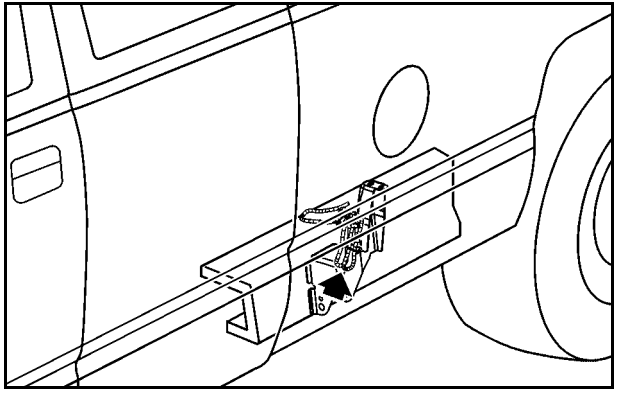

If the vehicle is equipped with the “Heavy-Duty Trailering” option, please refer to “Heavy-Duty Trailer Wiring Package” earlier in this section.

When the camper-wiring harness is ordered without the heavy-duty trailering package, an eight-wire harness with a seven-pin connector is located at the rear of the vehicle and is tied to the vehicle's frame.

Electric Brake Control Wiring Provisions

These wiring provisions are included with the vehicle as part of the trailer wiring package. These provisions are for an electric brake controller. The instrument panel contains blunt cut wires behind the steering column for the trailer brake controller. The harness contains the following wires:

- Dark Blue: Brake Signal to Trailer Connector
- Red/Black: Battery
- Light Blue/White: Brake Switch
- White: Ground

It should be installed by your dealer or a qualified service center.

If the vehicle is equipped with an ITBC, the blunt cuts exist, but are not connected further in the harness. If an aftermarket trailer brake controller is installed, the ITBC must be disconnected. Do not power both ITBC and aftermarket controllers to control the trailer brakes at the same time.

Auxiliary Battery

The auxiliary battery provision can be used to supply electrical power to additional equipment that may be added, such as a slide-in camper. If the vehicle has this provision, this relay will be located on the drivers side of the vehicle, next to the underhood electrical center.

Be sure to follow the proper installation instructions that are included with any electrical equipment that is installed.

Notice: **Leaving electrical equipment on for extended periods will drain the battery. Always turn off electrical equipment when not in use and do not use equipment that exceeds the maximum amperage rating for the auxiliary battery provision.**

Trailer Recommendations

Subtract the hitch loads from the Cargo Weight Rating (CWR). CWR is the maximum weight of the load the vehicle can carry. It does not include the weight of the people inside, but you can figure about 150 lbs. (68 kg) for each passenger. The total cargo load must not be more than the vehicles CWR.

Weigh the vehicle with the trailer attached, so the GVWR or GAWR are not exceeded. If using a weight-distributing hitch, weigh the vehicle without the spring bars in place.

The best performance is obtained by correctly spreading out the weight of the load and choosing the correct hitch and trailer brakes.

For more information see *Towing a Trailer on page 5-55*.

Section 6 Service and Appearance Care

Service 6-4
Accessories and Modifications 6-4
California Proposition 65 Warning 6-5
California Perchlorate Materials Requirements 6-5
Doing Your Own Service Work 6-5
Adding Equipment to the Outside of the Vehicle 6-6

Fuel 6-6
Gasoline Octane 6-7
Gasoline Specifications 6-8
California Fuel 6-8
Additives 6-9
Fuel E85 (85% Ethanol) 6-10
Fuels in Foreign Countries 6-11
Filling the Tank 6-12
Filling a Portable Fuel Container 6-14

Checking Things Under the Hood 6-14
Hood Release 6-15
Engine Compartment Overview 6-16
Engine Oil 6-17
Engine Oil Life System 6-20
Engine Air Cleaner/Filter 6-22
Automatic Transmission Fluid (4-Speed Transmission) 6-24
Automatic Transmission Fluid (6-Speed Transmission) 6-28
Cooling System 6-32
Engine Coolant 6-33
Engine Overheating 6-39
Overheated Engine Protection Operating Mode 6-41
Engine Fan Noise 6-42
Power Steering Fluid 6-42
Windshield Washer Fluid 6-43
Brakes 6-45
Battery 6-48
Jump Starting 6-49

Rear Axle 6-54

Four-Wheel Drive 6-56

Front Axle 6-58

Noise Control System 6-59
Tampering with Noise Control System Prohibited 6-59

Headlamp Aiming 6-60

Section 6 Service and Appearance Care

Bulb Replacement 6-63
Halogen Bulbs 6-63
Headlamps 6-64
Center High-Mounted Stoplamp (CHMSL) and Cargo Lamp 6-65
Pickup Box Identification and Fender Marker Lamps 6-66
Taillamps, Turn Signal, Stoplamps and Back-up Lamps 6-66
License Plate Lamp 6-68
Replacement Bulbs 6-69

Windshield Wiper Blade Replacement 6-69

Tires 6-70
Tire Sidewall Labeling 6-72
Tire Terminology and Definitions 6-77
Inflation - Tire Pressure 6-80
High-Speed Operation 6-82
Dual Tire Operation 6-82
Tire Pressure Monitor System 6-83
Tire Pressure Monitor Operation 6-84
Tire Inspection and Rotation 6-88
When It Is Time for New Tires 6-91
Buying New Tires 6-92
Different Size Tires and Wheels 6-93
Uniform Tire Quality Grading 6-94
Wheel Alignment and Tire Balance 6-96
Wheel Replacement 6-96
Tire Chains 6-98
If a Tire Goes Flat 6-99
Changing a Flat Tire 6-100
Removing the Spare Tire and Tools 6-101
Removing the Flat Tire and Installing the Spare Tire 6-106
Secondary Latch System 6-113
Storing a Flat or Spare Tire and Tools 6-116
Spare Tire 6-120

Appearance Care 6-121
Interior Cleaning 6-121
Fabric/Carpet 6-122
Leather 6-123
Instrument Panel, Vinyl, and Other Plastic Surfaces 6-123
Care of Safety Belts 6-124
Weatherstrips 6-124
Washing Your Vehicle 6-124
Cleaning Exterior Lamps/Lenses 6-125
Finish Care 6-125
Windshield and Wiper Blades 6-126
Aluminum or Chrome-Plated Wheels and Trim 6-126

Section 6 Service and Appearance Care

Tires 6-127
Sheet Metal Damage 6-127
Finish Damage 6-127
Underbody Maintenance 6-128
Chemical Paint Spotting 6-128

Vehicle Identification 6-128
Vehicle Identification Number (VIN) 6-128
Service Parts Identification Label 6-129

Electrical System 6-129
Add-On Electrical Equipment 6-129
Windshield Wiper Fuses 6-129
Power Windows and Other Power Options ... 6-129
Fuses and Circuit Breakers 6-130
Instrument Panel Fuse Block 6-130
Center Instrument Panel Fuse Block 6-132
Underhood Fuse Block 6-133

Capacities and Specifications 6-137

Service

For service and parts needs, visit your dealer. You will receive genuine GM parts and GM-trained and supported service people.

Genuine GM parts have one of these marks:

Accessories and Modifications

When non-dealer/non-retailer accessories are added to the vehicle, they can affect vehicle performance and safety, including such things as airbags, braking, stability, ride and handling, emissions systems, aerodynamics, durability, and electronic systems like antilock brakes, traction control, and stability control. Some of these accessories could even cause malfunction or damage not covered by the vehicle warranty.

Damage to vehicle components resulting from the installation or use of non-GM certified parts, including control module modifications, is not covered under the terms of the vehicle warranty and may affect remaining warranty coverage for affected parts.

GM Accessories are designed to complement and function with other systems on the vehicle. Your GM dealer can accessorize the vehicle using genuine GM Accessories. When you go to your GM dealer and ask for GM Accessories, you will know that GM-trained and supported service technicians will perform the work using genuine GM Accessories.

Also, see *Adding Equipment to Your Airbag-Equipped Vehicle on page 2-92*.

California Proposition 65 Warning

Most motor vehicles, including this one, contain and/or emit chemicals known to the State of California to cause cancer and birth defects or other reproductive harm. Engine exhaust, many parts and systems, many fluids, and some component wear by-products contain and/or emit these chemicals.

California Perchlorate Materials Requirements

Certain types of automotive applications, such as airbag initiators, seat belt pretensioners, and lithium batteries contained in remote keyless transmitters, may contain perchlorate materials. Special handling may be necessary. For additional information, see www.dtsc.ca.gov/hazardouswaste/perchlorate.

Doing Your Own Service Work

If this vehicle is a Two-mode Hybrid, see the Two-mode Hybrid manual for more information.

⚠ WARNING:

You can be injured and the vehicle could be damaged if you try to do service work on a vehicle without knowing enough about it.

- Be sure you have sufficient knowledge, experience, the proper replacement parts, and tools before attempting any vehicle maintenance task.
- Be sure to use the proper nuts, bolts, and other fasteners. English and metric fasteners can be easily confused. If the wrong fasteners are used, parts can later break or fall off. You could be hurt.

If doing some of your own service work, use the proper service manual. It tells you much more about how to service the vehicle than this manual can. To order the proper service manual, see *Service Publications Ordering Information on page 8-18*.

This vehicle has an airbag system. Before attempting to do your own service work, see *Servicing Your Airbag-Equipped Vehicle on page 2-92*.

Keep a record with all parts receipts and list the mileage and the date of any service work performed. See *Maintenance Record on page 7-17*.

Adding Equipment to the Outside of the Vehicle

Things added to the outside of the vehicle can affect the airflow around it. This can cause wind noise and can affect fuel economy and windshield washer performance. Check with your dealer before adding equipment to the outside of the vehicle.

Fuel

For diesel engine vehicles, see “Diesel Fuel Requirements and Fuel System” in the DURAMAX® Diesel manual.

For vehicles with gasoline engines, please read this.

Gasoline

Use of the recommended fuel is an important part of the proper maintenance of this vehicle. To help keep the engine clean and maintain optimum vehicle performance, we recommend the use of gasoline advertised as TOP TIER Detergent Gasoline.

Look for the TOP TIER label on the fuel pump to ensure gasoline meets enhanced detergency standards developed by auto companies. A list of marketers providing TOP TIER Detergent Gasoline can be found at www.toptiergas.com.

The 8th digit of the Vehicle Identification Number (VIN) shows the code letter or number that identifies the vehicle's engine. The VIN is at the top left of the instrument panel. See *Vehicle Identification Number (VIN) on page 6-128*.

If the vehicle has the 5.3L V8 engine (VIN Code 0), the 5.3L V8 engine (VIN Code 3), the 6.0L V8 engine (VIN Code J), or the 6.2L V8 engine (VIN Code 2), you can use either unleaded gasoline or ethanol fuel containing up to 85% ethanol (E85). See *Fuel E85 (85% Ethanol) on page 6-10*. In all other gasoline engines, use only unleaded gasoline. See *Gasoline Octane on page 6-7*.

Gasoline Octane

For all vehicles except those with the 6.2L V8 engine (VIN Code 2), use regular unleaded gasoline with a posted octane rating of 87 or higher. If the octane rating is less than 87, an audible knocking noise, commonly referred to as spark knock, might be heard when driving. If this occurs, use a gasoline rated at 87 octane or higher as soon as possible. If heavy knocking is heard when using gasoline rated at 87 octane or higher, the engine needs service.

If the vehicle has the 6.2L V8 engine (VIN Code 2), use premium unleaded gasoline with a posted octane rating of 91 or higher. You can also use regular unleaded gasoline rated at 87 octane or higher, but the vehicle's acceleration could be slightly reduced, and a slight audible knocking noise, commonly referred to as spark knock, might be heard. If the octane is less than 87, you might notice a heavy knocking noise when you drive. If this occurs, use a gasoline rated at 87 octane or higher as soon as possible. Otherwise, you could damage the engine. If heavy knocking is heard when using gasoline rated at 87 octane or higher, the engine needs service.

Gasoline Specifications

At a minimum, gasoline should meet ASTM specification D 4814 in the United States or CAN/CGSB-3.5 or 3.511 in Canada. Some gasolines contain an octane-enhancing additive called methylcyclopentadienyl manganese tricarbonyl (MMT). We recommend against the use of gasolines containing MMT. See *Additives on page 6-9* for additional information.

California Fuel

If the vehicle is certified to meet California Emissions Standards, it is designed to operate on fuels that meet California specifications. See the underhood emission control label. If this fuel is not available in states adopting California emissions standards, the vehicle will operate satisfactorily on fuels meeting federal specifications, but emission control system performance might be affected. The malfunction indicator lamp could turn on and the vehicle might fail a smog-check test. See *Malfunction Indicator Lamp on page 4-42*. If this occurs, return to your authorized dealer for diagnosis. If it is determined that the condition is caused by the type of fuel used, repairs might not be covered by the vehicle warranty.

Additives

To provide cleaner air, all gasolines in the United States are now required to contain additives that help prevent engine and fuel system deposits from forming, allowing the emission control system to work properly. In most cases, nothing should have to be added to the fuel. However, some gasolines contain only the minimum amount of additive required to meet U.S. Environmental Protection Agency regulations. To help keep fuel injectors and intake valves clean, or if the vehicle experiences problems due to dirty injectors or valves, look for gasoline that is advertised as TOP TIER Detergent Gasoline.

For customers who do not use TOP TIER Detergent Gasoline regularly, one bottle of GM Fuel System Treatment PLUS, added to the fuel tank at every engine oil change, can help clean deposits from fuel injectors and intake valves. GM Fuel System Treatment PLUS is the only gasoline additive recommended by General Motors.

Also, your dealer has additives that will help correct and prevent most deposit-related problems.

Gasolines containing oxygenates, such as ethers and ethanol, and reformulated gasolines might be available in your area. We recommend that you use these gasolines, if they comply with the specifications described earlier. However, E85 (85% ethanol) and other fuels containing more than 10% ethanol must not be used in vehicles that were not designed for those fuels.

Notice: **This vehicle was not designed for fuel that contains methanol. Do not use fuel containing methanol. It can corrode metal parts in the fuel system and also damage plastic and rubber parts. That damage would not be covered under the vehicle warranty.**

Some gasolines that are not reformulated for low emissions can contain an octane-enhancing additive called methylcyclopentadienyl manganese tricarbonyl (MMT); ask the attendant where you buy gasoline whether the fuel contains MMT. We recommend against the use of such gasolines. Fuels containing MMT can reduce the life of spark plugs and the performance of the emission control system could be affected. The malfunction indicator lamp might turn on. If this occurs, return to your dealer for service.

Fuel E85 (85% Ethanol)

The 8th digit of the Vehicle Identification Number (VIN) shows the code letter or number that identifies the vehicle's engine. The VIN is at the top left of the instrument panel. See *Vehicle Identification Number (VIN) on page 6-128*.

If the vehicle has the 5.3L V8 engine (Code 0), the 5.3L V8 engine (VIN Code 3), the 6.0L V8 engine (VIN Code J), or the 6.2L V8 engine (Code 2), you can use either unleaded gasoline or ethanol fuel containing up to 85% ethanol (E85). See *Fuel on page 6-6*. In all other engines, use only the unleaded gasoline described under *Gasoline Octane on page 6-7*.

Only vehicles that have the 5.3L V8 engine (Code 0), the 5.3L V8 engine (VIN Code 3), the 6.0L V8 engine (VIN Code J), or the 6.2L V8 engine (Code 2) can use 85% ethanol fuel (E85). We encourage the use of E85 in vehicles that are designed to use it. The ethanol in E85 is a “renewable” fuel, meaning it is made from renewable sources such as corn and other crops.

Many service stations will not have an 85% ethanol fuel (E85) pump available. The U.S. Department of Energy has an alternative fuels website (www.eere.energy.gov/afdc/infrastructure/locator.html) that can help you find E85 fuel. Those stations that do have E85 should have a label indicating ethanol content. Do not use the fuel if the ethanol content is greater than 85%.

At a minimum, E85 should meet ASTM Specification D 5798. By definition, this means that fuel labeled E85 will have an ethanol content between 70% and 85%. Filling the fuel tank with fuel mixtures that do not meet ASTM specifications can affect driveability and could cause the malfunction indicator lamp to come on.

To ensure quick starts in the wintertime, the E85 fuel must be formulated properly for your climate according to ASTM specification D 5798. If you have trouble starting on E85, it could be because the E85 fuel is not properly formulated for your climate. If this happens, switching to gasoline or adding gasoline to the fuel tank can improve starting. For good starting and heater efficiency below 0°C (32°F), the fuel mix in the fuel tank should contain no more than 70% ethanol. It is best not to alternate repeatedly between gasoline and E85. If you do switch fuels, it is recommended that you add as much fuel as possible — do not add less than 11 L (three gallons) when refueling. You should drive the vehicle immediately after refueling for at least 11 km (seven miles) to allow the vehicle to adapt to the change in ethanol concentration.

E85 has less energy per gallon than gasoline, so you will need to refill the fuel tank more often when using E85 than when you are using gasoline. See *Filling the Tank on page 6-12*.

Notice: **Some additives are not compatible with E85 fuel and can harm the vehicle's fuel system. Do not add anything to E85. Damage caused by additives would not be covered by the vehicle warranty.**

Notice: **This vehicle was not designed for fuel that contains methanol. Do not use fuel containing methanol. It can corrode metal parts in the fuel system and also damage plastic and rubber parts. That damage would not be covered under the vehicle warranty.**

Fuels in Foreign Countries

If you plan on driving in another country outside the United States or Canada, the proper fuel might be hard to find. Never use leaded gasoline or any other fuel not recommended in the previous text on fuel. Costly repairs caused by use of improper fuel would not be covered by the vehicle warranty.

To check the fuel availability, ask an auto club, or contact a major oil company that does business in the country where you will be driving.

Filling the Tank

If the vehicle has the DURAMAX Diesel engine, see the DURAMAX Diesel manual for more information.

⚠ WARNING:

Fuel vapor burns violently and a fuel fire can cause bad injuries. To help avoid injuries to you and others, read and follow all the instructions on the fuel pump island. Turn off the engine when refueling. Do not smoke near fuel or when refueling the vehicle. Do not use cellular phones. Keep sparks, flames, and smoking materials away from fuel. Do not leave the fuel pump unattended when refueling the vehicle. This is against the law in some places. Do not re-enter the vehicle while pumping fuel. Keep children away from the fuel pump; never let children pump fuel.

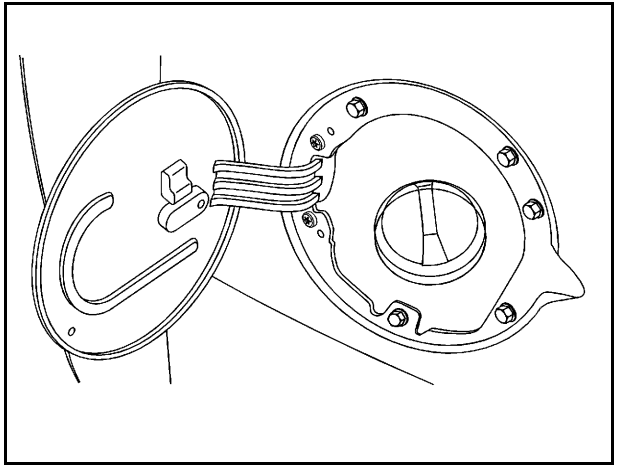

The tethered fuel cap is located behind a hinged fuel door on the driver side of the vehicle. If the vehicle has E85 fuel capability, the fuel cap will be yellow and state that E85 or gasoline can be used. See *Fuel E85 (85% Ethanol) on page 6-10*.

To remove the fuel cap, turn it slowly counterclockwise.

⚠ WARNING:

Fuel can spray out on you if you open the fuel cap too quickly. If you spill fuel and then something ignites it, you could be badly burned. This spray can happen if the tank is nearly full, and is more likely in hot weather. Open the fuel cap slowly and wait for any hiss noise to stop. Then unscrew the cap all the way.

If the vehicle is a dual fuel tank chassis cab model, and it runs out of fuel, refuel the front fuel tank first to ensure a quick restart.

Be careful not to spill fuel. Do not top off or overfill the tank and wait a few seconds after you have finished pumping before removing the nozzle. Clean fuel from painted surfaces as soon as possible. See *Washing Your Vehicle on page 6-124*.

When replacing the fuel cap, turn it clockwise until it clicks. It will require more effort to turn the fuel cap on the last turn as you tighten it. Make sure the cap is fully installed. The diagnostic system can determine if the fuel cap has been left off or improperly installed. This would allow fuel to evaporate into the atmosphere. See *Malfunction Indicator Lamp on page 4-42*.

The TIGHTEN GAS CAP message displays on the Driver Information Center (DIC) if the fuel cap is not properly installed. See *DIC Warnings and Messages on page 4-66* for more information.

⚠ WARNING:

If a fire starts while you are refueling, do not remove the nozzle. Shut off the flow of fuel by shutting off the pump or by notifying the station attendant. Leave the area immediately.

Notice: **If you need a new fuel cap, be sure to get the right type. Your dealer can get one for you. If you get the wrong type, it may not fit properly. This may cause the malfunction indicator lamp to light and may damage the fuel tank and emissions system. See *Malfunction Indicator Lamp on page 4-42*.**

Filling a Portable Fuel Container

⚠ WARNING:

Never fill a portable fuel container while it is in the vehicle. Static electricity discharge from the container can ignite the fuel vapor. You can be badly burned and the vehicle damaged if this occurs. To help avoid injury to you and others:

- Dispense fuel only into approved containers.
- Do not fill a container while it is inside a vehicle, in a vehicle's trunk, pickup bed, or on any surface other than the ground.
- Bring the fill nozzle in contact with the inside of the fill opening before operating the nozzle. Contact should be maintained until the filling is complete.
- Do not smoke while pumping fuel.
- Do not use a cellular phone while pumping fuel.

Checking Things Under the Hood

⚠ WARNING:

An electric fan under the hood can start up and injure you even when the engine is not running. Keep hands, clothing, and tools away from any underhood electric fan.

⚠ WARNING:

Things that burn can get on hot engine parts and start a fire. These include liquids like fuel, oil, coolant, brake fluid, windshield washer and other fluids, and plastic or rubber. You or others could be burned. Be careful not to drop or spill things that will burn onto a hot engine.

Hood Release

To open the hood:

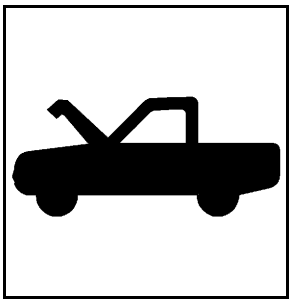

1. Pull the handle with this symbol on it. It is located inside the vehicle to the left of the brake pedal.

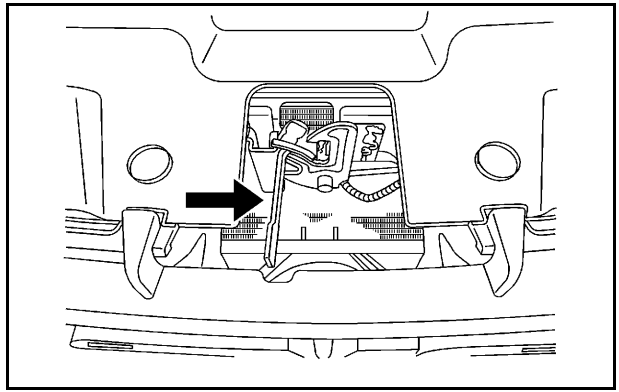

2. Then go to the front of the vehicle and locate the secondary hood release. This is located under the hood, near the center of the grille.
3. Push the secondary hood release to the right.
4. Lift the hood.

   Before closing the hood, be sure all the filler caps are on properly. Then bring the hood from full open to within 6 inches (152 mm) from the closed position, pause, then push the front center of the hood with a swift, firm motion to fully close the hood.

Engine Compartment Overview

If the vehicle has a diesel engine and/or an Allison Transmission, see the DURAMAX® Diesel manual.

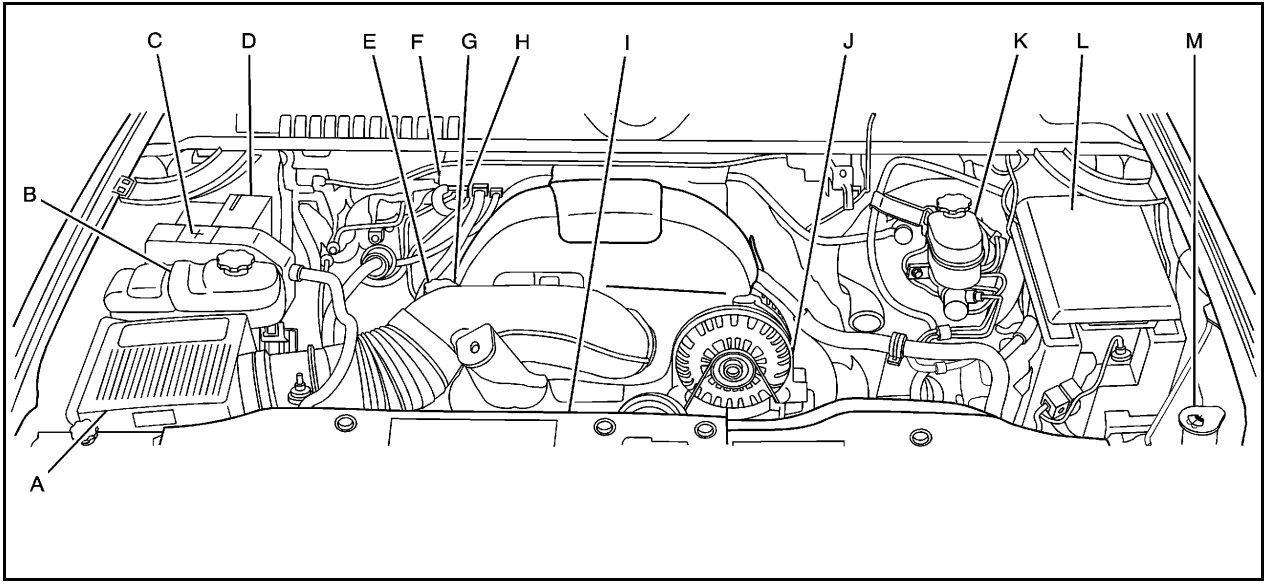

5.3 L V8 Engine (4.3 L V6 Engine, 4.8 L V6 Engine, 6.0 L V8 Engine and 6.2 L V8 Engine similar)

A. *Engine Air Cleaner/Filter on page 6-22*.

B. Coolant Surge Tank and Pressure Cap. See *Cooling System on page 6-32*.

C. Positive (+) Terminal. See *Jump Starting on page 6-49*.

D. *Battery on page 6-48*.

E. Engine Oil Fill Cap. See “When to Add Engine Oil” under *Engine Oil on page 6-17*.

F. Automatic Transmission Dipstick. See “Checking the Fluid Level” under *Automatic Transmission Fluid (4-Speed Transmission) on page 6-24* or *Automatic Transmission Fluid (6-Speed Transmission) on page 6-28*.

G. Remote Negative (−) Terminal (Out of View). See *Jump Starting on page 6-49*.

H. Engine Oil Dipstick (Out of View). See “Checking Engine Oil” under *Engine Oil on page 6-17*.

I. Engine Cooling Fan. See *Cooling System on page 6-32*.

J. Power Steering Fluid Reservoir. See *Power Steering Fluid on page 6-42*.

K. Brake Master Cylinder Reservoir. See “Brake Fluid” under *Brakes on page 6-45*.

L. *Underhood Fuse Block on page 6-133*.

M. Windshield Washer Fluid Reservoir. See “Adding Washer Fluid” under *Windshield Washer Fluid on page 6-43*.

Engine Oil

For diesel engine vehicles, see “Engine Oil” in the DURAMAX® Diesel manual.

Checking Engine Oil

It is a good idea to check the engine oil level at each fuel fill. In order to get an accurate reading, the oil must be warm and the vehicle must be on level ground.

The engine oil dipstick handle is a yellow loop. See *Engine Compartment Overview on page 6-16* for the location of the engine oil dipstick.

1. Turn off the engine and give the oil several minutes to drain back into the oil pan. If this is not done, the oil dipstick might not show the actual level.
2. Pull out the dipstick and clean it with a paper towel or cloth, then push it back in all the way. Remove it again, keeping the tip down, and check the level.

When to Add Engine Oil

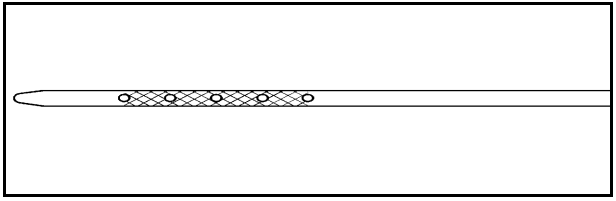

If the oil is below the cross-hatched area at the tip of the dipstick, add at least one liter/quart of the recommended oil. This section explains what kind of oil to use. For engine oil crankcase capacity, see *Capacities and Specifications on page 6-137*.

Notice: **Do not add too much oil. If the engine has so much oil that the oil level gets above the cross-hatched area that shows the proper operating range, the engine could be damaged.**

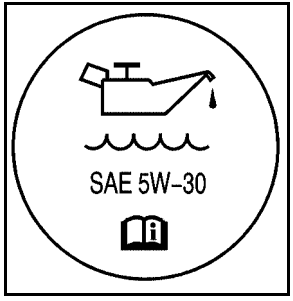

See *Engine Compartment Overview on page 6-16* for the location of the engine oil fill cap.

Add enough oil to put the level somewhere in the proper operating range. Push the dipstick all the way back in when through.

What Kind of Engine Oil to Use

Look for three things:

- GM6094M

  Use only an oil that meets GM Standard GM6094M.

- SAE 5W-30

  SAE 5W-30 is best for the vehicle. These numbers on an oil container show its viscosity, or thickness. Do not use other viscosity oils such as SAE 20W-50.

- American Petroleum Institute (API) starburst symbol

Oils meeting these requirements should have the starburst symbol on the container. This symbol indicates that the oil has been certified by the American Petroleum Institute (API).

Notice: **Use only engine oil identified as meeting GM Standard GM6094M and showing the American Petroleum Institute Certified For Gasoline Engines starburst symbol. Failure to use the recommended oil can result in engine damage not covered by the vehicle warranty.**

Cold Temperature Operation

If in an area of extreme cold, where the temperature falls below −29°C (−20°F), use either an SAE 5W-30 synthetic oil or an SAE 0W-30 engine oil. Both provide easier cold starting for the engine at extremely low temperatures. Always use an oil that meets the required specification, GM6094M. See “What Kind of Engine Oil to Use” for more information.

Engine Oil Additives / Engine Oil Flushes

Do not add anything to the oil. The recommended oils with the starburst symbol that meet GM Standard GM6094M are all that is needed for good performance and engine protection.

Engine oil system flushes are not recommended and could cause engine damage not covered by the vehicle warranty.

Engine Oil Life System

When to Change Engine Oil

This vehicle has a computer system that indicates when to change the engine oil and filter. This is based on engine revolutions and engine temperature, and not on mileage. Based on driving conditions, the mileage at which an oil change is indicated can vary considerably. For the oil life system to work properly, the system must be reset every time the oil is changed.

On some vehicles, when the system has calculated that oil life has been diminished, a CHANGE ENGINE OIL SOON message comes on to indicate that an oil change is necessary. See *DIC Warnings and Messages on page 4-66*. Change the oil as soon as possible within the next 1 000 km (600 miles). It is possible that, if driving under the best conditions, the oil life system might not indicate that an oil change is necessary for over a year. However, the engine oil and filter must be changed at least once a year and at this time the system must be reset. For vehicles without the CHANGE ENGINE OIL SOON message, an oil change is needed when the OIL LIFE REMAINING percentage is near 0%. Your dealer has trained service people who will perform this work using genuine parts and reset the system. It is also important to check the oil regularly and keep it at the proper level.

If the system is ever reset accidentally, the oil must be changed at 5 000 km (3,000 miles) since the last oil change. Remember to reset the oil life system whenever the oil is changed.

How to Reset the Engine Oil Life System

The Engine Oil Life System calculates when to change the engine oil and filter based on vehicle use. Whenever the oil is changed, reset the system so it can calculate when the next oil change is required. If a situation occurs where the oil is changed prior to a CHANGE ENGINE OIL SOON message coming on, reset the system.

Always reset the engine oil life to 100% after every oil change. It will not reset itself. To reset the Engine Oil Life System on most vehicles:

1. Display the OIL LIFE REMAINING on the DIC. If the vehicle does not have DIC buttons, the vehicle must be in P (Park) to access this display. See *DIC Operation and Displays (With DIC Buttons) on page 4-50* or *DIC Operation and Displays (Without DIC Buttons) on page 4-59*.
2. Press and hold the SET/RESET button on the DIC, or the trip odometer reset stem if the vehicle does not have DIC buttons, for more than five seconds. The oil life will change to 100%.

On all vehicles, the Engine Oil Life System can be reset as follows:

1. Turn the ignition to ON/RUN with the engine off
2. Fully press the accelerator pedal slowly three times within five seconds.
3. Display the OIL LIFE REMAINING on the DIC. If the display shows 100%, the system is reset. See *DIC Operation and Displays (With DIC Buttons) on page 4-50* or *DIC Operation and Displays (Without DIC Buttons) on page 4-59*.

If the vehicle has a CHANGE ENGINE OIL SOON message and it comes back on when the vehicle is started and/or the OIL LIFE REMAINING is near 0%, the Engine Oil Life System has not reset. Repeat the procedure.

What to Do with Used Oil

Used engine oil contains certain elements that can be unhealthy for your skin and could even cause cancer. Do not let used oil stay on your skin for very long. Clean your skin and nails with soap and water, or a good hand cleaner. Wash or properly dispose of clothing or rags containing used engine oil. See the manufacturer's warnings about the use and disposal of oil products.

Used oil can be a threat to the environment. If you change your own oil, be sure to drain all the oil from the filter before disposal. Never dispose of oil by putting it in the trash, pouring it on the ground, into sewers, or into streams or bodies of water. Recycle it by taking it to a place that collects used oil.

Engine Air Cleaner/Filter

If the vehicle has a diesel engine, see “Pickup Models” under “Engine Air Cleaner/Filter” in the DURAMAX® Diesel Supplement for the correct inspection and replacement procedures.

See *Engine Compartment Overview on page 6-16* for the location of the engine air cleaner/filter.

When to Inspect the Engine Air Cleaner/Filter

Inspect the air cleaner/filter at the Maintenance II intervals and replace it at the first oil change after each 50,000 mile (80 000 km) interval. See *Scheduled Maintenance on page 7-3* for more information.
If driving on dusty/dirty conditions, inspect the filter at each engine oil change.

How to Inspect the Engine Air Cleaner/Filter

To inspect the air cleaner/filter, remove the engine air cleaner/filter from the vehicle by following Steps 1 through 6. When the engine air cleaner/filter is removed, lightly shake it to release loose dust and dirt. If the engine air cleaner/filter remains caked with dirt, a new filter is required. Never use compressed air to clean the filter.

Replacing the Engine Air Cleaner/Filter

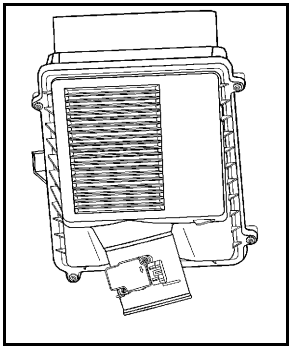

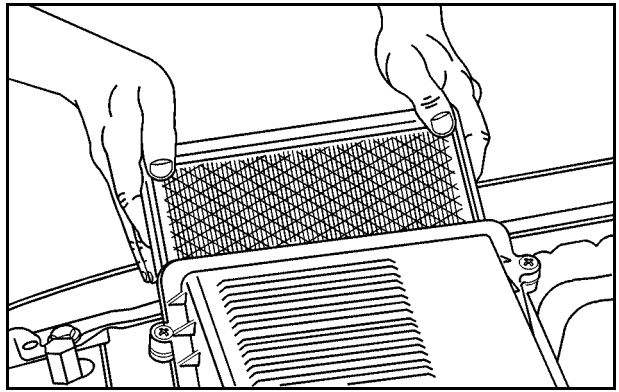

1. Locate the air cleaner/filter assembly. See *Engine Compartment Overview on page 6-16*.
2. Loosen the four screws on the cover of the housing and lift up the cover.
3. Remove the engine air cleaner/filter from the housing. Care should be taken to dislodge as little dirt as possible.
4. Clean the engine air cleaner/filter sealing surfaces and the housing.

5. Inspect or replace the engine air cleaner/filter.
6. Reinstall the cover and tighten the screws.

⚠ WARNING:

Operating the engine with the air cleaner/filter off can cause you or others to be burned. The air cleaner not only cleans the air; it helps to stop flames if the engine backfires. Use caution when working on the engine and do not drive with the air cleaner/filter off.

Automatic Transmission Fluid (4-Speed Transmission)

When to Check and Change Automatic Transmission Fluid

A good time to check the automatic transmission fluid level is when the engine oil is changed.

Change the fluid and filter at the intervals listed in *Scheduled Maintenance on page 7-3* and be sure to use the transmission fluid listed in *Recommended Fluids and Lubricants on page 7-13*.

How to Check Automatic Transmission Fluid

Because this operation can be a little difficult, you may choose to have this done at the dealer service department.

If you do it yourself, be sure to follow all the instructions here or you could get a false reading on the dipstick.

Notice: **Too much or too little fluid can damage the transmission. Too much can mean that some of the fluid could come out and fall on hot engine parts or exhaust system parts, starting a fire. Too little fluid could cause the transmission to overheat. Be sure to get an accurate reading if checking the transmission fluid.**

Wait at least 30 minutes before checking the transmission fluid level if you have been driving:

- When outside temperatures are above 32°C (90°F).
- At high speed for quite a while.
- In heavy traffic — especially in hot weather.
- While pulling a trailer.

To get the right reading, the fluid should be at normal operating temperature, which is 82°C to 93°C (180°F to 200°F).

Get the vehicle warmed up by driving about 24 km (15 miles) when outside temperatures are above 10°C (50°F). If it is colder than 10°C (50°F), drive the vehicle in 3 (Third) until the engine temperature gauge moves and then remains steady for 10 minutes.

A cold fluid check can be made after the vehicle has been sitting for eight hours or more with the engine off, but this is used only as a reference. Let the engine run at idle for five minutes if outside temperatures are 10°C (50°F) or more. If it is colder than 10°C (50°F), you may have to idle the engine longer. Should the fluid level be low during this cold check, you must check the fluid hot before adding fluid. Checking the fluid hot will give you a more accurate reading of the fluid level.

Checking the Fluid Level

Prepare the vehicle as follows:

1. Park the vehicle on a level place. Keep the engine running.
2. With the parking brake applied, place the shift lever in P (Park).
3. With your foot on the brake pedal, move the shift lever through each gear range, pausing for about three seconds in each range. Then, position the shift lever in P (Park).
4. Let the engine run at idle for three minutes or more.

Then, without shutting off the engine, follow these steps:

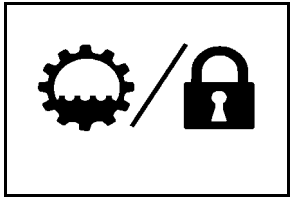

1. Locate the transmission dipstick handle with this graphic which is located at the rear of the engine compartment, on the passenger side of the vehicle.

   See *Engine Compartment Overview on page 6-16* for more information on location.
2. Flip the handle up and then pull out the dipstick and wipe it with a clean rag or paper towel.
3. Push it back in all the way, wait three seconds and then pull it back out again.

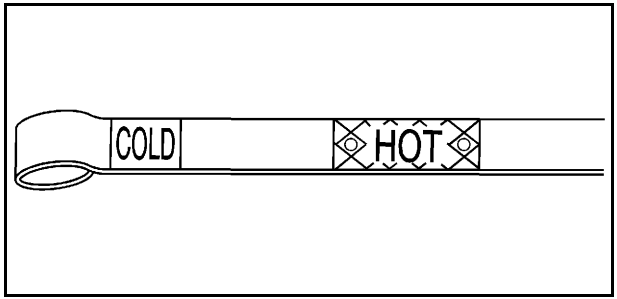

4. Check both sides of the dipstick, and read the lower level. The fluid level must be in the COLD area, below the cross-hatched area, for a cold check or in the HOT or cross-hatched area for a hot check. Be sure to keep the dipstick pointed down to get an accurate reading.
5. If the fluid level is in the acceptable range, push the dipstick back in all the way; then flip the handle down to lock the dipstick in place.

Consistency of Readings

Always check the fluid level at least twice using the procedure described previously. Consistency (repeatable readings) is important to maintaining proper fluid level. If readings are still inconsistent, contact your dealer.

How to Add Automatic Transmission Fluid

Refer to the Maintenance Schedule to determine what kind of transmission fluid to use. See *Recommended Fluids and Lubricants on page 7-13*.

Using a funnel, add fluid down the transmission dipstick tube only after checking the transmission fluid while it is hot. A cold check is used only as a reference. If the fluid level is low, add only enough of the proper fluid to bring the level up to the HOT area for a hot check. It does not take much fluid, generally less than 0.5 Liter (1 Pint). Do not overfill.

Notice: **Use of the incorrect automatic transmission fluid may damage the vehicle, and the damages may not be covered by the vehicle's warranty. Always use the automatic transmission fluid listed in *Recommended Fluids and Lubricants on page 7-13*.**

- After adding fluid, recheck the fluid level as described under “How to Check Automatic Transmission Fluid,” earlier in this section.
- When the correct fluid level is obtained, push the dipstick back in all the way; then flip the handle down to lock the dipstick in place.

Automatic Transmission Fluid (6-Speed Transmission)

When to Check and Change Automatic Transmission Fluid

It is usually not necessary to check the transmission fluid level. The only reason for fluid loss is a transmission leak or overheating the transmission. If you suspect a small leak, then use the following checking procedures to check the fluid level. However, if there is a large leak, then it may be necessary to have the vehicle towed to a dealer service department and have it repaired before driving the vehicle further.

Notice: **Use of the incorrect automatic transmission fluid may damage the vehicle, and the damages may not be covered by the vehicle's warranty. Always use the automatic transmission fluid listed in *Recommended Fluids and Lubricants on page 7-13*.**

Change the fluid and filter at the intervals listed in the Maintenance Schedule. See *Scheduled Maintenance on page 7-3*. Be sure to use the transmission fluid listed in *Recommended Fluids and Lubricants on page 7-13*.

How to Check Automatic Transmission Fluid

Notice: **Too much or too little fluid can damage the transmission. Too much can mean that some of the fluid could come out and fall on hot engine parts or exhaust system parts, starting a fire. Too little fluid could cause the transmission to overheat. Be sure to get an accurate reading if checking the transmission fluid.**

Before checking the fluid level, prepare the vehicle as follows:

1. Start the engine and park the vehicle on a level surface. Keep the engine running.
2. Apply the parking brake and place the shift lever in P (Park).
3. With your foot on the brake pedal, move the shift lever through each gear range, pausing for about three seconds in each range. Then, move the shift lever back to P (Park).

4. Allow the engine to idle (500 – 800 rpm) for at least one minute. Slowly release the brake pedal.
5. Keep the engine running and press the Trip/Fuel button or trip odometer reset stem until TRANS TEMP (Transmission Temperature) displays on the Driver Information Center (DIC).
6. Using the TRANS TEMP reading, determine and perform the appropriate check procedure. If the TRANS TEMP reading is not within the required temperature ranges, allow the vehicle to cool, or operate the vehicle until the appropriate transmission fluid temperature is reached.

Cold Check Procedure

Use this procedure only as a reference to determine if the transmission has enough fluid to be operated safely until a hot check procedure can be made. The hot check procedure is the most accurate method to check the fluid level. Perform the hot check procedure at the first opportunity. Use this cold check procedure to check fluid level when the transmission temperature is between 27°C and 32°C (80°F and 90°F).

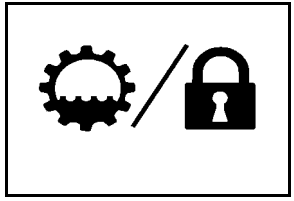

1. Locate the transmission dipstick at the rear of the engine compartment, on the passenger side of the vehicle.

   See *Engine Compartment Overview on page 6-16* for more information.
2. Flip the handle up, and then pull out the dipstick and wipe it with a clean rag or paper towel.
3. Install the dipstick by pushing it back in all the way, wait three seconds, and then pull it back out again.
4. Check both sides of the dipstick and read the lower level. Repeat the check procedure to verify the reading.

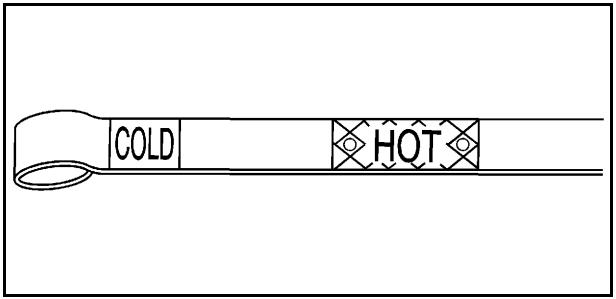

5. If the fluid level is below the COLD check band, add only enough fluid as necessary to bring the level into the COLD band. It does not take much fluid, generally less than 0.5 Liter (1 Pint). Do not overfill.
6. Perform a hot check at the first opportunity after the transmission reaches a normal operating temperature between 71°C to 93°C (160°F to 200°F).
7. If the fluid level is in the acceptable range, push the dipstick back in all the way, then flip the handle down to lock the dipstick in place.

Hot Check Procedure

Use this procedure to check the transmission fluid level when the transmission fluid temperature is between 71°C and 93°C (160°F and 200°F).

The hot check is the most accurate method to check the fluid level. The hot check should be performed at the first opportunity in order to verify the cold check. The fluid level rises as fluid temperature increases, so it is important to ensure the transmission temperature is within range.

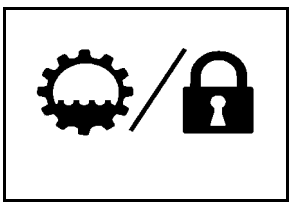

1. Locate the transmission dipstick at the rear of the engine compartment, on the passenger side of the vehicle.

   See *Engine Compartment Overview on page 6-16* for more information.
2. Flip the handle up, and then pull out the dipstick and wipe it with a clean rag or paper towel.
3. Install the dipstick by pushing it back in all the way, wait three seconds, and then pull it back out again.
4. Check both sides of the dipstick and read the lower level. Repeat the check procedure to verify the reading.

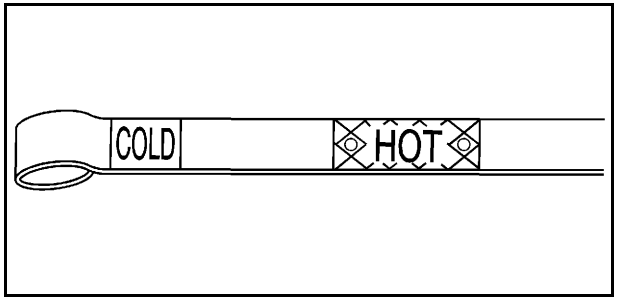

5. Safe operating level is within the HOT cross hatch band on the dipstick. If the fluid level is not within the HOT band, and the transmission temperature is between 71°C and 93°C (160°F and 200°F), add or drain fluid as necessary to bring the level into the HOT band. If the fluid level is low, add only enough fluid to bring the level into the HOT band. It does not take much fluid, generally less than 0.5 Liter (1 Pint). Do not overfill.
6. If the fluid level is in the acceptable range, push the dipstick back in all the way, then flip the handle down to lock the dipstick in place.

Consistency of Readings

Always check the fluid level at least twice using the procedure described previously. Consistency (repeatable readings) is important to maintaining proper fluid level. If readings are still inconsistent, contact your dealer.

Cooling System

If your vehicle has the DURAMAX® Diesel engine, see the DURAMAX® Diesel manual for more information.

The Cooling System allows the engine to maintain the correct working temperature.

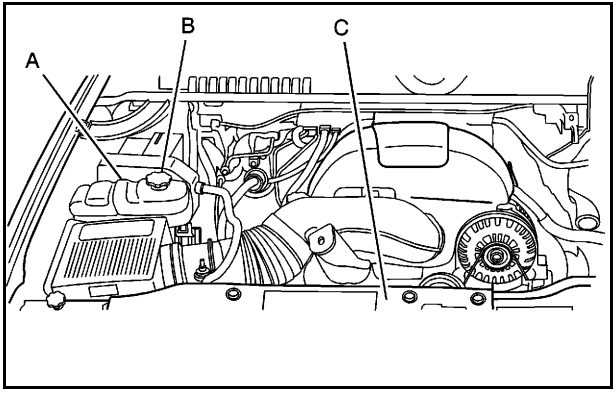

5.3L Engine (4.3L, 4.8L, 6.0L and 6.2L Similar)

A. Coolant Surge Tank

B. Coolant Surge Tank Pressure Cap

C. Engine Cooling Fan

⚠ WARNING:

An electric engine cooling fan can start even when the engine is not running. To avoid injury, always keep hands, clothing, and tools away from any engine cooling fan.

⚠ WARNING:

Heater and radiator hoses, and other engine parts, can be very hot. Do not touch them. If you do, you can be burned.

(Continued)

WARNING: (Continued)

Do not run the engine if there is a leak. If you run the engine, it could lose all coolant. That could cause an engine fire, and you could be burned. Get any leak fixed before you drive the vehicle.

Notice: **Using coolant other than DEX-COOL® can cause premature engine, heater core, or radiator corrosion. In addition, the engine coolant could require changing sooner, at 50 000 km (30,000 miles) or 24 months, whichever occurs first. Any repairs would not be covered by the vehicle warranty. Always use DEX-COOL® (silicate-free) coolant in the vehicle.**

Engine Coolant

The cooling system in the vehicle is filled with DEX-COOL® engine coolant. This coolant is designed to remain in the vehicle for five years or 150,000 miles (240 000 km), whichever occurs first.

The following explains the cooling system and how to check and add coolant when it is low. If there is a problem with engine overheating, see *Engine Overheating on page 6-39*.

What to Use

⚠ WARNING:

Adding only plain water to the cooling system can be dangerous. Plain water, or some other liquid such as alcohol, can boil before the proper coolant mixture will. The vehicle's coolant warning system is set for the proper coolant mixture. With plain water or the wrong mixture, the engine could get too hot but you would not get the overheat warning. The engine could catch fire and you or others could be burned. Use a 50/50 mixture of clean, drinkable water and DEX-COOL® coolant.

Use a 50/50 mixture of clean, drinkable water and DEX-COOL® coolant. If using this mixture, nothing else needs to be added. This mixture:

- Gives freezing protection down to −34°F (−37°C), outside temperature.
- Gives boiling protection up to 265°F (129°C), engine temperature.
- Protects against rust and corrosion.
- Will not damage aluminum parts.
- Helps keep the proper engine temperature.

Notice: **If an improper coolant mixture is used, the engine could overheat and be badly damaged. The repair cost would not be covered by the vehicle warranty. Too much water in the mixture can freeze and crack the engine, radiator, heater core, and other parts.**

Notice: **If extra inhibitors and/or additives are used in the vehicle's cooling system, the vehicle could be damaged. Use only the proper mixture of the engine coolant listed in this manual for the cooling system. See *Recommended Fluids and Lubricants on page 7-13* for more information.**

Checking Coolant

The coolant surge tank is located in the engine compartment on the passenger side of the vehicle. See *Engine Compartment Overview on page 6-16* for more information on location.

The vehicle must be on a level surface when checking the coolant level.

Check to see if coolant is visible in the coolant surge tank. If the coolant inside the coolant surge tank is boiling, do not do anything else until it cools down. If coolant is visible but the coolant level is not at or above the FULL COLD mark, add a 50/50 mixture of clean, drinkable water and DEX-COOL® coolant at the coolant surge tank, but be sure the cooling system is cool before this is done.

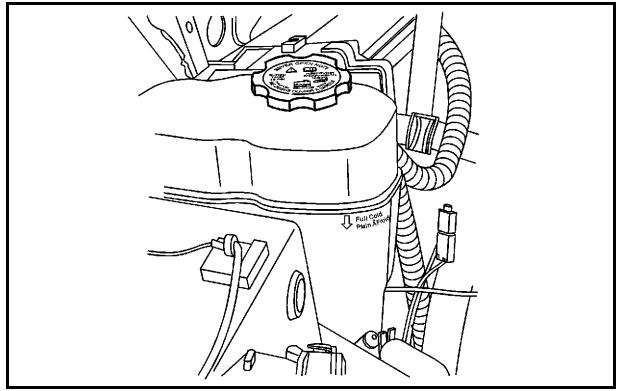

The coolant level should be at or above the FULL COLD mark. If it is not, you may have a leak in the cooling system.

If the vehicle has a low coolant sensor and the LOW COOLANT LEVEL message comes on and stays on, it means you are low on engine coolant. See “LOW COOLANT LEVEL” under *DIC Warnings and Messages on page 4-66*.

How to Add Coolant to the Coolant Surge Tank for Gasoline Engines

If the vehicle has a diesel engine, see “Cooling System” in the DURAMAX® Diesel Supplement for the proper coolant fill procedure.

⚠ WARNING:

You can be burned if you spill coolant on hot engine parts. Coolant contains ethylene glycol and it will burn if the engine parts are hot enough. Do not spill coolant on a hot engine.

Notice: **This vehicle has a specific coolant fill procedure. Failure to follow this procedure could cause the engine to overheat and be severely damaged.**

⚠ WARNING:

An electric engine cooling fan under the hood can start up even when the engine is not running and can cause injury. Keep hands, clothing, and tools away from any underhood electric fan.

⚠ WARNING:

Steam and scalding liquids from a hot cooling system can blow out and burn you badly. They are under pressure, and if you turn the coolant surge tank pressure cap — even a little — they can come out at high speed. Never turn the cap when the cooling system, including the coolant surge tank pressure cap, is hot. Wait for the cooling system and coolant surge tank pressure cap to cool if you ever have to turn the pressure cap.

If no coolant is visible in the surge tank, add coolant as follows:

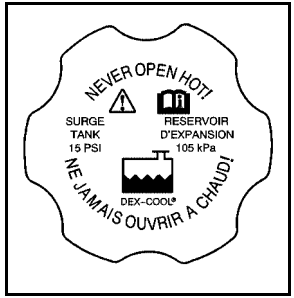

1. Remove the coolant surge tank pressure cap when the cooling system, including the coolant surge tank pressure cap and upper radiator hose, is no longer hot.

   Turn the pressure cap slowly counterclockwise about one full turn. If you hear a hiss, wait for that to stop. A hiss means there is still some pressure left.

2. Keep turning the pressure cap slowly, and remove it.

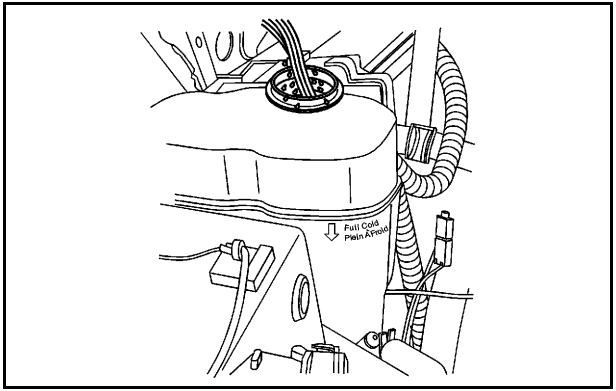

3. Fill the coolant surge tank with the proper mixture to the FULL COLD mark.
4. With the coolant surge tank pressure cap off, start the engine and let it run until the engine coolant temperature gauge indicates approximately 195°F (90°C).

   By this time, the coolant level inside the coolant surge tank may be lower. If the level is lower, add more of the proper mixture to the coolant surge tank until the level reaches the FULL COLD mark.
5. Replace the pressure cap. Be sure the pressure cap is hand-tight and fully seated.
6. Verify coolant level after engine is shut off and the coolant is cold. If necessary, repeat coolant fill procedure Steps 1 through 6.

Notice: **If the pressure cap is not tightly installed, coolant loss and possible engine damage may occur. Be sure the cap is properly and tightly secured.**

Engine Overheating

If the vehicle has the DURAMAX® Diesel engine, see the DURAMAX® Diesel manual for more information.

The vehicle has several indicators to warn of engine overheating.

You will find a coolant temperature gauge on the vehicle's instrument panel. See *Engine Coolant Temperature Gauge on page 4-41*.

In addition, you will find ENGINE OVERHEATED STOP ENGINE, ENGINE OVERHEATED IDLE ENGINE, and ENGINE POWER IS REDUCED messages in the Driver Information Center (DIC) on the instrument panel. See *DIC Warnings and Messages on page 4-66*.

You may decide not to lift the hood when this warning appears, but instead get service help right away. See *Roadside Assistance Program on page 8-7*.

If you do decide to lift the hood, make sure the vehicle is parked on a level surface.

Then check to see if the engine cooling fans are running. If the engine is overheating, both fans should be running. If they are not, do not continue to run the engine and have the vehicle serviced.

Notice: **Engine damage from running your engine without coolant is not covered by the vehicle warranty. See Overheated Engine Protection Operating Mode for information on driving to a safe place in an emergency.**

Notice: **If the engine catches fire while driving with no coolant, the vehicle can be badly damaged. The costly repairs would not be covered by the vehicle warranty. See *Overheated Engine Protection Operating Mode on page 6-41* for information on driving to a safe place in an emergency.**

If Steam Is Coming From The Engine Compartment

⚠ WARNING:

Steam from an overheated engine can burn you badly, even if you just open the hood. Stay away from the engine if you see or hear steam coming from it. Turn it off and get everyone away from the vehicle until it cools down. Wait until there is no sign of steam or coolant before you open the hood.

If you keep driving when the vehicles engine is overheated, the liquids in it can catch fire. You or others could be badly burned. Stop the engine if it overheats, and get out of the vehicle until the engine is cool.

See *Overheated Engine Protection Operating Mode on page 6-41* for information on driving to a safe place in an emergency.

If No Steam Is Coming From The Engine Compartment

The ENGINE OVERHEATED STOP ENGINE or the ENGINE OVERHEATED IDLE ENGINE message, along with a low coolant condition, can indicate a serious problem.

If you get an engine overheat warning, but see or hear no steam, the problem may not be too serious. Sometimes the engine can get a little too hot when you:

- Climb a long hill on a hot day.
- Stop after high-speed driving.
- Idle for long periods in traffic.
- Tow a trailer. See *Towing a Trailer on page 5-55*.

If you get the ENGINE OVERHEATED STOP ENGINE or the ENGINE OVERHEATED IDLE ENGINE message with no sign of steam, try this for a minute or so:

1. Turn the air conditioning off.
2. Turn the heater on to the highest temperature and to the highest fan speed. Open the windows as necessary.
3. If you are stopped in a traffic jam, apply the brake, shift to N (Neutral); otherwise, shift to the highest gear while driving — D (Drive) or 3 (Third).

If the temperature overheat gauge is no longer in the overheat zone or an overheat warning no longer displays, the vehicle can be driven. Continue to drive the vehicle slow for about 10 minutes. Keep a safe vehicle distance from the car in front of you. If the warning does not come back on, continue to drive normally.

If the warning continues, pull over, stop, and park the vehicle right away.

If there is no sign of steam, idle the engine for five minutes while parked. If the warning is still displayed, turn off the engine until it cools down. Also, see “Overheated Engine Protection Operating Mode” later in this section.

Overheated Engine Protection Operating Mode

If an overheated engine condition exists and the REDUCED ENGINE POWER message is displayed, an overheat protection mode which alternates firing groups of cylinders helps prevent engine damage. In this mode, you will notice a loss in power and engine performance. This operating mode allows the vehicle to be driven to a safe place in an emergency. Driving extended miles (km) and/or towing a trailer in the overheat protection mode should be avoided.

Notice: **After driving in the overheated engine protection operating mode, to avoid engine damage, allow the engine to cool before attempting any repair. The engine oil will be severely degraded. Repair the cause of coolant loss, change the oil and reset the oil life system. See *Engine Oil on page 6-17*.**

Engine Fan Noise

If the vehicle has a clutched engine cooling fan, when the clutch is engaged, the fan spins faster to provide more air to cool the engine. In most everyday driving conditions, the fan is spinning slower and the clutch is not fully engaged. This improves fuel economy and reduces fan noise. Under heavy vehicle loading, trailer towing, and/or high outside temperatures, the fan speed increases as the clutch more fully engages, so you may hear an increase in fan noise. This is normal and should not be mistaken as the transmission slipping or making extra shifts. It is merely the cooling system functioning properly. The fan will slow down when additional cooling is not required and the clutch disengages.

You may also hear this fan noise when you start the engine. It will go away as the fan clutch partially disengages.

If the vehicle has electric cooling fans, you may hear the fans spinning at low speed during most everyday driving. The fans may turn off if no cooling is required. Under heavy vehicle loading, trailer towing, and/or high outside temperatures, or if you are operating the air conditioning system, the fans may change to high speed and you may hear an increase in fan noise. This is normal and indicates that the cooling system is functioning properly. The fans will change to low speed when additional cooling is no longer required.

Power Steering Fluid

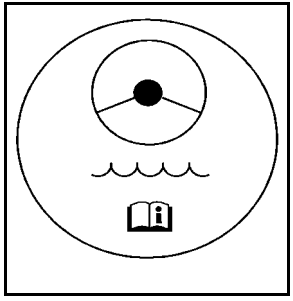

See *Engine Compartment Overview on page 6-16* for reservoir location.

When to Check Power Steering Fluid

It is not necessary to regularly check power steering fluid unless you suspect there is a leak in the system or you hear an unusual noise. A fluid loss in this system could indicate a problem. Have the system inspected and repaired.

How to Check Power Steering Fluid

To check the power steering fluid:

1. Turn the key off and let the engine compartment cool down.
2. Wipe the cap and the top of the reservoir clean.
3. Unscrew the cap and wipe the dipstick with a clean rag.
4. Replace the cap and completely tighten it.
5. Remove the cap again and look at the fluid level on the dipstick.

The level should be at the FULL COLD mark.
If necessary, add only enough fluid to bring the level up to the mark.

What to Use

To determine what kind of fluid to use, see *Recommended Fluids and Lubricants on page 7-13*. Always use the proper fluid.

Notice: **Use of the incorrect fluid may damage the vehicle and the damages may not be covered by the vehicle's warranty. Always use the correct fluid listed in *Recommended Fluids and Lubricants on page 7-13*.**

Windshield Washer Fluid

What to Use

When windshield washer fluid needs to be added, be sure to read the manufacturer's instructions before use. Use a fluid that has sufficient protection against freezing in an area where the temperature may fall below freezing.

Adding Washer Fluid

The vehicle has a low washer fluid message in the DIC that comes on when the washer fluid is low. The message is displayed for 15 seconds at the start of each ignition cycle. When the WASHER FLUID LOW ADD FLUID message displays, you will need to add washer fluid to the windshield washer fluid reservoir.

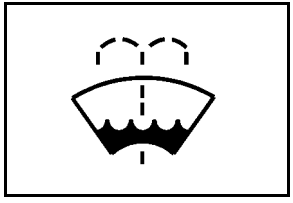

Open the cap with the washer symbol on it. Add washer fluid until the tank is full. See *Engine Compartment Overview on page 6-16* for reservoir location.

Notice:

- **When using concentrated washer fluid, follow the manufacturer's instructions for adding water.**
- **Do not mix water with ready-to-use washer fluid. Water can cause the solution to freeze and damage the washer fluid tank and other parts of the washer system. Also, water does not clean as well as washer fluid.**
- **Fill the washer fluid tank only three-quarters full when it is very cold. This allows for fluid expansion if freezing occurs, which could damage the tank if it is completely full.**
- **Do not use engine coolant (antifreeze) in the windshield washer. It can damage the vehicle's windshield washer system and paint.**

Brakes

Brake Fluid

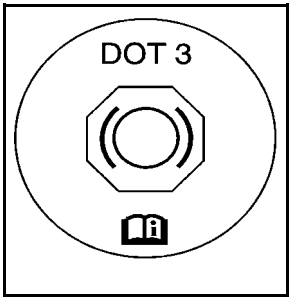

The brake master cylinder reservoir is filled with DOT 3 brake fluid. See *Engine Compartment Overview on page 6-16* for the location of the reservoir.

There are only two reasons why the brake fluid level in the reservoir might go down:

- The brake fluid level goes down because of normal brake lining wear. When new linings are installed, the fluid level goes back up.
- A fluid leak in the brake hydraulic system can also cause a low fluid level. Have the brake hydraulic system fixed, since a leak means that sooner or later the brakes will not work well.

Do not top off the brake fluid. Adding fluid does not correct a leak. If fluid is added when the linings are worn, there will be too much fluid when new brake linings are installed. Add or remove brake fluid, as necessary, only when work is done on the brake hydraulic system.

⚠ WARNING:

If too much brake fluid is added, it can spill on the engine and burn, if the engine is hot enough. You or others could be burned, and the vehicle could be damaged. Add brake fluid only when work is done on the brake hydraulic system. See “Checking Brake Fluid” in this section.

Refer to the Maintenance Schedule to determine when to check the brake fluid. See *Scheduled Maintenance on page 7-3*.

Checking Brake Fluid

Check brake fluid by looking at the brake fluid reservoir. See *Engine Compartment Overview on page 6-16*.

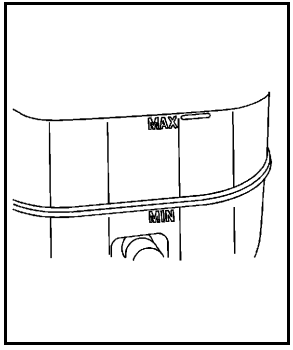

The fluid level should be above MIN. If it is not, have the brake hydraulic system checked to see if there is a leak.

After work is done on the brake hydraulic system, make sure the level is above the MIN but not over the MAX mark.

What to Add

Use only new DOT 3 brake fluid from a sealed container. See *Recommended Fluids and Lubricants on page 7-13*.

Always clean the brake fluid reservoir cap and the area around the cap before removing it. This helps keep dirt from entering the reservoir.

⚠ WARNING:

With the wrong kind of fluid in the brake hydraulic system, the brakes might not work well. This could cause a crash. Always use the proper brake fluid.

Notice:

- **Using the wrong fluid can badly damage brake hydraulic system parts. For example, just a few drops of mineral-based oil, such as engine oil, in the brake hydraulic system can damage brake hydraulic system parts so badly that they will have to be replaced. Do not let someone put in the wrong kind of fluid.**
- **If brake fluid is spilled on the vehicle's painted surfaces, the paint finish can be damaged. Be careful not to spill brake fluid on the vehicle. If you do, wash it off immediately. See *Washing Your Vehicle on page 6-124*.**

Brake Wear

This vehicle has front disc brakes and could have rear drum brakes or rear disc brakes.

Disc brake pads have built-in wear indicators that make a high-pitched warning sound when the brake pads are worn and new pads are needed. The sound can come and go or be heard all the time the vehicle is moving, except when applying the brake pedal firmly.

⚠ WARNING:

The brake wear warning sound means that soon the brakes will not work well. That could lead to an accident. When the brake wear warning sound is heard, have the vehicle serviced.

Notice: **Continuing to drive with worn-out brake pads could result in costly brake repair.**

Some driving conditions or climates can cause a brake squeal when the brakes are first applied or lightly applied. This does not mean something is wrong with the brakes.

Properly torqued wheel nuts are necessary to help prevent brake pulsation. When tires are rotated, inspect brake pads for wear and evenly tighten wheel nuts in the proper sequence to torque specifications in *Capacities and Specifications on page 6-137*.

If the vehicle has rear drum brakes, they do not have wear indicators, but if a rear brake rubbing noise is heard, have the rear brake linings inspected immediately. Rear brake drums should be removed and inspected each time the tires are removed for rotation or changing. Drum brakes have an inspection hole to inspect lining wear during scheduled maintenance. When the front brake pads are replaced, have the rear brakes inspected, too.

Brake linings should always be replaced as complete axle sets.

Brake Pedal Travel

See your dealer if the brake pedal does not return to normal height, or if there is a rapid increase in pedal travel. This could be a sign that brake service might be required.

Brake Adjustment

Every brake stop, the brakes adjust for wear.

Replacing Brake System Parts

The braking system on a vehicle is complex. Its many parts have to be of top quality and work well together if the vehicle is to have really good braking. The vehicle was designed and tested with top-quality brake parts. When parts of the braking system are replaced — for example, when the brake linings wear down and new ones are installed — be sure to get new approved replacement parts. If this is not done, the brakes might not work properly. For example, if someone puts in brake linings that are wrong for the vehicle, the balance between the front and rear brakes can change — for the worse. The braking performance expected can change in many other ways if the wrong replacement brake parts are installed.

Battery

If the vehicle is a Two-mode Hybrid, see the Two-mode Hybrid manual for more information.

This vehicle has a maintenance free battery (or batteries). Refer to the replacement number on the original battery label when a new battery is needed. See *Engine Compartment Overview on page 6-16* for battery location.

⚠ DANGER:

Battery posts, terminals, and related accessories contain lead and lead compounds, chemicals known to the State of California to cause cancer and reproductive harm. Wash hands after handling.

Vehicle Storage

⚠ WARNING:

Batteries have acid that can burn you and gas that can explode. You can be badly hurt if you are not careful. See *Jump Starting on page 6-49* for tips on working around a battery without getting hurt.

Infrequent Usage: Remove the black, negative (−) cable from the battery to keep the battery from running down.

Extended Storage: Remove the black, negative (−) cable from the battery or use a battery trickle charger.

Jump Starting

If the vehicle is a Two-mode Hybrid, see the Two-mode Hybrid manual for more information.

If the vehicle's battery (or batteries) has run down, you may want to use another vehicle and some jumper cables to start your vehicle. Be sure to use the following steps to do it safely.

⚠ WARNING:

Batteries can hurt you. They can be dangerous because:

- They contain acid that can burn you.
- They contain gas that can explode or ignite.
- They contain enough electricity to burn you.

If you do not follow these steps exactly, some or all of these things can hurt you.

Notice: **Ignoring these steps could result in costly damage to the vehicle that would not be covered by the warranty.**

Trying to start the vehicle by pushing or pulling it will not work, and it could damage the vehicle.

1. Check the other vehicle. It must have a 12-volt battery with a negative ground system.

Notice: **If the other vehicle's system is not a 12-volt system with a negative ground, both vehicles can be damaged. Only use vehicles with 12-volt systems with negative grounds to jump start your vehicle.**

2. If you have a vehicle with a diesel engine with two batteries, you should know before you begin that, especially in cold weather, you may not be able to get enough power from a single battery in another vehicle to start your diesel engine. If your vehicle has more than one battery, using the battery that is closer to the starter will reduce electrical resistance. This is located on the passenger side, in the rear of the engine compartment.

3. Get the vehicles close enough so the jumper cables can reach, but be sure the vehicles are not touching each other. If they are, it could cause an unwanted ground connection. You would not be able to start your vehicle, and the bad grounding could damage the electrical systems.

   To avoid the possibility of the vehicles rolling, set the parking brake firmly on both vehicles involved in the jump start procedure. Put the automatic transmission in P (Park) or a manual transmission in Neutral before setting the parking brake. If you have a four-wheel-drive vehicle, be sure the transfer case is in a drive gear, not in Neutral.

Notice: **If you leave the radio or other accessories on during the jump starting procedure, they could be damaged. The repairs would not be covered by the warranty. Always turn off the radio and other accessories when jump starting the vehicle.**

4. Turn off the ignition on both vehicles. Unplug unnecessary accessories plugged into the cigarette lighter or the accessory power outlets. Turn off the radio and all the lamps that are not needed. This will avoid sparks and help save both batteries. And it could save the radio!

5. Open the hood on the other vehicle and locate the positive (+) and negative (−) terminal locations on that vehicle.

   The positive (+) terminal, is located under a red plastic cover at the positive battery post. To uncover the positive (+) terminal, open the red plastic cover.

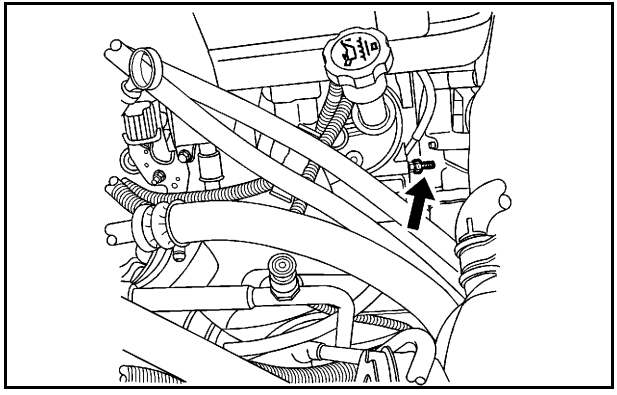

   The remote negative (−) terminal is a stud located on the right front passenger side of the engine, where the negative battery cable attaches. See *Engine Compartment Overview on page 6-16*.

⚠ WARNING:

An electric fan can start up even when the engine is not running and can injure you. Keep hands, clothing and tools away from any underhood electric fan.

⚠ WARNING:

Using an open flame near a battery can cause battery gas to explode. People have been hurt doing this, and some have been blinded. Use a flashlight if you need more light.

Be sure the battery has enough water. You do not need to add water to the battery installed in your new vehicle. But if a battery has filler caps, be sure the right amount of fluid is there. If it is low, add water to take care of that first. If you do not, explosive gas could be present.

Battery fluid contains acid that can burn you. Do not get it on you. If you accidentally get it in your eyes or on your skin, flush the place with water and get medical help immediately.

⚠ WARNING:

Fans or other moving engine parts can injure you badly. Keep your hands away from moving parts once the engine is running.

6. Check that the jumper cables do not have loose or missing insulation. If they do, you could get a shock. The vehicles could be damaged too.

   Before you connect the cables, here are some basic things you should know. Positive (+) will go to positive (+) or to a remote positive (+) terminal if the vehicle has one. Negative (−) will go to a heavy, unpainted metal engine part or to a remote negative (−) terminal if the vehicle has one.

   Do not connect positive (+) to negative (−) or you will get a short that would damage the battery and maybe other parts too. And do not connect the negative (−) cable to the negative (−) terminal on the dead battery because this can cause sparks.

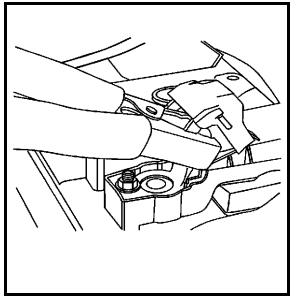

5.3L engine (4.3L, 4.8L, 6.0L and 6.2L similar)

7. Connect the red positive (+) cable to the positive (+) terminal of the vehicle with the dead battery.
8. Do not let the other end touch metal. Connect it to the positive (+) terminal of the good battery. Use a remote positive (+) terminal if the vehicle has one.
9. Now connect the black negative (−) cable to the negative (−) terminal of the good battery. Use a remote negative (−) terminal if the vehicle has one.

   Do not let the other end touch anything until the next step.
10. Connect the other end of the negative (−) cable to a heavy, unpainted metal engine part or to the remote negative (−) terminal, on the vehicle with the dead battery.
11. Start the vehicle with the good battery and run the engine for a while.
12. Try to start the vehicle that had the dead battery. If it will not start after a few tries, it probably needs service.

Notice: **If the jumper cables are connected or removed in the wrong order, electrical shorting may occur and damage the vehicle. The repairs would not be covered by the vehicle warranty. Always connect and remove the jumper cables in the correct order, making sure that the cables do not touch each other or other metal.**

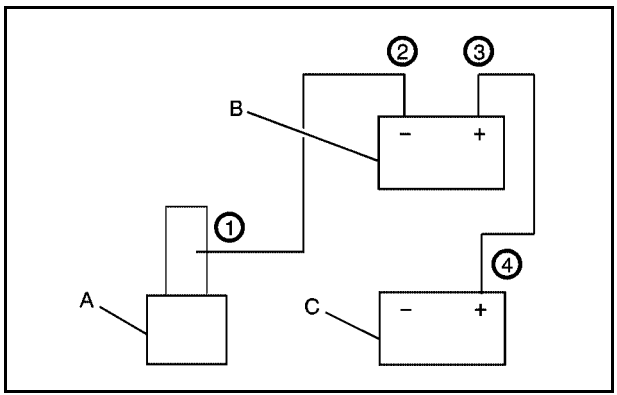

Jumper Cable Removal

A. Heavy, Unpainted Metal Engine Part or Remote Negative (−) Terminal

B. Good Battery or Remote Positive (+) and Remote Negative (−) Terminals

C. Dead Battery or Remote Positive (+) Terminal

To disconnect the jumper cables from both vehicles do the following:

1. Disconnect the black negative (−) cable from the vehicle that had the bad battery.
2. Disconnect the black negative (−) cable from the vehicle with the good battery.
3. Disconnect the red positive (+) cable from the vehicle with the good battery.
4. Disconnect the red positive (+) cable from the other vehicle.
5. Return the positive (+) terminal cover, to its original position.

Rear Axle

When to Check Lubricant

It is not necessary to regularly check rear axle fluid unless you suspect there is a leak or you hear an unusual noise. A fluid loss could indicate a problem. Have it inspected and repaired.

All axle assemblies are filled by volume of fluid during production. They are not filled to reach a certain level. When checking the fluid level on any axle, variations in the readings can be caused by factory fill differences between the minimum and the maximum fluid volume. Also, if a vehicle has just been driven before checking the fluid level, it may appear lower than normal because fluid has traveled out along the axle tubes and has not drained back to the sump area. Therefore, a reading taken five minutes after the vehicle has been driven will appear to have a lower fluid level than a vehicle that has been stationary for an hour or two. Remember that the rear axle assembly must be supported to get a true reading.

How to Check Lubricant

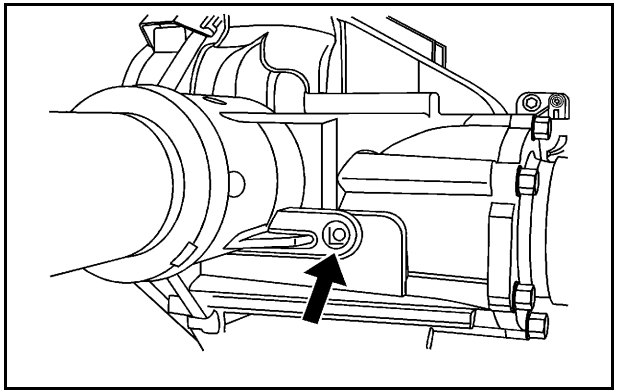

2500HD with 6.0L and 6.2L

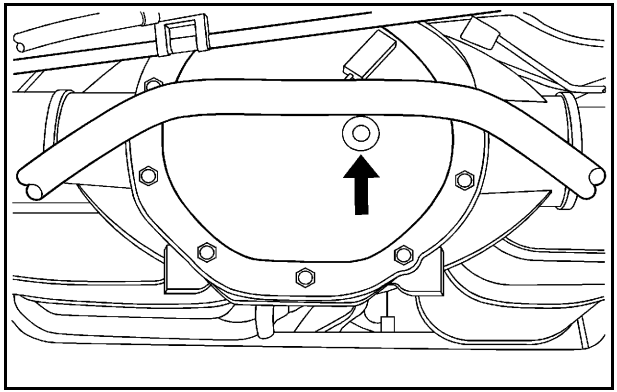

All Other Series and Engines

To get an accurate reading, the vehicle should be on a level surface.

- For all 4.3L, 4.8L and 5.3L 1500 Series applications, the proper level is 0.04 inches to 0.75 inches (1.0 mm to 19.0 mm) below the bottom of the filler hole, located on the rear axle. Add only enough fluid to reach the proper level.
- For all 6.0L and 6.2L 1500 Series applications, the proper level is from 0.6 inches to 1.6 inches (15 mm to 40 mm) below the bottom of the filler plug hole, located on the rear axle. Add only enough fluid to reach the proper level.
- For all 6.0L and 6.2L 2500HD Series applications, the proper level is from 0 to 0.5 inches (0 mm to 13 mm) below the bottom of the filler plug hole, located on the rear axle. Add only enough fluid to reach the proper level.
- For all 6.6L DURAMAX DIESEL 2500HD Series applications and all 3500 Series applications, the proper level is from 0.6 inches to 0.8 inches (17 mm to 21 mm) below the bottom of the filler plug hole, located on the rear axle. Add only enough fluid to reach the proper level.

What to Use

Refer to the Maintenance Schedule to determine what kind of lubricant to use. See *Recommended Fluids and Lubricants on page 7-13*.

Four-Wheel Drive

Lubricant checks in this section also apply to these vehicles.

Transfer Case

When to Check Lubricant

It is not necessary to regularly check transfer case fluid unless you suspect there is a leak, or you hear an unusual noise. A fluid loss could indicate a problem. Have it inspected and repaired.

How to Check Lubricant

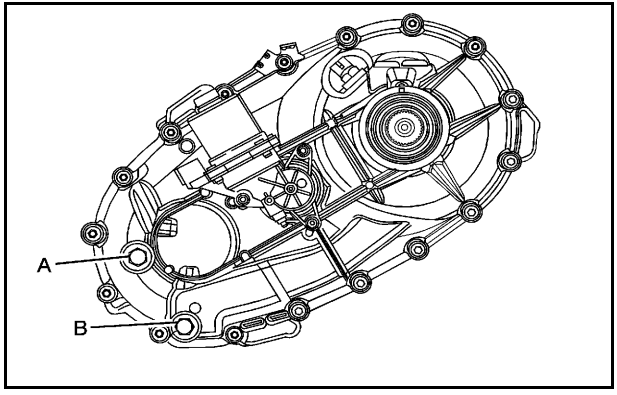

Electric Shift Transfer Case

A. Fill Plug

B. Drain Plug

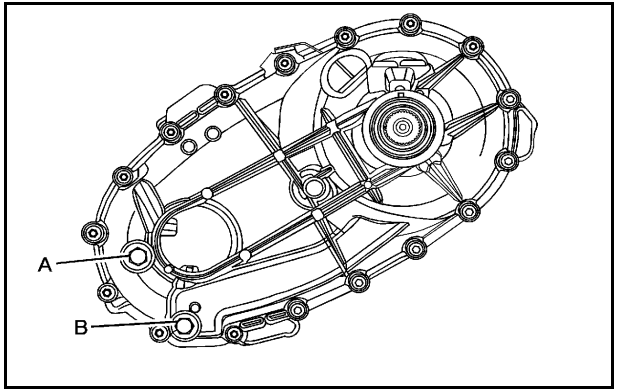

Manual Shift Transfer Case

A. Fill Plug

B. Drain Plug

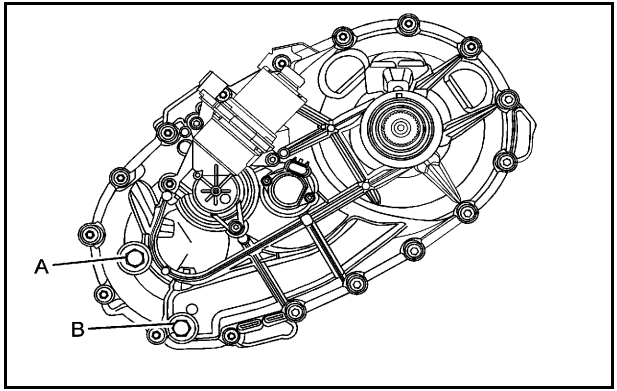

Active Transfer Case

A. Fill Plug

B. Drain Plug

To get an accurate reading, the vehicle should be on a level surface.

If the level is below the bottom of the filler plug hole, located on the transfer case, you will need to add some lubricant. Add enough lubricant to raise the level to the bottom of the filler plug hole. Use care not to overtighten the plug.

When to Change Lubricant

Refer to the Maintenance Schedule to determine how often to change the lubricant. See *Scheduled Maintenance on page 7-3*.

What to Use

Refer to the Maintenance Schedule to determine what kind of lubricant to use. See *Recommended Fluids and Lubricants on page 7-13*.

Front Axle

When to Check and Change Lubricant

It is not necessary to regularly check front axle fluid unless you suspect there is a leak or you hear an unusual noise. A fluid loss could indicate a problem. Have it inspected and repaired.

How to Check Lubricant

To get an accurate reading, the vehicle should be on a level surface.

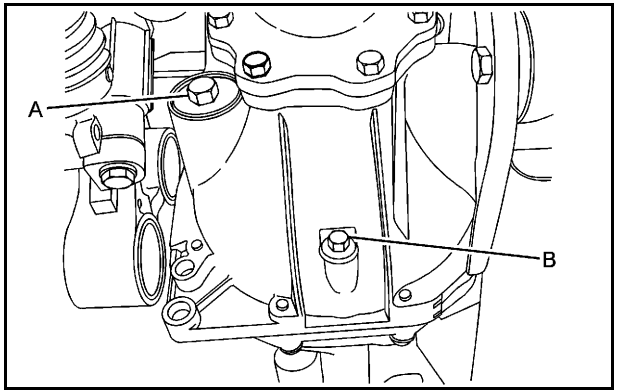

1500 Series

A: Fill Plug

B: Drain Plug

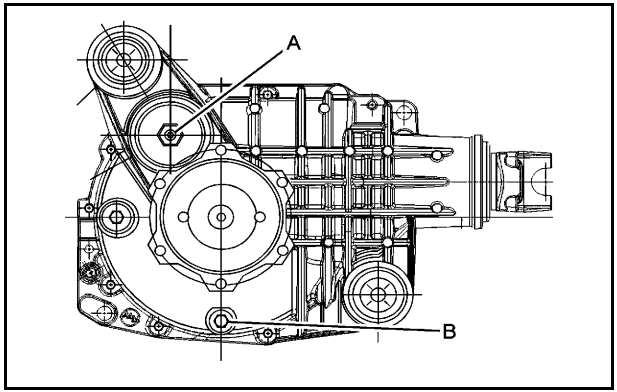

All except 1500 Series

A: Fill Plug

B: Drain Plug

- When the differential is cold, add enough lubricant to raise the level from 0 (0 mm) to 1/8 inch (3.2 mm) below the filler plug hole.
- When the differential is at operating temperature (warm), add enough lubricant to raise the level to the bottom of the filler plug hole.

What to Use

Refer to the Maintenance Schedule to determine what kind of lubricant to use. See *Recommended Fluids and Lubricants on page 7-13*.

Noise Control System

Tampering with Noise Control System Prohibited

The following information relates to compliance with federal noise emission standards for vehicles with a Gross Vehicle Weight Rating (GVWR) of more than 10,000 lbs (4 536 kg). The Maintenance Schedule provides information on maintaining the noise control system to minimize degradation of the noise emission control system during the life of your vehicle. The noise control system warranty is given in your warranty booklet.

These standards apply only to vehicles sold in the United States.

Federal law prohibits the following acts or the causing thereof:

1. The removal or rendering inoperative by any person, other than for purposes of maintenance, repair or replacement, of any device or element of design incorporated into any new vehicle for the purpose of noise control, prior to its sale or delivery to the ultimate purchaser or while it is in use; or
2. The use of the vehicle after such device or element of design has been removed or rendered inoperative by any person.

Among those acts presumed to constitute tampering are the acts listed below.

Insulation:

- Removal of the noise shields or any underhood insulation.

Engine:

- Removal or rendering engine speed governor, if the vehicle has one, inoperative so as to allow engine speed to exceed manufacturer specifications.

Fan and Drive:

- Removal of fan clutch, if the vehicle has one, or rendering clutch inoperative.
- Removal of the fan shroud, if the vehicle has one.

Air Intake:

- Removal of the air cleaner silencer.
- Modification of the air cleaner.

Exhaust:

- Removal of the muffler and/or resonator.
- Removal of the exhaust pipes and exhaust pipe clamps.

Headlamp Aiming

The vehicle has a visual optical headlamp aiming system. The aim of the headlamps have been preset at the factory and should need no further adjustment.

However, if the vehicle is damaged in a crash, the aim of the headlamps may be affected and adjustment may be necessary.

If oncoming vehicles flash their high beams at you, this may mean the vertical aim of your headlamps needs to be adjusted.

It is recommended that the vehicle is taken to your dealer for service if the headlamps need to be adjusted. It is possible however, to re-aim the headlamps as described.

The vehicle should:

- Be placed so the headlamps are 25 ft. (7.6 m) from a light colored wall.
- Have all four tires on a level surface which is level all the way to the wall.
- Be placed so it is perpendicular to the wall.
- Not have any snow, ice, or mud on it.
- Be fully assembled and all other work stopped while headlamp aiming is being performed.
- Normally loaded with a full tank of fuel and one person or 160 lbs (75 kg) sitting on the driver seat.
- Have the tires properly inflated.
- Have the spare tire is in its proper location in the vehicle.

Headlamp aiming is done with the vehicle's low-beam headlamps. The high-beam headlamps will be correctly aimed if the low-beam headlamps are aimed properly.

To adjust the vertical aim:

1. Open the hood. See *Hood Release on page 6-15*

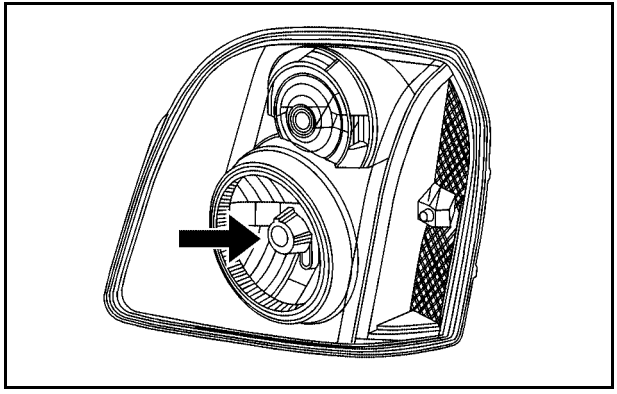

2. Locate the aim dot on the lens of the low-beam headlamp.
3. Record the distance from the ground to the aim dot on the low-beam headlamp.

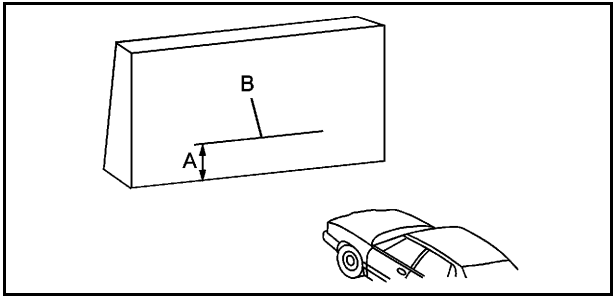

4. At a wall, measure from the ground upward (A) to the recorded distance from Step 3 and mark it.
5. Draw or tape a horizontal line (B) on the wall the width of the vehicle at the height of the mark in Step 4.

Notice: **Do not cover a headlamp to improve beam cut-off when aiming. Covering a headlamp may cause excessive heat build-up which may cause damage to the headlamp.**

6. Turn on the low-beam headlamps and place a piece of cardboard or equivalent in front of the headlamp not being adjusted. This allows only the beam of light from the headlamp being adjusted to be seen on the flat surface.

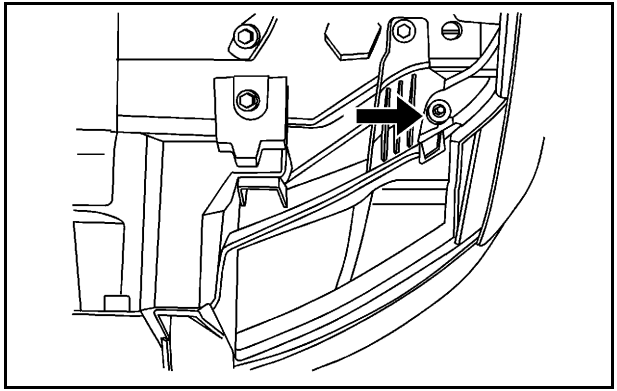

7. Locate the vertical headlamp aiming screws, which are under the hood near each headlamp assembly.

   The adjustment screw can be turned with an E8 Torx® socket.
8. Turn the vertical aiming screw until the headlamp beam is aimed to the horizontal tape line. Turn it clockwise or counterclockwise to raise or lower the angle of the beam.

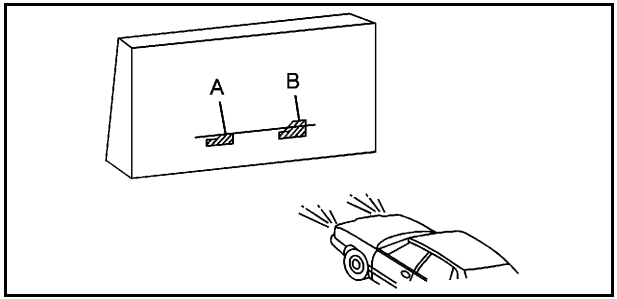

9. Make sure that the light from the headlamp is positioned at the bottom edge of the horizontal tape line. The lamp on the left (A) shows the correct headlamp aim. The lamp on the right (B) shows the incorrect headlamp aim.
10. Repeat Steps 7 through 9 for the opposite headlamp.

Bulb Replacement

For the proper type of replacement bulbs, see *Replacement Bulbs on page 6-69*.

For any bulb changing procedure not listed in this section, contact your dealer.

Halogen Bulbs

⚠ WARNING:

Halogen bulbs have pressurized gas inside and can burst if you drop or scratch the bulb. You or others could be injured. Be sure to read and follow the instructions on the bulb package.

Headlamps

To replace one of these bulbs:

1. Open the hood. See *Hood Release on page 6-15* for more information.
2. If you are replacing the bulb on the passenger side remove the Engine Air Cleaner cover. See *Engine Air Cleaner/Filter on page 6-22* for more information.
3. Reach in and access the bulb sockets from inside the engine compartment.

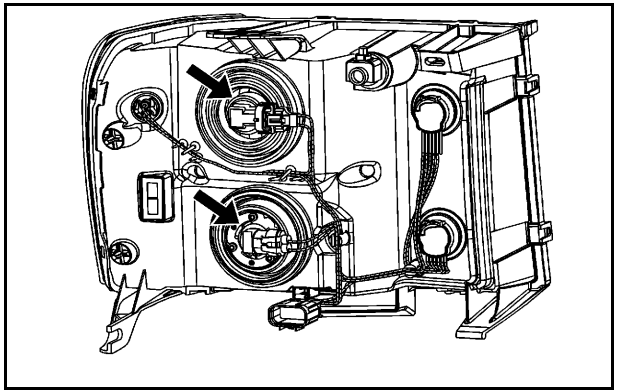

4. Turn the bulb socket counterclockwise to remove it from the headlamp assembly and pull it straight out.
5. Unplug the electrical connector from the old bulb by releasing the clips on the bulb socket.
6. Replace it with a new bulb socket.
7. Plug in the electrical connector to the new bulb socket.
8. Reinstall the new bulb socket into the headlamp assembly and turn it clockwise to secure.
9. Close the hood.

Center High-Mounted Stoplamp (CHMSL) and Cargo Lamp

To replace one of these bulbs:

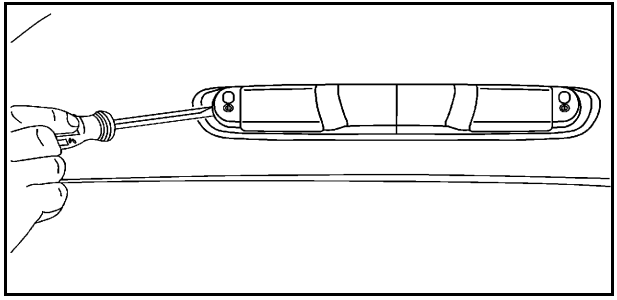

1. Remove the screws and lift off the lamp assembly.

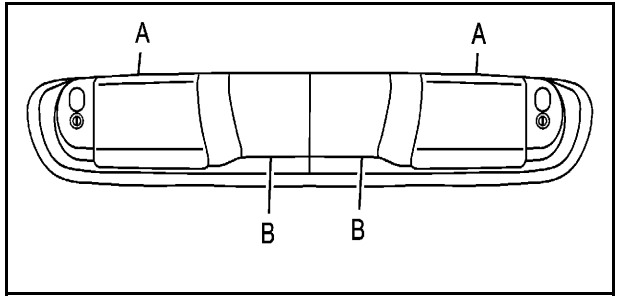

A. Cargo Lamp

B. Center High-Mounted Stoplamp Bulb (CHMSL)

2. Remove the bulbs by turning socket counterclockwise and pulling the bulb straight out.
3. Install the bulbs by pushing the bulb straight in and turning clockwise.
4. Reinstall the lamp assembly and tighten the screws.

Pickup Box Identification and Fender Marker Lamps

To replace a pickup box identification or fender marker lamp bulb:

1. Press the tab from the back to remove the lamp.
2. Unplug the lamp assembly harness.
3. Gently pry the individual lamp from the lamp assembly.
4. Unplug the lamp.
5. Plug in a new lamp and snap it into the assembly.
6. Reinstall the lamp assembly.

Taillamps, Turn Signal, Stoplamps and Back-up Lamps

To replace one of these bulbs:

1. Open the tailgate. *Tailgate on page 3-14* for more information.

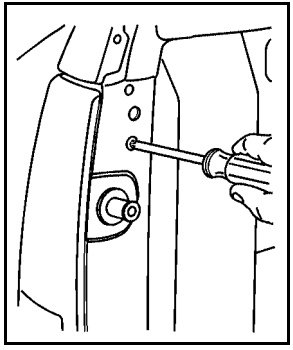

2. Remove the two rear lamp assembly screws near the tailgate latch strikerpost and pull out the lamp assembly.

3. Determine which of the following taillamp assemblies applies to your vehicle.

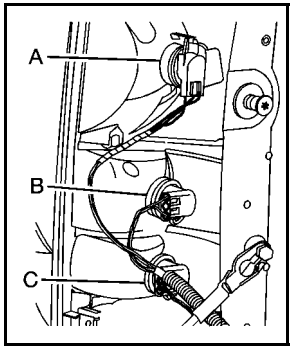

Dual Tire Models

A. Stoplamp/Taillamp/Turn Signal Lamp

B. Back-up Lamp

C. Stoplamp/Taillamp/Turn Signal Lamp

4. Press the tab, if the vehicle has one, and turn the bulb socket counterclockwise to remove it from the taillamp assembly.

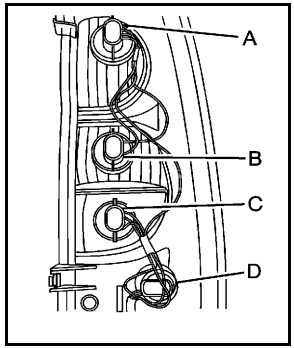

All Other Models

A. Stoplamp/Taillamp/Turn Signal Lamp

B. Stoplamp/Taillamp/Turn Signal Lamp

C. Back-up Lamp

D. Sidemarker Lamp

5. Pull the old bulb straight out from the socket.
6. Press a new bulb into the socket and turn the socket clockwise into the taillamp assembly.
7. Reinstall the taillamp assembly.

Taillamps (Chassis Cab Models)

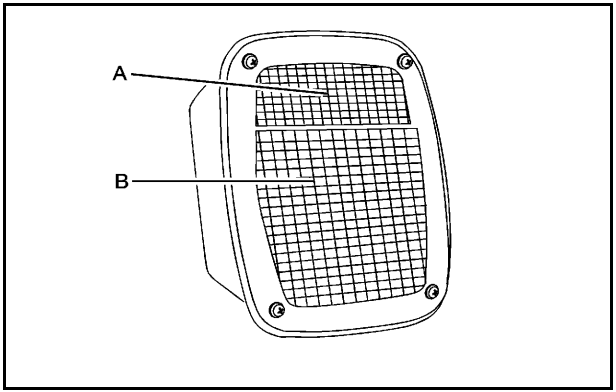

A. Backup Lamp
B. Stoplamp/Taillamp/Turn Signal Lamp

To replace one of these bulbs:

1. Remove the four screws.
2. Lift the lens off the lamp assembly.
3. Turn the old bulb counterclockwise and pull the it straight out from the socket.
4. Install a new bulb into the socket, turn it clockwise, and press it in until it is tight.
5. Reinstall the lens and the four screws.

License Plate Lamp

To replace one of these bulbs:

1. Reach under the rear bumper for the bulb socket.

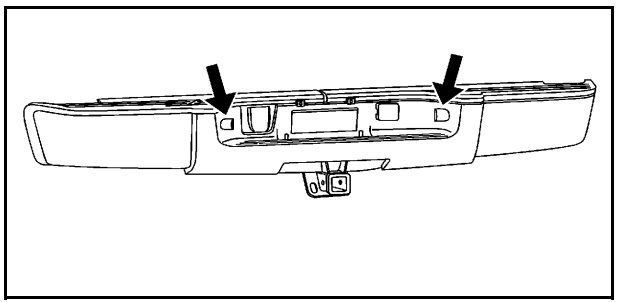

2. Turn the bulb socket counterclockwise and pull the bulb socket out of the connector.
3. Pull the old bulb from the bulb socket, keeping the bulb straight as you pull it out.
4. Install the new bulb.
5. Reverse Steps 1 through 3 to reinstall the bulb socket.

Replacement Bulbs

Exterior Lamp	Bulb Number
Back-up Lamp	3047 or 921
Back-up Lamp*	1156
Cargo Lamp and Center High-Mounted Stoplamp (CHMSL)	912
Fender Marker	W5WLL
High-Beam Headlamp	9005
Low-Beam Headlamp	H11
License Plate Lamp	168
Stoplamp/Taillamp/Turn Signal Lamp	3047
Sidemarker Lamp	194
Stoplamp/Turn Signal Lamp/Taillamp*	1157
* Chassis Cab Models	

For replacement bulbs not listed here, contact your dealer.

Windshield Wiper Blade Replacement

Windshield wiper blades should be inspected for wear or cracking. See *Scheduled Maintenance on page 7-3* for more information on wiper blade inspection.

Replacement blades come in different types and are removed in different ways. Here is how to remove the wiper blade:

1. Pull the windshield wiper arm connector away from the windshield.

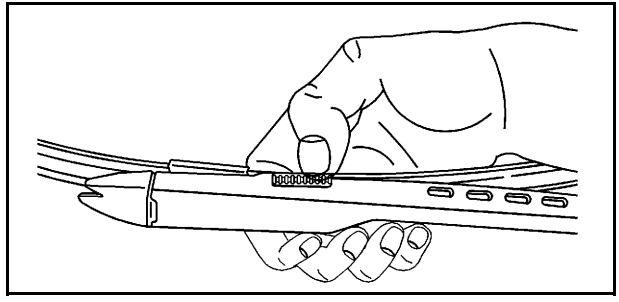

2. Squeeze the grooved areas on each side of the blade and turn the blade assembly away from the arm connector.

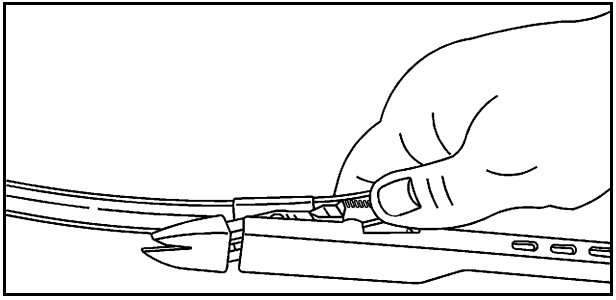

3. Install the new blade onto the arm connector and make sure the grooved areas are fully set in the locked position.

For the proper type and size, see *Maintenance Replacement Parts on page 7-15*.

Tires

Your new vehicle comes with high-quality tires made by a leading tire manufacturer. If you ever have questions about your tire warranty and where to obtain service, see your vehicle Warranty booklet for details. For additional information refer to the tire manufacturer.

⚠ CAUTION:

Poorly maintained and improperly used tires are dangerous.

- Overloading your vehicle's tires can cause overheating as a result of too much flexing. You could have an air-out and a serious accident. See *Loading the Vehicle on page 5-33*.

(Continued)

CAUTION: (Continued)

- Underinflated tires pose the same danger as overloaded tires. The resulting accident could cause serious injury. Check all tires frequently to maintain the recommended pressure. Tire pressure should be checked when your vehicle's tires are cold. See *Inflation - Tire Pressure on page 6-80*.
- Overinflated tires are more likely to be cut, punctured, or broken by a sudden impact — such as when you hit a pothole. Keep tires at the recommended pressure.
- Worn, old tires can cause accidents. If the tire's tread is badly worn, or if your vehicle's tires have been damaged, replace them.

20-Inch Tires

If your vehicle has the optional 20-inch P275/55R20 size tires, they are classified as touring tires and are designed for on road use. The low-profile, wide tread design is not recommended for “off-road” driving or commercial uses such as snow plowing. See *Off-Road Driving on page 5-13* and *Adding a Snow Plow or Similar Equipment on page 5-41* for additional information.

Notice: **If the vehicle has low-profile tires, they are more susceptible to damage from road hazards or curb impact than standard profile tires. Tire and/or wheel assembly damage can occur when coming into contact with road hazards like, potholes, or sharp edged objects, or when sliding into a curb. The vehicle warranty does not cover this type of damage. Keep tires set to the correct inflation pressure and, when possible avoid contact with curbs, potholes, and other road hazards.**

Tire Sidewall Labeling

Useful information about a tire is molded into the sidewall. The following illustrations are examples of a typical P-Metric and a LT-Metric tire sidewall.

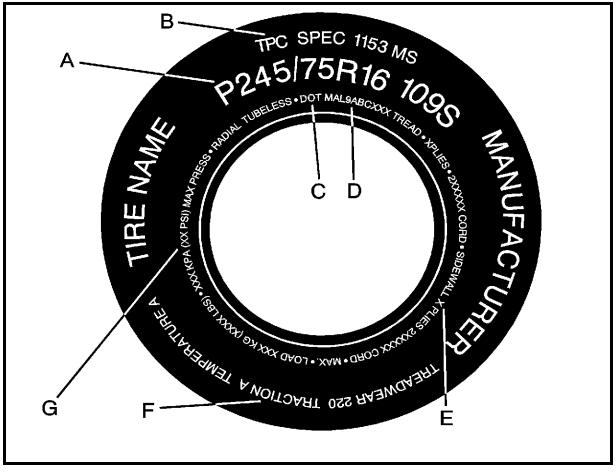

Passenger (P-Metric) Tire

(A) Tire Size: The tire size code is a combination of letters and numbers used to define a particular tire's width, height, aspect ratio, construction type, and service description. See the “Tire Size” illustration later in this section for more detail.

(B) TPC Spec (Tire Performance Criteria Specification): Original equipment tires designed to GM's specific tire performance criteria have a TPC specification code molded onto the sidewall. GM's TPC specifications meet or exceed all federal safety guidelines.

(C) DOT (Department of Transportation): The Department of Transportation (DOT) code indicates that the tire is in compliance with the U.S. Department of Transportation Motor Vehicle Safety Standards.

(D) Tire Identification Number (TIN): The letters and numbers following DOT code are the Tire Identification Number (TIN). The TIN shows the manufacturer and plant code, tire size, and date the tire was manufactured. The TIN is molded onto both sides of the tire, although only one side may have the date of manufacture.

(E) Tire Ply Material: The type of cord and number of plies in the sidewall and under the tread.

(F) Uniform Tire Quality Grading (UTQG): Tire manufacturers are required to grade tires based on three performance factors: treadwear, traction, and temperature resistance. For more information, see *Uniform Tire Quality Grading on page 6-94*.

(G) Maximum Cold Inflation Load Limit: Maximum load that can be carried and the maximum pressure needed to support that load. For information on recommended tire pressure see *Inflation - Tire Pressure on page 6-80* and *Loading the Vehicle on page 5-33*.

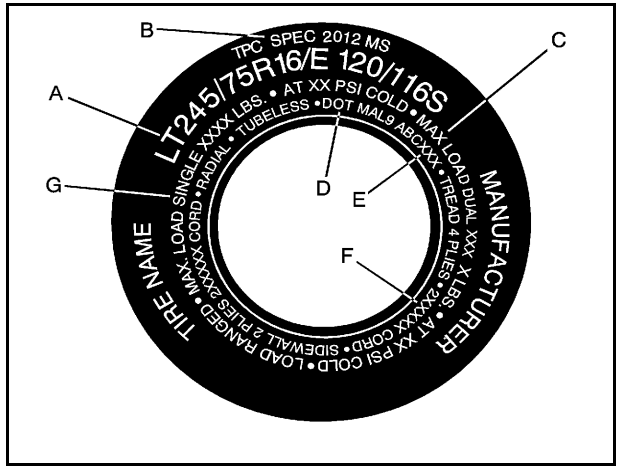

Light Truck (LT-Metric) Tire

(A) Tire Size: The tire size code is a combination of letters and numbers used to define a particular tire's width, height, aspect ratio, construction type, and service description. See the “Tire Size” illustration later in this section for more detail.

(B) TPC Spec (Tire Performance Criteria Specification): Original equipment tires designed to GM's specific tire performance criteria have a TPC specification code molded onto the sidewall. GM's TPC specifications meet or exceed all federal safety guidelines.

(C) Dual Tire Maximum Load: Maximum load that can be carried and the maximum pressure needed to support that load when used in a dual configuration. For information on recommended tire pressure see *Inflation - Tire Pressure on page 6-80* and *Loading the Vehicle on page 5-33*.

(D) DOT (Department of Transportation): The Department of Transportation (DOT) code indicates that the tire is in compliance with the U.S. Department of Transportation Motor Vehicle Safety Standards.

(E) Tire Identification Number (TIN): The letters and numbers following DOT code are the Tire Identification Number (TIN). The TIN shows the manufacturer and plant code, tire size, and date the tire was manufactured. The TIN is molded onto both sides of the tire, although only one side may have the date of manufacture.

(F) Tire Ply Material: The type of cord and number of plies in the sidewall and under the tread.

(G) Single Tire Maximum Load: Maximum load that can be carried and the maximum pressure needed to support that load when used as a single. For information on recommended tire pressure see *Inflation - Tire Pressure on page 6-80* and *Loading the Vehicle on page 5-33*.

Tire Size

The following examples show the different parts of a tire size.

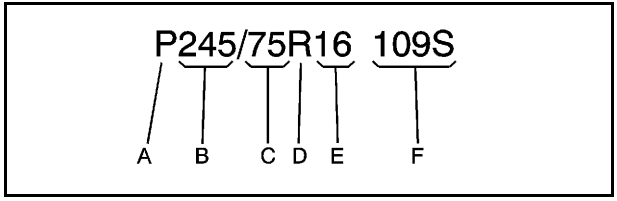

Passenger (P-Metric) Tire

(A) Passenger (P-Metric) Tire: The United States version of a metric tire sizing system. The letter P as the first character in the tire size means a passenger vehicle tire engineered to standards set by the U.S. Tire and Rim Association.

(B) Tire Width: The three-digit number indicates the tire section width in millimeters from sidewall to sidewall.

(C) Aspect Ratio: A two-digit number that indicates the tire height-to-width measurements. For example, if the tire size aspect ratio is 75, as shown in item C of the tire illustration, it would mean that the tire's sidewall is 75 percent as high as it is wide.

(D) Construction Code: A letter code is used to indicate the type of ply construction in the tire. The letter R means radial ply construction; the letter D means diagonal or bias ply construction; and the letter B means belted-bias ply construction.

(E) Rim Diameter: Diameter of the wheel in inches.

(F) Service Description: These characters represent the load index and speed rating of the tire. The load index represents the load carry capacity a tire is certified to carry. The speed rating is the maximum speed a tire is certified to carry a load.

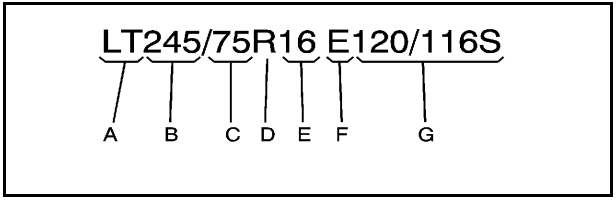

Light Truck (LT-Metric) Tire

(A) Light Truck (LT-Metric) Tire: The United States version of a metric tire sizing system. The letters LT as the first two characters in the tire size means a light truck tire engineered to standards set by the U.S. Tire and Rim Association.

(B) Tire Width: The three-digit number indicates the tire section width in millimeters from sidewall to sidewall.

(C) Aspect Ratio: A two-digit number that indicates the tire height-to-width measurements. For example, if the tire size aspect ratio is 75, as shown in item C of the light truck (LT-Metric) tire illustration, it would mean that the tire's sidewall is 75 percent as high as it is wide.

(D) Construction Code: A letter code is used to indicate the type of ply construction in the tire. The letter R means radial ply construction; the letter D means diagonal or bias ply construction; and the letter B means belted-bias ply construction.

(E) Rim Diameter: Diameter of the wheel in inches.

(F) Load Range: Load Range.

(G) Service Description: The service description indicates the load index and speed rating of a tire. If two numbers are given as in the example, 120/116, then this represents the load index for single versus dual wheel usage (single/dual). The speed rating is the maximum speed a tire is certified to carry a load.

Tire Terminology and Definitions

Air Pressure: The amount of air inside the tire pressing outward on each square inch of the tire. Air pressure is expressed in pounds per square inch (psi) or kilopascal (kPa).

Accessory Weight: This means the combined weight of optional accessories. Some examples of optional accessories are, automatic transmission, power steering, power brakes, power windows, power seats, and air conditioning.

Aspect Ratio: The relationship of a tire's height to its width.

Belt: A rubber coated layer of cords that is located between the plies and the tread. Cords may be made from steel or other reinforcing materials.

Bead: The tire bead contains steel wires wrapped by steel cords that hold the tire onto the rim.

Bias Ply Tire: A pneumatic tire in which the plies are laid at alternate angles less than 90 degrees to the centerline of the tread.

Cold Tire Pressure: The amount of air pressure in a tire, measured in pounds per square inch (psi) or kilopascals (kPa) before a tire has built up heat from driving. See *Inflation - Tire Pressure on page 6-80*.

Curb Weight: The weight of a motor vehicle with standard and optional equipment including the maximum capacity of fuel, oil, and coolant, but without passengers and cargo.

DOT Markings: A code molded into the sidewall of a tire signifying that the tire is in compliance with the U.S. Department of Transportation (DOT) motor vehicle safety standards. The DOT code includes the Tire Identification Number (TIN), an alphanumeric designator which can also identify the tire manufacturer, production plant, brand, and date of production.

GVWR: Gross Vehicle Weight Rating. See *Loading the Vehicle on page 5-33*.

GAWR FRT: Gross Axle Weight Rating for the front axle. See *Loading the Vehicle on page 5-33*.

GAWR RR: Gross Axle Weight Rating for the rear axle. See *Loading the Vehicle on page 5-33*.

Intended Outboard Sidewall: The side of an asymmetrical tire, that must always face outward when mounted on a vehicle.

Kilopascal (kPa): The metric unit for air pressure.

Light Truck (LT-Metric) Tire: A tire used on light duty trucks and some multipurpose passenger vehicles.

Load Index: An assigned number ranging from 1 to 279 that corresponds to the load carrying capacity of a tire.

Maximum Inflation Pressure: The maximum air pressure to which a cold tire can be inflated. The maximum air pressure is molded onto the sidewall.

Maximum Load Rating: The load rating for a tire at the maximum permissible inflation pressure for that tire.

Maximum Loaded Vehicle Weight: The sum of curb weight, accessory weight, vehicle capacity weight, and production options weight.

Normal Occupant Weight: The number of occupants a vehicle is designed to seat multiplied by 150 lbs (68 kg). See *Loading the Vehicle on page 5-33*.

Occupant Distribution: Designated seating positions.

Outward Facing Sidewall: The side of an asymmetrical tire that has a particular side that faces outward when mounted on a vehicle. The side of the tire that contains a whitewall, bears white lettering, or bears manufacturer, brand, and/or model name molding that is higher or deeper than the same moldings on the other sidewall of the tire.

Passenger (P-Metric) Tire: A tire used on passenger cars and some light duty trucks and multipurpose vehicles.

Recommended Inflation Pressure: Vehicle manufacturer's recommended tire inflation pressure as shown on the tire placard. See *Inflation - Tire Pressure on page 6-80* and *Loading the Vehicle on page 5-33*.

Radial Ply Tire: A pneumatic tire in which the ply cords that extend to the beads are laid at 90 degrees to the centerline of the tread.

Rim: A metal support for a tire and upon which the tire beads are seated.

Sidewall: The portion of a tire between the tread and the bead.

Speed Rating: An alphanumeric code assigned to a tire indicating the maximum speed at which a tire can operate.

Traction: The friction between the tire and the road surface. The amount of grip provided.

Tread: The portion of a tire that comes into contact with the road.

Treadwear Indicators: Narrow bands, sometimes called wear bars, that show across the tread of a tire when only 1/16 inch (1.6 mm) of tread remains. See *When It Is Time for New Tires on page 6-91*.

UTQGS (Uniform Tire Quality Grading Standards): A tire information system that provides consumers with ratings for a tire's traction, temperature, and treadwear. Ratings are determined by tire manufacturers using government testing procedures. The ratings are molded into the sidewall of the tire. See *Uniform Tire Quality Grading on page 6-94*.

Vehicle Capacity Weight: The number of designated seating positions multiplied by 150 lbs (68 kg) plus the rated cargo load. See *Loading the Vehicle on page 5-33*.

Vehicle Maximum Load on the Tire: Load on an individual tire due to curb weight, accessory weight, occupant weight, and cargo weight.

Vehicle Placard: A label permanently attached to a vehicle showing the vehicle's capacity weight and the original equipment tire size and recommended inflation pressure. See “Tire and Loading Information Label” under *Loading the Vehicle on page 5-33*.

Inflation - Tire Pressure

Tires need the correct amount of air pressure to operate effectively.

Notice: **Do not let anyone tell you that under-inflation or over-inflation is all right. It is not. If your tires do not have enough air (under-inflation), you can get the following:**

- **Too much flexing**
- **Too much heat**
- **Tire overloading**
- **Premature or irregular wear**
- **Poor handling**
- **Reduced fuel economy**

If your tires have too much air (over-inflation), you can get the following:

- **Unusual wear**
- **Poor handling**
- **Rough ride**
- **Needless damage from road hazards**

A vehicle specific Tire and Loading Information label is attached to your vehicle. This label shows your vehicle's original equipment tires and the correct inflation pressures for your tires when they are cold. The recommended cold tire inflation pressure, shown on the label, is the minimum amount of air pressure needed to support your vehicle's maximum load carrying capacity.

For additional information regarding how much weight your vehicle can carry, and an example of the Tire and Loading Information label, see *Loading the Vehicle on page 5-33*. How you load your vehicle affects vehicle handling and ride comfort. Never load your vehicle with more weight than it was designed to carry.

When to Check

Check your tires once a month or more.

Do not forget to check the pressure of the spare tire, if your vehicle has one. See *Spare Tire on page 6-120* for additional information.

How to Check

Use a good quality pocket-type gauge to check tire pressure. You cannot tell if your tires are properly inflated simply by looking at them. Radial tires may look properly inflated even when they're underinflated. Check the tire's inflation pressure when the tires are cold. Cold means your vehicle has been sitting for at least three hours or driven no more than 1 mile (1.6 km).

Remove the valve cap from the tire valve stem. Press the tire gauge firmly onto the valve to get a pressure measurement. If the cold tire inflation pressure matches the recommended pressure on the tire and loading information label, no further adjustment is necessary. If the pressure is low, add air until you reach the recommended amount.

If you overfill the tire, release air by pushing on the metal stem in the center of the tire valve. Recheck the tire pressure with the tire gauge.

Be sure to put the valve caps back on the valve stems. They help prevent leaks by keeping out dirt and moisture.

High-Speed Operation

⚠ WARNING:

Driving at high speeds, 160 km/h (100 mph) or higher, puts an additional strain on tires. Sustained high-speed driving causes excessive heat build up and can cause sudden tire failure. You could have a crash and you or others could be killed. Some high-speed rated tires require inflation pressure adjustment for high speed operation. When speed limits and road conditions are such that a vehicle can be driven at high speeds, make sure the tires are rated for high speed operation, in excellent condition, and set to the correct cold tire inflation pressure for the vehicle load.

Vehicles with P265/70R17 or P275/55R20 size tires require inflation pressure adjustment when driving the vehicle at speeds of 100 mph (160 km/h) or higher. Set the cold tire inflation pressure to 3 psi (20 kPa) above the recommended cold tire pressure shown on the Tire and Loading Information label.

When you end this high-speed driving, return the tires to the cold inflation pressure shown on the Tire and Loading Information label. See *Loading the Vehicle on page 5-33* and *Inflation - Tire Pressure on page 6-80*.

Dual Tire Operation

When the vehicle is new, or whenever a wheel, wheel bolt or wheel nut is replaced, check the wheel nut torque after 100, 1,000 and 6,000 miles (160, 1 600 and 10 000 km) of driving. For proper torque and wheel nut tightening information, see *Removing the Spare Tire and Tools on page 6-101*.

The outer tire on a dual wheel setup generally wears faster than the inner tire. Your tires will wear more evenly and last longer if you rotate the tires periodically, see *Tire Inspection and Rotation on page 6-88*. Also see *Scheduled Maintenance on page 7-3*.

⚠ WARNING:

If you operate your vehicle with a tire that is badly underinflated, the tire can overheat. An overheated tire can lose air suddenly or catch fire. You or others could be injured. Be sure all tires (including the spare) are properly inflated.

See *Inflation - Tire Pressure on page 6-80*, for information on proper tire inflation.

Tire Pressure Monitor System

The Tire Pressure Monitor System (TPMS) uses radio and sensor technology to check tire pressure levels. The TPMS sensors monitor the air pressure in your vehicle's tires and transmit tire pressure readings to a receiver located in the vehicle.

Each tire, including the spare (if provided), should be checked monthly when cold and inflated to the inflation pressure recommended by the vehicle manufacturer on the vehicle placard or tire inflation pressure label. (If your vehicle has tires of a different size than the size indicated on the vehicle placard or tire inflation pressure label, you should determine the proper tire inflation pressure for those tires.)

As an added safety feature, your vehicle has been equipped with a tire pressure monitoring system (TPMS) that illuminates a low tire pressure telltale when one or more of your tires is significantly under-inflated.

Accordingly, when the low tire pressure telltale illuminates, you should stop and check your tires as soon as possible, and inflate them to the proper pressure. Driving on a significantly under-inflated tire causes the tire to overheat and can lead to tire failure. Under-inflation also reduces fuel efficiency and tire tread life, and may affect the vehicle's handling and stopping ability.

Please note that the TPMS is not a substitute for proper tire maintenance, and it is the driver's responsibility to maintain correct tire pressure, even if under-inflation has not reached the level to trigger illumination of the TPMS low tire pressure telltale.

Your vehicle has also been equipped with a TPMS malfunction indicator to indicate when the system is not operating properly. The TPMS malfunction indicator is combined with the low tire pressure telltale. When the system detects a malfunction, the telltale will flash for approximately one minute and then remain continuously illuminated. This sequence will continue upon subsequent vehicle start-ups as long as the malfunction exists.

When the malfunction indicator is illuminated, the system may not be able to detect or signal low tire pressure as intended. TPMS malfunctions may occur for a variety of reasons, including the installation of replacement or alternate tires or wheels on the vehicle that prevent the TPMS from functioning properly. Always check the TPMS malfunction telltale after replacing one or more tires or wheels on your vehicle to ensure that the replacement or alternate tires and wheels allow the TPMS to continue to function properly.

See *Tire Pressure Monitor Operation on page 6-84* for additional information.

Federal Communications Commission (FCC) and Industry Canada

See *Radio Frequency Statement on page 8-21* for information regarding Part 15 of the Federal Communications Commission (FCC) Rules and RSS-210/211 of Industry Canada.

Tire Pressure Monitor Operation

This vehicle may have a Tire Pressure Monitor System (TPMS). The TPMS is designed to warn the driver when a low tire pressure condition exists. TPMS sensors are mounted onto each tire and wheel assembly, excluding the spare tire and wheel assembly. The TPMS sensors monitor the air pressure in the vehicle's tires and transmits the tire pressure readings to a receiver located in the vehicle.

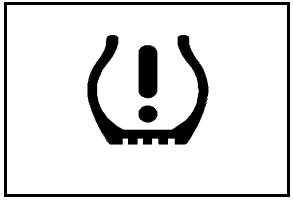

When a low tire pressure condition is detected, the TPMS will illuminate the low tire pressure warning symbol located on the instrument panel cluster.

At the same time a message to check the pressure in a specific tire appears on the Driver Information Center (DIC) display. The low tire pressure warning light and the DIC warning message come on at each ignition cycle until the tires are inflated to the correct inflation pressure. If your vehicle has DIC buttons, tire pressure levels can be viewed by the driver. For additional information and details about the DIC operation and displays see *DIC Operation and Displays (With DIC Buttons) on page 4-50* or *DIC Operation and Displays (Without DIC Buttons) on page 4-59* and *DIC Warnings and Messages on page 4-66*.

The low tire pressure warning light may come on in cool weather when the vehicle is first started, and then turn off as you start to drive. This could be an early indicator that the air pressure in the tire(s) are getting low and need to be inflated to the proper pressure.

A Tire and Loading Information label, attached to your vehicle, shows the size of your vehicle's original equipment tires and the correct inflation pressure for your vehicle's tires when they are cold. See *Loading the Vehicle on page 5-33*, for an example of the Tire and Loading Information label and its location on your vehicle. Also see *Inflation - Tire Pressure on page 6-80*.

Your vehicle's TPMS can warn you about a low tire pressure condition but it does not replace normal tire maintenance. See *Tire Inspection and Rotation on page 6-88* and *Tires on page 6-70*.

Notice: **Liquid tire sealants could damage the Tire Pressure Monitor System (TPMS) sensors. Sensor damage caused by using a tire sealant is not covered by your warranty. Do not use liquid tire sealants.**

TPMS Malfunction Light and Message

The TPMS will not function properly if one or more of the TPMS sensors are missing or inoperable. When the system detects a malfunction, the low tire warning light flashes for about one minute and then stays on for the remainder of the ignition cycle. A DIC warning message is also displayed. The low tire warning light and DIC warning message come on at each ignition cycle until the problem is corrected. Some of the conditions that can cause the malfunction light and DIC message to come on are:

- One of the road tires has been replaced with the spare tire. The spare tire does not have a TPMS sensor. The TPMS malfunction light and DIC message should go off once you re-install the road tire containing the TPMS sensor.
- The TPMS sensor matching process was started but not completed or not completed successfully after rotating the vehicle's tires. The DIC message and TPMS malfunction light should go off once the TPMS sensor matching process is performed successfully. See “TPMS Sensor Matching Process” later in this section.
- One or more TPMS sensors are missing or damaged. The DIC message and the TPMS malfunction light should go off when the TPMS sensors are installed and the sensor matching process is performed successfully. See your dealer for service.
- Replacement tires or wheels do not match your vehicle's original equipment tires or wheels. Tires and wheels other than those recommended for your vehicle could prevent the TPMS from functioning properly. See *Buying New Tires on page 6-92*.
- Operating electronic devices or being near facilities using radio wave frequencies similar to the TPMS could cause the TPMS sensors to malfunction.

If the TPMS is not functioning it cannot detect or signal a low tire condition. See your dealer for service if the TPMS malfunction light and DIC message comes on and stays on.

TPMS Sensor Matching Process

Each TPMS sensor has a unique identification code. Any time you rotate your vehicle's tires or replace one or more of the TPMS sensors, the identification codes will need to be matched to the new tire/wheel position. The sensors are matched to the tire/wheel positions in the following order: driver side front tire, passenger side front tire, passenger side rear tire, and driver side rear tire using a TPMS diagnostic tool. See your dealer for service.

The TPMS sensors can also be matched to each tire/wheel position by increasing or decreasing the tire's air pressure. If increasing the tire's air pressure, do not exceed the maximum inflation pressure indicated on the tire's sidewall.

To decrease air-pressure out of a tire you can use the pointed end of the valve cap, a pencil-style air pressure gauge, or a key.

You have two minutes to match the first tire/wheel position, and five minutes overall to match all four tire/wheel positions. If it takes longer than two minutes, to match the first tire and wheel, or more than five minutes to match all four tire and wheel positions the matching process stops and you need to start over.

The TPMS sensor matching process is outlined below:

1. Set the parking brake.
2. Turn the ignition switch to ON/RUN with the engine off.
3. Press the Remote Keyless Entry (RKE) transmitter's LOCK and UNLOCK buttons at the same time for approximately five seconds. The horn sounds twice to signal the receiver is in relearn mode and TIRE LEARNING ACTIVE message displays on the DIC screen.

   If your vehicle does not have RKE, press the Driver Information Center (DIC) vehicle information button until the PRESS ✓ TO RELEARN TIRE POSITIONS message displays. The horn sounds twice to signal the receiver is in relearn mode and TIRE LEARNING ACTIVE message displays on the DIC screen.

   If your vehicle does not have RKE or DIC buttons, press the trip odometer reset stem located on the instrument panel cluster until the PRESS ✓ TO RELEARN TIRE POSITIONS message displays. The horn sounds twice to signal the receiver is in relearn mode and TIRE LEARNING ACTIVE message displays on the DIC screen.
4. Start with the driver side front tire.

5. Remove the valve cap from the valve cap stem. Activate the TPMS sensor by increasing or decreasing the tire's air pressure for five seconds, or until a horn chirp sounds. The horn chirp, which may take up to 30 seconds to sound, confirms that the sensor identification code has been matched to this tire and wheel position.
6. Proceed to the passenger side front tire, and repeat the procedure in Step 5.
7. Proceed to the passenger side rear tire, and repeat the procedure in Step 5.
8. Proceed to the driver side rear tire, and repeat the procedure in Step 5. The horn sounds two times to indicate the sensor identification code has been matched to the driver side rear tire, and that the TPMS sensor matching process is no longer active. The TIRE LEARNING ACTIVE message on the DIC display screen goes off.
9. Turn the ignition switch to LOCK/OFF.
10. Set all four tires to the recommended air pressure level as indicated on the Tire and Loading Information label.
11. Put the valve caps back on the valve stems.

Tire Inspection and Rotation

We recommend that you regularly inspect your vehicle's tires, including the spare tire, for signs of wear or damage. See *When It Is Time for New Tires on page 6-91* for more information.

Tires should be rotated every 5,000 to 8,000 miles (8 000 to 13 000 km). See *Scheduled Maintenance on page 7-3*.

The purpose of a regular tire rotation is to achieve a uniform wear for all tires on the vehicle. This will ensure that your vehicle continues to perform most like it did when the tires were new.

Any time you notice unusual wear, rotate your tires as soon as possible and check wheel alignment. Also check for damaged tires or wheels. See *When It Is Time for New Tires on page 6-91* and *Wheel Replacement on page 6-96*.

If your vehicle has dual rear wheels, also see *Dual Tire Operation on page 6-82*.

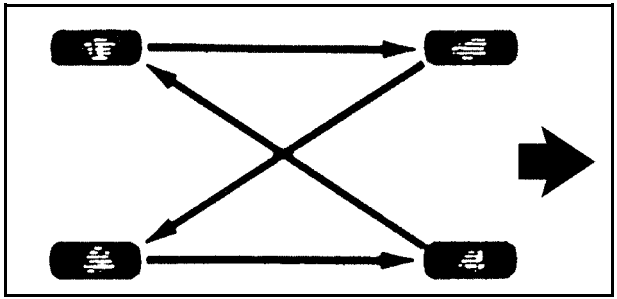

If your vehicle has single rear wheels and the tread design for the front tires is the same as the rear tires, use the rotation pattern shown here when rotating the tires.

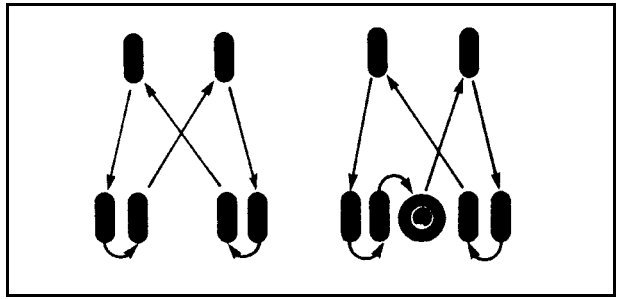

If your vehicle has dual rear wheels and the tread design for the front tires is the same as the rear tires, always use one of the correct rotation patterns shown here when rotating the tires.

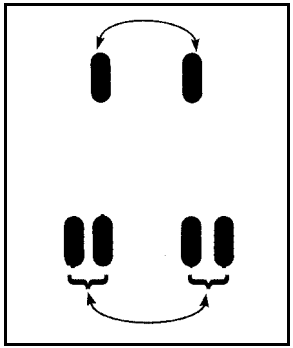

If your vehicle has dual rear wheels and the tread design for the front tires is different from the dual rear tires, always use the correct rotation pattern shown here when rotating the tires.

The dual tires are rotated as a pair, and the inside rear tires become the outside rear tires.

When you install dual wheels, be sure the vent holes in the inner and outer wheels on each side are lined up.

After the tires have been rotated, adjust the front and rear inflation pressures as shown on the Tire and Loading Information label. See *Inflation - Tire Pressure on page 6-80* and *Loading the Vehicle on page 5-33*.

Make certain that all wheel nuts are properly tightened. See “Wheel Nut Torque” under *Capacities and Specifications on page 6-137*.

⚠ WARNING:

Rust or dirt on a wheel, or on the parts to which it is fastened, can make wheel nuts become loose after time. The wheel could come off and cause an accident. When you change a wheel, remove any rust or dirt from places where the wheel attaches to the vehicle. In an emergency, you can use a cloth or a paper towel to do this; but be sure to use a scraper or wire brush later, if needed, to get all the rust or dirt off. See *Changing a Flat Tire on page 6-100*.

If your vehicle has a Tire Pressure Monitor System (TPMS), reset the TPMS sensors after rotating the tires. See *Tire Pressure Monitor Operation on page 6-84*.

Make sure the spare tire, if your vehicle has one, is stored securely. Push, pull, and then try to rotate or turn the tire. If it moves, tighten the cable. See *Storing a Flat or Spare Tire and Tools on page 6-116*.

When It Is Time for New Tires

Various factors, such as maintenance, temperatures, driving speeds, vehicle loading, and road conditions, influence when you need new tires.

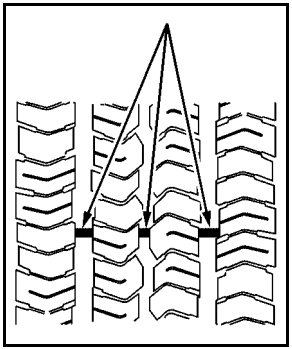

One way to tell when it is time for new tires is to check the treadwear indicators, which appear when your tires have only 1/16 inch (1.6 mm) or less of tread remaining. Some commercial truck tires may not have treadwear indicators.

You need new tires if any of the following statements are true:

- You can see the indicators at three or more places around the tire.
- You can see cord or fabric showing through the tire's rubber.
- The tread or sidewall is cracked, cut, or snagged deep enough to show cord or fabric.
- The tire has a bump, bulge, or split.
- The tire has a puncture, cut, or other damage that cannot be repaired well because of the size or location of the damage.

The rubber in tires degrades over time, even if they are not being used. This is also true for the spare tire, if your vehicle has one. Multiple conditions affect how fast this aging takes place, including temperatures, loading conditions, and inflation pressure maintenance. With proper care and maintenance tires will typically wear out before they degrade due to age. If you are unsure about the need to replace your tires as they get older, consult the tire manufacturer for more information.

Buying New Tires

GM has developed and matched specific tires for your vehicle. The original equipment tires installed on your vehicle, when it was new, were designed to meet General Motors Tire Performance Criteria Specification (TPC spec) system rating. If you need replacement tires, GM strongly recommends that you get tires with the same TPC Spec rating. This way, your vehicle will continue to have tires that are designed to give the same performance and vehicle safety, during normal use, as the original tires.

GM's exclusive TPC Spec system considers over a dozen critical specifications that impact the overall performance of your vehicle, including brake system performance, ride and handling, traction control, and tire pressure monitoring performance. GM's TPC Spec number is molded onto the tire's sidewall near the tire size. If the tires have an all-season tread design, the TPC spec number will be followed by a MS, for mud and snow. See *Tire Sidewall Labeling on page 6-72* for additional information.

GM recommends replacing tires in sets of four (or six if your vehicle has dual rear wheels). This is because uniform tread depth on all tires will help keep your vehicle performing most like it did when the tires were new. Replacing less than a full set of tires can affect the braking and handling performance of your vehicle. See *Tire Inspection and Rotation on page 6-88* for information on proper tire rotation.

⚠ WARNING:

Mixing tires could cause you to lose control while driving. If you mix tires of different sizes, brands, or types (radial and bias-belted tires) the vehicle may not handle properly, and you could have a crash. Using tires of different sizes, brands, or types may also cause damage to your vehicle. Be sure to use the correct size, brand, and type of tires on your vehicle's wheels.

⚠ WARNING:

If you use bias-ply tires on the vehicle, the wheel rim flanges could develop cracks after many miles of driving. A tire and/or wheel could fail suddenly, causing a crash. Use only radial-ply tires with the wheels on the vehicle.

If you must replace your vehicle's tires with those that do not have a TPC Spec number, make sure they are the same size, load range, speed rating, and construction type (radial and bias-belted tires) as your vehicle's original tires.

Vehicles that have a tire pressure monitoring system could give an inaccurate low-pressure warning if non-TPC Spec rated tires are installed on your vehicle. Non-TPC Spec rated tires may give a low-pressure warning that is higher or lower than the proper warning level you would get with TPC Spec rated tires. See *Tire Pressure Monitor System on page 6-83*.

Your vehicle's original equipment tires are listed on the Tire and Loading Information label. See *Loading the Vehicle on page 5-33*, for more information about the Tire and Loading Information label and its location on your vehicle.

Different Size Tires and Wheels

If you add wheels or tires that are a different size than your original equipment wheels and tires, this could affect the way your vehicle performs, including its braking, ride and handling characteristics, stability, and resistance to rollover. Additionally, if your vehicle has electronic systems such as anti-lock brakes, rollover airbags, traction control, and electronic stability control, the performance of these systems can be affected.

⚠ WARNING:

If you add different sized wheels, your vehicle may not provide an acceptable level of performance and safety if tires not recommended for those wheels are selected. You may increase the chance that you will crash and suffer serious injury. Only use GM specific wheel and tire systems developed for your vehicle, and have them properly installed by a GM certified technician.

See *Buying New Tires on page 6-92* and *Accessories and Modifications on page 6-4* for additional information.

Uniform Tire Quality Grading

Quality grades can be found where applicable on the tire sidewall between tread shoulder and maximum section width. For example:

Treadwear 200 Traction AA Temperature A

The following information relates to the system developed by the United States National Highway Traffic Safety Administration (NHTSA), which grades tires by treadwear, traction, and temperature performance. This applies only to vehicles sold in the United States. The grades are molded on the sidewalls of most passenger car tires. The Uniform Tire Quality Grading (UTQG) system does not apply to deep tread, winter-type snow tires, space-saver, or temporary use spare tires, tires with nominal rim diameters of 10 to 12 inches (25 to 30 cm), or to some limited-production tires.

While the tires available on General Motors passenger cars and light trucks may vary with respect to these grades, they must also conform to federal safety requirements and additional General Motors Tire Performance Criteria (TPC) standards.

All Passenger Car Tires Must Conform to Federal Safety Requirements In Addition To These Grades.

Treadwear

The treadwear grade is a comparative rating based on the wear rate of the tire when tested under controlled conditions on a specified government test course. For example, a tire graded 150 would wear one and a half (1½) times as well on the government course as a tire graded 100. The relative performance of tires depends upon the actual conditions of their use, however, and may depart significantly from the norm due to variations in driving habits, service practices and differences in road characteristics and climate.

Traction – AA, A, B, C

The traction grades, from highest to lowest, are AA, A, B, and C. Those grades represent the tire's ability to stop on wet pavement as measured under controlled conditions on specified government test surfaces of asphalt and concrete. A tire marked C may have poor traction performance. Warning: The traction grade assigned to this tire is based on straight-ahead braking traction tests, and does not include acceleration, cornering, hydroplaning, or peak traction characteristics.

Temperature – A, B, C

The temperature grades are A (the highest), B, and C, representing the tire's resistance to the generation of heat and its ability to dissipate heat when tested under controlled conditions on a specified indoor laboratory test wheel. Sustained high temperature can cause the material of the tire to degenerate and reduce tire life, and excessive temperature can lead to sudden tire failure. The grade C corresponds to a level of performance which all passenger car tires must meet under the Federal Motor Safety Standard No. 109. Grades B and A represent higher levels of performance on the laboratory test wheel than the minimum required by law. Warning: The temperature grade for this tire is established for a tire that is properly inflated and not overloaded. Excessive speed, underinflation, or excessive loading, either separately or in combination, can cause heat buildup and possible tire failure.

Wheel Alignment and Tire Balance

The tires and wheels on your vehicle were aligned and balanced carefully at the factory to give you the longest tire life and best overall performance. Adjustments to wheel alignment and tire balancing will not be necessary on a regular basis. However, if you notice unusual tire wear or your vehicle pulling to one side or the other, the alignment might need to be checked.
If you notice your vehicle vibrating when driving on a smooth road, the tires and wheels might need to be rebalanced. See your dealer for proper diagnosis.

Wheel Replacement

Replace any wheel that is bent, cracked, or badly rusted or corroded. If wheel nuts keep coming loose, the wheel, wheel bolts and wheel nuts should be replaced. If the wheel leaks air, replace it (except some aluminum wheels, which can sometimes be repaired). See your dealer if any of these conditions exist.

Your dealer will know the kind of wheel you need.

Each new wheel should have the same load-carrying capacity, diameter, width, offset and be mounted the same way as the one it replaces.

If you need to replace any of the wheels, wheel bolts, wheel nuts or Tire Pressure Monitor System (TPMS) sensors, replace them only with new GM original equipment parts. This way, you will be sure to have the right wheel, wheel bolts, wheel nuts, and TPMS sensors for the vehicle.

⚠ WARNING:

Using the wrong replacement wheels, wheel bolts, or wheel nuts on your vehicle can be dangerous. It could affect the braking and handling of your vehicle, make your tires lose air and make you lose control. You could have a collision in which you or others could be injured. Always use the correct wheel, wheel bolts, and wheel nuts for replacement.

Notice: **The wrong wheel can also cause problems with bearing life, brake cooling, speedometer or odometer calibration, headlamp aim, bumper height, vehicle ground clearance, and tire or tire chain clearance to the body and chassis.**

Whenever a wheel, wheel bolt or wheel nut is replaced on a dual wheel setup, check the wheel nut torque after 100, 1,000 and 6,000 miles (160, 1 600 and 10 000 km) of driving. For proper torque, see “Wheel Nut Torque” under *Capacities and Specifications on page 6-137*.

See *Changing a Flat Tire on page 6-100* for more information.

Used Replacement Wheels

⚠ WARNING:

Putting a used wheel on the vehicle is dangerous. You cannot know how it has been used or how far it has been driven. It could fail suddenly and cause a crash. If you have to replace a wheel, use a new GM original equipment wheel.

Tire Chains

⚠ WARNING:

If your vehicle has dual wheels or P265/65R18, P275/55R20 or LT265/70R17 size tires, do not use tire chains. They can damage your vehicle because there is not enough clearance. Tire chains used on a vehicle without the proper amount of clearance can cause damage to the brakes, suspension, or other vehicle parts. The area damaged by the tire chains could cause you to lose control of your vehicle and you or others may be injured in a crash.

Use another type of traction device only if its manufacturer recommends it for use on your vehicle and tire size combination and road conditions. Follow that manufacturer's instructions. To help avoid damage to your vehicle, drive slowly, readjust, or remove the device if it is contacting your vehicle, and do not spin your vehicle's wheels.

If you do find traction devices that will fit, install them on the rear tires.

Notice: **If your vehicle does not have dual wheels and has a tire size other than P265/65R18, P275/55R20 or LT265/70R17, use tire chains only where legal and only when you must. Use chains that are the proper size for your tires. Install them on the tires of the rear axle. Do not use chains on the tires of the front axle. Tighten them as tightly as possible with the ends securely fastened. Drive slowly and follow the chain manufacturer's instructions. If you can hear the chains contacting your vehicle, stop and retighten them. If the contact continues, slow down until it stops. Driving too fast or spinning the wheels with chains on will damage your vehicle.**

If a Tire Goes Flat

It is unusual for a tire to blowout while you are driving, especially if you maintain your vehicle's tires properly. If air goes out of a tire, it is much more likely to leak out slowly. But if you should ever have a blowout, here are a few tips about what to expect and what to do:

If a front tire fails, the flat tire creates a drag that pulls the vehicle toward that side. Take your foot off the accelerator pedal and grip the steering wheel firmly. Steer to maintain lane position, and then gently brake to a stop well out of the traffic lane.

A rear blowout, particularly on a curve, acts much like a skid and may require the same correction you would use in a skid. In any rear blowout remove your foot from the accelerator pedal. Get the vehicle under control by steering the way you want the vehicle to go. It may be very bumpy and noisy, but you can still steer. Gently brake to a stop, well off the road if possible.

⚠ WARNING:

Lifting a vehicle and getting under it to do maintenance or repairs is dangerous without the appropriate safety equipment and training. If a jack is provided with the vehicle, it is designed only for changing a flat tire. If it is used for anything else, you or others could be badly injured or killed if the vehicle slips off the jack. If a jack is provided with the vehicle, only use it for changing a flat tire.

If a tire goes flat, the next part shows how to use the jacking equipment to change a flat tire safely.

Changing a Flat Tire

If a tire goes flat, avoid further tire and wheel damage by driving slowly to a level place. Turn on the hazard warning flashers. See *Hazard Warning Flashers on page 4-3*.

⚠ WARNING:

Changing a tire can be dangerous. The vehicle can slip off the jack and roll over or fall on you or other people. You and they could be badly injured or even killed. Find a level place to change your tire. To help prevent the vehicle from moving:

1. Set the parking brake firmly.
2. Put an automatic transmission shift lever in P (Park), or shift a manual transmission to 1 (First) or R (Reverse).

(Continued)

WARNING: (Continued)

3. If you have a four-wheel-drive vehicle, be sure the transfer case is in a drive gear – not in N (Neutral).
4. Turn off the engine and do not restart while the vehicle is raised.
5. Do not allow passengers to remain in the vehicle.

To be even more certain the vehicle will not move, put blocks at the front and rear of the tire farthest away from the one being changed. That would be the tire on the other side, at the opposite end of the vehicle.

When the vehicle has a flat tire (B), use the following example as a guide to assist you in the placement of wheel blocks (A).

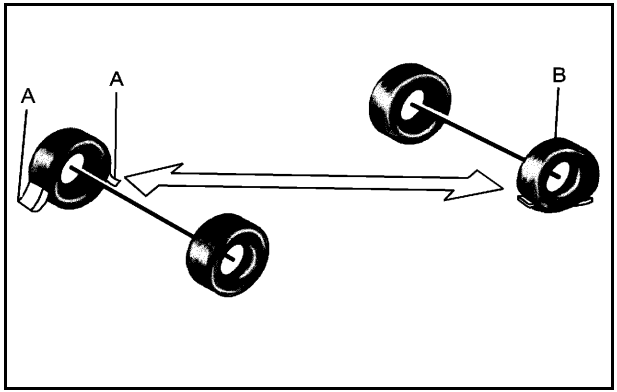

A. Wheel Block

B. Flat Tire

The following information explains how to use the jack and change a tire.

Removing the Spare Tire and Tools

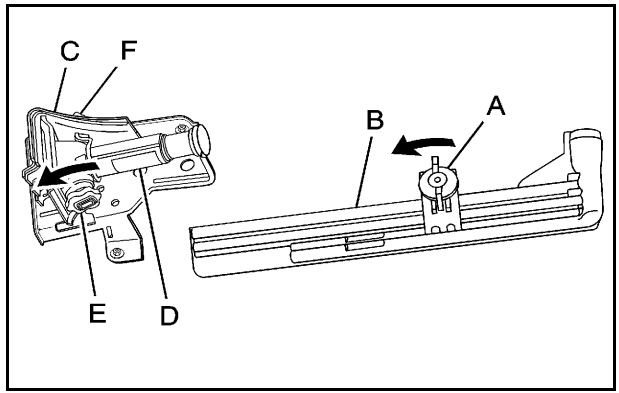

Crew Cab

A. Wing Nut Retaining Tool Kit

B. Tool Kit

C. Wheel Blocks

D. Jack

E. Jack Knob

F. Wing Nut Retaining Wheel Blocks

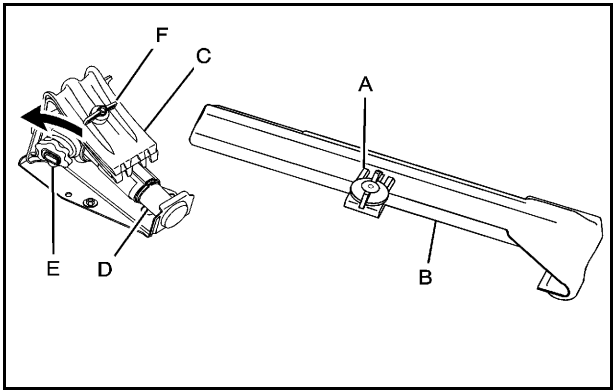

Regular Cab

A. Wing Nut Retaining Tool Kit
B. Tool Kit
C. Wheel Blocks
D. Jack
E. Jack Knob
F. Wing Nut Retaining Wheel Blocks

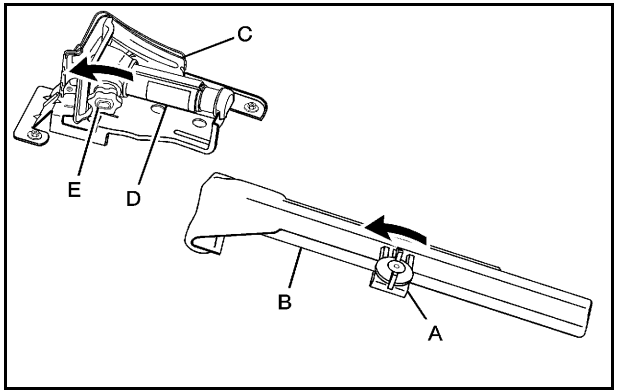

Extended Cab

A. Wing Nut Retaining Tool Kit
B. Tool Kit
C. Wheel Blocks
D. Jack
E. Jack Knob

For regular cab models, the equipment you will need is behind the passenger's seat. For extended and crew cab models, the equipment is on the shelf behind the passenger's side second row seat.

1. Turn the knob on the jack counterclockwise to lower the jack head to release the jack from its holder.
2. Remove the wheel blocks and the wheel block retainer by turning the wing nut counterclockwise.
3. Remove the wing nut used to retain the storage bag and tools by turning it counterclockwise.

You will use the jack handle extensions and the wheel wrench to remove the underbody-mounted spare tire.

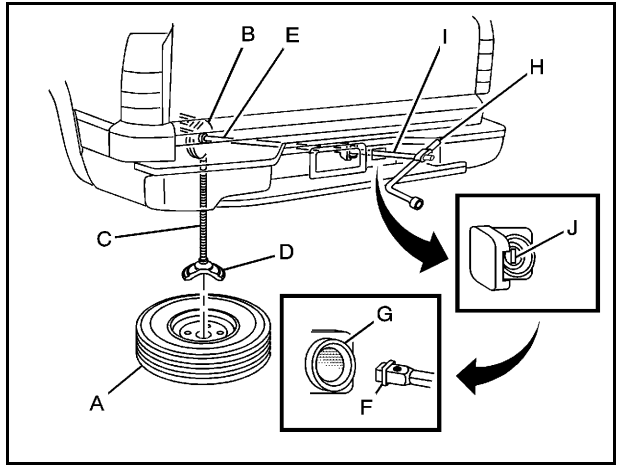

A. Spare Tire (Valve Stem Pointed Down)
B. Hoist Assembly
C. Hoist Cable
D. Tire/Wheel Retainer
E. Hoist Shaft
F. Hoist End of Extension Tool
G. Hoist Shaft Access Hole
H. Wheel Wrench
I. Jack Handle Extensions
J. Spare Tire Lock (If equipped)

1. Open the spare tire lock cover on the bumper and use the ignition key to remove the spare tire lock (J). To remove the spare tire lock, insert the ignition key turn and pull straight out.

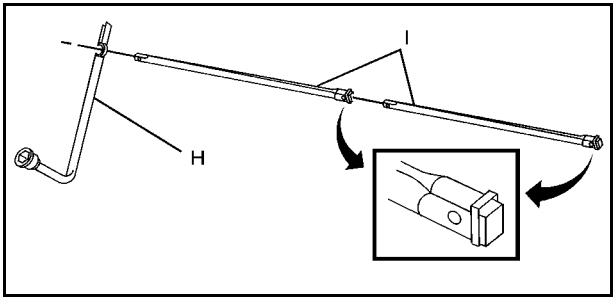

2. Assemble the wheel wrench (H) and the two jack handle extensions (I) as shown.

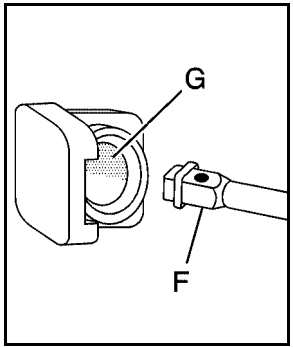

3. Insert the hoist end (open end) (F) of the extension through the hole (G) in the rear bumper.

   Do not use the chiseled end of the wheel wrench.

   Be sure the hoist end of the extension (F) connects to the hoist shaft (E). The ribbed square end of the extension is used to lower the spare tire.

4. Turn the wheel wrench (H) counterclockwise to lower the spare tire to the ground. Continue to turn the wheel wrench until the spare tire can be pulled out from under the vehicle.

   If spare tire does not lower to the ground, the secondary latch, if the vehicle has one, may be engaged causing the tire not to lower. See *Secondary Latch System on page 6-113*.

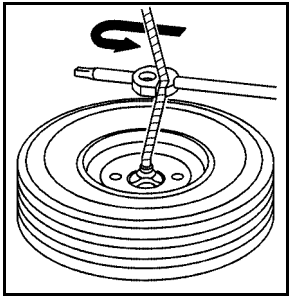

5. Use the wheel wrench hook which allows you to pull the hoist cable towards you to assist in reaching the spare tire.

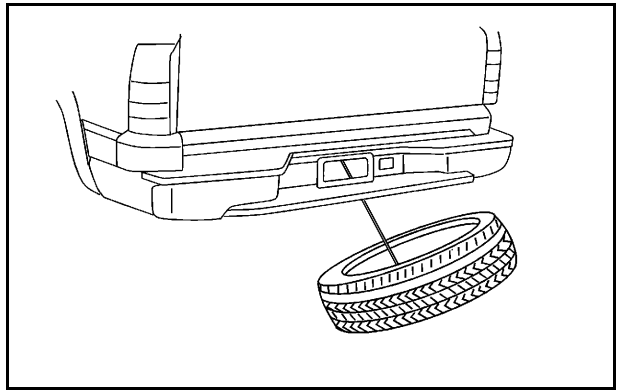

6. Tilt the tire toward the vehicle with some slack in the cable to access the tire/wheel retainer. Separate the retainer from the guide pin by sliding the retainer up the pin while pressing down on the latch.

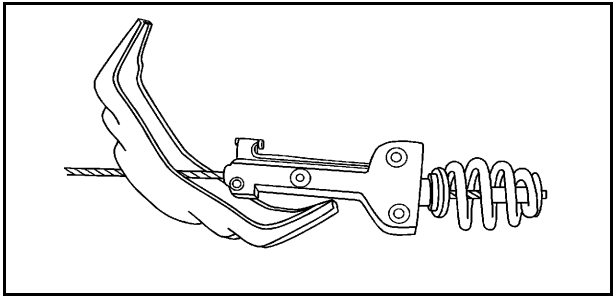

Once the retainer is separated from the guide pin, tilt the retainer and pull it through the center of the wheel along with the cable and guide latch.

7. Put the spare tire near the flat tire.

Removing the Flat Tire and Installing the Spare Tire

Use the following pictures and instructions to remove the flat tire and raise the vehicle.

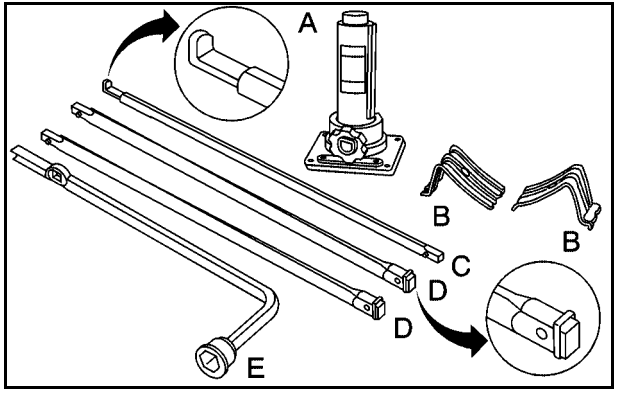

The tools you will be using include the jack (A), the wheel blocks (B), the jack handle (C), the jack handle extensions (D), and the wheel wrench (E).

1. Do a safety check before proceeding. See *Changing a Flat Tire on page 6-100* for more information.

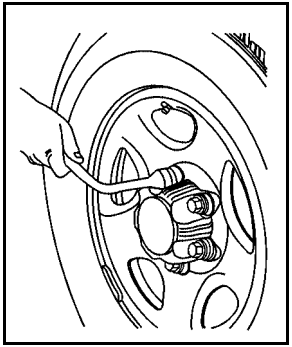

2. If your vehicle has wheel nut caps, loosen them by turning the wheel wrench counterclockwise.

If the vehicle has a center cap with wheel nut caps, the wheel nut caps are designed to stay with the center cap after they are loosened. Remove the entire center cap.

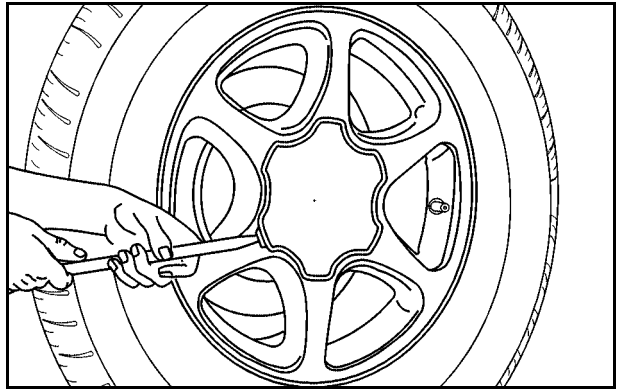

If the wheel has a smooth center cap, place the chisel end of the wheel wrench in the slot on the wheel, and gently pry it out.

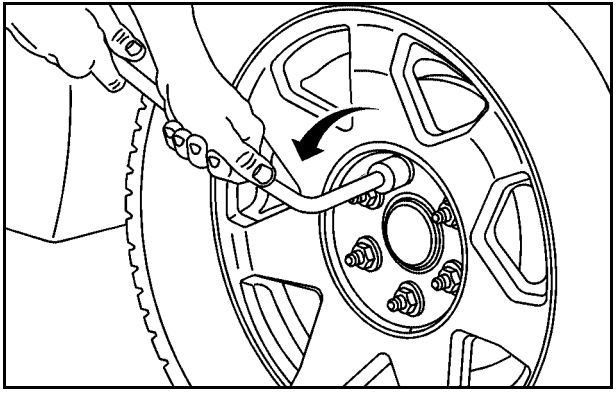

3. Use the wheel wrench and turn it counterclockwise to loosen the wheel nuts. Do not remove the wheel nuts yet.

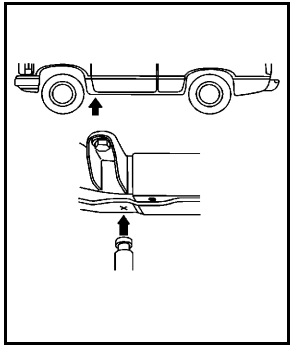

Front Position - 1500 Models

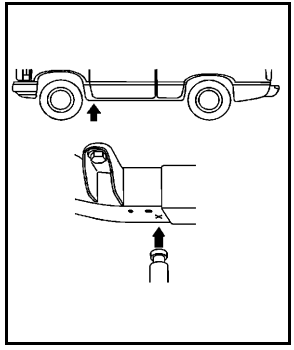

Front Position - All Other Models

4. Position the jack under the vehicle as shown. If the flat tire is on the front of the vehicle (1500 Model vehicles), position the jack under the bracket attached to the vehicle's frame, behind the flat tire. If the flat tire is on the front of the vehicle (all other models), position the jack on the frame behind the flat tire.

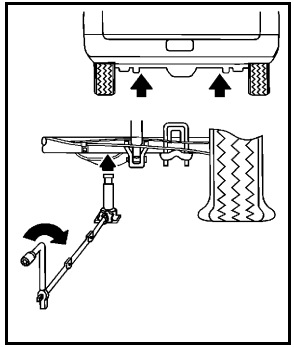

Rear Position – 1500 Models

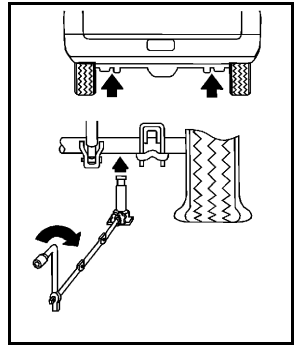

Rear Position – All Other Models

5. If the flat tire is on the rear, for 1500 models position the jack under the rear axle about 2 inches (5 cm) inboard of the shock absorber bracket; for all other models, position the jack under the rear axle between the spring anchor and the shock absorber bracket.

   If you have added a snow plow to the front of your vehicle, lower the snow plow fully before raising the vehicle.

   Make sure that the jack head is positioned so that the rear axle is resting securely between the grooves that are on the jack head.

⚠ WARNING:

Getting under a vehicle when it is jacked up is dangerous. If the vehicle slips off the jack, you could be badly injured or killed. Never get under a vehicle when it is supported only by a jack.

⚠ WARNING:

Raising your vehicle with the jack improperly positioned can damage the vehicle and even make the vehicle fall. To help avoid personal injury and vehicle damage, be sure to fit the jack lift head into the proper location before raising the vehicle.

6. Turn the wheel wrench clockwise to raise the vehicle. Raise the vehicle far enough off the ground so there is enough room for the spare tire to fit under the wheel well.

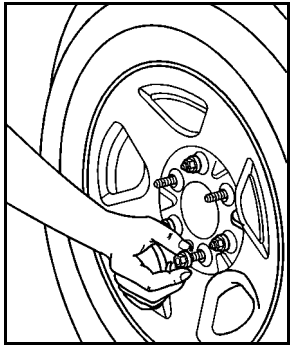

7. Remove all the wheel nuts and take off the flat tire.

⚠ WARNING:

Rust or dirt on a wheel, or on the parts to which it is fastened, can make wheel nuts become loose after time. The wheel could come off and cause an accident. When changing a wheel, remove any

(Continued)

WARNING: (Continued)

rust or dirt from places where the wheel attaches to the vehicle. In an emergency, use a cloth or a paper towel to do this; but be sure to use a scraper or wire brush later, if needed, to get all the rust or dirt off. See *Changing a Flat Tire on page 6-100*.

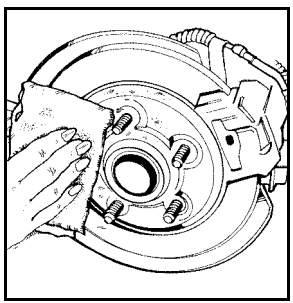

8. Remove any rust or dirt from the wheel bolts, mounting surfaces, and spare wheel.

9. Install the spare tire.

⚠ WARNING:

Never use oil or grease on bolts or nuts because the nuts might come loose. The vehicle's wheel could fall off, causing a crash.

10. Put the wheel nuts back on with the rounded end of the nuts toward the wheel.
11. Tighten each wheel nut by hand. Then use the wheel wrench to tighten the nuts until the wheel is held against the hub.
12. Turn the wheel wrench counterclockwise to lower the vehicle. Lower the jack completely.

⚠ WARNING:

If wheel studs are damaged, they can break. If all the studs on a wheel broke, the wheel could come off and cause a crash. If any stud is damaged because of a loose-running wheel, it could be that all of the studs are damaged. To be sure, replace all studs on the wheel. If the stud holes in a wheel have become larger, the wheel could collapse in operation. Replace any wheel if its stud holes have become larger or distorted in any way. Inspect hubs and hub-piloted wheels for damage. Because of loose running wheels, piloting pad damage may occur and require replacement of the entire hub, for proper centering of the wheels. When replacing studs, hubs, wheel nuts or wheels, be sure to use GM original equipment parts.

⚠ WARNING:

Wheel nuts that are improperly or incorrectly tightened can cause the wheels to become loose or come off. The wheel nuts should be tightened with a torque wrench to the proper torque specification after replacing. Follow the torque specification supplied by the aftermarket manufacturer when using accessory locking wheel nuts. See *Capacities and Specifications on page 6-137* for original equipment wheel nut torque specifications.

Notice: **Improperly tightened wheel nuts can lead to brake pulsation and rotor damage. To avoid expensive brake repairs, evenly tighten the wheel nuts in the proper sequence and to the proper torque specification. See *Capacities and Specifications on page 6-137* for the wheel nut torque specification.**

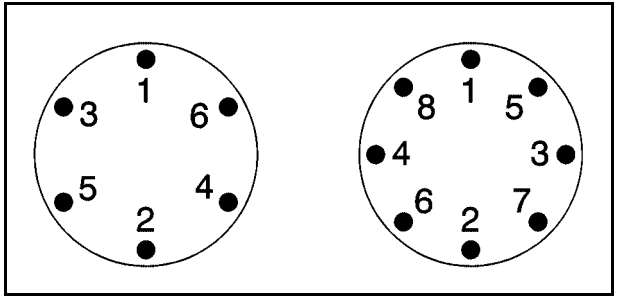

13. Tighten the nuts firmly in a crisscross sequence as shown by turning the wheel wrench clockwise.

Have a technician check the wheel nut tightness of all wheels with a torque wrench after the first 100 miles (160 km) and then 1,000 miles (1600 km) after that. Repeat this service whenever you have a tire removed or serviced. See *Capacities and Specifications on page 6-137* for more information.

When you reinstall the regular wheel and tire, you must also reinstall either the center cap, or bolt-on hub cap, depending on what your vehicle is equipped with. For center caps, place the cap on the wheel and tap it into place until it seats flush with the wheel. The cap only goes on one way. Be sure to line up the tab on the center cap with the indentation on the wheel.

For bolt-on hub caps, align the plastic nut caps with the wheel nuts and then tighten by hand. Then use the wheel wrench to tighten.

Secondary Latch System

This vehicle may have an underbody-mounted tire hoist assembly equipped with a secondary latch system. It is designed to stop the spare tire from suddenly falling off your vehicle. For the secondary latch to work, the spare must be installed with the valve stem pointing down. See *Storing a Flat or Spare Tire and Tools on page 6-116*.

⚠ WARNING:

Before beginning this procedure read all the instructions. Failure to read and follow the instructions could damage the hoist assembly and you and others could get hurt. Read and follow the instructions listed next.

To release the spare tire from the secondary latch:

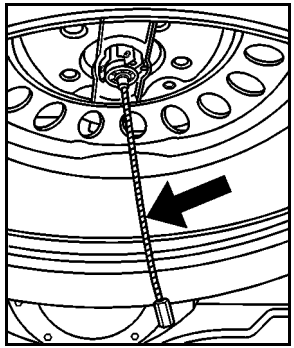

1. Check under the vehicle to see if the cable end is visible. If the cable is not visible proceed to Step 6.
2. If it is visible, first try to tighten the cable by turning the wheel wrench clockwise until you hear two clicks or feel it skip twice. You cannot overtighten the cable.
3. Loosen the cable by turning the wrench counterclockwise three or four turns.
4. Repeat this procedure at least two times. If the spare tire lowers to the ground, continue with Step 5 of *Removing the Spare Tire and Tools on page 6-101*.

5. If the spare does not lower, turn the wrench counterclockwise until approximately 6 inches (15 cm) of cable is exposed.
6. Stand the wheel blocks on their shortest ends, with the backs facing each other.

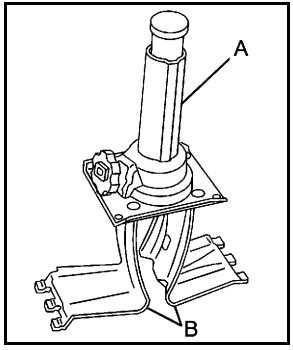

7. Place the bottom edge of the jack (A) on the wheel blocks (B), separating them so that the jack is balanced securely.

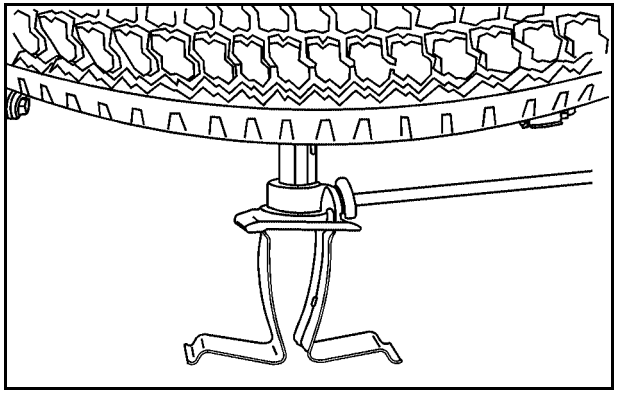

8. Attach the jack handle, extension, and wheel wrench to the jack and place it (with the wheel blocks) under the vehicle toward the front of the rear bumper.

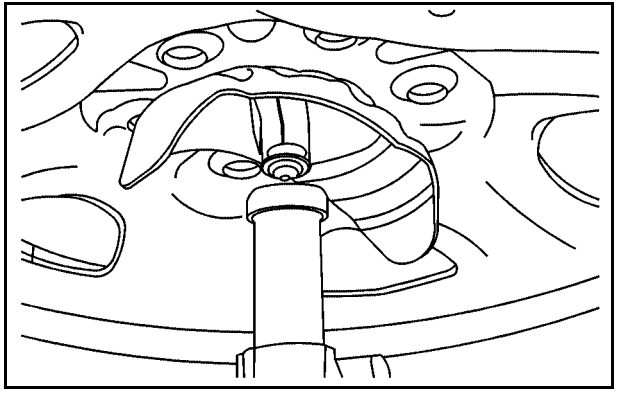

9. Position the center lift point of the jack under the center of the spare tire.
10. Turn the wrench clockwise to raise the jack until it lifts the end fitting.
11. Continue raising the jack until the spare tire stops moving upward and is held firmly in place. The secondary latch has released and the spare tire is balancing on the jack.
12. Lower the jack by turning the wheel wrench counterclockwise. Keep lowering the jack until the spare tire slides off the jack or is hanging by the cable.

⚠ WARNING:

Someone standing too close during the procedure could be injured by the jack. If the spare tire does not slide off the jack completely, make sure no one is behind you or on either side of you as you pull the jack out from under the spare.

13. Disconnect the jack handle from the jack and carefully remove the jack. Use one hand to push against the spare while firmly pulling the jack out from under the spare tire with the other hand.

    If the spare tire is hanging from the cable, insert the hoist end of extension, and wheel wrench into the hoist shaft hole in the bumper and turn the wheel wrench counterclockwise to lower the spare the rest of the way.
14. Turn the wheel wrench in the hoist shaft hole in the bumper clockwise to raise the cable back up if the cable is hanging under the vehicle.

Have the hoist assembly inspected as soon as you can. You will not be able to store a spare or flat tire using the hoist assembly until it has been inspected and/or replaced.

To continue changing the flat tire, see *Removing the Flat Tire and Installing the Spare Tire on page 6-106*.

Storing a Flat or Spare Tire and Tools

⚠ WARNING:

Storing a jack, a tire, or other equipment in the passenger compartment of the vehicle could cause injury. In a sudden stop or collision, loose equipment could strike someone. Store all these in the proper place.

Notice: **Storing an aluminum wheel with a flat tire under your vehicle for an extended period of time or with the valve stem pointing up can damage the wheel. Always stow the wheel with the valve stem pointing down and have the wheel/tire repaired as soon as possible.**

Store the tire under the rear of the vehicle in the spare tire carrier.

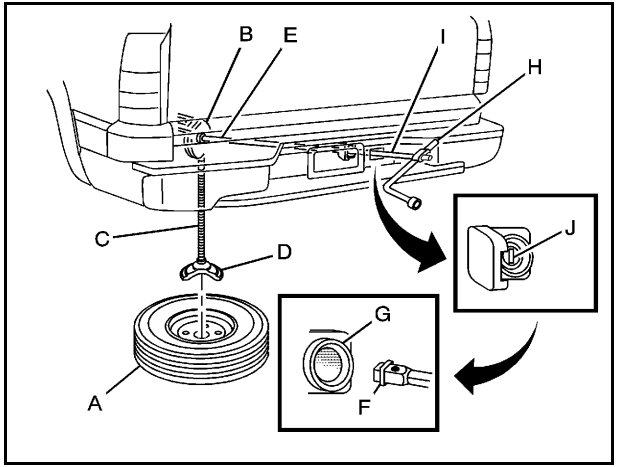

A. Flat or Spare Tire (Valve Stem Pointed Down)
B. Hoist Assembly
C. Hoist Cable
D. Tire/Wheel Retainer
E. Hoist Shaft
F. Hoist End of Extension Tool
G. Hoist Shaft Access Hole
H. Wheel Wrench
I. Jack Handle Extensions
J. Spare Tire Lock (If Equipped)

1. Put the tire on the ground at the rear of the vehicle with the valve stem pointed down, and to the rear.

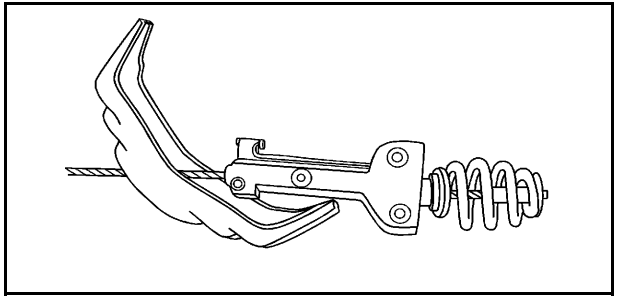

2. Separate the tire/wheel retainer (D) from the guide pin. Pull the pin through the center of the wheel. Tilt the retainer down and through the center wheel opening.

   Make sure the retainer is fully seated across the underside of the wheel.

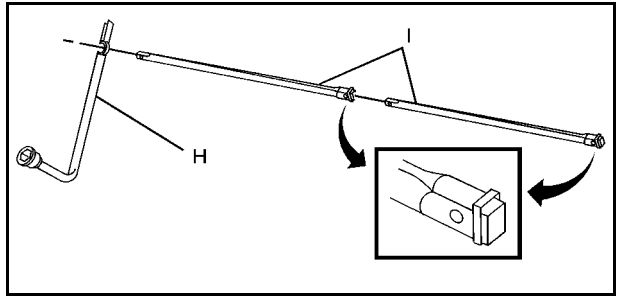

3. Attach the wheel wrench (H) and extensions (I) together, as shown.

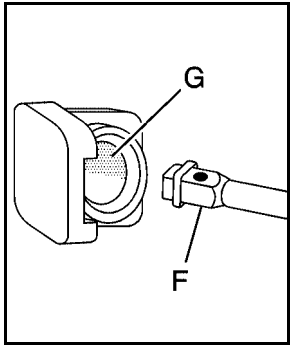

4. Insert the hoist end (F) through the hole (G) in the rear bumper and onto the hoist shaft.

   Do not use the chiseled end of the wheel wrench.

5. Raise the tire part way upward. Make sure the retainer is seated in the wheel opening.
6. Raise the tire fully against the underside of the vehicle by turning the wheel wrench clockwise until you hear two clicks or feel it skip twice. You cannot overtighten the cable.

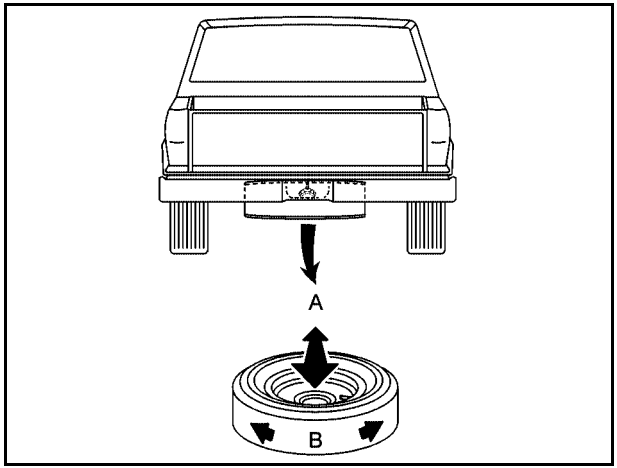

7. Make sure the tire is stored securely. Push, pull (A), and then try to turn (B) the tire. If the tire moves, use the wheel wrench to tighten the cable.
8. Reinstall the spare tire lock, if the vehicle has one.

To store the jack and jack tools:

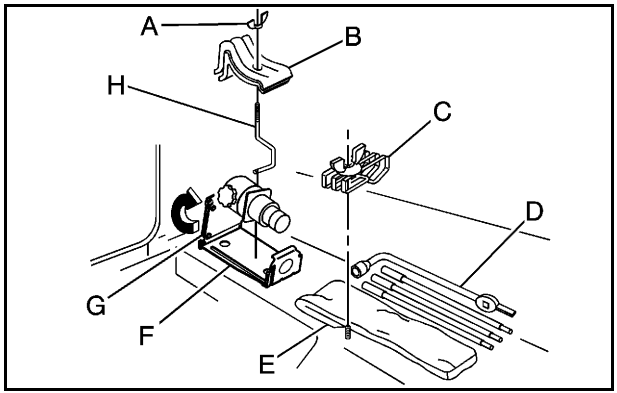

A. Wing Nut Retaining Wheel Blocks
B. Wheel Blocks
C. Wing Nut Retaining Tool Kit
D. Wheel Wrench and Extensions
E. Tool Bag
F. Jack Mounting Bracket
G. Jack
H. Bolt Retaining Wheel Blocks

1. Put the tools (D) in the tool bag (E) and place them in the retaining bracket (C).
2. Tighten down the wing nut (C).
3. Assemble the wheel blocks (B) and jack (G) together with the wing nut (A) and retaining bolt (H).
4. Position the jack (G) in the mounting bracket (F). Position the holes in the base of the jack (G) onto the pin in the mounting bracket (F).
5. Return them to their original location in the vehicle. For more information, refer to *Removing the Spare Tire and Tools on page 6-101* for more information.

Spare Tire

Your vehicle, when new, had a fully-inflated spare tire. A spare tire may lose air over time, so check its inflation pressure regularly. See *Inflation - Tire Pressure on page 6-80* and *Loading the Vehicle on page 5-33* for information regarding proper tire inflation and loading your vehicle. For instruction on how to remove, install or store a spare tire, see *Removing the Flat Tire and Installing the Spare Tire on page 6-106* and *Storing a Flat or Spare Tire and Tools on page 6-116*.

Notice: **If the vehicle has four-wheel drive and the different size spare tire is installed on the vehicle, do not drive in four-wheel drive until you can have your flat tire repaired and/or replaced. You could damage the vehicle, and the repair costs would not be covered by your warranty. Never use four-wheel drive when the different size spare tire is installed on the vehicle.**

Your vehicle may have a different size spare tire than the road tires originally installed on your vehicle. This spare tire was developed for use on your vehicle, so it is all right to drive on it. If your vehicle has four-wheel drive and the different size spare tire is installed, keep the vehicle in two-wheel drive.

After installing the spare tire on your vehicle, you should stop as soon as possible and make sure the spare tire is correctly inflated. Have the damaged or flat road tire repaired or replaced as soon as you can and installed back onto your vehicle. This way, the spare tire will be available in case you need it again.

Do not mix tires and wheels of different sizes, because they will not fit. Keep your spare tire and its wheel together. If your vehicle has a spare tire that does not match your vehicle's original road tires and wheels in size and type, do not include the spare in the tire rotation.

Appearance Care

Interior Cleaning

The vehicle's interior will continue to look its best if it is cleaned often. Although not always visible, dust and dirt can accumulate on the upholstery. Dirt can damage carpet, fabric, leather, and plastic surfaces. Regular vacuuming is recommended to remove particles from the upholstery. It is important to keep the upholstery from becoming and remaining heavily soiled. Soils should be removed as quickly as possible. The vehicle's interior may experience extremes of heat that could cause stains to set rapidly.

Lighter colored interiors may require more frequent cleaning. Use care because newspapers and garments that transfer color to home furnishings may also transfer color to the vehicle's interior.

When cleaning the vehicle's interior, only use cleaners specifically designed for the surfaces being cleaned. Permanent damage may result from using cleaners on surfaces for which they were not intended. Use glass cleaner only on glass. Remove any accidental over-spray from other surfaces immediately. To prevent over-spray, apply cleaner directly to the cleaning cloth.

Notice: **Using abrasive cleaners when cleaning glass surfaces on the vehicle, could scratch the glass and/or cause damage to the rear window defogger. When cleaning the glass on the vehicle, use only a soft cloth and glass cleaner.**

Many cleaners contain solvents that may become concentrated in the vehicle's breathing space. Before using cleaners, read and adhere to all safety instructions on the label. While cleaning the vehicle's interior, maintain adequate ventilation by opening the vehicle's doors and windows.

Dust may be removed from small buttons and knobs using a small brush with soft bristles.

Products that remove odors from the vehicle's upholstery and clean the vehicle's glass can be obtained from your dealer.

Do not clean the vehicle using:

- A knife or any other sharp object to remove a soil from any interior surface.
- A stiff brush. It can cause damage to the vehicle's interior surfaces.
- Heavy pressure or aggressive rubbing with a cleaning cloth. Use of heavy pressure can damage the interior and does not improve the effectiveness of soil removal.
- Laundry detergents or dishwashing soaps with degreasers can leave residue that streaks and attracts dirt. For liquid cleaners, about 20 drops per gallon (3.78 L) of water is a good guide. Use only mild, neutral-pH soaps.
- Too much cleaner that saturates the upholstery.
- Organic solvents such as naptha, alcohol, etc. that can damage the vehicle's interior.

Fabric/Carpet

Use a vacuum cleaner with a soft brush attachment frequently to remove dust and loose dirt. A canister vacuum with a beater bar in the nozzle may only be used on floor carpet and carpeted floor mats. For any soil, always try to remove it first with plain water or club soda. Before cleaning, gently remove as much of the soil as possible using one of the following techniques:

- For liquids: gently blot the remaining soil with a paper towel. Allow the soil to absorb into the paper towel until no more can be removed.
- For solid dry soils: remove as much as possible and then vacuum.

To clean:

1. Saturate a lint-free, clean white cloth with water or club soda.
2. Wring the cloth to remove excess moisture.
3. Start on the outside edge of the soil and gently rub toward the center. Continue cleaning, using a clean area of the cloth each time it becomes soiled.
4. Continue to gently rub the soiled area until the cleaning cloth remains clean.
5. If the soil is not completely removed, use a mild soap solution and repeat the cleaning process that was used with plain water.

If any of the soil remains, a commercial fabric cleaner or spot lifter may be necessary. When a commercial upholstery cleaner or spot lifter is to be used, test a small hidden area for colorfastness first. If the locally cleaned area gives any impression that a ring formation may result, clean the entire surface.

After the cleaning process has been completed, a paper towel can be used to blot excess moisture from the fabric or carpet.

Leather

A soft cloth dampened with water can be used to remove dust. If a more thorough cleaning is necessary, a soft cloth dampened with a mild soap solution can be used. Allow the leather to dry naturally. Do not use heat to dry. Never use steam to clean leather. Never use spot lifters or spot removers on leather. Many commercial leather cleaners and coatings that are sold to preserve and protect leather may permanently change the appearance and feel of the leather and are not recommended. Do not use silicone or wax-based products, or those containing organic solvents to clean the vehicle's interior because they can alter the appearance by increasing the gloss in a non-uniform manner. Never use shoe polish on leather.

Instrument Panel, Vinyl, and Other Plastic Surfaces

A soft cloth dampened with water may be used to remove dust. If a more thorough cleaning is necessary, a clean soft cloth dampened with a mild soap solution can be used to gently remove dust and dirt. Never use spot lifters or removers on plastic surfaces. Many commercial cleaners and coatings that are sold to preserve and protect soft plastic surfaces may permanently change the appearance and feel of the interior and are not recommended. Do not use silicone or wax-based products, or those containing organic solvents to clean the vehicle's interior because they can alter the appearance by increasing the gloss in a non-uniform manner.

Some commercial products may increase gloss on the instrument panel. The increase in gloss may cause annoying reflections in the windshield and even make it difficult to see through the windshield under certain conditions.

Care of Safety Belts

Keep belts clean and dry.

⚠ WARNING:

Do not bleach or dye safety belts. It may severely weaken them. In a crash, they might not be able to provide adequate protection. Clean safety belts only with mild soap and lukewarm water.

Weatherstrips

Silicone grease on weatherstrips will make them last longer, seal better, and not stick or squeak. Apply silicone grease with a clean cloth. During very cold, damp weather frequent application may be required. See *Recommended Fluids and Lubricants on page 7-13*.

Washing Your Vehicle

The best way to preserve the vehicle's finish is to keep it clean by washing it often.

Notice: **Certain cleaners contain chemicals that can damage the emblems or nameplates on the vehicle. Check the cleaning product label. If it states that it should not be used on plastic parts, do not use it on the vehicle or damage may occur and it would not be covered by the warranty.**

Do not wash the vehicle in direct sunlight. Use a car washing soap. Do not use cleaning agents that are petroleum based or that contain acid or abrasives, as they can damage the paint, metal or plastic on the vehicle. Approved cleaning products can be obtained from your dealer. Follow all manufacturers' directions regarding correct product usage, necessary safety precautions and appropriate disposal of any vehicle care product.

Rinse the vehicle well, before washing and after to remove all cleaning agents completely. If they are allowed to dry on the surface, they could stain.

Dry the finish with a soft, clean chamois or an all-cotton towel to avoid surface scratches and water spotting.

High pressure car washes may cause water to enter the vehicle. Avoid using high pressure washes closer than 12 inches (30 cm) to the surface of the vehicle. Use of power washers exceeding 1,200 psi (8 274 kPa) can result in damage or removal of paint and decals.

Cleaning Exterior Lamps/Lenses

Use only lukewarm or cold water, a soft cloth and a car washing soap to clean exterior lamps and lenses. Follow instructions under *Washing Your Vehicle on page 6-124*.

Finish Care

Occasional waxing or mild polishing of the vehicle by hand may be necessary to remove residue from the paint finish. Approved cleaning products can be obtained from your dealer.

If the vehicle has a basecoat/clearcoat paint finish, the clearcoat gives more depth and gloss to the colored basecoat. Always use waxes and polishes that are non-abrasive and made for a basecoat/clearcoat paint finish.

Notice: **Machine compounding or aggressive polishing on a basecoat/clearcoat paint finish may damage it. Use only non-abrasive waxes and polishes that are made for a basecoat/clearcoat paint finish on the vehicle.**

Foreign materials such as calcium chloride and other salts, ice melting agents, road oil and tar, tree sap, bird droppings, chemicals from industrial chimneys, etc., can damage the vehicle's finish if they remain on painted surfaces. Wash the vehicle as soon as possible.
If necessary, use non-abrasive cleaners that are marked safe for painted surfaces to remove foreign matter.

Exterior painted surfaces are subject to aging, weather and chemical fallout that can take their toll over a period of years. To help keep the paint finish looking new, keep the vehicle garaged or covered whenever possible.

Protecting Exterior Bright Metal Parts

Bright metal parts should be cleaned regularly to keep their luster. Washing with water is all that is usually needed. However, chrome polish may be used on chrome or stainless steel trim, if necessary.

Use special care with aluminum trim. To avoid damaging protective trim, never use auto or chrome polish, steam or caustic soap to clean aluminum. A coating of wax, rubbed to high polish, is recommended for all bright metal parts.

Windshield and Wiper Blades

Clean the outside of the windshield with glass cleaner.

Clean the rubber blades using a lint free cloth or paper towel soaked with windshield washer fluid or a mild detergent. Wash the windshield thoroughly when cleaning the blades. Bugs, road grime, sap, and a buildup of vehicle wash/wax treatments may cause wiper streaking. Replace the wiper blades if they are worn or damaged.

Wipers can be damaged by:

- Extreme dusty conditions
- Sand and salt
- Heat and sun
- Snow and ice, without proper removal

Aluminum or Chrome-Plated Wheels and Trim

The vehicle may have either aluminum or chrome-plated wheels.

Keep the wheels clean using a soft clean cloth with mild soap and water. Rinse with clean water. After rinsing thoroughly, dry with a soft clean towel. A wax may then be applied.

Notice: **Chrome wheels and other chrome trim may be damaged if the vehicle is not washed after driving on roads that have been sprayed with magnesium, calcium or sodium chloride. These chlorides are used on roads for conditions such as ice and dust. Always wash the vehicle's chrome with soap and water after exposure.**

Notice: **Using strong soaps, chemicals, abrasive polishes, cleaners, brushes, or cleaners that contain acid on aluminum or chrome-plated wheels, could damage the surface of the wheel(s). The repairs would not be covered by the vehicle warranty. Use only approved cleaners on aluminum or chrome-plated wheels.**

The surface of these wheels is similar to the painted surface of the vehicle. Do not use strong soaps, chemicals, abrasive polishes, abrasive cleaners,

cleaners with acid, or abrasive cleaning brushes on them because they could damage the surface. Do not use chrome polish on aluminum wheels.

Notice: **Using chrome polish on aluminum wheels could damage the wheels. The repairs would not be covered by the vehicle warranty. Use chrome polish on chrome wheels only.**

Use chrome polish only on chrome-plated wheels, but avoid any painted surface of the wheel, and buff off immediately after application.

Notice: **Driving the vehicle through an automatic car wash that has silicone carbide tire cleaning brushes, could damage the aluminum or chrome-plated wheels. The repairs would not be covered by the vehicle warranty. Never drive a vehicle that has aluminum or chrome-plated wheels through an automatic car wash that uses silicone carbide tire cleaning brushes.**

Tires

To clean the tires, use a stiff brush with tire cleaner.

Notice: **Using petroleum-based tire dressing products on the vehicle may damage the paint finish and/or tires. When applying a tire dressing, always wipe off any overspray from all painted surfaces on the vehicle.**

Sheet Metal Damage

If the vehicle is damaged and requires sheet metal repair or replacement, make sure the body repair shop applies anti-corrosion material to parts repaired or replaced to restore corrosion protection.

Original manufacturer replacement parts will provide the corrosion protection while maintaining the vehicle warranty.

Finish Damage

Any stone chips, fractures or deep scratches in the finish should be repaired right away. Bare metal will corrode quickly and may develop into major repair expense.

Minor chips and scratches can be repaired with touch-up materials available from your dealer. Larger areas of finish damage can be corrected in your dealer's/retailer's body and paint shop.

Underbody Maintenance

Chemicals used for ice and snow removal and dust control can collect on the underbody. If these are not removed, corrosion and rust can develop on the underbody parts such as fuel lines, frame, floor pan, and exhaust system even though they have corrosion protection.

At least every spring, flush these materials from the underbody with plain water. Clean any areas where mud and debris can collect. Dirt packed in close areas of the frame should be loosened before being flushed. Your dealer or an underbody car washing system can do this.

Chemical Paint Spotting

Some weather and atmospheric conditions can create a chemical fallout. Airborne pollutants can fall upon and attack painted surfaces on the vehicle. This damage can take two forms: blotchy, ring-shaped discolorations, and small, irregular dark spots etched into the paint surface.

Although no defect in the paint job causes this, we will repair, at no charge to the owner, the surfaces of new vehicles damaged by this fallout condition within 12 months or 12,000 miles (20 000 km) of purchase, whichever occurs first.

Vehicle Identification

Vehicle Identification Number (VIN)

This legal identifier is in the front corner of the instrument panel, on the driver side. It can be seen through the windshield from outside. The VIN also appears on the Certification/Tire and Service Parts labels and certificates of title and registration.

Engine Identification

The eighth character in the VIN is the engine code. This code identifies the vehicle's engine, specifications, and replacement parts. See “Engine Specifications” under *Capacities and Specifications on page 6-137* for the vehicle's engine code.

Service Parts Identification Label

This label, on the inside of the glove box, has the following information:

- Vehicle Identification Number (VIN)
- Model designation
- Paint information
- Production options and special equipment

Do not remove this label from the vehicle.

Electrical System

Add-On Electrical Equipment

Notice: **Do not add anything electrical to the vehicle unless you check with your dealer first. Some electrical equipment can damage the vehicle and the damage would not be covered by the vehicle's warranty. Some add-on electrical equipment can keep other components from working as they should.**

Add-on equipment can drain the vehicle battery, even if the vehicle is not operating.

The vehicle has an airbag system. Before attempting to add anything electrical to the vehicle, see *Servicing Your Airbag-Equipped Vehicle on page 2-92* and *Adding Equipment to Your Airbag-Equipped Vehicle on page 2-92*.

Windshield Wiper Fuses

The windshield wiper motor is protected by an internal circuit breaker and a fuse. If the motor overheats due to heavy snow, etc., the wiper will stop until the motor cools. If the overload is caused by some electrical problem and not snow, etc., be sure to get it fixed.

Power Windows and Other Power Options

Circuit breakers protect the power windows and other power accessories. If the current load is too heavy, the circuit breaker opens and then closes after a cool down period, protecting the circuit until the problem is fixed or goes away.

Fuses and Circuit Breakers

If the vehicle is a Two-mode Hybrid, see the Two-mode Hybrid manual for more information.

The wiring circuits in the vehicle are protected from short circuits by a combination of fuses, circuit breakers and fusible thermal links. This greatly reduces the chance of fires caused by electrical problems.

Look at the silver-colored band inside the fuse. If the band is broken or melted, replace the fuse. Be sure you replace a bad fuse with a new one of the identical size and rating.

If you ever have a problem on the road and don't have a spare fuse, you can borrow one that has the same amperage. Just pick some feature of your vehicle that you can get along without – like the radio or cigarette lighter – and use its fuse, if it is the correct amperage. Replace it as soon as you can.

Instrument Panel Fuse Block

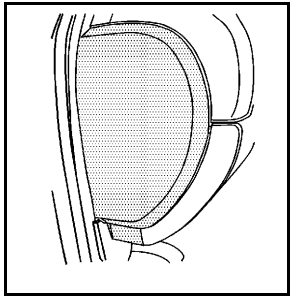

The instrument panel fuse block access door is located on the driver side edge of the instrument panel.

Pull off the cover to access the fuse block.

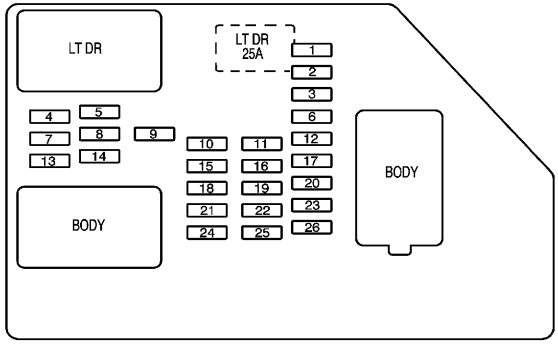

The vehicle may not use all of the fuses shown.

Fuses	Usage
1	Rear Seats
2	Rear Accessory Power Outlet
3	Steering Wheel Controls Backlight
4	Driver Door Module
5	Dome Lamps, Driver Side Turn Signal
6	Driver Side Turn Signal, Stoplamp
7	Instrument Panel Back Lighting
8	Passenger Side Turn Signal, Stoplamp
9	Passenger Door Module, Driver Unlock
10	Power Door Lock 2 (Unlock Feature)
11	Power Door Lock 2 (Lock Feature)
12	Stoplamps, Center-High Mounted Stoplamp
13	Rear Climate Controls
14	Power Mirror
15	Body Control Module (BCM)
16	Accessory Power Outlets
17	Interior Lamps
18	Power Door Lock 1 (Unlock Feature)
19	Rear Seat Entertainment
20	Ultrasonic Rear Parking Assist, Power Liftgate
21	Power Door Lock 1 (Lock Feature)

Fuses	Usage
22	Driver Information Center (DIC)
23	Rear Wiper
24	Cooled Seats
25	Driver Seat Module, Remote Keyless Entry System
26	Driver Power Door Lock (Unlock Feature)

Circuit Breaker	Usage
LT DR	Driver Side Power Window Circuit Breaker

Harness Connector	Usage
LT DR	Driver Door Harness Connection
BODY	Harness Connector
BODY	Harness Connector

Center Instrument Panel Fuse Block

The center instrument panel fuse block is located underneath the instrument panel, to the left of the steering column.

Top View

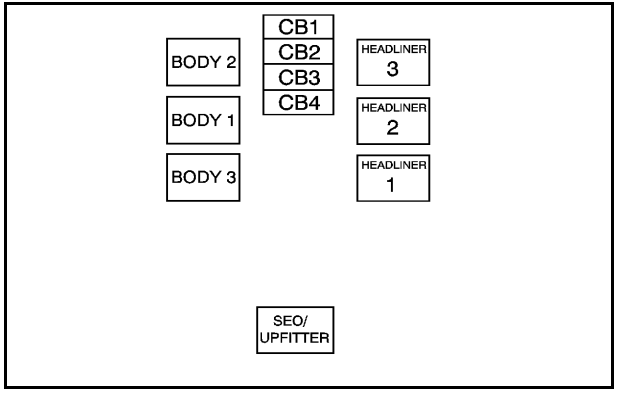

Harness Connector	Usage
BODY 2	Body Harness Connector 2
BODY 1	Body Harness Connector 1
BODY 3	Body Harness Connector 3

Harness Connector	Usage
HEADLINER 3	Headliner Harness Connector 3
HEADLINER 2	Headliner Harness Connector 2
HEADLINER 1	Headliner Harness Connector 1
SEO/UPFITTER	Special Equipment Option Upfitter Harness Connector

Circuit Breaker	Usage
CB1	Passenger Side Power Window Circuit Breaker
CB2	Passenger Seat Circuit Breaker
CB3	Driver Seat Circuit Breaker
CB4	Rear Sliding Window

Underhood Fuse Block

If the vehicle has the DURAMAX® Diesel engine, see the DURAMAX® Diesel manual for more information.

If the vehicle is a Two-mode Hybrid, see the Two-mode Hybrid manual for more information.

The underhood fuse block is located in the engine compartment, on the driver side of the vehicle.

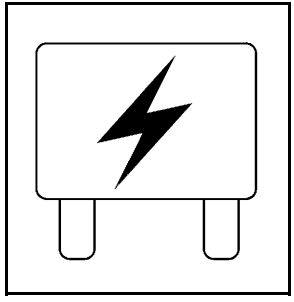

Lift the cover to access the fuse block.

Notice: **Spilling liquid on any electrical components on the vehicle may damage it. Always keep the covers on any electrical component.**

To remove fuses, hold the end of the fuse between your thumb and index finger and pull straight out.

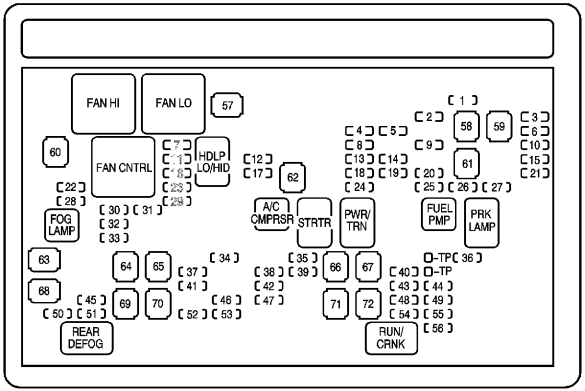

Fuses	Usage
1	Right Trailer Stop/Turn Lamp
2	Electronic Suspension Control, Automatic Level Control Exhaust
3	Left Trailer Stop/Turn Lamp

Fuses	Usage
4	Engine Controls
5	Engine Control Module, Throttle Control
6	Trailer Brake Controller
7	Front Washer
8	Oxygen Sensor
9	Antilock Brakes System 2
10	Trailer Back-up Lamps
11	Driver Side Low-Beam Headlamp
12	Engine Control Module (Battery)
13	Fuel Injectors, Ignition Coils (Right Side)
14	Transmission Control Module (Battery)
15	Vehicle Back-up Lamps
16	Passenger Side Low-Beam Headlamp
17	Air Conditioning Compressor
18	Oxygen Sensors
19	Transmission Controls (Ignition)

Fuses	Usage
20	Fuel Pump
21	Fuel System Control Module
22	Not Used
23	Not Used
24	Fuel Injectors, Ignition Coils (Left Side)
25	Trailer Park Lamps
26	Driver Side Park Lamps
27	Passenger Side Park Lamps
28	Fog Lamps
29	Horn
30	Passenger Side High-Beam Headlamp
31	Daytime Running Lamps (DRL)
32	Driver Side High-Beam Headlamp
33	Daytime Running Lights 2
34	Sunroof
35	Key Ignition System, Theft Deterrent System
36	Windshield Wiper
37	SEO B2 Upfitter Usage (Battery)
38	Electric Adjustable Pedals

Fuses	Usage
39	Climate Controls (Battery)
40	Airbag System (Ignition)
41	Amplifier
42	Audio System
43	Miscellaneous (Ignition), Cruise Control
44	Not Used
45	Airbag System (Battery)
46	Instrument Panel Cluster
47	Power Take-Off
48	Auxiliary Climate Control (Ignition)
49	Center High-Mounted Stoplamp (CHMSL)
50	Rear Defogger
51	Heated Mirrors
52	SEO B1 Upfitter Usage (Battery)
53	Cigarette Lighter, Auxiliary Power Outlet
54	SEO Upfitter Usage
55	Climate Controls (Ignition)
56	Engine Control Module, Secondary Fuel Pump (Ignition)

J-Case Fuses	Usage
57	Cooling Fan 1
58	Not Used
59	Heavy Duty Antilock Brake System
60	Cooling Fan 2
61	Antilock Brake System 1
62	Starter
63	Stud 2 (Trailer Brakes)
64	Left Bussed Electrical Center 1
65	Not Used
66	Heated Windshield Washer System
67	Transfer Case
68	Stud 1 (Trailer Connector Battery Power) (Optional - 40A Fuse Required)
69	Mid-Bussed Electrical Center 1
70	Climate Control Blower
71	Not Used
72	Left Bussed Electrical Center 2

Relays	Usage
FAN HI	Cooling Fan High Speed
FAN LO	Cooling Fan Low Speed
FAN CNTRL	Cooling Fan Control
HDLP LO/HID	Low-Beam Headlamp
FOG LAMP	Front Fog Lamps
A/C CMPRSR	Air Conditioning Compressor
STRTR	Starter
PWR/TRN	Powertrain
FUEL PMP	Fuel Pump
PRK LAMP	Parking Lamps
REAR DEFOG	Rear Defogger
RUN/CRANK	Switched Power

Capacities and Specifications

The following approximate capacities are given in English and metric conversions. See *Recommended Fluids and Lubricants on page 7-13* for more information.

If your vehicle has the DURAMAX® Diesel engine, see the DURAMAX® Diesel manual for more information.

Application	Capacities	
	English	Metric
Air Conditioning Refrigerant R134a	For the air conditioning system refrigerant charge amount, see the refrigerant caution label located under the hood. See your dealer for more information.	
Cooling System		
4.3L V6 1500 Series	16.5 qt	15.6 L
4.8L V8 1500 Series	16.9 qt	16.0 L
5.3L V8 1500 Series	16.9 qt	16.0 L
6.0L V8 2500 Series and 3500 Series	16.4 qt	15.5 L
6.2L V8 1500 Series	16.8 qt	15.9 L
Engine Oil with Filter		
4.3L V6	4.5 qt	4.3 L
4.8L V8; 5.3L V8; 6.0L V8; 6.2L V8	6.0 qt	5.7 L

Application	Capacities	
	English	Metric
Fuel Tank		
1500 Series Standard and Short Box	26.0 gal	98.0 L
1500 Series Long Box	34.0 gal	128.7 L
2500 Series Standard Box	26.0 gal	98.0 L
2500 Series and 3500 Series Long Box	34.0 gal	128.7 L
3500 Series Chassis Cab	50.0 gal	189.0 L
3500 Chassis Cab – Front Tank	27.0 gal	102.0 L
3500 Chassis Cab – Rear Tank (if equipped)	23.0 gal	87.0 L
Transmission Fluid (Pan Removal and Filter Replacement)		
Auto 4-Speed Transmission 4L60-E Electronic Transmission	5.0 qt	4.7 L
Auto 6-Speed Transmission 6L80-E	6.0 qt	5.7 L
Auto 6-Speed Transmission 6L90-E	6.3 qt	6.0 L
Auto 6-Speed Transmission Allison	7.4 qt	7.0 L
Transfer Case Fluid	1.6 qt	1.5 L
Wheel Nut Torque	140 ft lb	190 N•m
All capacities are approximate. When adding, be sure to fill to the approximate level, as recommended in this manual. Recheck fluid level after filling.		

Engine Specifications

Engine	VIN Code	Transmission	Spark Plug Gap
4.3L V6 (LU3)	X	Automatic	0.060 in (1.52 mm)
4.8L V8 (L20)	A	Automatic	0.040 in (1.02 mm)
5.3L V8 Flexible Fuel with Active Fuel Management™ (Iron Block) (LMG)	0	Automatic	0.040 in (1.02 mm)
5.3L V8 Flexible Fuel with Active Fuel Management™(Aluminum Block) (LC9)	3	Automatic	0.040 in (1.02 mm)
6.0L V8 (Iron Block) (L96 or LY6)	G or K	Automatic	0.040 in (1.02 mm)
6.2L V8 Flexible Fuel (Aluminum Block) (L9H)	2	Automatic	0.040 in (1.02 mm)

✍ NOTES

Section 7 Maintenance Schedule

Maintenance Schedule 7-2
Introduction 7-2
Scheduled Maintenance 7-3
Owner Checks and Services 7-11
Recommended Fluids and Lubricants 7-13
Maintenance Replacement Parts 7-15
Engine Drive Belt Routing 7-16
Maintenance Record 7-17

Maintenance Schedule

Introduction

This maintenance section applies to vehicles with a gasoline engine. For diesel engine vehicles, see the maintenance schedule section in the DURAMAX Diesel manual.

Notice: **Maintenance intervals, checks, inspections, recommended fluids, and lubricants are necessary to keep this vehicle in good working condition. Damage caused by failure to follow scheduled maintenance might not be covered by the vehicle warranty.**

As the vehicle owner, you are responsible for the scheduled maintenance in this section. We recommend having your dealer perform these services. Proper vehicle maintenance helps to keep the vehicle in good working condition, improves fuel economy, and reduces vehicle emissions for better air quality.

Because of all the different ways people use vehicles, maintenance needs vary. The vehicle might need more frequent checks and services. Please read the information under Scheduled Maintenance. To keep the vehicle in good condition, see your dealer.

The maintenance schedule is for vehicles that:

- carry passengers and cargo within recommended limits on the Tire and Loading Information label. See *Loading the Vehicle on page 5-33*.
- are driven on reasonable road surfaces within legal driving limits.
- are driven off-road in the recommended manner. See *Off-Road Driving on page 5-13*.
- use the recommended fuel. See *Gasoline Octane on page 6-7*.

⚠ WARNING:

Performing maintenance work on a vehicle can be dangerous. In trying to do some jobs, you can be seriously injured. Do your own maintenance work only if you have the required know-how and the proper tools and equipment for the job. If you have any doubt, see your dealer to have a qualified technician do the work. See *Doing Your Own Service Work on page 6-5*.

At your dealer, you can be certain that you will receive the highest level of service available. Your dealer has specially trained service technicians, uses genuine replacement parts, as well as, up to date tools and equipment to ensure fast and accurate diagnostics.

The proper replacement parts, fluids, and lubricants to use are listed in *Recommended Fluids and Lubricants on page 7-13* and *Maintenance Replacement Parts on page 7-15*. We recommend the use of genuine parts from your dealer.

Rotation of New Tires

To maintain ride, handling, and performance of the vehicle, it is important that the first rotation service for new tires be performed when they have 8 000 to 13 000 km (5,000 to 8,000 miles). See *Tire Inspection and Rotation on page 6-88*.

Scheduled Maintenance

When the Change Engine Oil Soon Message Displays

Change engine oil and filter. See *Engine Oil on page 6-17*. *An Emission Control Service.*

When the Change Engine Oil Soon message displays, service is required for the vehicle as soon as possible, within the next 1 000 km/600 miles. If driving under the best conditions, the engine oil life system might not indicate the need for vehicle service for more than a year. The engine oil and filter must be changed at least once a year and the oil life system must be reset. Your dealer has trained service technicians who will perform this work and reset the system. If the engine oil life system is reset accidentally, service the vehicle within 5 000 km/3,000 miles since the last service. Reset the oil life system whenever the oil is changed. See *Engine Oil Life System on page 6-20*.

When the Change Engine Oil Soon message displays, certain services, checks, and inspections are required. The services described for Maintenance I should be performed at every engine oil change. The services described for Maintenance II should be performed when:

- Maintenance I was performed the last time the engine oil was changed.
- It has been 10 months or more since the Change Engine Oil Soon message has displayed or since the last service.

Maintenance I

- Change engine oil and filter. See *Engine Oil on page 6-17*. *An Emission Control Service.*
- Engine coolant level check. See *Engine Coolant on page 6-33*.
- Windshield washer fluid level check. See *Windshield Washer Fluid on page 6-43*.
- Tire inflation check. See *Inflation - Tire Pressure on page 6-80*.
- Tire wear inspection. See *Tire Inspection and Rotation on page 6-88*.
- Rotate tires. See *Tire Inspection and Rotation on page 6-88*.
- Fluids visual leak check (or every 12 months, whichever occurs first). A leak in any system must be repaired and the fluid level checked.
- Engine air cleaner filter inspection (vehicles driven in dusty conditions only). See *Engine Air Cleaner/ Filter on page 6-22*.
- Brake system inspection (or every 12 months, whichever occurs first).
- For vehicles with Allison Transmission® only: At the first engine oil change only, replace external transmission filter.

Maintenance II

- Perform all services described in Maintenance I.
- Steering and suspension inspection. Visual inspection for damaged, loose, or missing parts or signs of wear.
- Lubricate the front suspension, steering linkage, and parking brake cable guides. Control arm ball joints on 2500/3500 series vehicles require lubrication but should not be lubricated unless their temperature is −12°C (10°F) or higher, or they could be damaged. Control arm ball joints on 1500 series vehicles are maintenance-free. Vehicles used under severe commercial operating conditions require lubrication on a regular basis every 5 000 km/3,000 miles.

- Engine cooling system inspection. Visual inspection of hoses, pipes, fittings, and clamps and replacement, if needed.
- Windshield wiper blade inspection for wear, cracking, or contamination and windshield and wiper blade cleaning, if contaminated. See *Windshield and Wiper Blades on page 6-126*. Worn or damaged wiper blade replacement. See *Windshield Wiper Blade Replacement on page 6-69*.
- Body hinges and latches, key lock cylinders, folding seat hardware, and tailgate hinges, linkage, and handle pivot points lubrication. See *Recommended Fluids and Lubricants on page 7-13*. More frequent lubrication may be required when vehicle is exposed to a corrosive environment. Applying silicone grease on weatherstrips with a clean cloth makes them last longer, seal better, and not stick or squeak.
- Restraint system component check. See *Checking the Restraint Systems on page 2-94*.
- Automatic transmission fluid level check and adding fluid, if needed. See *Automatic Transmission Fluid (4-Speed Transmission) on page 6-24* or *Automatic Transmission Fluid (6-Speed Transmission) on page 6-28*.
- Four-wheel drive vehicles: Transfer case fluid level check and adding fluid, if needed.
- Engine air cleaner filter inspection. See *Engine Air Cleaner/Filter on page 6-22*.
- Vehicles with diesel engine or GVWR above 4 536 kg (10,000 lbs) only: Shields inspection for damage or looseness. Adjust or replace as required. This is a Noise Emission Control Service. Applicable to vehicles sold in the United States and recommended for vehicles sold in Canada.

Additional Required Services

At the First 160 km/100 Miles, 1 600 km/ 1,000 Miles, and 10 000 km/6,000 Miles

- For vehicles with dual wheels: Check dual wheel nut torque. For proper torque, see *Capacities and Specifications on page 6-137*.

At Each Fuel Stop

- Engine oil level check. See *Engine Oil on page 6-17*.
- Engine coolant level check. See *Engine Coolant on page 6-33*.
- Windshield washer fluid level check. See *Windshield Washer Fluid on page 6-43*.

Once a Month

- Tire inflation check. See *Inflation - Tire Pressure on page 6-80*.
- Tire wear inspection. See *Tire Inspection and Rotation on page 6-88*.

Once a Year

- Starter switch check. See *Owner Checks and Services on page 7-11*.
- Parking brake and automatic transmission P (Park) mechanism check. See *Owner Checks and Services on page 7-11*.
- Automatic transmission shiftlock control system check. See *Owner Checks and Services on page 7-11*.
- Ignition transmission lock check. See *Owner Checks and Services on page 7-11*.
- Engine cooling system and pressure cap pressure check. Radiator and air conditioning condenser outside cleaning. See *Cooling System on page 6-32*.
- Exhaust system and nearby heat shields inspection for loose or damaged components.
- Accelerator pedal check for damage, high effort, or binding. Replace if needed.

First Engine Oil Change After Every 40 000 km/25,000 Miles

- Fuel system inspection for damage or leaks.
- Four-wheel drive only: Transfer case fluid change (extreme duty service) for vehicles mainly driven off-road in four-wheel drive. Vehicles used for farming, mining, forestry, Department of Natural Resources (DNR), and snow plowing occupations meet this definition. Check vent hose at transfer case for kinks and proper installation. Check to be sure vent hose is unobstructed, clear, and free of debris. During any maintenance, if a power washer is used to clean mud and dirt from the underbody, care should be taken to not directly spray the transfer case output seals. High pressure water can overcome the seals and contaminate the transfer case fluid. Contaminated fluid will decrease the life of the transfer case and should be replaced.

First Engine Oil Change After Every 80 000 km/50,000 Miles

- Engine air cleaner filter replacement. See *Engine Air Cleaner/Filter on page 6-22*.
- Automatic transmission fluid change (severe service) for vehicles with Gross Vehicle Weight Rating (GVWR) over 3 901 kg (8,600 lbs) or mainly driven in heavy city traffic in hot weather, in hilly or mountainous terrain, when frequently towing a trailer, or used for taxi, police, or delivery service. See *Automatic Transmission Fluid (4-Speed Transmission) on page 6-24* or *Automatic Transmission Fluid (6-Speed Transmission) on page 6-28*.
- Four-wheel drive only: Transfer case fluid change (severe service) for vehicles mainly driven when frequently towing a trailer, or used for taxi, police, or delivery service. Check vent hose at transfer case for kinks and proper installation. Check to be sure vent hose is unobstructed, clear, and free of debris. During any maintenance, if a power washer is used to clean mud and dirt from the underbody, care should be taken to not directly spray the transfer case output seals. High pressure water can overcome the seals and contaminate the transfer case fluid. Contaminated fluid will decrease the life of the transfer case and should be replaced.
- Evaporative control system inspection. Check all fuel and vapor lines and hoses for proper hook-up, routing, and condition. Check that the purge valve, if the vehicle has one, works properly. Replace as needed. *An Emission Control Service. The U.S. Environmental Protection Agency or the California Air Resources Board has determined that the failure to perform this maintenance item will not nullify the emission warranty or limit recall liability prior to the completion of the vehicle's useful life. We, however, urge that all recommended maintenance services be performed at the indicated intervals and the maintenance be recorded.*

First Engine Oil Change After Every 160 000 km/100,000 Miles

- Automatic transmission fluid change (normal service). See *Automatic Transmission Fluid (4-Speed Transmission) on page 6-24* or *Automatic Transmission Fluid (6-Speed Transmission) on page 6-28*.
- Four-wheel drive only: Transfer case fluid change (normal service). Check vent hose at transfer case for kinks and proper installation. Check to be sure vent hose is unobstructed, clear, and free of debris. During any maintenance, if a power washer is used to clean mud and dirt from the underbody, care should be taken to not directly spray the transfer case output seals. High pressure water can overcome the seals and contaminate the transfer case fluid. Contaminated fluid will decrease the life of the transfer case and should be replaced.
- Spark plug replacement and spark plug wires inspection. *An Emission Control Service.*

First Engine Oil Change After Every 240 000 km/150,000 Miles

- Engine cooling system drain, flush, and refill, cooling system and cap pressure check, and cleaning of outside of radiator and air conditioning condenser (or every 5 years, whichever occurs first). See *Engine Coolant on page 6-33*. *An Emission Control Service.*
- Engine accessory drive belt inspection for fraying, excessive cracks, or obvious damage and replacement, if needed. *An Emission Control Service.*

Scheduled Maintenance

Service	Maintenance I	Maintenance II
Change engine oil and filter. Reset oil life system.	•	•
Engine coolant level check.	•	•
Windshield washer fluid level check.	•	•
Tire inflation pressures check.	•	•
Tire wear inspection.	•	•
Rotate tires.	•	•
Fluids visual leak check.	•	•
Engine air cleaner filter inspection (vehicles driven in dusty conditions only).	•	•
Brake system inspection.	•	•
Allison Transmission® only: External transmission filter replacement (at the first maintenance service performed on the vehicle only).		

Scheduled Maintenance (cont'd)

Service	Maintenance I	Maintenance II
Steering and suspension inspection.		•
Chassis components lubrication.		•
Engine cooling system inspection.		•
Windshield wiper blades inspection.		•
Body components lubrication.		•
Restraint system components check.		•
Automatic transmission fluid level check.		•
Four-wheel drive only: Transfer case fluid level check.		•
Engine air cleaner filter inspection (vehicles not driven in dusty conditions).		•
Shields inspection, vehicles with diesel engine or with GVWR above 4 536 kg (10,000 lbs) only.		•

Owner Checks and Services

Starter Switch Check

⚠ WARNING:

When you are doing this inspection, the vehicle could move suddenly. If the vehicle moves, you or others could be injured.

1. Before starting this check, be sure there is enough room around the vehicle.
2. Firmly apply both the parking brake and the regular brake. See *Parking Brake on page 3-54*.

   Do not use the accelerator pedal, and be ready to turn off the engine immediately if it starts.
3. Try to start the engine in each gear. The vehicle should start only in P (Park) or N (Neutral). If the vehicle starts in any other position, contact your dealer for service.

Automatic Transmission Shift Lock Control System Check

⚠ WARNING:

When you are doing this inspection, the vehicle could move suddenly. If the vehicle moves, you or others could be injured.

1. Before starting this check, be sure there is enough room around the vehicle. It should be parked on a level surface.
2. Firmly apply the parking brake. See *Parking Brake on page 3-54*.

   Be ready to apply the regular brake immediately if the vehicle begins to move.
3. With the engine off, turn the ignition to ON/RUN, but do not start the engine. Without applying the regular brake, try to move the shift lever out of P (Park) with normal effort. If the shift lever moves out of P (Park), contact your dealer for service.

Ignition Transmission Lock Check

While parked, and with the parking brake set, try to turn the ignition to LOCK/OFF in each shift lever position.

- The ignition should turn to LOCK/OFF only when the shift lever is in P (Park).
- The ignition key should come out only in LOCK/OFF.

Contact your dealer if service is required.

Parking Brake and Automatic Transmission P (Park) Mechanism Check

⚠ WARNING:

When you are doing this check, the vehicle could begin to move. You or others could be injured and property could be damaged. Make sure there is room in front of the vehicle in case it begins to roll. Be ready to apply the regular brake at once should the vehicle begin to move.

Park on a fairly steep hill, with the vehicle facing downhill. Keeping your foot on the regular brake, set the parking brake.

- To check the parking brake's holding ability: With the engine running and the transmission in N (Neutral), slowly remove foot pressure from the regular brake pedal. Do this until the vehicle is held by the parking brake only.
- To check the P (Park) mechanism's holding ability: With the engine running, shift to P (Park). Then release the parking brake followed by the regular brake.

Contact your dealer if service is required.

Recommended Fluids and Lubricants

This maintenance section applies to vehicles with a gasoline engine. If the vehicle has a diesel engine and/or an Allison Transmission, see the maintenance schedule section in the DURAMAX® Diesel manual.

Fluids and lubricants identified below by name, part number, or specification can be obtained from your dealer.

Usage	Fluid/Lubricant
Engine Oil	Engine oil which meets GM Standard GM6094M and displays the American Petroleum Institute Certified for Gasoline Engines starburst symbol. To determine the proper viscosity for your vehicle's engine, see *Engine Oil on page 6-17*.
Engine Coolant	50/50 mixture of clean, drinkable water and use only DEX-COOL® coolant. See *Engine Coolant on page 6-33*.
Hydraulic Brake System	DOT 3 Hydraulic Brake Fluid (GM Part No. U.S. 12377967, in Canada 89021320).
Windshield Washer	Optikleen® Washer Solvent.
Power Steering System	GM Power Steering Fluid (GM Part No. U.S. 89021184, in Canada 89021186).
Automatic Transmission	DEXRON®-VI Automatic Transmission Fluid.
Key Lock Cylinders	Multi-Purpose Lubricant, Superlube (GM Part No. U.S. 12346241, in Canada 10953474).
Floor Shift Linkage	Lubriplate Lubricant Aerosol (GM Part No. U.S. 12346293, in Canada 992723) or lubricant meeting requirements of NLGI #2 Category LB or GC-LB.
Chassis Lubrication	Chassis Lubricant (GM Part No. U.S. 12377985, in Canada 88901242) or lubricant meeting requirements of NLGI #2, Category LB or GC-LB.
Front Axle (1500 Series) - Four-Wheel Drive	SAE 80W-90 Axle Lubricant (GM Part No. U.S. 89021671, in Canada 89021672).
Front Axle (1500, 2500 HD, and 3500 HD Series)	SAE 75W-90 Synthetic Axle Lubricant (GM Part No. U.S. 89021677, in Canada 89021678).

Usage	Fluid/Lubricant
Rear Axle	SAE 75W-90 Synthetic Axle Lubricant (GM Part No. U.S. 89021677, in Canada 89021678).
Transfer Case (Four-Wheel Drive)	DEXRON®-VI Automatic Transmission Fluid.
Front Axle Propshaft Spline or One-Piece Propshaft Spline (Two-Wheel Drive with 4-Speed Auto. Trans.)	Spline Lubricant, Special Lubricant (GM Part No. U.S. 12345879, in Canada 10953511).
Rear Driveline Center Spline	Chassis Lubricant (GM Part No. U.S. 12377985, in Canada 88901242) or lubricant meeting requirements of NLGI #2, Category LB or GC-LB.
Hood Hinges	Multi-Purpose Lubricant, Superlube (GM Part No. U.S. 12346241, in Canada 10953474).

Usage	Fluid/Lubricant
Body Door Hinge Pins, Tailgate Hinge and Linkage, Folding Seats, and Fuel Door Hinge	Multi-Purpose Lubricant, Superlube (GM Part No. U.S. 12346241, in Canada 10953474).
Tailgate Handle Pivot Points, Hinges, Latch Bolt, and Linkage	Multi-Purpose Lubricant, Superlube (GM Part No. U.S. 12346241, in Canada 10953474).
Weatherstrip Conditioning	Weatherstrip Lubricant (GM Part No. U.S. 3634770, in Canada 10953518) or Dielectric Silicone Grease (GM Part No. U.S. 12345579, in Canada 992887).
Weatherstrip Squeaks	Synthetic Grease with Teflon, Superlube (GM Part No. U.S. 12371287, in Canada 10953437).

Maintenance Replacement Parts

Replacement parts identified below by name, part number, or specification can be obtained from your dealer.

If your vehicle has the DURAMAX® diesel engine, see the DURAMAX® Diesel manual for more information.

Part	GM Part Number	ACDelco Part Number
Engine Air Cleaner/Filter		
Standard Filter	15908916*	A3086C*
High Capacity Filter	15908915	A3085C
Oil Filter		
4.3L V6	25010792	PF47
4.8L V8; 5.3L V8; 6.0L V8; 6.2L V8	89017524	PF48
Spark Plugs		
4.3L V6	12568387	41-101
4.8L V8; 5.3L V8; 6.0L V8; 6.2L V8	12621258	41-110
Wiper Blades – 21.6 in (55.0 cm)	25877402	—
*15908915 (A3085C) high-capacity air cleaner filter may be substituted.		

Engine Drive Belt Routing

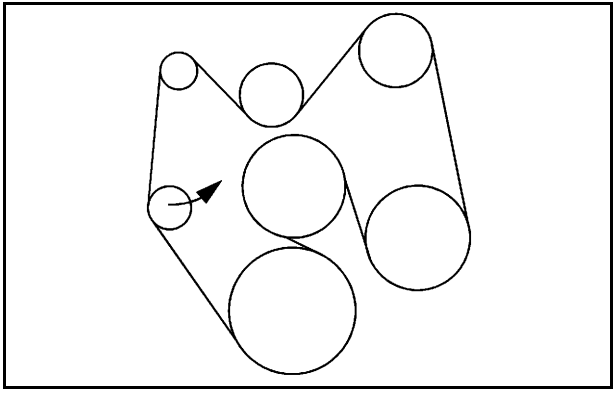

V6 Engines

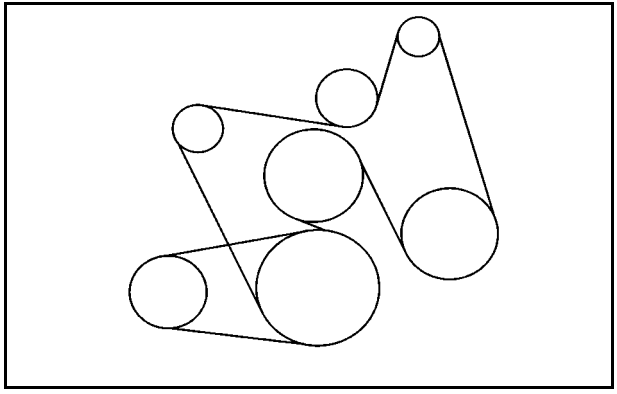

V8 Engines

If your vehicle has the DURAMAX® Diesel engine, see the DURAMAX® Diesel manual for more information.

Maintenance Record

After the scheduled services are performed, record the date, odometer reading, who performed the service, and the type of services performed in the boxes provided. Retain all maintenance receipts.

Maintenance Record

Date	Odometer Reading	Serviced By	Services Performed

Maintenance Record (cont'd)

Date	Odometer Reading	Serviced By	Services Performed

Maintenance Record (cont'd)

Date	Odometer Reading	Serviced By	Services Performed

Maintenance Record (cont'd)

Date	Odometer Reading	Serviced By	Services Performed

Section 8 Customer Assistance Information

Customer Assistance and Information 8-2
Customer Satisfaction Procedure 8-2
Online Owner Center 8-5
Customer Assistance for Text Telephone (TTY) Users 8-6
Customer Assistance Offices 8-6
GM Mobility Reimbursement Program 8-7
Roadside Assistance Program 8-7
Scheduling Service Appointments 8-11
Courtesy Transportation Program 8-11
Collision Damage Repair 8-13

Reporting Safety Defects 8-16
Reporting Safety Defects to the United States Government 8-16
Reporting Safety Defects to the Canadian Government 8-17
Reporting Safety Defects to General Motors ... 8-17
Service Publications Ordering Information 8-18

Vehicle Data Recording and Privacy 8-19
Event Data Recorders 8-20
OnStar® 8-21
Navigation System 8-21
Radio Frequency Identification (RFID) 8-21
Radio Frequency Statement 8-21

Customer Assistance and Information

Customer Satisfaction Procedure

Your satisfaction and goodwill are important to your dealer and to GMC. Normally, any concerns with the sales transaction or the operation of the vehicle will be resolved by the dealer's sales or service departments. Sometimes, however, despite the best intentions of all concerned, misunderstandings can occur. If your concern has not been resolved to your satisfaction, the following steps should be taken:

STEP ONE: Discuss your concern with a member of dealership management. Normally, concerns can be quickly resolved at that level. If the matter has already been reviewed with the sales, service or parts manager, contact the owner of the dealership or the general manager.

STEP TWO: If after contacting a member of dealership management, it appears your concern cannot be resolved by the dealership without further help, in the U.S., call the GMC Consumer Relations Manager at 1-800-GMC-8782 (1-800-462-8782, Customer Assistance prompt). In Canada, call General Motors of Canada Customer Communication at 1-800-263-3777 (English) or 1-800-263-7854 (French).

We encourage you to call the toll-free number in order to give your inquiry prompt attention. Have the following information available to give the Customer Assistance Representative:

- Vehicle Identification Number (VIN). This is available from the vehicle registration or title, or the plate at the top left of the instrument panel and visible through the windshield.
- Dealership name and location.
- Vehicle delivery date and present mileage.

When contacting GMC, remember that your concern will likely be resolved at a dealer's facility. That is why we suggest following Step One first.

STEP THREE — U.S. Owners: Both General Motors and your dealer are committed to making sure you are completely satisfied with your new vehicle. However, if you continue to remain unsatisfied after following the procedure outlined in Steps One and Two, you can file with the Better Business Bureau (BBB) Auto Line Program to enforce your rights.

The BBB Auto Line Program is an out of court program administered by the Council of Better Business Bureaus to settle automotive disputes regarding vehicle repairs or the interpretation of the New Vehicle Limited Warranty. Although you may be required to resort to this informal dispute resolution program prior to filling out a court action, use of the program is free of charge and your case will generally be heard within 40 days. If you do not agree with the decision given in your case, you may reject it and proceed with any other venue for relief available to you.

You may contact the BBB Auto Line Program using the toll-free telephone number or write them at the following address:

BBB Auto Line Program
Council of Better Business Bureaus, Inc.
4200 Wilson Boulevard
Suite 800
Arlington, VA 22203-1838

Telephone: 1-800-955-5100
dr.bbb.org/goauto

This program is available in all 50 states and the District of Columbia. Eligibility is limited by vehicle age, mileage, and other factors. General Motors reserves the right to change eligibility limitations and/or discontinue its participation in this program.

STEP THREE — Canadian Owners: In the event that you do not feel your concerns have been addressed after following the procedure outlined in Steps One and Two, General Motors of Canada Limited wants you to be aware of its participation in a no-charge Mediation/ Arbitration Program. General Motors of Canada Limited has committed to binding arbitration of owner disputes involving factory-related vehicle service claims. The program provides for the review of the facts involved by an impartial third party arbiter, and may include an informal hearing before the arbiter. The program is designed so that the entire dispute settlement process, from the time you file your complaint to the final decision, should be completed in approximately 70 days. We believe our impartial program offers advantages over courts in most jurisdictions because it is informal, quick, and free of charge.

For further information concerning eligibility in the Canadian Motor Vehicle Arbitration Plan (CAMVAP), call toll-free 1-800-207-0685, or call the General Motors Customer Communication Centre, 1-800-263-3777 (English), 1-800-263-7854 (French), or write to:

Mediation/Arbitration Program
c/o Customer Communication Centre
General Motors of Canada Limited
Mail Code: CA1-163-005
1908 Colonel Sam Drive
Oshawa, Ontario L1H 8P7

Telephone: 1-800-955-5100

Your inquiry should be accompanied by the Vehicle Identification Number (VIN).

Online Owner Center

Online Owner Center (U.S.) — www.gmownercenter.com/gmc

Information and services customized for your specific vehicle — all in one convenient place.

- Digital owner manual, warranty information, and more
- Online service and maintenance records
- Find GMC dealers for service nationwide
- Exclusive privileges and offers
- Recall notices for your specific vehicle
- OnStar® and GM Cardmember Services Earnings summaries

Other Helpful Links:

GMC — www.gmc.com

GMC Merchandise — www.gmccollection.com

Help Center — www.gmc.com/helpcenter

- FAQ
- Contact Us

My GM Canada (Canada) — www.gm.ca

My GM Canada is a password-protected section of www.gm.ca where you can save information on GM vehicles, get personalized offers, and use handy tools and forms with greater ease.

Here are a few of the valuable tools and services you will have access to:

- My Showroom: Find and save information on vehicles and current offers in your area.
- My Dealers/Retailers: Save details such as address and phone number for each of your preferred GM dealers/retailers.
- My Driveway: Access quick links to parts and service estimates, check trade-in values, or schedule a service appointment by adding the vehicles you own to your driveway profile.
- My Preferences: Manage your profile and use tools and forms with greater ease.

To sign up, visit the My GM Canada section within www.gm.ca.

Customer Assistance for Text Telephone (TTY) Users

To assist customers who are deaf, hard of hearing, or speech-impaired and who use the Text Telephones (TTYs), GMC has TTY equipment available at its Customer Assistance Center. Any TTY user can communicate with GMC by dialing: 1-800-GMC-8583 (462-8583). (TTY users in Canada can dial 1-800-263-3830.)

Customer Assistance Offices

GMC encourages customers to call the toll-free number for assistance. However, if a customer wishes to write or e-mail GMC, the letter should be addressed to:

United States

GMC Customer Assistance Center
P.O. Box 33172
Detroit, MI 48232-5172

www.GMC.com

1-800-GMC-8782 (462-8782)
1-800-GMC-8583 (462-8583)
(For Text Telephone devices (TTYs))
Roadside Assistance: 1-800-GMC-8782 (462-8782)

From Puerto Rico

1-800-496-9992 (English)
1-800-496-9993 (Spanish)

U.S. Virgin Islands:

1-800-496-9994

Canada

General Motors of Canada Limited
Customer Communication Centre, CA1-163-005
1908 Colonel Sam Drive
Oshawa, Ontario L1H 8P7
www.gmcanada.com

1-800-263-3777 (English)
1-800-263-7854 (French)
1-800-263-3830 (For Text Telephone devices (TTYs))
Roadside Assistance: 1-800-268-6800

All Overseas Locations

Please contact the local General Motors Business Unit.

Mexico, Central America and Caribbean Islands/Countries (Except Puerto Rico and U.S. Virgin Islands)

General Motors de Mexico, S. de R.L. de C.V.
Customer Assistance Center
Paseo de la Reforma # 2740
Col. Lomas de Bezares
C.P. 11910, Mexico, D.F.

01-800-508-0000
Long Distance: 011-52-53 29 0 800

GM Mobility Reimbursement Program

GM MOBILITY℠

This program, available to qualified applicants, can reimburse you up to $1,000 of the cost of eligible aftermarket adaptive equipment required for your vehicle, such as hand controls or a wheelchair/scooter lift.

The offer is available for a very limited period of time from the date of vehicle purchase/lease. For more details, or to determine your vehicle's eligibility, visit gmmobility.com or call the GM Mobility Assistance Center at 1-800-323-9935. Text telephone (TTY) users, call 1-800-833-9935.

General Motors of Canada also has a Mobility Program. Call 1-800-GM-DRIVE (463-7483) for details. TTY users call 1-800-263-3830.

Roadside Assistance Program

For U.S. purchased vehicles, call **1-800-GMC-8782 (1-800-462-8782); (Text telephone (TTY): 1-888-889-2438)**.

For Canadian purchased vehicles, call **1-800-268-6800**.

Service is available 24 hours a day, 365 days a year.

Calling for Assistance

When calling Roadside Assistance, have the following information ready:

- Your name, home address, and home telephone number
- Telephone number of your location
- Location of the vehicle
- Model, year, color, and license plate number of the vehicle
- Odometer reading, Vehicle Identification Number (VIN), and delivery date of the vehicle
- Description of the problem

Coverage

Services are provided up to 5 years/100,000 miles (160 000 km), whichever comes first.

In the U.S., anyone driving the vehicle is covered. In Canada, a person driving the vehicle without permission from the owner is not covered.

Roadside Assistance is not a part of the New Vehicle Limited Warranty. GMC and General Motors of Canada Limited reserve the right to make any changes or discontinue the Roadside Assistance program at any time without notification.

GMC and General Motors of Canada Limited reserve the right to limit services or payment to an owner or driver if they decide the claims are made too often, or the same type of claim is made many times.

Services Provided

- **Emergency Fuel Delivery:** Delivery of enough fuel for the vehicle to get to the nearest service station.
- **Lock-Out Service:** Service is provided to unlock the vehicle if you are locked out. A remote unlock may be available if you have OnStar®. For security reasons, the driver must present identification before this service is given.
- **Emergency Tow From a Public Road or Highway:** Tow to the nearest GMC dealer for warranty service, or if the vehicle was in a crash and cannot be driven. Assistance is also given when the vehicle is stuck in the sand, mud, or snow.
- **Flat Tire Change:** Service is provided to change a flat tire with the spare tire. The spare tire, if equipped, must be in good condition and properly inflated. It is the owner's responsibility for the repair or replacement of the tire if it is not covered by the warranty.
- **Battery Jump Start:** Service is provided to jump start a dead battery.
- **Trip Routing Service:** Detailed maps of North America are provided when requested either with the most direct route or the most scenic route. Additional travel information is also available. Allow three weeks for delivery.
- **Trip Interruption Benefits and Assistance:** If your trip is interrupted due to a warranty failure, incidental expenses may be reimbursed during the 5 years/100,000 miles (160 000 km) Powertrain warranty period. Items considered are hotel, meals, and rental car.

Services Not Included in Roadside Assistance

- Impound towing caused by violation of any laws.
- Legal fines.
- Mounting, dismounting or changing of snow tires, chains, or other traction devices.
- Towing or services for vehicles driven on a non-public road or highway.

Services Specific to Canadian Purchased Vehicles

- **Fuel delivery:** Reimbursement is approximately $5 Canadian. Diesel fuel delivery may be restricted. Propane and other fuels are not provided through this service.
- **Lock-Out Service:** Vehicle registration is required.
- **Trip Routing Service:** Limit of six requests per year.
- **Trip Interruption Benefits and Assistance:** Must be over 250 kilometres from where your trip was started to qualify. General Motors of Canada Limited requires pre-authorization, original detailed receipts, and a copy of the repair orders. Once authorization has been received, the Roadside Assistance advisor will help you make arrangements and explain how to receive payment.
- **Alternative Service:** If assistance cannot be provided right away, the Roadside Assistance advisor may give you permission to get local emergency road service. You will receive payment, up to $100, after sending the original receipt to Roadside Assistance. Mechanical failures may be covered, however any cost for parts and labor for repairs not covered by the warranty are the owner responsibility.

Scheduling Service Appointments

When your vehicle requires warranty service, contact your dealer and request an appointment. By scheduling a service appointment and advising your service consultant of your transportation needs, your dealer can help minimize your inconvenience.

If your vehicle cannot be scheduled into the service department immediately, keep driving it until it can be scheduled for service, unless, of course, the problem is safety-related. If it is, please call your dealership/ retailer, let them know this, and ask for instructions.

If the dealer requests you to bring the vehicle for service, you are urged to do so as early in the work day as possible to allow for the same day repair.

Courtesy Transportation Program

To enhance your ownership experience, we and our participating dealers are proud to offer Courtesy Transportation, a customer support program for vehicles with the New Vehicle Limited Warranty (Base Warranty Coverage period in Canada) and extended powertrain, and hybrid specific warranty in both the U.S. and Canada.

Several courtesy transportation options are available to assist in reducing your inconvenience when warranty repairs are required.

Courtesy Transportation is not a part of the New Vehicle Limited Warranty. A separate booklet entitled “Warranty and Owner Assistance Information” furnished with each new vehicle provides detailed warranty coverage information.

Transportation Options

Warranty service can generally be completed while you wait. However, if you are unable to wait, GM helps to minimize your inconvenience by providing several transportation options. Depending on the circumstances, your dealer can offer you one of the following:

Shuttle Service

Shuttle service is the preferred means of offering Courtesy Transportation. Dealers may provide you with shuttle service to get you to your destination with minimal interruption of your daily schedule. This includes one-way or round trip shuttle service within reasonable time and distance parameters of the dealer's area.

Public Transportation or Fuel Reimbursement

If your vehicle requires overnight warranty repairs, and public transportation is used instead of the dealer's shuttle service, the expense must be supported by original receipts and can only be up to the maximum amount allowed by GM for shuttle service. In addition, for U.S. customers, should you arrange transportation through a friend or relative, limited reimbursement for reasonable fuel expenses may be available. Claim amounts should reflect actual costs and be supported by original receipts. See your dealer for information regarding the allowance amounts for reimbursement of fuel or other transportation costs.

Courtesy Rental Vehicle

Your dealer may arrange to provide you with a courtesy rental vehicle or reimburse you for a rental vehicle that you obtain if your vehicle is kept for an overnight warranty repair. Rental reimbursement will be limited and must be supported by original receipts. This requires that you sign and complete a rental agreement and meet state/provincial, local, and rental vehicle provider requirements. Requirements vary and may include minimum age requirements, insurance coverage, credit card, etc. You are responsible for fuel usage charges and may also be responsible for taxes, levies, usage fees, excessive mileage, or rental usage beyond the completion of the repair.

It may not be possible to provide a like-vehicle as a courtesy rental.

Additional Program Information

All program options, such as shuttle service, may not be available at every dealer. Please contact your dealer for specific information about availability. All Courtesy Transportation arrangements will be administered by appropriate dealer personnel.

General Motors reserves the right to unilaterally modify, change or discontinue Courtesy Transportation at any time and to resolve all questions of claim eligibility pursuant to the terms and conditions described herein at its sole discretion.

Collision Damage Repair

If your vehicle is involved in a collision and it is damaged, have the damage repaired by a qualified technician using the proper equipment and quality replacement parts. Poorly performed collision repairs diminish your vehicle's resale value, and safety performance can be compromised in subsequent collisions.

Collision Parts

Genuine GM Collision parts are new parts made with the same materials and construction methods as the parts with which your vehicle was originally built. Genuine GM Collision parts are your best choice to ensure that your vehicle's designed appearance, durability, and safety are preserved. The use of Genuine GM parts can help maintain your GM New Vehicle Warranty.

Recycled original equipment parts may also be used for repair. These parts are typically removed from vehicles that were total losses in prior crashes. In most cases, the parts being recycled are from undamaged sections of the vehicle. A recycled original equipment GM part, may be an acceptable choice to maintain your vehicle's originally designed appearance and safety performance, however, the history of these parts is not known. Such parts are not covered by your GM New Vehicle Limited Warranty, and any related failures are not covered by that warranty.

Aftermarket collision parts are also available. These are made by companies other than GM and may not have been tested for your vehicle. As a result, these parts may fit poorly, exhibit premature durability/corrosion problems, and may not perform properly in subsequent collisions. Aftermarket parts are not covered by your GM New Vehicle Limited Warranty, and any vehicle failure related to such parts are not covered by that warranty.

Repair Facility

We recommend that you choose a collision repair facility that meets your needs before you ever need collision repairs. Your dealer may have a collision repair center with GM-trained technicians and state of the art equipment, or be able to recommend a collision repair center that has GM-trained technicians and comparable equipment.

Insuring Your Vehicle

Protect your investment in your GM vehicle with comprehensive and collision insurance coverage. There are significant differences in the quality of coverage afforded by various insurance policy terms. Many insurance policies provide reduced protection to your GM vehicle by limiting compensation for damage repairs by using aftermarket collision parts. Some insurance companies will not specify aftermarket collision parts. When purchasing insurance, we recommend that you assure your vehicle will be repaired with GM original equipment collision parts. If such insurance coverage is not available from your current insurance carrier, consider switching to another insurance carrier.

If your vehicle is leased, the leasing company may require you to have insurance that assures repairs with Genuine GM Original Equipment Manufacturer (OEM) parts or Genuine Manufacturer replacement parts. Read your lease carefully, as you may be charged at the end of your lease for poor quality repairs.

If a Crash Occurs

Here is what to do if you are involved in a crash.

- Check to make sure that you are all right. If you are uninjured, make sure that no one else in your vehicle, or the other vehicle, is injured.
- If there has been an injury, call emergency services for help. Do not leave the scene of a crash until all matters have been taken care of. Move your vehicle only if its position puts you in danger or you are instructed to move it by a police officer.
- Give only the necessary and requested information to police and other parties involved in the crash. Do not discuss your personal condition, mental frame of mind, or anything unrelated to the crash. This will help guard against post-crash legal action.
- If you need roadside assistance, call GM Roadside Assistance. See *Roadside Assistance Program on page 8-7* for more information.
- If your vehicle cannot be driven, know where the towing service will be taking it. Get a card from the tow truck operator or write down the driver's name, the service's name, and the phone number.
- Remove any valuables from your vehicle before it is towed away. Make sure this includes your insurance information and registration if you keep these items in your vehicle.
- Gather the important information you will need from the other driver. Things like name, address, phone number, driver's license number, vehicle license plate, vehicle make, model and model year, Vehicle Identification Number (VIN), insurance company and policy number, and a general description of the damage to the other vehicle.
- If possible, call your insurance company from the scene of the crash. They will walk you through the information they will need. If they ask for a police report, phone or go to the police department headquarters the next day and you can get a copy of the report for a nominal fee. In some states/provinces with “no fault” insurance laws, a report may not be necessary. This is especially true if there are no injuries and both vehicles are driveable.
- Choose a reputable collision repair facility for your vehicle. Whether you select a dealer or a private collision repair facility to fix the damage, make sure you are comfortable with them. Remember, you will have to feel comfortable with their work for a long time.
- Once you have an estimate, read it carefully and make sure you understand what work will be performed on your vehicle. If you have a question, ask for an explanation. Reputable shops welcome this opportunity.

Managing the Vehicle Damage Repair Process

In the event that your vehicle requires damage repairs, GM recommends that you take an active role in its repair. If you have a pre-determined repair facility of choice, take your vehicle there, or have it towed there. Specify to the facility that any required replacement collision parts be original equipment parts, either new Genuine GM parts or recycled original GM parts. Remember, recycled parts will not be covered by your GM vehicle warranty.

Insurance pays the bill for the repair, but you must live with the repair. Depending on your policy limits, your insurance company may initially value the repair using aftermarket parts. Discuss this with your repair professional, and insist on Genuine GM parts. Remember if your vehicle is leased you may be obligated to have the vehicle repaired with Genuine GM parts, even if your insurance coverage does not pay the full cost.

If another party's insurance company is paying for the repairs, you are not obligated to accept a repair valuation based on that insurance company's collision policy repair limits, as you have no contractual limits with that company. In such cases, you can have control of the repair and parts choices as long as cost stays within reasonable limits.

Reporting Safety Defects

Reporting Safety Defects to the United States Government

If you believe that your vehicle has a defect which could cause a crash or could cause injury or death, you should immediately inform the National Highway Traffic Safety Administration (NHTSA) in addition to notifying General Motors.

If NHTSA receives similar complaints, it may open an investigation, and if it finds that a safety defect exists in a group of vehicles, it may order a recall and remedy campaign. However, NHTSA cannot become involved in individual problems between you, your dealer, or General Motors.

To contact NHTSA, you may call the Vehicle Safety Hotline toll-free at 1-888-327-4236 (TTY: 1-800-424-9153); go to *http://www.safercar.gov*; or write to:

Administrator, NHTSA
1200 New Jersey Avenue, S.E.
Washington, D.C. 20590

You can also obtain other information about motor vehicle safety from *http://www.safercar.gov*.

Reporting Safety Defects to the Canadian Government

If you live in Canada, and you believe that your vehicle has a safety defect, notify Transport Canada immediately, in addition to notifying General Motors of Canada Limited. Call them at 1-800-333-0510 or write to:

Transport Canada
Road Safety Branch
2780 Sheffield Road
Ottawa, Ontario K1B 3V9

1-800-333-0510

Reporting Safety Defects to General Motors

In addition to notifying NHTSA (or Transport Canada) in a situation like this, please notify General Motors.

Call 1-800-GMC-8782 (1-800-462-8782), or write:

GMC Customer Assistance Center
P.O. Box 33172
Detroit, MI 48232-5172

In Canada, call 1-800-263-3777 (English) or 1-800-263-7854 (French), or write:

General Motors of Canada Limited
Customer Communication Centre, CA1-163-005
1908 Colonel Sam Drive
Oshawa, Ontario L1H 8P7

Service Publications Ordering Information

Service Manuals

Service Manuals have the diagnosis and repair information on engines, transmission, axle suspension, brakes, electrical, steering, body, etc.

Service Bulletins

Service Bulletins give additional technical service information needed to knowledgeably service General Motors cars and trucks. Each bulletin contains instructions to assist in the diagnosis and service of your vehicle.

Owner Information

Owner publications are written specifically for owners and intended to provide basic operational information about the vehicle. The owner manual includes the Maintenance Schedule for all models.

In-Portfolio: Includes a Portfolio, Owner Manual, and Warranty Booklet.

RETAIL SELL PRICE: $35.00 (U.S.) plus processing fee

Without Portfolio: Owner Manual only.

RETAIL SELL PRICE: $25.00 (U.S.) plus processing fee

Current and Past Model Order Forms

Technical Service Bulletins and Manuals are available for current and past model GM vehicles. To request an order form, specify year and model name of the vehicle.

ORDER TOLL FREE: 1-800-551-4123 Monday-Friday 8:00 AM - 6:00 PM Eastern Time

For Credit Card Orders Only
(VISA-MasterCard-Discover), visit Helm, Inc.
on the World Wide Web at: helminc.com

Or you can write to:

Helm, Incorporated
P.O. Box 07130
Detroit, MI 48207

Prices are subject to change without notice and without incurring obligation. Allow ample time for delivery.

Note to Canadian Customers: All listed prices are quoted in U.S. funds. Canadian residents are to make checks payable in U.S. funds.

Vehicle Data Recording and Privacy

Your GM vehicle has a number of sophisticated computers that record information about the vehicle's performance and how it is driven. For example, your vehicle uses computer modules to monitor and control engine and transmission performance, to monitor the conditions for airbag deployment and deploy airbags in a crash and, if so equipped, to provide antilock braking to help the driver control the vehicle. These modules may store data to help your dealer technician service your vehicle. Some modules may also store data about how you operate the vehicle, such as rate of fuel consumption or average speed. These modules may also retain the owner's personal preferences, such as radio pre-sets, seat positions, and temperature settings.

Event Data Recorders

This vehicle has an Event Data Recorder (EDR). The main purpose of an EDR is to record, in certain crash or near crash-like situations, such as an airbag deployment or hitting a road obstacle, data that will assist in understanding how a vehicle's systems performed. The EDR is designed to record data related to vehicle dynamics and safety systems for a short period of time, typically 30 seconds or less. The EDR in this vehicle is designed to record such data as:

- How various systems in your vehicle were operating
- Whether or not the driver and passenger safety belts were buckled/fastened
- How far, if at all, the driver was pressing the accelerator and/or brake pedal
- How fast the vehicle was traveling

This data can help provide a better understanding of the circumstances in which crashes and injuries occur.

Important: EDR data is recorded by your vehicle only if a non-trivial crash situation occurs; no data is recorded by the EDR under normal driving conditions and no personal data (e.g., name, gender, age, and crash location) is recorded. However, other parties, such as law enforcement, could combine the EDR data with the type of personally identifying data routinely acquired during a crash investigation.

To read data recorded by an EDR, special equipment is required, and access to the vehicle or the EDR is needed. In addition to the vehicle manufacturer, other parties, such as law enforcement, that have the special equipment, can read the information if they have access to the vehicle or the EDR.

GM will not access this data or share it with others except: with the consent of the vehicle owner or, if the vehicle is leased, with the consent of the lessee; in response to an official request of police or similar government office; as part of GM's defense of litigation through the discovery process; or, as required by law. Data that GM collects or receives may also be used for GM research needs or may be made available to others for research purposes, where a need is shown and the data is not tied to a specific vehicle or vehicle owner.

OnStar®

If the vehicle has OnStar and you subscribe to the OnStar services, please refer to the OnStar Terms and Conditions in the OnStar Owners Guide for information on data collection and use.

Navigation System

If your vehicle has a navigation system, use of the system may result in the storage of destinations, addresses, telephone numbers, and other trip information. Refer to the navigation system operating manual for information on stored data and for deletion instructions.

Radio Frequency Identification (RFID)

RFID technology is used in some vehicles for functions such as tire pressure monitoring and ignition system security, as well as in connection with conveniences such as key fobs for remote door locking/unlocking and starting, and in-vehicle transmitters for garage door openers. RFID technology in GM vehicles does not use or record personal information or link with any other GM system containing personal information.

Radio Frequency Statement

This vehicle has systems that operate on a radio frequency that comply with Part 15 of the Federal Communications Commission (FCC) Rules and with RSS-210/211 of Industry Canada.

Operation is subject to the following two conditions:

1. The device may not cause interference.
2. The device must accept any interference received, including interference that may cause undesired operation of the device.

Changes or modifications to any of these systems by other than an authorized service facility could void authorization to use this equipment.

✍ NOTES

A

Accessories and Modifications 6-4
Accessory Power 3-25
Accessory Power Outlets 4-17
Active Fuel Management™ 3-30
Add-On Electrical Equipment 6-129
Adding a Snow Plow or Similar Equipment 5-41
Additives, Fuel 6-9
Adjustable Throttle and Brake Pedal 3-28
Air Cleaner/Filter, Engine 6-22
Air Conditioning 4-19, 4-20
Airbag
  Adding Equipment to Your Airbag-Equipped Vehicle 2-92
Airbag System
  Airbag Off Switch 2-83
  How Does an Airbag Restrain? 2-80
  Passenger Sensing System 2-86
  Servicing Your Airbag-Equipped Vehicle 2-92
  What Makes an Airbag Inflate? 2-80
  What Will You See After an Airbag Inflates? 2-81
  When Should an Airbag Inflate? 2-78
  Where Are the Airbags? 2-75
Airbags
  Off Light 4-34
  Passenger Status Indicator 4-36
  Readiness Light 4-33
  System Check 2-73
Antenna
  Fixed Mast 4-151
Antenna, XM™ Satellite Radio Antenna System 4-151
Antilock Brake System (ABS) 5-4
  Warning Light 4-40
Appearance Care
  Aluminum or Chrome-Plated Wheels 6-126
  Care of Safety Belts 6-124
  Chemical Paint Spotting 6-128
  Cleaning Exterior Lamps/Lenses 6-125
  Fabric/Carpet 6-122
  Finish Care 6-125
  Finish Damage 6-127
  Instrument Panel, Vinyl, and Other Plastic Surfaces 6-123
  Interior Cleaning 6-121
  Leather 6-123

Appearance Care (cont.)
Sheet Metal Damage 6-127
Tires 6-127
Underbody Maintenance 6-128
Washing Your Vehicle 6-124
Weatherstrips 6-124
Windshield and Wiper Blades 6-126
Ashtray 4-19
Assistance Program, Roadside 8-7
Audio System 4-85
Audio Steering Wheel Controls 4-148
Navigation/Radio System, see Navigation Manual 4-125
Radio Reception 4-150
Rear Seat (RSA) 4-145
Setting the Clock 4-86
Theft-Deterrent Feature 4-148
XM™ Satellite Radio Antenna System 4-151
Audio System(s) 4-88
Automatic Headlamp System 4-12
Automatic Transmission
Fluid 6-24, 6-28
Operation 3-30
Auxiliary
Roof Mounted Lamp 4-14
Axle, Rear 6-54

B

Battery 6-48
Electric Power Management 4-16
Run-Down Protection 4-17
Belt Routing, Engine 7-16
Bluetooth® 4-125
Brake
Emergencies 5-5
Pedal and Adjustable Throttle 3-28
Brakes 6-45
Antilock 5-4
Parking 3-54
System Warning Light 4-38
Braking 5-3
Braking in Emergencies 5-5
Break-In, New Vehicle 3-23
Bulb Replacement 6-69
Center High-Mounted Stoplamp (CHMSL) and Cargo Lamp 6-65
Fog Lamps 4-14
Halogen Bulbs 6-63
Headlamp Aiming 6-60
Headlamps 6-63, 6-64

Bulb Replacement (cont.)
License Plate Lamps 6-68
Pickup Box Identification and Fender Marker Lamps 6-66
Taillamps, Turn Signal, Stoplamps and Back-up Lamps 6-66
Buying New Tires 6-92

C

Calibration 4-63
California
Perchlorate Materials Requirements 6-5
Warning 6-5
California Fuel 6-8
Camera, Rear Vision 3-67
Canadian Owners iii
Capacities and Specifications 6-137
Carbon Monoxide
Engine Exhaust 3-58
Tailgate 3-14
Winter Driving 5-29
Care of
Safety Belts 6-124
Cargo Lamp 4-16
CD, MP3 . . . . . 4-109, 4-116
Center Console Storage 3-81
Center High-Mounted Stoplamp (CHMSL) and Cargo Lamp 6-65
Center Seat 2-13
Chains, Tire 6-98
Charging System Light 4-37
Check
Engine Light 4-42
Checking Things Under the Hood 6-14
Chemical Paint Spotting 6-128
Child Restraints
Infants and Young Children 2-42
Lower Anchors and Tethers for Children 2-49
Older Children 2-39
Securing a Child Restraint in a Rear Seat Position 2-58
Securing a Child Restraint in the Center Front Seat Position 2-61
Securing a Child Restraint in the Right Front Seat Position 2-62, 2-66, 2-70
Systems 2-45
Where to Put the Restraint 2-47
Cigarette Lighter 4-19
Circuit Breakers 6-130
Cleaning
Aluminum or Chrome-Plated Wheels 6-126
Exterior Lamps/Lenses 6-125
Fabric/Carpet 6-122
Finish Care 6-125

Cleaning (cont.)
Instrument Panel, Vinyl, and Other Plastic Surfaces 6-123
Interior 6-121
Leather 6-123
Tires 6-127
Underbody Maintenance 6-128
Washing Your Vehicle 6-124
Weatherstrips 6-124
Windshield and Wiper Blades 6-126
Climate Control System 4-19, 4-20
Outlet Adjustment 4-29
Climate Control Systems
Dual Automatic 4-23
Climate Controls 1-19
Clock, Setting 4-86
Collision Damage Repair 8-13
Compass 4-63
Content Theft-Deterrent 3-19
Control of a Vehicle 5-3
Coolant
Engine 6-33
Engine Temperature Gauge 4-41
Cooling System 6-32
Courtesy Transportation Program 8-11
Cruise Control 4-7
Light 4-47
Cupholders 3-80
Customer Assistance 8-6
Offices 8-6
Text Telephone (TTY) Users 8-6
Customer Information
Service Publications Ordering Information 8-18
Customer Satisfaction Procedure 8-2

D

Damage Repair, Collision 8-13
Data Recorders, Event 8-20
Daytime Running Lamps (DRL) 4-12
Defensive Driving 5-2
Delayed Locking 3-11
DIC Compass 4-63
Disc, MP3 ....4-109, 4-116
Doing Your Own Service Work 6-5
Dome Lamp Override 4-15
Dome Lamps 4-15
Door
Delayed Locking 3-11
Locks 3-10
Power Locks 3-11
Programmable Automatic Door Locks 3-11
Rear Door Security Locks 3-12
Rear Doors 3-13

Driver Information Center (DIC) 4-50
DIC Operation and Displays 4-50, 4-59
DIC Vehicle Customization 4-76
DIC Warnings and Messages 4-66
Driving
At Night 5-25
Before a Long Trip 5-27
Defensive 5-2
Drunk 5-2
Highway Hypnosis 5-27
Hill and Mountain Roads 5-28
In Rain and on Wet Roads 5-26
Loss of Control 5-11
Off-Road 5-13
Off-Road Recovery 5-11
Recovery Hooks 5-32
Rocking Your Vehicle to Get it Out 5-32
Winter 5-29
Driving for Better Fuel Economy 1-34
Dual Automatic Climate Control System 4-23
Dual Tire Operation 6-82
DVD
Rear Seat Entertainment System 4-136

E

E85 Fuel 6-10
EDR 8-19
Electrical Equipment, Add-On 6-129
Electrical System
Center Instrument Panel Fuse Block 6-132
Fuses and Circuit Breakers 6-130
Instrument Panel Fuse Block 6-130
Power Windows and Other Power Options 6-129
Underhood Fuse Block 6-133
Windshield Wiper Fuses 6-129
Electronic Immobilizer
PASS-Key® III+ 3-21
Electronic Immobilizer Operation
PASS-Key® III+ 3-21
Engine
Air Cleaner/Filter 6-22
Check and Service Engine Soon Light 4-42
Compartment Overview 6-16
Coolant 6-33
Coolant Heater 3-29
Coolant Temperature Gauge 4-41
Cooling System 6-32

Engine (cont.)
Drive Belt Routing 7-16
Exhaust 3-58
Fan Noise 6-42
Fast Idle System 3-27
Oil 6-17
Overheated Protection Operating Mode 6-41
Overheating 6-39
Starting 3-26
Engine Oil
Life System 6-20
Entry Lighting 4-15
Event Data Recorders 8-20
Exit Lighting 4-15
Extender, Safety Belt 2-38
Exterior Lamps 4-10

F

Fast Idle System 3-27
Filter
Engine Air Cleaner 6-22
Finish Damage 6-127
Fixed Mast Antenna 4-151
Flash-to-Pass 4-5
Flashers, Hazard Warning 4-3
Flat Tire 6-99
Flat Tire, Changing 6-100
Flat Tire, Storing 6-116
Fluid
Automatic Transmission 6-24, 6-28
Power Steering 6-42
Windshield Washer 6-43
Fog Lamps
Bulb Replacement 4-14
Light 4-47
Four-Wheel Drive 3-39, 6-56
Four-Wheel-Drive Light 4-48
Front Axle 6-58
Fuel 6-6
Additives 6-9
California Fuel 6-8
E85 (85% Ethanol) 6-10
Filling a Portable Fuel Container 6-14
Filling the Tank 6-12
Fuels in Foreign Countries 6-11
Gasoline Octane 6-7
Gasoline Specifications 6-8
Gauge 4-48
Low Fuel Warning Light 4-49
Management, Active 3-30
Fuel Economy
Driving for Better 1-34

Fuses
Center Instrument Panel Fuse Block 6-132
Fuses and Circuit Breakers 6-130
Instrument Panel Fuse Block 6-130
Underhood Fuse Block 6-133
Windshield Wiper 6-129

G

Garage Door Opener 3-73
Gasoline
Octane 6-7
Specifications 6-8
Gauges
Engine Coolant Temperature 4-41
Fuel 4-48
Oil Pressure 4-45
Speedometer 4-31
Tachometer 4-31
Trip Odometer 4-31
Voltmeter Gauge 4-38
Glove Box 3-80
GM Mobility Reimbursement Program 8-7

H

Halogen Bulbs 6-63
Hazard Warning Flashers 4-3
Head Restraints 2-3
Headlamps 6-64
Aiming 6-60
Bulb Replacement 6-63
Daytime Running Lamps (DRL) 4-12
Exterior Lamps 4-10
Flash-to-Pass 4-5
High/Low Beam Changer 4-5
On Reminder 4-12
Pickup Box Identification and Fender Marker Lamps 6-66
Heated Seats 2-8
Heater 4-19, 4-20
Engine Coolant 3-29
High-Speed Operation, Tires 6-82
Highbeam On Light 4-47
Highway Hypnosis 5-27
Hill and Mountain Roads 5-28
Hood
Checking Things Under 6-14
Release 6-15
Horn 4-3
How to Wear Safety Belts Properly 2-21

I

Ignition Positions 3-24
Infants and Young Children, Restraints 2-42
Inflation - Tire Pressure 6-80
Instrument Panel
  Brightness 4-15
  Storage Area 3-81
Instrument Panel Cluster 4-30
Integrated Trailer Brake Control System (ITBC) 5-55
Introduction 7-2

J

Jump Starting 6-49

K

Keyless Entry
  Remote (RKE) System 3-5
Keyless Entry System 3-4
Keys 3-3

L

Labeling, Tire Sidewall 6-72
Lamps
  Auxiliary Roof Mounted Lamp 4-14
  Cargo 4-16
  Daytime Running (DRL) 4-12
  Dome 4-15
  Dome Lamp Override 4-15
  License Plate 6-68
  Malfunction Indicator 4-42
  Reading 4-16
Lap Belt 2-37
Lap-Shoulder Belt 2-30
LATCH System for Child Restraints 2-49
Latches, Seatback 2-13
Lighting
  Entry 4-15
  Exit 4-15
Lights
  Airbag Off 4-34
  Airbag Readiness 4-33
  Antilock Brake System (ABS) Warning 4-40

Lights (cont.)
Brake System Warning 4-38
Charging System 4-37
Cruise Control 4-47
Exterior Lamps 4-10
Flash-to-Pass 4-5
Fog Lamps 4-47
Four-Wheel-Drive 4-48
High/Low Beam Changer 4-5
Highbeam On 4-47
Low Fuel Warning 4-49
Oil Pressure 4-46
On Reminder 4-12
Passenger Airbag Status Indicator 4-36
Safety Belt Reminders 4-32
Security 4-47
StabiliTrak® Indicator 4-40
Tire Pressure 4-41
Tow/Haul Mode 4-48
Loading Your Vehicle 5-33
Locking Rear Axle 5-9
Locks
Delayed Locking 3-11
Door 3-10
Lockout Protection 3-13
Locks (cont.)
Power Door 3-11
Programmable Automatic Door Locks 3-11
Rear Door Security Locks 3-12
Loss of Control 5-11
Low Fuel Warning Light 4-49
Lower Anchors and Tethers for Children 2-49
Lumbar
Manual Controls 2-6
Power Controls 2-7

M

Maintenance Schedule
Maintenance Record 7-17
Maintenance Replacement Parts 7-15
Owner Checks and Services 7-11
Recommended Fluids and Lubricants 7-13
Scheduled Maintenance 7-3
Malfunction Indicator Lamp 4-42
Manual Lumbar Controls 2-6
Manual Seats 2-4
Manual Windows 3-17
Memory Seat, Mirrors, and Pedals 2-8
Message
DIC Warnings and Messages 4-66

Mirrors
Automatic Dimming Rearview 3-60
Manual Rearview 3-60
Outside Convex Mirror 3-63
Outside Heated Mirrors 3-63
Outside Manual Mirrors 3-60
Outside Power Foldaway Mirrors 3-62
Outside Power Mirrors 3-61
Outside Towing Mirrors 3-61
Park Tilt 3-63
MP3 . . . . . 4-109, 4-116

N

Navigation System, Privacy 8-21
Navigation/Radio System, see Navigation Manual 4-125
New Vehicle Break-In 3-23
Noise Control System, Tampering 6-59

O

Odometer 4-31
Trip 4-31
Off-Road 5-13
Driving 5-13
Recovery 5-11
Oil
Engine 6-17
Engine Oil Life System 6-20
Pressure Gauge 4-45
Pressure Light 4-46
Older Children, Restraints 2-39
Online Owner Center 8-5
OnStar, Privacy 8-21
OnStar® System 1-35
Operation, Universal Home Remote System 3-73
Outlet Adjustment 4-29
Outlets
Accessory Power 4-17
Outside
Convex Mirror 3-63
Heated Mirrors 3-63
Manual Mirrors 3-60
Power Foldaway Mirrors 3-62
Power Mirrors 3-61
Towing Mirrors 3-61
Overheated Engine Protection Operating Mode 6-41
Owner Checks and Services 7-11
Owners, Canadian iii

P

Paint, Damage 6-127
Park
  Shifting Into 3-55
  Shifting Out of 3-57
Park Aid 3-64
Park Tilt Mirrors 3-63
Parking
  Assist 3-64
  Brake 3-54
  Over Things That Burn 3-58
PASS-Key® III+ Electronic Immobilizer 3-21
PASS-Key® III+ Electronic Immobilizer
  Operation 3-21
Passenger Airbag Status Indicator 4-36
Passenger Sensing System 2-86
Passing 5-11
Perchlorate Materials Requirements, California 6-5
Phone
  Bluetooth® 4-125
Pickup Conversion to Chassis Cab 5-48
Power
  Door Locks 3-11
  Electrical System 6-129
  Lumbar Controls 2-7
  Retained Accessory (RAP) 3-25
  Seat 2-5
Power (cont.)
  Sliding Rear Window 3-18
  Steering Fluid 6-42
  Windows 3-17
Pregnancy, Using Safety Belts 2-37
Privacy 8-19
  Navigation System 8-21
  OnStar 8-21
  Radio Frequency Identification (RFID) 8-21
Program
  Courtesy Transportation 8-11
Programmable Automatic Door Locks 3-11
Proposition 65 Warning, California 6-5

R

Radio Frequency
  Identification (RFID) 8-21
  Statement 8-21
Radio(s) 4-88
Radios
  Navigation/Radio System, see Navigation
    Manual 4-125
  Reception 4-150
  Setting the Clock 4-86
  Theft-Deterrent 4-148
Reading Lamps 4-16

Rear Axle 6-54
Locking 5-9
Rear Door Security Locks 3-12
Rear Doors 3-13
Rear Seat Armrest 3-83
Rear Seat Audio (RSA) System 4-145
Rear Seat Entertainment System 4-136
Rear Seat Audio (RSA) 4-145
Rear Seat Operation 2-14, 2-15
Rear Vision Camera (RVC) 3-67
Rearview Mirrors 3-60
Automatic Dimming 3-60
Reclining Seatbacks 2-10
Recommended Fluids and Lubricants 7-13
Recovery Hooks 5-32
Recreational Vehicle Towing 5-49
Reimbursement Program, GM Mobility 8-7
Remote Keyless Entry (RKE) System 3-4, 3-5
Remote Vehicle Start 3-7
Removing the Flat Tire and Installing the Spare Tire 6-106
Removing the Spare Tire and Tools 6-101
Replacement Bulbs 6-69
Replacement Parts
Maintenance 7-15
Reporting Safety Defects
Canadian Government 8-17
General Motors 8-17
U.S. Government 8-16
Restraint System Check
Checking the Restraint Systems 2-94
Replacing Restraint System Parts After a Crash 2-95
Retained Accessory Power (RAP) 3-25
Roadside Assistance Program 8-7
Rocking Your Vehicle to Get it Out 5-32
Roof
Sunroof 3-83
Roof Rack System 3-82
Running the Vehicle While Parked 3-59

S

Safety Belts
Care of 6-124
Extender 2-38
How to Wear Safety Belts Properly 2-21
Lap Belt 2-37
Lap-Shoulder Belt 2-30
Reminders 4-32
Safety Belts Are for Everyone 2-16
Use During Pregnancy 2-37

Safety Defects Reporting
Canadian Government 8-17
General Motors 8-17
U.S. Government 8-16
Safety Warnings and Symbols iv
Scheduled Maintenance 7-3
Scheduling Appointments 8-11
Seatback Latches 2-13
Seats
Center Seat 2-13
Head Restraints 2-3
Heated Seats 2-8
Manual Lumbar 2-6
Memory, Mirrors and Pedals 2-8
Power Lumbar 2-7
Power Seats 2-5
Rear Seat Operation 2-14, 2-15
Reclining Seatbacks 2-10
Secondary Latch System 6-113
Securing a Child Restraint
Center Front Seat Position 2-61
Rear Seat Position 2-58
Right Front Seat Position 2-62, 2-66, 2-70
Security
Light 4-47
Service 6-4
Accessories and Modifications 6-4
Adding Equipment to the Outside of the Vehicle . . . 6-6
Doing Your Own Work 6-5
Engine Soon Light 4-42
Parts Identification Label 6-129
Publications Ordering Information 8-18
Scheduling Appointments 8-11
Servicing Your Airbag-Equipped Vehicle 2-92
Setting the Clock 4-86
Sheet Metal Damage 6-127
Shifting
Out of Park 3-57
Shifting Into Park 3-55
Signals, Turn and Lane-Change 4-4
Sliding Rear Window, Power 3-18
Snow Plow 5-41
Spare Tire 6-120
Installing 6-106
Removing 6-101
Storing 6-116
Specifications and Capacities 6-137
Speedometer 4-31
StabiliTrak® Indicator Light 4-40
StabiliTrak® System 5-6

Start Vehicle, Remote 3-7
Starting the Engine 3-26
Steering 5-9
Steering Wheel Controls, Audio 4-148
Steering Wheel, Tilt Wheel 4-3
Storage Areas
  Center Console 3-81
  Cupholders 3-80
  Glove Box 3-80
  Instrument Panel 3-81
  Rear Seat Armrest 3-83
  Roof Rack System 3-82
Stuck in Sand, Mud, Ice, or Snow 5-31
Sun Visors 3-19
Sunroof 3-83
System
  Roof Rack 3-82

T

Tachometer 4-31
Tailgate 3-14
Taillamps
  Turn Signal, Stoplamps and Back-up Lamps 6-66
Tampering with Noise Control System
  Prohibited 6-59
Text Telephone (TTY) Users 8-6
Theft-Deterrent Feature 4-148
Theft-Deterrent Systems 3-19
  Content Theft-Deterrent 3-19
  PASS-Key® III+ Electronic Immobilizer 3-21
  PASS-Key® III+ Electronic Immobilizer
    Operation 3-21
Throttle, Adjustable 3-28
Tilt Wheel 4-3
Time, Setting 4-86
Tires 6-70
  Aluminum or Chrome-Plated Wheels,
    Cleaning 6-126
  Buying New Tires 6-92
  Chains 6-98
  Changing a Flat Tire 6-100
  Cleaning 6-127
  Different Size 6-93
  Dual Tire Operation 6-82
  High-Speed Operation 6-82
  If a Tire Goes Flat 6-99
  Inflation - Tire Pressure 6-80
  Inspection and Rotation 6-88
  Installing the Spare Tire 6-106
  Pressure Light 4-41
  Pressure Monitor Operation 6-84
  Pressure Monitor System 6-83
  Removing the Flat Tire 6-106
  Removing the Spare Tire and Tools 6-101
  Secondary Latch System 6-113

Tires (cont.)
Sidewall Labeling 6-72
Spare Tire 6-120
Storing a Flat or Spare Tire and Tools 6-116
Terminology and Definitions 6-77
Uniform Tire Quality Grading 6-94
Wheel Alignment and Tire Balance 6-96
Wheel Replacement 6-96
When It Is Time for New Tires 6-91
Tow/Haul Mode 3-36
Tow/Haul Mode Light 4-48
Towing
Recreational Vehicle 5-49
Towing a Trailer 5-55
Trailer Recommendations 5-84
Your Vehicle 5-48
Traction
StabiliTrak® System 5-6
Trailer
Towing Recommendations 5-84
Transmission
Fluid, Automatic 6-24, 6-28
Transmission Operation, Automatic 3-30
Transportation Program, Courtesy 8-11
Trip Odometer 4-31
Truck-Camper Loading Information 5-45
Turn and Lane-Change Signals 4-4
Turn Signal/Multifunction Lever 4-4

U

Ultrasonic Rear Parking Assist (URPA) 3-64
Uniform Tire Quality Grading 6-94
Universal Home Remote System 3-73
Operation 3-73

V

Vehicle
Control 5-3
Loading 5-33
Remote Start 3-7
Running While Parked 3-59
Symbols iv
Vehicle Customization, DIC 4-76
Vehicle Data Recording and Privacy 8-19
Vehicle Identification
Number (VIN) 6-128
Service Parts Identification Label 6-129
Ventilation Adjustment 4-29
Visors 3-19
Voltmeter Gauge 4-38

W

Warning Lights, Gauges, and Indicators 4-29
Warnings
DIC Warnings and Messages 4-66
Hazard Flashers 4-3
Safety and Symbols iv
Wheels
Alignment and Tire Balance 6-96
Different Size 6-93
Replacement 6-96
When It Is Time for New Tires 6-91
Where to Put the Child Restraint 2-47
Windows 3-16
Manual 3-17
Power 3-17
Sliding Rear 3-18
Windshield
Washer 4-7
Washer Fluid 6-43
Wiper Blade Replacement 6-69
Wiper Blades, Cleaning 6-126
Wiper Fuses 6-129
Wipers 4-6
Winter Driving 5-29

X

XM Radio Messages 4-123
XM™ Satellite Radio
Antenna 4-151