GROUP 22C

MANUAL TRANSAXLE OVERHAUL <F6MBA>

CONTENTS

GENERAL DESCRIPTION. 22C-2

SPECIAL TOOLS. 22C-3

TRANSAXLE 22C-6
DISASSEMBLY AND ASSEMBLY 22C-6

INPUT SHAFT 22C-25
DISASSEMBLY AND ASSEMBLY 22C-25

OUTPUT SHAFT 22C-28
DISASSEMBLY AND ASSEMBLY 22C-28
DISASSEMBLY AND ASSEMBLY 22C-38

SELECT LEVER. 22C-45
DISASSEMBLY AND ASSEMBLY 22C-45

CLUTCH HOUSING 22C-47
DISASSEMBLY AND ASSEMBLY 22C-47

TRANSMISSION CASE 22C-51
DISASSEMBLY AND ASSEMBLY 22C-51

DIFFERENTIAL. 22C-55
DISASSEMBLY AND ASSEMBLY 22C-55

SPECIFICATIONS 22C-57
FASTENER TIGHTENING SPECIFICATIONS. 22C-57
GENERAL SPECIFICATIONS 22C-58
SERVICE SPECIFICATIONS 22C-58
SEALANTS AND ADHESIVES 22C-58
ADJUSTING SNAP RINGS AND SPACERS 22C-59

cardiagn.com

GENERAL DESCRIPTION

M1222000100294

TRANSMISSION SECTIONAL VIEW

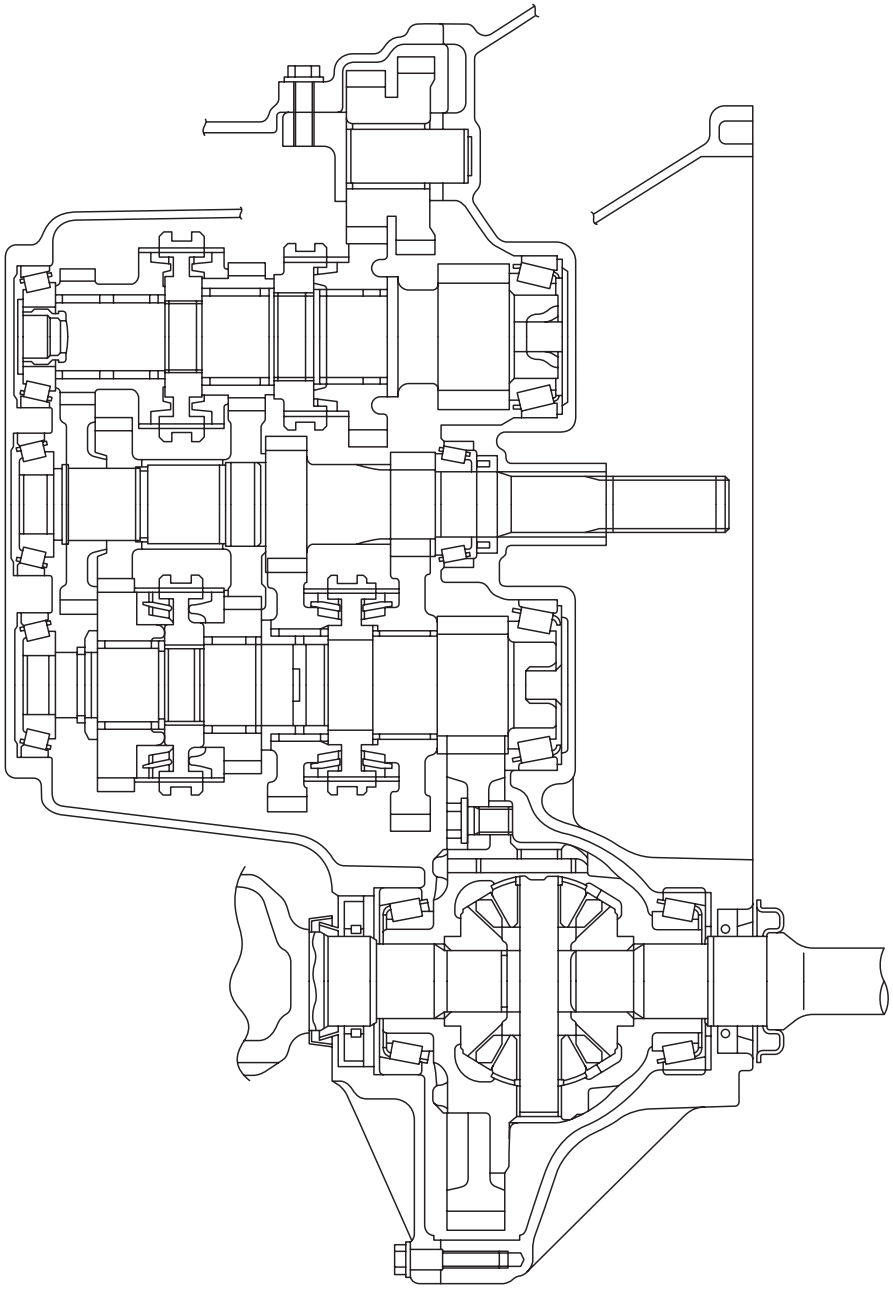

AK402746

cardiagn.com

SPECIAL TOOLS

M1222000600318

TOOL	TOOL NUMBER AND NAME	SUPERSESSION	APPLICATION
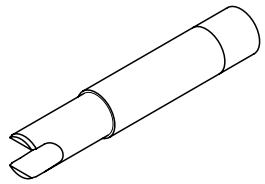	MB992038 Preload socket	–	• Measurement of differential side bearing preload • Measurement of output shaft No.2 bearing preload
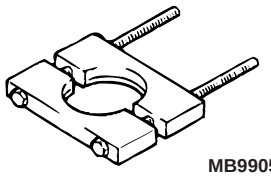	MB990560 Rear axle shaft bearing installer	–	Remove of input and output shaft cylindrical roller bearing
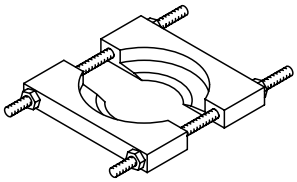	MD998917 Bearing remover	General service tool or MD998348-01	• Remove of each bearing • Remove of input and output shaft each gear
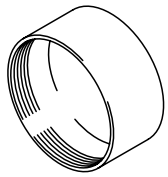	MD998812 Installer cap	General service tool	Use with installer and installer adapter
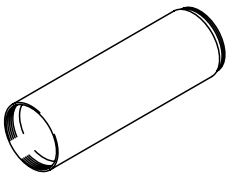	MD998814 Installer 200	MIT304180-A	Use with installer cap and installer adapter
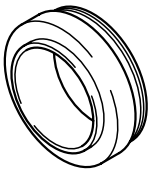	MD998823 Installer adapter	General service tool	• Installation of input shaft each gear • Installation of input shaft radial ball bearing
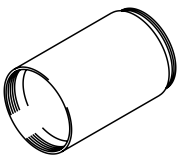	MD998813 Installer 100	General service tool	Use with installer and installer adapter

cardiagn.com

TOOL	TOOL NUMBER AND NAME	SUPERSESSION	APPLICATION
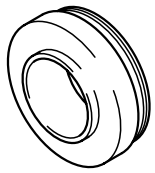	MD998818 Installer adaptor	General service tool	Installation of input shaft cylindrical roller bearing
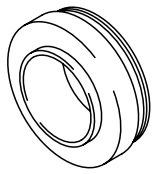	MD998820 Installer adapter	MD998820-01	Installation of output shaft cylindrical roller bearing
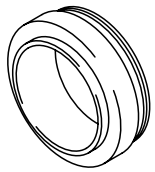	MD998824 Installer adapter	MD998824-01	• Installation of each hub sleeve • Installation of output shaft radial ball bearing
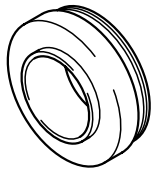	MD998819 Installer adapter	General service tool	Installation of output shaft taper roller bearing
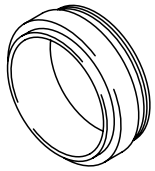	MD998827 Installer adapter	–	• Installation of reverse synchronizer sub-assembly • Installation of 5th-6th hub sleeve • Installation of taper roller bearing
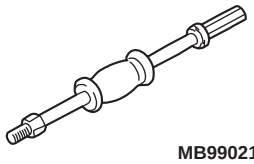 MB990211	MB990211 Slide hammer	MD990211-01	Use with slide hammer puller
	MB992039	–	• Remove of tapered roller bearing No.1 • Remove of cylindrical roller bearing outer race
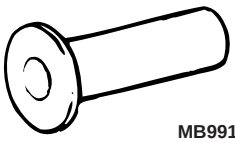 MB991168	MB991168 Differential oil seal installer	MB991168-01	• Installation of tapered roller bearing No.1 • Installation of type T oil seal

cardiagn.com

TOOL	TOOL NUMBER AND NAME	SUPERSESSION	APPLICATION
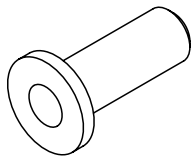	MB990699 Differential oil seal installer	–	Installation of cylindrical roller bearing outer race
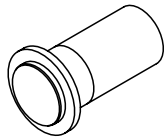	MB992037 Input shaft oil seal installer	–	Installation of type T oil seal
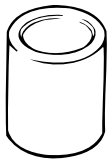	MB991448 Bush remover & installer base	–	Installation of cylindrical roller bearing outer
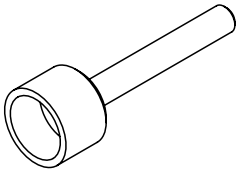	MD998550 Extension HSG seal installer	–	Installation of type T oil seal
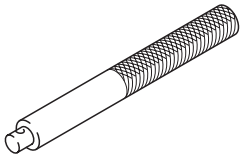	MB990938 Installer bar	MB990938-01	• Use with bush remover & installer base • Use with knuckle oil seal installer
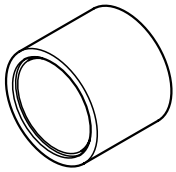	MB991445 Bush remover & installer base	–	Installation of tapered roller bearing
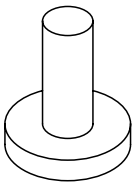	MB991966 Bearing outer race installer	–	Installation of tapered roller bearing No.1
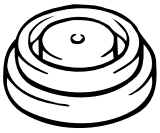 MB991015	MB991015 Knuckle oil seal installer	MB991015-01	Installation of tapered roller bearing

cardiagn.com

TRANSAXLE

DISASSEMBLY AND ASSEMBLY

M1222001000405

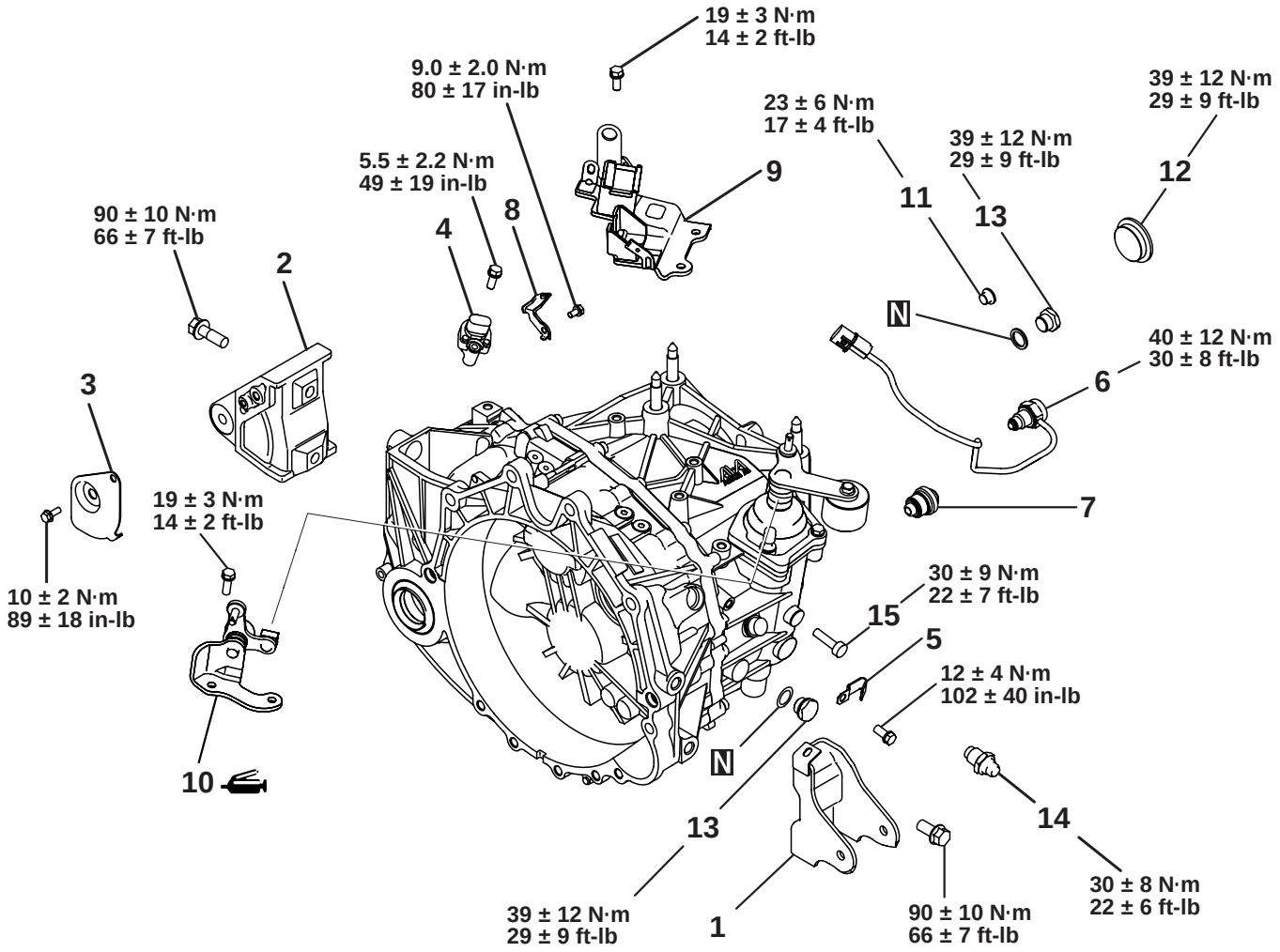

Disassembly steps

1. ROLL STOPPER BRACKET FRONT
2. ROLL STOPPER BRACKET REAR
3. HEAT PROTECTOR
4. SPEEDOMETER DRIVEN GEAR ASSEMBLY
5. CLAMP
6. BACK UP LAMP SWITCH ASSEMBLY
7. LOCK BALL ASSEMBLY
8. WIRING HARNESS CLAMP BRACKET

Disassembly steps (Continued)

9. CONTROL CABLE BRACKET
10. SELECTING BELL-CRANK ASSEMBLY & CONTROL BELL-CRANK DUST COVER
11. STRAIGHT SCREW PLUG
12. STRAIGHT SCREW PLUG
13. STRAIGHT SCREW PLUG
14. LOCK BALL ASSEMBLY
15. STRAIGHT PIN

Required Special Tools:

- MB992038: Preload socket

cardiagn.com

DISASSEMBLY SERVICE POINTS

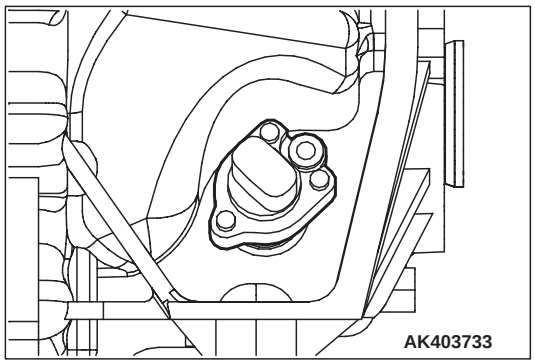

1. Remove the speedometer driven gear assembly.

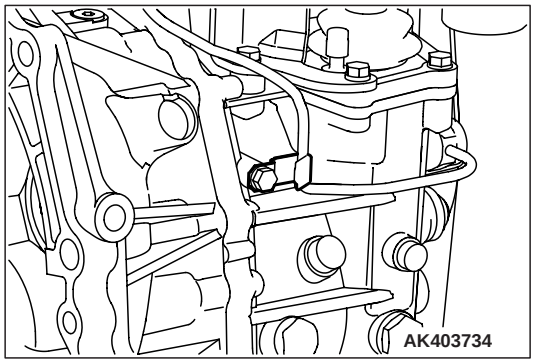

2. Remove the clamp.

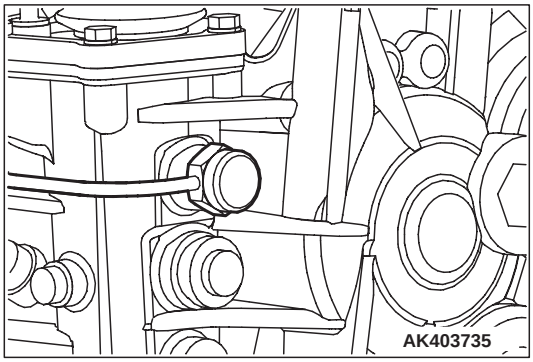

3. Remove the back up lamp switch assembly.

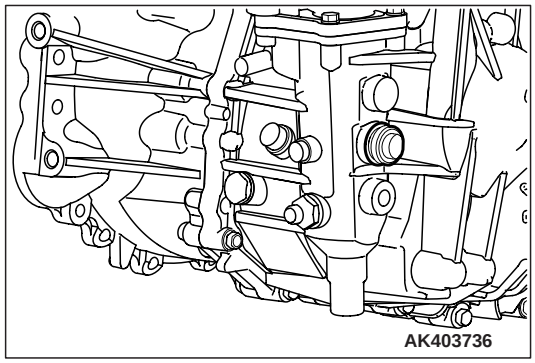

4. Remove the lock ball assembly.
5. Remove the transmission case hanger No.1.

cardiagn.com

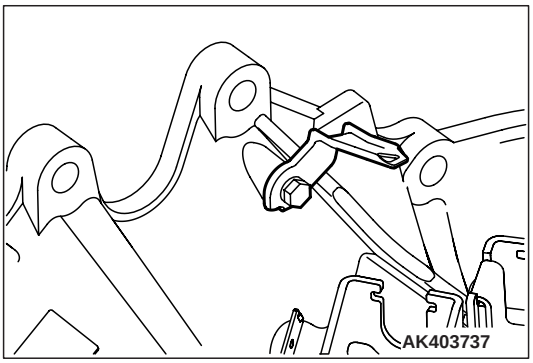

6. Remove the wiring harness clamp bracket.

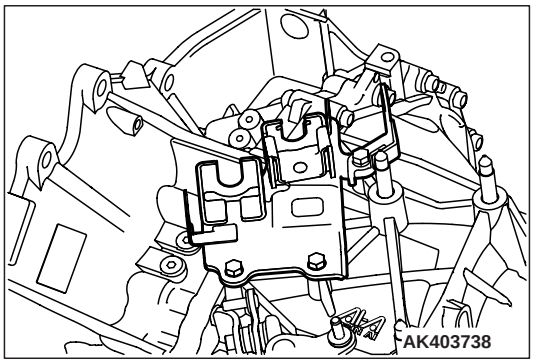

7. Remove the control cable bracket.

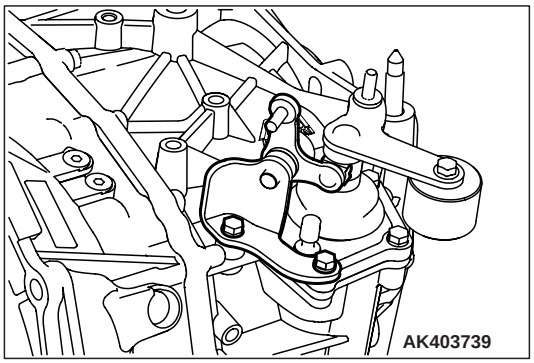

8. Remove the selecting bell crank assembly and the control bell crank dust cover.

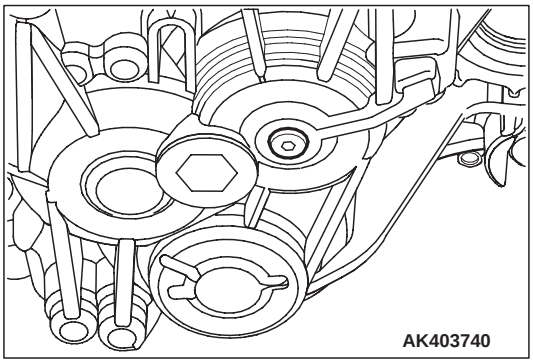

9. Remove the straight screw plug with head.

cardiagn.com

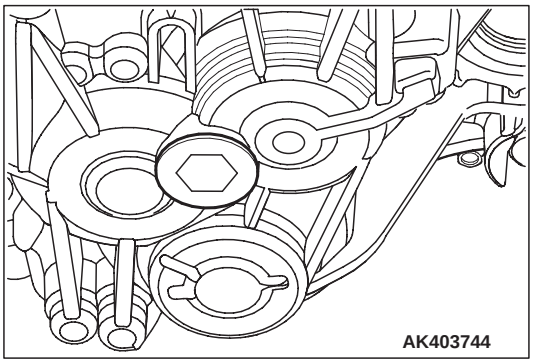

10.Remove the straight screw plug with head.

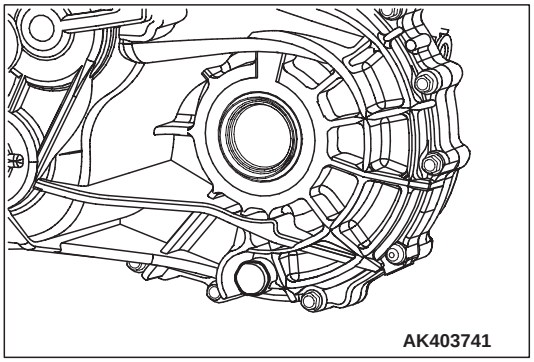

11.Remove the straight screw plug with head and the gasket (two places).

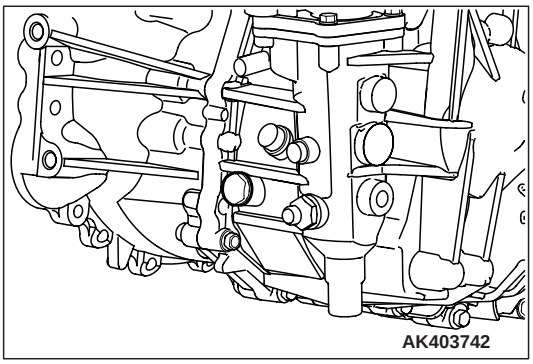

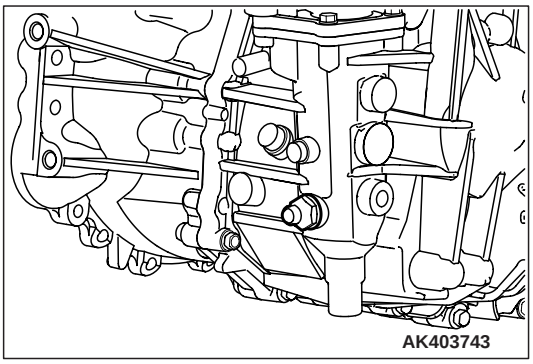

12.Remove the lock ball assembly.

cardiagn.com

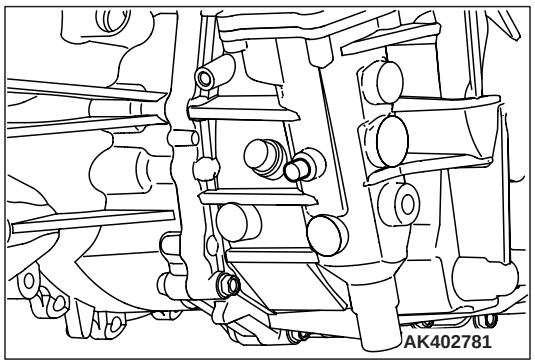

13.Remove the straight pin.

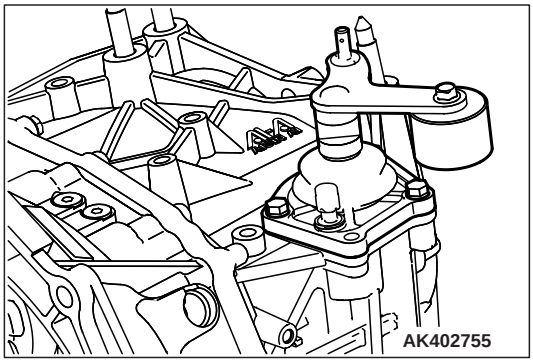

14.Remove the shift & select lever shaft assembly.

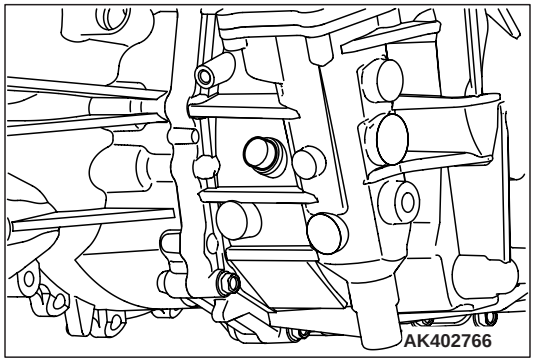

15.Remove the flange bolt and gasket.

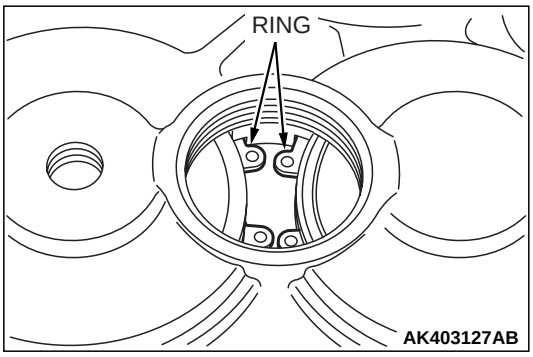

16.Use snap ring pliers to expand the indicated hole snap rings. The hole snap rings will release the radial ball bearings, and the input shaft and output shaft No.1 will fall under its own weight.

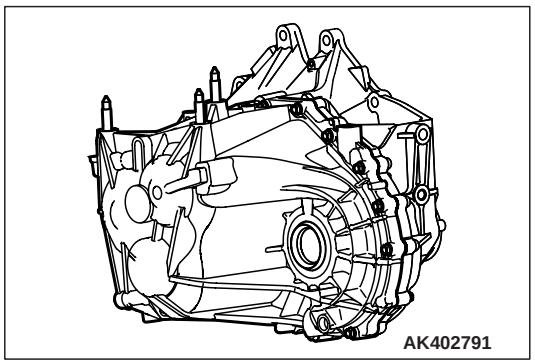

17.Remove the transmission case sub-assembly.

cardiagn.com

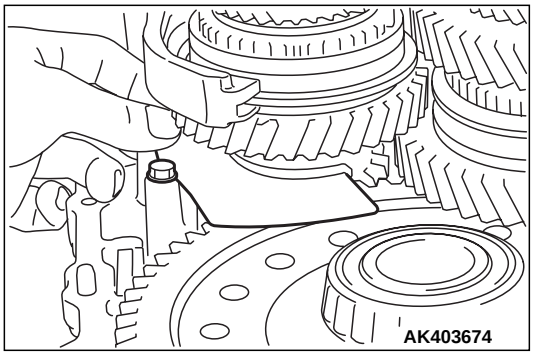

18.Remove the transmission oil separator.

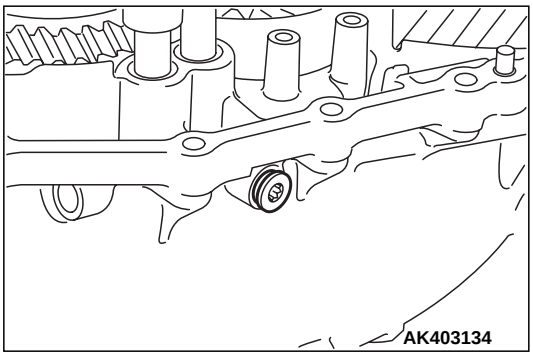

19.Remove the straight screw plug with head, the shift detent ball spring seat No.1, the compression spring and ball (four places).

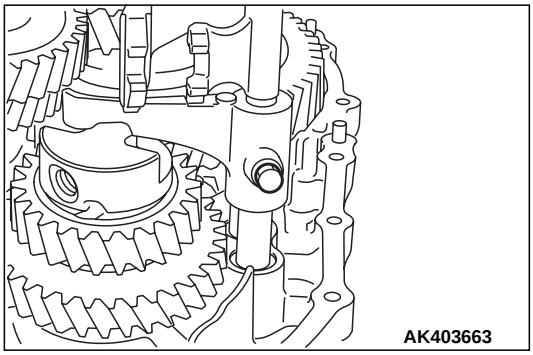

20.Remove the washer based hexagon bolt.

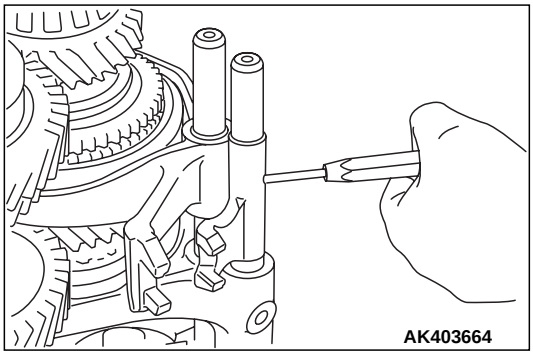

21.Remove the slotted spring pin (three places).

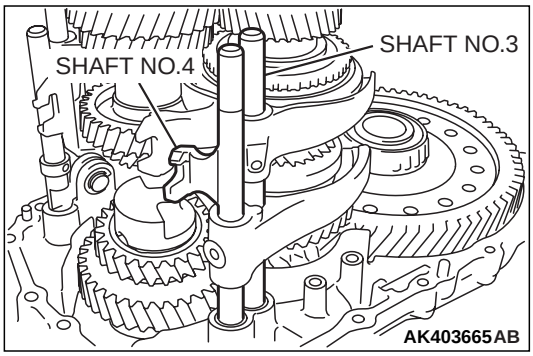

22.Remove the gear shift fork shaft No.4 and the gear shift fork shaft No.3.

cardiagn.com

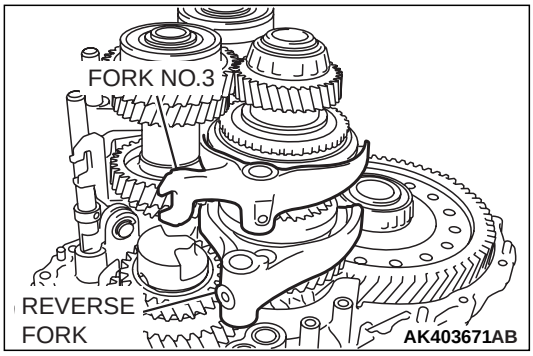

23.Remove the gear shift fork assembly No.3 and the reverse shift fork.

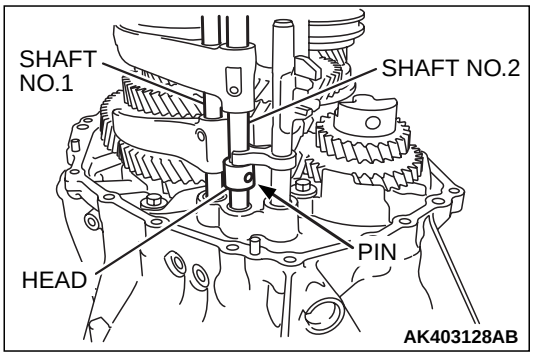

24.After removing the gear shift fork shaft No.1, remove the slotted spring pin of the gear shift fork shaft No.2 and gear shift head No.2.

25.Remove the gear shift fork shaft No.2.

26.Remove the gear shift head No.2.

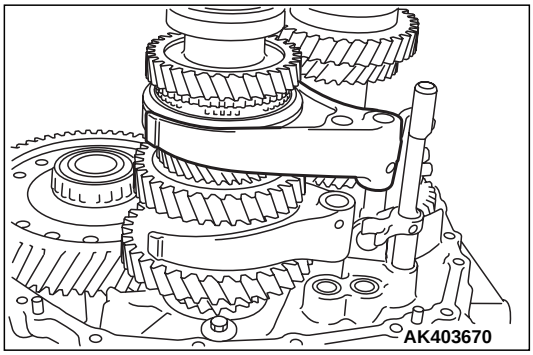

27.Remove the gear shift fork assembly No.2.

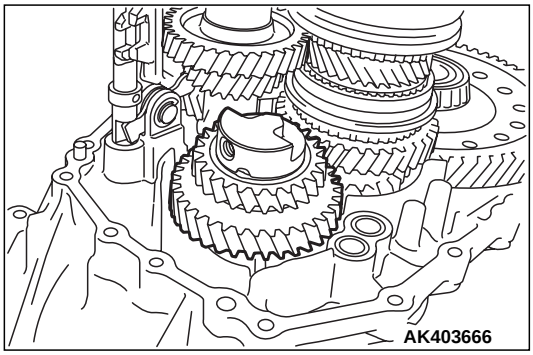

28.Remove the reverse idler gear shaft, reverse idler thrust washer, needle roller bearing and reverse idler gear.

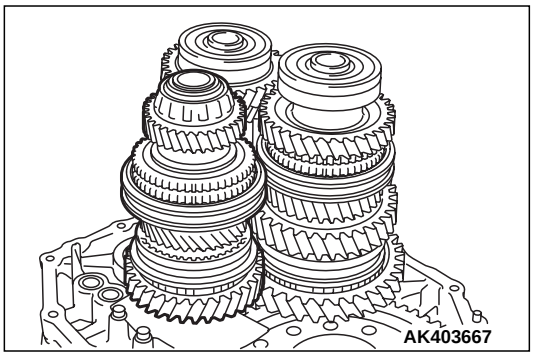

29.Remove the output shaft No.2 sub-assembly.

cardiagn.com

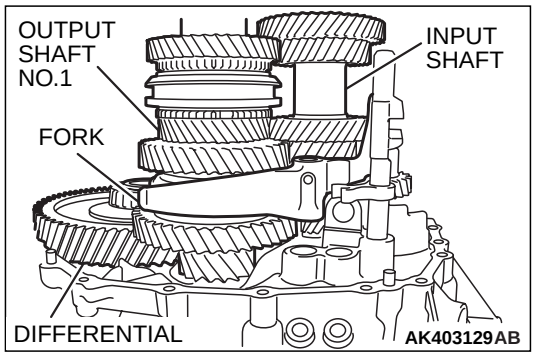

30. Remove the input shaft sub-assembly, output shaft No.1 sub-assembly and gear shift fork assembly No.1.
31. Remove the differential sub-assembly.

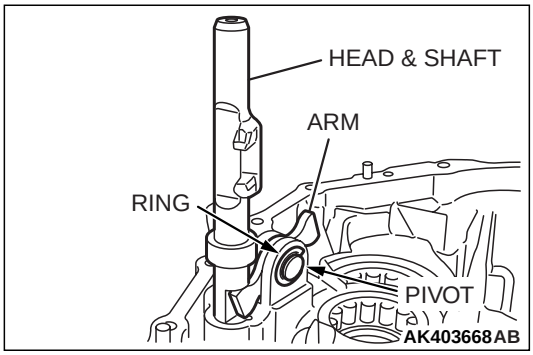

32. Remove the E ring.
33. Remove the shift arm pivot.
34. Remove the gear shift head No.3 and gear shift fork shaft No.5 and shift arm simultaneously.

ADJUSTMENT BEFORE ASSEMBLY

DIFFERENTIAL SIDE BEARING PRELOAD ADJUSTMENT

1. Set the differential assembly to the transaxle case.
2. Push and fit the tapered roller bearing outer race by hand.

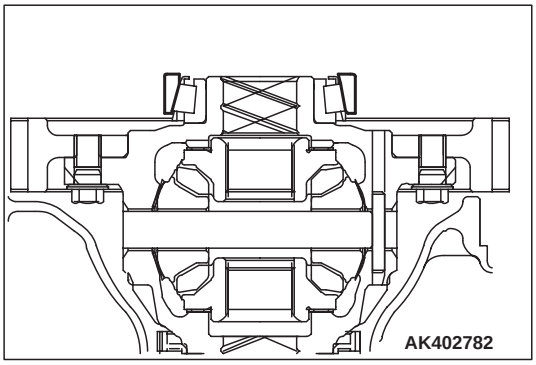

3. To fit the tapered roller bearing outer race, rotate the differential assembly by hand about 10 times with the special tool MB992038.

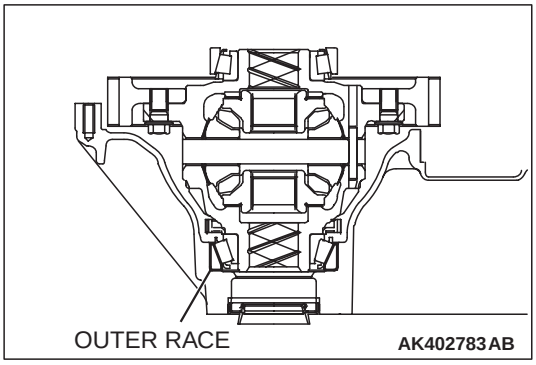

cardiagn.com

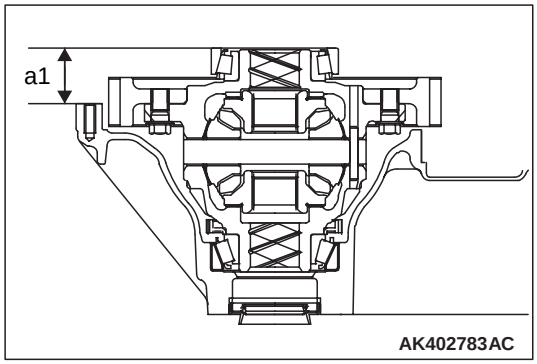

4. Put the transaxle case on the surface table and use a height gauge to measure the dimension "a1," which is from the mating surface of the transaxle case to the end surface of the tapered roller bearing outer race.

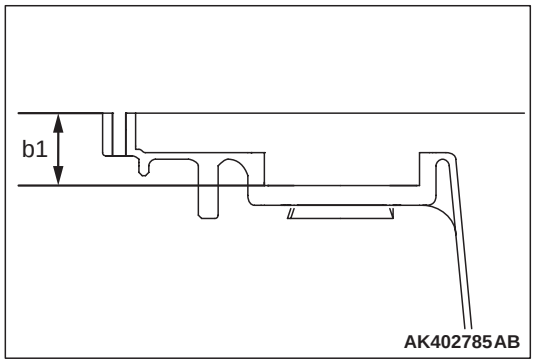

5. Put the straight edge on the mating surface of the transmission case and measure the dimension "b1" with a vernier caliper.
6. Select the shim whose dimension is the difference between "b1" and "a1."
7. Install the differential assembly to the transaxle case. Tighten the transmission case bolts to the specified torque of 30 ±5 N· m (22 ±4 ft-lb).

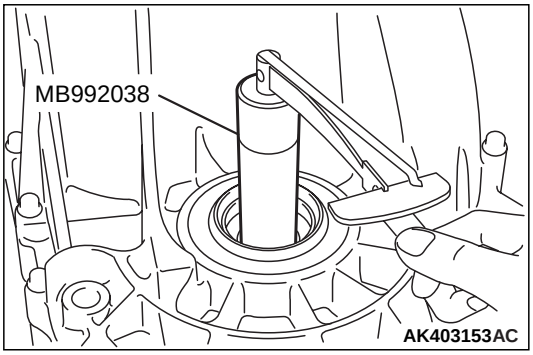

8. Using special tool MB992038, measure the rotational starting torque of differential case. When it is not within the standard range, reselect the shim.

   Standard value: 1.00 –2.49 N· m (8.85 –22.04 in-lb)

OUTPUT SHAFT No. 2 BEARING PRELOAD ADJUSTMENT

1. Set the output shaft No.2 assembly and differential assembly to the transaxle case.
2. Push and fit the tapered roller bearing outer race by hand.

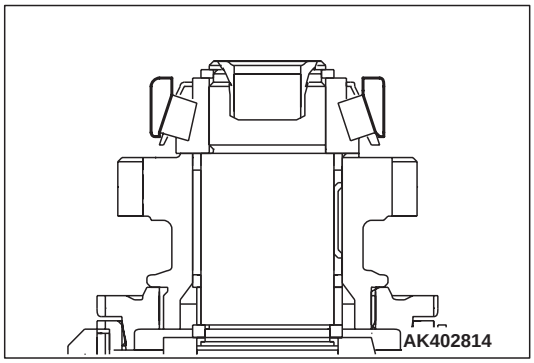

cardiagn.com

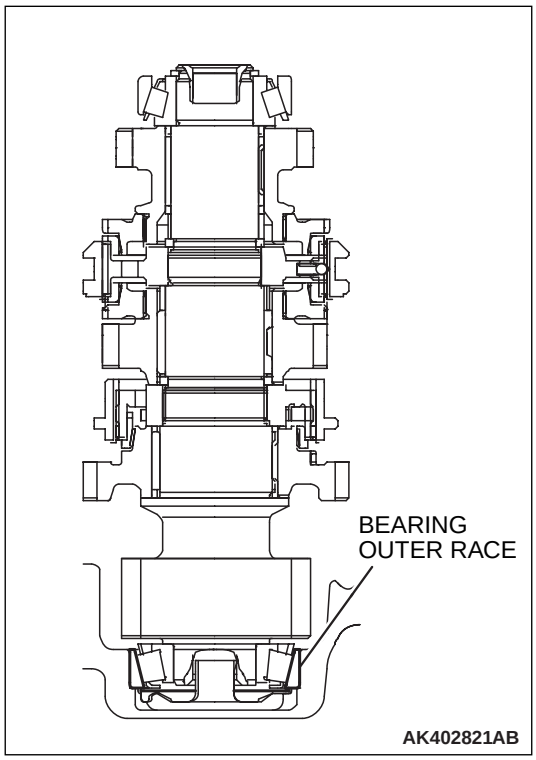

3. To fit the tapered roller bearing outer race, rotate the output shaft No.2 assembly by hand about 10 times with the special tool MB992038.

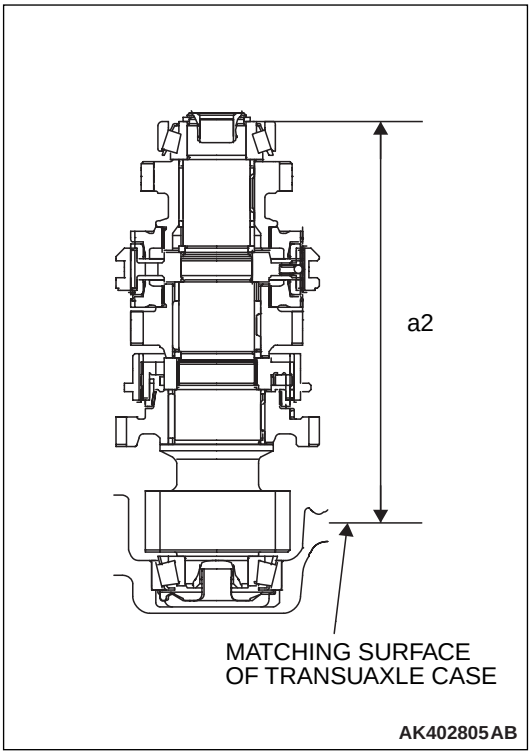

4. Put the transaxle case on the surface table and measure the dimension "a2," which is from the mating surface of the transaxle case to the end surface of the bearing outer race, with a height gauge.

cardiagn.com

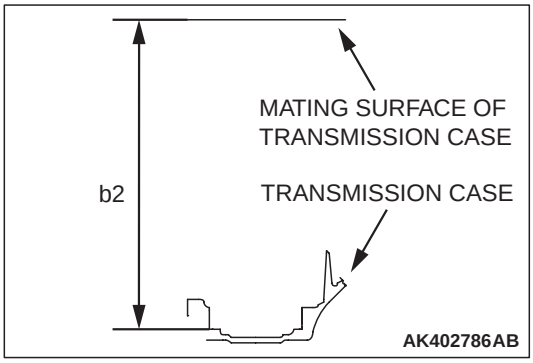

5. Put the straight edge on the mating surface of the transmission case and measure the dimension "b2" with a vernier caliper.
6. Select the shim whose dimension is the difference between "b2" and "a2."
7. Install the output shaft No.2 assembly and differential assembly to the transaxle case. Tighten the transmission case bolts to the specified torque of 30 ±5 N· m (22 ±4 ft-lb).

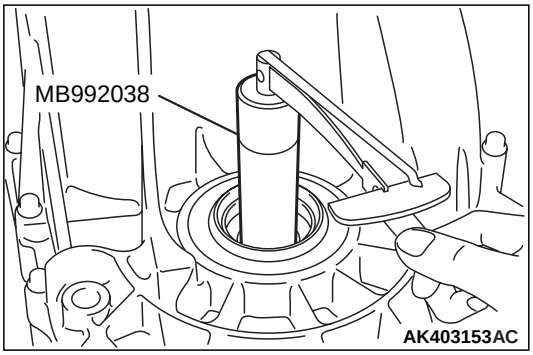

8. Using special tool MB992038, measure the rotational starting torque on the differential shaft. From this rotational starting torque, subtract the value measured in the adjustment of the bearing preload on the differential side. When this is not within the standard range, reselect the shim.

   Standard value: 3.89 –5.51 N· m (34.43 –48.77 in-lb)

ASSEMBLY SERVICE POINTS

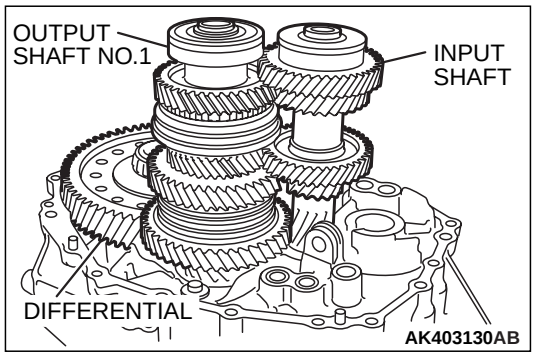

1. Install the differential sub-assembly in the transaxle case.
2. Install the input shaft sub-assembly and output shaft No.1 sub-assembly in the transaxle case simultaneously.

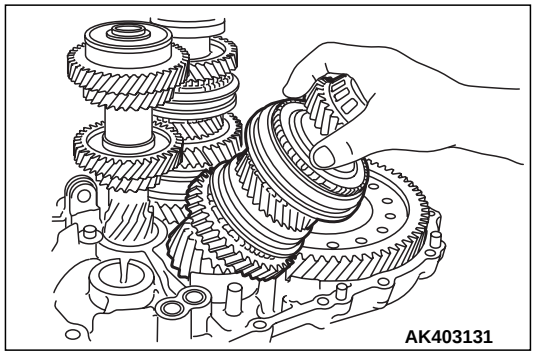

3. Install the output shaft No.2 sub-assembly in the transaxle case as shown in the illustration.

cardiagn.com

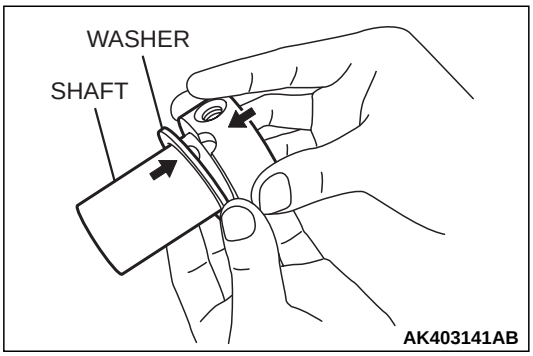

4. Set the reverse idler gear, the needle roller bearing, the reverse idler thrust washer and the reverse idle gear shaft.

   NOTE: Fit the projection of the anti-rotation for the reverse idler thrust washer into the reverse idle gear shaft as shown.

5. Install them to the transaxle case.

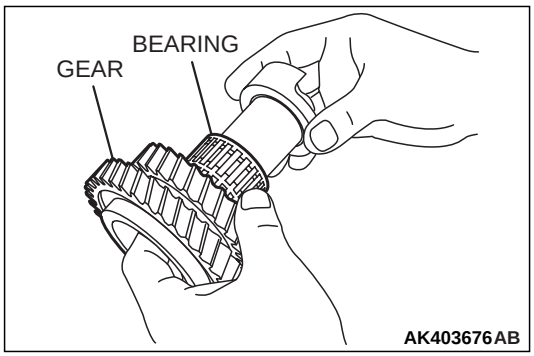

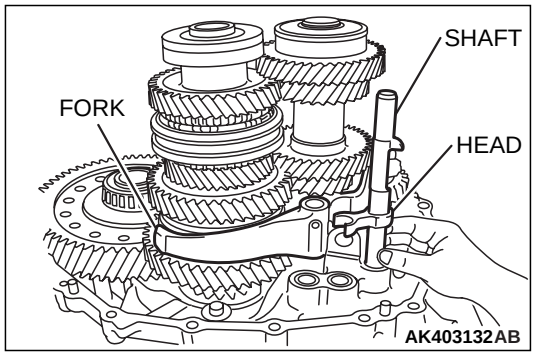

6. Install the gear shift fork assembly No.1.
7. Install the gear shift fork shaft No.5 in the transaxle case and then install the gear shift head No.3 on the gear shift fork shaft No.5 by hammering in the slotted spring pin.

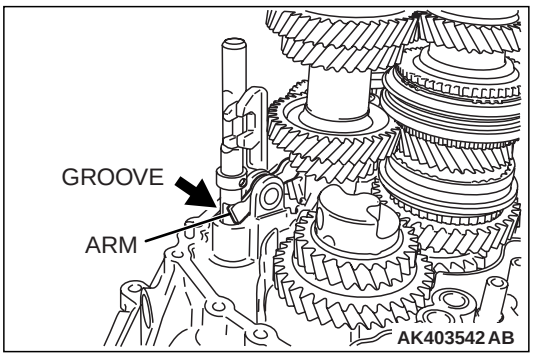

8. Insert the shift arm into the transaxle case, fitting it in the groove of the gear shift fork shaft No.5.

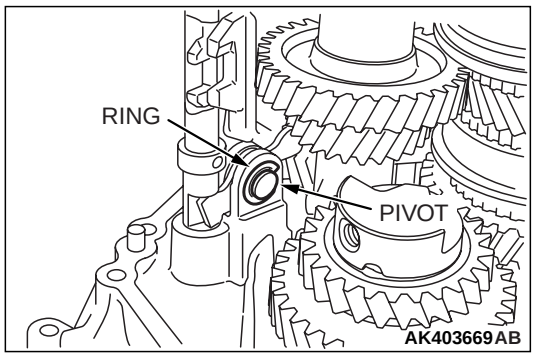

9. After insert the arm pivot into the transaxle case and the shift arm, install the E-ring into the arm pivot.

cardiagn.com

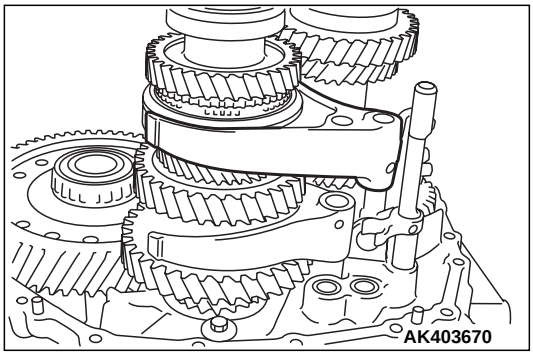

10.Install the gear shift fork assembly No.2.

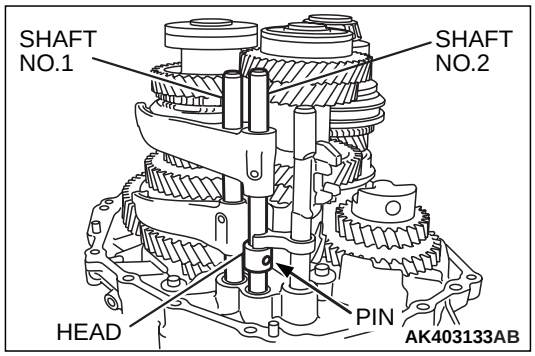

11.Insert the shaft No.1 in the order of fork No.2, No.1 and the transaxle case.
12.Insert the shaft No. 2 in the order of gear shift fork assembly No.2, gear shift head No.3, gear shift head No.2 with the shift arm and transaxle case.
13.Stick the slotted spring pin in the gear shift head No.2.

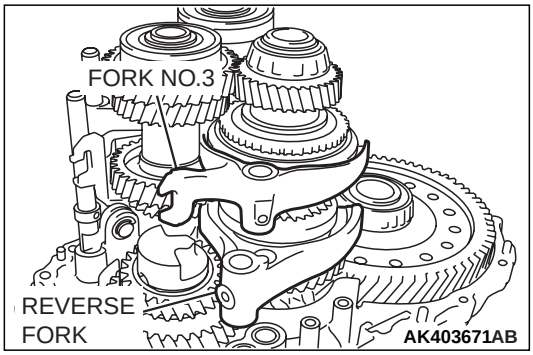

14.Install the reverse shift fork and the gear shift fork assembly No.3.

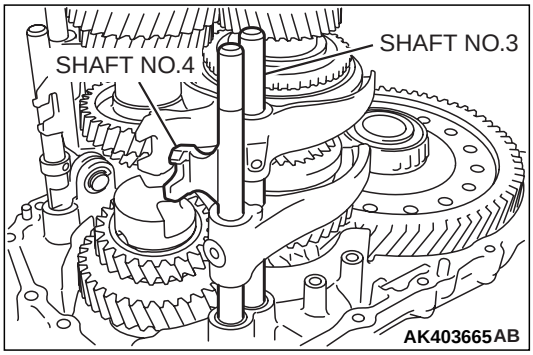

15.Insert the gear shift fork shaft No.3 in the order of gear shift fork assembly No.3, reverse shift fork, and transaxle case.
16.Insert the gear shift fork shaft No.4 in the order of reverse shift fork and transaxle case.

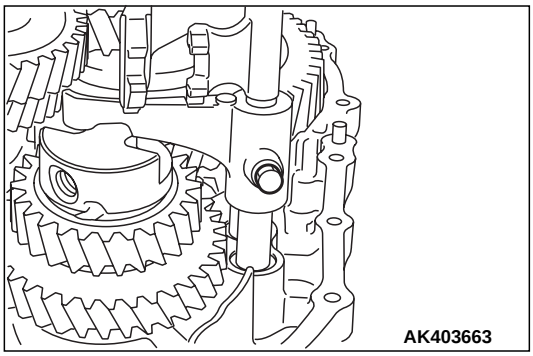

17.Tighten the washer based hexagon bolts to the specified torque of 20 ±4 N· m (15 ±3 ft-lb).

cardiagn.com

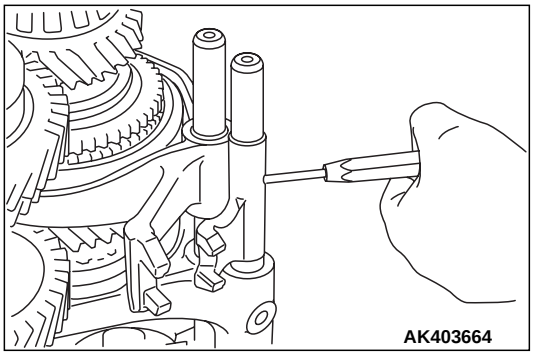

18. Stick the pins in the gear shift fork assembly No.1, No.2 and No.3.

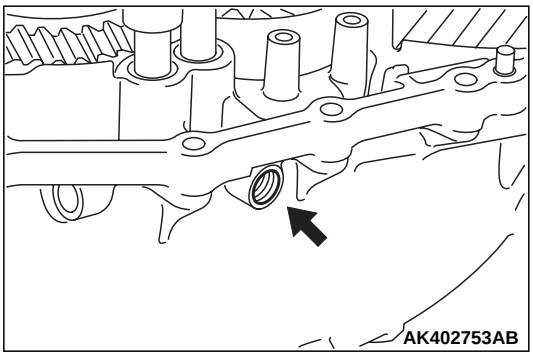

⚠ CAUTION

As shown in the illustration, install the white painted spring only for the reverse fork.

19. Install the ball, the compression spring, the shift detent ball seat spring No.1 and the straight screw plug with head (four places).

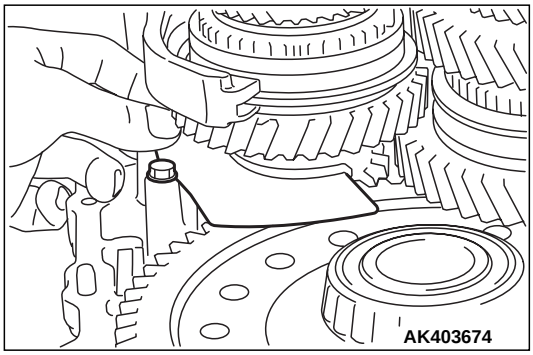

20. Install the transmission oil separator to the transaxle case and tighten the bolts to the specified torque of 8.5 ±2.5 N· m (75 ±22 in-lb).

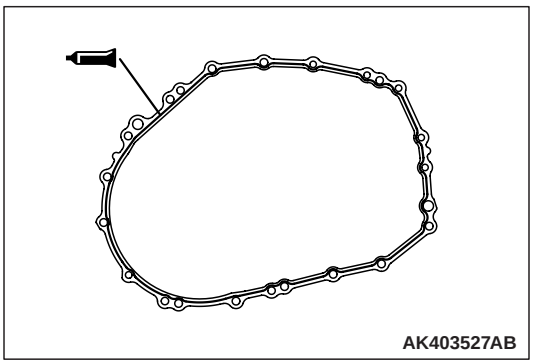

21. Apply a 1.2 mm (0.0472 inch) diameter bead of sealant (Mitsubishi Part number MD994421 or equivalent) as illustrated onto the transmission case.

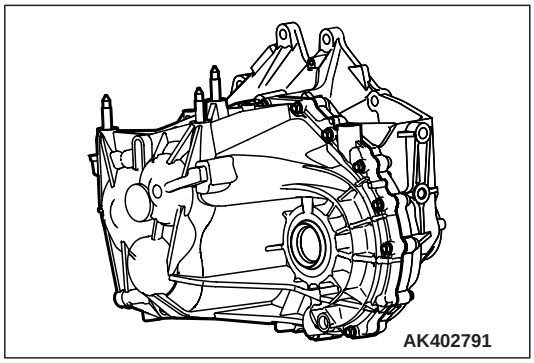

22. Install the transmission case sub-assembly to the transaxle case sub-assembly and tighten the bolts to the specified torque of 30 ±5 N· m (22 ±4 ft-lb).

cardiagn.com

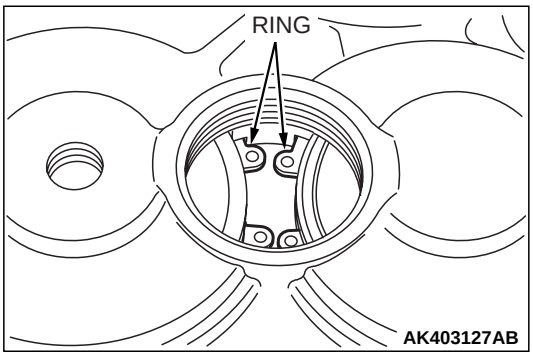

23. Extend the hole snap ring and install it on the radial ball bearing.

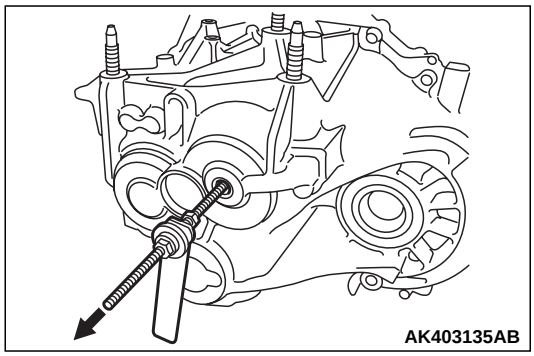

24. Install stud bolt to the output shaft No.2 sub-assembly.
25. Pull the output shaft No.2 sub-assembly in the direction as shown in the illustration and fit the hole snap ring into the bearing groove.

    NOTE: After installation, keep the sealed area away from oil for approximately one hour.

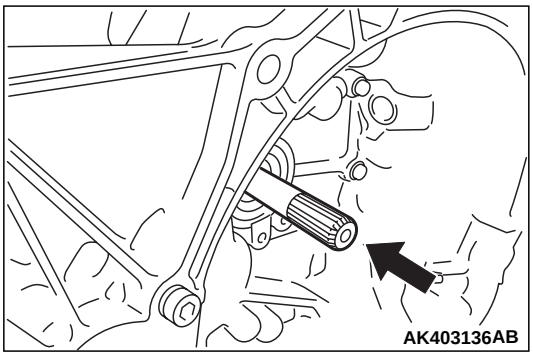

26. Push the input shaft sub-assembly in the direction as shown in the illustration and fit the hole snap ring into the bearing groove.

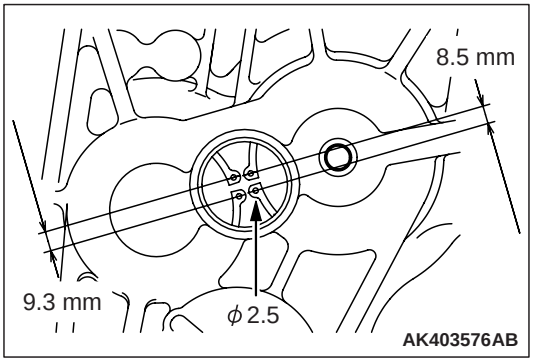

27. Lift the output No.1 sub-assembly.
28. Confirm that the dimension between the centers of ϕ2.5 holes on the hole snap ring is in accordance with the illustration.
29. Check the hole snap ring fits securely into the bearing groove.

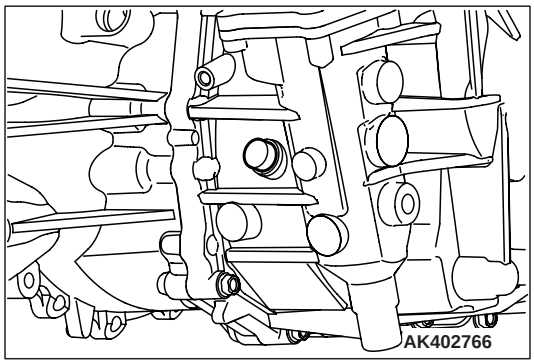

30. Install the flange bolt and gasket to the specified torque of 50 ±10 N· m (37 ±7 ft-lb).

cardiagn.com

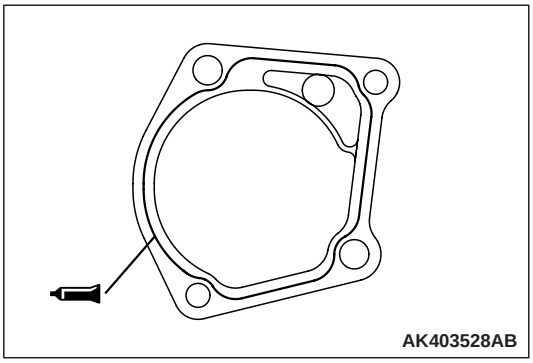

31. Apply a 1.2 mm (0.0472 inch) diameter bead of sealant (Mitsubishi Part number MD994421 or equivalent) as illustrated onto the control shaft cover.

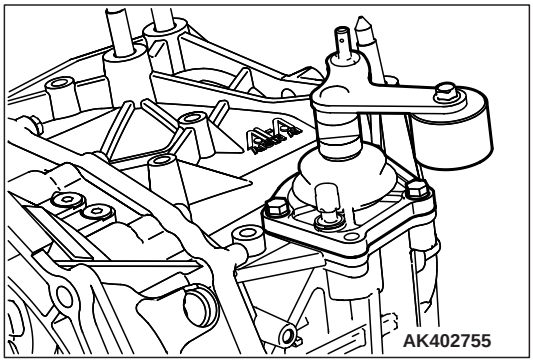

32. Install the shift & select lever shaft assembly to the transmission case and tighten the bolts to the specified torque of 19 ±3 N· m (14 ±2 ft-lb).

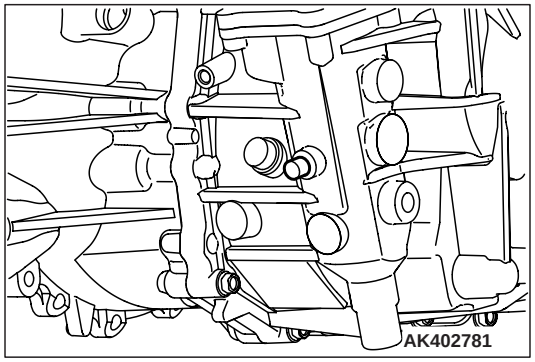

33. Install the straight pin to the specified torque of 30 ±9 N· m (22 ±7 ft-lb).

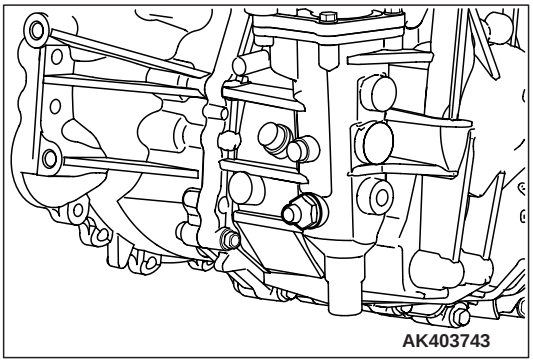

34. Install the lock ball assembly and tighten to the specified torque of 30 ±8 N· m (22 ±6 ft-lb).

cardiagn.com

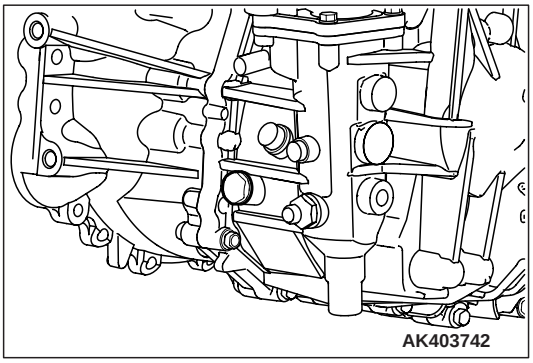

35. Install the straight screw plug with head and gasket (two places) and tighten to the specified torque of 39 ±12 Nm (29 ±9 ft-lb).

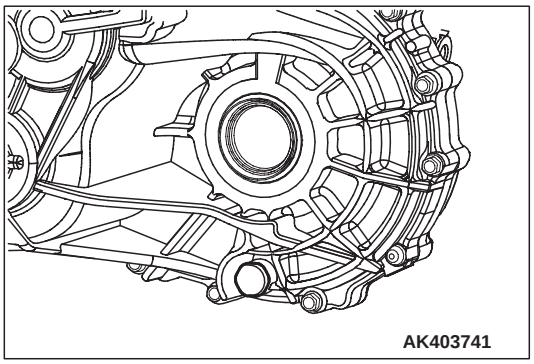

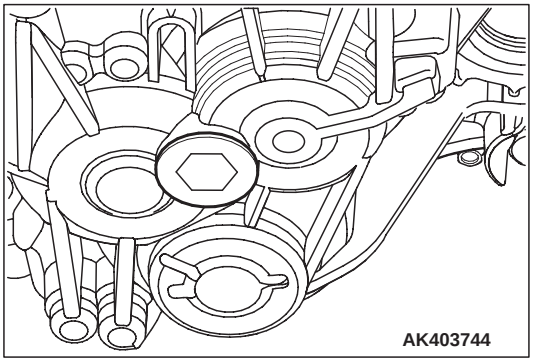

36. Install the straight screw plug with head and tighten to the specified torque of 39 ±12 N· m (29 ±9 ft-lb).

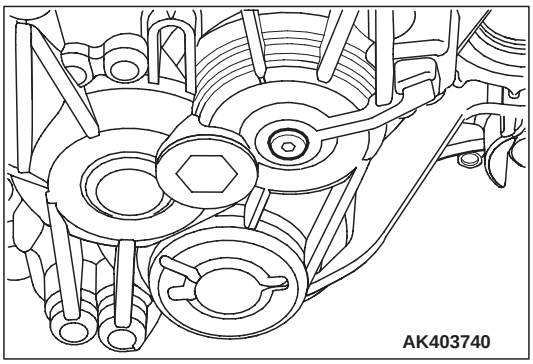

37. Install the straight screw plug with head and tighten to the specified torque of 23 ±6 N· m (17 ±4 ft-lb).

38. Apply grease to the hole and the sides of control bell crank dust cover.

cardiagn.com

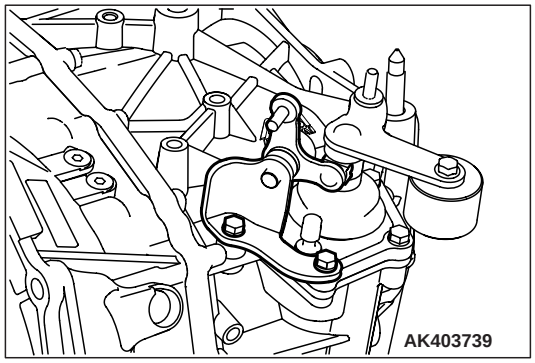

39. Install the selecting bell crank assembly and control bell crank dust cover to the transmission case and tighten the bolts to the specified torque of 19 ±3 N· m (14 ±2 ft-lb).

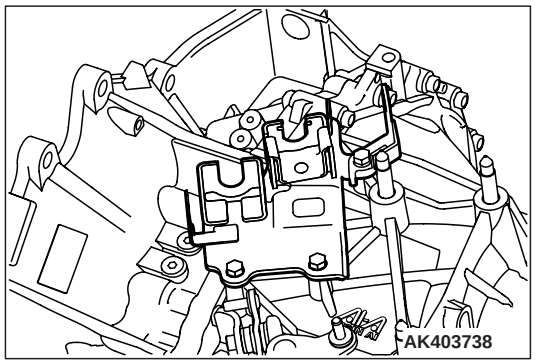

40. Install the control cable bracket to the transmission case and tighten the bolts to the specified torque of 19 ±3 N· m (14 ±2 ft-lb).

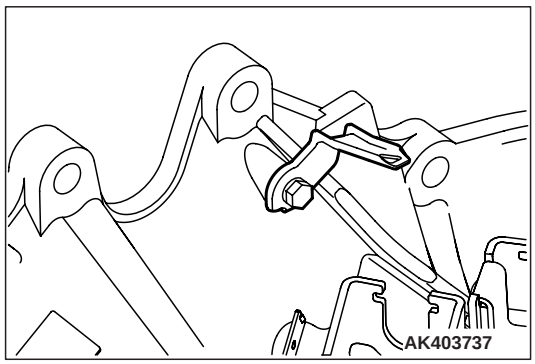

41. Install the wiring harness clamp bracket to the transmission case and tighten the bolts to the specified torque of 9.0 ±2.0 N· m (80 ±17 ft-lb).
42. Install the transmission case hanger No.1 to the transmission case and tighten the bolts to the specified torque of 19 ±3 N· m (14 ±2 ft-lb).

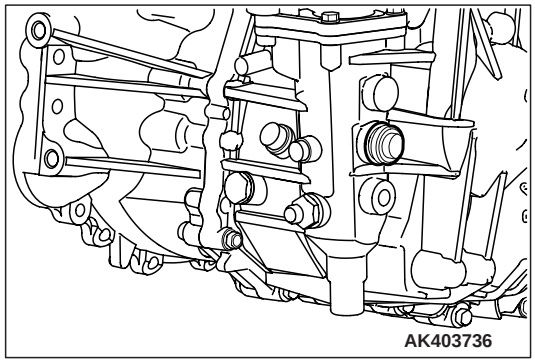

43. Install the lock ball assembly and tighten to the specified torque of 40 ±12 Nm (30 ±8 ft-lb).

cardiagn.com

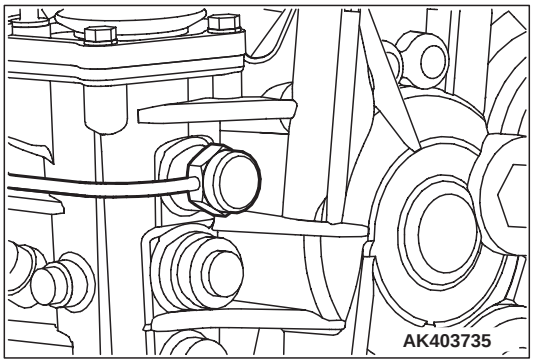

44. Install the backup lamp switch assembly and tighten to the specified torque of 40 ±12 N· m (30 ±8 ft-lb).

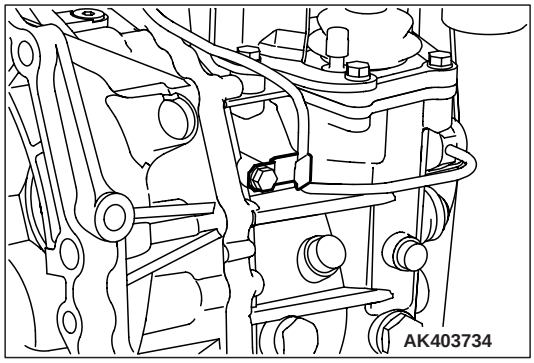

45. Install the clamp to the transmission case and tighten the bolts to the specified torque of 12 ±4 N· m (102 ±40 in-lb).

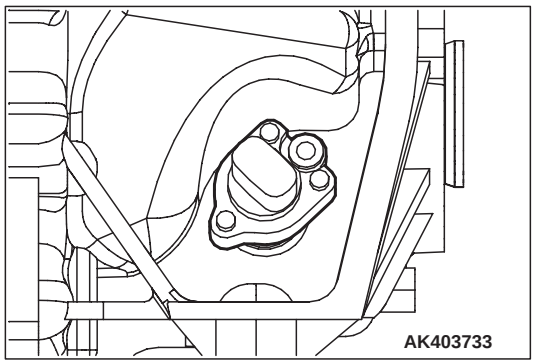

46. Install the speedometer driven gear assembly to the transmission case and tighten the bolts to the specified torque of 5.5 ±2.2 N· m (49 ±19 in-lb).

cardiagn.com

INPUT SHAFT

DISASSEMBLY AND ASSEMBLY

M1222001600300

Required Special Tools:

- MB990560: Rear axle shaft bearing remover
- MD998812: Installer cap
- MD998813: Installer 100
- MD998814: Installer 200
- MD998818: Installer adapter
- MD998823: Installer adapter
- MD998917: Bearing remover

DISASSEMBLY SERVICE POINTS

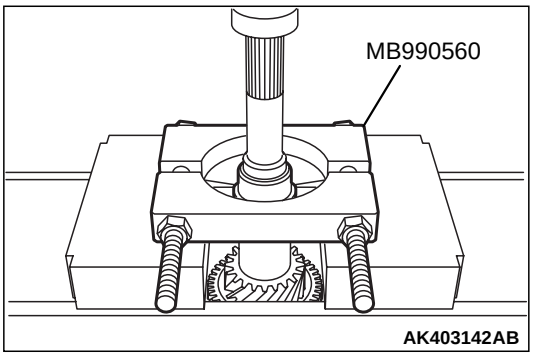

1. Using special tool MB990560, support the cylindrical roller bearing and remove the cylindrical roller bearing.

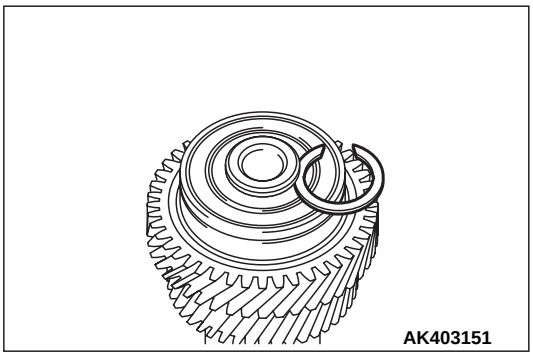

2. Remove the shaft snap ring.

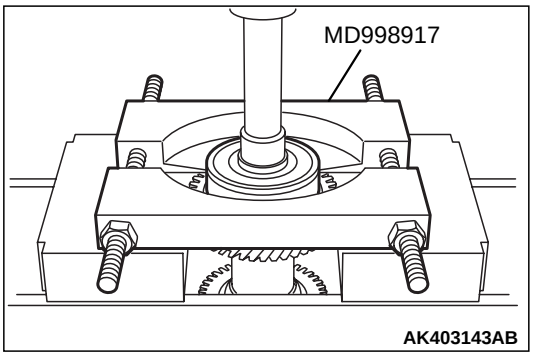

3. Using special tool MD998917, support the radial ball bearing and remove the radial ball bearing.

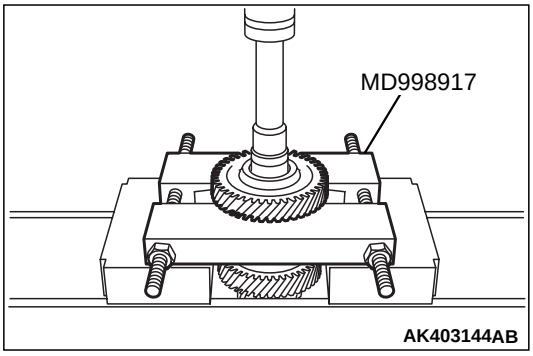

4. Using special tool MD998917, support the 6th drive gear and remove the 6th drive gear.

cardiagn.com

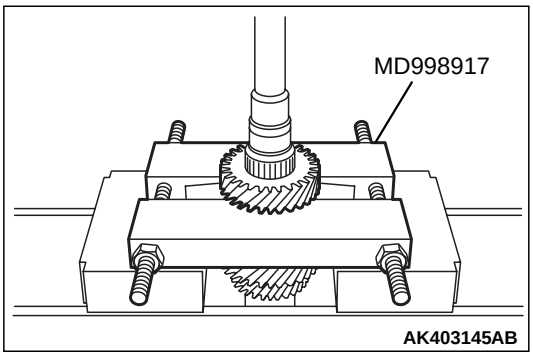

5. Using special tool MD998917, support the 3rd drive gear and remove the 3rd drive gear.
6. Remove the spacer.

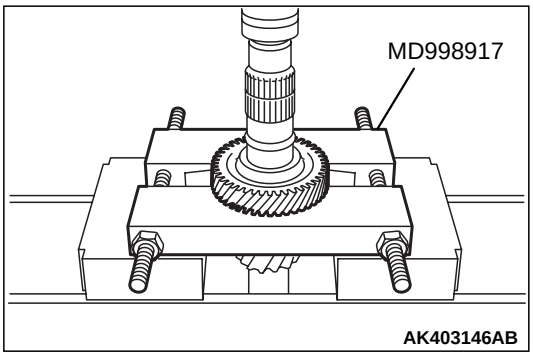

7. Using special tool MD998917, support the 4th drive gear and remove the 4th drive gear.

ASSEMBLY SERVICE POINTS

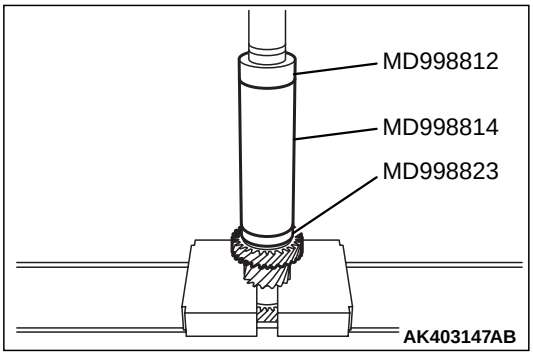

1. Using special tools MD998812, MD998814 and MD998823, install the 4th drive gear.
2. Install the spacer to input shaft.

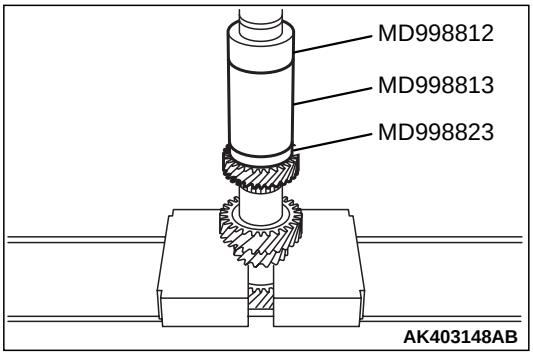

3. Using special tools MD998812, MD998813 and MD998823, install the 3rd drive gear.

cardiagn.com

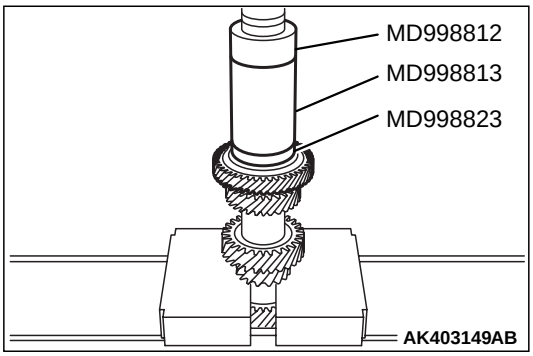

4. Using special tools MD998812, MD998813 and MD998823, install the 6th drive gear.

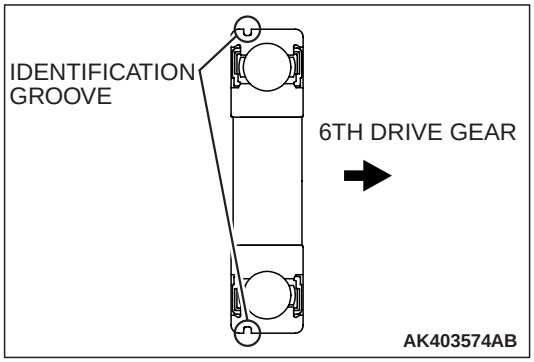

⚠ CAUTION

Never push the sealing area at the press fit.

5. Check the installation direction of the radial ball bearing.

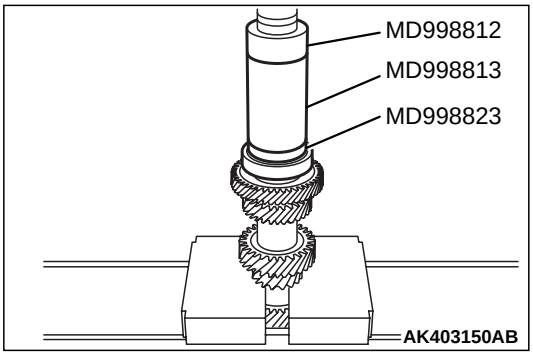

6. Using special tools MD998812, MD998813 and MD998823, install the radial ball bearing.

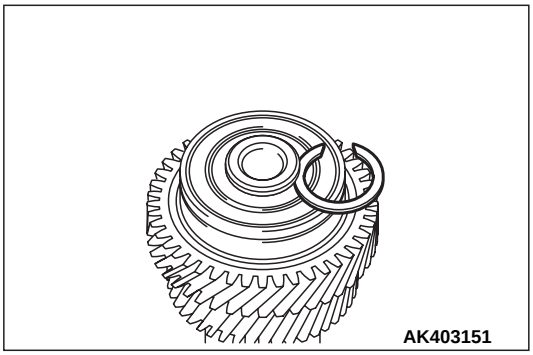

7. Select a shaft snap ring that allows distance of the thrust crevice of radial ball bearing to fall within the standard value range.

   Standard value: 0 –0.1 mm (0 –0.0039 inch)

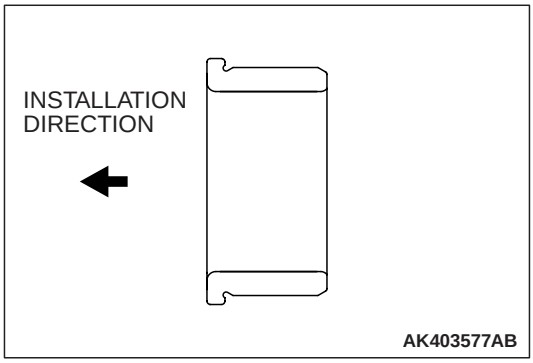

8. Check the installation direction of the cylindrical roller bearing.

cardiagn.com

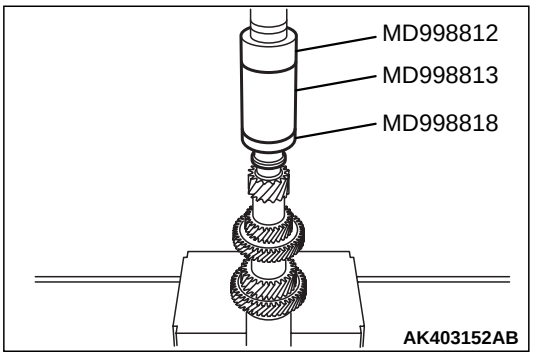

9. Using special tools MD998812, MD998813 and MD998818, install the cylindrical roller bearing.

OUTPUT SHAFT

DISASSEMBLY AND ASSEMBLY

M1222002200338

<OUTPUT SHAFT No.1>

Required Special Tools:

- MB990560: Rear axle shaft bearing remover
- MD998812: Installer cap
- MD998813: Installer 100
- MD998814: Installer 200
- MD998820: Installer adapter
- MD998824: Installer adapter
- MD998917: Bearing remover

DISASSEMBLY SERVICE POINTS

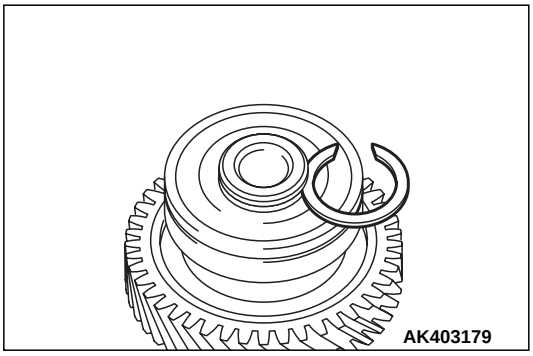

1. Remove the shaft snap ring.

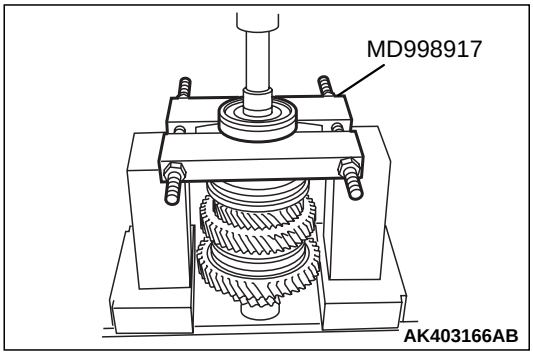

2. Using special tool MD998917, support the radial ball bearing and remove the radial ball bearing.

cardiagn.com

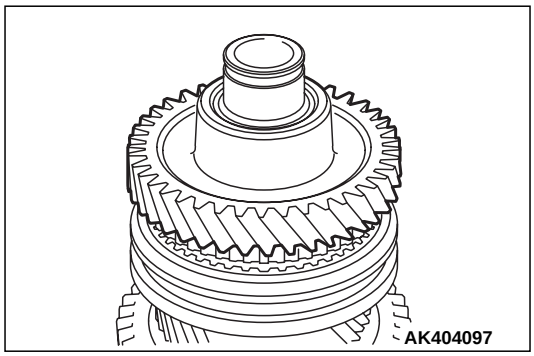

3. Remove the 3rd gear sub-assembly.

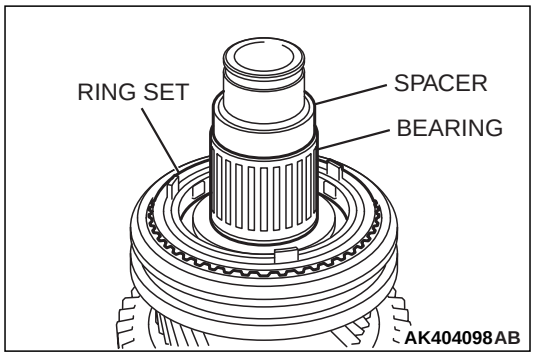

4. Remove the spacer, needle roller bearing and synchronizer ring set No.1.

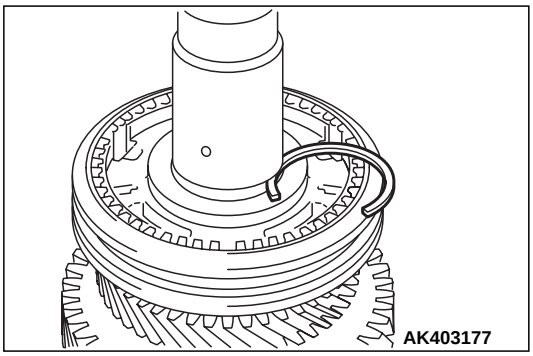

5. Remove the shaft snap ring.

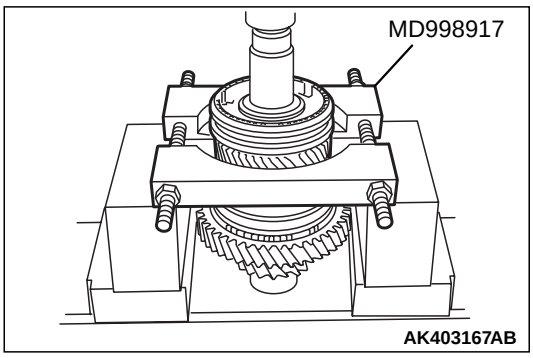

6. Using special tool MD998917, support the 4th gear sub-assembly and remove the 3rd-4th hub sleeve, synchronizer ring set No.4 and 4th gear sub-assembly.

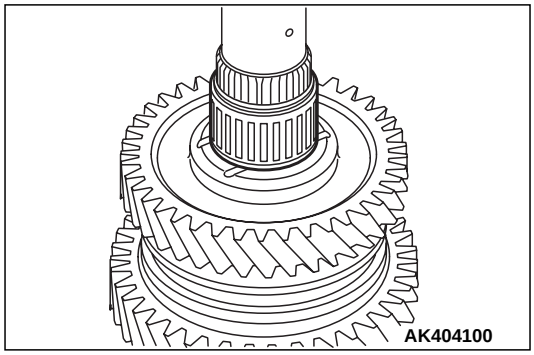

7. Remove the needle roller bearing.

cardiagn.com

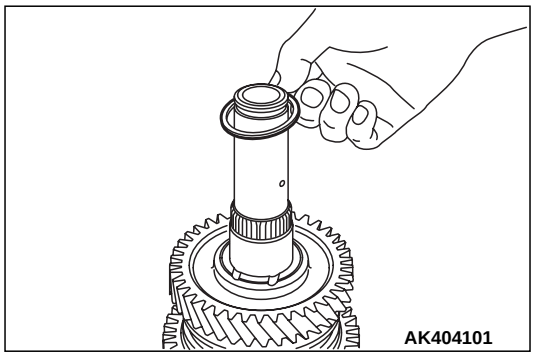

8. Remove the spacer.

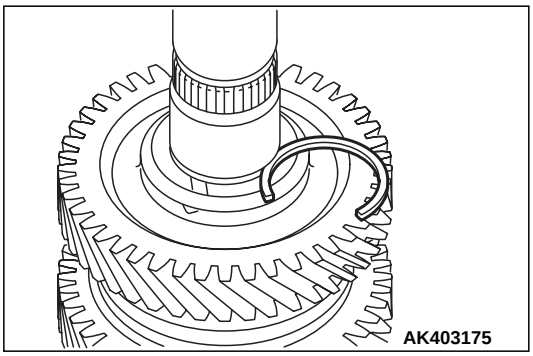

9. Remove the shaft snap ring.

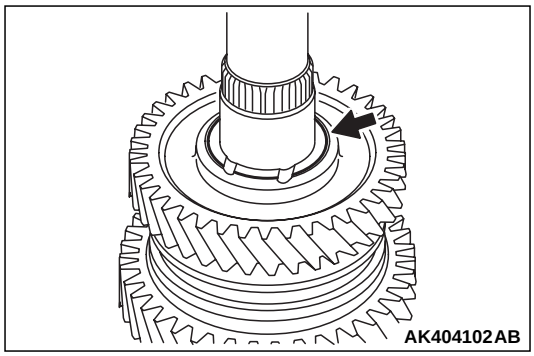

10. Remove the 2nd gear bearing inner race.

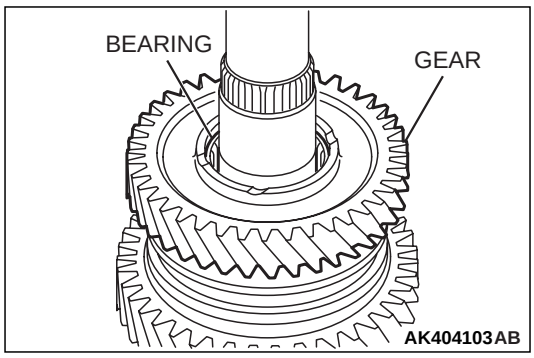

11. Remove the 2nd gear and needle roller bearing.

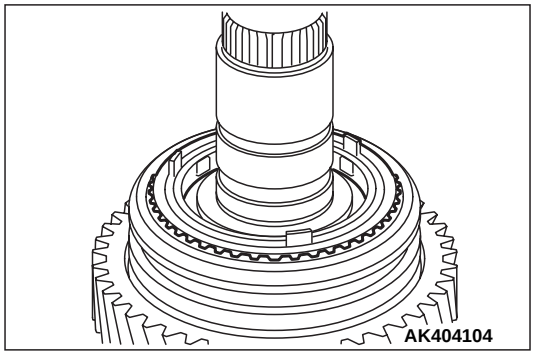

12. Remove the synchronizer ring set No.1.

cardiagn.com

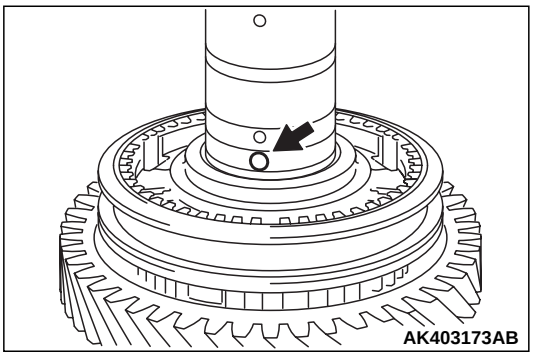

13.Remove the ball.

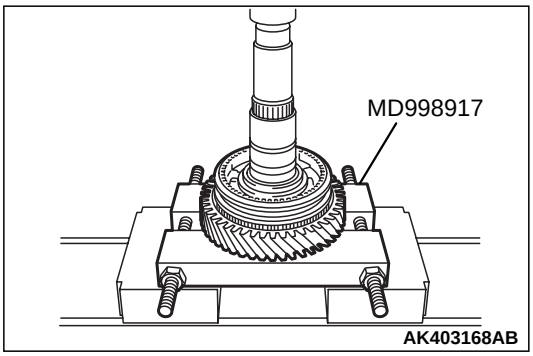

14.Using special tool MD998917, support the 1st gear and remove the 1st-2nd hub sleeve, synchronizer ring set No.1 and 1st gear.

15.Remove the needle roller bearing.

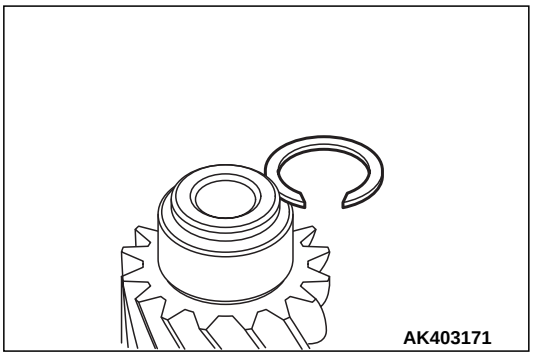

16.Remove the shaft snap ring.

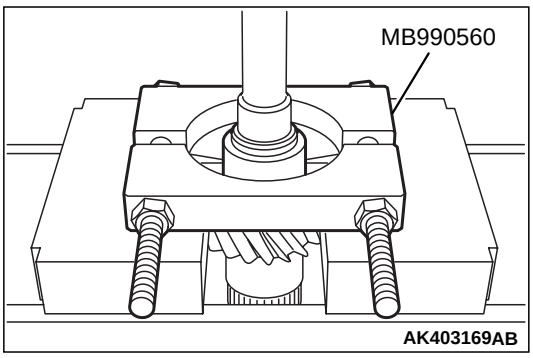

17.Using special tool MB998917, support the cylindrical roller bearing and remove the cylindrical roller bearing.

cardiagn.com

ASSEMBLY SERVICE POINTS

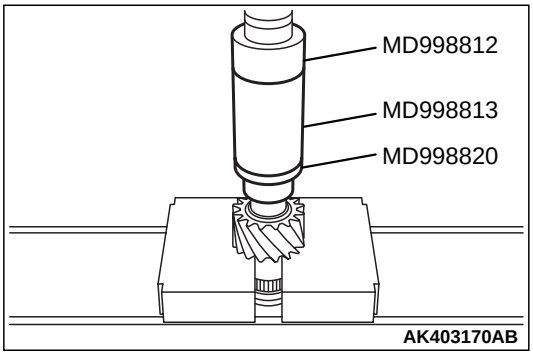

1. Using special tools MD998812, MD998813 and MD998820, install the cylindrical roller bearing.

   NOTE: Apply the gear oil sufficiently on the sliding surface.

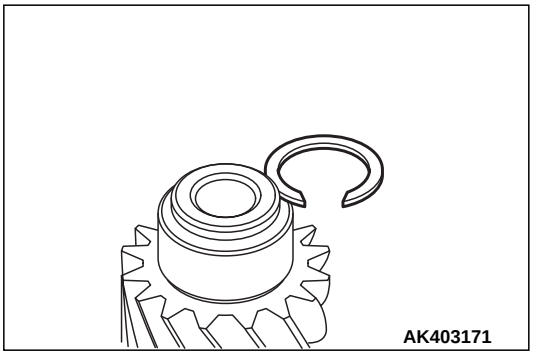

2. Install the shaft snap ring to output shaft No.1.

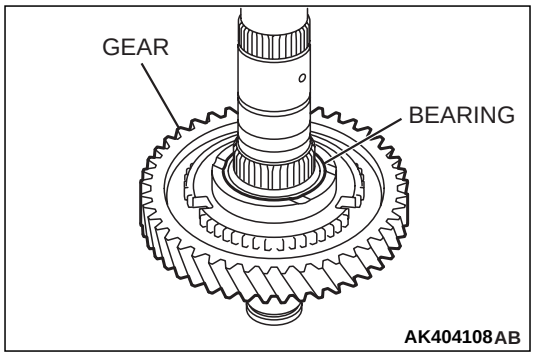

3. Install the 1st gear and needle roller bearing to output shaft No.1.

cardiagn.com

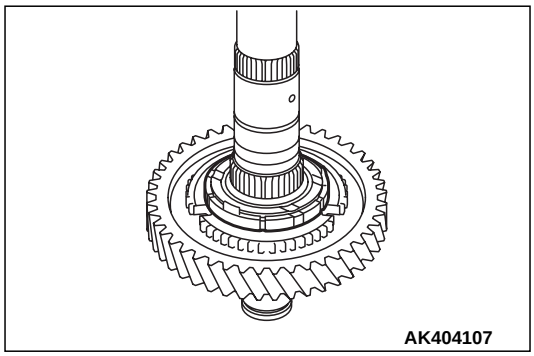

4. Install the synchronizer ring set No.1 to 1st gear.
   NOTE: Apply the gear oil sufficiently on the sliding surface.

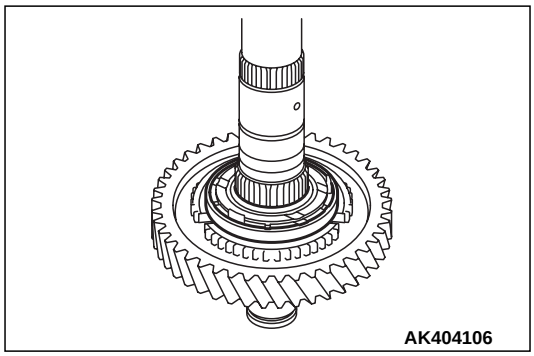

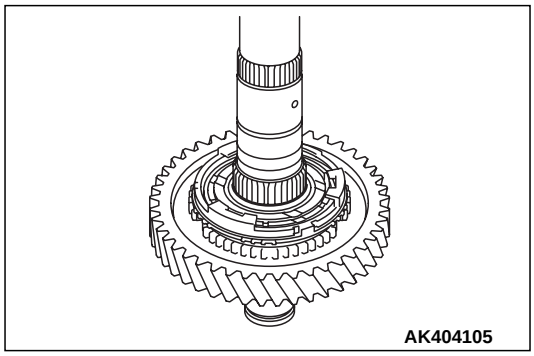

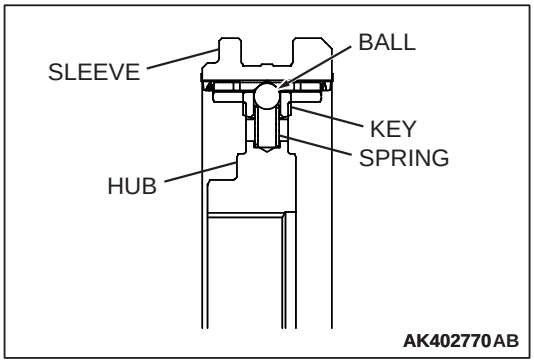

5. As shown in the illustration, set the 1st-2nd hub sleeve.
   NOTE:
   - *Apply gear oil to the caulked area between the sleeve and the hub.*
   - *After installation, confirm the sleeve and the hub slide smoothly.*

cardiagn.com

⚠ CAUTION

- **Pay attention to the direction of inserting the 1st-2nd hub sleeve.**
- **During press fit, confirm correct positions of the hub and the synchronizer ring.**
- **Check for smooth rotation of the gear after installation.**
- **The synchronizer ring must not bind.**

6. Install the 1st-2nd hub sleeve to the output shaft No.1 in the direction as shown in the illustration

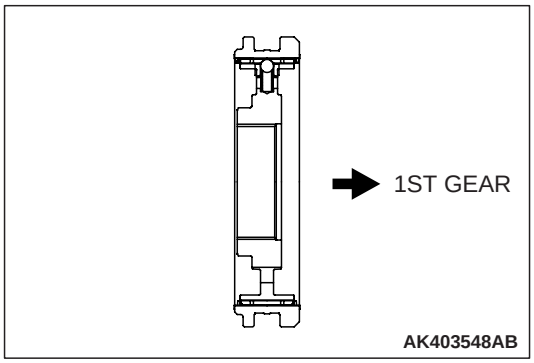

7. Using special tools MD998812, MD998814 and MD998824, install the 1st-2nd hub sleeve.

   NOTE: Install 1st-2nd hub sleeve securely into the stopper of the output shaft No.1.

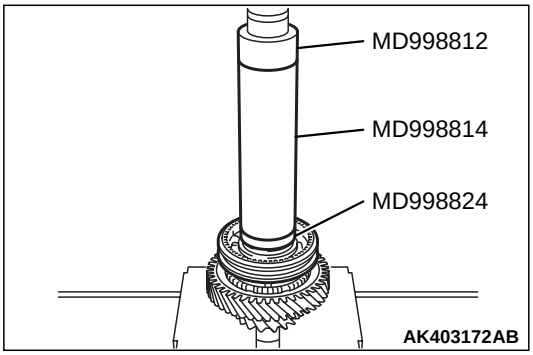

8. Insert the ball to the output shaft No.1.

   NOTE: Do not forget to attach the ball.

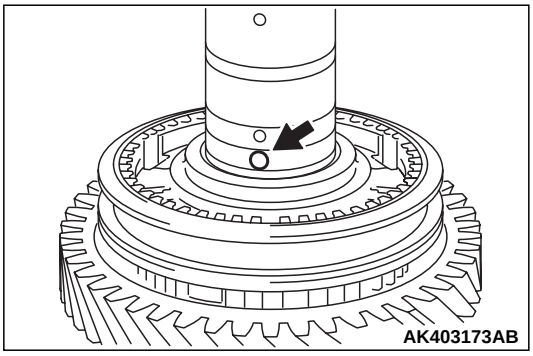

9. Install the synchronizer ring set No.1 to 1st-2nd hub sleeve.

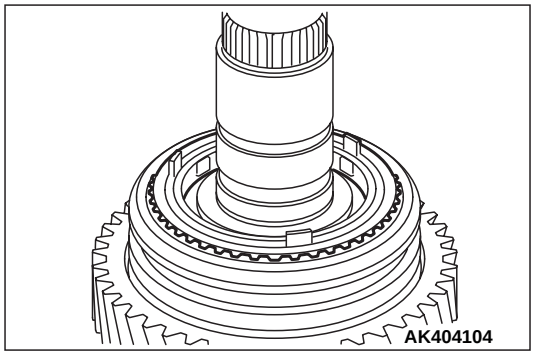

cardiagn.com

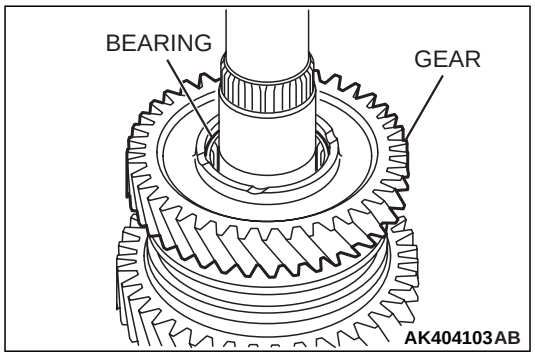

10.Insert the 2nd gear and needle roller bearing to the output shaft No.1.

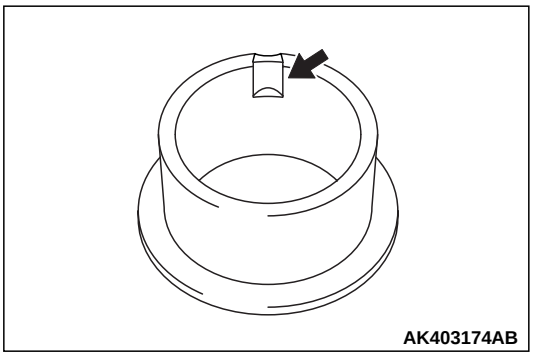

11.Fit the ball into groove as shown in the illustration.

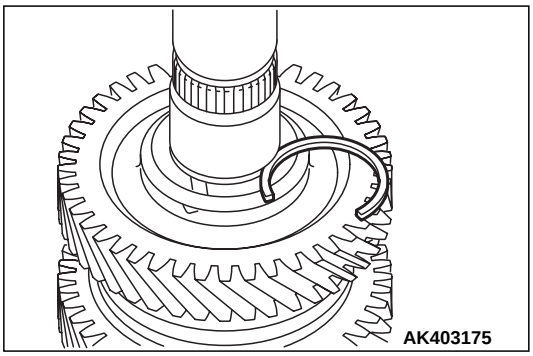

12.Select a shaft snap ring that allows distance of the thrust crevice of 2nd gear bearing inner race to fall within the standard value range.

Standard value: 0 –0.1 mm (0 –0.0039 inch)

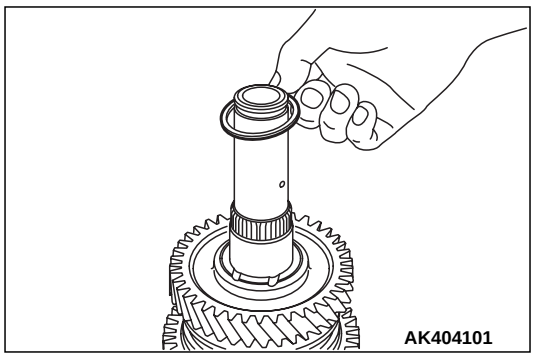

13.Insert the spacer to the output shaft No.1.

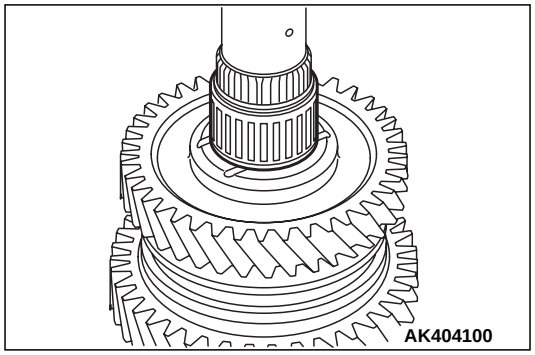

14.Insert the needle roller bearing to the output shaft No.1.

cardiagn.com

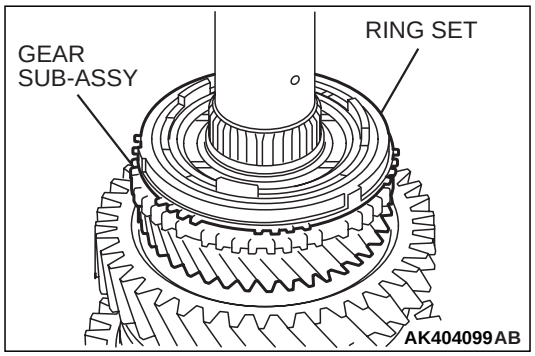

15.Insert the 4th gear sub-assembly and synchronizer ring set No.4 to the output shaft No.1.

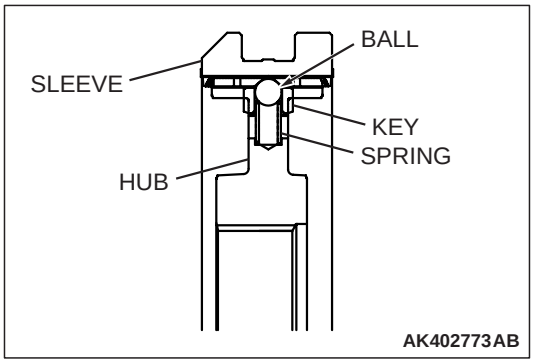

16.As shown in the illustration, set the 3rd-4th hub sleeve.

NOTE:
- *Apply gear oil to the caulked area between the sleeve and the hub.*
- *After installation, confirm the sleeve and the hub slide smoothly.*

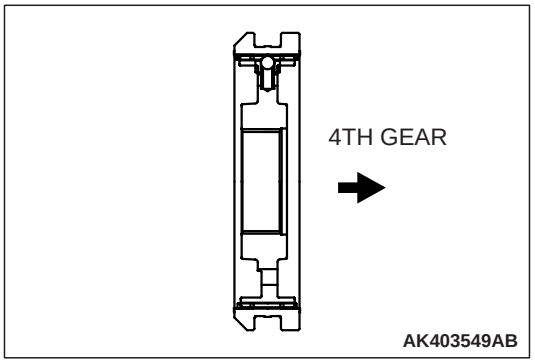

⚠ CAUTION
- **Pay attention to the direction of inserting the 3rd-4th hub sleeve.**
- **During press fit, confirm correct positions of the hub and the synchronizer ring.**
- **Check for smooth rotation of the gear after the installation.**
- **The synchronizer ring must not bind.**

17. Set the 3rd-4th hub sleeve to the output shaft No.1 in the direction as shown in the illustration.

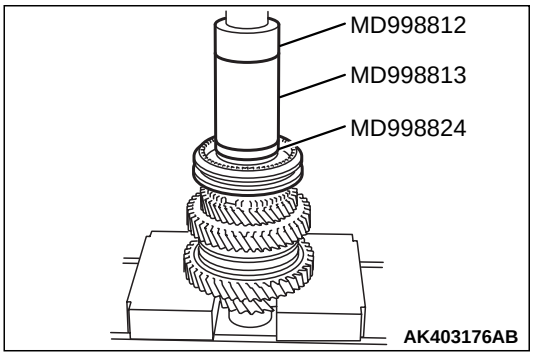

18.Using special tools MD998812, MD998813 and MD998824, install the 3rd-4th hub sleeve.

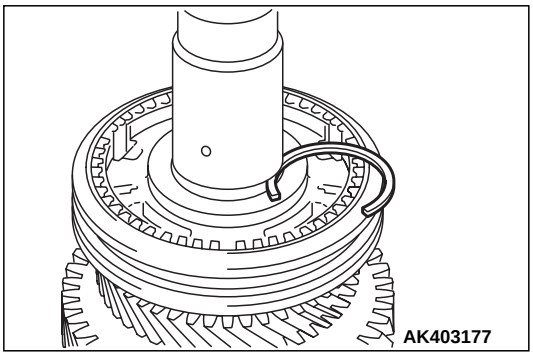

19.Select a shaft snap ring that allows distance of the thrust crevice of 3rd-4th hub to fall within the standard value range.

Standard value: 0 –0.1 mm (0 –0.0039 inch)

cardiagn.com

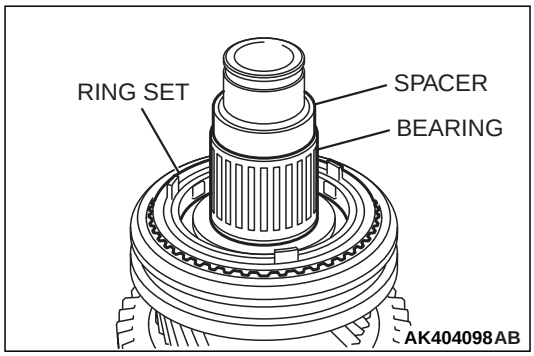

20. Insert the synchronizer ring set No.1, needle roller bearing and spacer to the 3rd-4th hub sleeve.

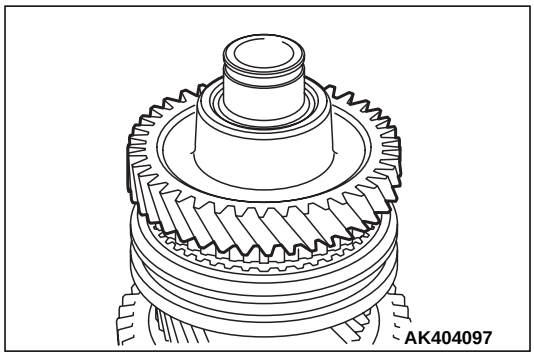

21. Insert the 3rd gear sub-assembly to the output shaft No.1.

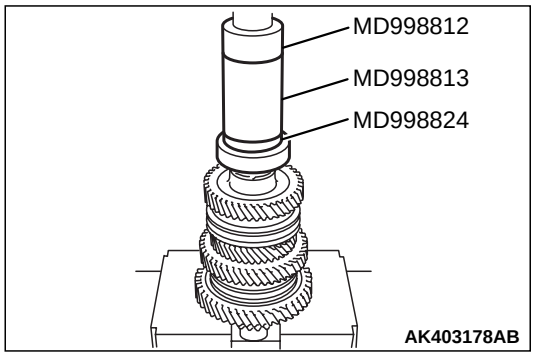

22. Using special tools MD998812, MD998813 and MD998824, install the radial ball bearing.

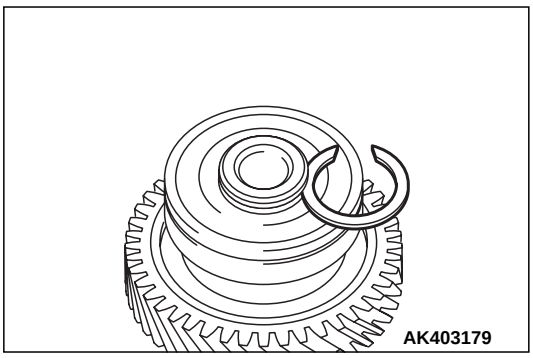

23. Select a shaft snap ring that allows distance of the thrust crevice of bearing to fall within the standard value range.

Standard value: 0 –0.1 mm (0 –0.0039 inch)

cardiagn.com

DISASSEMBLY AND ASSEMBLY

M1222002200327

<OUTPUT SHAFT No.2>

Required Special Tools:

- MD998812: Installer cap
- MD998813: Installer 100
- MD998814: Installer 200
- MD998819: Installer adapter
- MD998827: Installer adapter
- MD998917: Bearing remover

DISASSEMBLY SERVICE POINTS

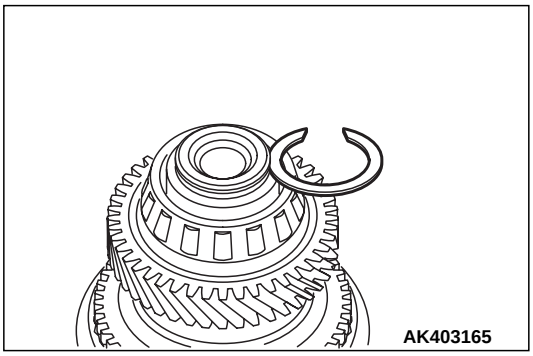

1. Remove the shaft snap ring.

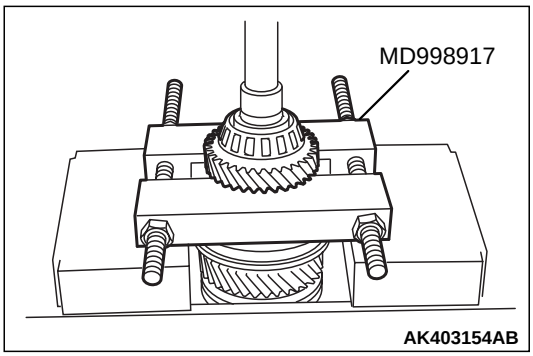

2. Using special tool MD998917, support the 6th gear sub assembly and remove the tapered roller bearing No.2 and 6th gear sub-assembly.

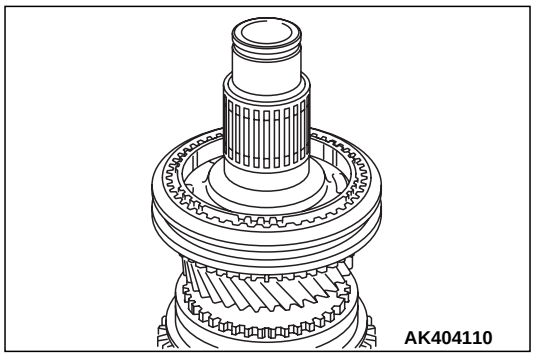

3. Remove the synchronizer outer ring No.3.

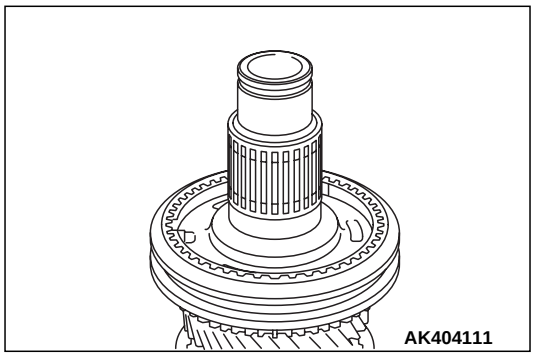

4. Remove the needle roller bearing and spacer.

cardiagn.com

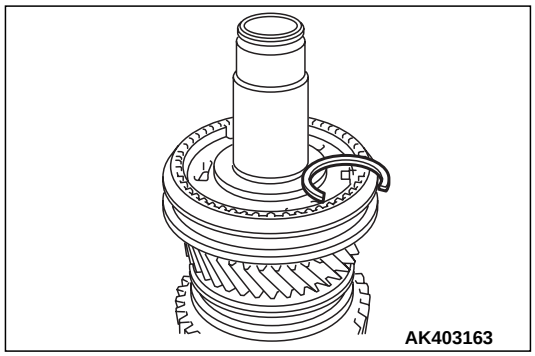

5. Remove the shaft snap ring.

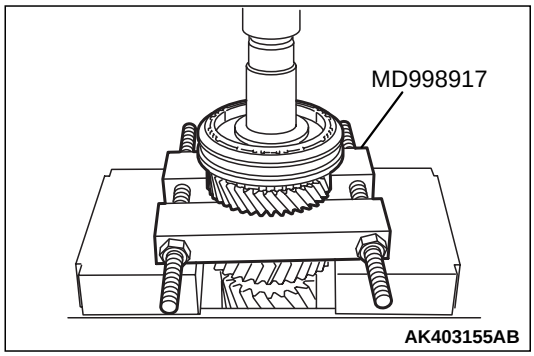

6. Using special tool MD998917, support the 5th gear sub-assembly and remove the 5th-6th hub sleeve, synchronizer outer ring No.3 and 5th gear sub-assembly.

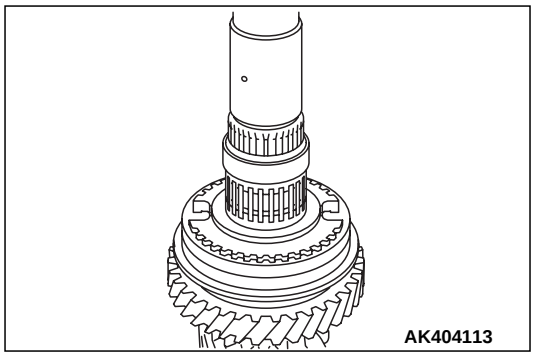

7. Remove the spacer and needle roller bearing.

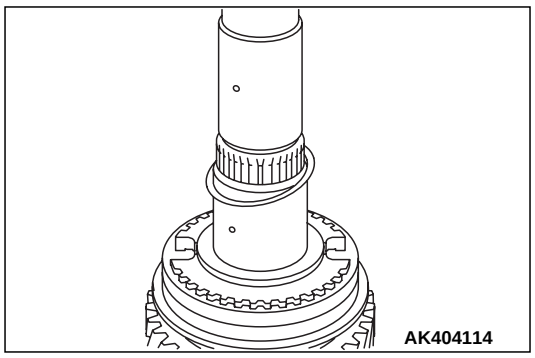

8. Remove the spacer.

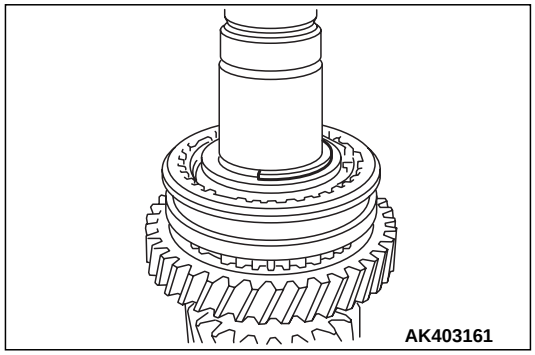

9. Remove the shaft snap ring.

cardiagn.com

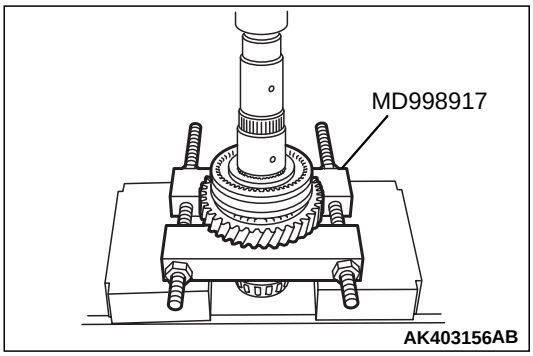

10. Using special tool MD998917, support the reverse gear and remove the reverse synchronizer sub-assembly, synchronizer ring No.4 and reverse gear.
11. Remove the needle roller bearing.

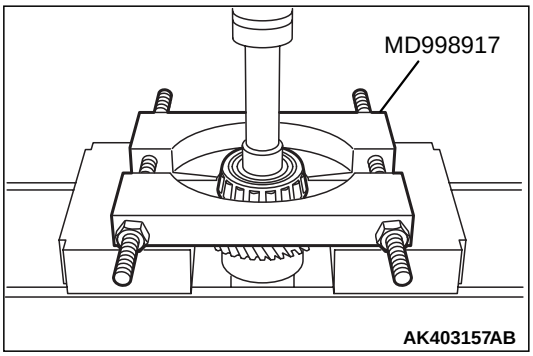

12. Using special tool MD998917, support the tapered roller bearing No.2 and remove the tapered roller bearing No.2.

ASSEMBLY SERVICE POINTS

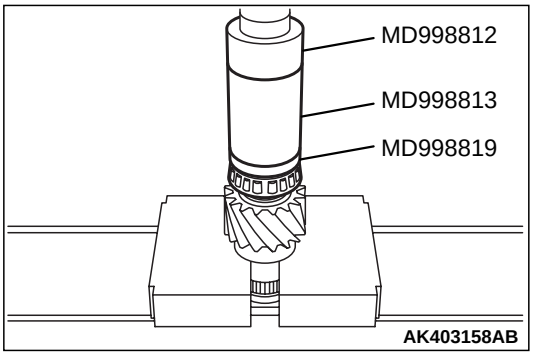

1. Using special tools MD998812, MD998813, and MD998819, install the tapered roller bearing No.2.

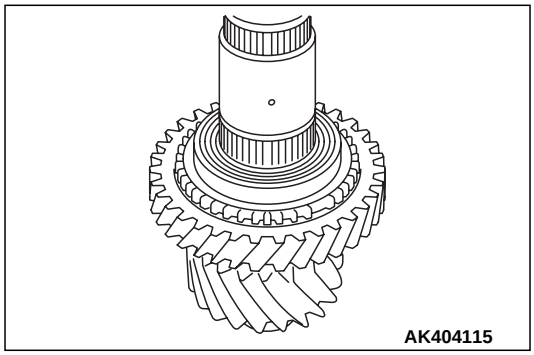

2. Install the needle roller bearing and reverse gear to output shaft No.2.
3. Install the synchronizer ring No.4.

cardiagn.com

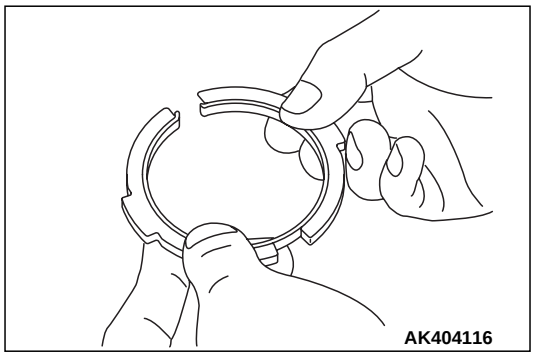

4. As shown in the illustration, install the synchromesh shifting key No.3 and the synchromesh shifting key spring No.3.

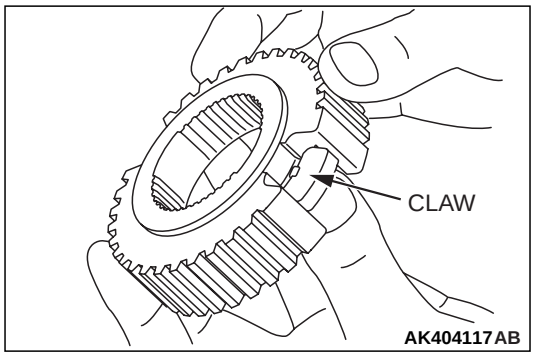

5. Install the synchromesh shifting key No.3 to the transmission clutch hub No.4 so that the claw is positioned as shown in the illustration.

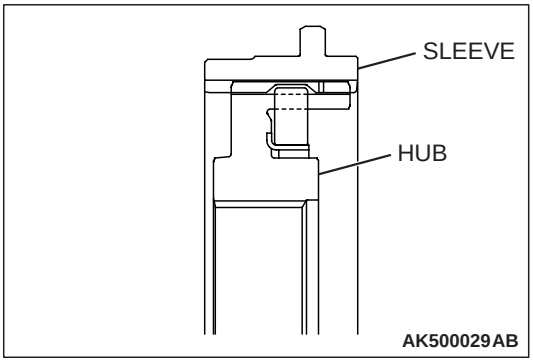

6. Combine the transmission clutch hub No.4 with the transmission hub sleeve No.4 in the direction as shown in the illustration.

   NOTE:
   - *Apply gear oil to the caulked area between the sleeve and the hub.*
   - *After installation, confirm the sleeve and the hub slide smoothly.*

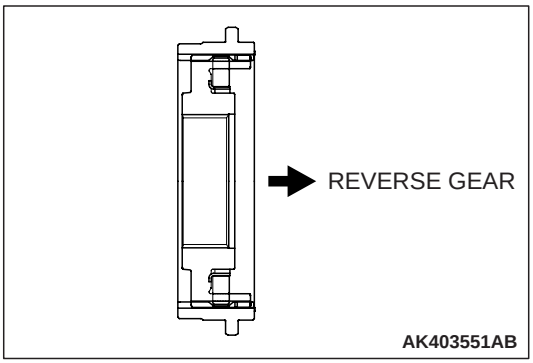

7. Set the reverse synchronizer sub-assembly to the output shaft No.2 in the direction as shown in the illustration.

   NOTE:
   - *Install the 1st-2nd synchronizer assembly securely into the stopper of the output shaft No.2.*
   - *Check for smooth rotation of the gear after the installation.*

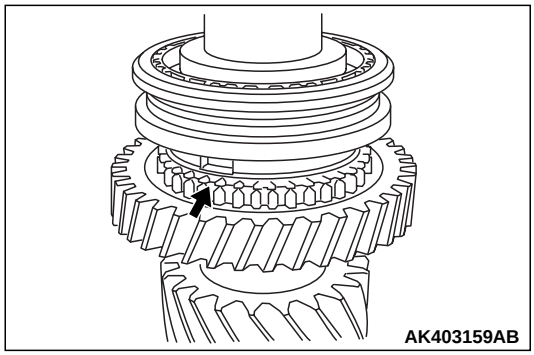

8. Install the synchronizer ring No.4, aligning the projection in the synchronizer hub with the groove in position shown in the illustration.

cardiagn.com

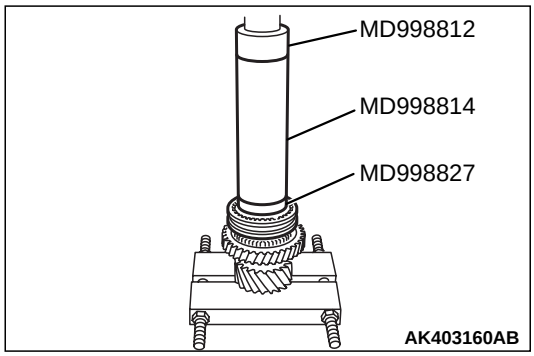

9. Using special tools MD998812, MD998814 and MD998827, install the reverse synchronizer sub-assembly.

   NOTE:
   - *Confirm correct position as shown.*
   - *The synchronizer ring must not bind.*

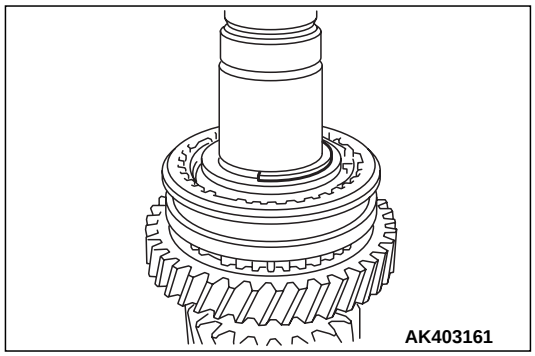

10. Select a shaft snap ring that allows distance of the thrust crevice of reverse hub to fall within the standard value range.

    Standard value: 0 –0.1 mm (0 –0.0039 inch)

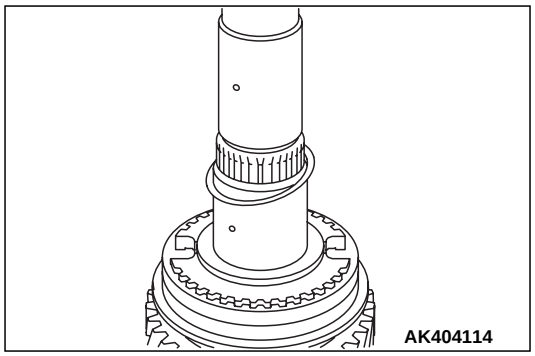

11. Install the spacer to output shaft No.2.

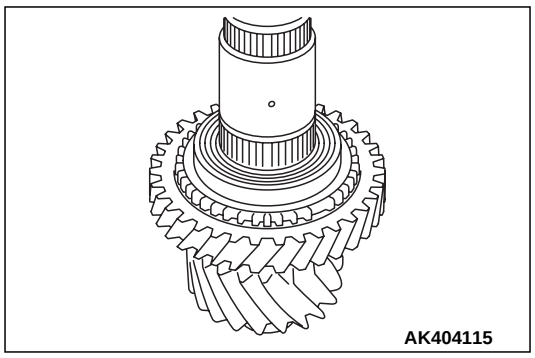

12. Install the needle roller bearing and spacer to output shaft No.2.

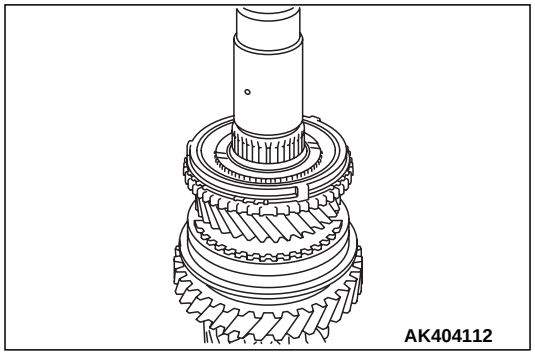

13. Install the 5th gear sub-assembly to output shaft No.2, and synchronizer outer ring No.3 to 5th gear sub-assembly.

cardiagn.com

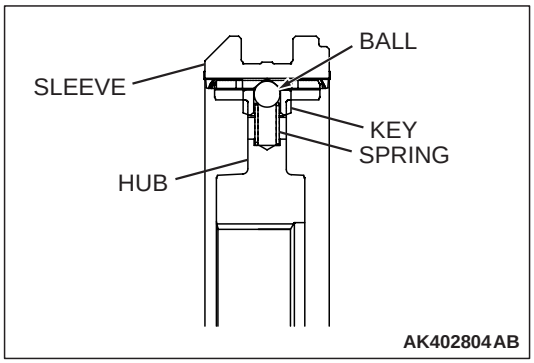

14.As shown in the illustration, set the 5th-6th hub sleeve.

NOTE:
- *Apply gear oil to the caulked area between the sleeve and the hub.*
- *After the installation, confirm the sleeve and the hub slide smoothly.*

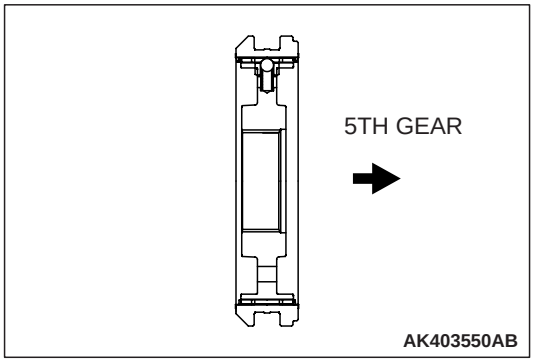

15. Set the 5th-6th hub sleeve to the output shaft No.2 in the direction as shown in the illustration.

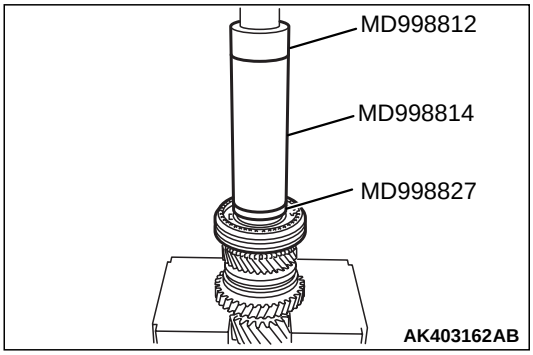

16.Using special tools MD998812, MD998814 and MD998827, install the 5th-6th hub sleeve.

NOTE:
- *During press fit, confirm correct positions of the hub and the synchronizer ring.*
- *Install the 5th-6th synchronizer assembly securely into the stopper of the output shaft No.2.*
- *After installation, confirm the sleeve and the hub slide smoothly.*
- *The synchronizer ring must not bind.*

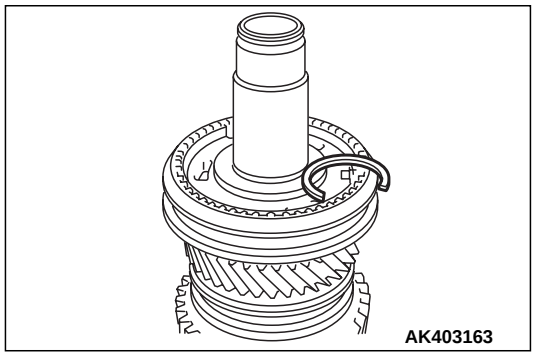

17.Select a shaft snap ring that allows distance of the thrust crevice of 5th-6th hub to fall within the standard value range.

Standard value: 0 –0.1 mm (0 –0.0039 inch)

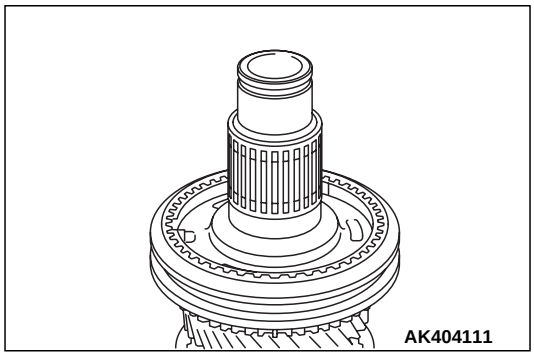

18.Install the spacer and needle roller bearing to output shaft No.2.

cardiagn.com

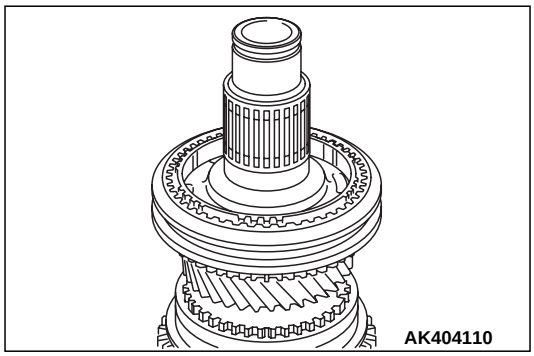

19. Install the synchronizer outer ring No.3 to 5th gear sub-assembly.

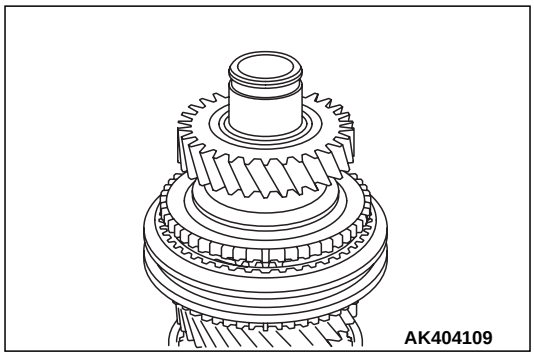

20. Install the 6th gear sub-assembly to output shaft No.2.

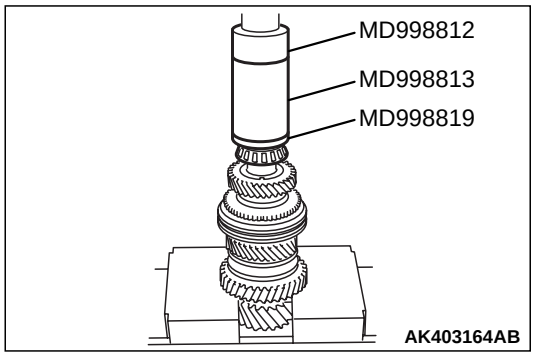

21. Using special tools MD998812, MD998813 and MD998819, install the tapered roller bearing No.2.

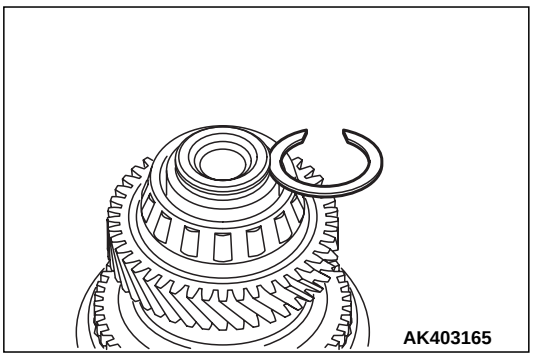

22. Install the shaft snap ring to output shaft No.2.

Standard value: 0 –0.1 mm (0 –0.0039 inch)

cardiagn.com

SELECT LEVER

DISASSEMBLY AND ASSEMBLY

M1222012800171

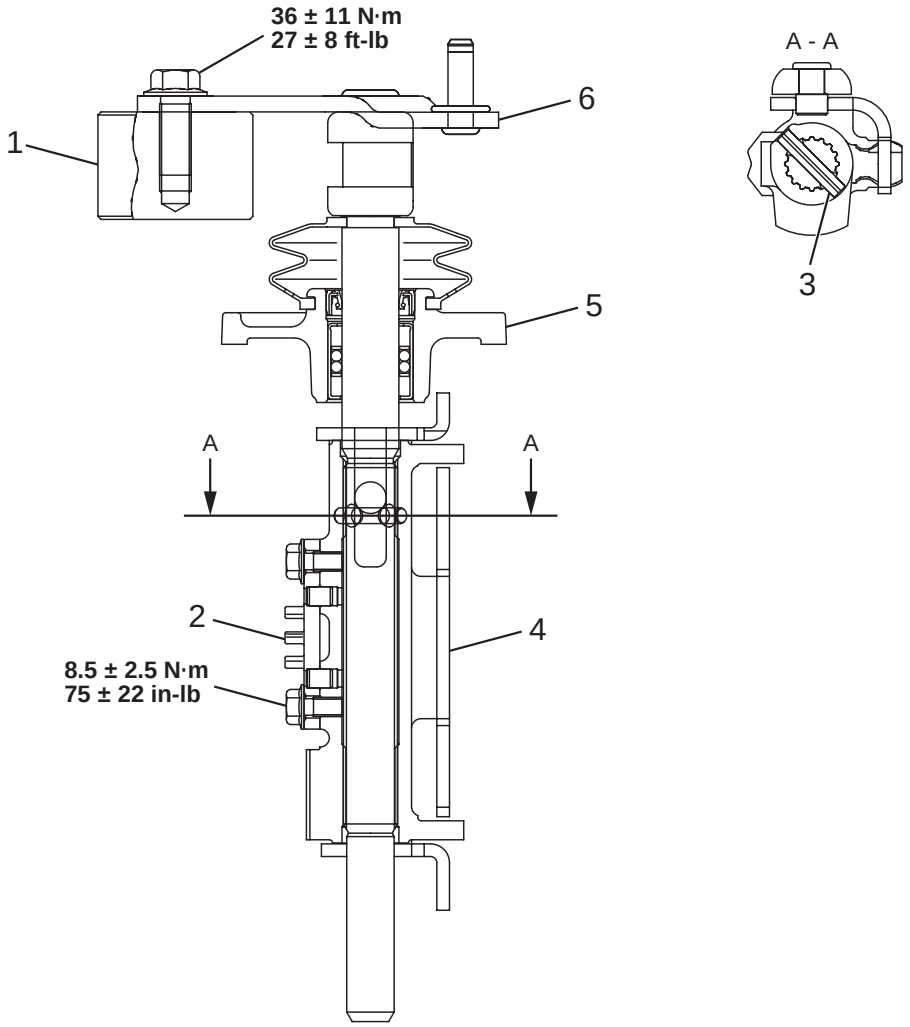

AK402774AB

Disassembly steps

1. SHIFT LEVER DAMPER
2. SHIFT GUIDE PLATE

<<**A**>> >>**A**<< 3. SLOTTED SPRING PIN

4. SHIFT & SELECT LEVER NO.1, SHIFT INTERLOCK PLATE NO.1

Disassembly steps (Continued)

5. CONTROL SHAFT COVER SUB-ASSEMBLY
6. SHIFT & SELECT LEVER SHAFT

cardiagn.com

DISASSEMBLY SERVICE POINTS

<<A>> SLOTTED SPRING PIN REMOVAL

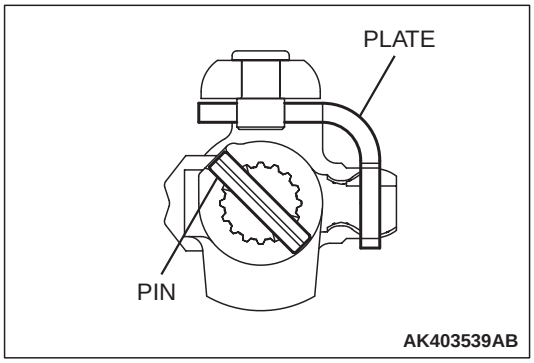

⚠ **CAUTION**

As shown in the illustration, remove the slotted spring pin, not touching the shift interlock plate No.1.

ASSEMBLY SERVICE POINTS

SLOTTED SPRING PIN INSTALL

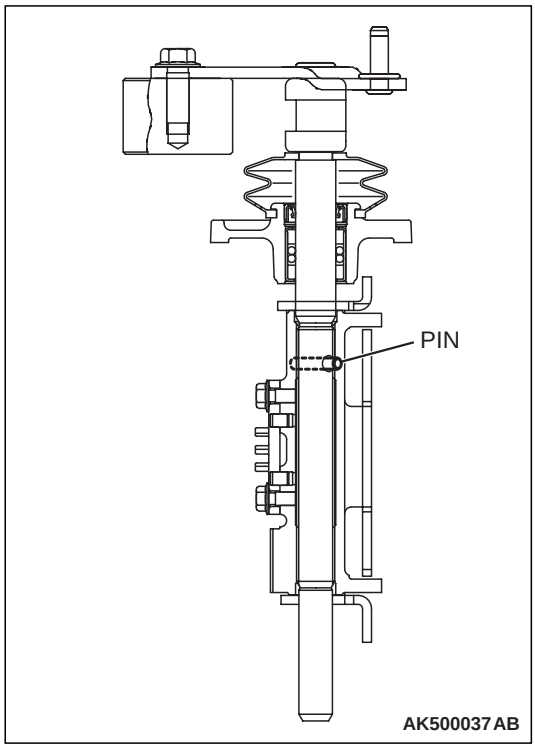

As shown in the illustration, stick the slotted spring pin in the shift interlock plate No.1

cardiagn.com

CLUTCH HOUSING

DISASSEMBLY AND ASSEMBLY

M1222003700284

Required Special Tools:

- MB990211: Slide hammer
- MB990699: Differential oil seal installer
- MB990938: Installer bar
- MB991168: Differential oil seal installer
- MB991445: Bush remover & installer base
- MB991448: Bush remover & installer base
- MB992037: Input shaft oil seal installer
- MB992039: Slide hammer puller
- MD998550: Extension HSG seal installer

DISASSEMBLY SERVICE POINTS

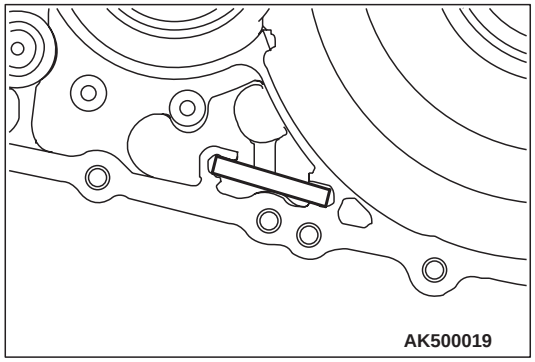

1. Remove the transmission magnet.

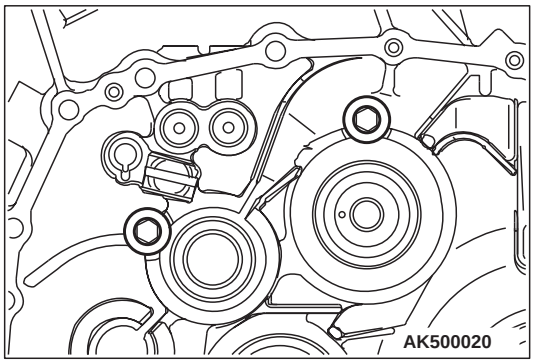

2. Remove the bolt with washer and bearing lock plate.
3. Using special tools MB990211 and MB992039, remove the tapered roller bearing No.1.

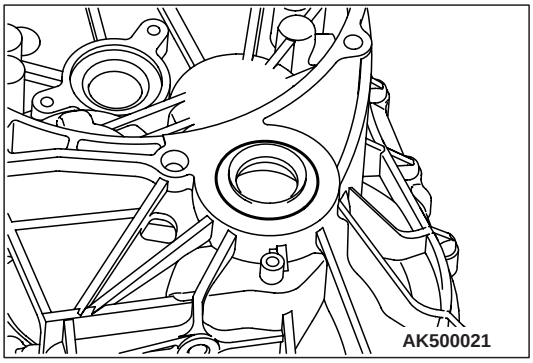

4. Remove the type T oil seal.
5. Using special tools MB990211 and MB992039, remove the cylindrical roller bearing.

cardiagn.com

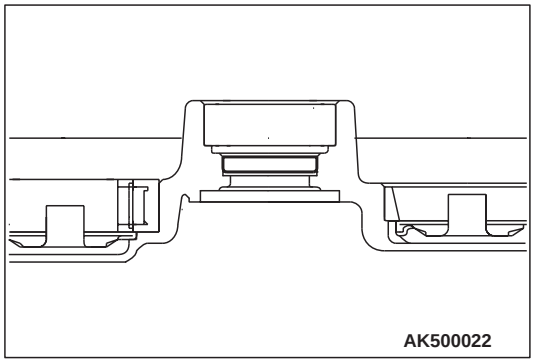

6. Remove the type T oil seal.

7. Using special tools MB990211 and MB992039, remove the cylindrical roller bearing.
8. Using special tools MB990211 and MB992039, remove the tapered roller bearing No.1.
9. Remove the output shaft cover (two pieces).

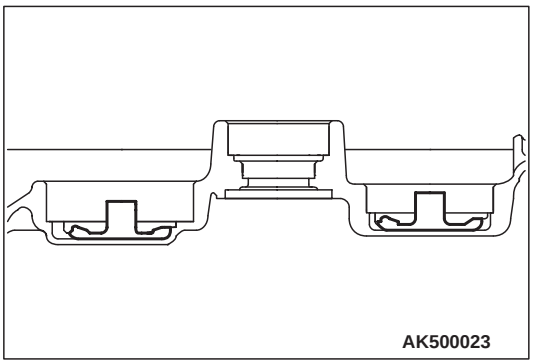

ASSEMBLY SERVICE POINTS

1. Install the output shaft cover (two pieces) in the transaxle case.

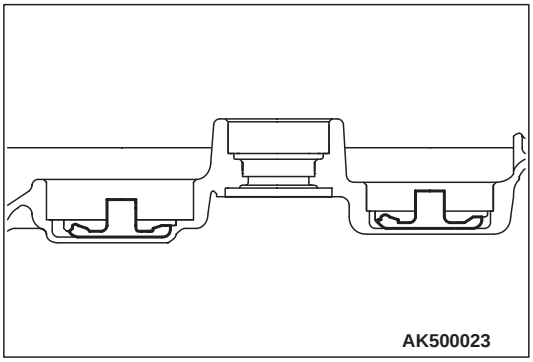

2. Using special tool MB991168, install the tapered roller bearing No.1 in the transaxle case.

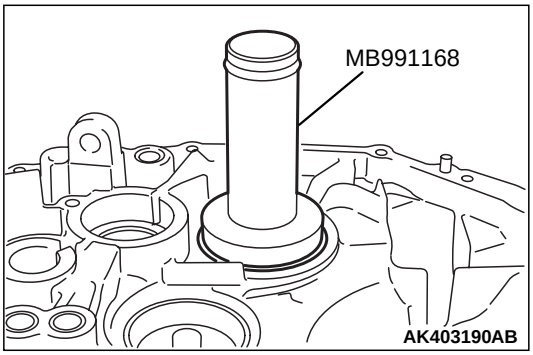

cardiagn.com

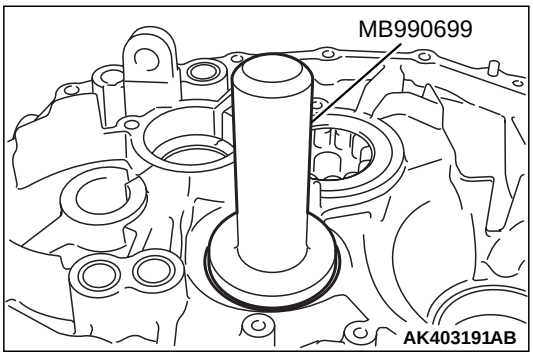

3. Using special tool MB990699, install the cylindrical roller bearing in the transaxle case.

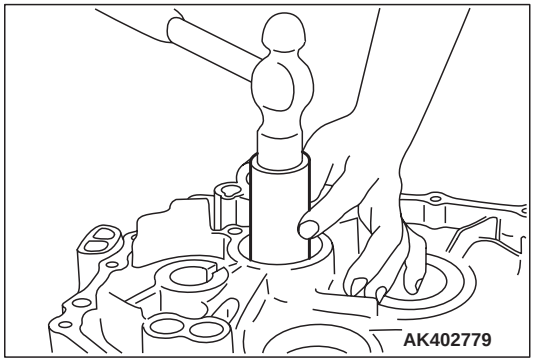

4. Using special tool MB9902037, install the type T oil seal in the transaxle case.

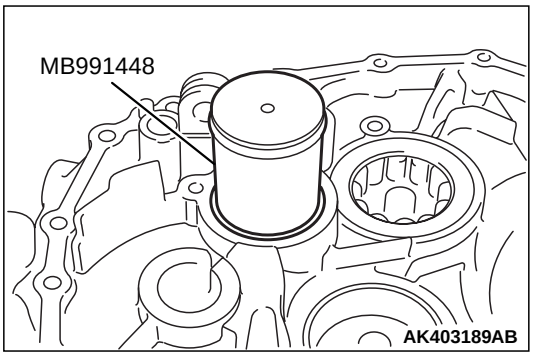

5. Using special tool MB991448, install the cylindrical roller bearing in the transaxle case.

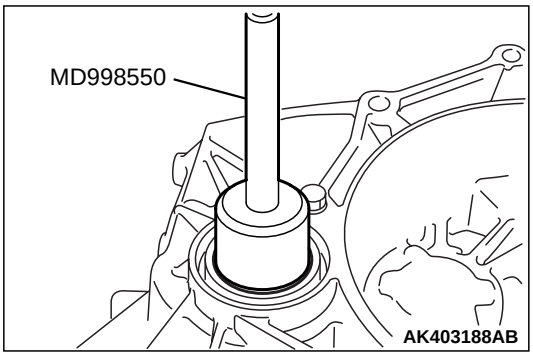

6. Using special tool MD998550, install the type T oil seal in the transaxle case.

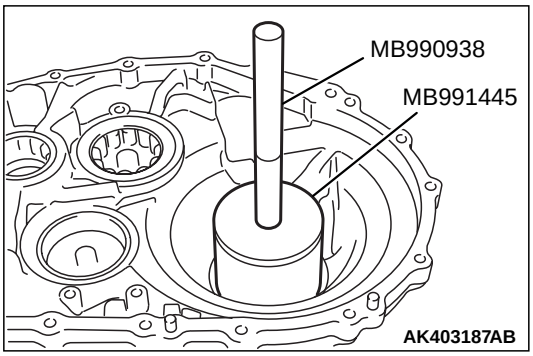

7. Using special tools MB990938 and MB991445, install the tapered roller bearing No.1 in the transaxle case.

cardiagn.com

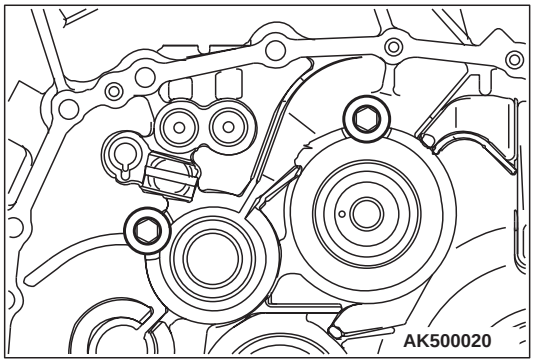

8. Install the bearing lock plate.
9. Tighten the bolt with washer to the specified torque of 11 ±4 N· m (98 ±35 in-lb).

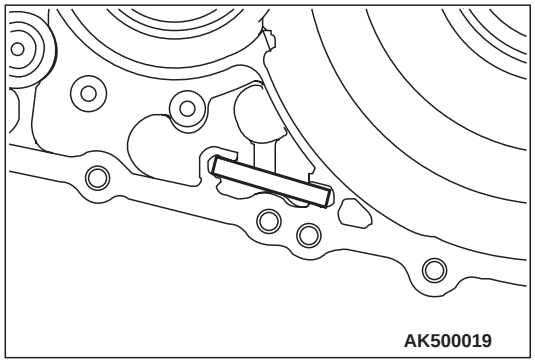

10. Install the transmission magnet in the transaxle case.

cardiagn.com

TRANSMISSION CASE

DISASSEMBLY AND ASSEMBLY

M1222013400217

Required Special Tools:

- MB990211: Slide hammer
- MB990938: Installer bar
- MB991015: Knuckle oil seal installer
- MB991966: Bearing outer race installer
- MB992039: Slide hammer puller

DISASSEMBLY SERVICE POINTS

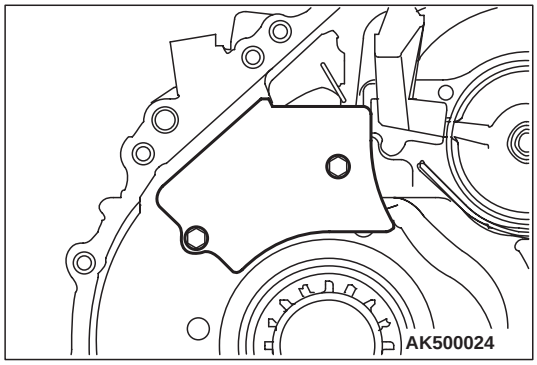

1. Remove the transmission oil separator.
2. Using special tools MB990211 and MB992039, remove the tapered roller bearing No.1.

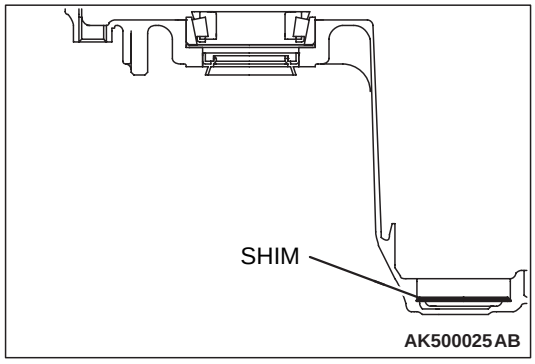

3. Remove the shim.

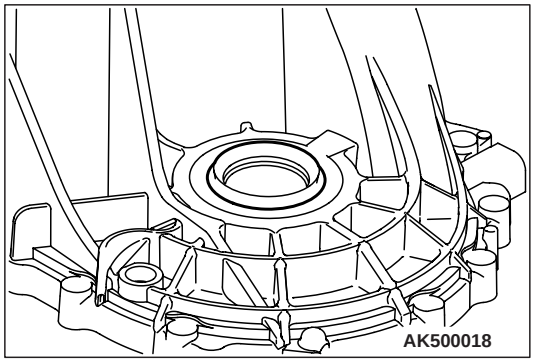

4. Remove the type T oil seal.

5. Using special tools MB990211 and MB992039, remove the tapered roller bearing No.1 and shim.

cardiagn.com

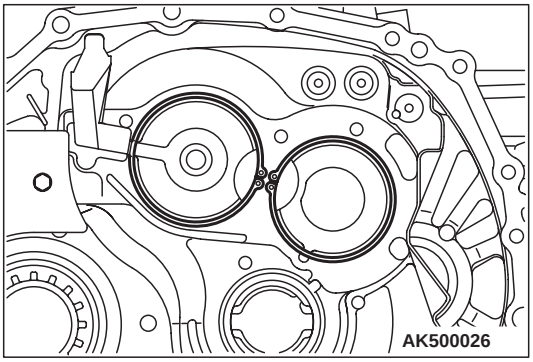

6. Remove the hole snap ring (two pieces).

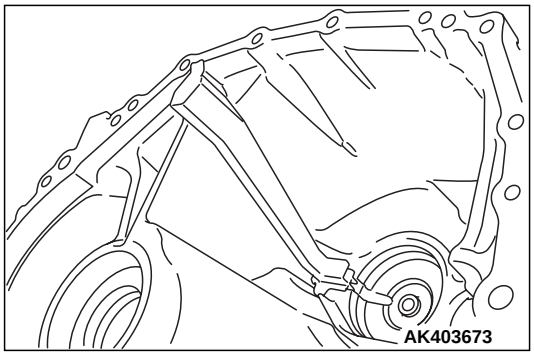

7. Remove the oil receiver pipe.

REASSEMBLY SERVICE POINTS

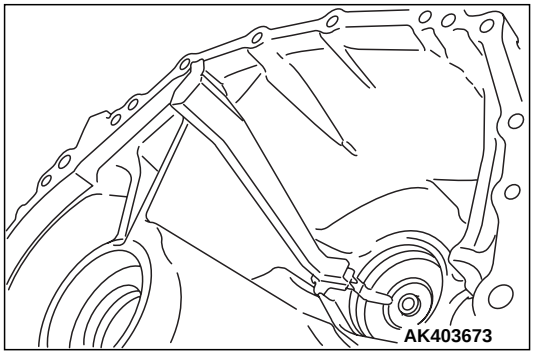

1. install the oil receiver pipe in the transmission case.

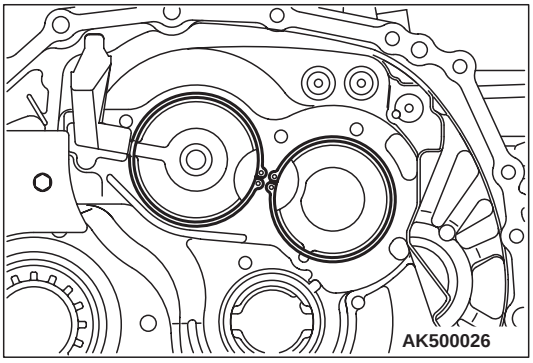

2. install the hole snap ring (two pieces) in the transmission case.

cardiagn.com

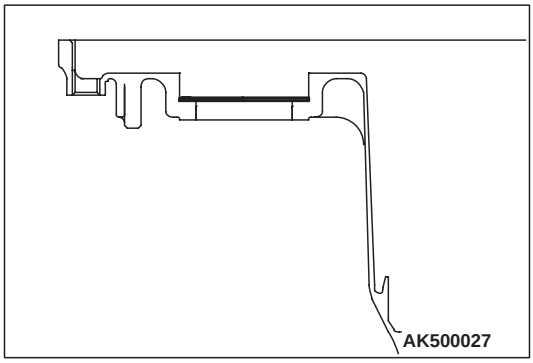

3. install the shim in the transmission case.

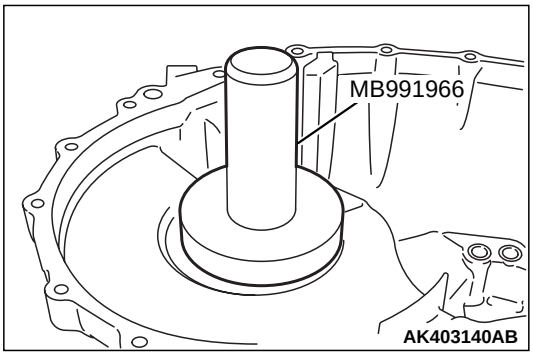

4. Using special tool MB991966, install the tapered roller bearing No.1 in the transmission case.

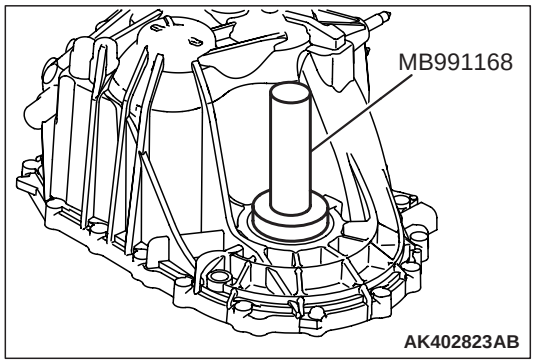

5. Using special tool MB991168, install the type T oil seal in the transmission case.

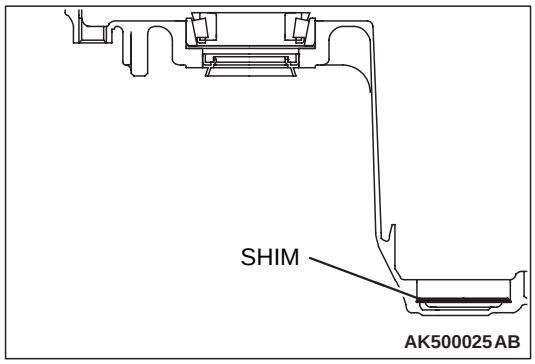

6. Install the shim in the transmission case.

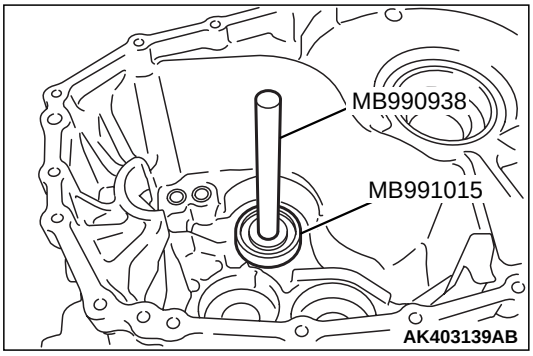

7. Using special tools MB990938 and NB991445, install the tapered roller bearing No.1 in the transaxle case.

cardiagn.com

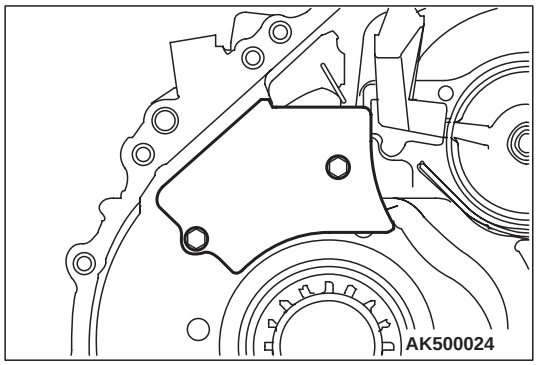

8. Install the oil separator and tighten to the specified torque of 8.5 ±2.5 N· m (75 ±25 in-lb).

cardiagn.com

DIFFERENTIAL

DISASSEMBLY AND ASSEMBLY

M1222002500210

Required Special Tools:

- MD998812: Installer cap
- MD998813: Installer 100
- MD998827: Installer adapter
- MD998917: Bearing remover

DISASSEMBLY SERVICE POINTS

1. Remove the differential ring gear.

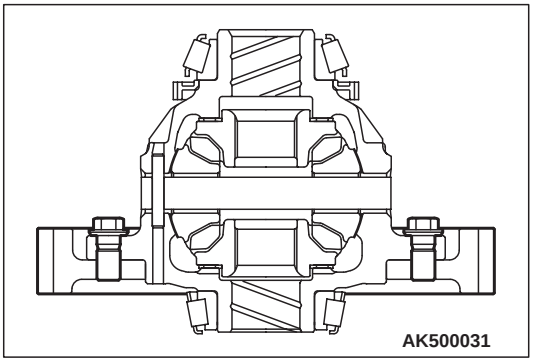

⚠ CAUTION

Do not damage the case and the gear.

2. Loosen and remove the speed meter drive gear.

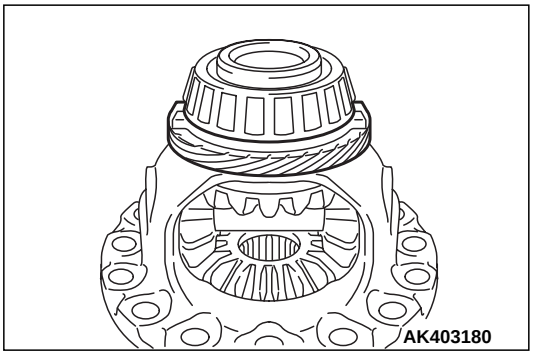

3. Place special tool MD998817 in the speedometer drive gear location, and remove the tapered roller bearing No.2.

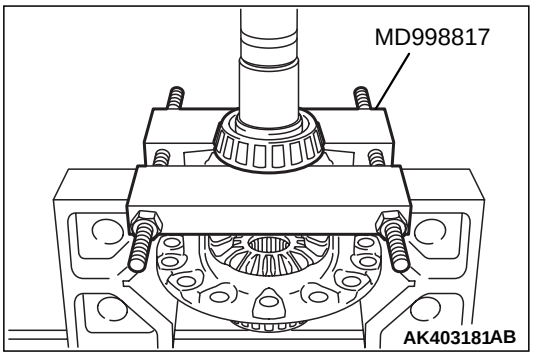

⚠ CAUTION

Do not damage the case and the gear.

4. Loosen and remove the tapered roller bearing No.2 (roller).

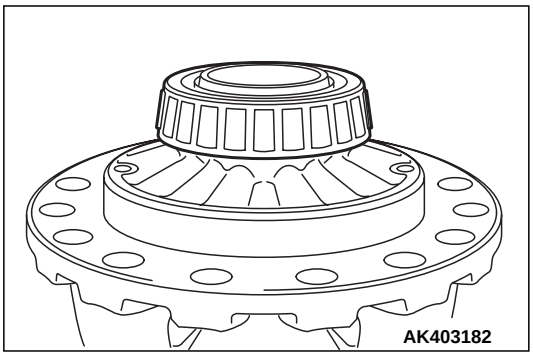

cardiagn.com

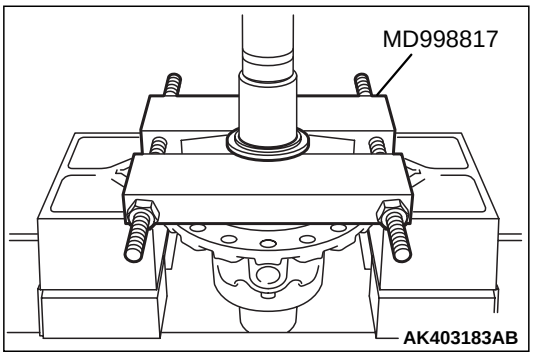

5. Place special tool MD998817 in the tapered roller bearing No.2 (roller) location, and remove the tapered roller bearing No.2 (inner race).

ASSEMBLY SERVICE POINTS

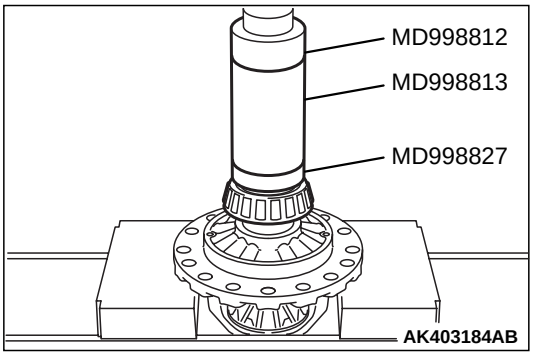

1. Using special tools MB998812, MD998813 and MD998827, install the tapered roller bearing No.2.
2. Install the speedometer drive gear to the differential case sub-assembly.

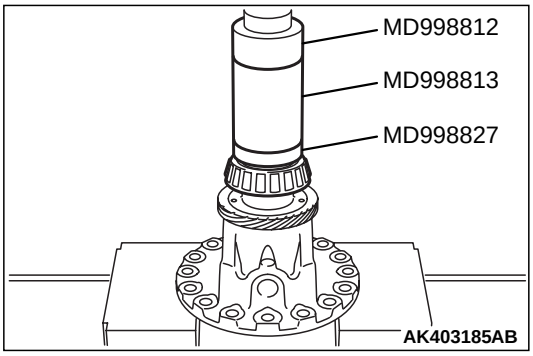

3. Using special tools MB998812, MD998813 and MD998827, install the tapered roller bearing No.2.

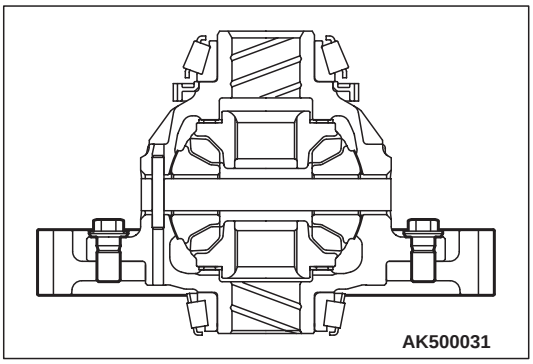

4. Install the differential ring gear to the differential case sub-assembly and tighten the bolts to the specified torque of 106 N· m (78 ft-lb).

cardiagn.com

SPECIFICATIONS

FASTENER TIGHTENING SPECIFICATIONS

M1222012100257

ITEM	SPECIFICATION
Transmission case - transaxle case mounting bolt	30 ±5 N· m (22 ±4 ft-lb)
Reverse fork - fork shaft mounting bolt	20 ±4 N· m (15 ±3 ft-lb)
Transaxle case - plug (lock ball) mounting bolt	23 ±6 N· m (17 ±4 ft-lb)
Transaxle case - oil separator mounting bolt	8.5 ±2.5 N· m (75 ±22 in-lb)
Transaxle case - reverse idler shaft mounting bolt	50 ±10 N· m (37 ±7 ft-lb)
Transaxle case - control cover sub-assembly mounting bolt	19 ±3 N· m (14 ±2 ft-lb)
Transmission case - pin (guide plate) mounting bolt	30 ±9 N· m (22 ±7 ft-lb)
Transmission case - lock ball (shift detent) mounting bolt	30 ±8 N· m (22 ±6 ft-lb)
Transmission case - filler plug mounting bolt	39 ±12 N· m (29 ±9 ft-lb)
Transmission case - drain plug mounting bolt	39 ±12 N· m (29 ±9 ft-lb)
Transmission case - plug (bearing hole snap) mounting bolt	39 ±12 N· m (29 ±9 ft-lb)
Transmission case - plug (output No.1 left hand) mounting bolt	23 ±6 N· m (17 ±4 ft-lb)
Transmission case - bell crank assembly mounting bolt	19 ±3 N· m (14 ±2 ft-lb)
Transmission case - cable bracket mounting bolt	19 ±3 N· m (14 ±2 ft-lb)
Transaxle case - bracket (wiring harness) mounting bolt	9.0 ±2.0 N· m (80 ±17 in-lb)
Transaxle case - hanger mounting bolt	19 ±3 N· m (14 ±2 ft-lb)
Transmission case - lock ball (select detent) mounting bolt	40 ±12 N· m (30 ±8 ft-lb)
Transaxle case - switch (backup lamp) mounting bolt	40 ±12 N· m (30 ±8 ft-lb)
Transmission case - clamp (switch) mounting bolt	12 ±4 N· m (102 ±40 in-lb)
Transaxle case - speedometer mounting bolt	5.5 ±2.2 N· m (49 ±19 in-lb)
Shift guide plate - inner lever mounting bolt	8.5 ±2.5 N· m (75 ±22 in-lb)
Shift & select shaft - damper mounting bolt	36 ±11 N· m (27 ±8 ft-lb)
Transaxle case - bearing lock plate mounting bolt	11 ±4 N· m (98 ±35 in-lb)
Transmission case - oil separator mounting bolt	8.5 ±2.5 N· m (75 ±22 in-lb)
Differential case - ring gear mounting bolt	106 N· m (78 ft-lb)

cardiagn.com

GENERAL SPECIFICATIONS

M1222000200406

ITEM		SPECIFICATION
Model		F6MBA-1-LKJA
Applicable engine		6G75
Type		6-speed transaxle floor shift
Gear ratio	1st	3.214
	2nd	2.238
	3rd	1.535
	4th	1.171
	5th	1.085
	6th	0.790
	Reverse	3.456
Final reduction ratio No.1		3.777
Final reduction ratio No.2		3.238
Speedometer gear ratio (driven/drive)		Not applicable

SERVICE SPECIFICATIONS

M1222000300287

ITEM	STANDARD VALUE
Rotational starting torque of differential case N· m (in-lb)	1.00 – 2.49 (8.85 – 22.04)
Value N· m (in-lb): rotation start torque on differential shaft is subtracted from the value measured in the adjustment of the bearing preload on the differential side.	3.89 – 5.51 (34.43 – 48.77)
Input shaft radial ball bearing thrust crevice mm (in)	0 – 0.1 (0 – 0.0039)
2nd gear bearing inner race thrust crevice mm (in)	0 – 0.1 (0 – 0.0039)
3rd-4th hub thrust crevice mm (in)	0 – 0.1 (0 – 0.0039)
Output shaft No.1 radial ball bearing thrust crevice mm (in)	0 – 0.1 (0 – 0.0039)
Reverse hub thrust crevice mm (in)	0 – 0.1 (0 – 0.0039)
5th-6th hub thrust crevice mm (in)	0 – 0.1 (0 – 0.0039)
Output shaft No.2 tapered roller bearing thrust crevice mm (in)	0 – 0.1 (0 – 0.0039)

SEALANTS AND ADHESIVES

M1222000500300

ITEM	SPECIFIED SEALANT
Mating face for transaxle case and transmission case	Mitsubishi Part No. MD994421 or equivalent
Mating face for transmission case and control shaft cover	

cardiagn.com

ADJUSTING SNAP RINGS AND SPACERS

M1222012000283

Adjustment shims (for differential side LH tapered roller bearing preload adjustment)

THICKNESS mm (in)	IDENTIFICATION SYMBOL	THICKNESS mm (in)	IDENTIFICATION SYMBOL
2.00 ±0.01 (0.0787 ±0.0004)	0	2.45 ±0.01 (0.0965 ±0.0004)	9
2.05 ±0.01 (0.0807 ±0.0004)	1	2.50 ±0.01 (0.0984 ±0.0004)	A
2.10 ±0.01 (0.0827 ±0.0004)	2	2.55 ±0.01 (0.1004 ±0.0004)	B
2.15 ±0.01 (0.0846 ±0.0004)	3	2.60 ±0.01 (0.1024 ±0.0004)	C
2.20 ±0.01 (0.0866 ±0.0004)	4	2.65 ±0.01 (0.1043 ±0.0004)	D
2.25 ±0.01 (0.0886 ±0.0004)	5	2.70 ±0.01 (0.1063 ±0.0004)	E
2.30 ±0.01 (0.0906 ±0.0004)	6	2.75 ±0.01 (0.1083 ±0.0004)	F
2.35 ±0.01 (0.0925 ±0.0004)	7	2.80 ±0.01 (0.1102 ±0.0004)	G
2.40 ±0.01 (0.0944 ±0.0004)	8	2.85 ±0.01 (0.1122 ±0.0004)	H

Adjustment shims (for output shaft No.2 bearing preload adjustment)

THICKNESS mm (in)	IDENTIFICATION SYMBOL	THICKNESS mm (in)	IDENTIFICATION SYMBOL
1.80 ±0.01 (0.0709 ±0.0004)	A	2.25 ±0.01 (0.0886 ±0.0004)	K
1.85 ±0.01 (0.0728 ±0.0004)	B	2.30 ±0.01 (0.0906 ±0.0004)	L
1.90 ±0.01 (0.0748 ±0.0004)	C	2.35 ±0.01 (0.0925 ±0.0004)	M
1.95 ±0.01 (0.0768 ±0.0004)	D	2.40 ±0.01 (0.0944 ±0.0004)	N
2.00 ±0.01 (0.0787 ±0.0004)	E	2.45 ±0.01 (0.0965 ±0.0004)	P
2.05 ±0.01 (0.0807 ±0.0004)	F	2.50 ±0.01 (0.0984 ±0.0004)	Q
2.10 ±0.01 (0.0827 ±0.0004)	G	2.55 ±0.01 (0.1004 ±0.0004)	R
2.15 ±0.01 (0.0846 ±0.0004)	H	2.60 ±0.01 (0.1024 ±0.0004)	S
2.20 ±0.01 (0.0866 ±0.0004)	J	2.65 ±0.01 (0.1043 ±0.0004)	T

Shaft snap rings (for input shaft radial ball bearing preload adjustment)

THICKNESS mm (in)	IDENTIFICATION SYMBOL	THICKNESS mm (in)	IDENTIFICATION SYMBOL
1.80 ±0.05 (0.0709 ±0.0020)	A	2.20 ±0.05 (0.0866 ±0.0020)	3
1.85 ±0.05 (0.0728 ±0.0020)	B	2.25 ±0.05 (0.0886 ±0.0020)	4
1.90 ±0.05 (0.0748 ±0.0020)	C	2.30 ±0.05 (0.0906 ±0.0020)	5
1.95 ±0.05 (0.0768 ±0.0020)	D	2.35 ±0.05 (0.0925 ±0.0020)	6
2.00 ±0.05 (0.0787 ±0.0020)	E	2.40 ±0.05 (0.0944 ±0.0020)	F
2.05 ±0.05 (0.0807 ±0.0020)	0	2.45 ±0.05 (0.0965 ±0.0020)	G
2.10 ±0.05 (0.0827 ±0.0020)	1	2.50 ±0.05 (0.0984 ±0.0020)	H
2.15 ±0.05 (0.0846 ±0.0020)	2		

cardiagn.com

Washers (or adjustment of distance between differential side gear thrust pinion and differential side gear thrust pinion washer)

THICKNESS mm (in)	IDENTIFICATION SYMBOL	THICKNESS mm (in)	IDENTIFICATION SYMBOL
1.25 ±0.02 (0.0492 ±0.0008)	–	1.65 ±0.02 (0.0650 ±0.0008)	–
1.30 ±0.02 (0.0512 ±0.0008)	–	1.70 ±0.02 (0.0670 ±0.0008)	–
1.35 ±0.02 (0.0532 ±0.0008)	–	1.75 ±0.02 (0.0689 ±0.0008)	–
1.40 ±0.02 (0.0551 ±0.0008)	–	1.80 ±0.02 (0.0709 ±0.0008)	–
1.45 ±0.02 (0.0571 ±0.0008)	–	1.85 ±0.02 (0.0728 ±0.0008)	–
1.50 ±0.02 (0.0591 ±0.0008)	–	1.90 ±0.02 (0.0748 ±0.0008)	–
1.55 ±0.02 (0.0610 ±0.0008)	–	1.95 ±0.02 (0.0768 ±0.0008)	–
1.60 ±0.02 (0.0630 ±0.0008)	–		

Shaft snap rings (for output shaft No.1 2nd gear bushing end play adjustment)

THICKNESS mm (in)	IDENTIFICATION SYMBOL	THICKNESS mm (in)	IDENTIFICATION SYMBOL
2.25 ±0.05 (0.0886 ±0.0020)	A	2.45 ±0.05 (0.0965 ±0.0020)	E
2.30 ±0.05 (0.0906 ±0.0020)	B	2.50 ±0.05 (0.0984 ±0.0020)	F
2.35 ±0.05 (0.0925 ±0.0020)	C	2.55 ±0.05 (0.1004 ±0.0020)	G
2.40 ±0.05 (0.0944 ±0.0020)	D	2.60 ±0.05 (0.1024 ±0.0020)	H

Shaft snap rings (for output shaft No.1 reverse synchronizer hub bushing end play adjustment)

THICKNESS mm (in)	IDENTIFICATION SYMBOL	THICKNESS mm (in)	IDENTIFICATION SYMBOL
2.25 ±0.05 (0.0886 ±0.0020)	A	2.45 ±0.05 (0.0965 ±0.0020)	E
2.30 ±0.05 (0.0906 ±0.0020)	B	2.50 ±0.05 (0.0984 ±0.0020)	F
2.35 ±0.05 (0.0925 ±0.0020)	C	2.55 ±0.05 (0.1004 ±0.0020)	G
2.40 ±0.05 (0.0944 ±0.0020)	D	2.60 ±0.05 (0.1024 ±0.0020)	H

Shaft snap rings (for output shaft No.1 3rd-4th synchronizer hub bushing end play adjustment)

THICKNESS mm (in)	IDENTIFICATION SYMBOL	THICKNESS mm (in)	IDENTIFICATION SYMBOL
2.25 ±0.05 (0.0886 ±0.0020)	1	2.40 ±0.05 (0.0944 ±0.0020)	4
2.30 ±0.05 (0.0906 ±0.0020)	2	2.45 ±0.05 (0.0965 ±0.0020)	5
2.35 ±0.05 (0.0925 ±0.0020)	3	2.50 ±0.05 (0.0984 ±0.0020)	6

Shaft snap rings (for output shaft No.2 reverse synchronizer hub bushing end play adjustment)

THICKNESS mm (in)	IDENTIFICATION SYMBOL	THICKNESS mm (in)	IDENTIFICATION SYMBOL
2.25 ±0.05 (0.0886 ±0.0020)	A	2.45 ±0.05 (0.0965 ±0.0020)	E
2.30 ±0.05 (0.0906 ±0.0020)	B	2.50 ±0.05 (0.0984 ±0.0020)	F
2.35 ±0.05 (0.0925 ±0.0020)	C	2.55 ±0.05 (0.1004 ±0.0020)	G
2.40 ±0.05 (0.0944 ±0.0020)	D	2.60 ±0.05 (0.1024 ±0.0020)	H

cardiagn.com

Shaft snap rings (for output shaft No.2 radial ball bearing preload adjustment)

THICKNESS mm (in)	IDENTIFICATION SYMBOL	THICKNESS mm (in)	IDENTIFICATION SYMBOL
1.85 ±0.05 (0.0728 ±0.0020)	B	2.05 ±0.05 (0.0807 ±0.0020)	0
1.90 ±0.05 (0.0748 ±0.0020)	C	2.10 ±0.05 (0.0827 ±0.0020)	1
1.95 ±0.05 (0.0768 ±0.0020)	D	2.15 ±0.05 (0.0846 ±0.0020)	2
2.00 ±0.05 (0.0787 ±0.0020)	E		

Shaft snap rings (for output shaft No.2 5th-6th synchronizer hub bushing end play adjustment)

THICKNESS mm (in)	IDENTIFICATION SYMBOL	THICKNESS mm (in)	IDENTIFICATION SYMBOL
2.25 ±0.05 (0.0886 ±0.0020)	1	2.40 ±0.05 (0.0944 ±0.0020)	4
2.30 ±0.05 (0.0906 ±0.0020)	2	2.45 ±0.05 (0.0965 ±0.0020)	5
2.35 ±0.05 (0.0925 ±0.0020)	3	2.50 ±0.05 (0.0984 ±0.0020)	6

cardiagn.com

NOTES

cardiagn.com