Please rate this document after reviewing at the bottom of this page.

Safety
Precaution

Precautions to take before servicing high voltage system

Hybrid vehicles have high voltage batteries. Incorrect handling of high voltage system or vehicle may lead to serious accident including electric shock and electric leakage.

- Be sure to shut off the high voltage by removing the safety plug before performing inspection or repairing the high voltage system.
  (Refer to "High Voltage Shut-off Procedures")
- Keep the safety plug completely removed to prevent the plug from being connected by mistake.
- Do not wear metallic objects (watch, ring etc.) while working on the high voltage system, due to risk of serious accidents like electric shock.
- Whenever working on the high voltage system, wear personal protective equipment to prevent accidents.
  (Refer to "Personal Protective Equipment")
- Technicians not wearing personal protective equipment must not be allowed to work on high voltage systems. Cover high voltage components with an insulated sheet to prevent accidents.
- Use insulation tools when working on the high voltage system.
- Put the removed high voltage components on the insulation mat.

- All the high voltage wiring and connectors are orange.
- A caution label for high voltage is attached to the high voltage components.
- High voltage components include:
  High Voltage Battery Pack Assembly, Power Relay Assembly (PRA), BMS ECU, Hybrid Power Control Unit (HPCU), Hybrid Drive Motor, HSG, Electric A/C Compressor, Low DC/DC Converter (LDC), On-Board Charger (OBC), Power Cable, Electric Compressor, etc.

- To prevent injury to technician, place "High Voltage" caution sign as shown.

cardiagn.com

DANGER

DANGER

High Voltage : Do not touch during operation.

Person in charge : _____

CarDiagn.com

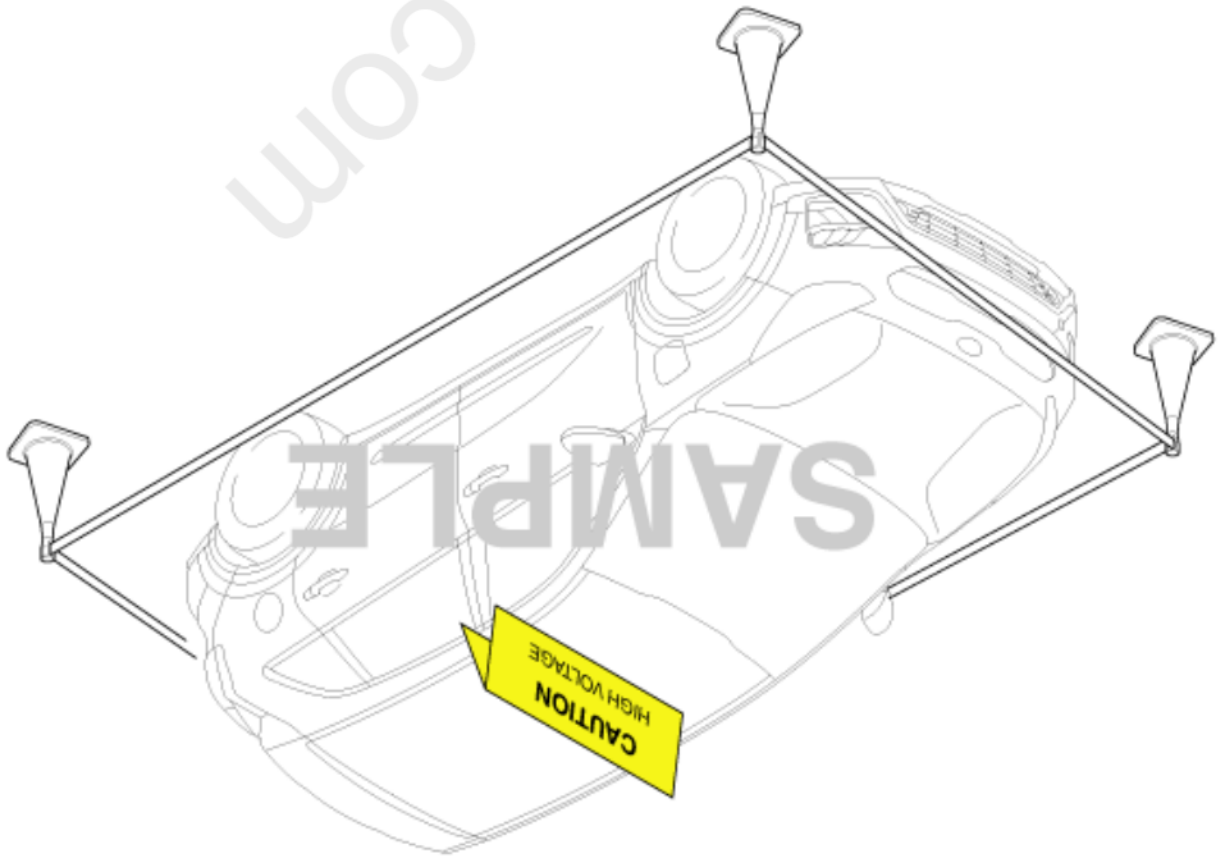

SAMPLE

DANGER

High Voltage : Do not touch during operation.

Person in charge : _____

Print out this page, fold in half, and place it on top of vehicle in service.

cardiagn.com

Personal Protective Equipment

Name	Illustration	Description
Insulation gloves		Used when inspecting or working on the high voltage components [Insulation performance : 1000V / 300A or above]
Insulation shoes		Used when inspecting or working on the high voltage components
Insulation clothes		

Insulation helmet	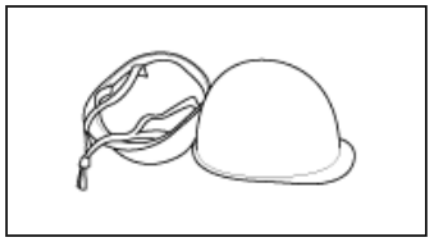	
Safety glasses		Used in the following cases : • During removal & installation or inspection of the high voltage battery terminals or wiring, where spark might happen. • When working on the high voltage battery pack assembly.
Face shield	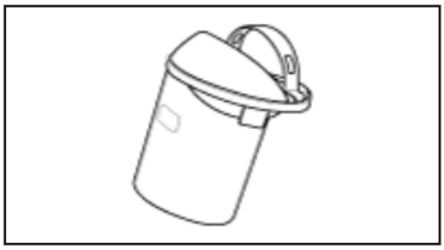	
Insulation mat	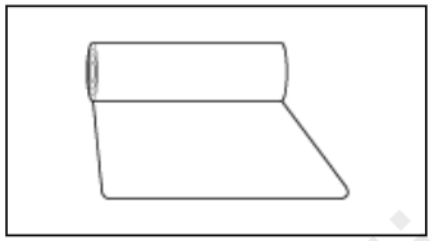	All removed high voltage components are placed on an insulation mat to prevent accident.
Insulation sheet	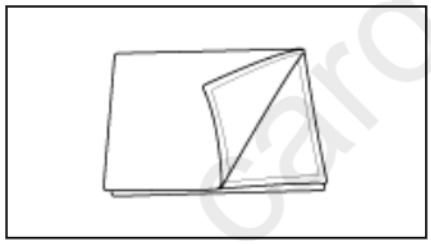	Insulation sheet is used to cover high voltage components to protect people not wearing personal protective equipment from accident.
Warning tape	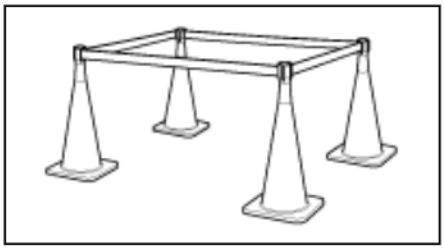	Used for informing that it is dangerous past this line.

cardiagn.com

Personal Protective Equipment Inspection

- Check that the personal protective equipment is not damaged.
- Check that the insulation gloves are not torn or damaged.
- Wear the insulation glove after removing moisture.



① Fold the insulation glove as above.
② Fold again 3~4 times to make it airtight.
② Squeeze the inflated glove to see if the glove is torn or damaged.

Precautions to take when handling power cable

- Immediately insulate the high voltage terminal after reconnecting the terminal (use insulation tape).
- Tighten the high voltage terminal screw to torque specifications.
- Be careful that (+) and (-) terminals do not come in contact when connecting or disconnecting power cable and busbar.

Precautions to take when handling high voltage battery

- When transporting high voltage battery, be sure to keep it flat and leveled. Failure to do so may decrease the battery performance and/or its life-span.
- High voltage battery's performance may decrease if it is exposed to high temperature for a lengthy period. As a result, heat-treatment after painting must not exceed 70°C (158°F) / 30 minutes, or 80°C (176°F) / 20 minutes.

Precautions in case of fire on high voltage battery system

- If the fire occurs indoor, ventilate the area to let out hydrogen gas.
- ABC fire extinguisher is recommended for putting out the fire. (water may also be used).

Precautions in case of high voltage battery gas or electrolyte leakage

- Turn OFF the Start button. Keep the Smart Key at least 2 meters (78.7 inch, 6.5 feet) away from the vehicle to prevent unintended engine start.
- Gas is hydrogen and alkaline vapor. If the leakage is indoor, ventilate the area immediately and evacuate to a safe location.
- If the leaked liquid comes in contact with skin, immediately neutralize the affected area with boric acid solution, then clean with tap water or saline solution.
- If the leaked vapor or liquid gets in the eye, immediately clean the affected eye with water then get medical attention.
- If the gas leakage is caused by high temperature, then do NOT use the battery until the high voltage battery fully cools down to room temperature.

cardiagn.com

Precautions when handling the vehicle after an accident

- Be sure to wear insulated gloves (or rubber gloves), protective goggles, insulated suit, and insulated boots.
- Do NOT touch bare cable under any condition
  (refer to "Precautions when handling power cable.")
- In case of vehicle fire, put out the fire with ABC extinguisher. Do NOT use water (usage of large volume of water is okay, but small volume can worsen the situation).
- If more than half of the vehicle is submerged, then do NOT go near the Safety Switch or other high voltage related components. If such a component must be accessed, then move the vehicle to the safe location first before handling the component.
- Gas is hydrogen and alkaline vapor. If the leakage is indoor, ventilate the area immediately and evacuate to a safe location.
- If the leaked liquid comes in contact with skin, immediately neutralize the affected area with boric acid solution, then clean with tap water or saline solution.
- Refer to "High voltage cut-off procedure" if the high voltage needs to be cut off.

Preparations when servicing the accident vehicle

- Be sure to wear insulated gloves (or rubber gloves), protective goggles, insulated suit, and insulated boots.
- Boric acid power or solution
- ABC Extinguisher
- Towel for cleaning electrolyte
- Vinyl tape (for insulating terminal)
- Mega ohm tester (for checking high voltage)

Precautions in case HEV is left unattended for a lengthy period

- Turn OFF the Start button. Keep the Smart Key at least 2 meters (78.7 inch, 6.5 feet) away from the vehicle to prevent unintended engine start.
- We recommend that HEV is driven at least 1 time for over 30 minutes every 2 months to protect and manage the high voltage battery (inquire at relevant team in HMC).
- When inspecting or exchanging the auxiliary battery, check high voltage battery SOC reset related problems.

carcian.com

Please rate this document after reviewing at the bottom of this page.

High Voltage Shut-off
Procedures

- Be sure to read and follow the “General Safety Information and Caution” before doing any work related with the high voltage system. Failure to follow the safety instructions may result in serious electrical injuries.
- Be sure to read and follow the “High Voltage Shut-off Procedures” before doing any work related with the high voltage system. Failure to follow the safety instructions may result in serious electrical injuries.

High voltage components:
High Voltage Battery Pack Assembly, Power Relay Assembly (PRA), BMS ECU, Hybrid Power Control Unit (HPCU), Hybrid Drive Motor, HSG, Electric A/C Compressor, Low DC/DC Converter (LDC), On-Board Charger (OBC), Power Cable, Electric Compressor etc.

1. Turn the ignition switch OFF.
2. Remove the auxiliary 12V battery cover (A).



3. Disconnect the auxiliary 12V battery negative (-) terminal.



4. Remove the luggage board (A).



5. Remove the safety plug cover (A) after loosening the mounting bolts.



6. Unfasten the hook (A) in the direction of arrow.

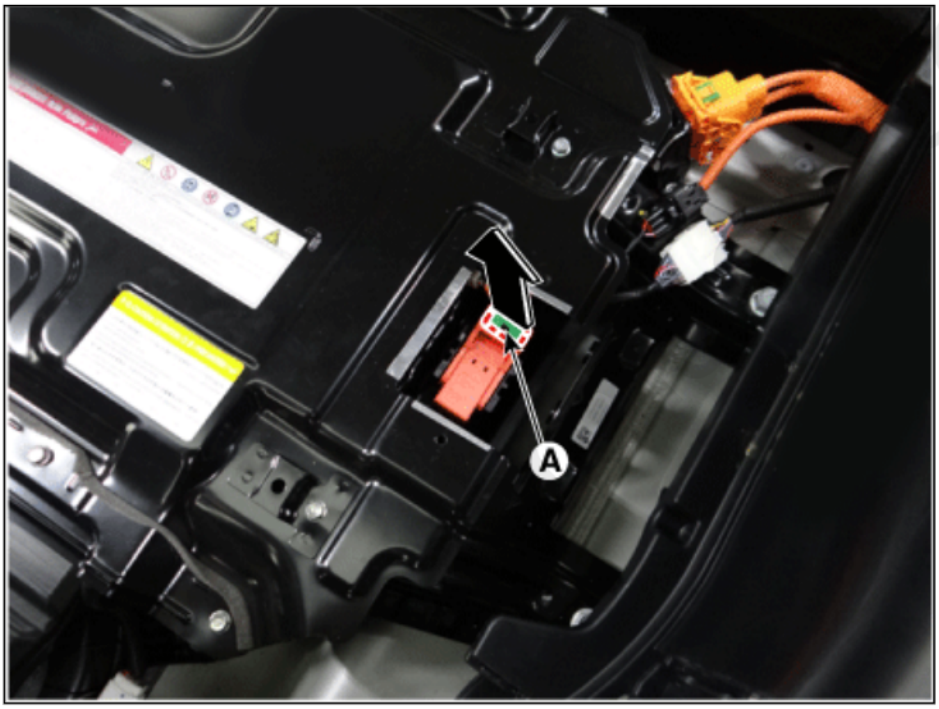

7. Unfasten the lever (A) in the direction of arrow.

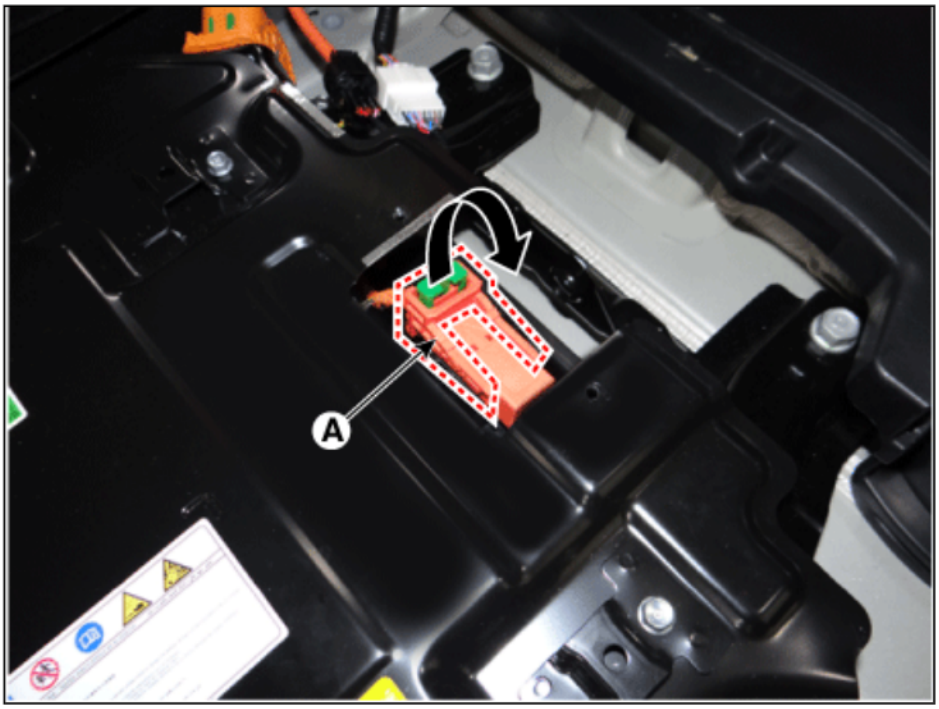

8. Remove the safety plug (A).

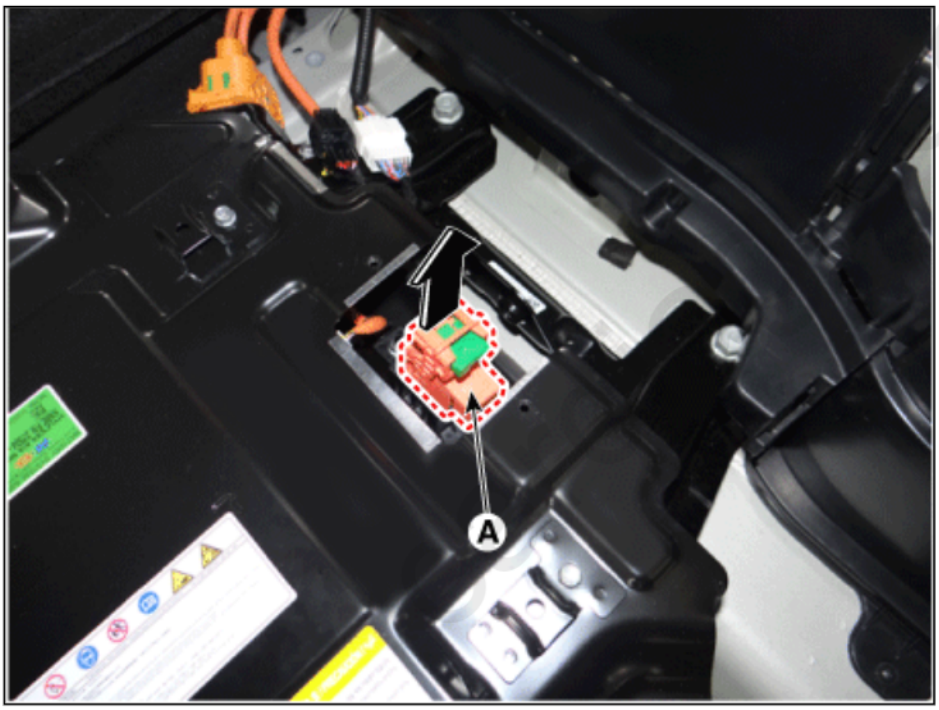

9. Wait at least 5 minutes or until the capacitor in the high voltage system is fully discharged.
10. Measure the voltage between the inverter terminals to check that the capacitor in the inverter is discharged completely.
    (1) Remove air cleaner assembly and air duct.
    (Refer to Engine Mechanical System – "Air Cleaner")

(2) Disconnect the inverter power cable (A).

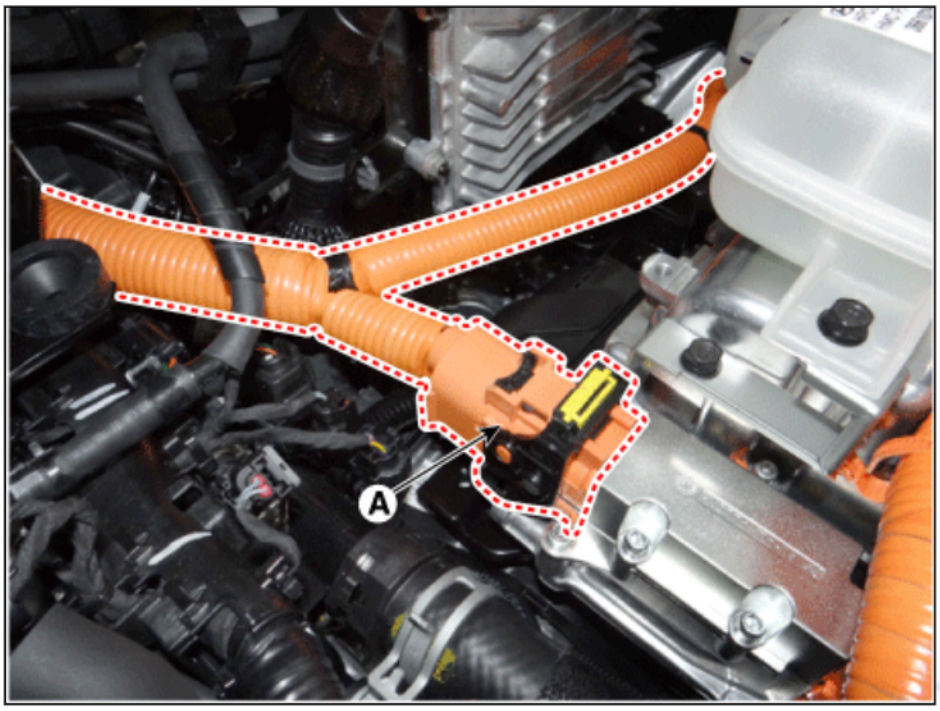

Disconnect the inverter power cable as shown below.

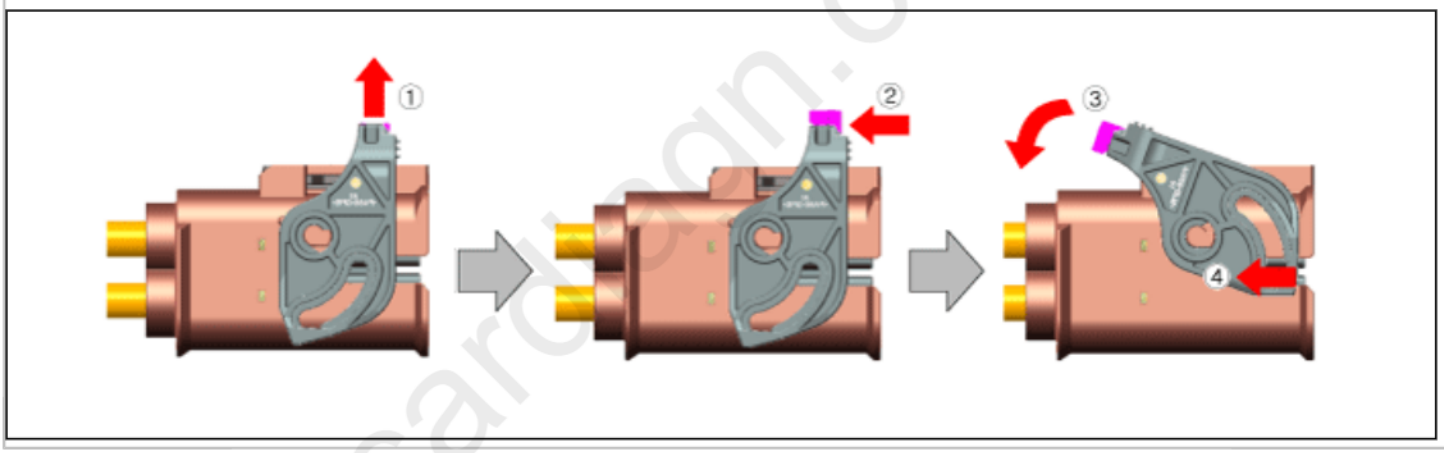

(3) Measure the voltage between the inverter (+) terminal and the inverter (-) terminal.

Less than 30V : High voltage circuit properly shut
More than 30V : Fault on high voltage circuit

cardiagn.com

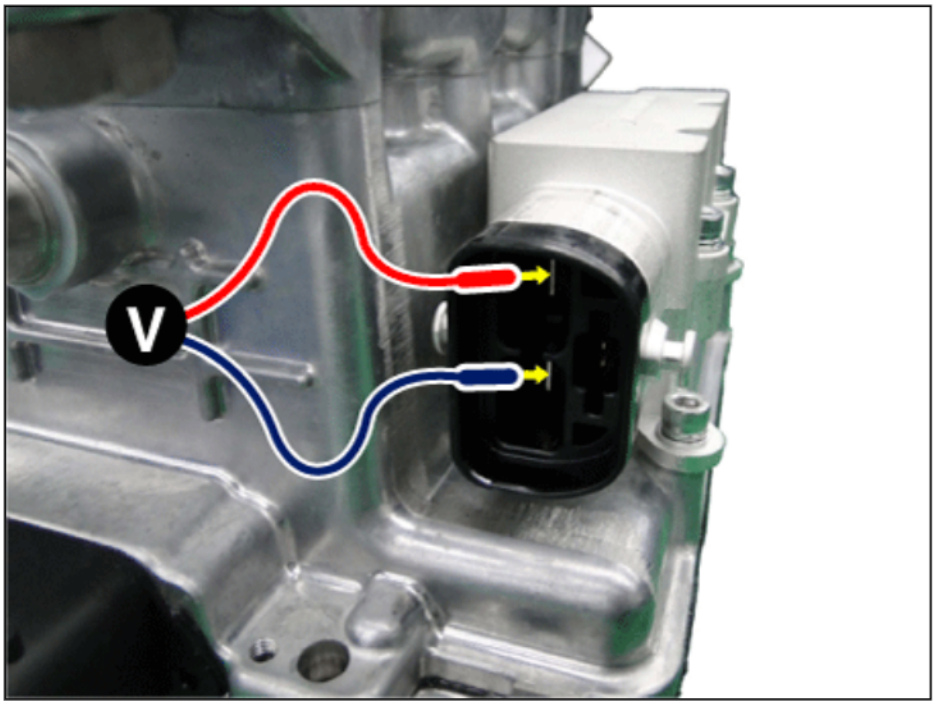

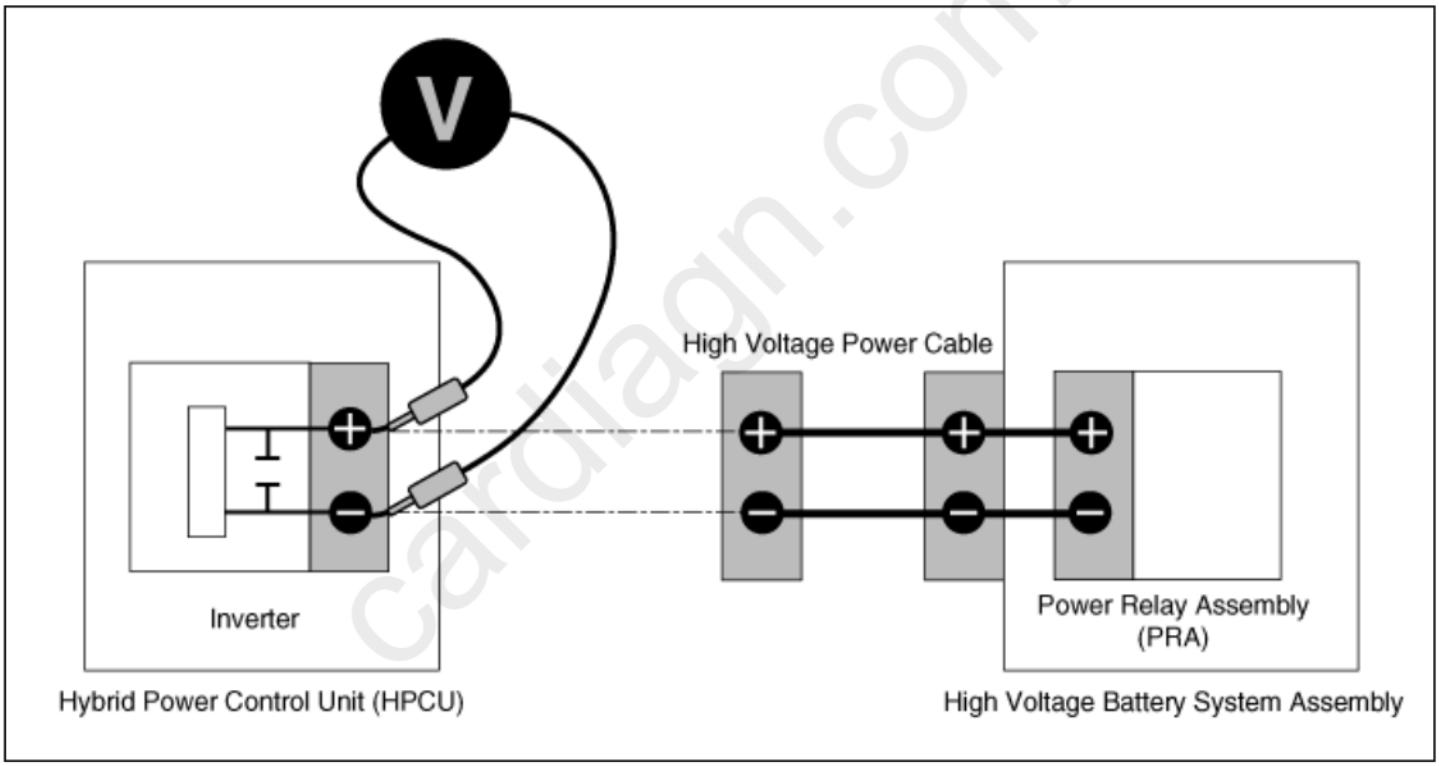

cardiagn.com

If voltage over 30V is measured, reconfirm that the safety plug has been removed. If voltage over 30V is measured even though the safety plug has been removed, there can be serious problem with the high voltage circuit. In this case, check DTC and do not touch the high voltage system circuits.

Please rate this document after reviewing at the bottom of this page.

General Troubleshooting
Information

Before Troubleshooting

1. Check applicable fuses in the appropriate fuse/relay box.
2. Check the battery for damage, state of charge, cleanliness and tight connections.
   (Refer to Engine Electrical System - "Battery")

- Do not quick-charge a battery unless the battery ground cable has been disconnected, otherwise you will damage the alternator diodes.
- Do not attempt to crank the engine with the battery ground cable loosely connected or you will severely damage the wiring.

3. Check the alternator belt tension (D).

Handling Connectors

1. Make sure the connectors are clean and have no loose wire terminals.
2. Make sure multiple cavity connectors are packed with grease (except watertight connectors).
3. All connectors have push-down release type locks (A).

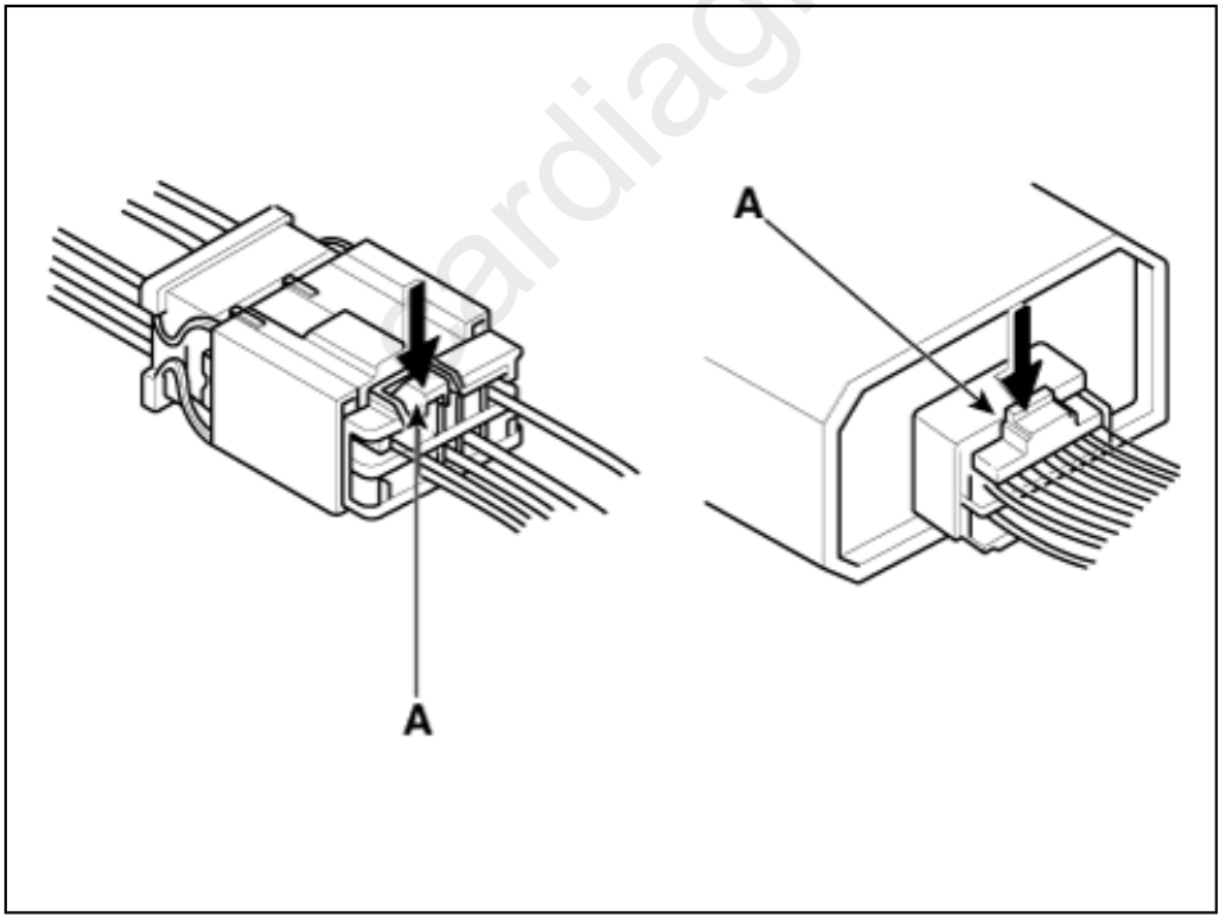

cardiagn.com

4. Some connectors have a clip on their side used to attach them to a mount bracket on the body or on another component. This clip has a pull type lock.
5. Some mounted connectors cannot be disconnected unless you first release the lock and remove the connector from its mounting bracket (A).

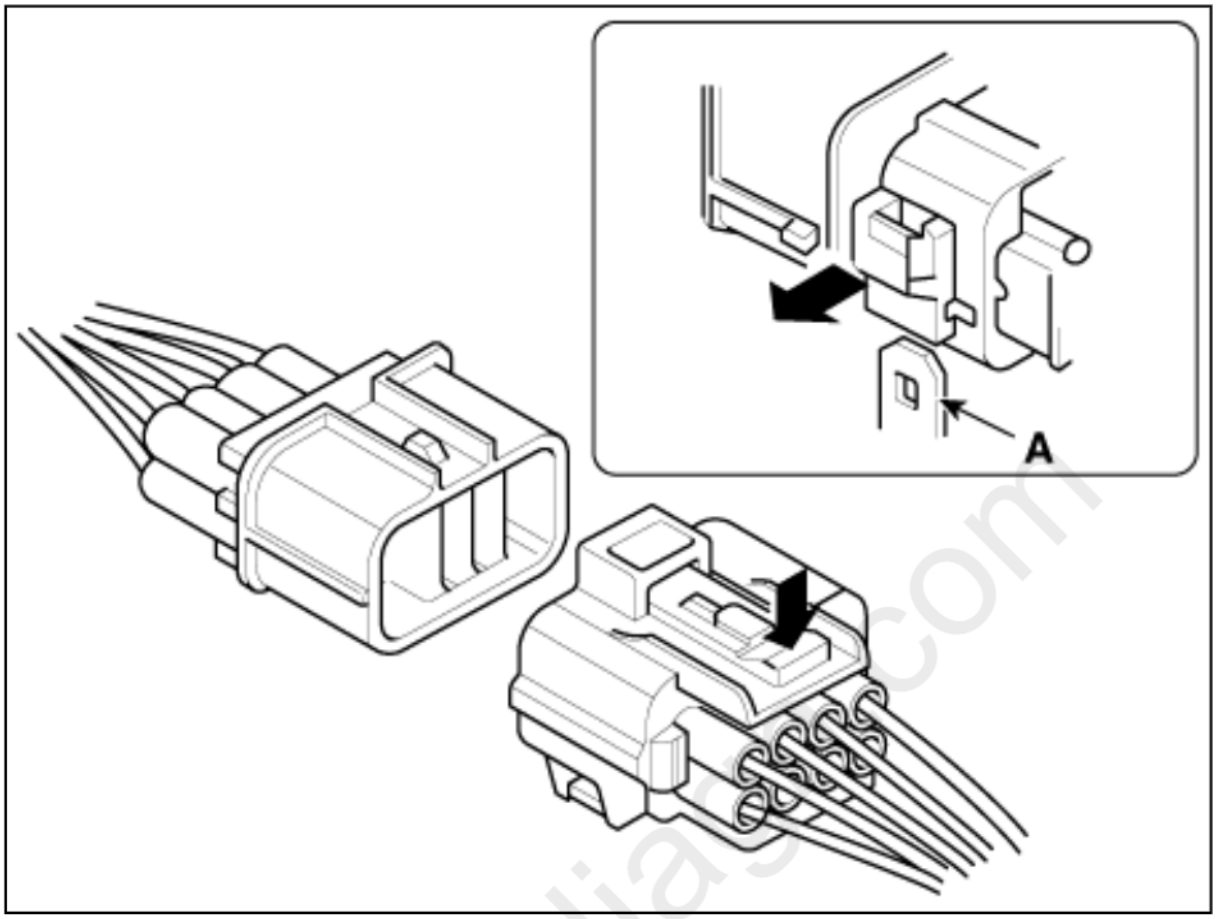

6. Never try to disconnect connectors by pulling on their wires; pull on the connector halves instead.
7. Always reinstall plastic covers.

cardiag.com

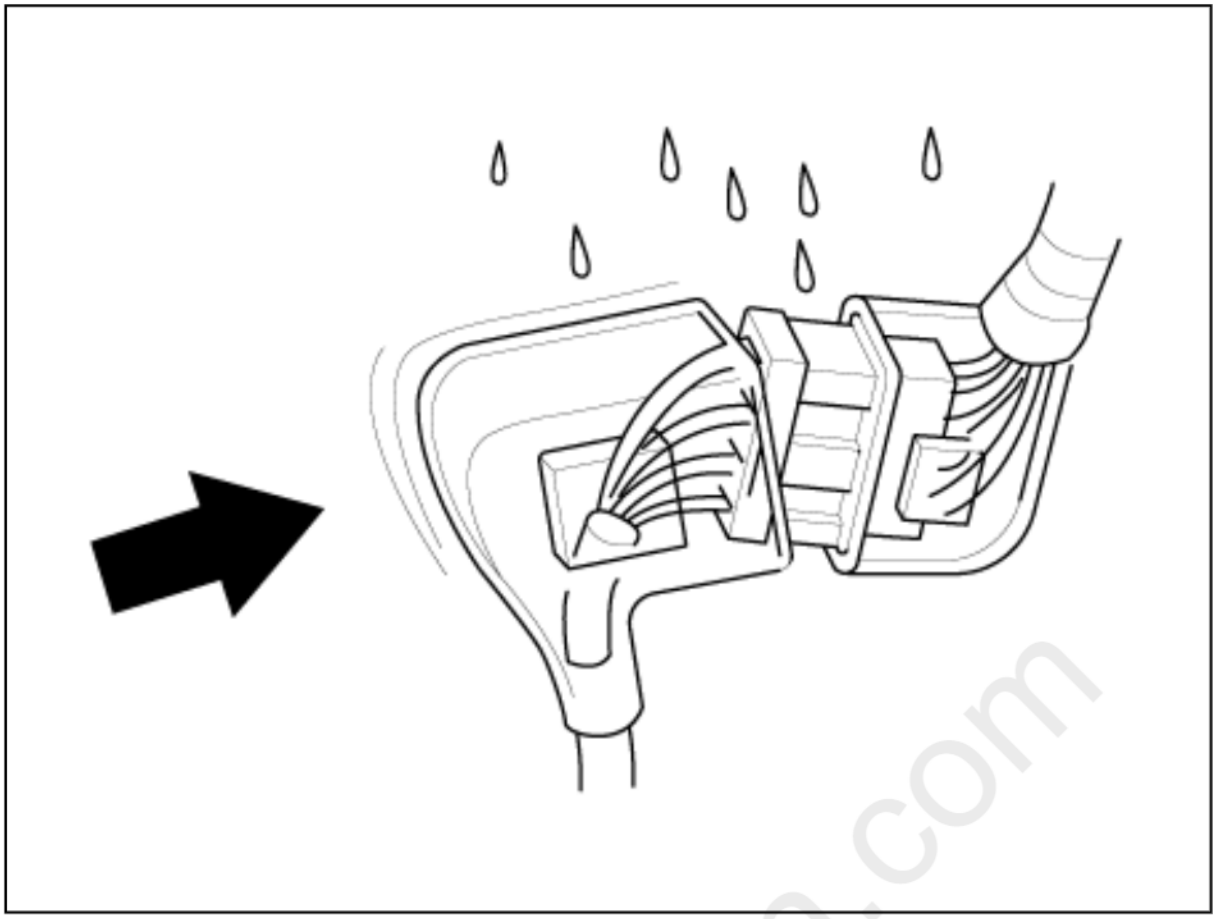

8. Before connecting connectors, make sure the terminals (A) are in place and not bent.

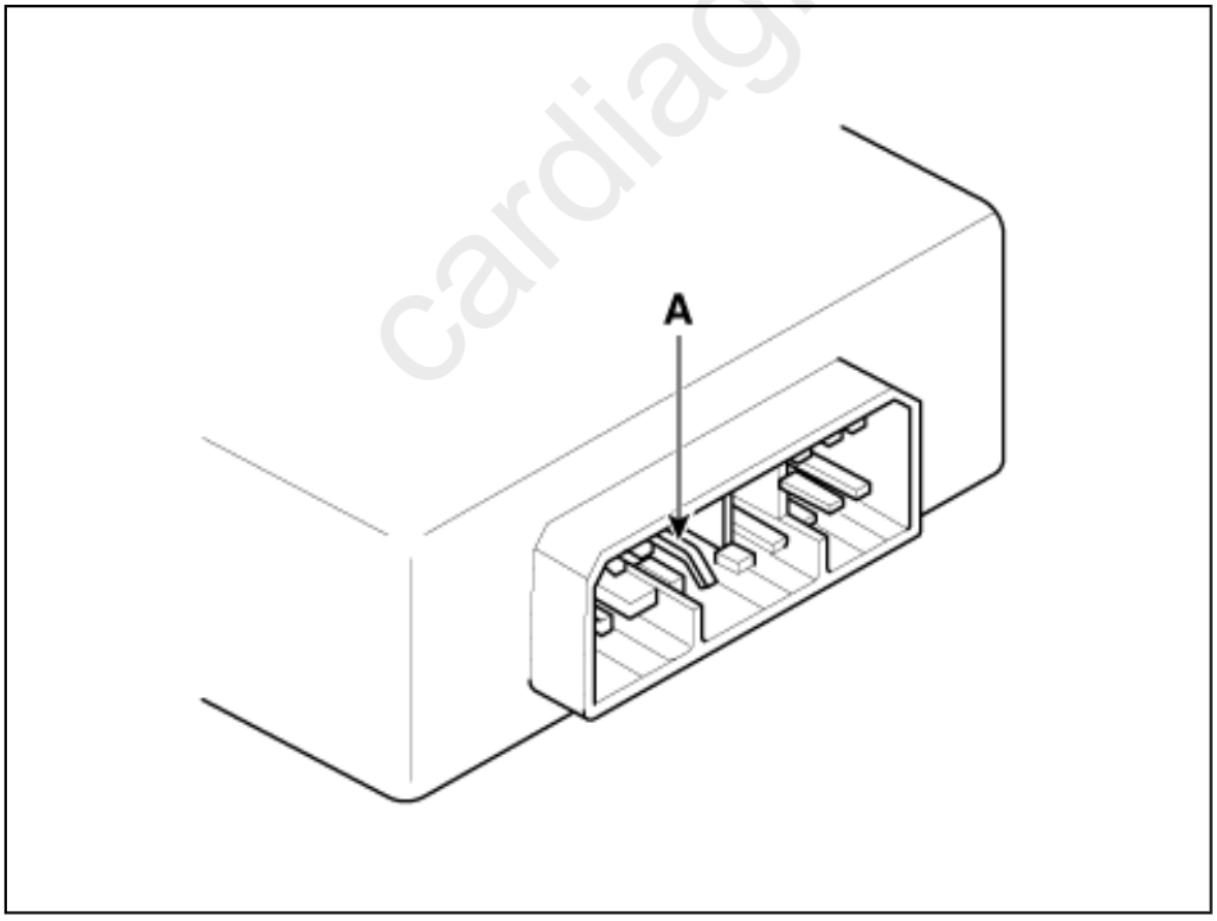

cardiagn.com

9. Check for loose retainer (A) and rubber seals (B).

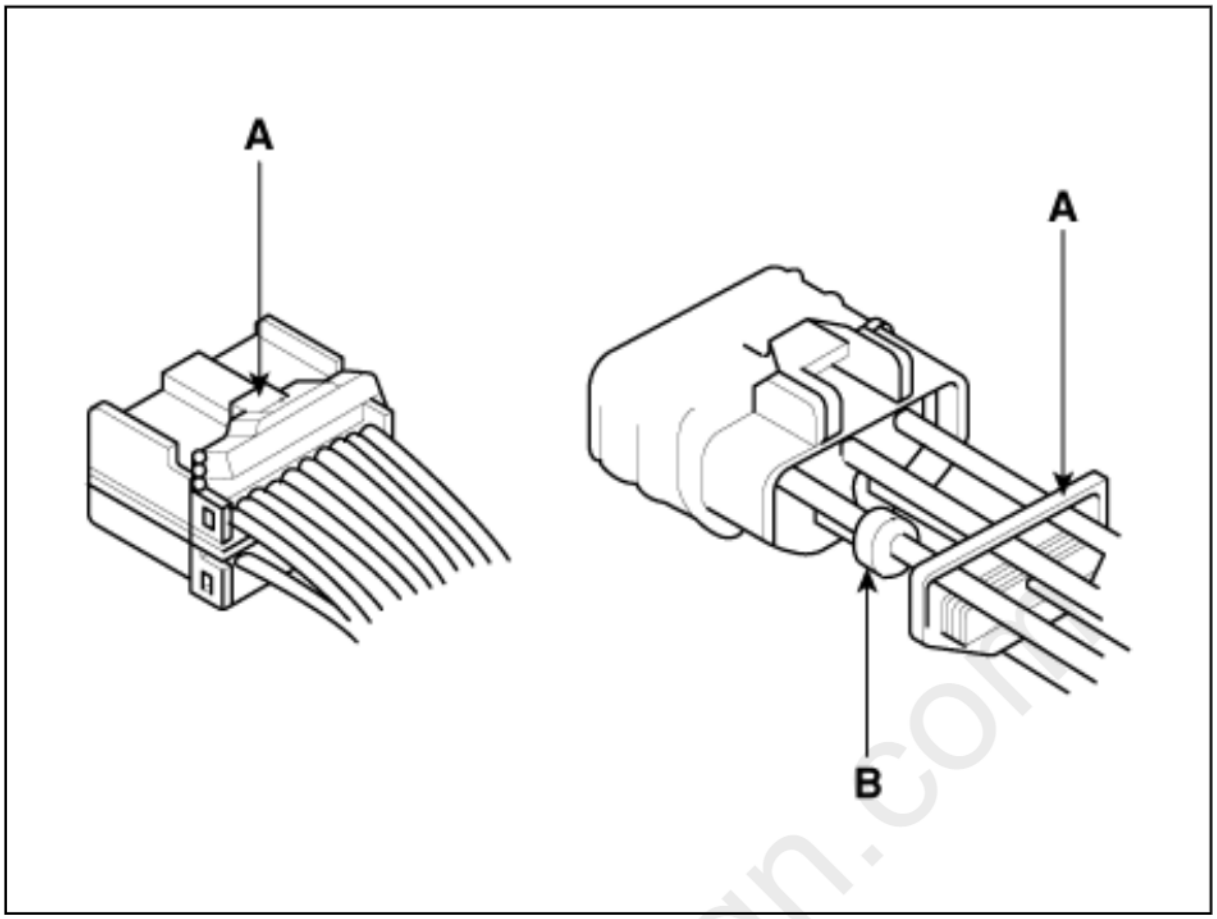

10. The backs of some connectors are packed with grease. Add grease if necessary. If the grease (A) is contaminated, replace it.

cardiagn.com

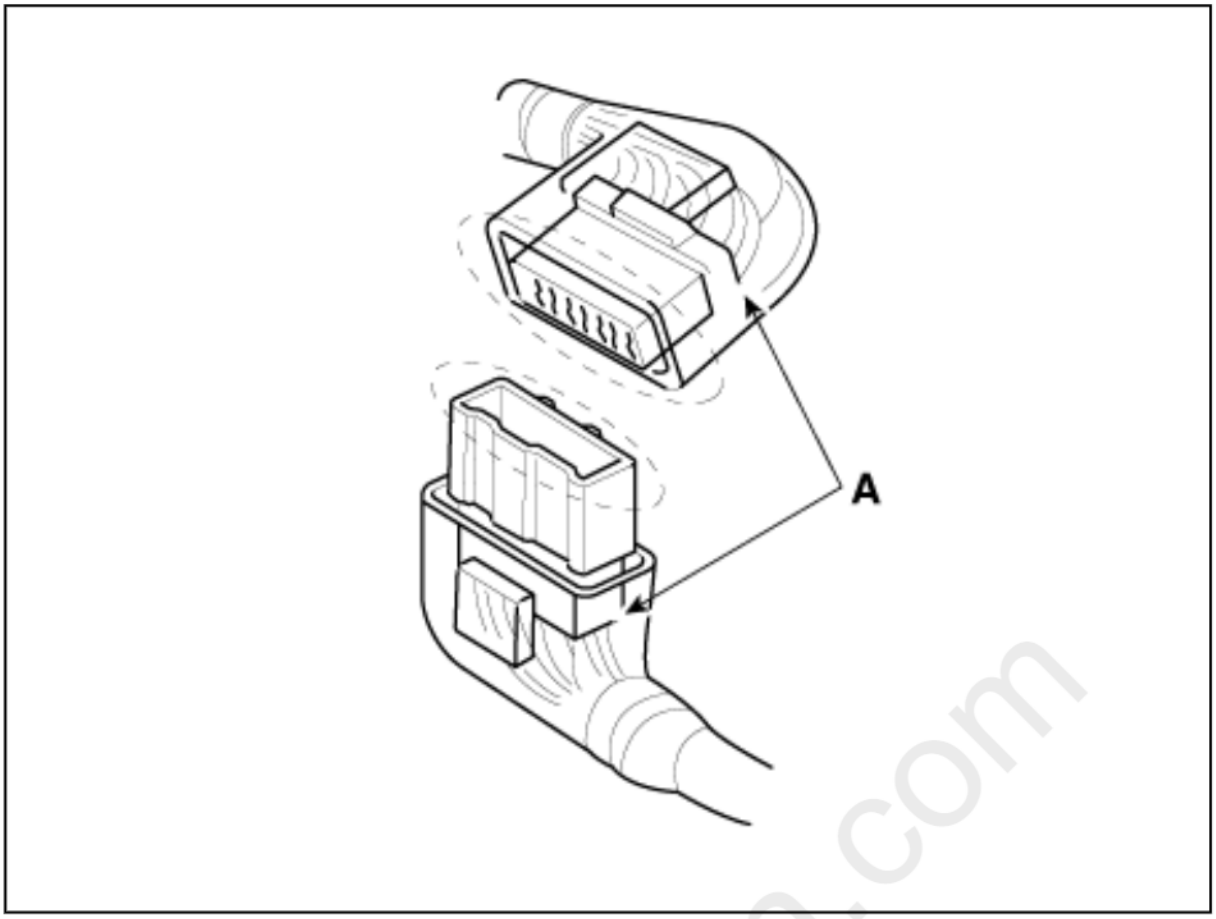

11. Insert the connector all the way and make sure it is securely locked.
12. Position wires so that the open end of the cover faces down.

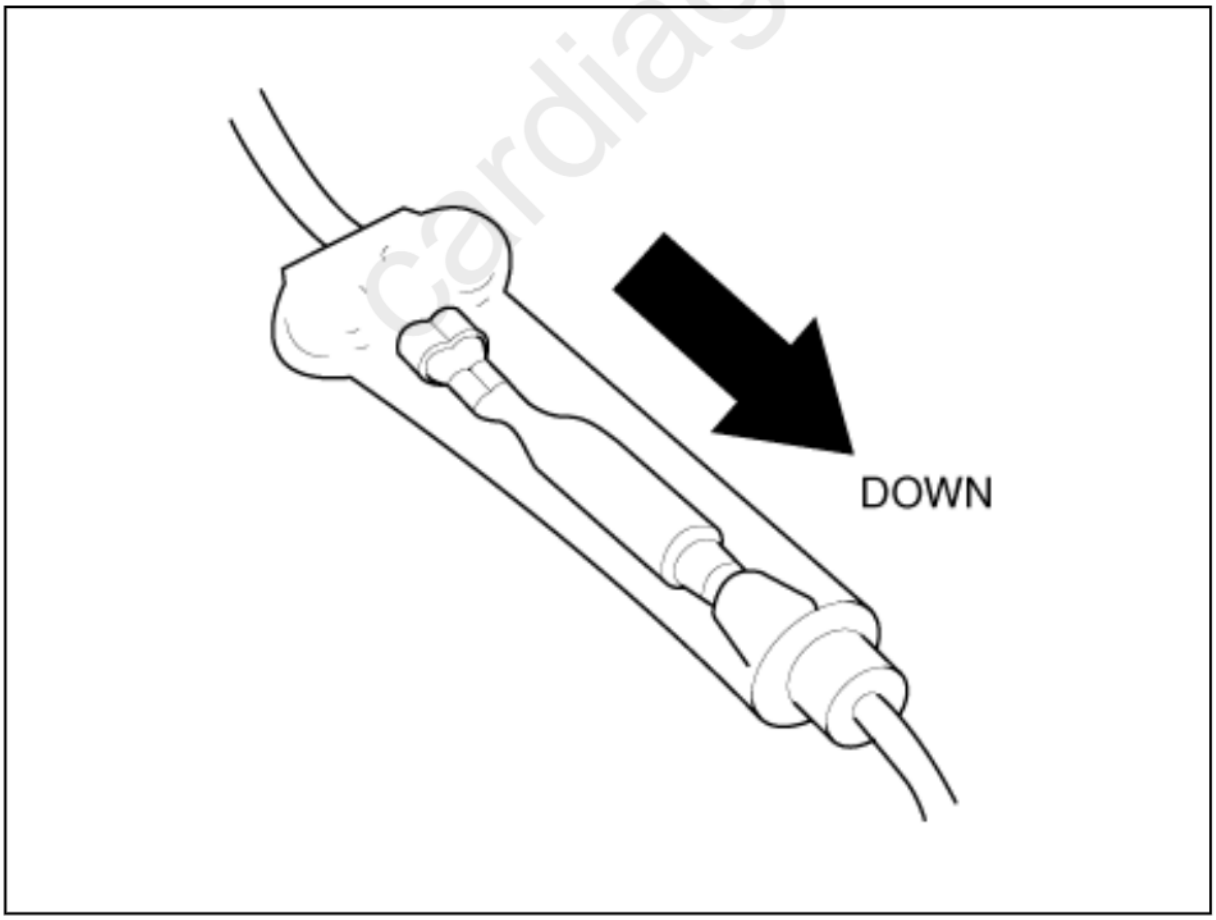

cardiagn.com

Handling Wires And Harnesses

1. Secure wires and wire harnesses to the frame with their respective wire ties at the designated locations.
2. Remove clips carefully; don't damage their locks (A).

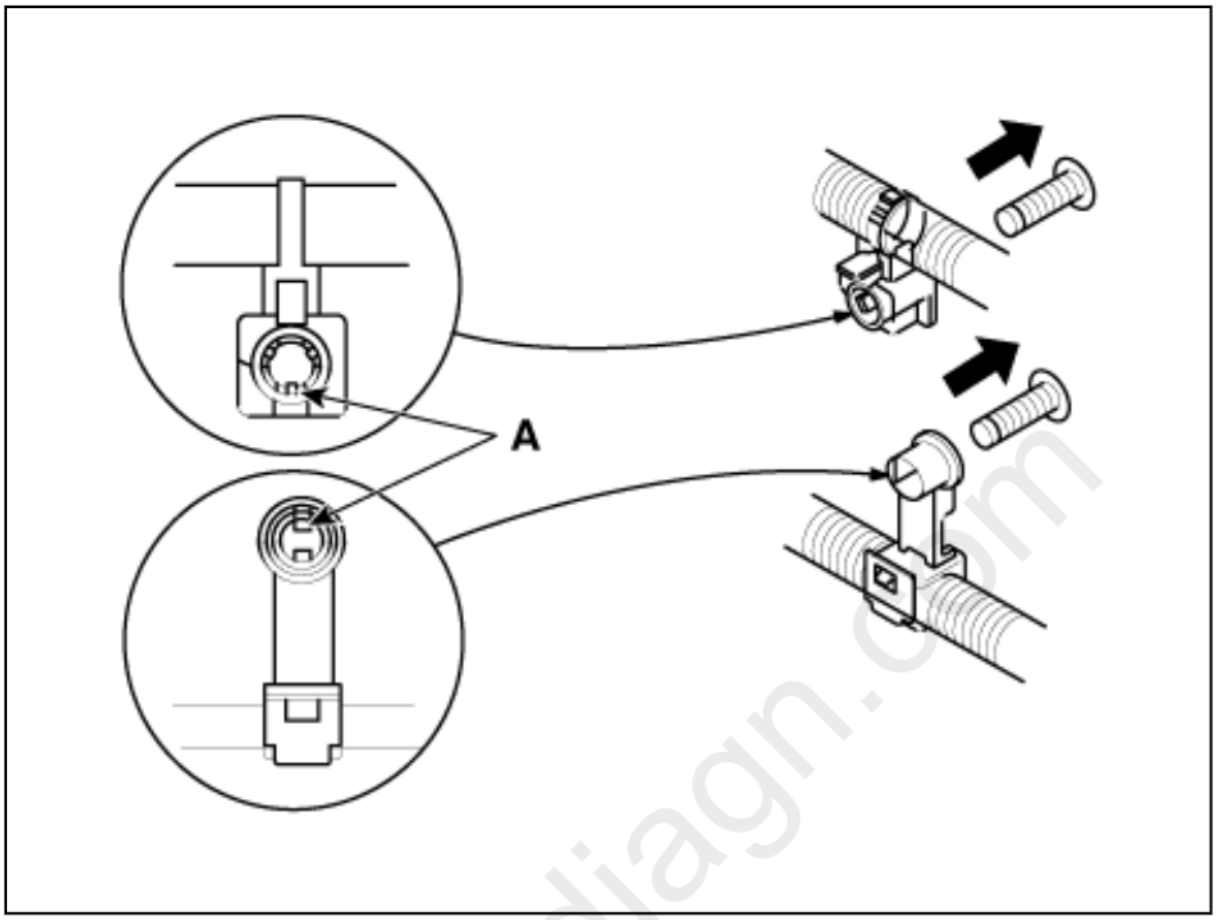

3. Slip pliers (A) under the clip base and through the hole at an angle, and then squeeze the expansion tabs to release the clip.

cardiagn.com

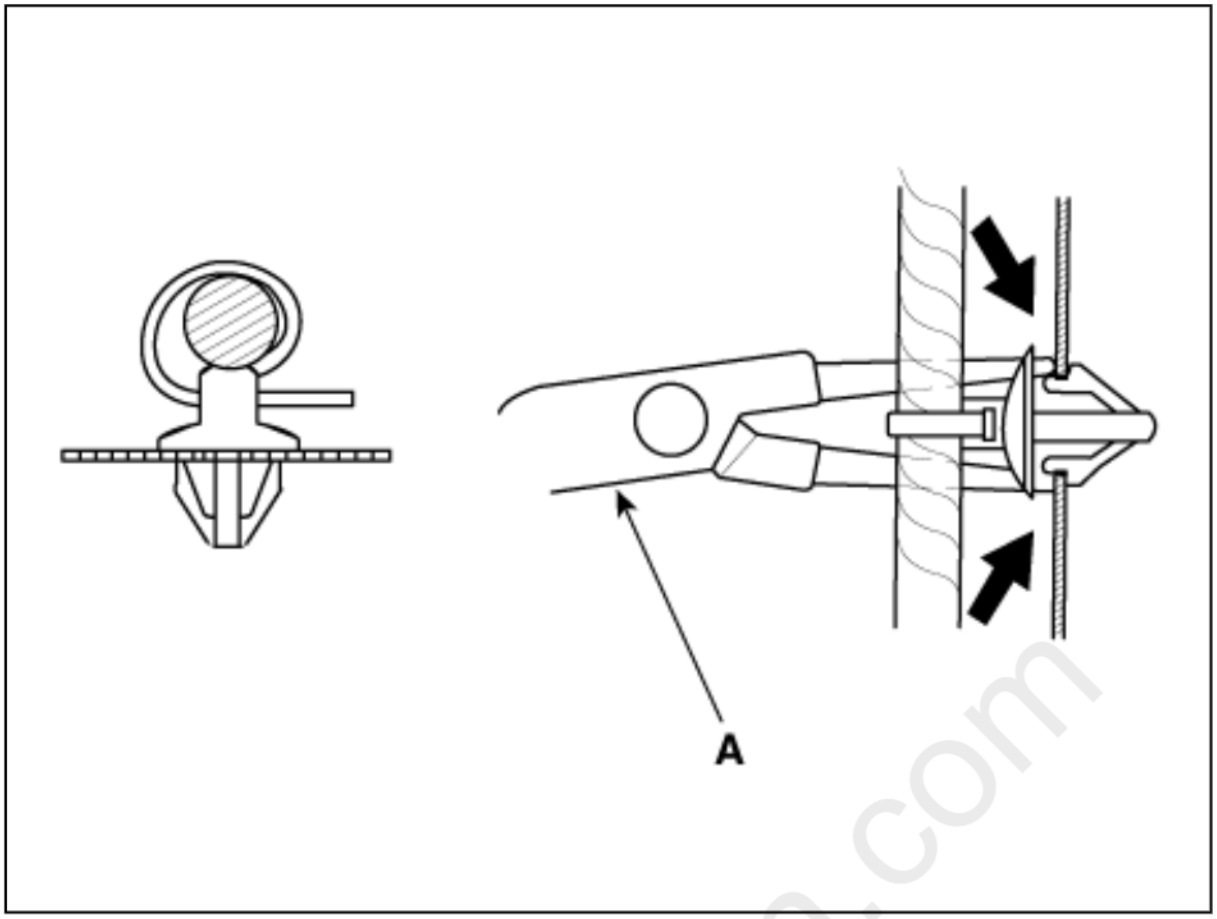

4. After installing harness clips, make sure the harness doesn't interfere with any moving parts.
5. Keep wire harnesses away from exhaust pipes and other hot parts, from sharp edges of brackets and holes, and from exposed screws and bolts.
6. Seat grommets in their grooves properly (A). Do not leave grommets distorted (B).

cardiagn.com

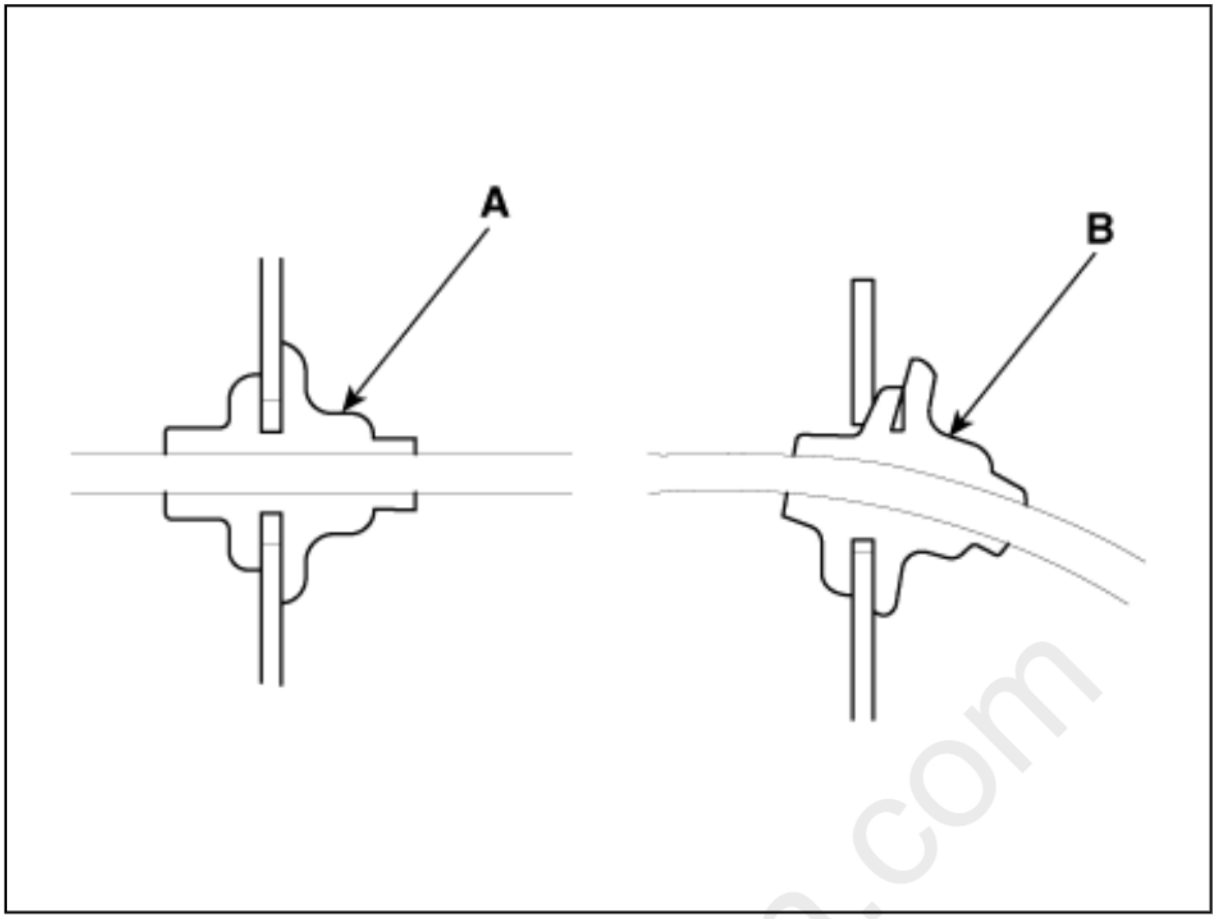

Testing and Repairing

1. Do not use wires or harnesses with broken insulation.
   Replace them or repair them by wrapping the break with electrical tape.
2. After installing parts, make sure that no wires are pinched under them.
3. When using electrical test equipment, follow the manufacturer's instructions and those described in this manual.
4. If possible, insert the remover tool from the wire side (except waterproof connector).

carlogn.com

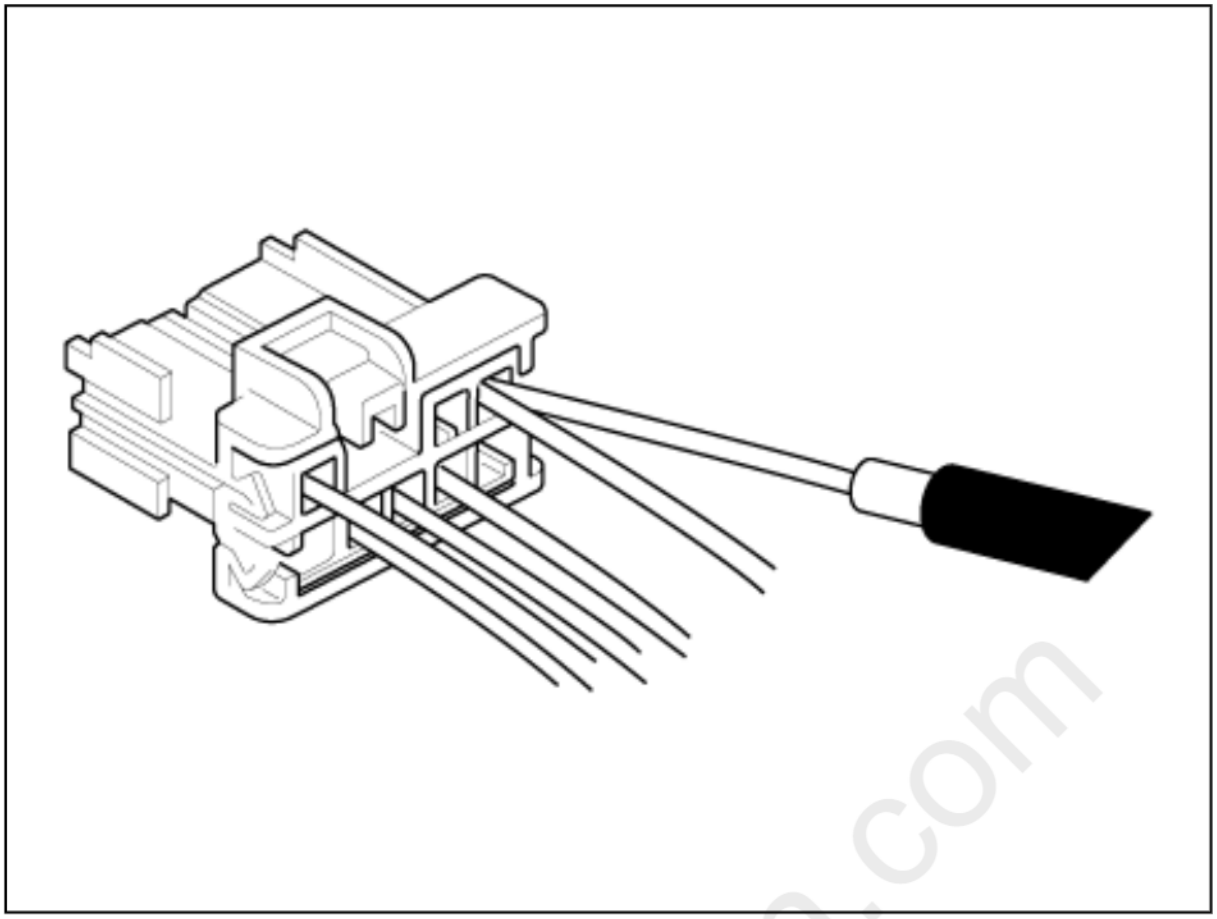

5. Use a probe with a tapered tip.
   Refer to the user's guide in the wiring repair kit (Pub No. : TRK 015.)

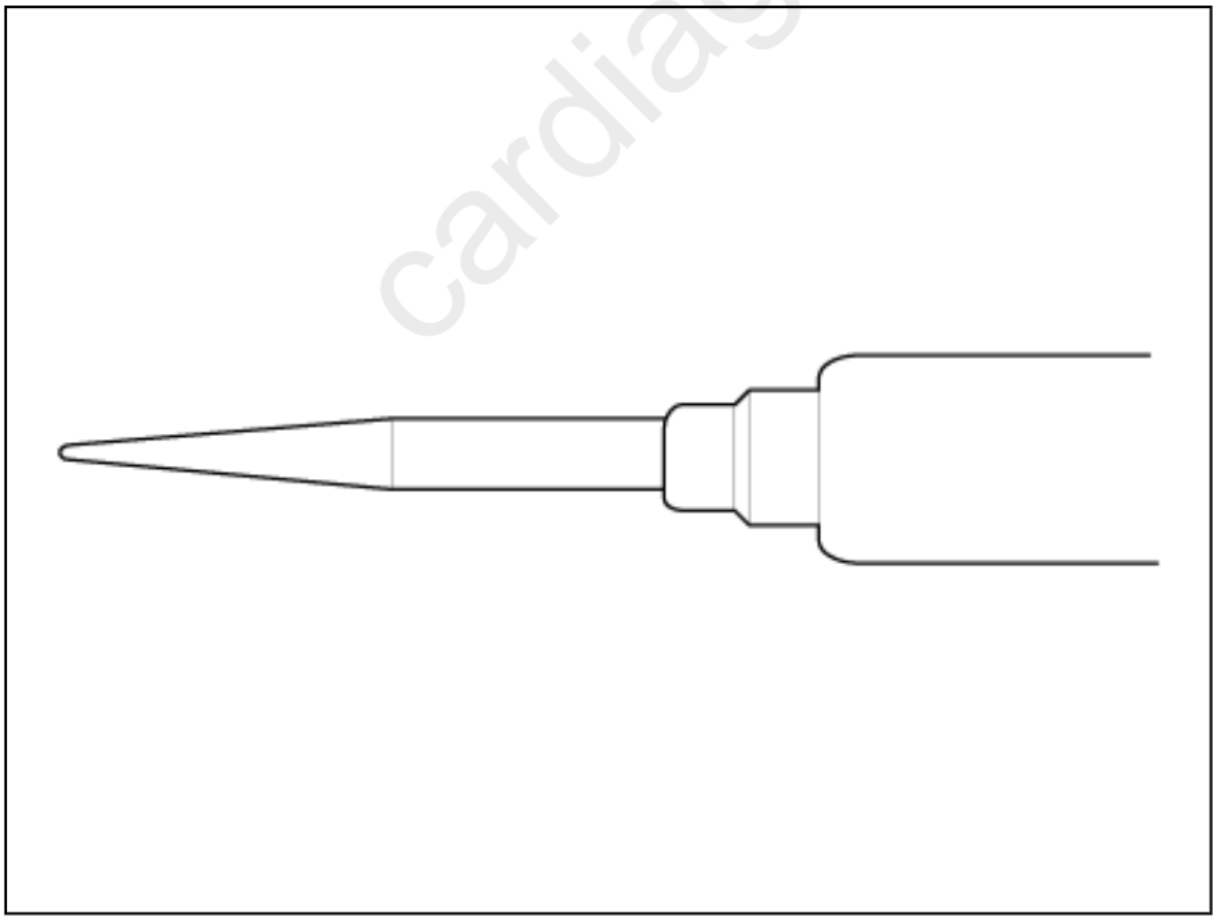

cardiagn.com

Five-step Troubleshooting

1. Verify the complaint
   Turn on all the components in the problem circuit to verify the customer complaint. Note the symptoms. Do not begin disassembling or testing until you have narrowed down the problem area.
2. Analyze the schematic
   Look up the schematic for the problem circuit.
   Determine how the circuit is supposed to work by tracing the current paths from the power feed through the circuit components to ground. If several circuits fail at the same time, the fuse or ground is a likely cause.
   Based on the symptoms and your understanding of the circuit operation, identify one or more possible causes of the problem.
3. Isolate the problem by testing the circuit.
   Make circuit tests to check the diagnosis you made in step 2. Keep in mind that a logical, simple procedure is the key to efficient troubleshooting.
   Test for the most likely cause of failure first. Try to make tests at points that are easily accessible.
4. Fix the problem
   Once the specific problem is identified, make the repair. Be sure to use proper tools and safe procedures.
5. Make sure the circuit works
   Turn on all components in the repaired circuit in all modes to make sure you've fixed the entire problem. If the problem was a blown fuse, be sure to test all of the circuits on the fuse. Make sure no new problems turn up and the original problem does not recur.

Installation of the transmitting device.

Electronically controlled computers are designed not to be interrupted by other radio signals, but it can be affected by a remote control of even less than 25 W output if the antenna or cable of a remote control is wired near the computer. To prevent this, follow the below directions.

1. Install the antenna on the roof or rear bumper.
2. Keep the antenna cables at least 200 mm away from the computer or wiring as they transmit radio signals.
3. Decrease the standing-wave ratio by using proper antennas and cables.
4. Do not install remote control with high output.

cardiagn.com

5. After installing the remote control, check the engine by generating radio signals while idling the engine.

- The standing-wave ratio : When connected to cables and antennas of different impedence, the input impedence Zi changes based on the length of cable and frequency of remote control, and the voltage range also changes based on position.
- This rate of the maximum and the minimum voltage is called the standing-wave ratio, and also refers to the rate of the antenna impedance and cable impedance.
- The volume of radio signals from cables is proportional to the standing-wave ratio volume, hence the influence to electronic parts increases.

Power Window and Sunroof Reset

If negative (-) battery cable was removed or fuse was replaced while opening/closing the power window or sunroof, perform initialization again as the default value of motor is erased.

System	Resetting
Auto up/down window	Reset the window motor to its default settings in the following cases: • In case battery power connected to power window is not supplied due to battery replacement, discharged battery or fuse replacement while opening/closing the power window Whenever the battery is disconnected or discharged, or the related fuse is replaced or reinstalled, reset the Auto up/down window system according to the procedure below. 1) Turn the ignition switch "ON". 2) Pull up the power window switch until the window is fully closed and keep pulling it up for about 1 second.
	The sunroof must be initialized as follows if the battery power connected to sunroof motor has been blocked or discharged, or related fuse has been replaced while opening/closing the sunroof or the sunroof was activated by using emergency handle.

carcian.com

Panorama sunroof	•In case battery power connected to sunroof motor was blocked due to battery replacement, discharged battery or fuse replacement while opening/closing the sunroof •In case the one-touch automatic opening/closing of the sunroof does not function properly •In case the sunroof reverses during automatic closing operation even if there is no obstacle caught in the sunroof (safety feature) 1) After IG ON, use CLOSE Switch to fully close the sunroof glass and roller blind. 2) When the glass and the roller blind is fully closed, release the CLOSE Switch and then press and hold down the switch (about 10 sec.) until the glass and the blind moves slightly one time. 3) Release the CLOSE Switch and then press and hold down the switch again, and the glass and the blind opens and closes in below order and completes Sunroof Reset process. Blind slides open → Sunroof glass tilts, slides open, and then closes → Blind slides and closes. ※ If the CLOSE Switch is released while above operation is in progress, the reset process is cancelled and you must go back and repeat the process from step 1.

Trip computer, Clock and Audio Reset
When reconnecting the battery cable after disconnecting, recharging battery after discharged or installing the memory fuse located on the driver's side panel after removing, be sure to reset systems mentioned on the below table.
In addition, when replacing or reinstalling the fuses after removing, reset according to the below table.

System	Resetting
Trip computer	If the battery is reconnected after being disconnected, the configuration on trip computer will be initialized. Explain this to the customer.
Clock	If the battery terminals or related fuses have been disconnected, you must reset the time in the audio head unit. (Refer to "Audio" in owner's manual.)
Audio	If the battery has been reconnected after being disconnected, the customer's preset radio stations will be initialized. Record the customer's preset radio stations prior to servicing, and set the customer's preset radio stations into the audio after service.

cardiagn.com

Please rate this document after reviewing at the bottom of this page.

Specification

Item		Specification
Rated Voltage		DC 12.5V
Operating voltage		DC 12.2 - 15.3V
Output voltage	220V	AC 198 - 242V (rms)
	115V	AC 103.5 - 126.5V (rms)
Rated power	200W	200W (-86 to 113°F (-30 to 45°C))
	150W	
Current spec.	200W	Full load input current : Max. 20A
	150W	Full load input current : Max. 15A

cardiagn.com

Please rate this document after reviewing at the bottom of this page.

Component
Location

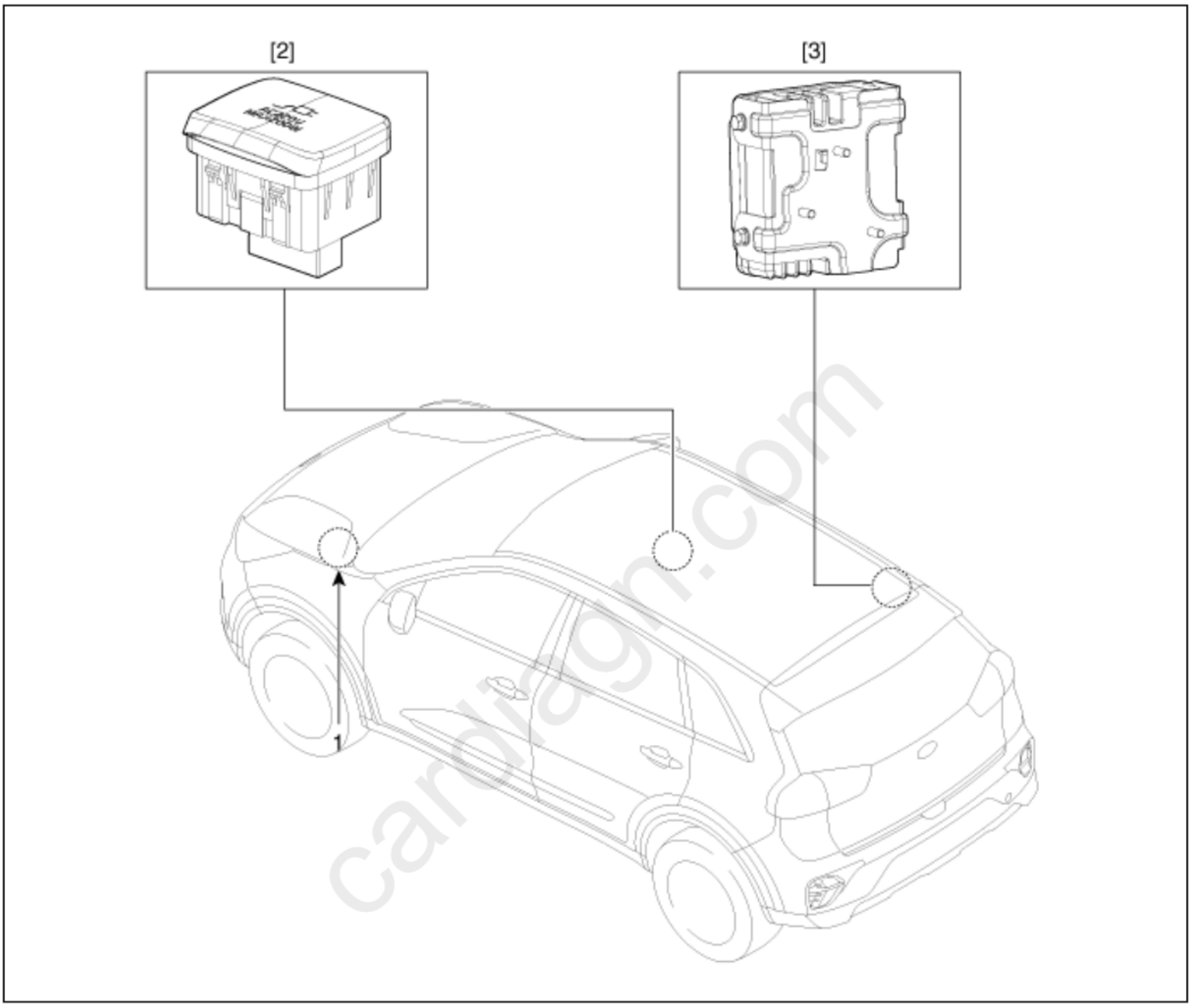

1. Battery
2. AC inverter outlet switch
3. AC inverter unit

Please rate this document after reviewing at the bottom of this page.

Description

An inverter is a device that transforms the DC voltage from the battery into an AC voltage (115V). The inverter can power various electrical devices that consume 150W or less, including mobile phone or notebook rechargers, audio systems, and TVs.

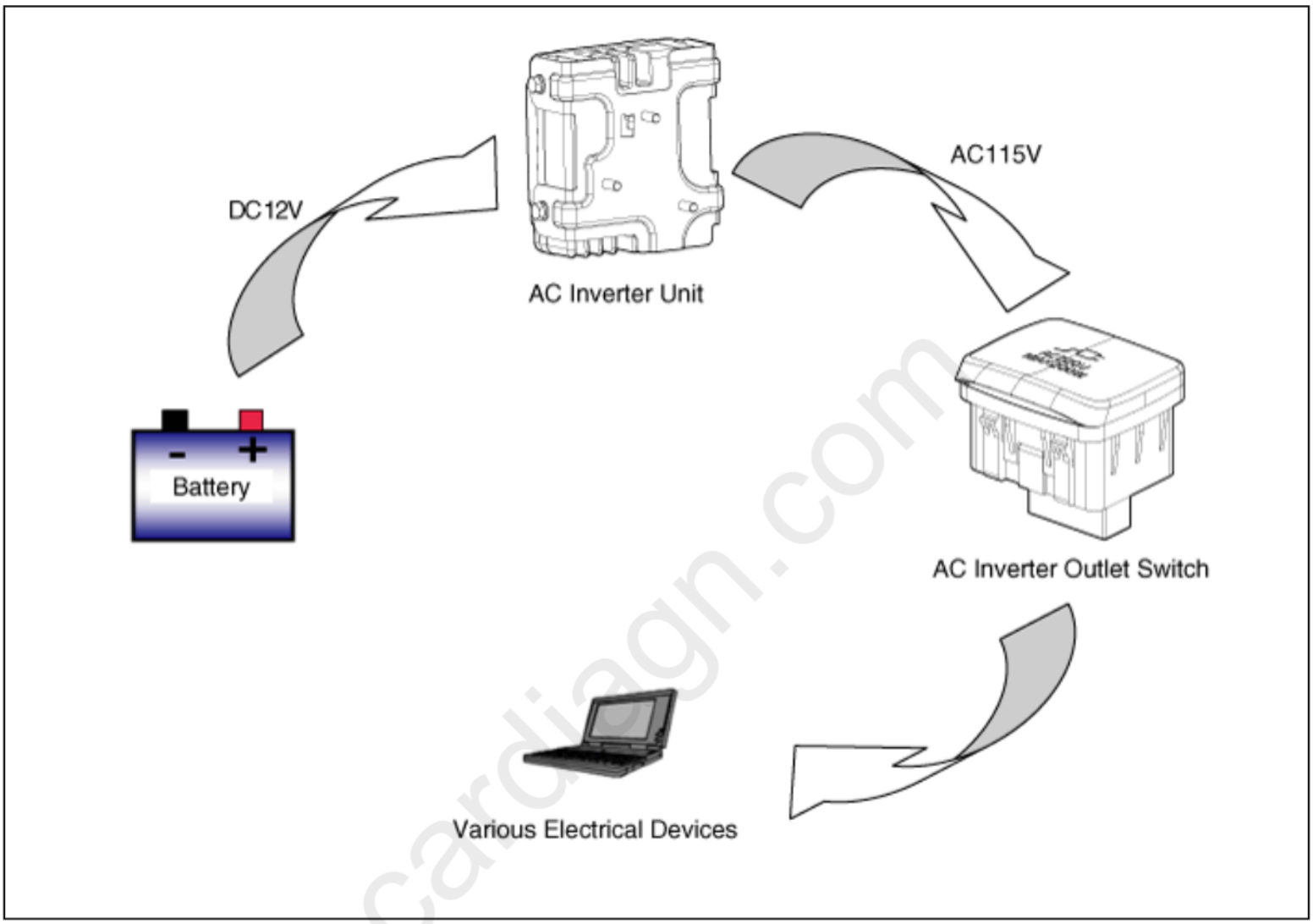

cardiagn.com

Inverter system Protection Function

Item	Condition	LED Status
Undervoltage protection	Shuts down for safety at voltages lower than 11.3 V ± 0.3 V.	LED flickering
	Resumes operation at 12.2 V ± 0.3 V.	LED lighting
Overvoltage protection	Shuts down for safety at voltages higher than 15.5 V ± 0.3 V.	LED flickering
	Resumes operation at 15.5 V ± 0.3 V.	LED lighting
Overheat protection	Shuts down for safety if temperatures exceed 221 ± 50°F (105 ± 10°C)	LED flickering
	Resumes operation at 203 ± 50°F (95 ± 10°C)	LED lighting
Overcurrent protection	Turns OFF when overcurrent above a set point is detected.	LED lighting

	The inverter stops for 20 seconds before it restarts.	LED flickering (20 seconds)
	Turns OFF when overcurrent is detected 3 times. (Turn the AC inverter switch ON again to turn on the inverter.)	
short circuit protection	The inverter shuts down for safety if there is a short circuit between the AC1 and AC 2 outputs during operation.	LED OFF
undervoltage/overvoltage shutdown protection	Shuts down at voltages lower than 10.7 V ± 0.3 V.	LED OFF
	Shuts down at voltages lower than 16.5 V ± 0.3 V.	LED OFF

DO NOT touch or insert any foreign substance into the AC inverter. Be aware of the potential risk of electric shock or fire.

- Only use the AC inverter when the engine is running. Always disconnect the inverter when not in use.
- Using the AC inverter when the engine is off or leaving an electric device plugged in for a long time may drain the battery of the vehicle.
- DO NOT use any electric devices that consume more than rated power.
- Some electric devices may not operate properly even though they consume less power than rated capacity of inverter provided by the vehicle.
  - Household appliances that require high voltage at initial operation (e.g. compressor operated refrigerator, electrically powered tools, etc.)
  - Measuring equipment used to process accurate data (e.g. medical equipment, precision measuring equipment, etc.)
  - Equipment that requires stable power supply (e.g. electric blanket/mattress, touch sensor lighting, etc.)
- Connecting an electrical device that generates excessive levels of electromagnetic noise to the AC inverter may cause abnormal sounds in the audio equipment or a malfunction in the vehicle's electronic devices.
- Connecting a faulty electronic device to the AC inverter may damage the inverter or the electric system of the vehicle.

The LED indicator blinks if the AC inverter input voltage falls below 11.3 V. The inverter shuts off if the voltage falls below 10.7 V.
Inspect the battery and recharging system.

cardiagn.com

Please rate this document after reviewing at the bottom of this page.

Connector and Terminal
Function

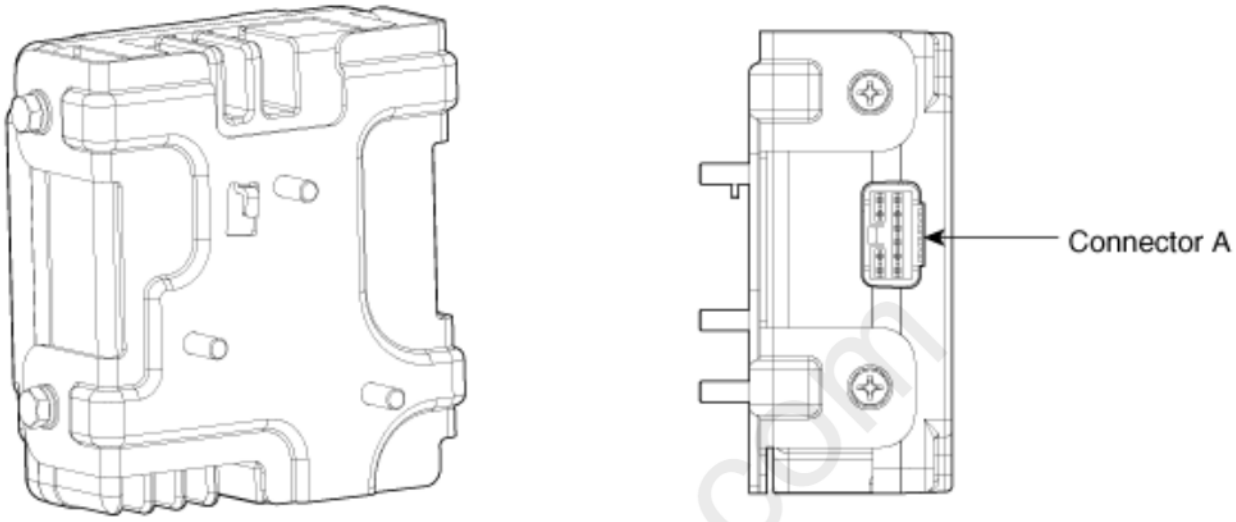

Connector A	No.	Description	No.	Description
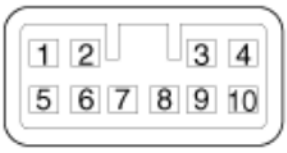	1	Ground	6	Battery (+)
	2	Ground	7	-
	3	AC inverter ON indicator (+)_output	8	IGN2
	4	AC inverter power1_output	9	AC inverter ON switch_input
	5	Battery (+)	10	AC inverter power2_output

cardiagn.com

Circuit
Diagram

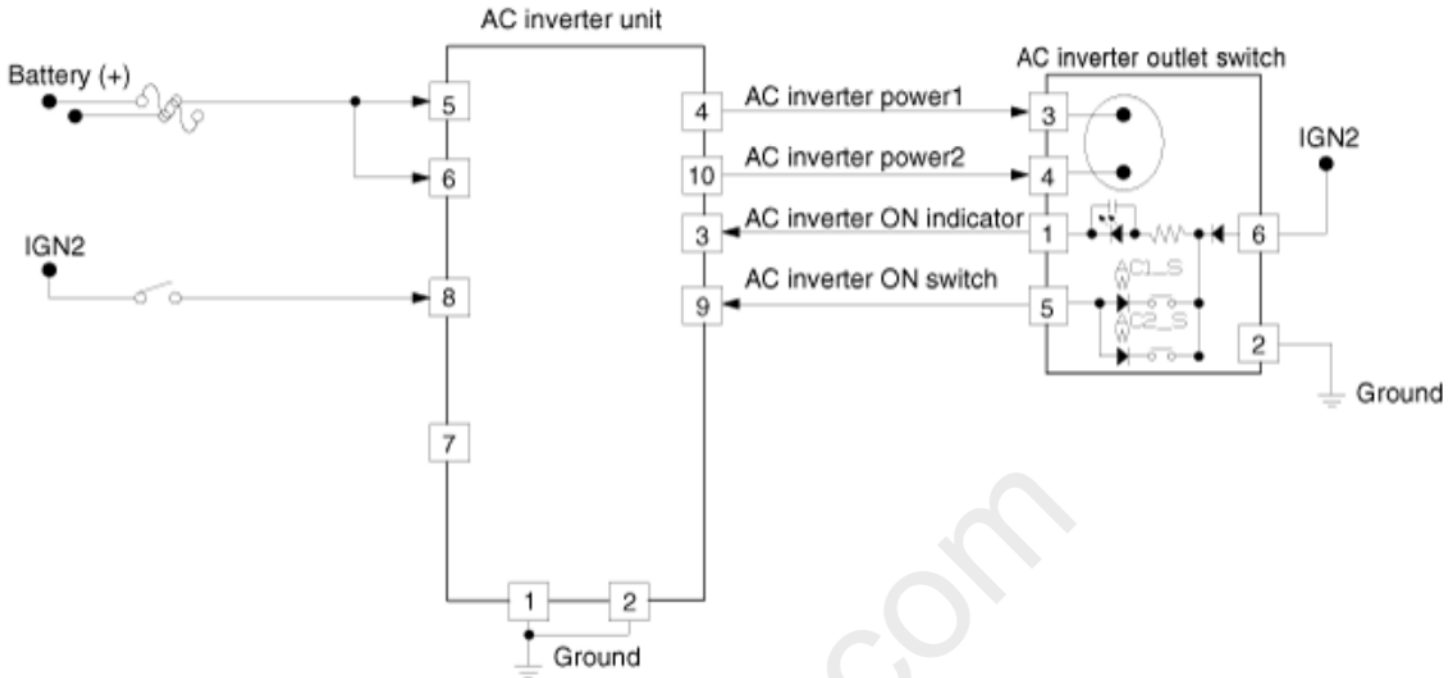

cardiagn.com

Please rate this document after reviewing at the bottom of this page.

Removal

1. Disconnect the negative (-) battery terminal.
2. Remove the luggage side trim [RH].
   (Refer to Body - "Luggage Side Trim")
3. Disconnect the AC inverter unit connector (A).

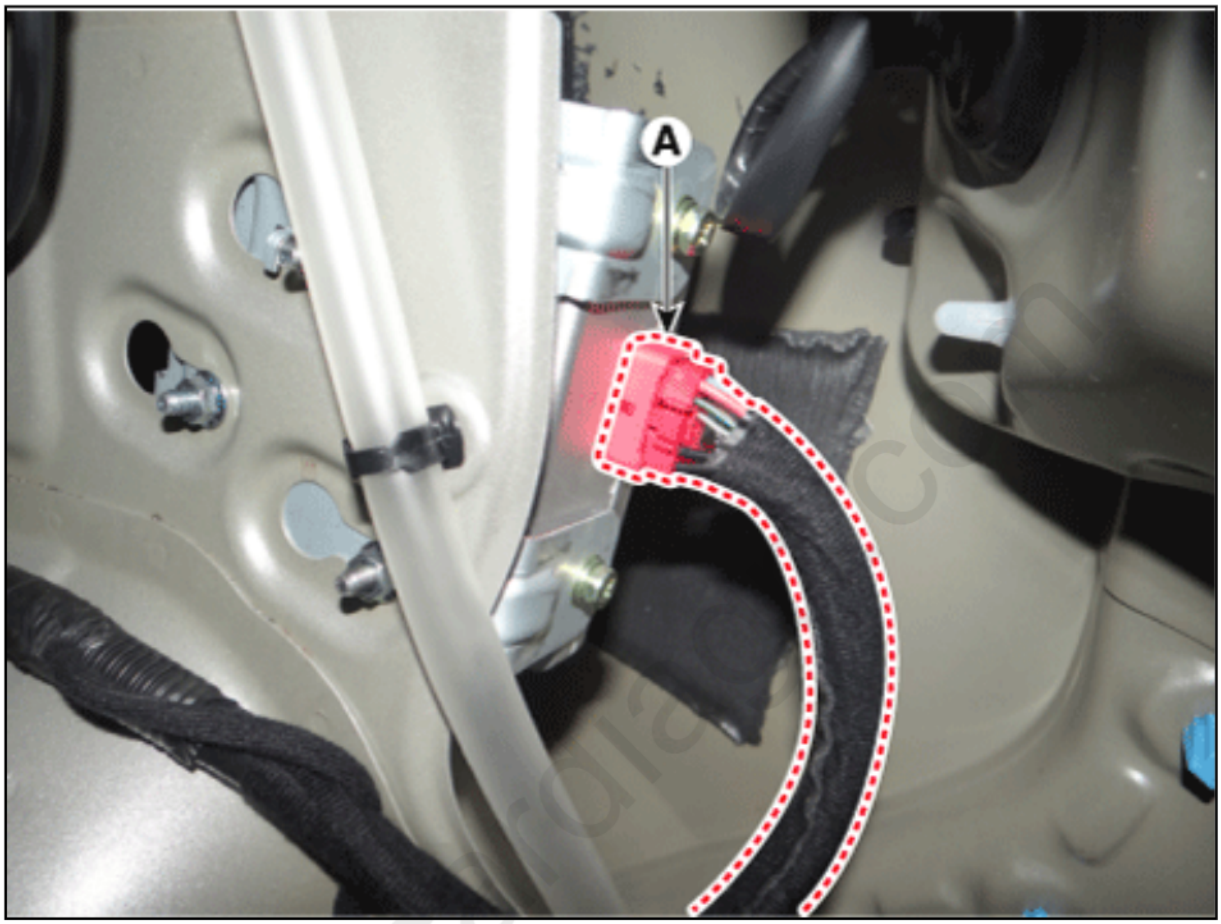

4. Remove the AC inverter unit (A) after loosening the mounting nuts.



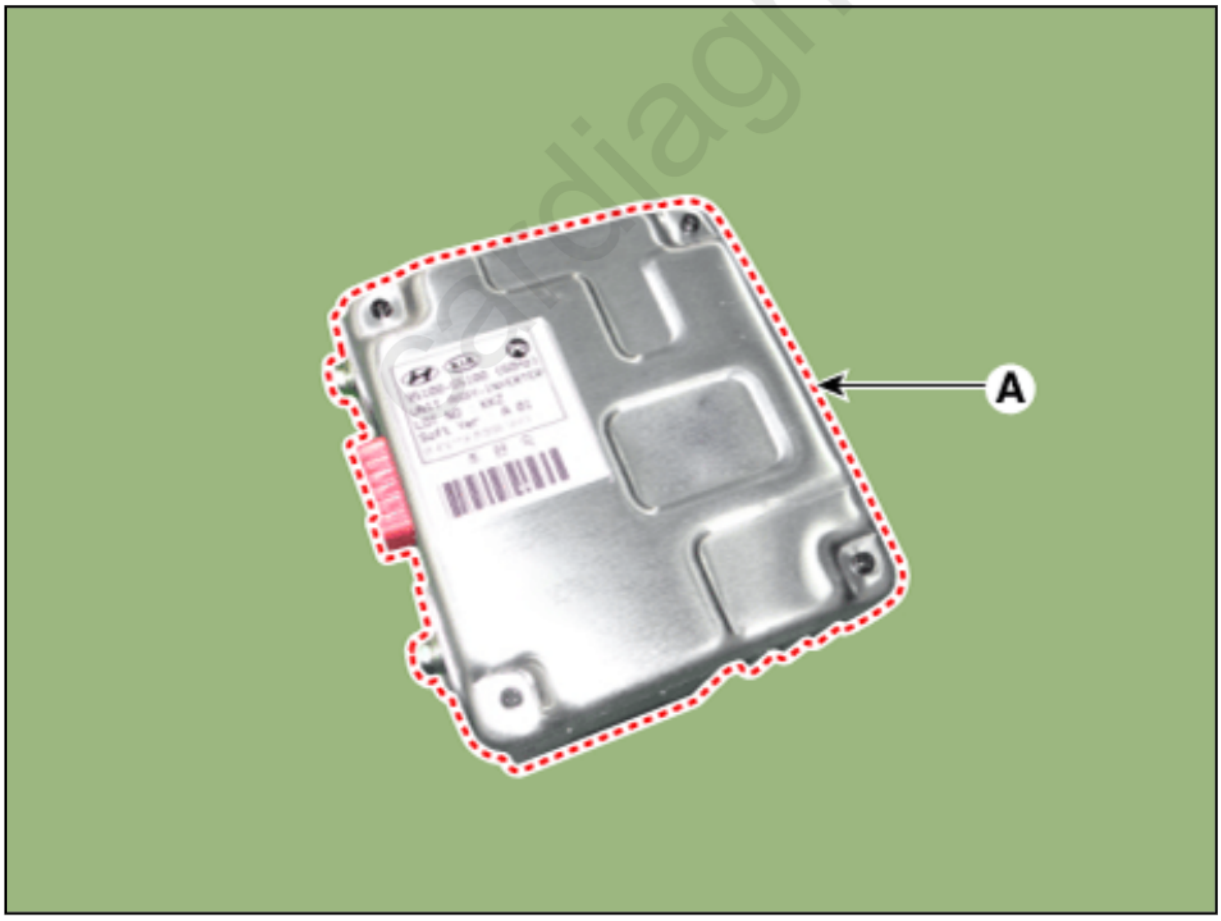

Installation

1. Install in the reverse order of removal.

- Before starting repair work, turn off the engine and AC inverter.
- Working on AC inverter while it's turned on may cause electric shock.
- Working on AC inverter with wet hands may cause electric shock.

cardiagn.com

Please rate this document after reviewing at the bottom of this page.

Connector and Terminal
Function

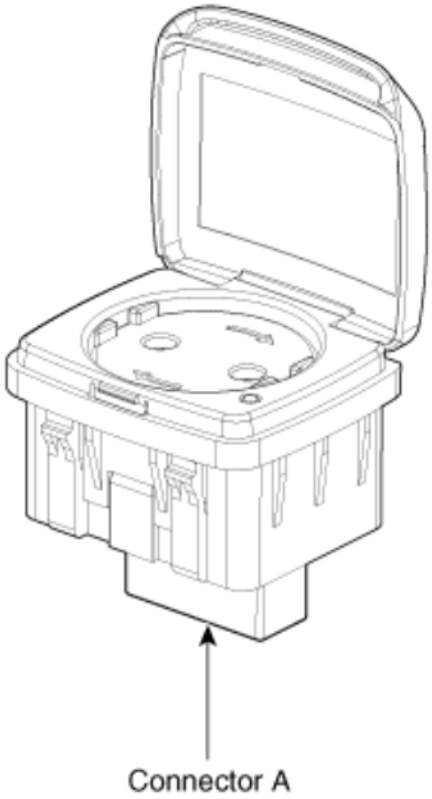

Connector A	
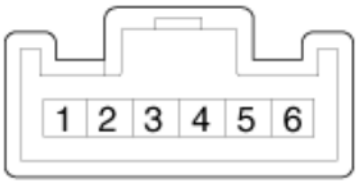	
No.	**Description**
1	Indicator
2	Ground
3	AC1
4	AC2
5	AC inverter switch
6	IGN2

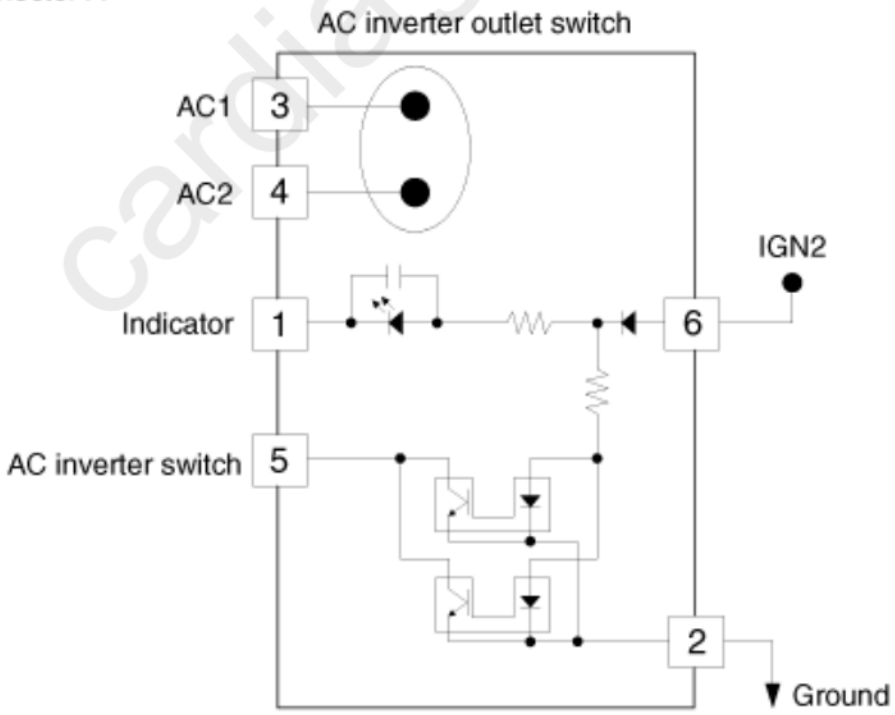

cardiagn.com

Please rate this document after reviewing at the bottom of this page.

Removal

1. Disconnect the negative (-) battery terminal.
2. Remove the rear console cover.
   (Refer to Body - "Rear Console Cover")
3. Disconnect the AC inverter outlet switch connector (A).



4. Remove the AC inverter outlet switch (A) after pushing the mounting hooks.

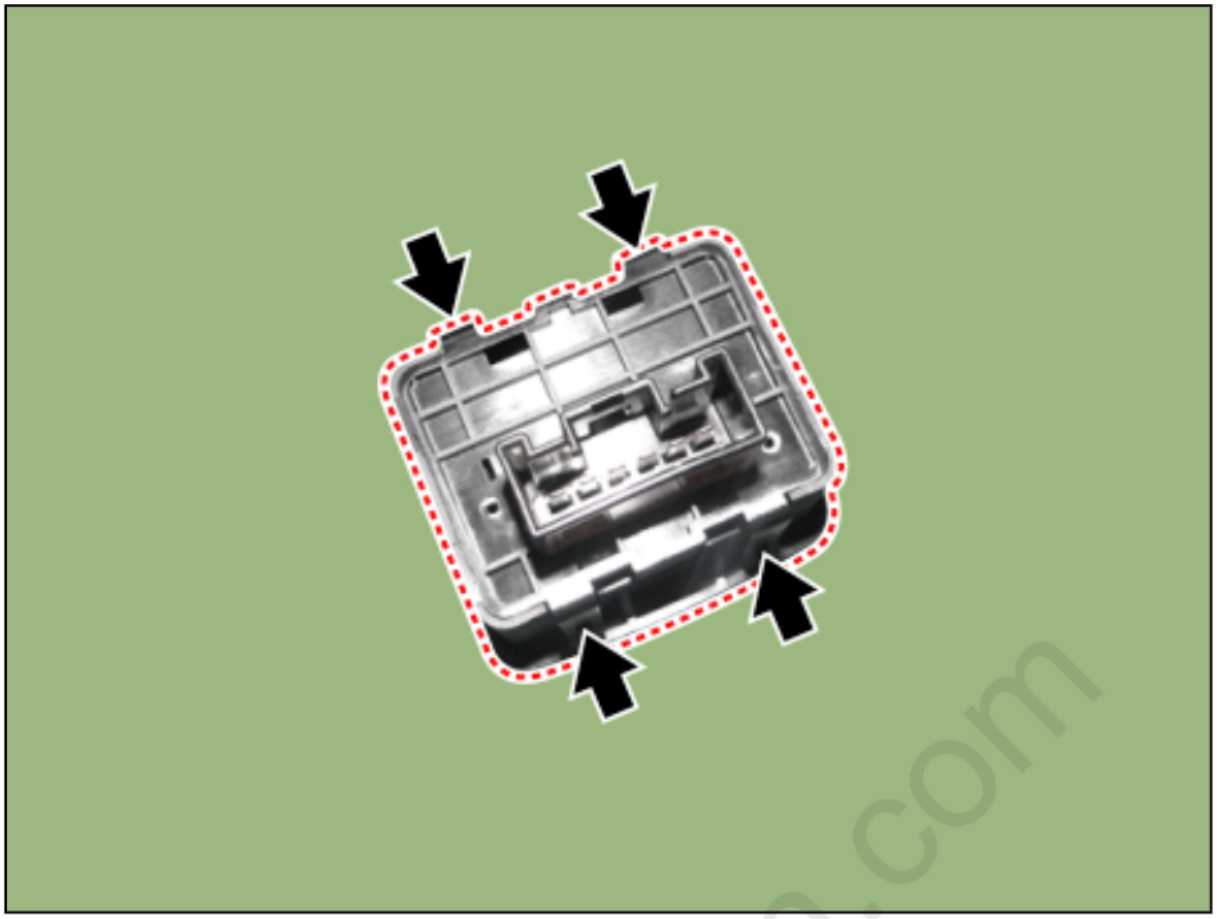

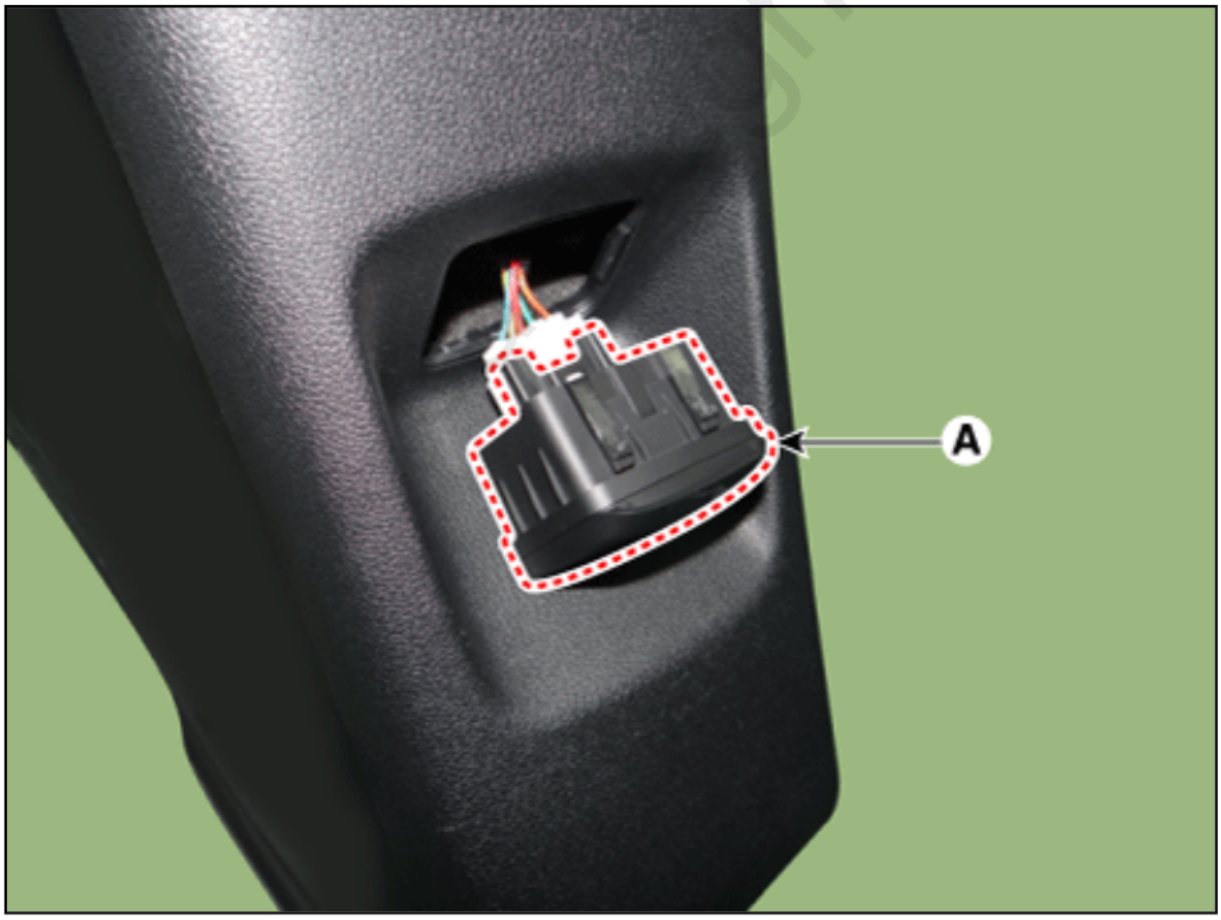

Installation

1. Install in the reverse order of removal.

cardiagn.com

Please rate this document after reviewing at the bottom of this page.

Specifications

Items		Specifications
Rated voltage		5V
Load		Max. 1mA (Relay load)
Illuminations (LUX)	50	1.20 ± 0.26 V
	100	2.08 ± 0.47 V
	150	3.13 ± 0.69 V

cardiagn.com

Please rate this document after reviewing at the bottom of this page.

Component
Location

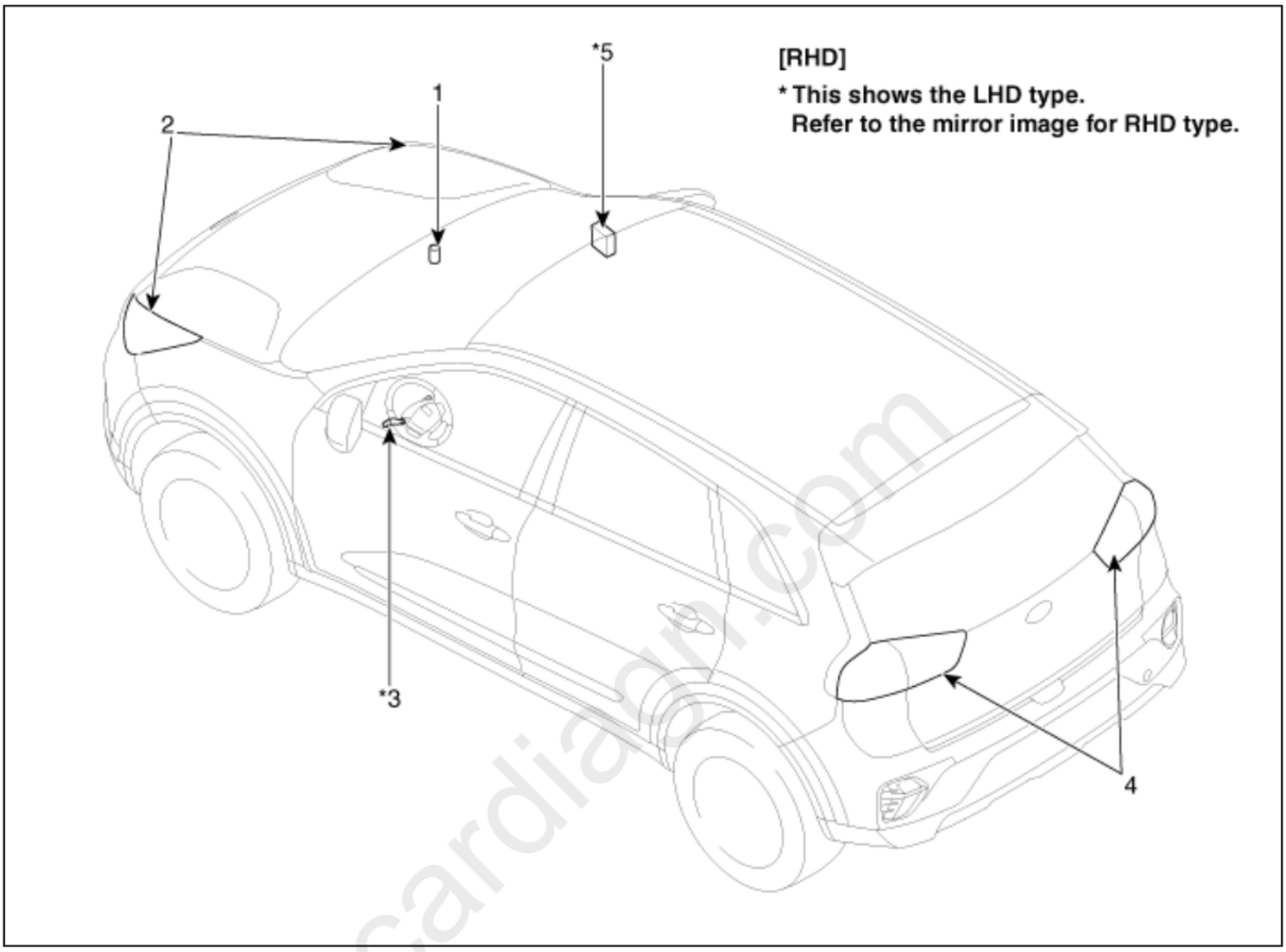

1. Auto light sensor
2. Headlamps
3. Lighting switch (Auto)
4. Rear combination lamps
5. BCM (Body Control Module)

cardiagn.com

Please rate this document after reviewing at the bottom of this page.

Description

- It's a system that uses illumination sensor to automatically turn ON the tail lamp and head lamp based on the change in surrounding environment's illumination condition.
- It activates when the vehicle enters/exits tunnel, or when the illumination condition in surrounding environment changes due to rain, snow, or fog.

cardiagn.com

Please rate this document after reviewing at the bottom of this page.

Connector and Terminal
Function

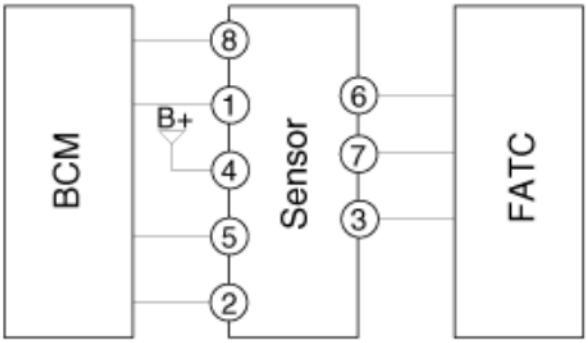

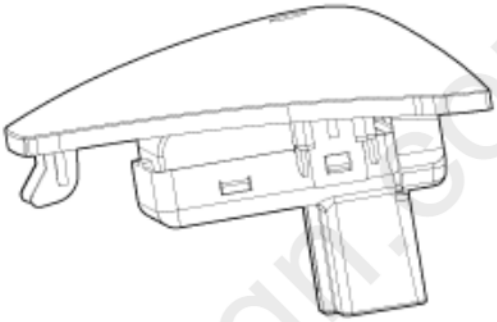



[Photo sensor & Auto light sensor Connector]

No.	Description
1	Auto light sensor signal
2	Auto light sensor ground
3	Passenger side photo sensor
4	LED (Power)
5	LED (Signal)
6	Driver side photo sensor
7	Photo sensor power
8	Auto light sensor power

cardiagn.com

Please rate this document after reviewing at the bottom of this page.

Removal

1. Remove the auto light sensor (A) from the main crash pad.

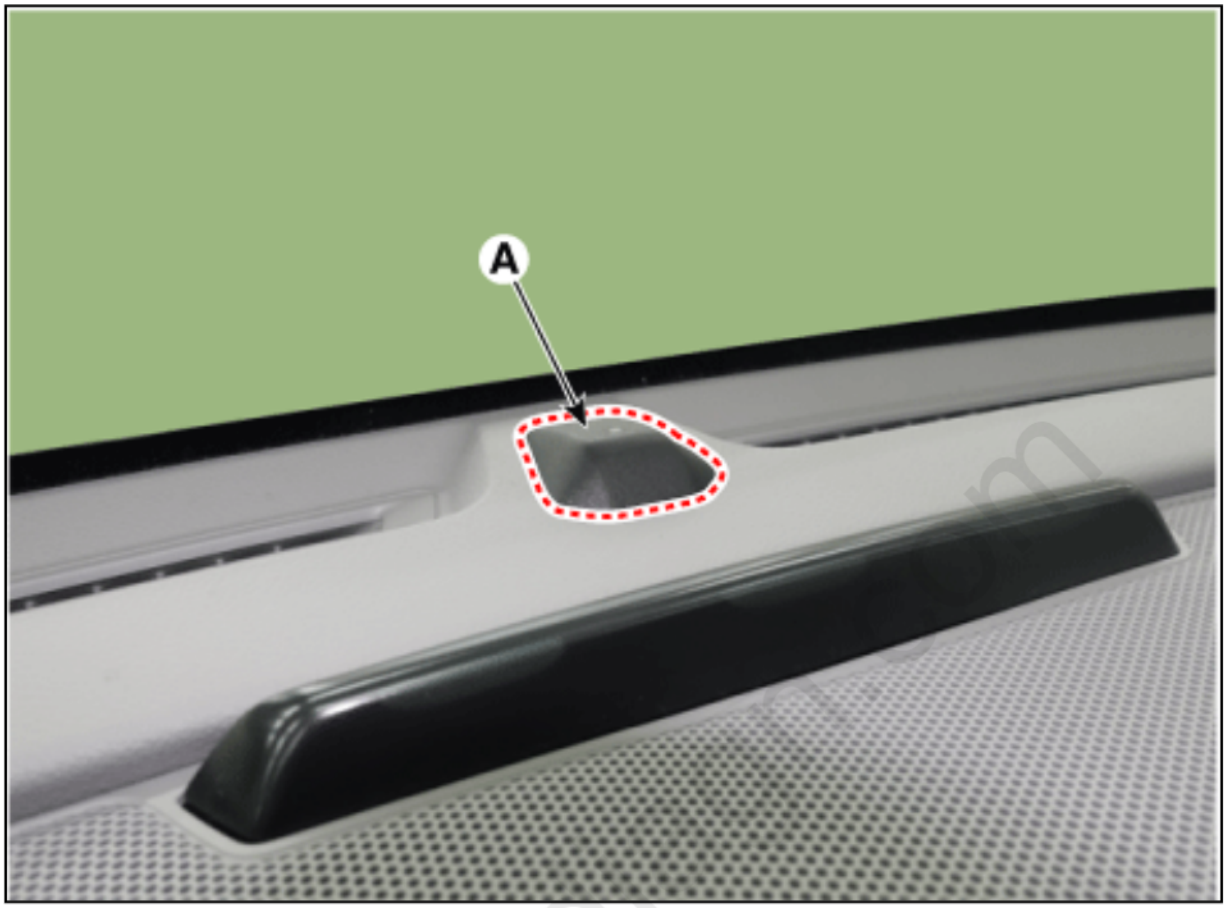

2. Disconnect the connector (A) from the auto light sensor.

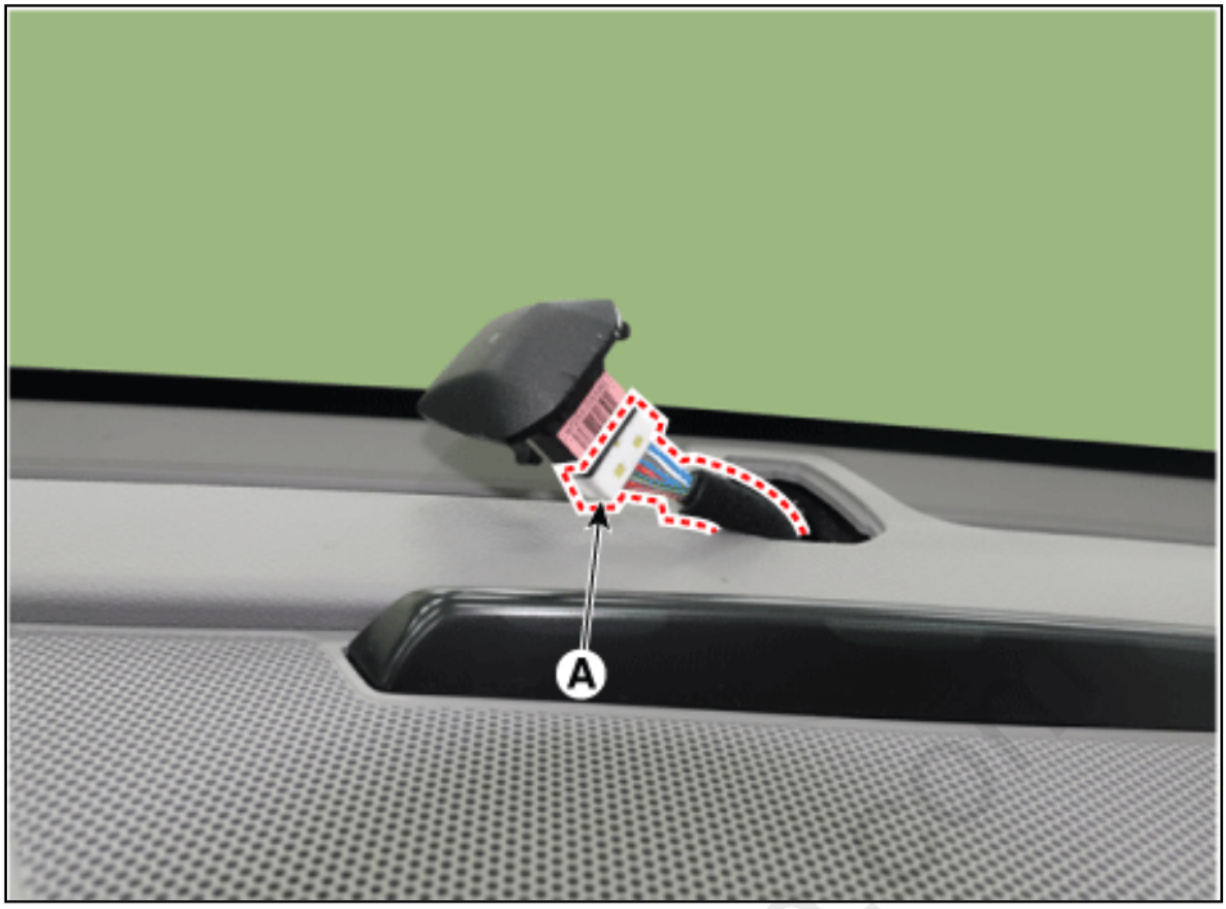

Installation

1. Install in the reverse order removal.

cardiagn

Please rate this document after reviewing at the bottom of this page.

Component
Location

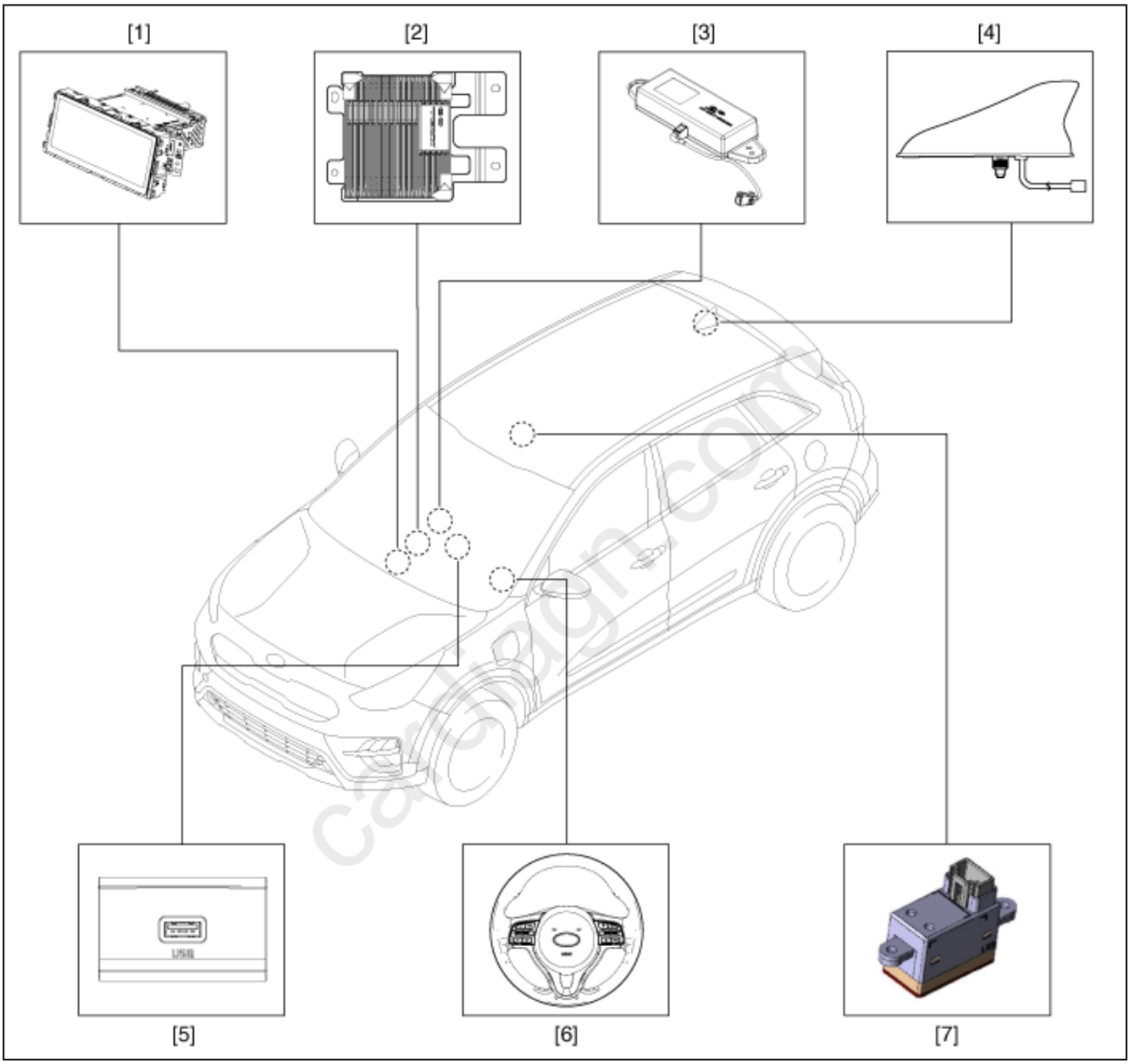

1. AVN head unit
2. External amplifier
3. Crash pad LTE antenna
4. Roof LTE antenna
5. Multimedia jack
6. Steering wheel remote control (SWRC)
7. Hands-free mic (Built-in overhead console)

Please rate this document after reviewing at the bottom of this page.

Description

The system is basically composed of a keyboard for the operation of combined function, LCD monitor, a head unit with Bluetooth handsfree calling, voice recognition and navigation, music amplifier and the media unit that connects with other external devices.

System Block Diagram

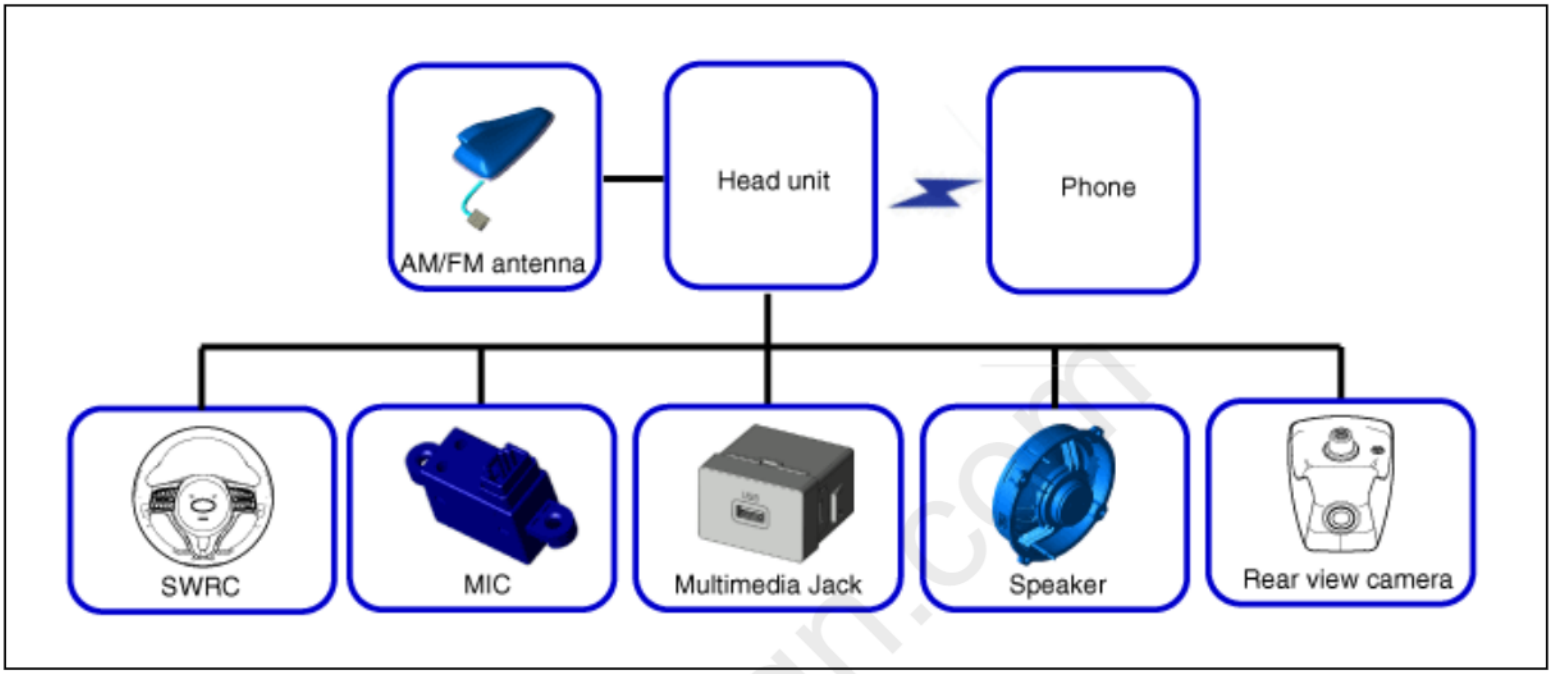

cardiagn.com

Please rate this document after reviewing at the bottom of this page.

Connector and Terminal
Function

Display Audio Head Unit

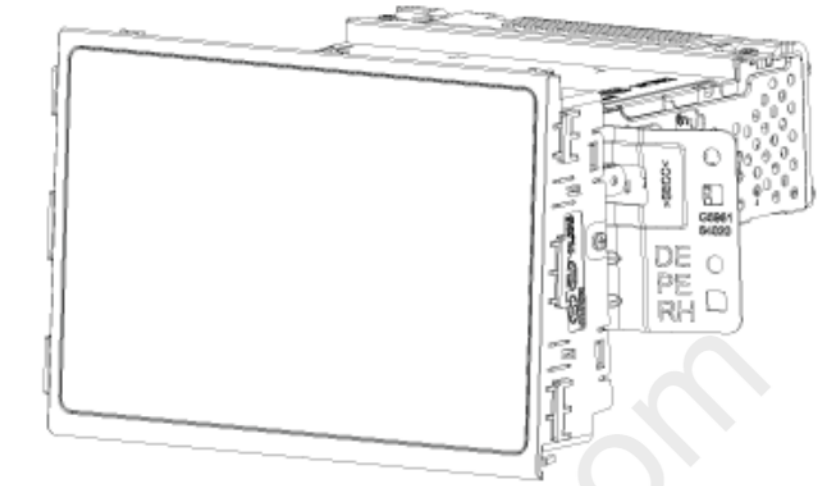

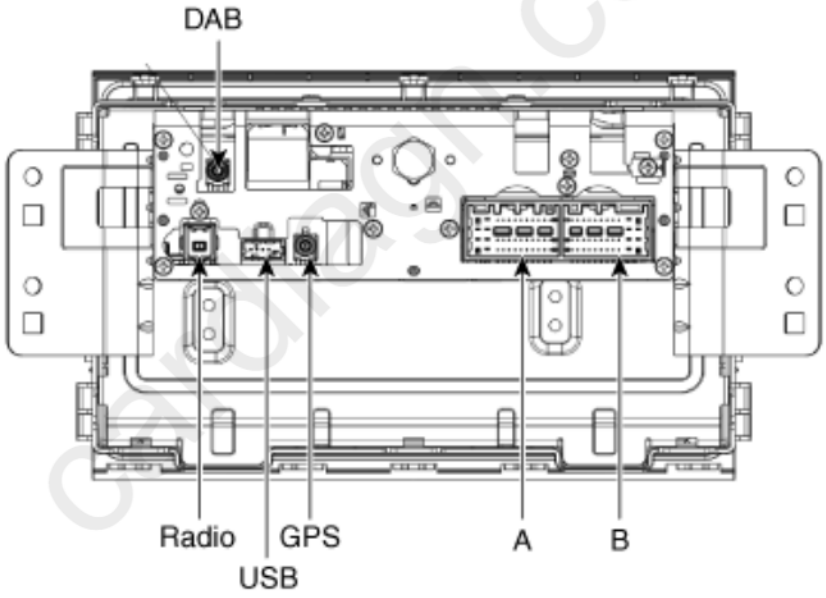

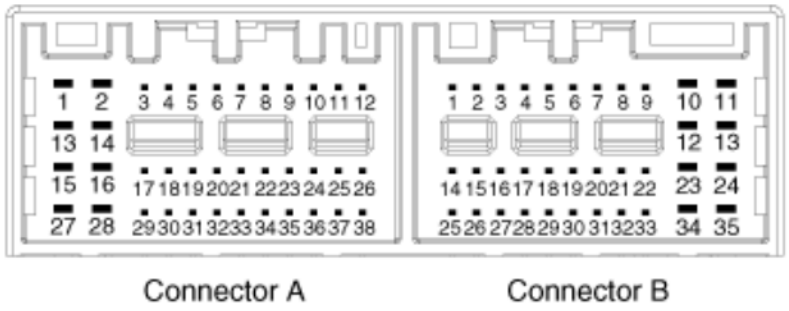

Connector Pin Information

Pin	Function

	Connector A	Connector B
1	Rear door left speaker (+)	-
2	Rear door left speaker (-)	MIC (+)
3	-	-
4	-	-
5	-	Antenna power
6	RVM Camera : Power	Illumination (+)
7	RVM Camera : Video	MM-CAN (High)
8	-	-
9	-	-
10	-	Battery (+)
11	DTC	Battery (+)
12	Steering wheel key	Ground
13	Front door left speaker (+)	Ground
14	Front door left speaker (-)	-
15	Front door right speaker (-)	MIC (-)
16	Front door right speaker (+)	-
17	-	-
18	-	-
19	-	Illumination (-)
20	RVM Camera : Power ground	MM-CAN (Low)
21	RVM Camera : Video ground	-
22	-	ACC
23	-	-
24	-	-
25	-	-
26	Steering wheel key ground	-
27	Rear door left speaker (-)	-
28	Rear door left speaker (+)	-
29	-	-
30	-	-
31	-	-
32	-	-
33	RVM Camera : Shield ground	IGN1
34	-	-

cardiagn.com

35	-	-
36	-	
37	-	
38	Vehicle speed	

Radio antenna	Pin	Function
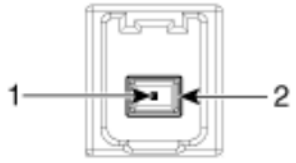	1	Signal
	2	Ground

USB Connector	Pin	Function
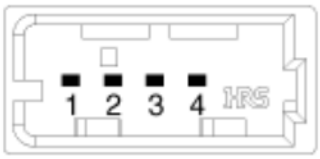	1	USB_VCC
	2	USB data_Low
	3	USB data_High
	4	USB_Ground

GPS Antenna	Pin	Function
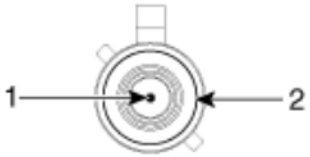	1	Signal
	2	Ground

DAB antenna connector	Pin	Function
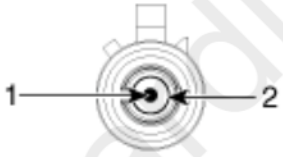	1	Signal
	2	Ground

AVN Head Unit

cardiagn.com

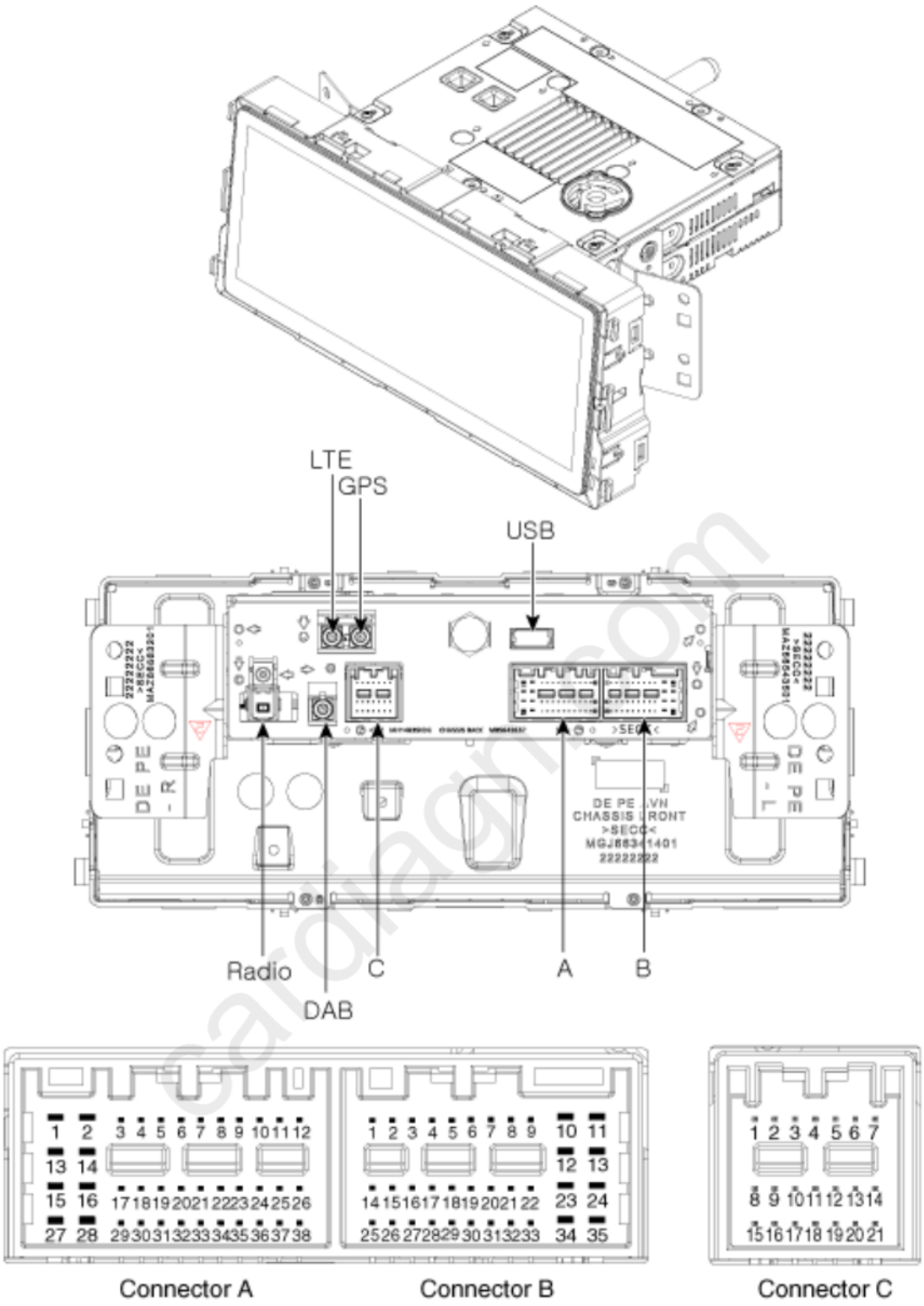

Pin	Function			
	Connector A		Connector B	Connector C
	External AMP	Internal AMP		
1	-	Rear door left speaker (+)	-	-

2	-	Rear door left speaker (-)	MIC (+)	C-CAN (High)
3	Amplifier navigation voice (+)	-	-	IGN3_Wake up (PHEV Only)
4	Amplifier SPDIF (High)	-	-	-
5	Reset		-	-
6	RVM Camera : Power		Illumination (+)	-
7	RVM Camera : Video		MM-CAN_High	-
8	-		-	-
9	-		-	C-CAN (Low)
10	-		Battery (+)	-
11	DTC		Battery (+)	-
12	Steering wheel key		Ground	-
13	-	Front door left speaker (+)	Ground	-
14	-	Front door left speaker (-)	-	-
15	-	Front door right speaker (-)	MIC (-)	-
16	-	Front door right speaker (+)	-	MTS Key
17	Amplifier navigation voice (-)	-	-	-
18	Amplifier SPDIF (Low)	-	-	-
19	Amplifier SPDIF (Ground)	-	Illumination (-)	-
20	RVM Camera : Power ground		MM-CAN_Low	-
21	RVM Camera : Video ground		-	-
22	-		ACC	
23	-		Keyboard power	
24	-		-	
25	-		-	
26	Steering wheel key ground		-	
27	-	Rear door right speaker (-)	-	
28	-	Rear door right speaker (+)	-	

cardiagn.com

29	-	-
30	-	-
31	-	-
32	-	IGN3 (PHEV Only)
33	RVM Camera : Shield ground	IGN1
34	-	Keyboard ground
35	-	-
36	-	
37	-	
38	Vehicle speed	

Radio antenna	Pin	Function	Pin	Function
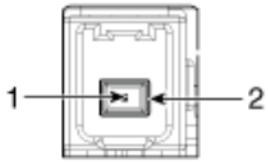	1	FM/AM	2	Ground

USB connector	Pin	Function	Pin	Function
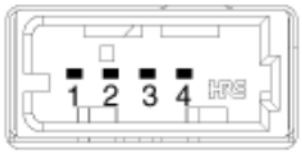	1	USB VCC	3	USB data (+)
	2	USB data (-)	4	USB Ground

GPS antenna	Pin	Function	Pin	Function
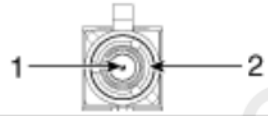	1	Signal	2	Ground

DAB antenna	Pin	Function
	1	Signal

LTE antenna	Pin	Function	Pin	Function
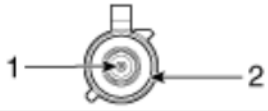	1	Signal	2	Ground

cardiagn.com

Please rate this document after reviewing at the bottom of this page.

Removal

1. Remove the crash pad plate [RH] (A).

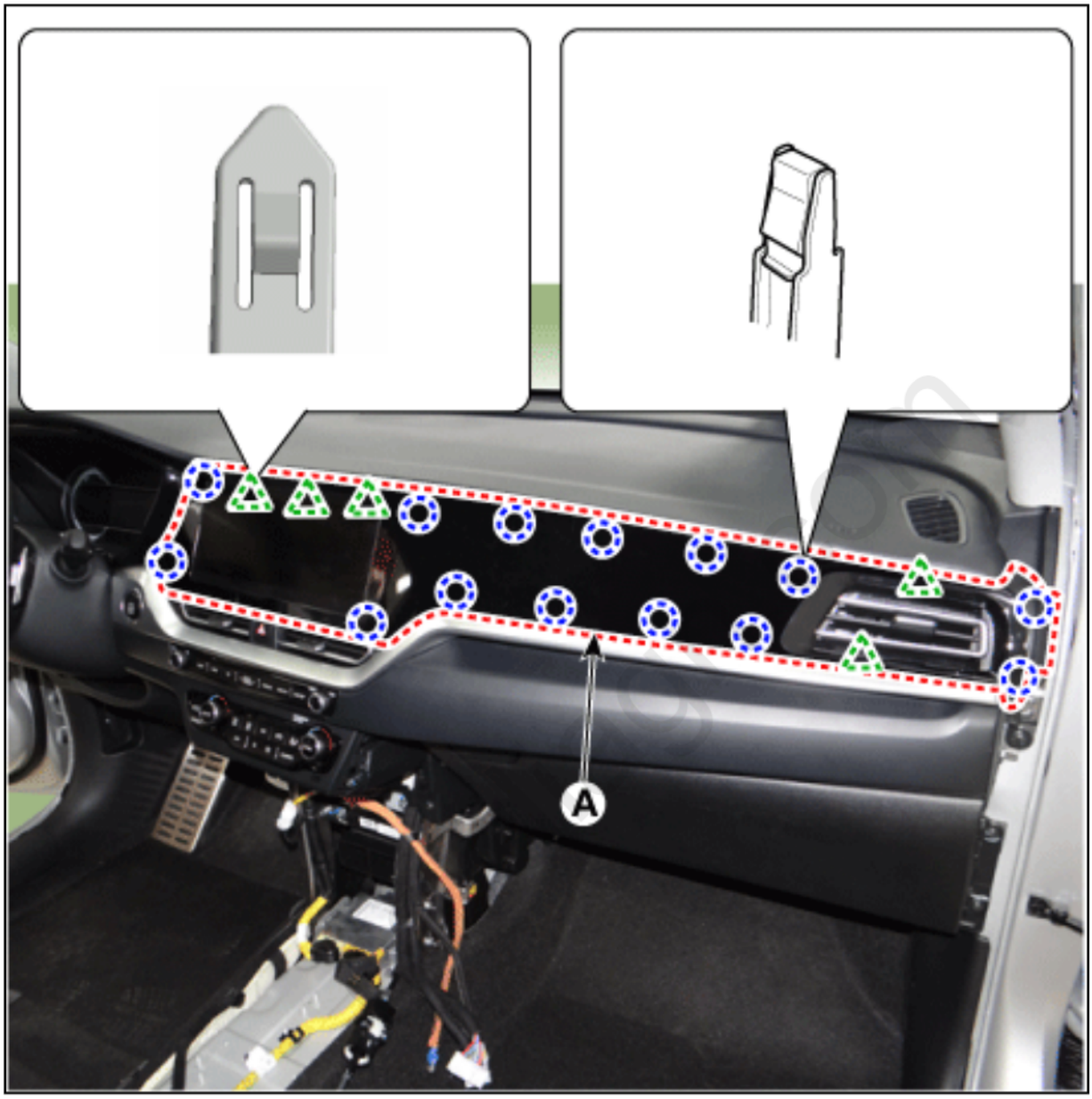

2. Remove the audio/AVN head unit (A) after loosening the mounting screws.

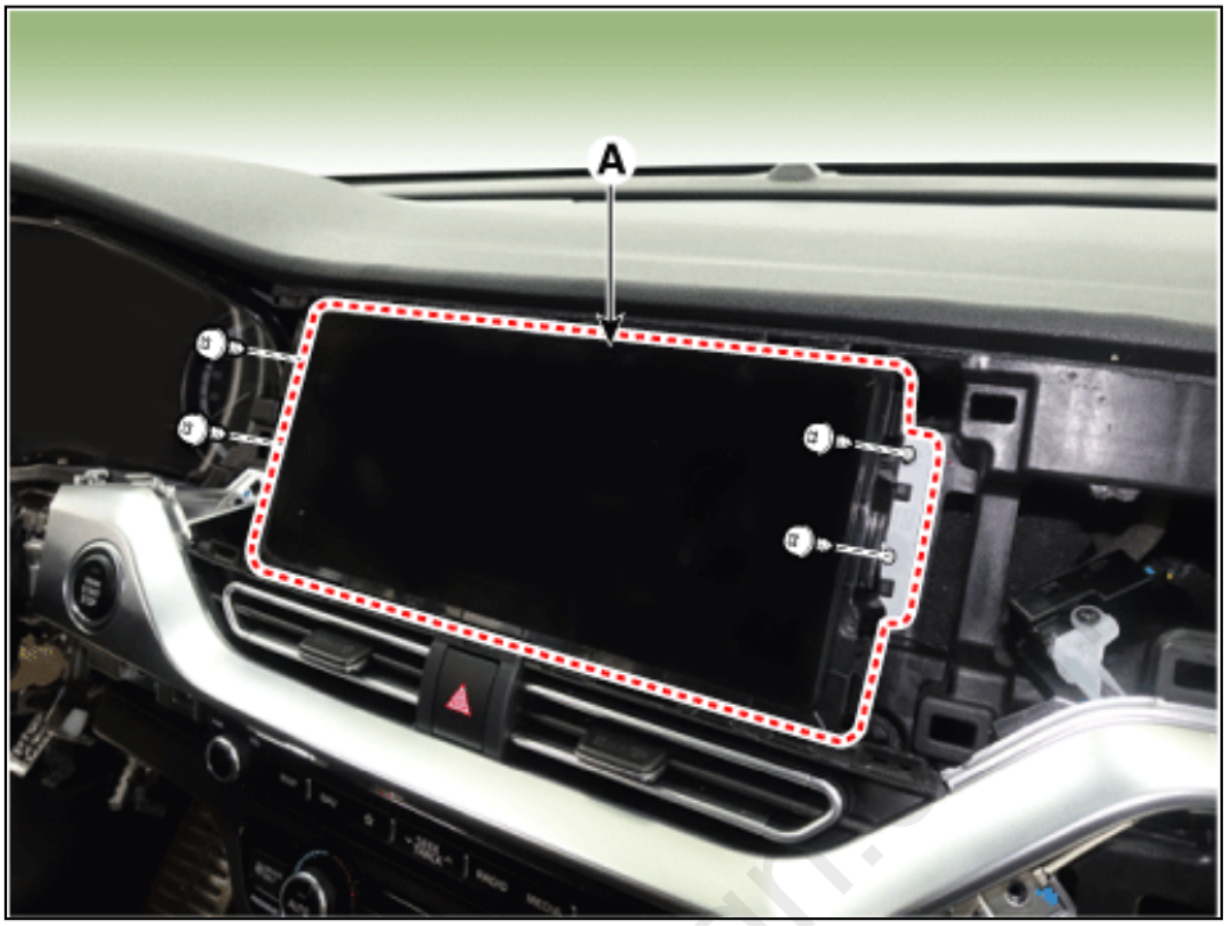

3. Disconnect the connectors (A) from the audio/AVN head unit.

cardiagn

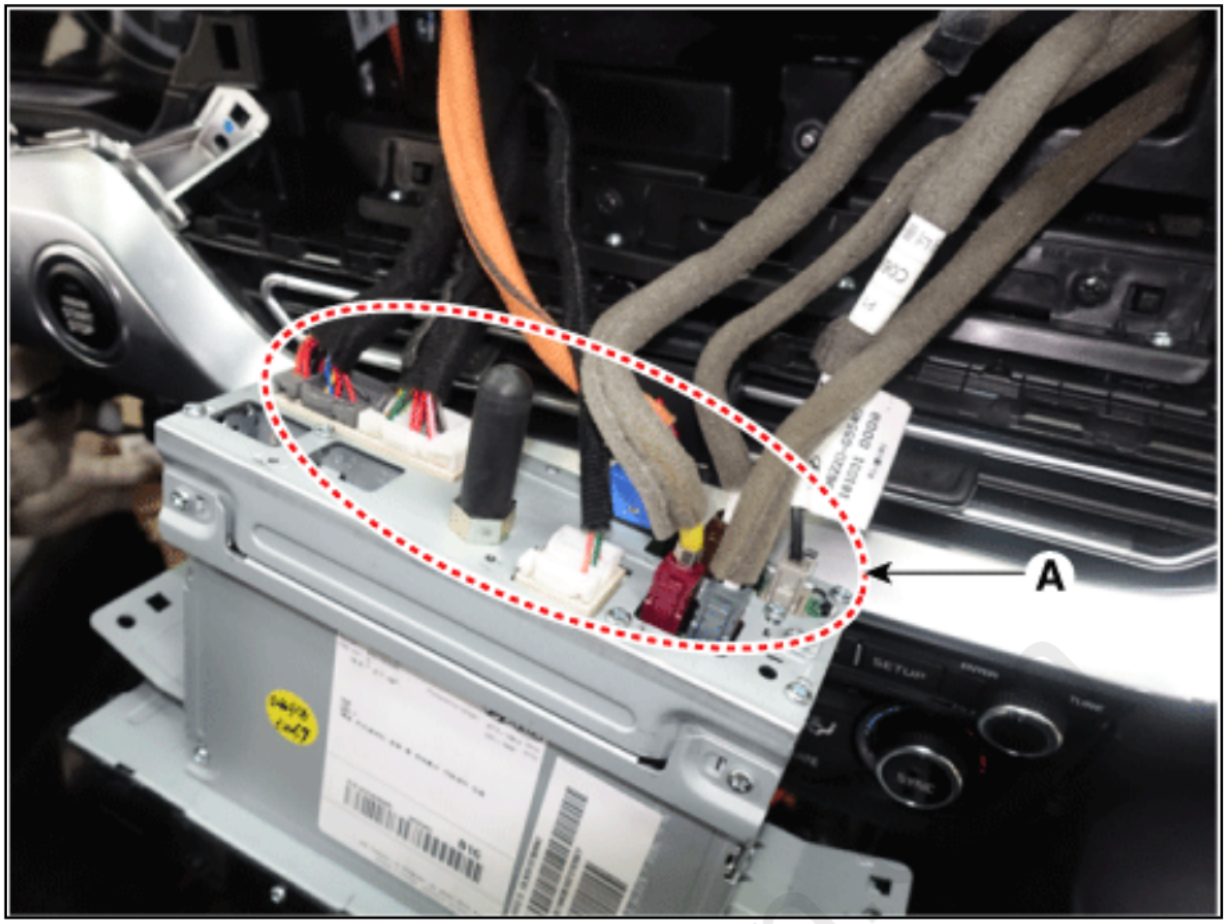

Installation

1. Install in the reverse order of removal.

cardiagn

Please rate this document after reviewing at the bottom of this page.

Connector and Terminal
Function

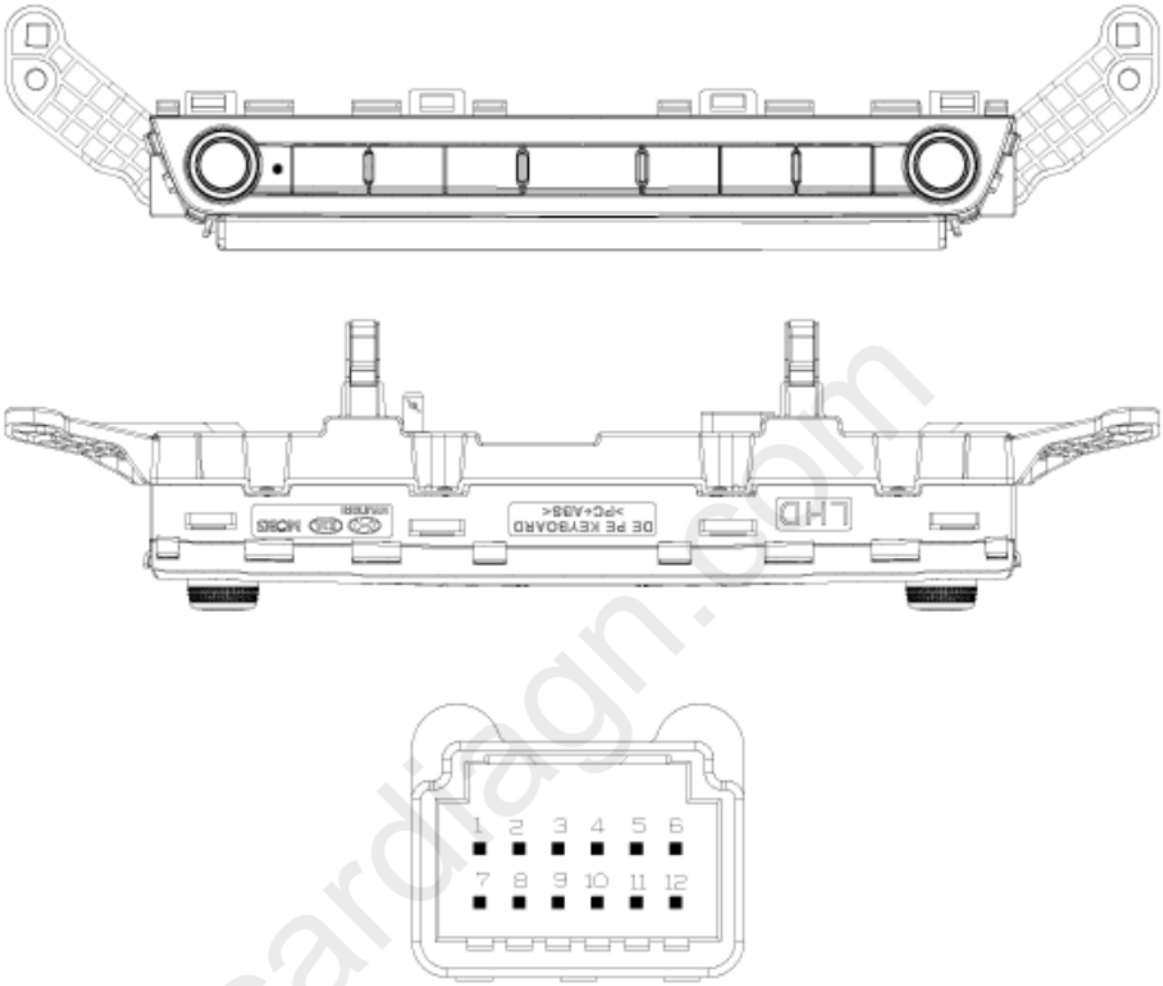

Pin	Function
1	-
2	Battery (+)
3	ACC
4	IGN1
5	Illumination (-)
6	Illumination (+)
7	MM-CAN (Low)
8	MM-CAN (High)
9	-

cardiagn.com

10	Ground
11	-
12	-

cardiagn.com

Please rate this document after reviewing at the bottom of this page.

Removal

1. Remove the crash pad garnish assembly [RH].
   (Refer to Body - "Crash Pad Garnish")
2. Remove the keyboard (A) after loosening the mounting screws.

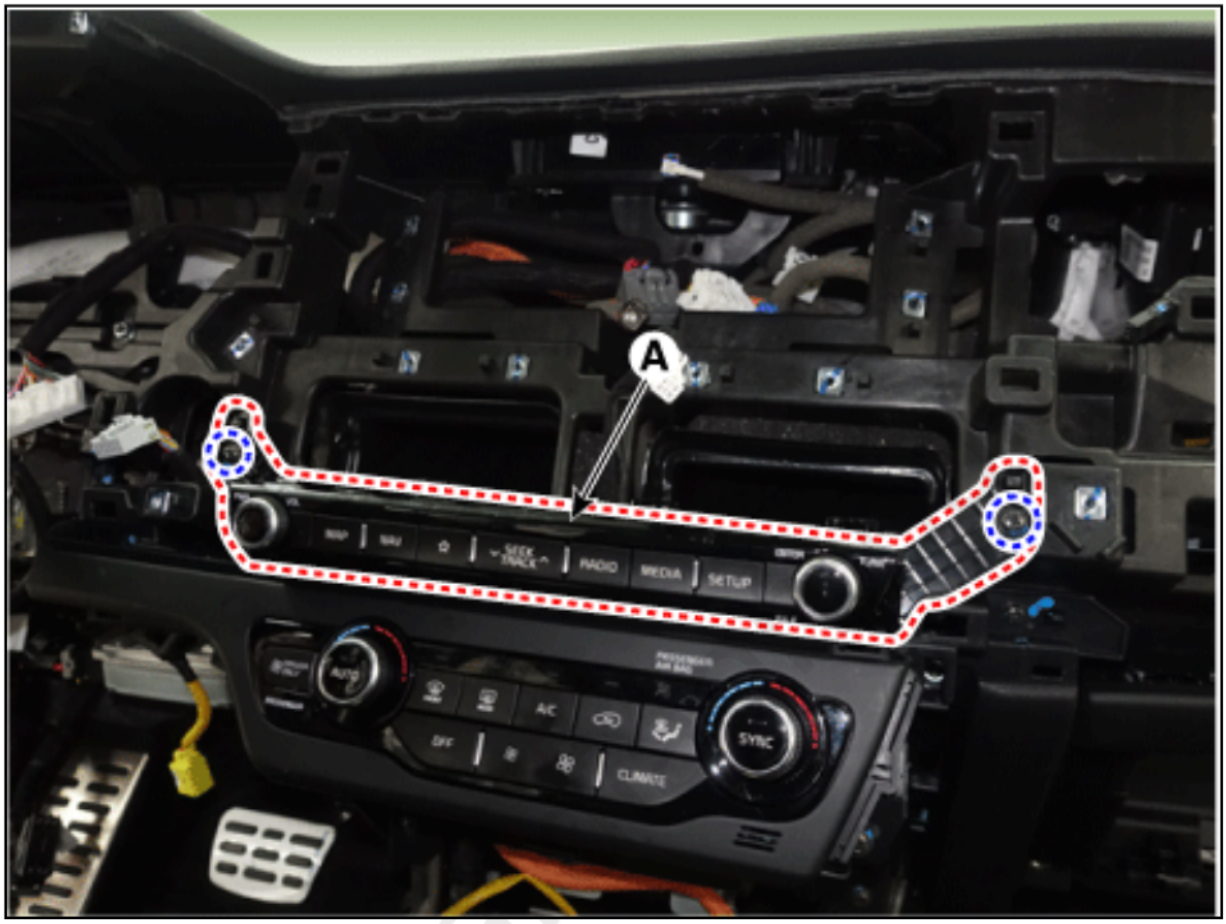

3. Disconnect the connectors (A) from the keyboard.

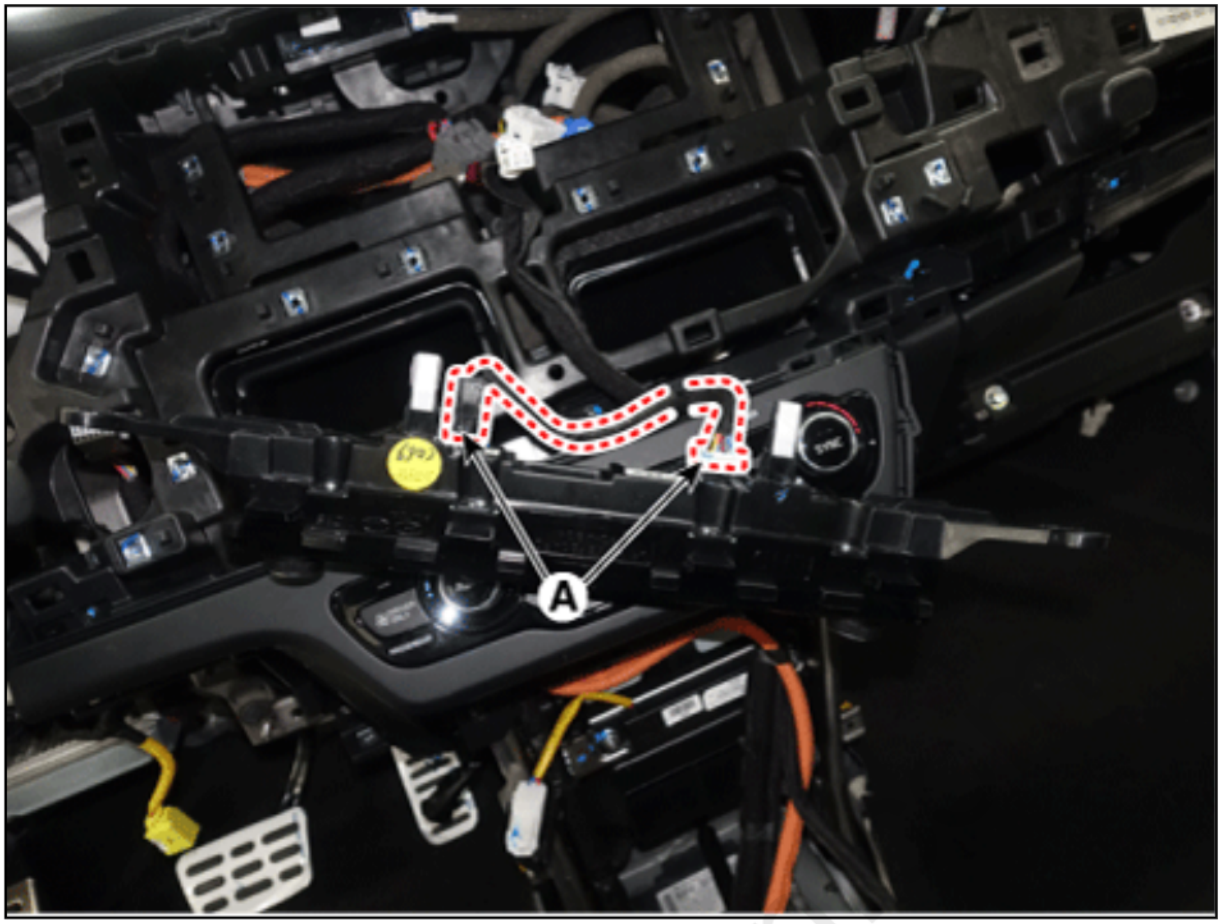

Installation

1. Install in the reverse order of removal.

cardiagn

Please rate this document after reviewing at the bottom of this page.

Components

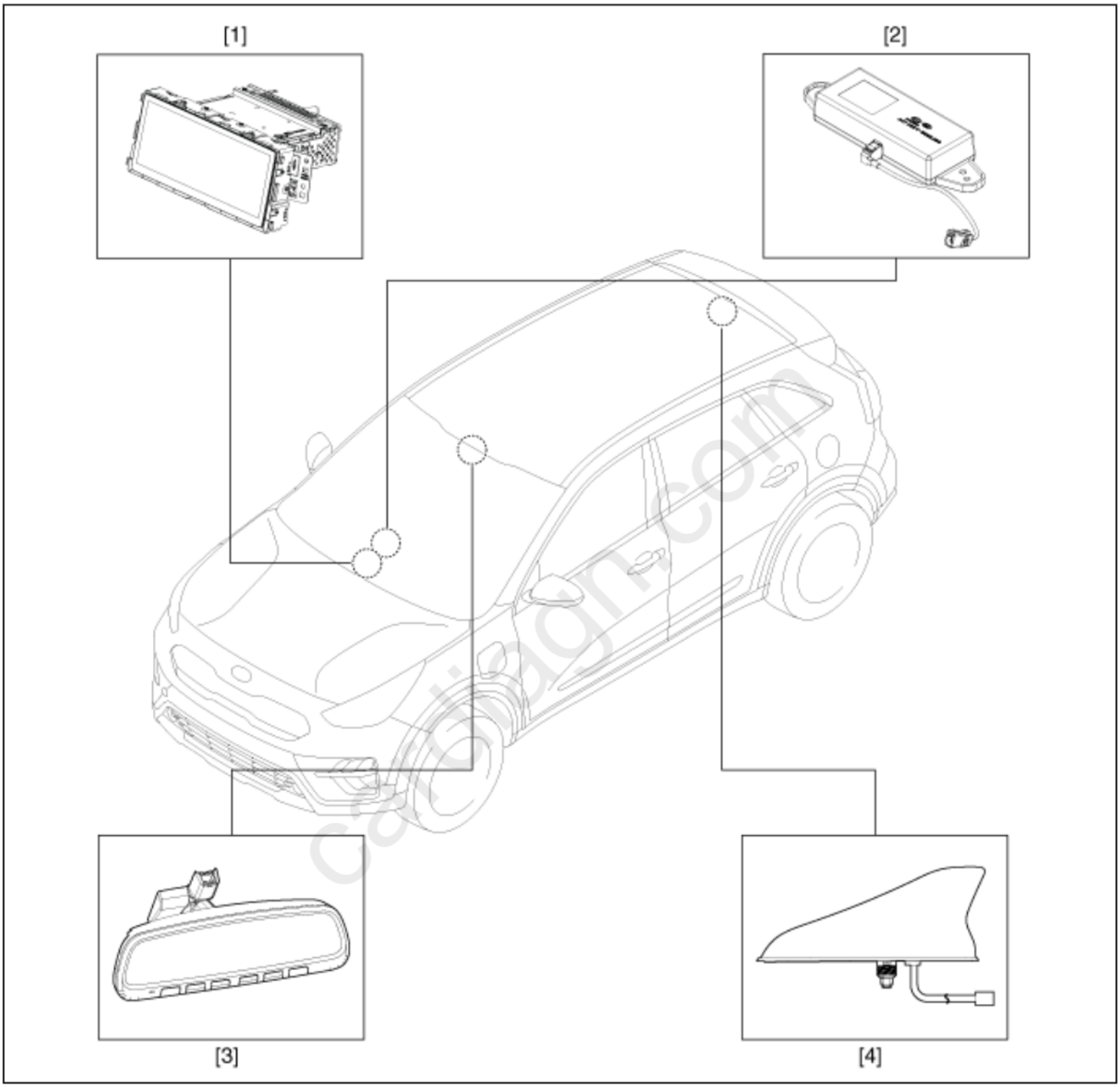

1. AVN head unit
2. Crash pad LTE antenna (Wi-Fi, LTE 2)
3. UVO Keypad
4. Roof LTE antenna (AM/FM + DMB + GPS + LTE 1)

Please rate this document after reviewing at the bottom of this page.

Description

Vehicle information systems (UVO) based on state-of-the-art IT systems, safety and security

The term "Telematics" is a combination of telecommunication and informatics. The Telematics system uses an assortment of communication devices mounted on the vehicle to analyze various vehicle and driving conditions and keep driving safe and convenient.

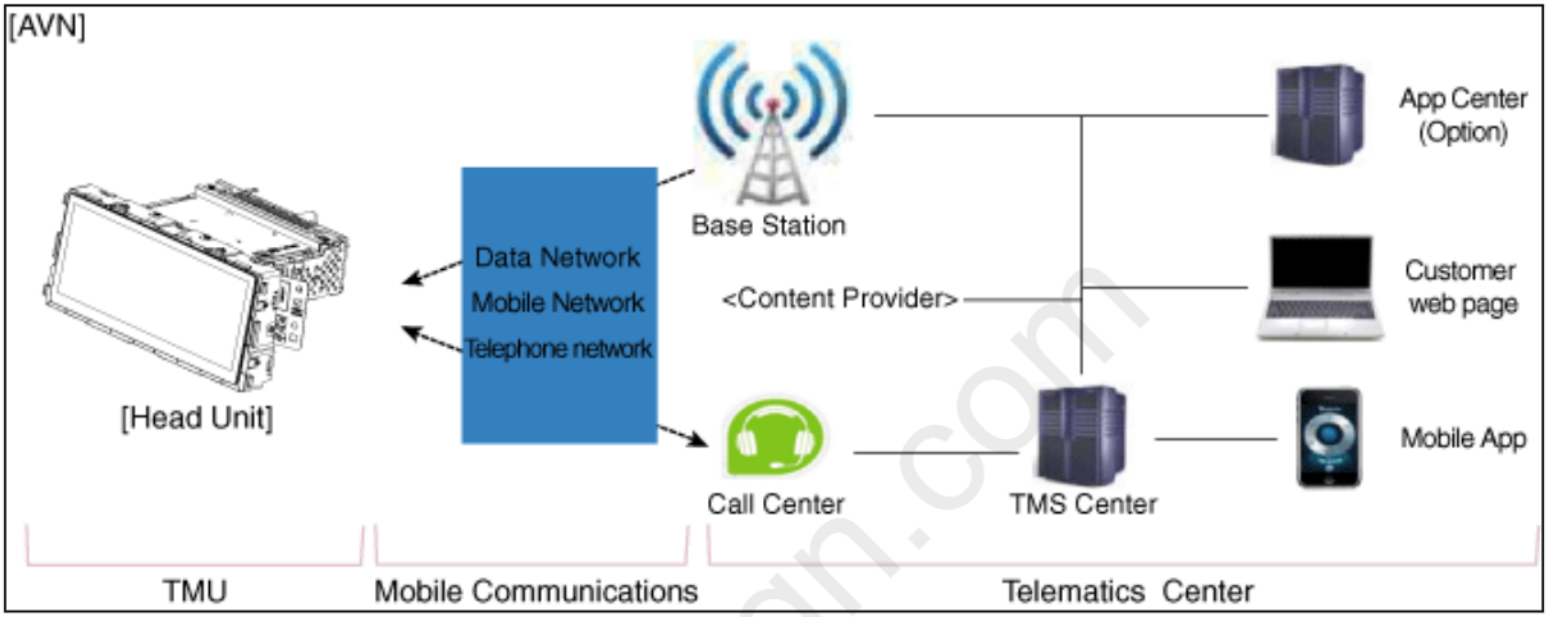

Service List for UVO

1. Safety and Security

Service Name	Service Trigger
- Auto Crash Notification	When an accident occurred and airbag deployed, ACN notification will be triggered automatically.
- SOS – Emergency Assistance	It will be triggered by manually pressing the SOS button on the inside mirror. It will connect you to emergency assistance helper.
- Alarm/Panic Notification	when the vehicle alarm system is activated, it will be automatically triggered and inform to owner. If the customer push the panic button of key FOB near the vehicle, it will be triggered and notify that driver or vehicle occupant may be in danger
- Enhanced roadside	Push the Interactive Voice Recognition (IVR) button on the inside mirror and ask to operator about the help.
- Remote Door Control – Lock	Customer can ask Remote Door Lock service by using the Smart Phone application or on the web (CWP).
- Remote Door Control – Unlock	Customer can ask Remote Door Unlock service by using the Smart Phone application or on the web (CWP).
- Remote Horn and Lights	Customer can ask Horn & Light or Light Only services by using the Smart Phone application or on the web (CWP).

cardiagn.com

- Stolen Vehicle Recovery	This service can be triggered on request by police only
- Vehicle Immobilization/Slowdown	This service can be triggered on request by police only
- Vehicle Remote Start (w/ Climate and Windshield Defrost Control)	The customer can ask remote start service by using the Smart Phone application or on the web (CWP). (Automatic transmission only) The customer can also set the temperature and control windshield defrost.
- Find My Car	The customer can check vehicle parking location by using the Smart Phone application.

2. Voice Recognition Module (VRM)

Service Name	Service Trigger
- Maintenance Alert Notification	Refer the telematics web service manual for detail information about setup mile triggered diagnostic service
- Automated DTC notification	If the vehicle found any problem on the vehicle itself, this information will be sent for server automatically.
- On-demand Diagnostics	The customer can check the status of vehicle. Customer can also check the diagnostics result on the Smart Phone application/SMS/Email/web (CWP) or asking to operator by IVR call.
- Scheduled Diagnostics	There are two kinds of scheduled diagnostic options. Please see telematics web service manual for more information.
- Driving Information	The customer can check driving history information(e.g. mileage, driving time, etc.)

3. Geographic Information System (GIS)

Service Name	Service Trigger
- Geo-Fence	The customer can setup valid boundary of vehicle driving. It can be used for Varlet geo-fence or normal geo-fence. Both can be setup by web or by asking operator using IVR call.
- Send2Car	POI download can be requested via Google Maps, CWP and smartphone application.
- Google Local Search	The customer can search destination via using Google Local Search.
- Google Voice Local Search	The customer can search destination by voice via using Google Voice Local Search.

cardiagn.com

4. Operator Service & ETC

Service Name	Service Trigger
- IVR - Service Link	The Customer can schedule service appointment at preferred or nearest Kia dealer. Please ask operator on the IVR call.
- IVR - Roadside Assistance	The Customer can request roadside assistance service. Please ask operator on the IVR call.
- IVR - UVO Account Assistance	The Customer can ask UVO account information. Please ask operator on the IVR call.

cardiagn.com

Please rate this document after reviewing at the bottom of this page.

Removal

AVN Head Unit

1. Remove the AVN head unit.
   (Refer to Audio/AVN System - "Audio/AVN Head Unit")

Roof LTE Antenna

1. Remove the roof LTE antenna.
   (Refer to Audio/AVN System - "Antenna")

Crash Pad LTE Antenna

1. Remove the AVN head unit.
   (Refer to Audio/AVN System - "Audio/AVN Head Unit")
2. Remove the crash pad LTE antenna (A) after loosening the mounting screws.

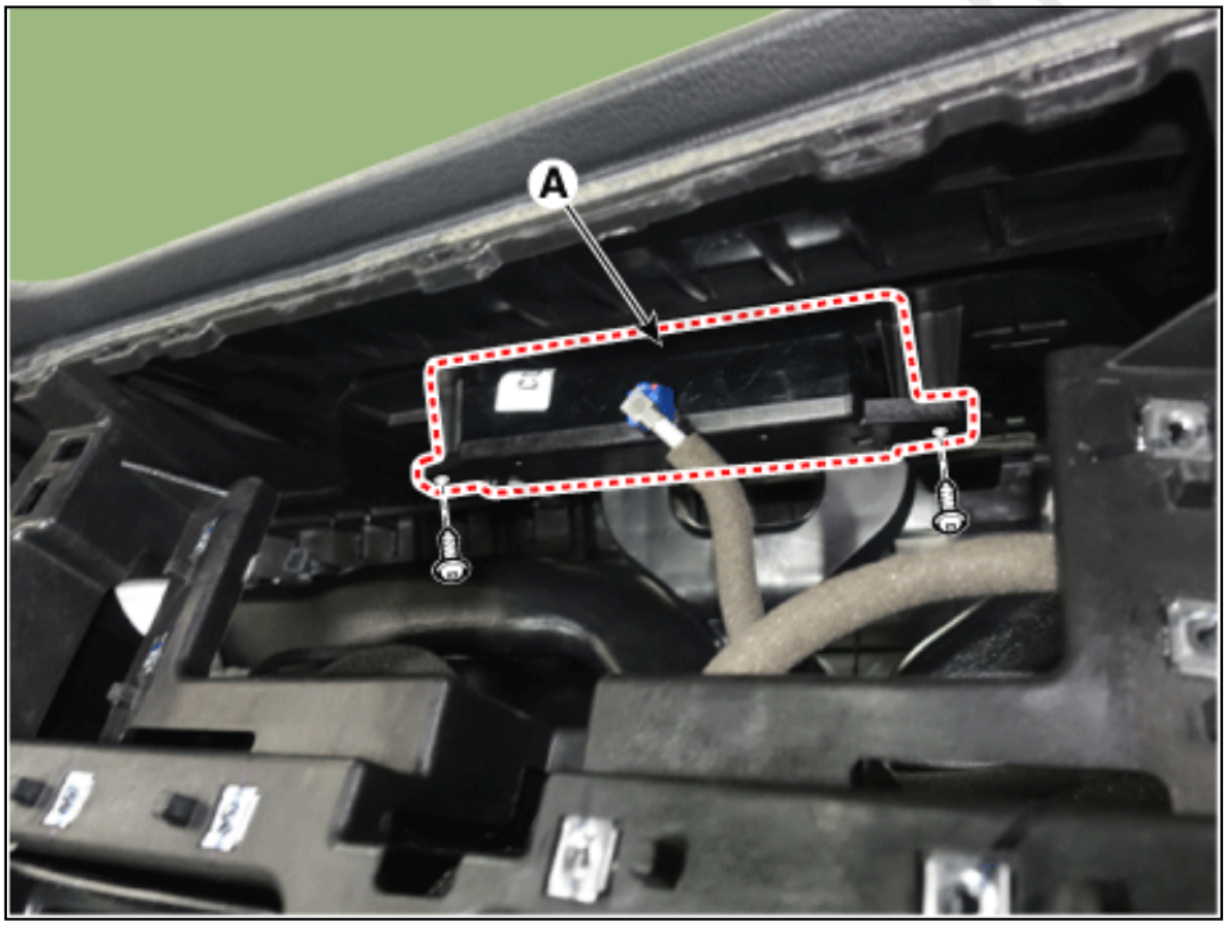

3. Disconnect the connector (A) from the crash pad LTE antenna.



UVO Keypad

1. Remove the inside rear view mirror.
   (Refe to Electro Chromic Inside Rear View Mirror - "Repair procedures")

Installation

1. Install in the reverse order of removal.

cardiag

Please rate this document after reviewing at the bottom of this page.

Inspection

Troubleshooting of the speakers

When handling the speakers :

- Do not cause shock to the speakers by dropping or throwing them.
- Be careful not to drop water and oil on the speakers.
- Use caution to handle the speaker because diaphragm made of paper is easily torn by impact or external force.
- Audio system tuning may cause damage to the speakers. The modified speakers are not covered by the manufacturer's warranty.

1. Basic inspection
   Loosen the screws to rule out the interference from the body trims and surrounding parts and then remove the speaker.
   After removing the speaker, check the sound quality of the speaker with the connector plugged in.
2. Inspection for each cause
   (1) Abnormal vibration
   - –Make sure the mounting screws are properly tightened before replacing the speaker.
   - –Reinstall the speaker and check that the symptom is resolved.
   - –If the symptom does not disappear, replace the speaker with a new one.

   (2) Noise
   - –Check that the speaker connector is properly connected and reinstall the connector if necessary.
   - –If noises occur in the radio mode, turn to the CD player mode.
   - –If noises occur in both modes, replace the speaker with a new one.

If noises occur only in the radio mode, the poor radio reception is the cause so do not replace the speaker.

cardiagn.com

(3) Poor working

–Check the plus (+) and negative (-) speaker terminals using an ohmmeter.

–If resistance is measured at the specified value shown below, the speaker operation is normal.

–If the measured resistance is different from the specified value, replace the speaker.

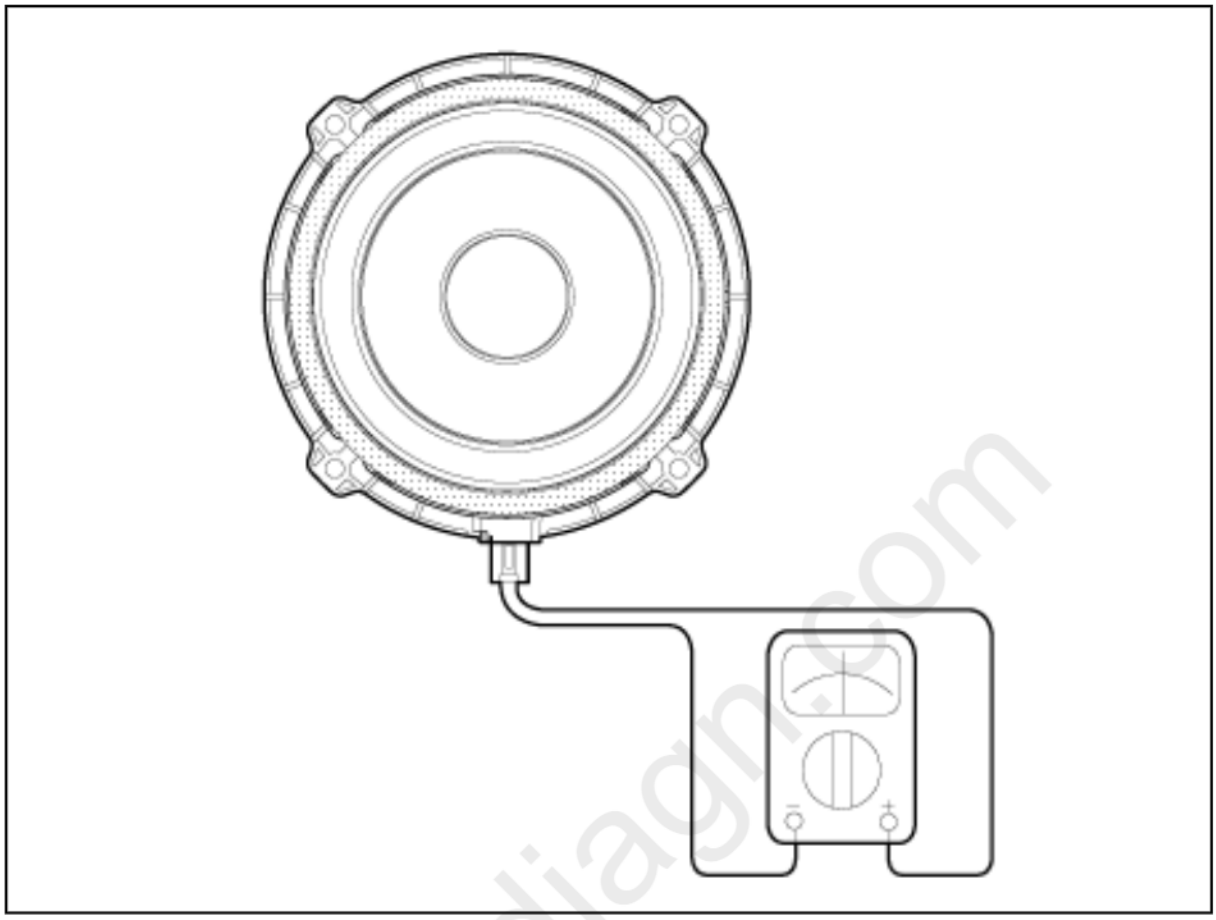

Removal

Front Door Speaker

1. Remove the front door trim.
   (Refer to Body - "Front Door Trim")
2. Remove the front door speaker (B) after disconnecting the connector (A) and loosening the screws.

cardiagn.com

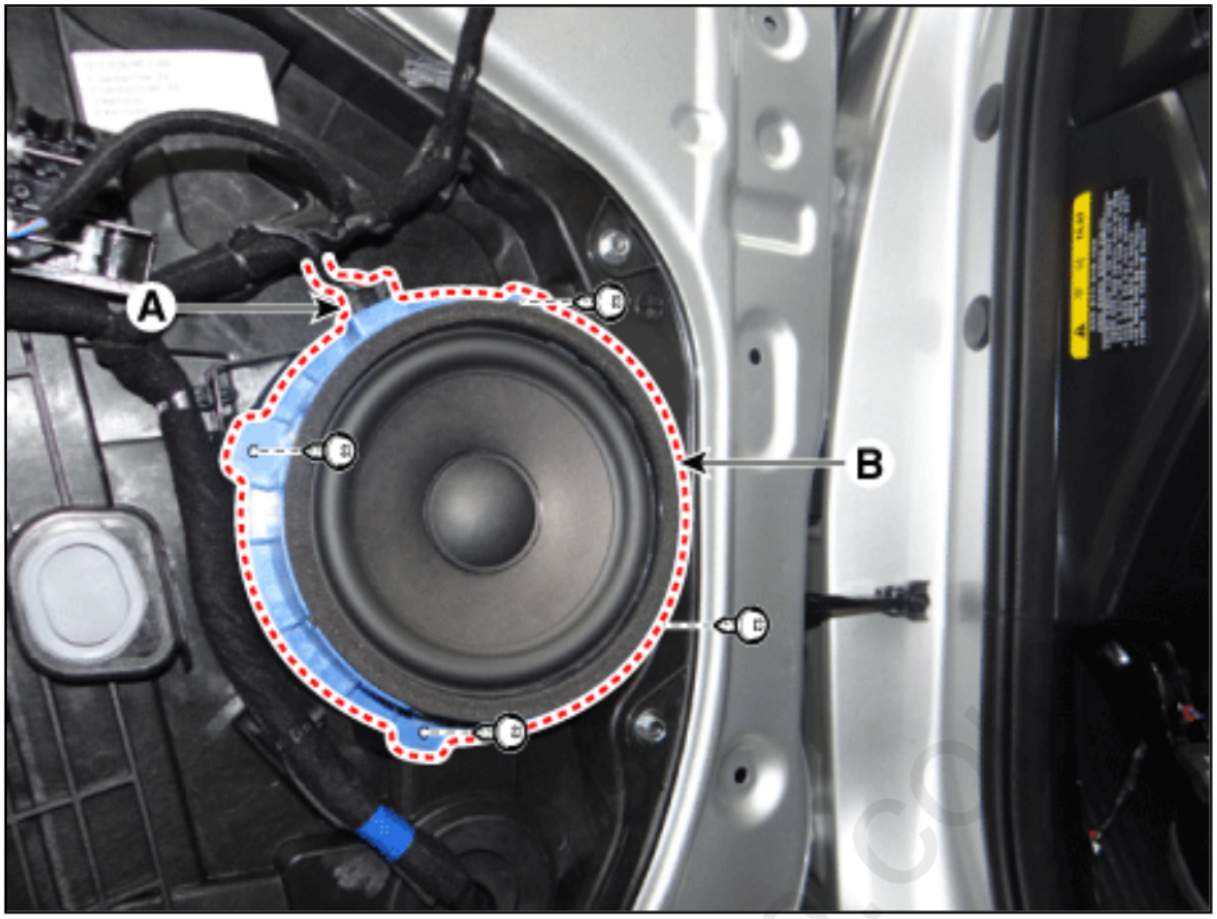

Tweeter Speaker

1. Remove the front pillar trim.
   (Refer to Body - "Front Pillar Trim")
2. Using a scraper or remover, remove the tweeter speaker grill (A).

Take care not to scratch the crash pad and related parts.

cardiagn.com

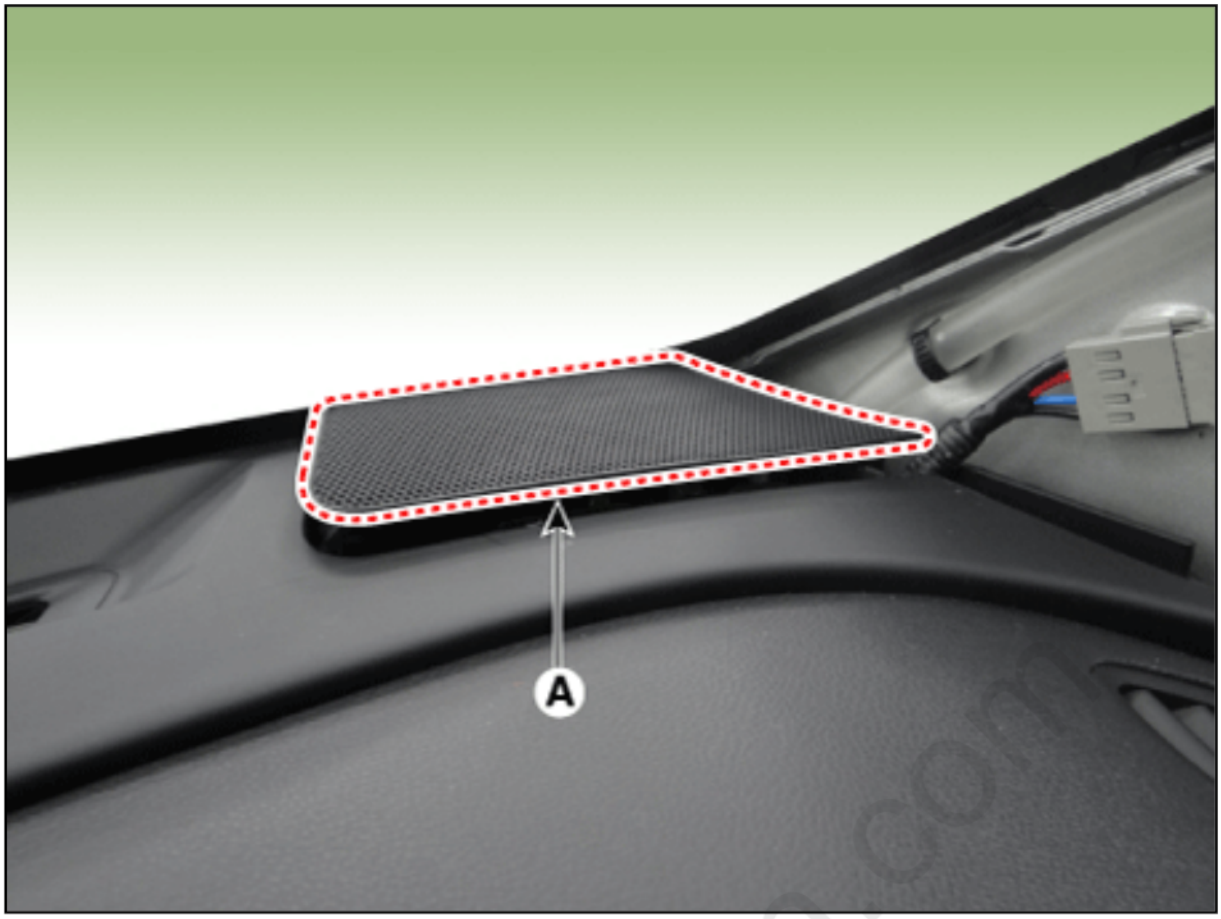

3. Remove the tweeter speaker (A) after loosening the mounting screws.



4. Disconnect the tweeter speaker connector (A).



Rear Door Speaker

1. Remove the rear door trim.
   (Refer to Body - "Rear Door Trim")
2. Remove the rear door speaker (B) after disconnecting the connector (A) and loosening the screws.

cardiag

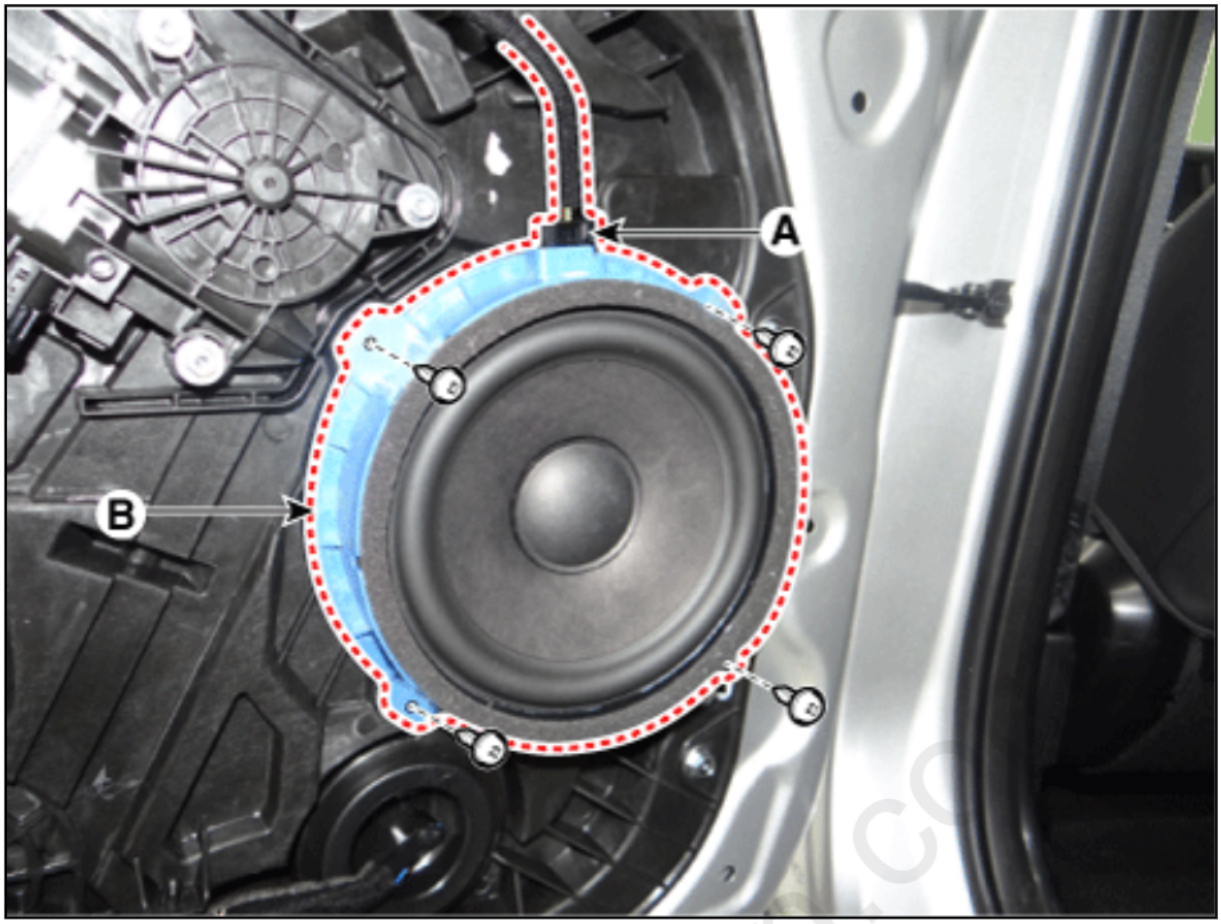

Crash Pad Center Speaker

1. Using a scraper or remover, remove the crash pad center speaker grill (A).

Take care not to scratch the crash pad and related parts.

cardiagn.com

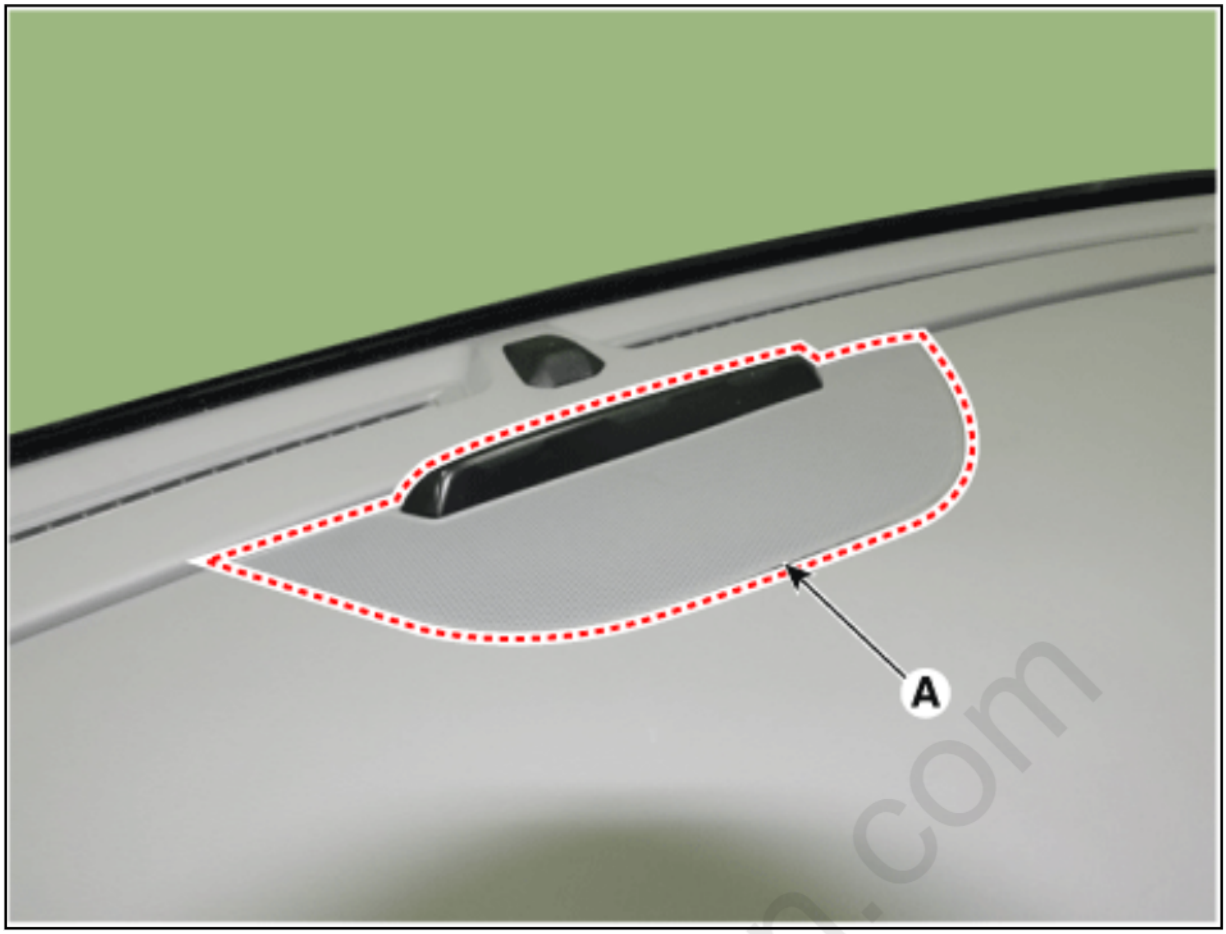

2. Disconnect the center speaker grill connector (A).



3. Remove the crash pad center speaker (A) after loosening the mounting screws.



4. Disconnect the crash pad center speaker connector (A).

cardiagn.com

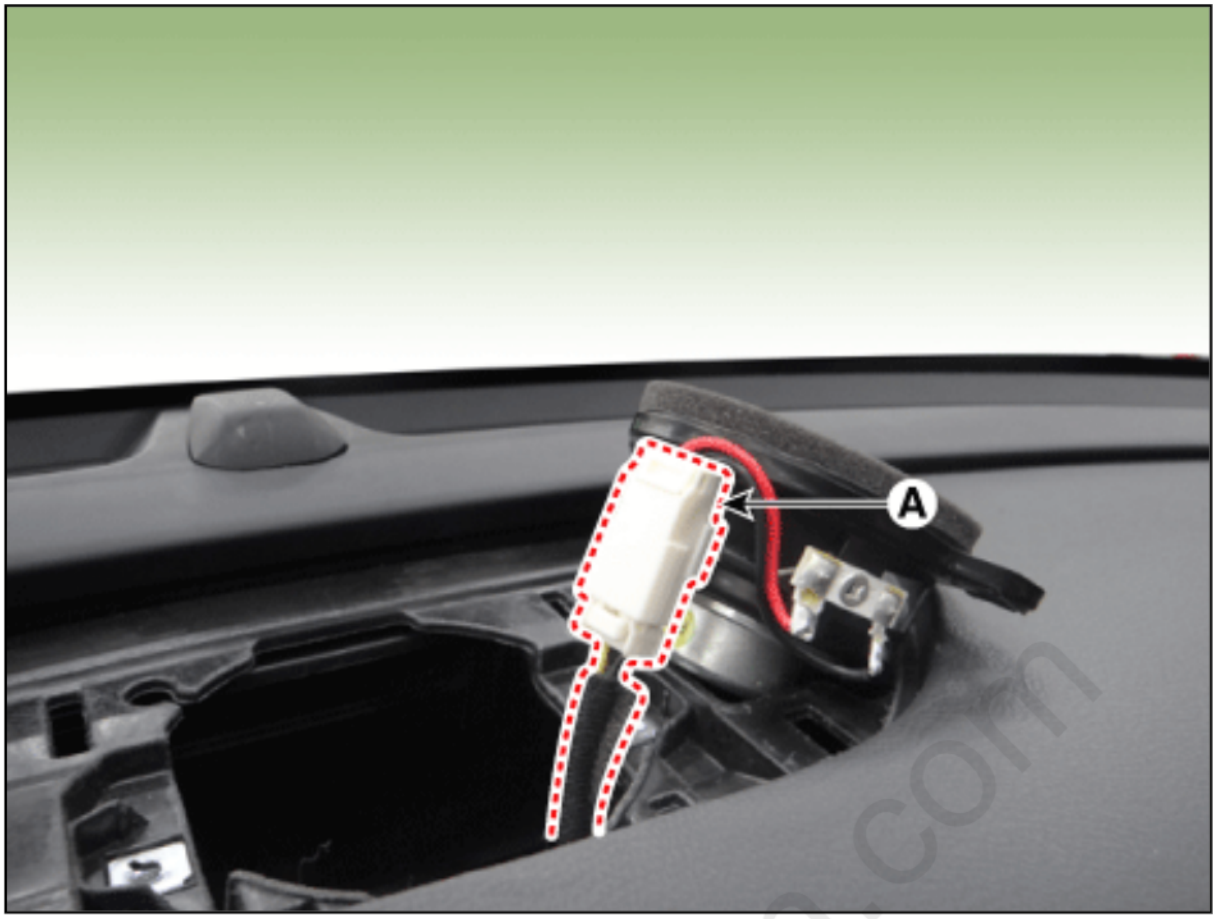

Sub Woofer Speaker

1. Remove the left luggage side trim.
   (Refer to Body - "Luggage Side Trim")
2. Disconnect the sub woofer speaker connector (A).

cardiagn.com

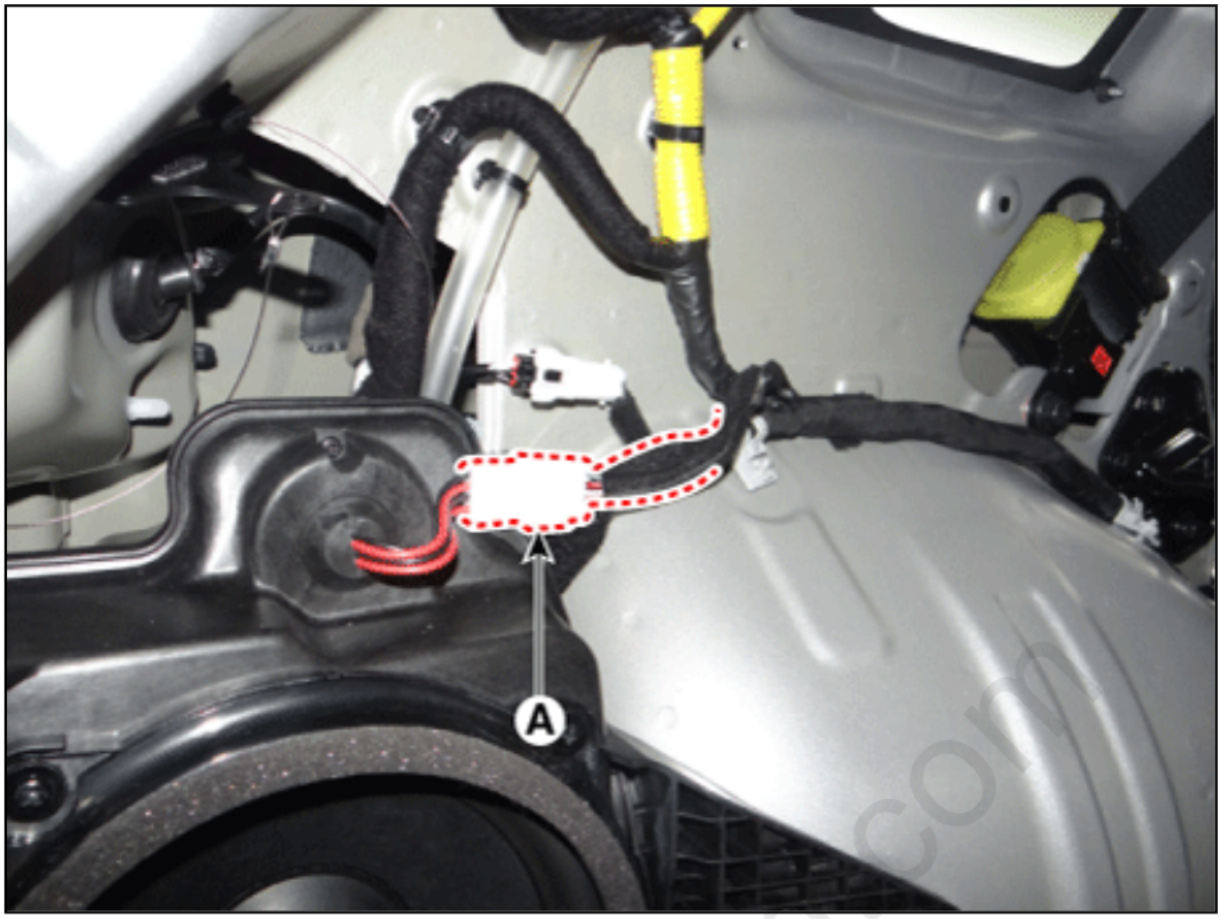

3. Remove the sub woofer speaker (A) after loosening the bolt and nuts.

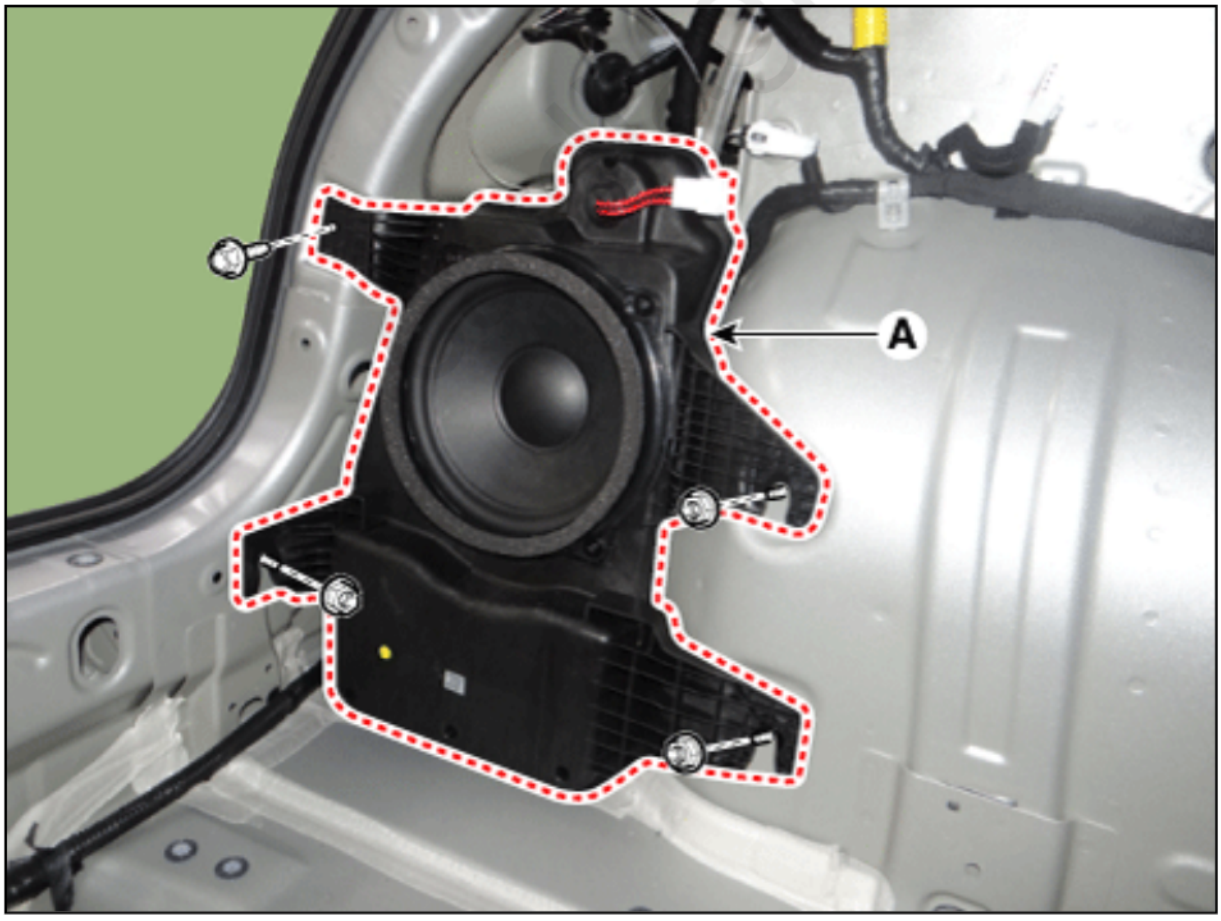

Installation

1. Install in the reverse order of removal.

cardiagn.com

Please rate this document after reviewing at the bottom of this page.

Schematic
Diagrams

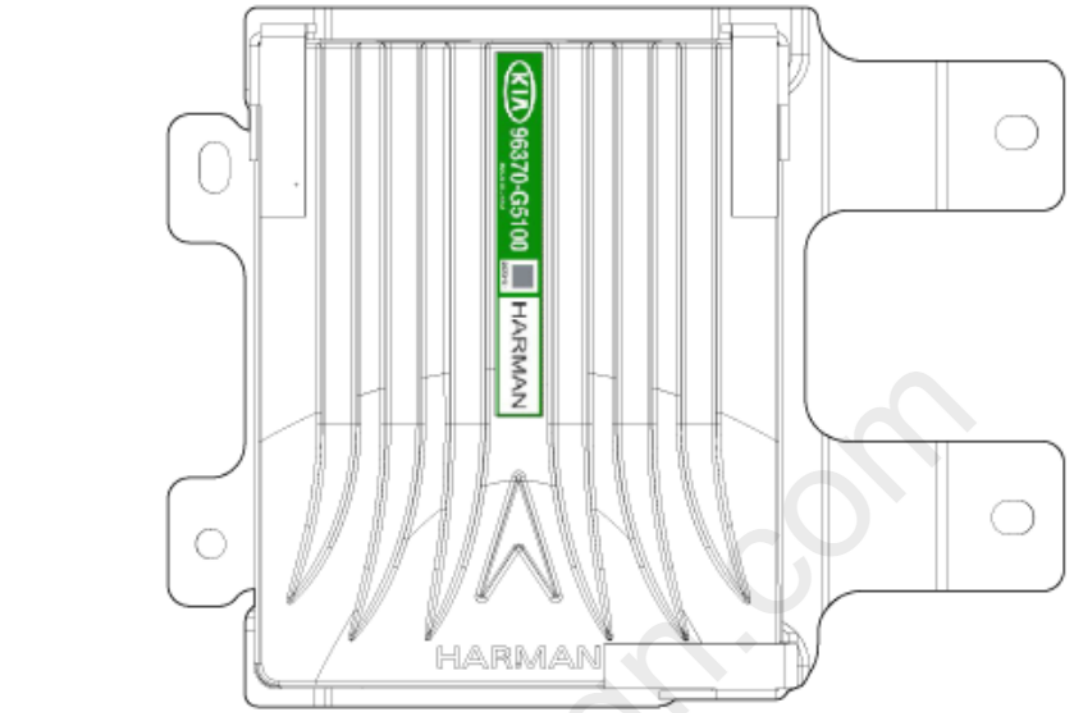

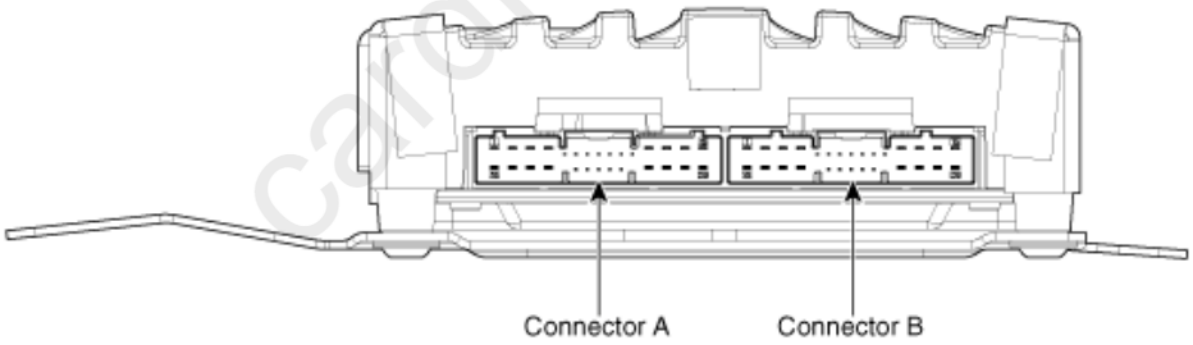

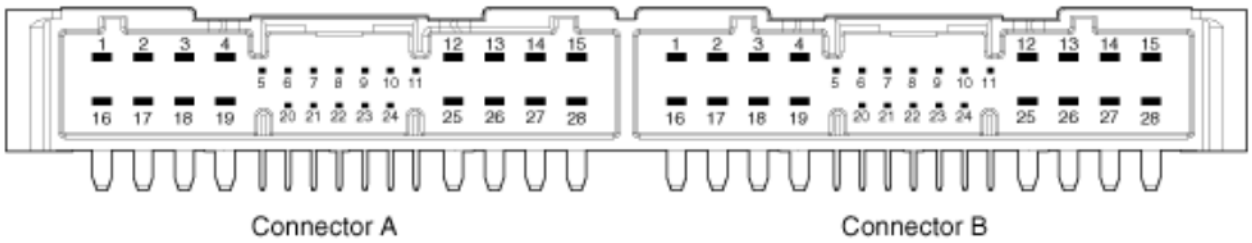

cardiagn.com

Connector Pin Information

No.	Connector A	No.	Connector B
1	Battery (+)	1	Sub woofer speaker 2 (+)
2	Battery (+)	2	Sub woofer speaker 1 (+)
3	Battery (+)	3	Front right tweeter speaker (+)
4	Battery (+)	4	Front left tweeter speaker (+)
5	-	5	-
6	Multimedia-CAN (High)	6	-
7	Multimedia-CAN (Low)	7	-
8	ACC	8	-
9	Navigation voice (+)	9	-
10	-	10	-
11	-	11	-
12	-	12	Rear right speaker (+)
13	-	13	Rear left speaker (+)
14	-	14	Crash pad center speaker (+)
15	-	15	-
16	Ground	16	Sub woofer speaker 2 (-)
17	Ground	17	Sub woofer speaker 1 (-)
18	Ground	18	Front right tweeter speaker (-)
19	Ground	19	Front left tweeter speaker (-)
20	SPDIF (High)	20	-
21	SPDIF (Low)	21	-
22	SPDIF (Ground)	22	-
23	Navigation voice (-)	23	-
24	-	24	-
25	-	25	Rear right speaker (-)
26	-	26	Rear left speaker (-)
27	-	27	Crash pad center speaker (-)
28	-	28	-

cardiagn.com

Please rate this document after reviewing at the bottom of this page.

Removal

1. Remove the main crash pad.
   (Refer to Body - "Main Crash Pad Assembly")
2. Remove the external amplifier (A) after loosening the mounting bolts and nuts.

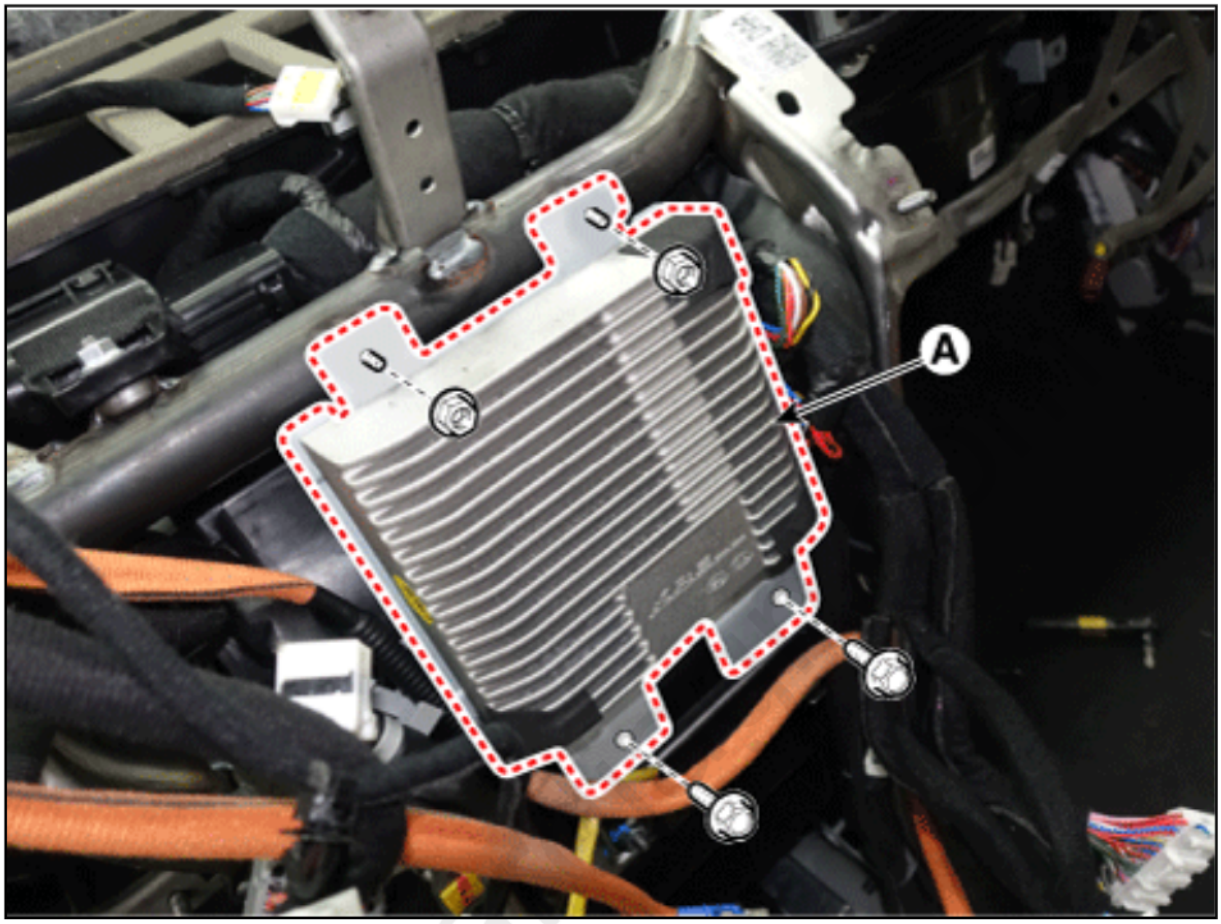

3. Disconnect the connectors (A) from the external amplifier.

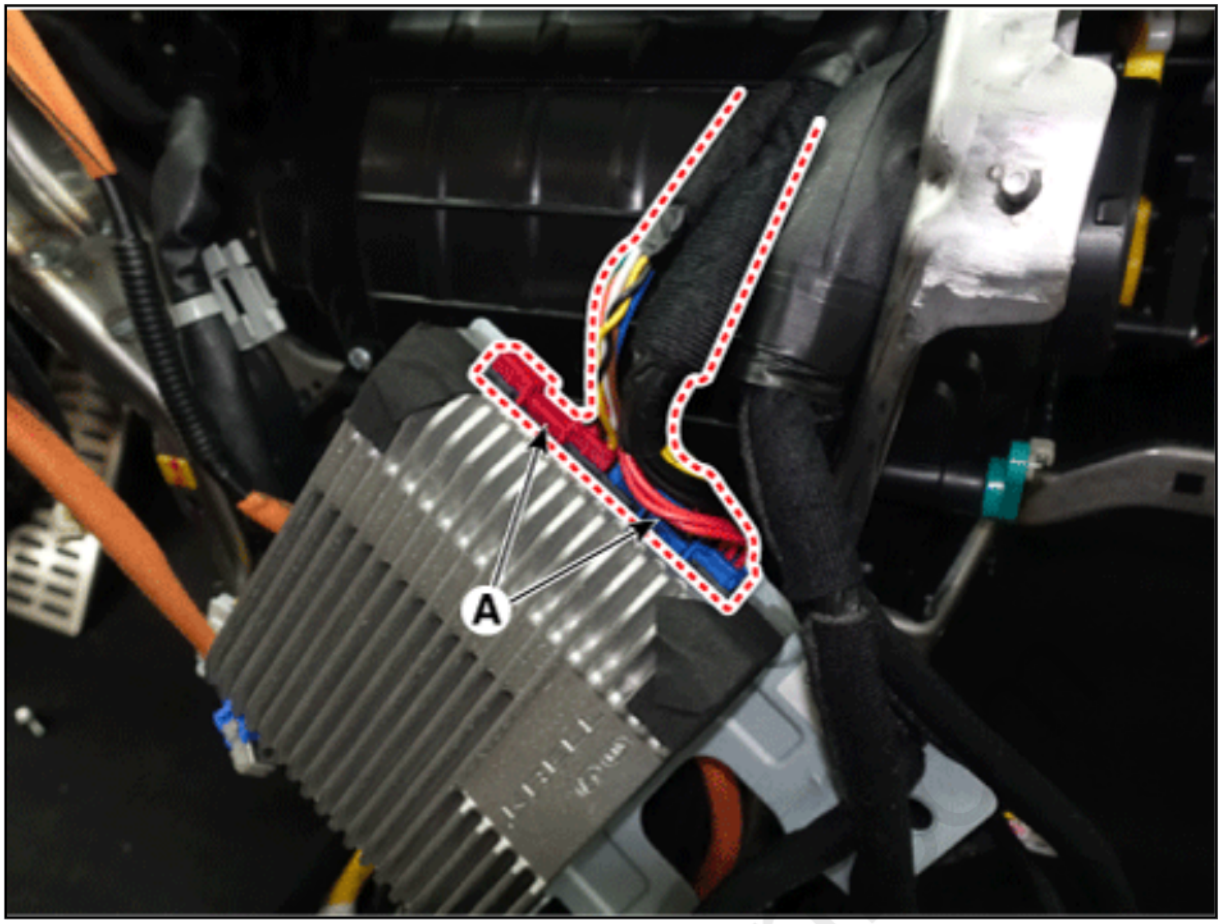

Installation

1. Install in the reverse order of removal.

cardiagn

Please rate this document after reviewing at the bottom of this page.

Components

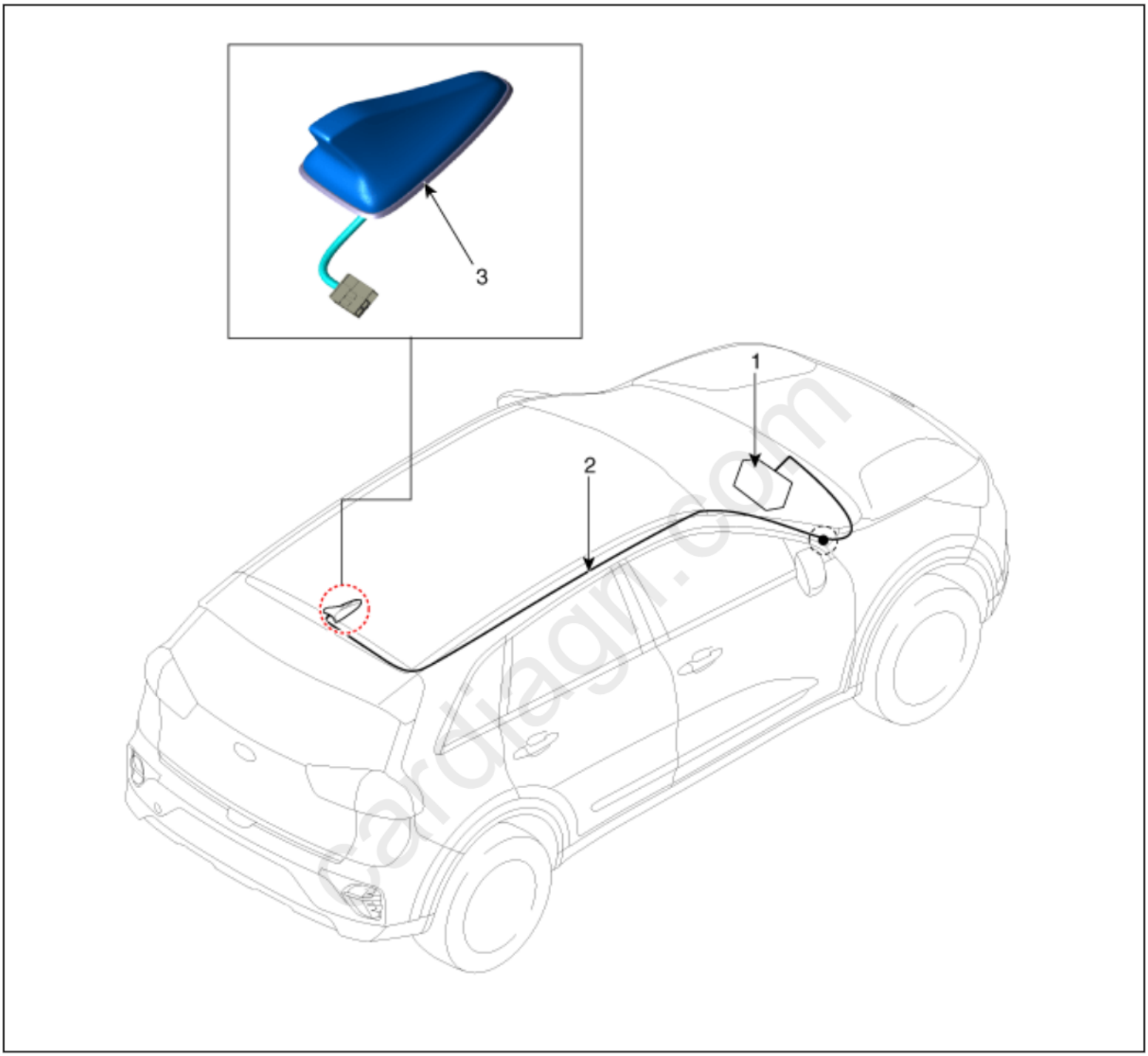

1. Audio/AVN head unit
2. Antenna feeder cable
3. Roof antenna

Please rate this document after reviewing at the bottom of this page.

Removal

Roof antenna

1. Disconnect the negative (-) battery terminal.
2. Remove the roof trim assembly.
   (Refer to Body - "Roof Trim Assembly")
3. Disconnect the roof antenna cable and connectors (A).

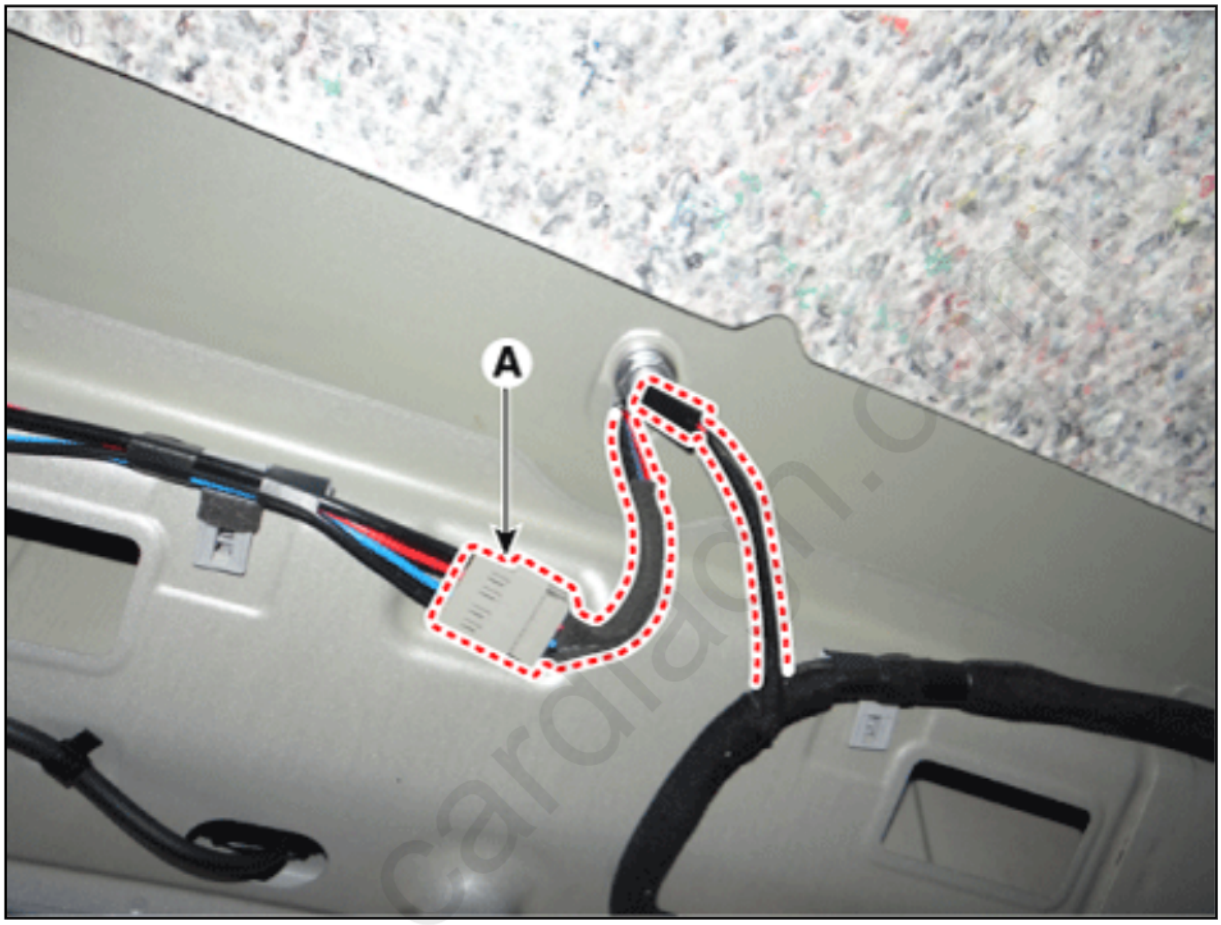

4. Remove the roof antenna (B) after loosening a nut (A).

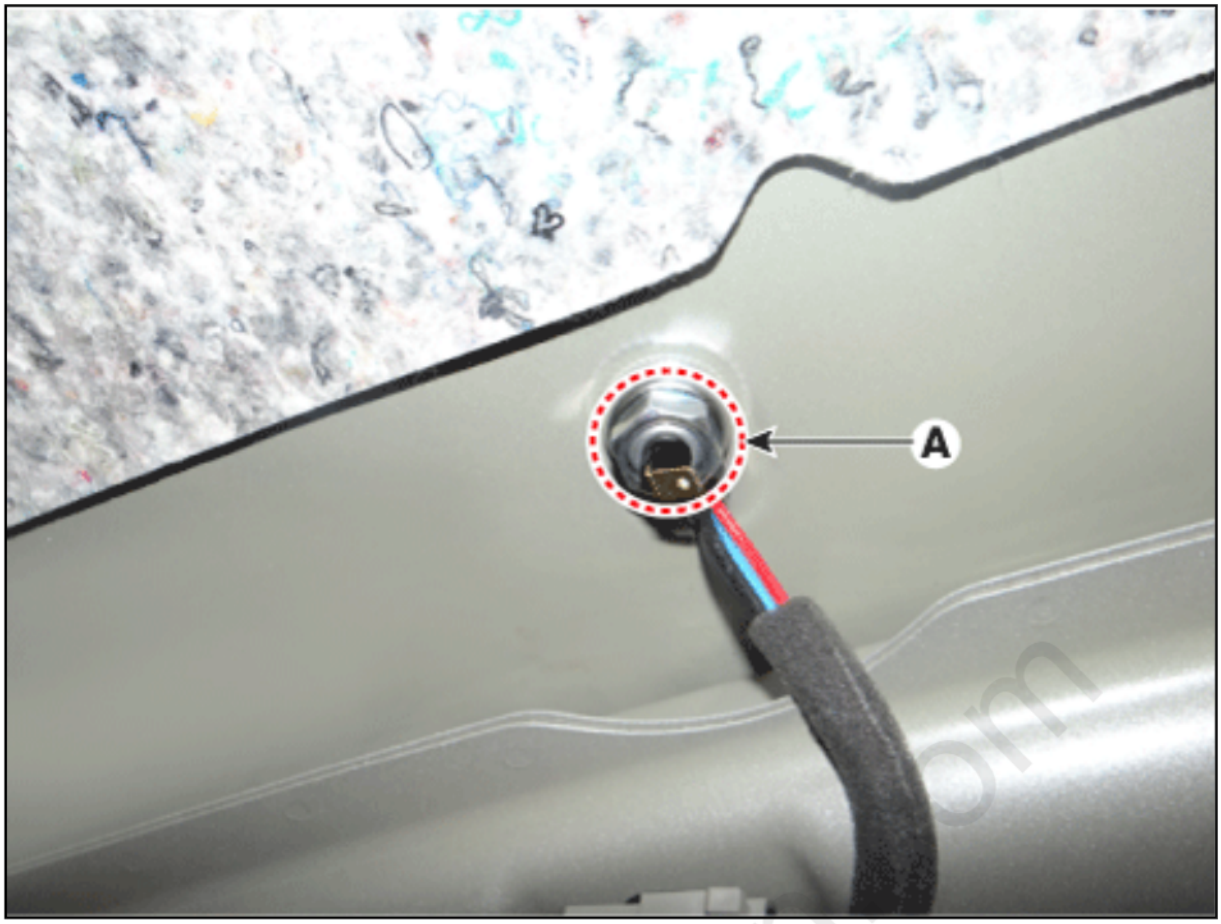

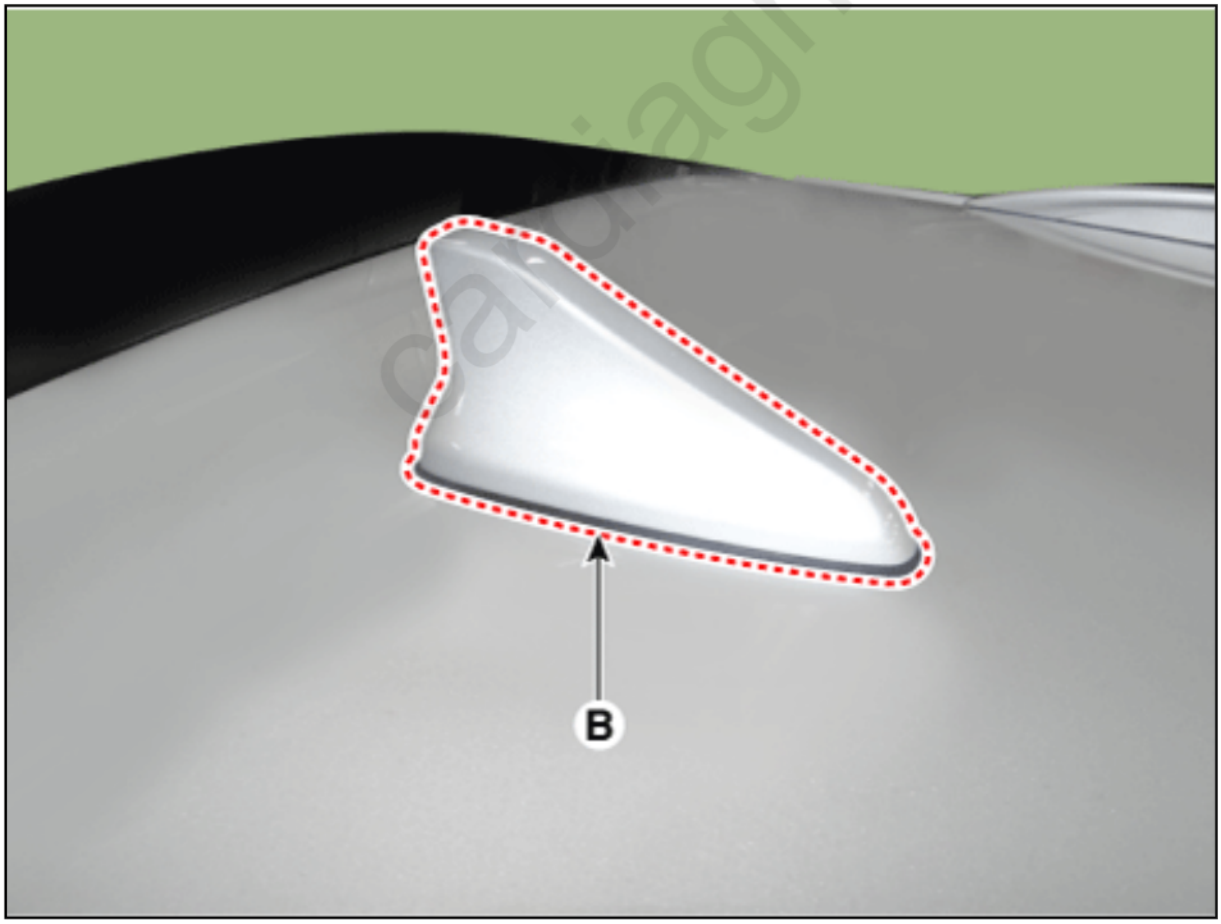

Installation

1. Install in the reverse order of removal.

cardiagn.com

Please rate this document after reviewing at the bottom of this page.

Components

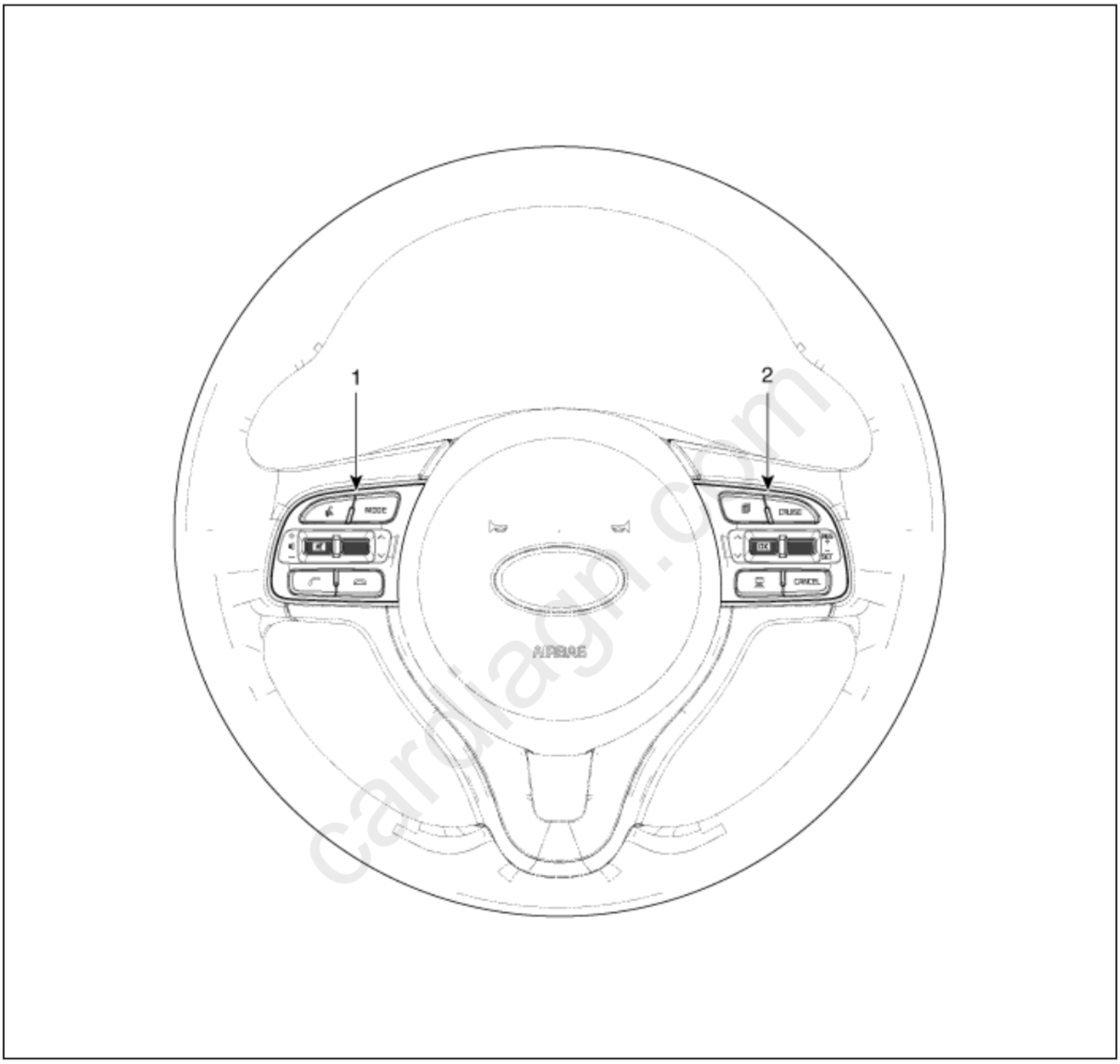

1. Left Remote Control Switch (Audio + Hands free + Voice)

2. Right Remote Control Switch (Cruise+Trip Computer)

cardiagn.com

Please rate this document after reviewing at the bottom of this page.

Circuit
Diagram

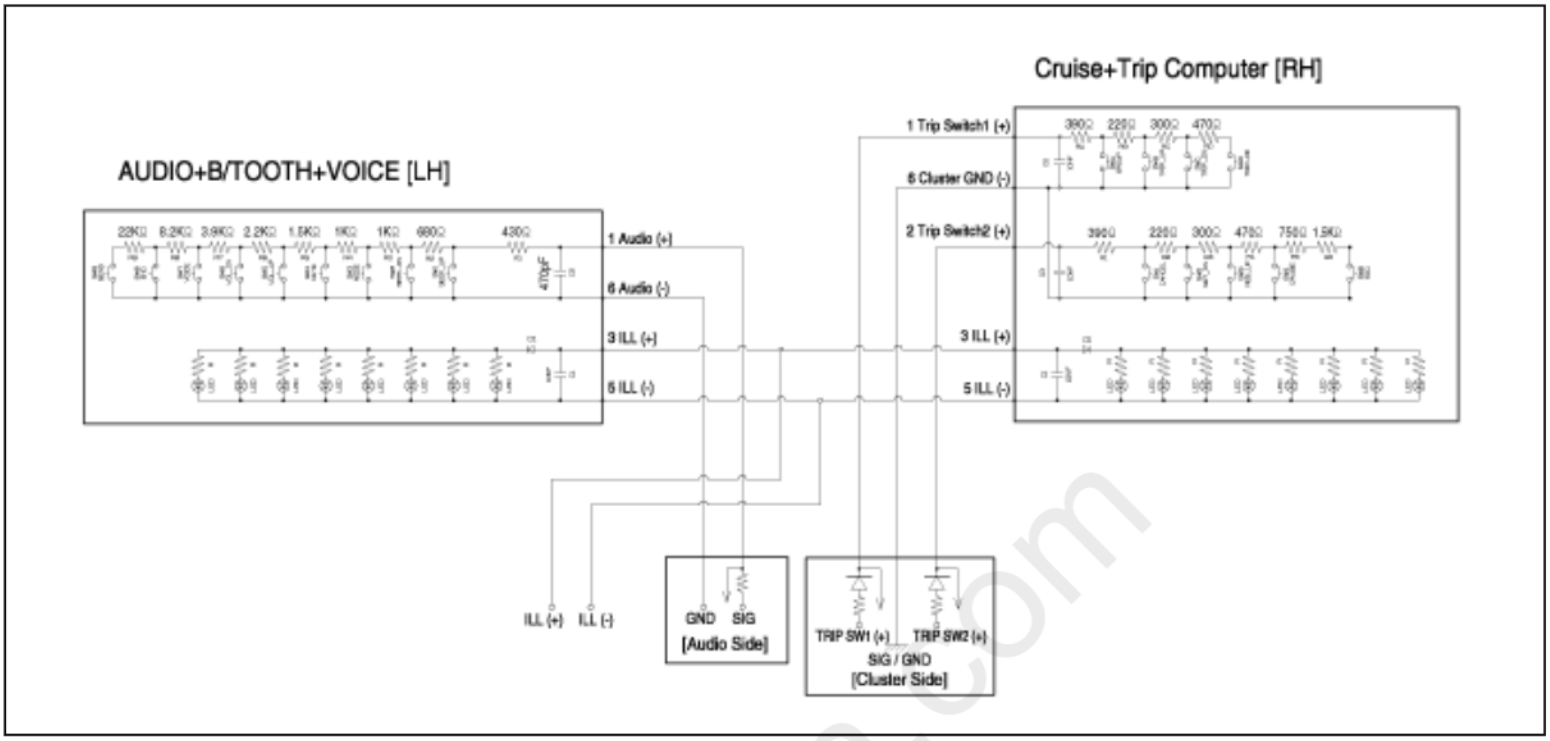

[Audio + Bluetooth]

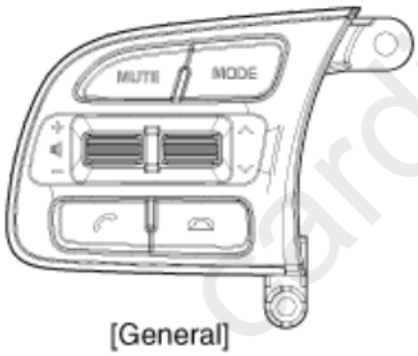

[General]

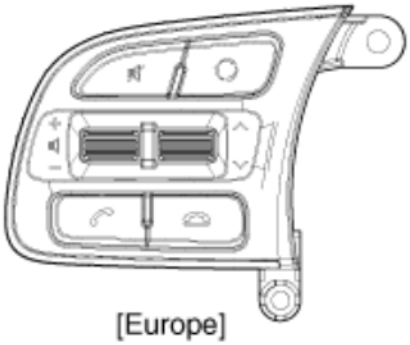

[Europe]

Connector

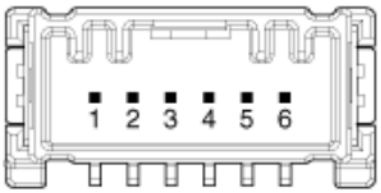

No.	Description
1	Audio (+)
2	-
3	Illumination (+)
4	-
5	Illumination (-)
6	Audio (-)

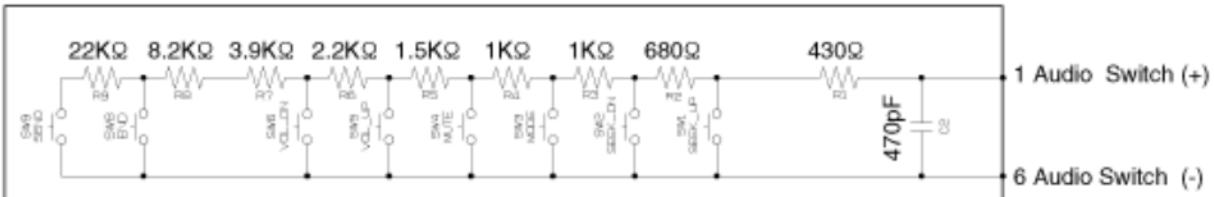

cardiagn.com

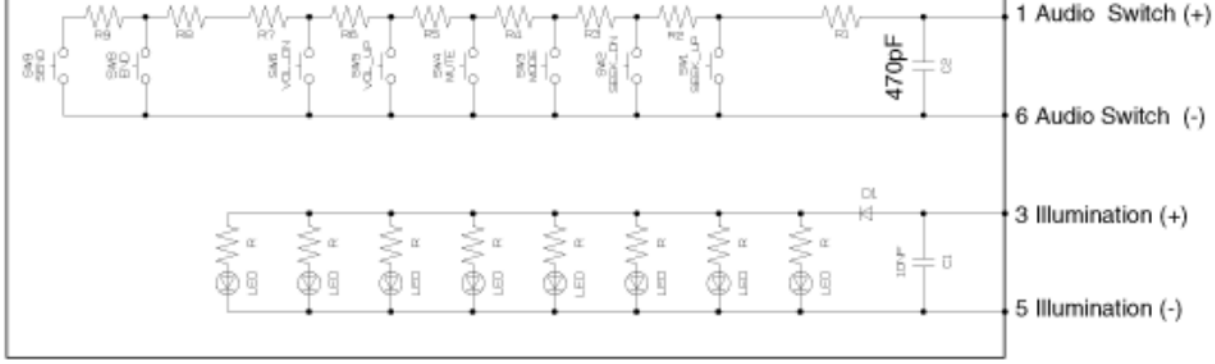

[Audio + Bluetooth + Voice]

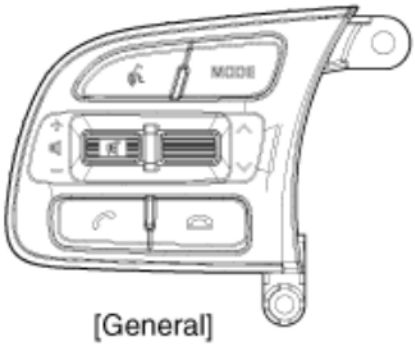

[General]

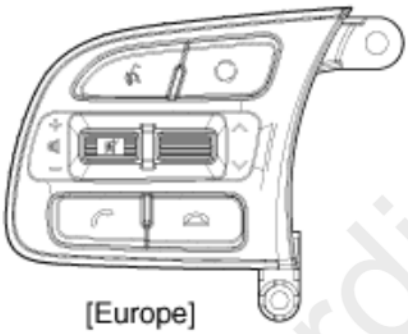

[Europe]

Connector

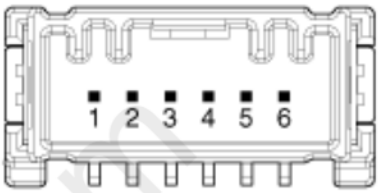

No.	Description
1	Audio (+)
2	-
3	Illumination (+)
4	-
5	Illumination (-)
6	Audio (-)

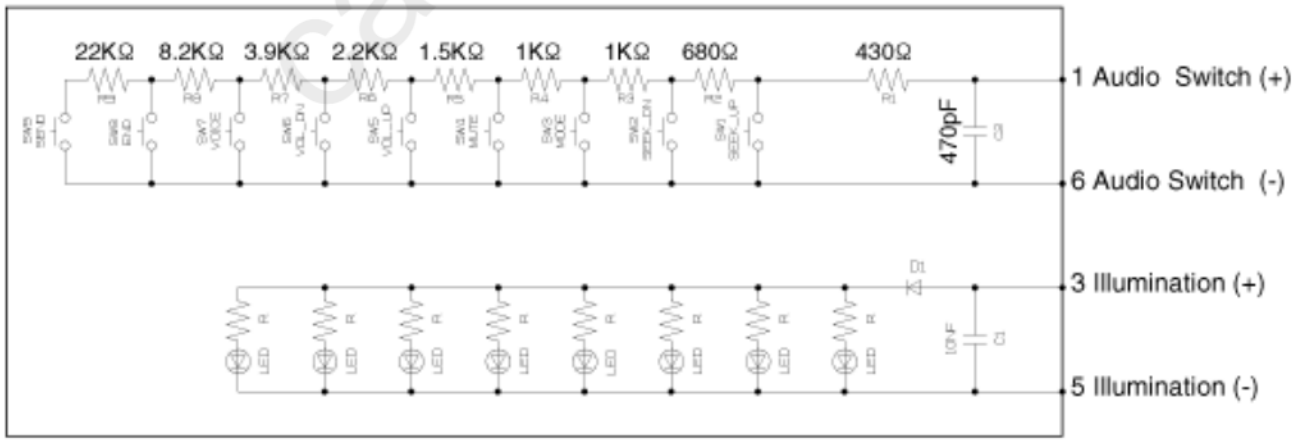

[Trip]

cardiagn.com

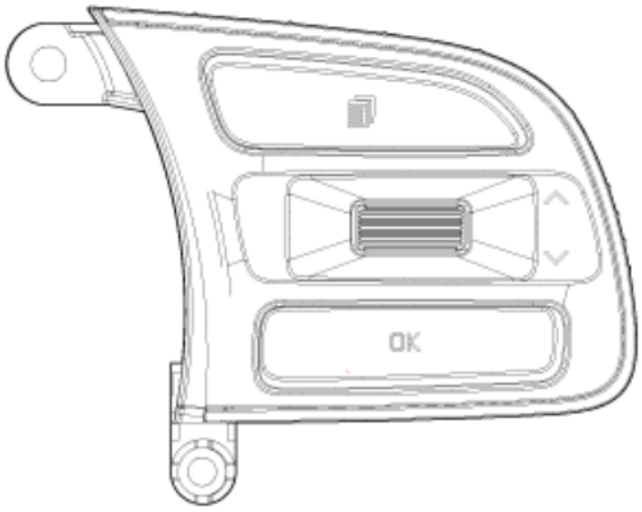

Connector	
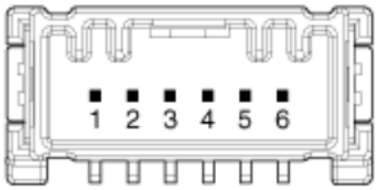	
No.	**Description**
1	Trip switch1 (+)
2	Trip switch2 (+)
3	Illumination (+)
4	-
5	Illumination (-)
6	Cluster Ground (-)

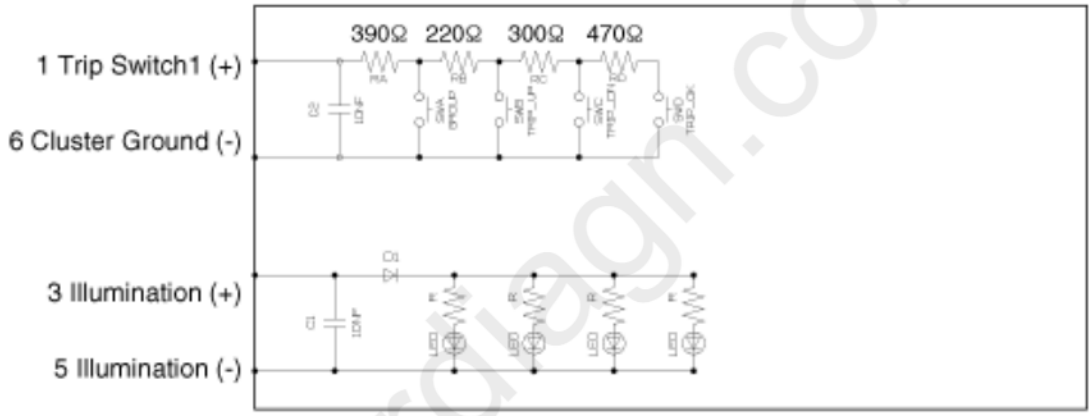

[Trip + Cruise]

cardiagn.com

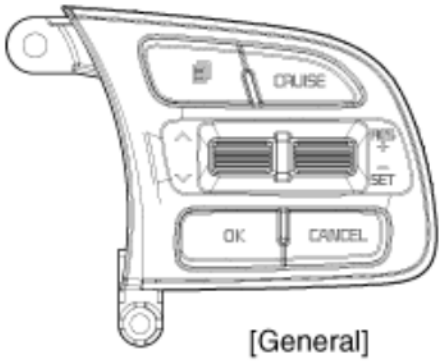

[General]

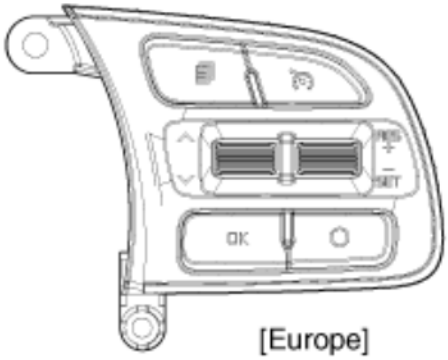

[Europe]

Connector	
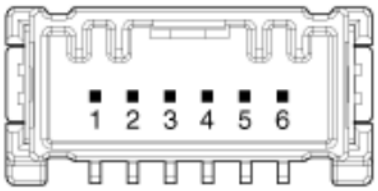	
No.	**Description**
1	Trip switch1 (+)
2	Trip switch2 (+)
3	Illumination (+)
4	-
5	Illumination (-)
6	Cluster Ground (-)

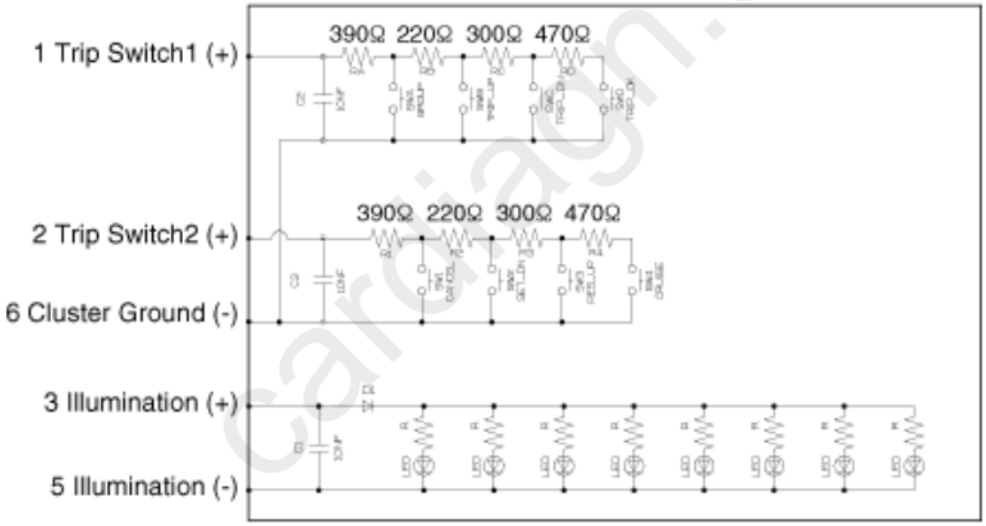

cardiagn.com

[Trip + Cruise + SCC]

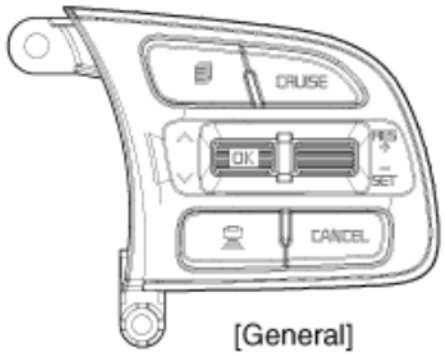

[General]

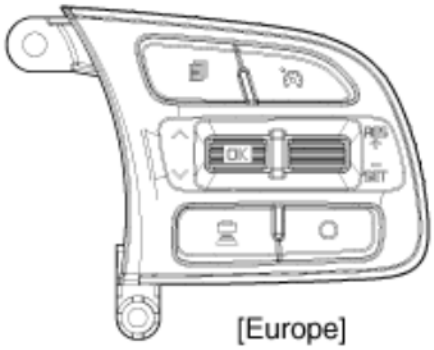

[Europe]

Connector	
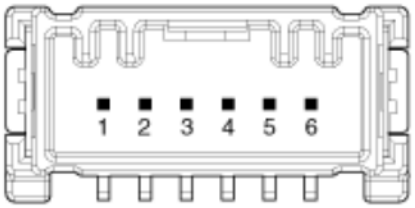	
No.	**Description**
1	Trip switch1 (+)
2	Trip switch2 (+)
3	Illumination (+)
4	-
5	Illumination (-)
6	Cluster Ground (-)

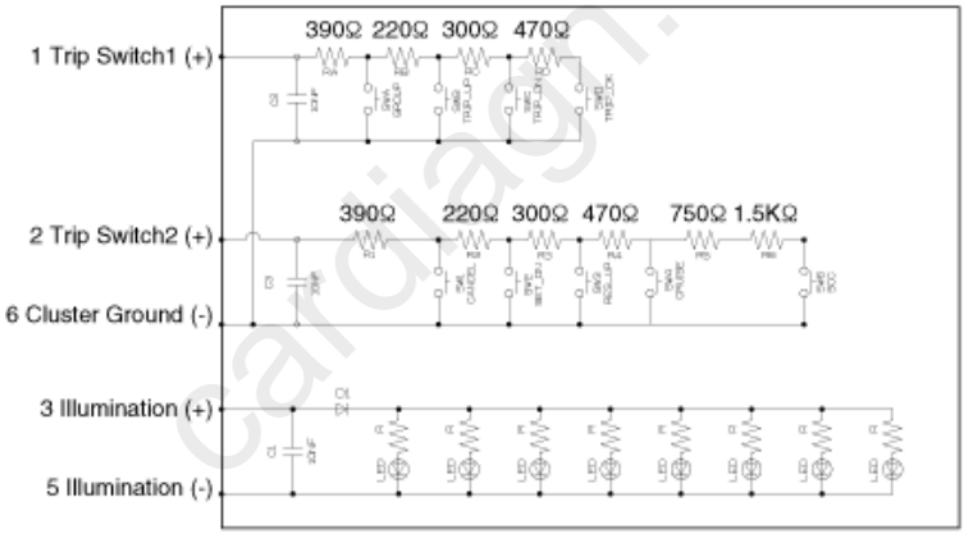

cardiagn.com

[Trip + Cruise + SLD] (Europe Only)

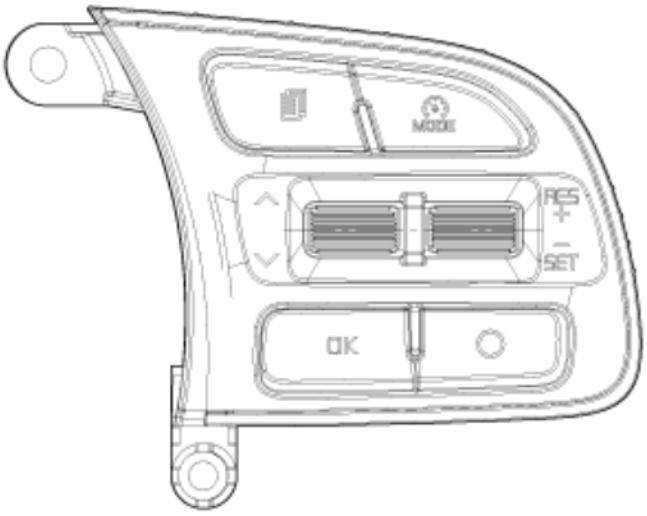

Connector	
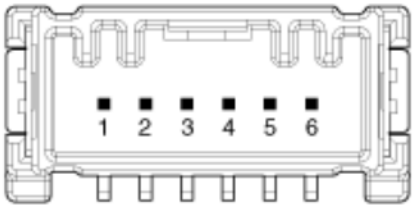	
No.	**Description**
1	Trip switch1 (+)
2	Trip switch2 (+)
3	Illumination (+)
4	-
5	Illumination (-)
6	Cluster Ground (-)

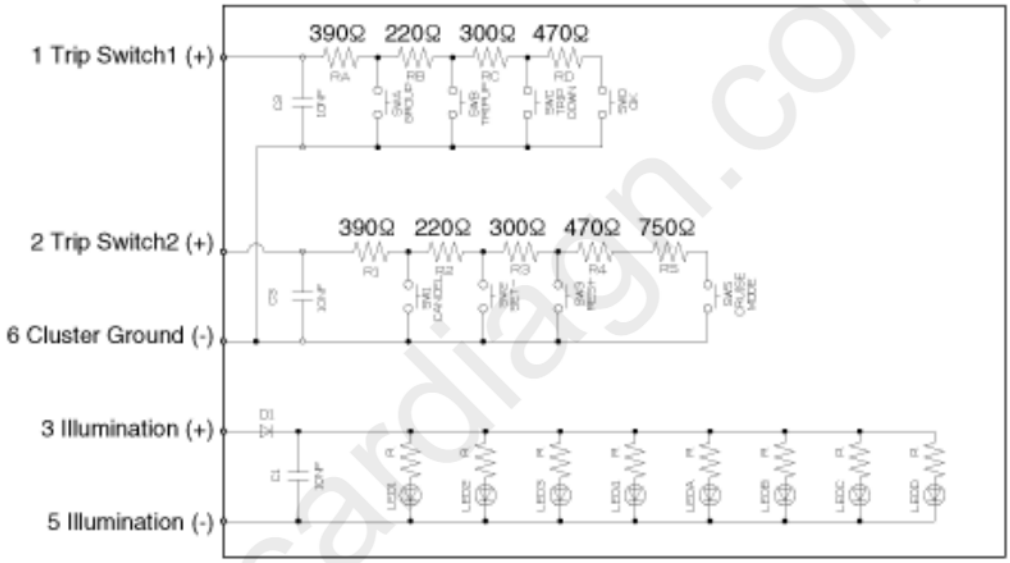

cardiagn.com

[Trip + SCC + SLD] (Europe Only)

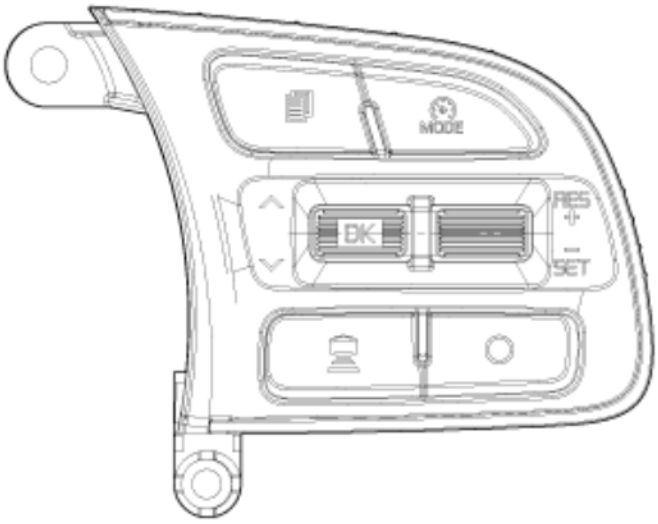

Connector	
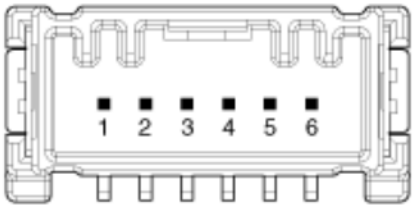	
No.	**Description**
1	Trip switch1 (+)
2	Trip switch2 (+)
3	Illumination (+)
4	-
5	Illumination (-)
6	Cluster Ground (-)

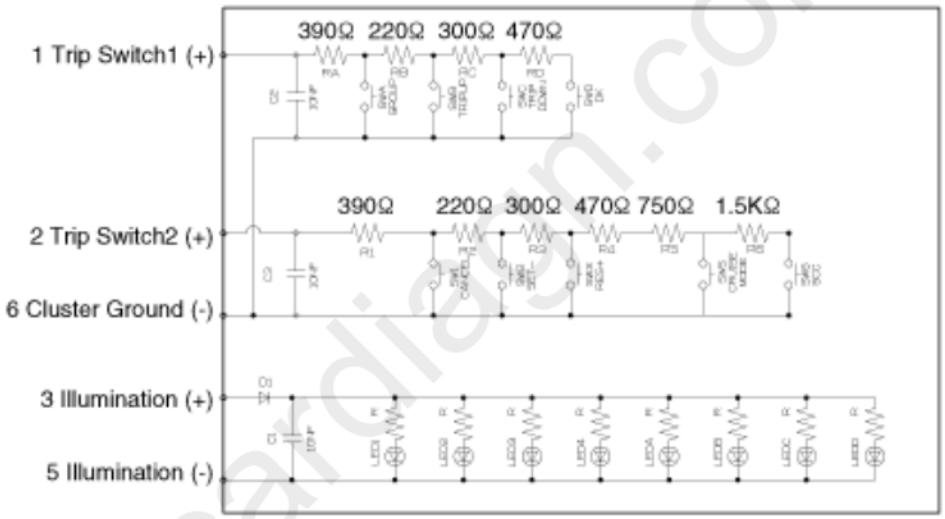

cardiagn.com

Please rate this document after reviewing at the bottom of this page.

Removal

1. Disconnect the negative (-) battery terminal.
2. Remove the steering wheel assembly.
   (Refer to Steering System - "Steering Wheel")
3. Remove the steering back cover (A) after loosening the mounting screws.



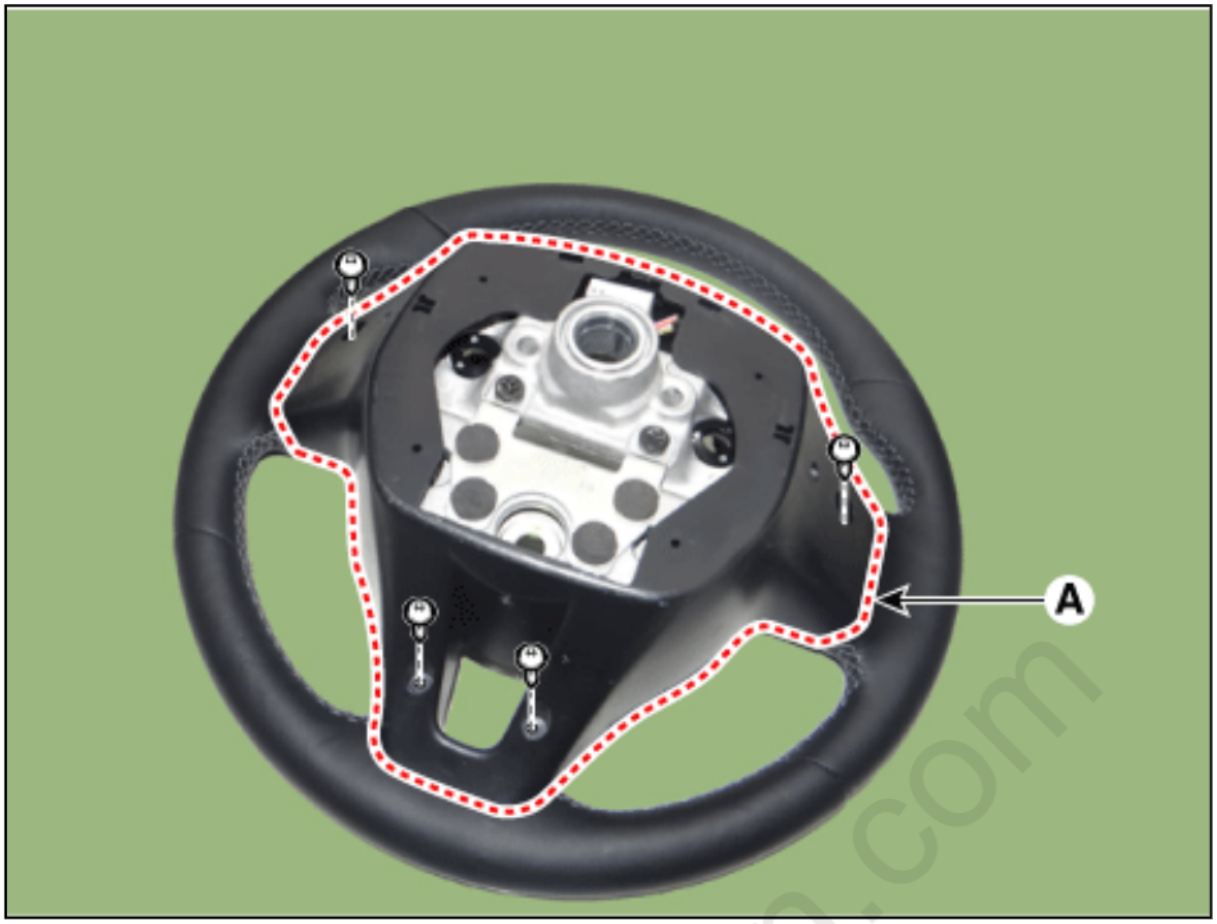

4. Remove the wiring connector (A) from the steering back cover.

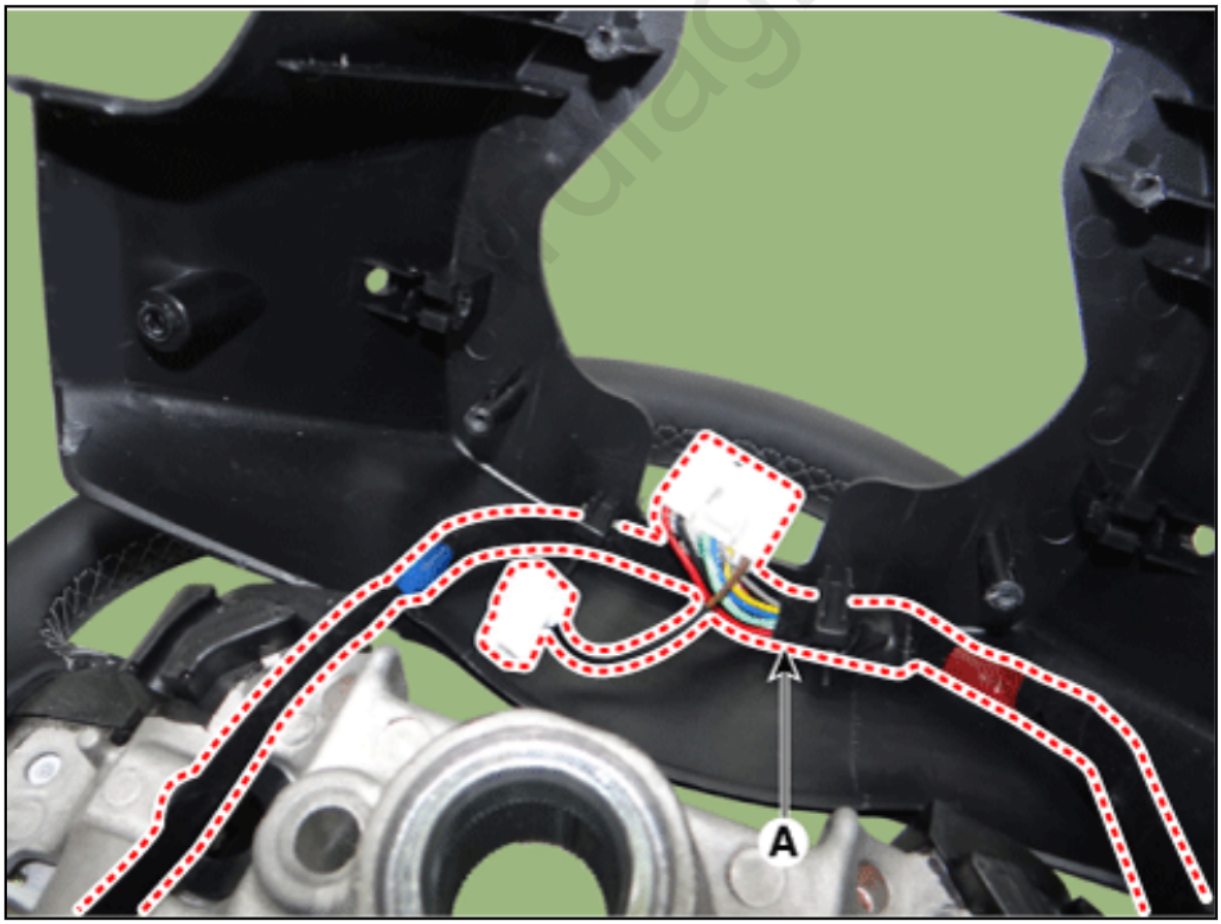

5. Disconnect the steering wheel remote control connector (A).

[LH]

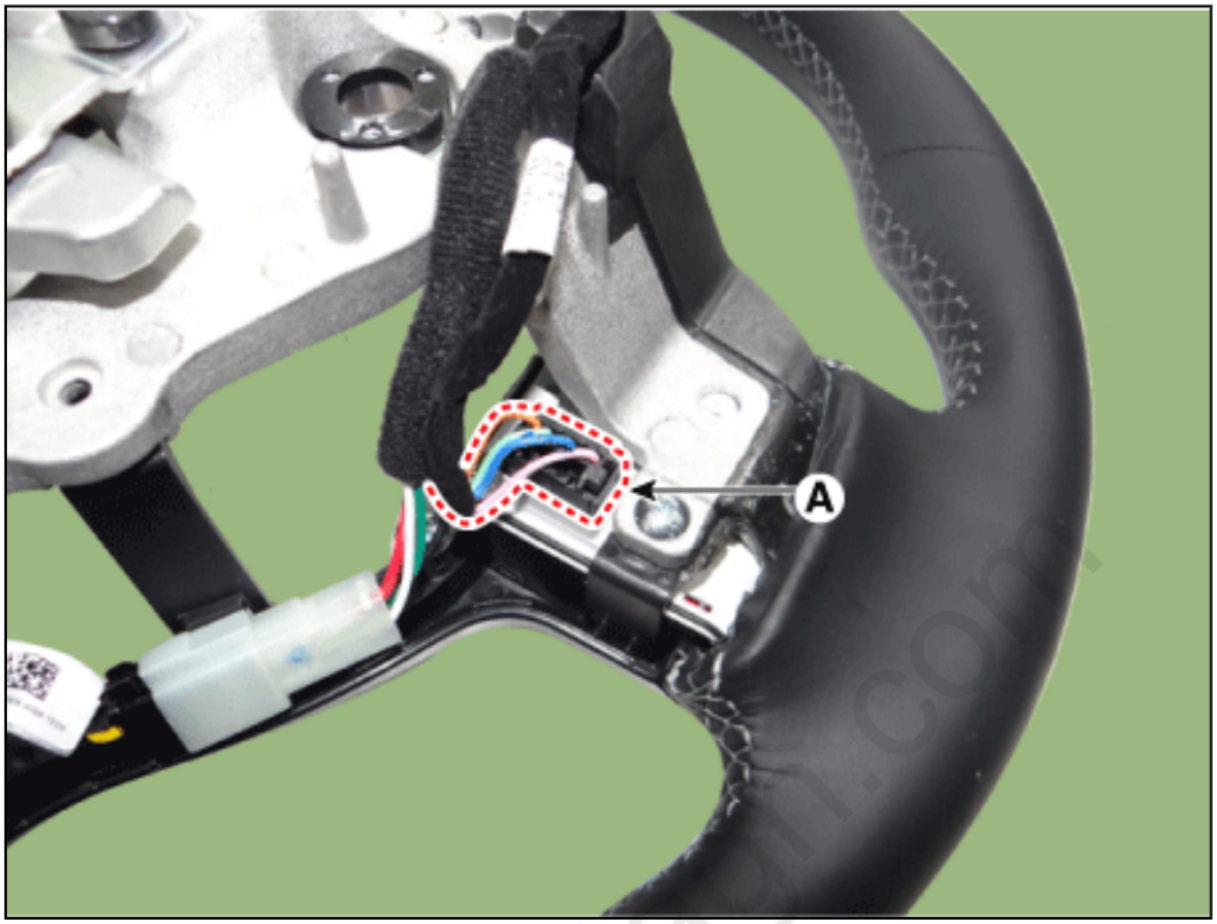

[RH]

cardiag.com

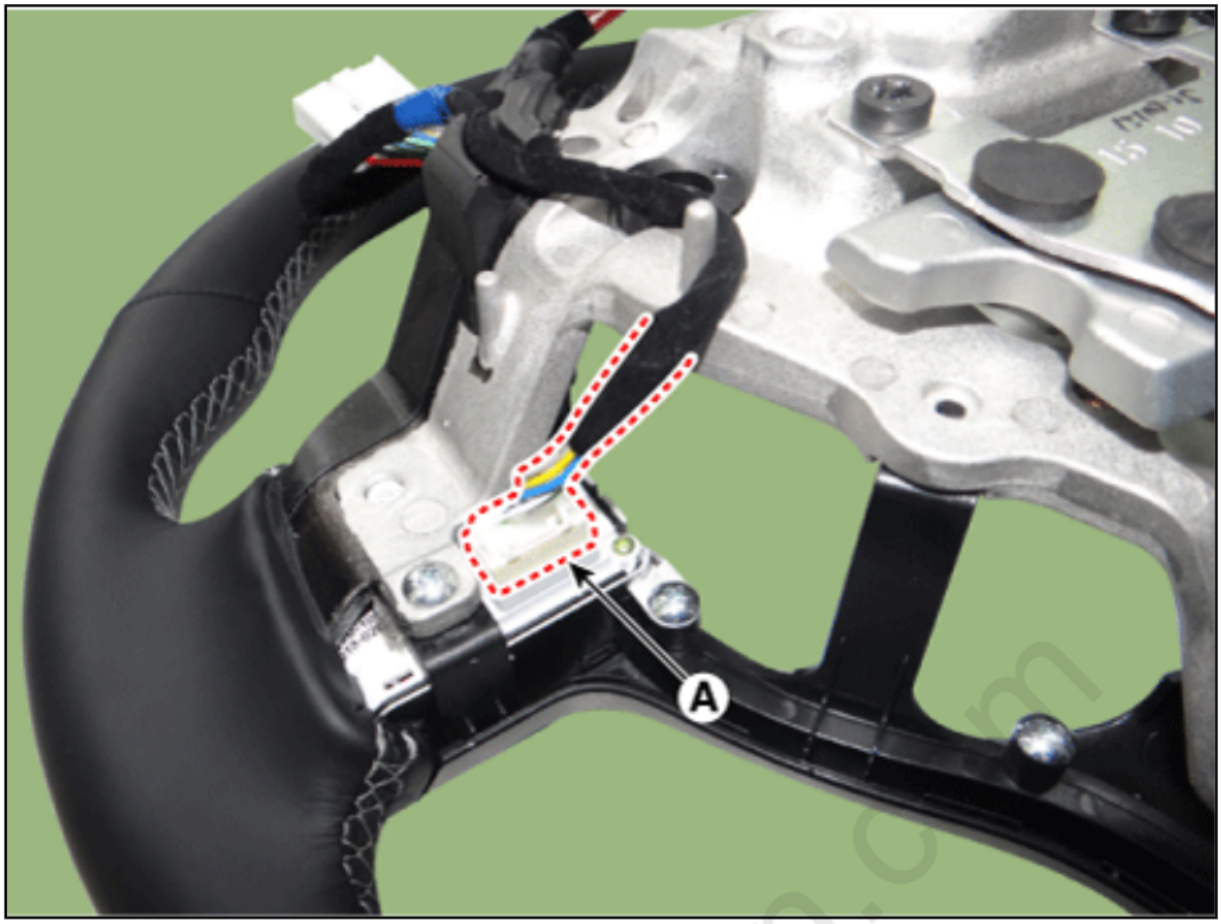

6. Remove the steering wheel remote control assembly (A) after loosening the mounting screws.



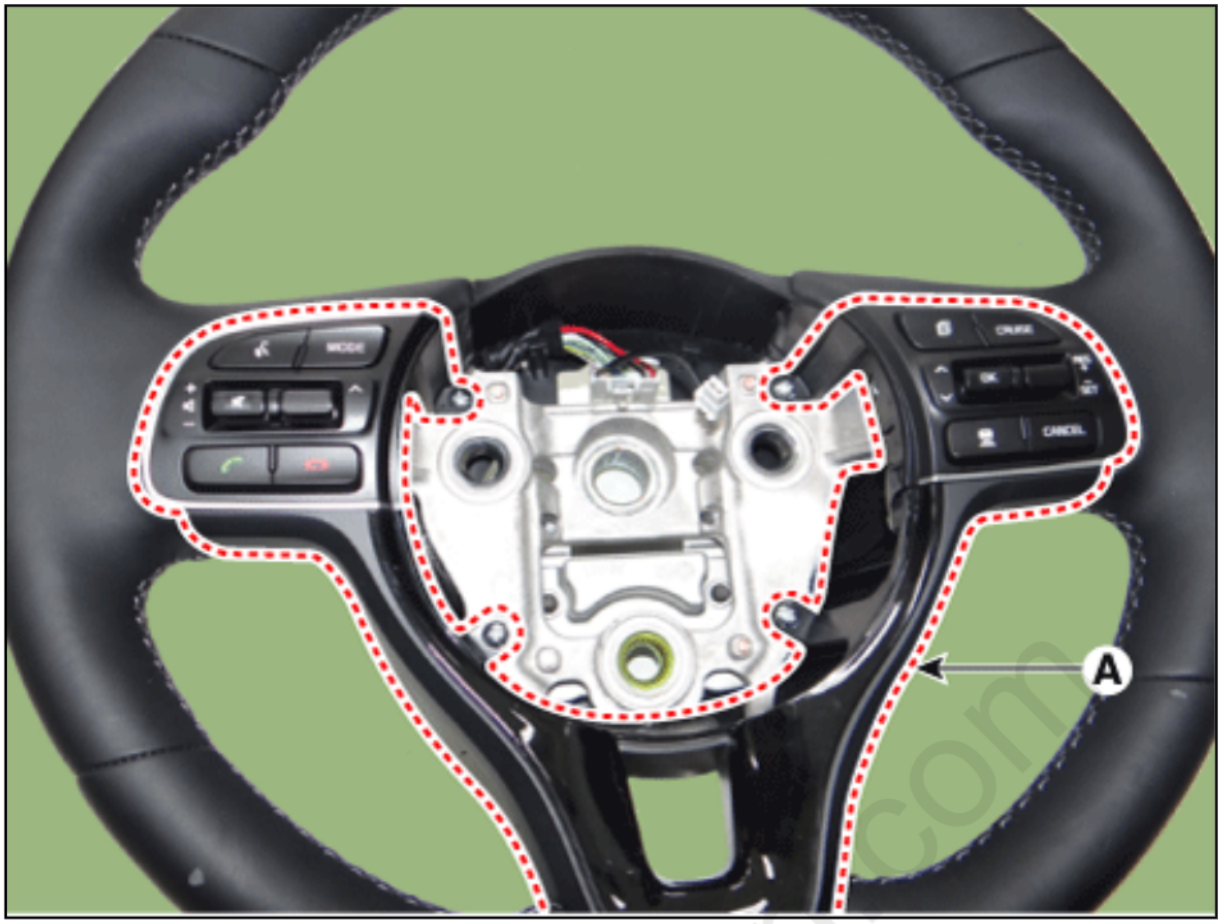

7. Remove the steering wheel remote control (A) after loosening the mounting screws.

   [LH]

cardiagn.com

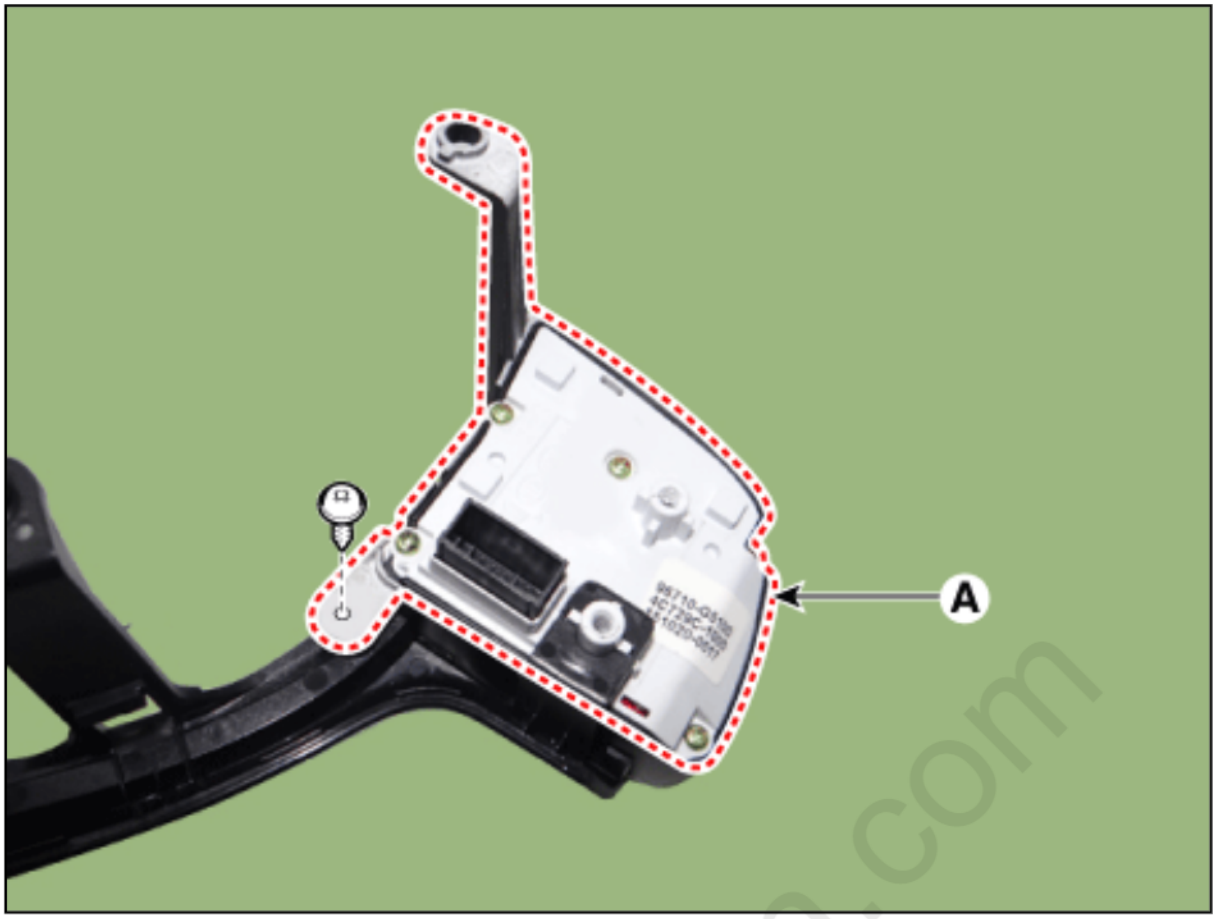

[RH]

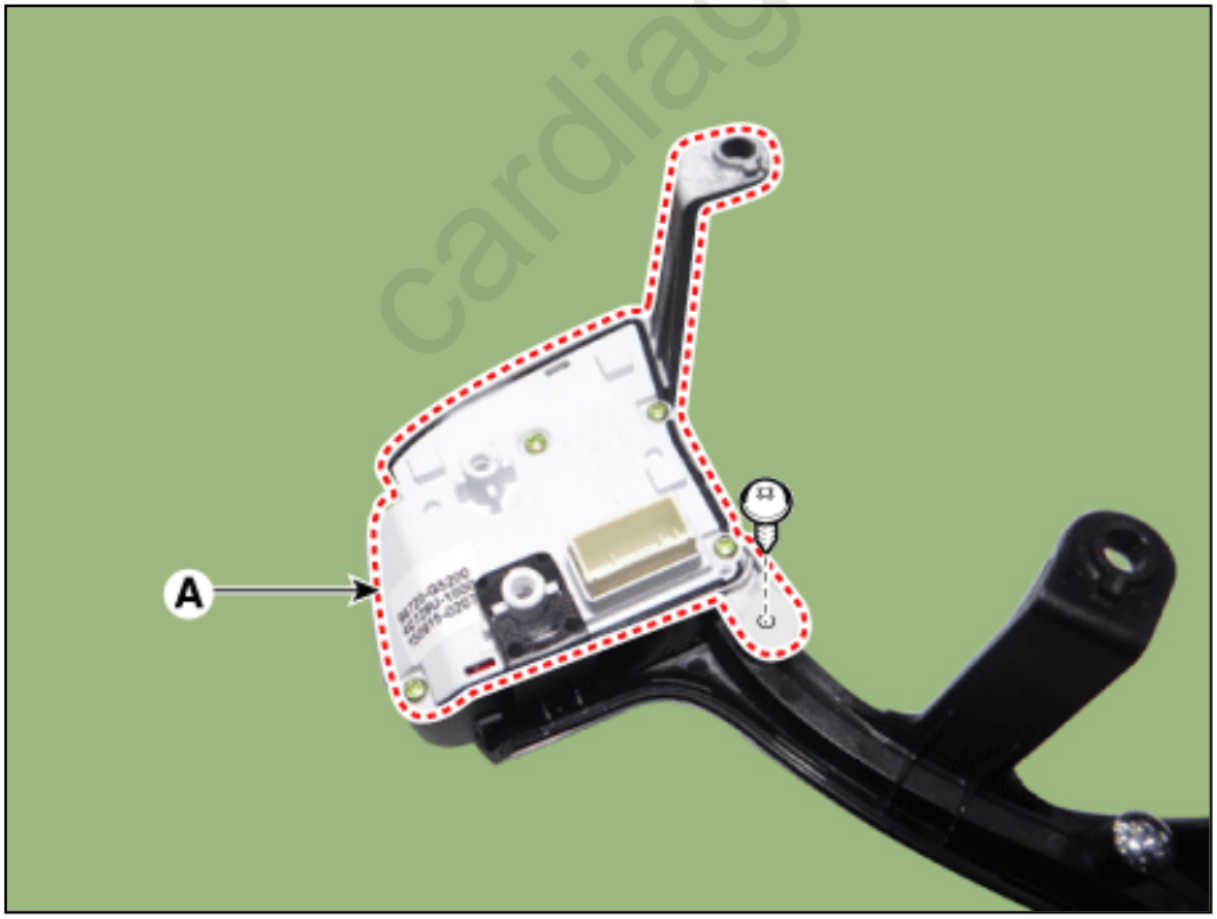

cardiagn.com

Installation

1. Install in the reverse order of removal.

Inspection

1. Check for resistance between terminals in each switch position (LH).

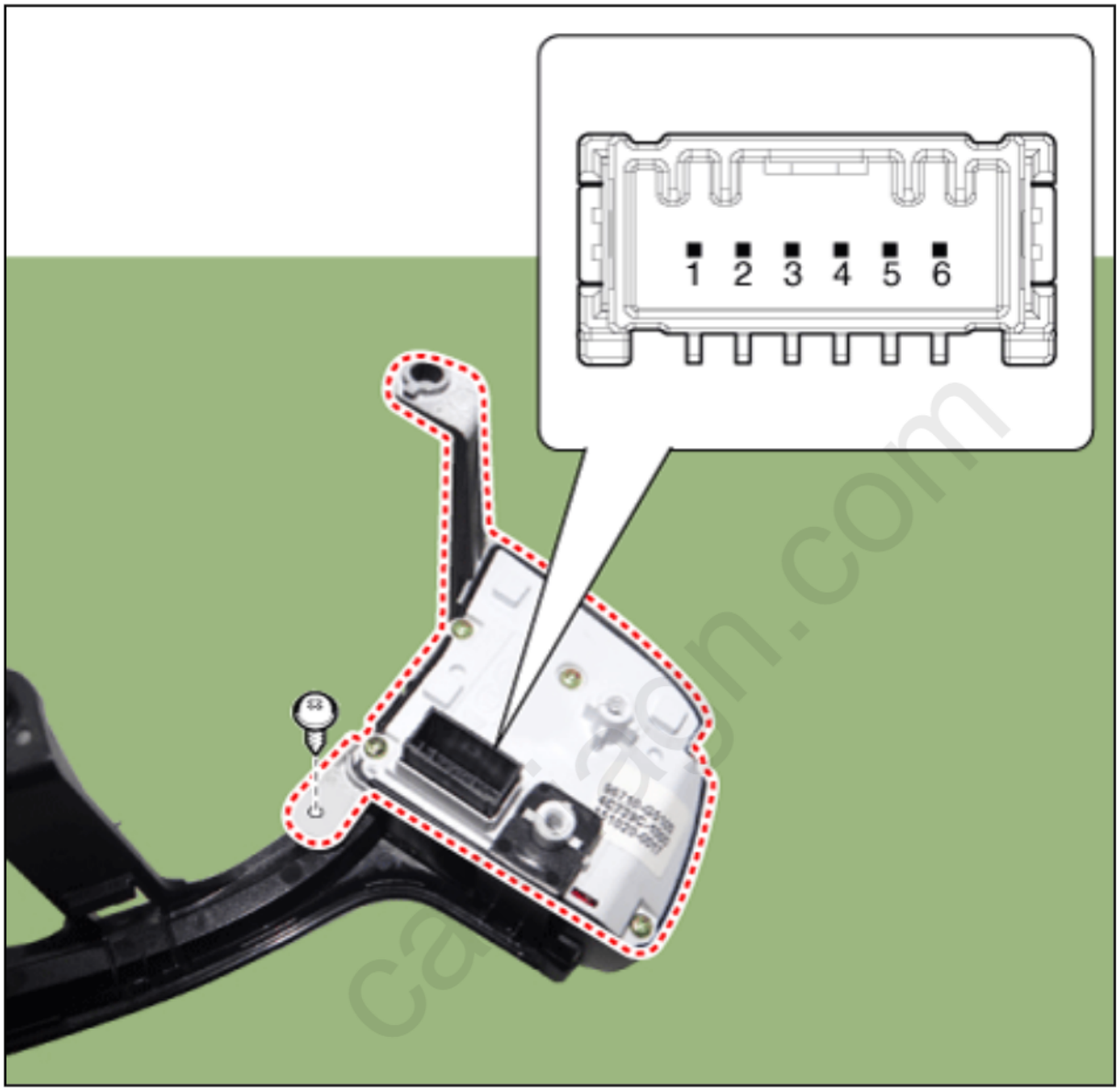

[LH : Audio + Hands free + Voice]

Switch	Connector terminal	Resistance (±3%)
SEEK Up	1-6	430 Ω
SEEK Down		1.11 kΩ
MODE		2.11 kΩ
MUTE		3.11 kΩ

Volume (+)		4.61 kΩ
Volume (-)		6.81 kΩ
Voice		10.71 kΩ
END		18.91 kΩ
SEND		40.91 kΩ

2. Check for resistance between terminals in each switch position (RH).

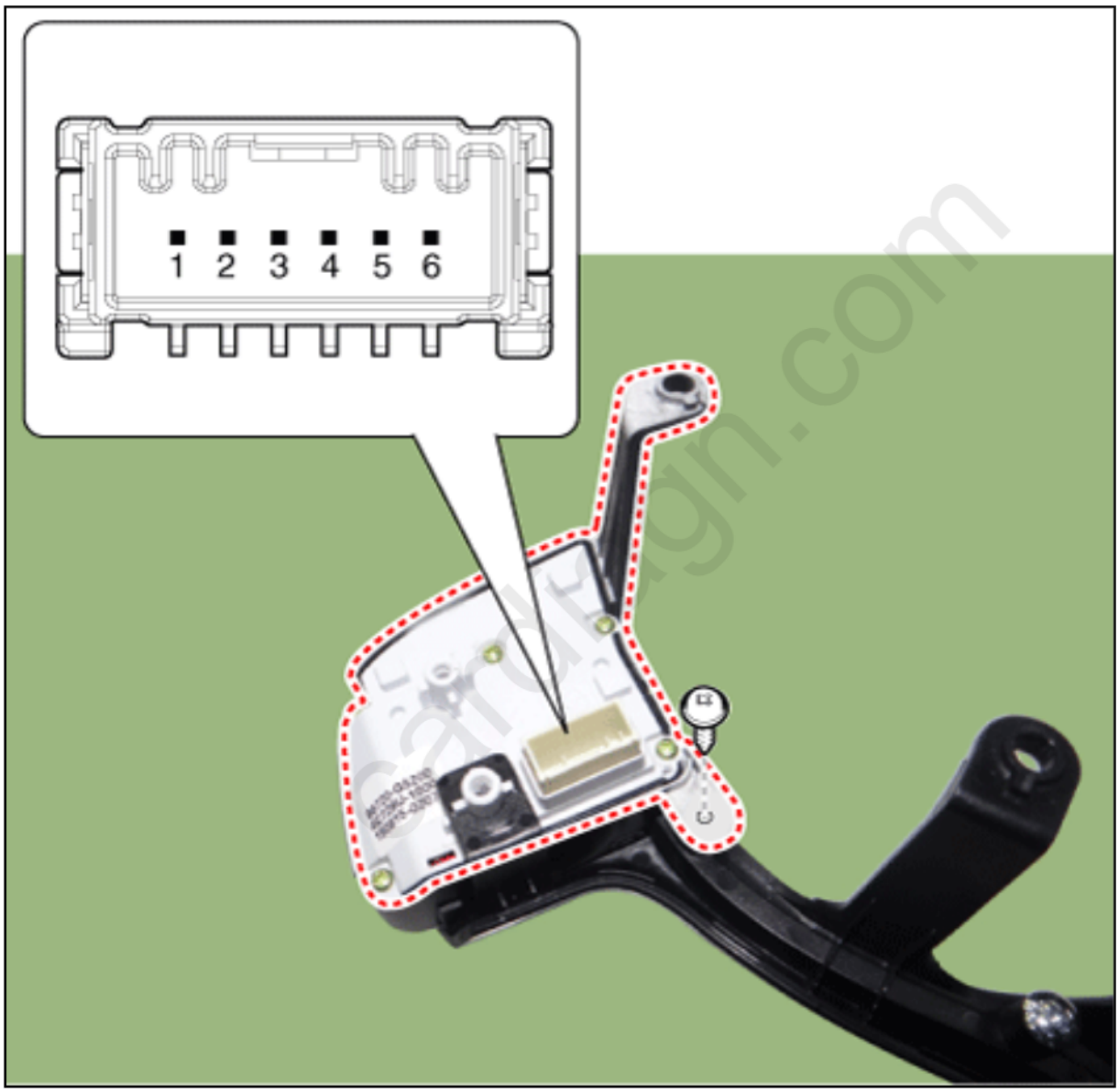

[RH : Cruise + Trip]

Switch	Connector terminal	Resistance (±5%)
Cancel		390 Ω

SET -	2-6	610 Ω
RES +		910 Ω
Cruise ON/OFF		1.38 kΩ
Cruise & Speed Limit ON/OFF		2.13 kΩ
SCC (Following distance control)		3.63 kΩ
Group	1-6	390 Ω
Trip Up		610 Ω
Trip Down		910 Ω
ENTER		1.38 kΩ

cardiagn.com

Please rate this document after reviewing at the bottom of this page.

Circuit
Diagram



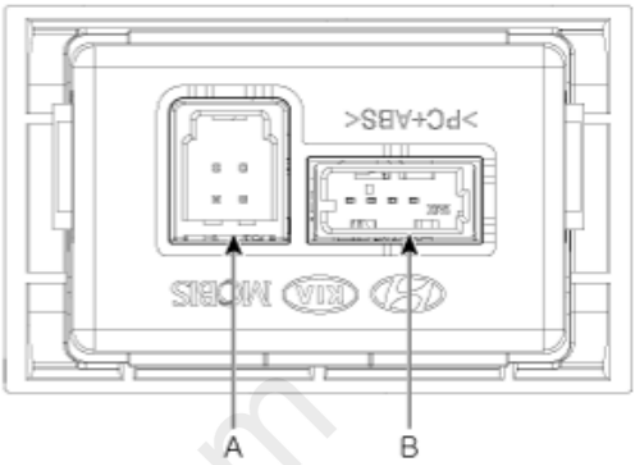

Connector A	Pin	Function	Pin	Function
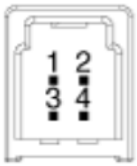	1	Illumination (-)	3	Illumination (+)
	2	DTC	4	Ground

Connector B	Pin	Function	Pin	Function
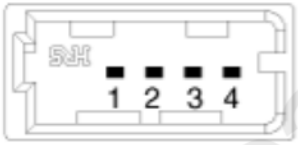	1	USB ground	3	USB data (Low)
	2	USB data (High)	4	USB ACC

cardiagn.com

Please rate this document after reviewing at the bottom of this page.

Description

The multimedia jack on the console upper cover is for customers who like to listen to external portable music players like the MP3 etc., through the vehicle's sound system when it is linked to this jack. The customer has this added option.
In case of distorted sound coming from the AUX-linked external music players, the audio unit may not be defective but the output level of the player does not match the specification of the AUX.

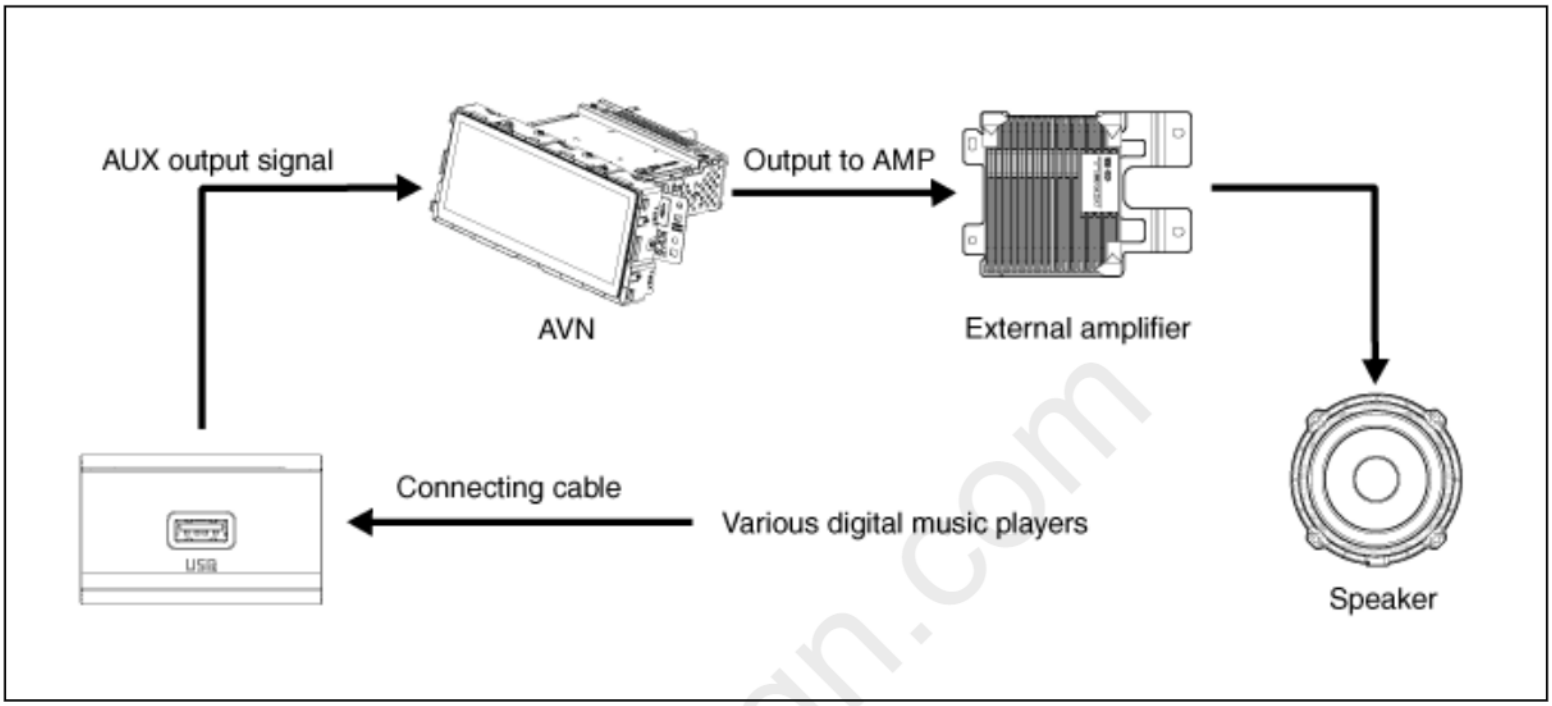

cardiagn.com

Please rate this document after reviewing at the bottom of this page.

Removal

1. Remove the gear knob (A) by pull both of it up after removing the boots from the console upper cover.

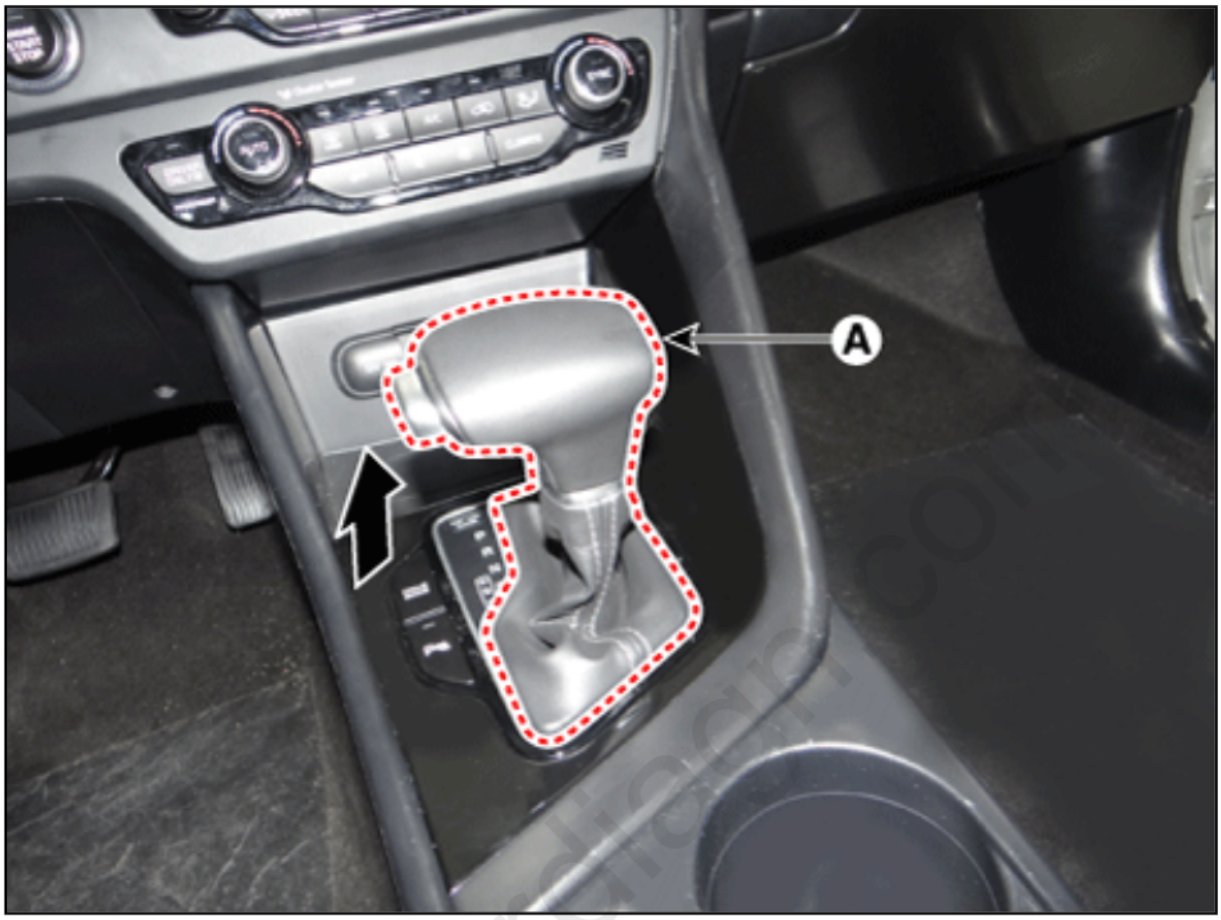

2. Remove the console upper cover (A).

cardiagn.com



3. Disconnect the connector (A) from the console upper cover.

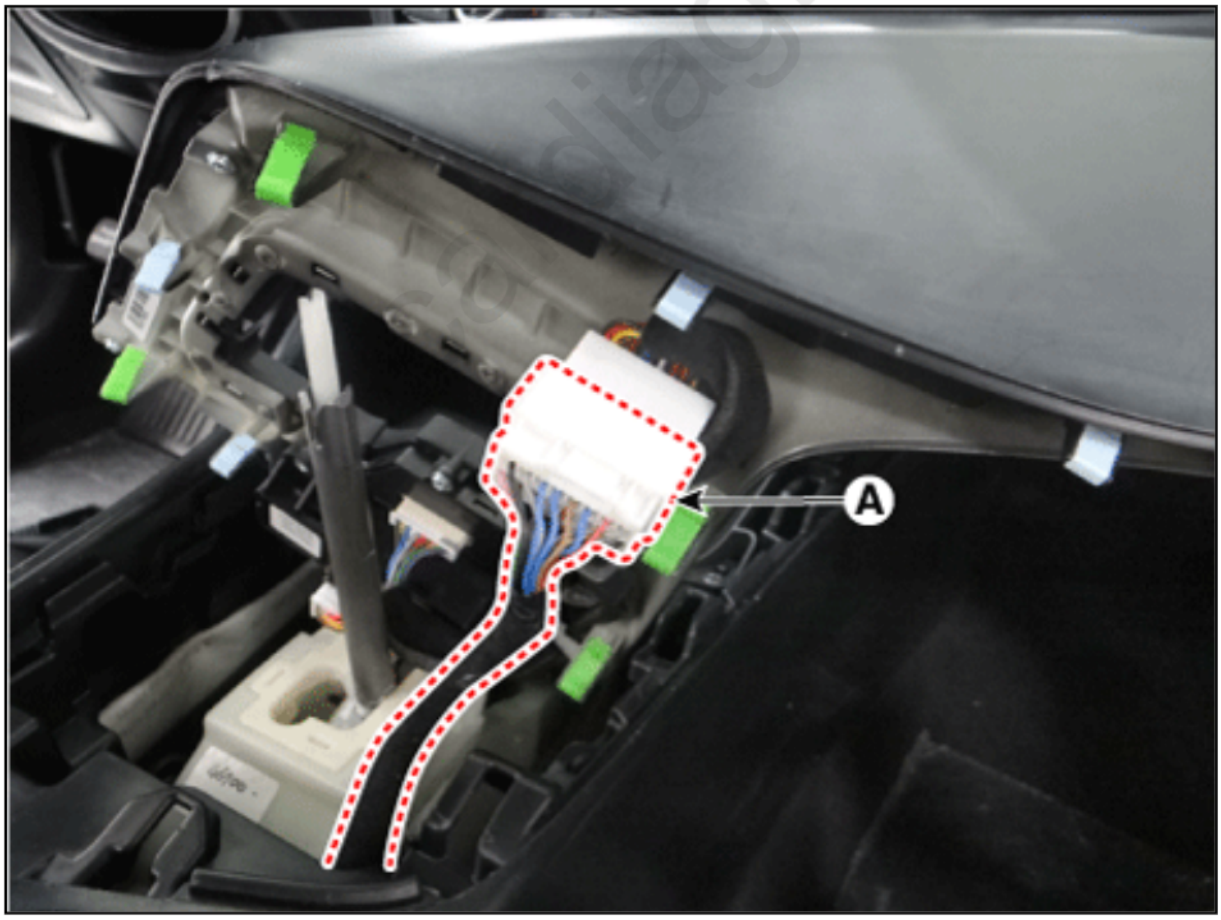

4. Remove the console tray (A) after loosening the mounting screws.

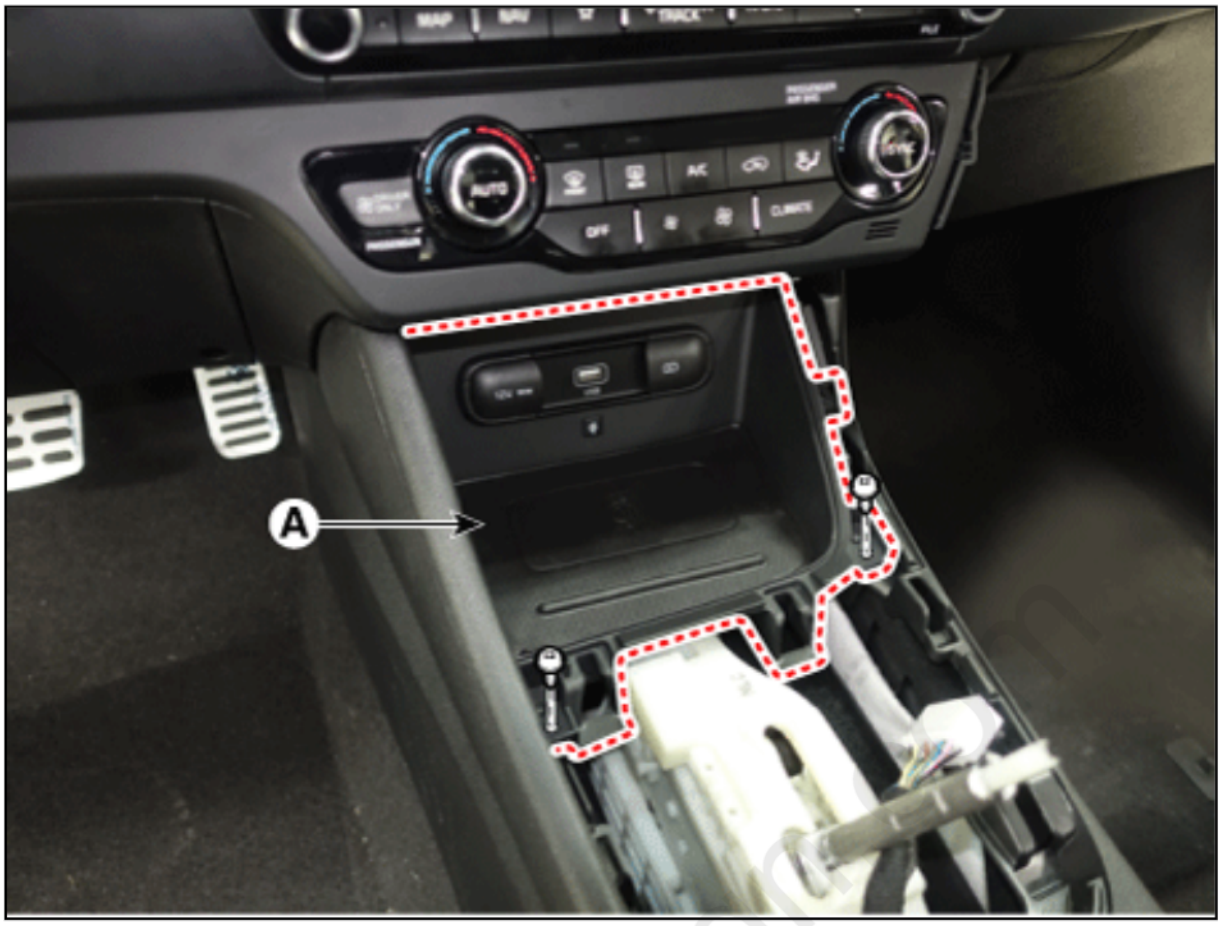

5. Disconnect the connectors (A) from the console tray.

cardiagn.com

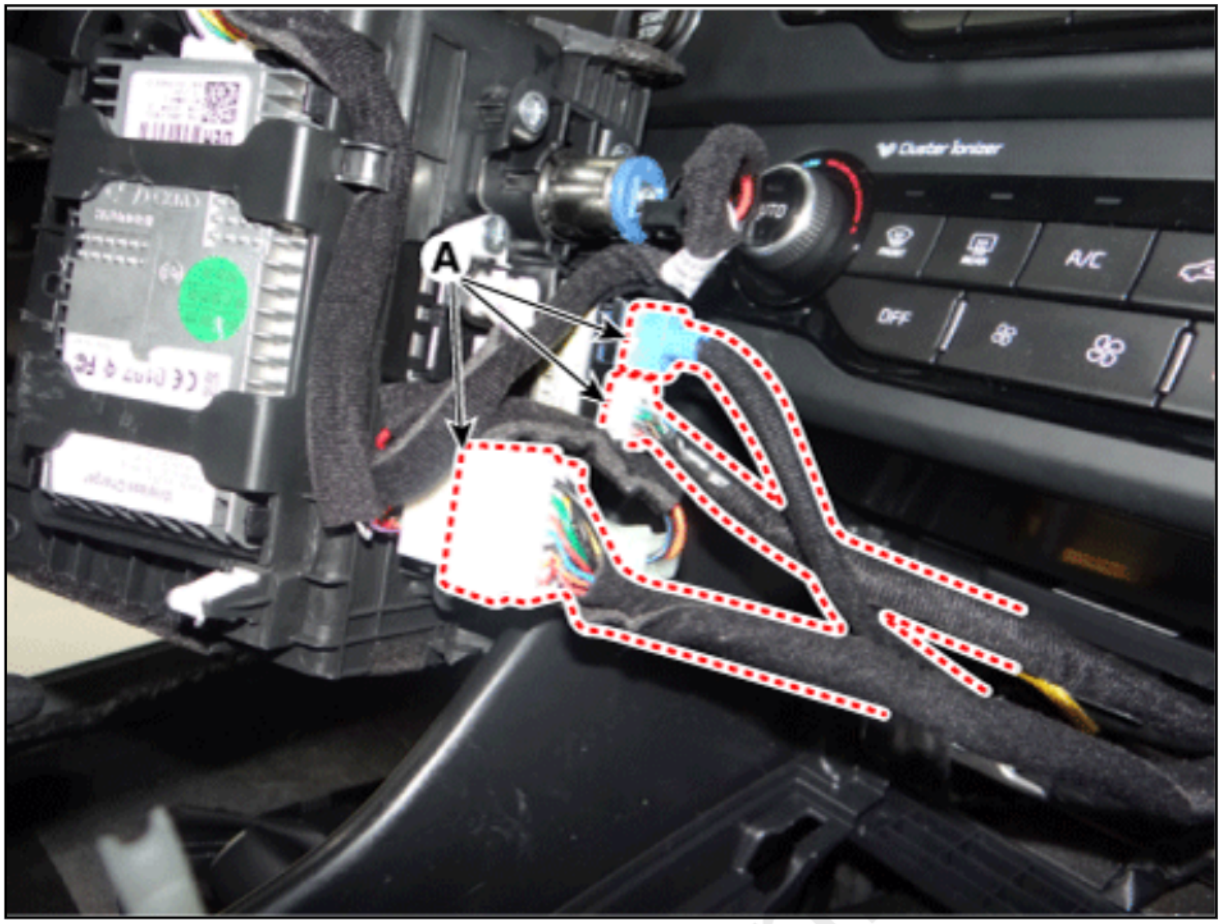

6. Remove the multimedia jack (A) after releasing the fixed hooks.

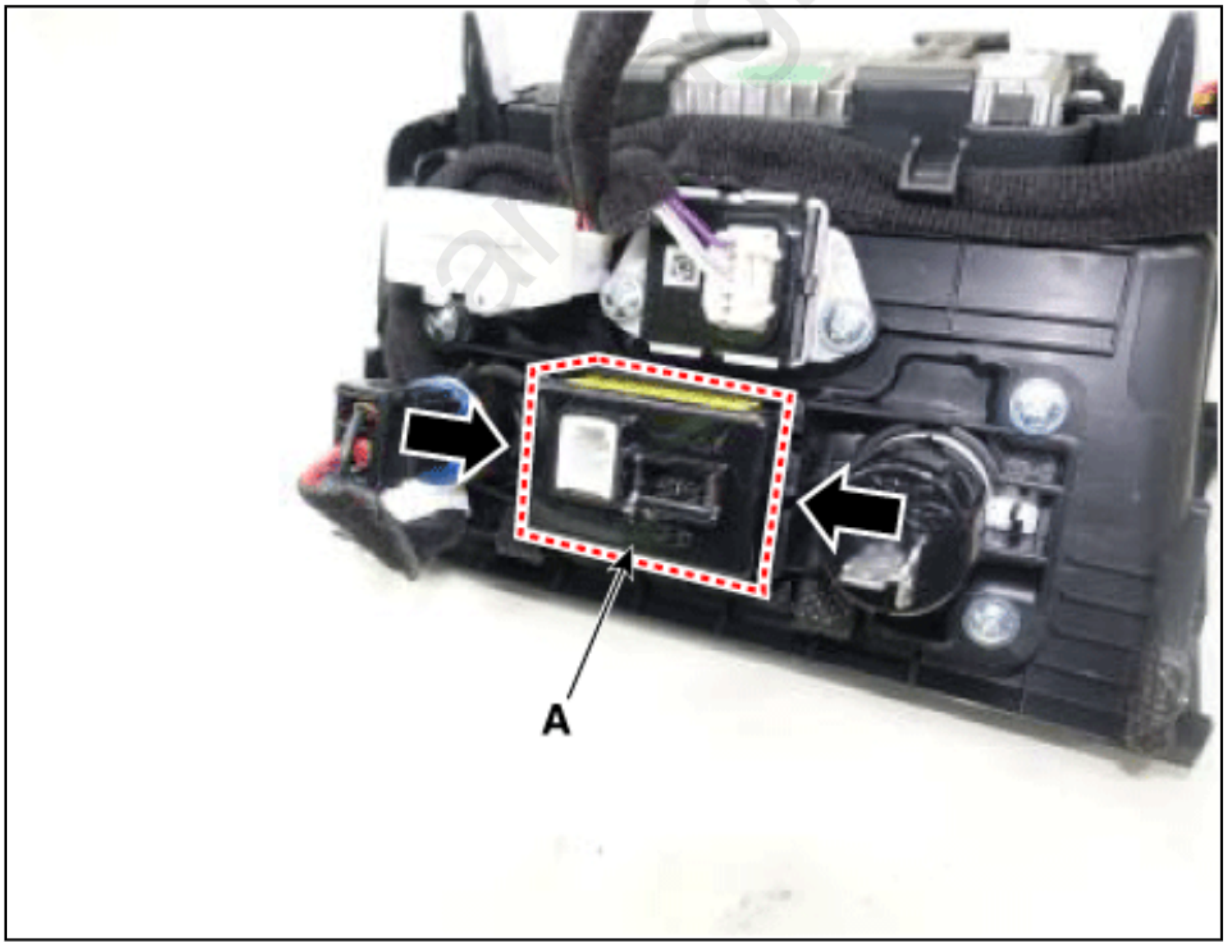

Installation

1. Install in the reverse order of removal.

cardiagn.com

Please rate this document after reviewing at the bottom of this page.

Inspection

1. Remove the overhead console lamp.
   (Refer to Lighting System - "Overhead Console Lamp")
2. Check tshe continuity of between terminals.

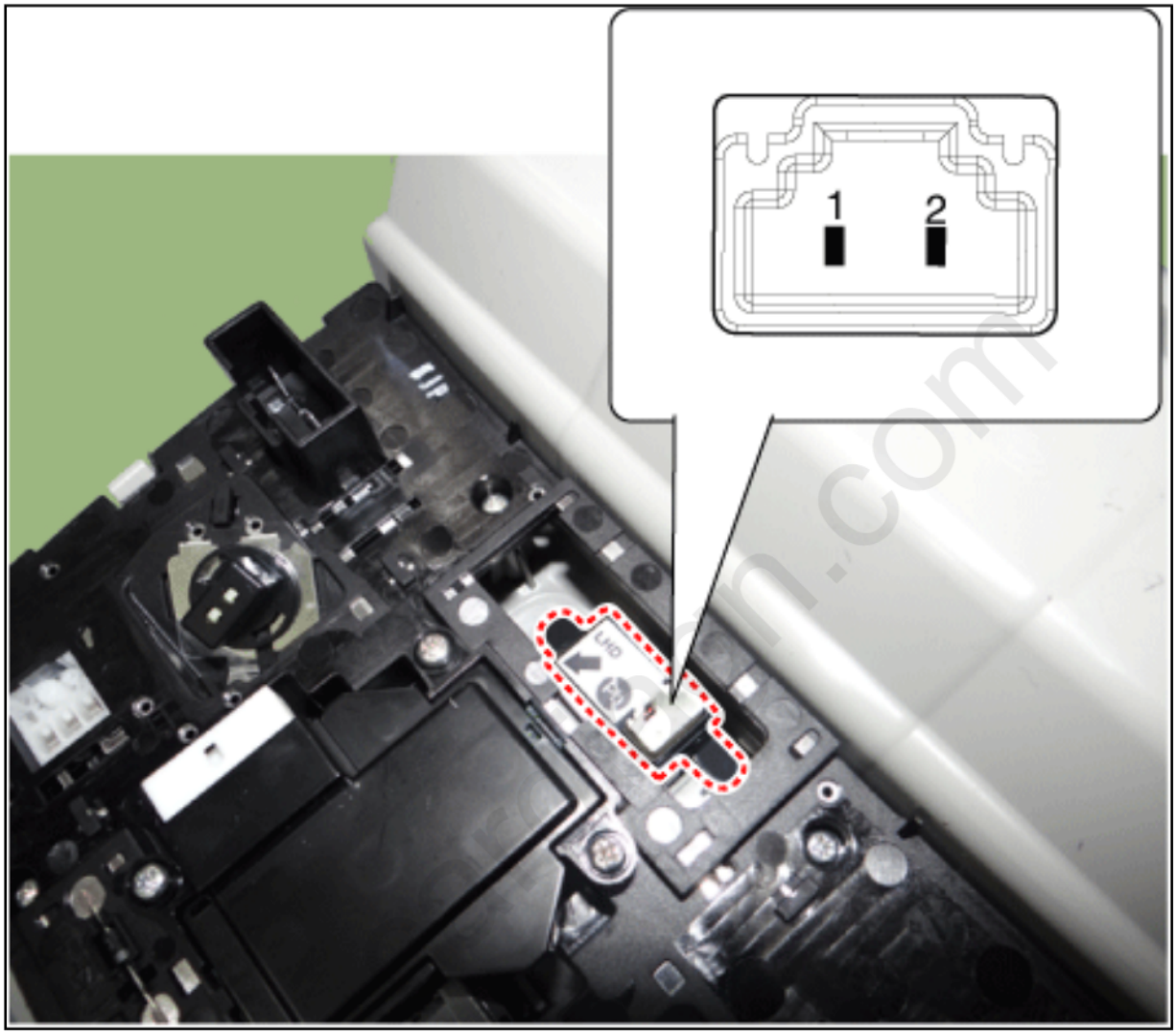

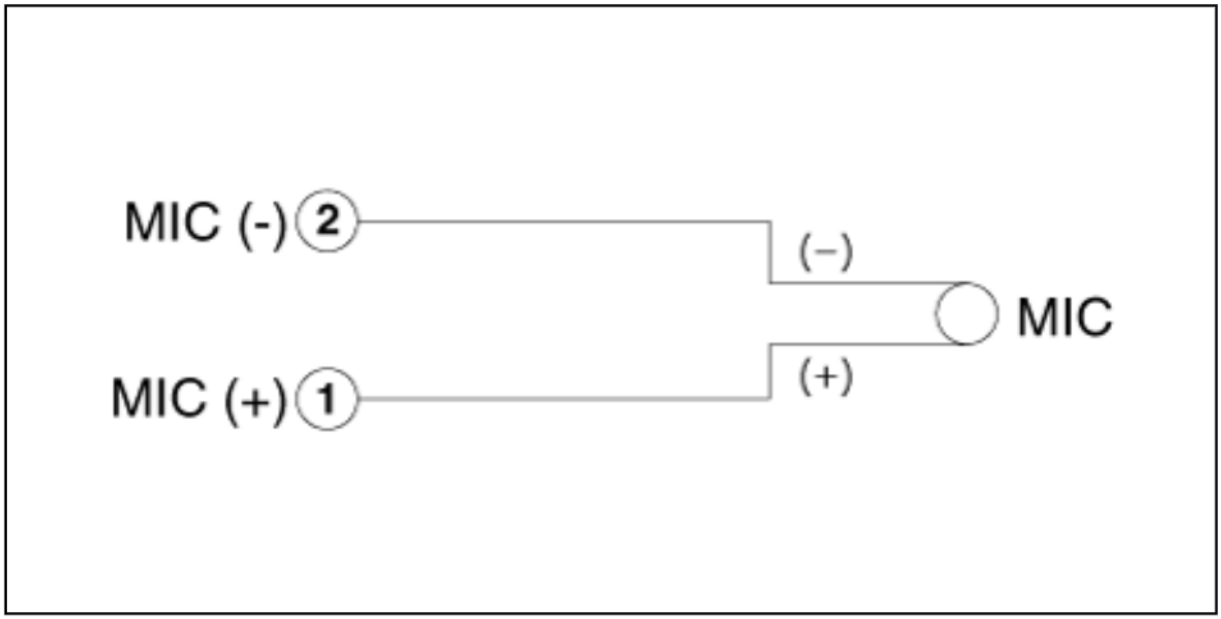

Removal

1. Remove the overhead console lamp.
   (Refer to Lighting System - "Overhead Console Lamp")
2. Remove the hands-free mic (A) after loosening the mounting screws.

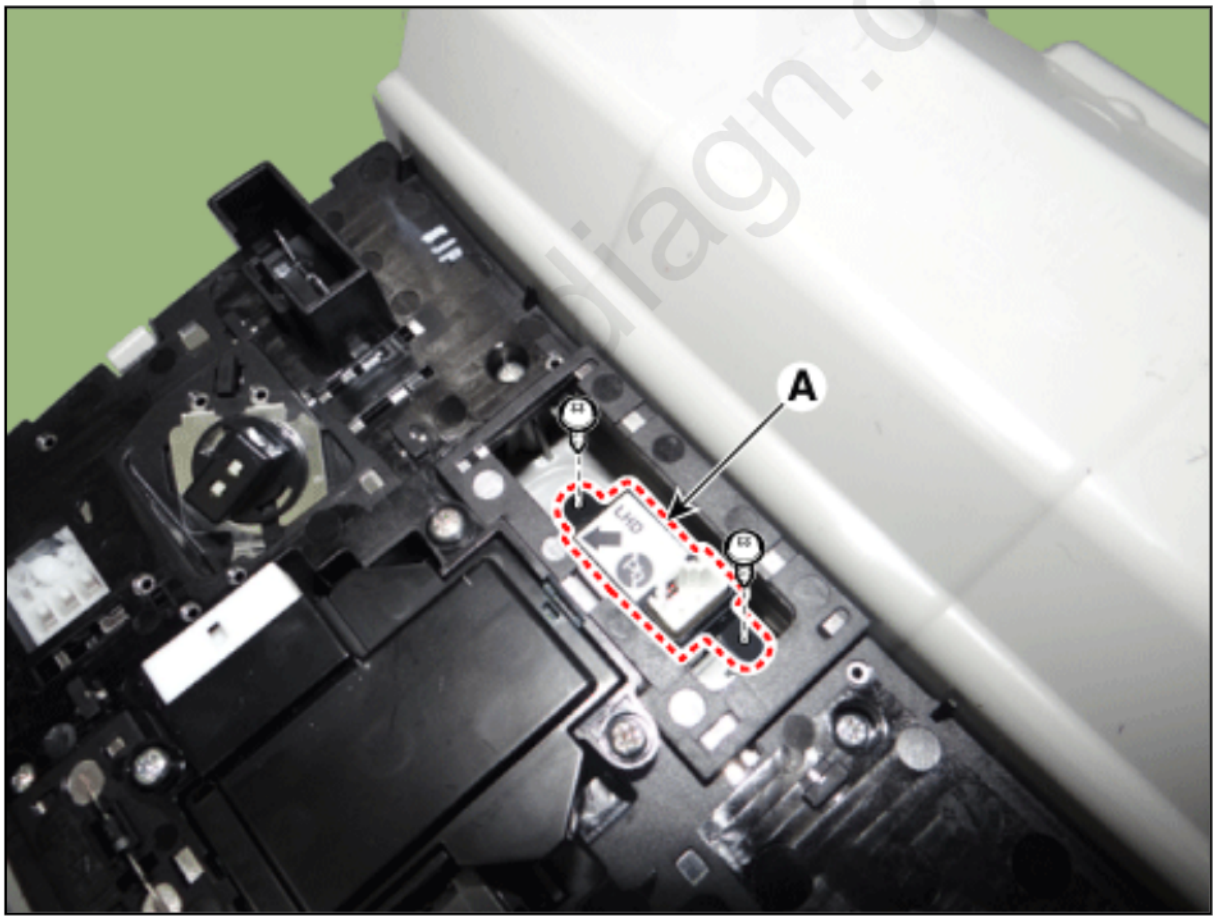

Installation

1. Install in the reverse order of removal.

Please rate this document after reviewing at the bottom of this page.

Specifications

Items	Specifications
Rated voltage	DC 12 V
Operating voltage	DC 9 - 16 V
Operating temperature	-22 to 167°F (-30 to 75°C)
Dark current	3.5 mA (Security Indicator 0.7 mA)

cardiagn.com

Please rate this document after reviewing at the bottom of this page.

Schematic
Diagrams

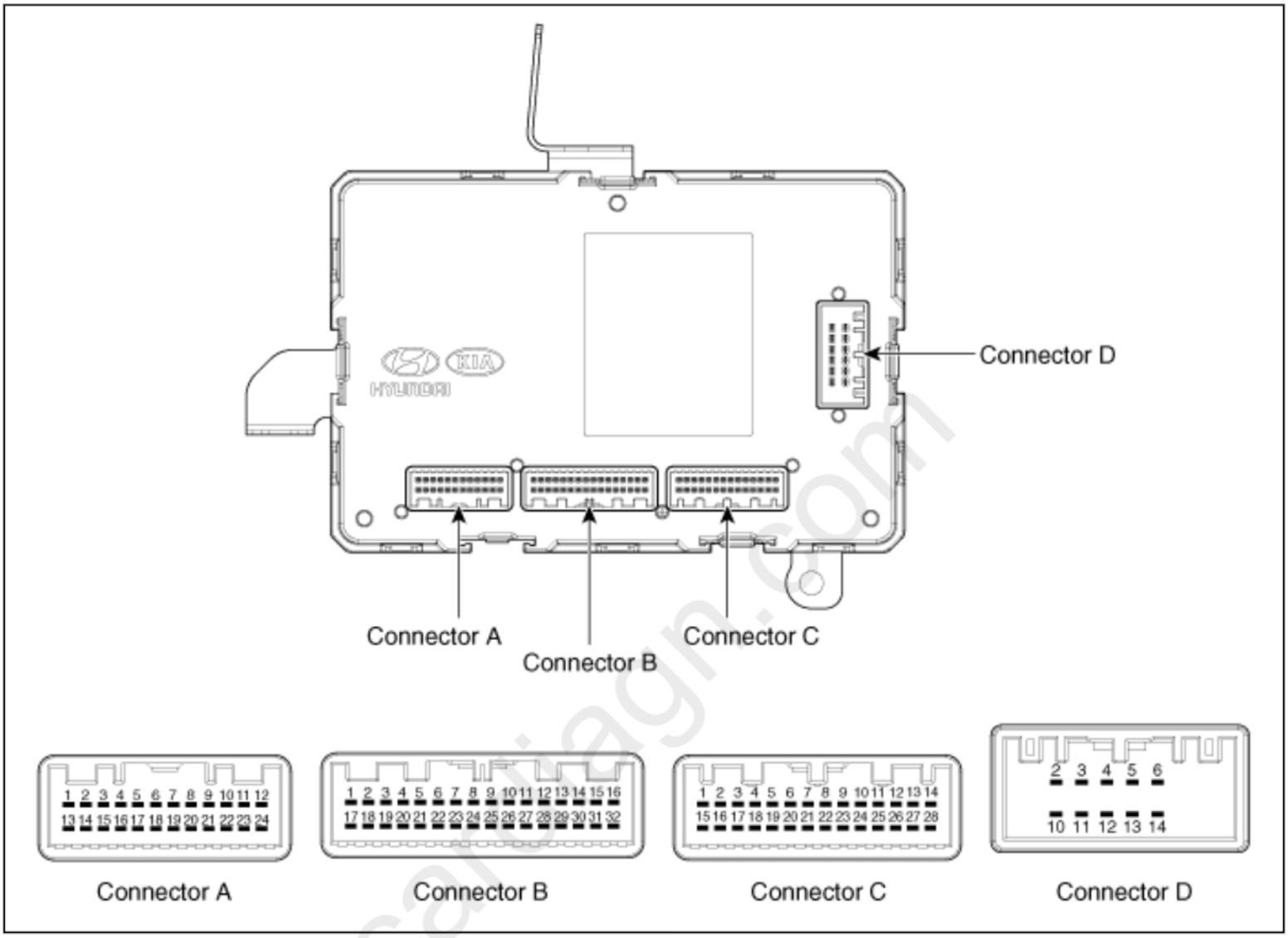

Connector Pin Information

No.	Connector A	Connector B	Connector C	Connector D
1	-	Key in switch	Front wiper relay (Low)	-
2	-	Heated handle switch	Auto light sensor (GND)	IGN1
3	Rear left seat belt indicator	-	PDW ON switch indicator	IGN2 (Heated handle power_1)
4	Assist seat belt indicator	-	Heated handle switch indicator	IGN2 (Heated handle power_2)
5	Rear center seat belt indicator	Multifunction light switch	-	Heated handle power

6	Rear right seat belt indicator	PDW (Option)	-	Room lamp
7	-	KEY inter lock switch	Crash signal	Ground (Power)
8	-	Sunroof open switch	Auto light sensor	-
9	Mirror unfolding relay	PDW ON switch	NTC Sensor	-
10	Rear wiper relay	Ground	Headlamp switch (High)	Battery (+)
11	-	-	Rear wiper switch	-
12	-	-	Front wiper INT volume switch	-
13	Key solenoid	-	Front wiper switch	PDW-R Power
14	-	-	Fog lamp switch	PDW-F Power
15	ATM solenoid	-	Front wiper relay (High)	Ground (Signal)
16	-	-	Auto light sensor (Power)	
17	Security indicator	-	Sunroof enable (High)	
18	Pocket lamp	-	-	
19	Safety power window enable (Low)	C-CAN (High)	-	
20	Key hole illumination	C-CAN (Low)	-	
21	-	B-CAN (Low)	Front wiper low back up switch	
22	-	B-CAN (High)	NTC (GND)	
23	Mirror fold relay	-	IGN2	
24	-	LIN_Rain sensor	ACC	
25		LIN_PAS	Rear wiper washer switch	
26		-	Front wiper washer switch	
27		-	Blade position (High)	
28		Rear defogger switch	Brake switch	
29		Rain sensor (Option)		
30		-		
31		-		
32		-		

cardiagn.com

Please rate this document after reviewing at the bottom of this page.

Description

Body Control Module (BCM) function

No	Item	Description
1	Washer Linked Wiper	–If the washer switch is pressed ON for 0.06-0.2 second with the vehicle mode in IGN2, the wiper relay is turned ON 0.3±0.1 second after washer switch ON, and then the wiper relay is turned OFF 0.7±0.1 second later. –If the washer switch is pressed ON for over 0.2 second with the vehicle mode in IGN2, the wiper relay is turned ON 0.3±0.1 second after washer switch ON, and then the wiper relay is turned OFF 2.5-3.8 seconds (wiper activates 2-3 times) after washer switch OFF.
2	MIST Linked Wiper	–If the wiper mist switch is pressed ON for 0.7 second with the vehicle mode in IGN2, the wiper relay is turned ON, and then OFF 0.7 second later. –If the wiper mist switch is pressed ON for over 0.7 second with the vehicle mode in IGN2, the wiper relay is turned ON, and then turned OFF 0.7 second after wiper mist switch OFF.
3	Variable INT Wiper	–If the INT wiper switch is turned ON with the vehicle mode in IGN2, INT wiper operates intermittently (10 -2.2 sec.) based on the INT volume setting.
4	Rear Defogger Deicer Timer	–If the defogger switch is turned ON with the vehicle mode in alternator ON, defogger relay is turned ON for 20 minutes. –If the defogger switch is pressed one more time or if alternator mode is turned OFF while the defogger is ON, then the defogger relay is turned OFF.
5	KEY Inter Lock	–If the KEY INTER LOCK switch is turned OFF with the vehicle mode in IGN1 ON or ACC ON, the key solenoid output is turned ON and prevents the key from being removed.
6	ATM Shift Lock	–If brake switch is turned ON with the vehicle mode in IGN1 ON and the shift lever in P position, ATM solenoid is turned ON to unlock the shift lever.

7	Tailgate Release	–Tailgate release relay is turned ON for 0.2±0.02 second if TX tailgate signal is received. –If tailgate release switch is turned ON with all doors unlocked, tailgate release relay is turned ON for 0.2±0.02 second. (However, Tailgate release switch is ignored when in ARMWAIT, ARM, REARM, or ALARM mode.) –If Interior tailgete release switch is turned ON, tailgate release relay is turned ON for 0.2±0.02 second. (However, Tailgate release relay is NOT turned ON of the vehicle speed is over 5km/h(3.1mi/h), or if the vehicle is in ARMWAIT, ARM, REARM, or ALARM mode.)
8	Power Window Timer	–Power window relay is turned ON when the vehicle mode is switched to IGN ON. –When the vehicle mode is switched IGN ON → OFF, power window relay is turned ON for 30 seconds. –If a door is opened during the 30 second power window relay ON period, the power window relay is immediately turned OFF. –If a door is opened and the vehicle mode is switched IGN ON → OFF, power window relay is immediately turned OFF.
9	Seat Belt Reminder (Driver Side)	–If Seat belt is not fastened, Indicator is turned ON at the first IGN ON, then turned OFF when the seat belt is fastened. –If the vehicle speed is over 20Km/h with Seat belt unfastened, Indicator blinks and chime buzzer is activated for 100 seconds. –While the vehicle speed is over 20Km/h with the seat belt fastened, then the seat belt is unfastened, Indicator blinks and chime buzzer is activated for 100 seconds. (Reminder) –If the Seat belt is fastened or the vehicle mode is switched to IGN OFF while 100 sec. buzzer is activating, the Indicator blinking and the buzzer is turned OFF. –If the vehicle mode is switched to IGN ON with Seat belt unfastened, and vehicle speed exceeds 20Km/h with Indicator ON, Indicator blinks and chime buzzer is activated for 100 seconds.

carlign.com

10	Seat Belt Reminder (Passenger Side)	–If there is no one in the passenger seat, then the system operates as if seat belt is fastened. –If Seat belt is not fastened, Indicator is turned ON at the first IGN ON, then turned OFF when the seat belt is fastened. –If the vehicle speed is over 20Km/h with seat belt unfastened, Indicator blinks and chime buzzer is activated for 100 seconds. –While the vehicle speed is over 20Km/h with the Seat belt fastened, then the seat belt is unfastened, Indicator blinks and chime buzzer is activated for 100 seconds. (Reminder) –If the seat belt is fastened or the vehicle mode is switched to IGN OFF while 100 sec. buzzer is activating, the Indicator blinking and the buzzer is turned OFF. –If the vehicle mode is switched to IGN ON with Seat belt unfastened, and vehicle speed exceeds 20Km/h with Indicator ON, Indicator blinks and chime buzzer is activated for 100 seconds.
11	Seat Belt Reminder (Rear)	–If Seat belt is not fastened, Indicator is turned ON for 35 seconds at the first IGN ON, then turned OFF when the seat belt is fastened. –If the vehicle speed is over 20Km/h with seat belt unfastened, Indicator blinks and chime buzzer is activated for 35 seconds. –If the vehicle speed is over 20Km/h with the seat belt fastened, then the seat belt is unfastened, Indicator blinks and chime buzzer is activated for 35 seconds. (Reminder) –If the seat belt is fastened or the vehicle mode is switched to IGN OFF while 35 sec. buzzer is activating, the Indicator blinking and the buzzer is turned OFF. –If the vehicle mode is switched to IGN ON with seat belt unfastened, and vehicle speed exceeds 20Km/h with Indicator ON, Indicator blinks and chime buzzer is activated for 35 seconds.
12	KEY Operated Warning	–If the driver door is opened with the KEY IN, buzzer is continuously activated at 1 second interval. –The buzzer is turned OFF if KEY OUT or the door is closed while the chime buzzer is activated.
13	Parking Brake Warning	–If the vehicle speed exceeds 5Km/h(3.1mi/h) while the vehicle mode is in IGN1 and the parking brake is engaged, buzzer is sounded until the parking brake is released. (Buzzer activates at 0.6 second ON and 0.4 second OFF at 1 second interval until the parking brake is released.)

carmanuals.com

14	Decayed Room Lamp	–If a door is opened with the vehicle mode in IGN OFF, the room lamp is turned ON. If the door is closed, the room lamp is remained ON for 30 seconds then turned OFF. (dimmer 2±0.2 sec.) –If the door is remained opened, the room lamp is remained ON for 20 minutes, then turned OFF. (dimmer 2±0.2 sec.)
15	KEY Hole Illumination	–Key illumination Lamp is turned ON if a door is opened while the vehicle mode in IGN1 switch OFF, and the Key illumination Lamp is turned OFF 30 seconds after the door is closed. –If the vehicle mode is switched to IGN1 ON while Key illumination lamp is ON, then the lamp is immediately turned OFF. –If the vehicle mode is switched to ARMWAIT while Key illumination lamp is ON, then the lamp is immediately turned OFF.
16	Tail Lamp Auto Cut	–If Tail switch is switched OFF→ ON, the tail relay is turned ON. –If Tail switch is turned OFF, then the tail relay is turned OFF. –If KEY IN switch OFF & Tail switch ON & Driver Door OPEN while in KEY IN switch ON & Tail switch ON, the tail relay is turned OFF. (Auto OFF) –If KEY IN switch is turned ON after Auto OFF, then the tail relay is turned ON. Tail relay does not turn back ON even if the driver side door is opened → closed.
17	Head Lamp Escort	–If the vehicle mode is switched from IGN1 to IGN1 OFF, and the Head lamp is turned ON by Head lamp switch or auto light, then the Head lamp is remained ON. –Head lamp is turned OFF in case of any of the following conditions. ① 15 seconds after driver side door is opened → closed. ② Head lamp or Auto light is not turned ON. ③ If driver side door is remained opened for over 5 minutes. ④ 20 minutes after the vehicle mode switching from IGN1 ON to IGN OFF. ⑤ If TX lock signal is received 2 times while H/Lamp is ON.
18	Head Lamp LOW / HIGH	–If Head lamp low is turned ON with head lamp low switch ON or auto light function, and head lamp high switch is ON (Self return), then the head lamp high is turned ON. –Head lamp high can only be turned OFF with the passing switch.

cardiagn.com

19	Head Lamp PASSING	–Head lamp high activates only when the passing switch is turned ON and the vehicle mode is in IGN2 ON. –The switch is used to turn OFF when the head lamp high is ON.
20	Front Fog Lamp	–If the front fog is turned ON while tail lamp is ON, then the front fog lamp is turned ON. –If the front fog is turned OFF while the front fog lamp is ON, then the lamp is turned OFF. –If the head lamp low is turned ON while front fog is ON, then the front fog lamp is turned ON. –If the front fog is turned OFF while the front fog lamp is ON, then the lamp is turned OFF.
21	Auto Light Control	–If Auto light sensor is detects light ON condition, then the light is turned ON 2.5 seconds later. –If the sensor detects light OFF condition, then the light is turned OFF 2.5 seconds later. –If the sensor detects tail light ON condition, then only the tail lamp is turned ON. If the sensor detects head lamp ON condition, then both the tail lamp and the head lamp are turned ON. –In case of head lamp ON condition, both the tail lamp and head lamp are turned ON regardless of tail switch ON/OFF status.
22	Daytime Running Light (DRL)	–DRL Lamp is turned ON when the engine is started. –DRL Lamp is turned OFF if head lamp low or front fog lamp is turned ON.
23	Head Lamp Welcome	–If the vehicle mode is switched to KEY OFF, all doors are closed and locked while the Head lamp is turned ON (Head lamp switch or AUTO switch + night time), then RKE unlock is activated, the Head lamp is turned ON for 15 seconds.
24	AV Tail Linked	–When the vehicle mode is switched to ACC ON, the auto light sensor ambience is reflected. –If Auto light ambience level is tail lamp ON condition for over 2.5 seconds, then ON signal is sent. –If Auto light ambience level is tail lamp OFF condition for over 2.5 seconds, then OFF signal is sent.
25	PDW-R	–If the shift lever is switched to R position while the vehicle mode is in IGN1 ON, then buzzer is activated 0.5 second later. –Warning level is displayed in the cluster and buzzer is activated corresponding to the warning condition.

cardiagn.com

26	Normal/ARMWAIT/ Relock Mode	–If TX lock signal is received while any one of the doors, hood, or trunk is opened, then only the lock signal is outputted. Hazard lamp is not turned ON and the vehicle does not enter the ARM mode. –If any of the doors is not opened or KEY IN is not detected within 30 seconds after receiving TX unlock signal, then the vehicle returns to ARM mode.
27	Security Indicator Control	–If the vehicle is in ARMWAIT mode while KEY OUT, then Indicator is remained ON. Indicator blinks in interval if the vehicle is in any mode other than ARMWAIT. (Blink Interval: 2 sec. OFF, 0.3 sec. ON)
28	Alarm Condition	–If Alarm activation condition is detected, then start inhibit is turned ON to prevent engine start and the alarm is activated.
29	DISARM/Alarm Deactivation Condition	–If TX UNLOCK/LOCK switch signal is received, unlock/lock signal is outputted for 0.5 second, and START INHIBIT is turned OFF. –If KEY IN switch ON & IGN1 switch ON & IGN2 switch ON & alternator ON is maintained for 30 seconds, then start inhibit is turned OFF and the vehicle mode is switched to DISARM.
30	RESET	–If the battery is disconnected while the alarm is activating, and then reconnected, then the alarm also reactivates. –If the battery is disconnected while the vehicle is in ARM mode, and then reconnected, the vehicle maintains ARM mode.
31	Central Door Lock/ Unlock	–If Driver/Passenger side door KEY lock/unlock switch is turned ON within 3 seconds, then all door lock/unlock signal is outputted for 0.5 second. –If TX lock/unlock signal is received, then all door lock/unlock signal is outputted for 0.5 second. –If Driver door lock switch (Power window) is Lock/Unlock, then all door lock/unlock signal is outputted for 0.5 second.

cardiagn.com

32	Auto Door Lock	–If the vehicle mode is in IGN1 ON & alternator ON, and the vehicle speed is over15km/h(9.3mi/h), all doors are locked within 1.5 seconds. (However, if all doors are already locked or in case all door fail condition, then all door lock function is not executed.) –If any one of the doors is unlocked after locking via above condition, then lock command is executed 3 times. (at 1 sec. interval). Unlocked door that is locked during the 3 attempts is ignored. –Auto door lock function is not engaged in case of crash unlock condition.
33	Auto Door Unlock	–If KEY OFF after KEY IN, then all door unlock is executed. (However, if all doors are already unlocked, then the unlock command is not executed.)
34	Driver Door Unlock Switch Synchronized Auto Door Unlock	–If All doors are closed, and driver door unlock switch is switched from locked to unlocked, then all door unlock signal is outputted 1 time for 0.25 second.
35	Passive KEY Reminder	–This function does not activate if the vehicle speed is over 3Km/h (1.86mi/h). –If KEY Reminder signal is received from SMK, then all door unlock command is outputted for 1 second. –If the door remains locked even if unlock command is outputted for 1 second as stated above, then unlock is attempted for up to 3 times (excluding the 1st output) (1 sec. interval: 0.5 sec. ON/OFF)
36	Crash Door Unlock	–Unlock is executed every time ACU signal is inputted when IGN switch is turned ON. Unlock output continues for the set duration even if the vehicle mode is switched from IGN KEY ON to OFF. –If the Driver/Assist/Rear door lock switch is switched from unlock to lock after executing unlock, then unlock command is executed again for 5 seconds. –Auto Door Lock function is not engaged in case of crash unlock condition.
37	FOLD / UNFOLD	–Fold/Unfold is engaged when Fold/Unfold switch is activated. –If Auto switch is activated, then Fold/Unfold is engaged automatically in case of any of below conditions. 1) If RKE Lock/Unlock. 2) If Passive Lock/Unlock. 3) If Smart Key approach/away signal is detected.

cardiagn.com

cardiagn.com

Please rate this document after reviewing at the bottom of this page.

Removal

1. Disconnect the negative (-) battery terminal.
2. Remove the glove box housing.
   (Refer to Body - "Glove Box Housing")
3. Disconnect the blower motor connector (A).



4. Disconnect the body control module connectors (A).



5. Remove the body control module (A) after loosening the mounting bolts and nuts.

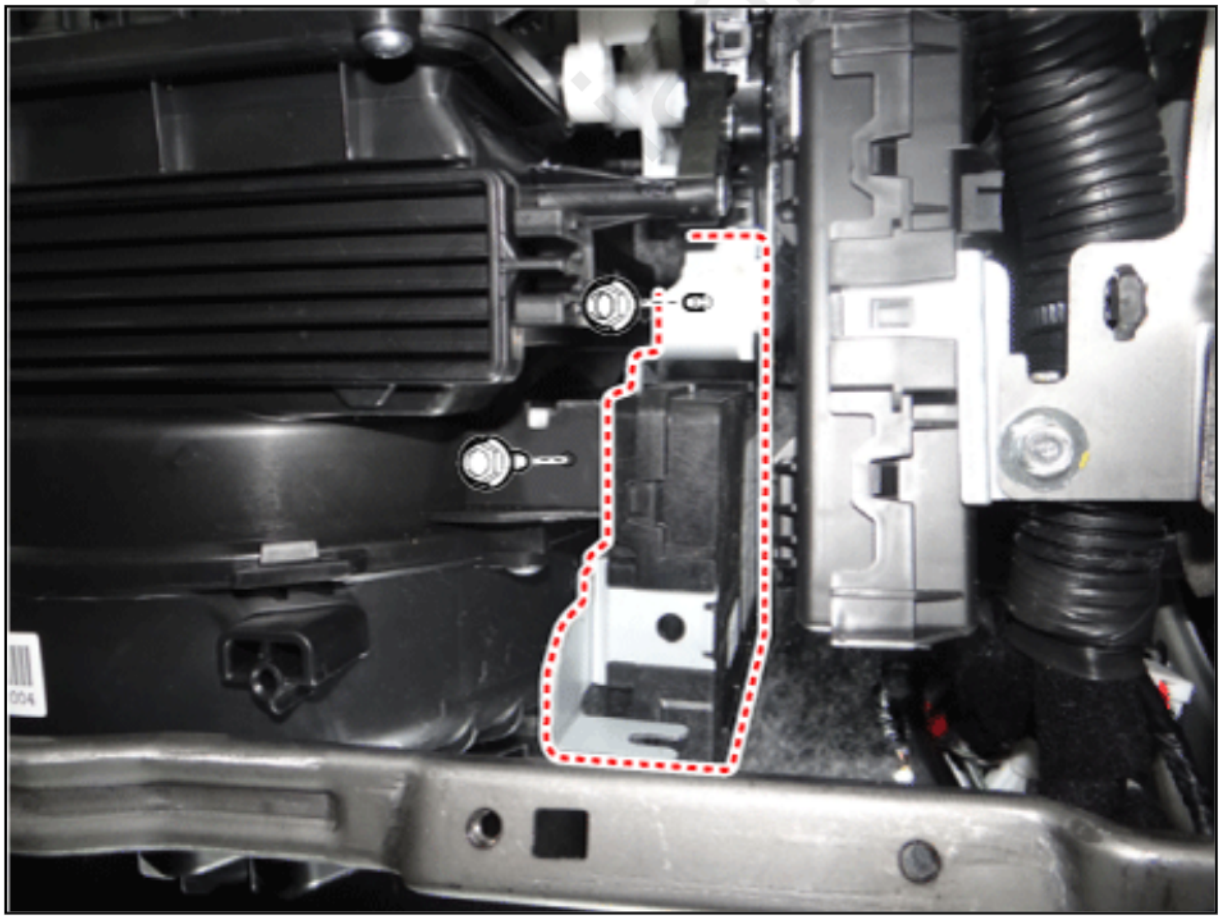

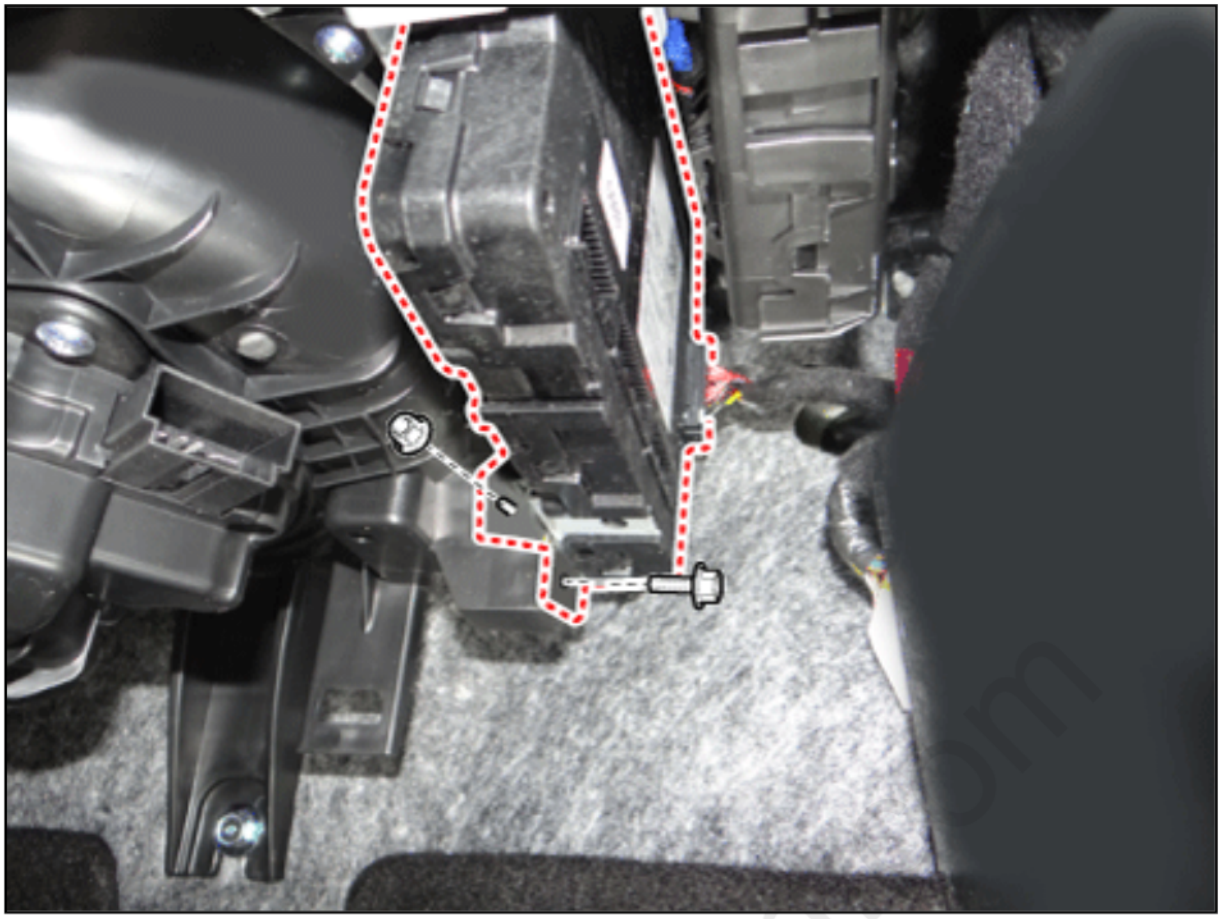

6. Remove the body control module (B) after disconnecting the connector (A).



Installation

1. Install in the reverse order of removal.

BCM Diagnosis With
KDS

1. In the body electrical system, failure can be quickly diagnosed by using the vehicle diagnostic system (KDS).
   The diagnostic system (KDS) provides the following information.
   (1) Self diagnosis : Checking failure and code number (DTC)
   (2) Current data : Checking the system input/output data state
   (3) Actuation test : Checking the system operation condition
   (4) Additional function : Controlling other features including system option setting and zero point adjustment
2. Select the "Car model" and the 'Body Control Module (BCM)' to be checked in order to check the vehicle with the tester.
3. Select the 'Current Data' menu to search the current state of the input/output data.
4. If you want to change user option, select "user option".

cardiagn.com

Please rate this document after reviewing at the bottom of this page.

Component
Location

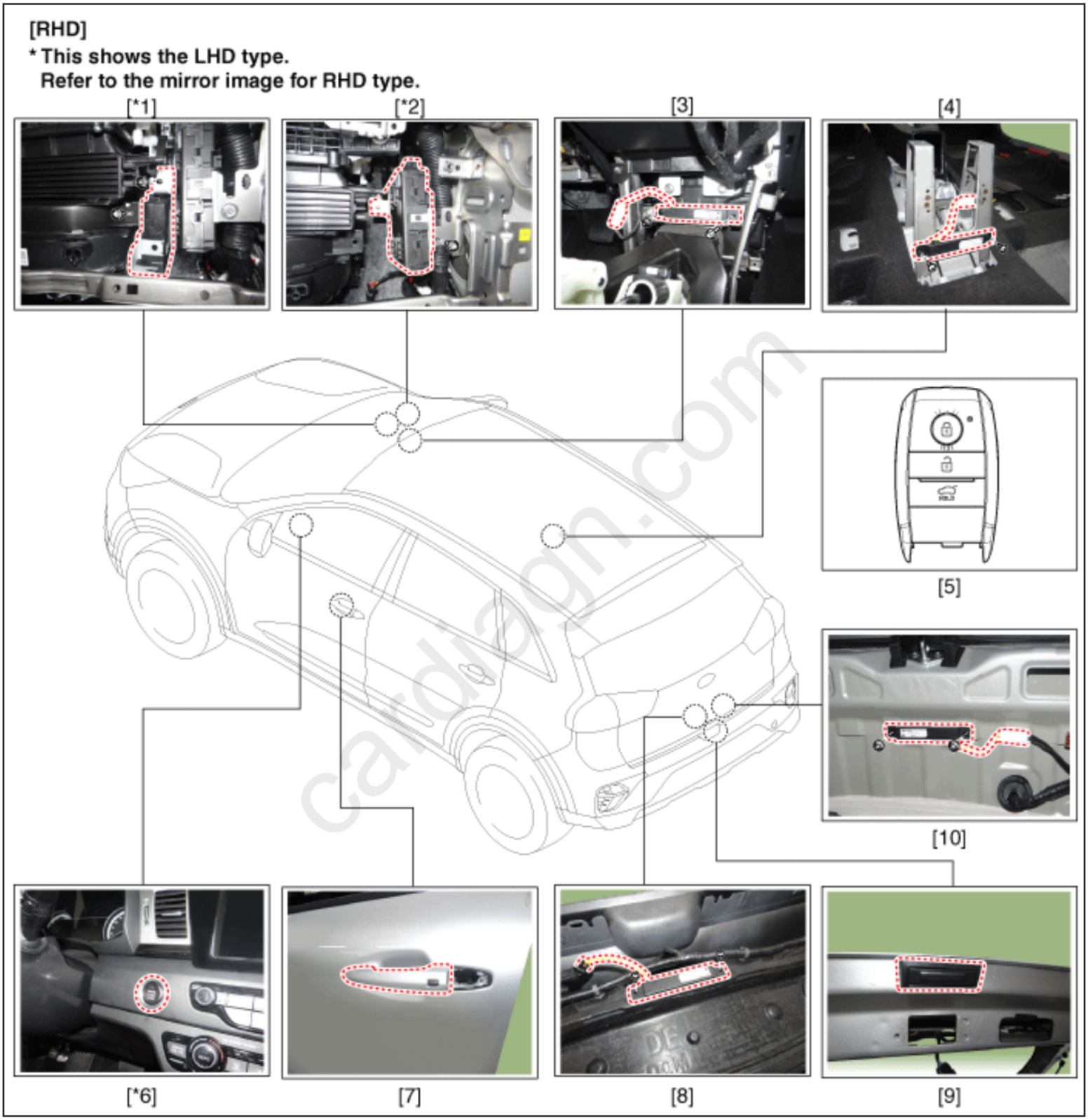

1. Body control module (BCM)
2. Smart key unit (SMK)
3. Interior antenna 1
4. Interior antenna 2
5. FOB key
6. Start Stop Button (SSB)
7. Door handle & door antenna
8. Bumper antenna
9. Liftgate open switch
10. Liftgate antenna

cardiagn.com

Please rate this document after reviewing at the bottom of this page.

Description

System Overview

The System offers the following features:

- –Changing the state of engine ignition and power by using the start button.
- –Controlling external relays for ACC / IGN1 / IGN2 terminal switching and STARTER, without use of mechanical ignition switch.
- –Indicating the vehicle status on display by using explicit messages.
- –Immobilizer function by LF transponder communication between fob and fob holder.
- –Redundant architecture for high system dependability.
- –Interface with Low Speed CAN vehicle communication network.
- –Interface with LIN vehicle communication network depending on platform.

The RKE and SMART KEY functions are not considered part of this Button Engine Start system and are specified in a separate system.

System Main Function

- –Switching of ACC / IGN1 / IGN2 terminals.
- –Control of the STARTER relay BAT line (high side) based on communication with EMS ECU.
- –Management of the Immobilizer function.
- –Management of BES warning function.

Wireless Communications

The electric wave is used to exchange information between vehicle and FOB key. For now, button engine start is applied with smart key FOB key together.

Smart key function is explained separately so refer to the corresponding system contents.

System flowchart

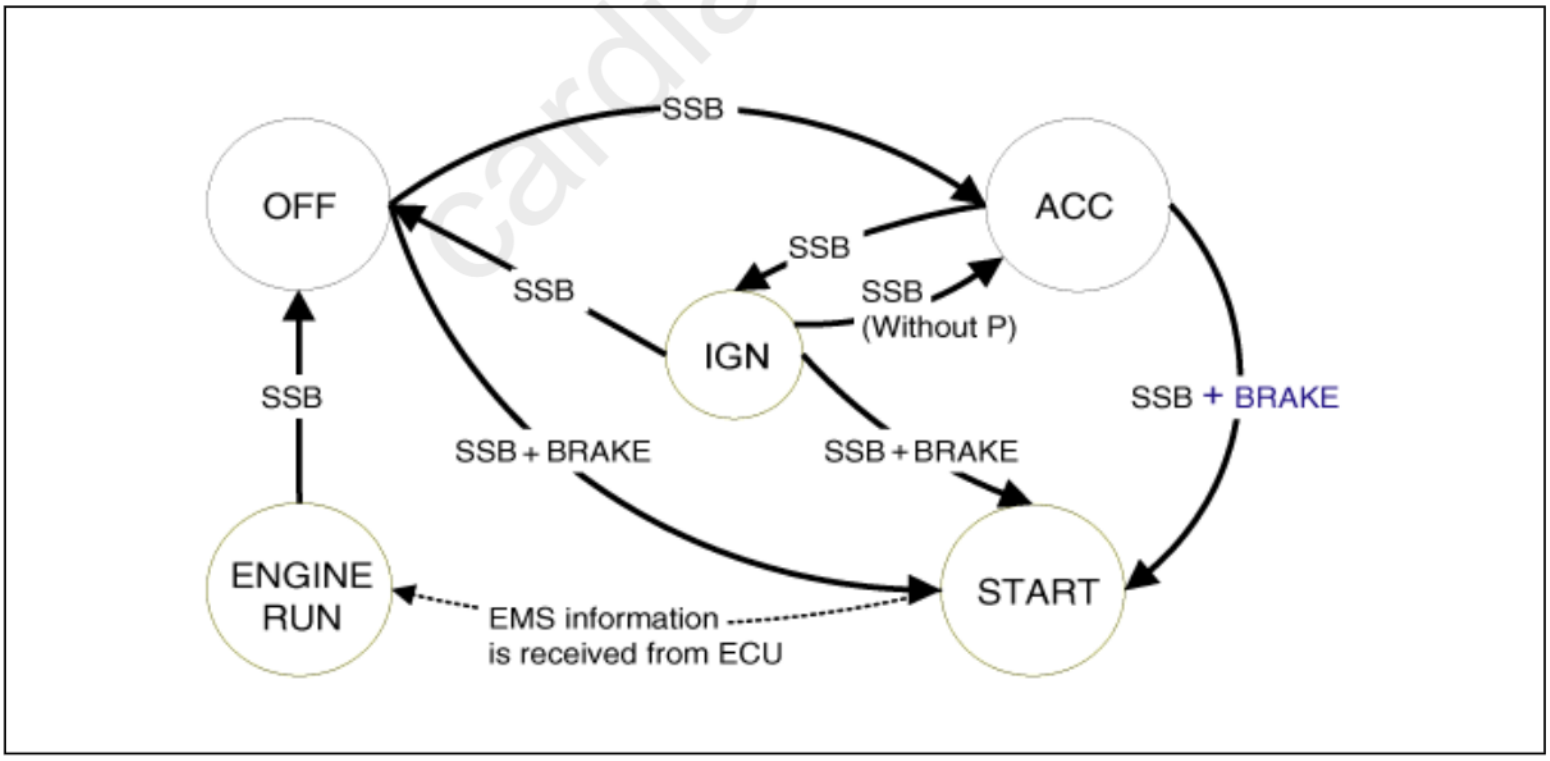

System Block Diagram

cardiagn.com

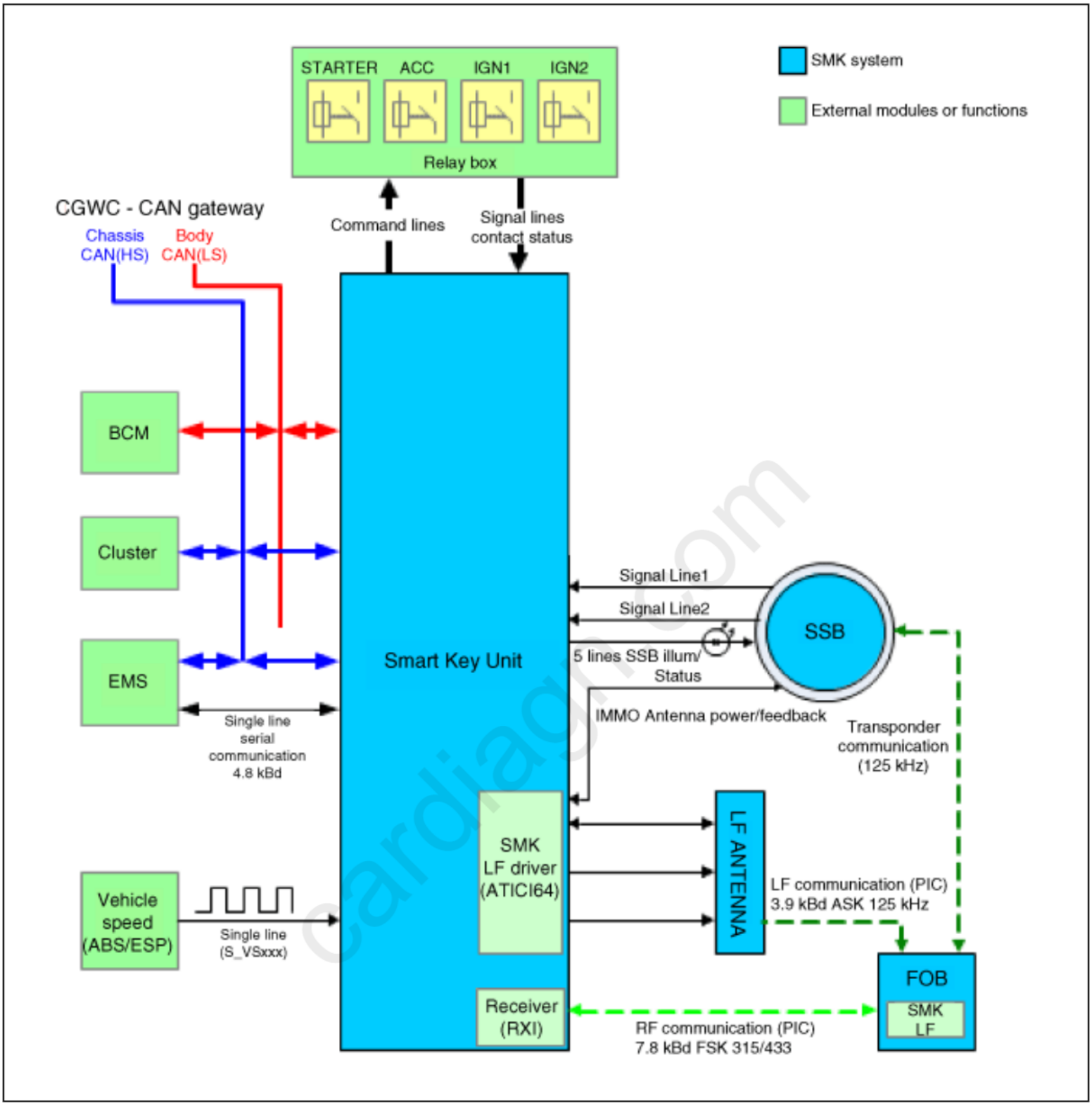

Smart Key Unit

The SMK manages all function related to:

- "Start Stop Button (SSB) monitoring"
- "Immobilizer communication" (with Engine Management System unit for immobilizer release)
- "Authentication server" (Validity of Transponder and in case of Smart Key option Passive Fob authentication)
- "System consistency monitoring"
- "System diagnosis"
- Control of display message / warning buzzer
- Control of SSB LEDs (illumination, clamp state)

The smart key unit masters the entire button engine start system.
It collects information about vehicle status from other modules (vehicle speed, alarm status, driver door open...), reads the inputs (e.g. SSB, Capacitive Sensor / Lock Button, PARK position Switch), controls the outputs (e.g. exterior and interior antennas), and communicates with others devices via the CAN network as well as a single-line interfaces.
The SMK manages the functions related to the "terminal control" by activating external relays for ACC, IGN1 and IGN2. This unit is also responsible for the control of the STARTER relay.
The SMK is also controlling the illumination of the SSB as well as the "system status indicator", which consists of 2 LEDs of different color. The illumination of the fob holder is also managed by the SMK.
The SMK reads the inputs (Engine fob in, vehicle speed, relays contact status), controls the outputs (Engine relay output drive), and communicates with others devices via the CAN.

Limp Home Mode

- In case of no input signal for the brake (AT specification), the ACC mode shall move to “START” by pressing SSM for more than 10 seconds.
- In case of problems with communication between EMS and CAN (the EMS state), the “START” state moved to the “ENGINE RUN” based on RPM input.
- In case that one out of two SSB input lines is disconnected, the electric power cycling is available when SSB is pressed twice within 10 seconds.
  The buzzer rings when the button is pressed in the first time.
  The electric power cycling is available and buzzer stops when the button is pressed twice within 10 seconds.

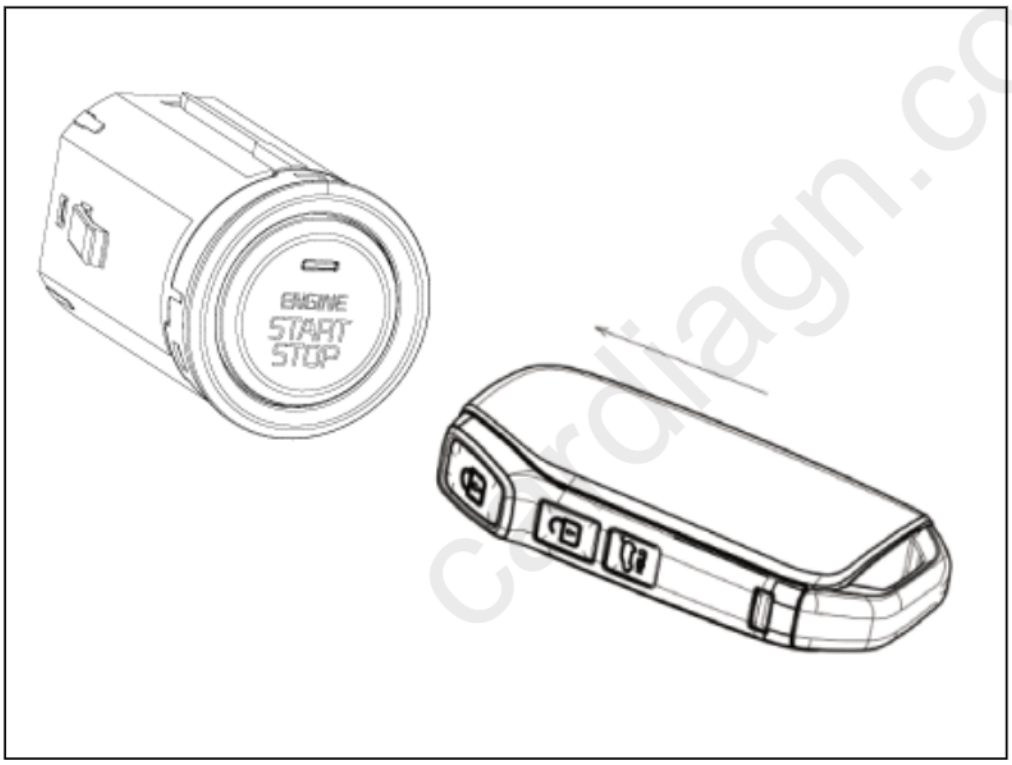

cardiagn.com

Terminal and Starter Relay
Relay is used to switch the terminal ACC / IGN1 / IGN2. Normally-open relay is operated by smart key unit.
One relay coil is connected to output terminal of IBU

Electronic Steering Column Lock (ESCL)
The ESCL is needed to lock the steering column in order to prevent unauthorized usage of the vehicle.
In order to achieve the required safety integrity level, the ESCL is controlled and monitored by the IBU.
Such redundant architecture guarantees that the ESCL motor is supplied only during locking/unlocking operation and that it is disconnected from the battery and ground lines otherwise to avoid unexpected operation while the vehicle is in motion.
Data are exchanged between the ESCL and IBU through an encrypted serial communication interface.

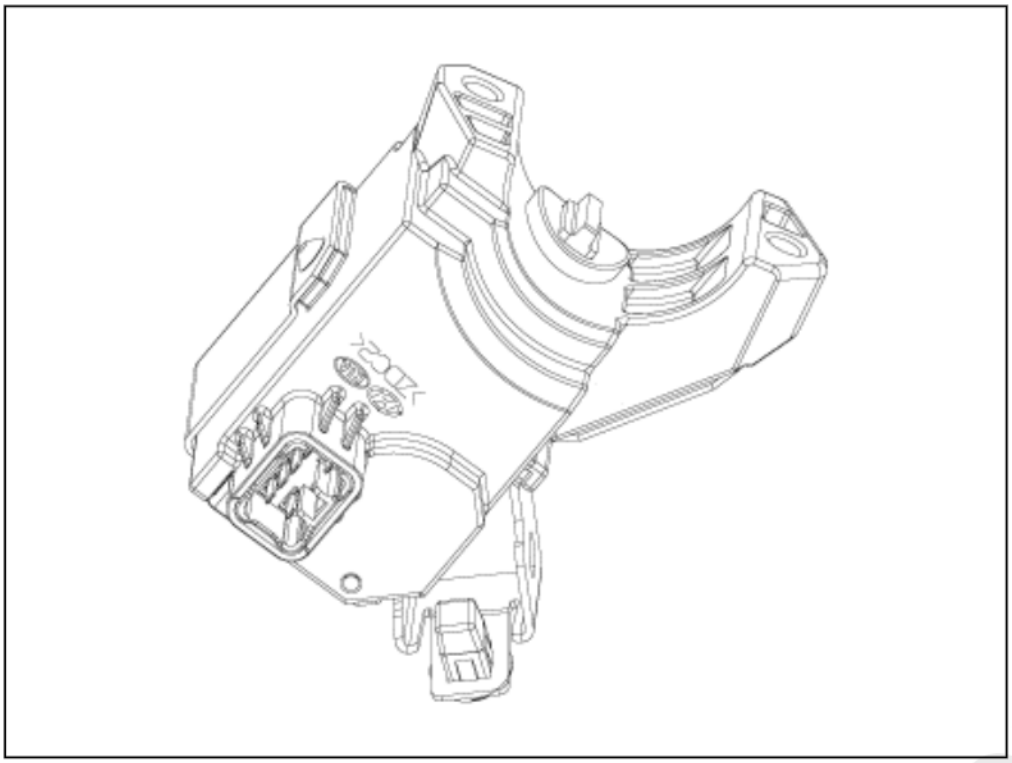

BES System State Chart

System states in learnt mode

In learnt mode, the BES System can be set in 6 different states, depending on the status of the terminals, ESCL and Engine status:

System State	Terminal Status	ESCL Status	Engine status
1. OFF - Locked	OFF	Locked	Stopped
2. OFF - Unlocked	OFF	Unlocked	Stopped
3. ACC	ACC	Unlocked	Stopped
4. IGN	IGN1, IGN2, ACC	Unlocked	Stopped
5. Start	IGN1, Start	Unlocked	Cranking
6. IGN - Engine	IGN1, IGN2, ACC	Unlocked	Running (means "self-running")

Referring to the terminals, the system states described in the table above are same as those one found in a system based on a mechanical ignition switch. The one of distinction with Mechanical-Ignition-Switch based system is that the BES system allows specific transition from [OFF] to [START] without going through [ACC] and [IGN] states.

System states in virgin mode

The BES System can be set in 5 different states (OFF locked is not available in virgin mode), depending on the status of the terminals, ESCL and Engine status:

System State	Terminal Status	ESCL Status	Engine status
1. OFF - Unlocked	OFF	Unlocked	Stopped
2. ACC	ACC	Unlocked	Stopped
3. IGN	IGN1, IGN2, ACC	Unlocked	Stopped

cardiagn.com

4. Start	IGN1, START with special pattern of activation see Chap 6.2.1 for details	Unlocked	Cranking
5. IGN - Engine	IGN1, IGN2, ACC	Unlocked	Running (means "self-running")

Referring to the terminals, the system states described in the table above are same as those one found in a system based on a mechanical ignition switch. The one of distinction with Mechanical-Ignition-Switch based system is that the BES system allows specific transition from [OFF] to [START] without going through [ACC] and [IGN] states.

cardiagn.com

Please rate this document after reviewing at the bottom of this page.

Schematic
Diagrams



Button

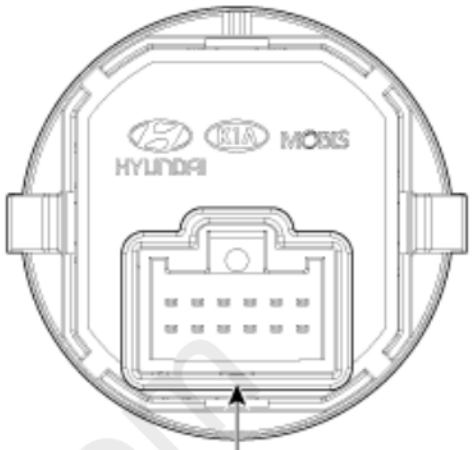

Connector A

Connector A	No.	Description	No.	Description
	1	SSB Switch 1	7	Ground
	2	Battery (+)	8	SSB Switch 2
	3	SSB LED Indicator (ACC)	9	SSB LED Indicator (IGN)
	4	SSB Illumination (-)	10	Rheostat
	5	SSB Illumination (+)	11	-
	6	Immobilizer antenna power	12	Immobilizer antenna ground

carcian.com

Please rate this document after reviewing at the bottom of this page.

Removal

1. Disconnect the negative (-) battery terminal.
2. Remove the crash pad garnish assembly [RH].
   (Refer to Body - "Crash Pad Garnish [RH]")
3. Remove the start/stop button.
   (1) Push the fixed hooks.

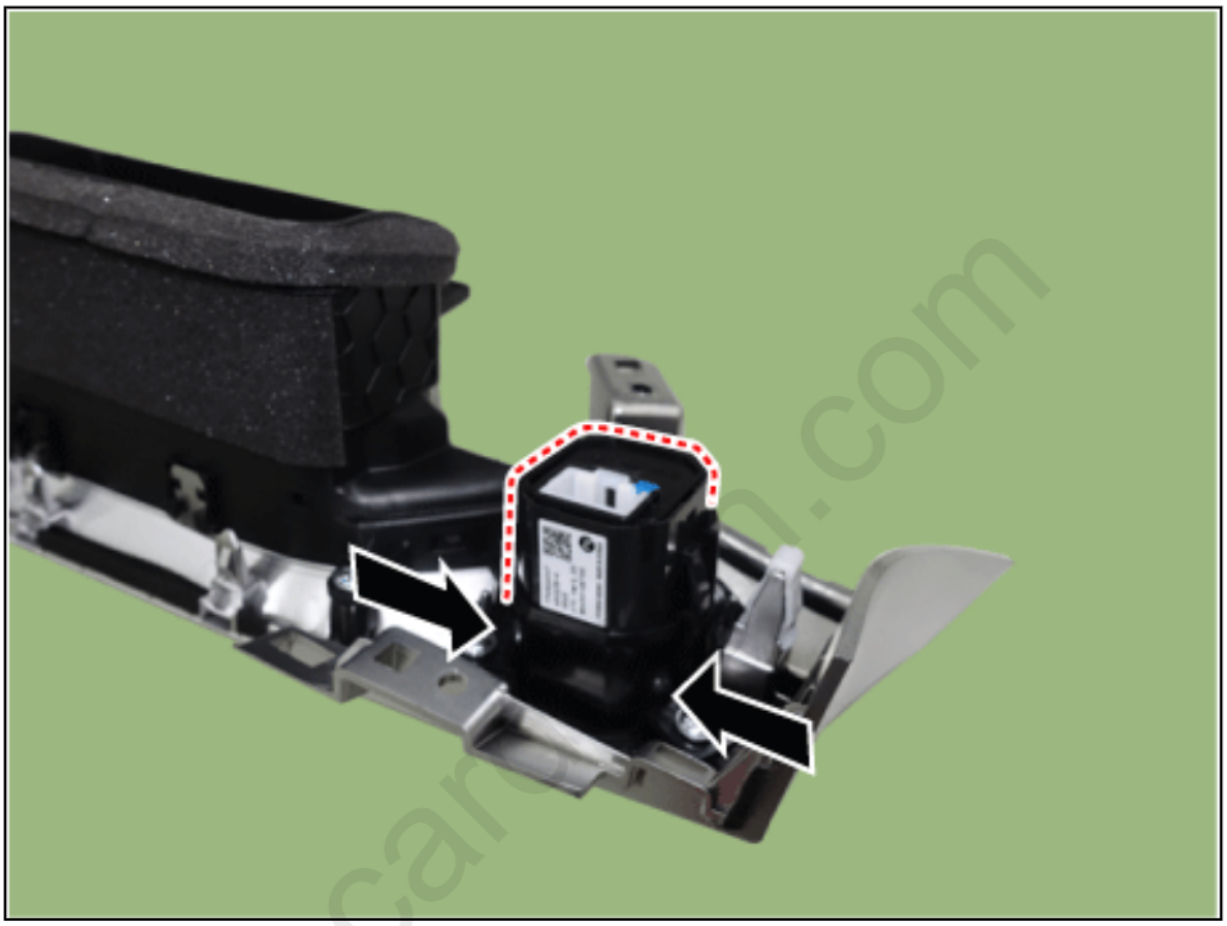

   (2) Remove the start/stop button bracket (A) after loosening the mounting screws.

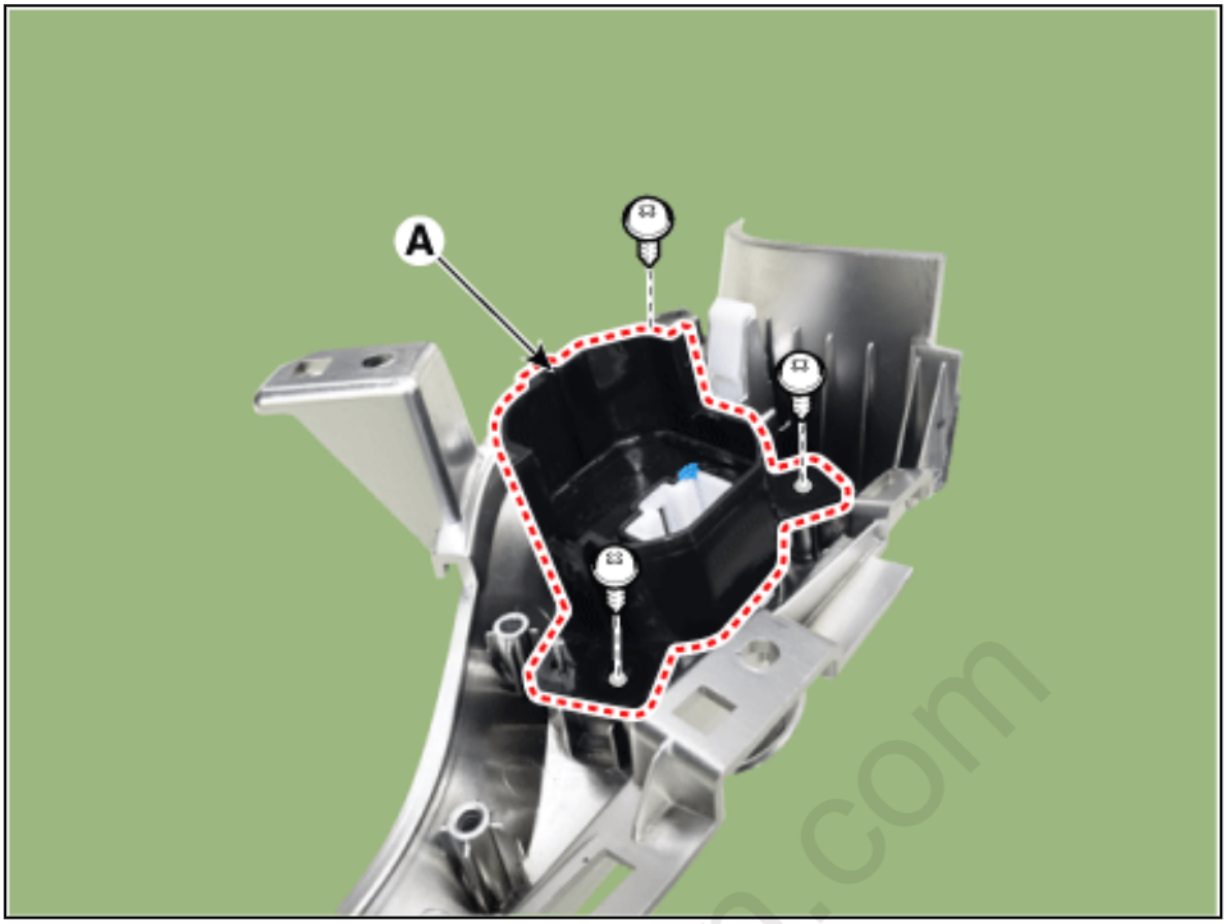

(3) Remove the start/stop button (A) by pressing it in the direction of arrow after pushing the fixed hooks.

cardiagn.com

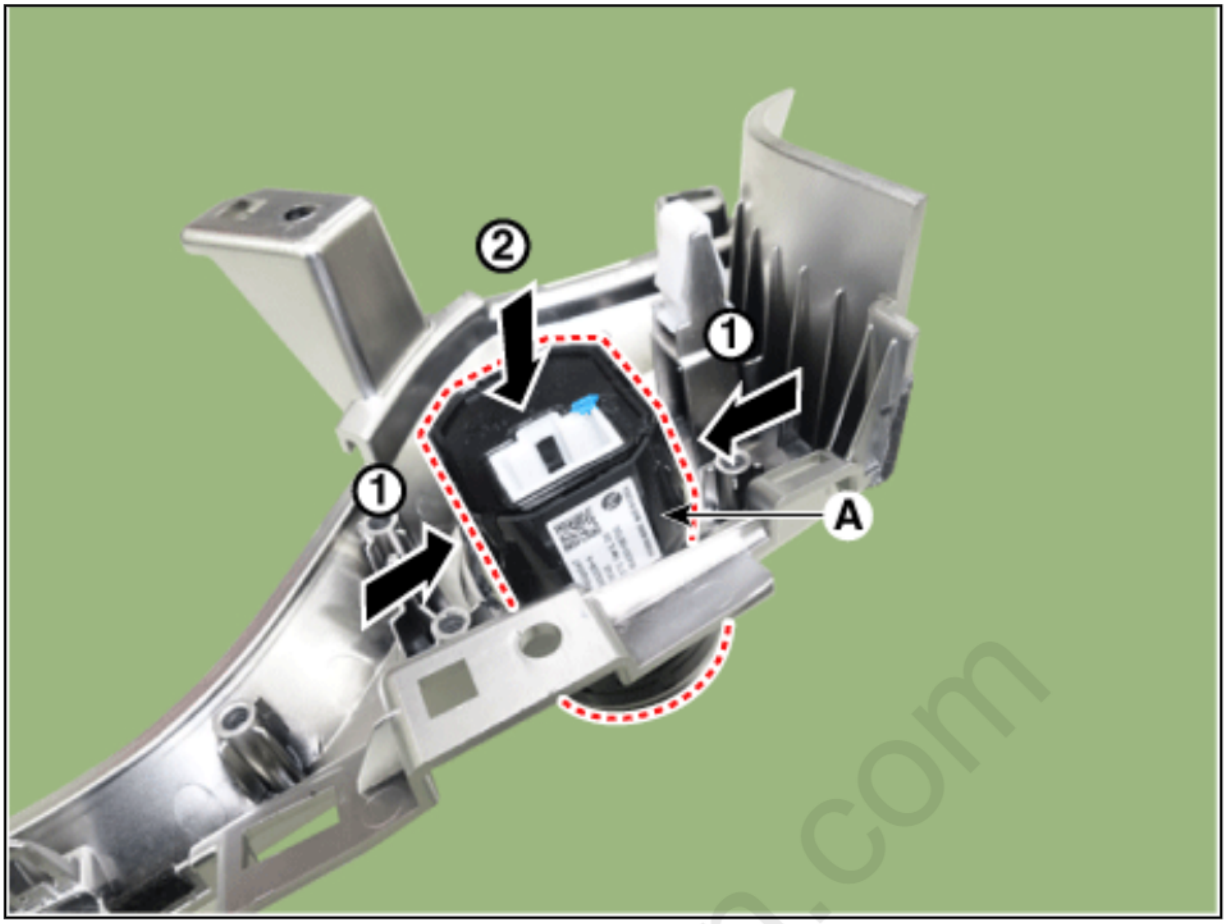

Installation

1. Install in the reverse order of removal.

cardiagn.com

Please rate this document after reviewing at the bottom of this page.

Component

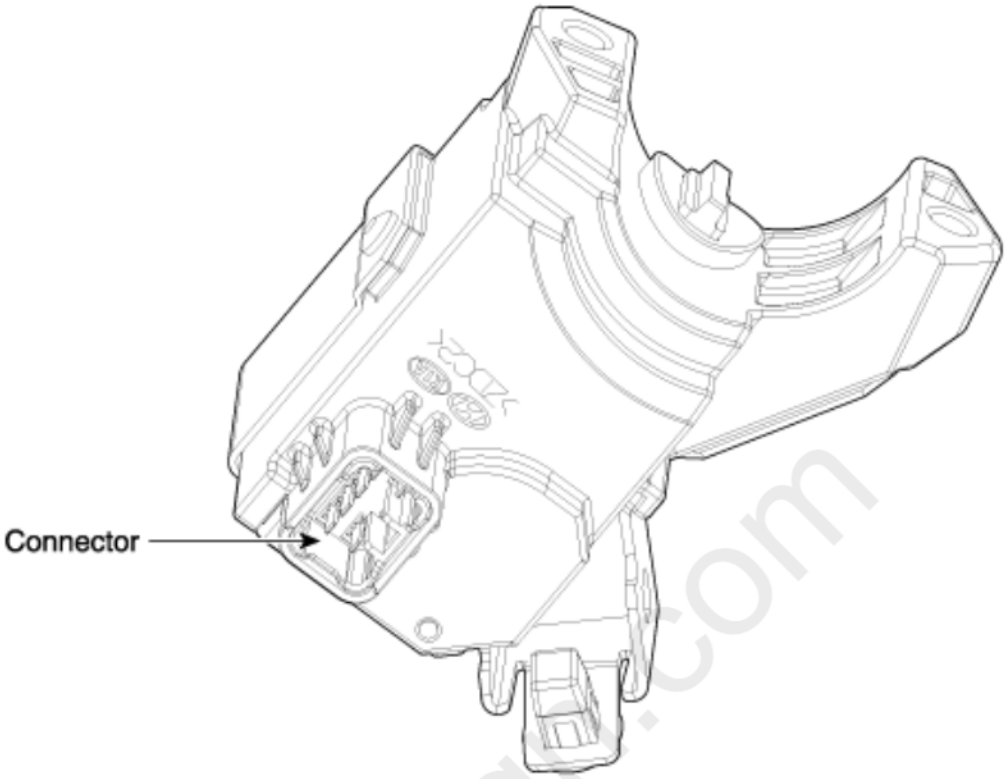

Connector (6 pins)	
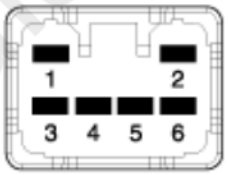	
Pin No	Description
1	-
2	Ground
3	Power(12V)
4	ESCL-Enable (Lock)
5	ESCL- Unlock
6	Data line

cardiagn.com

Please rate this document after reviewing at the bottom of this page.

Removal

1. Disconnect the negative(-) battery terminal.
2. Remove the crash pad lower panel.
   (Refer to Body - "Crash Pad Lower Panel")
3. Remove the steering column upper and lower shrouds.
   (Refer to Body - "Steering Column Shroud Panel")
4. Disconnect the electronic steering column lock connector (A).

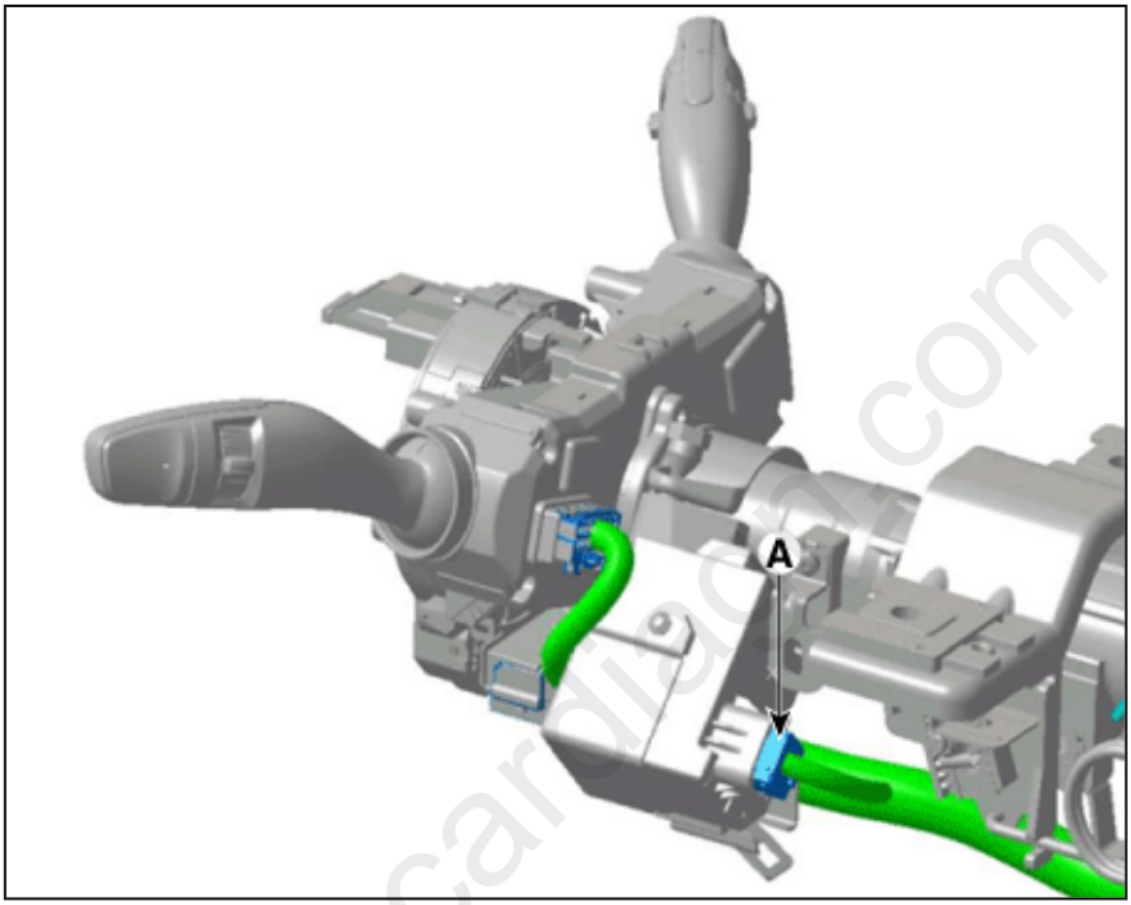

5. Remove the electronic steering column lock (A).
   (Refer to Steering System - "Steering Column and Shaft")

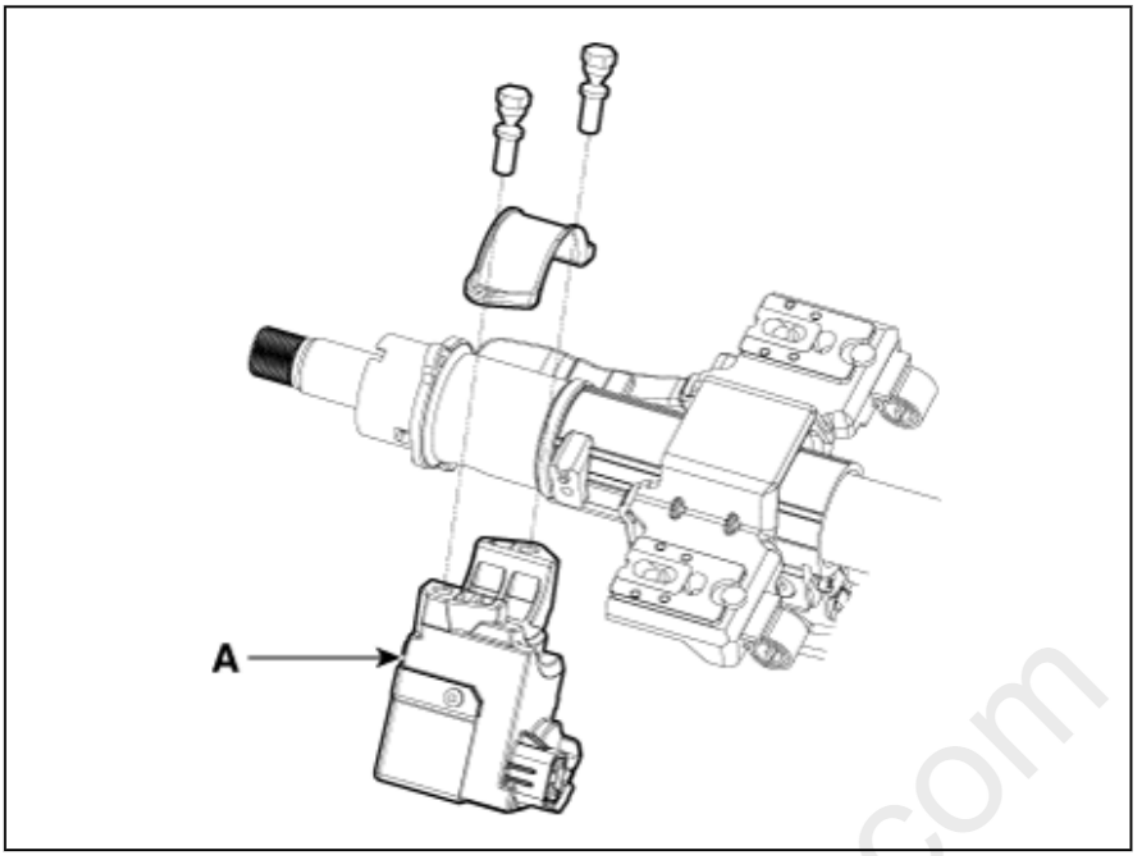

Installation

1. Install the electronic steering column lock.

- Do not reuse the shear bolts.
- When installing the new shear bolts to the electronic steering column lock, tighten the shear bolts until its head is cut off.

Tightening torque :
7.0 - 13.0 N·m (0.7 - 1.3 kgf·m, 5.0 - 9.4 lb·ft)

2. Install the steering column.
3. Install the crash pad lower panel.

cardiagn.com

Please rate this document after reviewing at the bottom of this page.

Schematic
Diagrams

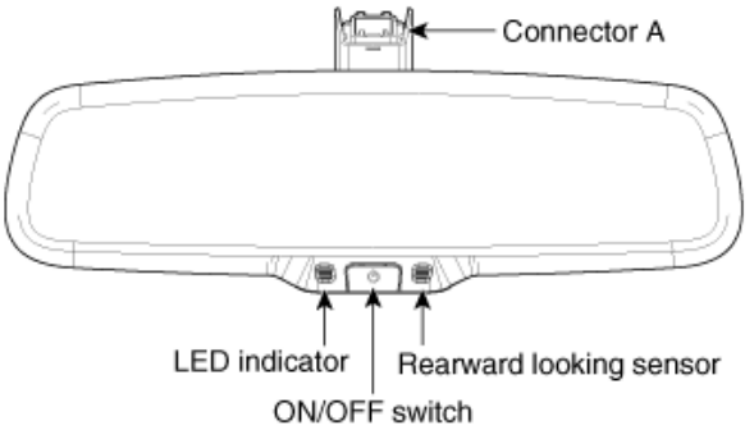

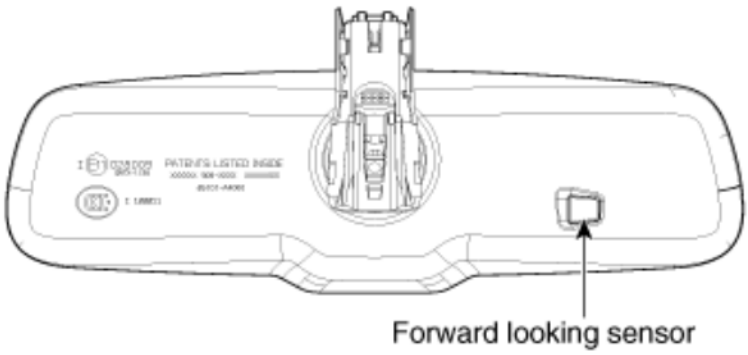

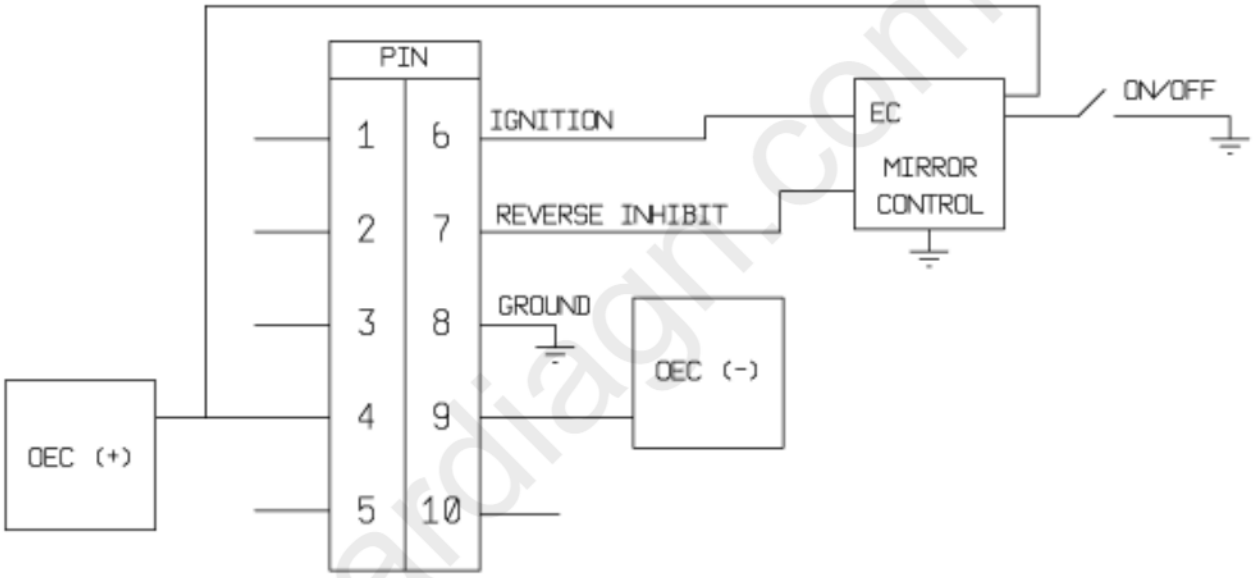

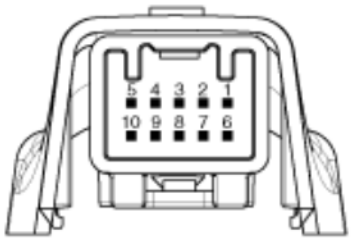

Pin	Description
1	-
2	-
3	-
4	OEC (+)
5	-
6	Ignition
7	Reverse inhibiter
8	Ground
9	OEC (-)
10	-

cardiagn.com

Please rate this document after reviewing at the bottom of this page.

Description

The ECM (Electro Chromatic inside rear view Mirror) is one that automatically dims to protect the driver's eyes when it senses light reflecting from the car behind. The sensor in the mirror detects the brightness and if the headlight from the car behind is reflected on the mirror, the chemical layer inside the mirror reacts to glare and adjusts the reflectivity from 10 to 70%. When switching to the reverse gear, the mirror becomes bright regardless of the surrounding. The ECM receives voltage, ground and reverse gear signals, and uses two sensors to measure the intensity of glaring.

1. The forward facing sensor determines whether the surrounding space is dark enough to activate the function.
2. The rearward facing sensor detects the glare on the mirror. If the glare is detected, the sensor transmits the signal for the mirror to dim
3. The ECM is darkened to the level as determined by the rearward looking sensor. When the glaring is no longer detected, the mirror stops functioning.

(1. LED indicator, 2. ON/OFF Switch, 3. Rearward looking sensor, 4. Forward looking sensor)

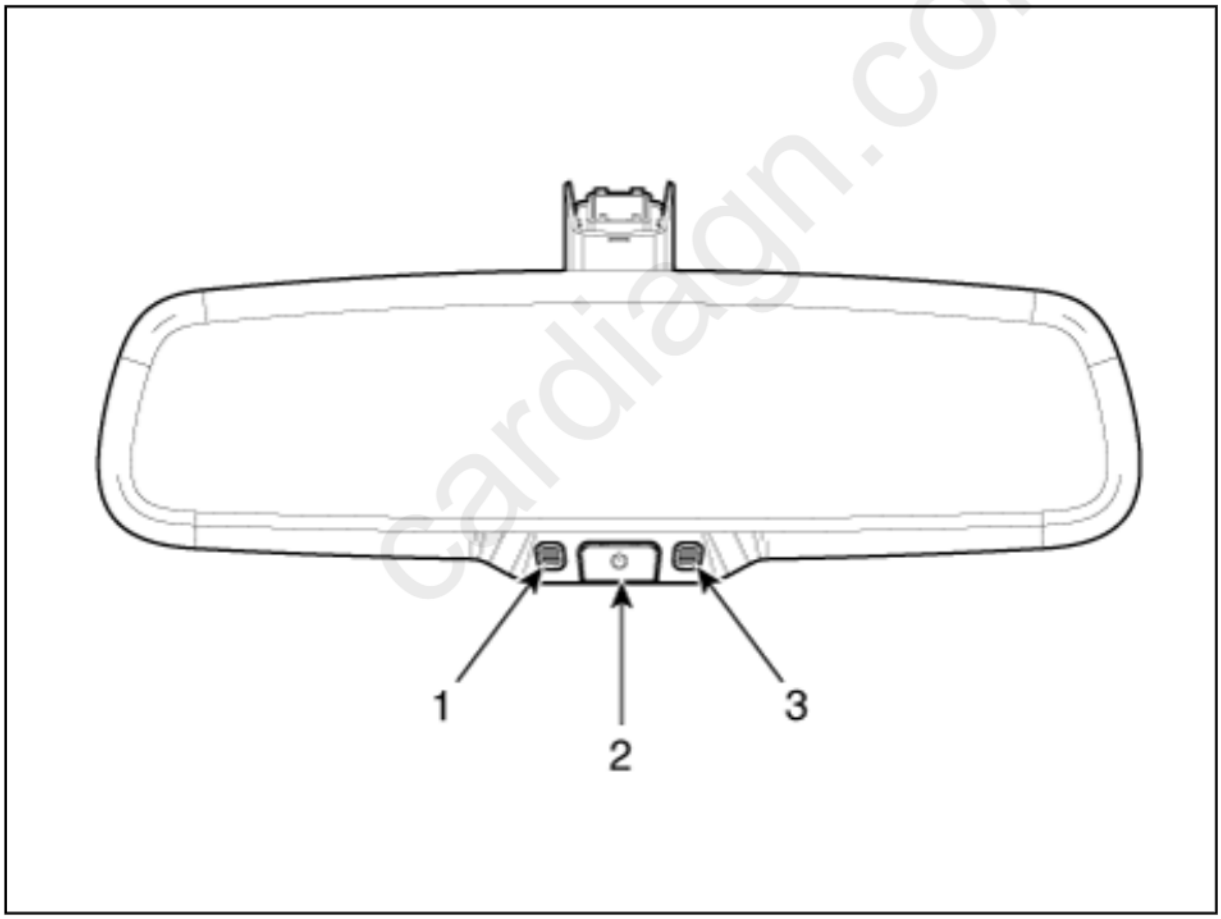

cardiagn.com

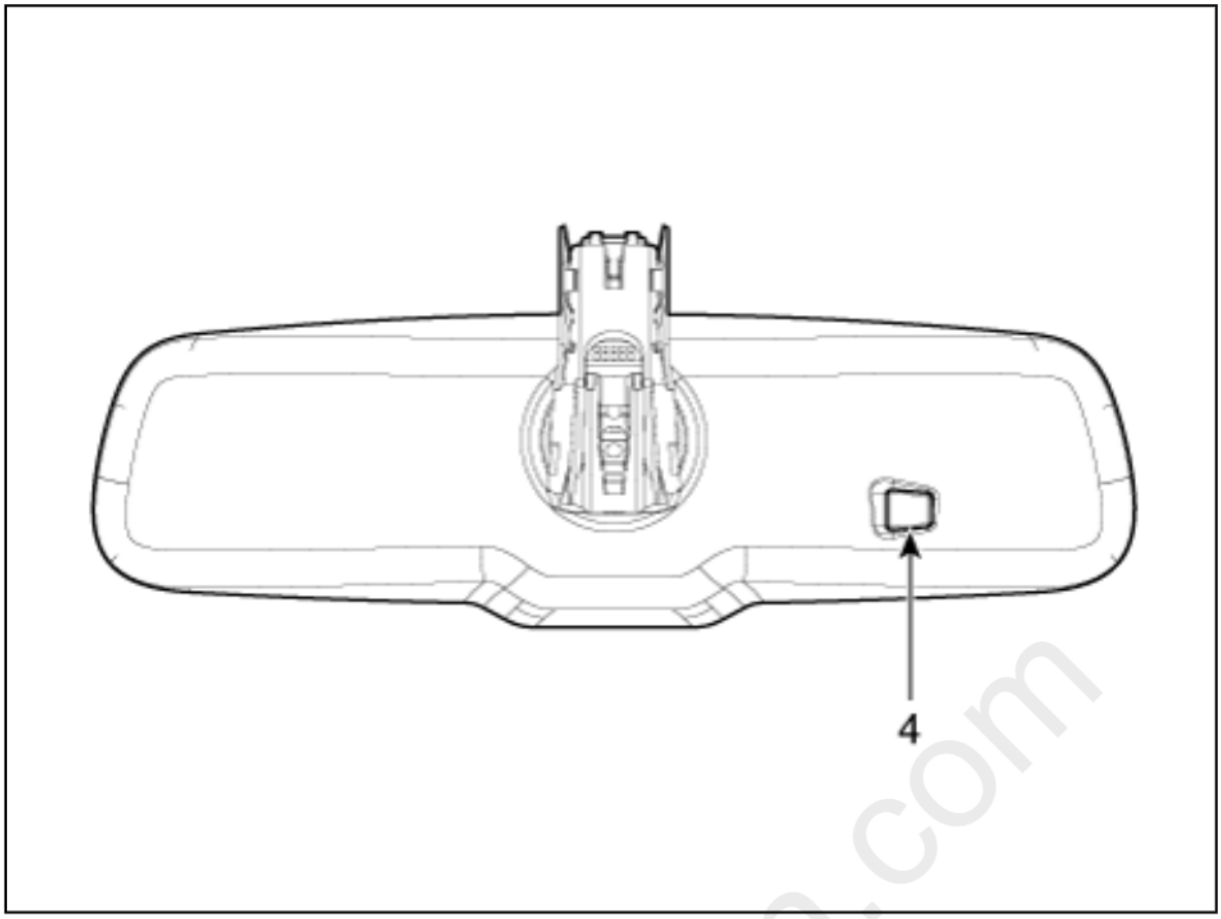

Automatic-dimming
Function

To protect your vision during nighttime driving, your mirror will automatically dim upon detecting glare from the vehicles traveling behind you. The auto-dimming function can be controlled by the Dimming ON/OFF Button :

1. Pressing and holding the Feature Control button for more than 3 but less than 6 seconds turns the auto-dimming function OFF which is indicated by the green Status Indicator LED turning off.
2. Pressing and holding the Feature Control button again for more than 3 but less than 6 seconds turns the auto-dimming function ON which is indicated by the green Status Indicator LED turning on.

The mirror defaults to the "ON" position each time the vehicle is started.

carmanuals.com

Please rate this document after reviewing at the bottom of this page.

Inspection

Check it by the procedure below to see if the function of the ECM is normal.

1. Turn the ignition key to the "ON" position.
2. Cover the forward facing sensor.
3. Head a light to the rearward-facing sensor.
4. The ECM shall dim as soon as the rearward-facing sensor detects a certain level of brightness.

> If this test is performed in daytime, the ECM may be darkened as soon as the forward facing sensor is covered.

5. In the reverse gear, the ECM shall not dim.
   When directing light to both the forward-facing and rearward-facing sensors, the ECM shall not dim.

Removal

1. Remove the mirror wiring cover (A).



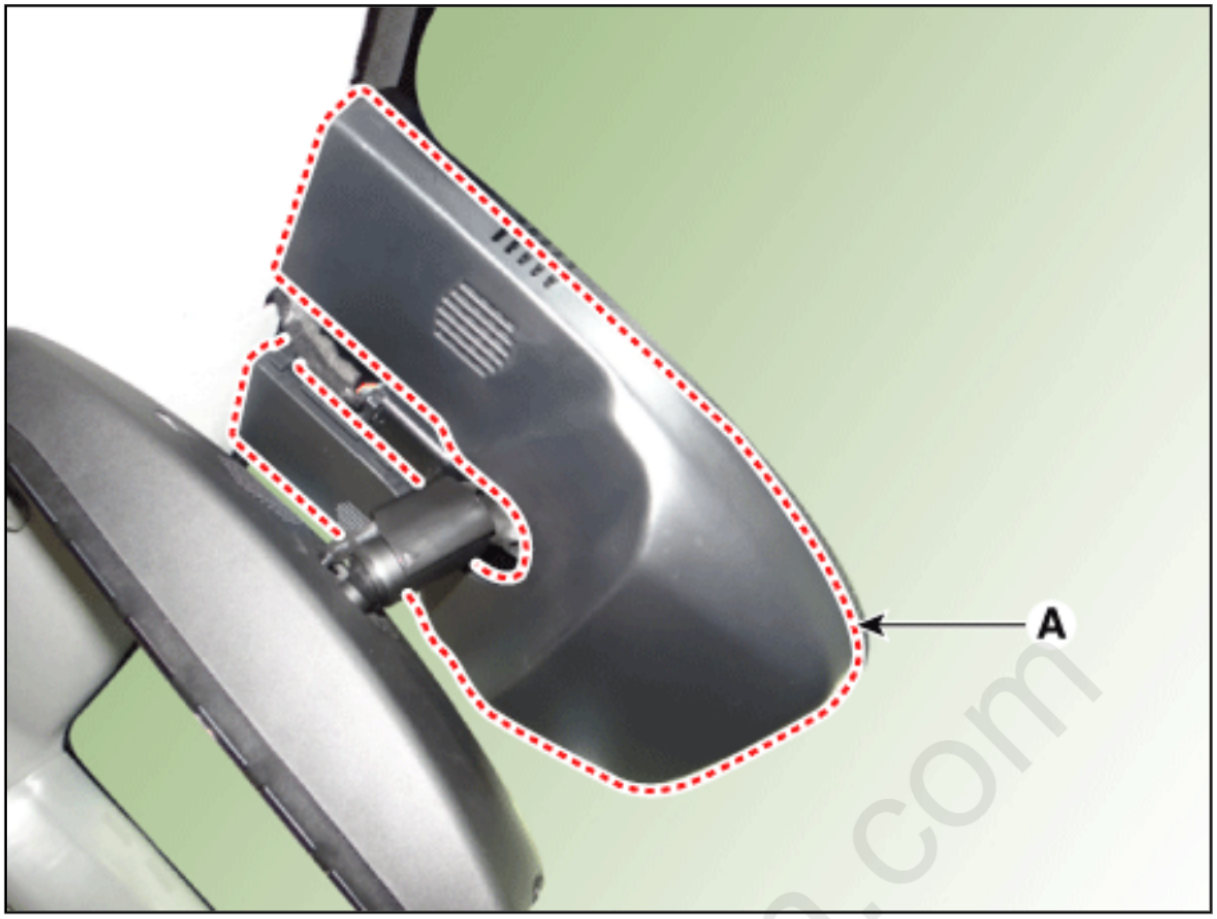

2. Remove the mirror connector (A).



3. Remove the mirror (A) by pulling up the mirror in the arrow direction below.

Make sure not to damage the mounting bracket (B) when removing the mirror.

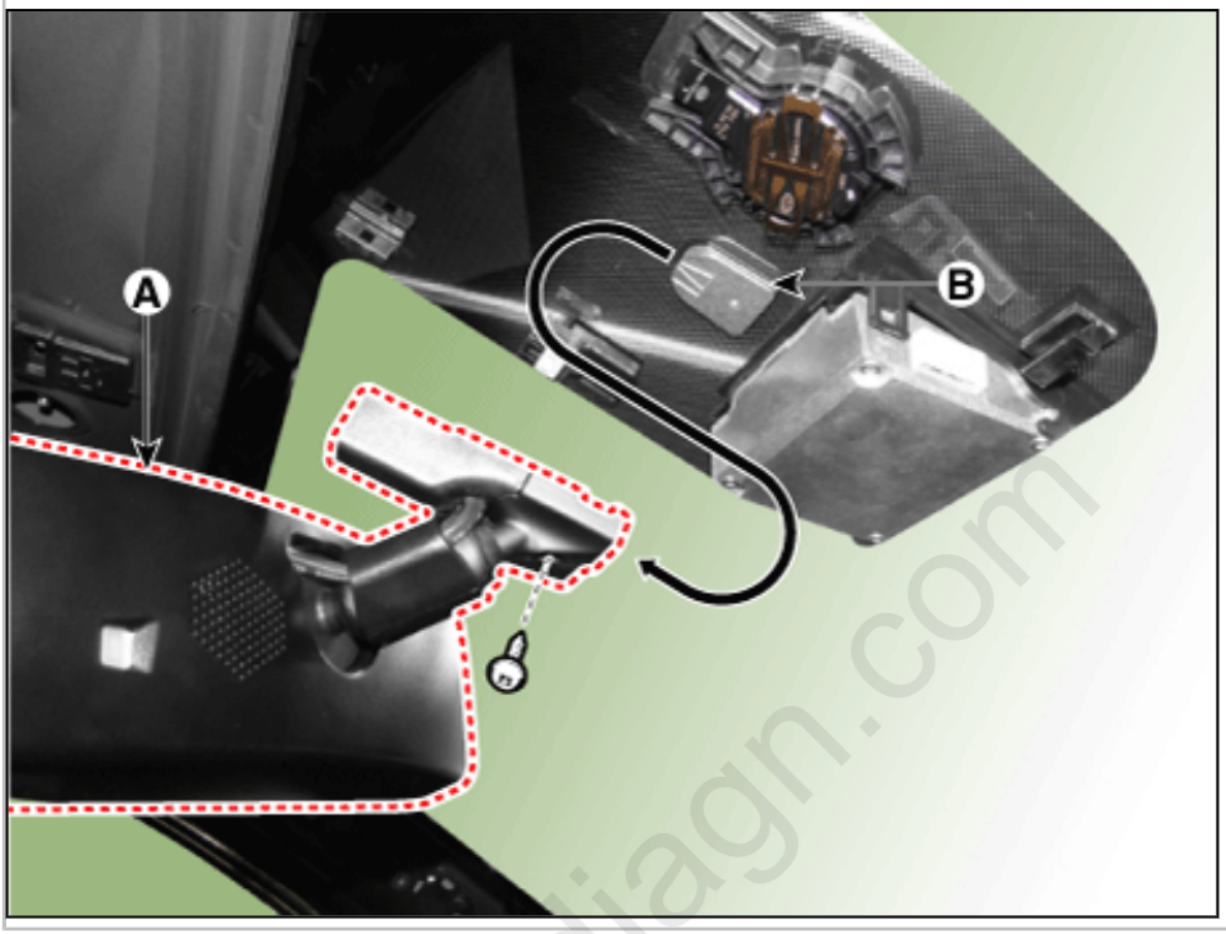

Installation

1. When installing the mirror, be careful not to damage the mounting bracket.
2. Install the mirror wiring cover and rain sensor cover after reconnecting the connector and tightening the screw.

cardiagn.com

Please rate this document after reviewing at the bottom of this page.

Component
Location

[RHD]

* This shows the LHD type.
  Refer to the mirror image for RHD type.



1. Fuel filler door open switch
2. Fuel filler door release actuator

Please rate this document after reviewing at the bottom of this page.

Removal

1. Disconnect the negative (-) battery terminal.
2. Remove the left luggage side trim.
   (Refer to Body - "Luggage Side Trim")
3. Disconnect the fuel filler door release actuator connector (A).



4. Remove the fuel filler door housing.
   (Refer to Body - "Fuel Filler Door")
5. Remove the fuel filler door release actuator (A) after loosening the mounting bolts.



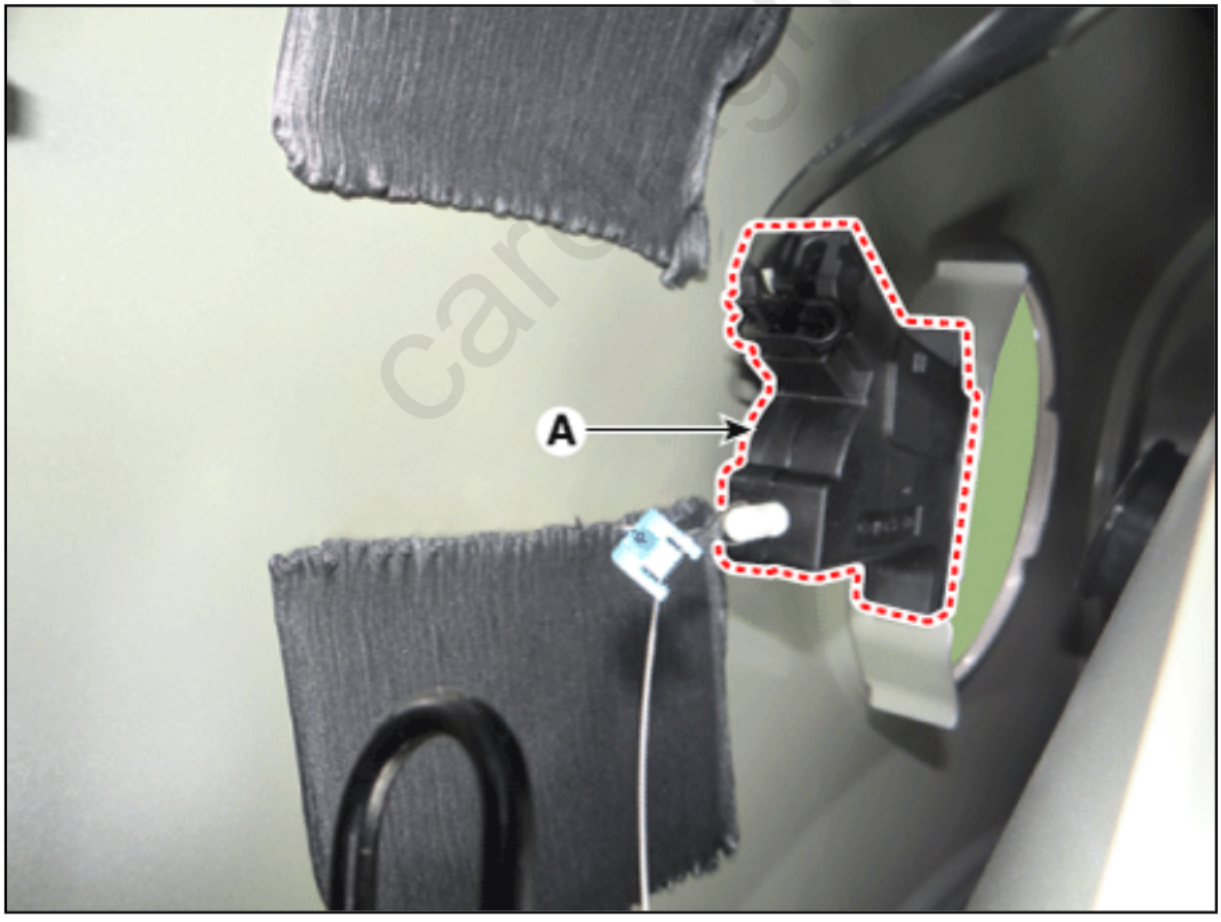

Installation

1. Install in the reverse order of removal.

Inspection

1. Check for continuity between terminals No. 2 and No. 4. If there is no continuity, replace the fuel filler door release actuator.

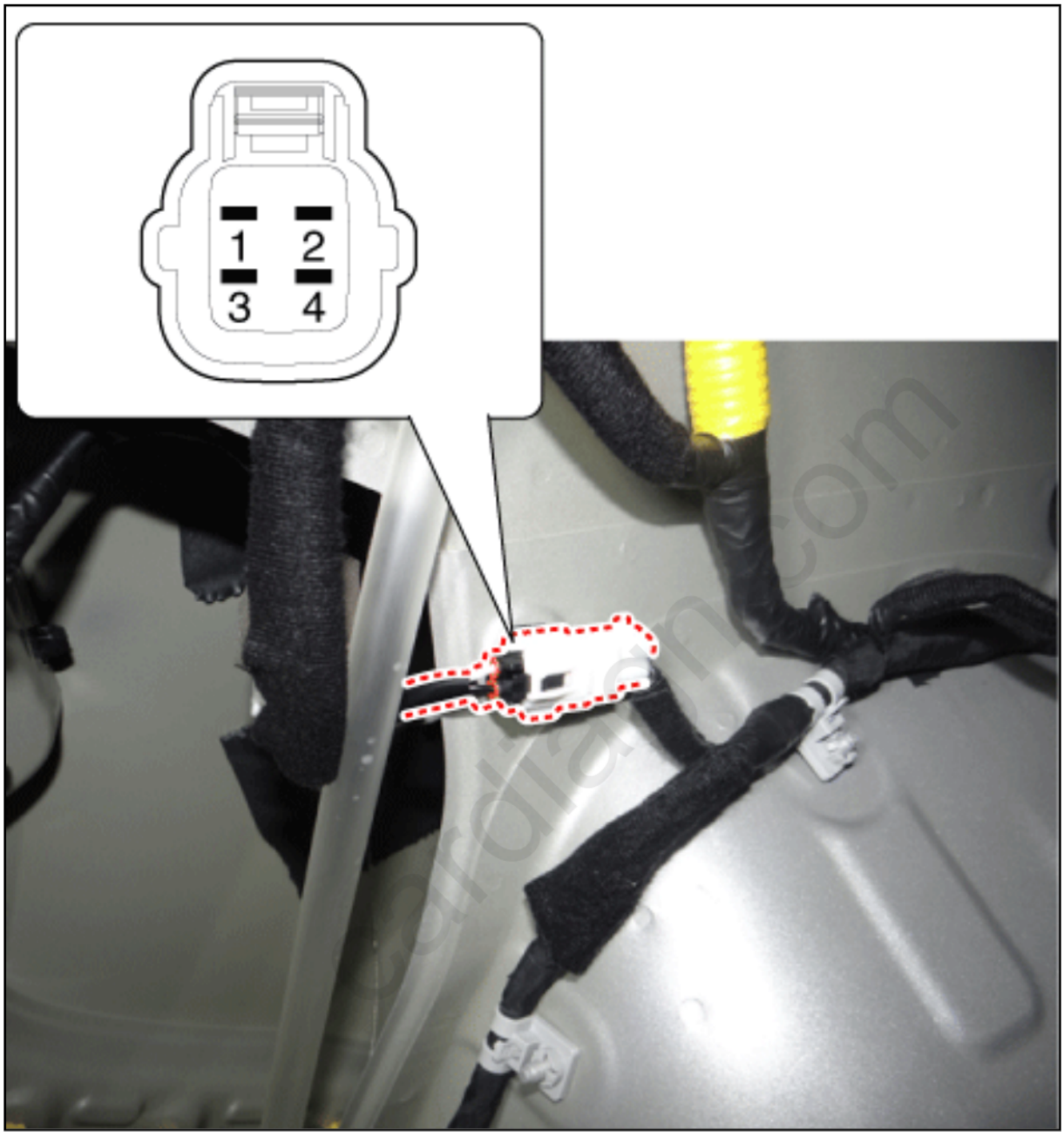

Terminal / Operation	2	4
Lock	⊖	⊕
Unlock	⊕	⊖

cardiagn.com

Please rate this document after reviewing at the bottom of this page.

Components

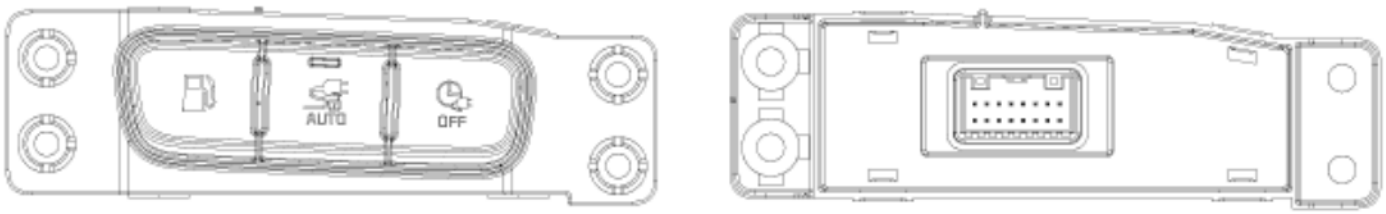

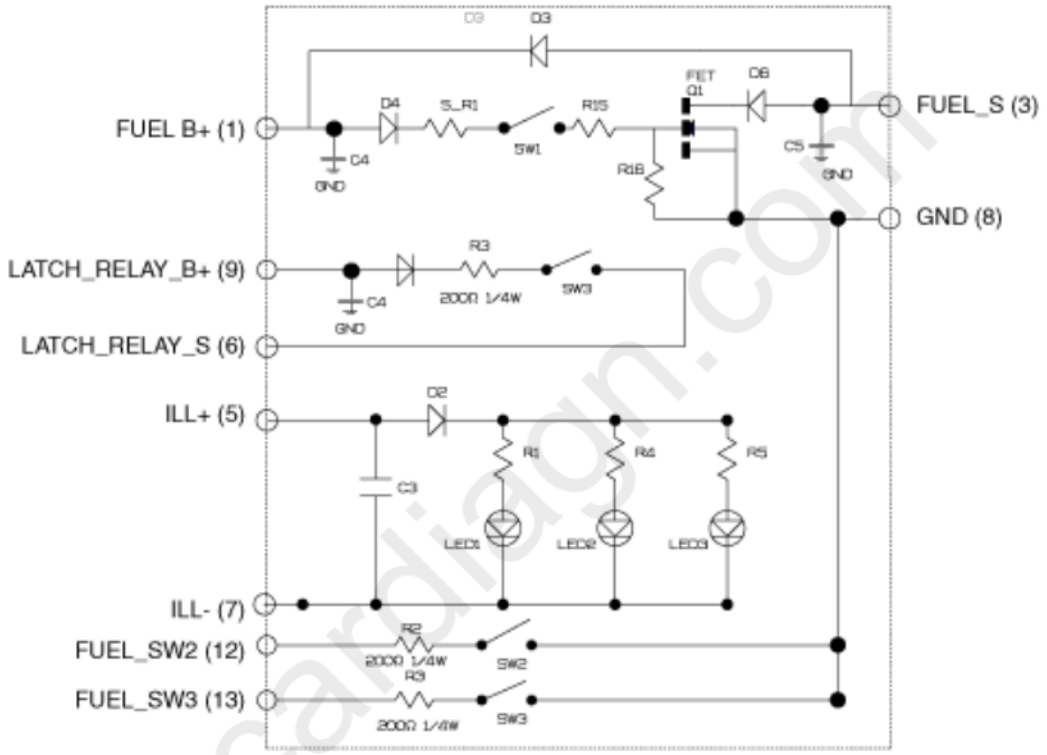

cardiagn.com

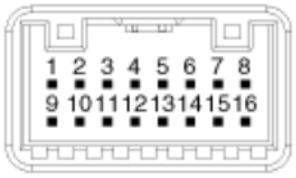

Connector	Pin	Function	Pin	Function
	1	Battery (+)	9	Latch relay power
	2	-	10	Fuel indicator
	3	Fuel filler door switch	11	-
	4	-	12	Fuel switch 2
	5	Illumination (+)	13	Fuel switch 3
	6	Latch relay signal	14	Detent
	7	Illumination (-)	15	-
	8	Ground	16	IGN3

Please rate this document after reviewing at the bottom of this page.

Removal

1. Disconnect the negative (-) battery terminal.
2. Remove the crash pad lower panel.
   (Refer to Body - "Crash Pad Lower Panel")
3. Remove the crash pad lower switch (A) after loosening the mounting screws.

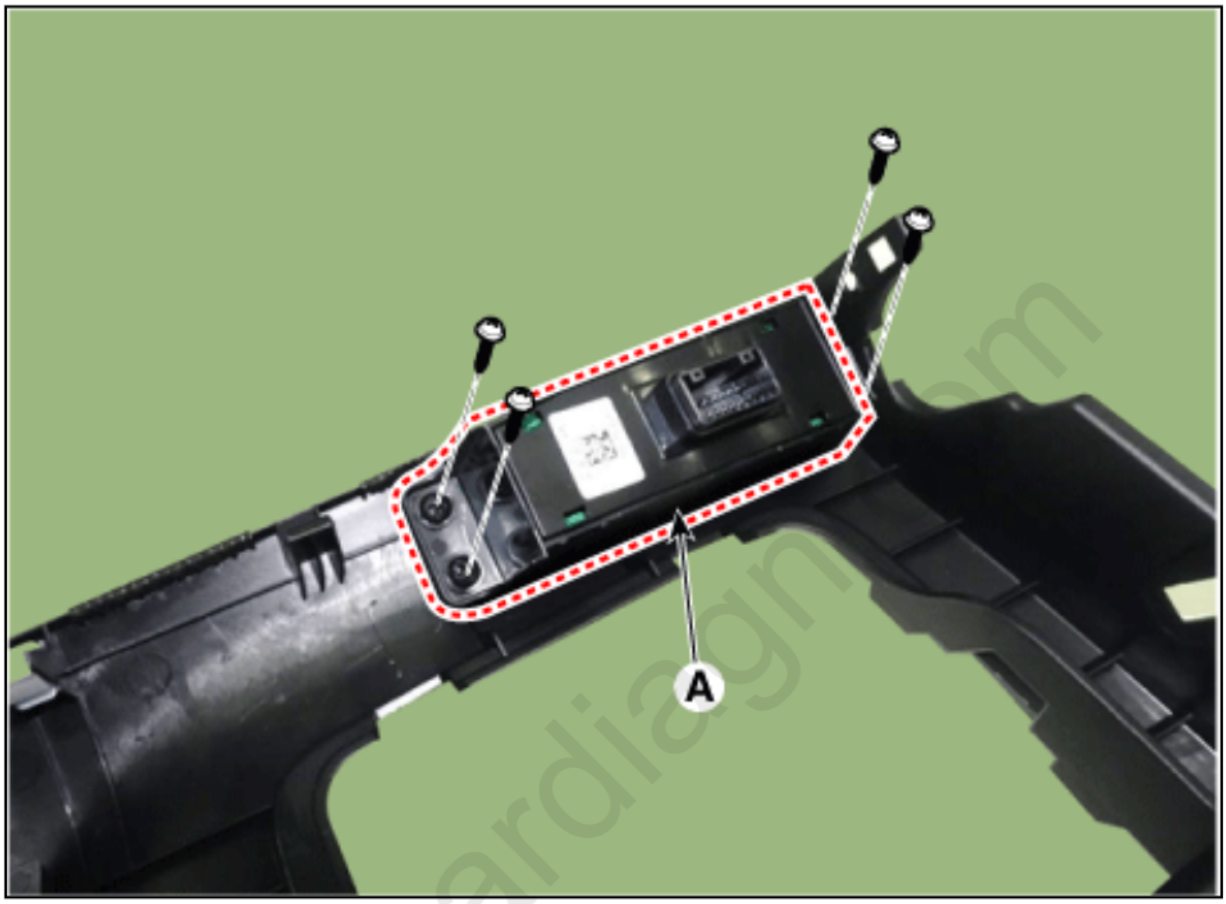

Installation

1. Install in the reverse order of removal.

Inspection

1. Check for continuity between the terminals. If there is an abnormality, replace the switch.

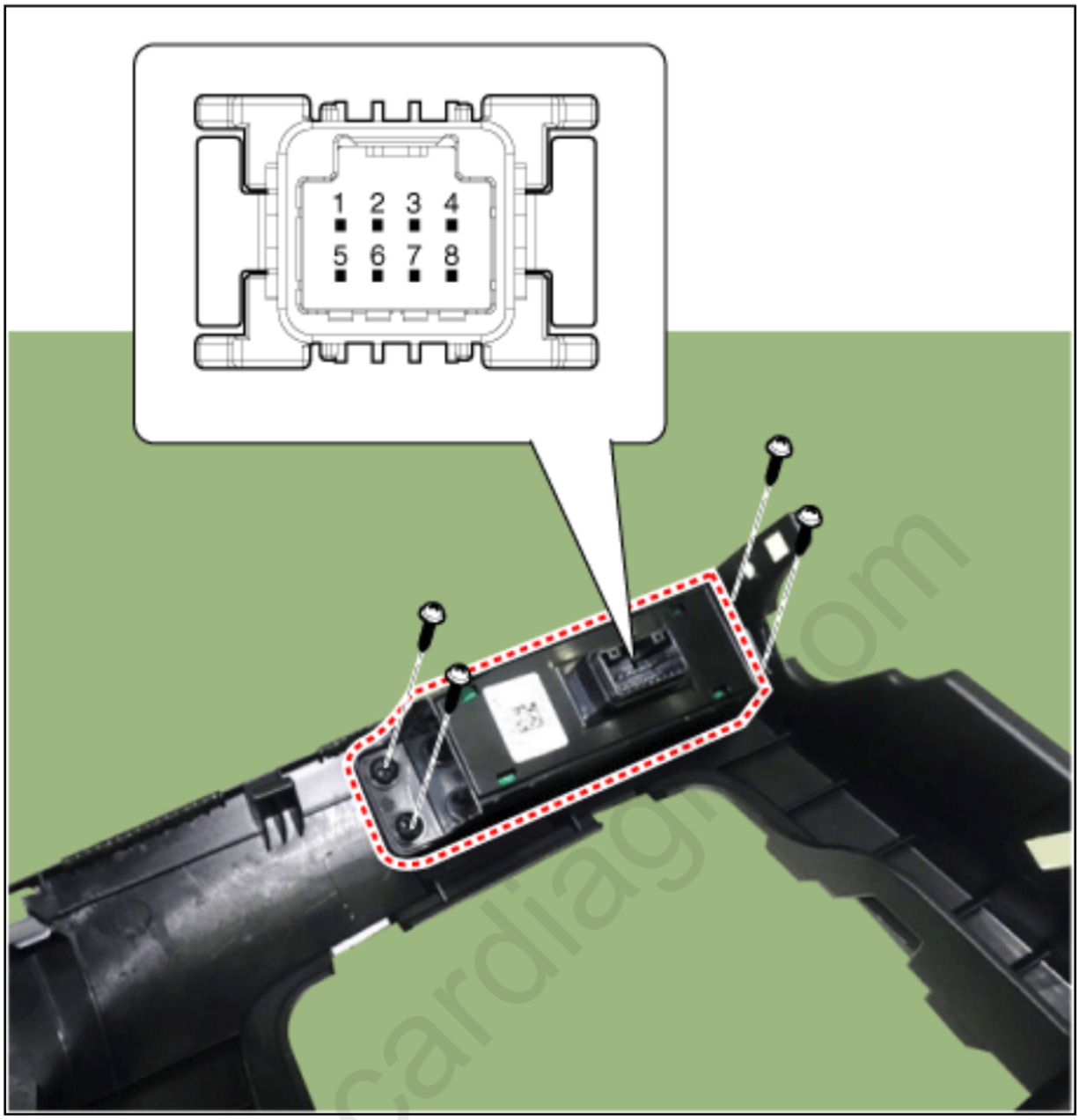

Switch \ Terminal	3	8
ON	○———	———○
OFF		

Please rate this document after reviewing at the bottom of this page.

Component
Location

[Engine Room]

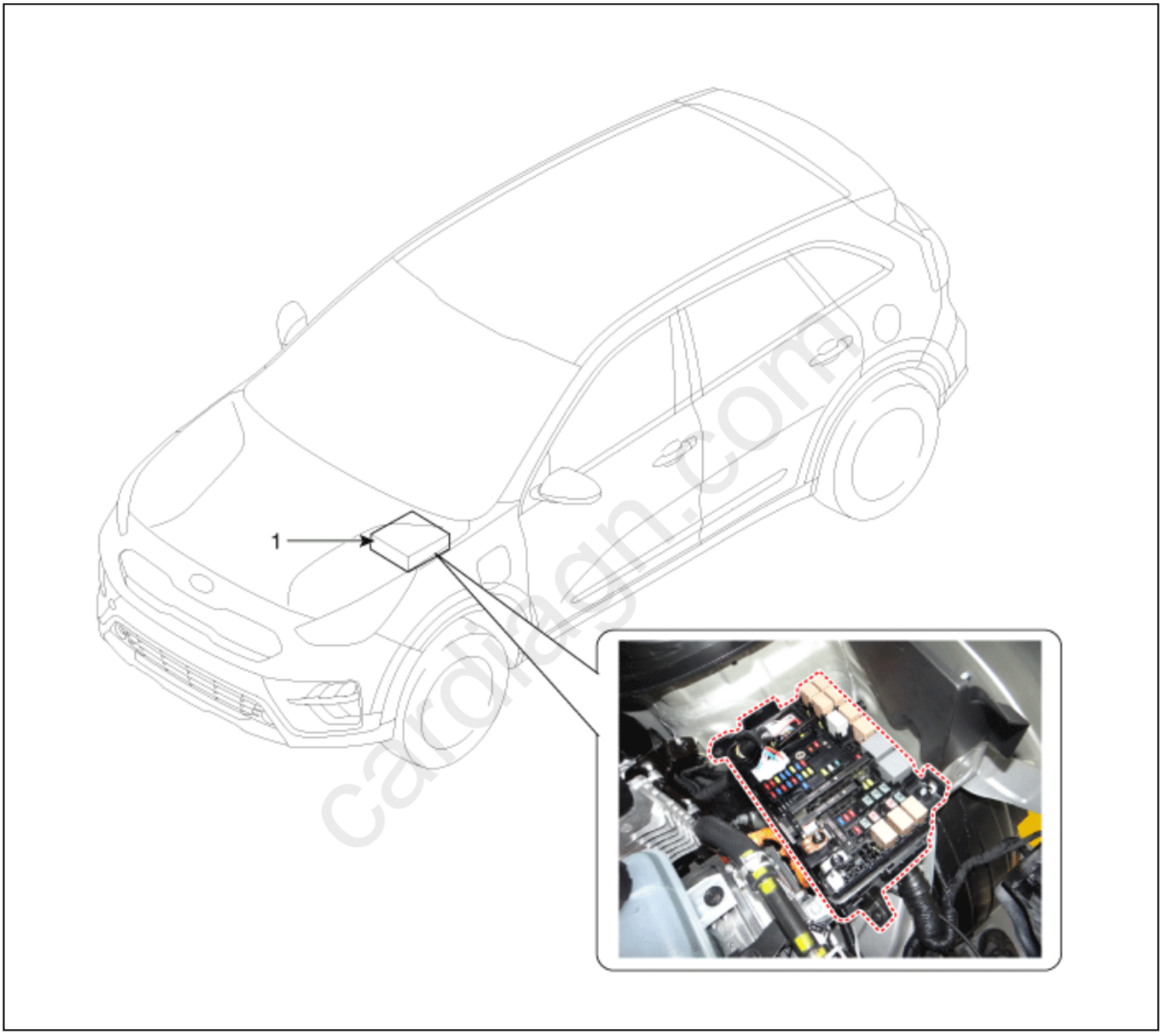

1. Engine room relay block

[Interior Relay]



1. Integrated Gateway & Power control Module (IGPM)
2. ICM relay block

Please rate this document after reviewing at the bottom of this page.

Component

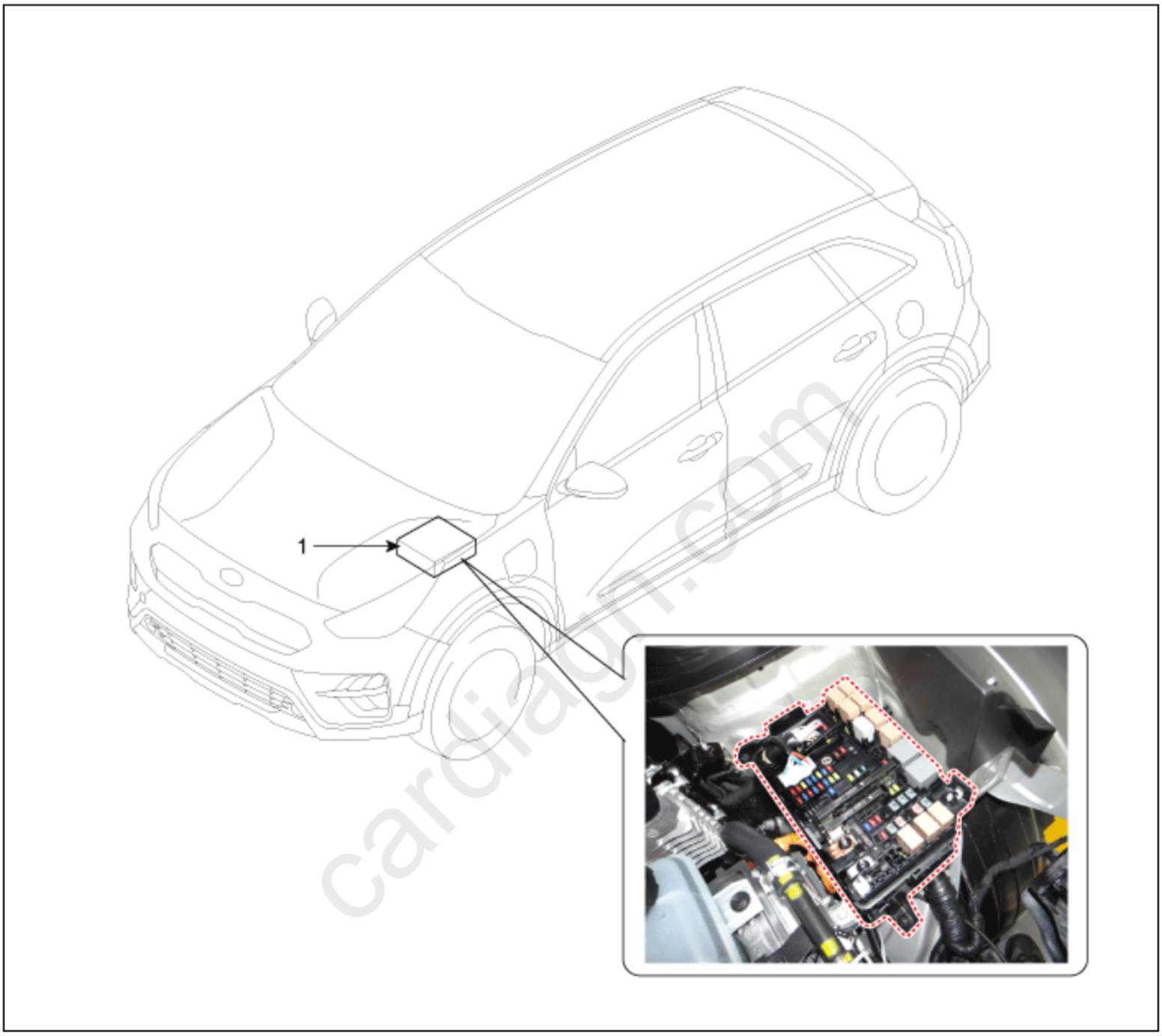

1. Engine room relay block

Please rate this document after reviewing at the bottom of this page.

Inspection

1. Disconnect the negative (-) battery terminal.
2. Pull out the relay from the engine compartment relay block.

Power Relay (Type A)

Check for continuity between the terminals.

1. After supplying power to between No. 85 and 86 power relay terminals, check that there is continuity between No. 30 and 87 terminals.
2. After disconnecting power between No. 85 and 86 power relay terminals, check that there is no continuity between No. 30 and 87 terminals.

Engine Room Relay Block

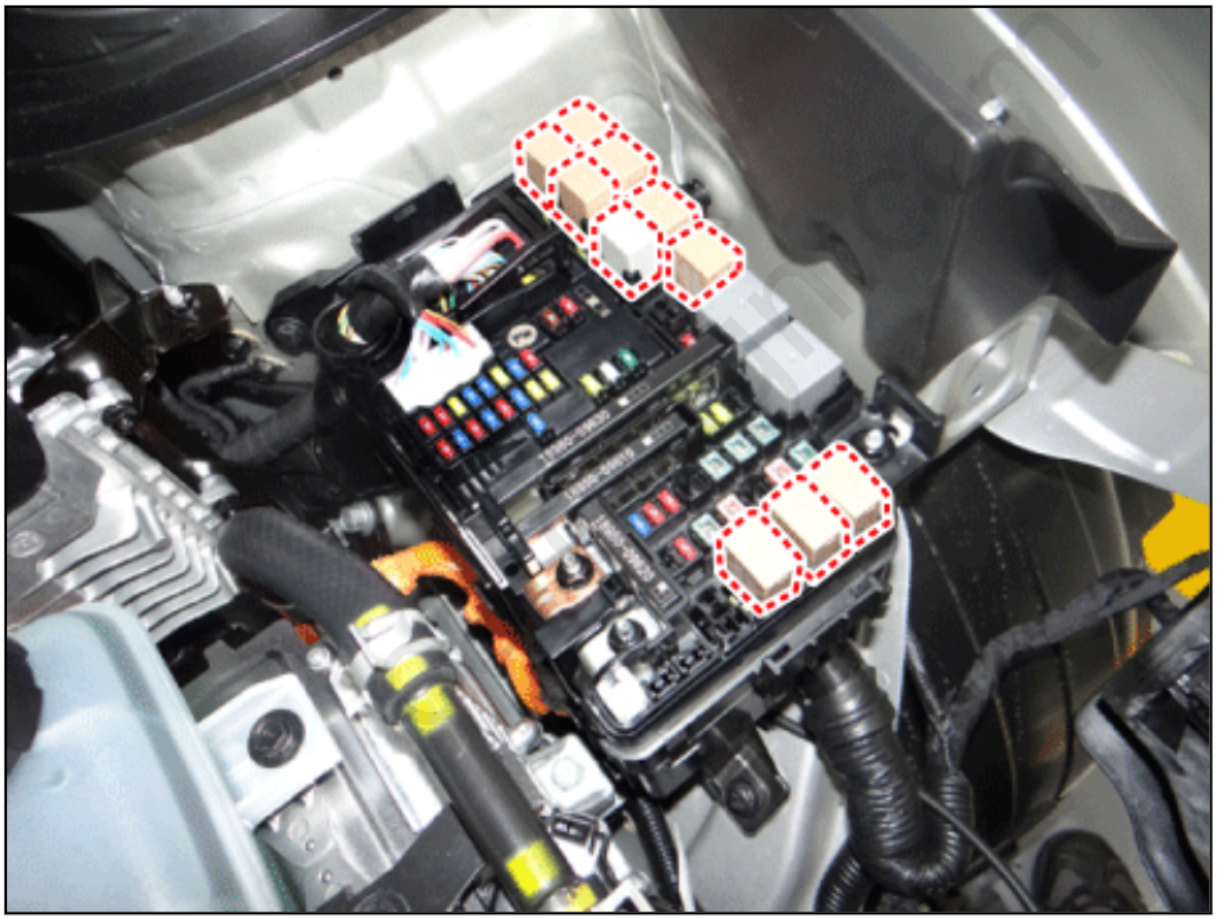

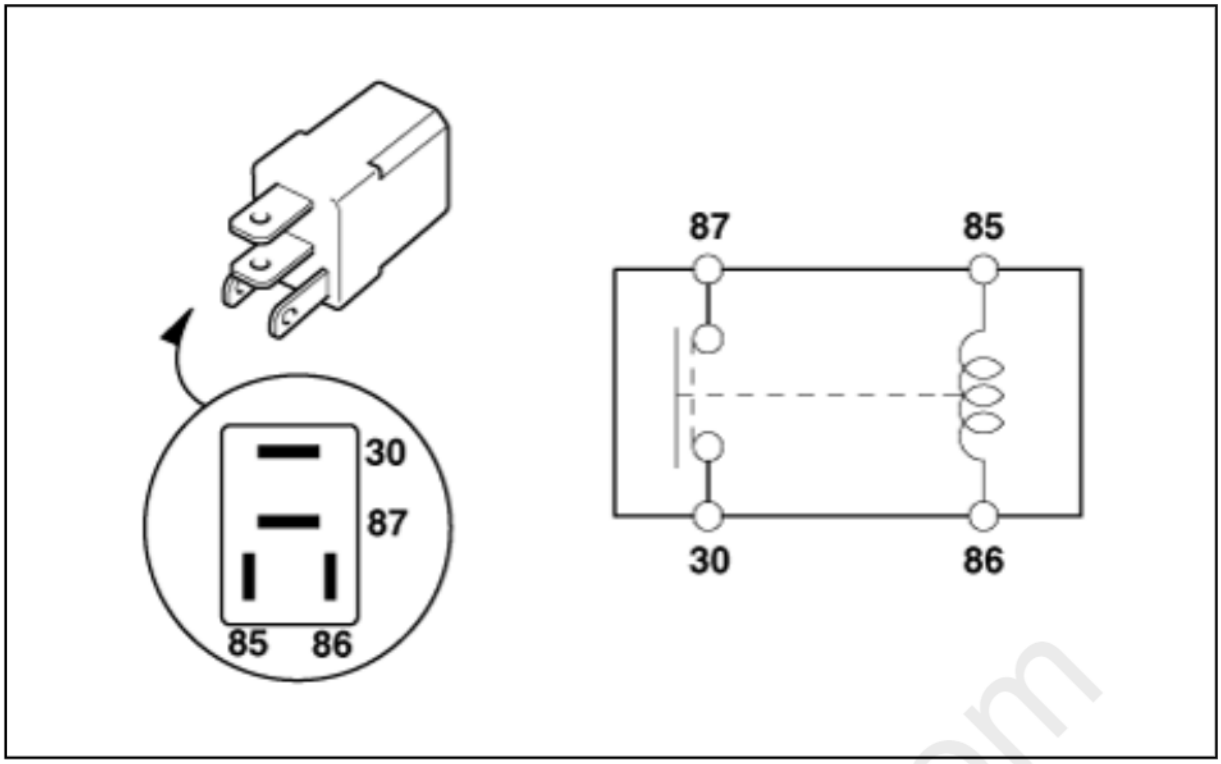

Terminal / Power	30	87	85	86
Disconnected			○ — ○	
Connected	○ — ○		⊖ — ⊕	

Power Relay (Type B)

Check for continuity between the terminals.

1. After supplying power to between No. 85 and 86 power relay terminals, check that there is continuity between No. 30 and 87 terminals.
2. After disconnecting power between No. 85 and 86 power relay terminals, check that there is no continuity between No. 30 and 87 terminals.

cardiagn.com

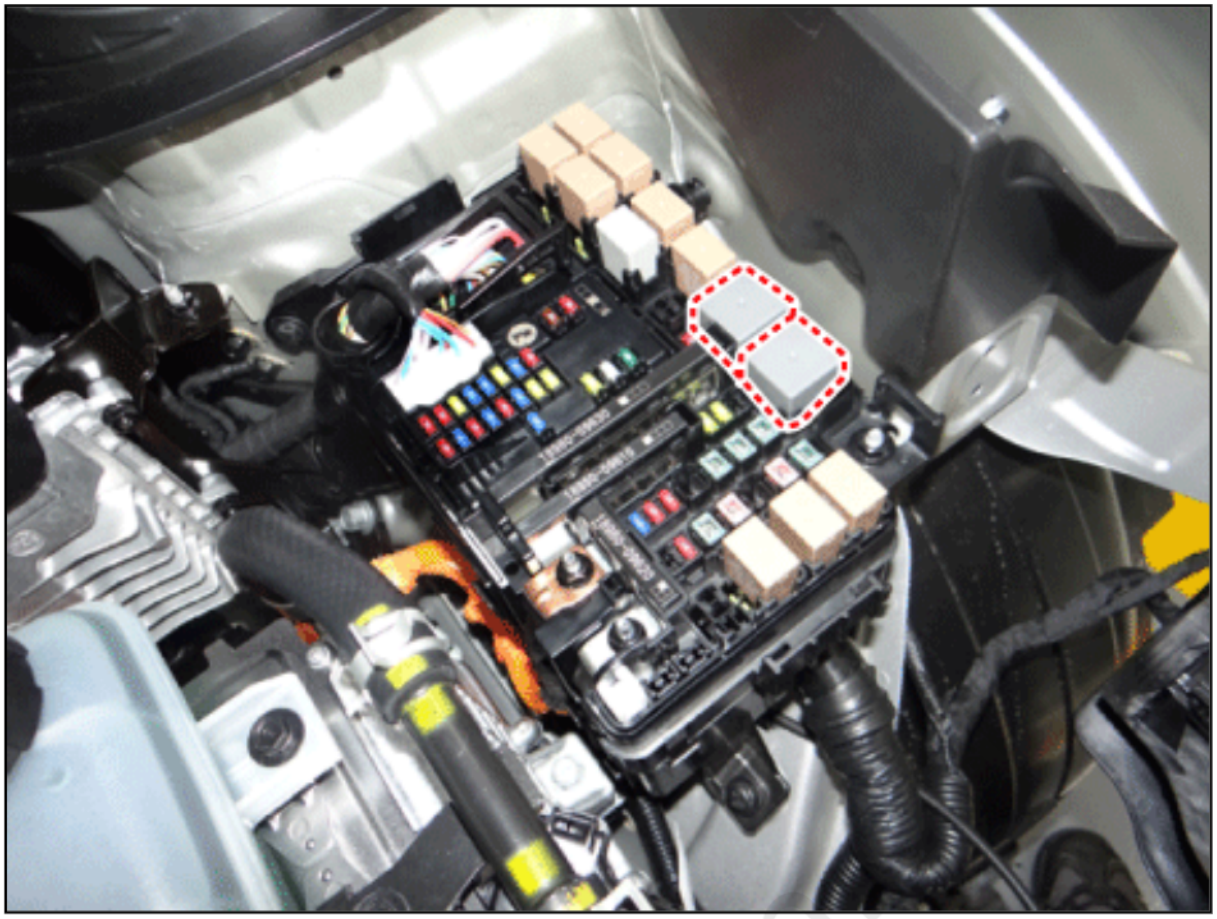

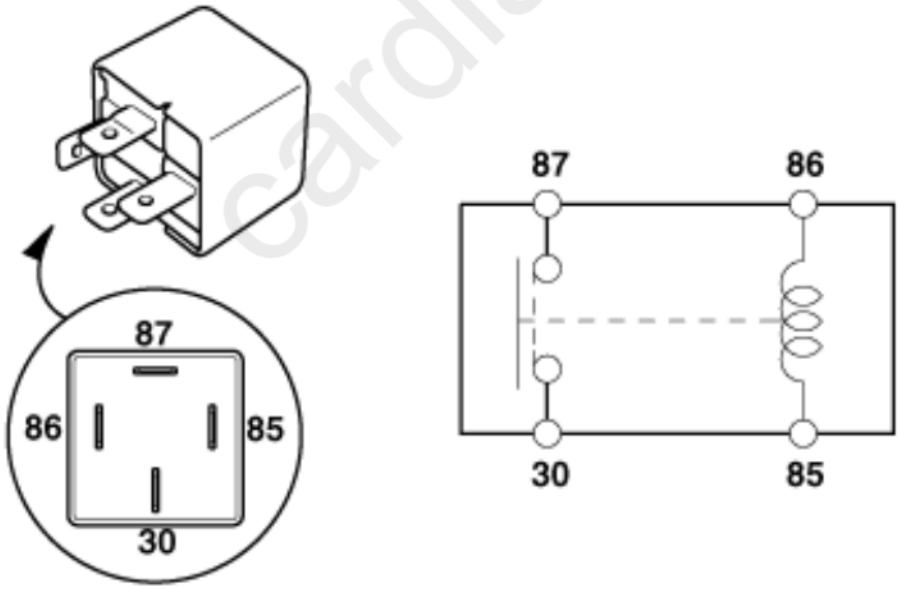

cardiagn

Terminal / Position	86	85	87	30
Disconnected	○	○		
Connected	⊖	⊕	○	○

Metal Core PCB block

1. Disconnect the negative (-) battery terminal.
2. Disconnect the PCB block connector (A).

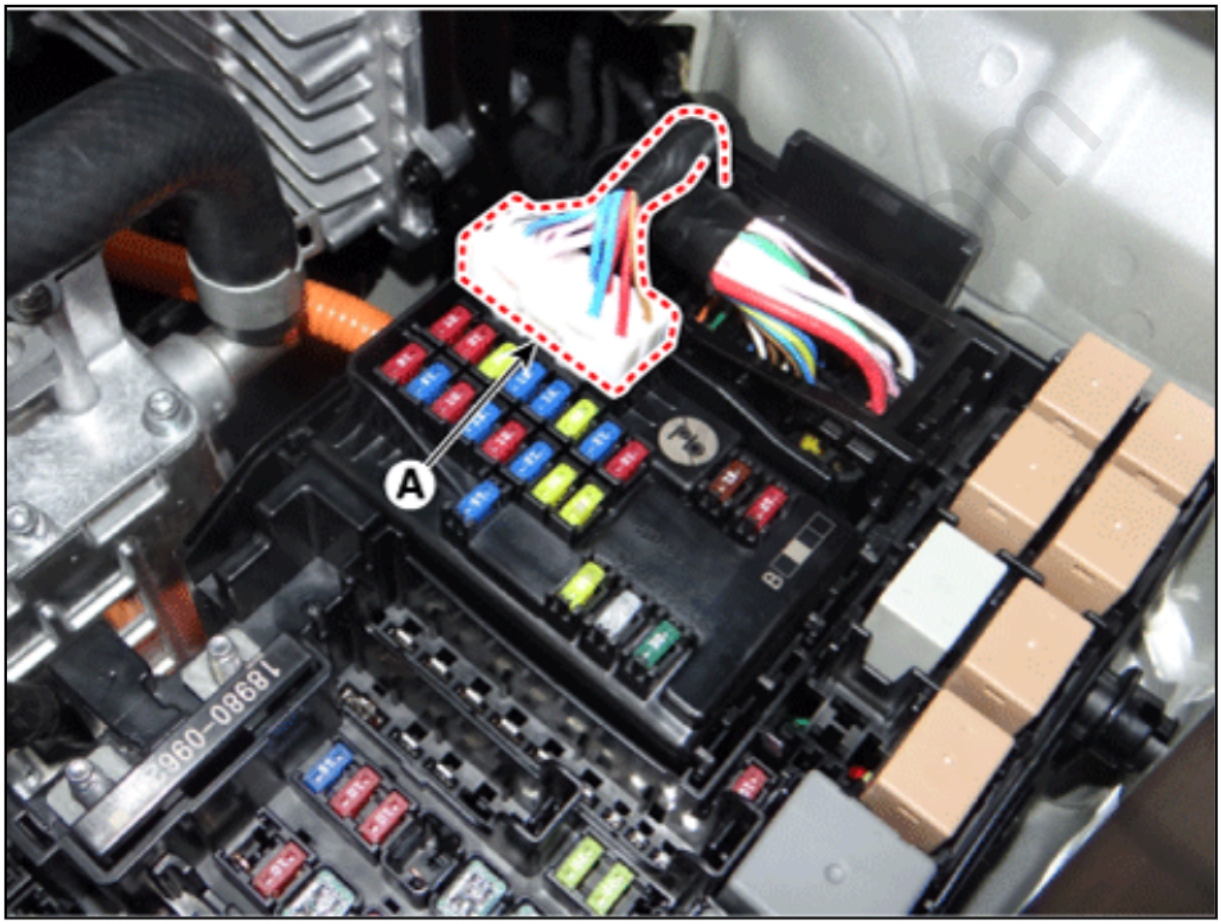

3. Push the four hooks in the direction of the arrow and lift up the metal core PCB block (A).

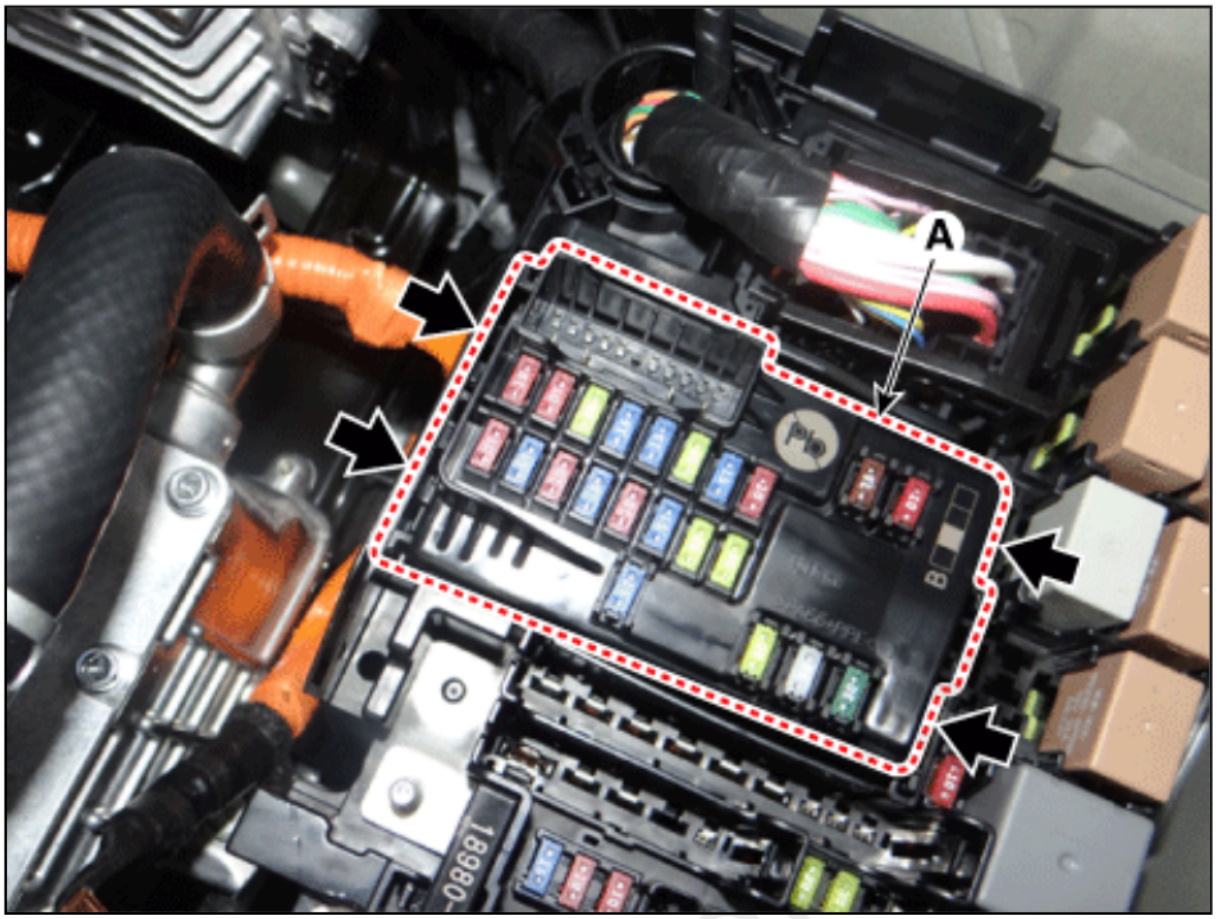

4. Remove the metal core PCB block by disconnecting the connectors (A).

cardiag

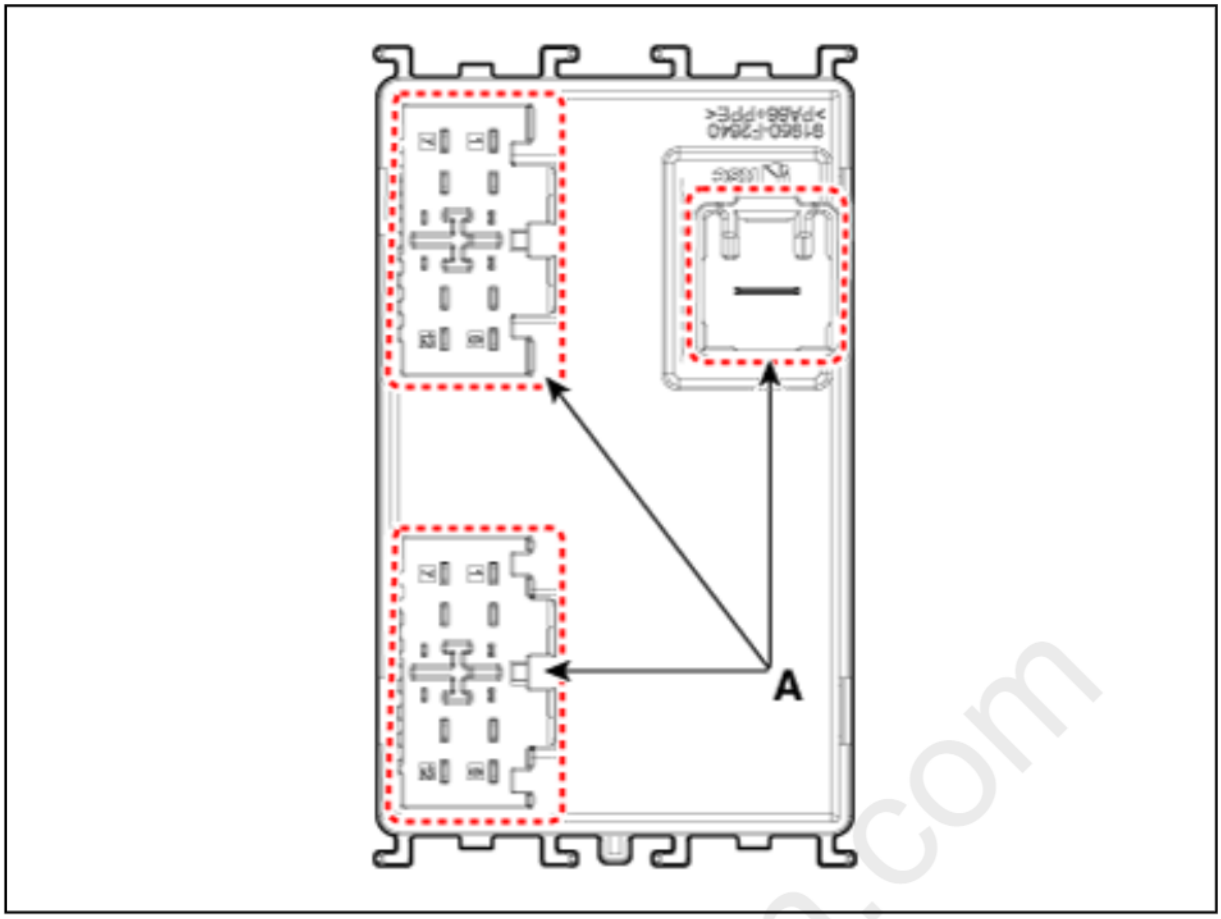

Fuse

1. Check that the fuse holders are loosely held and that the fuses are securely fixed by the holders.
2. Check that each fuse circuit has the exact fuse capacity.
3. Check the fuses for any damage.

- If a fuse is to be replaced, be sure to use a new fuse of the same capacity. Always identify the cause of the blown fuse and completely eliminate the problem before installing a new fuse.

Multi Fuse

(Multi Fuse A, B)

1. Disconnect the negative (-) battery terminal.

cardiagn.com

2. Remove the power cable terminal (A) after loosening the nut from the engine room fuse & relay box.

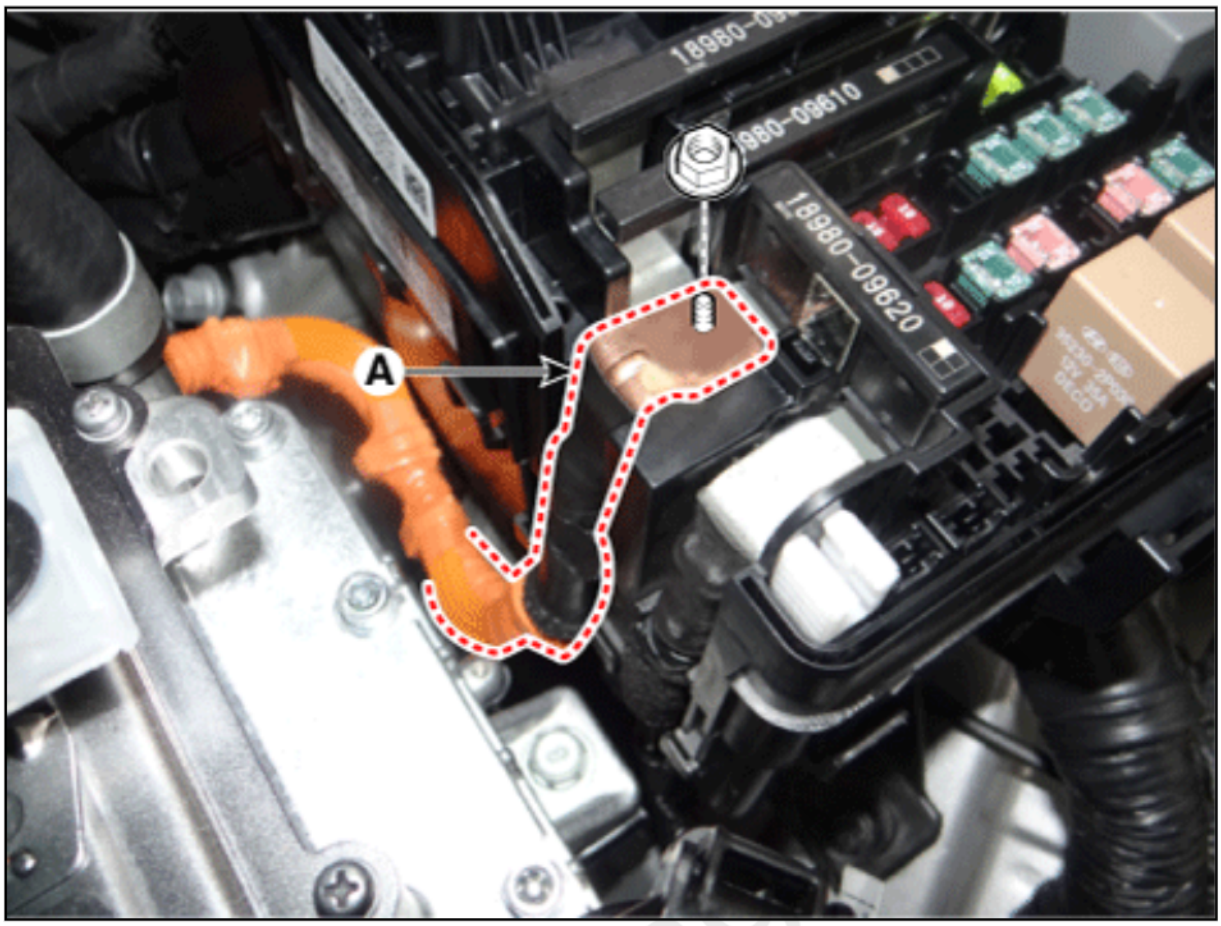

3. Remove the multi fuse A (A) after pushing the hook.

cardiag

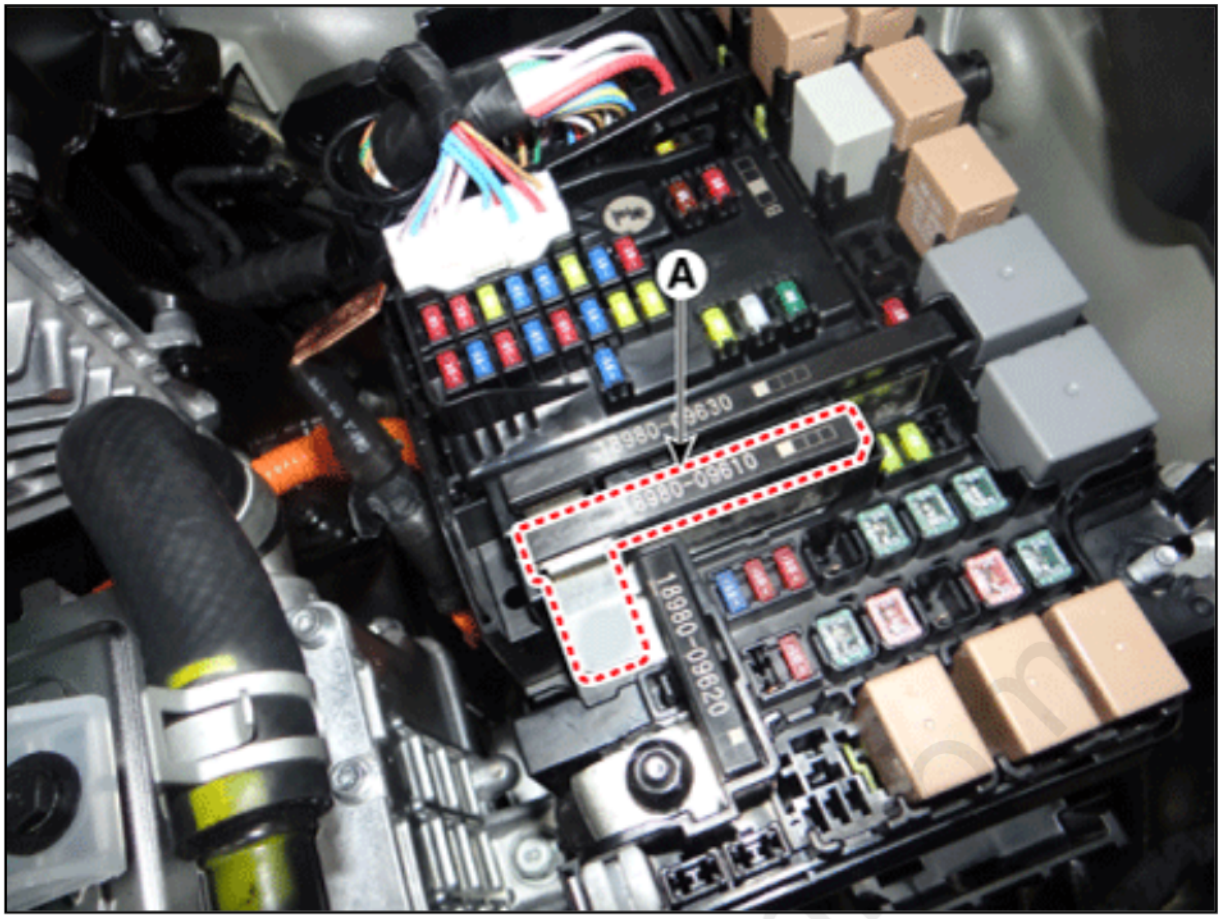

4. Remove the multi fuse B (A) after pushing the hook.

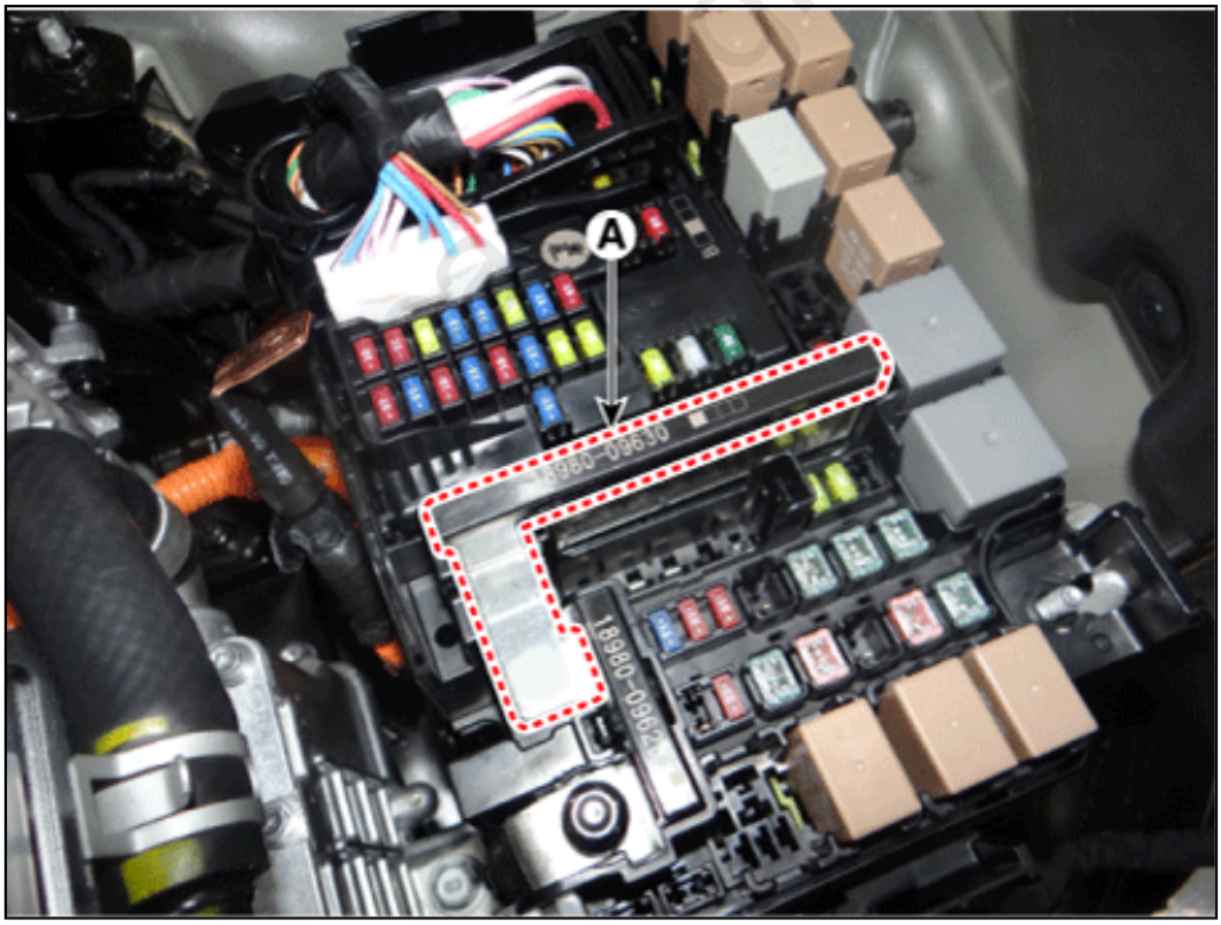

(Multi Fuse C)

1. Remove the multi fuse A and multi fuse B.
2. Remove the cooling & hose bracket (A) after loosening the mounting bolt.

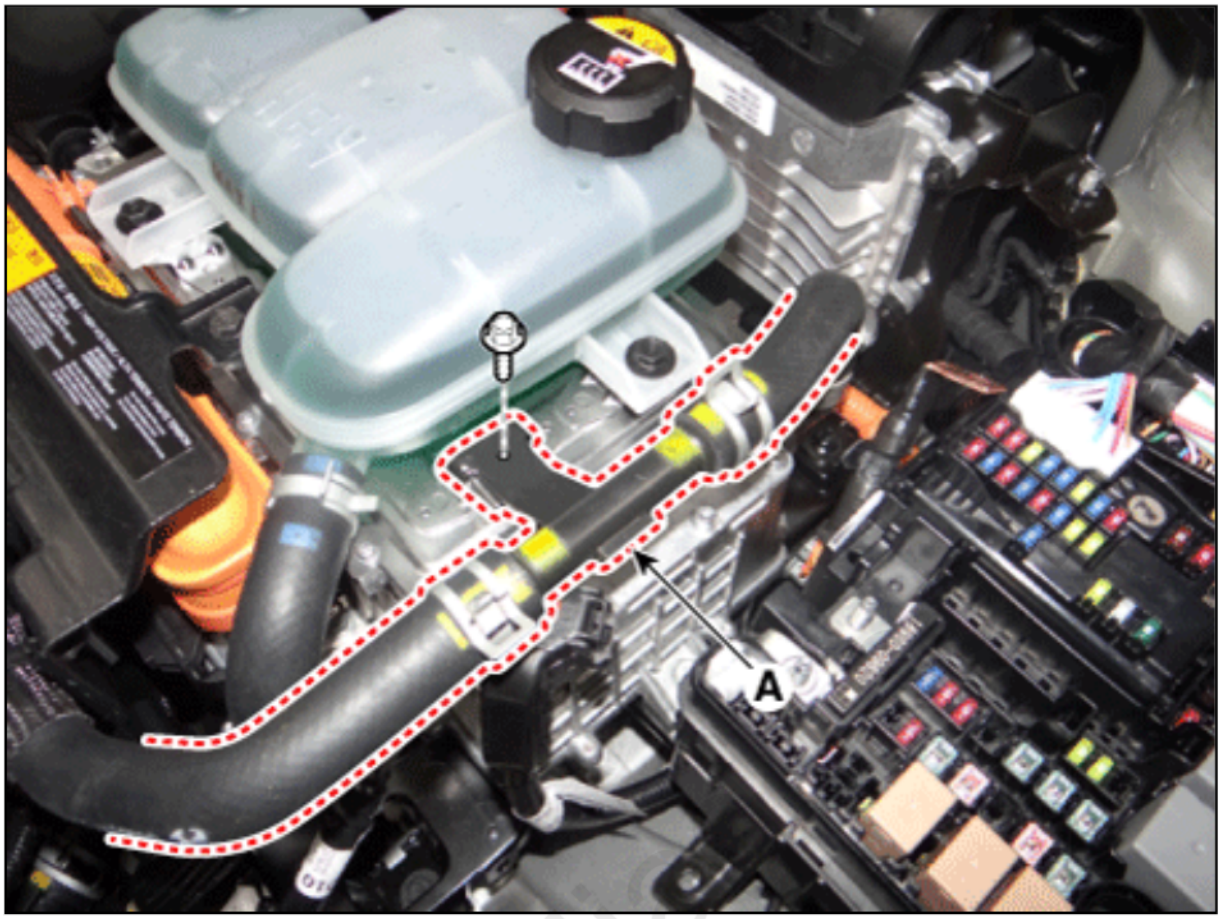

3. Remove the power cable terminal cap (A).

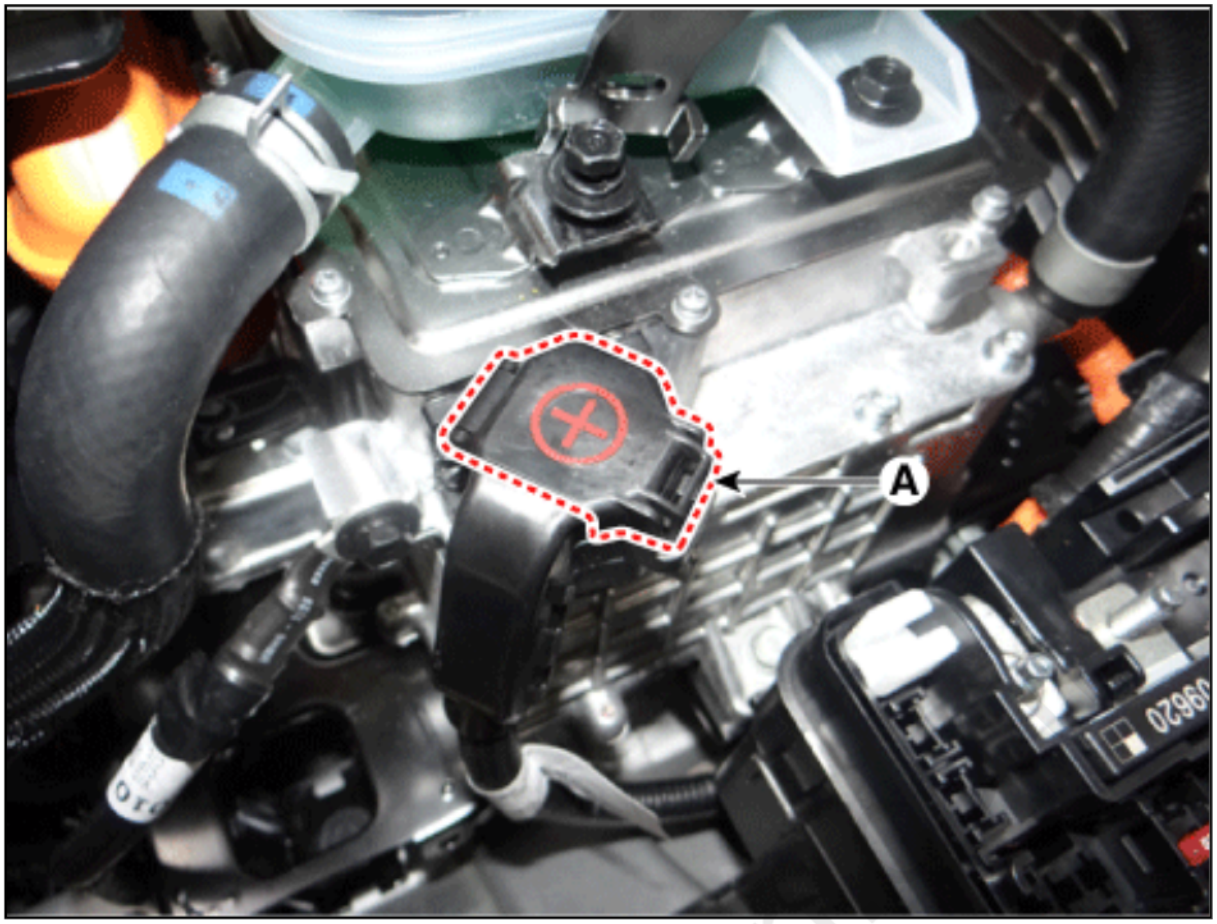

4. Remove the power cable terminal (A) after loosening the bolt from the HPCU.

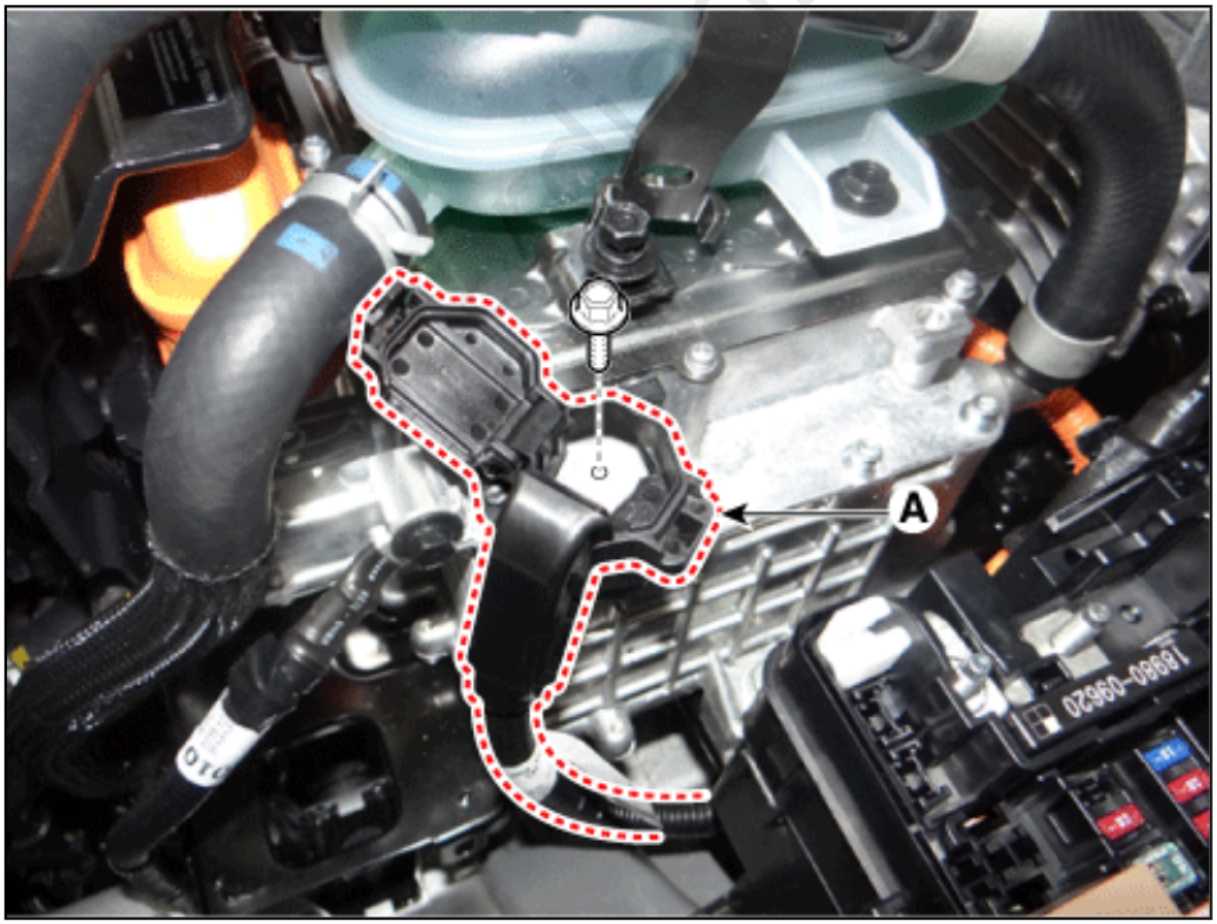

5. Remove the engine room fuse & relay box power cable mounting clip (A).

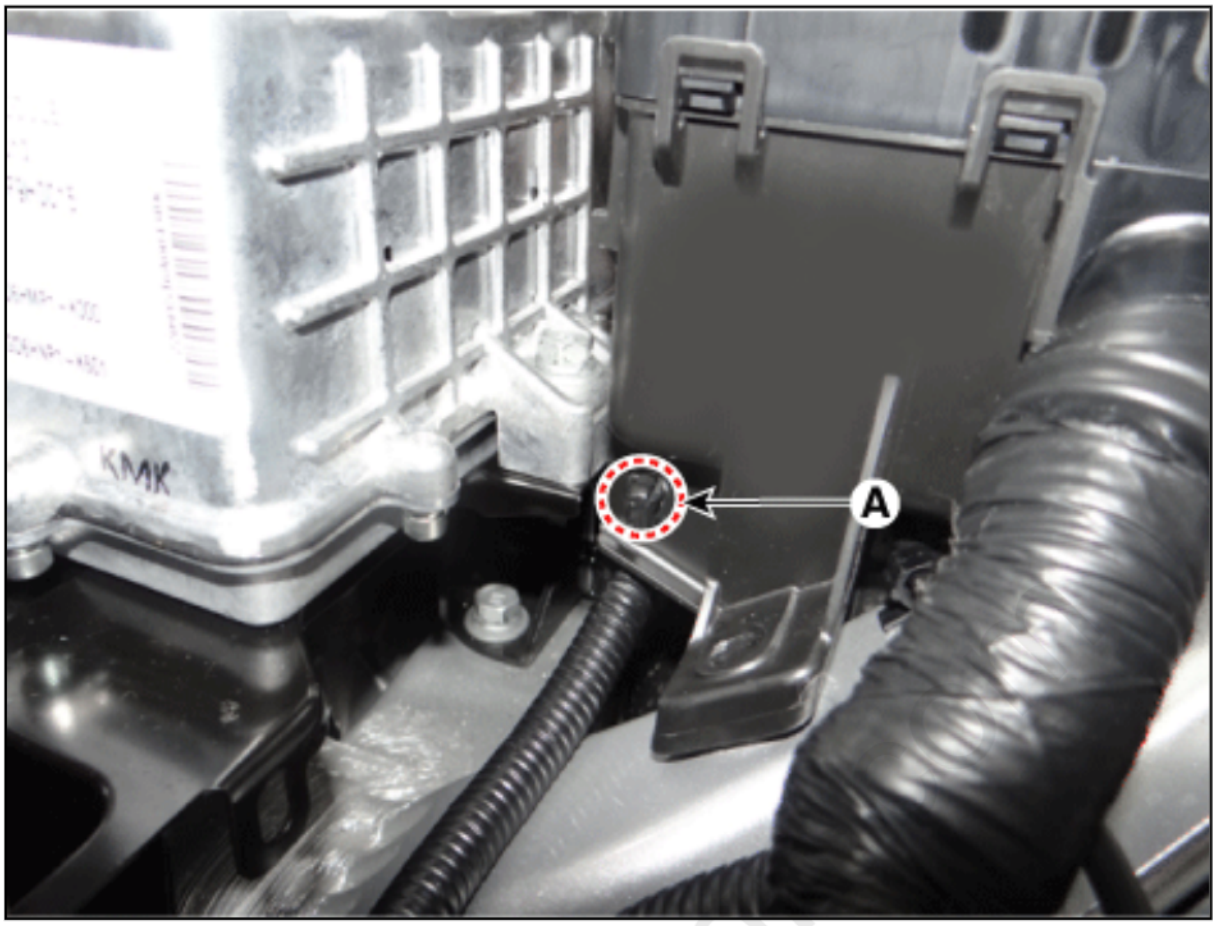

6. Remove the power cable terminal (A) after loosening the nut from the engine room fuse & relay box.

cardiag

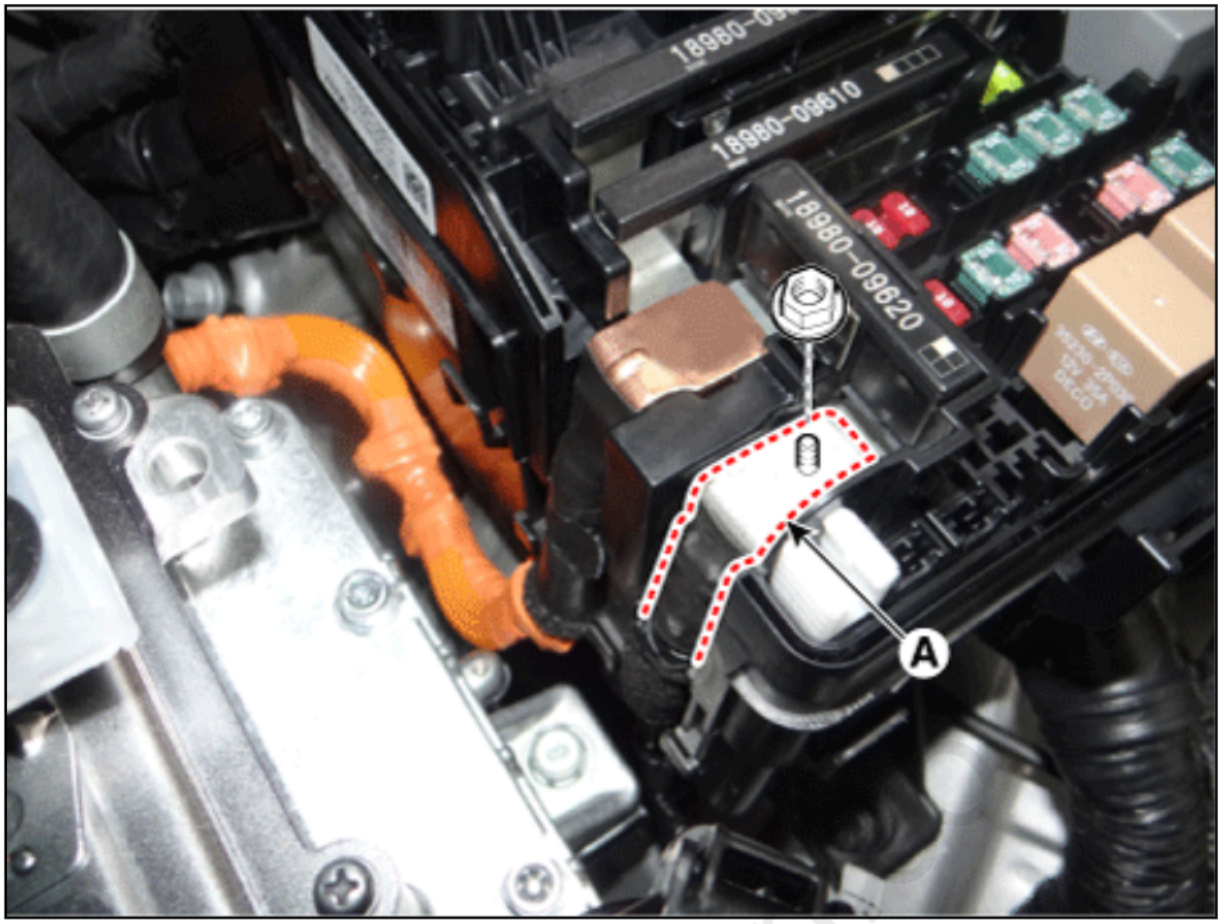

7. Remove the multi fuse C (A) after pushing the hook.

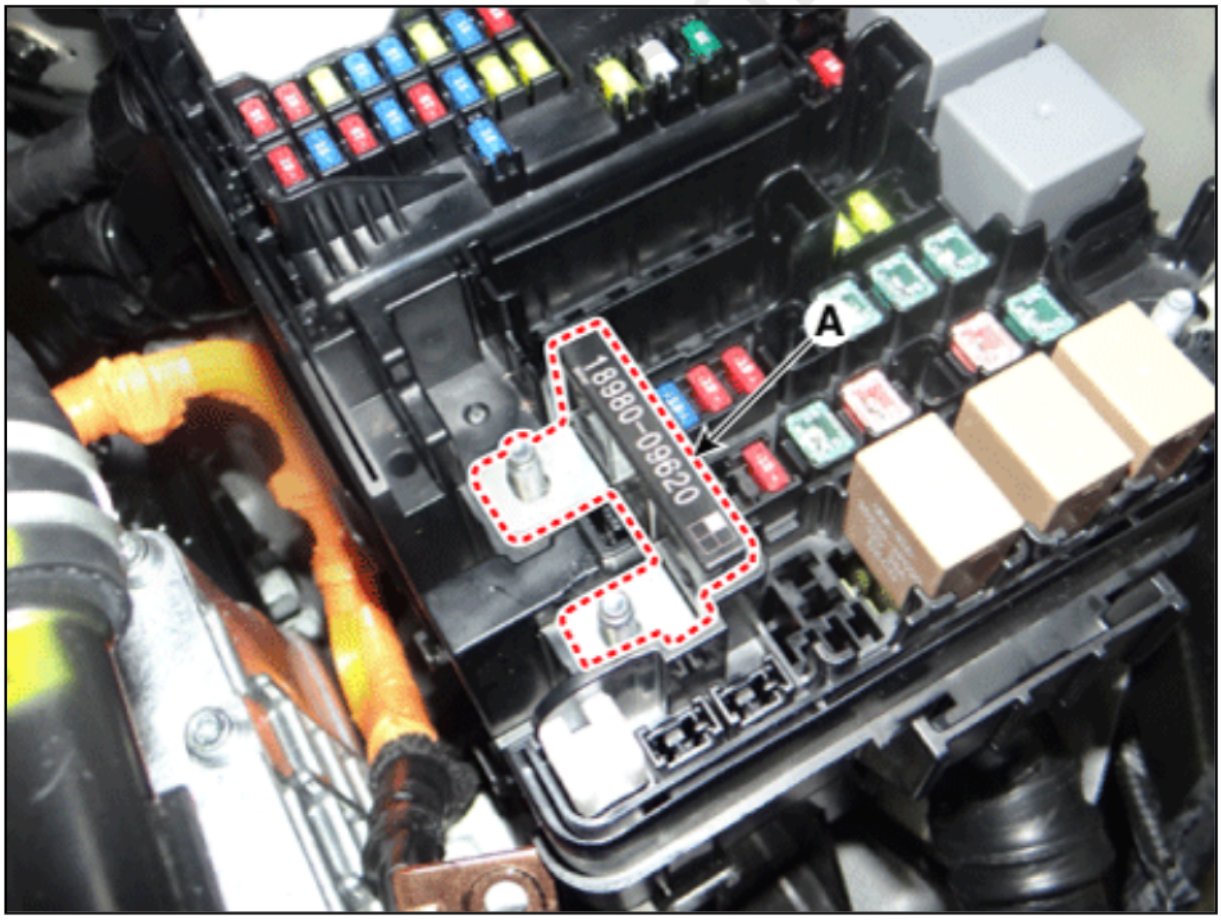

- The entire multi fuse (A) has to be replaced even if only one fuse is damaged.
- When replacing it, refer to “the Engine compartment- component location” diagram to check fuse capacities and circuit arrangement.
- Use the multi fuse of the exact fuse capacity for each circuit.

cardiagn.com

Please rate this document after reviewing at the bottom of this page.

Component
Location

IGPM

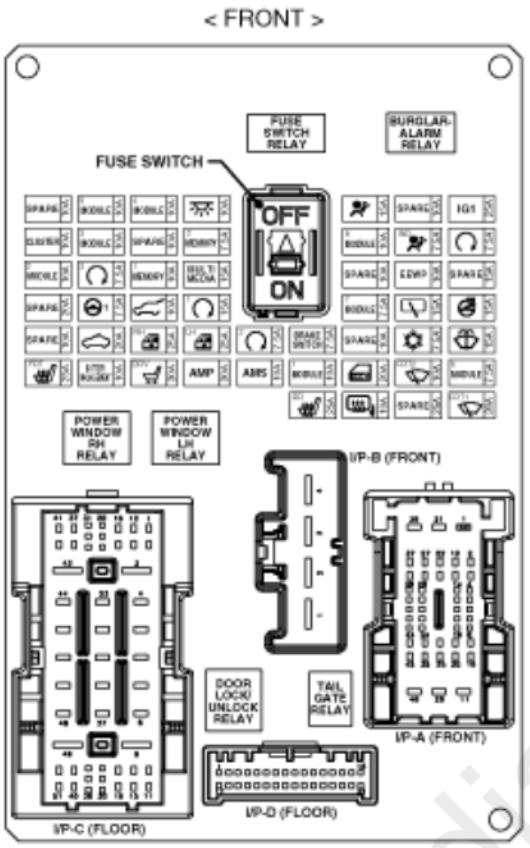

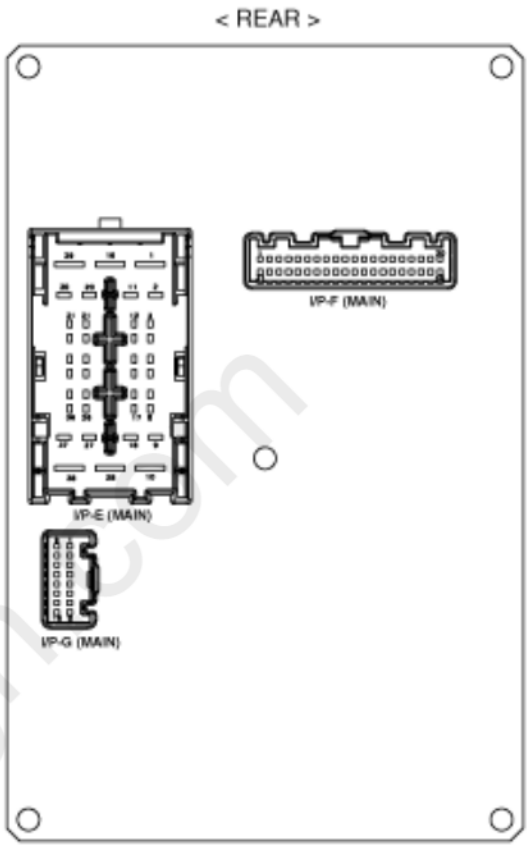

※ USE THE DESIGNATED FUSE AND RELAY ONLY

Circuit (IGPM)

cardiagn.com

✱ : Leak Current Autocut Device (LCAD) Fuse

NO.	(A)	Fuse Name	Symbol	Circuit Protected
F2	10A	MODULE5	5 MODULE	Crash Pad Switch, Electro Chromic Mirror, A/V &Navigation Head Unit, Audio, Shift Lever Indicator, VESS Unit, A/C Control Module, Head Lamp Leveling Device Actuator LH/RH, Driver IMS Module, Front Seat Warmer Control Module, Rear Seat Warmer Control Module, Auto Head Lamp Leveling Device Module
F3	10A	MODULE4	4 MODULE	Lane Departure Warning Control Module, Crash Pad Switch, AEB Module, Blind Spot Detection Radar LH/RH
F4	10A	INTERIOR LAMP		Luggage Lamp, Ignition Key ILL & Door Warning Switch, Front Vanity Lamp LH/RH, Room Lamp, Overhead Console Lamp
F5	15A	A/BAG		SRS Control Module
F7	25A	IG1	IG1	PCB Block (Fuse - F35, F36, F37, F38)
F8	10A	CLUSTER	CLUSTER	Instrument Cluster
F9	10A	MODULE3	3 MODULE	BCM, DCT Shift Lever, Driver/Passenger Door Module, Stop Lamp Switch, Instrument Cluster, MDPS Unit
F11	7.5A	MEMORY2	2 MEMORY	Active Air Flap Unit
F12	10A	MODULE8	8 MODULE	Electric Water Pump (Engine), Active Air Flap Unit, VPD Sensor, E/R Junction Block (RLY. 4), BMS Control Module
F13	7.5A	A/BAG IND	IND	A/C Control Module, Instrument Cluster
F14	7.5A	START		[W/O Smart Key & W/O Immobilizer] Burglaralarm Relay [With Smart Key / With Immobilizer] Inhibitor Switch
F15	10A	MODULE2	2 MODULE	E/R Junction Block (RLY. 14), Wireless Charger, BCM, AMP, Smart Key Control Module, USB Charger, Audio, A/V & Navigation Head Unit, Driver Power Outside Mirror
F16	7.5A	PDM3	0	[W/O Smart Key] Immobilizer Module [With Smart Key] Smart Key Control Module
F17	10A	MEMORY1	1 MEMORY	Instrument Cluster, Wireless Charger, A/C Control Module, Auto Light & Photo Sensor, Rain Sensor, BCM, ICM Relay Box (Outside Mirror Folding/Unfolding Relay), Driver IMS Module, Driver/Passenger Door Module
F18	15A	MULTI MEDIA	MULTI MEDIA	Audio, A/V & Navigation Head Unit
F20	10A	EEWP	EEWP	Electric Water Pump (HEV)
F23	7.5A	MDPS	1	MDPS Unit
F24	10A	TAIL GATE		Tail Gate Relay, ICM Relay Box (Fuel Lid Relay), Fuel Filler Switch
F25	15A	PDM1	1	Smart Key Control Module
F26	7.5A	MODULE7	7 MODULE	AC Inverter (220V), AC Inverter Module, Rear Seat Warmer Control Module, Front Seat Warmer Control Module/ Front Air Ventilation Seat Control Module

NO.	(A)	Fuse Name	Symbol	Circuit Protected
F27	15A	WIPER (REAR)		E/R Junction Block (RLY.5)
F29	15A	HEATED STEERING		BCM
F30	20A	SUNROOF		Sunroof Motor
F31	25A	P/WINDOW RH	RH	Power Window RH Relay, Driver/Passenger Safety Power Window Module
F32	25A	P/WINDOW LH	LH	Power Window LH Relay, Driver/Passenger Safety Power Window Module
F33	7.5A	PDM2	2	[W/O Smart Key] Immobilizer Module [With Smart Key] Smart Key Control Module, Start/Stop Button Switch
F34	7.5A	BRAKE SWITCH	BRAKE SWITCH	Stop Lamp Switch
F36	7.5A	A/CON		A/C Control Module, Ionizer, E/R Junction Block (RLY.1/2/12), Electronic A/C Compressor
F37	15A	WASHER		Multifunction Switch
F38	25A	S/HEATER (FRT)	FRT	Front Seat Warmer Control Module, Front Air Ventilation Seat Control Module
F39	10A	BATTERY MANAGEMENT	BATTERY MANAGEMENT	BMS Control Module
F40	30A	P/SEAT (DRV)	DRV	[W/O IMS] Driver Seat Manual Switch [With IMS] Driver Seat Manual Switch, Driver IMS Module
F41	30A	AMP	AMP	AMP
F42	10A	AMS	AMS	Battery Sensor
F43	10A	MODULE1	1 MODULE	Data Link Connector, Hazard Switch/Key Interlock, AEB Module, Driver Door Module, Passenger Door Module, Driver Smart Key Outside Handle, Passenger Smart Key Outside Handle
F44	20A	DOOR LOCK		Door Lock/Unlock Relay, ICM Relay Box (Dead Lock Relay)
F45	10A	WIPER2 (FRT)	FRT2	BCM, ECM
F46	7.5A	MODULE6	6 MODULE	BCM, Smart Key Control Module
F47	25A	S/HEATER (REAR)	RR	Rear Seat Warmer Control Module
F48	10A	HEATED MIRROR		A/C Control Module, Driver/Passenger Power Outside Mirror
F50	30A	WIPER1 (FRT)	FRT1	Wiper Motor, PCB Block (Front Wiper (Low) Relay

※USE THE DESIGNATED FUSE AND RELAY ONLY

cardiagn.com

Please rate this document after reviewing at the bottom of this page.

Description

Communication Network Diagram

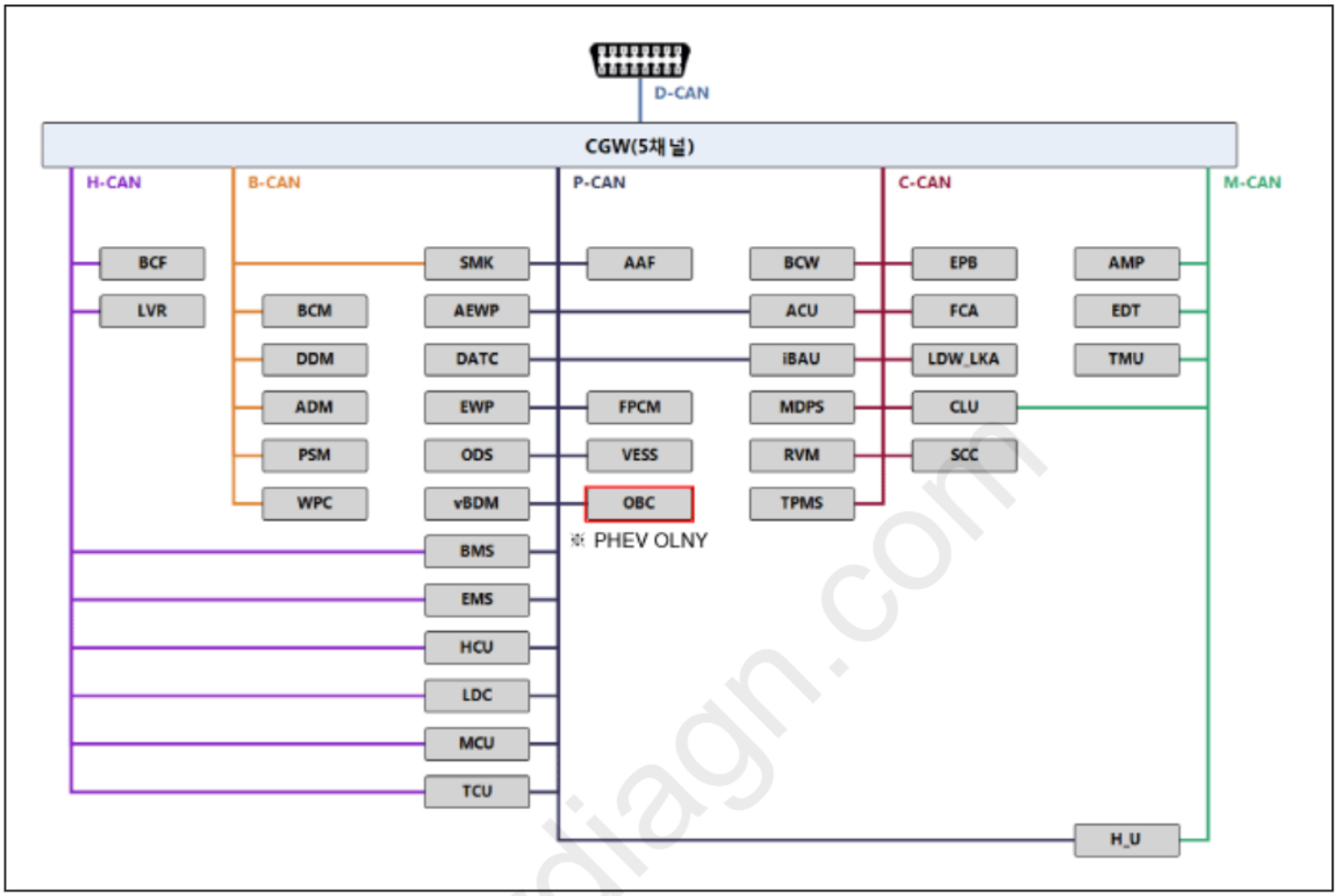

Abbreviation	Expalnation
AAF	Active Air Flap
ACU	Airbag Control Unit
AMP	Amplifier
BCW	Blind Spot Collision Warning
BCM	Body Control Unit
BMS	Battery Management System
CLU	Cluster
DATC	Dual Automatic Temp Control
EPB	Electronic Parking Brake
EWP	Electric Water Pump
EMS	Engine Management System
FCA	Forward Collision Avoidance
FPCM	Fuel Pump Control Module
H_U	Head unit

cardiagn.com

HCU	Hybrid Control Unit
IBAU	Intergrated Brake Actuation Unit
LDC	Low DC/DC Converter
LKA	Lane Keeping Assist
MDPS	Motor Driven Power Steering
MCU	Motor Control Unit
OBC	ON-Board Charger
ODS	Occupant Detection System
PSM	Power Seat Module
RVM	Rear View Monitor
SCC	Smart Cruise Control
SMK	Smart Key Unit
TPMS	Tire Pressure Monitoring System
TCU	Transaxle Control Unit
WPC	Wireless Power Charger
VESS	Virtual Engine Sound System

Integrated Gateway & Power control Module (IGPM)
Integrated Gateway & Power control Module (IGPM) is a module that performs the function of conventional Junction Block and some functions of BCM.
It controls various components including lamps by using CAN communication and IPS (replacing the function of fuse and relay) or ARISU.

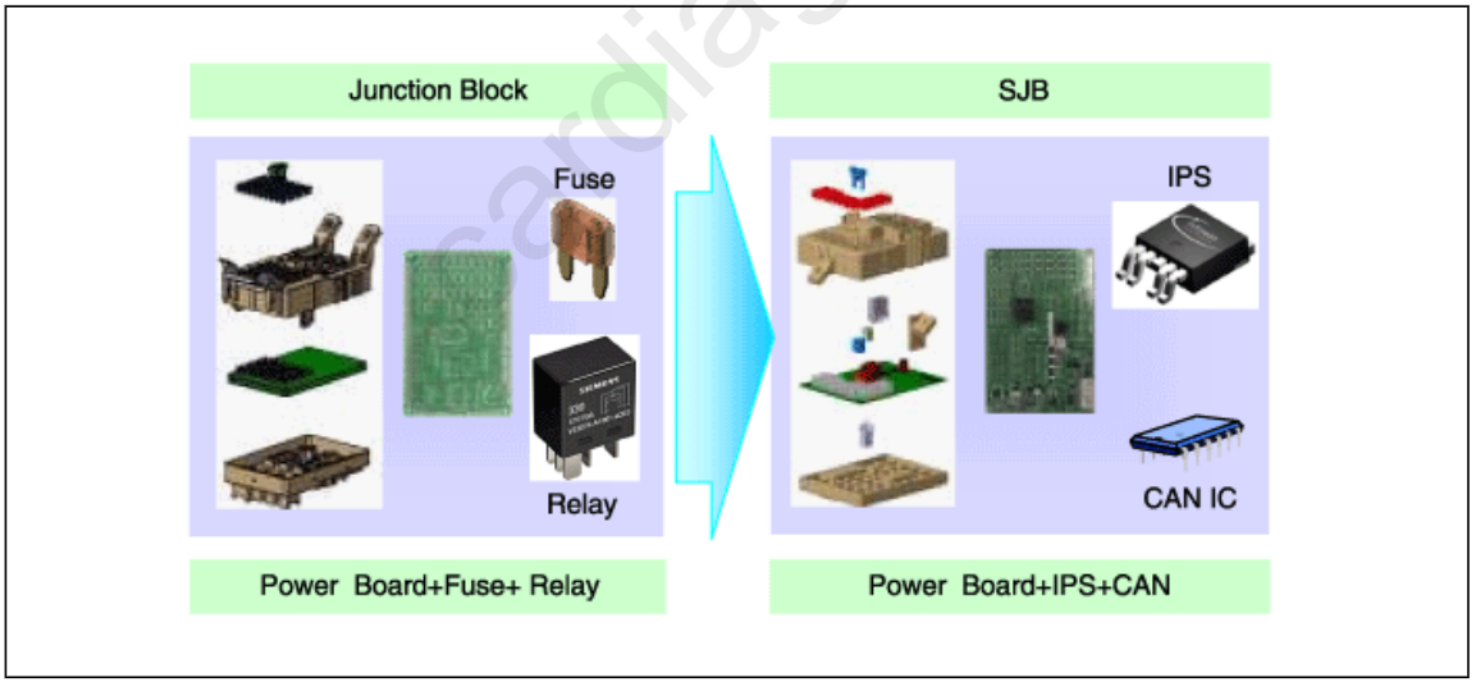

IPS stands for Intelligent Power Switch, which uses the semiconductor technology to replace the current role of fuse and relay. (The IPS chip has two functions: 1) the high current-based component control; 2) component protection from overcurrent.)



The advantages of IPS are as follows:
–Reduce relay and consequently decrease weight and volume
–Remove the relay operation noise
–No need to replace fuses and increase the product life
–Capable to diagnose faulty parts

IGPM control entry

1. Switch signal input
   (1) Assist the door switch
   Driver's seat belt switch
   Rear left door switch
   Rear right door switch
   IGN1 switch
   IGN2 switch
   Brake fluid sensor
   Tailgate open switch
   Tailgate lid handle switch
   Hazard lamp switch
   Head lamp low beams switch
   Hood switch
   Left front / rear turn signal switch
   Right front / rear turn signal switch
   Parking brake switch
   Driver the door lock/unlock control status
   Assist the door lock/unlock control status
   Rear left the door lock/unlock status
   Rear right the door lock/unlock status
   Driver the door switch
   Driver the door key lock switch
   Driver the door key unlock switch
   Driver the door power window lock switch
   Driver the door power window unlock switch
   (2) IPS&ARISU
   Left Head lamp low beams
   Right Head lamp low beams
   Left Head lamp high beams
   Right Head lamp high beams
   Room lamp
   Exterior left tail lamp
   Exterior right tail lamp
   Left front / rear turn signals
   Right front / rear turn signals
   Body resistance cut control
   Front left static bending light

cardiagn.com

Front right static bending light

(3) Relay Control

Tailgate lid relay

Door lock/unlock relay

Power window wake-up relay

2. IGPM protection

(1) PCL (Programmable Current Limit) functions

–PCL replaces the junction block function of protecting wires.

–How to operate : If the lamp current exceeds the standard level, cut off the current to protect the lamp.

–Lamp cut off time : 300ms or less.

–Applied components: all lamp components controlled by IGPM

–Output the error code according to the error detection conditions.

(2) OCL (Open Current Limit)

–OCL detects the lamp open state and informs the user of it.

–How to operate: Detect the current of the lamp and if it is below the standard level, change the lamp operation.

–Applied components: 4 turn signal lamps.

–Output the error code according to the error detection conditions.

3. IGPM fail safe function

(1) When the MCU is out of order (not operating due to a physical or electrical shock from the outside), and IGN2 and head lamp low switch are on, IGPM forces the head lamp low and exterior/interior lamps to turn on in order to secure the driver's safety.

(2) When the data transmission/reception fails due to a failed CAN communication line connected with IGPM module (disconnection of both high and low line, high/low BAT short, high/low GND short), the head lamp low and interior/exterior tail lamps are forced to turn on if IGN2 is on and the head lamp low switch is on.

4. Auto Cut System of Dark Current

(1) Description : It cuts automatically power to be provided with components for reducing useless dark current according to vehicle state.

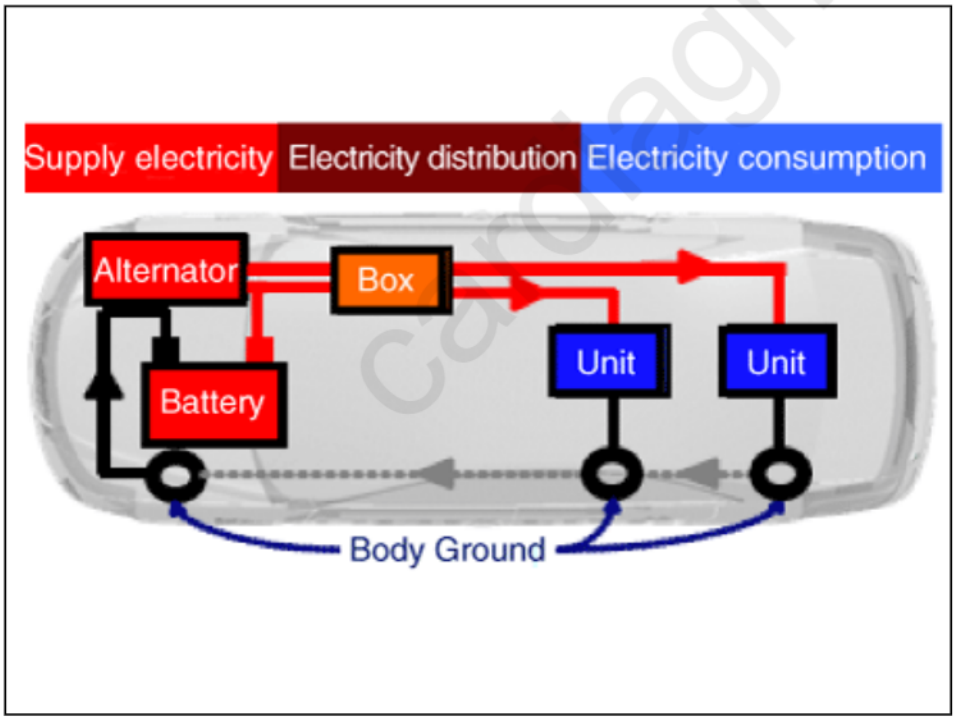

Carcagn.com

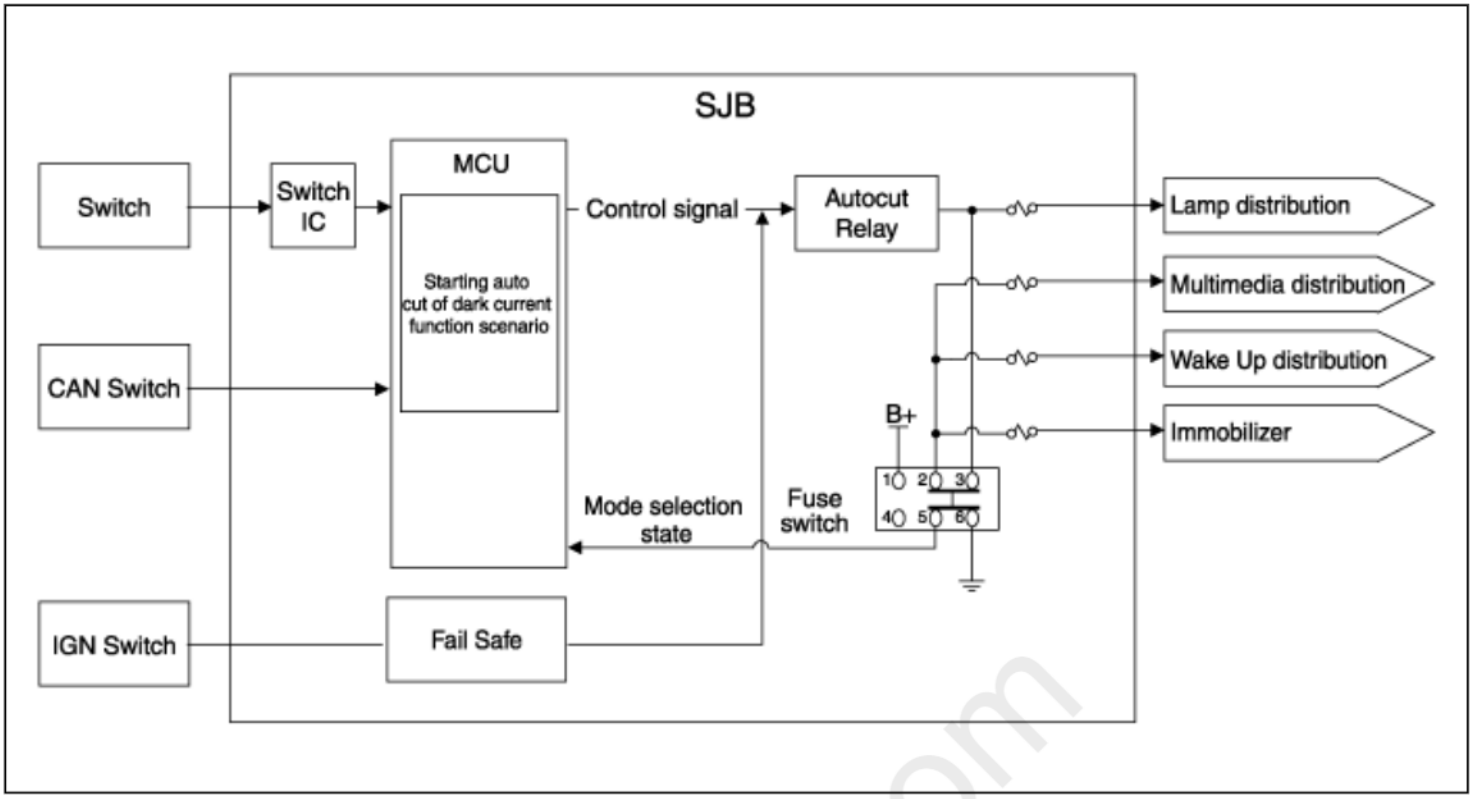

(2) IGPM had 3 modes, "Normal Mode", "Sleep Mode", "Power Off Mode". Auto cut of dark current practice in "Sleep Mode".

–- “Sleep” condition: IG OFF, consistent state of the input switch during a certain time, non-operation state of the CAN network.

–- “Sleep” deactivation condition: switch inputs, operation state of the CAN network, KEY ON, POWER ON.

–- “Power off” condition: In the dark current automatic cutoff function, the timer set for cutting the power load runs out.

–"Normal Mode" : IGPM function normally activates.

–"Sleep Mode" : It is low power mode and activates for reducing electricity consumption of IGPM. Auto cut of dark current function activates.

–"Power OFF Mode" : Power of MCU and circumferential circuit is cut for minimizing electricity consumption. Operation stops.

(3) The explanation - The auto cut of dark current

cardiagn.com

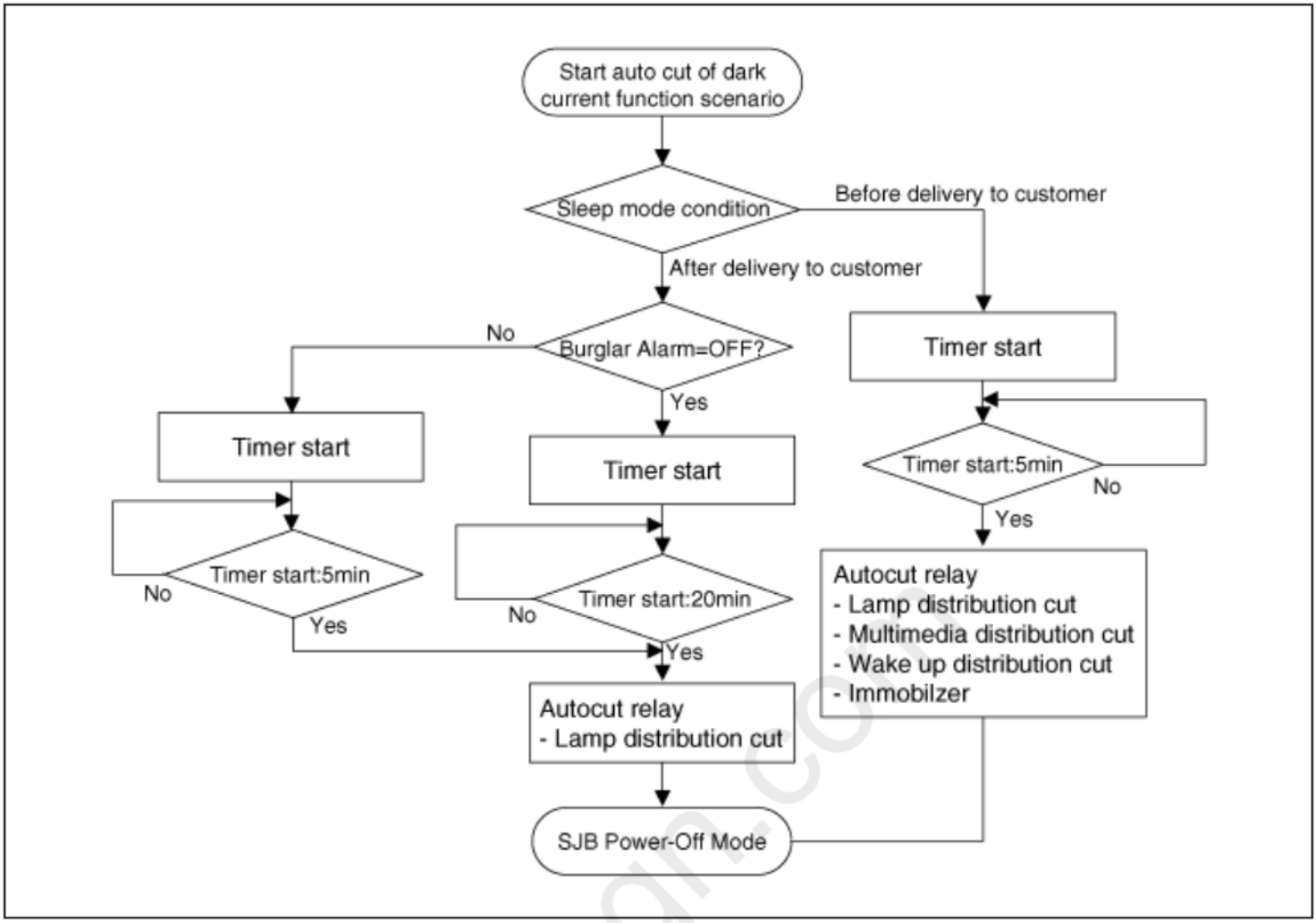

Before delivering to customer	Fuse switch OFF
•All door close & RKE door lock or Consistent switch state (Auto cut of dark current scenario starts.) –5 minutes after entering the "sleep" state. –IGPM power down(IGPM dark current : 200 μA) and cutting power of Lamp /Body Load/Wake up/Immobilizer	

After delivering to customer	Fuse switch ON

carDiagn.com

•All door close & Constant switch state : Burglar Alarm State=OFF (Auto cut of dark current scenario starts.) –After "sleep" state is for 20 min. –IGPM power down(IGPM dark current : 200 μA) and cutting power of Lamp Load •In case RKE door lock : Burglar Alarm State=ON & Tailgate Switch=CLOSE (Auto cut of dark current scenario starts.) –After "Sleep" state 35s-65s (Waiting time of other unit : 30-60s + IGPM sleep counts 5 min) –IGPM Power down (IGPM dark current : 200 μA) and cutting power of Lamp Load	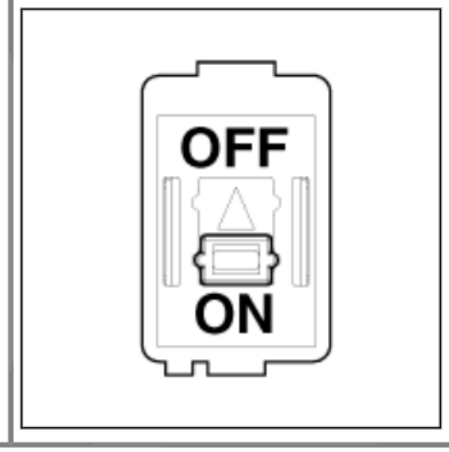

(4) Possible problems in case of the fuse switch setting errors

: If a fuse switch is set to OFF(Before delivering to customer) by a customer or technician and auto cut function of dark current activates, the following problems may occur.

Symptom	Related part
•Door lock/unlock, tailgate open don't activate by RKE. (Wakeup of each module don't activate.)	BCM
•Digital clock is reset.(Memory is reset.)	Digital clock
•Audio setting values (volume, frequency setting) are reset. (Memory is reset.)	Audio

* If fuse switch OFF(before delivering to customer) is set, power of BCM, Digital clock and audio is shut off.

cardiagn.com

Please rate this document after reviewing at the bottom of this page.

Fuse

Inspection

1. Check that the fuse holders are loosely held and that the fuses are securely fixed by the holders.
2. Check that each fuse circuit has the exact fuse capacity.
3. Check the fuses for any damage.

If a fuse is to be replaced, be sure to use a new fuse of the same capacity. Always identify the cause of the blown fuse and completely eliminate the problem before installing a new fuse.

Diagnosis with KDS

1. In the body electrical system, failure can be quickly diagnosed by using the vehicle diagnostic system (KDS).
   The diagnostic system (KDS) provides the following information.
   (1) Self diagnosis : Checking failure and code number (DTC)
   (2) Current data : Checking the system input/output data state
   (3) Actuation test : Checking the system operation condition
   (4) Additional function : Controlling other features including system option setting and zero point adjustment
2. Select the 'Car model' and the 'Smart Junction Block (SJB)' to be checked in order to check the vehicle with the tester.
3. Select the 'Current Data' menu to search the current state of the input/output data.
4. To forcibly actuate the input value of the module to be checked, select option 'Actuation Test'
5. If you want to change user option, select "user option".

Removal

[Integrated Gateway & Power control Module (IGPM)]

1. Disconnect the negative (-) battery terminal.
2. Remove the crash pad lower panel.
   (Refer to Body - "Crash Pad Lower Panel")

cardiagn.com

3. Remove the crash pad side switch (A) after loosening the mounting screw.

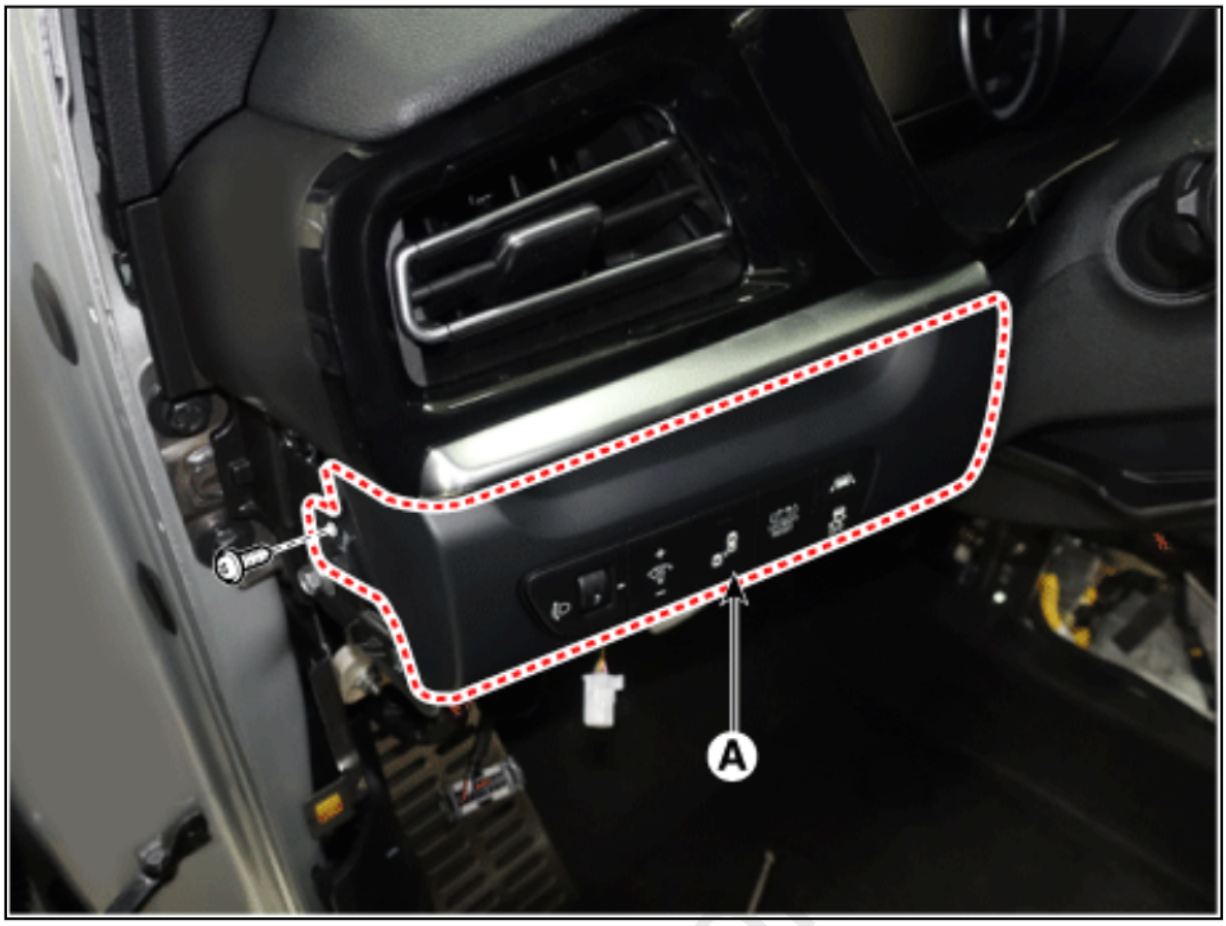

4. Disconnect the crash pad side switch connector (A).

cardiag

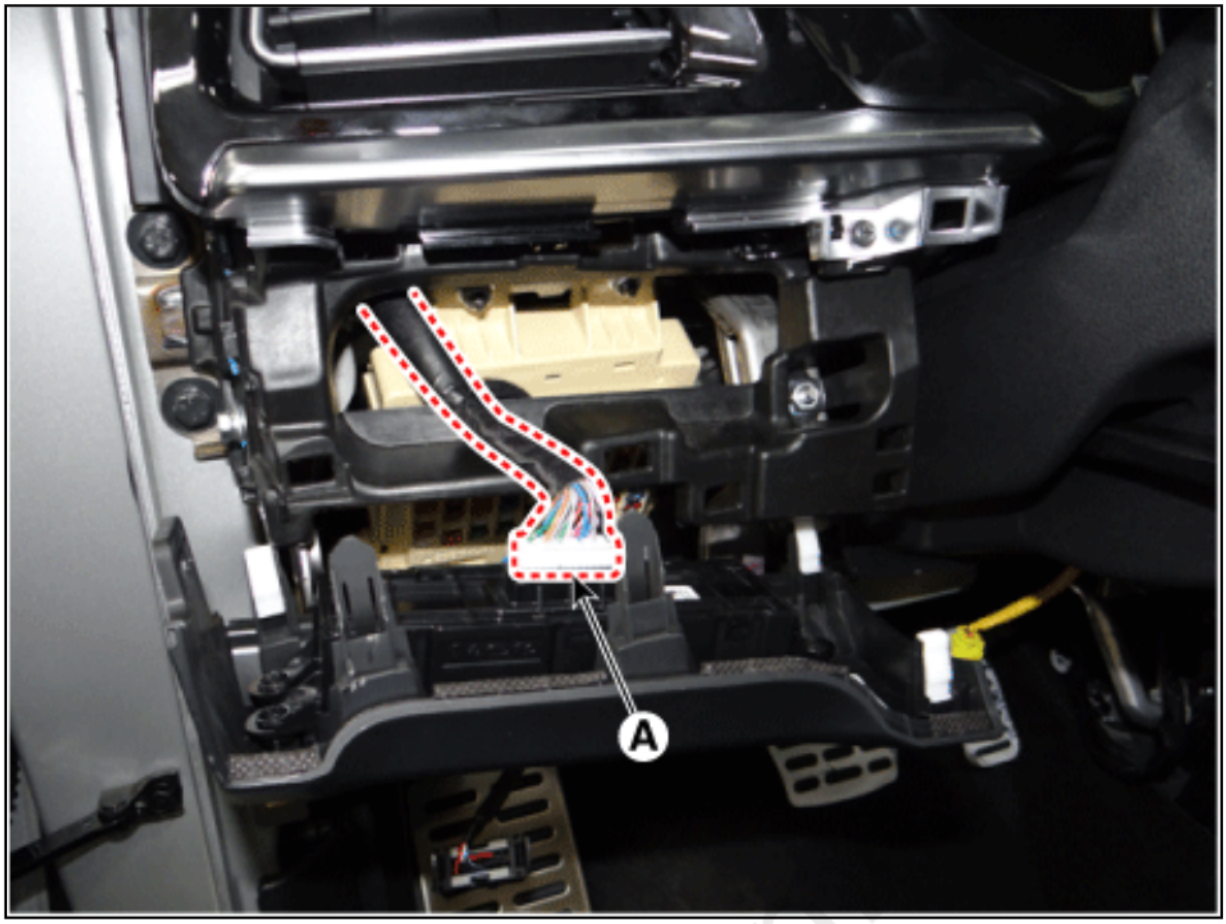

5. Disconnect the connectors (A) from the fuse side of the IGPM.

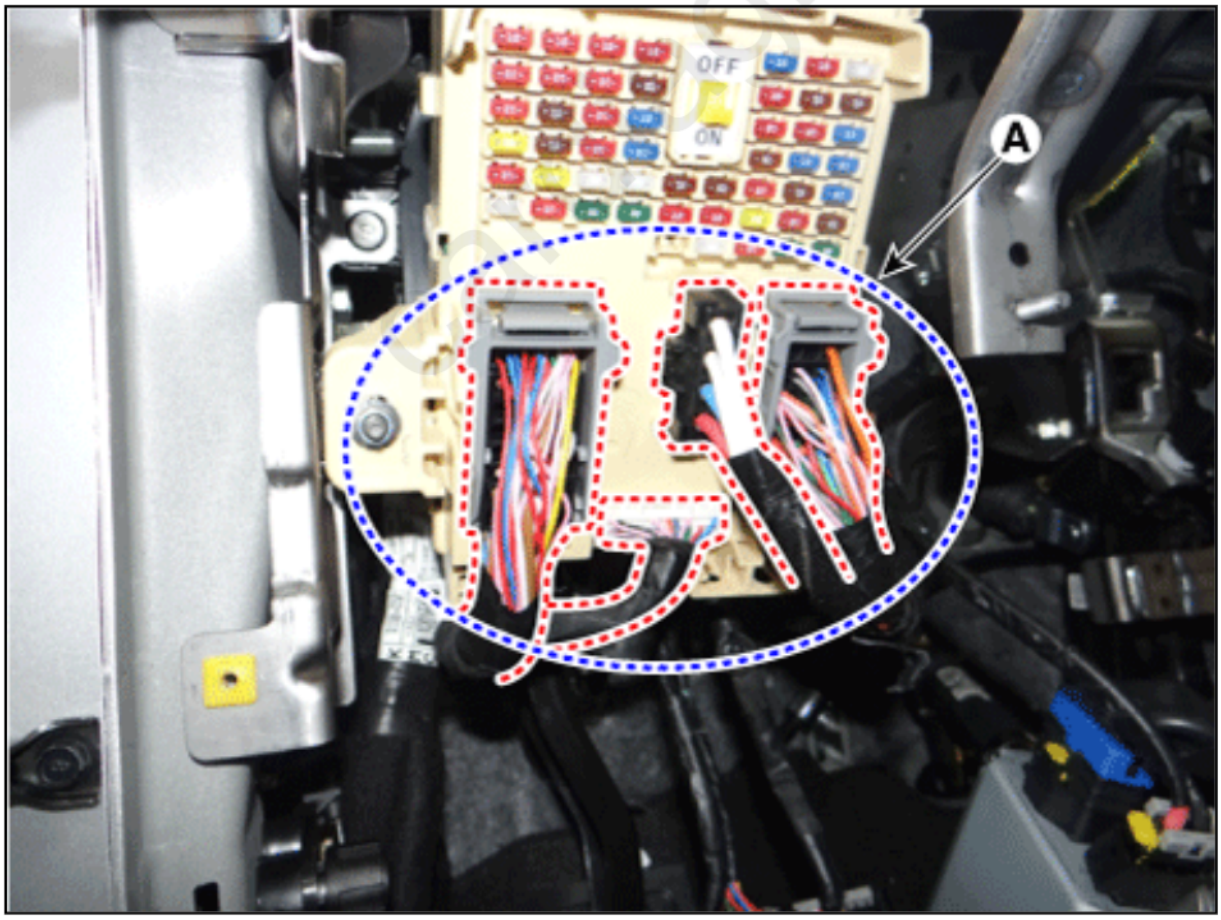

6. Remove the mounting clips (A).

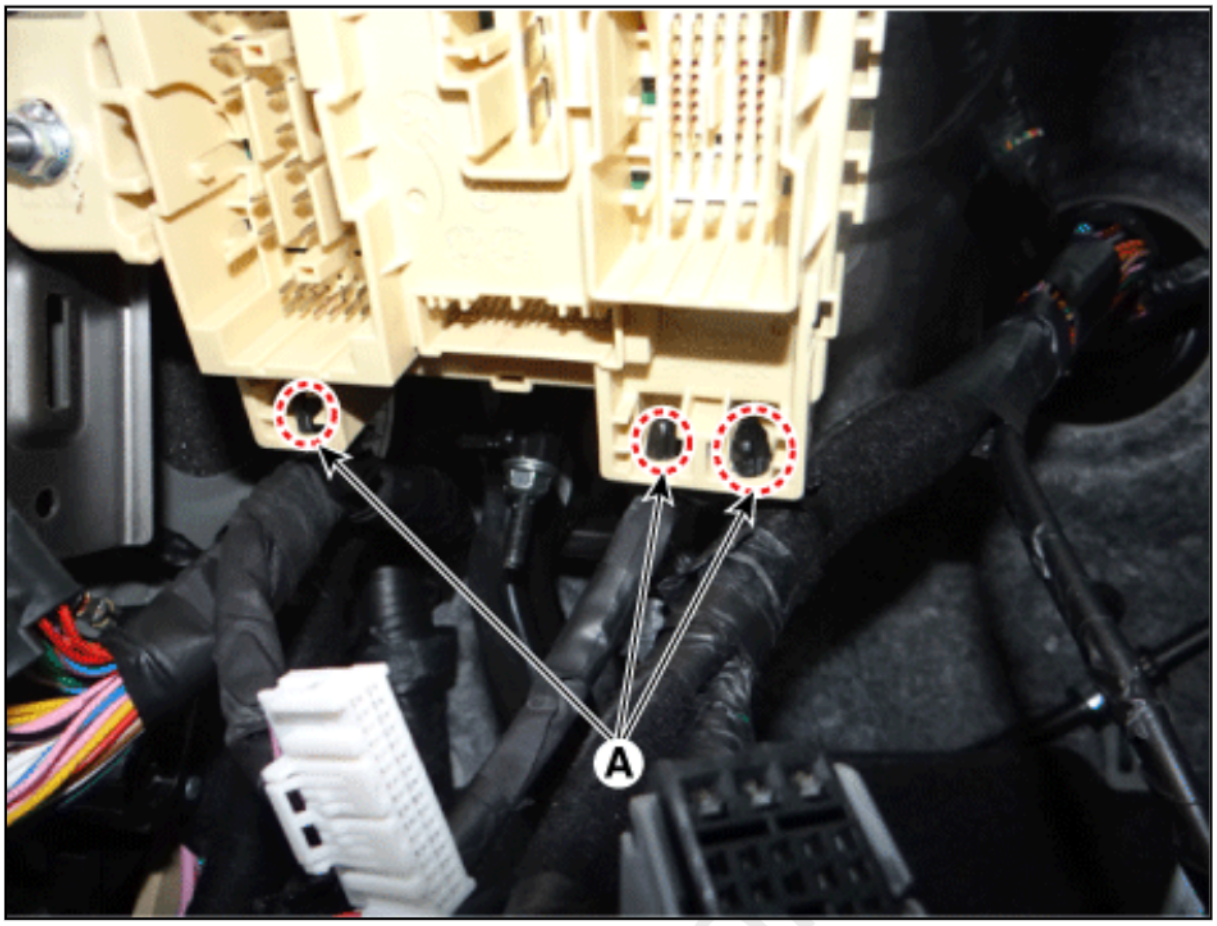

7. Remove the IGPM (A) after loosening the mounting nuts.

cardiag

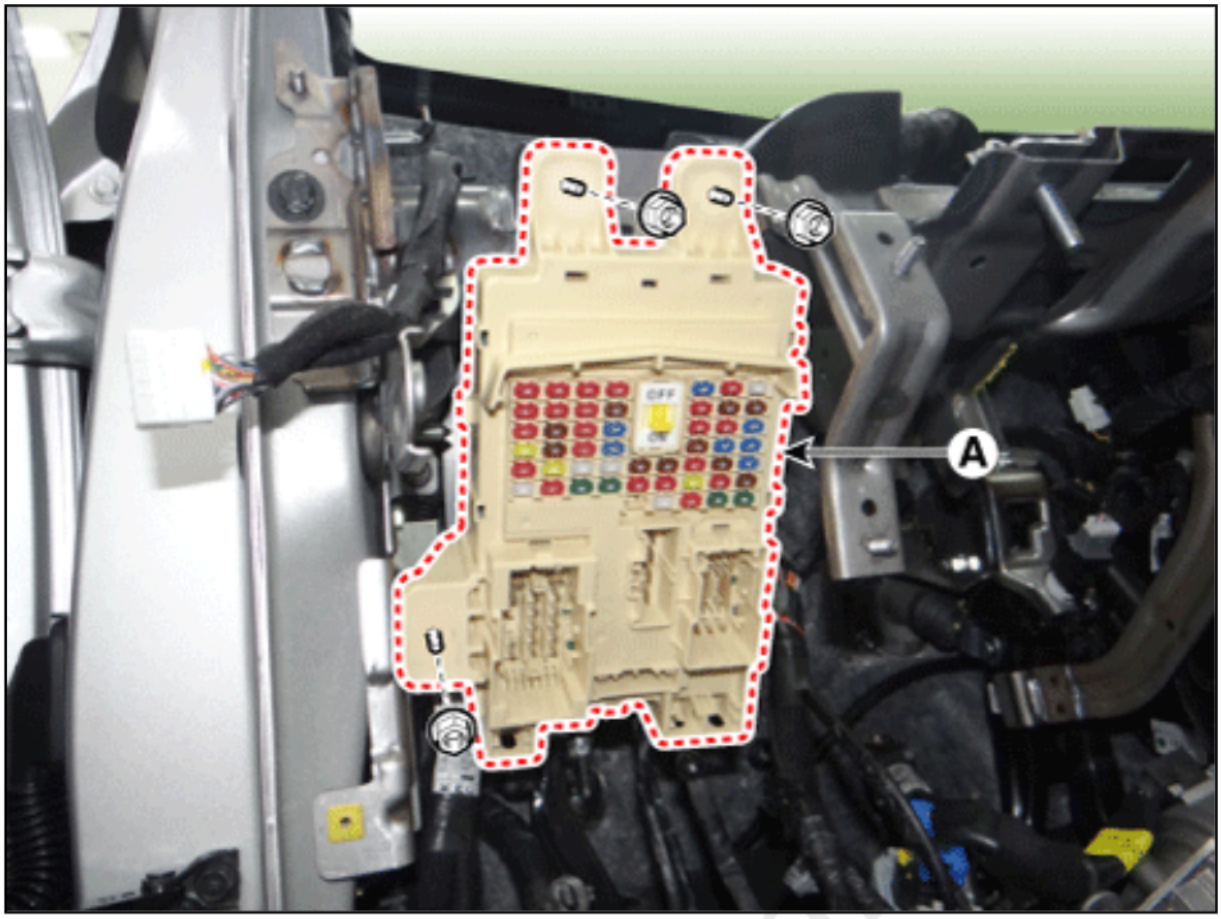

8. Disconnect the connectors (A) from the back of the IGPM.

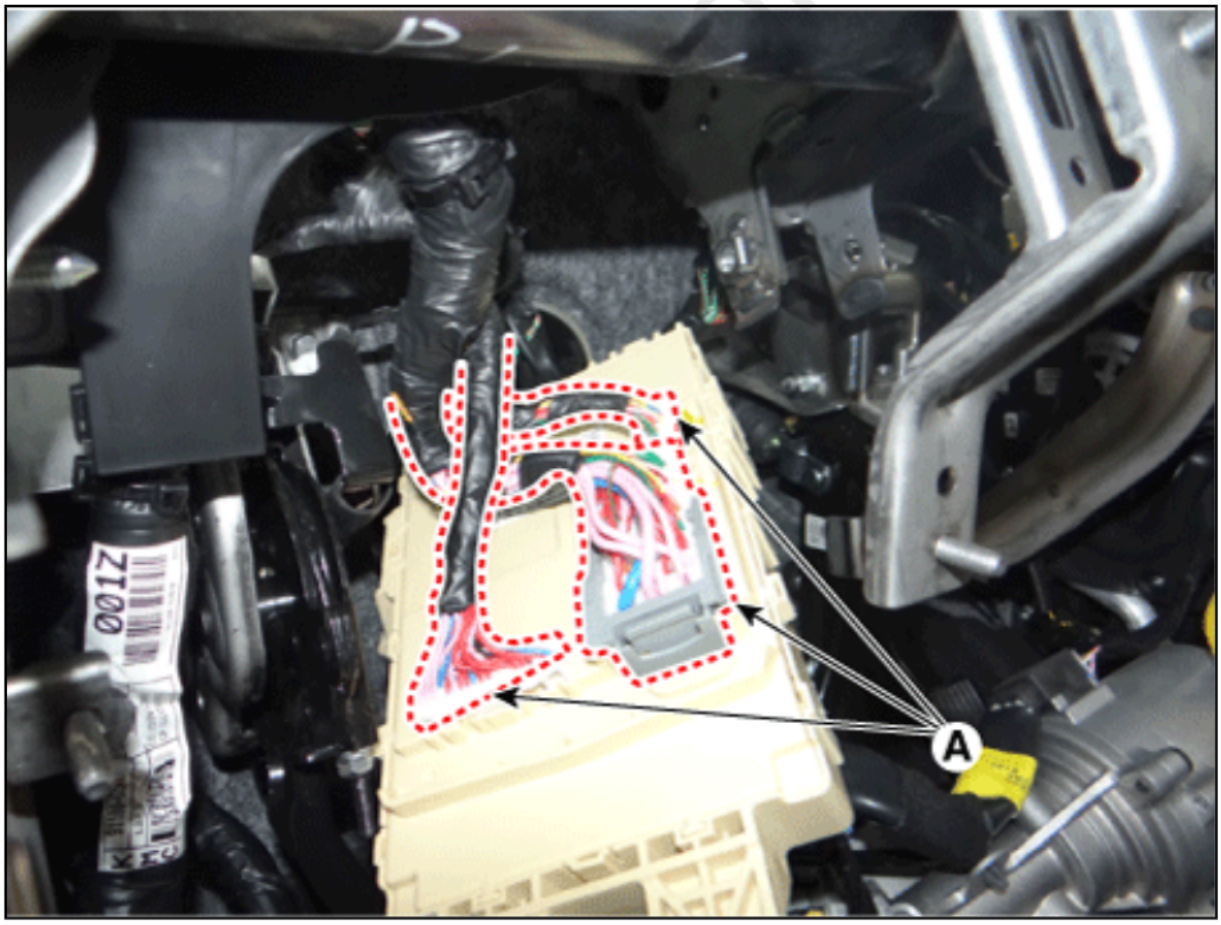

Installation

1. Install in the reverse order of removal.

cardiagn.com

Please rate this document after reviewing at the bottom of this page.

Circuit
Diagram

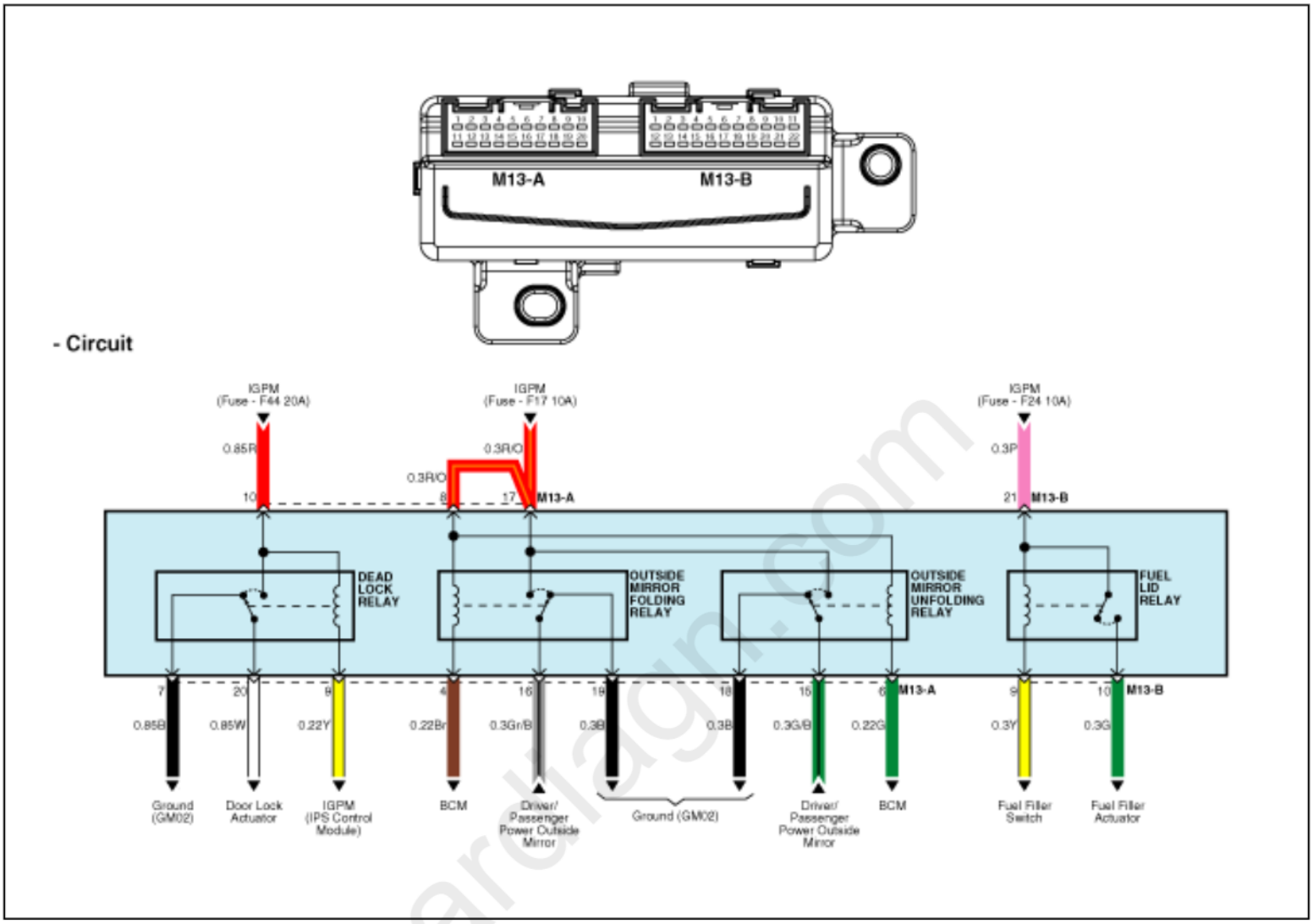

cardiagn.com

Please rate this document after reviewing at the bottom of this page.

Description

The ICM relay is united with fuel filler door lock/unlock relay and outside mirror folding/unfolding relay which installed inside the crash pad.



Please rate this document after reviewing at the bottom of this page.

Inspection

Outside Mirror Folding Relay

1. After supplying power to between No. 8 and 17 ICM relay terminals, check that there is continuity between No. 16 and 19 terminals.
2. After disconnecting power between No. 8 and 17 ICM relay terminals, check that there is no continuity between No. 16 and 19 terminals.

Outside Mirror Unfolding Relay

1. After supplying power to between No. 8 and 17 ICM relay terminals, check that there is continuity between No. 15 and 18 terminals.
2. After disconnecting power between No. 8 and 17 ICM relay terminals, check that there is no continuity between No. 15 and 18 terminals.

Removal

1. Disconnect the negative (-) battery terminal.
2. Remove the main crash pad assembly.
   (Refer to Body - "Main Crash Pad Assembly")
3. Disconnect the connector (A) from the ICM relay.
4. Remove the ICM realy (B) after loosening the mounting nuts.

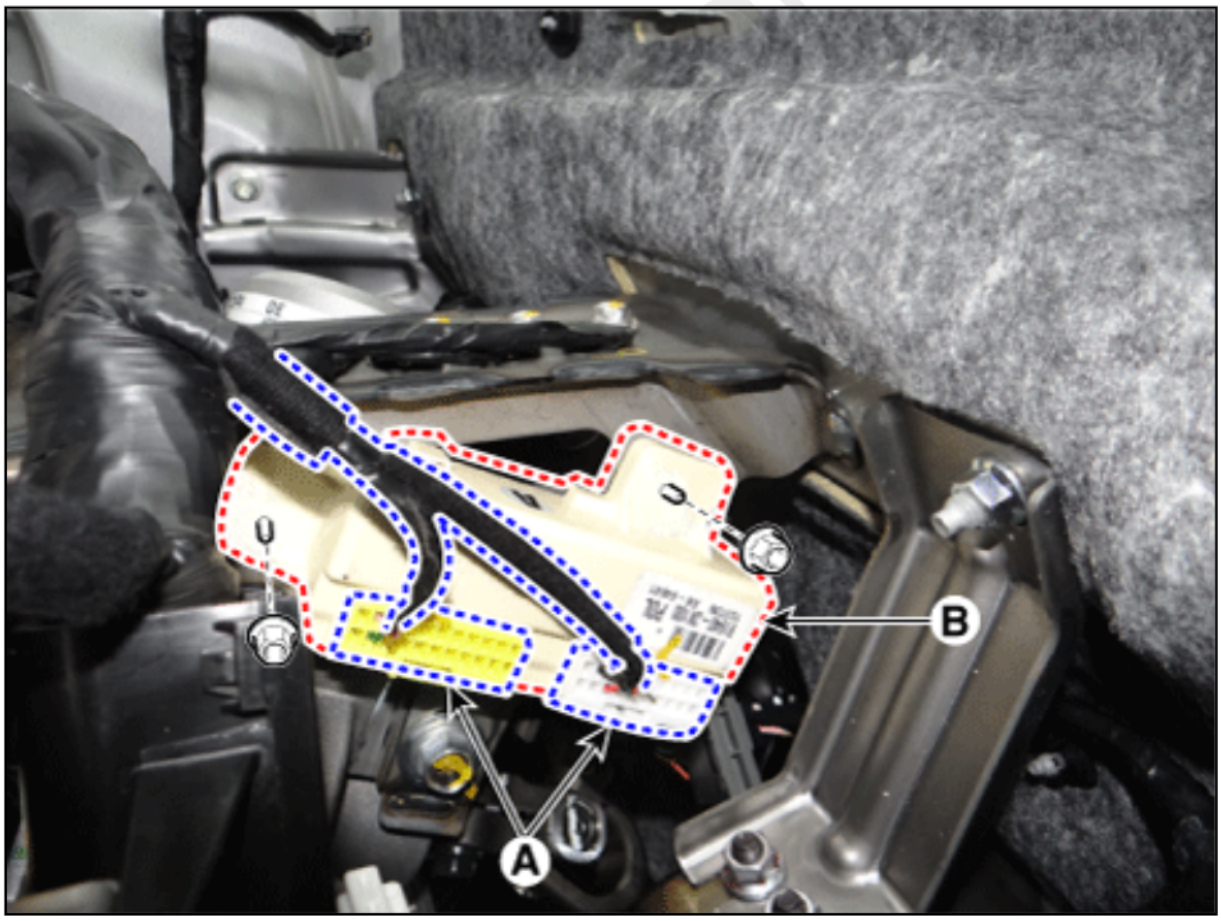

Installation

1. Install in the reverse order of removal.

cardiagn.com

Please rate this document after reviewing at the bottom of this page.

Component
Location

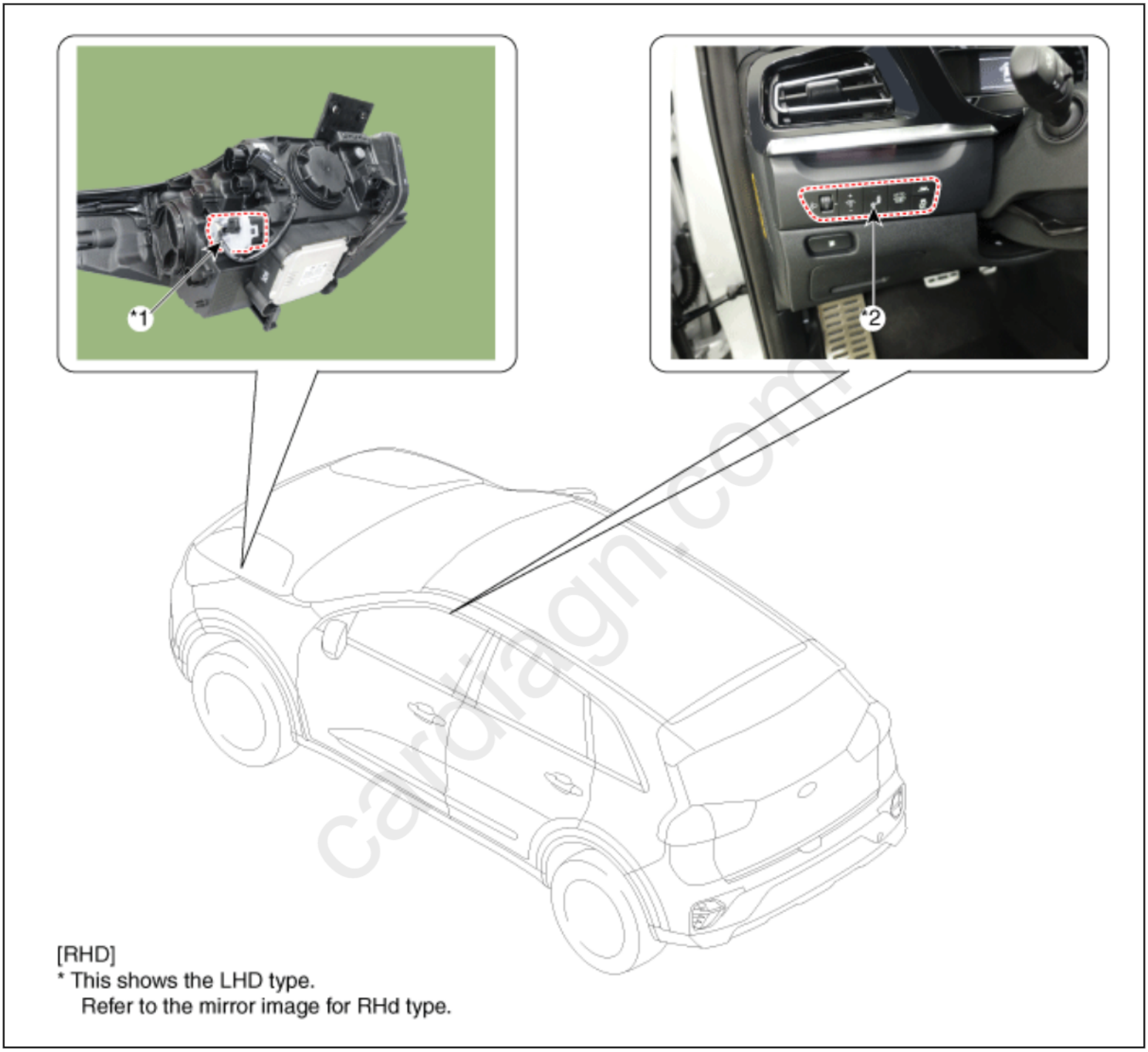

1. Headlamp leveling actuator
2. Headlamp leveling switch

Please rate this document after reviewing at the bottom of this page.

Connector and Terminal
Function

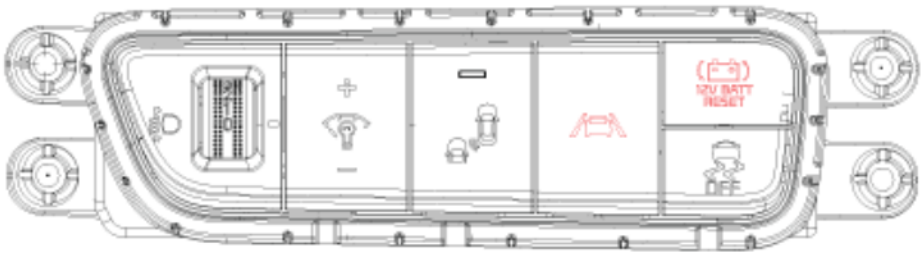

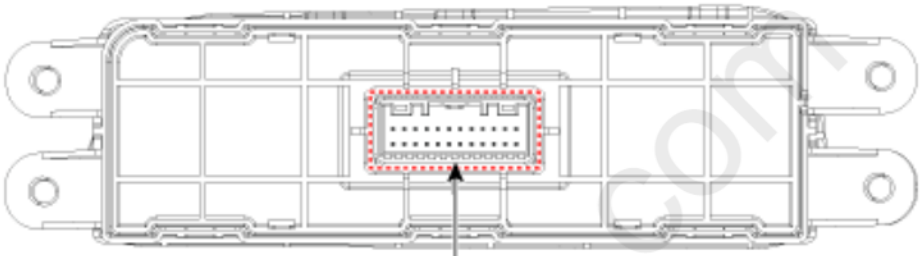

Connector

Connector	Pin	Function	Pin	Function
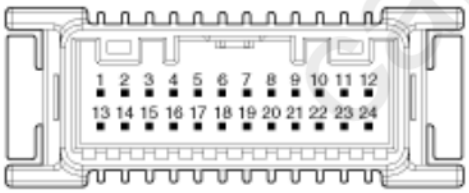	1	IGN1	13	Latch relay power
	2	-	14	-
	3	ESC OFF	15	HLLD signal
	4	-	16	Latch relay signal
	5	LKA mode	17	Rheostat up
	6	BCW mode	18	Rheostat down
	7	BCW indicator	19	-
	8	IGN HLLD	20	Illumination (+)
	9	VESS	21	-
	10	VESS indicator	22	Illumination (-)
	11	-	23	-
	12	HLLD ground	24	Ground

cardiagn.com

Circuit
Diagram

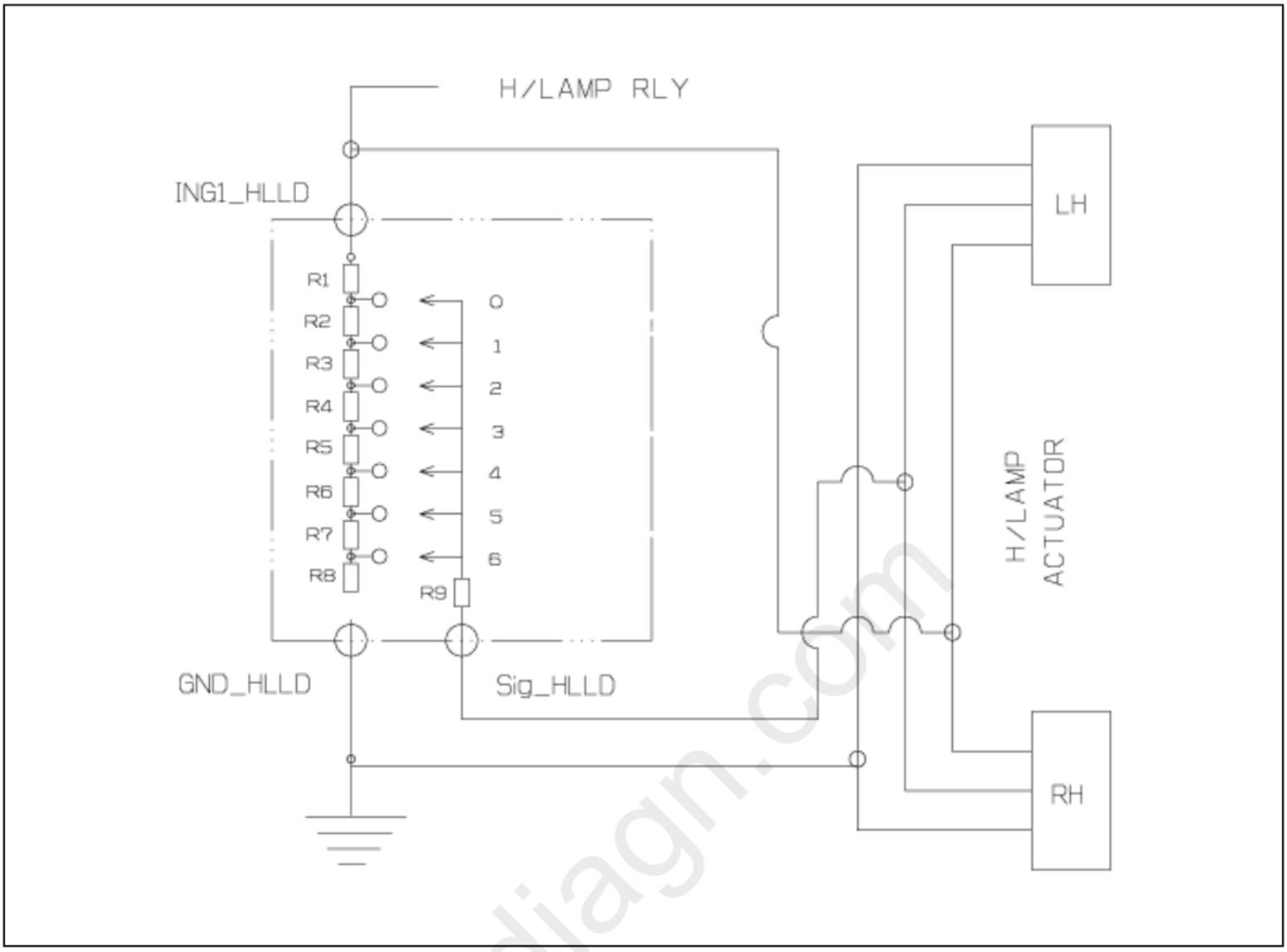

cardiagn.com

Please rate this document after reviewing at the bottom of this page.

Removal

1. Disconnect the negative (-) battery terminal.
2. Remove the crash pad lower panel.
   (Refer to Body - "Crash Pad Lower Panel")
3. Remove the crash pad plate [LH] (A) after loosening the screws.

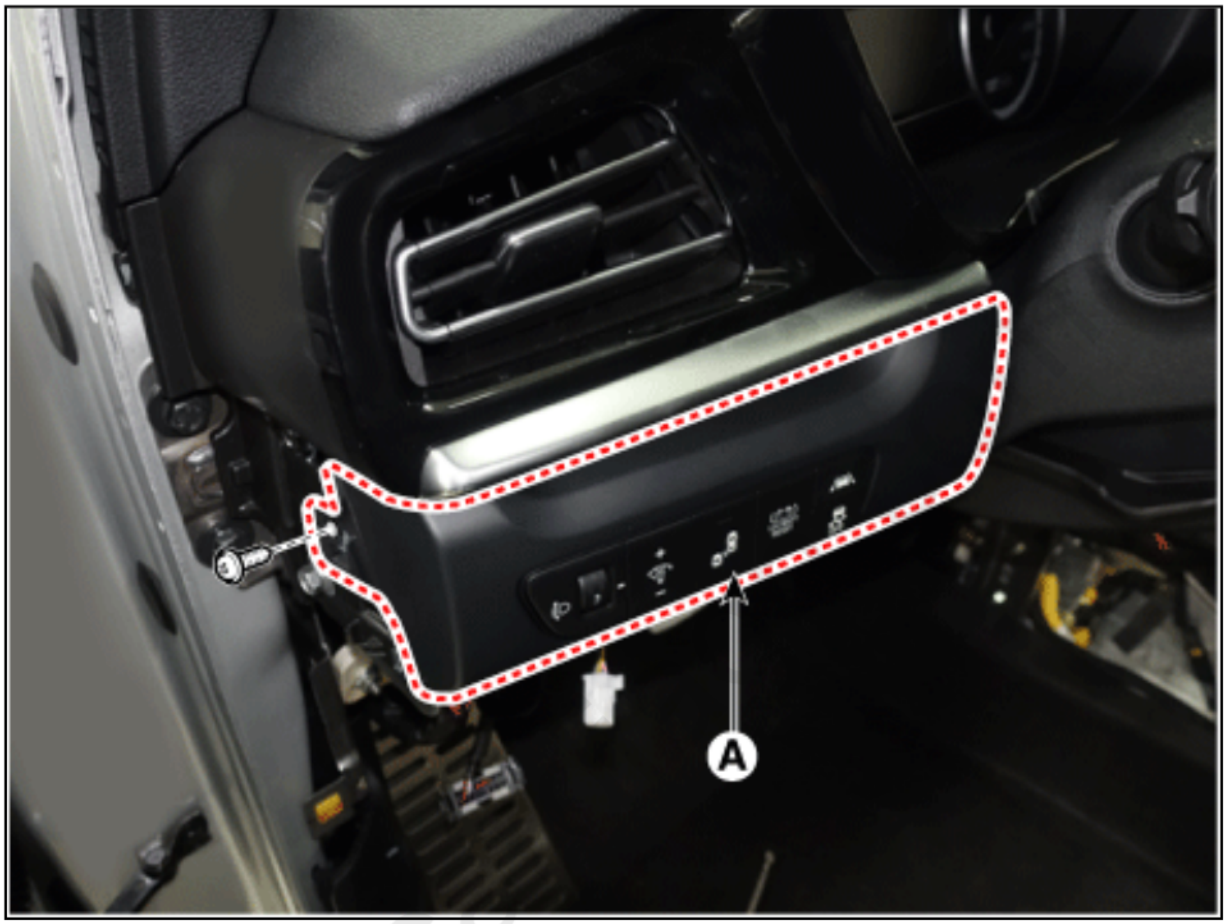

4. Disconnect the crash pad side switch connector (A).

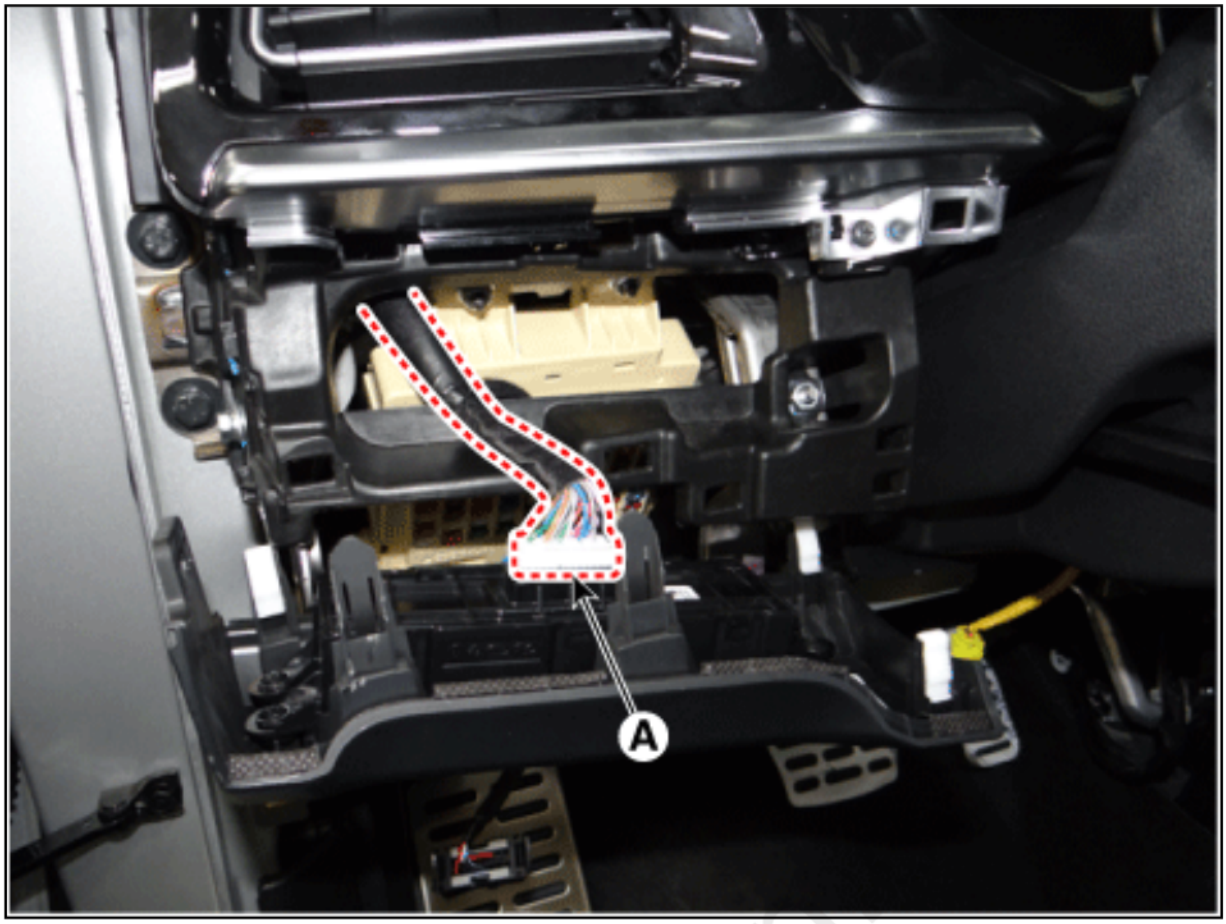

5. Remove the crash pad side switch (A) after loosening the screws.

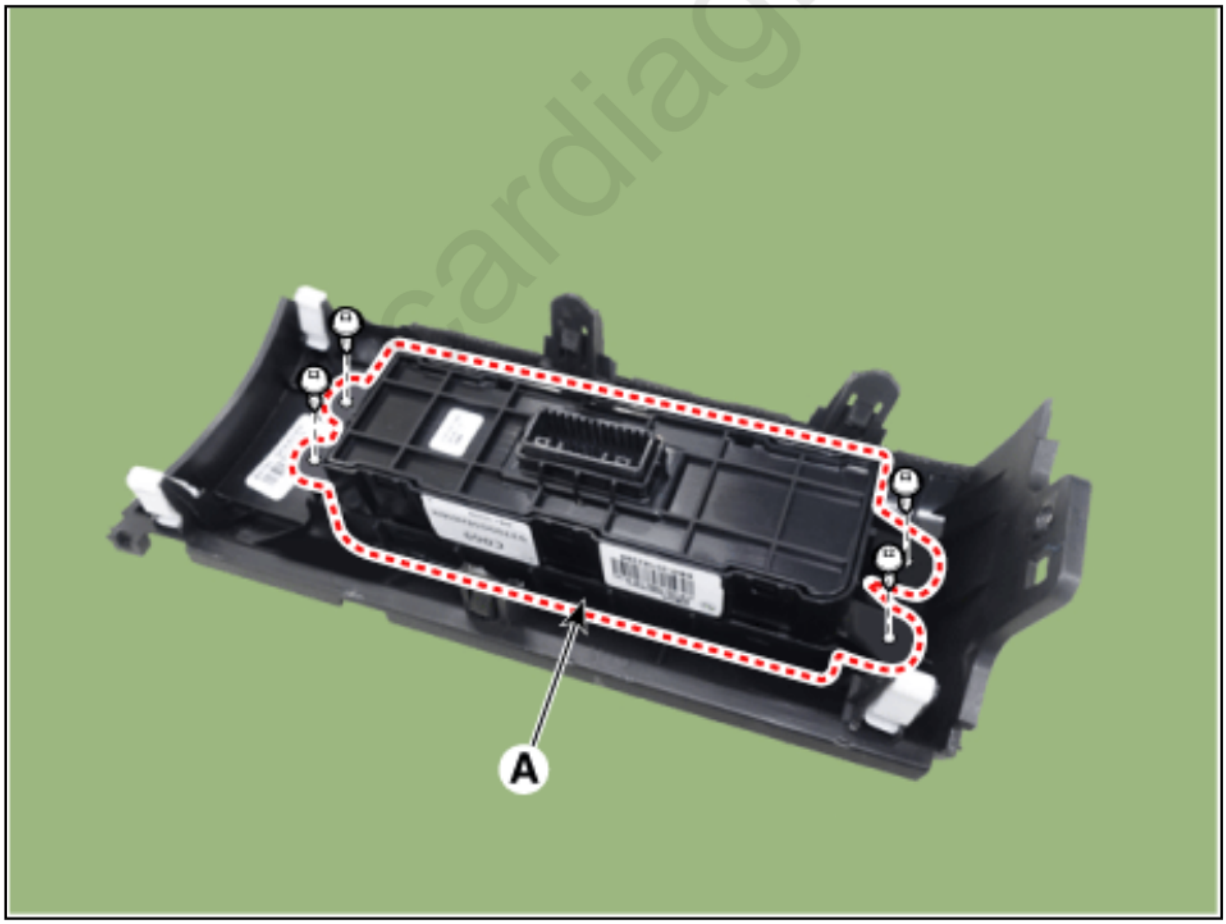

Installation

1. Install in the reverse order of removal.

cardiagn.com

Please rate this document after reviewing at the bottom of this page.

Specifications

Item	Specification	Remark
Operating voltage	9 - 16 V	-
Current consumption	MAX 5.0 A	At 12 V
Sound level	111 ± 3 dB	At 13 V, 2 m
Insulation resistance	MIN 1 MΩ	By 500 V mega meter

cardiagn.com

Please rate this document after reviewing at the bottom of this page.

Component
Location

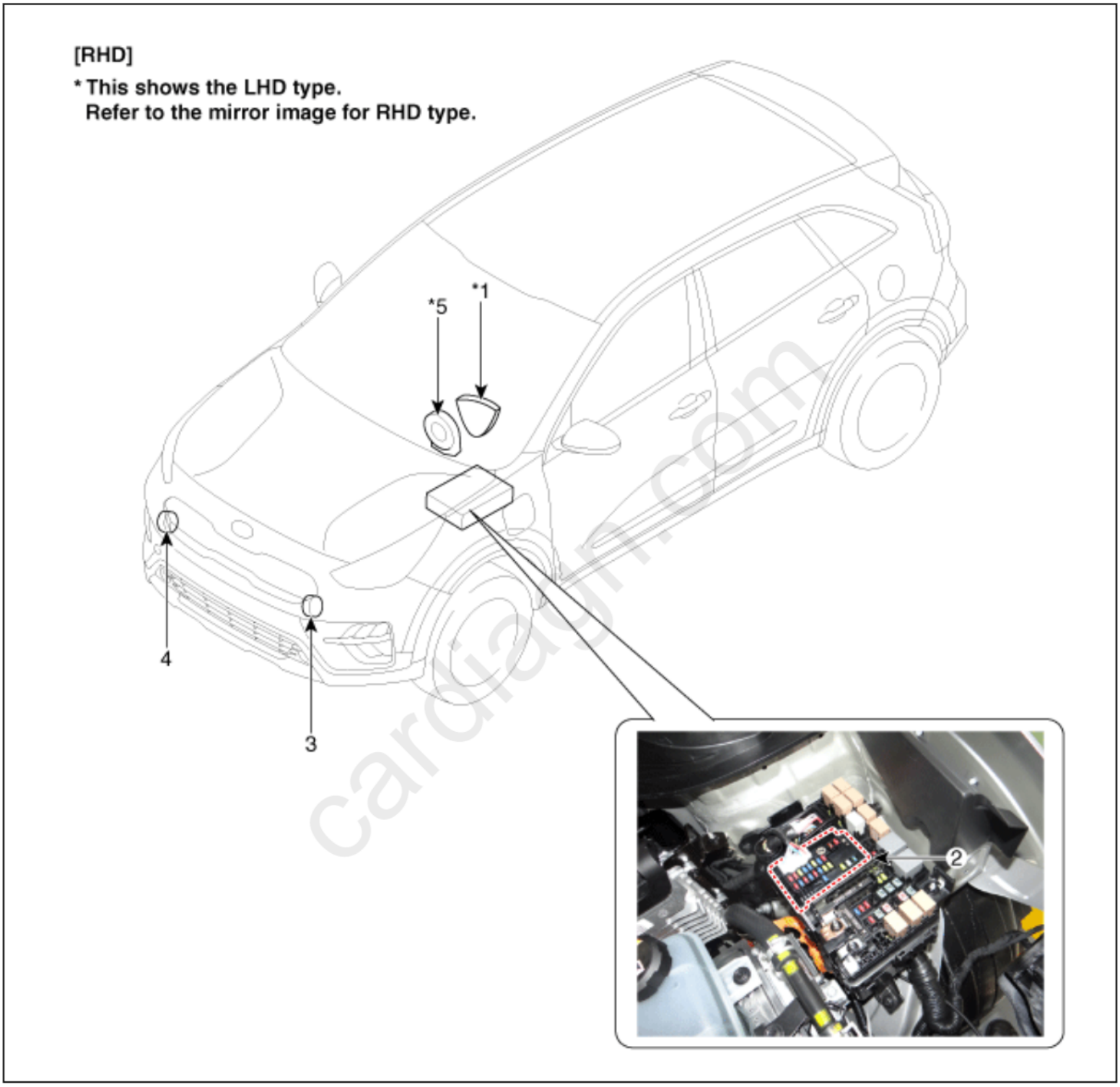

1. Horn switch
2. Horn relay (Built - in Metal Core Block PCB)
3. Horn (Low pitch)
4. Horn (High pitch)
5. Clock spring

Please rate this document after reviewing at the bottom of this page.

Removal

1. Remove the front bumper cover.
   (Refer to Body - "Front Bumper Cover")
2. Disconnect the connector (A) from the horn.

[Low]

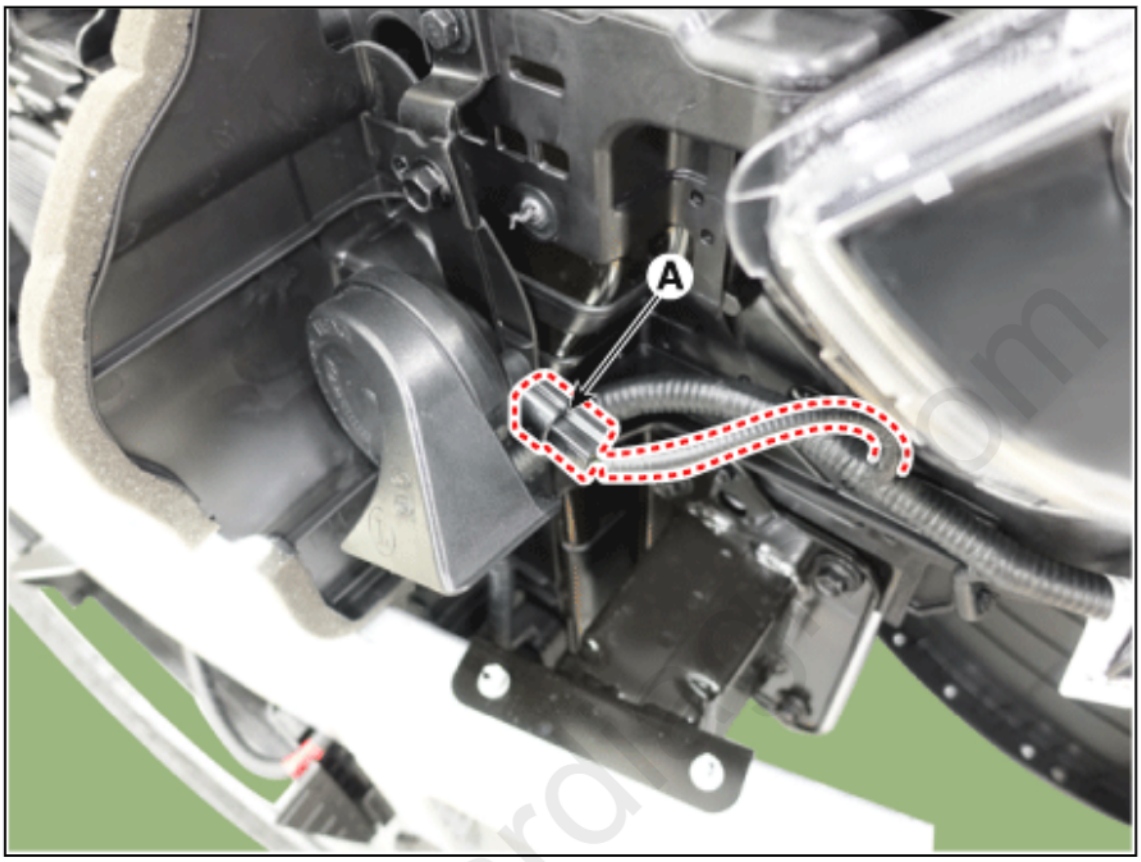

[High]

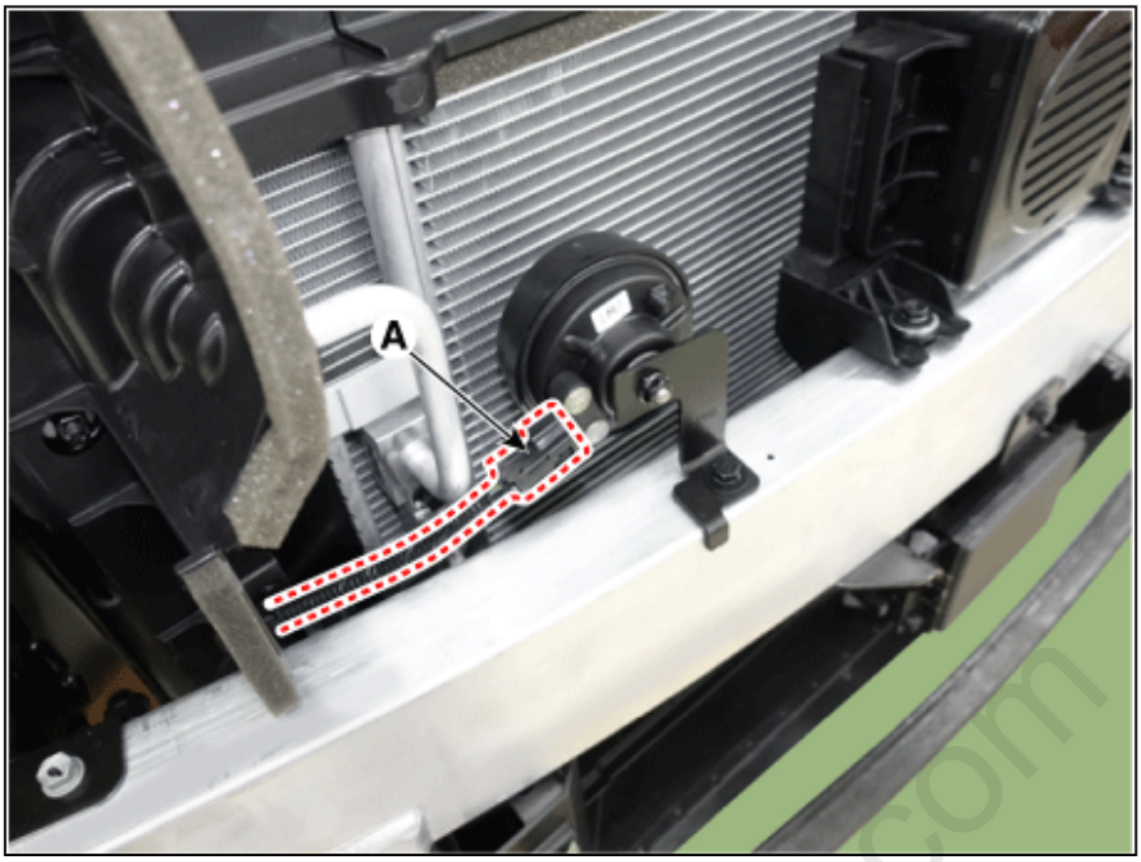

3. Remove the horn (A) after loosening the mounting bolt.

Tightening torque :
10.7 - 11.7 N·m (1.1 - 1.2 kgf·m, 7.9 - 8.6 lb·ft)

[Low]

cardiagn.com

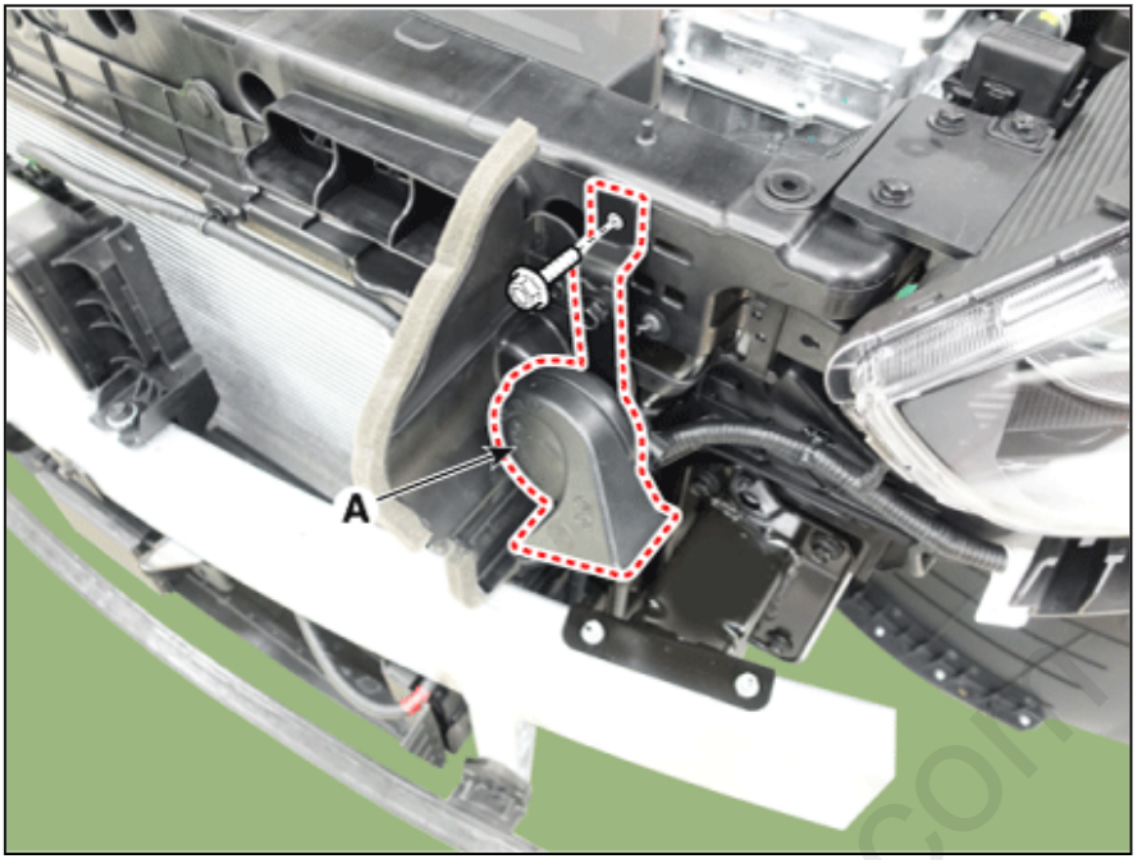

[High]

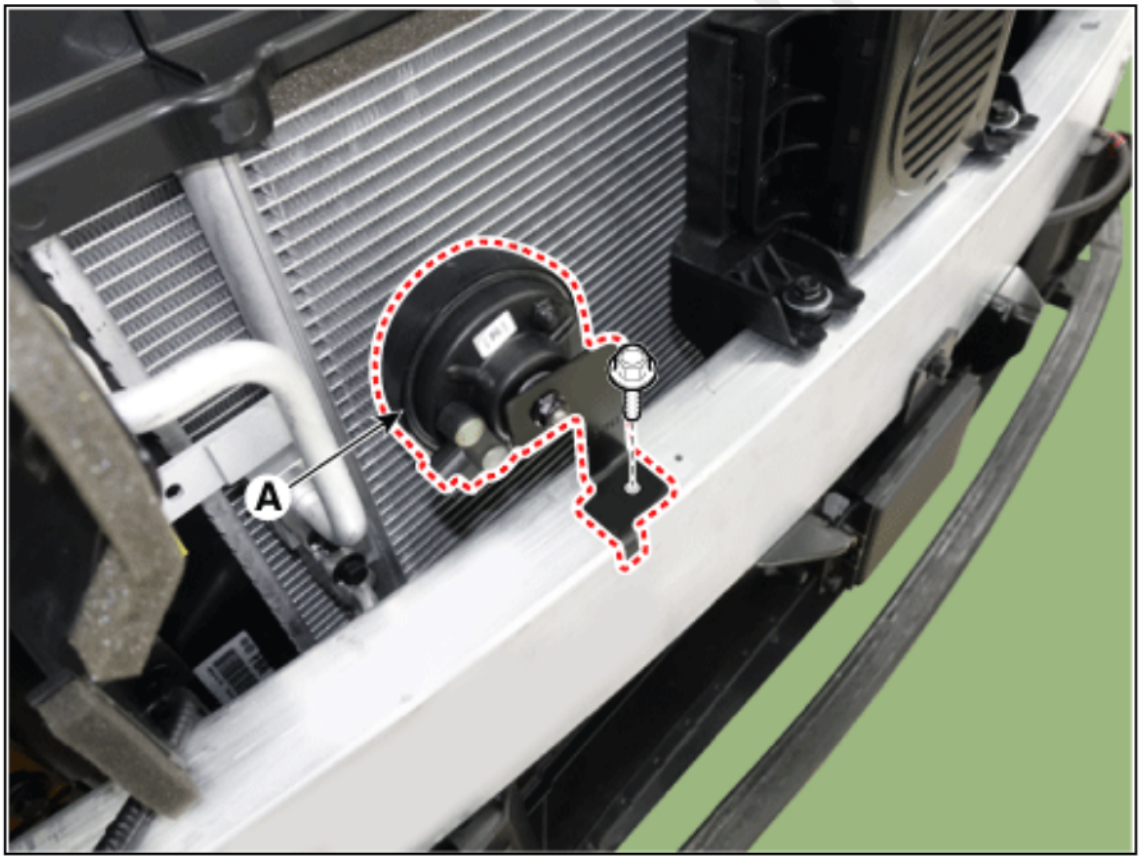

Installation

1. Install in the reverse order of removal.

Inspection

1. Test the horn by connecting battery power to the terminal 2 and ground the terminal 1.

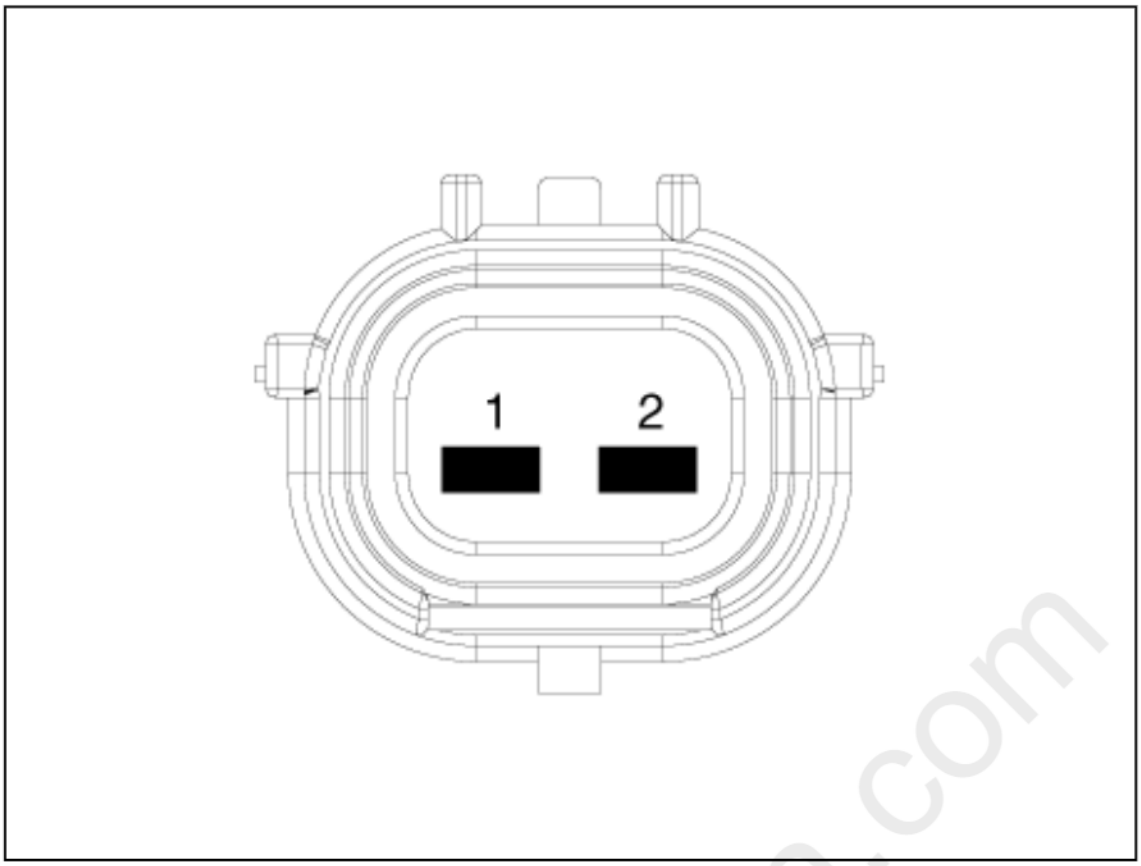

2. The relay on the horn of this vehicle is implanted into the metal core block PCB of the engine room relay block.

The semi-conductor type relay inserted in the PCB is impossible to replace. If the relay needs to be replaced, replace the metal core box and conduct a test on it.

cardiagn.com

Please rate this document after reviewing at the bottom of this page.

Inspection

1. Disconnect the key warning switch connector (A) and ignition switch connector (B) from the steering column.

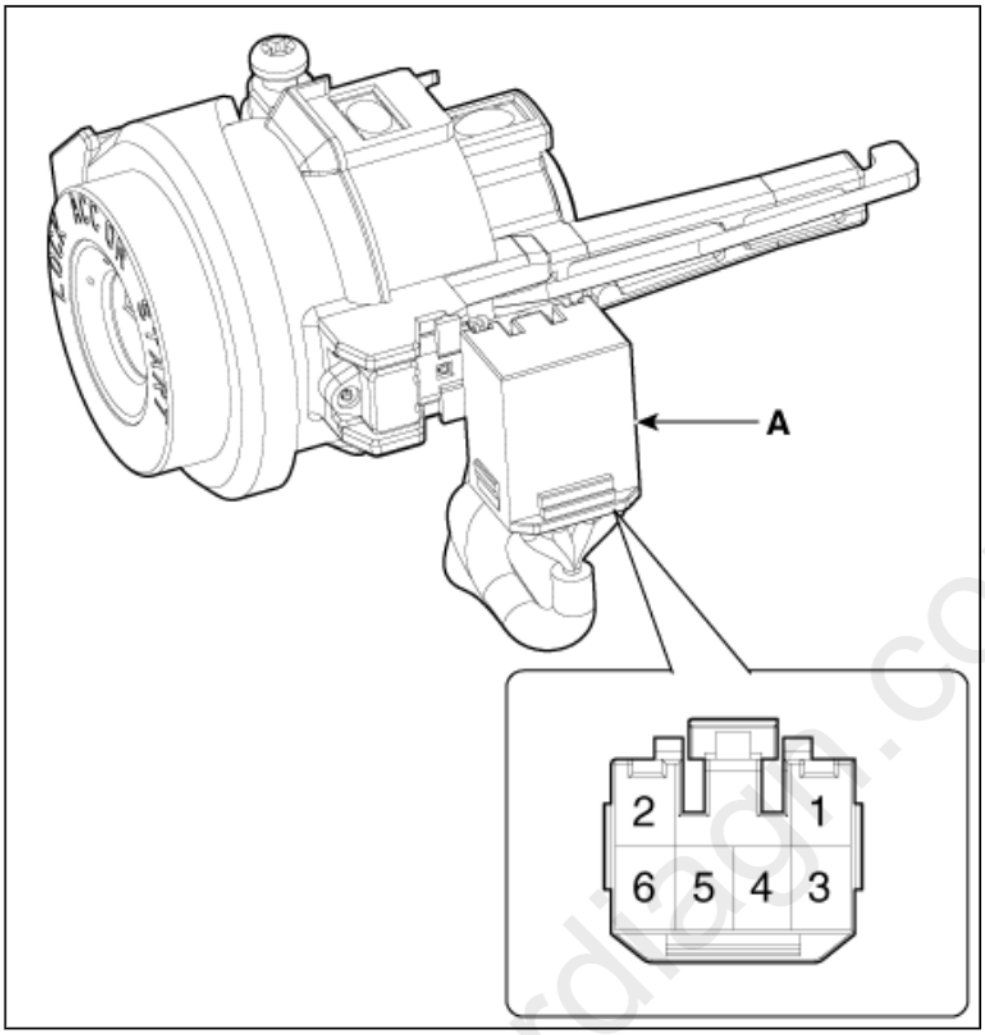

cardiagn.com

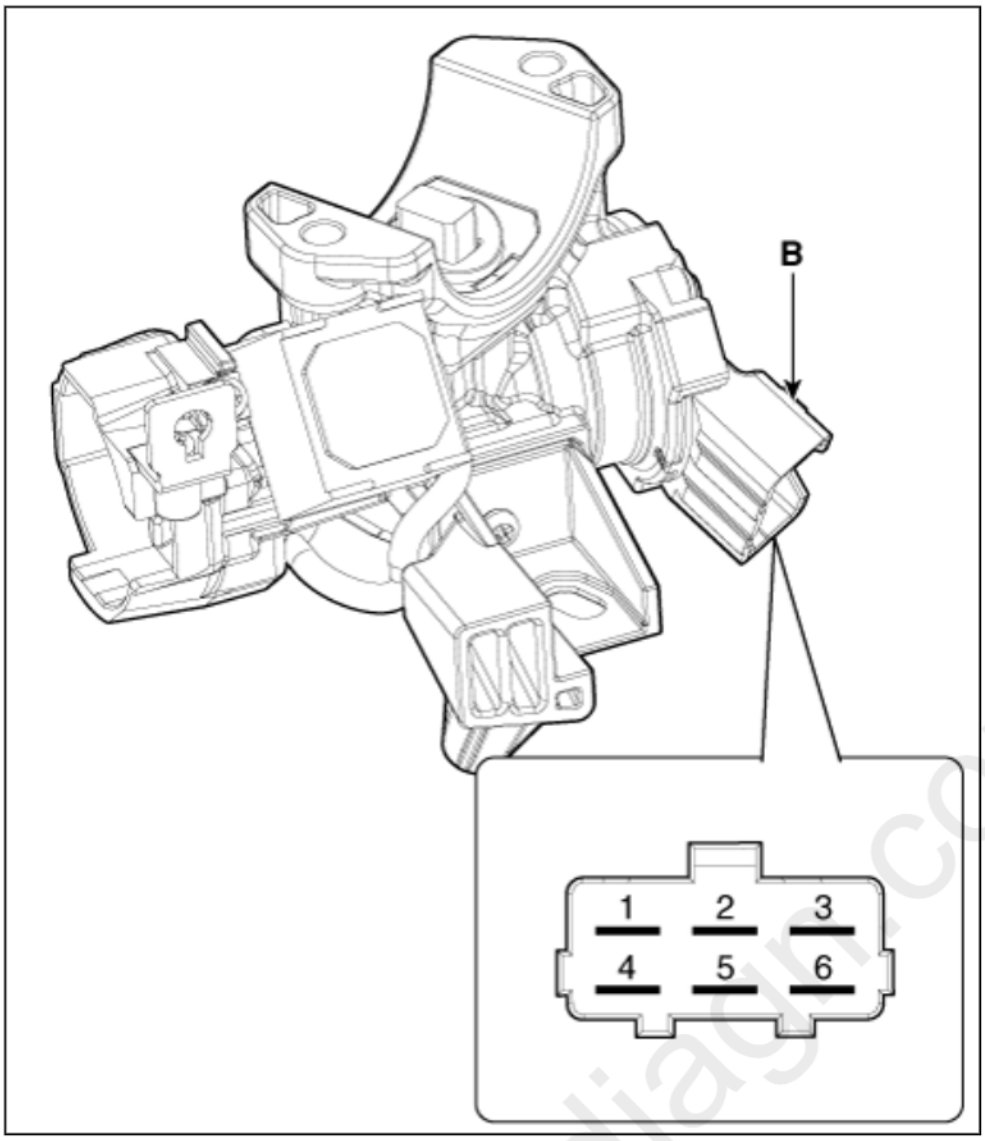

2. Check for continuity between the terminals.
3. If continuity is not specified, replace the switch.

Position \ Terminal	Key	Ignition switch (B) 5 (B1)	6 (ACC)	4 (IGN1)	1 (B2)	2 (IGN2)	3 (ST)	Key warning switch (A) 3	4	Key hole illumination (A) 5	6
LOCK	Removal										
	Insert										
ACC		○—○									
ON		○—○	○	○	○—○			○—○		○—○	
START		○—	—	○	○—	—	○				

Removal

1. Disconnect the negative (-) battery terminal.
2. Remove the crash pad lower panel.
   (Refer to Body - "Crash Pad Lower Panel")
3. Remove the steering column upper and lower shroud panel.
   (Refer to Body - "Steering Column Shroud Panel")

cardiagn.com

4. Remove the ignition switch connector (A) and key warning / immobilizer connector (B).

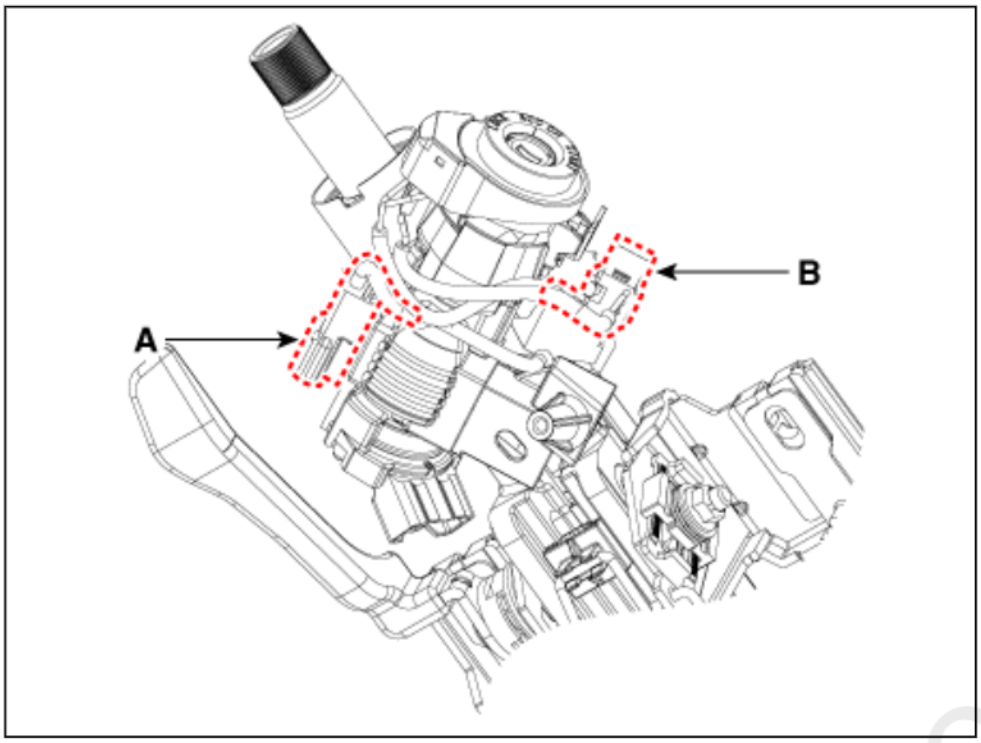

5. Insert key and turn it to ACC position.

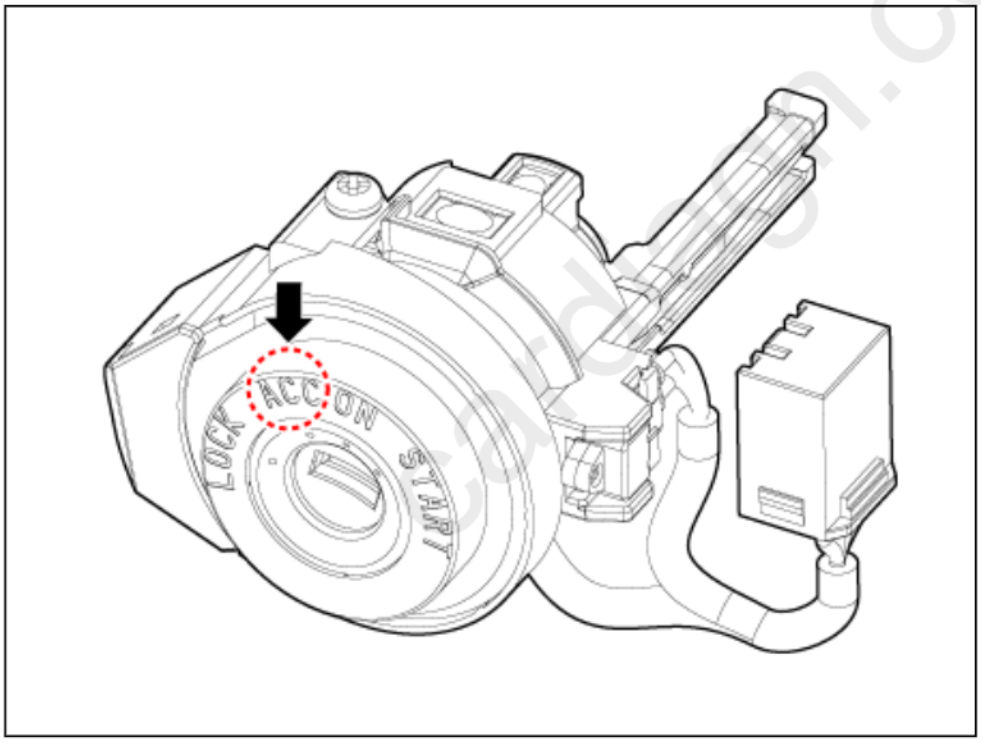

6. Pushing lock pin (A) with the awl.

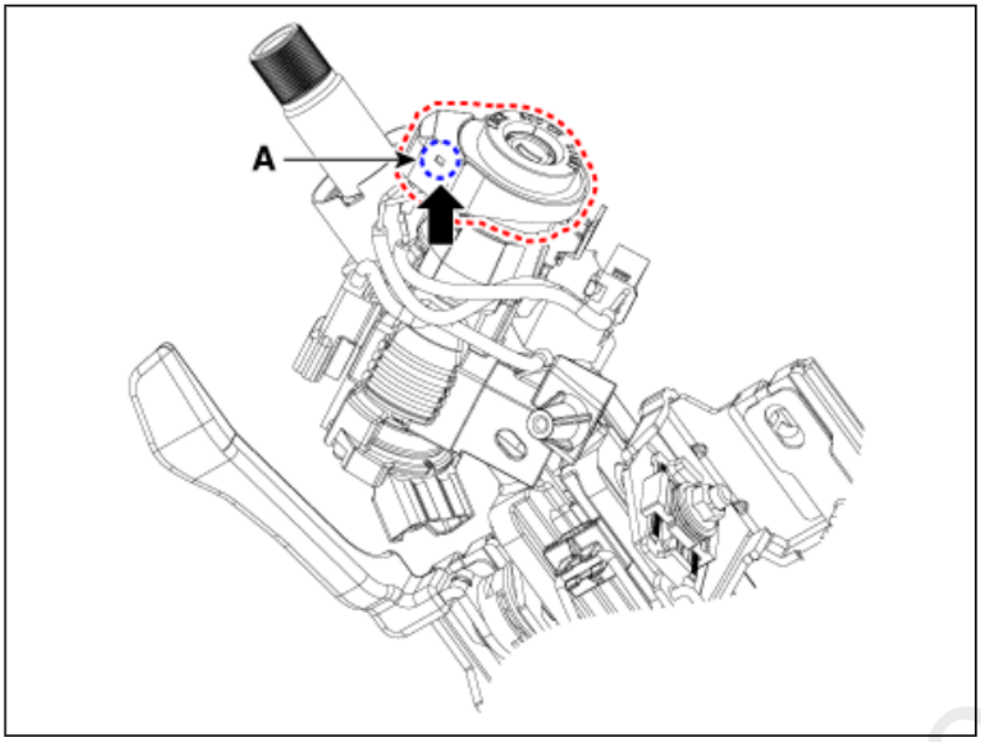

7. Remove the key lock cylinder (A).

B : Key warning switch
C : Ignition switch connector

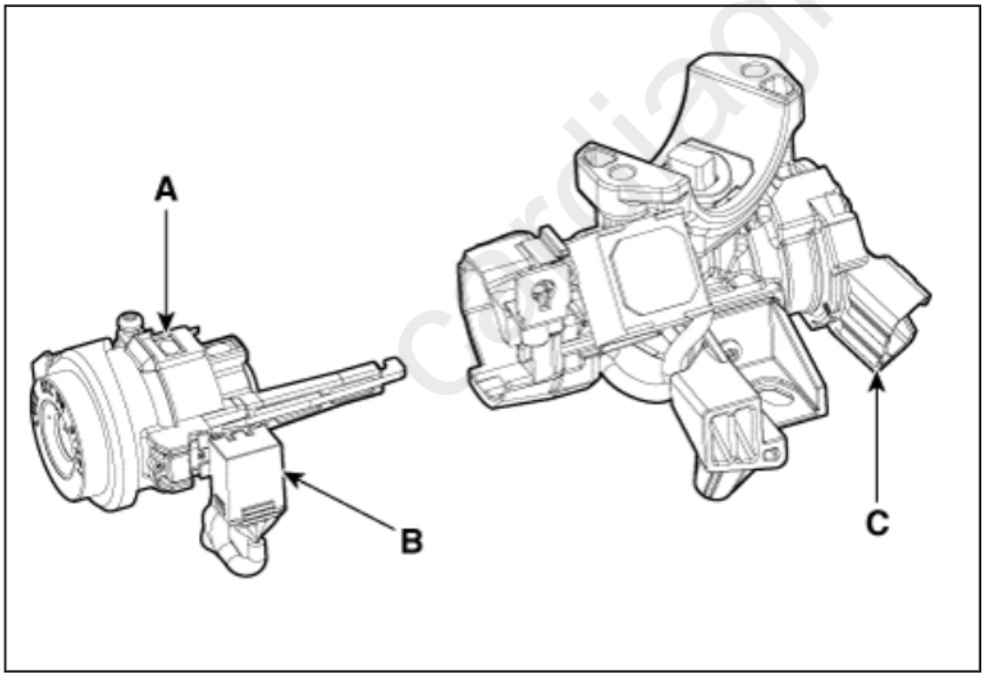

cardiagn.com

8. Remove the ignition switch (A) after loosening the mounting bolts.

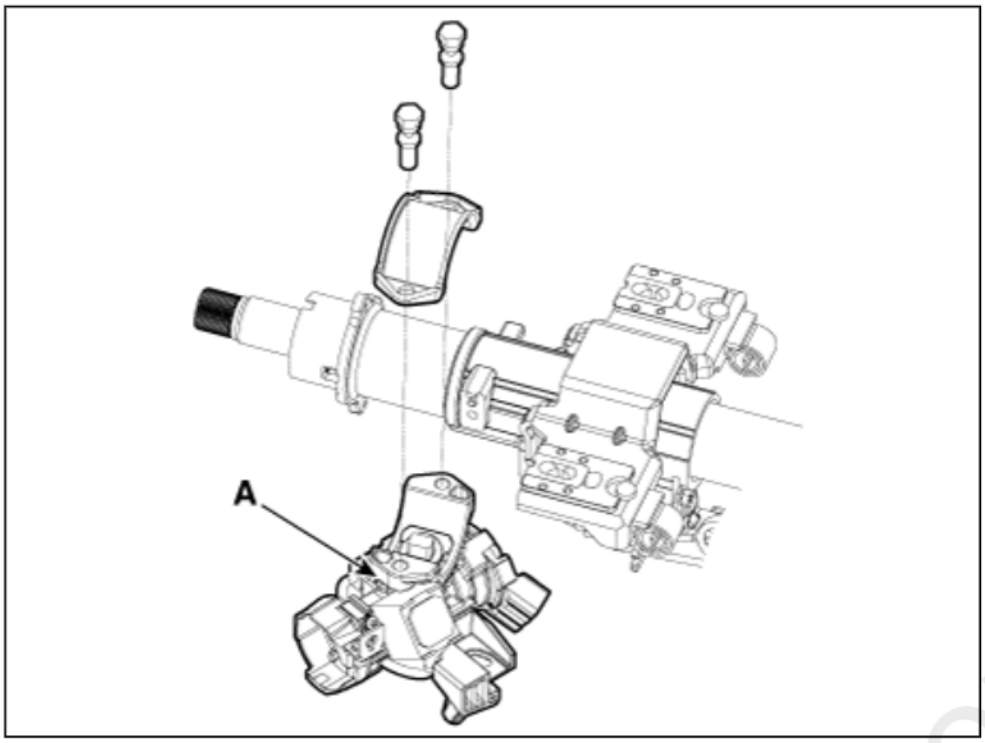

Installation

1. Install in the reverse order of removal.

- Do not reuse the shear bolts.
- When installing the new shear bolts to the ignition switch assembly, tighten the shear bolts until its head is cut off.

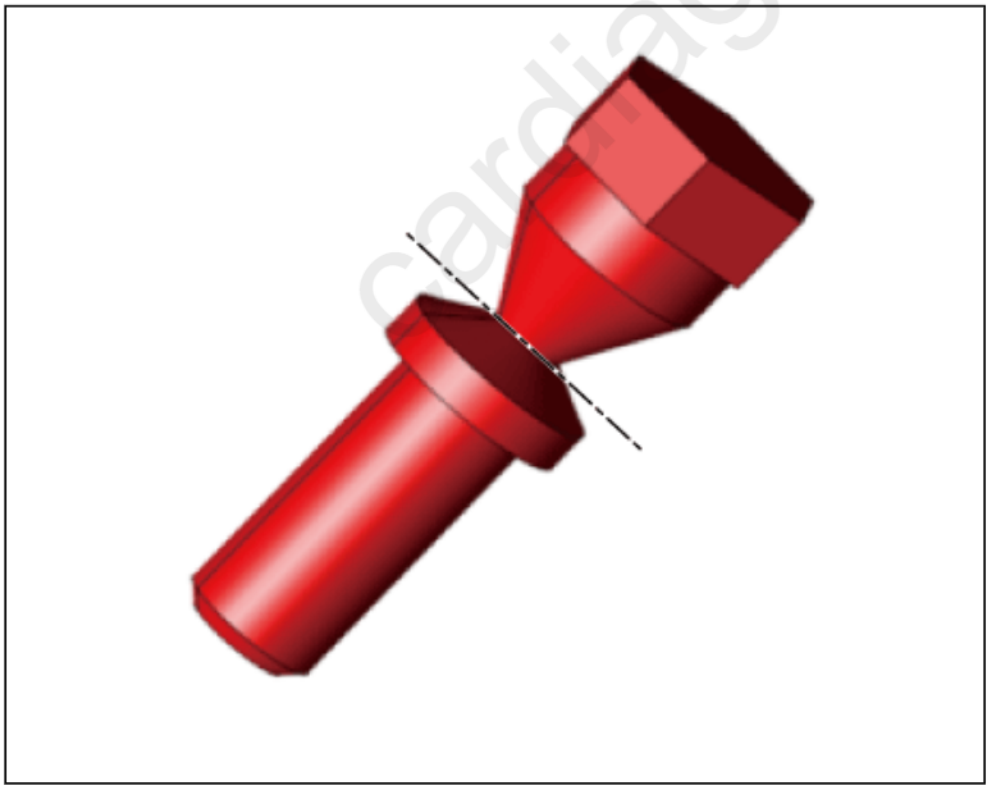

cardiagn.com

Please rate this document after reviewing at the bottom of this page.

Connector and Terminal
Function

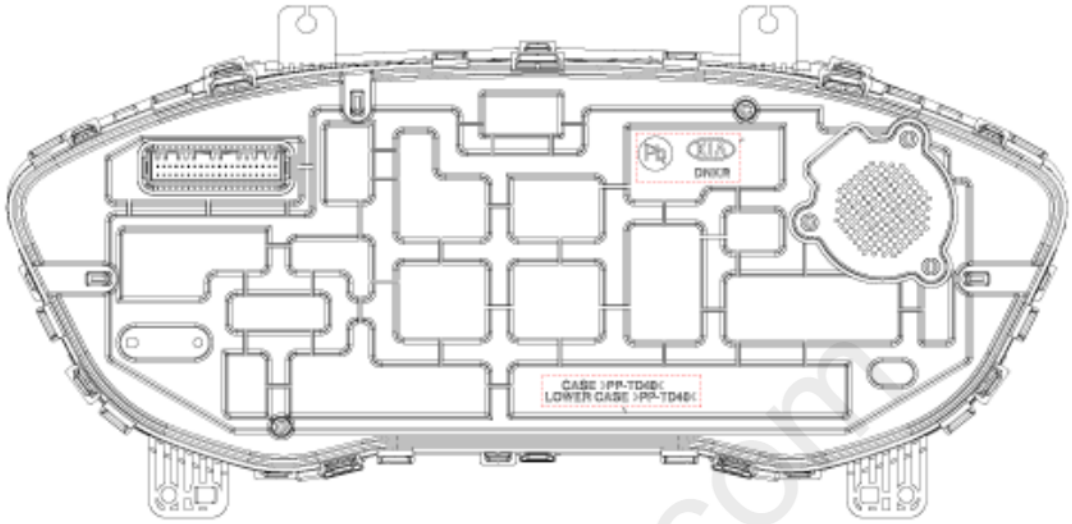



Pin	Function	Pin	Function
1	Ground	21	Trip switch (-) input
2	Illumination (-)	22	Trip switch 1 (+) input
3	Rheostat switch (Down)	23	Trip switch 2 (+) input
4	Rheostat switch (Up)	24	AT ('P' Position)
5	-	25	AT ('R' Position)
6	Oil pressure switch input	26	AT ('N' Position)
7	Washer level low input	27	AT ('D' Position)
8	-	28	AT ('S' Position)
9	-	29	M-CAN (Low)
10	-	30	M-CAN (High)

11	Detent	31	-
12	-	32	C-CAN (High)
13	-	33	C-CAN (Low)
14	Fuel sender (+) input	34	-
15	-	35	-
16	Fuel sender (-) input	36	-
17	Immobilizer input	37	Ground
18	Vehicle speed output	38	IGN3 (PHEV Only)
19	Air bag (+) input	39	IGN1
20	Tail lamp input	40	Battery (+)

cardiagn.com

Please rate this document after reviewing at the bottom of this page.

Description

Main Function

1. High speed CAN communication (C-CAN)
   (1) Custom Function : car seats linked to getting on/off motion, Welcome Light etc.
   (2) LKA: Lane Keeping Assist
   (3) PDW: Parking Distance Warning
2. Low speed CAN communication (M-CAN)
   (1) AV : Audio / Video Multimedia information Display
   (2) TBT : Turn By Turn Navigation Information Display
3. Sound output
   Various alarms and sound effects are issued through the cluster speaker.

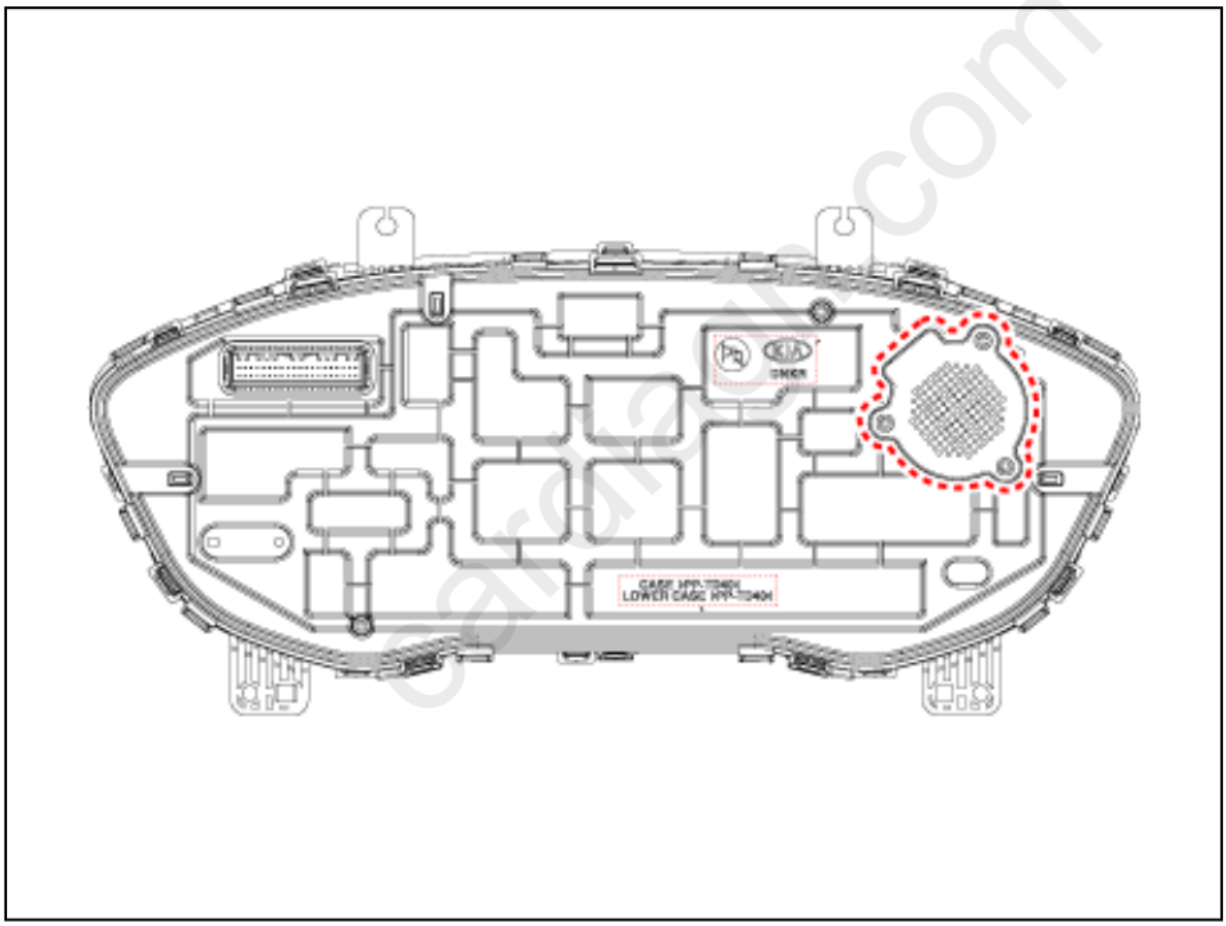

Sound	Description and function (CAN data receiver)
Welcome	Welcome (Key out and door open/closed state checked by BCM
Goodbye	Goodbye (Cluster)

Door open warning	Key reminder warning (BCM), Vehicle speed is 1km/h or below & IGN switch is ACCor IGN or engine start & when vehicle speed is below 1km/h or when the driverside door is opened
Seat belt warning	Driver seat belt warning (BCM)
PDW system warning	PDW sensor fault warning (BCM)
Gear R	PDW warning when shift gear R (BCM and PDW)
Parking Brake	Parking brake warning (BCM)
Start button	SSB button warning (SMK)
Rheostat light information	Rheostat warning when select the max or min degree (Cluster)
Smart Key departure	Smart key out warning (SMK)
	Non smart key warning (SMK)
Conventional cruise	Change the conventional cruise
Turn signal lamp	Turn signal lamp warning (BCM)
Smart key battery low voltage	Warning when driver push the SSB button with low voltage battery smart key (SMK)
EPB warning	Warning when change from Auto Hold to EPB lock (EPB)
Coolant temperature alarm	When the engine temperature is over 120 °C (EMS)

4. User Setting Mode (USM)
   Setting can be changed by using switchs (Menu, UP, Down and OK button). There are many items (for example, In/Out Seat Synchronization, In/Out Steering Wheel Synchronization, Auto Door Lock, Auto Door Lock Deactivate, Head Lamp Escort, Welcome Light, Welcome Sound, One Touch Turn Signal, Average Fuel Consumption Auto Reset, Brightness, and Content Setup) that can be set and customized. The signal flow during setting is as follows.
   (1) UMS settings are set, they are transmitted to BCM.
   (2) BCM transmits the settings via B-CAN to the relevant modules.
   (3) The module completes setting and transmits the modified setting to BCM.
   (4) BCM transmits the final settings via C-CAN to the cluster.



The cluster communicates directly with C-CAN units.

Hybrid Mian Features

cardiagn.com

1. ECO and power guage

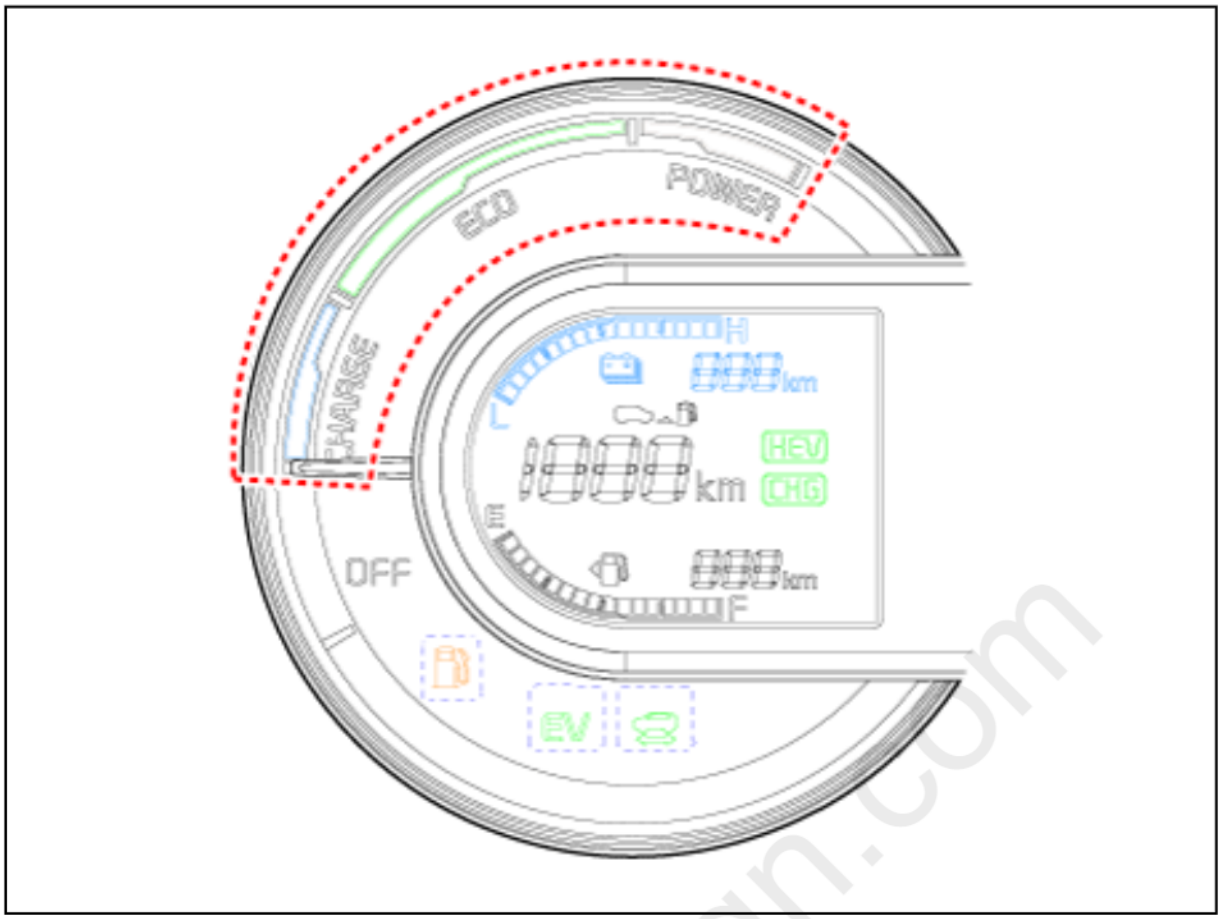

(1) It displays the degree of economic driving by identifying the status of a driver's operation, depending on a vehicle's driving conditions (e.g., required power, system efficiency and charging).

(2) It leads to economic driving by informing the driver of the optimal driving conditions depending on the vehicle's conditions.

(3) It displays that ECO guide and power segment will operate during driving, and also indicates the state of regenerative braking when a charge zone is instructed while driving.

2. SOC(State of Charge) guage

(1) It displays the amount of charge of high-voltage battery.

(2) It displays the charged amount of SOC received from BMS module on the digital gauge in the instrument cluster (as follows).

cardiagn.com

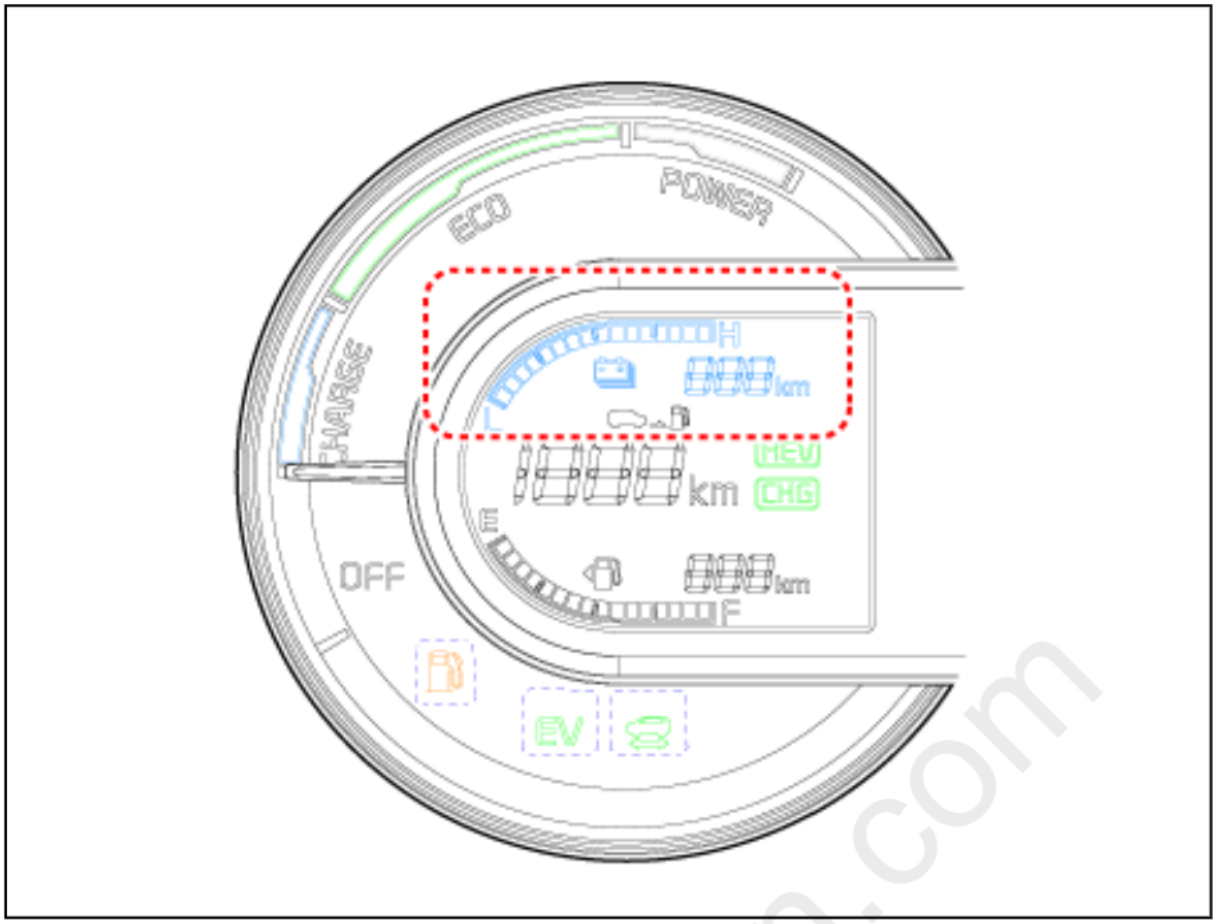

No.	SOC(%)	No.	SOC(%)
0	~ 19.5	9	55.5 ~ 60
1	20 ~ 23	10	60.5 ~ 65
2	23.5 ~ 26	11	65.5 ~ 70
3	26.5 ~ 30	12	70.5 ~ 75
4	30.5 ~ 35	13	75.5 ~ 80
5	35.5 ~ 39.5	14	80.5 ~ 85
6	40 ~ 44.5	15	85.5 ~ 92
7	45 ~ 50	16	92.5 ~ 95
8	50.5 ~ 55		

cardiagn.com

3. Energy Flow

(1) It displays graphical energy flow of an HEV vehicle to inform the driver of the vehicle information.

(2) It leads to economic driving by showing the energy flow diagram by means of intuitive images.

(3) HCU module receives operation mode CAN signals to implement any relevant animation.

No.	Definition	Graphic	Remark
1	Vehicle stopped	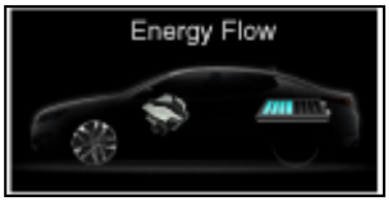	-
2	Vehicle mode driven only by motor	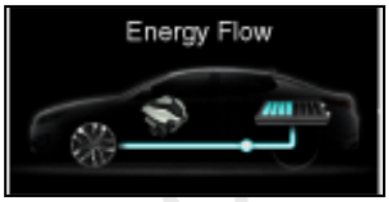	Battery → Wheels
3	Vehicle mode driven by motor and engine	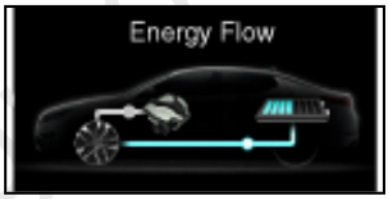	Batteries → Wheels Engine → Wheels
4	Vehicle mode driven only by engine		Engine → Wheels
5	Engine stops at the high-voltage battery charge state.	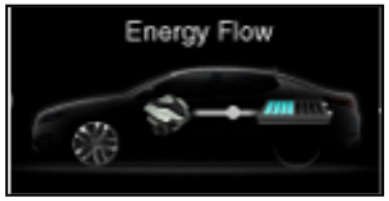	Engine → Batteries
6	Due to the high voltage battery charging regenerative braking.	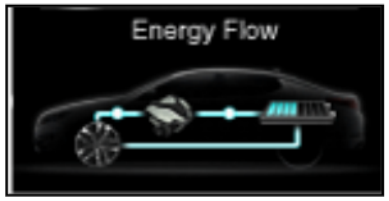	Wheels → Batteries

cardiag.com

7	Engine Friction braking conditions using a vehicle.	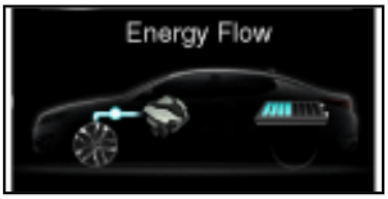	Wheels → Engine
8	Engine amount of secondary high-voltage battery charging while driving	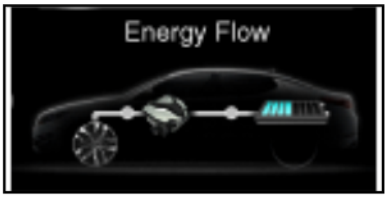	Engine → Wheels Engine → Batteries
9	Vehicle mode in which motor engine is used to recharge the battery	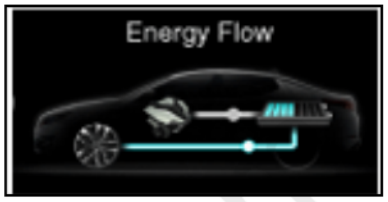	Engine → Batteries Batteries → Wheels
10	Engine Generation / Regeneration	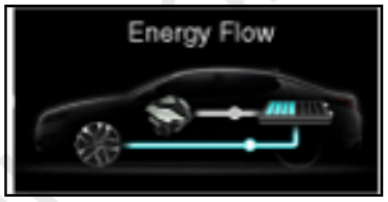	Engine → Batteries Wheels → Batteries
11	Engine Brake / Regeneration	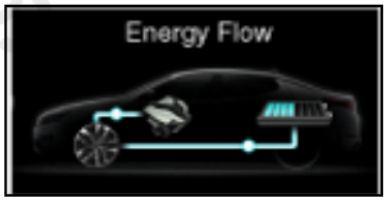	Wheels → Engine Wheels → Batteries

cardiagn

Please rate this document after reviewing at the bottom of this page.

Removal

- Put on gloves to protect your hands.
- When removing with a flat-tip screwdriver or remover, wrap protective tape around the tools to prevent damage to components.

Instrument Cluster

1. Disconnect the negative (-) battery terminal.
2. Remove the cluster fascia panel.
   (Refer to Body - "Cluster Fascia Panel")
3. Remove the instrument cluster (A) after loosening the mounting screws.

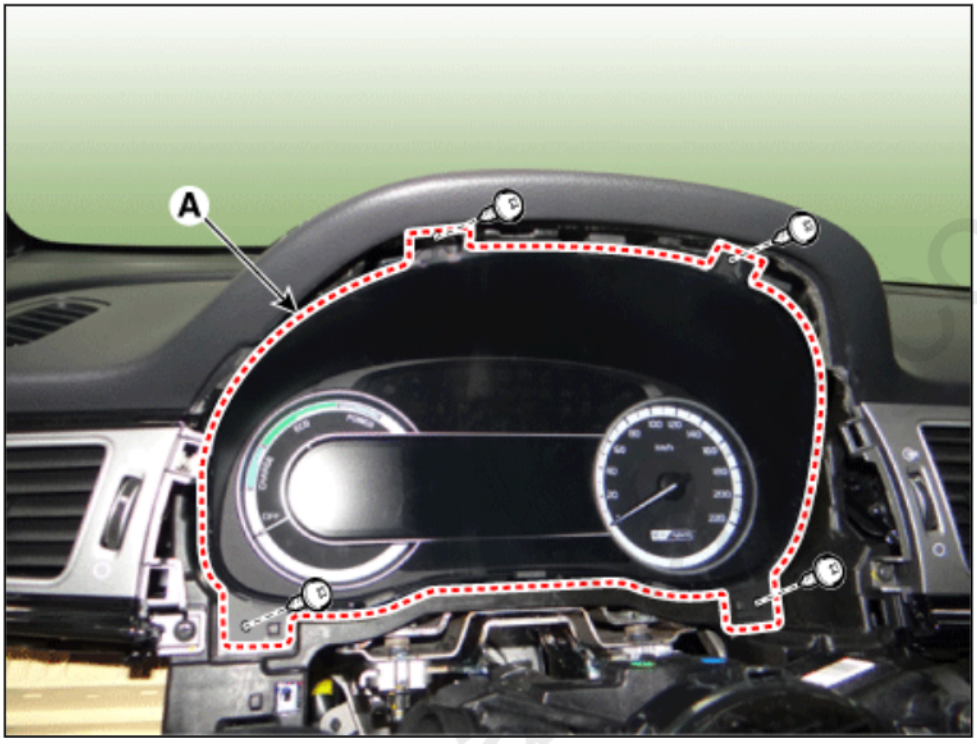

4. Disconnect the connector (A) from the instrument cluster.

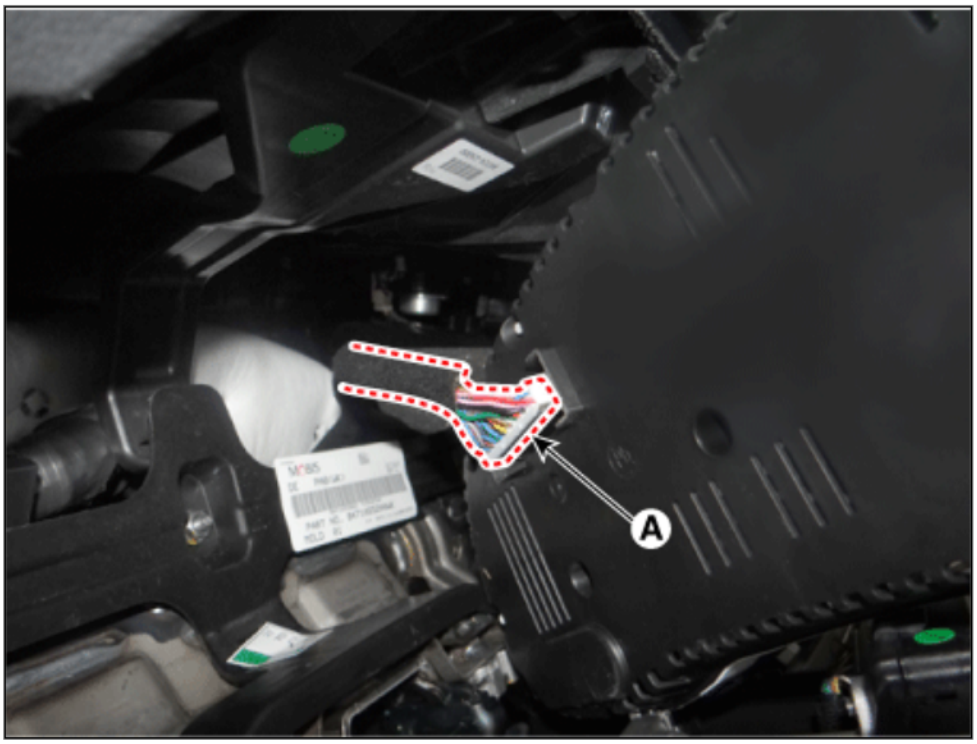

Installation

1. Install in the reverse order of removal.
2. After replacing the cluster with a new one, the "Variant Coding" procedure must be performed.

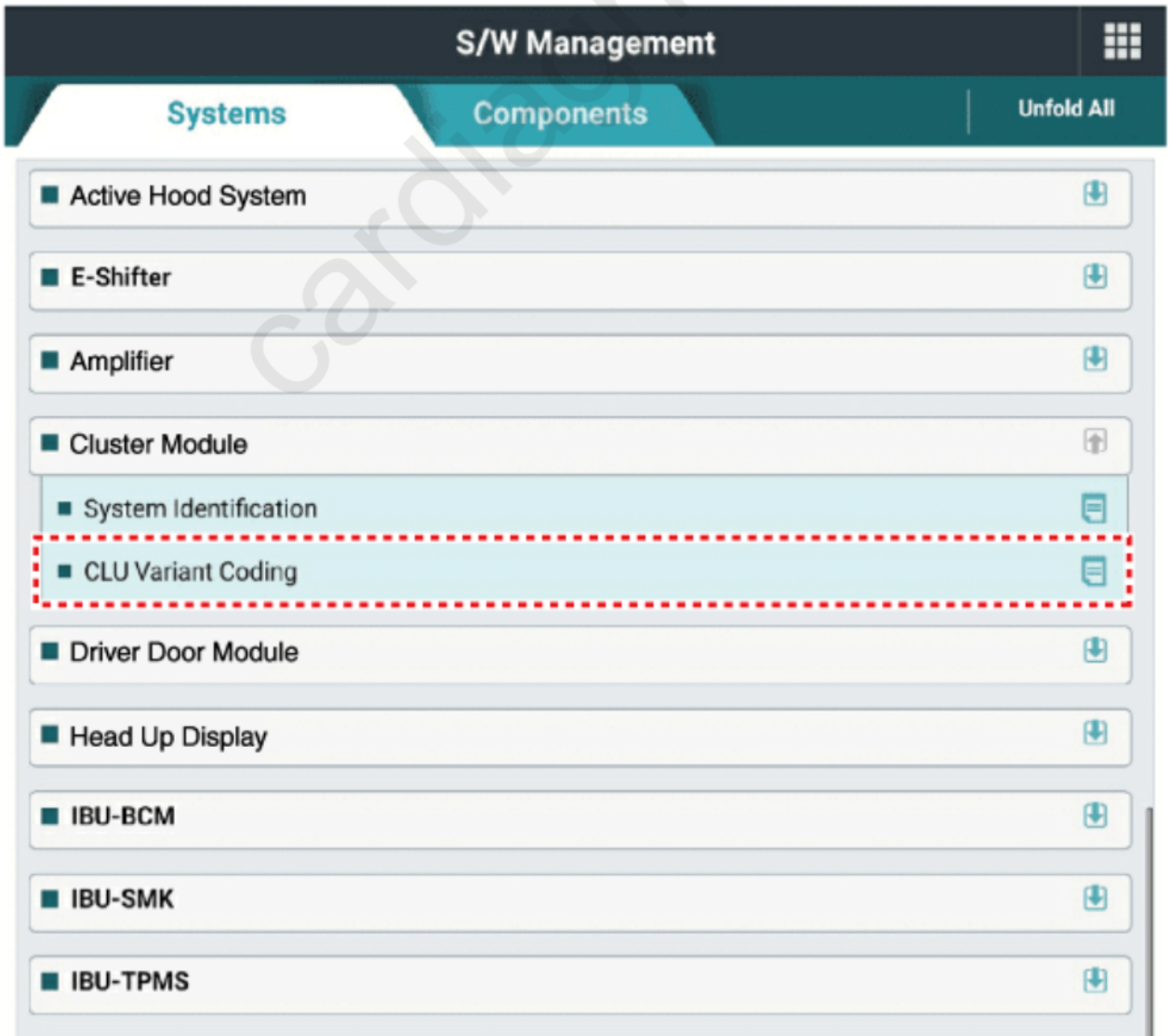

cardiagn.com

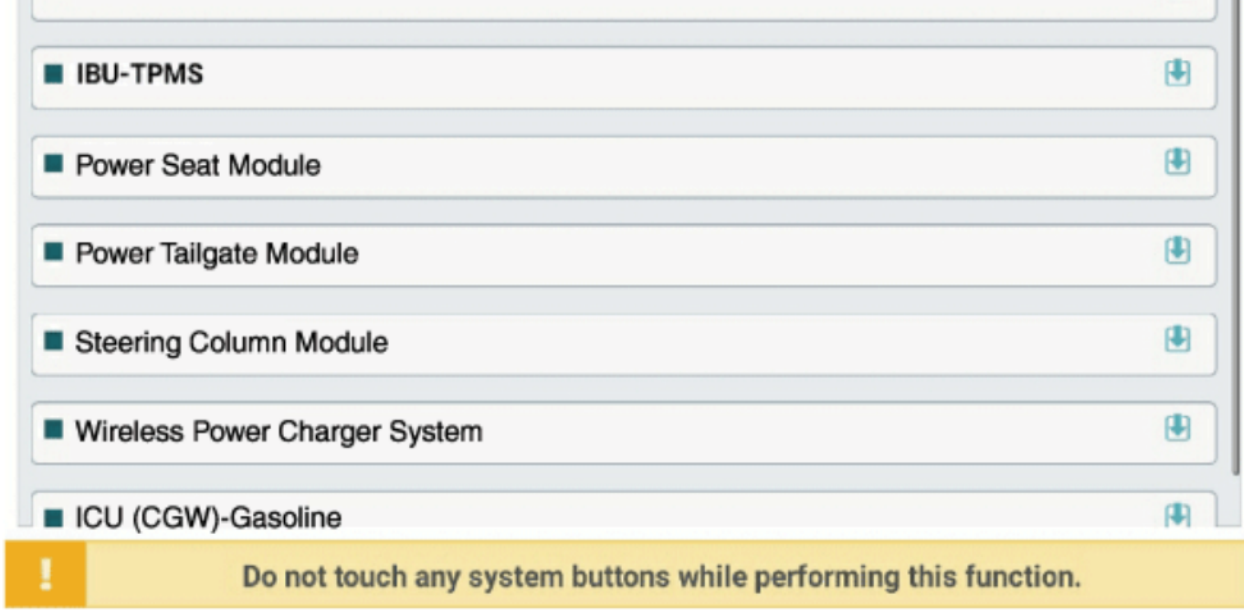

Do not touch any system buttons while performing this function.

S/W Management

- **CLU Variant Coding**

Purpose	To set the specification of cluster in the vehicle which is applied to the vehicle CAN communication controller(ESP, MDPS, TPMS, EPB, SCC and so on).
Enable Condition	1.Engine Off 2.Ignition Switch On
Concerned Component	Cluster
Concerned DTC	B100051, B100155, B100255, B100455, B100855, B101055, B102055, B104055, B108055
Fail Safe	Set DTC, Warning message is displayed on instrument cluster
Etc	Input CLU coding code from web site.

cardiagn.com

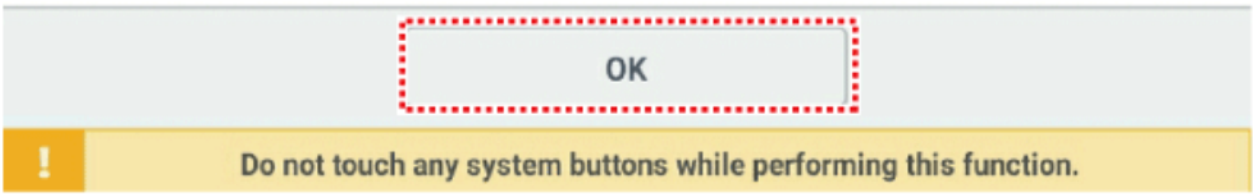

S/W Management

■ CLU Variant Coding

● [CLU Variant Coding]

This function is intended to set for the specification of cluster in the vehicle which is applied to the vehicle system. (Option :ECS, MDPS, SCC and so on)

●[Condition]

1. Ignition key on
2. Engine Status : Stop

Press [OK] button to continue.

cardiagn.com



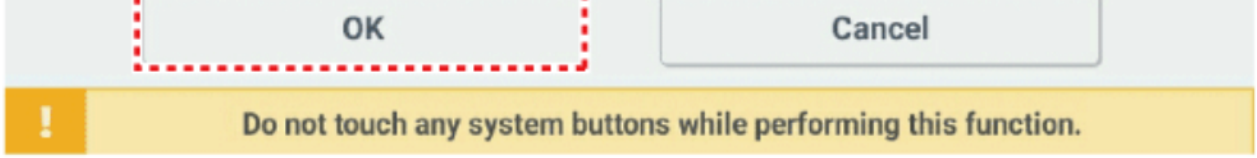

Inspection

1. Check point (Warning indicator)

•Fault conditions and normal operating conditions, refer to the owner's manual.

NO	Ref Symbol	Name	Color	Signal Input	Signal Control	Check Point
1	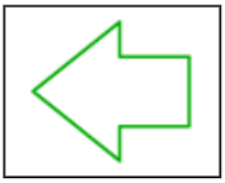	Turn signal (Left)	Green	CAN	BCM (Gateway)	1)Multifunction Switch 2)BCM 3)CAN Failure
2	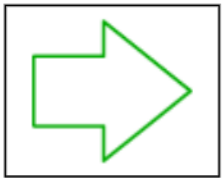	Turn signal (Right)	Green	CAN	BCM (Gateway)	1)Multifunction Switch 2)BCM 3)CAN Failure
3	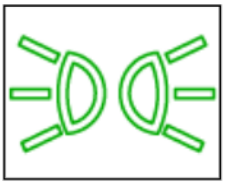	Tail Lamp	Green	CAN	BCM (Gateway)	1)Multifunction Switch 2)BCM 3)CAN Failure
4		Front Fog Lamp	Green	CAN	BCM (Gateway)	1)Multifunction Switch 2)BCM 3)CAN Failure
5	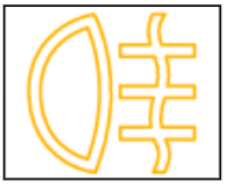	Rear Fog Lamp	Yellow	CAN	BCM (Gateway)	1)Multifunction Switch 2)BCM 3)CAN Failure
6		High Beam	Blue	CAN	BCM (Gateway)	1)Multifunction Switch 2)BCM 3)CAN Failure
				CAN	BSD	1)BSD System 2)CAN Failure

cardiagn.com

7		Master Symbol	Yellow		TPMS	1)TPMS System 2)CAN Failure
					BCM	1)External lamps 2)BCM 3)CAN Failure
				Hard-wired	Fuel Sender	1)Fuel Sender Failure 2)Wiring Failure
					Low Washer	1)Washer fluid lever sensor 2)Wiring Failure
					Digital Input	Reminders when service checks
8	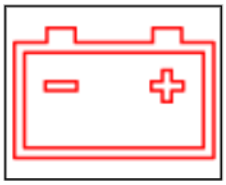	Battery Charge	Red	CAN	ECM	1)Charging System 2)CAN Failure
9	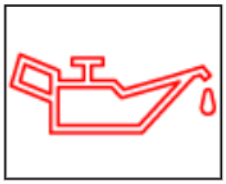	Oil Pressure	Red	Hard-wired	ECM	1)ECM System 2)Hard-wired 3)CAN Failure
10	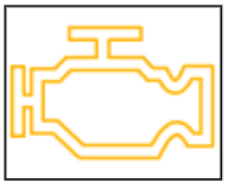	Check Engine	Yellow	CAN	ECM	1)ECM System 2)CAN Failure
11		Immobilizer	Yellow	CAN	BCM (Gateway)	1)SMK System 2)BCM 3)CAN Failure 4)Hard-wired
12		Parking Brake Brake Fluid EBD EPB	Red	CAN	BCM (Gateway) EBD EPB ABS TCS	1)BCM 2)ABS System 3)EPB System 4)CAN Failure 5)Parking Brake Switch 6)Brake Oil Lever Sensor
13		ABS	Yellow	CAN	ABS	1)ABS System 2)CAN Failure

cardiagn.com

14		ESC	Yellow	CAN	TCS	1)ABS System 2)CAN Failure
15		ESC Off	Yellow	CAN	TCS	1)ABS System 2)CAN Failure
16		Seat Belt	Red	CAN	BCM (Gateway)	1)BCM 2)CAN Failure
17		Airbag	Red	CAN	SRSCM	1)SRSCM System 2)CAN Failure
18		EPS (MDPS)	Red	CAN	MDPS	1)MDPS Unit System 2)MDPS Motor 3)CAN Failure
19		TPMS	Yellow	CAN	TPMS	1)TPMS System 2)TPMS Sensor 3)CAN Failure
20		LKA	Green Yellow White	CAN	LKA	1)LKA System 2)CAN Failure
21		Fuel Warning	Yellow	Direct (Micom)	Fuel Segment	1)Fuel Sendar Failure 2)Wiring Failure
22		ECO	Green	Hard- wired	ECO mode	1)ECM System 2)CAN Failure

cardiagn.com

23		SPORT	Yellow	Hard-wired	SPORT mode	1)ECM System 2)CAN Failure
24		CRUISE	Green	CAN	ECM	1)ECM System 2)CAN Failure
25		SET	Green	CAN	ECM	1)ECM System 2)CAN Failure
26		Over speed	Yellow	CAN	ECM	1)ECM 2)CAN Failure
27		AEB	Yellow	CAN	SCC	1)AEB System 2)CAN Failure
28		Cooling water temperature	Red	CAN	EMS	1. EMS System 2. CAN Failure
29		Service	Yellow	CAN	HCU MCU GCU BMS LDC TCU OBC	3. HCU System 4. MCU System 5. GCU System 6. BMS System 7. LDC System 8. TCU System 9. OBC System 10. CAN Failure
30	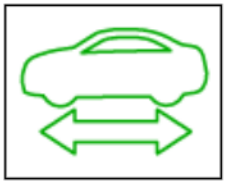	Ready	Green	CAN	HCU	11. HCU System 12. CAN Failure

cardiagn.com

31		EV mode	Green	CAN	HCU	13. HCU System 14. CAN Failure
32		Regenerative Braking System (RBS)	Yellow	CAN	HCU	15. HCU System 16. CAN Failure

2. Check point (Gauge)

NO	Name	Signal Input	Signal Control (Unit/Sensor)	Check Point
1	Speedometer	C-CAN	ABS/ESC	1. ABS System 2. CAN Line failure
2	Tachometer	C-CAN	ECM	1. ECM 2. CAN Line failure
3	Cooling water temperature	C-CAN	ECM	1. ECM 2. CAN Line failure
4	Fuel	Hardwire	Fuel Sander	1. Fuel sender failure 2. Wiring failure

Diagnosis with KDS

1. In the body electrical system, failure can be quickly diagnosed by using the vehicle diagnostic system (KDS).
   The diagnostic system (KDS) provides the following information.
   (1) Self diagnosis : Checking failure and code number (DTC)
   (2) Current data : Checking the system input/output data state
   (3) Actuation test : Checking the system operation condition
   (4) Additional function : Controlling other features including system option setting and zero point adjustment
2. Select the 'Car model' and the 'Cluster Module (CLU)' to be checked in order to check the vehicle with the tester
3. Select the 'Current Data' menu to search the current state of the input/output data.
4. To forcibly actuate the input value of the module to be checked, select option 'Actuation Test'

cardiagn.com

Please rate this document after reviewing at the bottom of this page.

Troubleshooting

Error Item	Failure symptom	Inspection items	Detailed inspections	Relevant Parts/ Components
Screen display	LCD screen does not turn on	1) Connector attachments 2) Components	1) Check the connector attachments 2) Check B+, IGN and GND wiring 3) Check the components	Connectors, wiring, fuses, dashboard
Warning light	Airbag warning lamp malfunction	1) Connector attachments 2) C-CAN 3) Components	1) Check airbag + signal (connectors) 2) Check C-CAN (ACU4) signal 3) Check the FPC attachment inside the dashboard	ACU Connectors, wiring, fuses, dashboard
Mode conversion	Integrated driving mode malfunction	1) Connector attachments 2) Switch 3) Components	1) Check the switch input (connector) 2) Check the switch signal input (disconnection or shorting) 3) Check conversion with dashboard component	Switch connector, wiring dashboard
Illumination	Interior light brightness cannot be controlled.	1) Connector attachments 2) Switch 3) Components	1) Check if the light switch's input signal reaches the connector 2) Check ILL- and DETENT signals 3) Check the TAIL+ signal input	Switch connector, wiring dashboard

cardiagn.com

Warning Sound	No dashboard alarm	1) Connector attachments 2) Car speakers 3) Components	1) Check the speaker output connector 2) Check the car speakers	Speaker connectors, wiring dashboard
Fuel indicator	Faulty fuel gauge indication	1) Connector attachments 2) Fuel sender 3) Components	1) Check fuel input and GND connectors (open, short or input resistance values) 2) Check fuel sender	Fuel sender connector, wiring dashboard

cardiagn.com

Please rate this document after reviewing at the bottom of this page.

Specifications

Memory Power Seat Unit

Item	Specifications
Rated voltage	DC 12 V
Operating voltage	DC 9 - 16 V
Operating temperature range	-22 to 167°F (-30 to 75°C)
Dark current	Max. 0.6 mA

Memory Power Seat Switch

Item	Specifications
Rated voltage	DC 12 V
Operating temperature range	-22 to 176°F (-30 to 80°C)

cardiagn.com

Please rate this document after reviewing at the bottom of this page.

Components

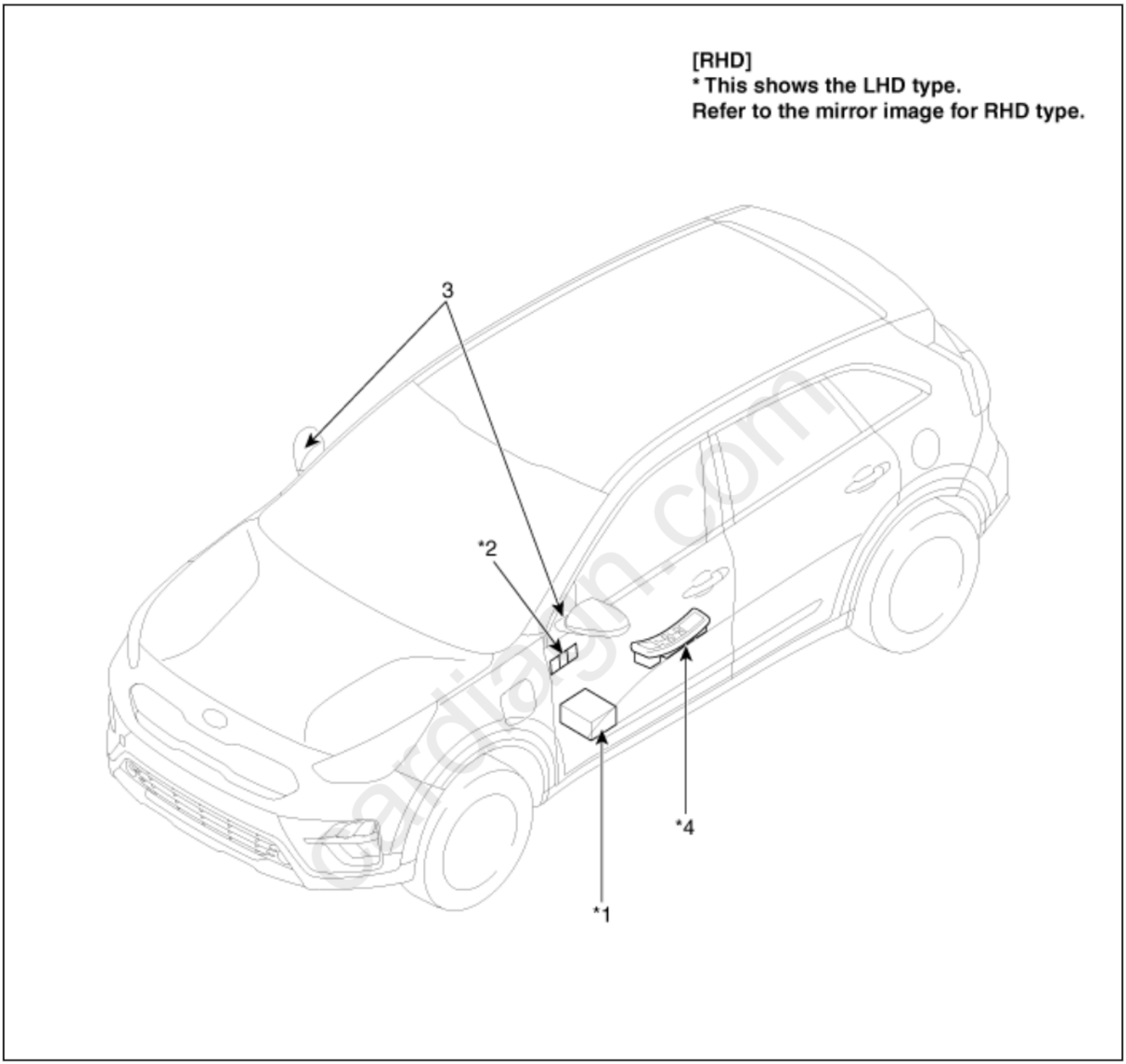

1. Memory power seat unit (PSM)
2. IMS control switch
3. Outside rear view mirror
4. IMS mirror control (Driver Door Module (DDM))

Please rate this document after reviewing at the bottom of this page.

Components

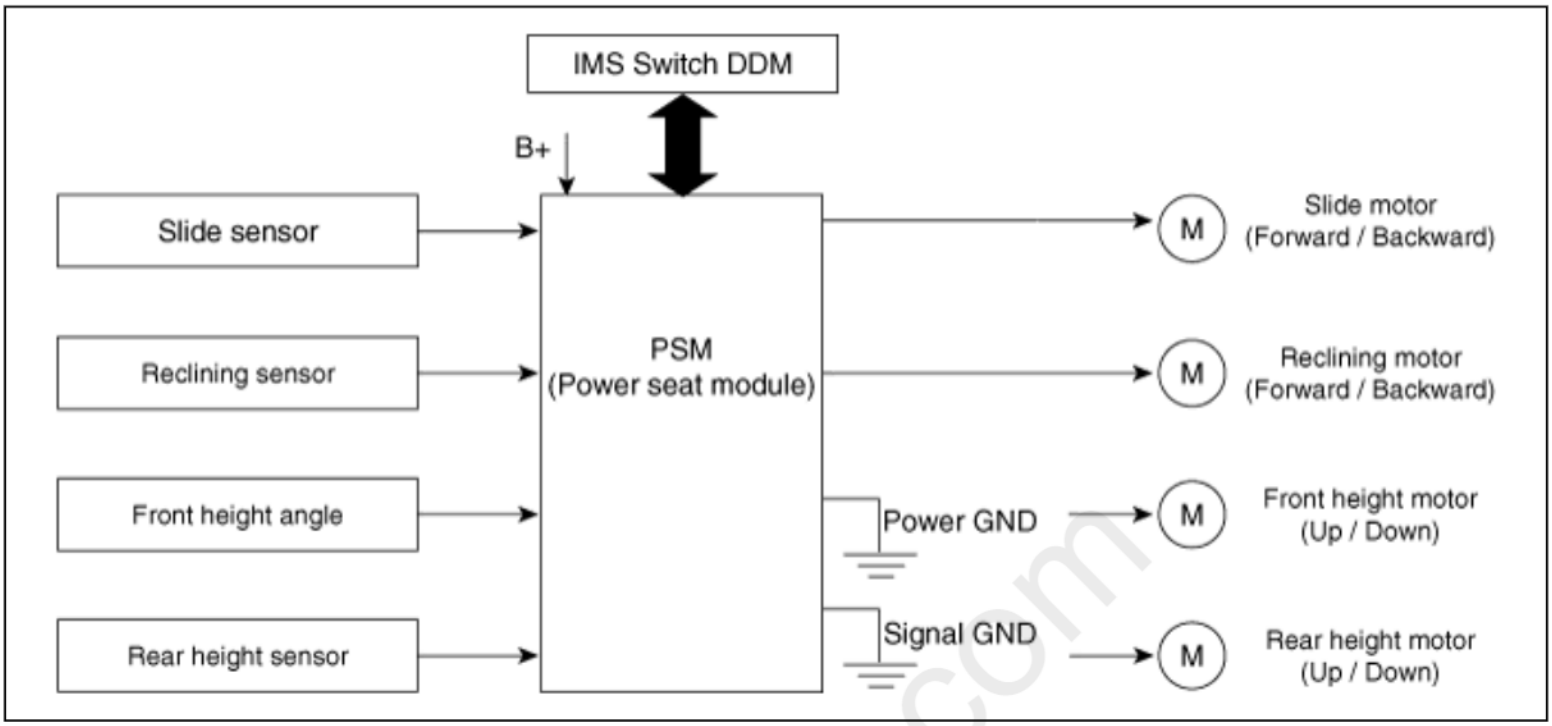

cardiagn.com

Please rate this document after reviewing at the bottom of this page.

Description

The optimum seat position set by the driver is memorized in the power seat unit by IMS switch control to be recalled by using the IMS switch even if the seat position has been changed.
It is equipped with safety functions such as prohibition of recalling and emergency stopping of linked motion while driving.

Manual Operation

The position of the seat is changed by operating the motor when the signal is input with manual switch for the seat (Slide, recline, front tilt, rear height adjusting)

Memory function

Can memorize and recall data for up to two persons with IMS switch.

1. Memorized operations of seat and outside rearview mirror positions are operated by IMS switch via CAN (IMS → DDM) when the optimum seat position is set by the driver.
2. Recall by the CAN data received from IMS switch control.

Linked motion for getting on/off

1. The driver's seat moves backward when the driver get off from the vehicle.
2. Condition for operating getting on : When the electric power is in ACC, When Engine OFF, if the driver close the driver side door with carring samrt key (When ON at the User Setting Mode)
3. Condition for operating getting off : When the electric power off and open the driver door.

Operation

Recall operation

1. The buzzer will operate once and automatically be adjusted to the memorized position when the CAN data from IMS is received.
2. Unsaved recall signals will not be performed.
3. If another recall signal is received during recall operation, the last received recall signal prevails.
4. If recall signal is received by pressing switch 1 or 2 during recall operation, the seat will stop recall operation.
5. If memory signal is received by pressing SET button during recall operation, the seat will stop the recall operation.



Press the SET button once more to store the position of stop.

6. Automatically stop at the virtual limit position during recall operation.
7. If the difference between memorized position and current position is less than 4 pulses, motor will not be operated.

Conditions for prohibiting recall operation

Recall operation is prohibited and recall operation is stopped if any of the following conditions is met.

1. IGN2 OFF (except within 30 seconds of opening or closing door)

cardiagn.com

2. Over 3 km/h of vehicle speed
3. In case of manual switch manipulation
4. Operation time chart

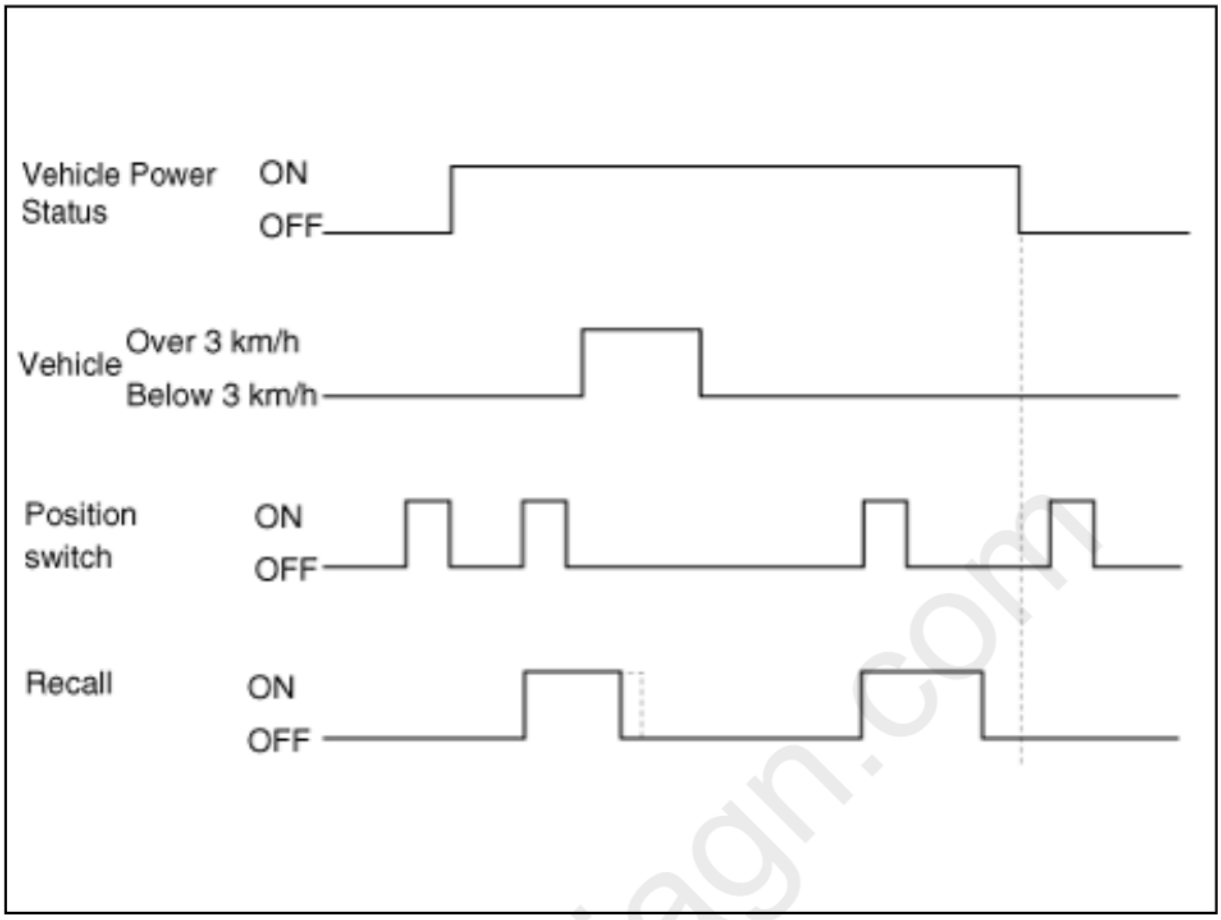

Decision on the operation priority

1. The motor operation shall be delayed for 100±10 milliseconds to prevent the overlapping of inrush circuit during motor start. In this case, the priority is as follows.
   Slide > Backrest adjustment >Front height adjustment >Rear height adjustment
   Operation time chart

cardiagn.com

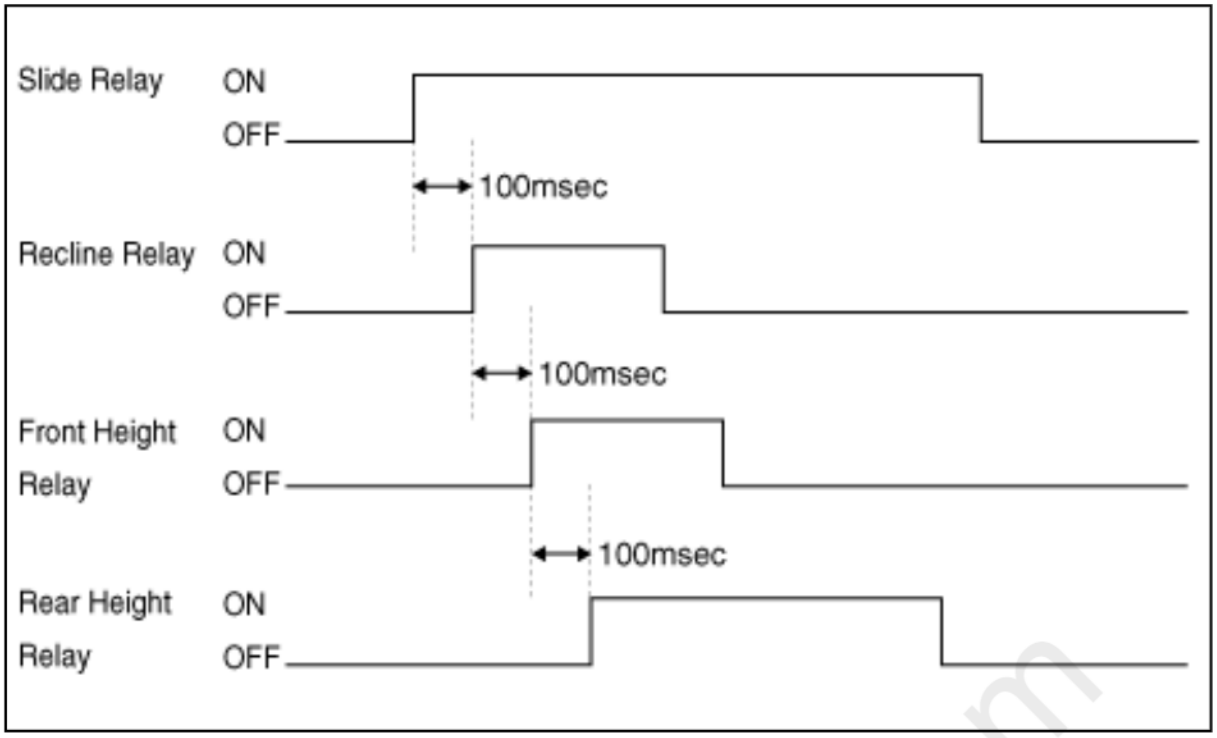

Operation linked with getting on/getting off

1. Return operations backwards when getting off and forward when getting on (slide type only)
2. It is available when the automatic SET message transmitted from the driver seat power window switch (DDM) is ON.

Applied only to driver's settings menu (USM) is on.

3. Starting of operation when the electric power off and open the driver door.
4. Move to the target potision of ACC ON.
5. Condition for prohibiting operation
   - –Over 1.8 MPH (3km/h) of vehicle speed
   - –In case of power seat manual control switch manipulation
   - –On receiving recall command during operation for getting on
   - –Driver Settings Manu (USM) is Off

cardiagn.com

Please rate this document after reviewing at the bottom of this page.

Connector and Terminal
Function

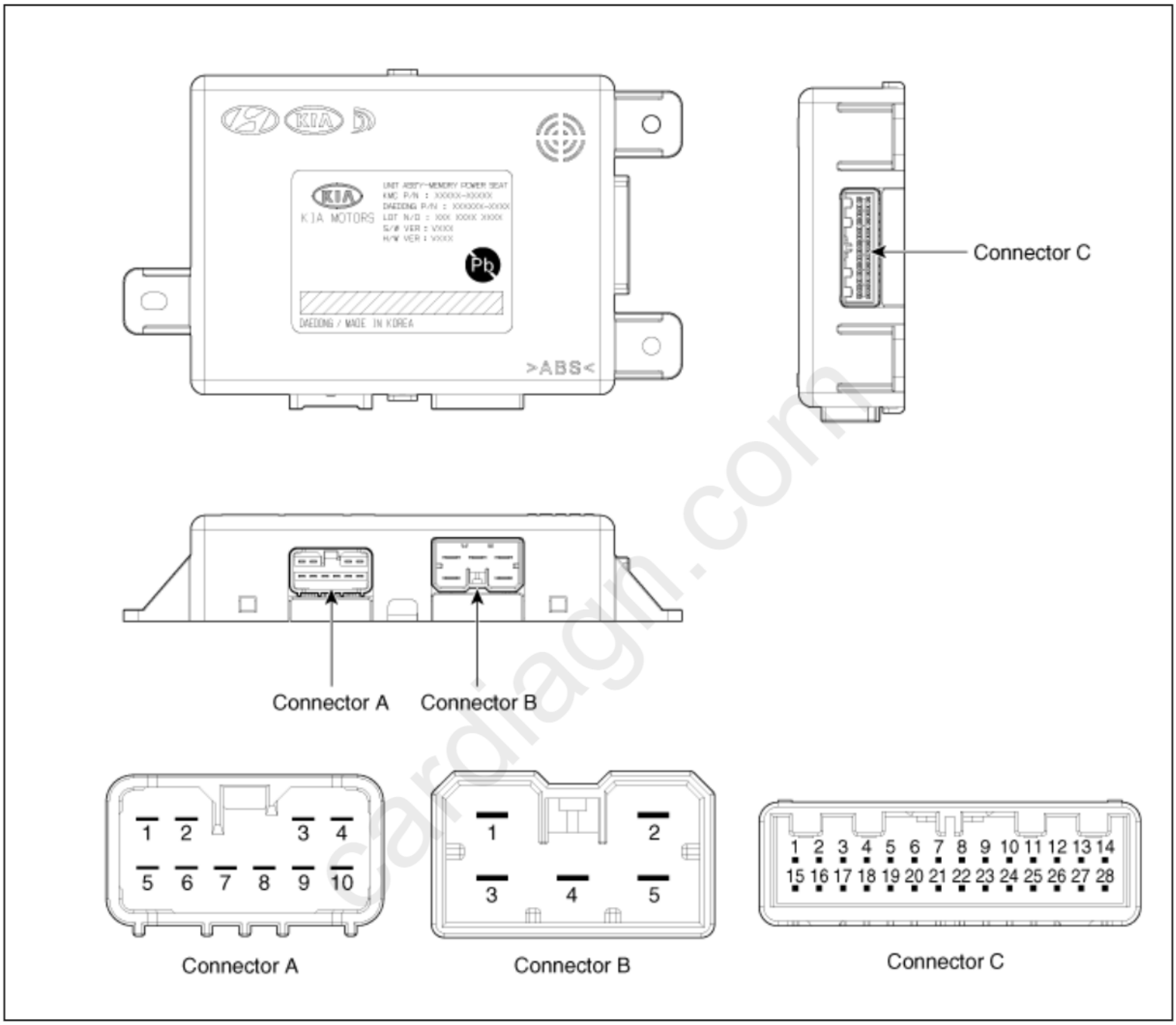

Connector Pin Information

No.	Connecter A	Connecter B	Connecter C
1	-	Battery (+)	Slide switch signal (Forward)
2	Reclining motor (Forward)	Ground	Reclining switch signal (Forward)
3	Rear height motor (Up)	Battery (+)	Front tilt switch signal (Up)
4	Slide motor (Forward)	-	Rear height switch signal (Up)
5	-	Ground	-
6	Reclining motor (Backward)		B-CAN (High)

7	Front tilt motor (Up)
8	Front tilt motor (Down)
9	Rear height motor (Down)
10	Slide motor (Backward)
11	
12	
13	
14	
15	
16	
17	
18	
19	
20	
21	
22	
23	
24	
25	
26	
27	
28	

B-CAN (Low)
IMS Switch1
Reclining limit switch (Forward)
Slide sensor
Front tilt sensor
-
Seat position sensor power
IGN1
Slide switch signal (Backward)
Reclining switch signal (Backward)
Front tilt switch signal (Down)
Rear height switch signal (Down)
-
Ground
SET Switch
IMS Switch2
Reclining limit switch (Backward)
Reclining sensor
Seat rear height sensor
-
-
Battery (+)

cardiagn.com

Please rate this document after reviewing at the bottom of this page.

Removal

1. Before removing the driver side seat assembly, pull it upward to the maximum by pushing the front seat height adjusting switch (A).



2. Disconnect the negative (-) battery terminal
3. Remove the driver front seat assembly.
   (Refer to Body - "Front Seat Assembly")
4. Disconnect the IMS unit connectors (A).

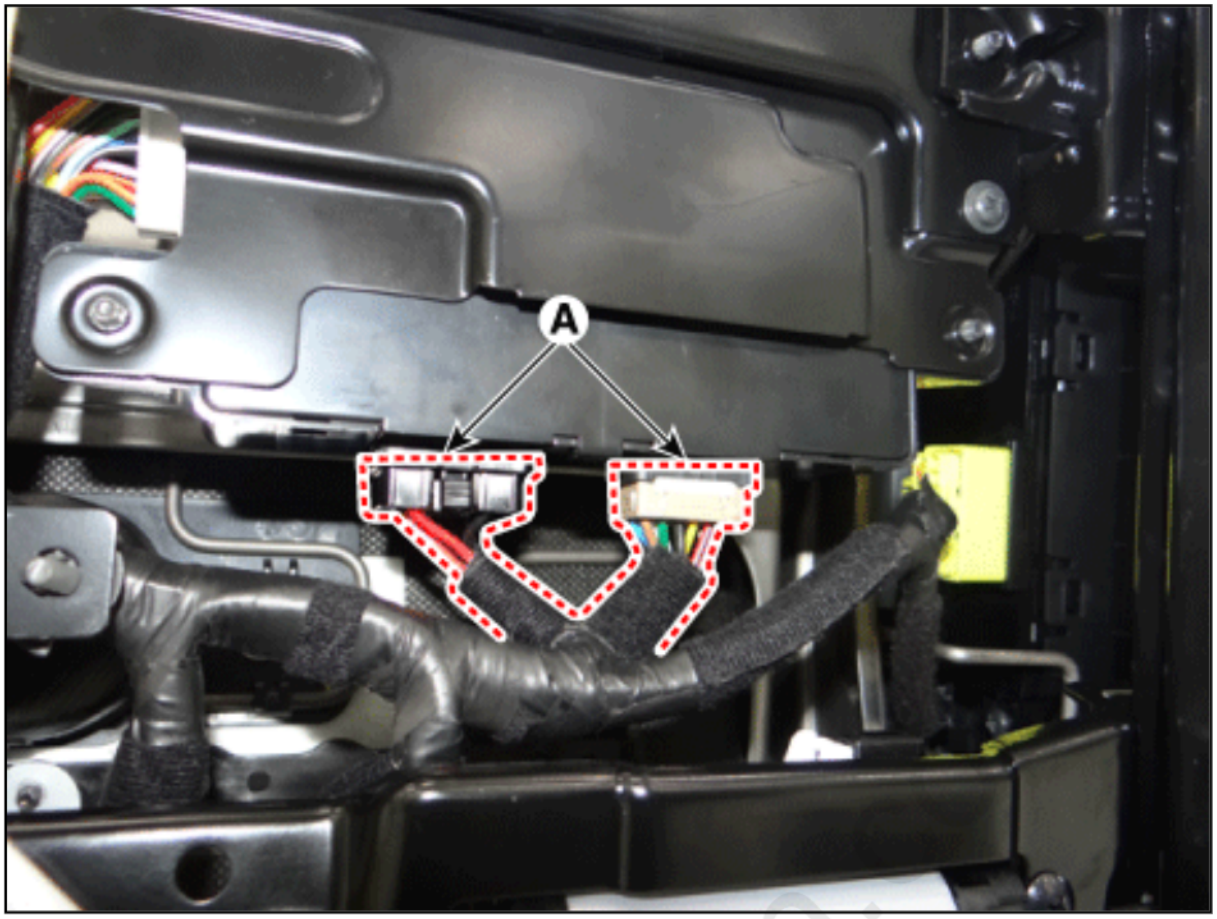
A

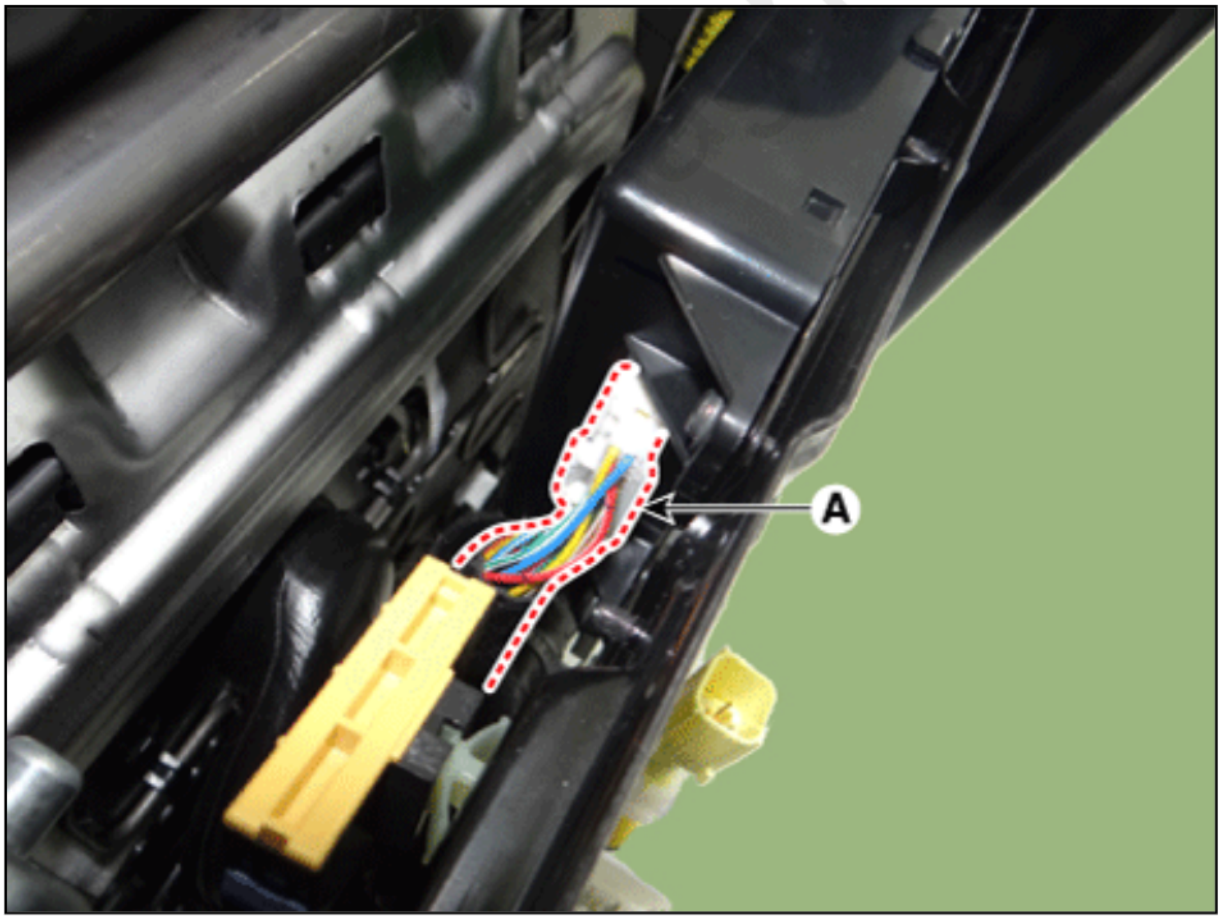
A

5. Remove the IMS unit (A) after loosening the mounting screws.

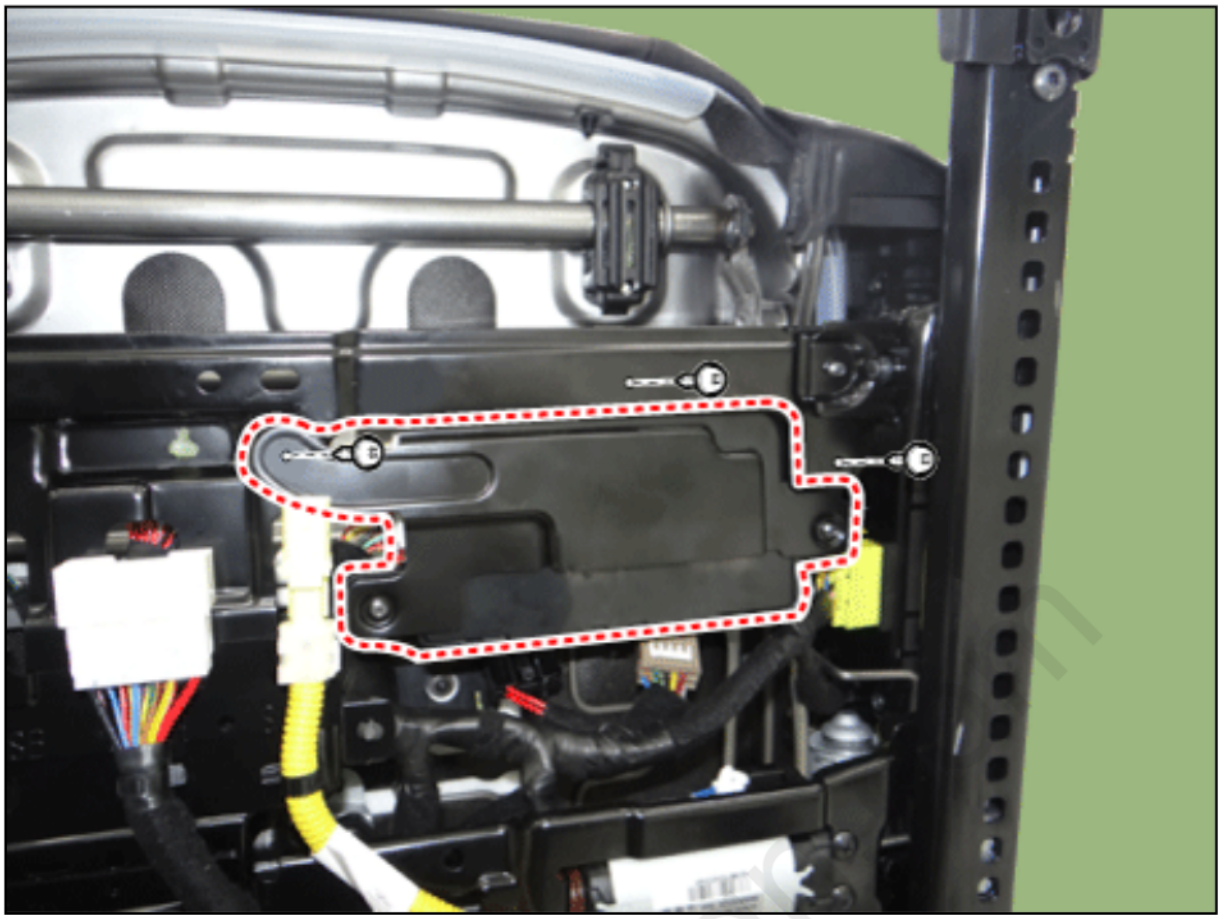

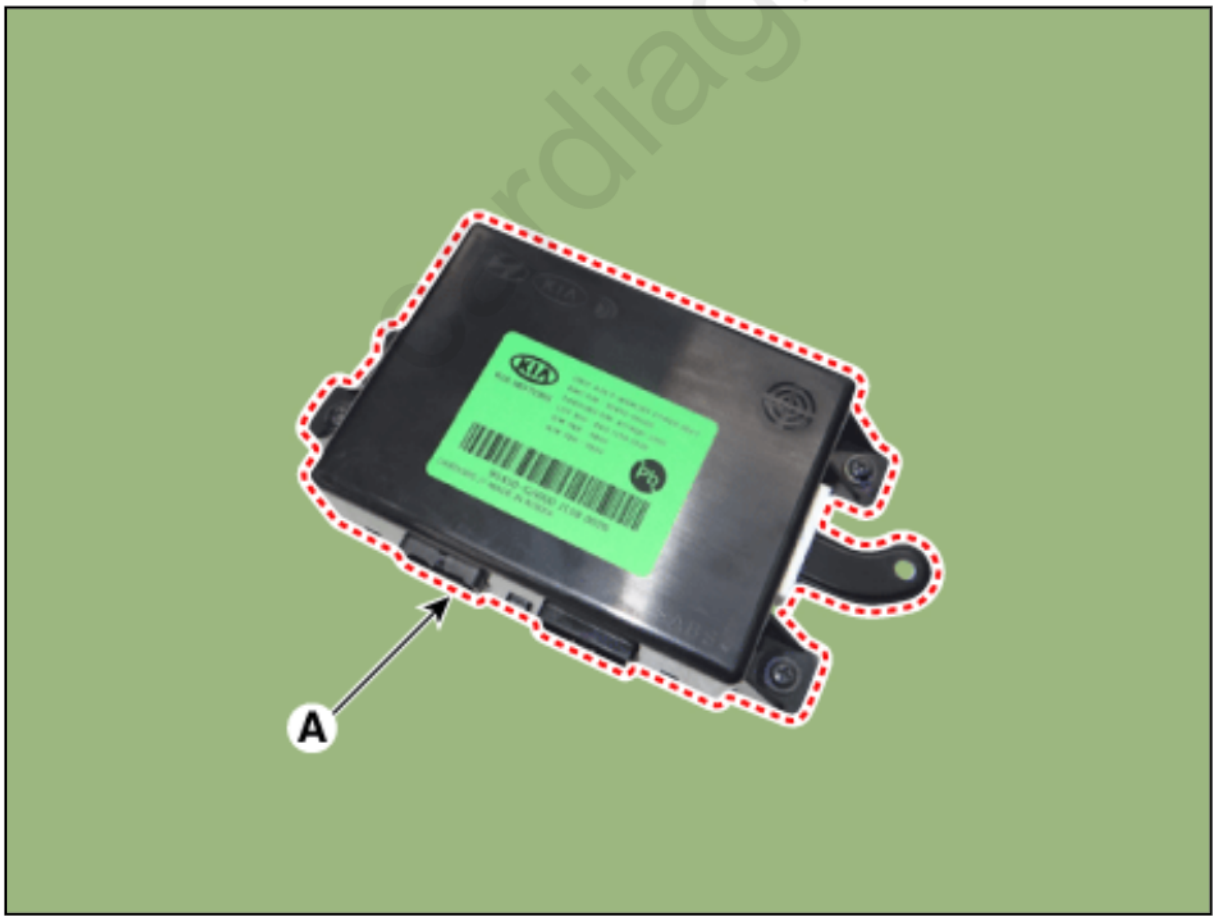

Installation

1. Install in the reverse order of removal.

Inspection

Diagnosis with KDS

1. In the body electrical system, failure can be quickly diagnosed by using the vehicle diagnostic system (KDS).
   The diagnostic system (KDS) provides the following information.
   (1) Self diagnosis : Checking failure and code number (DTC)
   (2) Current data : Checking the system input/output data state
   (3) Actuation test : Checking the system operation condition
   (4) Additional function : Controlling other features including system option setting and zero point adjustment
2. Select the 'Car model' and the 'Memory Power Seat Module (DPSM/APSM)' to be checked in order to check the vehicle with the tester.
3. Select the 'Current Data' menu to search the current state of the input/output data.

cardiagn.com

Please rate this document after reviewing at the bottom of this page.

Connector and Terminal
Function

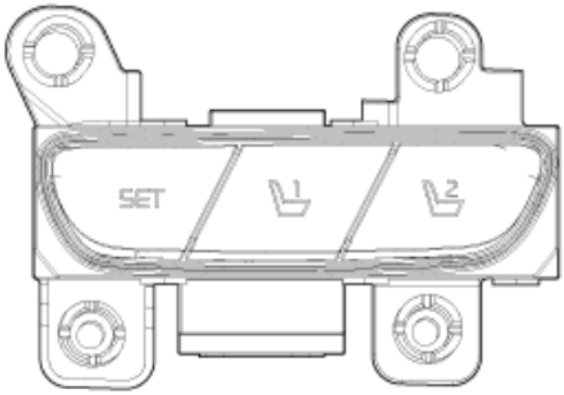

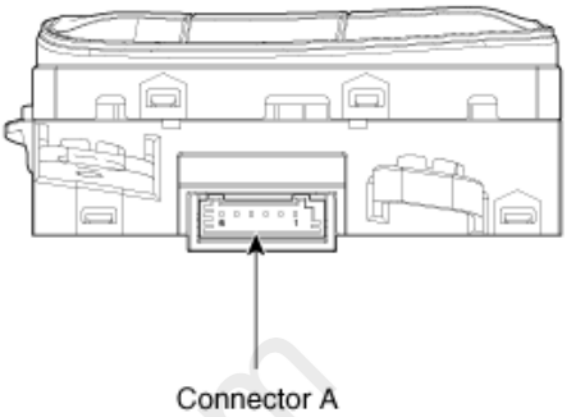

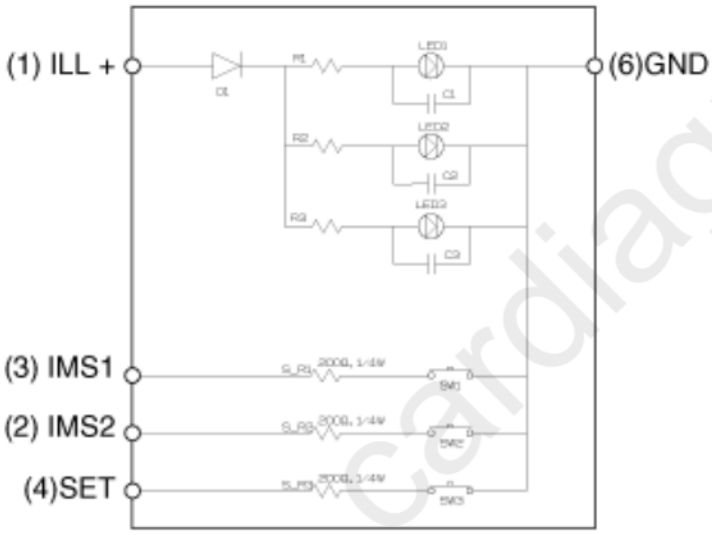

Connector A

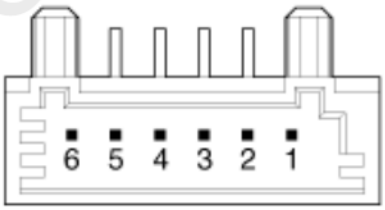

No.	Description
1	Illumination (+)
2	IMS Switch 2
3	IMS Switch 1
4	SET Switch
5	-
6	Ground

cardiagn.com

Please rate this document after reviewing at the bottom of this page.

Removal

1. Disconnect the negative (-) battery terminal.
2. Remove the driver front door trim.
   (Refer to Body - "Front Door Trim")
3. Remove the memory power seat switch (A) after loosening the mounting screws.

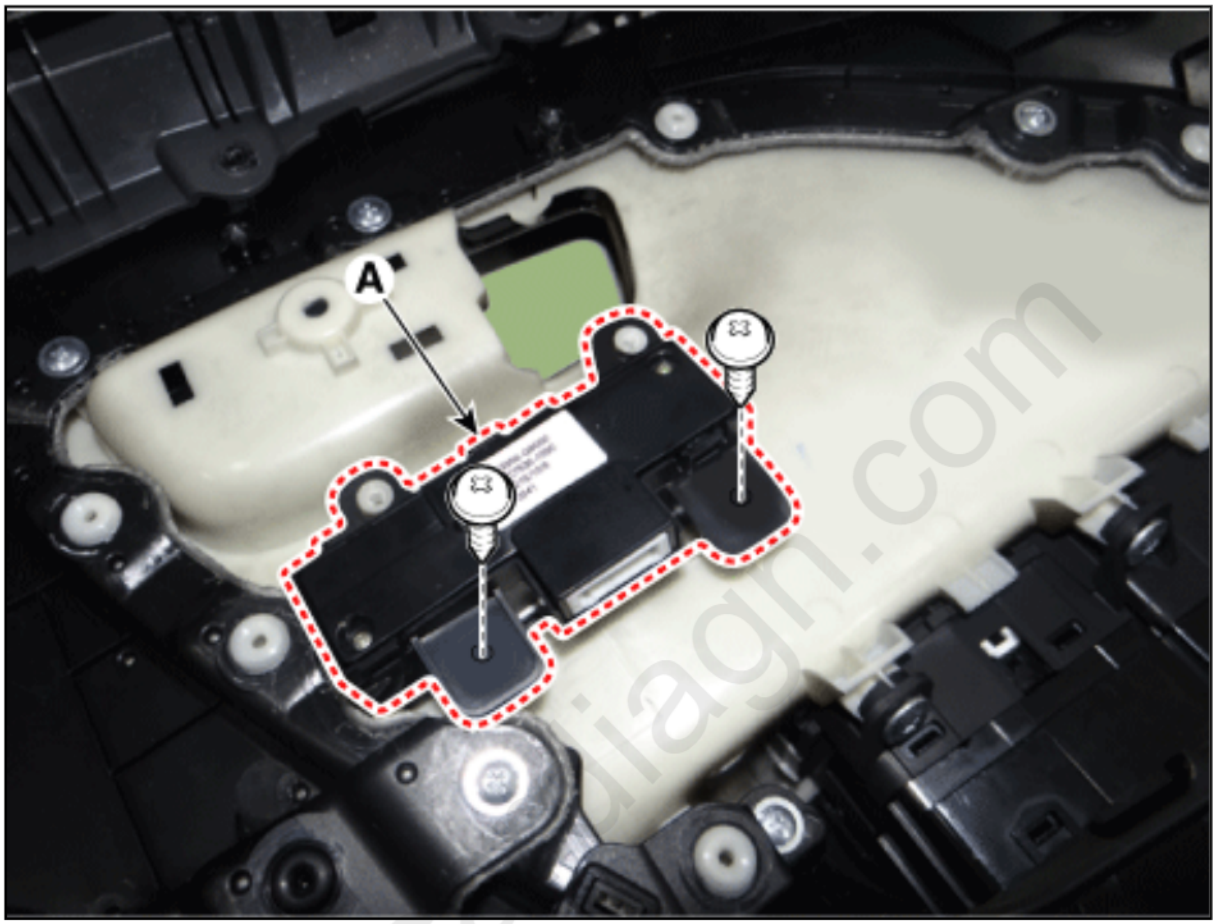

Installation

1. Install in the reverse order of removal.

Inspection

1. Remove the memory power seat connector.

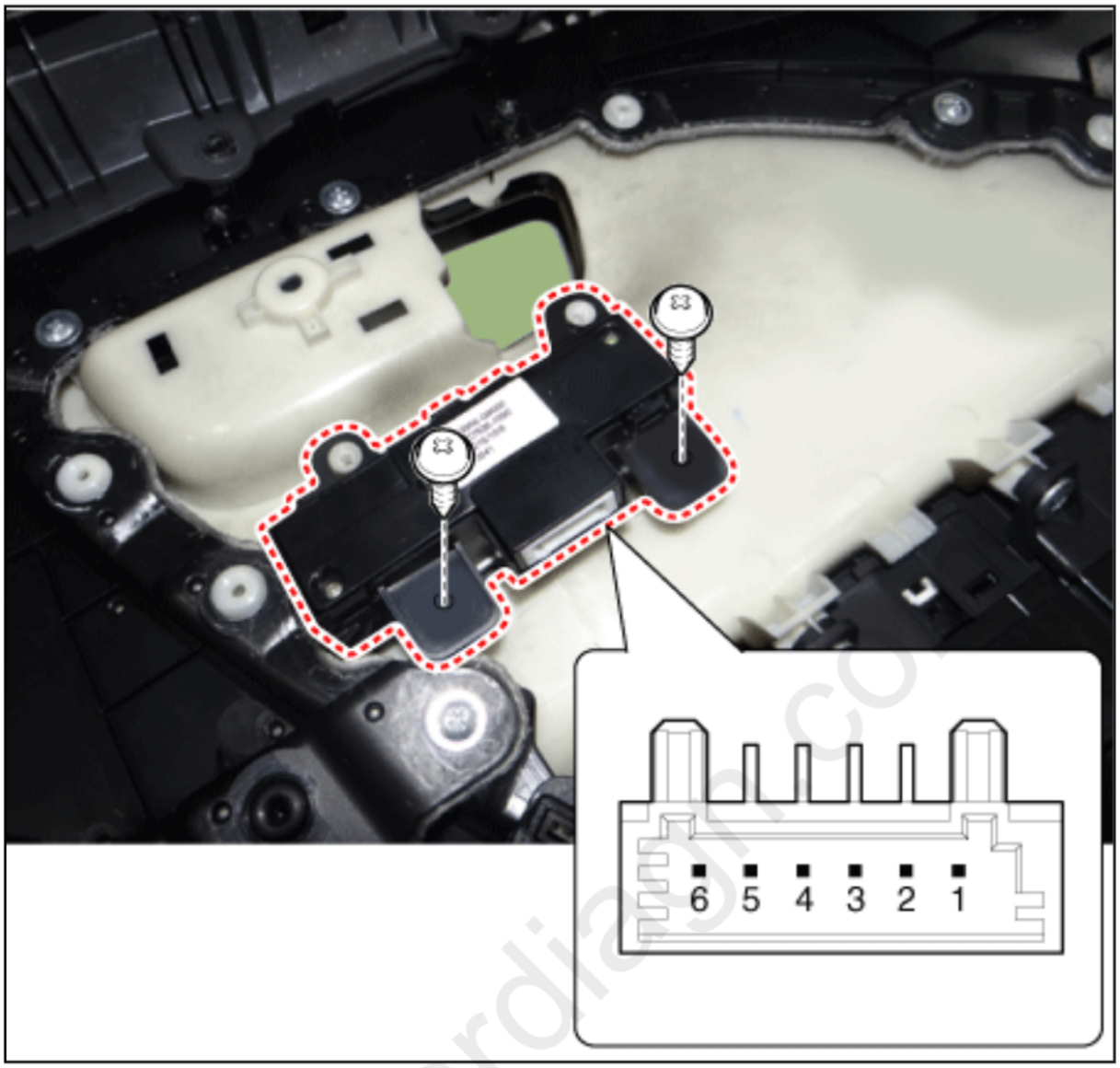

2. When each switch is pressed, check the electricity flow between memory power seat switch connector and grounding, and if the electricity does not match the specification, replace the switch.

Terminal / Position	6	4	3	2
SET	○	○		
1	○		○	
2	○			○

Please rate this document after reviewing at the bottom of this page.

Specification

Item	Specification
Power source	3 V
Operating temperature	14 to 140°F (-10 to 60°C)
RF Modulation	FSK
LF Modulation	ASK
RF frequency	433.92 MHz
Button number	3
Function	Door lock
	Door unlock
	Tailgate unlock

cardiagn.com

Please rate this document after reviewing at the bottom of this page.

Component
Location

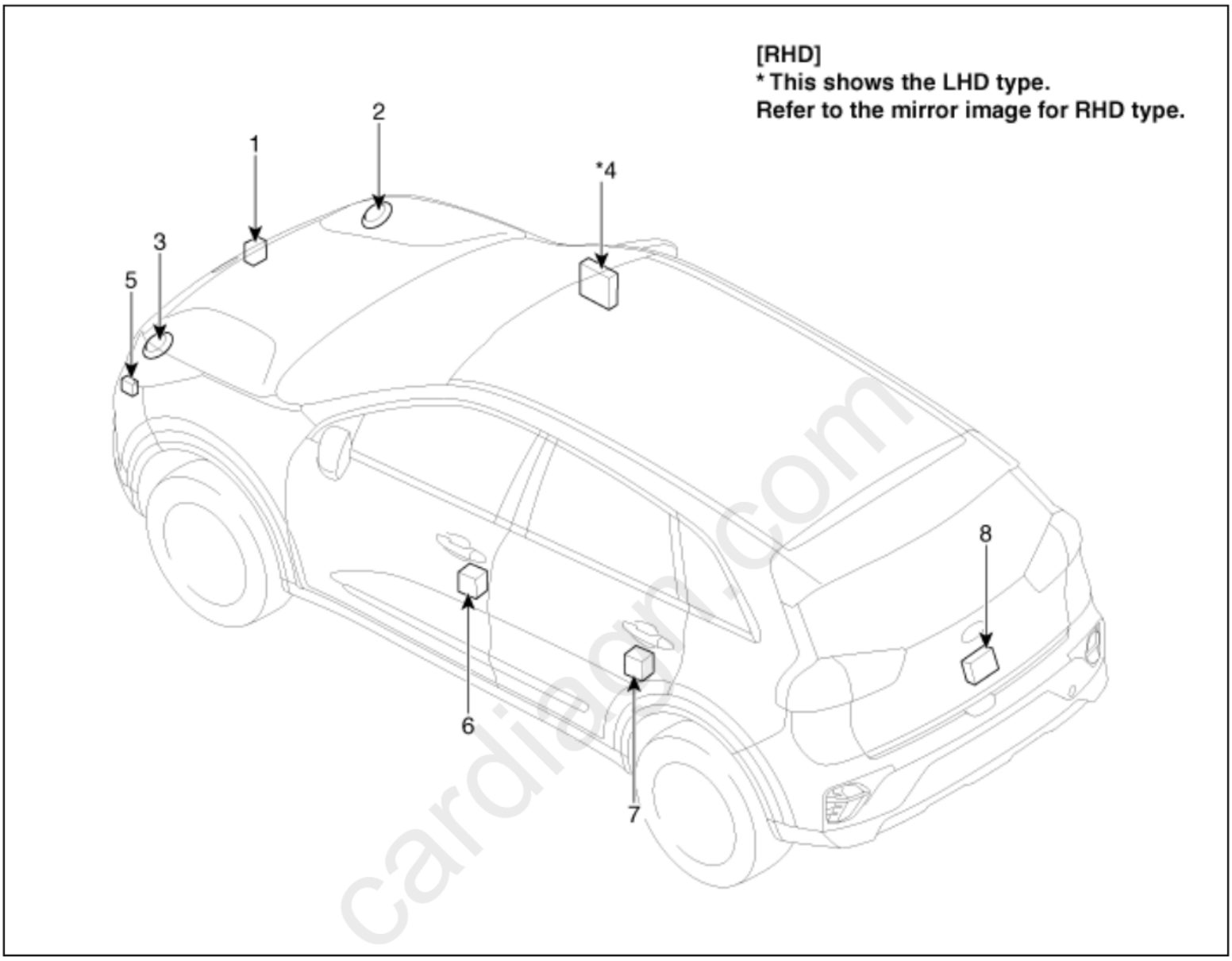

1. Hood switch
2. Horn (High-pitch)
3. Horn (Low-pitch)
4. Body control module (BCM)
5. Door lock/unlock buzzer
6. Front door actuator & switch
7. Rear door actuator & switch
8. Tailgate actuator & switch

Please rate this document after reviewing at the bottom of this page.

Description

Burglar Alarm State [B/A State]

B/A State	Description
DISARM	1)This is the state when "ARM" mode is off. 2)If all doors or hood or tailgate are opened, there is no alarm sound. 3)Security indicator keeps blinking in IGN OFF while it lights out in ACC ON.
ARMWAIT	1)If the IBU receives locking signals from remote control or Passive lock (specification of Smart Key) or driver's seat door key lock with the conditions for "ARM WAIT" satisfied, the IBU waits for 30 seconds after outputting "All Door Lock" signal before entering "ARM WAIT" mode. 2)For 30 seconds of "ARM WAIT" mode, there is no alarm sound and "ARM" mode turns off even if a burglary occurs. 3)Under any conditions, it is impossible to directly enter "ARM" mode without passing through "ARM WAIT" mode. 4)Security indicator remains on for 30 seconds of "ARM WAIT" mode.

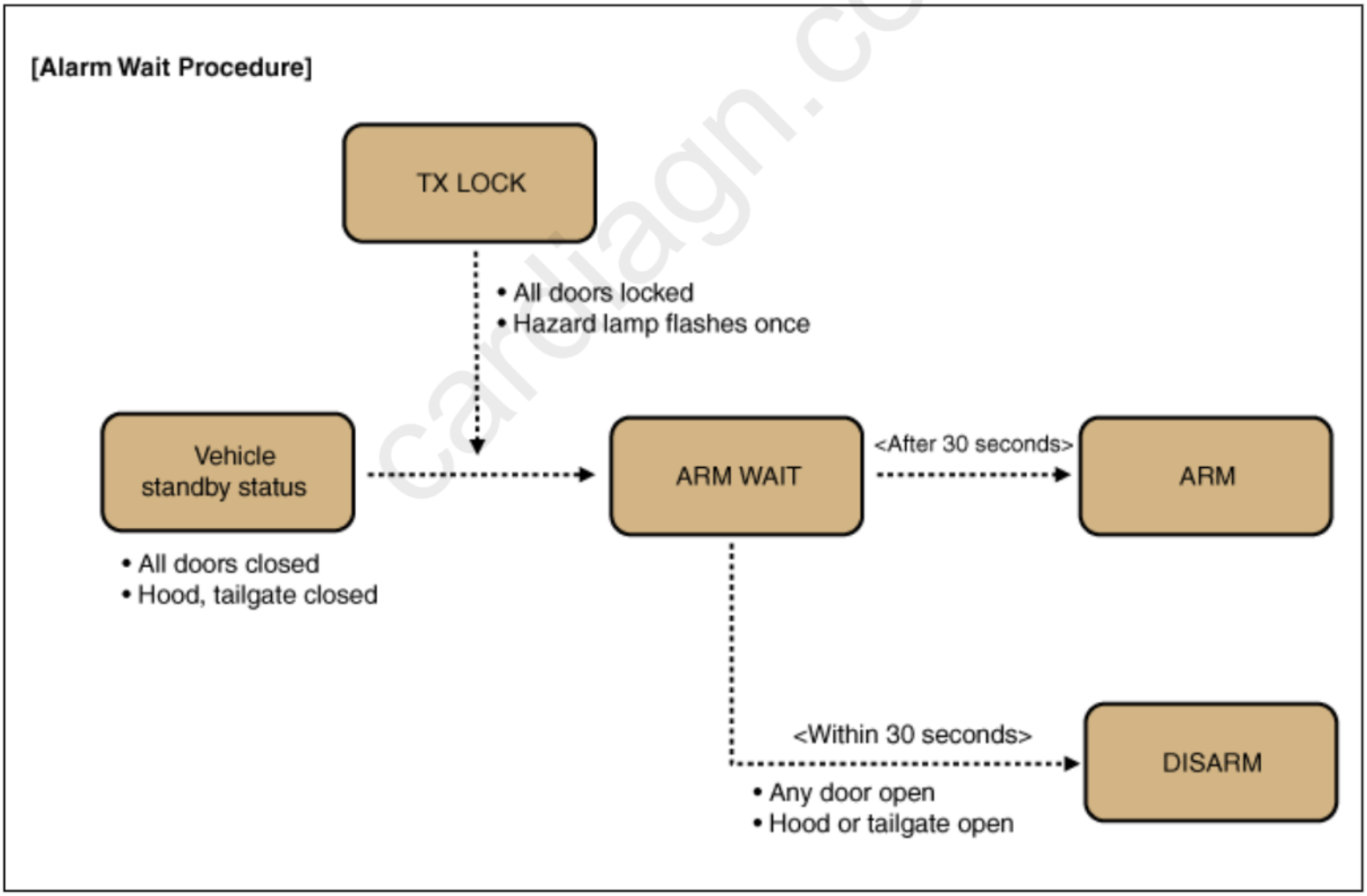

※ Remark: For a vehicle equipped with Smart Key system, the same process is applied to Passive door lock function.

B/A State	Description

AUTO LOCK TIMER 1	1) This is a similar function to RELOCK (automatic locking system after 30 seconds). 2) If UNLOCK button in remote control is pressed with "ARM WAIT" conditions satisfied, or in "ARM" mode, all doors are unlocked and then timer set for 30 seconds starts running. 3) After the 30 seconds the IBU automatically outputs all door lock signal and enters "ARM WAIT" mode. 4) After AUTO LOCK TIMER 1 (30 seconds) runs out, the IBU automatically enters "ARM" mode via "ARM WAIT" mode (30 seconds). 5) In case that the driver presses UNLOCK button by mistake, this safety function lets the vehicle enter "ARM" mode after 60 seconds. 6) Security indicator keeps blinking throughout AUTO LOCK TIMER1 process.

[Auto Lock Timer 1 Procedure]

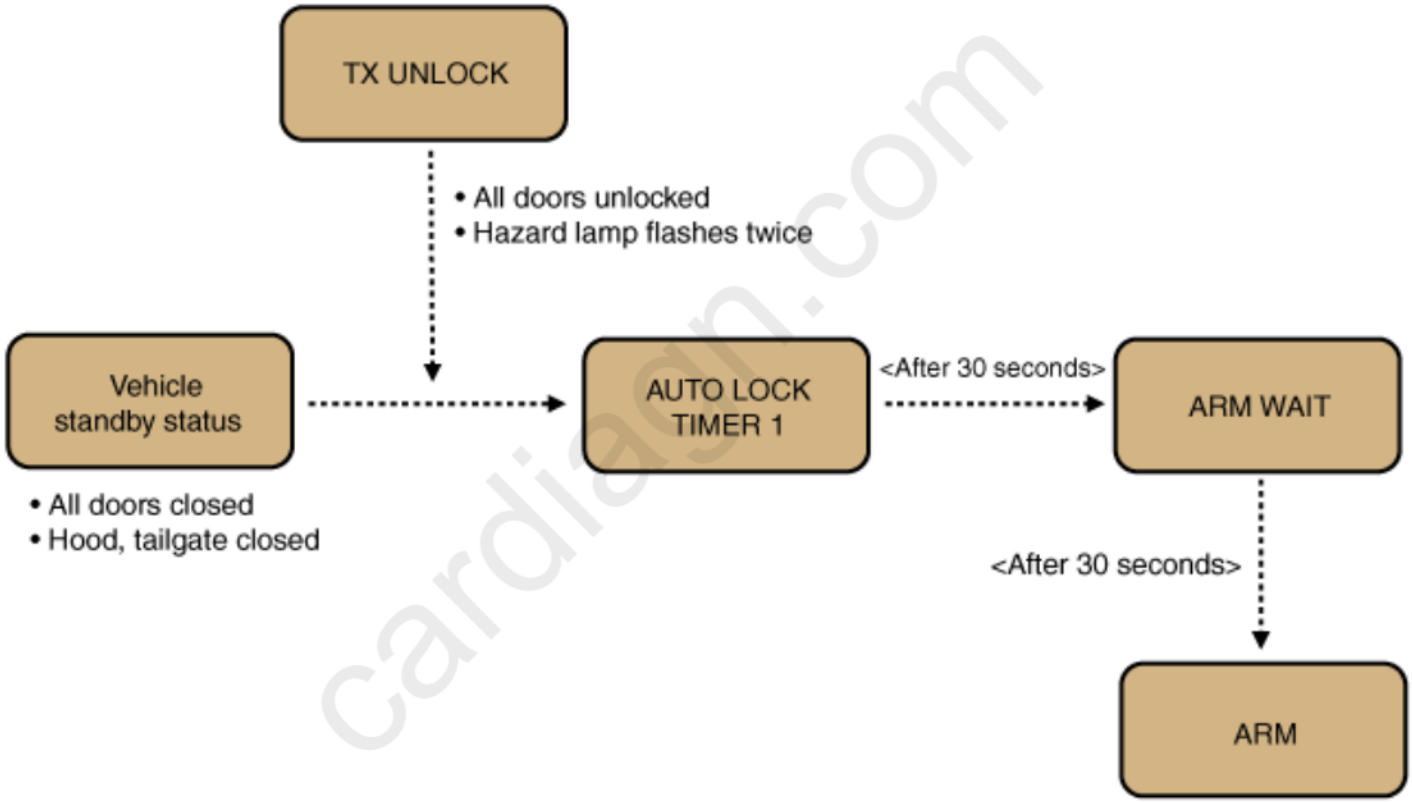

cardiagn.com

※ Remark: For a vehicle equipped with Smart Key system, the same process is applied to Passive door lock function.

B/A State	Description

AUTO LOCK TIMER 2	1)This shares the same purpose with AUTO LOCK TIMER 1 but operation conditions are different. 2)This function operates if UNLOCK button in the remote control is pressed when all doors are closed except hood or tailgate. After 30 seconds, the vehicle automatically enters door lock mode. 3)But after the 30 seconds, it is impossible to move to "ARM WAIT" mode because hood or tailgate is open ("PRE ARM" mode is maintained). 4)As soon as hood or tailgate is closed, the vehicle automatically moves to "ARM" mode via "ARM WAIT". 5)During AUTO LOCK TIMER 2, security indicator keeps blinking.

[Auto Lock Timer 2 Procedure]

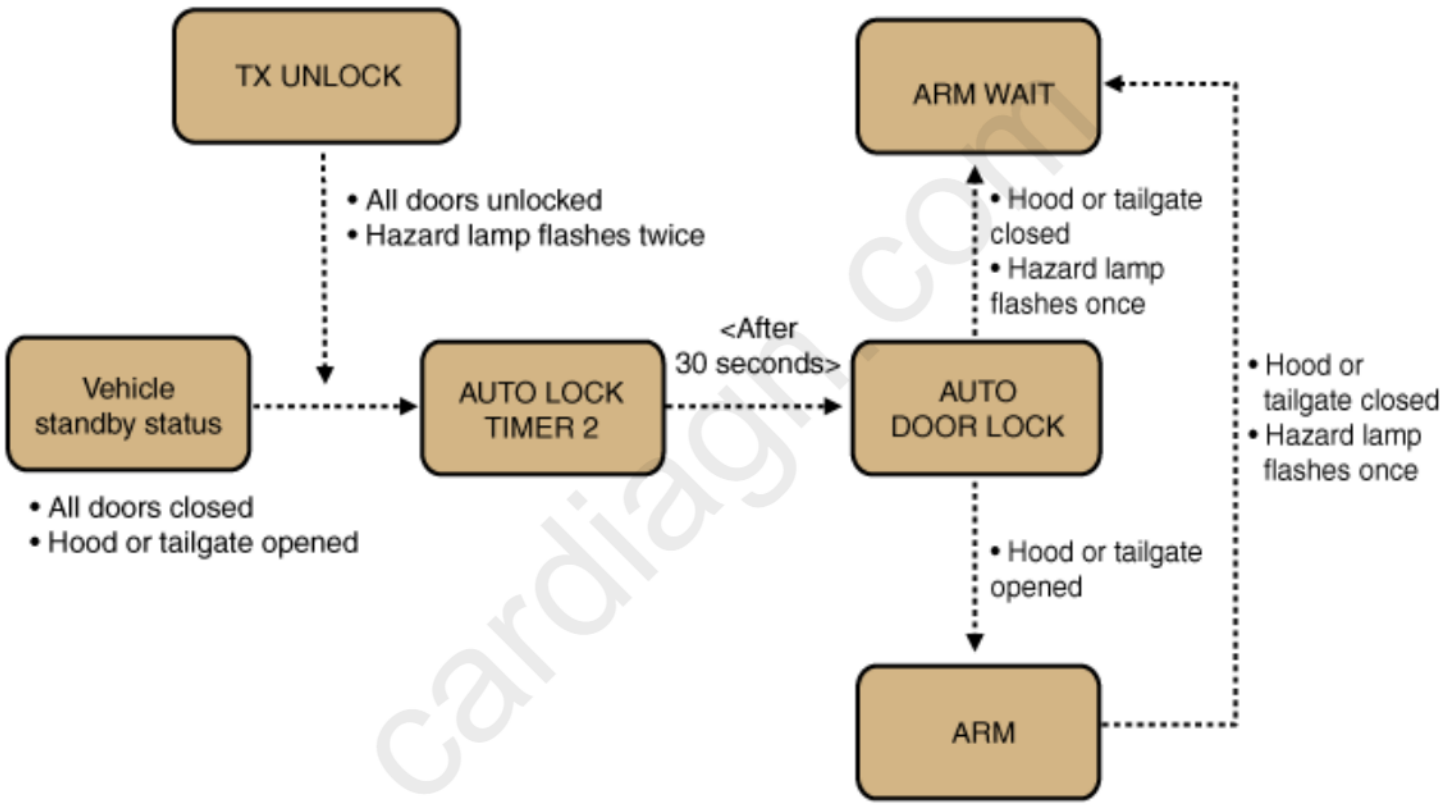

※ Remark: For a vehicle equipped with Smart Key system, the same process is applied to Passive door lock function.

B/A State	Description

PRE ARM	1-1. This is the state right before entering "ARM" mode after AUTO LOCK Timer 2 is completed and all doors are closed. 1-2. If the driver closes hood or tailgate, hazard lamp blinks one time and then the vehicle automatically enters "ARM" mode via "ARM WAIT" mode. 2-1. If LOCK button is pressed while at least one of all doors, hood and tailgate is open, "PRE ARM" mode turns on. 2-2. Because all doors locking signal is issued but the conditions for "ARM WAIT" are not satisfied, the vehicle remains in standby mode and enters ARM mode via ARM WAIT mode as soon as the door being open is closed. 2-3. In case intrusion is detected in PRE ARM mode, the vehicle turns into DISARM mode. 2-4. Security indicator keeps blinking in PRE ARM mode.

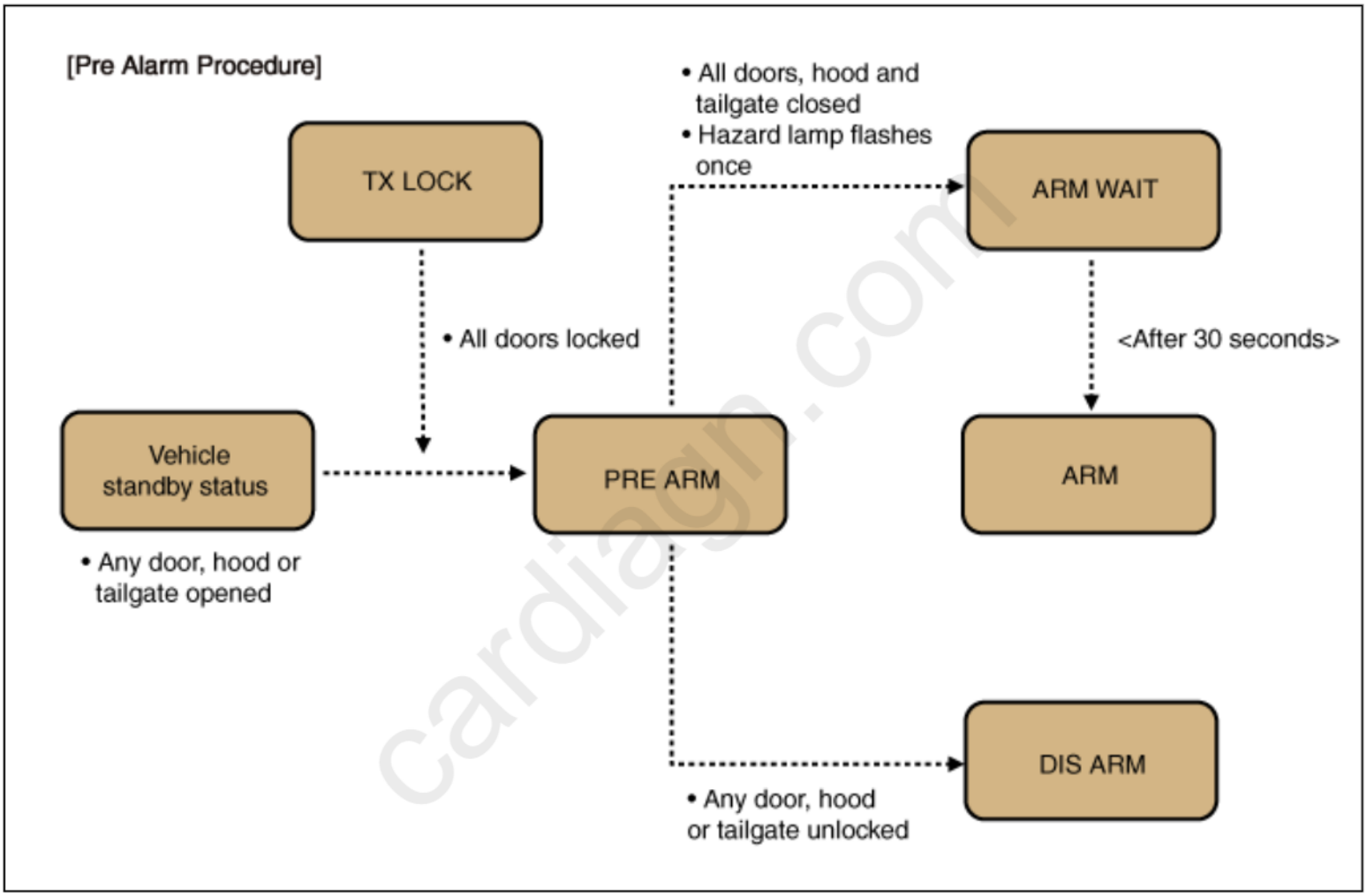

B/A State	Description
RE ARM	1)In "REARM" state, if the vehicle intrusion is detected, flashing and alarm sound are activated again and the state changes to ALARM mode. 2)Burglar Alarm state moves to RE ARM mode after the timer of 27 seconds is completed. 3)Security Indicator keeps blinking.

B/A State	Description

cardiagn.com

AUTOLOCK TIMER3	1)B/A state changes to "AUTOLockTIMER3", when TX-Tailgate command operated. 2)B/A state changes "AUTOLOCKTIMER3" to "ARMWAIT", when the "30sec." timer expires with all doors lock and closed. 3)B/A state changes "AUTOLOCKTIMER3" to "DISARM", when any door open. 4)In "AUTOLOCKTIMER3" state, timer "30sec." timer is running. If this timer expired, state transits to "PREARM" state with Tailgate Open. 5)In this state, Security indicator keeps blinking

[Auto Lock Timer 3 Procedure]

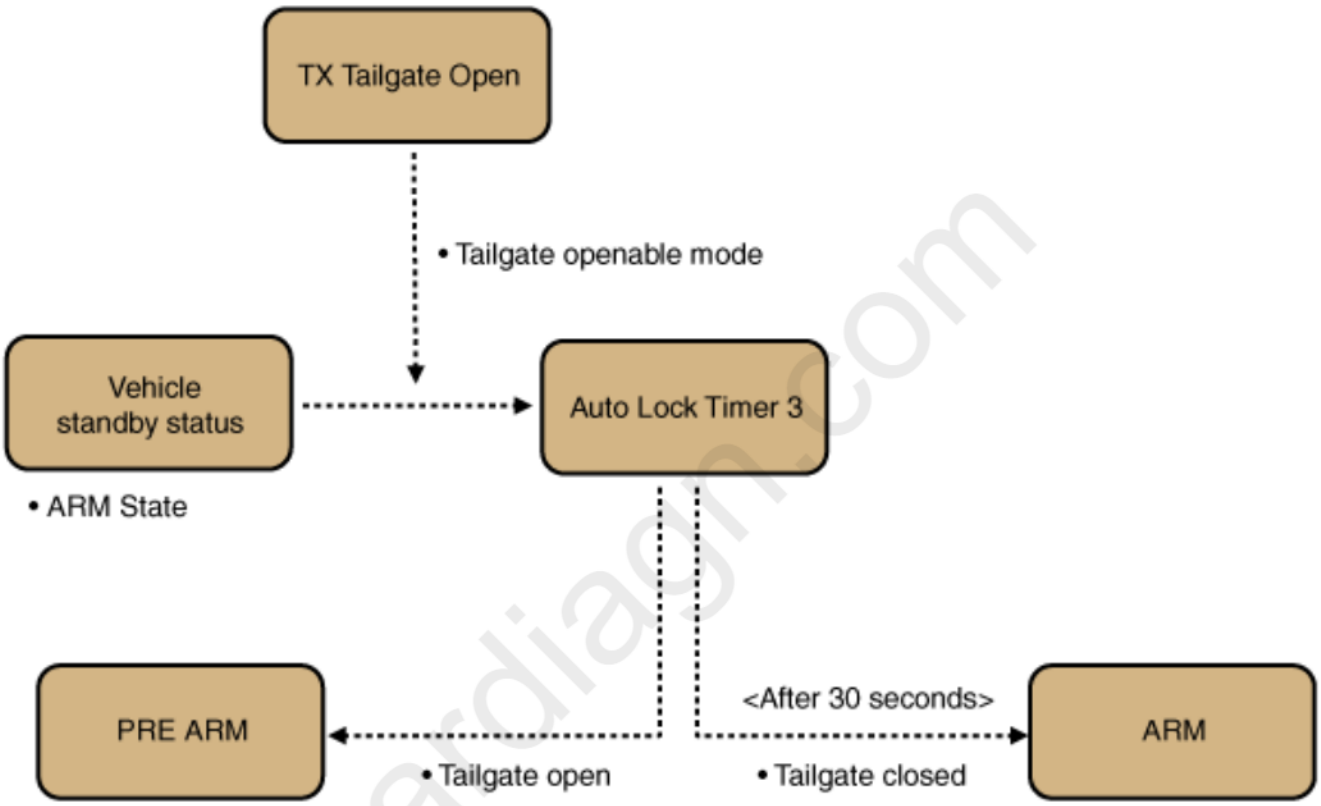

cardiagn.com

B/A State	Description
ARM HOLD (Alarm hold : Tailgate) ※Non-PTL option	1)"ARM HOLD" mode is similar to the existing tailgate alarm hold mode. 2)If tailgate is opened by a remote control (including smart key) in ARM mode, the vehicle enters ARM HOLD mode which holds off the burglar alarm only for the open tailgate. 3)As long as tailgate is closed, ARM HOLD mode keeps on without break. 4)When the opened tailgate is shut down, timer set for 30 seconds starts running. For the 30 seconds of ARM HOLD mode, burglar alarm does not go off if tailgate is opened. 5)When 30 seconds pass after tailgate is closed, the vehicle immediately enters ARM mode. 6)During ARM HOLD more, ARM mode is maintained for doors and hood so if intrusion through any door or hood is detected, burglar alarm normally goes off. 7)Security indicator keeps blinking during ARM HOLD mode.

Note 1: ARM HOLD is a mode that defers activation of ARM mode only for tailgate. During ARM HOLD mode, ARM mode is applied to doors and hood.

Note 2: When using the ignition key to open the tailgate, the ARM HOLD function works in the same way, provided that the "Door Key Burglar Alarm" function should be enabled. if this is disabled, the key-based ARM HOLD is off and using the key to opening the tailgate is determined as a theft and the alarm is issued.

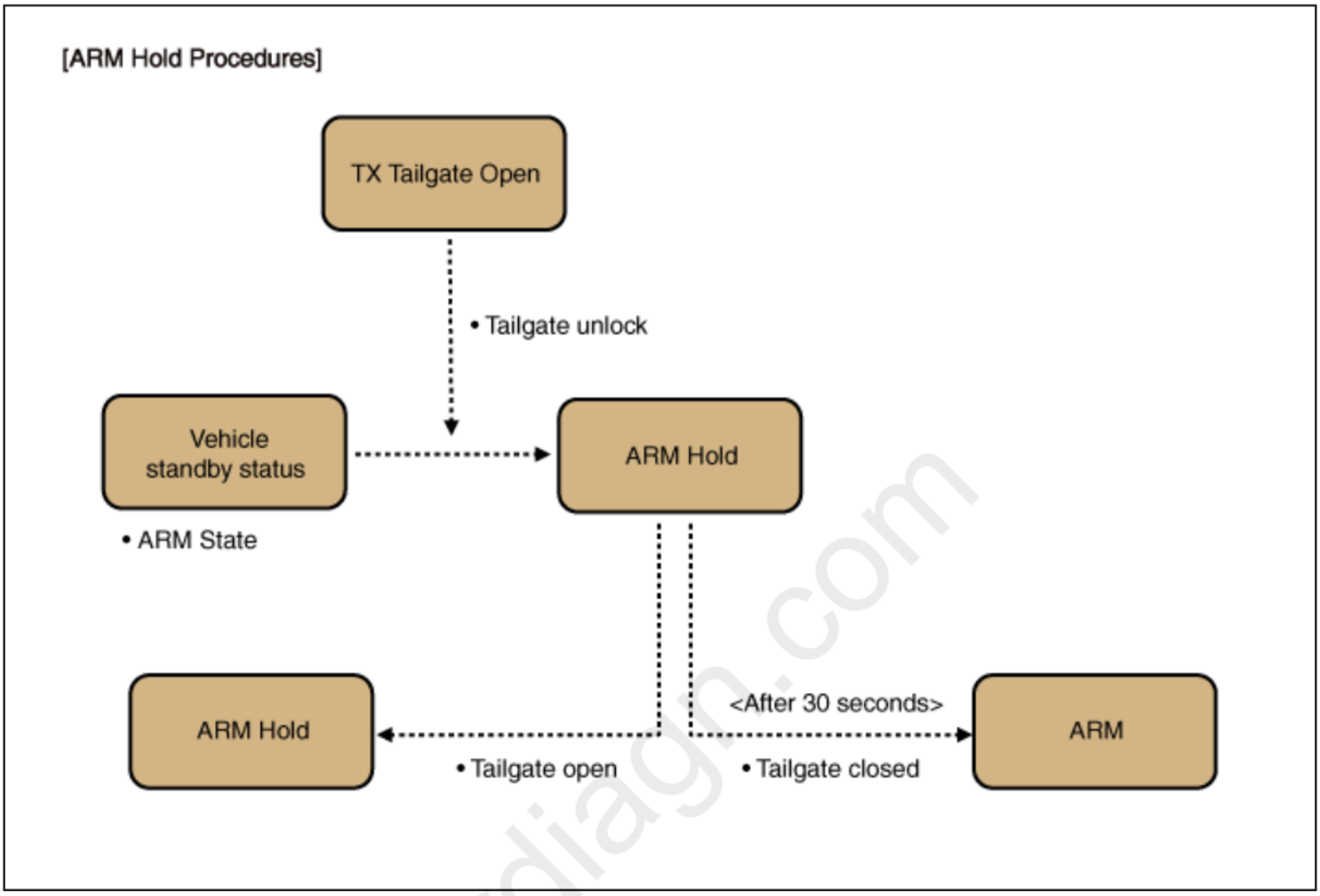

B/A State	Description
RE ARM (ARM mode is on again)	1)If the door, hood and tailgate are all closed after the termination of ALARM mode, it means that the ARM mode is on again. 2)At this time the actuator state (door lock/unlock) is neglected and ARM mode is kept until the remote control signal is received (normal ARM mode). 3)The security indicator keeps flickering during this mode.
RESET	1)When the battery is removed in ALARM or RE ARM mode, RESET mode is on. 2)When the battery is installed after RESET, the theft alarm operation resumes.(instead of remained output, the cycle of 27 seconds ON/10 seconds OFF repeats three times)

B/A State	Description

cardiagn.com

KEY ON 30 second deactivation (Non-Smart Key option)	1)For a vehicle without smart key option, if it waits for 30 seconds with the ignition key on during ALARM mode, the vehicle enters DISARM mode. 2)Even before 3O seconds pass, if the engine starts (Alternator "L" terminal voltage is HI: sent from the cluster module to CAN data), the theft alarm is instantly deactivated. (No ignition inhibition: The immobilizer system is applied as a basic function so the ignition system is normally operated by the registered immobilizer key during alarming) ※ For a smart key-based vehicle, the alarm is deactivated instantly after the smart key authentication.
When ARM mode is on, the tailgate OPEN and central door unlock are not allowed.	1)From the moment that a vehicle enters ARM WAIT mode by activating all door lock using the remote control or smart key, the central door unlock switch of the indoor tailgate unlock switch or DDM & ADM (power window switch of driver and passenger seat) is disabled. (theft prevention) ※ The function is equally applied to ARM WAIT/ARM/ALARM/RE ARM modes.

cardiagn.com

Please rate this document after reviewing at the bottom of this page.

Inspection

- When removing with a flat-tip screwdriver or remover, wrap protective tape around the tools to prevent damage to components.
- When removing the interior trim pieces, use a plastic panel removal tool not to damage the surface.
- Be careful to store and handle the trim when removing/installing because lubricant and oil can leave a stain on the trim.

Front Door Lock Module Inspection

1. Remove the front door trim.
   (Refer to Body - "Front Door Trim")
2. Remove the front door module.
   (Refer to Body - "Front Door Module")
3. Disconnect the connector from the actuator.

cardiagn.com

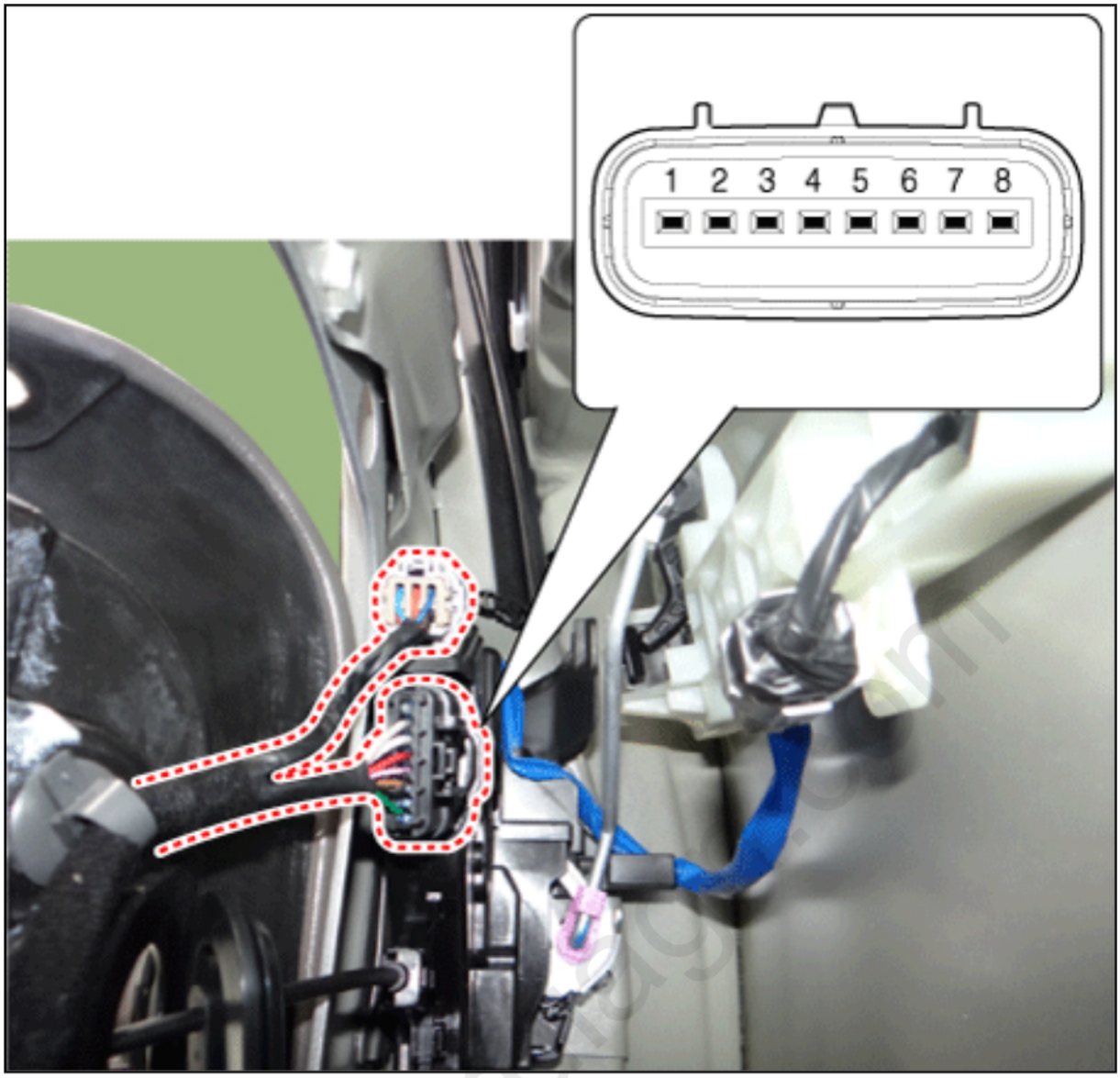

[Central Lock Motor]

No.	Pin Information	
	LH	RH
1	-	AJAR switch
2	Motor 1	COM
3	Motor 2	Lock / Unlock switch
4	Key unlock switch	Key lock switch
5	Key lock switch	Key unlock switch
6	Lock / Unlock switch	Motor 2
7	COM	Motor 1
8	AJAR switch	-

[Dead Lock Motor]

No.	Pin Information	
	LH	RH
1	Motor 1	AJAR switch
2	Motor 2	COM
3	Motor 3	Lock / Unlock switch
4	Key unlock switch	Key lock switch
5	Key lock switch	Key unlock switch
6	Lock / Unlock switch	Motor 3
7	COM	Motor 2
8	AJAR switch	Motor 1

4. Check actuator operation by connecting power and ground as shown below. To prevent damage to the actuator, apply battery voltage only momentarily.

   [Central Lock Motor]

cardiagn.com

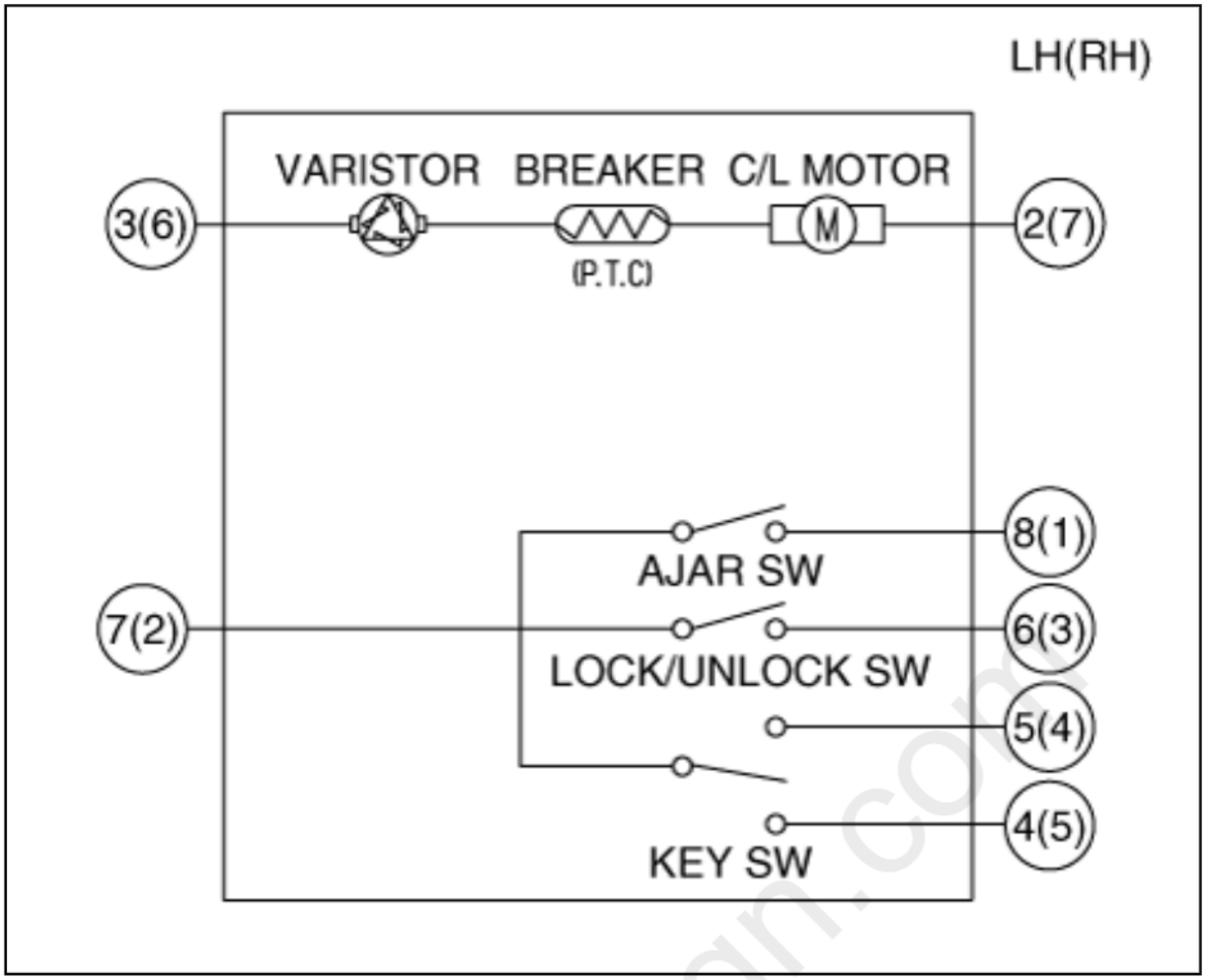

[Dead Lock Motor]

cardiagn.com

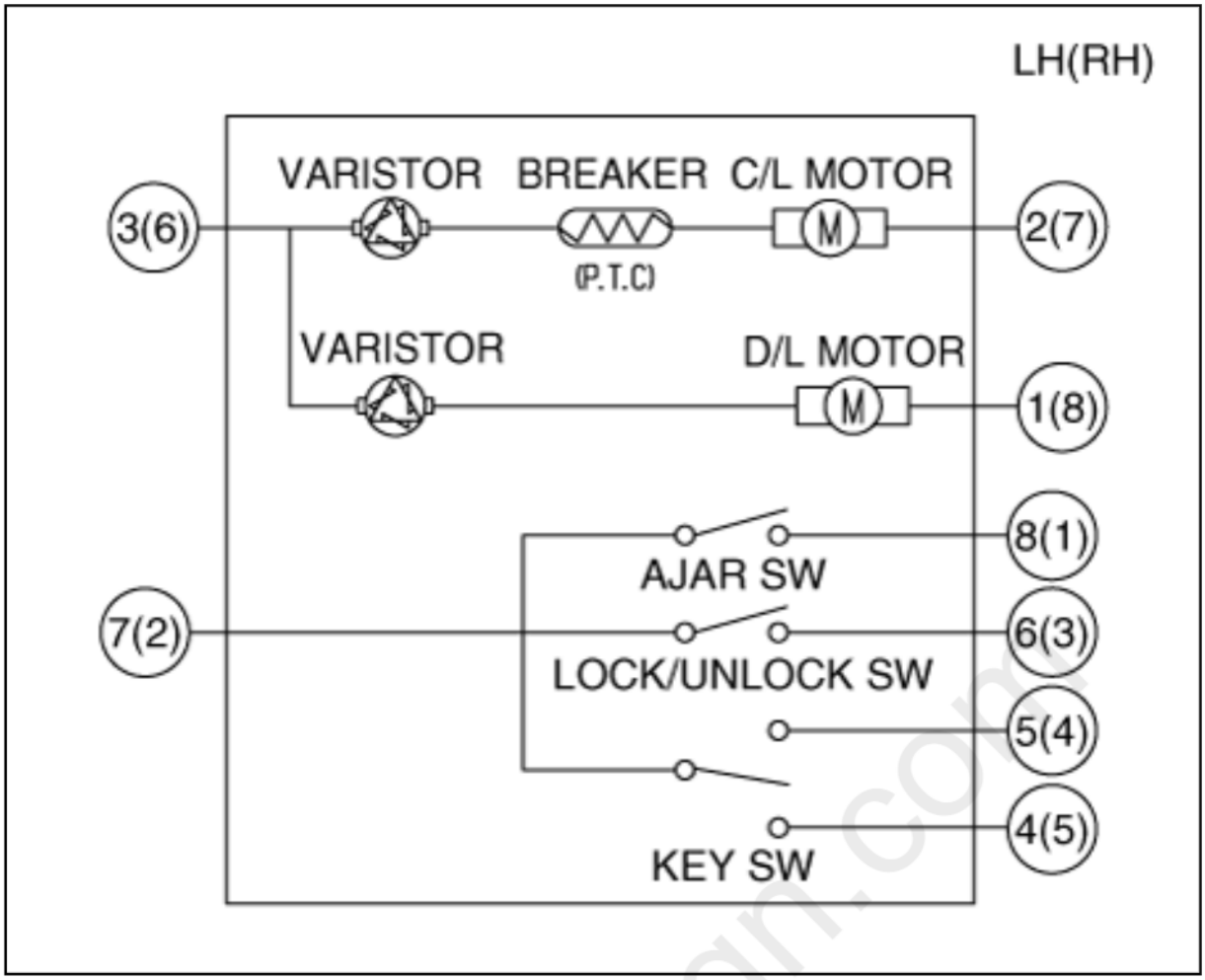

[Central Lock Motor]

(LH)

cardiagn.com

Operation / Terminal	Central Lock	Central Unlock
2	+	-
3	-	+
6 & 7	ON → OFF	OFF → ON
7 & 8	Door open & Half-latching (1st detent) = ON Full-latching (2nd close) = OFF	
5 & 7	Key Rotate CW (LH) / CCW (RH) : ON Key Return : OFF	
4 & 7	Key Rotate CCW (LH) / CW (RH) : ON Key Return : OFF	

(RH)

cardiagn.com

Operation / Terminal	Central Lock	Central Unlock
7	-	+
6	+	-
2 & 3	ON → OFF	OFF → ON
1 & 2	Door open & Half-latching (1st detent) = ON Full-latching (2nd close) = OFF	
2 & 4	Key Rotate CW (LH) / CCW (RH) : ON Key Return : OFF	
2 & 5	Key Rotate CCW (LH) / CW (RH) : ON Key Return : OFF	

[Dead Lock Motor]

cardiagn.com

LH (RH)

Operation / Terminal	Central Lock	Central Unlock	Dead Lock	Dead unlock
1(8)	-	+	+	-
2(7)	+	-	-	+
3(6)	-	+	-	+
6(2) & 7(3)	ON → OFF	OFF → ON		
5(2) & 7(4)	Key rotate CW (LH), CCW (RH) : ON Key return : OFF			
4(2) & 7(5)	Key rotate CCW (LH), CW (RH) : ON Key return : OFF			
7(1) & 8(2)	Door open & half latching : ON Full latching : OFF			

Rear Door Lock Module Inspection

1. Remove the rear door trim.
   (Refer to Body - "Rear Door Trim")
2. Remove the rear door module.
   (Refer to Body - "Rear Door Module")
3. Disconnect the connector from the actuator.

cardiagn.com

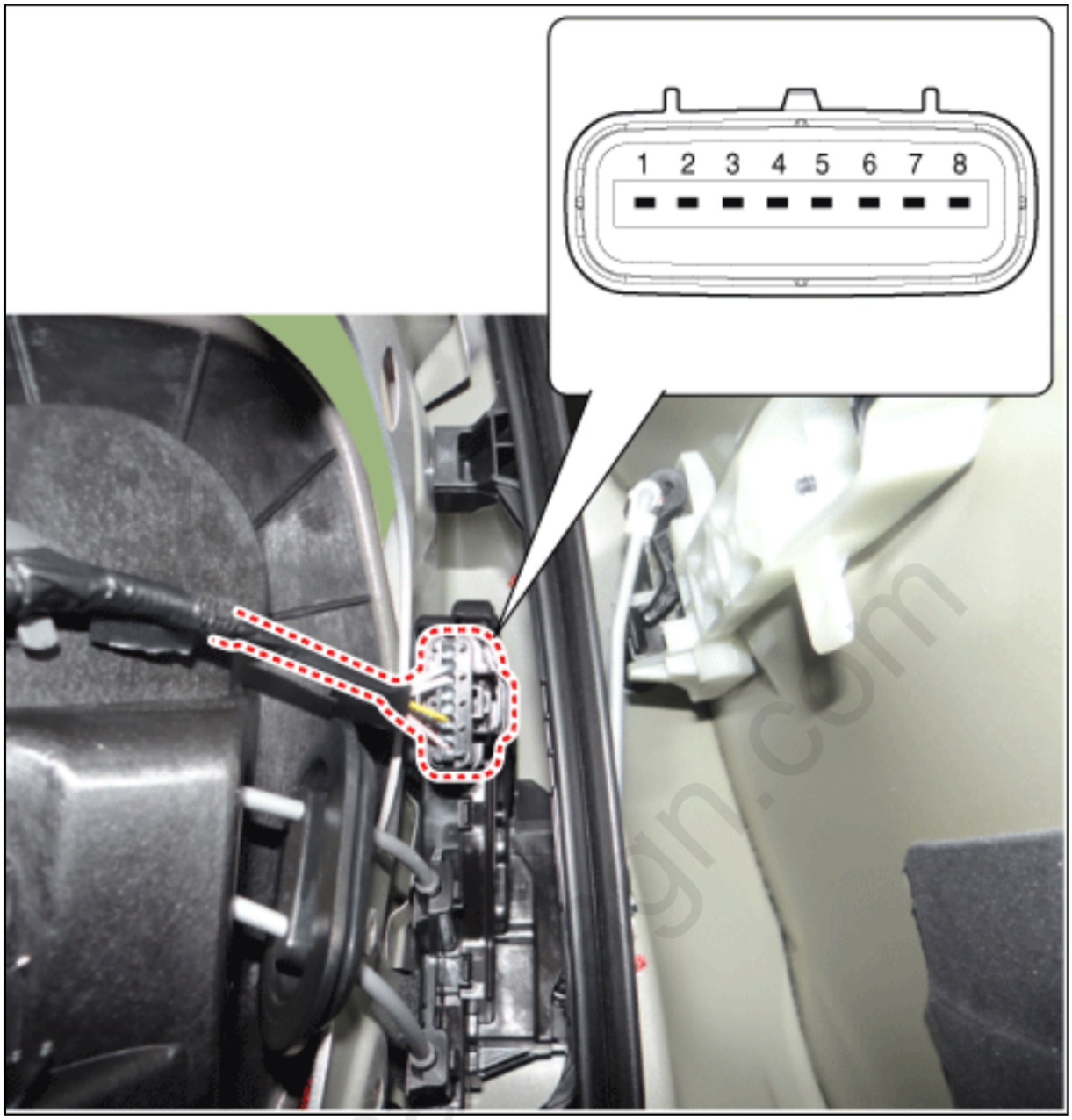

[Central Lock Motor]

No.	Pin Information	
	LH	RH
1	-	AJAR switch
2	Motor 1	COM
3	Motor 2	Lock / Unlock switch
4	-	-
5	-	-
6	Lock / Unlock switch	Motor 2

7	COM	Motor 1
8	AJAR switch	-

[Dead Lock Motor]

No.	Pin Information	
	LH	**RH**
1	Motor 1	AJAR switch
2	Motor 2	COM
3	Motor 3	Lock / Unlock switch
4	-	-
5	-	-
6	Lock / Unlock switch	Motor 3
7	COM	Motor 2
8	AJAR switch	Motor 1

4. Check actuator operation by connecting power and ground as shown below. To prevent damage to the actuator, apply battery voltage only momentarily.

   [Central Lock Motor]

cardiagn.com

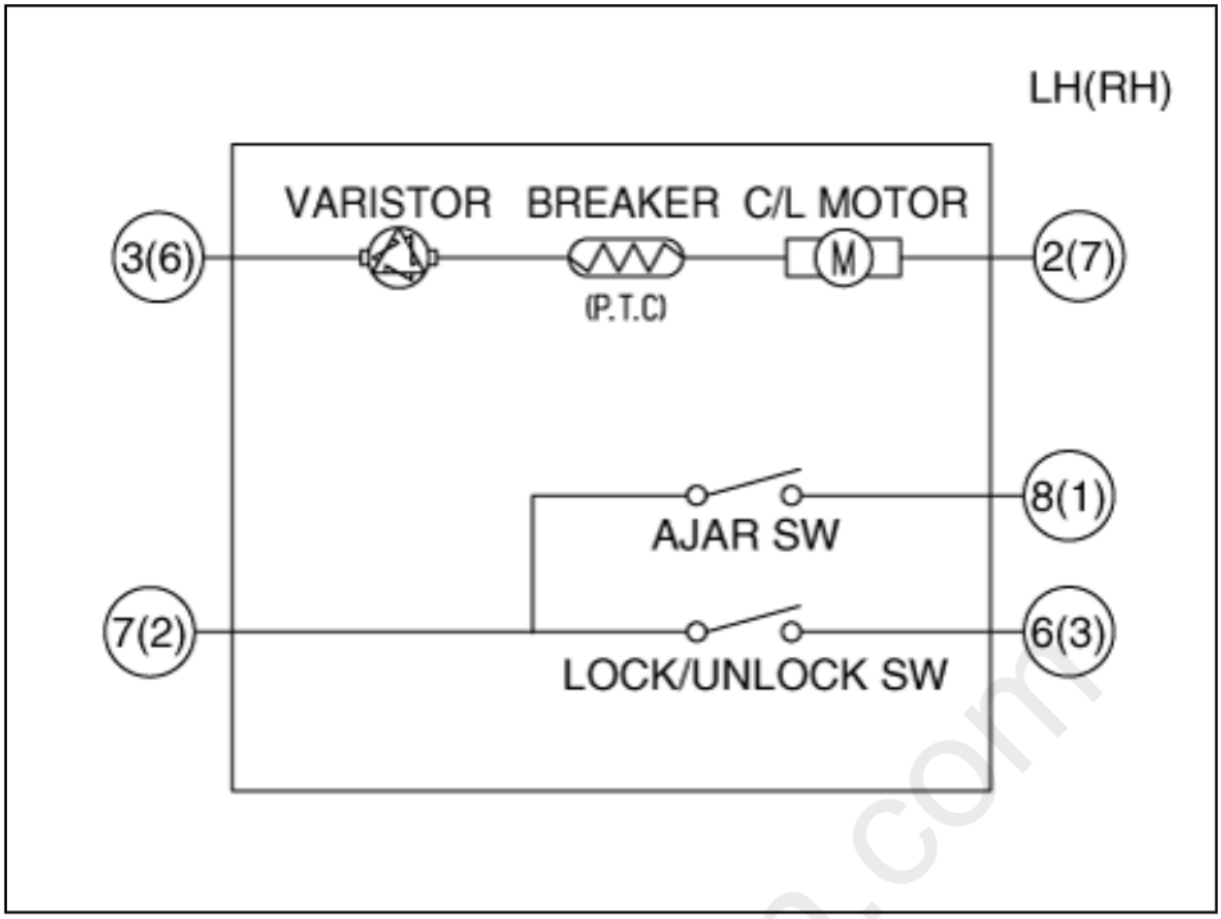

[Dead Lock Motor]

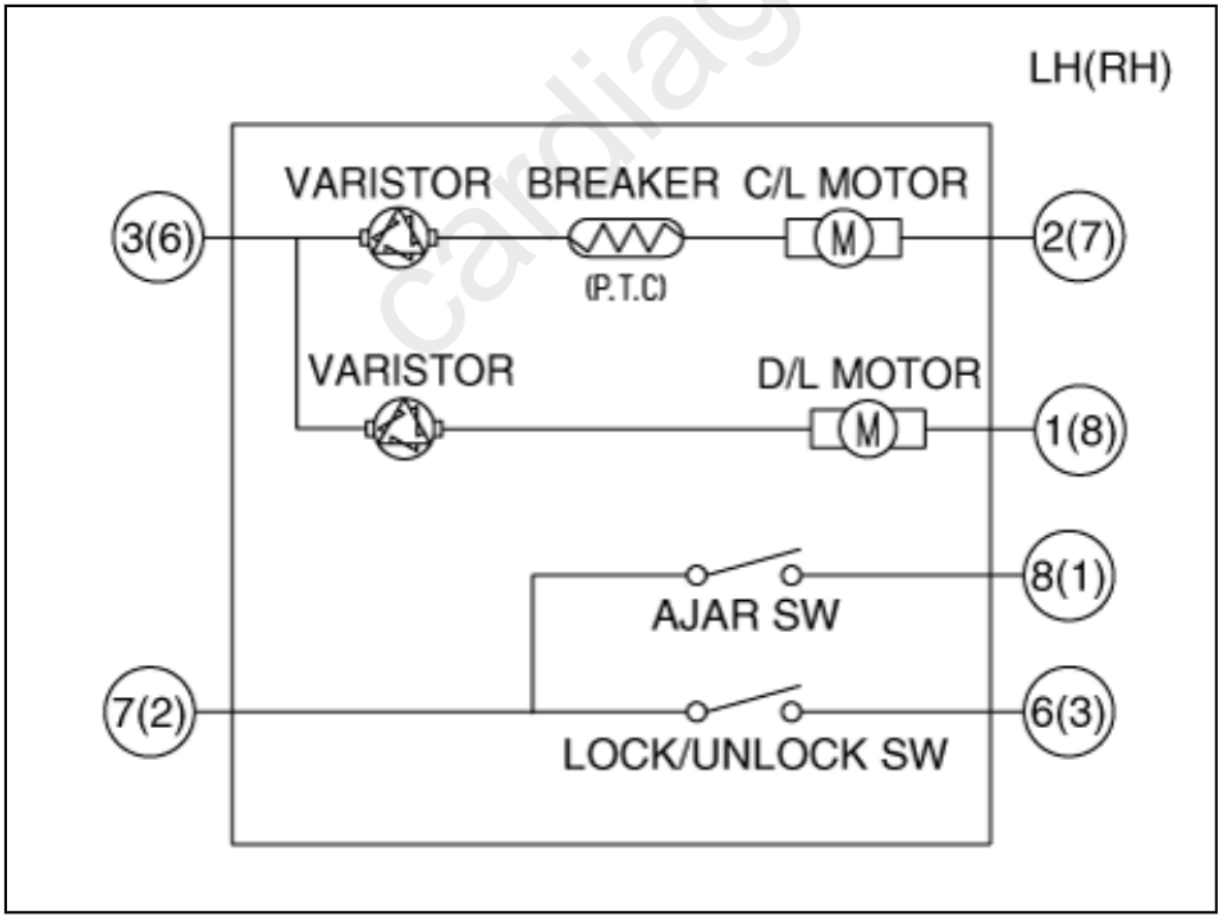

cardiagn.com

[Central Lock Motor]

(LH)

Operation / Terminal	Central Lock	Central Unlock
2	+	-
3	-	+
6 & 7	ON → OFF	OFF → ON
7 & 8	Door open & Half-latching (1st detent) = ON Full-latching (2nd close) = OFF	

(RH)

Operation / Terminal	Central Lock	Central Unlock
7	-	+
6	+	-
2 & 3	ON → OFF	OFF → ON
1 & 2	Door open & Half-latching (1st detent) = ON Full-latching (2nd close) = OFF	

[Dead Lock Motor]

cardiagn.com

LH (RH)

Operation / Terminal	Central Lock	Central Unlock	Dead Lock	Dead unlock
1(8)	-	+	+	-
2(7)	+	-	-	+
3(6)	-	+	-	+
6(2) & 7(3)	ON → OFF	OFF → ON		
7(1) & 8(2)	Door open & half latching : ON Full latching : OFF			

Tailgate Lock Module Inspection

1. Remove the tailgate trim.
   (Refer to Body - "Tailgate Trim")
2. Disconnect the connectors from the actuator.

cardiagn.com



3. Check actuator operation by connecting power and ground as shown below. To prevent damage to the actuator, apply battery voltage only momentarily.

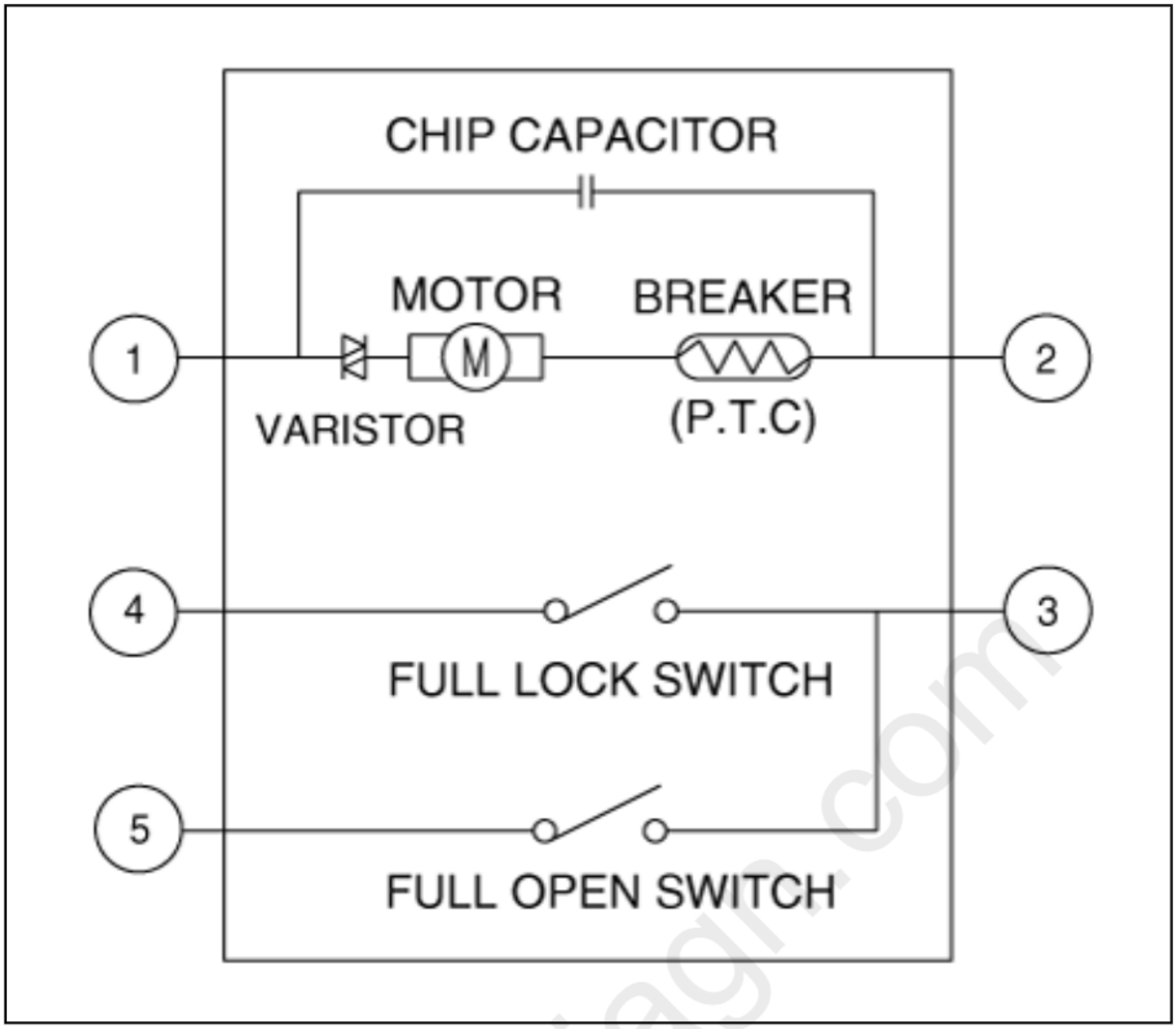

Operation / Terminal	Fully Locked	Half Locked	Fully Open
①	⊕	⊕	X
②	⊖	⊖	X
⑤ & ③	OFF	OFF	ON
④ & ③	OFF	ON	ON

4. Checking the tailgate of the vehicle power option power refers to the tailgate module.

Tailgate Open Switch Inspection

1. Disconnect the negative (-) battery terminals.

2. Remove the tailgate latch.
   (Refer to Body - "Tailgate Latch")
3. Disconnect the tailgate open switch assembly connector.

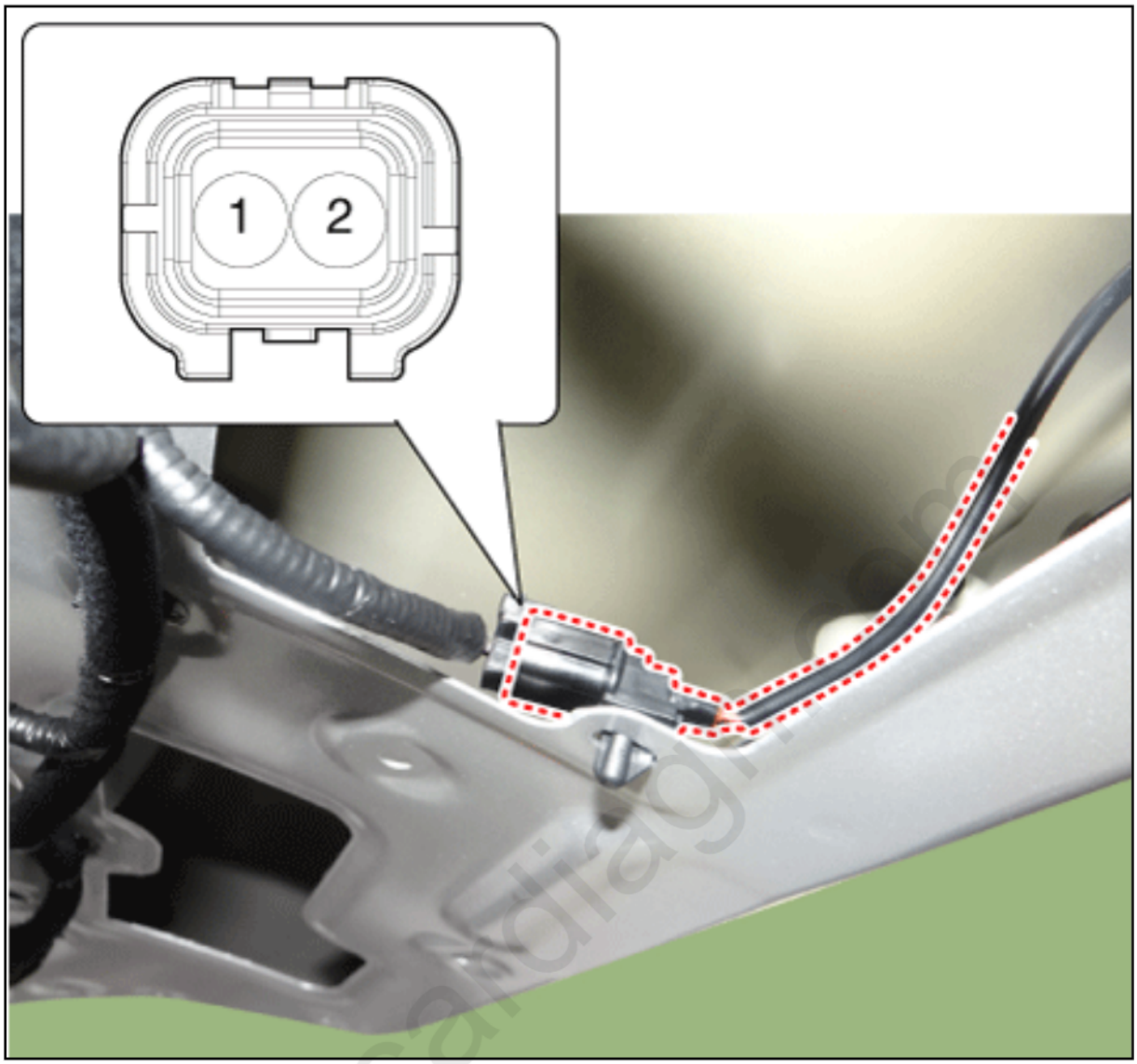

4. Check for continuity between terminals in half latching condition as shown below.

Operation / Terminal	OFF	ON(PUSH)
1		○
2		○

Hood Switch Inspection

1. Disconnect the hood switch connector (A).

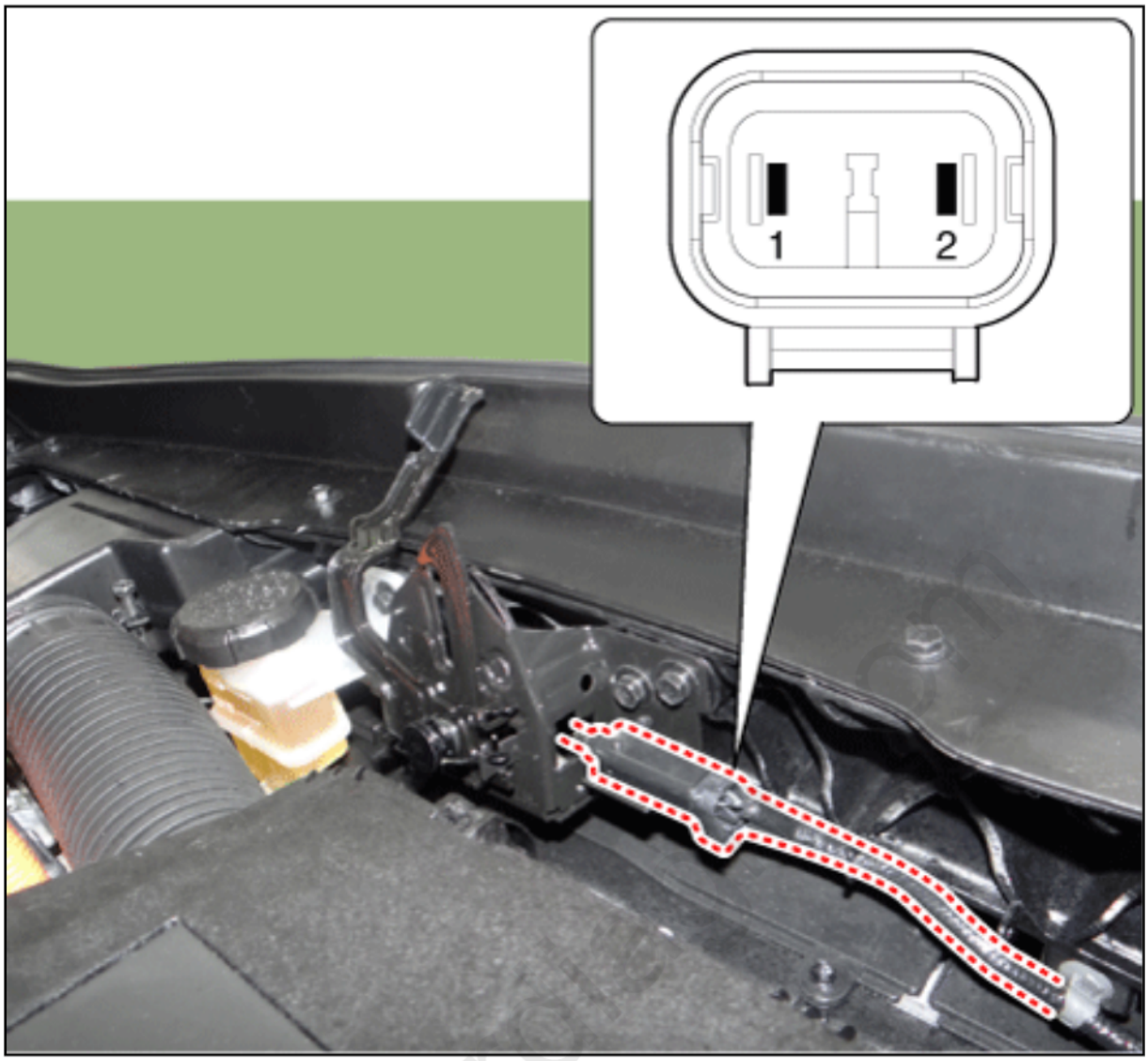

2. Check for continuity between the terminals and ground as shown below.
   (Refer to Body - "Hood Latch")

Terminal / Position	1	2
Open hood(Free)	○———	———○
Close hood(Push)		

Removal

Front Door Lock Module

1. Remove the front door latch.
   (Refer to Body - "Front Door Latch")

Rear Door Lock Module

1. Remove the rear door latch.
   (Refer to Body - "Rear Door Latch")

Tailgate Lock Module

1. Remove the Tailgate lid latch.
   (Refer to Body - "Tailgate Latch")

Tailgate Lid Handle

1. Remove the tailgate latch.
   (Refer to Body - "Tailgate Latch")
2. Disconnect the connector (A) and then remove the connector fixing clip.

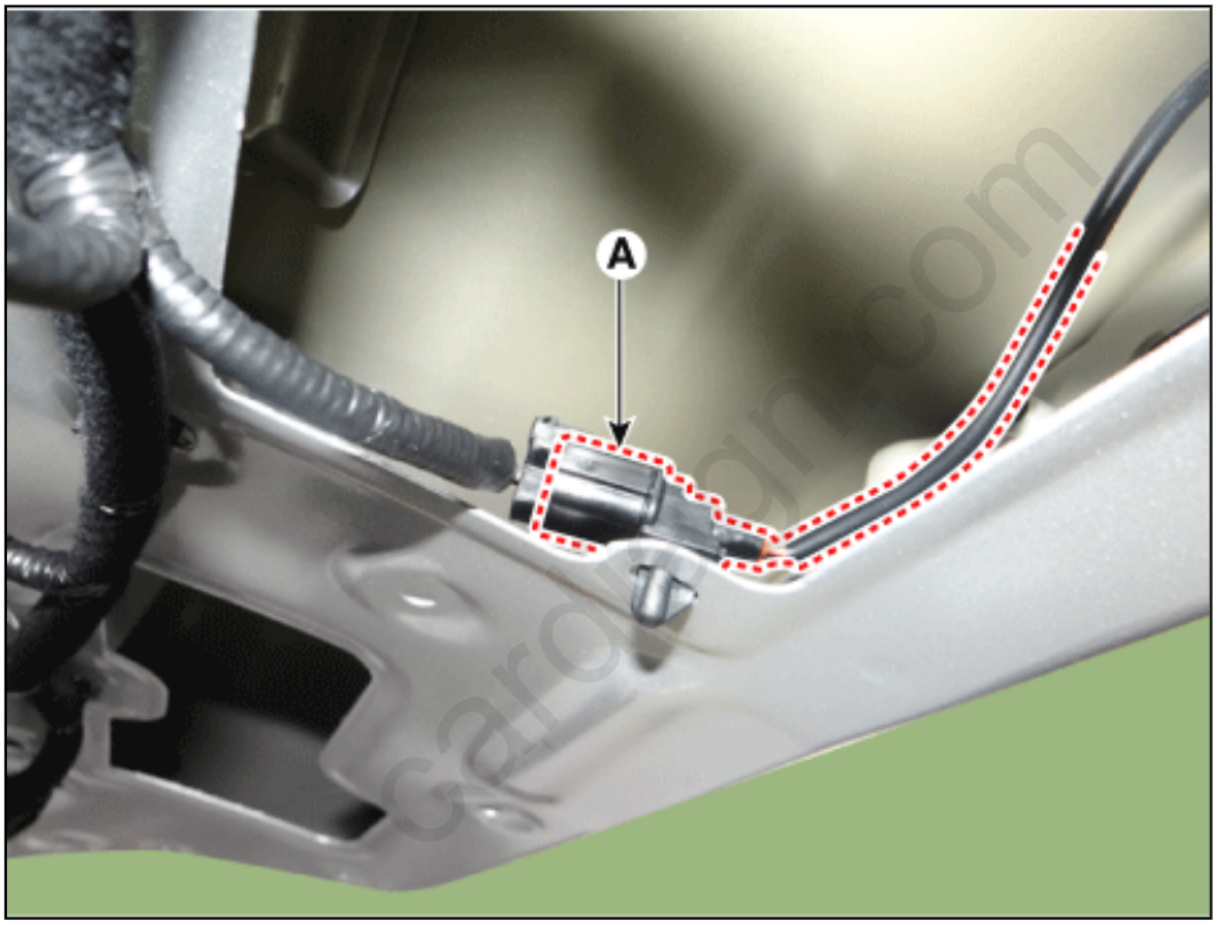

3. Remove the tailgate lid handle (A) by pushing the fixing hooks.



Installation

1. Install in the reverse order of removal.

Please rate this document after reviewing at the bottom of this page.

Specification

Items			Type	Watt
Front	Headlamps (Low/ High)	Blub type	HB3	60
		LED type	LED	LED
	Headlamps (Low)		LED	LED
	Turn signal lamps	Blub type	PY21W	21
		LED type	LED	LED
	Position lamps		LED	LED
	Daytime running lamps		LED	LED
	Fog lamps	Blub type	HB4	51
		LED type	LED	LED
	Side repeater lamps		LED	LED
Rear	Stop/Tail lamps		P21/5W	21/5
	Stop lamps		LED	LED
	Tail lamps	Blub type	W5W	5
		LED type	LED	LED
	Turn signal lamps		P21W	21
	Fog lamp		LED	LED
	Back-up lamp		W16W	16
	License plate lamp		W5W	5
	High mounted stop lamp		LED	LED
Interior	Map lamp	Blub type	WEDGE	10
		LED type	LED	LED
	Vanity mirror lamps		FESTOON	5
	Room lamp	Blub type	FESTOON	10
		LED type	LED	LED
		Blub type	FESTOON	10

cardiagn.com

	Tailgate lamp	LED type	LED	LED

cardiagn.com

Please rate this document after reviewing at the bottom of this page.

Component
Location

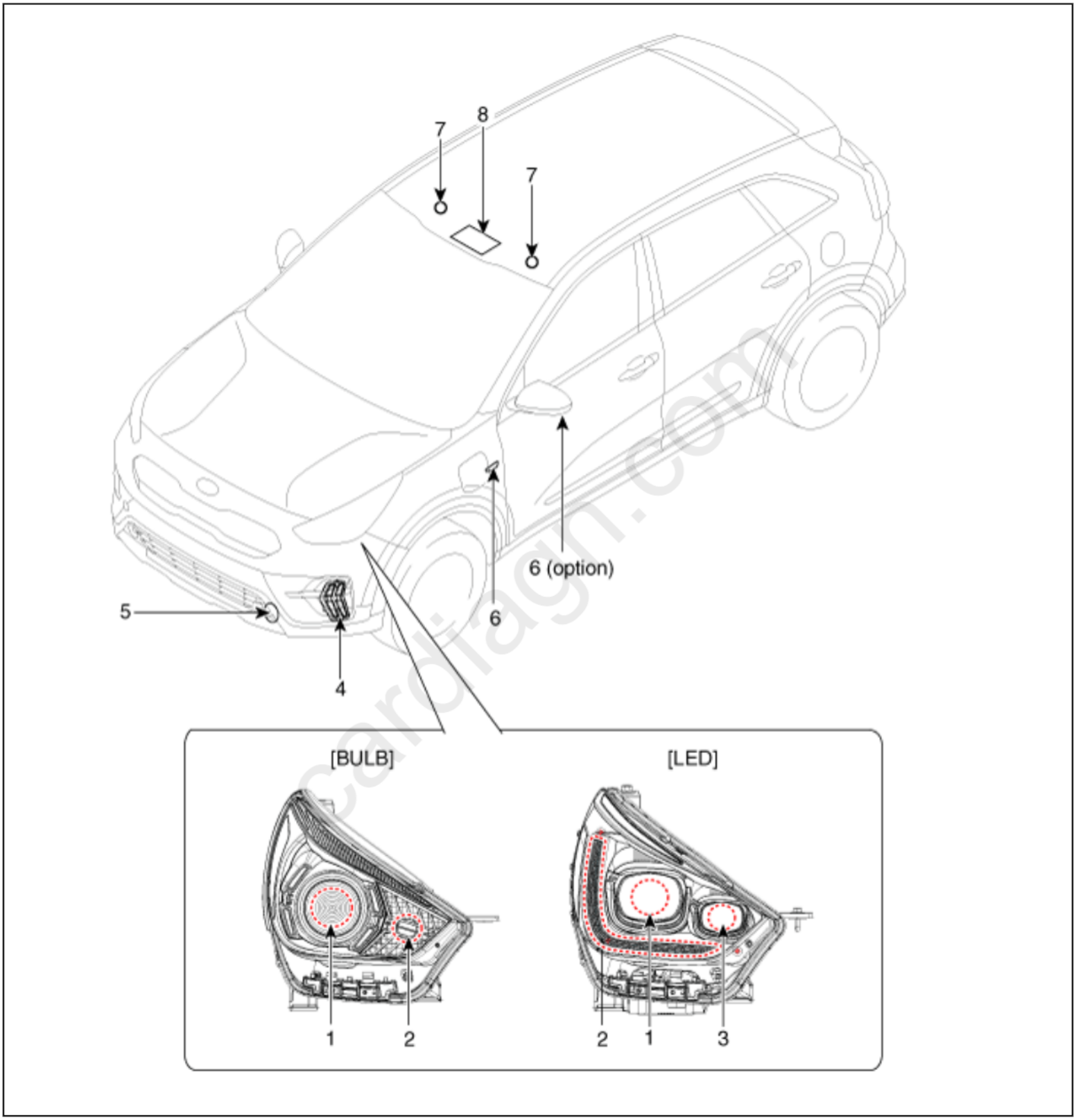

1 . Headlamp (Low/High BI-Function)
2. Turn signal lamp
3. Sub low beam
4 . Daytime running light, Position lamp
5. Fog lamp
6. Side repeater lamp
7. Vanity lamp
8. Map lamp

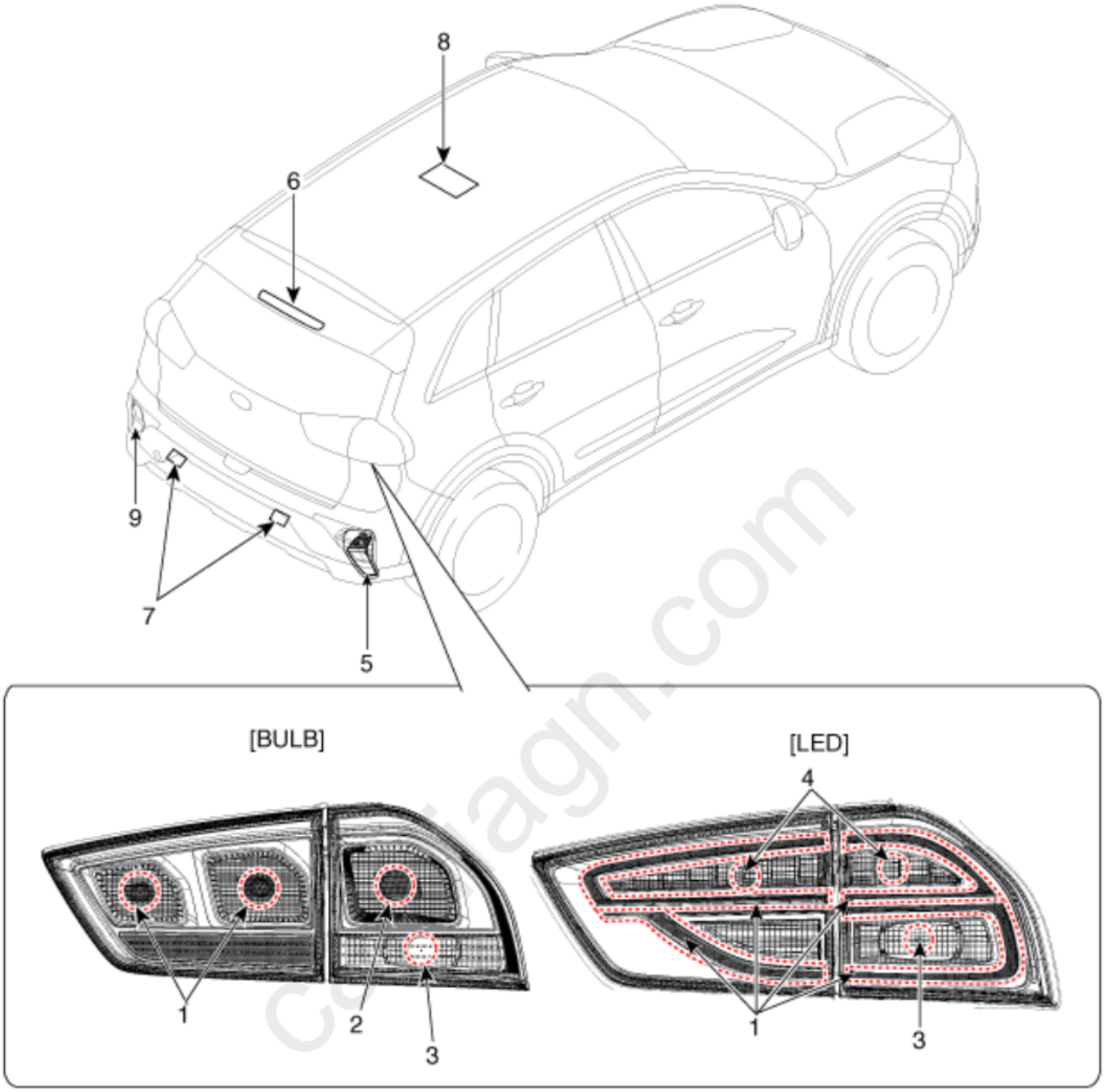

1 . Tail lamp
2. Tail lamp, Stop lamp
3 . Turn signal lamp
4 . Stop lamp
5. Back-up lamp
6 . High mounted stop lamp
7 . License lamp
8 . Room lamp
9. Rear fog lamp

Please rate this document after reviewing at the bottom of this page.

Description

BI-FUNCTION

1. Definition

–A headlamp with integrated functions of high and low beam

–The light is controlled by rotating the shield inserted to the lens. (A solenoid is adopted.)

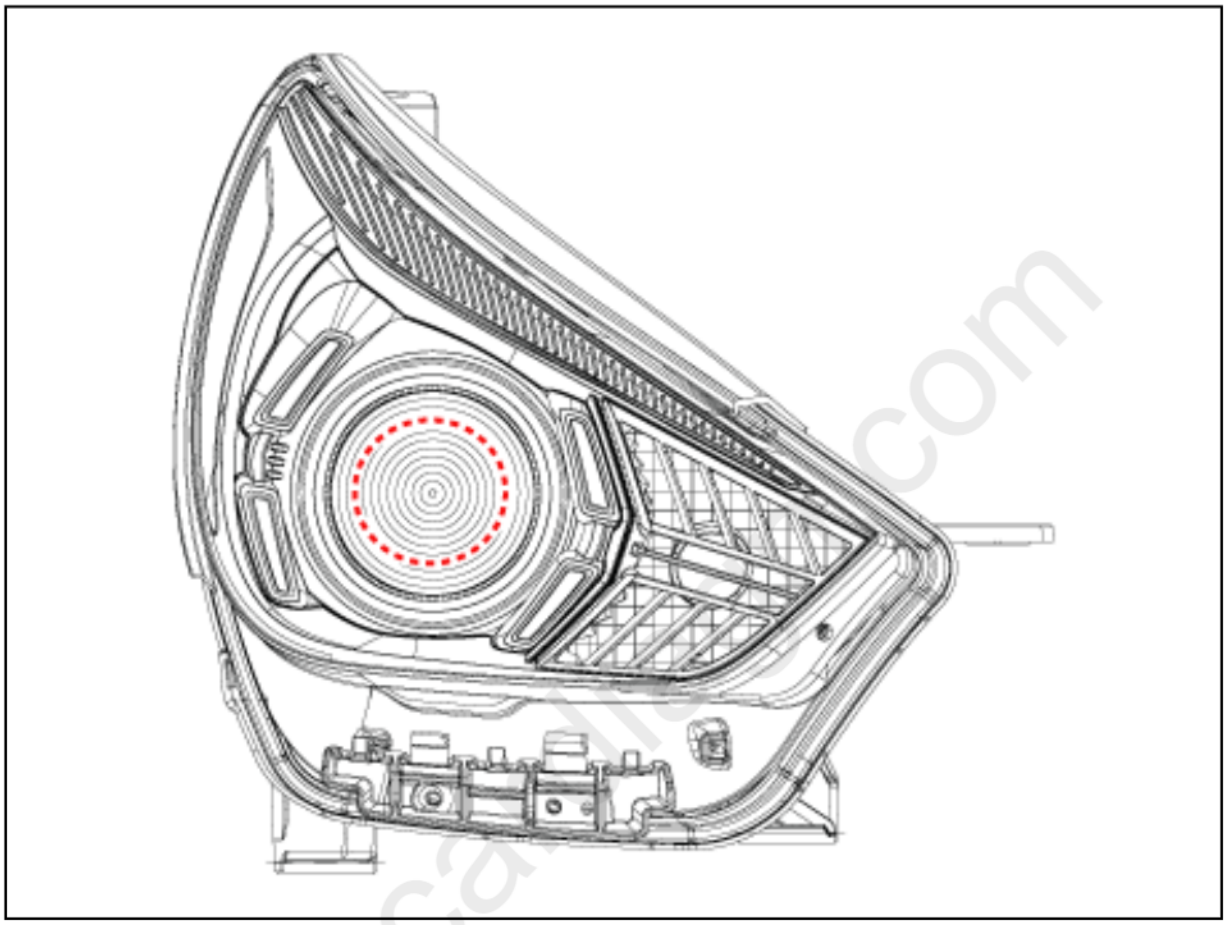

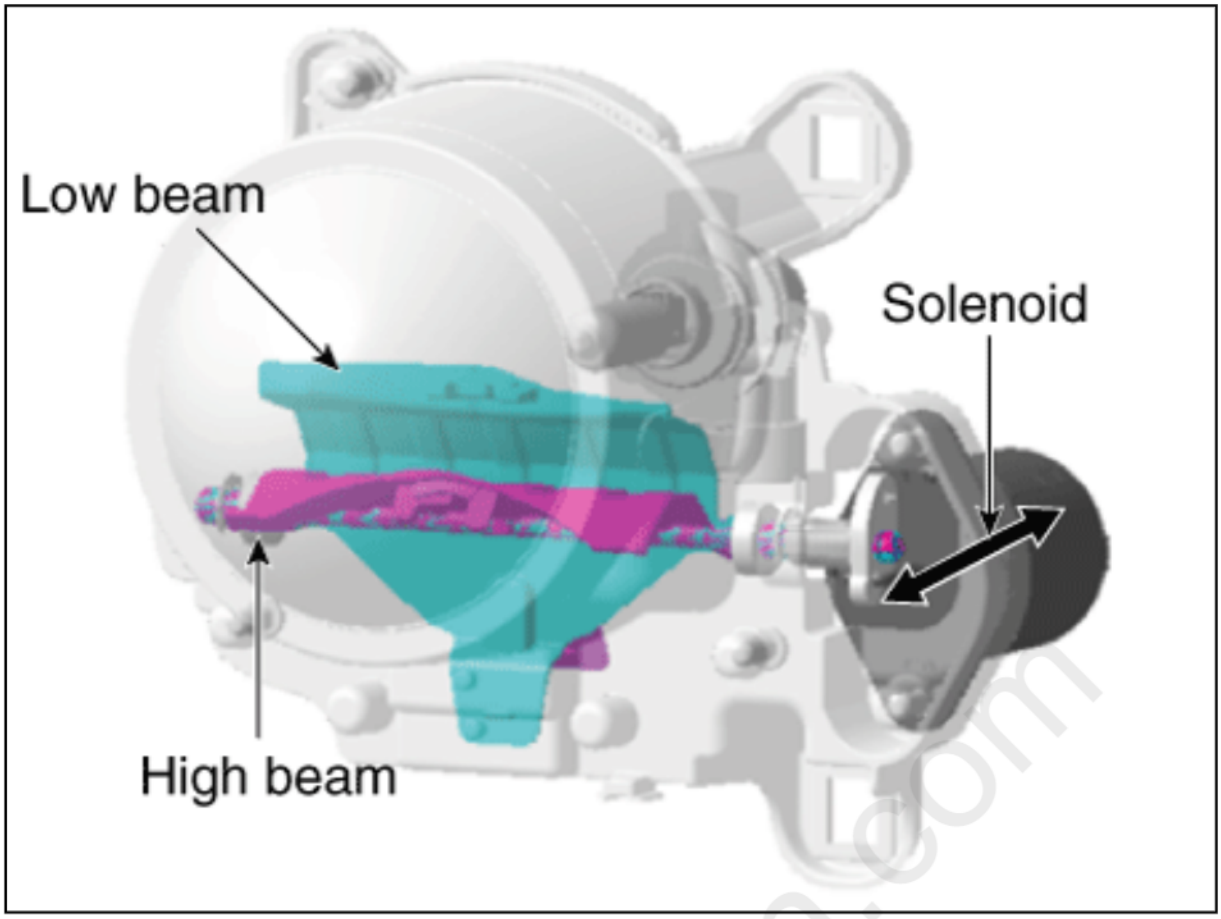

2. Structure and mechanism
   – When working as a low beam
   : The light illuminates to the restricted area of low beam by blocking the light with the stopped shield.

cardiagn.com

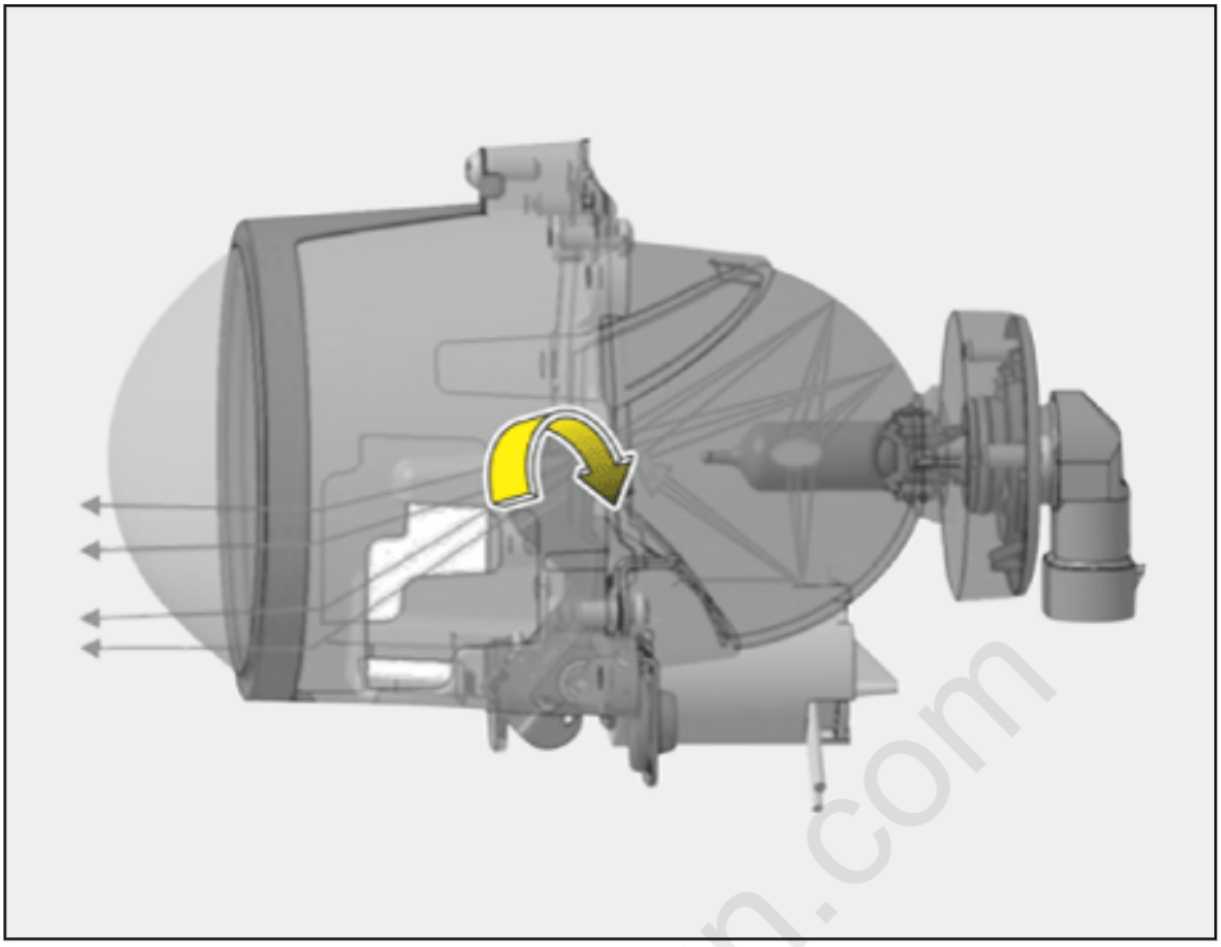

–When working as a high beam

: The light is not blocked by the open shield and the light illuminates to the area of high beam.

cardiagn.com

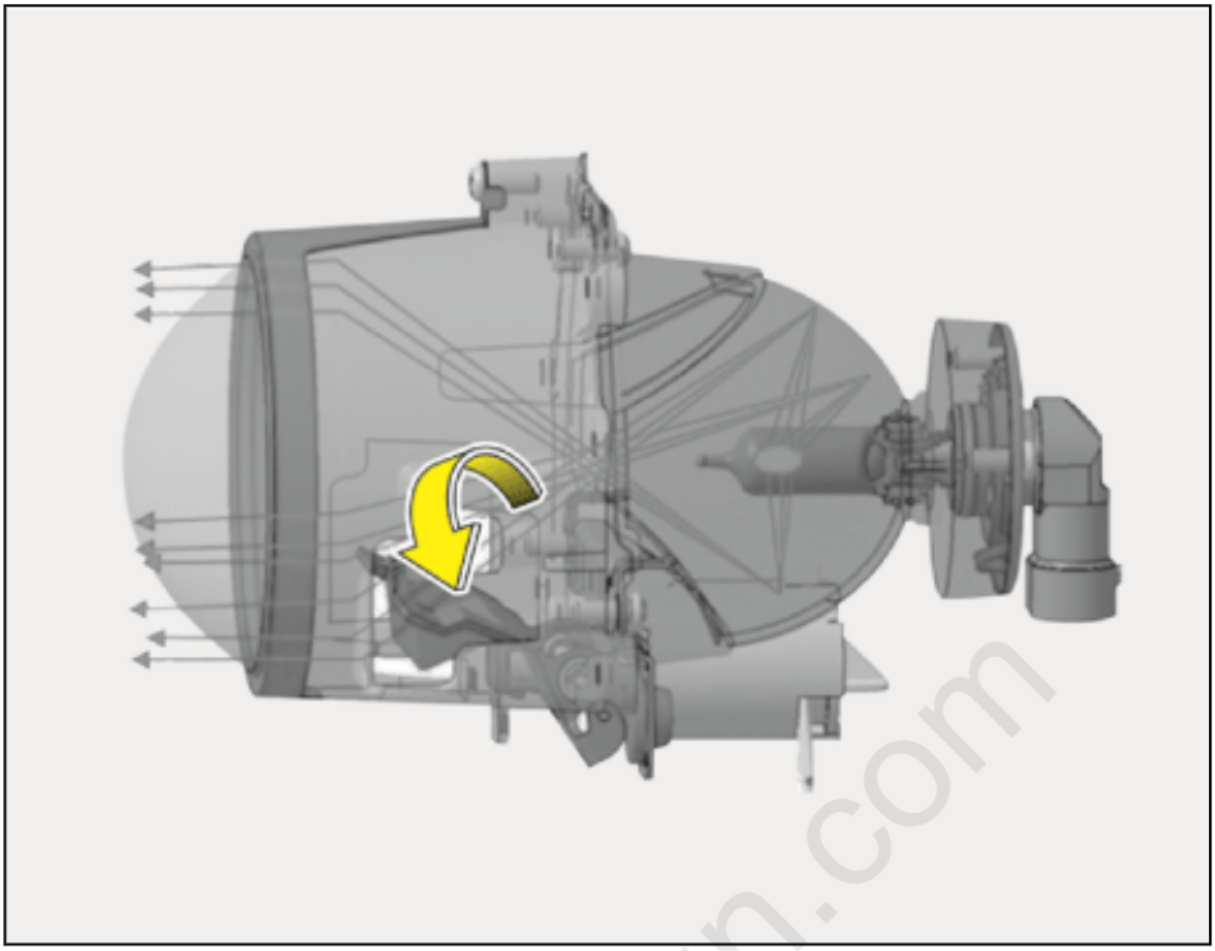

cardiagn.com

Please rate this document after reviewing at the bottom of this page.

Connector and Terminal Function

Connector

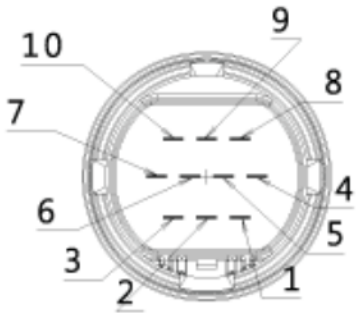

Headlamp Main Connector (Bulb)

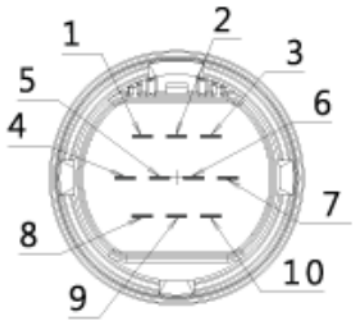

Headlamp Main Connector (LED)

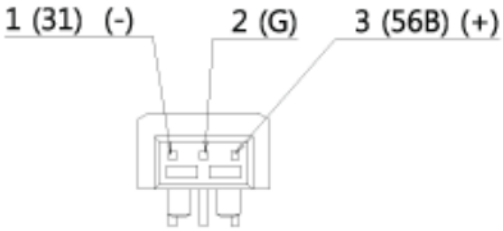

HLLD Connector

Terminal Function

Pin	Function		
	Bulb	**LED**	**HLLD**
1	-	-	Ground
2	High DC motor (+)	High DC motor (+)	Signal
3	Low (+)	Low (+)	Power
4	Turn signal lamp (-)	Turn signal lamp (-)	
5	High DC motor (-)	High DC motor (-)	
6	Low (-)	Low (-)	
7	-	Low tail lamp	
8	Turn signal lamp (+)	Turn signal lamp (+)	
9	-	Turn signal lamp, Tail lamp	
10	-	-	

Circuit Diagram

Headlamp (Bulb)

cardiagn.com

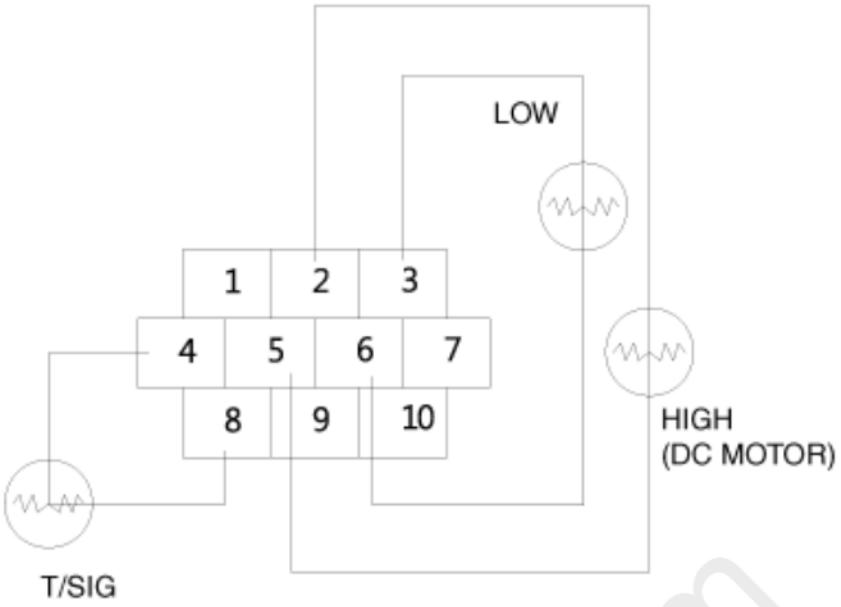

Headlamp (LED)

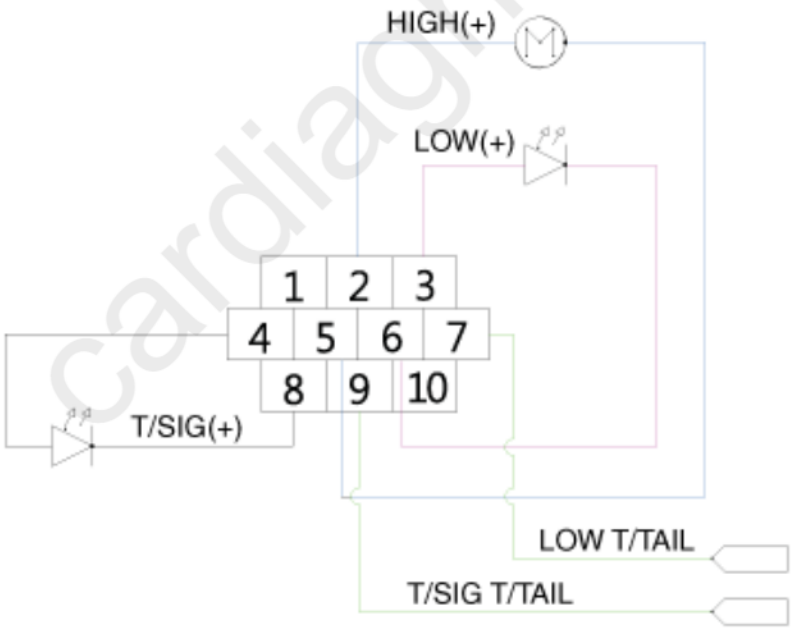

cardiagn.com

Please rate this document after reviewing at the bottom of this page.

Inspection

1. Check the battery voltage. (Low beam will be on when the battery voltage is above 9 V.)
2. Check the fuse and relay.
3. Securely connect the bulb connector.

Removal

Headlamp

1. Disconnect the negative battery terminal.
2. Remove the front bumper assembly.
   (Refer to Body - "Front Bumper Assembly")
3. Remove the diagnosis connector (A) after loosening the mounting screw.

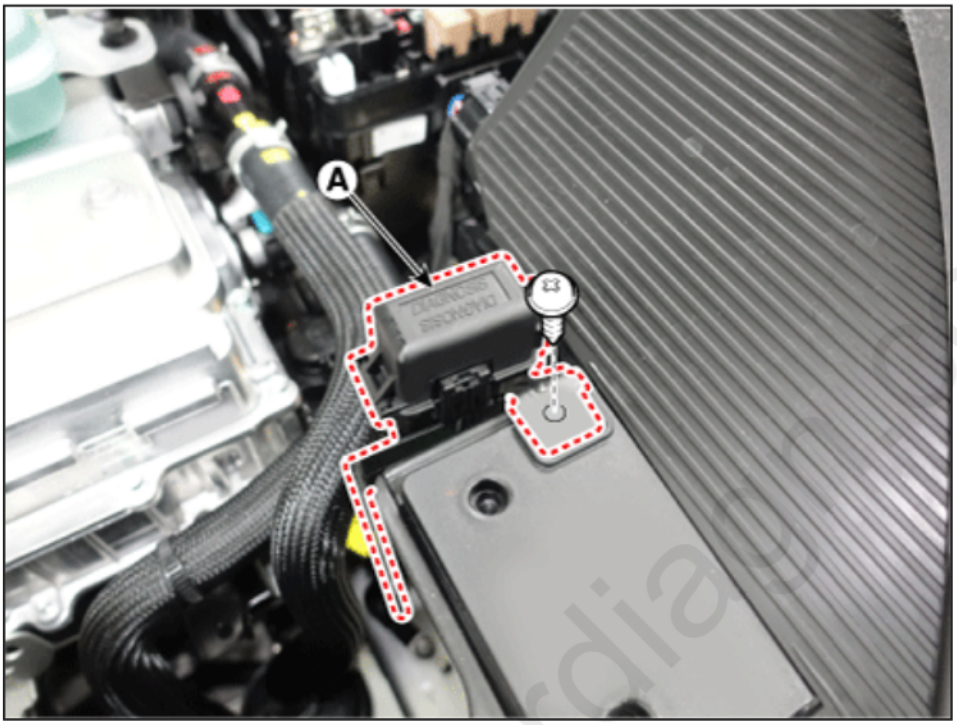

4. Remove the headlamp (A) after loosening the mounting bolts.

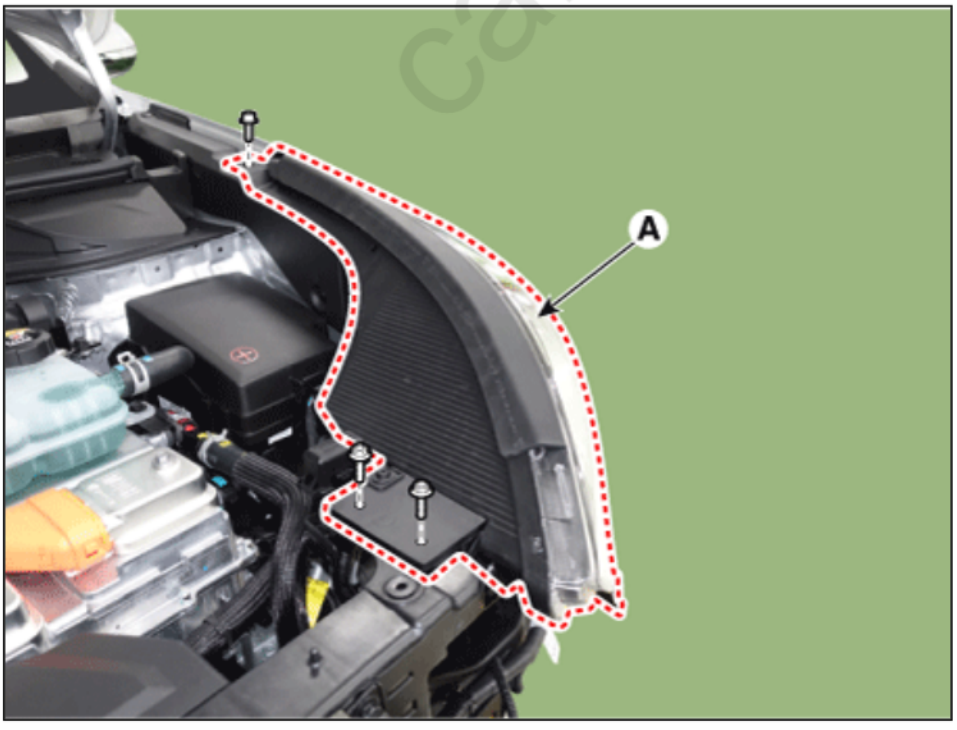

Be careful not to damage the retaining clips (A).

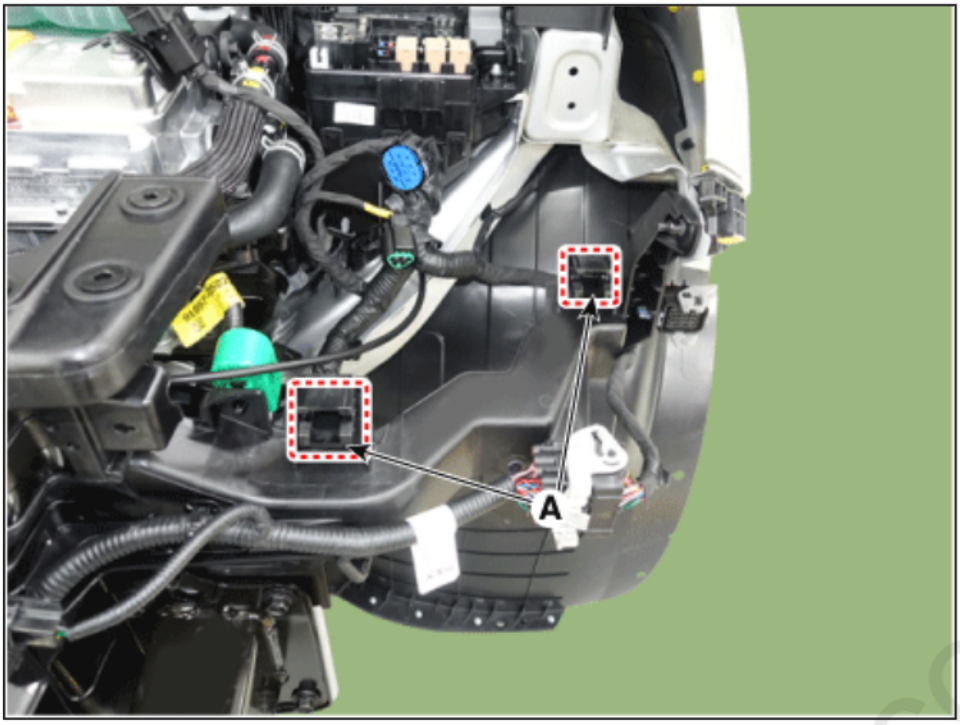

5. Disconnect the connector (A) from the headlamp.

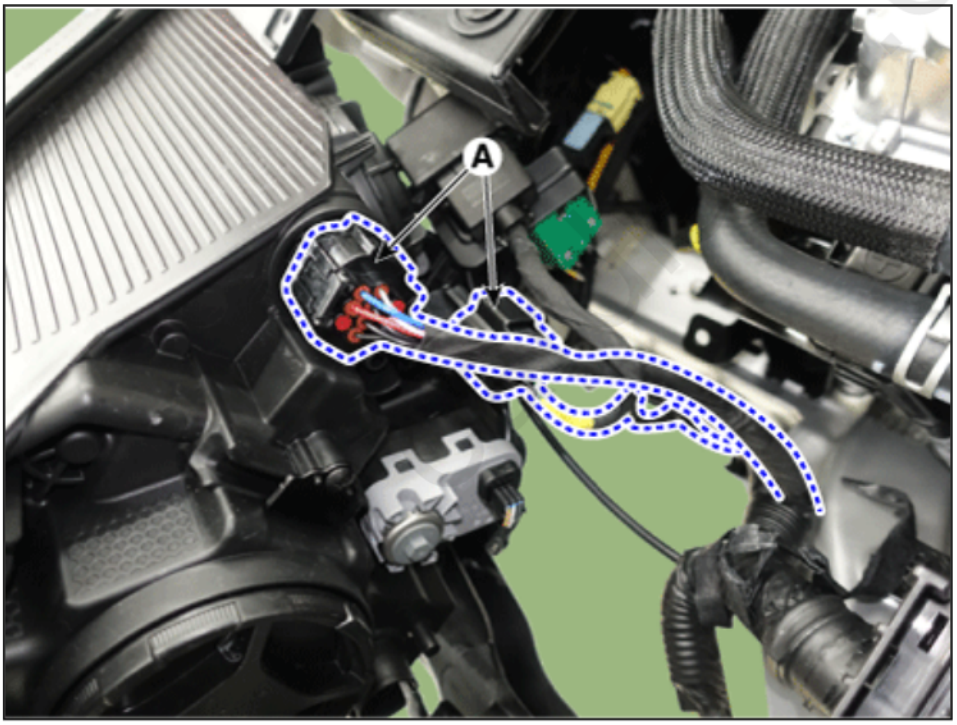

LED Driver Module

1. Remove the headlamp.
   (Refer to Lighting System - "Headlamps")

2. Remove the LED driver module (A) after loosening the mounting screws.

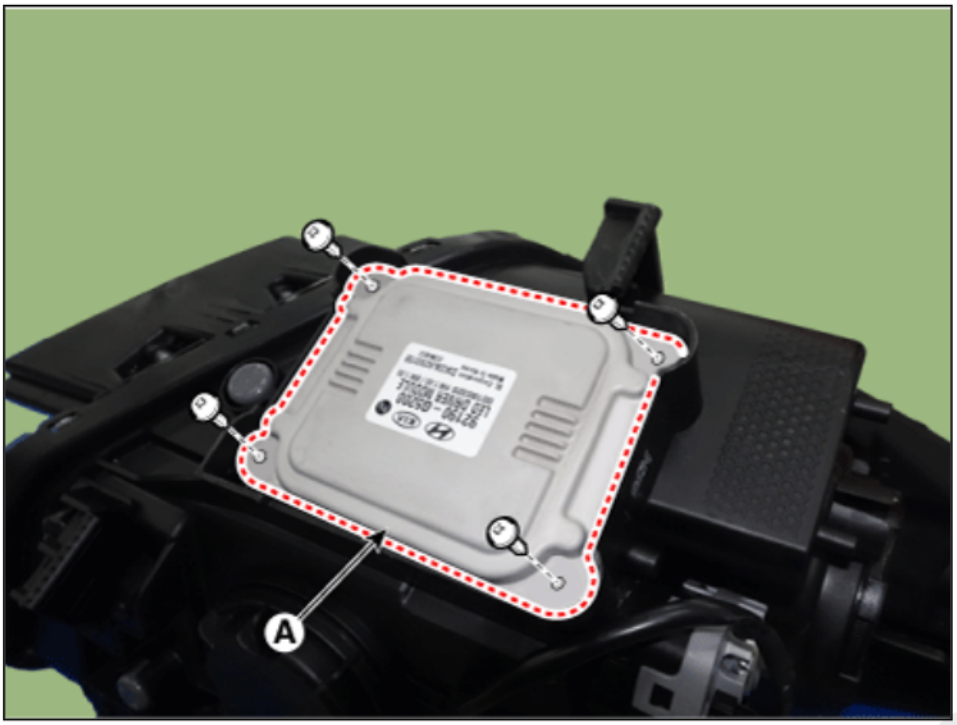

3. Disconnect the connector (A) from the LED driver module.

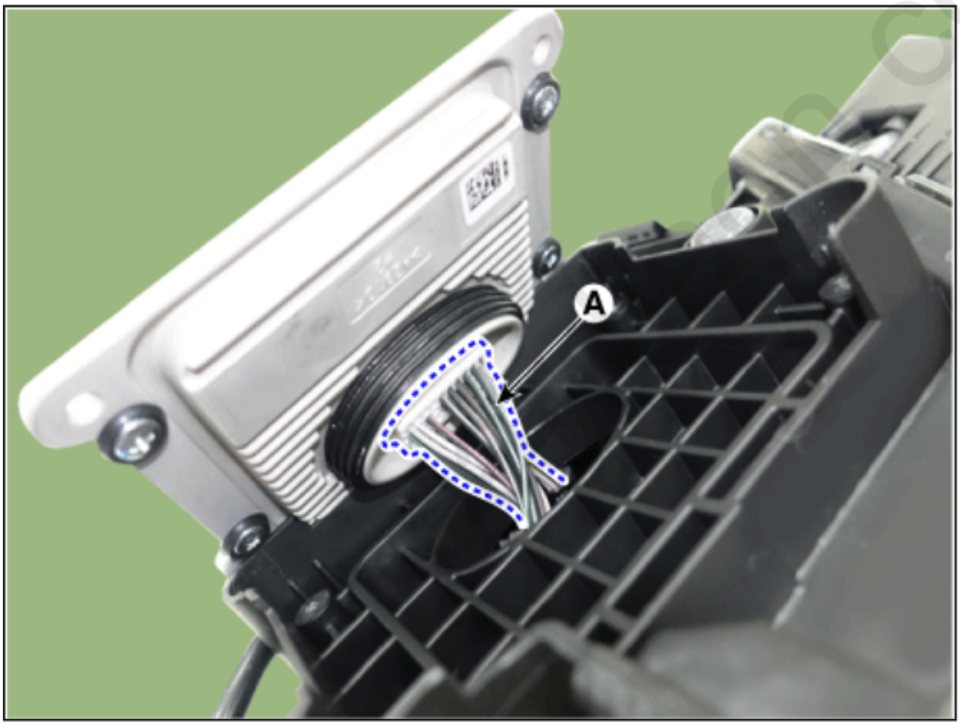

Installation

1. Install in the reverse order of removal.

If the headlamp needs to be adjusted, refer to headlamp aiming procedure.
(Refer to Headlamp - "Adjustment")

Replacement

Headlamp Bulb

1. Remove the dust caps (A) from the headlamp assembly after turning in the counterclockwise direction.

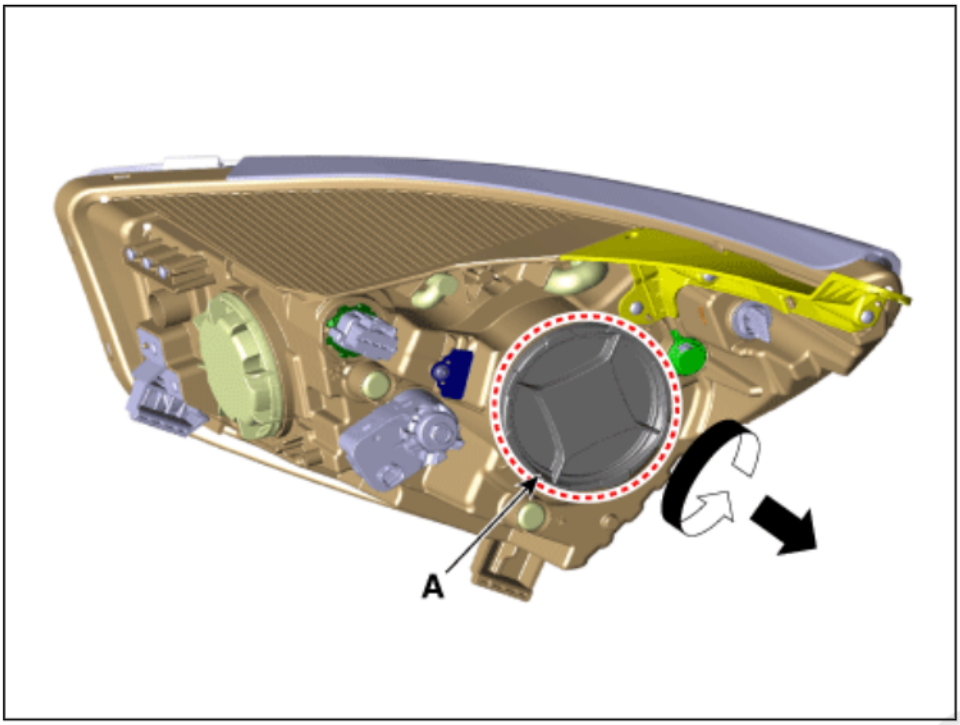

2. Disconnect the connector (A) from the socket.

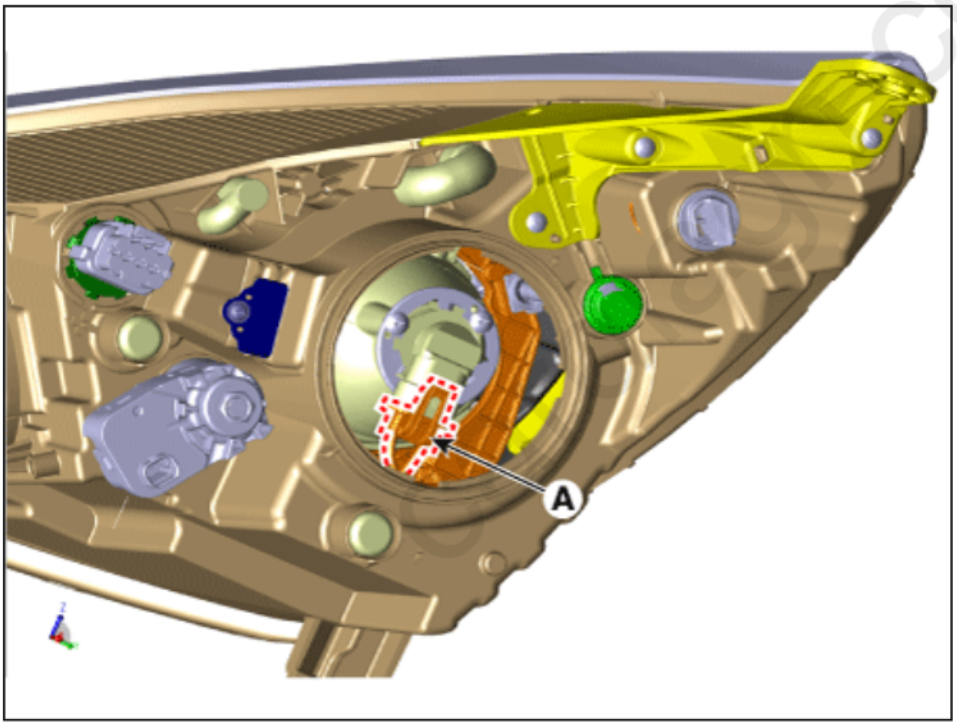

3. Remove the headlamp high/low beam bulb (A) from the headlamp assembly after turning in the counterclockwise direction.

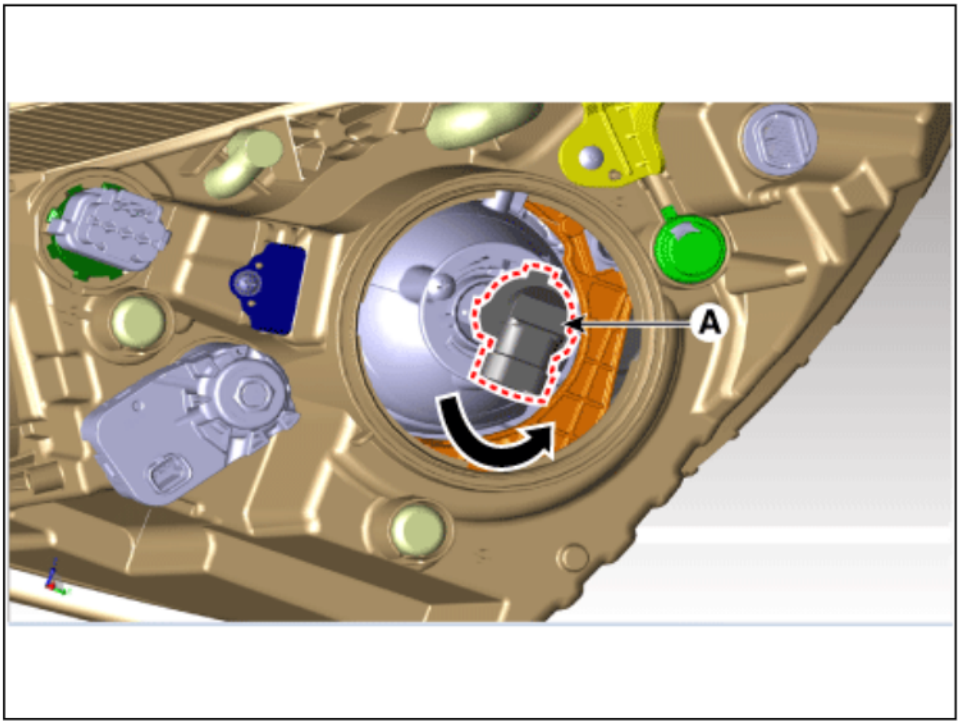

Turn Signal Lamp Bulb

1. Remove the dust caps (A) from the headlamp assembly after turning in the counterclockwise direction.

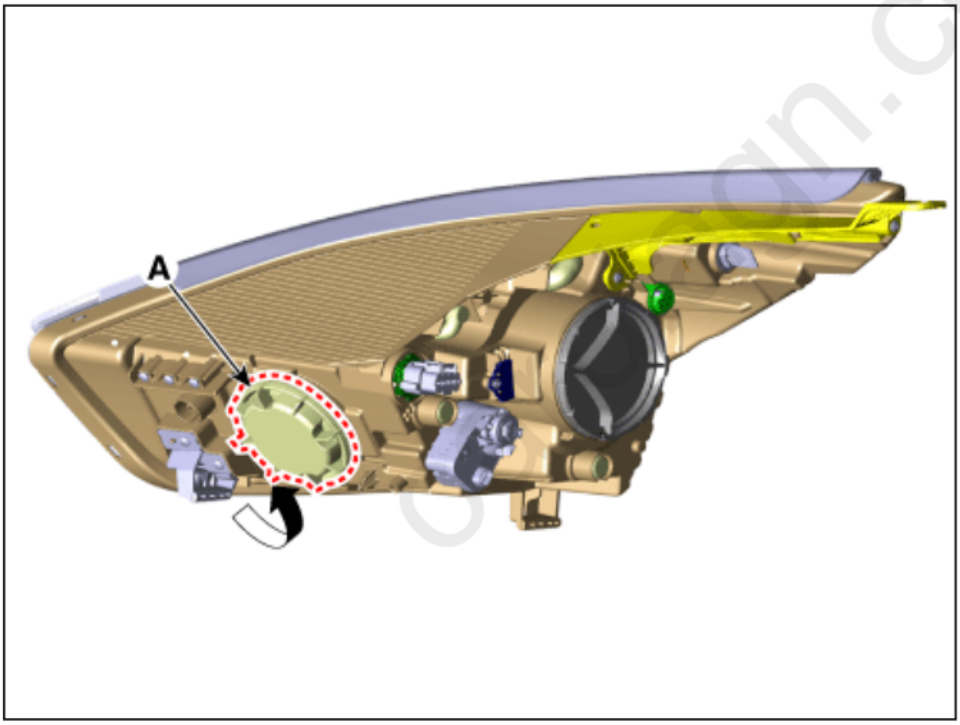

2. Replace the turn signal lamp bulb (B) after removing the turn signal lamp socket (A) by turning in the counterclockwise direction.

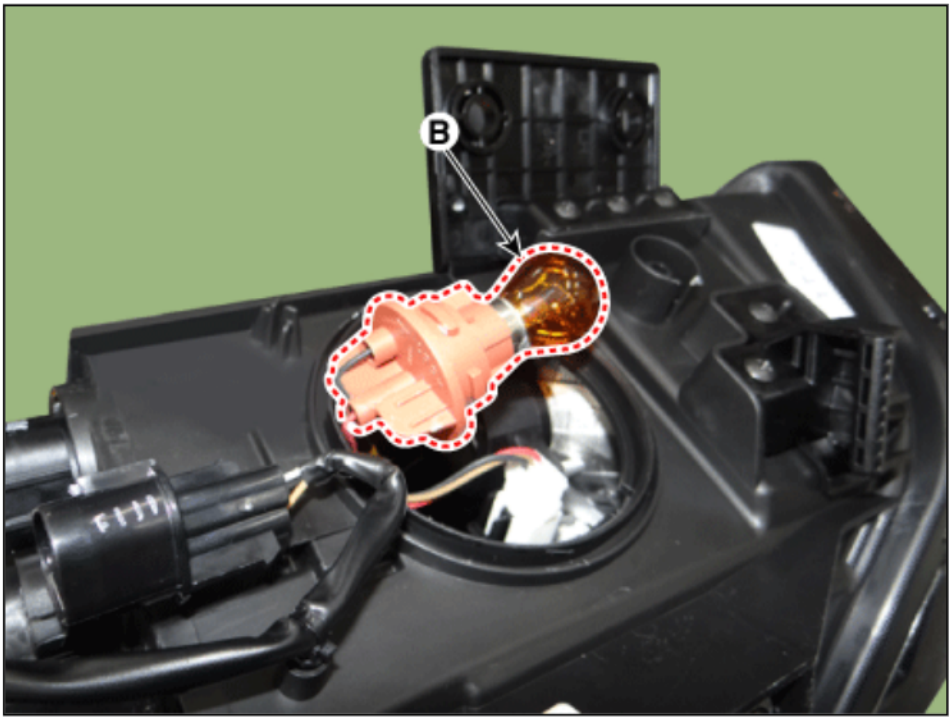

Moisture Absorbent

1. Turn the headlamp switch off.
2. Remove the dust caps (A) from the headlamp assembly after turning in the counterclockwise direction.

[LH]

(1) Remove the diagnosis connector (A) after loosening the mounting screw.

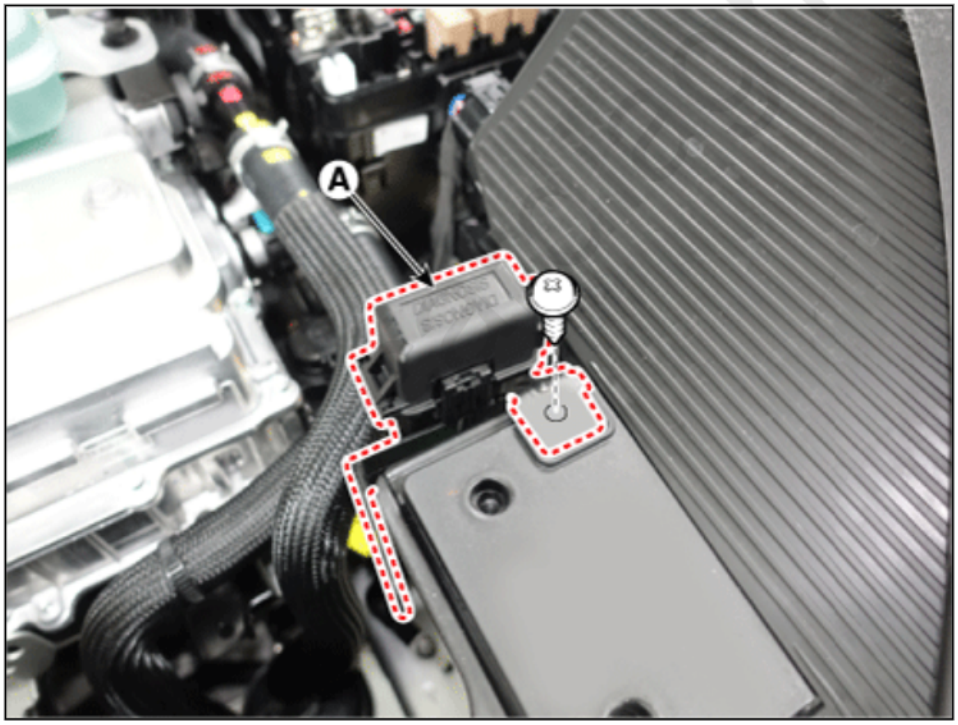

(2) Remove the dust cap (A).

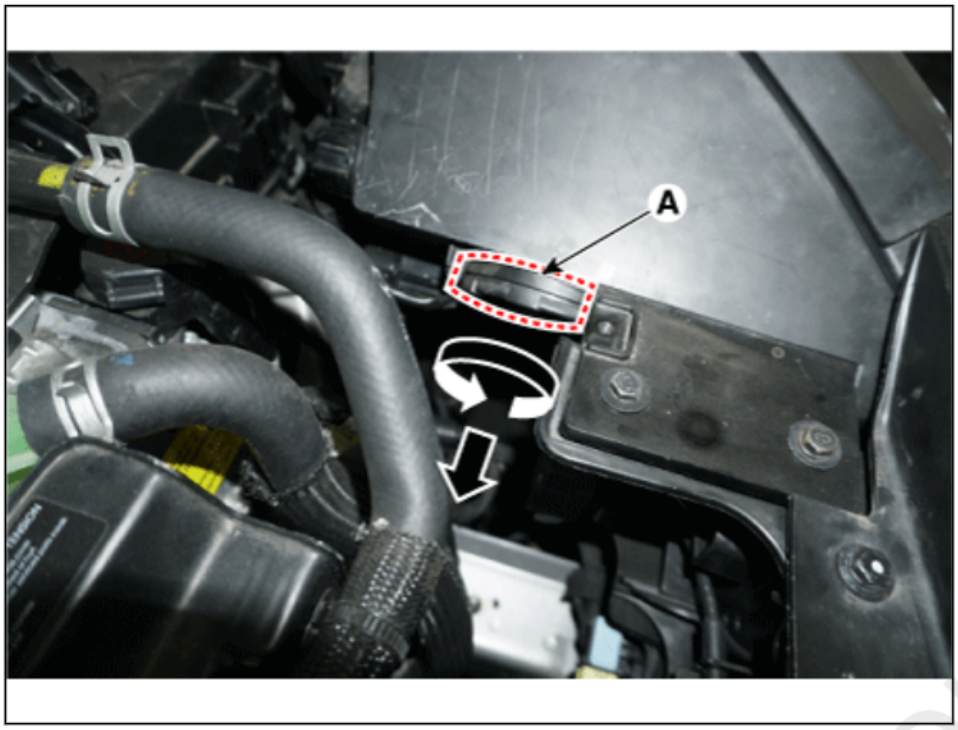

[RH]



3. Remove the moisture absorbent brakcet (A) from the dust cover after loosening the mounting screws (B).

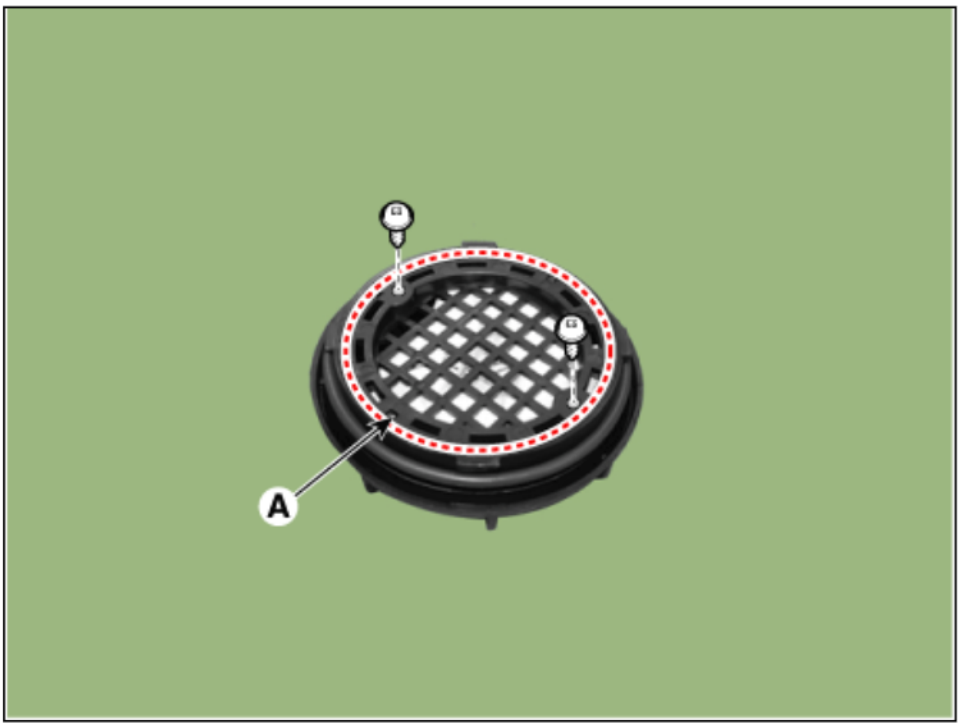

4. Remove the moisture absorbent (A).

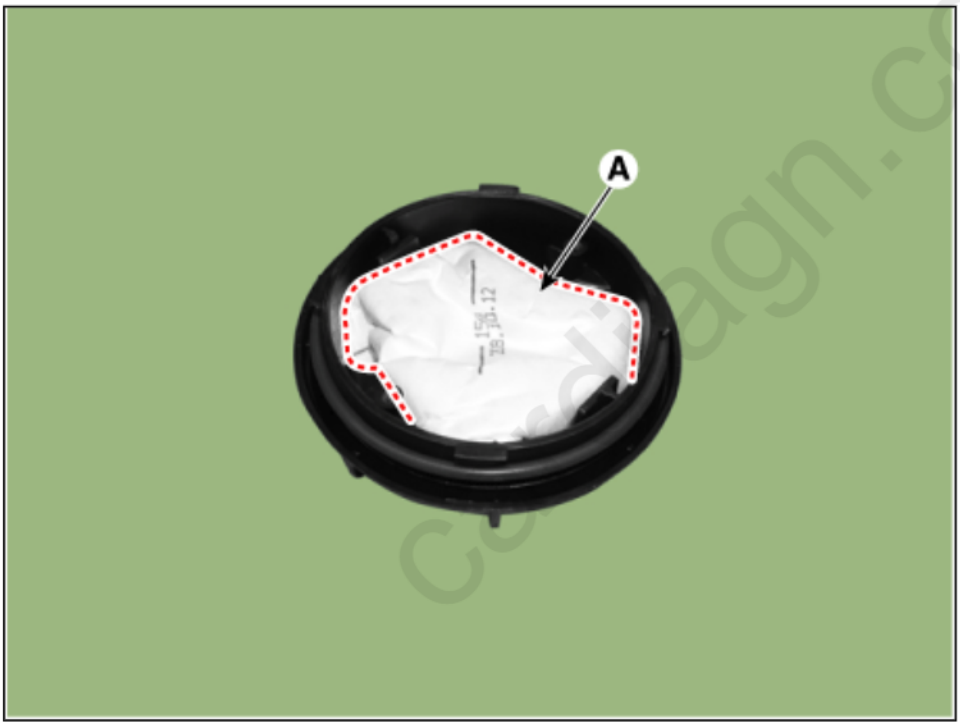

5. Fold an new absorbent material as the picture below.

cardiagn.com

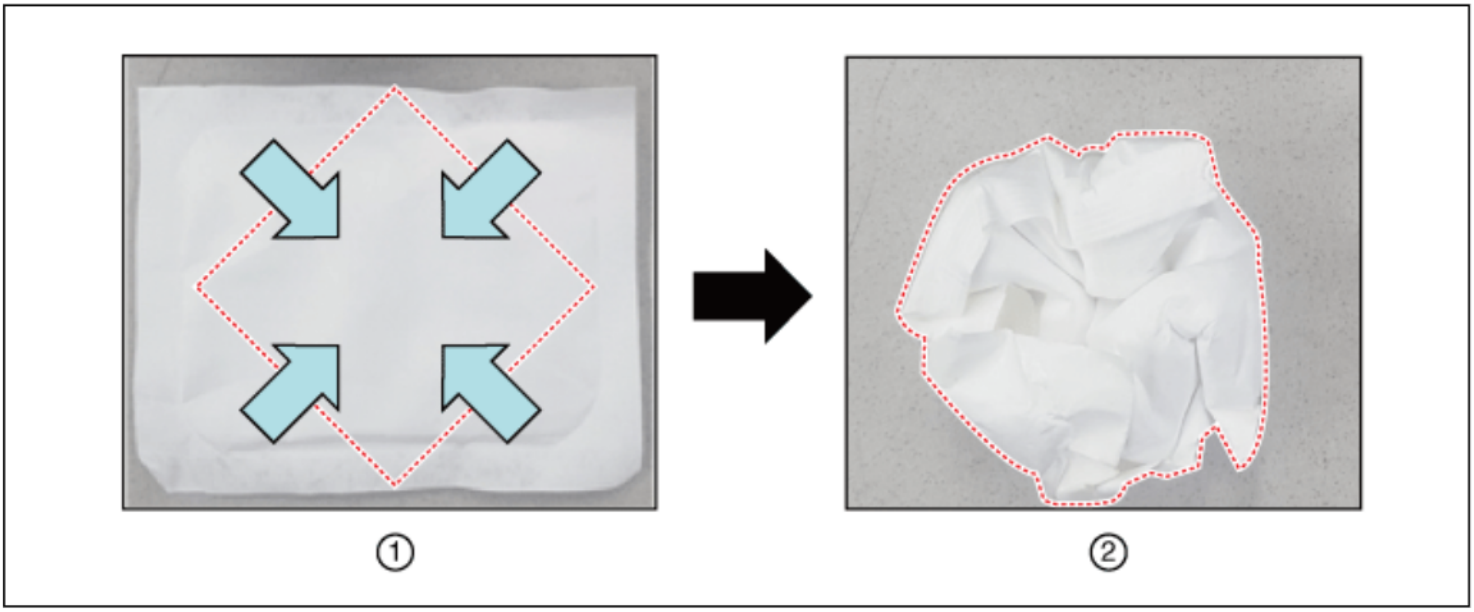

6. Replace the moisture absorbent (A) with the folding side facing downwards.

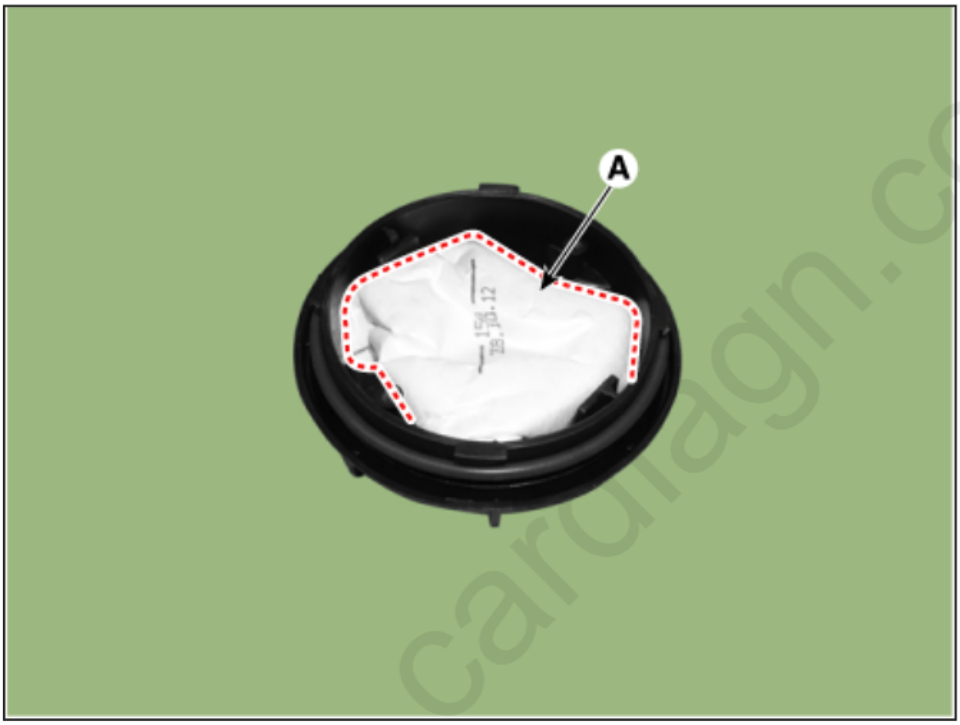

Be careful of the installation direction of the moisture absorbent bracket.

cardiagn.com

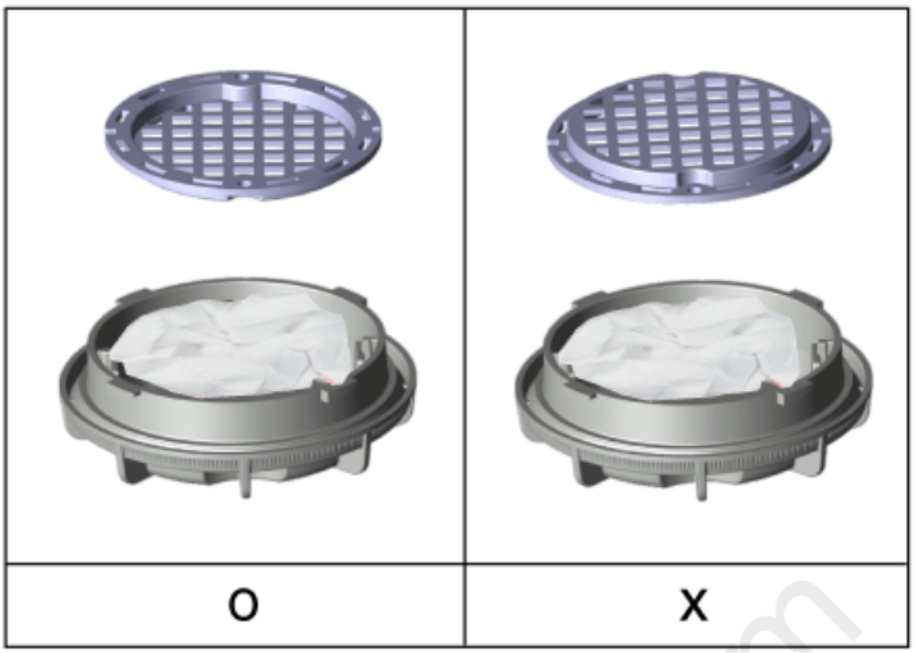

Adjustment

Headlamp Aiming

Adjust the headlamp aiming by turning the adjustment bolt. If do not have aiming alignment equipment, follow the procedure below.

1. Inflate the tires to the specified pressure and remove any loads from the vehicle except the driver, spare tire, and tools.
2. The vehicle should be placed on a flat floor.
3. Check suspecsion spring for defects.
4. Check that the surface of the headlamp lens is clean.
5. Draw vertical lines (passing through respective headlamp centers) and a horizontal line (passing through center of headlamps) on the screen.
6. If headlamp leveling device is equipped, adjust the headlamp leveling device switch with 0 positions.
7. With the headlamps and battery in normal condition, aim the headlamps so the brightest portion falls on the horizontal and vertical lines.

A : Vertical

B : Horizontal

cardiagn.com

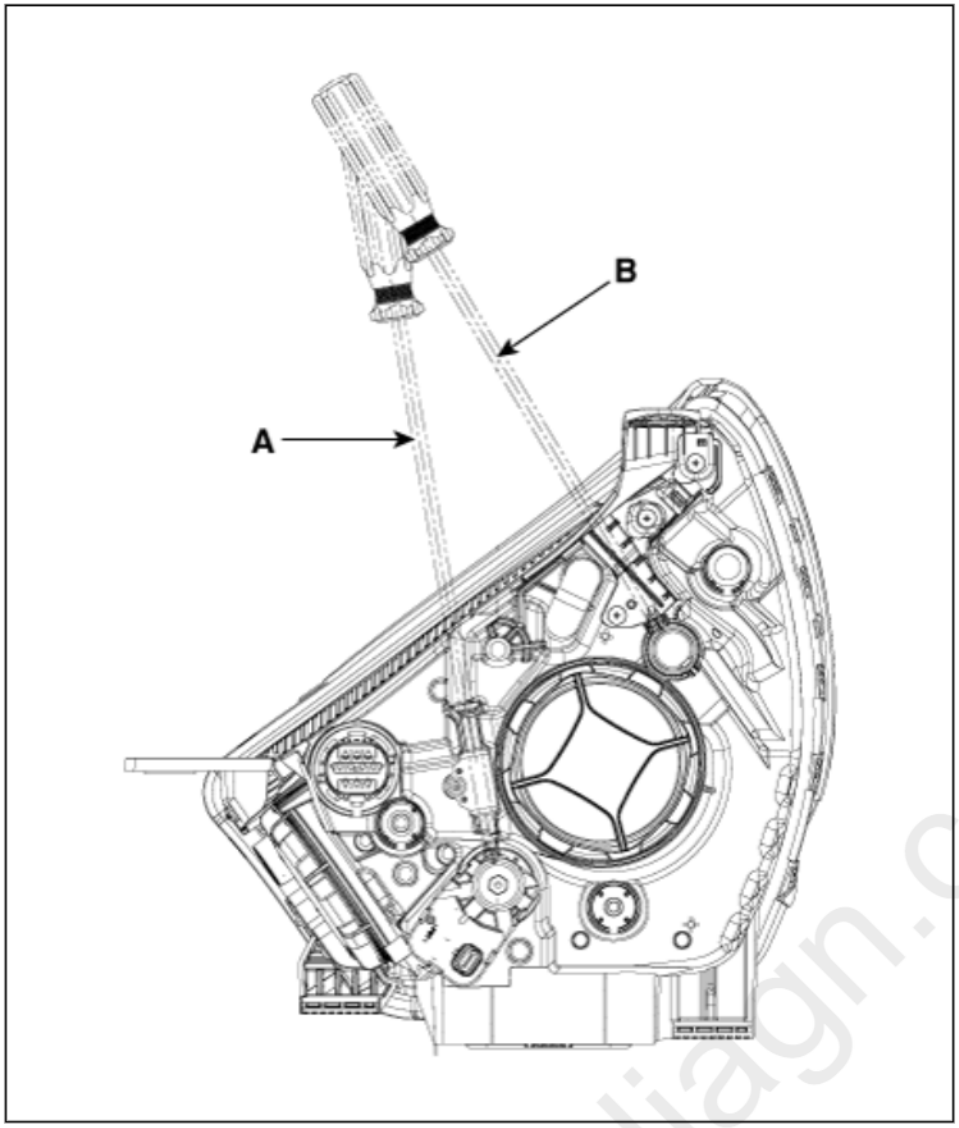

Headlamp Aiming Point

cardiagn.com

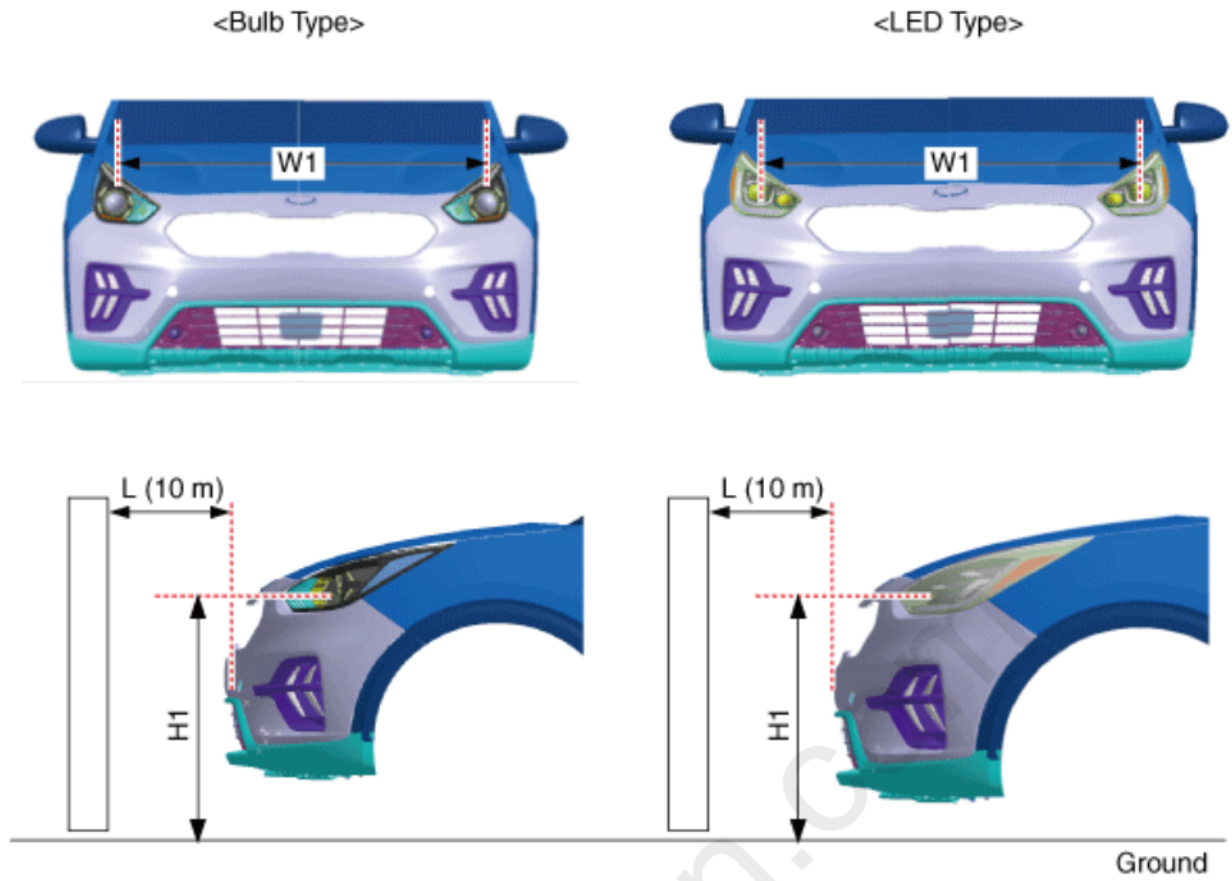

H1 : Height between the headlamp bulb center and the ground (Low/High)
W1 : Distance between the headlamp bulb center (Low/High)
L : Distance between the headlamp bulb center and screen

[Bulb Type]

Vehicle condition	H1	W1	Note
Empty	32.0 (814)	55.5 (1411)	All DIM in in. (mm)
1 person on board	31.8 (809)		

[LED Type]

Vehicle condition	H1	W1	Note
Empty	32.4 (824)	54.4 (1384)	All DIM in in. (mm)
1 person on board	32.2 (819)		

1. If headlamp leveling device is equipped, adjust the headlamp leveling device switch with 0 positions.

2. Turn the low beam on without driver aboard.
   The low beam cut-off line should be projected as shown in the picture.
   –After adjusting the horizontal aiming, adjust the vertical aiming.

[LHD]

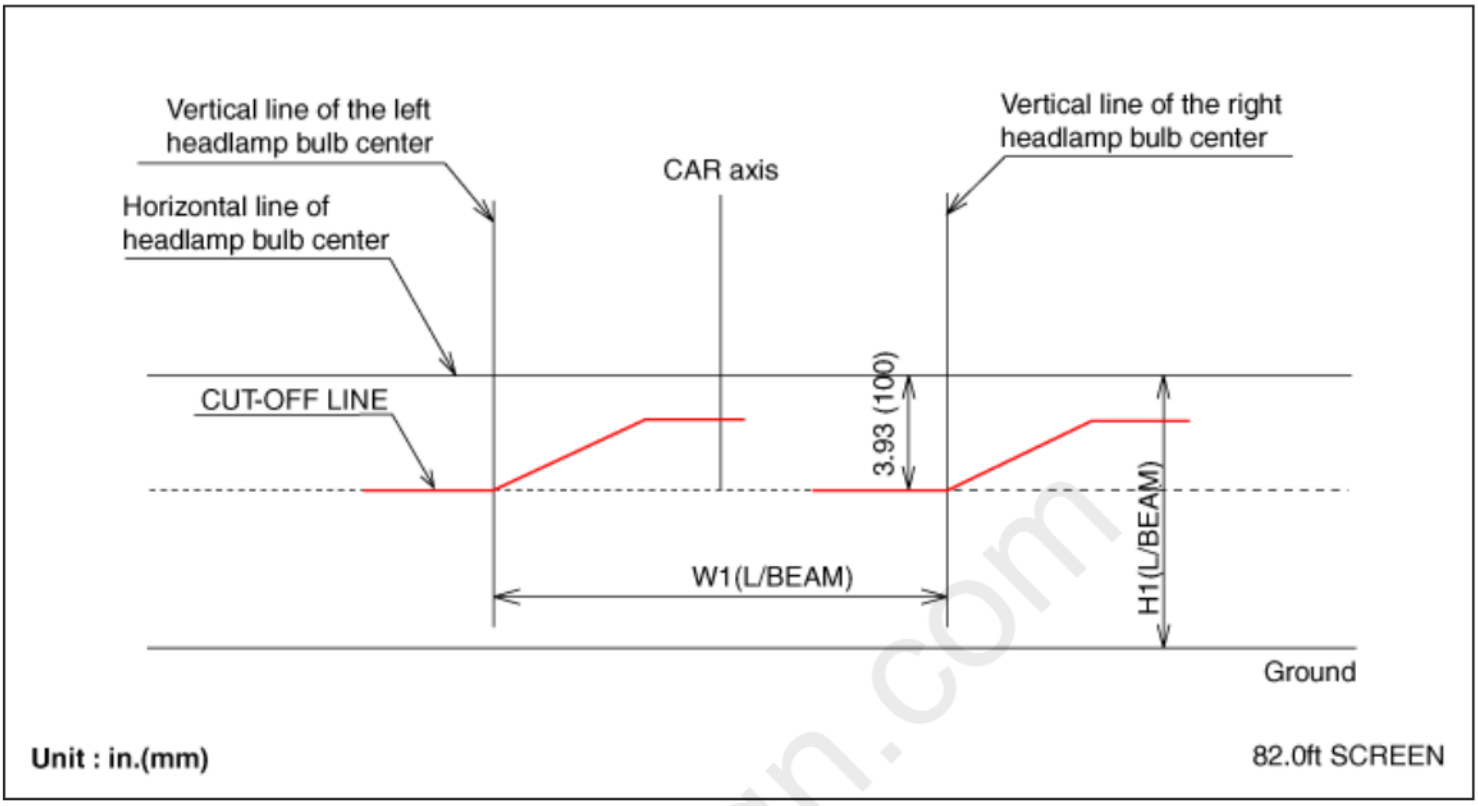

[RHD]

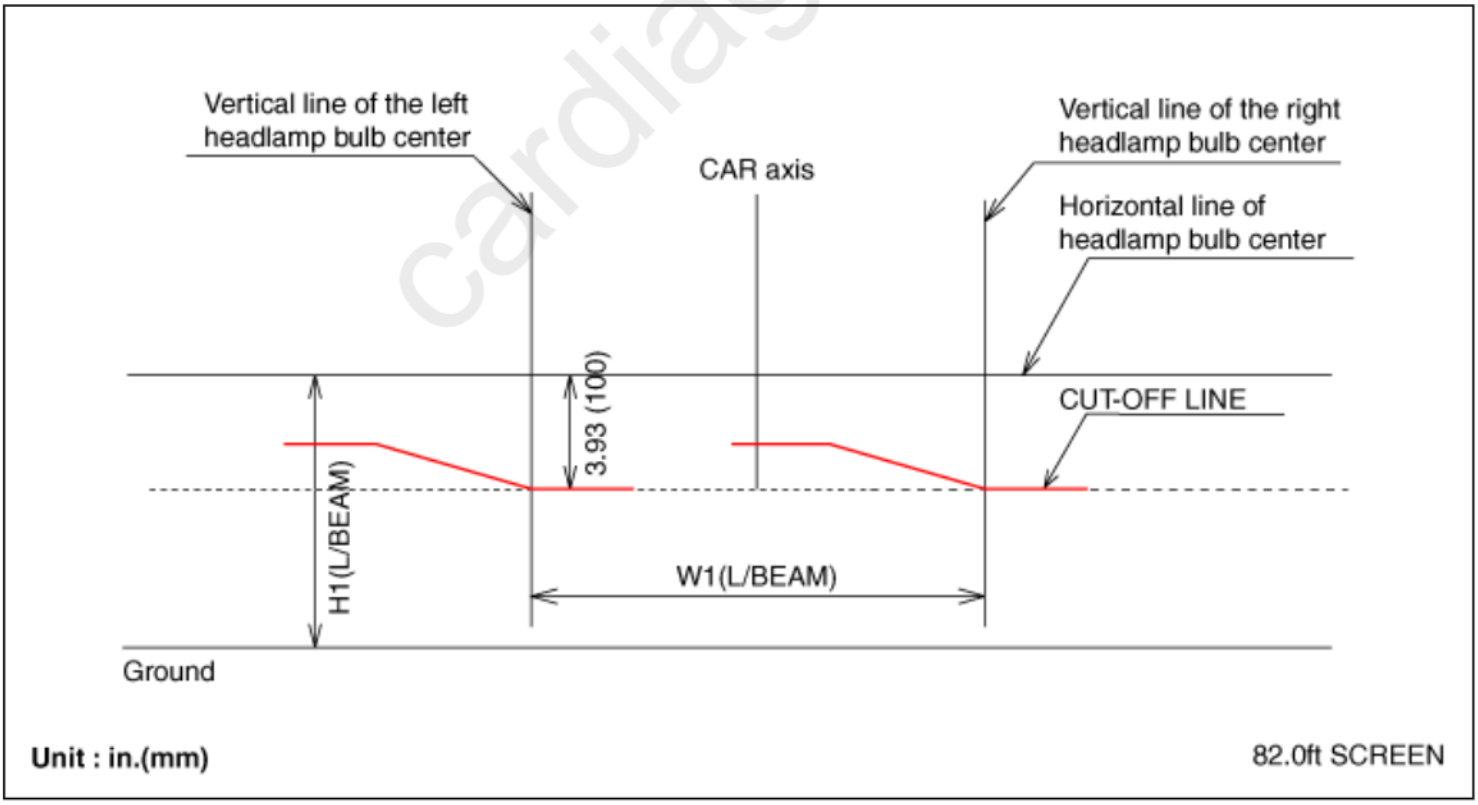

3. Turn the front fog lamp on without the driver aboard.

cardiagn.com

4. After adjusting LOW BEAM and after turning ON the HIGH BEAM it is necessary to check HIGH BEAM HOT ZONE range.
   –If the HOT ZONE range after LOW BEAM AIM'G deviateds the refulation, it is because the product is defective. So, in this case it should change the lamp.

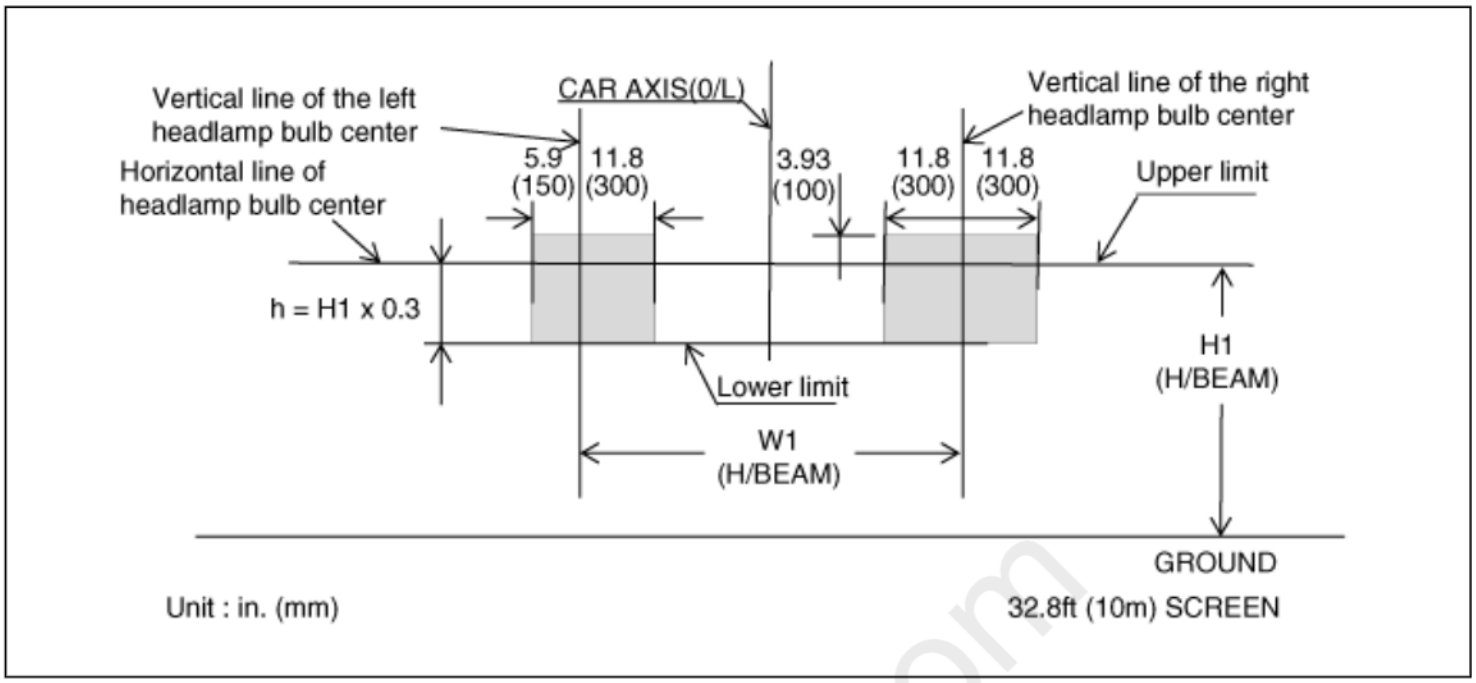

cardiagn.com

Please rate this document after reviewing at the bottom of this page.

Removal

Side Repeater (Outside Mirror)

1. Remove the outside mirror scalp.
   (Refer to Body - "Outside Rear View Mirror")
2. Remove the side repeater lamp (A) after loosening the mounting screw.

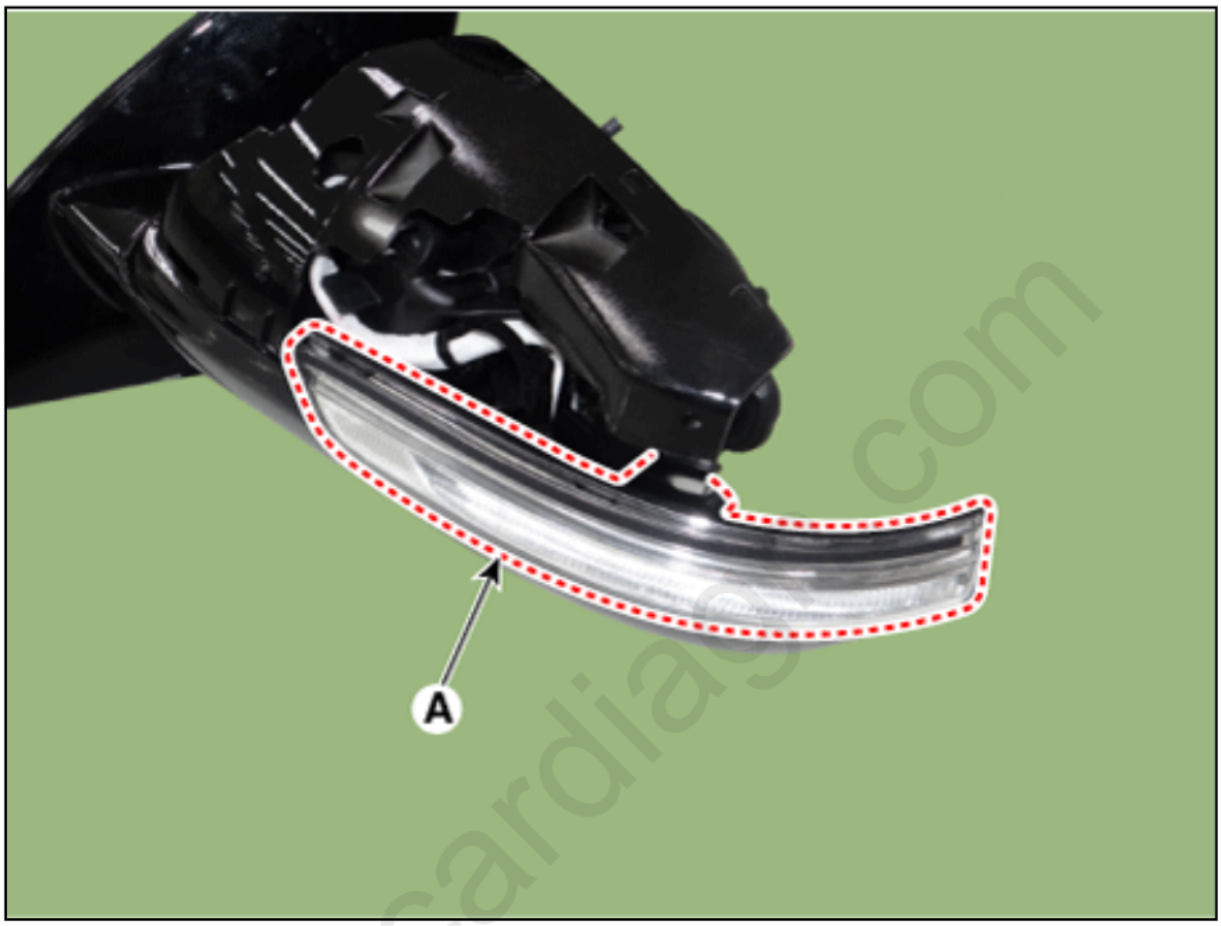

3. Disconnect the connector (A) from the side repeater lamp (B).

cardiag.com

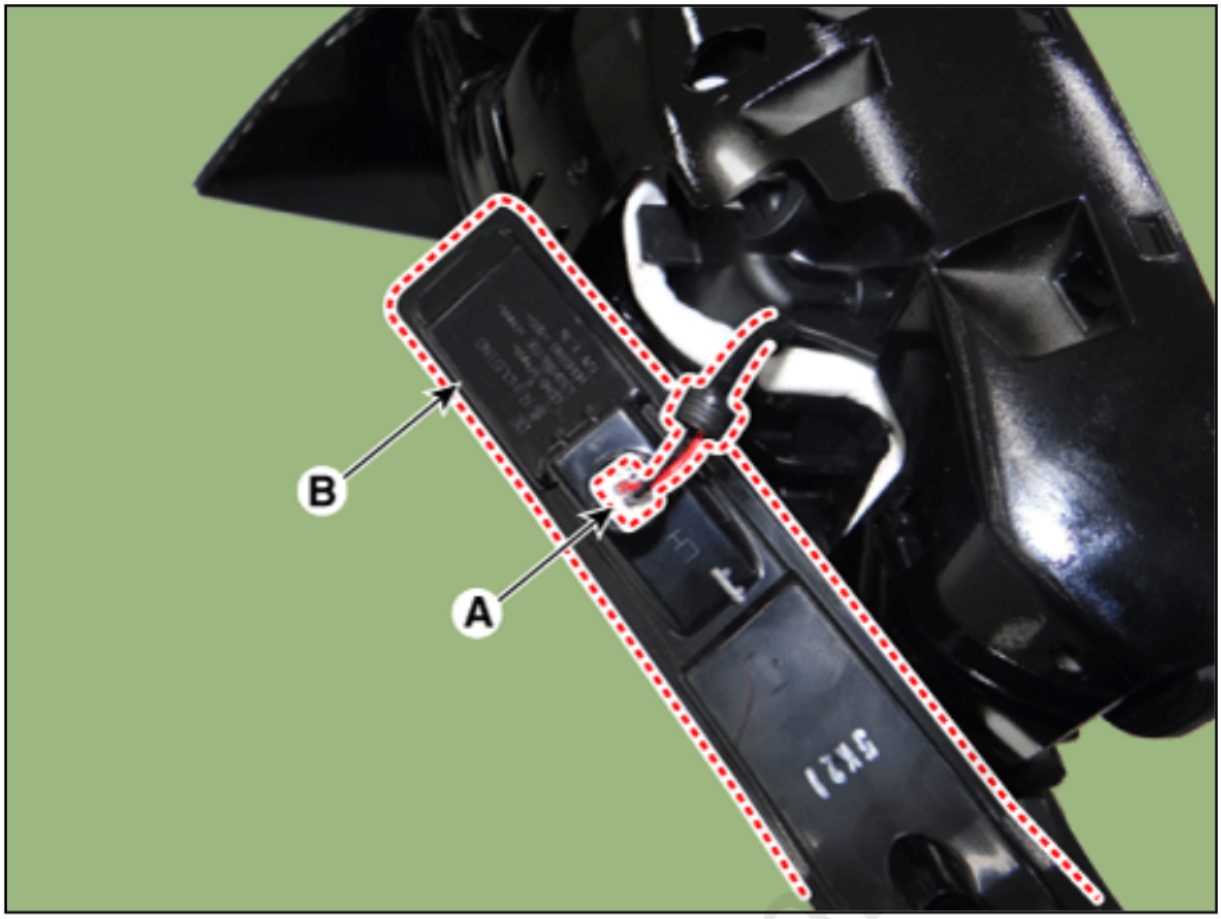

Installation

1. Install in the reverse order of removal.

cardiagn

Please rate this document after reviewing at the bottom of this page.

Removal

- Put on gloves to prevent hand injuries.
- When removing with a flat-tip screwdriver or remover, wrap protective tape around the tools to prevent damage to components.

1. Disconnect the negative (-) battery terminal.
2. Using a screwdriver or remover, separate the room lamp lens (A) from the room lamp.

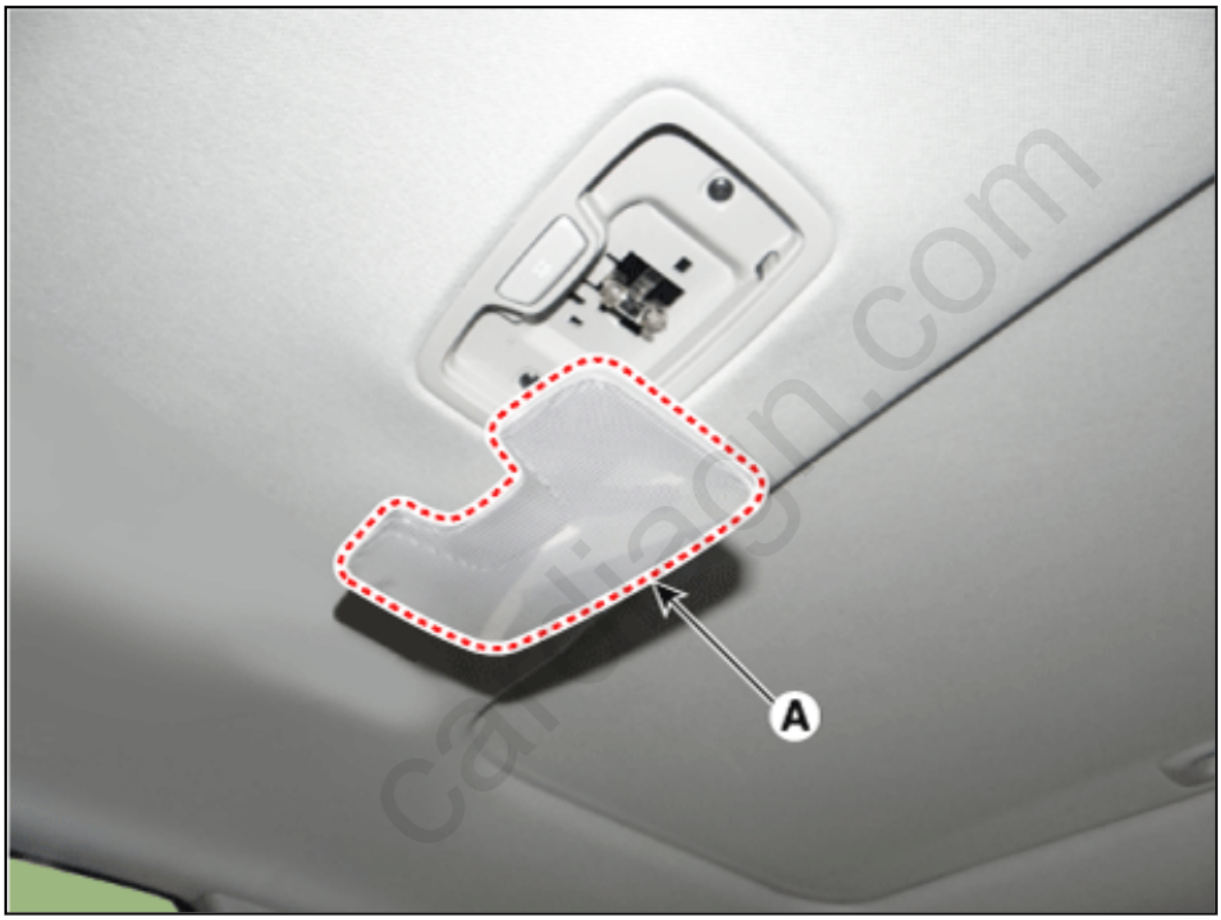

3. Remove the room lamp (A) after loosening the screws.

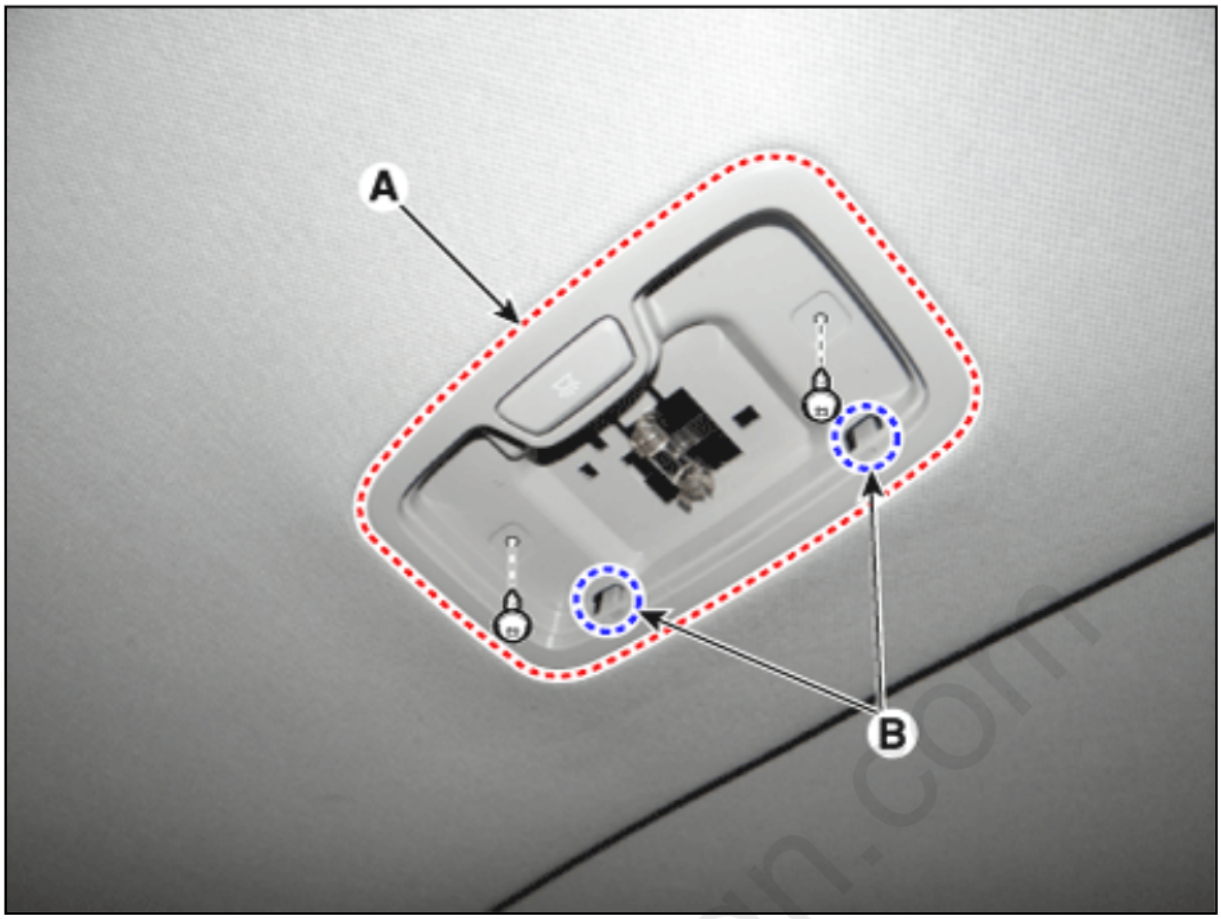

- When removing the room lamp, be careful of the direction in which the tool is inserted (B).
- When inserting the tool in the opposite direction, take caution as the room lamp may be damaged.

4. Remove the room lamp assembly (B) after disconnecting the room lamp connector (A).

cardiagn.com

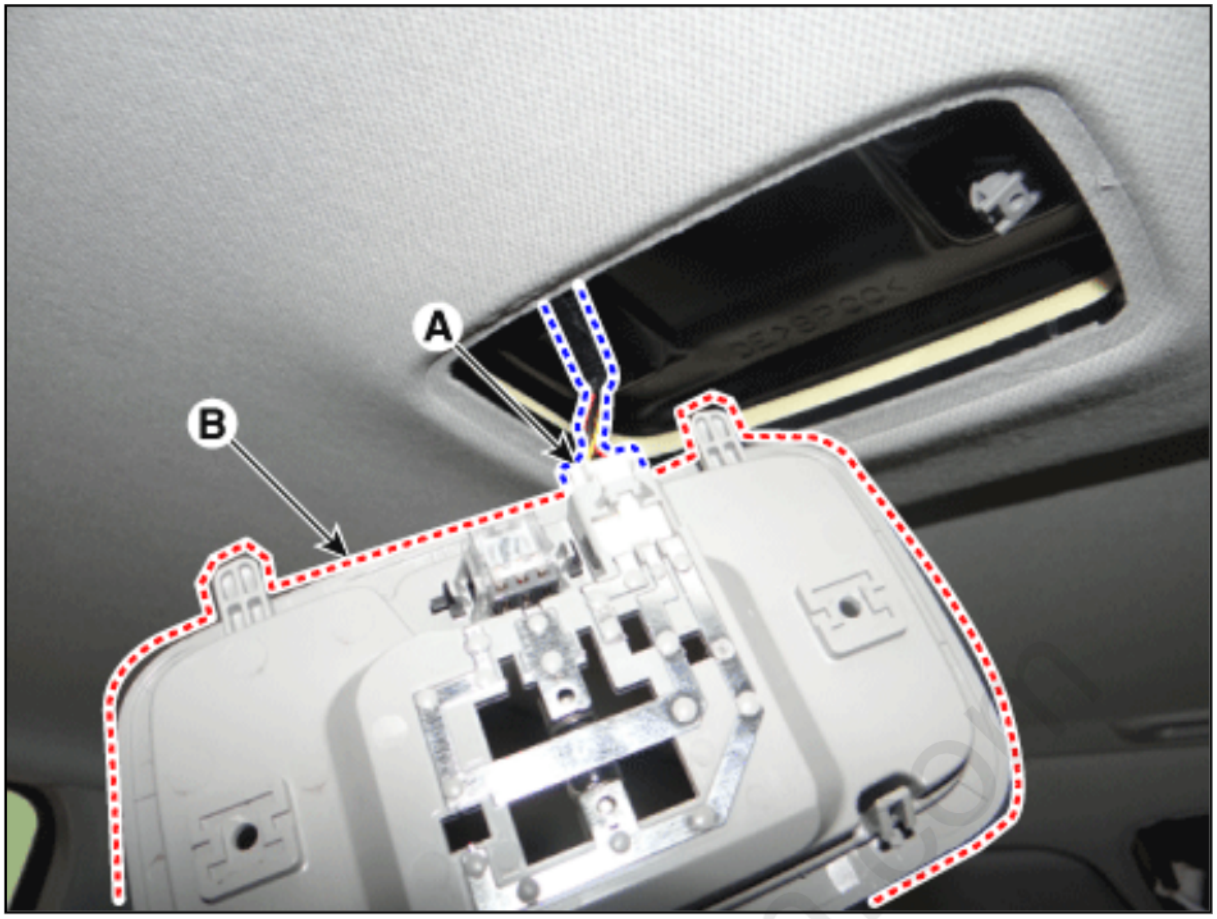

Bulb Replacement

1. Using a screwdriver or remover, separate the room lamp lens (A) from the room lamp.

cardiagn.com

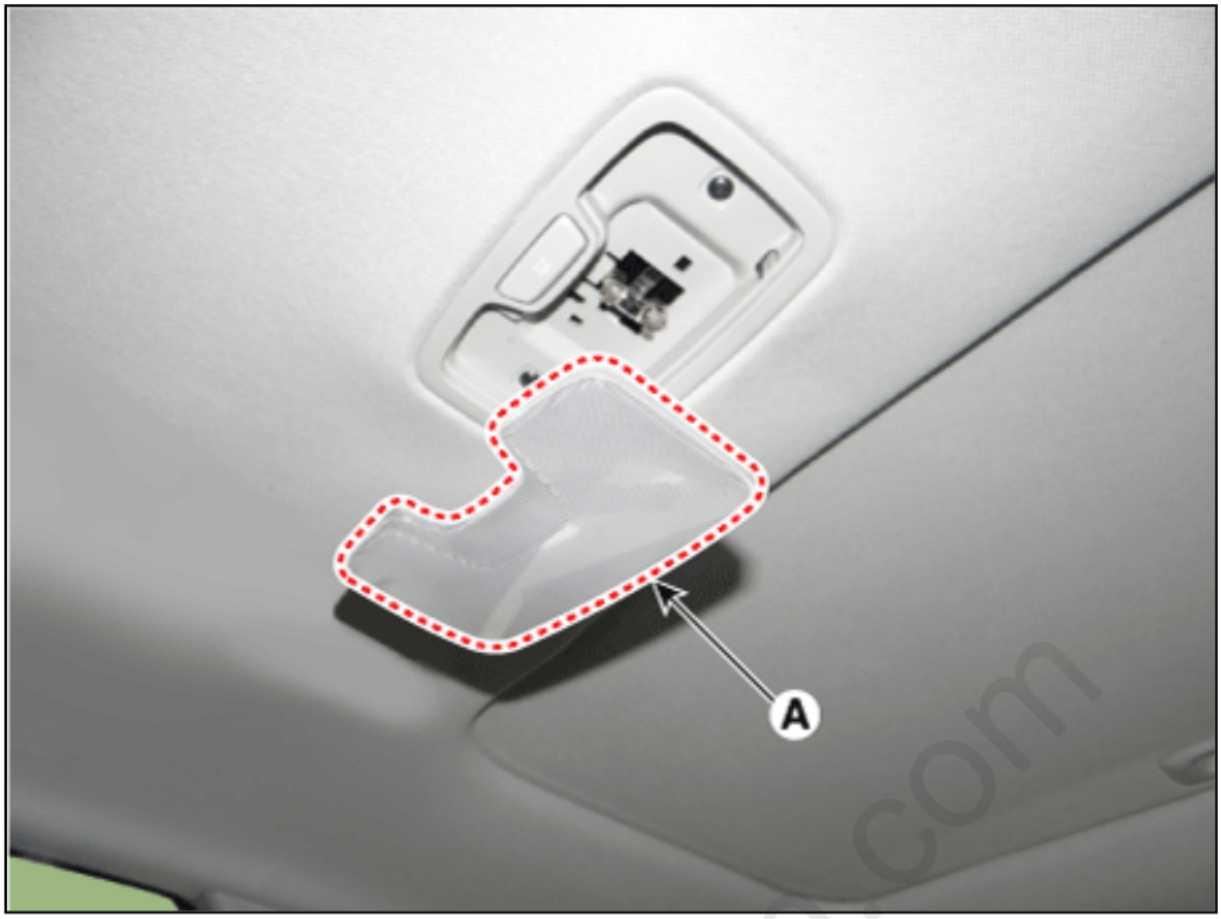

2. Disconnect the room lamp bulb (A).

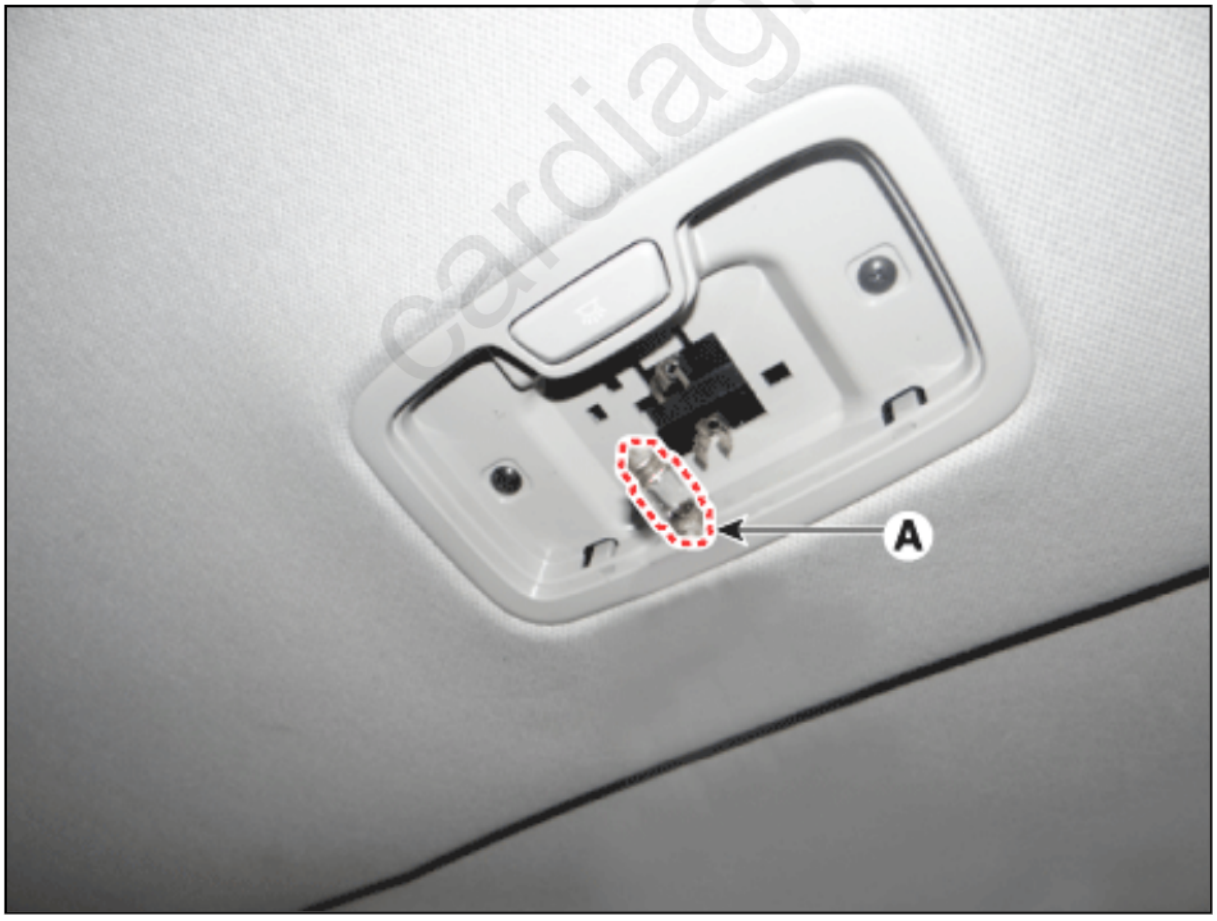

Installation

1. Install in the reverse order of removal.

cardiagn.com

Please rate this document after reviewing at the bottom of this page.

Removal

1. Disconnect the negative (-) battery terminal.
2. Detach the vanity lamp (A) using a flat-tip screwdriver.

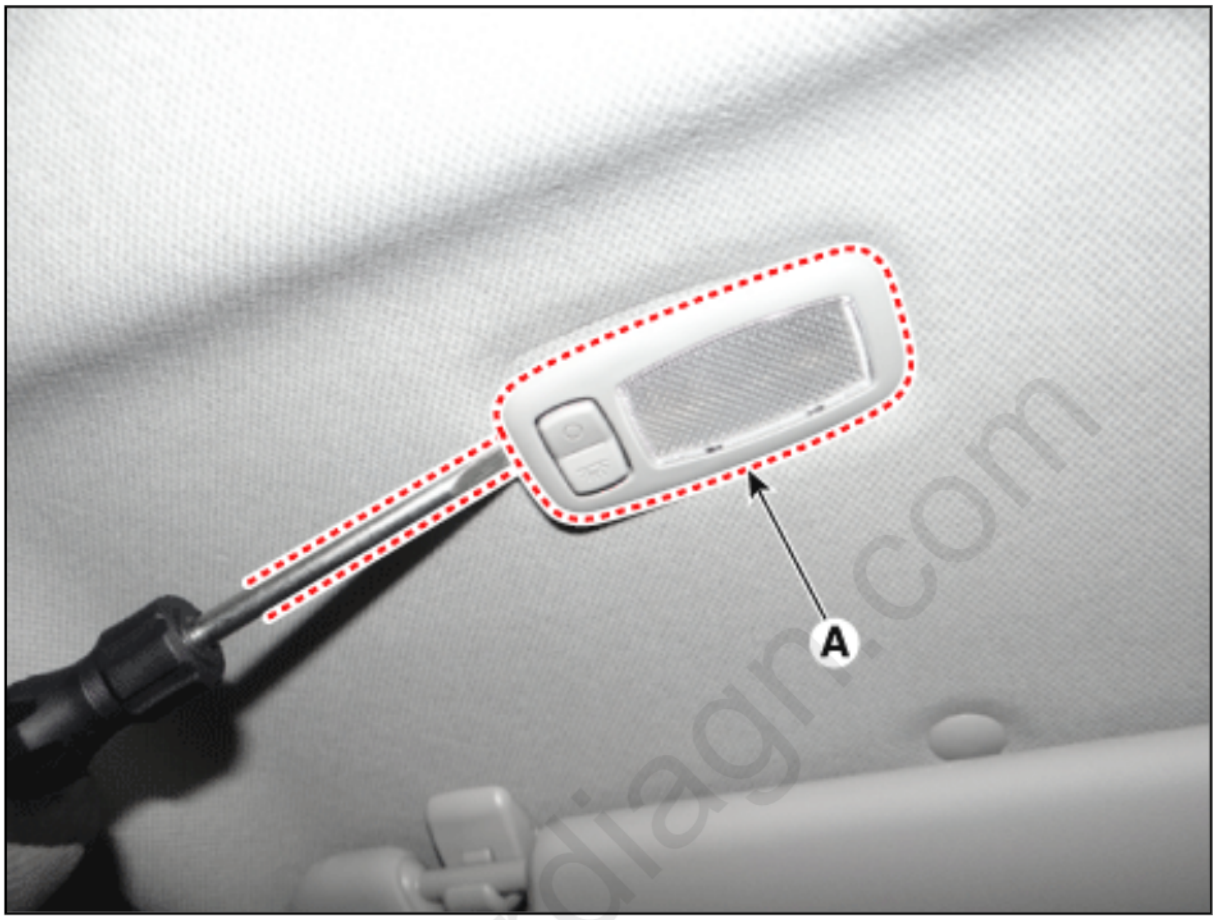

3. Disconnect the vanity lamp connector (A).

cardiagn.com



Bulb Replacement

1. Detach the vanity lamp (A) using a flat-tip screwdriver.

cardiagn.com

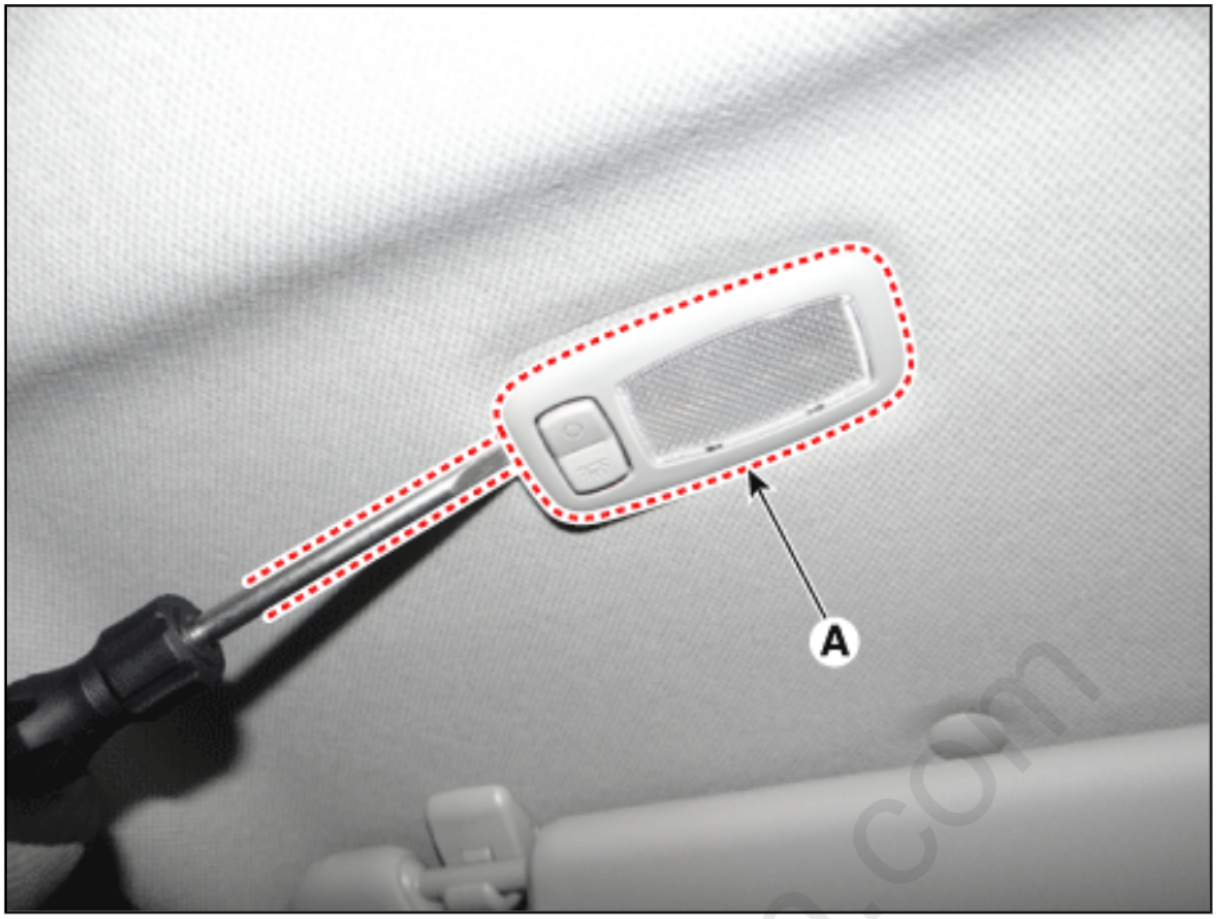

2. Remove the vanity lamp bulb (A).



Installation

1. Install in the reverse order of removal.

cardiagn.com

Please rate this document after reviewing at the bottom of this page.

Connector and Terminal
Function

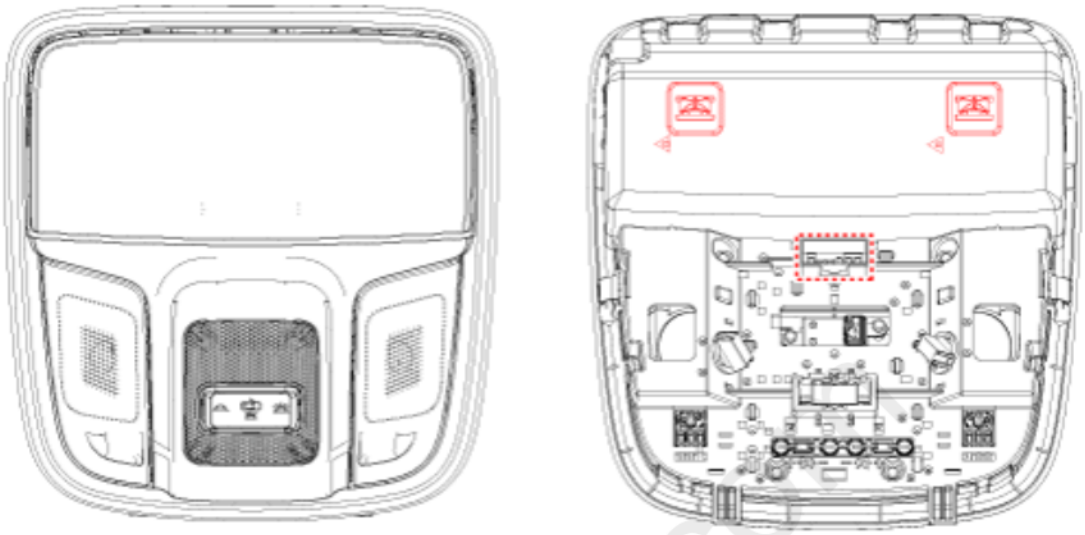

Connector	Pin	Function
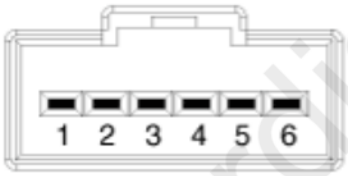	1	Power
	2	Door (-)
	3	Room signal
	4	-
	5	-
	6	Ground

cardiagn.com

Circuit
Diagram

Non-Sunroof

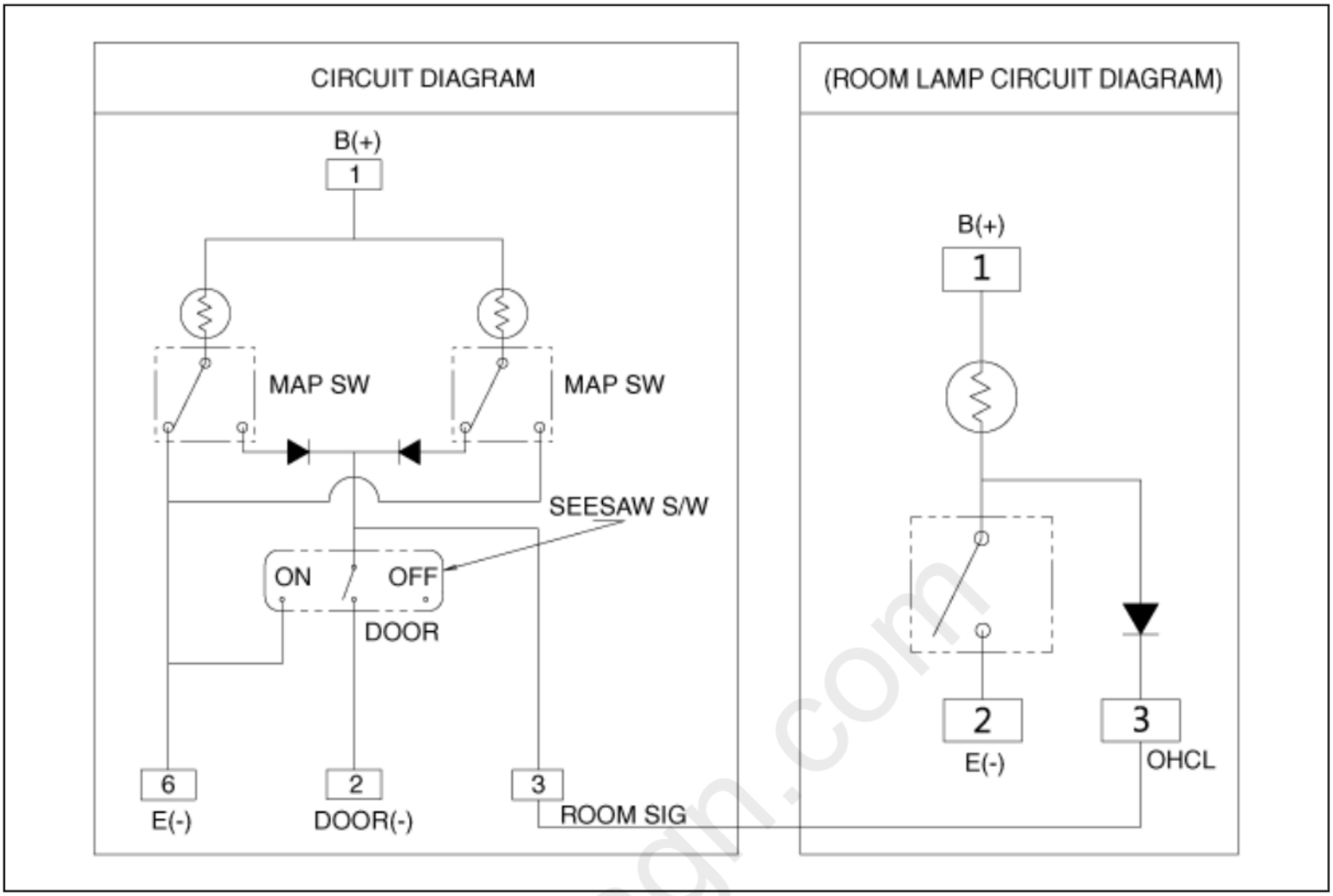

Sunroof (Bulb Type)

cardiagn.com

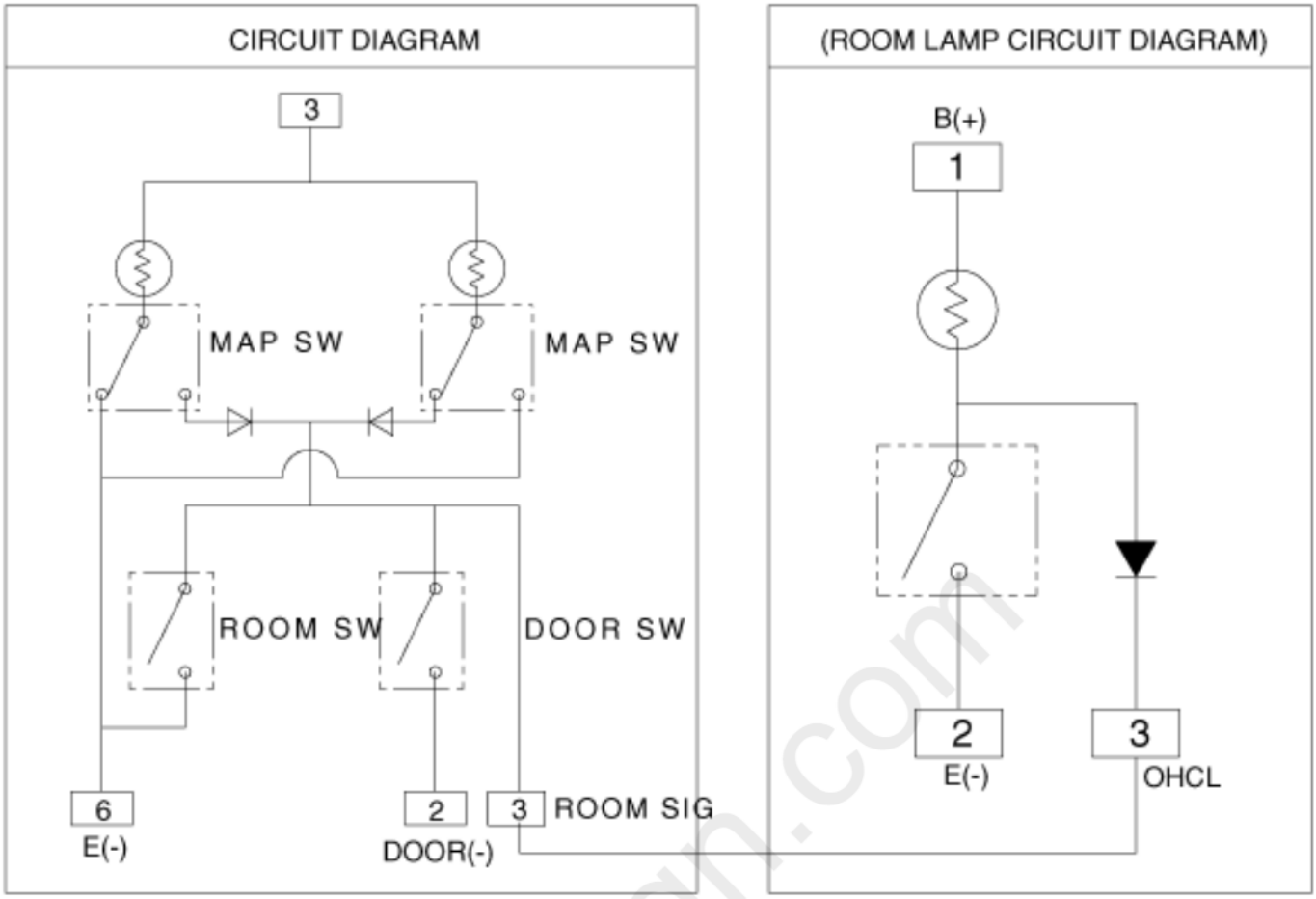

Sunroof (LED Type)

cardiagn.com

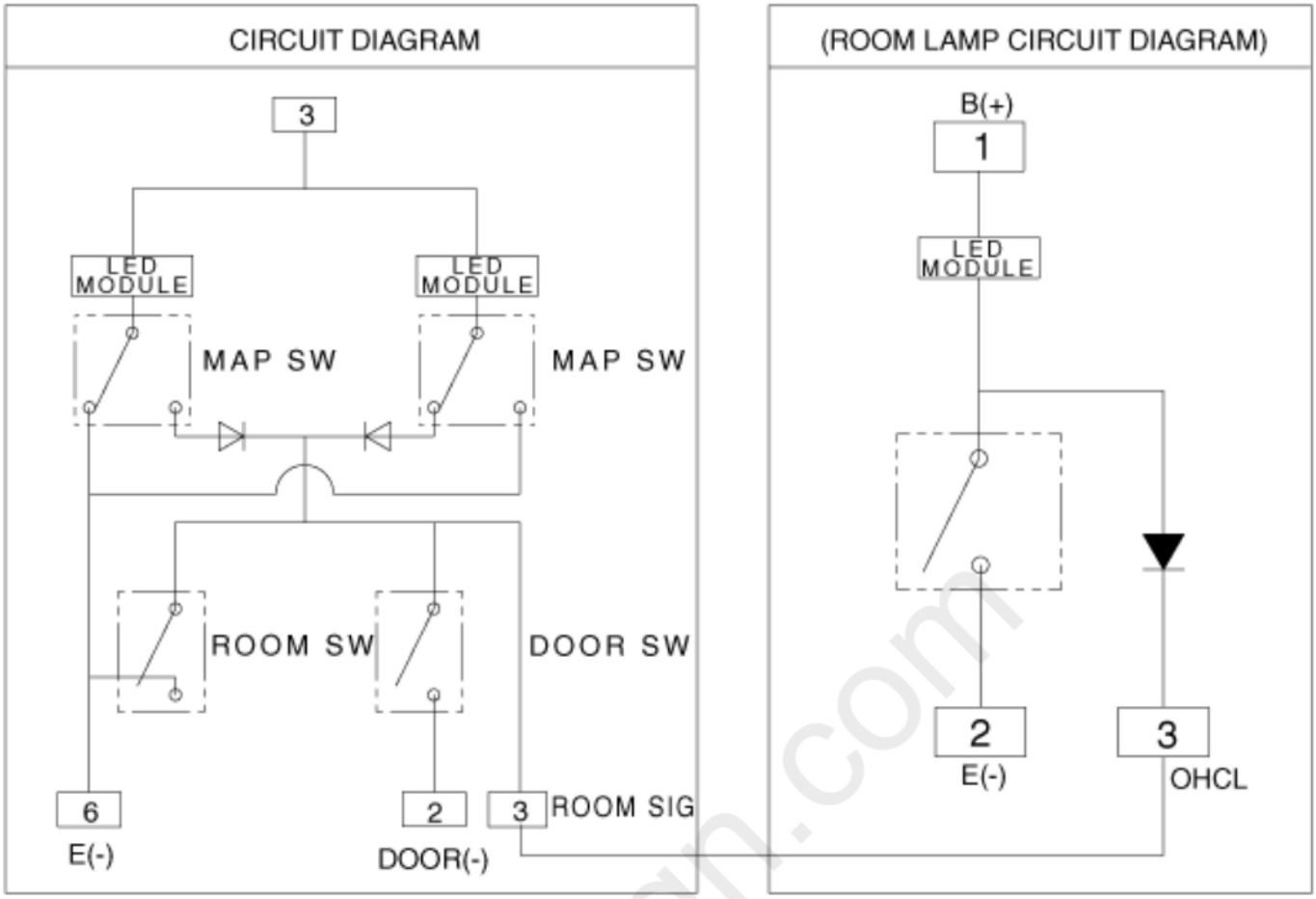

cardiagn.com

Please rate this document after reviewing at the bottom of this page.

Inspection

1. Remove the overhead console lamp.
   (Refer to Lighting System - "Overhead Console Lamp")
2. Check for continuity between terminals.

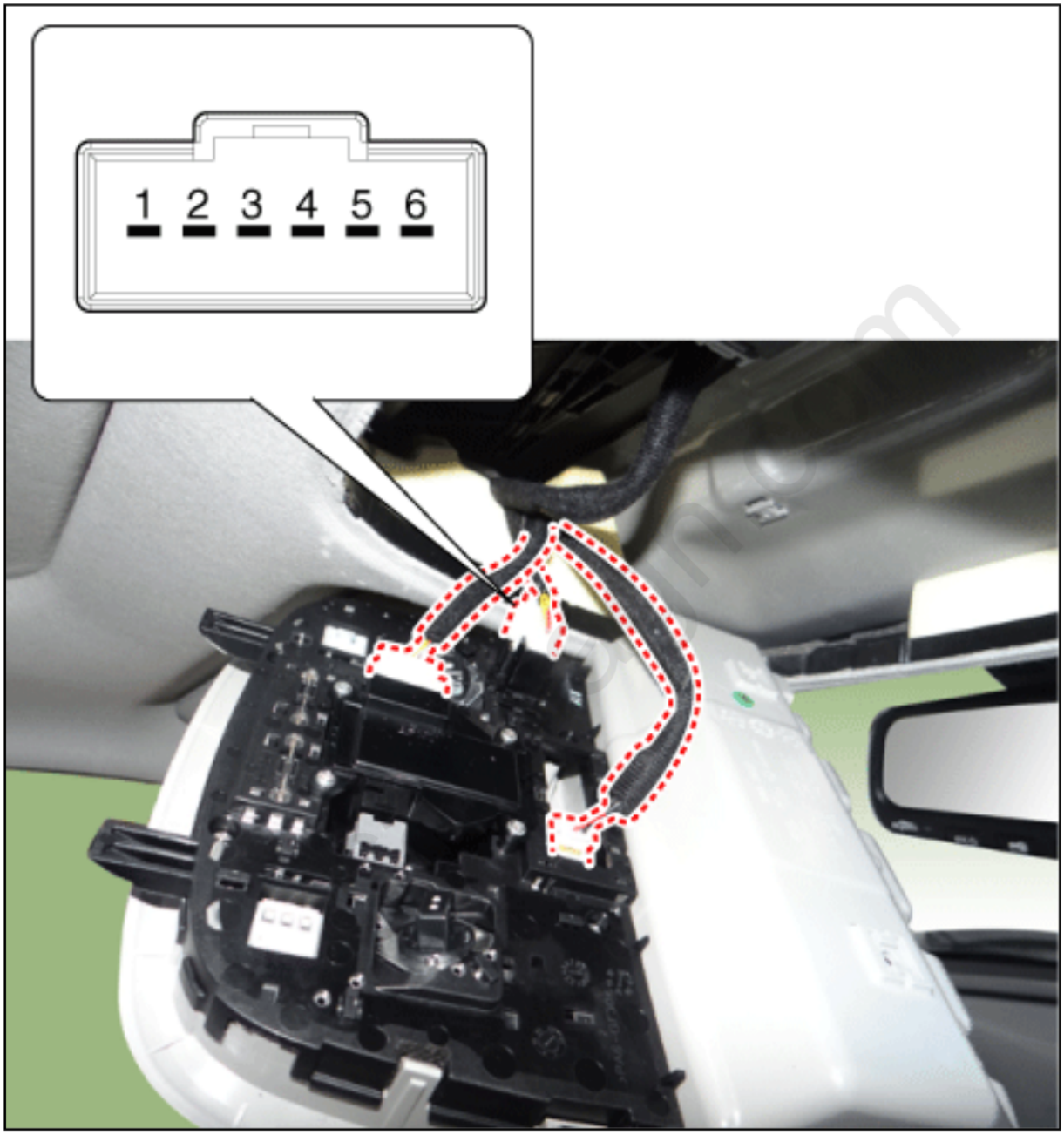

Item / Position / Terminal	Map lamp switch			
	Left		Right	
	ON	OFF	ON	OFF
1				
6				

Removal

1. Disconnect the negative (-) battery terminal.
2. Remove the overhead console lamp (A) after loosening the mounting screws.

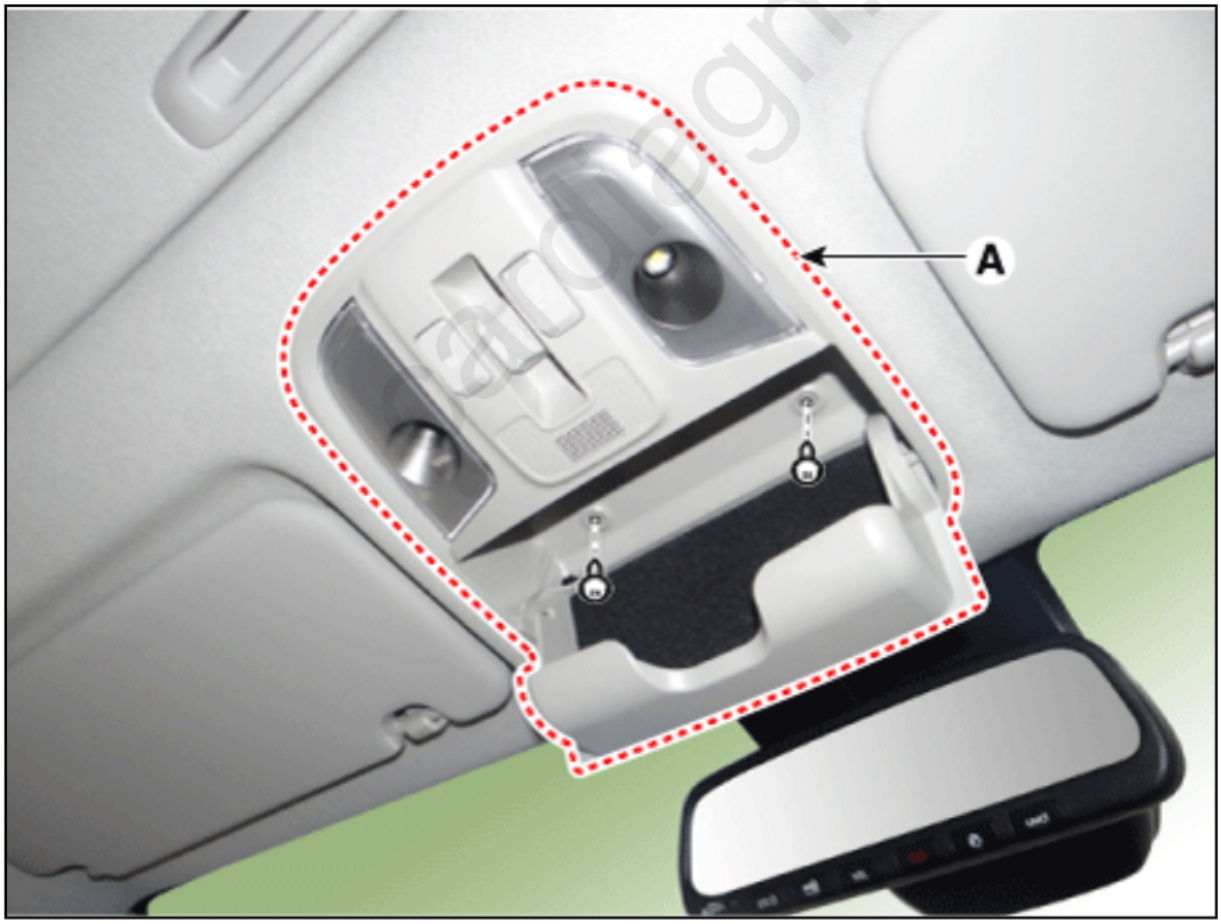

3. Remove the overhead console after disconnecting the connectors (A).

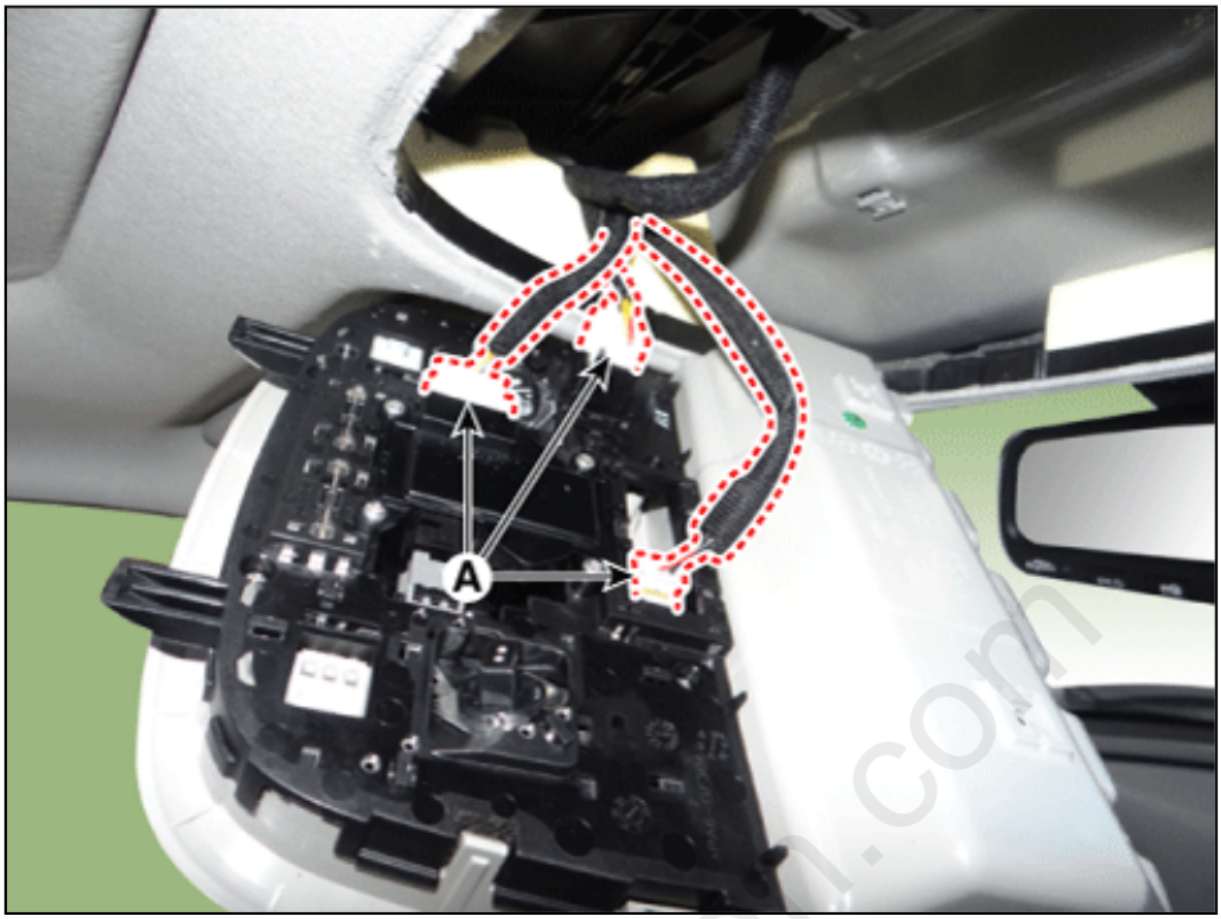

Installation

1. Install in the reverse order of removal.

Replacement

1. Remove the overhead console lamp (A) after loosening the mounting screws.

cardiagn.com

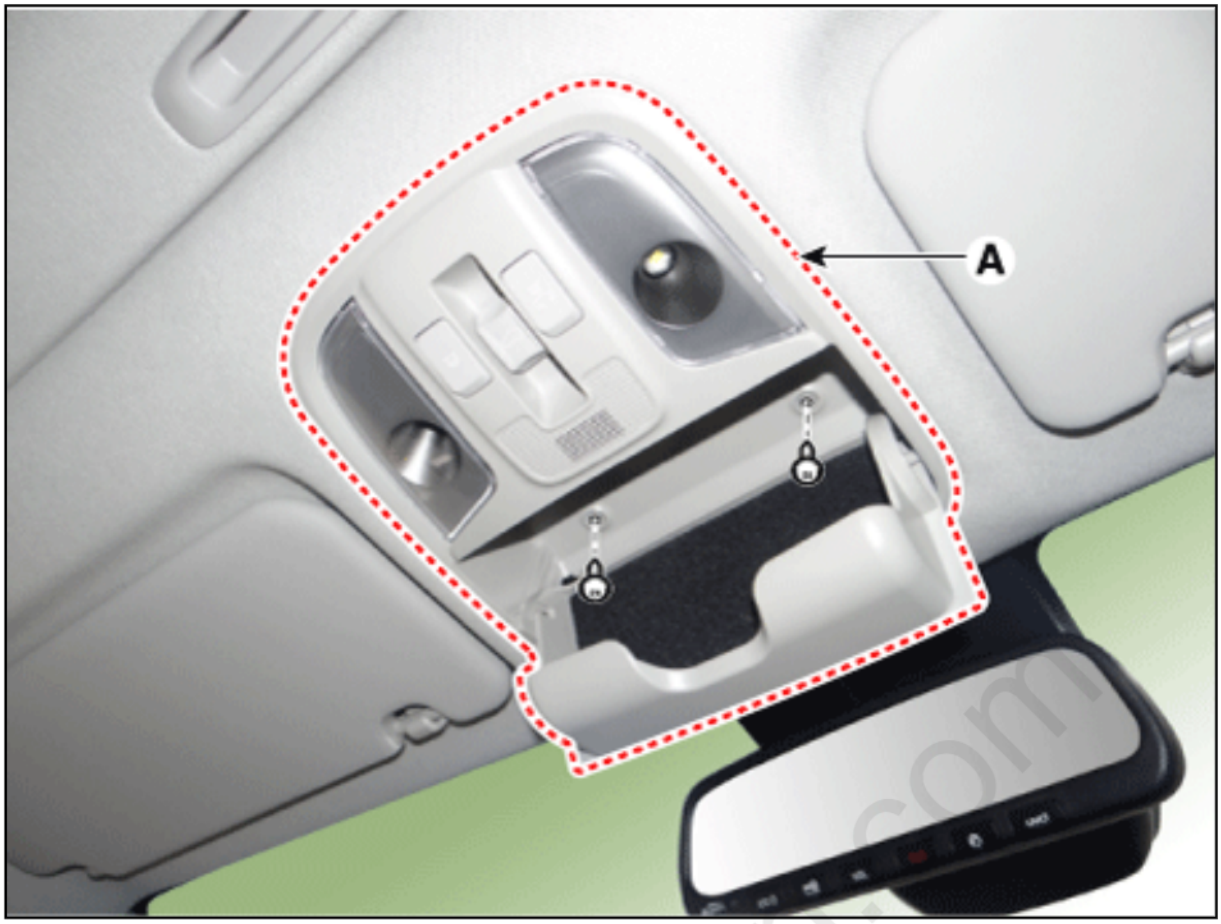

2. Remove the socket (A) by rotating in the counterclockwise.

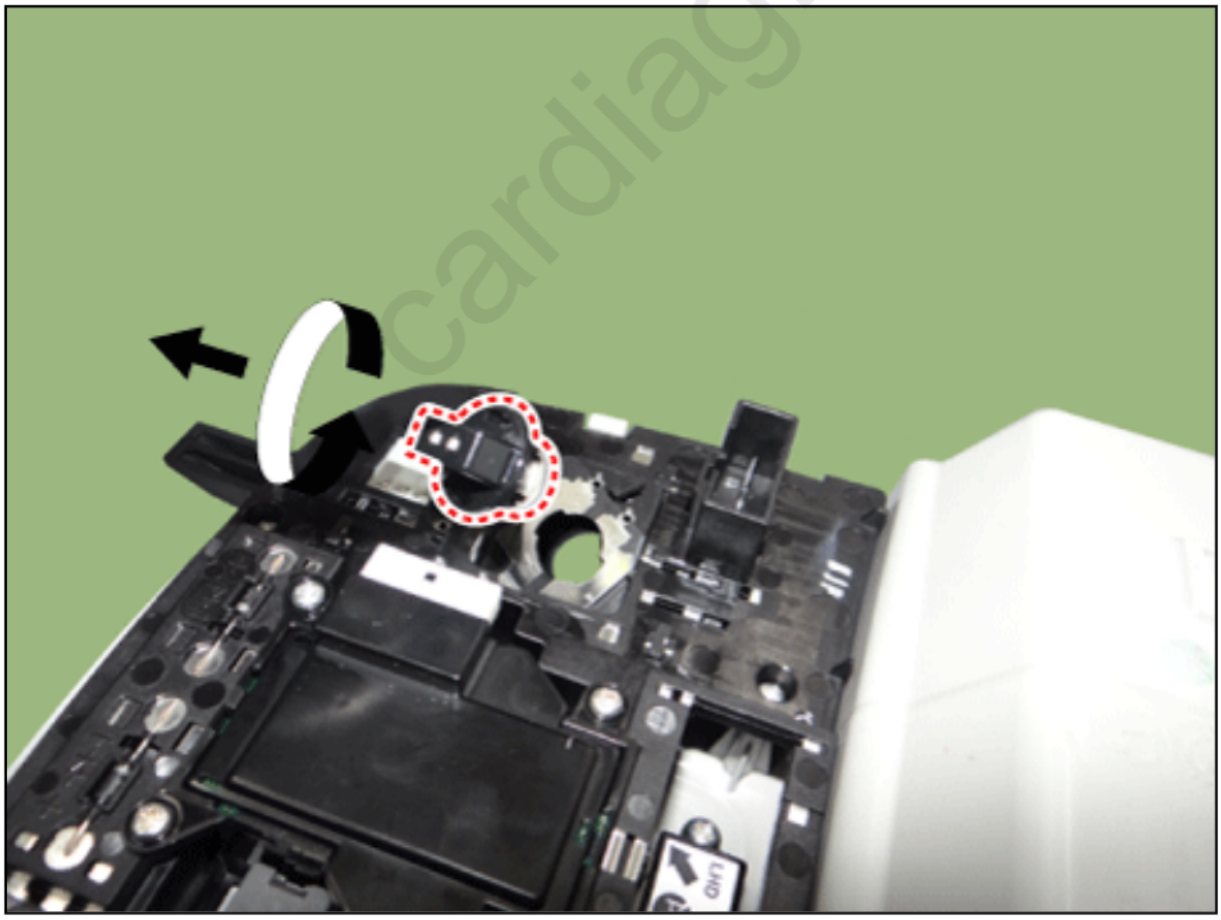

cardiagn.com

Please rate this document after reviewing at the bottom of this page.

Connector and Terminal Function

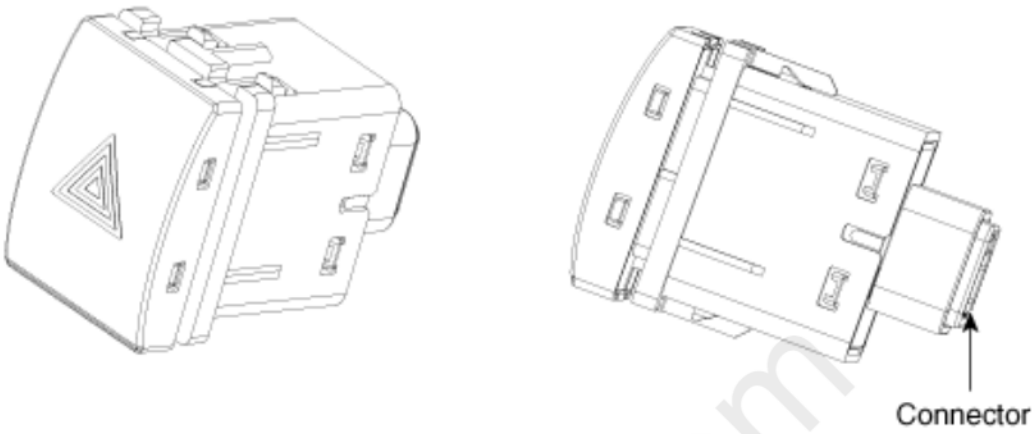

Connector	Pin	Function
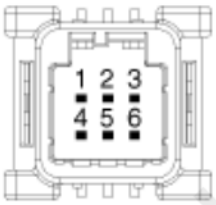	1	Battery (+)
	2	-
	3	Hazard switch indicator
	4	Ground
	5	-
	6	Hazard switch signal

Circuit Diagram

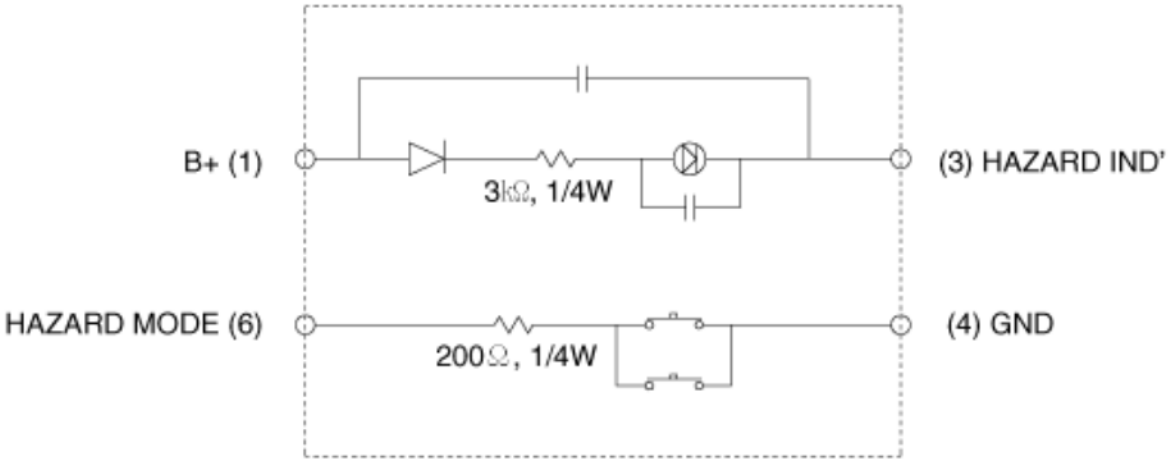

cardiagn.com

Please rate this document after reviewing at the bottom of this page.

Inspection

1. Check for continuity between terminals.

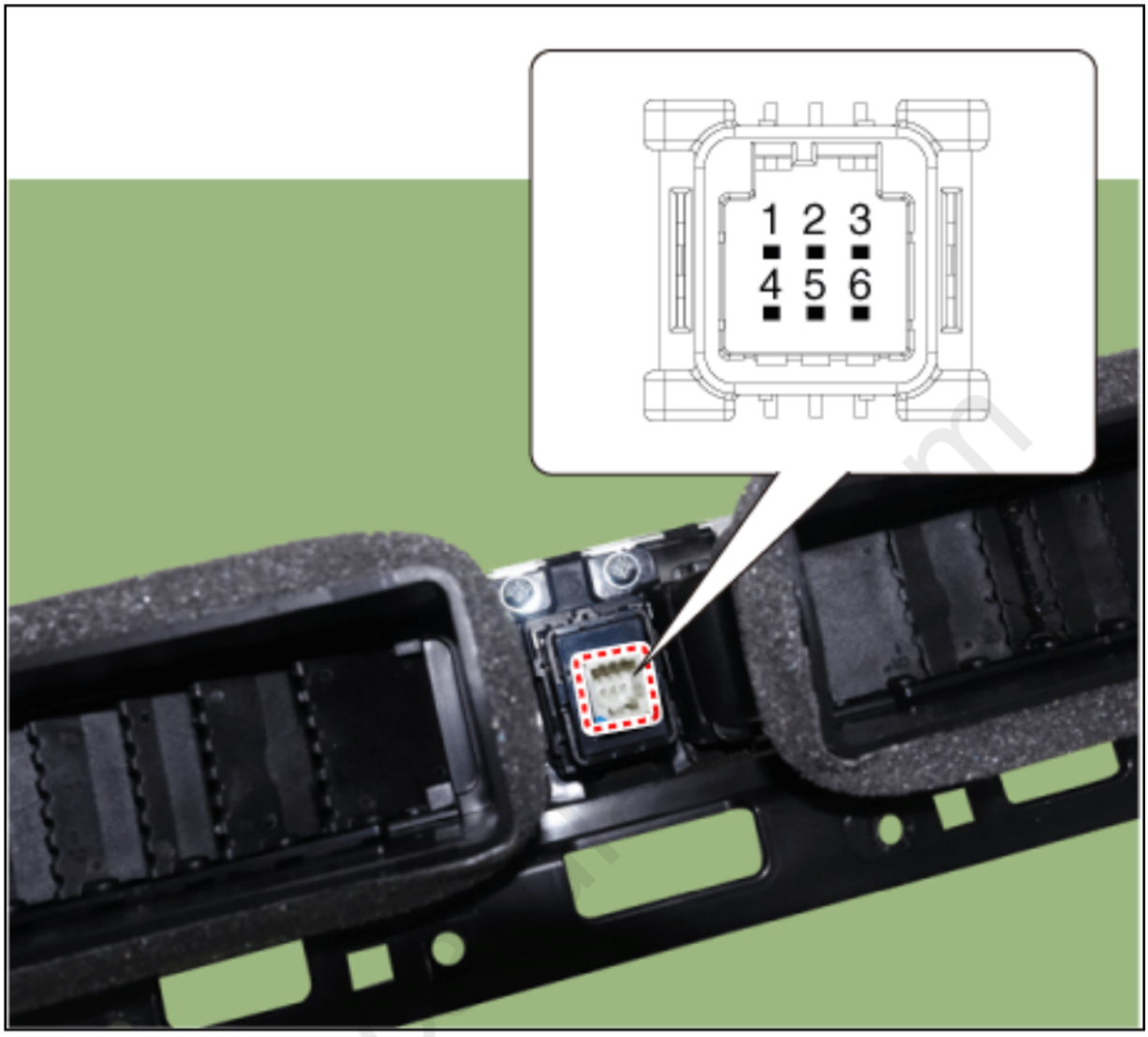

Pin	Function
1	Battery (+)
2	-
3	Hazard switch indicator
4	Ground
5	-
6	Hazard switch signal

Terminal / Position	1	6
OFF		
ON	○———	———○

Removal

1. Disconnect the negative battery terminal.
2. Remove the crash pad garnish assembly [RH].
   (Refer to Body - "Crash Pad Garnish [RH]")
3. Remove the air ventilation duct (A) by pulling it in the direction of the arrow after loosening the mounting screws.

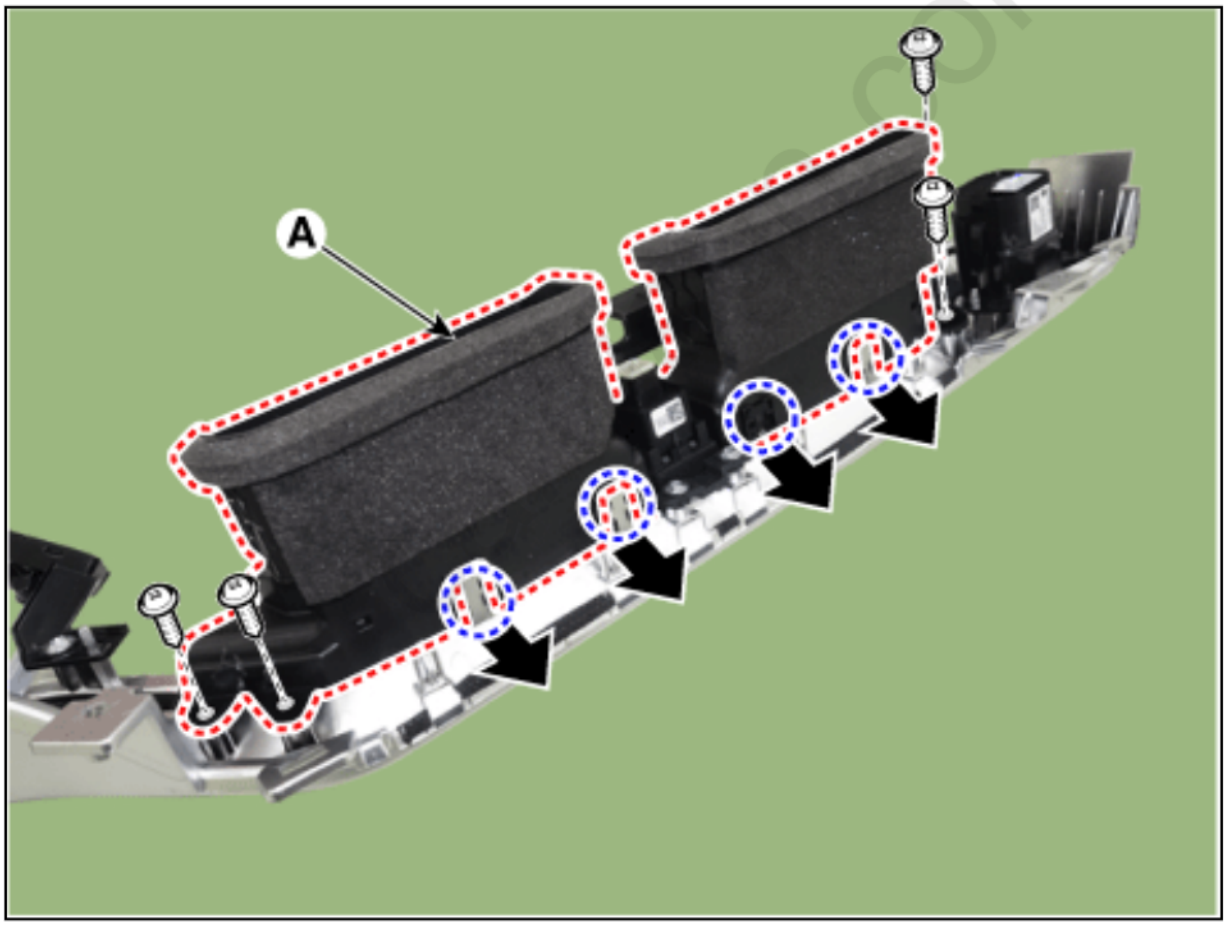

4. Remove the hazard switch (A) after loosening the mounting screws.

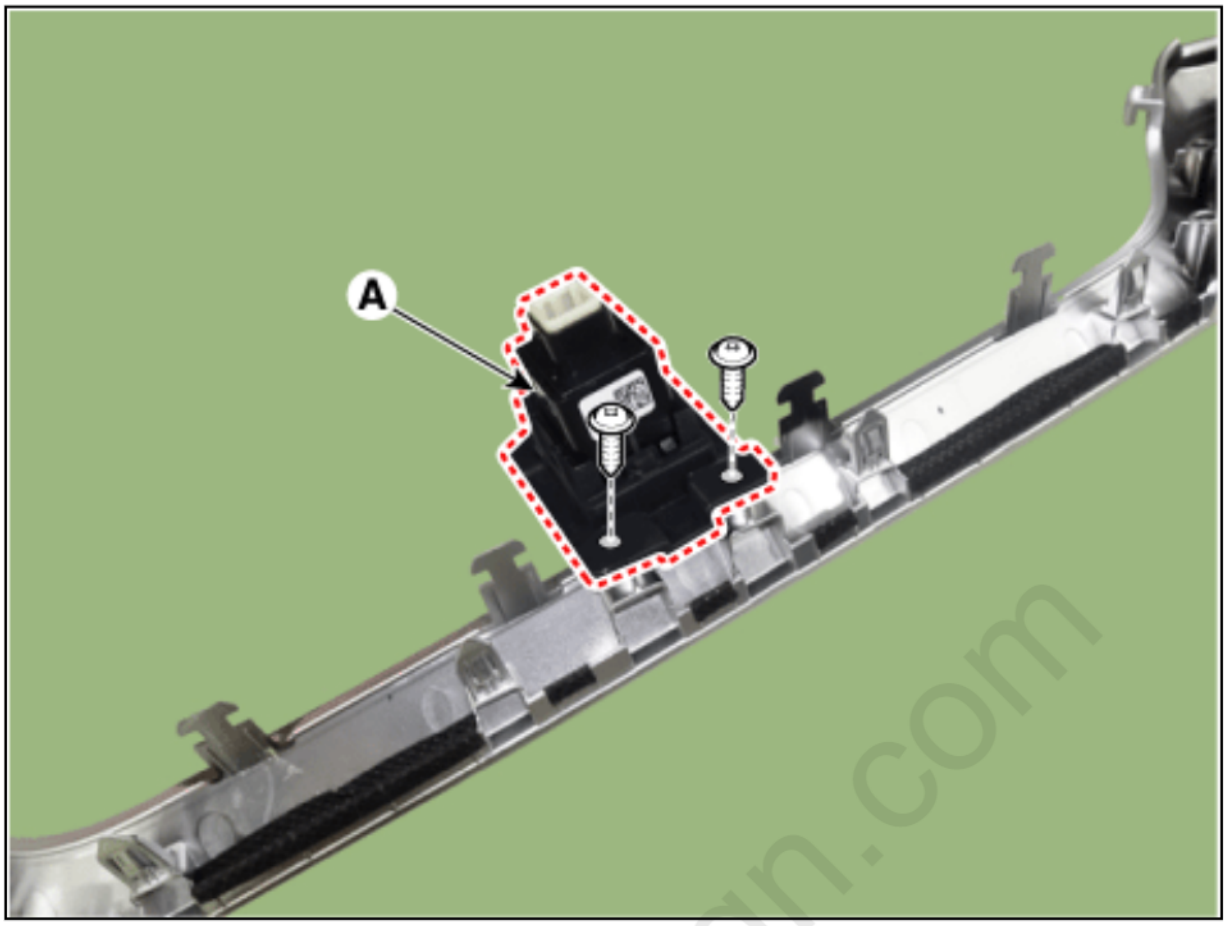

Installation

1. Install in the reverse order of removal.

cardiagn.com

Please rate this document after reviewing at the bottom of this page.

Connector and Terminal
Function

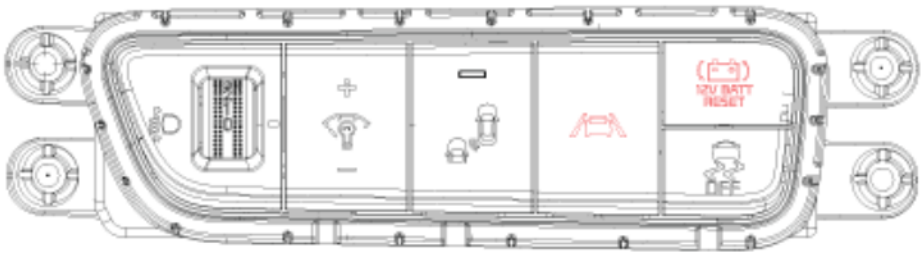

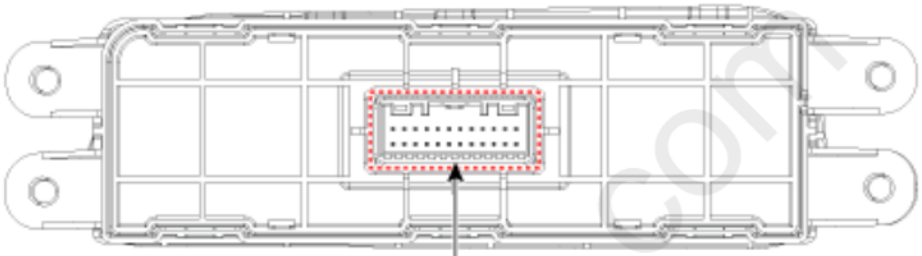

Connector

Connector	Pin	Function	Pin	Function
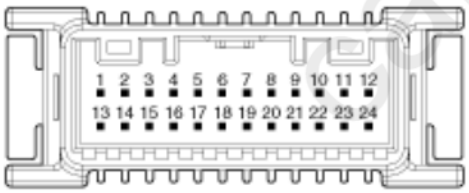	1	IGN1	13	Latch relay power
	2	-	14	-
	3	ESC OFF	15	HLLD signal
	4	-	16	Latch relay signal
	5	LKA mode	17	Rheostat up
	6	BCW mode	18	Rheostat down
	7	BCW indicator	19	-
	8	IGN HLLD	20	Illumination (+)
	9	VESS	21	-
	10	VESS indicator	22	Illumination (-)
	11	-	23	-
	12	HLLD ground	24	Ground

cardiagn.com

Circuit
Diagram

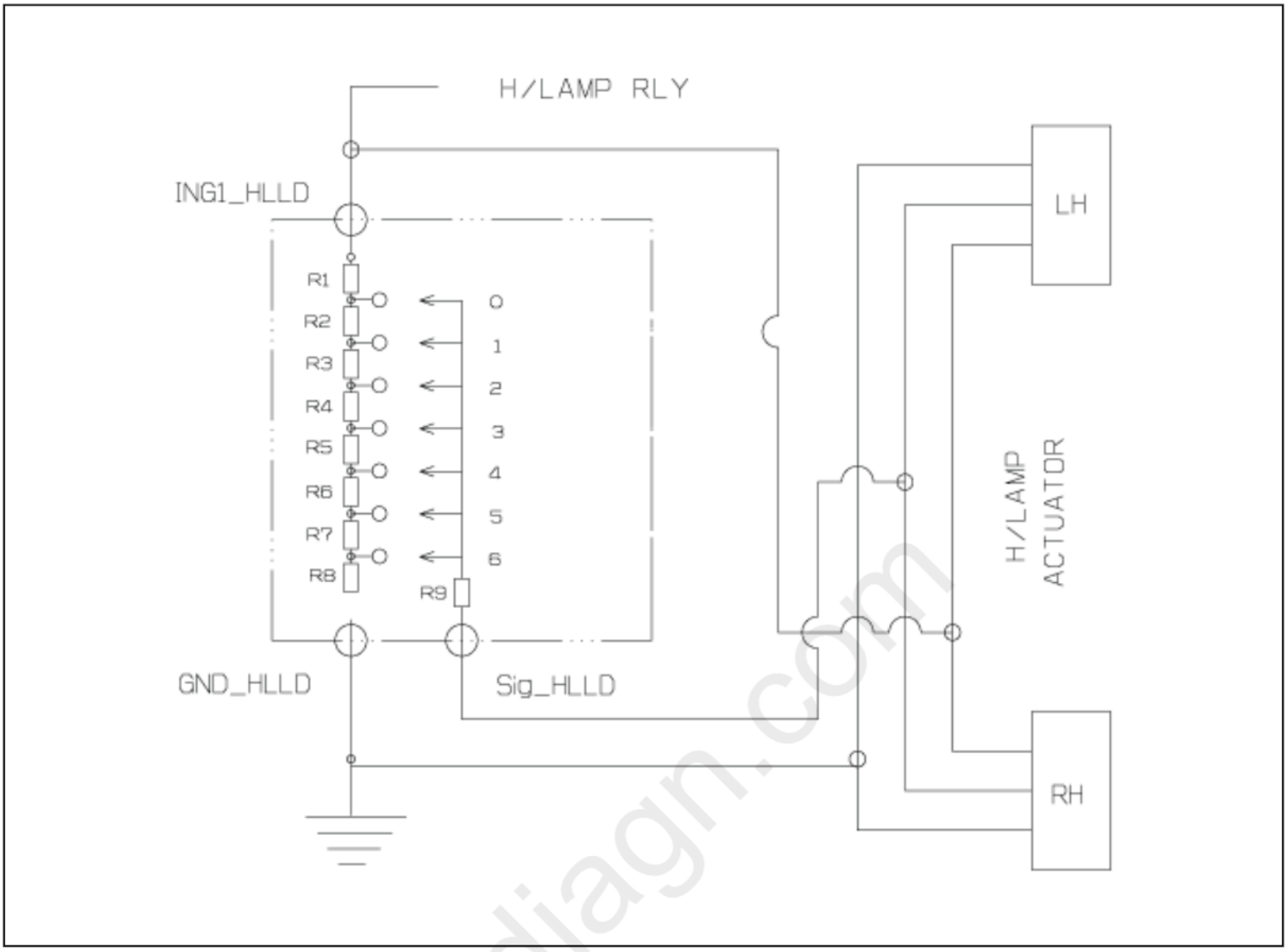

cardiagn.com

Please rate this document after reviewing at the bottom of this page.

Removal

1. Disconnect the negative (-) battery terminal.
2. Remove the crash pad lower panel.
   (Refer to Body - "Crash Pad Lower Panel")
3. Remove the crash pad plate [LH] (A) after loosening the screws.

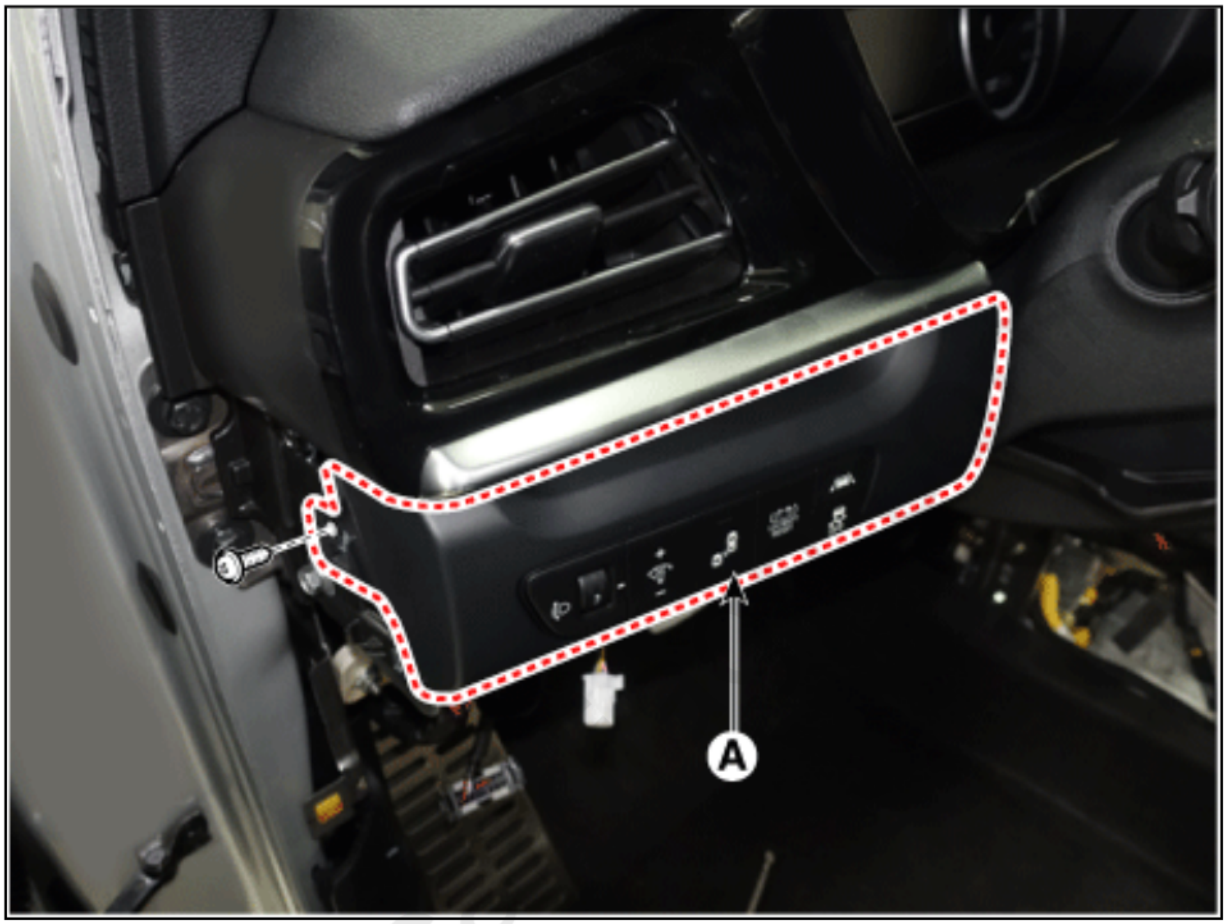

4. Disconnect the crash pad side switch connector (A).

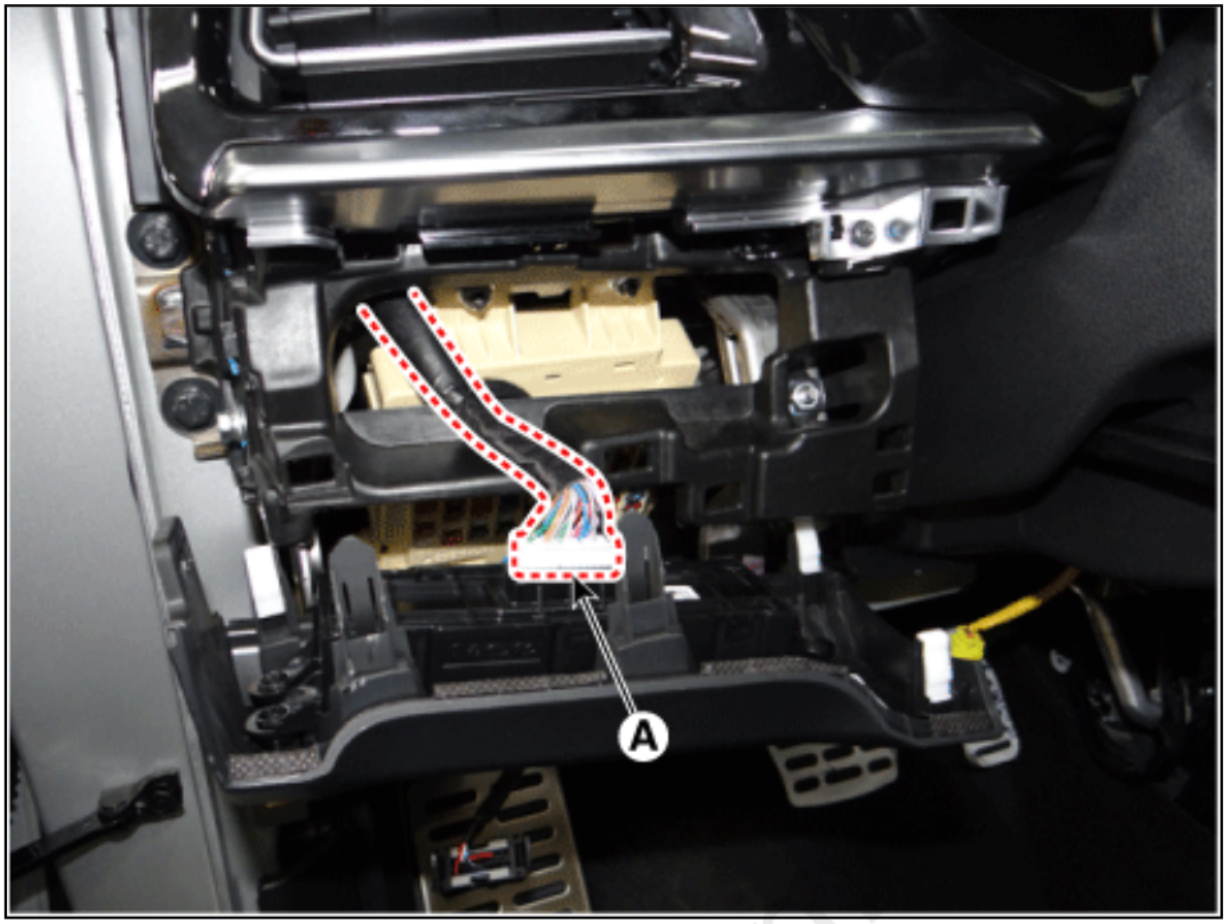

5. Remove the crash pad side switch (A) after loosening the screws.

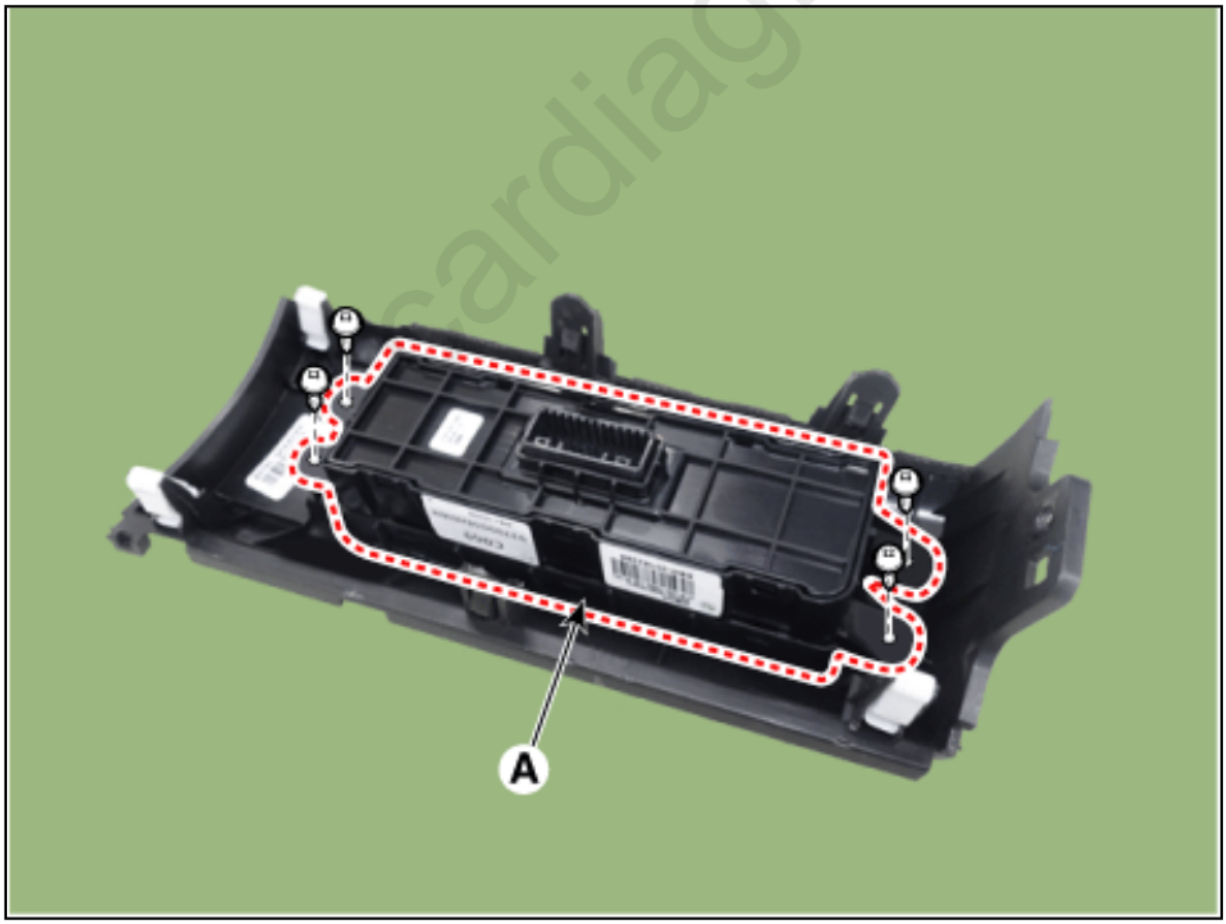

Installation

1. Install in the reverse order of removal.

Inspection

1. Check for intensity of new rheostat switch. If the light intensity of the lamps changes smoothly without any flickering when the rheostat is turned, it can be assumed that the rheostat is normal.

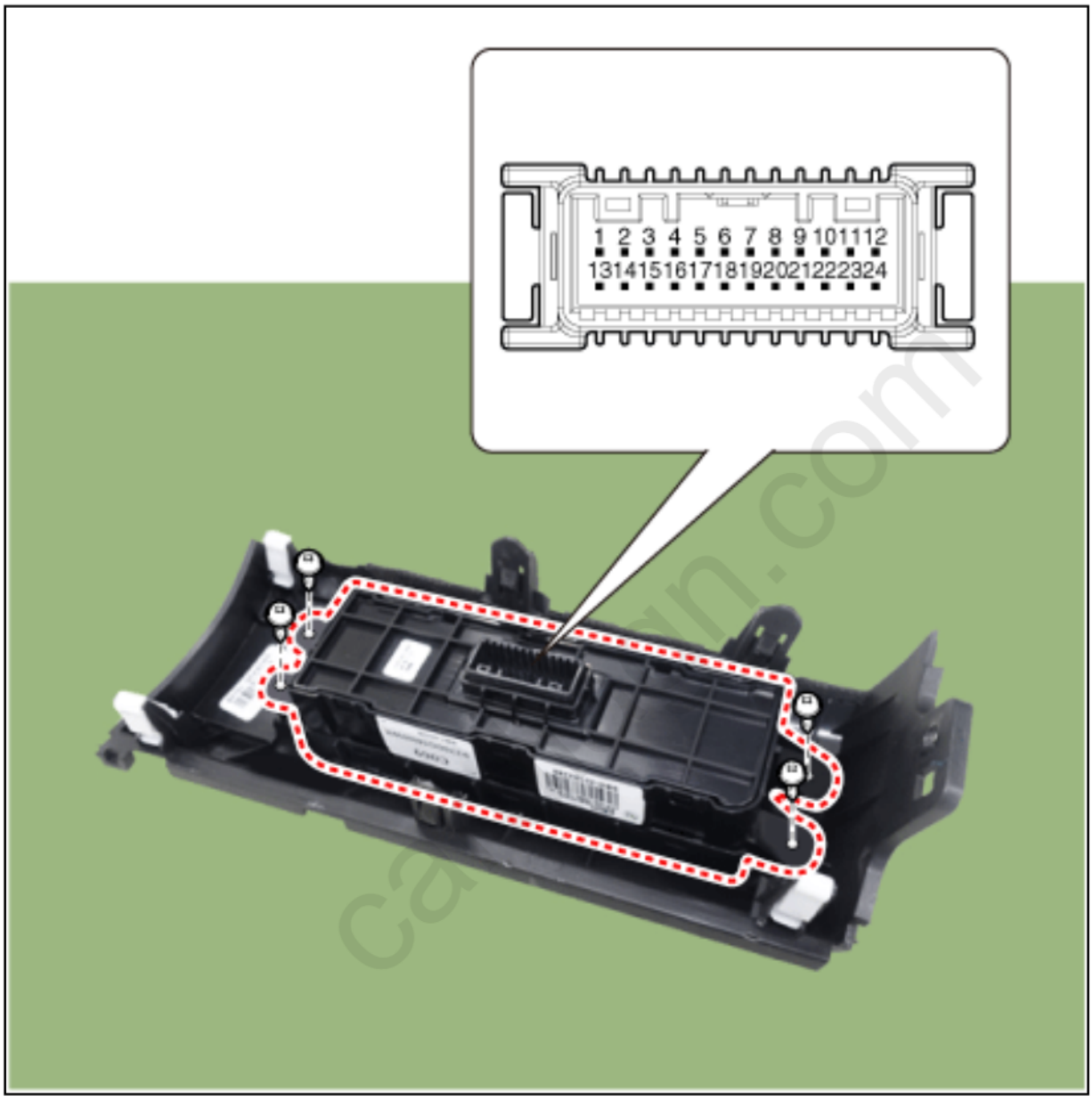

Position / Terminal	UP (+)	DOWN (-)	Description
18			Down
24			GND
19			Up
22	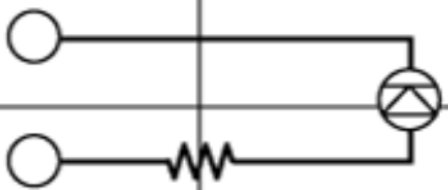		Illumination (-)
20			Illumination (+)

cardiagn.com

Please rate this document after reviewing at the bottom of this page.

Removal

[Front Fog Lamp]

1. Disconnect the negative battery terminal.
2. Remove the front bumper assembly.
   (Refer to Body - "Front Bumper Assembly")
3. Disconnect the connector (A) from the front fog lamp.



4. Remove the front fog lamp (A) after loosening the mounting screws.

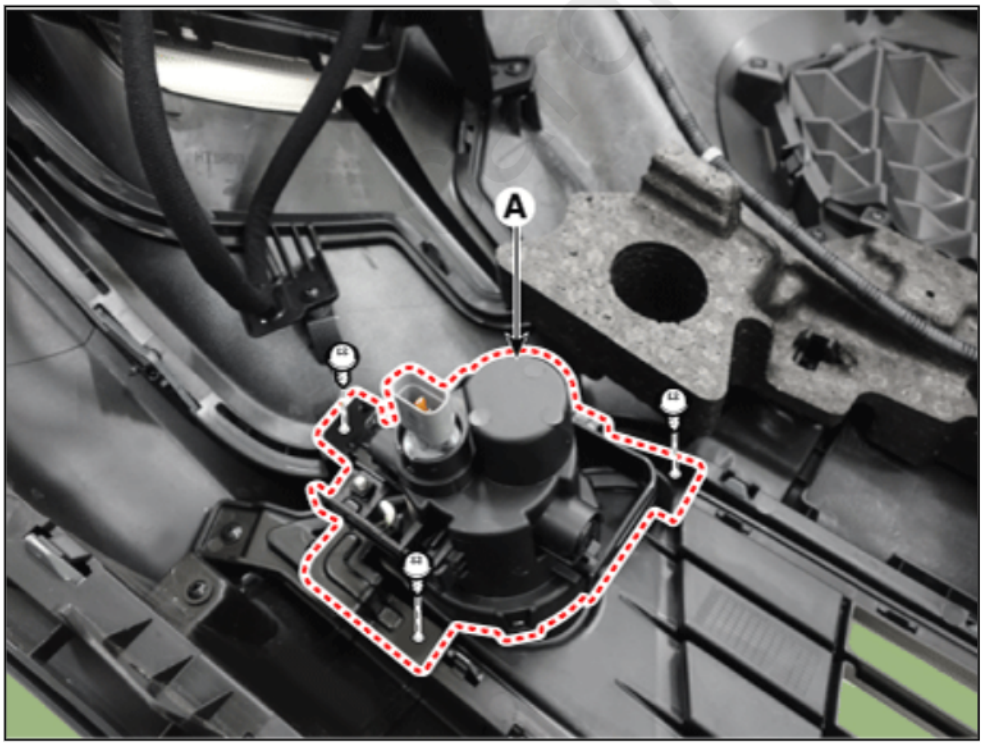

[Rear Fog Lamp]

1. Disconnect the negative battery terminal.

2. Remove the rear bumper assembly.
   (Refer to Body - "Rear Bumper Assembly")
3. Disconnect the connector (A) from the rear fog lamp.



4. Remove the rear fog lamp (A) after loosening the mounting screws.



Installation

1. Install in the revesr order of removal.

If the fog lamp needs to be adjusted, refer to fog lamp aiming procedure.
(Refer to Fog Lamp - "Adjustment")

Replacement

1. Remove the engine room under cover.
   (Refer to Engine Mechanical System - "Engine Room Under Cover")
2. Remove the front fog lamp bulb (A) by turning it in the counterclockwise direction after disconnecting the connector.

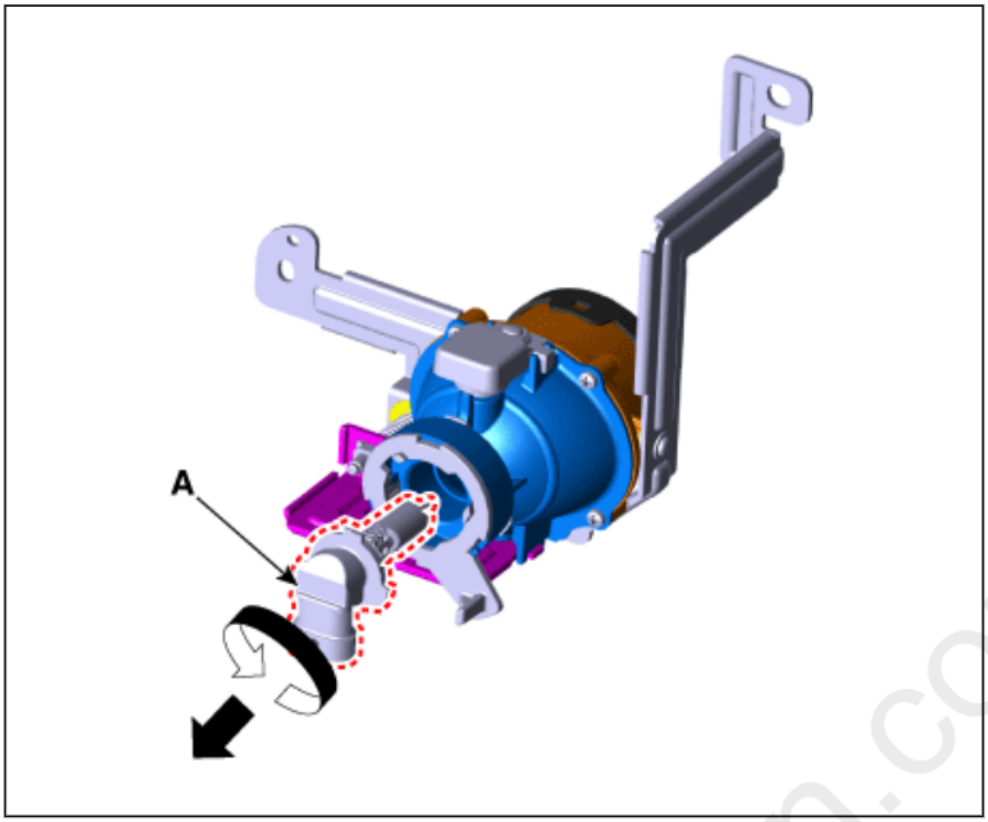

Adjustment

Front Fog Lamp Aiming Procedures

Adjust the headlamp aiming by turning the adjustment bolt. If do not have aiming alignment equipment, follow the procedure below.

1. Inflate the tires to the specified pressure and remove any loads from the vehicle except the driver, spare tire, and tools.
2. The vehicle should be placed on a flat floor.
3. Check suspecsion spring for defects.
4. Check that the surface of the headlamp lens is clean.G602
5. Draw vertical lines (passing through respective headlamp centers) and a horizontal line (passing through center of headlamps) on the screen.
6. If headlamp leveling device is equipped, adjust the headlamp leveling device switch with 0 positions.
7. With the headlamps and battery in normal condition, aim the headlamps so the brightest portion falls on the horizontal and vertical lines.

cardiagn.com

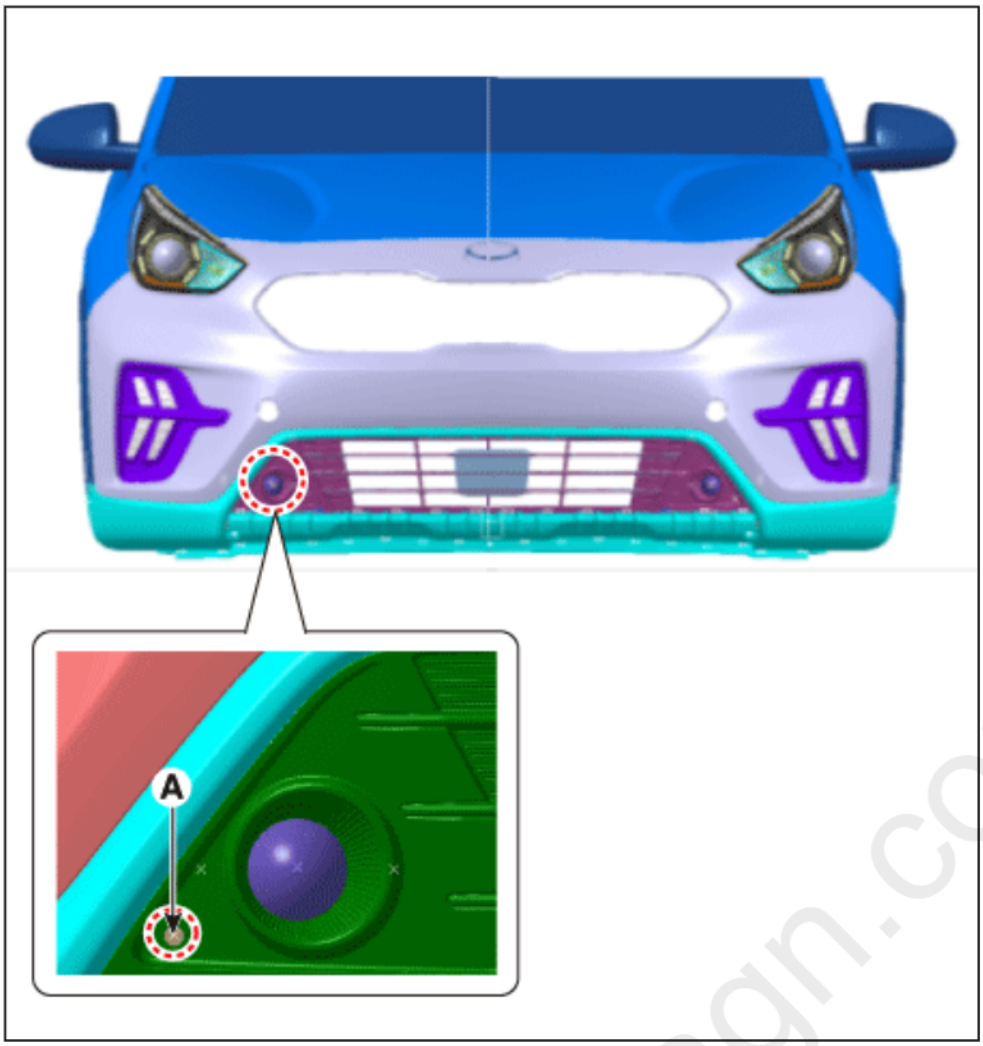

Front Fog Lamp Aiming Point

cardiagn.com

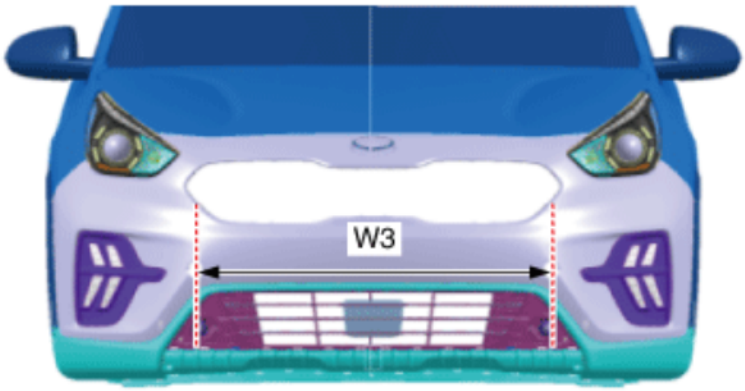

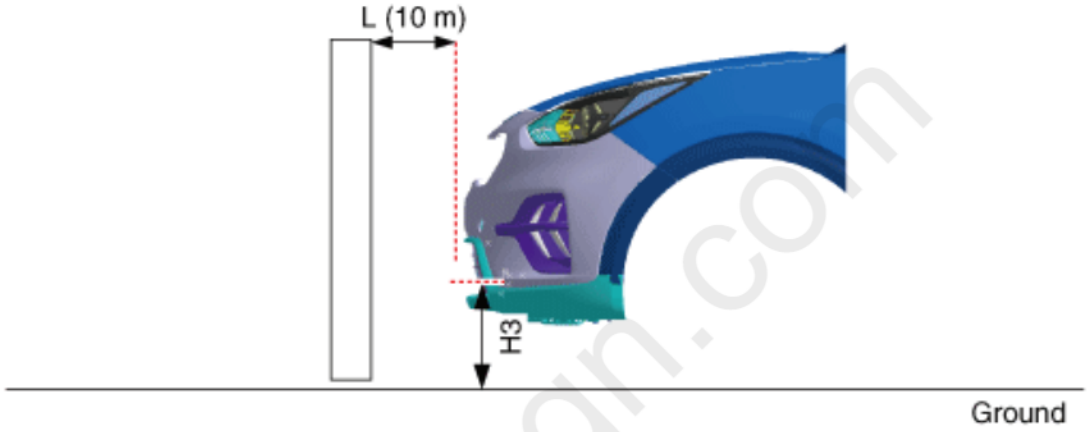

H3 : Height between the fog lamp bulb center and ground
W3 : Distance between the fog lamp bulb center
L : Distance betwwen the headlamp bulb and screen

[Bulb Type]

Vehicle condition	H3	W3	Note
Empty	12.9 (329)	37.8 (960)	All DIM in in. (mm)
1 person on board	12.7 (324)		

1. Turn the front fog lamp on without the driver aboard.
2. The cut-off line should be projected in the allowable range (shaded region).

cardiagn.com

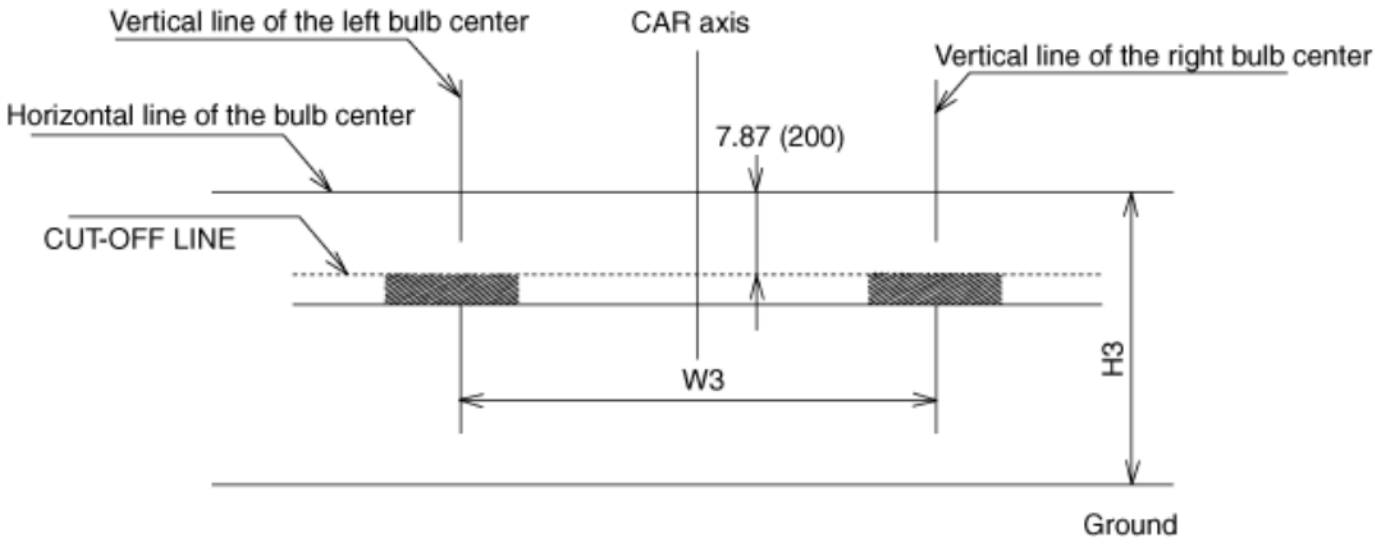

Unit : in. (mm)

Distance to the screen : 32.8 ft (10m)

cardiagn.com

Please rate this document after reviewing at the bottom of this page.

Removal

1. Disconnect the negative (-) battery terminal.
2. Remove the license lamp assembly (A) after pressing the locking pin.

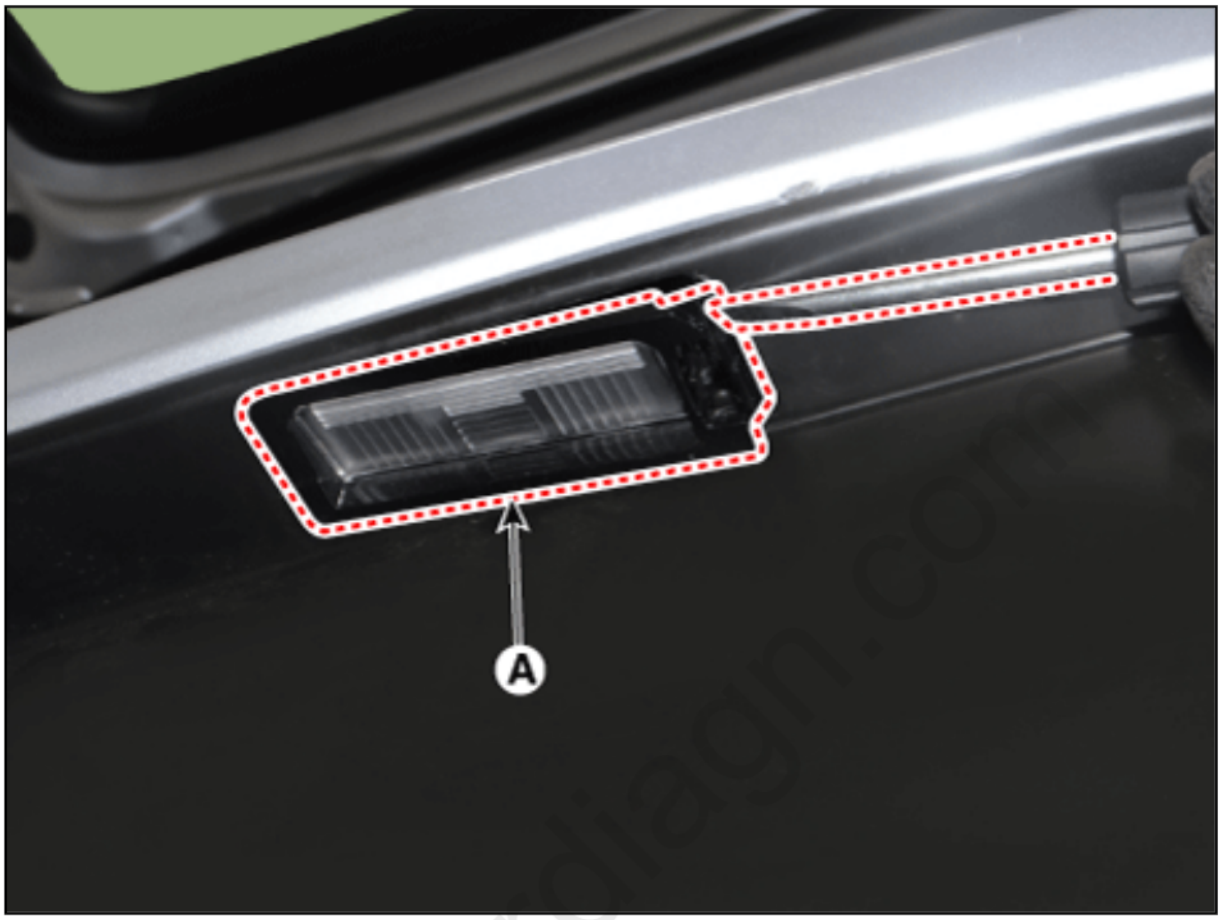

3. Disconnect the license lamp connector (A).

carmanuals.com

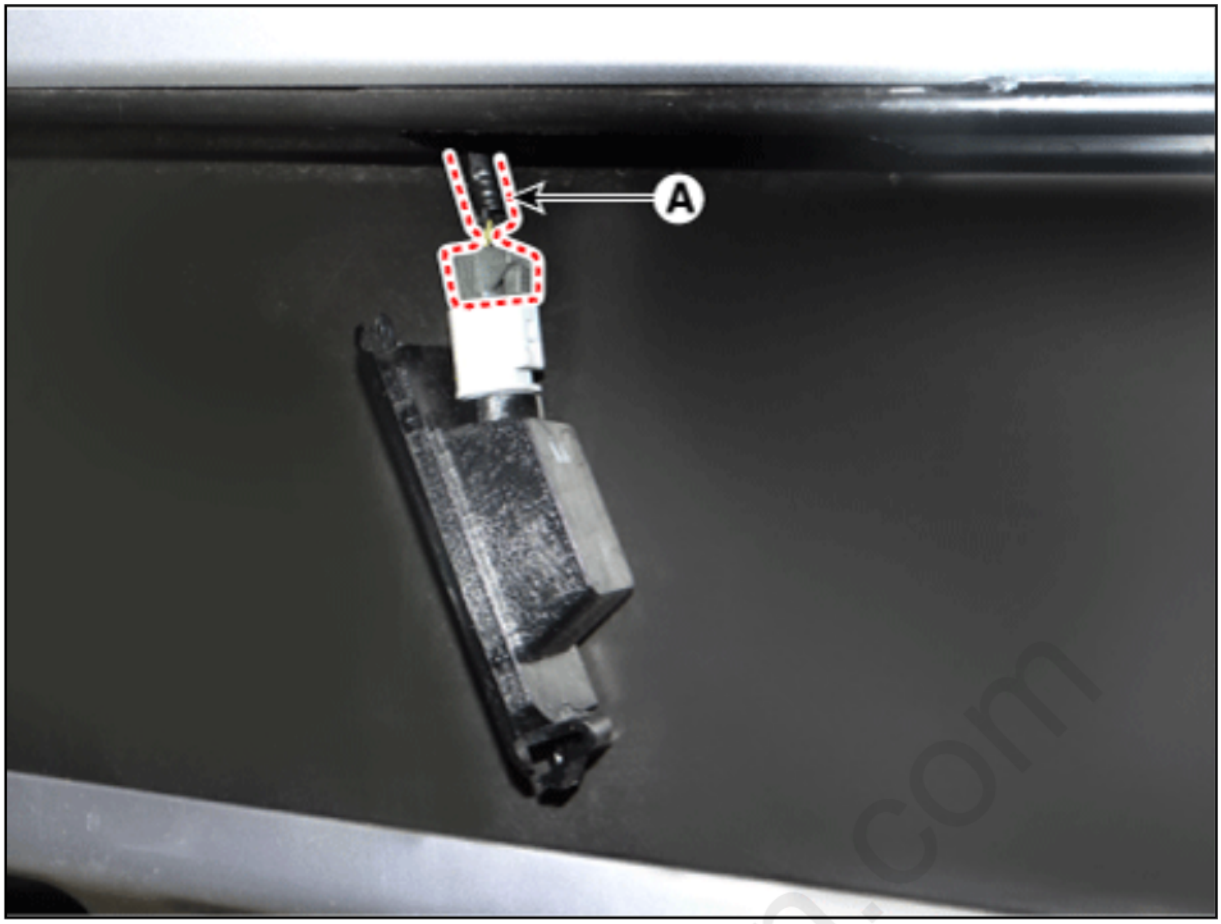

4. Remove the license lamp bulb (B) after removing the license lamp socket (A).

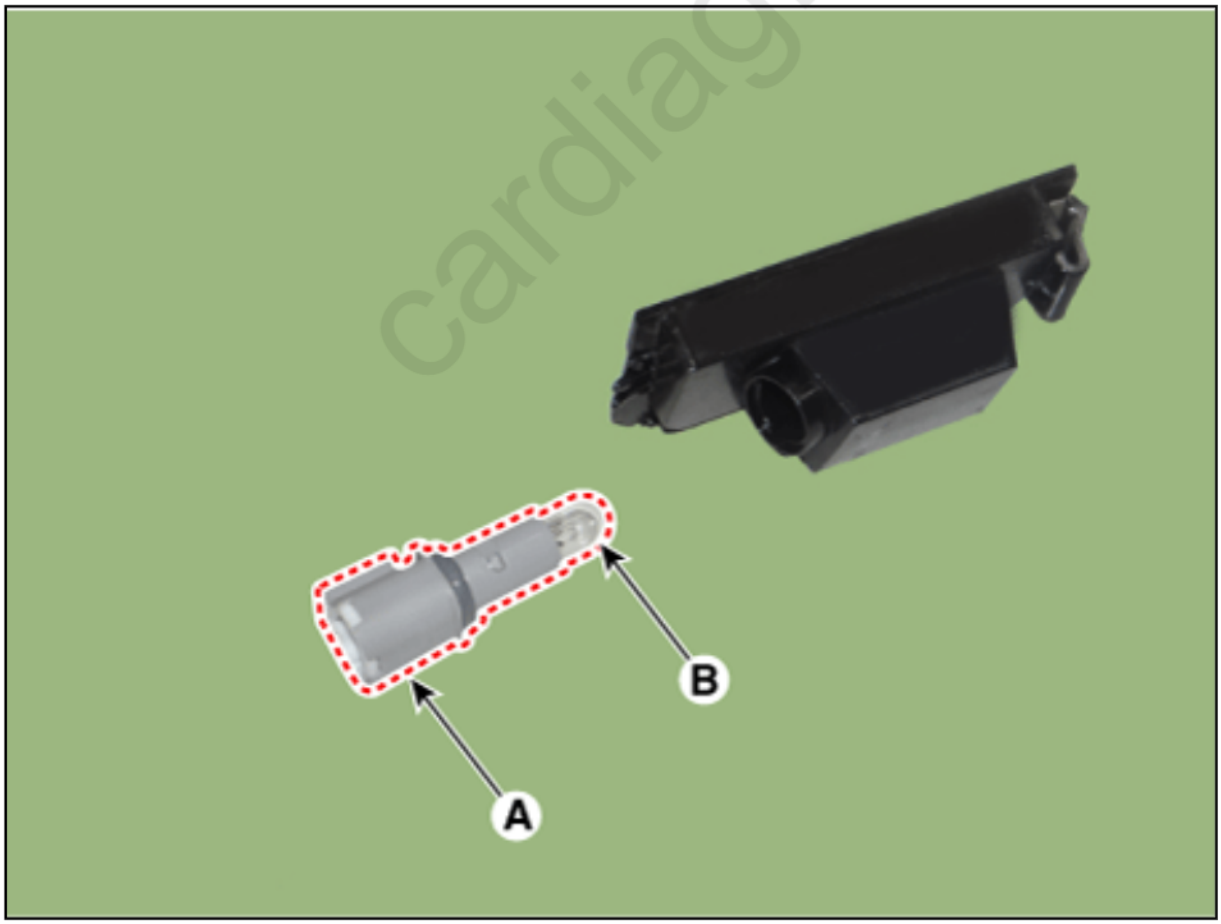

cardiagn.com

Installation

1. Install in the reverse order of removal.

cardiagn.com

Please rate this document after reviewing at the bottom of this page.

Removal

1. Disconnect the negative (-) battery terminal.
2. Remove the rear spoiler.
   (Refer to Body - "Rear Spoiler")
3. Remove the high mounted stop lamp cover.

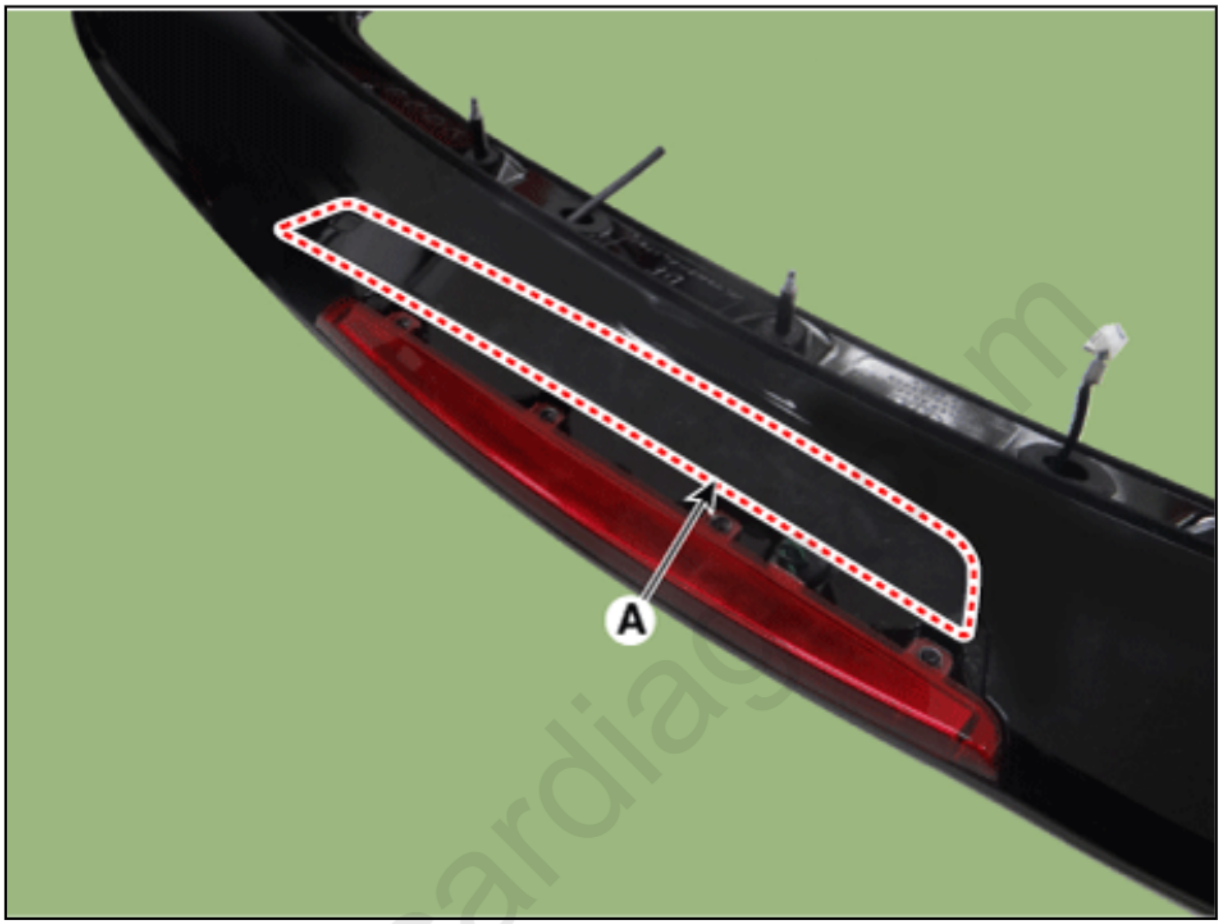

4. Remove the high mounted stop lamp (A) after loosening the mounting screws.

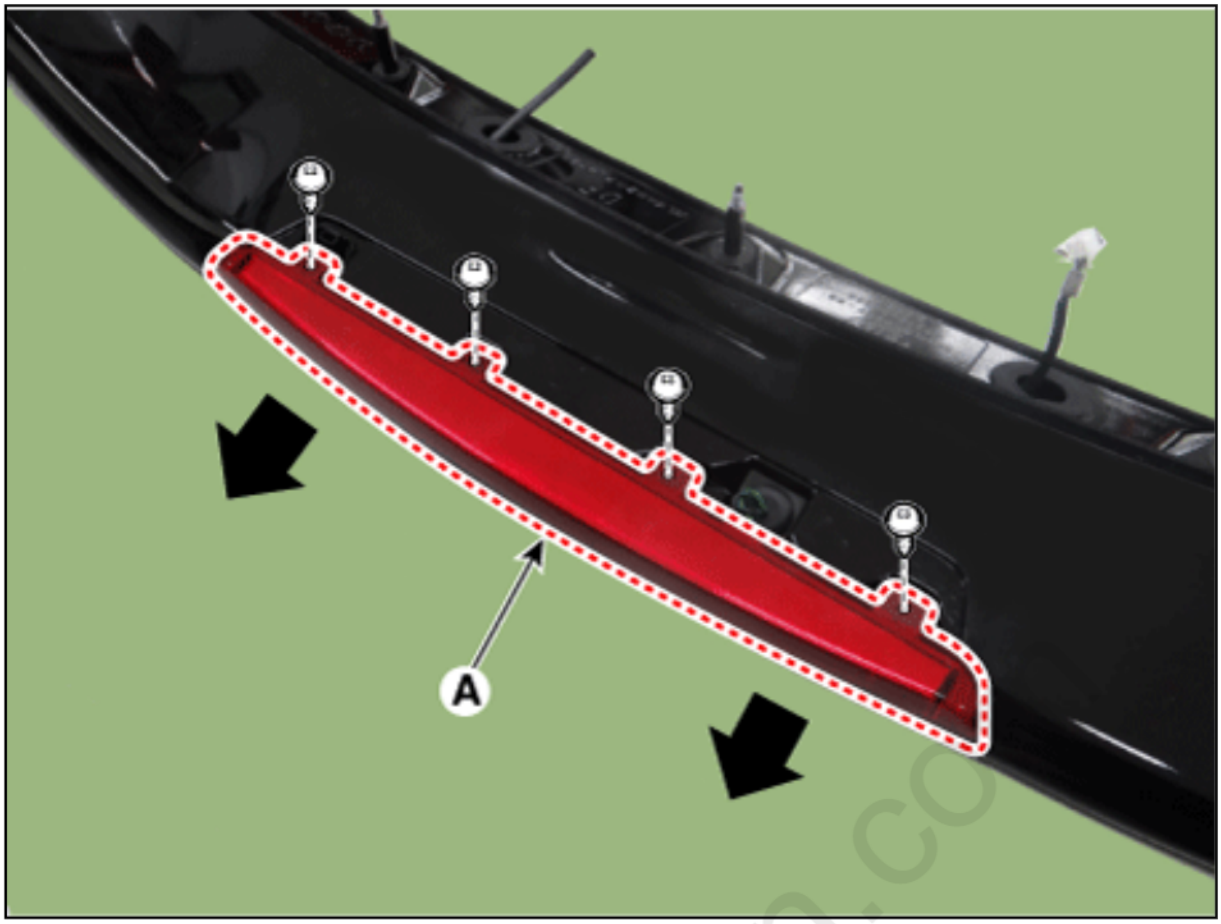

Installation

1. Install in the reverse order of removal.

cardiagn.co

Please rate this document after reviewing at the bottom of this page.

Circuit
Diagram

Bulb Type

[Outside Rear Combination Lamp]

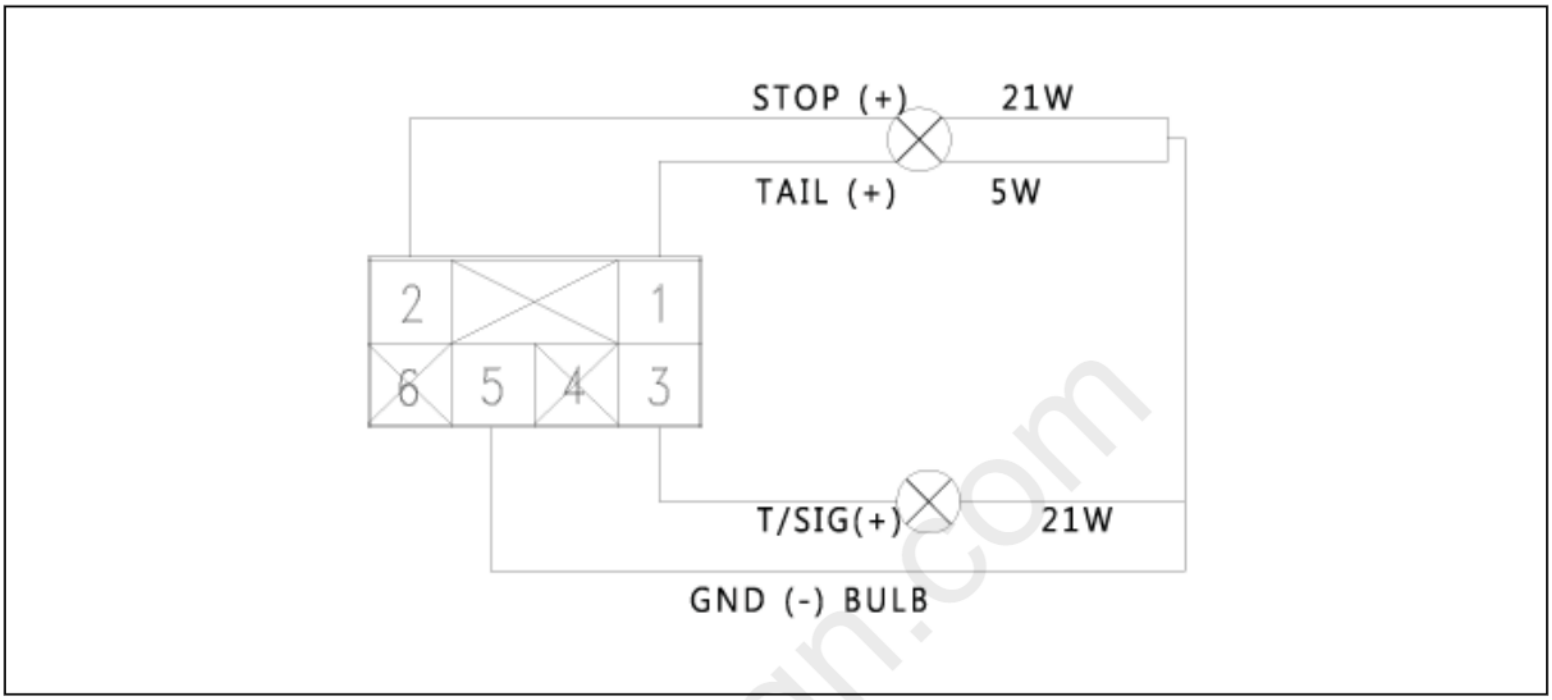

Pin	Function
1	Tail lamp (+)
2	Stop lamp (+)
3	Turn signal lamp (+)
4	-
5	Ground
6	-

[Inside Rear Combination Lamp]

cardiagn.com

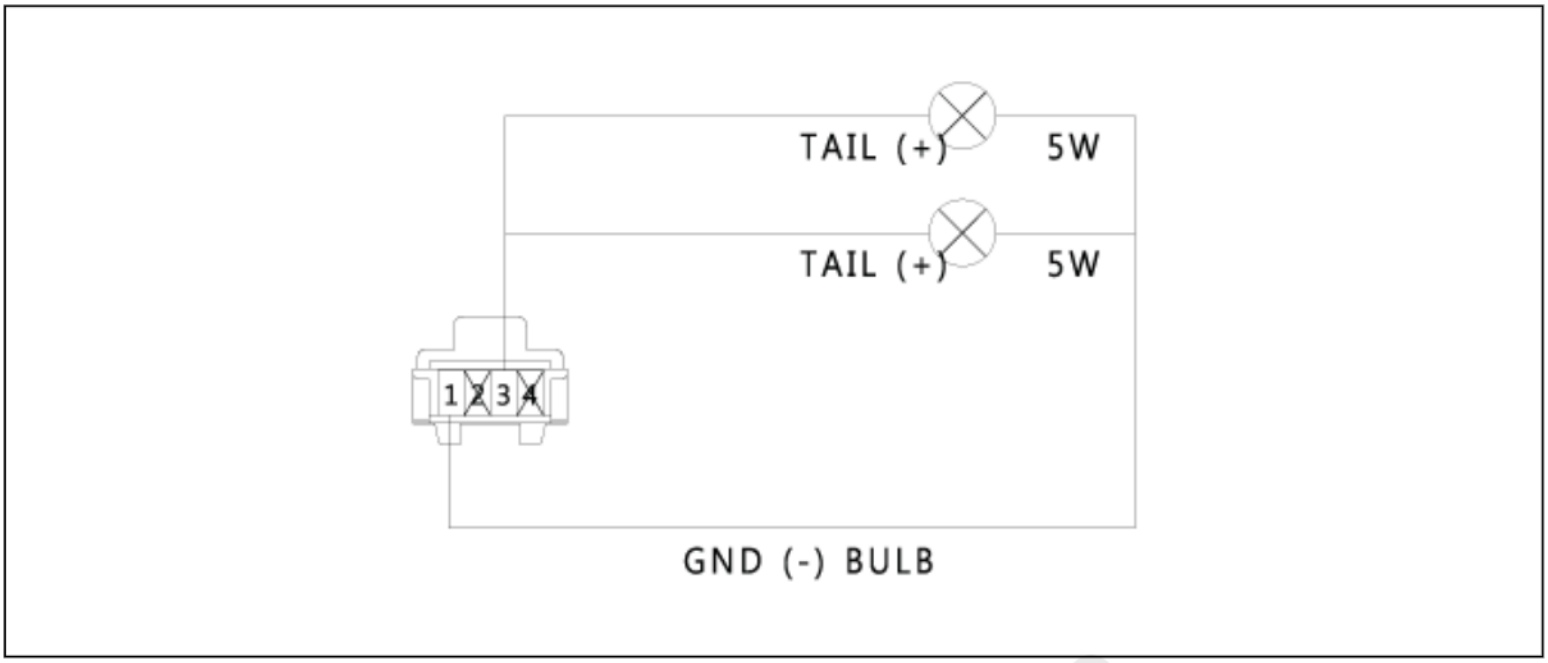

Pin	Function
1	Ground
2	-
3	Tail lamp (+)
4	-

LED Type

[Outside Rear Combination Lamp]

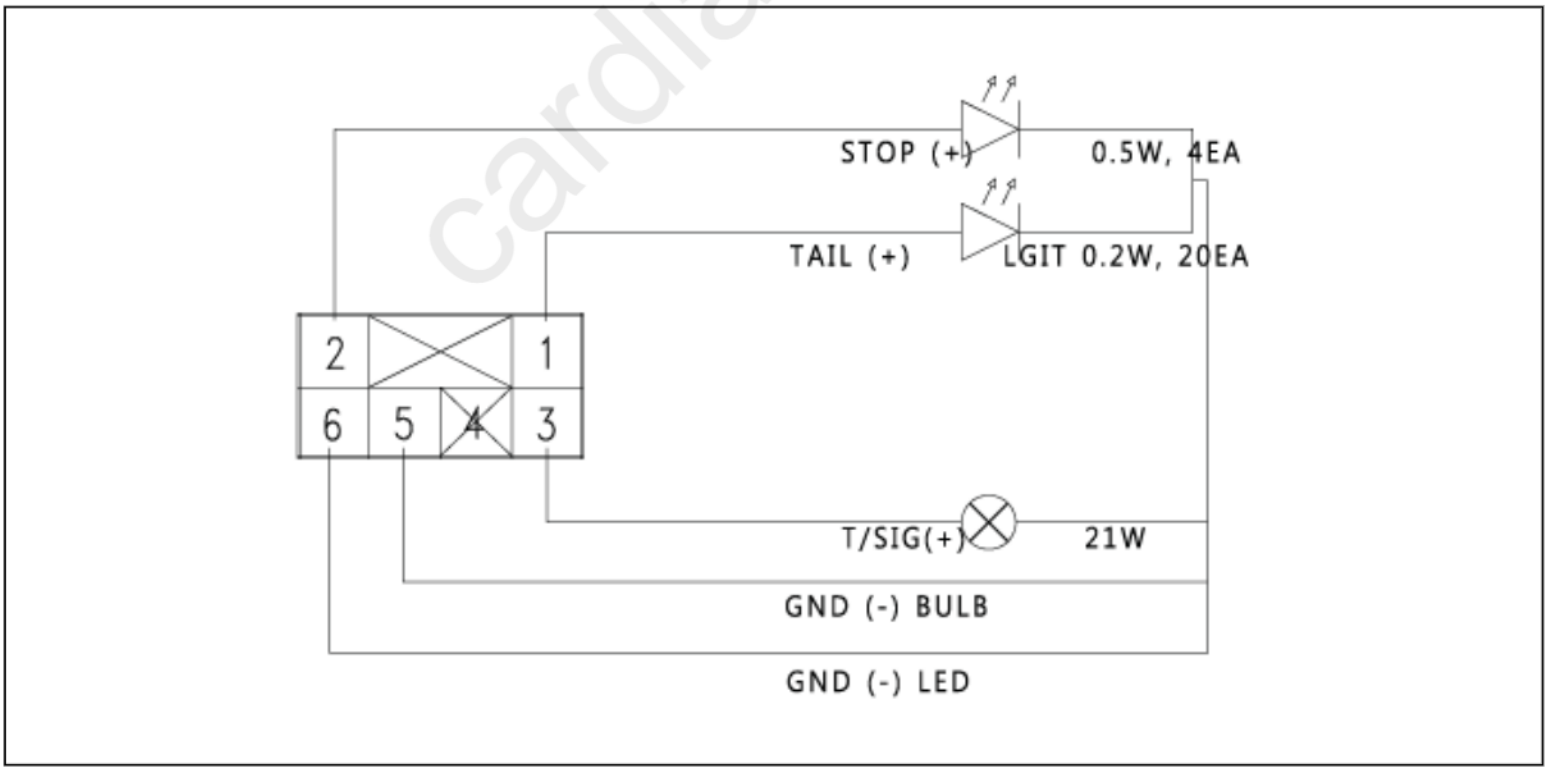

Pin	Function

cardiagn.com

1	Tail lamp LED (+)
2	Stop lamp LED (+)
3	Turn signal lamp bulb (+)
4	-
5	Ground (Bulb)
6	Ground (LED)

[Inside Rear Combination Lamp]

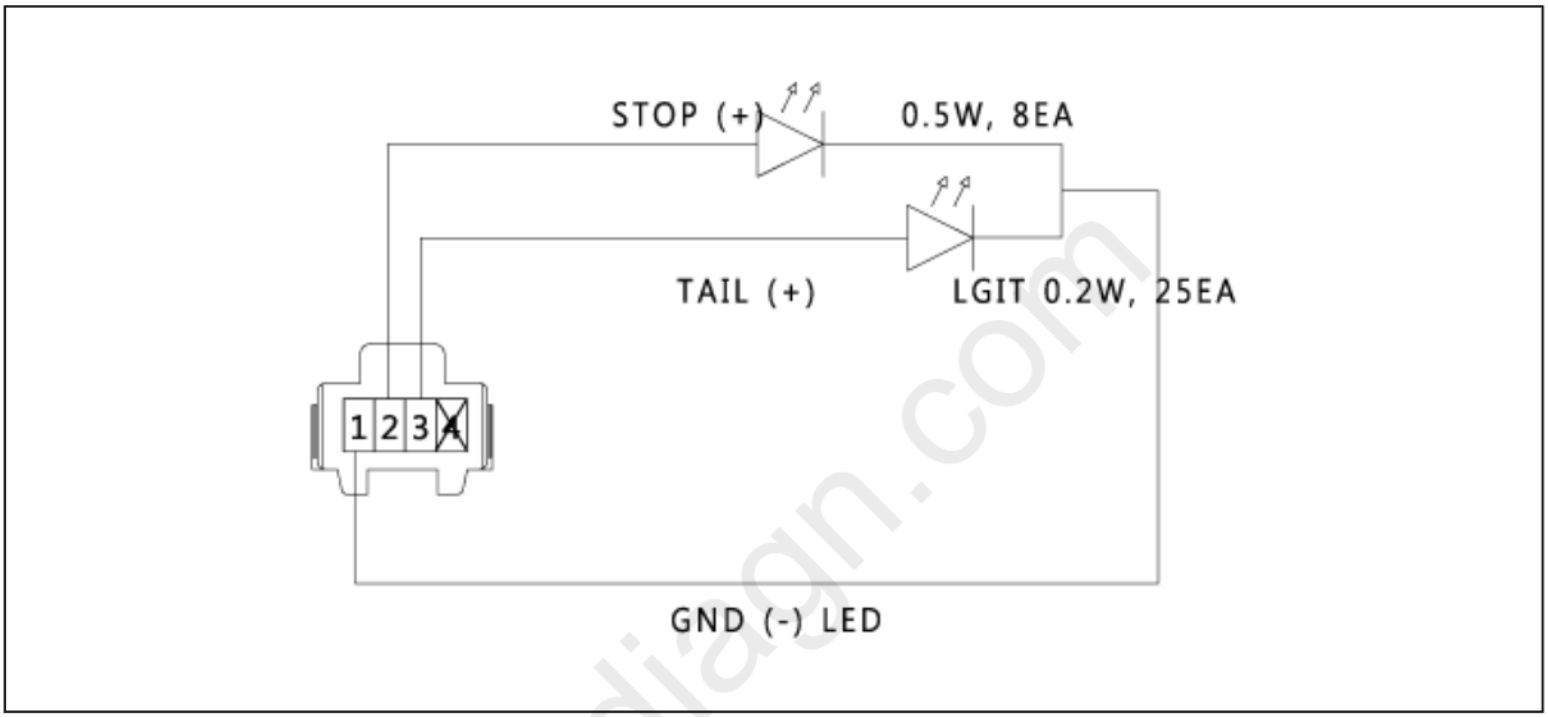

Pin	Function
1	Ground
2	Stop lamp (+)
3	Tail lamp (+)
4	-

cardiagn.com

Please rate this document after reviewing at the bottom of this page.

Removal

Rear Combination Lamp (Outside)

1. Disconnect the negative (-) battery terminal.
2. Using a screwdriver or remover, remove the rear combination lamp cover (A).

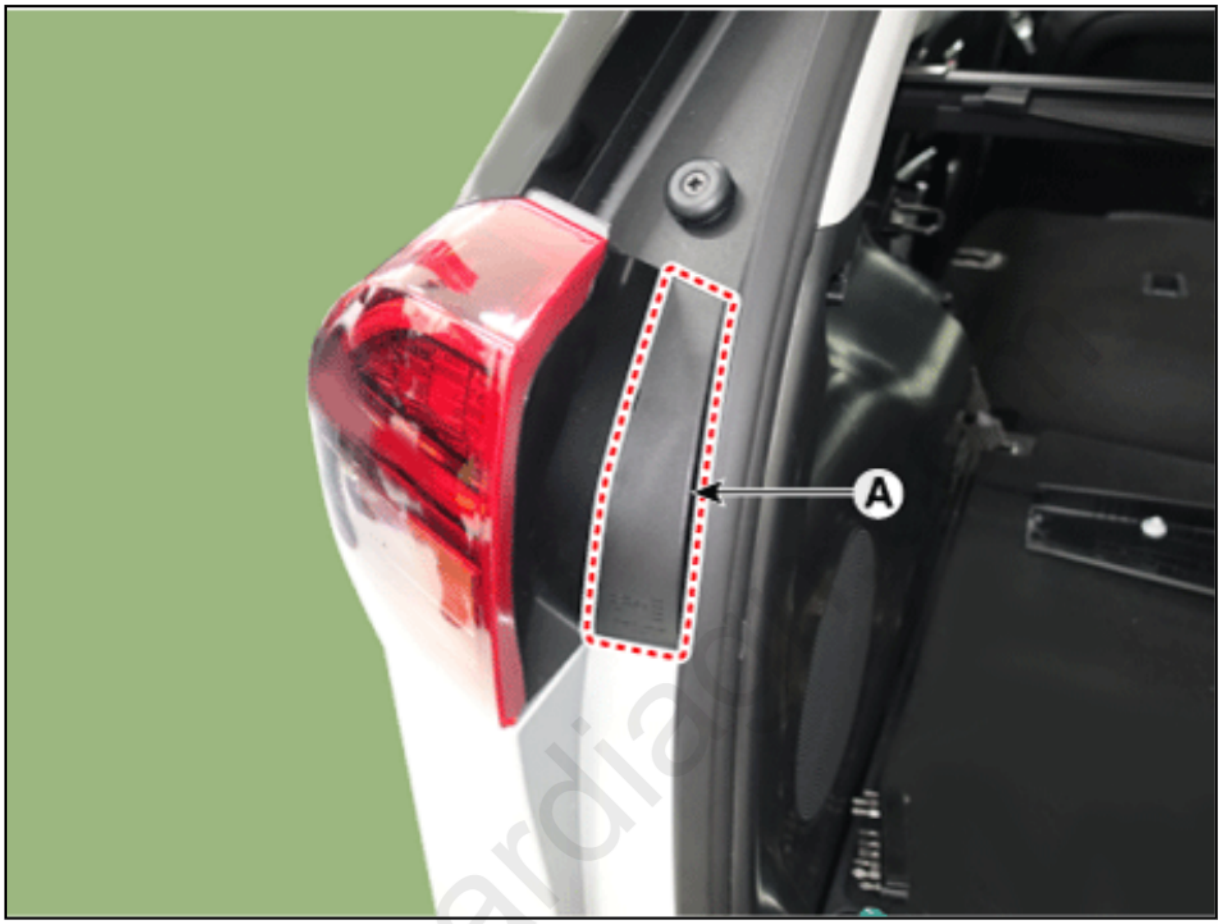

3. Remove the rear combination lamp (A) after loosening the screws.

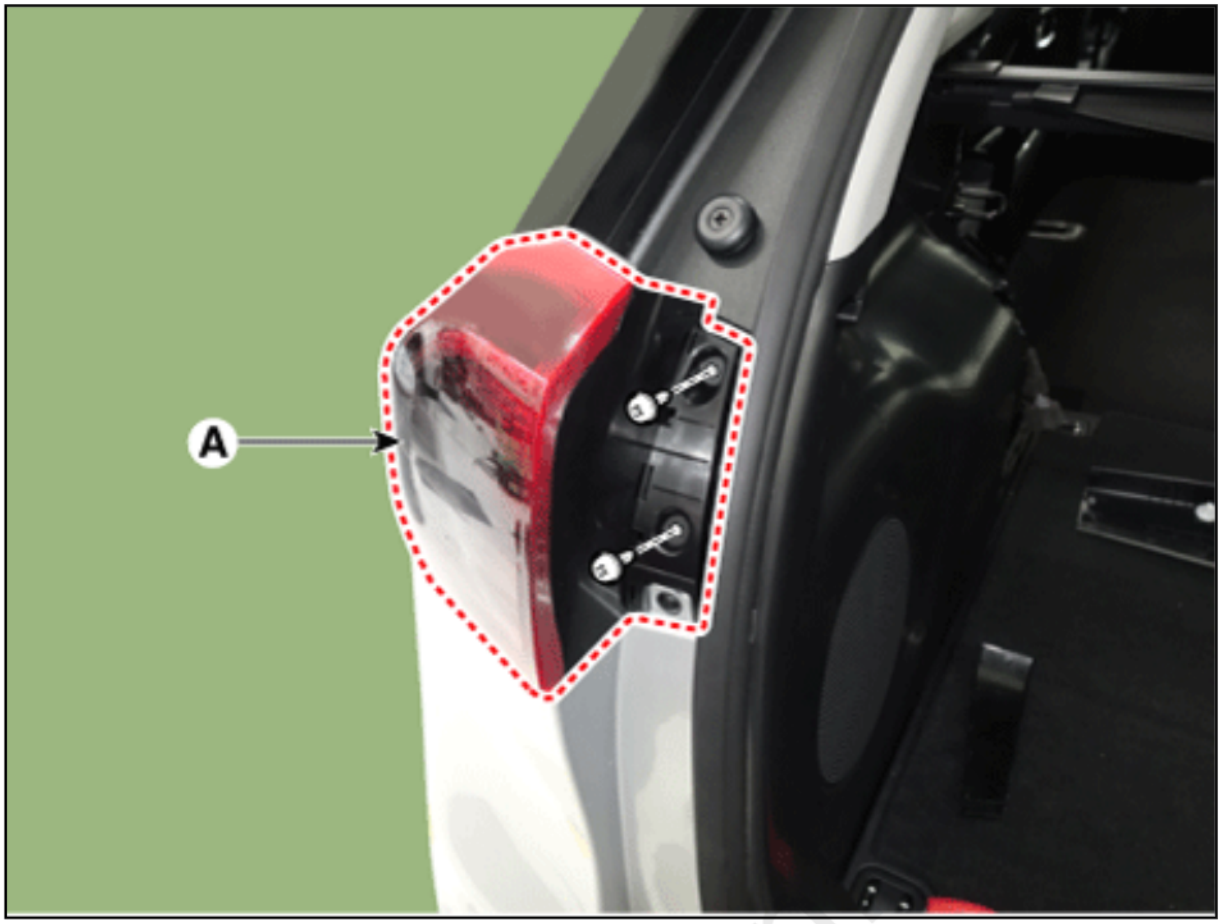

4. Remove the rear combination lamp packing (A).

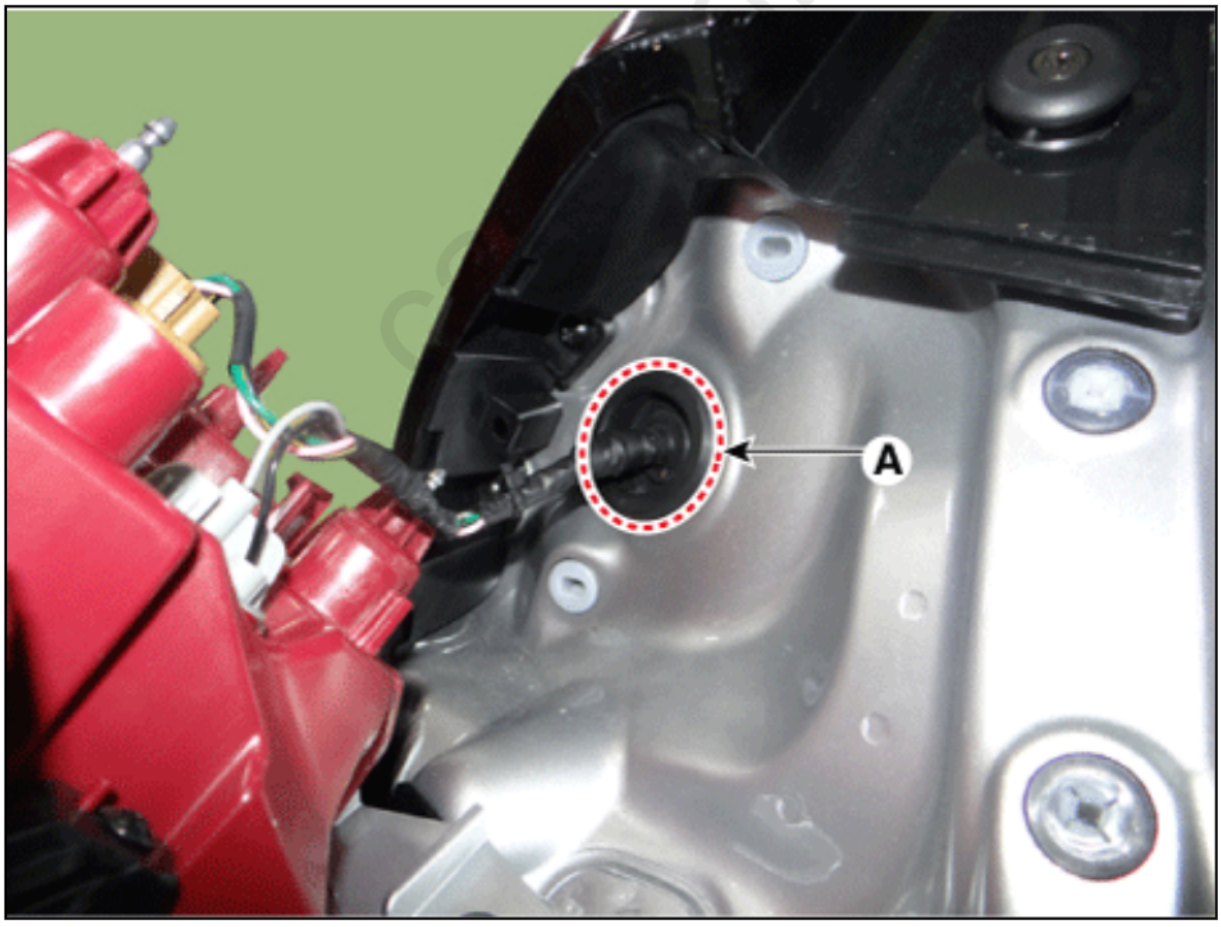

5. Disconnect the rear combination lamp connector (A).

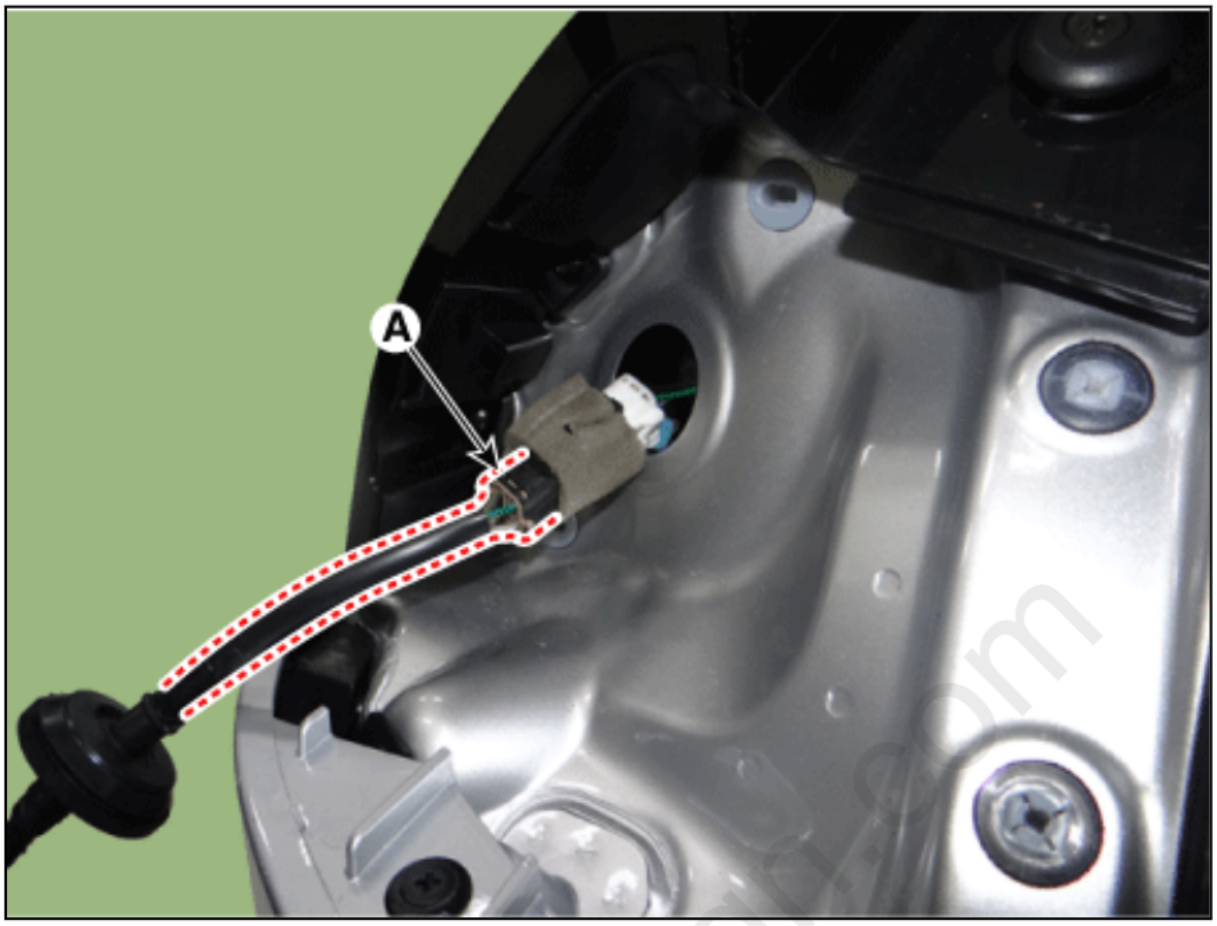

Rear Combination Lamp (Inside)

1. Disconnect the negative (-) battery terminal.
2. Using a screwdriver or remover, remove the rear combination lamp cover (A).

cardiagn.com

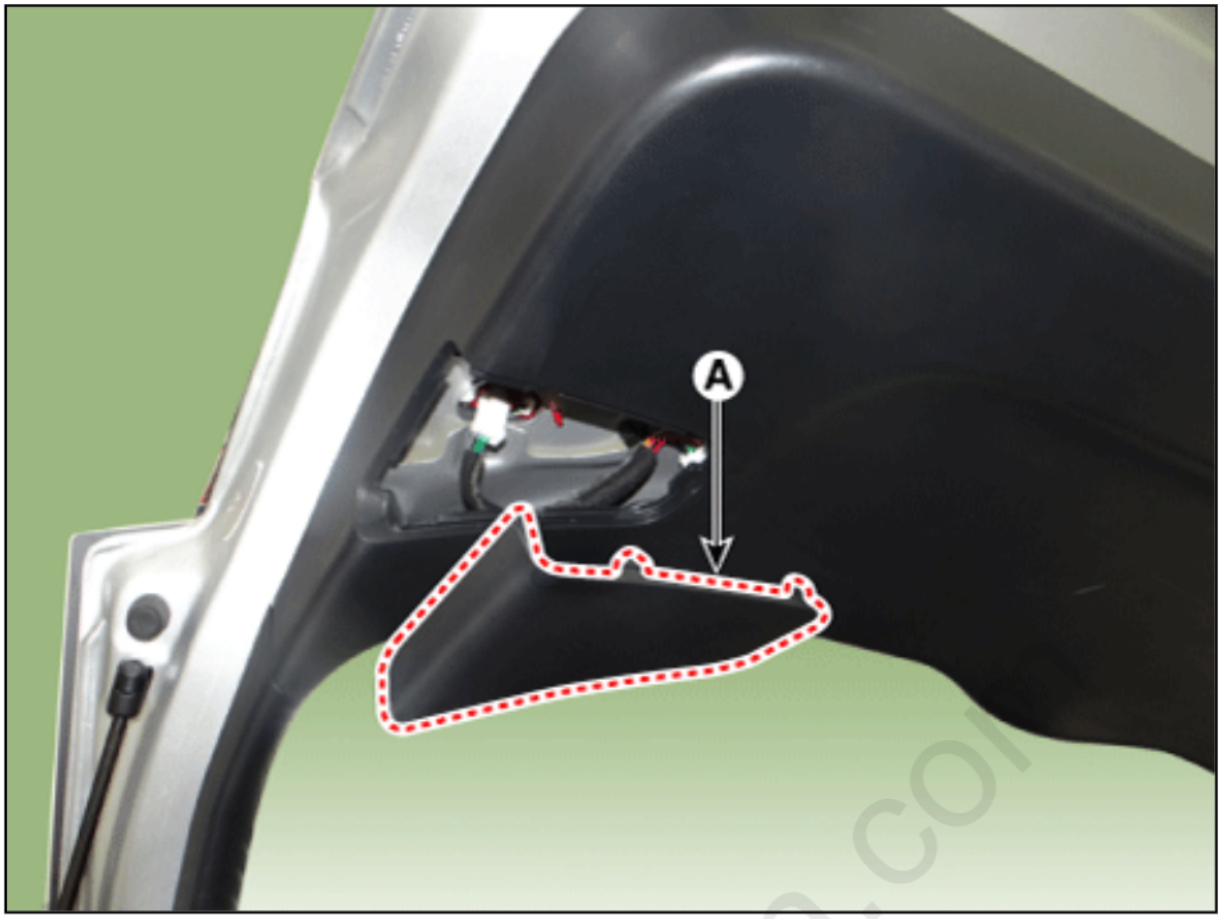

3. Disconnect the connector (A) and then remove the rear combination lamp after loosening the nuts.

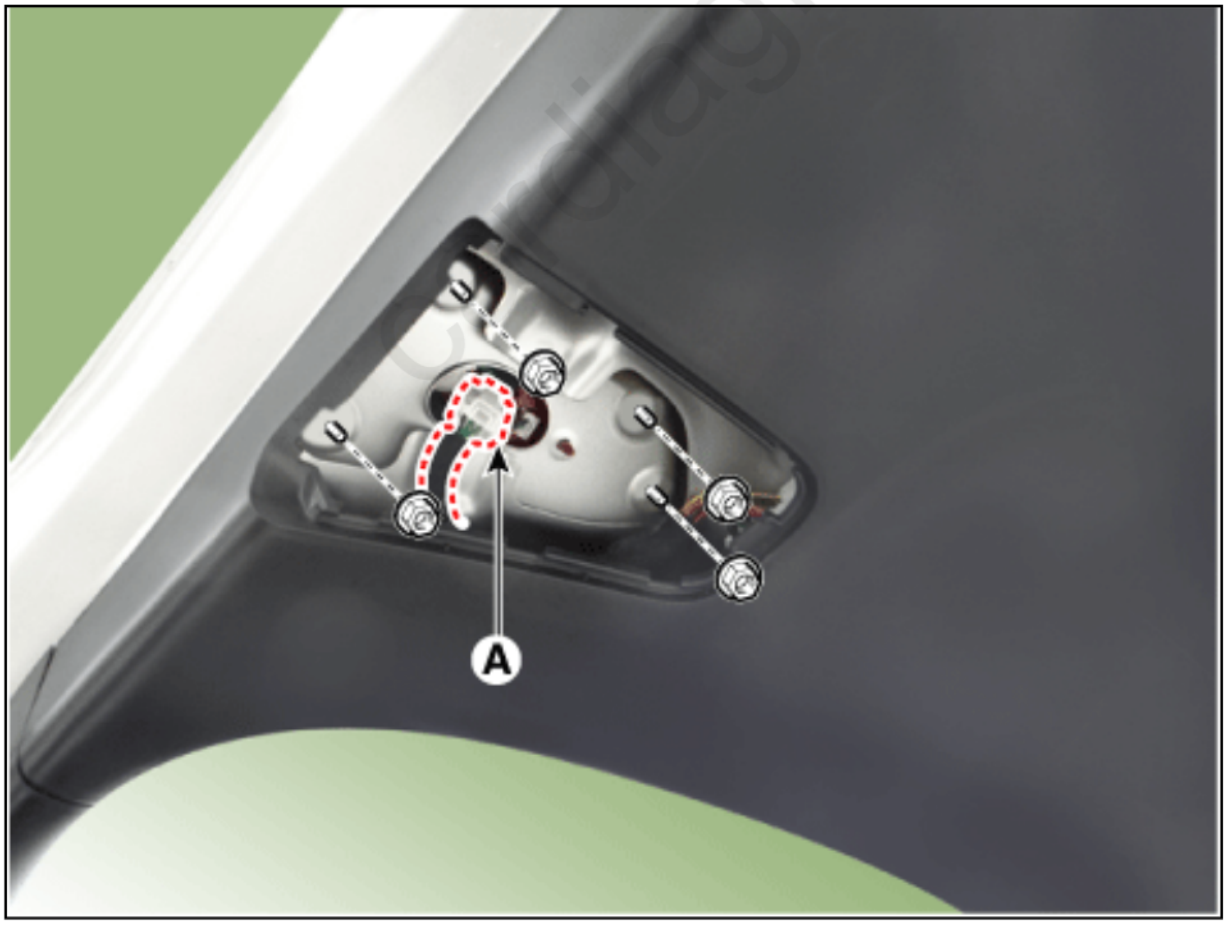

Back up lamp

1. Disconnect the negative (-) battery terminal.
2. Remove the rear bumper cover.
   (Refer to Body - "Rear bumper Cover")
3. Disconnect the back up lamp connector (A).



4. Remove the back up lamp (A) after loosening the screws.



Installation

1. Install in the reverse order of removal.

Replacement

Tail Lamp

1. Remove the inside rear combination lamp.
   (Refer to Lighting System - "Rear Combination Lamp")
2. Remove the tail lamp socket (A) by turning it in the counterclockwise direction.

cardiagn

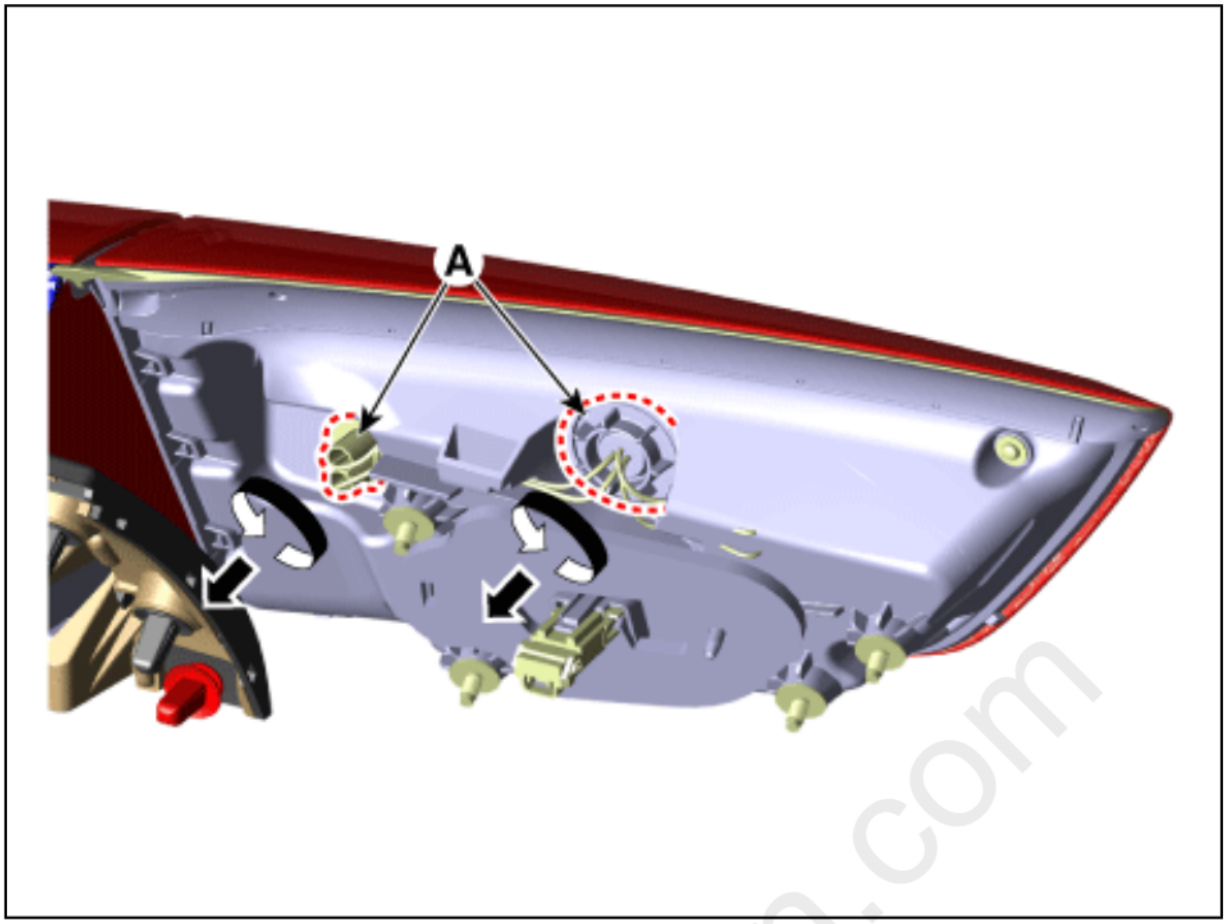

3. Replace the tail lamp bulb (A).

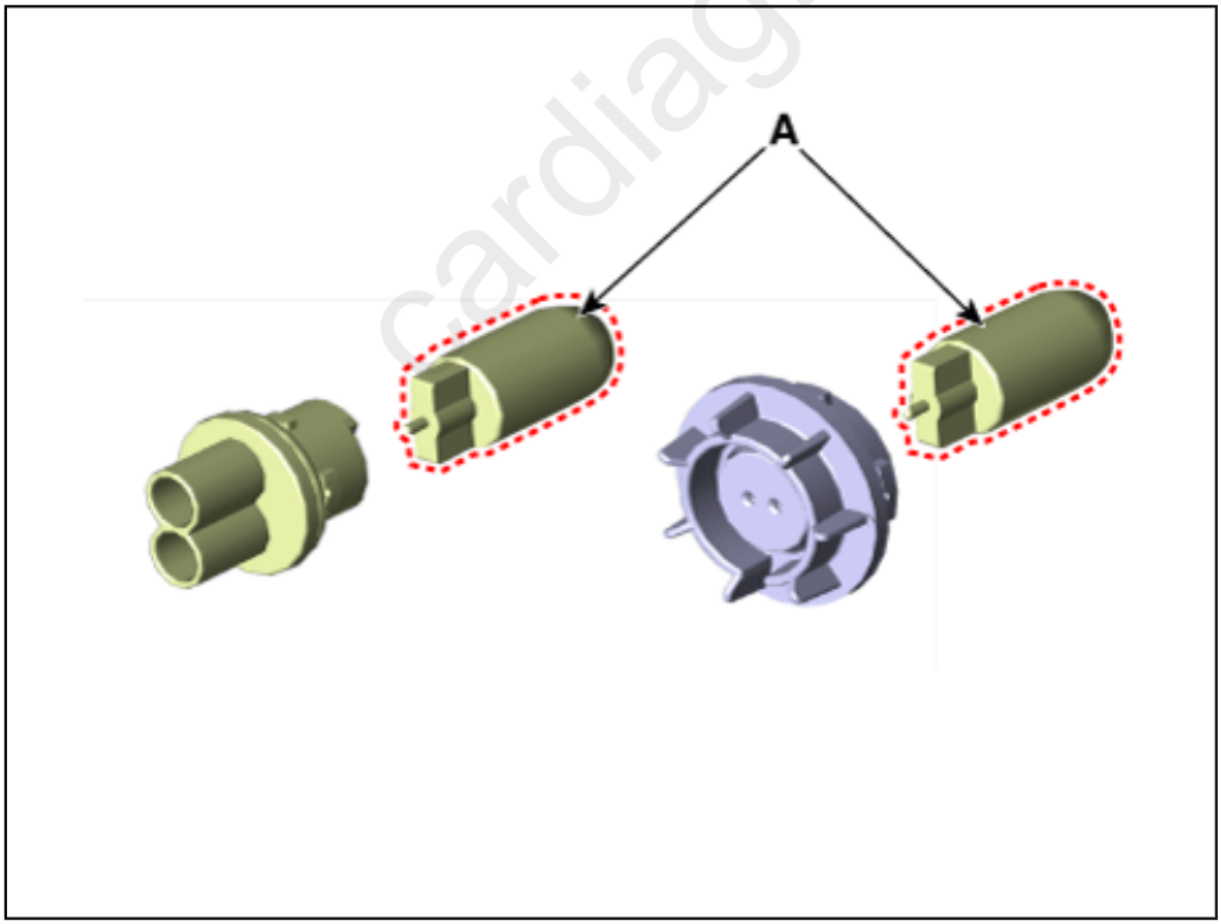

cardiagn.com

Tail Lamp & Stop Lamp

1. Remove the outside rear combination lamp.
   (Refer to Lighting System - "Rear Combination Lamp")
2. Remove the tail lamp & stop lamp socket (A) by turning it in the counter clockwise direction.

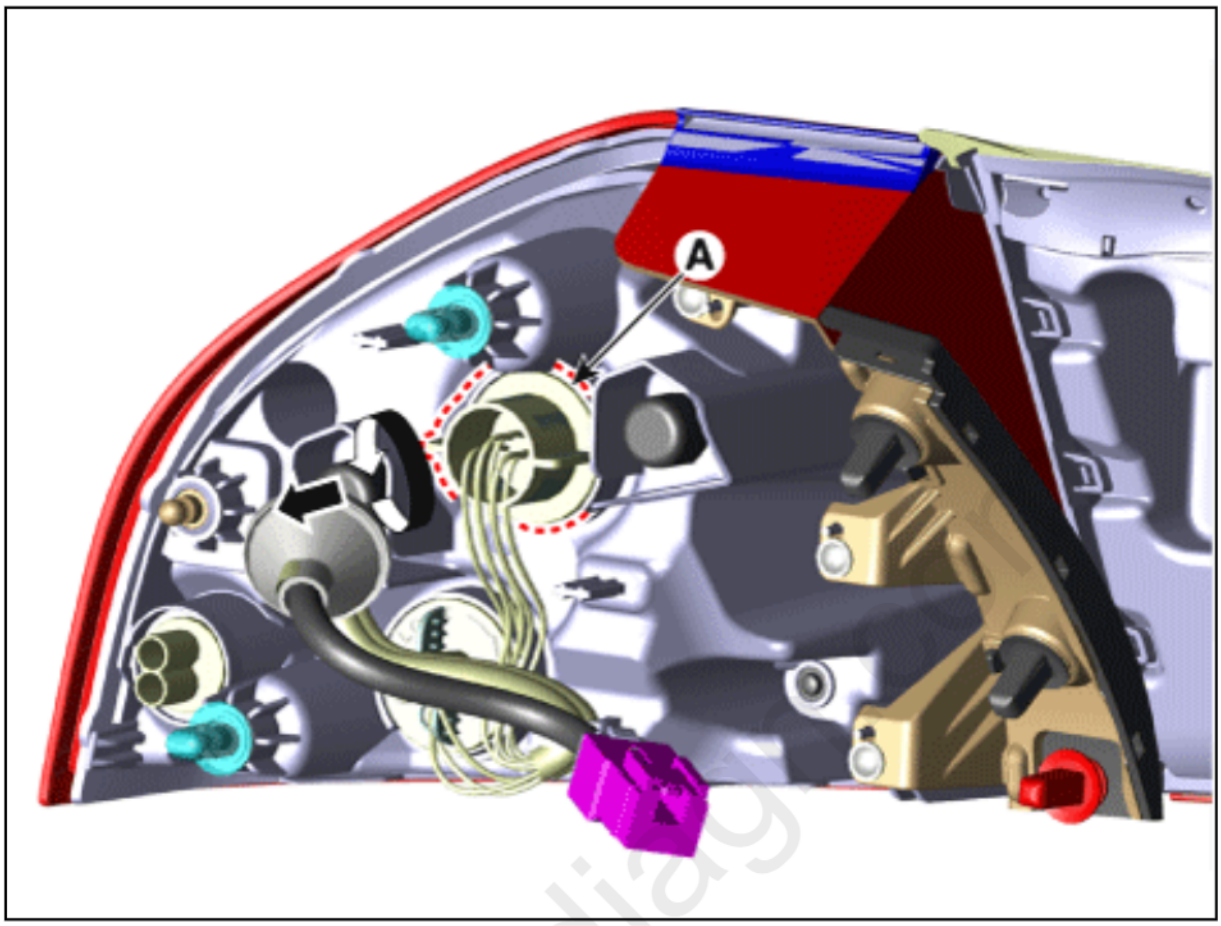

3. Replace the tail lamp & stop lamp bulb (A).

cardiag

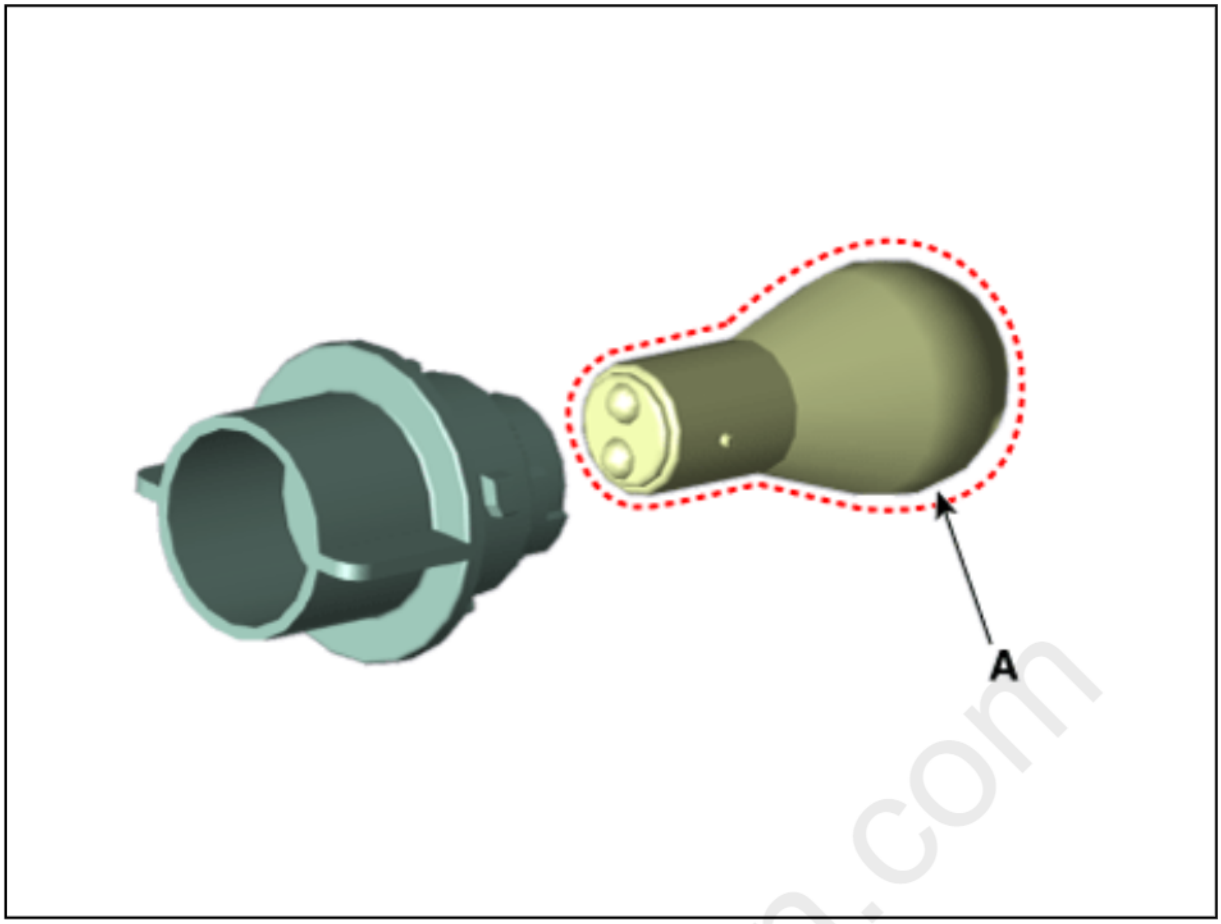

Turn Signal Lamp

1. Remove the outside rear combination lamp.
   (Refer to Lighting System - "Rear Combination Lamp")
2. Remove the turn signal lamp socket (A) by turning it in the counter clockwise direction.

cardiagn.com

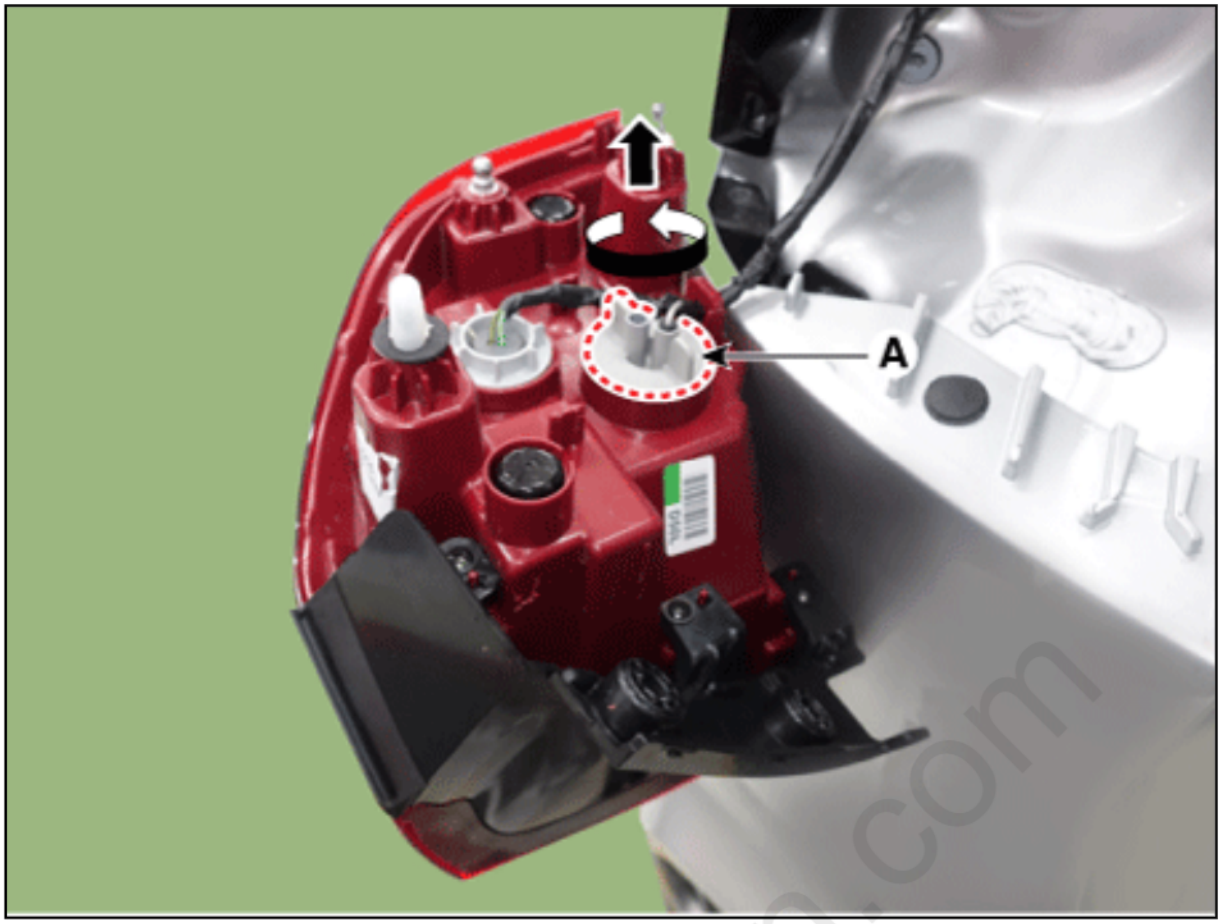

3. Replace the turn signal lamp bulb (A).

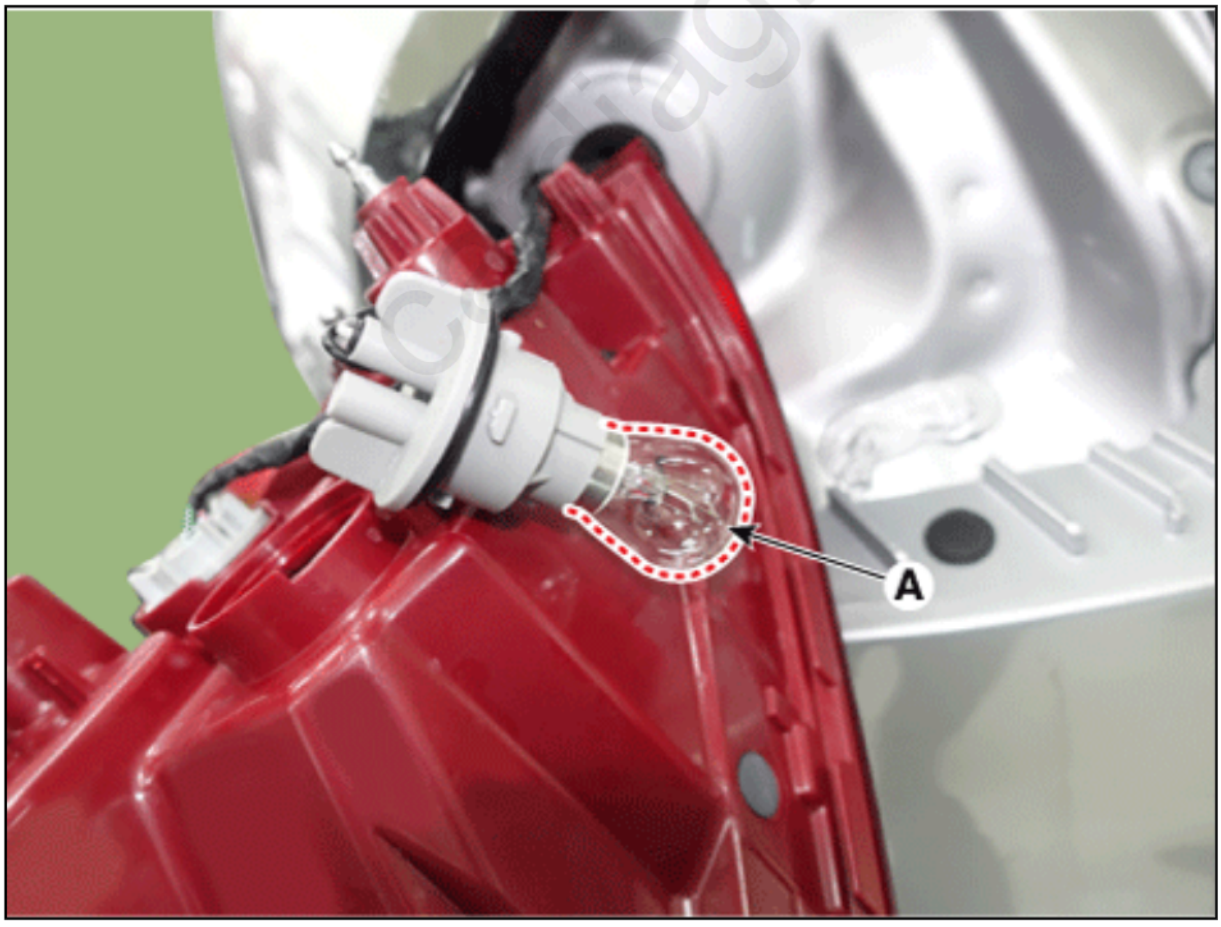

Back-up Lamp

1. Remove the rear bumper under cover (A).

[LH]

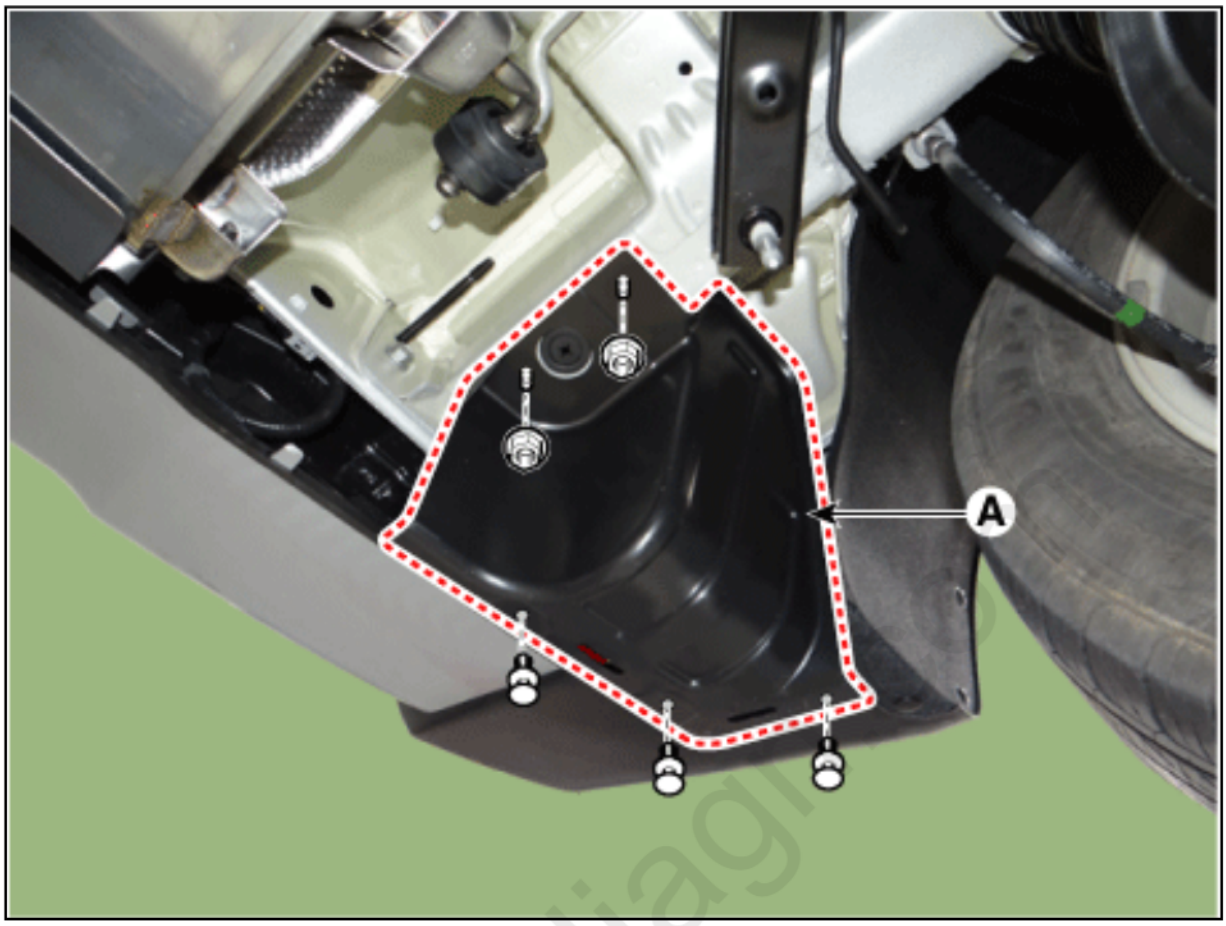

[RH]

cardiagn

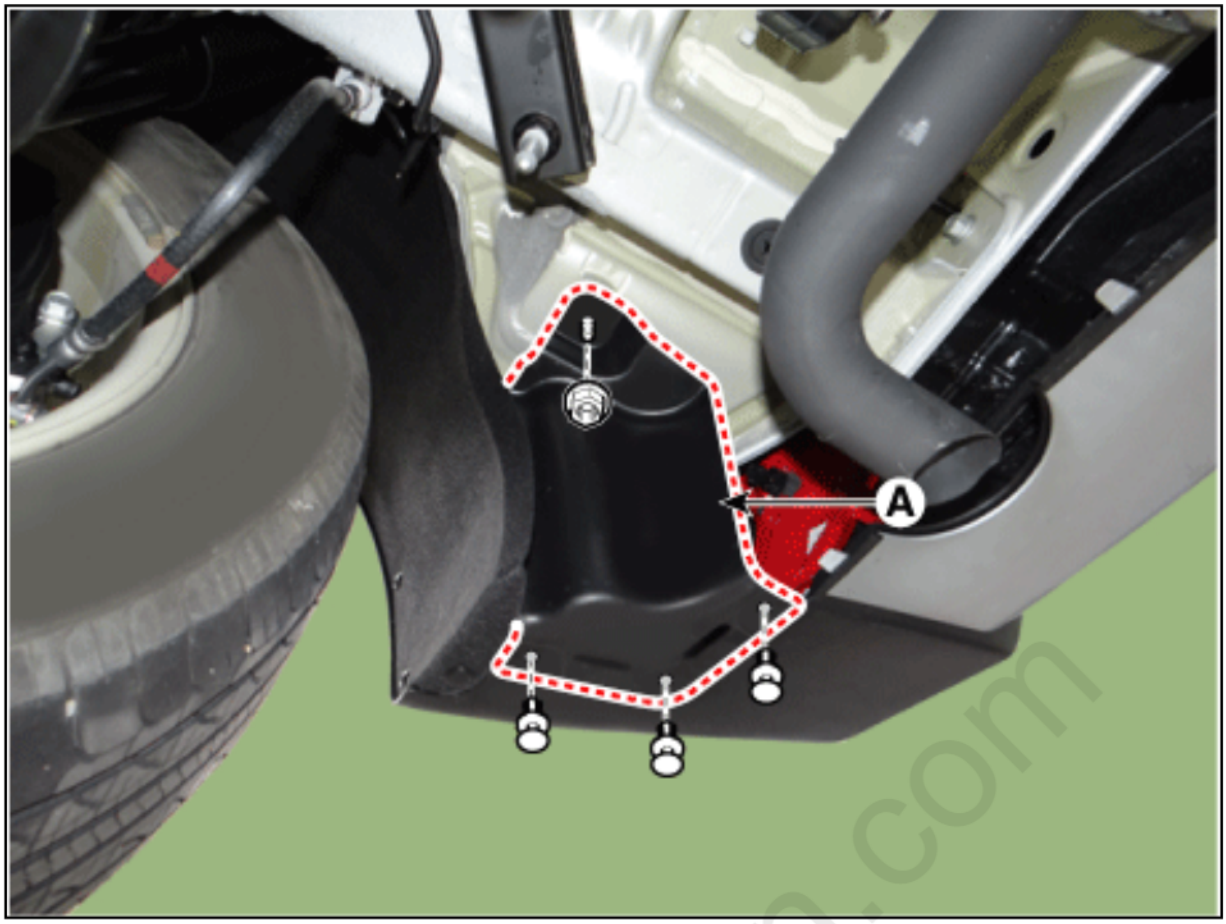

2. Remove the back-up lamp socket (A) by turning it in the counterclockwise direction.



3. Replace the back-up lamp bulb (A).



cardiag

Please rate this document after reviewing at the bottom of this page.

Connector and Terminal
Function

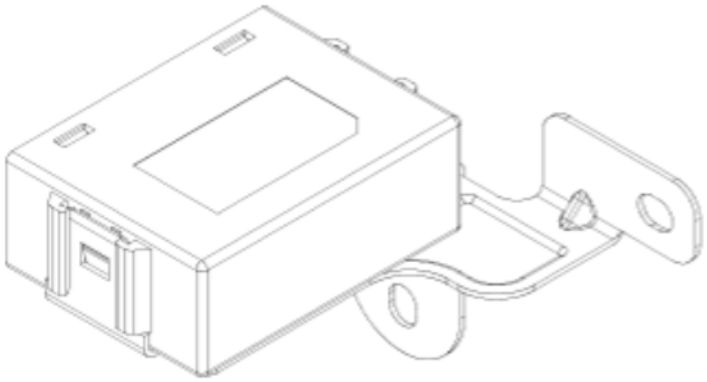

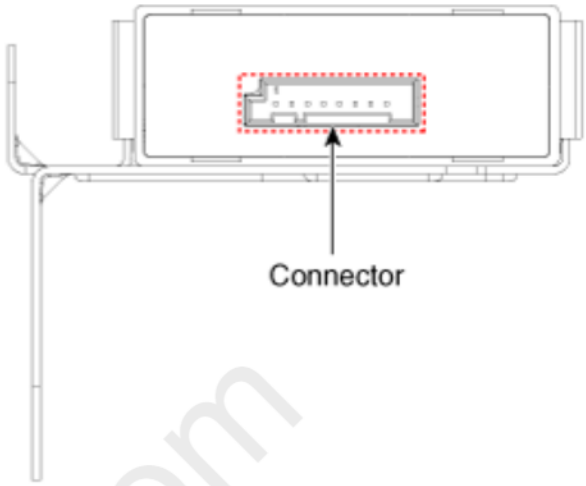

Connector A	Pin	Function
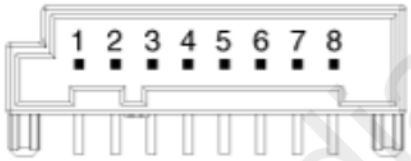	1	Ground
	2	-
	3	B-CAN (Low)
	4	B-CAN (High)
	5	-
	6	LIN
	7	-
	8	Power

cardiagn.com

Circuit
Diagram

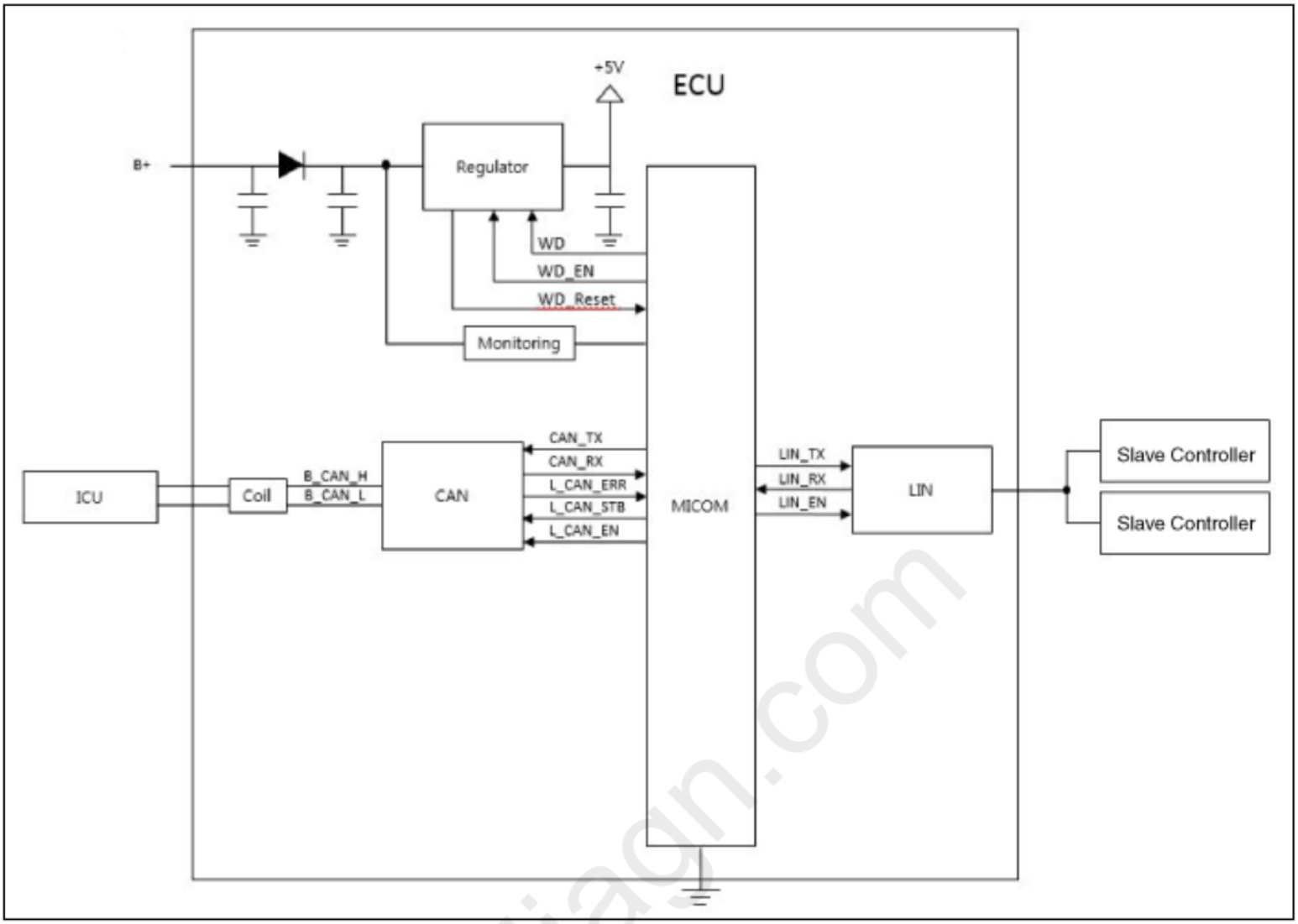

cardiagn.com

Please rate this document after reviewing at the bottom of this page.

Removal

1. Remove the glove box housing.
   (Refer to Body - "Glove box housing")
2. Remove the mood lamp unit (A) after loosening the mounting nuts.

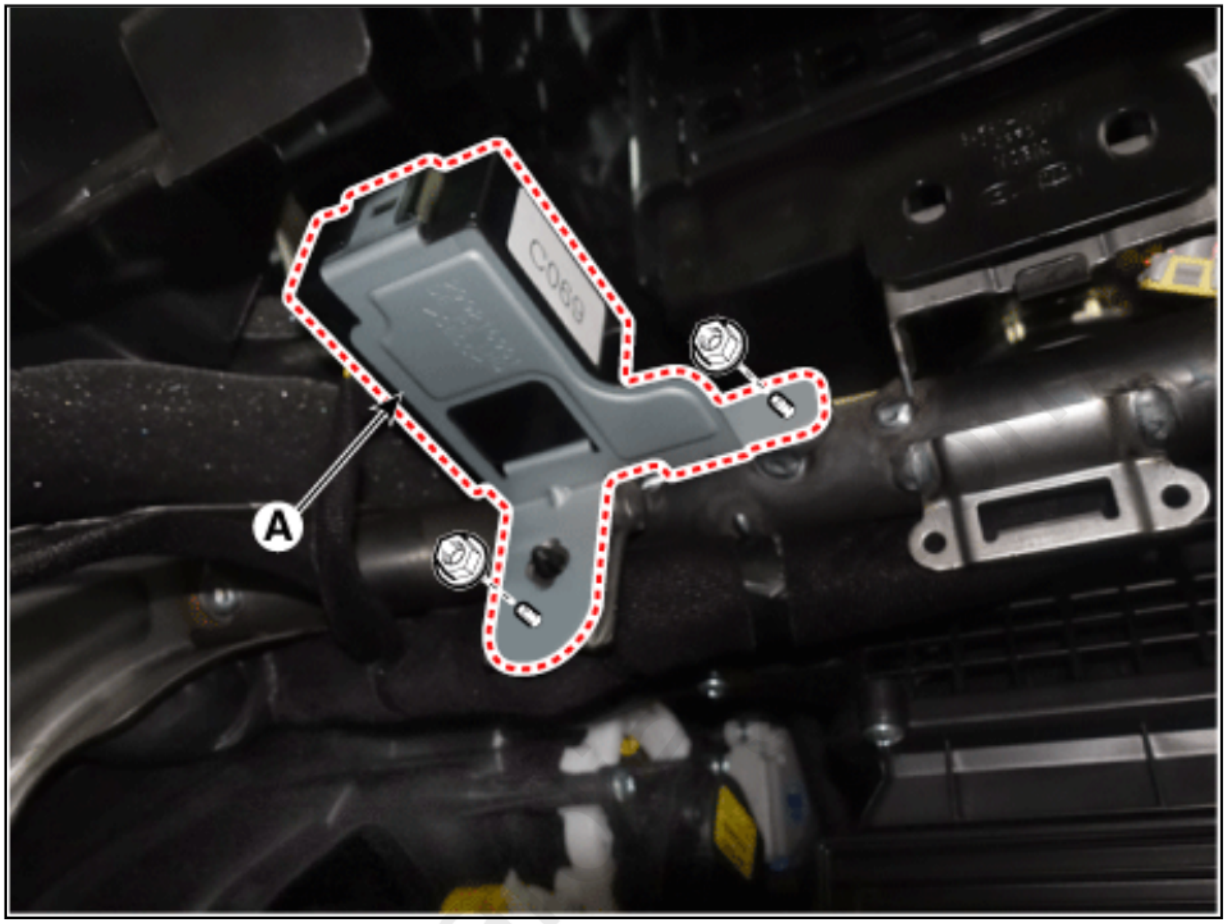

3. Disconnect the connector (A) from the mood lamp unit.

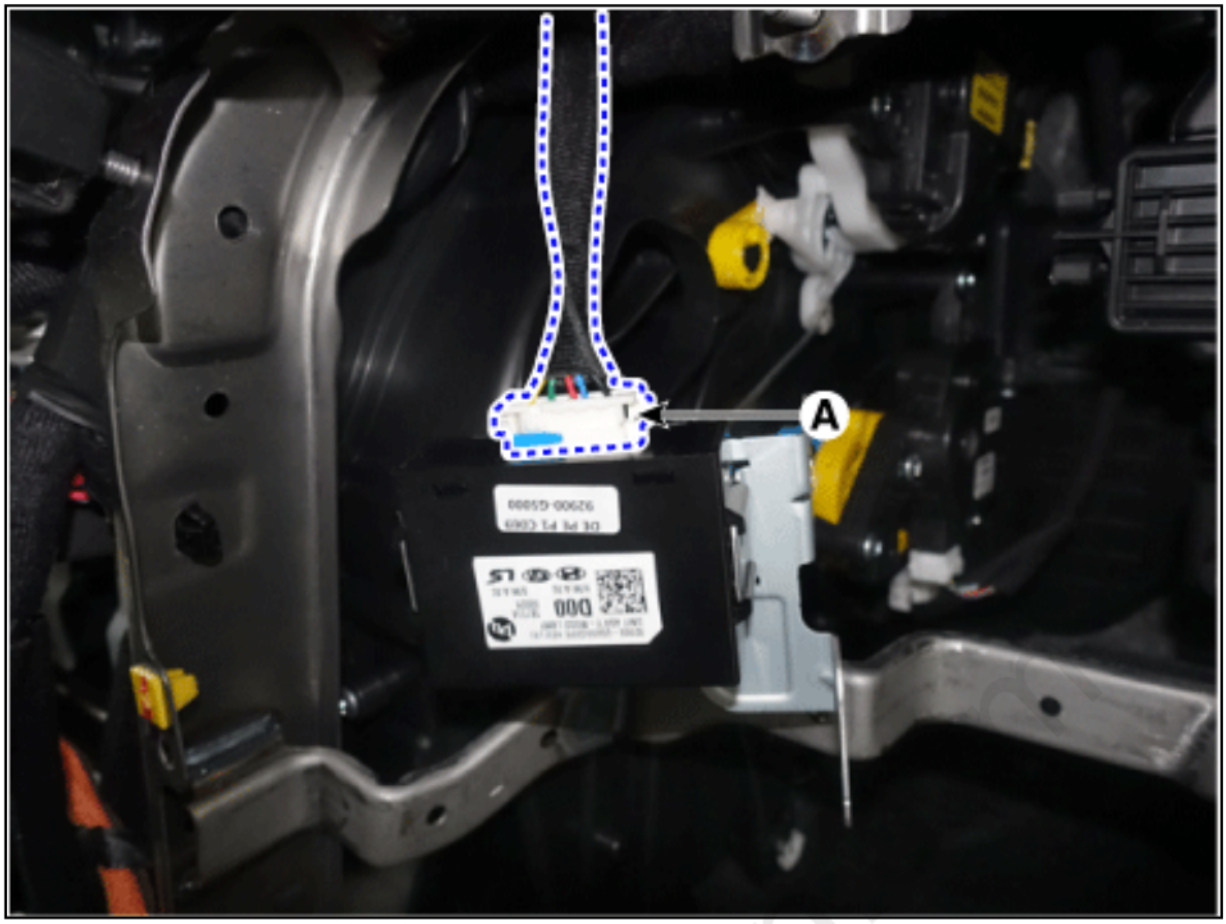

Installation

1. Install in the reverse order of removal.

cardiagn

Please rate this document after reviewing at the bottom of this page.

Circuit
Diagram

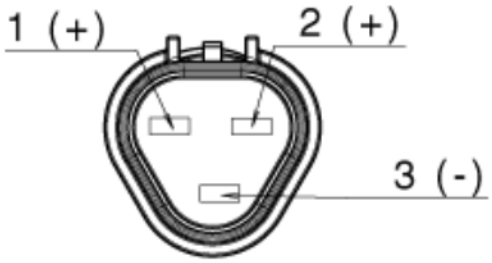

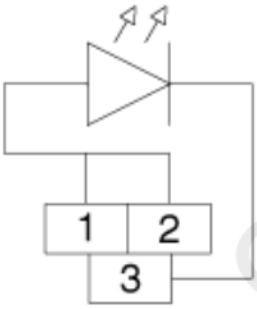

Pin	Function	NOTE
1	DRL	
2	Position lamp	
3	Ground	

cardiagn.com

Please rate this document after reviewing at the bottom of this page.

Removal

1. Remove the front bumper assembly.
   (Refer to Body - "Front Bumper Assembly")
2. Disconnect the connector (A) from the DRL.

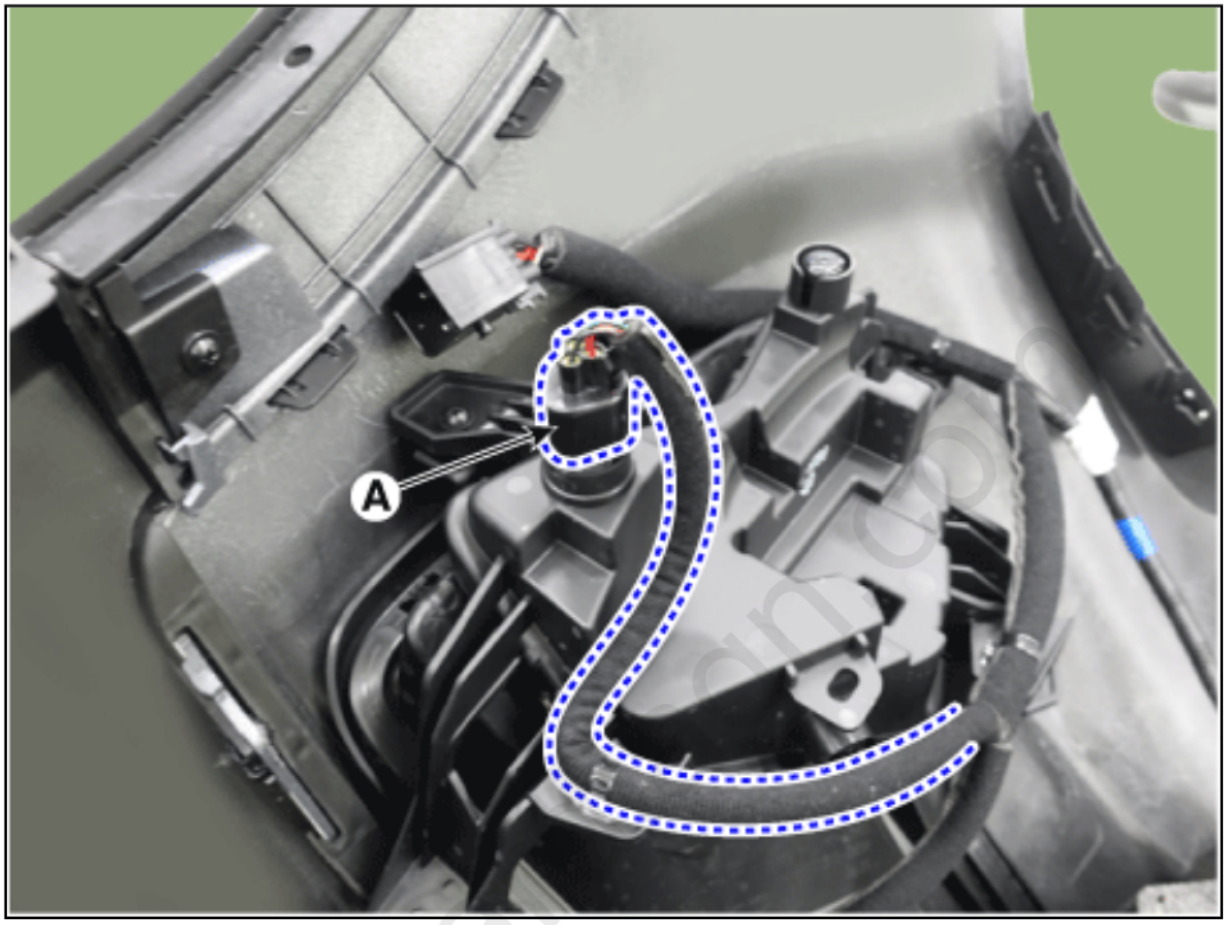

3. Remove the DRL (A) after loosening the mounting screws.

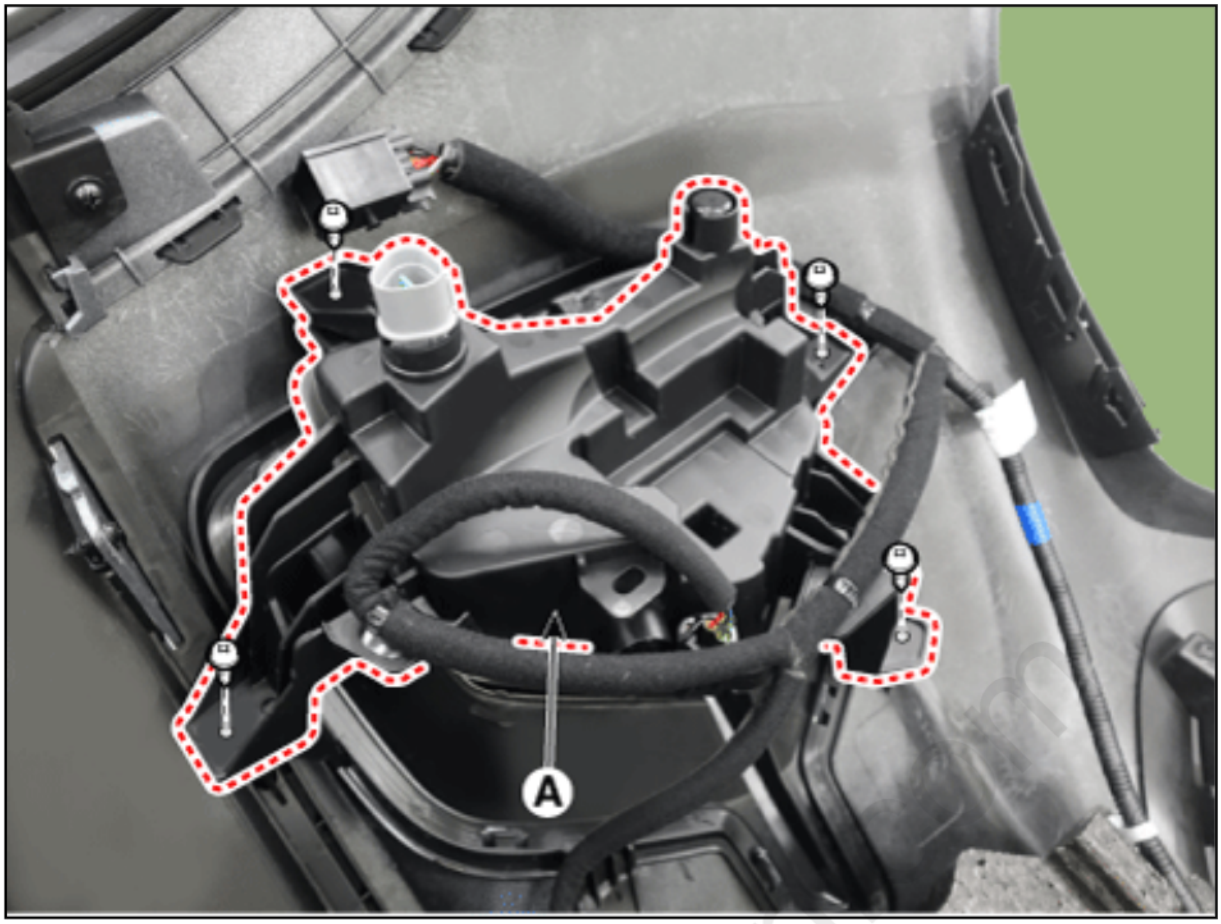

Installation

1. Install in the reverse order of removal.

cardiagn.com

Please rate this document after reviewing at the bottom of this page.

Specifications

Items		Specifications
Rated voltage		DC 12 V
Operating temperature range		-22 - 176°F (-30 - 80°C)
Rated load	Washer	Washer : 6A (Motor load)

cardiagn.com

Please rate this document after reviewing at the bottom of this page.

Component

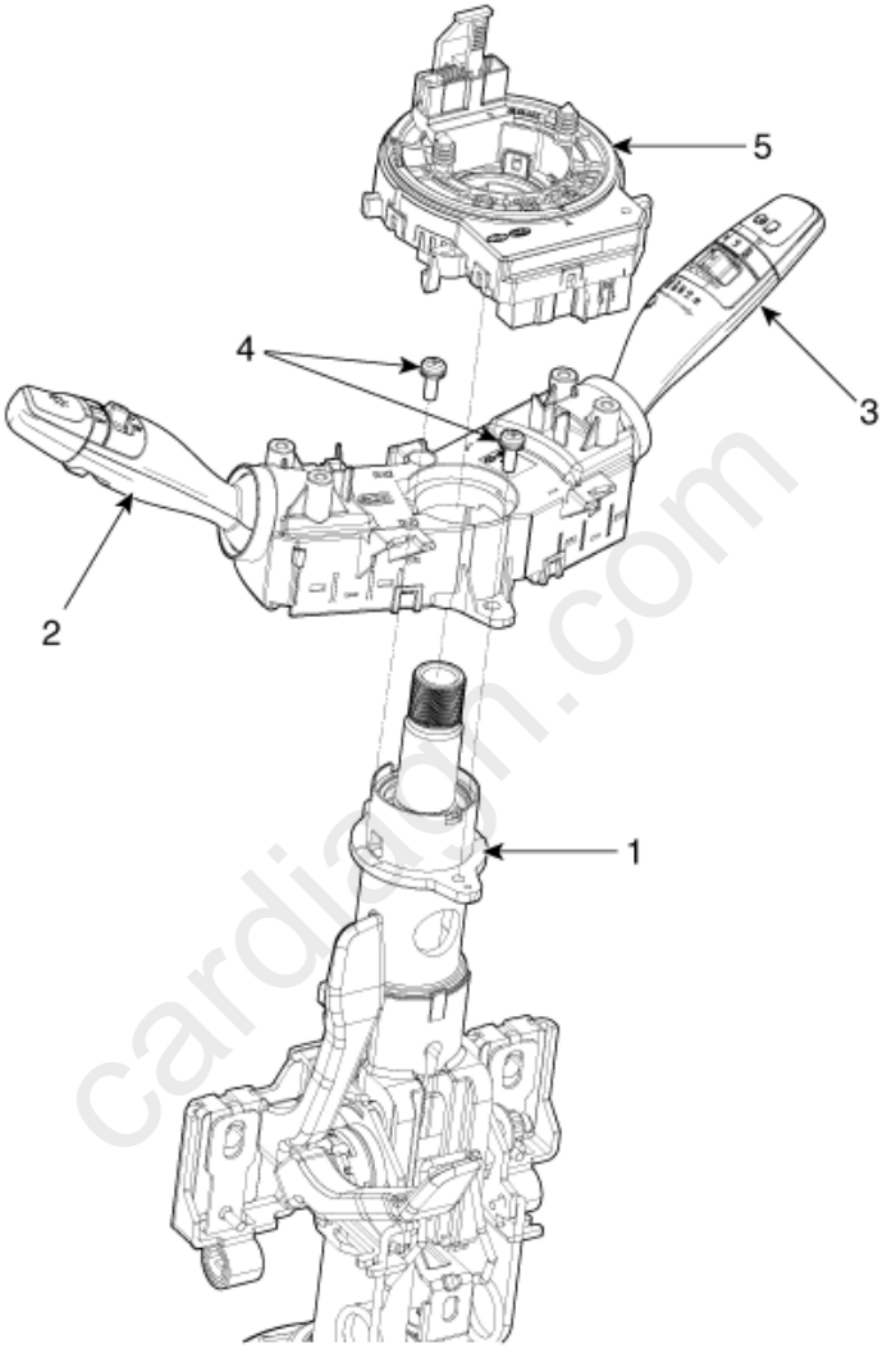

* Assembly sequence :
① → ② → ③ → Wiring connector

1 . Steering column shaft
2 . Lighting switch
3 . Wiper/Washer switch
4 . Screws
5 . Clock spring

cardiagn.com

[LHD]

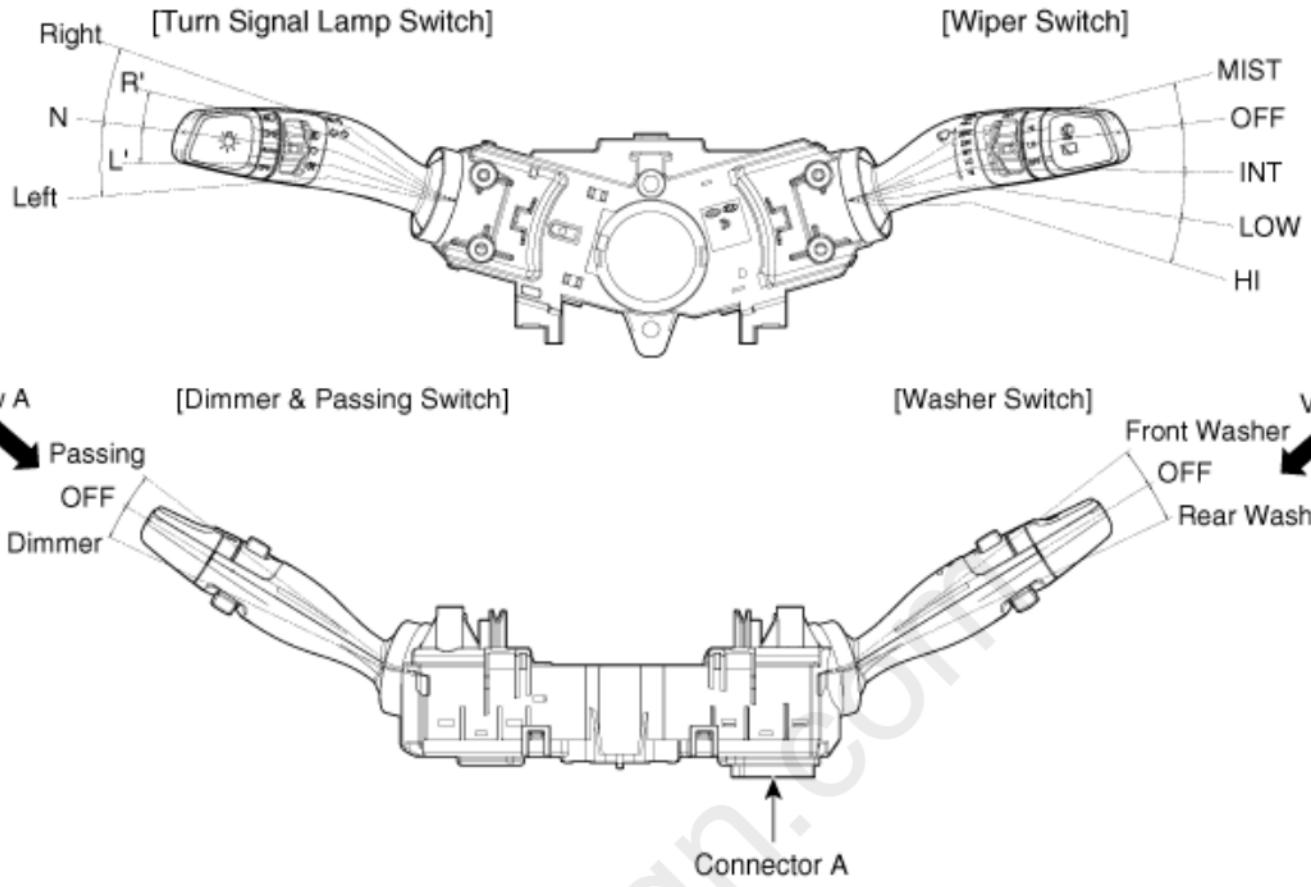

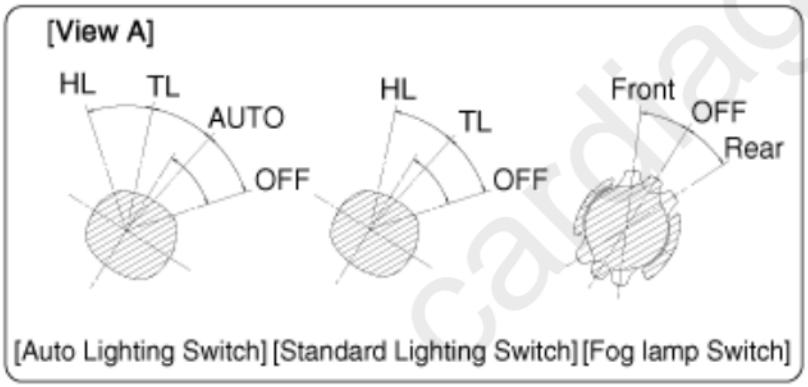

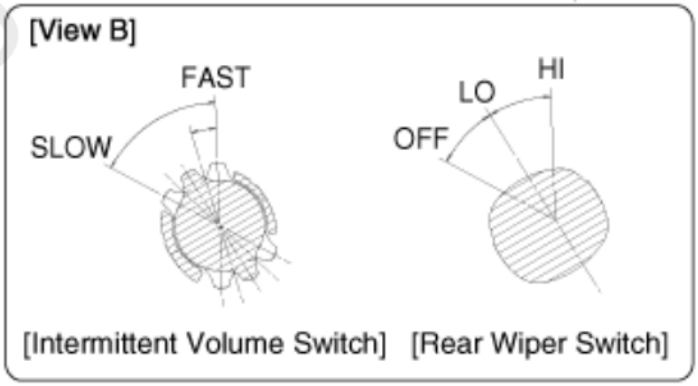

Connector A	No.	Description	No.	Description
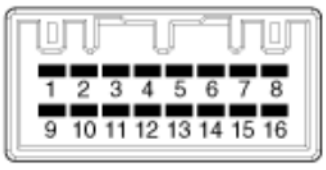	1	Front wiper switch	9	Ground
	2	Front wiper low backup switch	10	Fog lamp switch
	3	-	11	Ground
	4	Rear washer motor switch	12	Turn signal lamp switch
	5	-	13	Dimmer & Passing switch
	6	Front washer motor switch	14	Light switch
	7	Front wiper intermittent volume switch	15	Headlamp low backup switch
	8	IGN2	16	Rear wiper switch

[RHD]

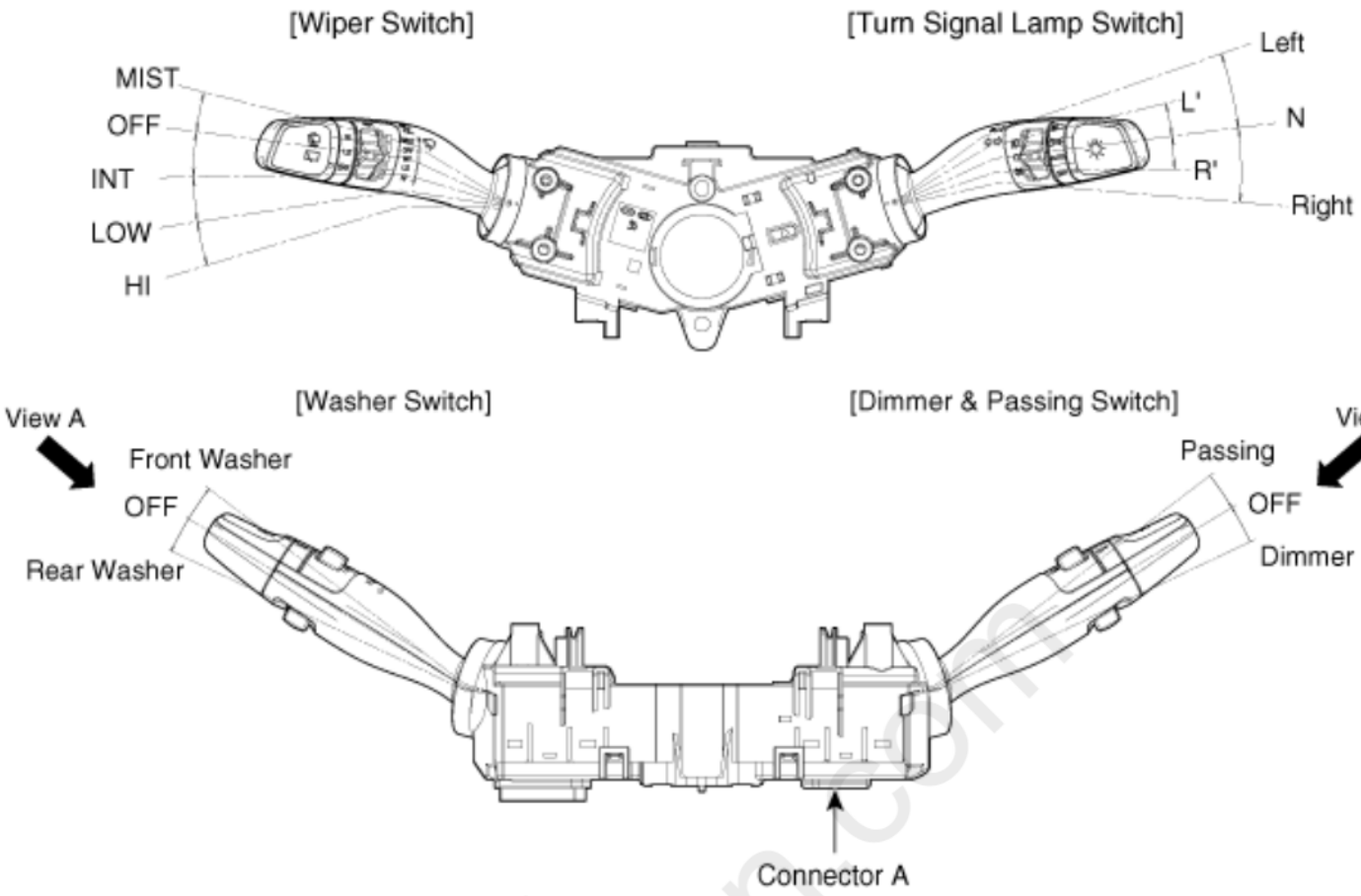

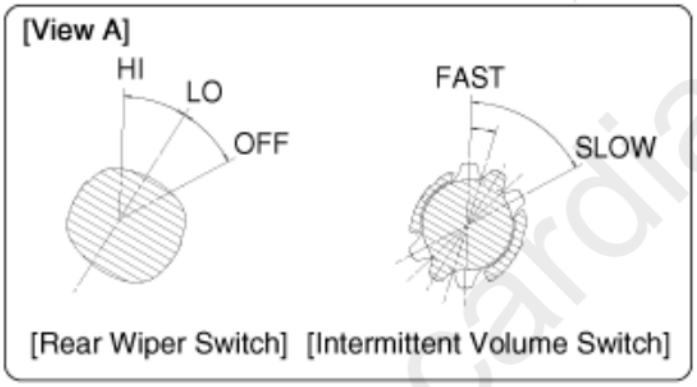

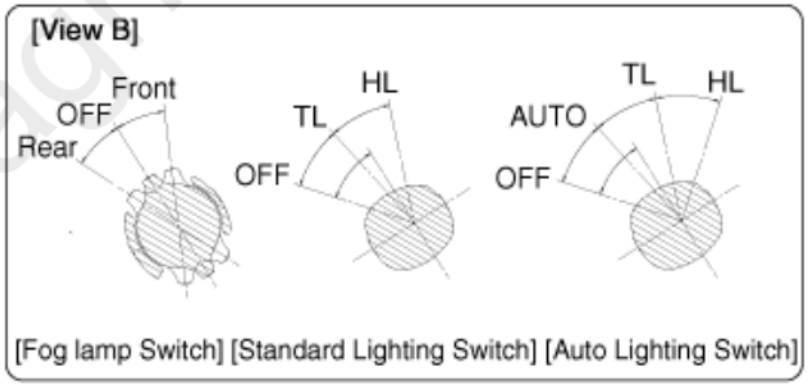

cardiagn.com

Connector A	No.	Description	No.	Description
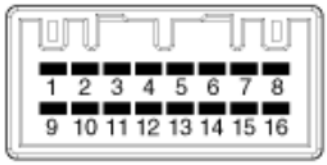	1	Front washer motor switch	9	Rear wiper switch
	2	Front wiper intermittent volume switch	10	Headlamp low backup switch
	3	Front wiper switch	11	Light switch
	4	-	12	Dimmer & Passing switch
	5	-	13	Turn signal lamp switch
	6	Front wiper low backup switch	14	Fog lamp switch
	7	IGN2	15	Ground
	8	Rear washer motor switch	16	Ground

Please rate this document after reviewing at the bottom of this page.

Removal

1. Disconnect the negative (-) battery terminal.
2. Remove the steering wheel.
   (Refer to Steering System - "Steering Wheel")
3. Remove the steering column upper and lower shrouds after loosening the screws.
   (Refer to Body - "Steering Column Shroud Panal")
4. Remove the clock spring.
   (Refer to Restraint - "Driver Airbag (DAB) Module and Clock Spring")

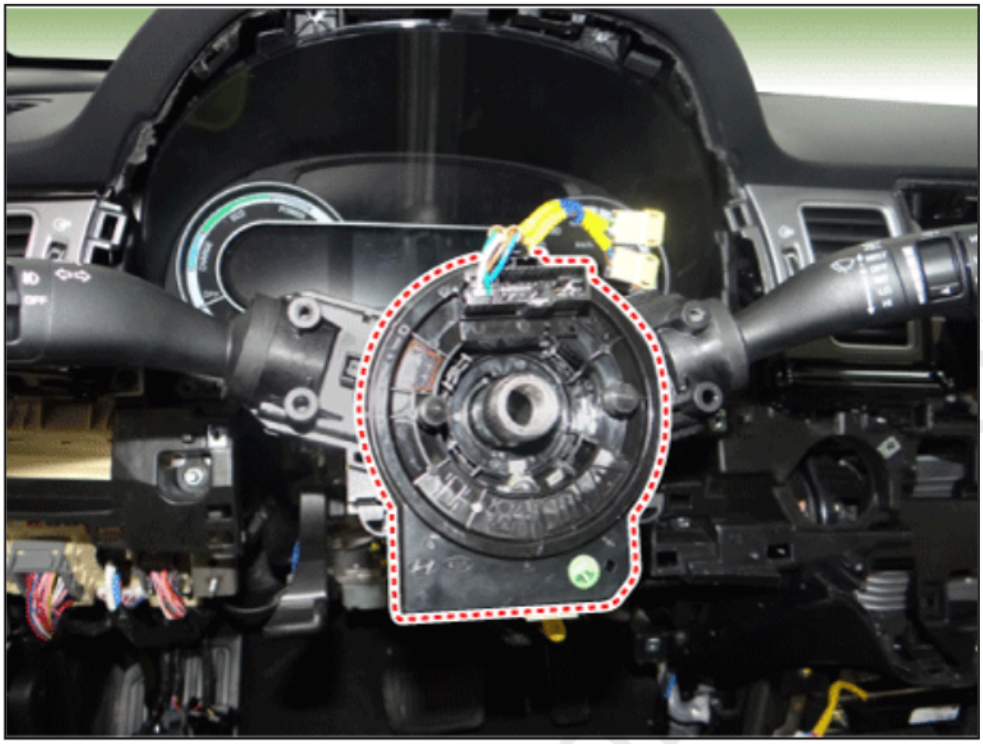

5. Disconnect the multifunction switch connector (A).

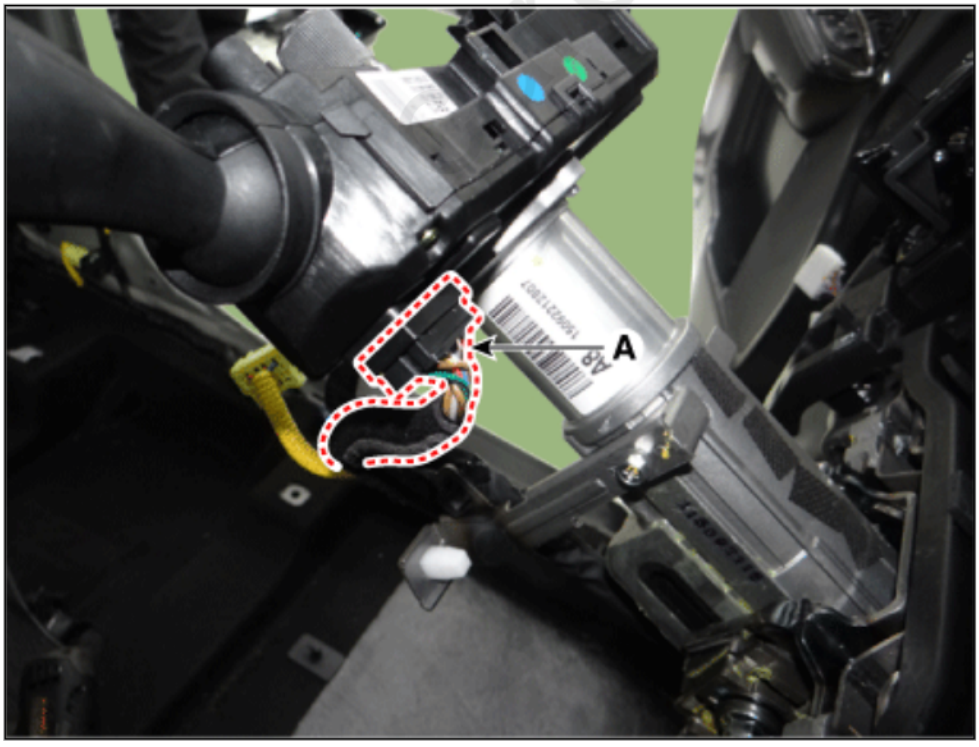

6. Remove the multifunction switch assembly (A) after loosening the screws.

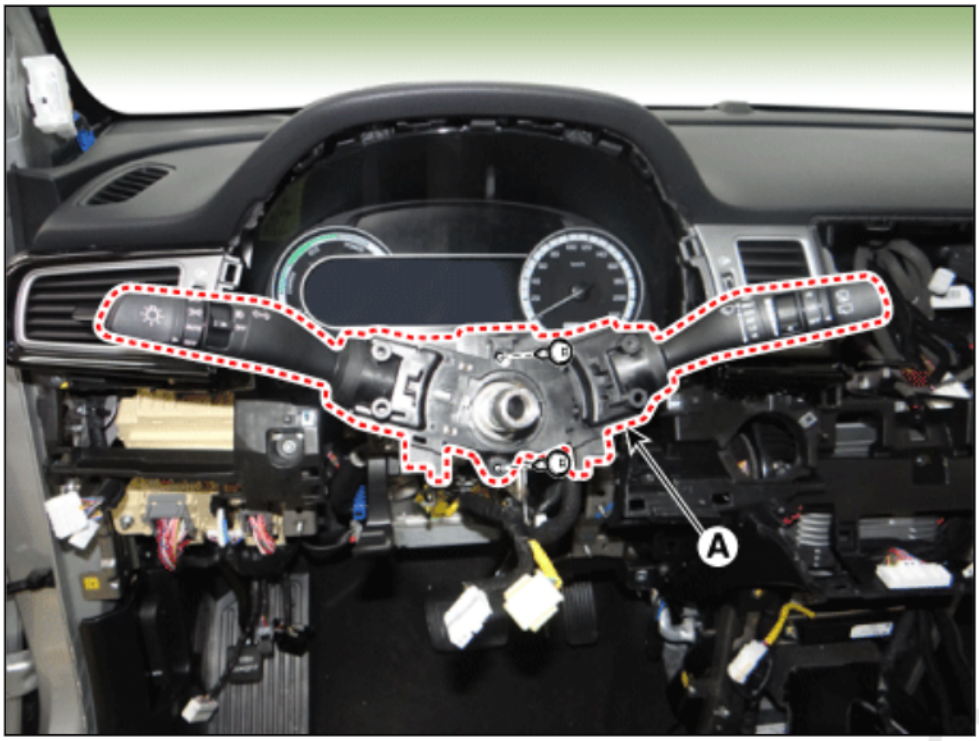

Installation

1. Install in the reverse order of removal.

Work with fully understanding of repair procedure and caution relating to clock spring.
(Refer to Restraint - "Driver Airbag (DAB) Module and Clock Spring")

2. Check if the steering wheel remote control, airbag system and horn are normally operating after turning the handle all the way left and right when installing air bag module is done.

Inspection

Multifunction Switch Inspection

1. Check for continuity between the terminals in each switch position as shown below.

cardiagn.com

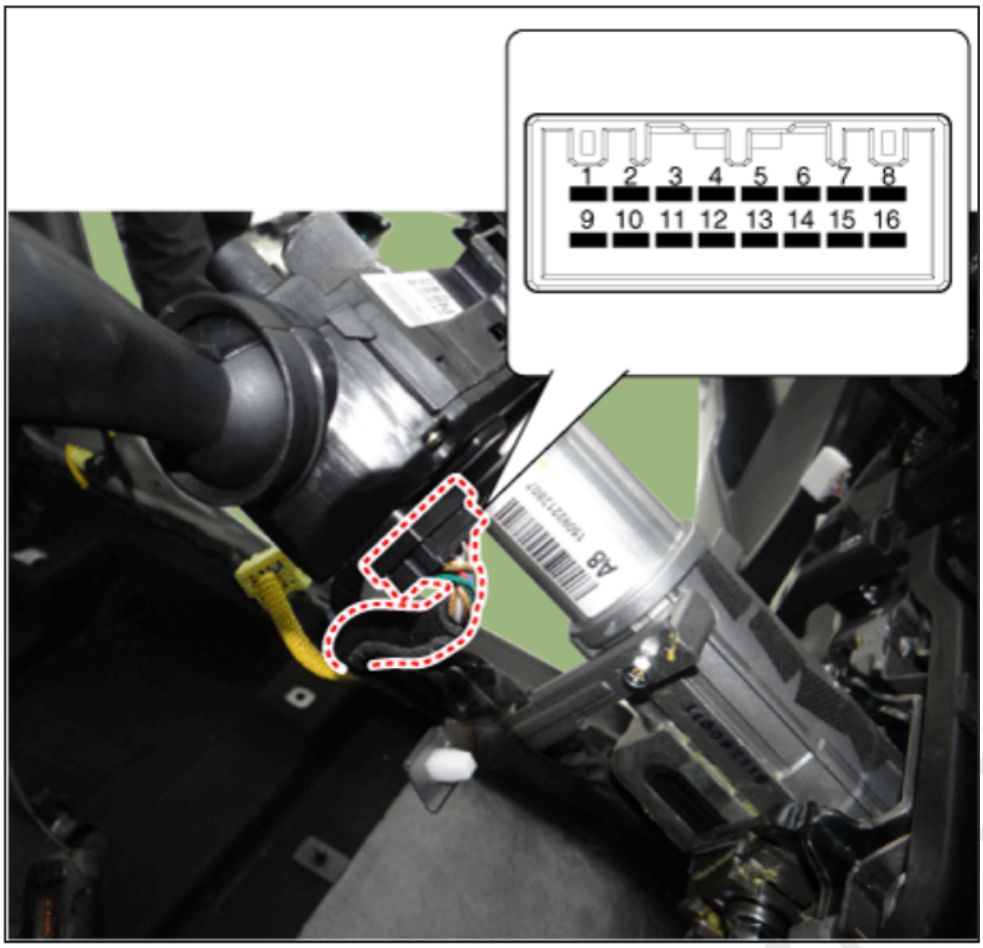

[Left Handle Drive]

Switch	Switch position	Switch terminal	Resistance (Ω, ±3.5%)
Front wiper switch	MIST	1-9	330
	OFF		∞
	Intermittent (AUTO)		800
	LOW		1,800
	HIGH		5,700
Rear wiper switch	OFF	9-16	∞
	LOW		910
	HIGH		2,910
Wiper intermittent volume	Volume 1	7-9	330
	Volume 2		690
	Volume 3		1,310
	Volume 4		2,610
	Volume 5		7,310
Fog lamp switch	OFF	9-10	∞
	Front fog lamp		910
	Rear fog lamp		2,910

Turn signal switch	OFF	9-12	∞
	Left		910
	Right		2,910
Dimmer & Passing switch	OFF	9-13	∞
	Passing		910
	Dimmer		2,910
Light switch	OFF	9-14	∞
	AUTO / DRL		680
	Tail lamp		1,680
	Low beam		5,580

[Right Handle Drive]

Switch	Switch position	Switch terminal	Resistance (Ω, ±3.5%)
Front Wiper switch	MIST	3-16	330
	OFF		∞
	Intermittent (AUTO)		800
	LOW		1,800
	HIGH		5,700
Rear wiper switch	OFF	9-16	∞
	LOW		910
	HIGH		2,910
Wiper intermittent volume	Volume 1	2-16	330
	Volume 2		690
	Volume 3		1,310
	Volume 4		2,610
	Volume 5		7,310
Fog lamp switch	OFF	14-16	∞
	Front fog lamp		910
	Rear fog lamp		2,910
Turn signal switch	OFF	13-16	∞
	Left		910
	Right		2,910
Dimmer & Passing switch	OFF	12-16	∞
	Passing		910
	Dimmer		2,910
	OFF		∞

carmagn.com

Light switch	AUTO / DRL	11-16	680
	Tail lamp		1,680
	Low beam		5,580

Inspection (With KDS)

1. In the body electrical system, failure can be quickly diagnosed by using the vehicle diagnostic system (KDS).
   The diagnostic system(KDS) provides the following information.
   (1) Self diagnosis : Checking failure and code number (DTC)
   (2) Current data : Checking the system input/output data state
   (3) Actuation test : Checking the system operation condition
   (4) Additional function : Controlling other features including system option setting and zero point adjustment
2. Select the 'Car model' and the 'Body Control Module (BCM)' to be checked in order to check the vehicle with the tester.
3. Select the 'Current Data' menu to search the current state of the input/output data.

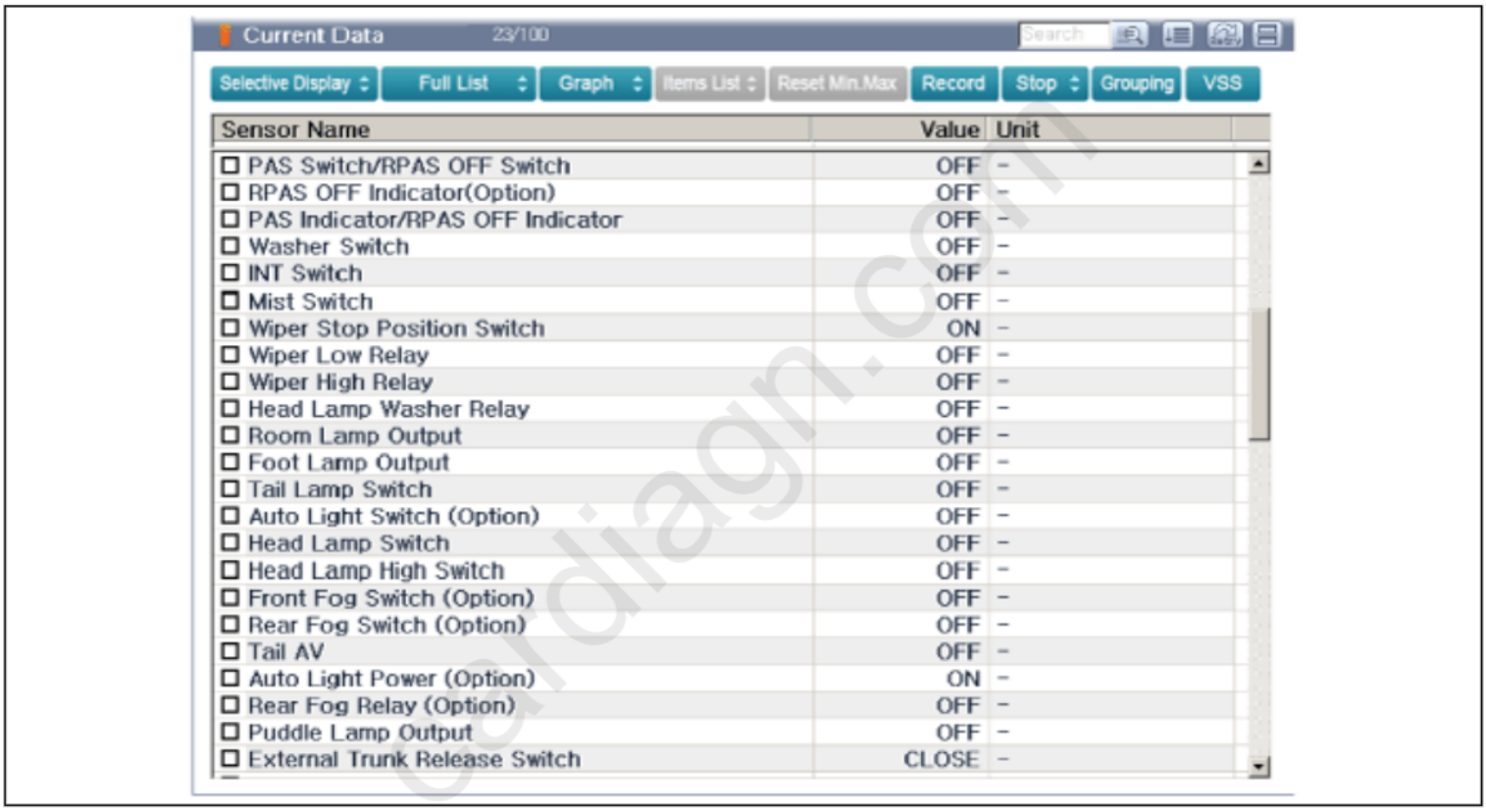

Please rate this document after reviewing at the bottom of this page.

Component
Location

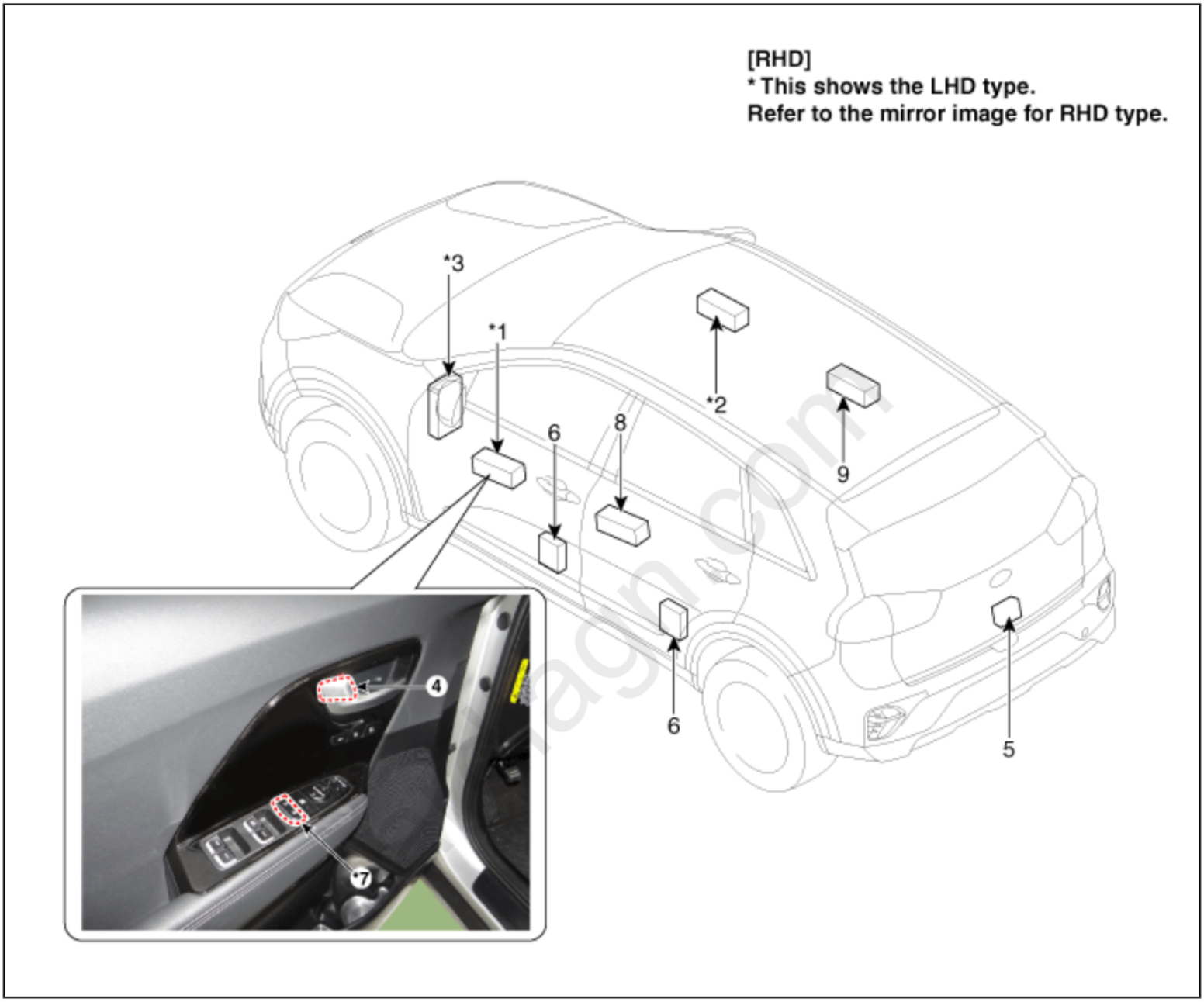

1. Driver power window switch
2. Assist power window switch
3 . Integrated Gateway & Power control Module (IGPM)
4 . Door lock knob
5 . Tailgate latch assembly
6. Door latch assembly
7 . Door lock/unlock switch
8 . Rear left power window switch
9 . Rear right power window switch

Please rate this document after reviewing at the bottom of this page.

Inspection

- When removing with a flat-tip screwdriver or remover, wrap protective tape around the tools to prevent damage to components.
- When removing the interior trim pieces, use a plastic panel removal tool not to damage the surface.
- Be careful to store and handle the trim when removing/installing because lubricant and oil can leave a stain on the trim.

Front Door Lock Module Inspection

1. Remove the front door trim.
   (Refer to Body - "Front Door Trim")
2. Remove the front door module.
   (Refer to Body - "Front Door Module")
3. Disconnect the connector from the actuator.

cardiagn.com

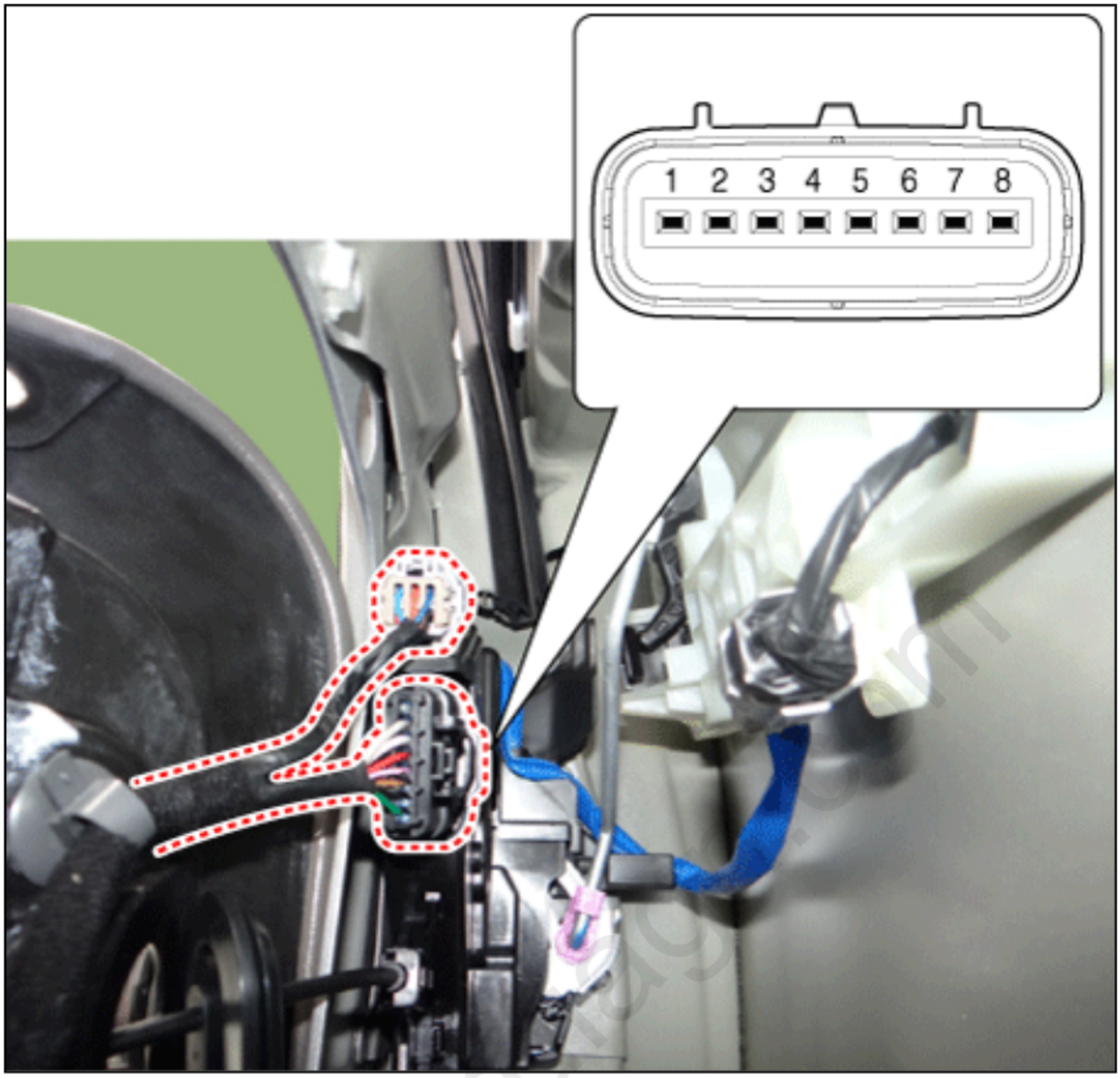

[Central Lock Motor]

No.	Pin Information	
	LH	RH
1	-	AJAR switch
2	Motor 1	COM
3	Motor 2	Lock / Unlock switch
4	Key unlock switch	Key lock switch
5	Key lock switch	Key unlock switch
6	Lock / Unlock switch	Motor 2
7	COM	Motor 1
8	AJAR switch	-

[Dead Lock Motor]

No.	Pin Information	
	LH	RH
1	Motor 1	AJAR switch
2	Motor 2	COM
3	Motor 3	Lock / Unlock switch
4	Key unlock switch	Key lock switch
5	Key lock switch	Key unlock switch
6	Lock / Unlock switch	Motor 3
7	COM	Motor 2
8	AJAR switch	Motor 1

4. Check actuator operation by connecting power and ground as shown below. To prevent damage to the actuator, apply battery voltage only momentarily.

   [Central Lock Motor]

cardiagn.com

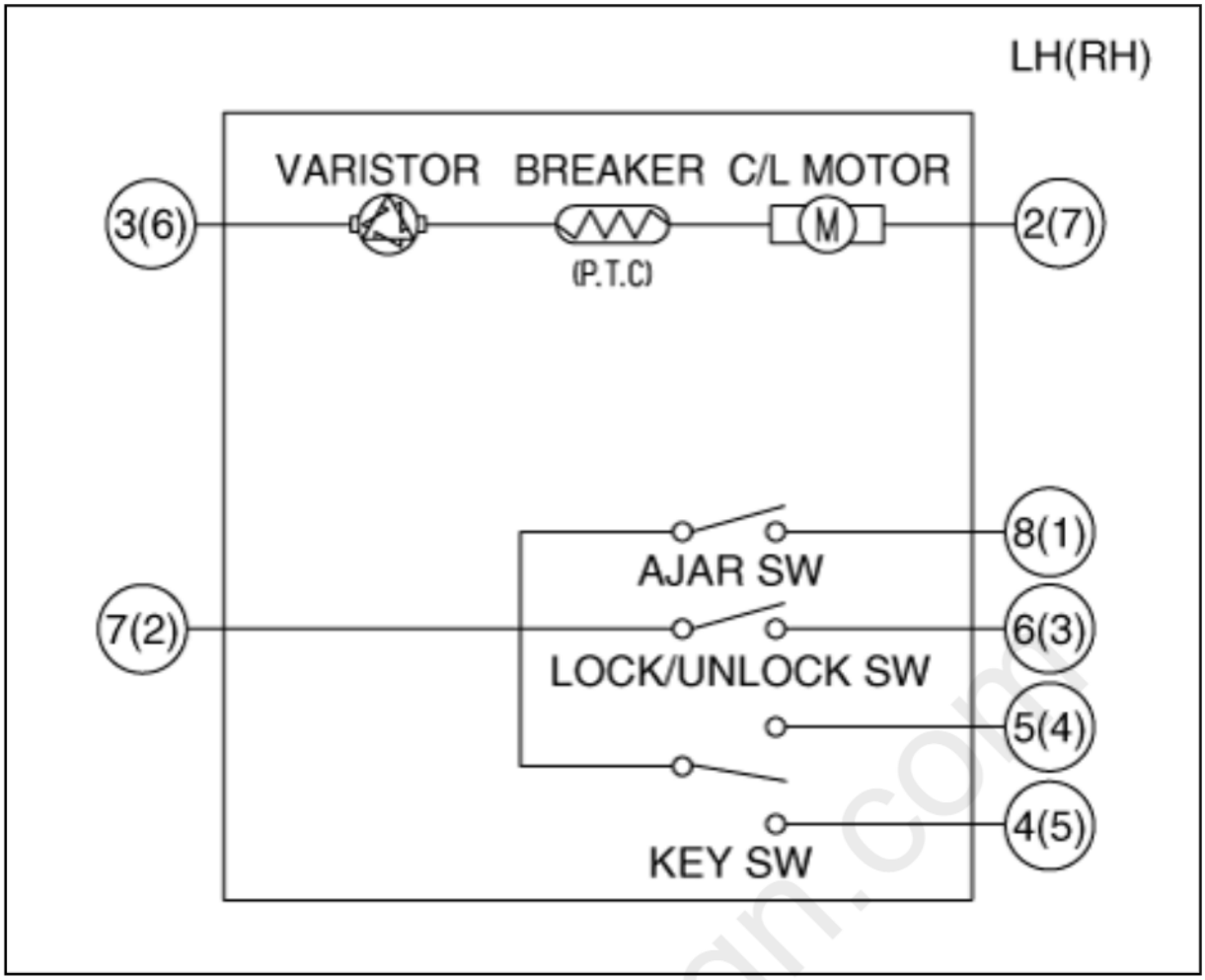

[Dead Lock Motor]

cardiagn.com

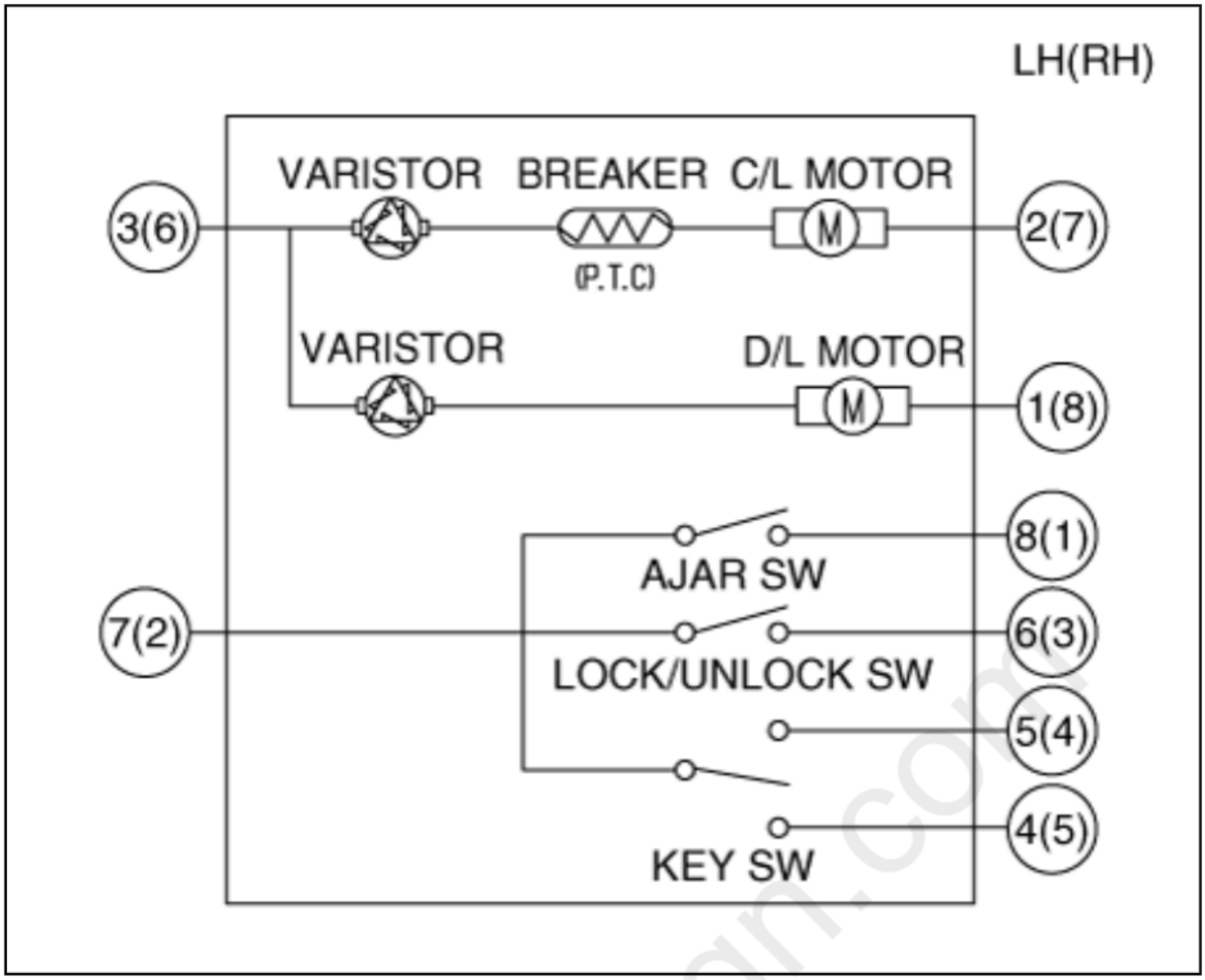

[Central Lock Motor]

(LH)

cardiagn.com

Operation / Terminal	Central Lock	Central Unlock
2	+	-
3	-	+
6 & 7	ON → OFF	OFF → ON
7 & 8	Door open & Half-latching (1st detent) = ON Full-latching (2nd close) = OFF	
5 & 7	Key Rotate CW (LH) / CCW (RH) : ON Key Return : OFF	
4 & 7	Key Rotate CCW (LH) / CW (RH) : ON Key Return : OFF	

(RH)

cardiagn.com

Operation / Terminal	Central Lock	Central Unlock
7	-	+
6	+	-
2 & 3	ON → OFF	OFF → ON
1 & 2	Door open & Half-latching (1st detent) = ON Full-latching (2nd close) = OFF	
2 & 4	Key Rotate CW (LH) / CCW (RH) : ON Key Return : OFF	
2 & 5	Key Rotate CCW (LH) / CW (RH) : ON Key Return : OFF	

[Dead Lock Motor]

cardiagn.com

LH (RH)

Operation / Terminal	Central Lock	Central Unlock	Dead Lock	Dead unlock
1(8)	-	+	+	-
2(7)	+	-	-	+
3(6)	-	+	-	+
6(2) & 7(3)	ON → OFF	OFF → ON		
5(2) & 7(4)	Key rotate CW (LH), CCW (RH) : ON Key return : OFF			
4(2) & 7(5)	Key rotate CCW (LH), CW (RH) : ON Key return : OFF			
7(1) & 8(2)	Door open & half latching : ON Full latching : OFF			

Rear Door Lock Module Inspection

1. Remove the rear door trim.
   (Refer to Body - "Rear Door Trim")
2. Remove the rear door module.
   (Refer to Body - "Rear Door Module")
3. Disconnect the connector from the actuator.

cardiagn.com

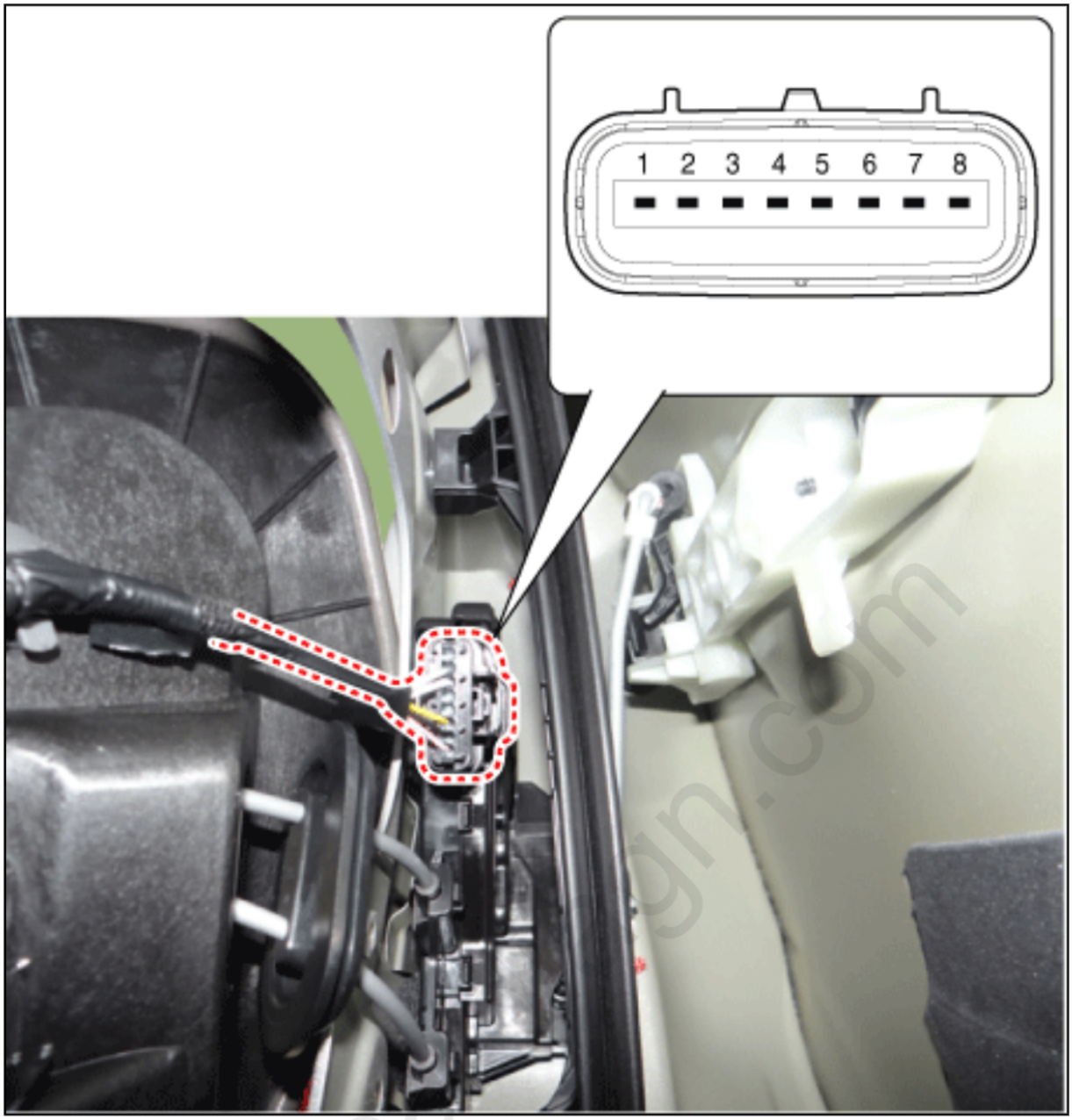

[Central Lock Motor]

No.	Pin Information	
	LH	RH
1	-	AJAR switch
2	Motor 1	COM
3	Motor 2	Lock / Unlock switch
4	-	-
5	-	-
6	Lock / Unlock switch	Motor 2

7	COM	Motor 1
8	AJAR switch	-

[Dead Lock Motor]

No.	Pin Information	
	LH	**RH**
1	Motor 1	AJAR switch
2	Motor 2	COM
3	Motor 3	Lock / Unlock switch
4	-	-
5	-	-
6	Lock / Unlock switch	Motor 3
7	COM	Motor 2
8	AJAR switch	Motor 1

4. Check actuator operation by connecting power and ground as shown below. To prevent damage to the actuator, apply battery voltage only momentarily.

   [Central Lock Motor]

cardiagn.com

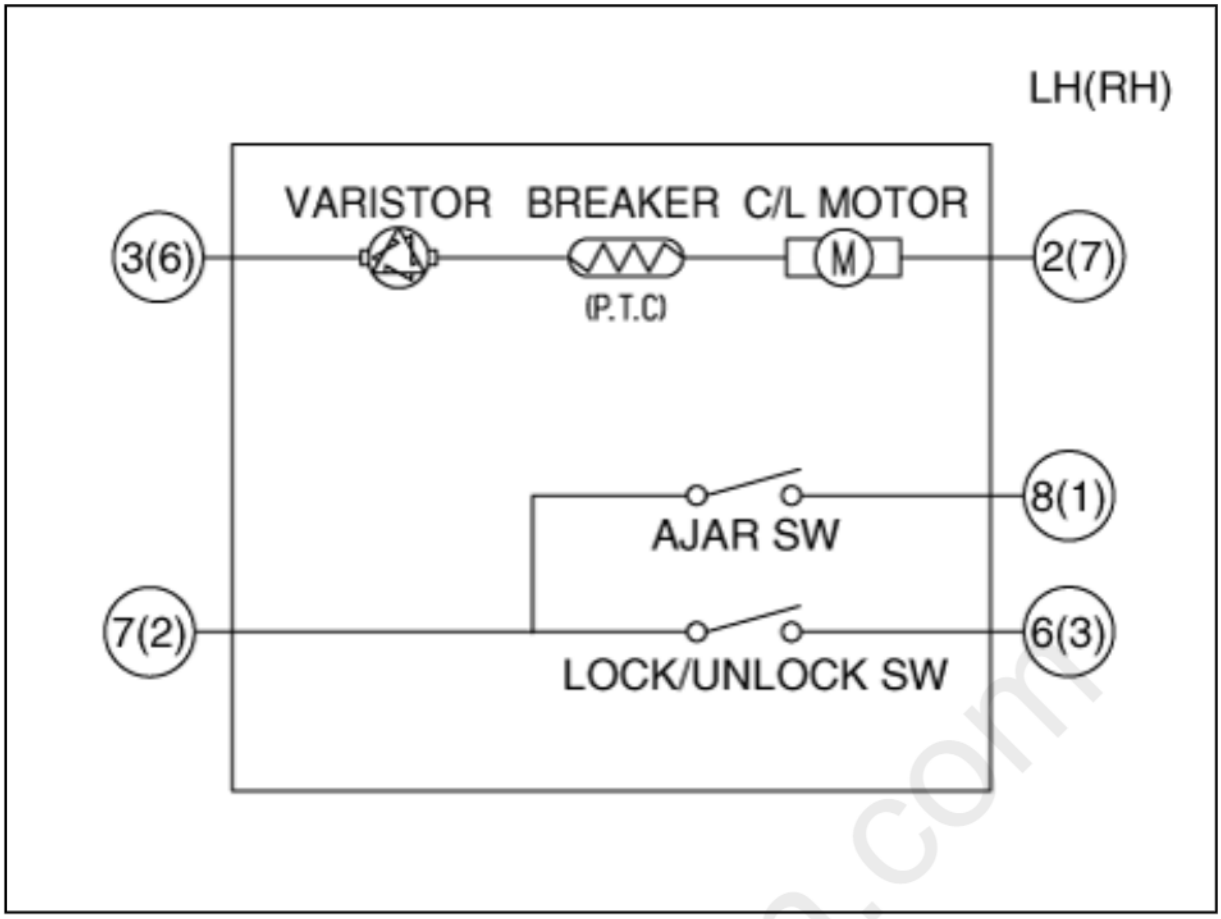

[Dead Lock Motor]

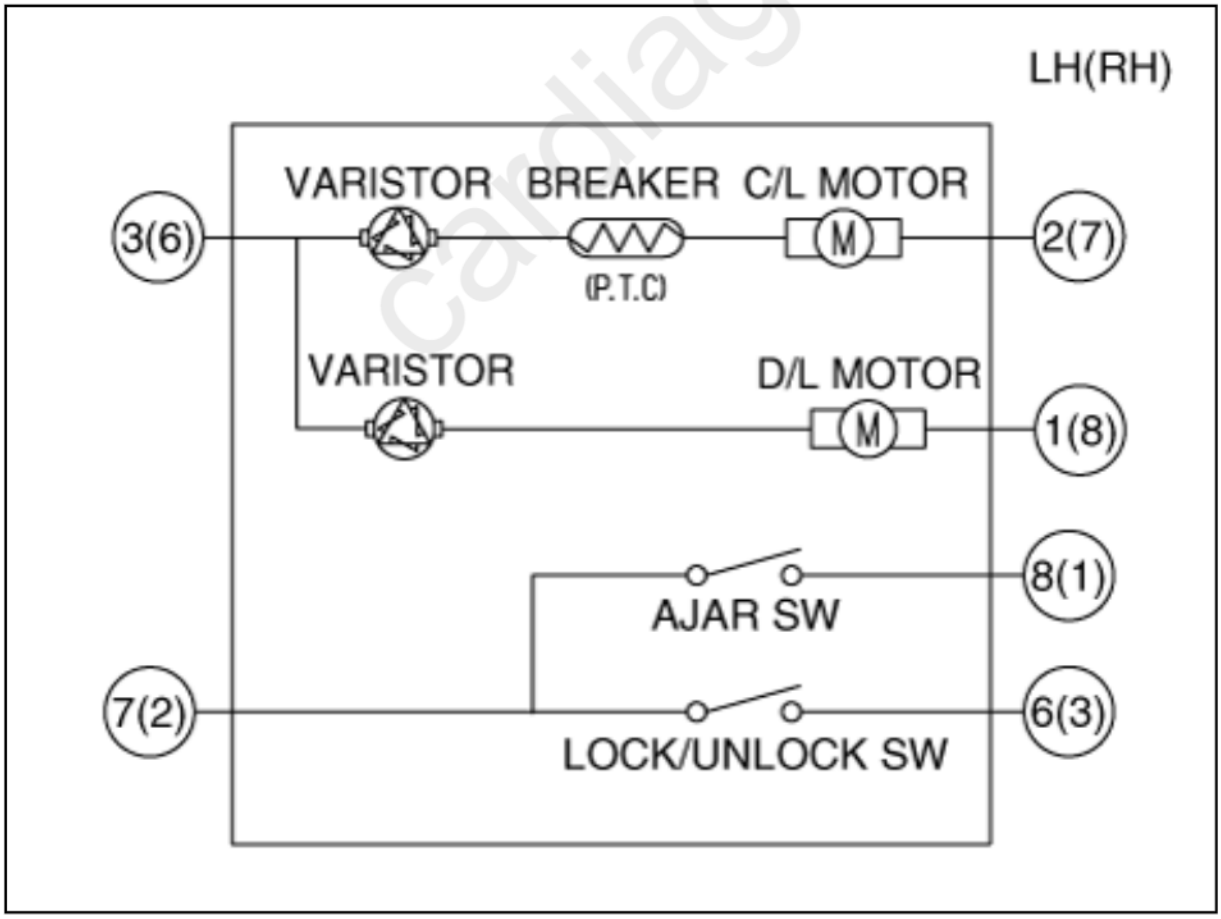

cardiagn.com

[Central Lock Motor]

(LH)

Operation / Terminal	Central Lock	Central Unlock
2	+	-
3	-	+
6 & 7	ON → OFF	OFF → ON
7 & 8	Door open & Half-latching (1st detent) = ON Full-latching (2nd close) = OFF	

(RH)

Operation / Terminal	Central Lock	Central Unlock
7	-	+
6	+	-
2 & 3	ON → OFF	OFF → ON
1 & 2	Door open & Half-latching (1st detent) = ON Full-latching (2nd close) = OFF	

[Dead Lock Motor]

cardiagn.com

LH (RH)

Operation / Terminal	Central Lock	Central Unlock	Dead Lock	Dead unlock
1(8)	-	+	+	-
2(7)	+	-	-	+
3(6)	-	+	-	+
6(2) & 7(3)	ON → OFF	OFF → ON		
7(1) & 8(2)	Door open & half latching : ON Full latching : OFF			

Tailgate Lock Module Inspection

1. Remove the tailgate trim.
   (Refer to Body - "Tailgate Trim")
2. Disconnect the connectors from the actuator.

cardiagn.com



3. Check actuator operation by connecting power and ground as shown below. To prevent damage to the actuator, apply battery voltage only momentarily.

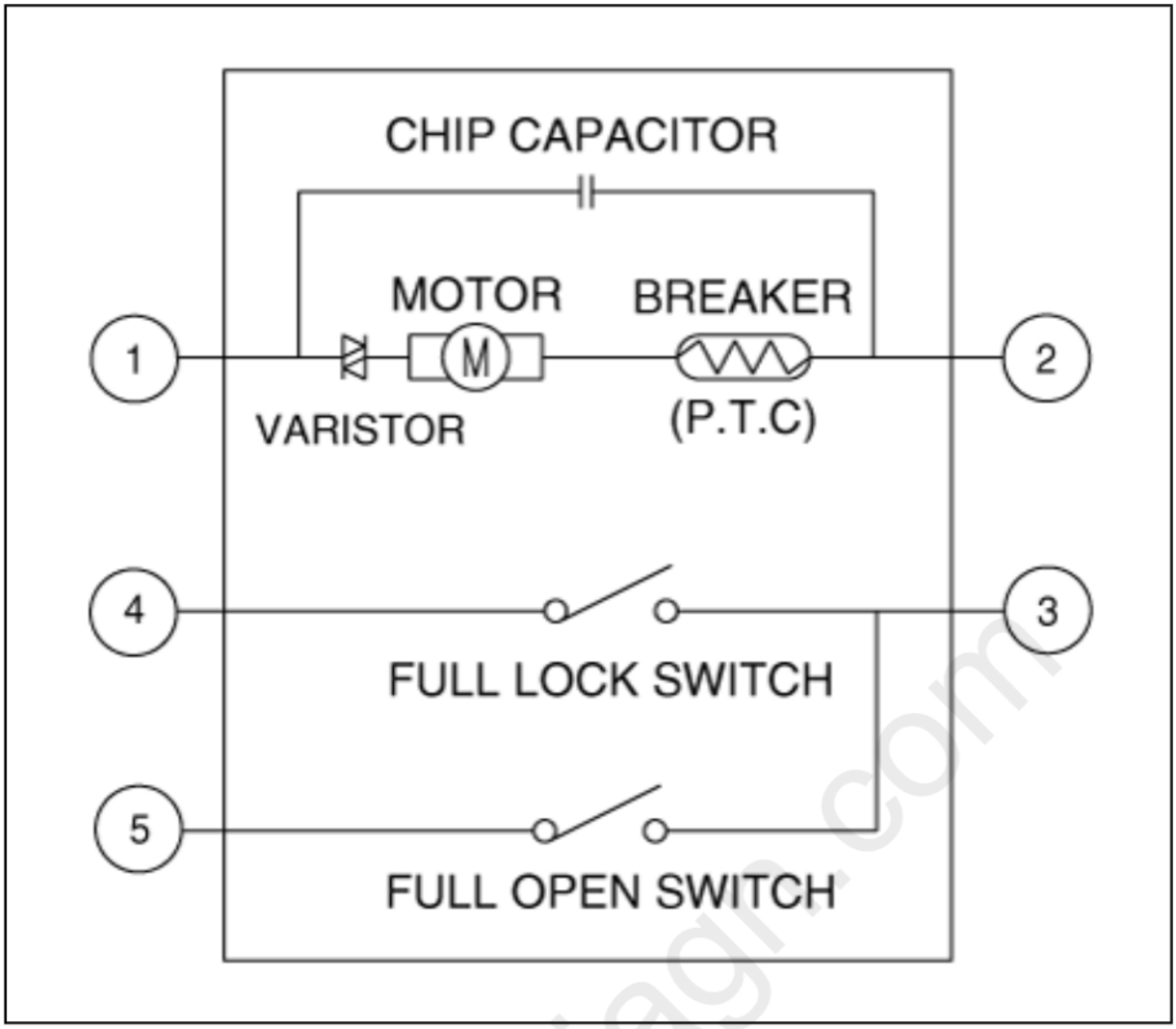

Operation / Terminal	Fully Locked	Half Locked	Fully Open
①	⊕	⊕	X
②	⊖	⊖	X
⑤ & ③	OFF	OFF	ON
④ & ③	OFF	ON	ON

4. Checking the tailgate of the vehicle power option power refers to the tailgate module.

Removal

Front Door Lock Module

1. Remove the front door latch.
   (Refer to Body - "Front Door Latch")

Rear Door Lock Module

1. Remove the rear door latch.
   (Refer to Body - "Rear Door Latch")

Tailgate Lock Module

1. Remove the Tailgate lid latch.
   (Refer to Body - "Tailgate Latch")

Installation

1. Install in the reverse order of removal.

cardiagn.com

Please rate this document after reviewing at the bottom of this page.

Inspection

[Non-IMS Type]

1. Check for continuity between the terminals. If there is an abnormality, replace the switch.

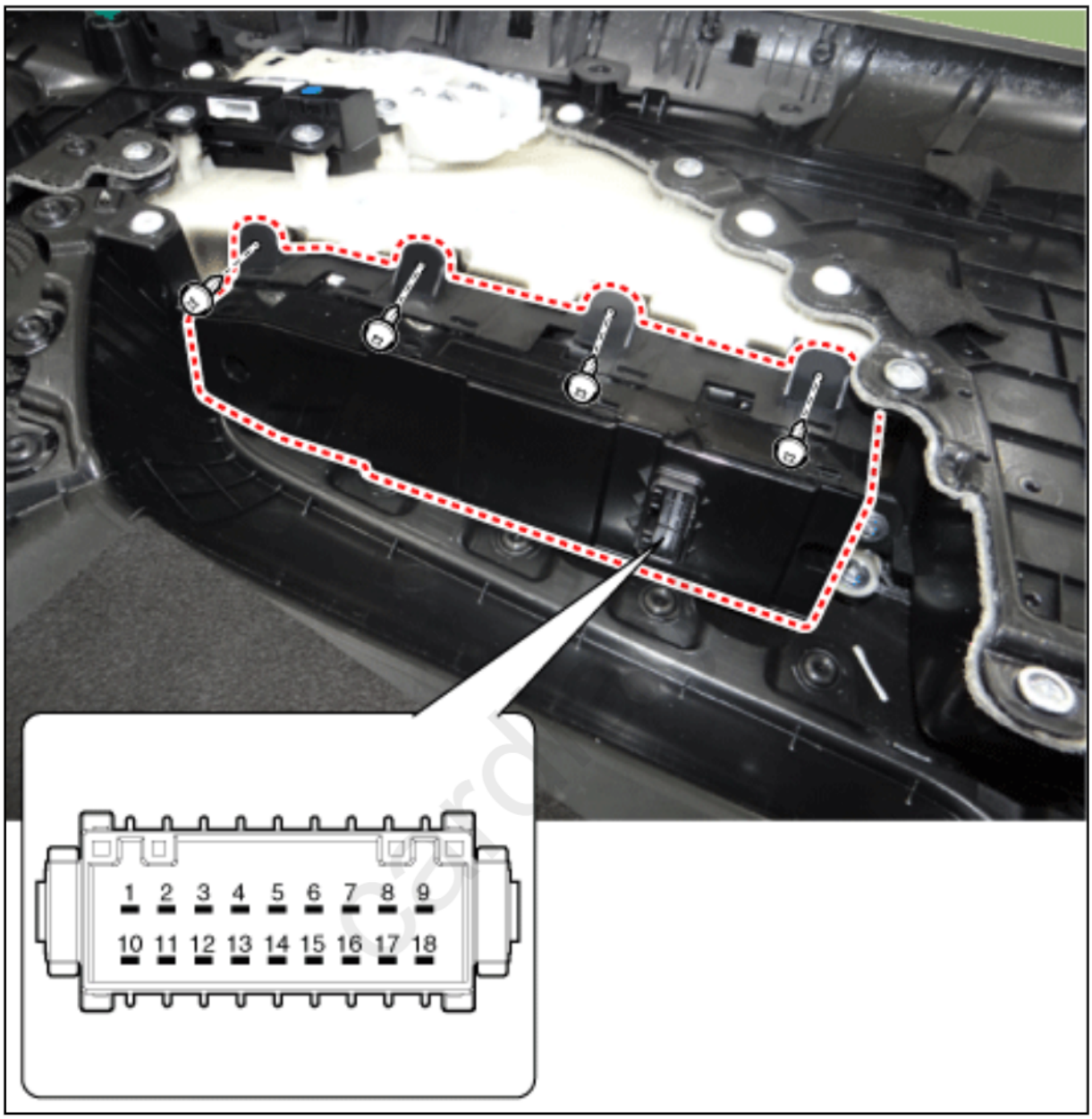

Terminal / Position	6	8	4
Door Lock		○——	——○
Door Unlock	○——	——○	

[IMS Type]

Diagnosis With KDS

1. The body electrical system can be quickly diagnosed for failed parts by using vehicle diagnostic system (KDS).
   The diagnostic system (KDS) provides the following information.
   (1) Self diagnosis : Checks and displays the failure code (DTC)
   (2) Current data : Checks the system input/output data state
   (3) Actuation test : Checks the system operating condition
   (4) Additional function : Other controls such as the system option and zero point
2. Select the 'Car model' and the system to be checked in order to check the vehicle with the tester.
3. Select the 'Body Control Module (BCM)' to check the driver seat or assist door module (DDM/ ADM).
4. Select the "Current Data" menu to check the current state of the input/output data.
   The input/output data for the sensors corresponding to the driver seat or assist door module (DDM/ ADM) can be checked.
5. To check the power door lock operation by force, select "Actuation test".

Removal

1. Remove the power window main switch.
   (Refer to Power Window - "Power Window Switch")

Installation

1. Install in the reverse order of removal.

cardiagn.com

Please rate this document after reviewing at the bottom of this page.

Component
Location

[RHD]

* This shows the LHD type.
  Refer to the mirror image for RHD type.

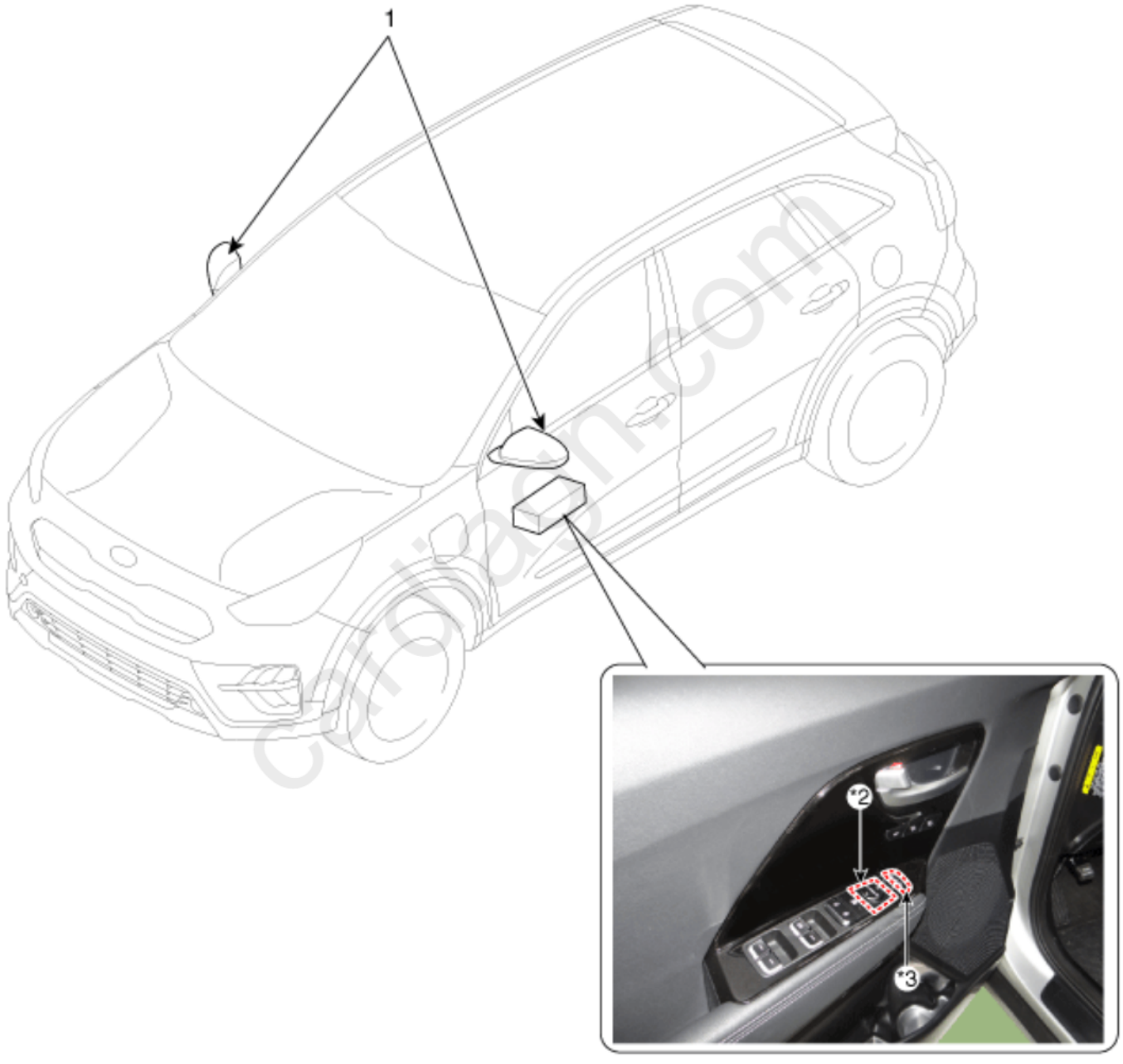

1. Power door mirror
2. Power door mirror switch
3. Power folding mirror switch

Please rate this document after reviewing at the bottom of this page.

Connector and Terminal
Function

Driver Power Window Switch (Non-IMS Type)

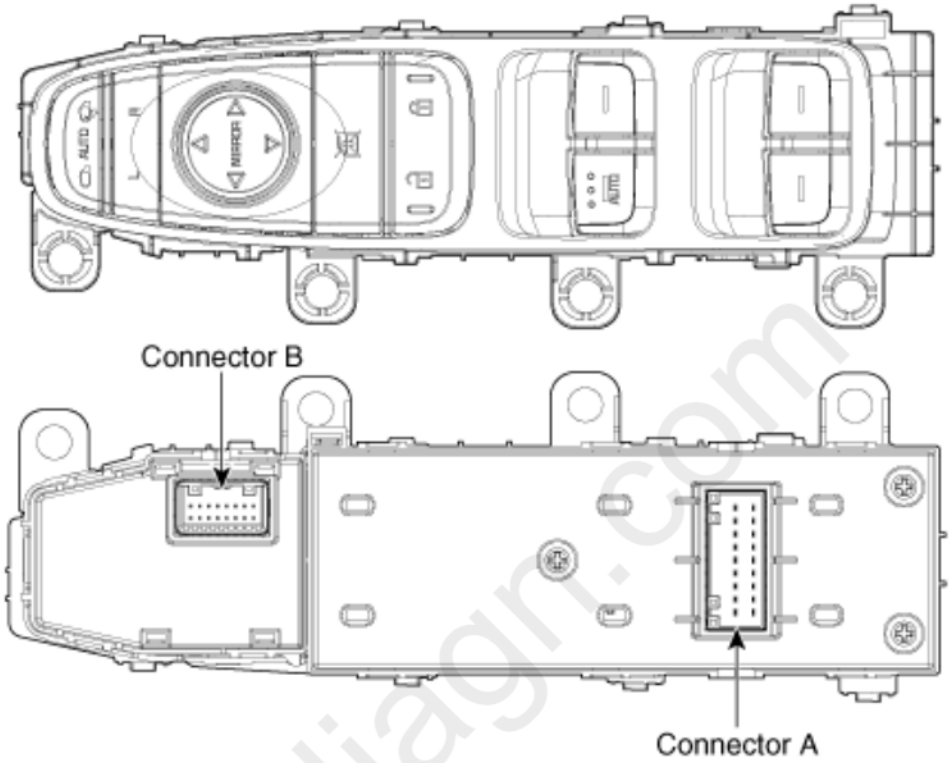

cardiagn.com

Connector A	Pin	Function	Pin	Function
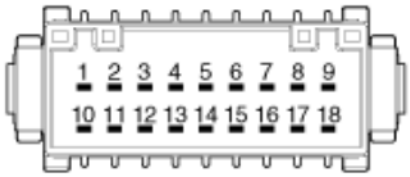	1	Front right power window (Up)	10	Rear right power window (Up)
	2	Front right power window (Auto)	11	Rear right power window (Down)
	3	Front right power window (Auto)	12	Battery (+) RH
	4	Door lock switch	13	Tail lamp
	5	Left power window lock	14	Right power window lock
	6	Door unlock switch	15	Rear left power window (Up)
	7	Front left power window (Up)	16	Rear left power window (Down)
	8	Ground	17	Front left power window (Auto)
	9	Front left power window (Down)	18	Battery (+) LH

[LHD]

Connector B	Pin	Function	Pin	Function
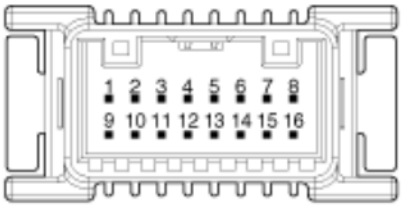	1	-	9	-
	2	-	10	Left mirror common
	3	-	11	Left mirror horizontal
	4	-	12	Mirror vertical
	5	Ground	13	Right mirror horizontal
	6	-	14	Right mirror common
	7	Mirror folding switch	15	-
	8	Mirror unfolding switch	16	ACC

[RHD]

Connector B	Pin	Function	Pin	Function
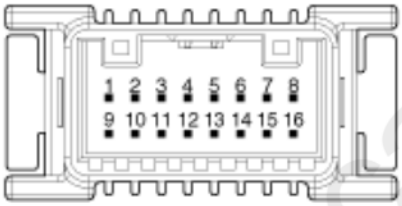	1	-	9	-
	2	Left mirror common	10	-
	3	Left mirror horizontal	11	-
	4	Mirror vertical	12	-
	5	Right mirror horizontal	13	Ground
	6	Right mirror common	14	-
	7	-	15	Mirror folding switch (Only for Auto folding type)
	8	ACC	16	Mirror unfolding switch (Only for Auto folding type)

cardiagn.com

Driver Power Window Switch (DDM, IMS Type)

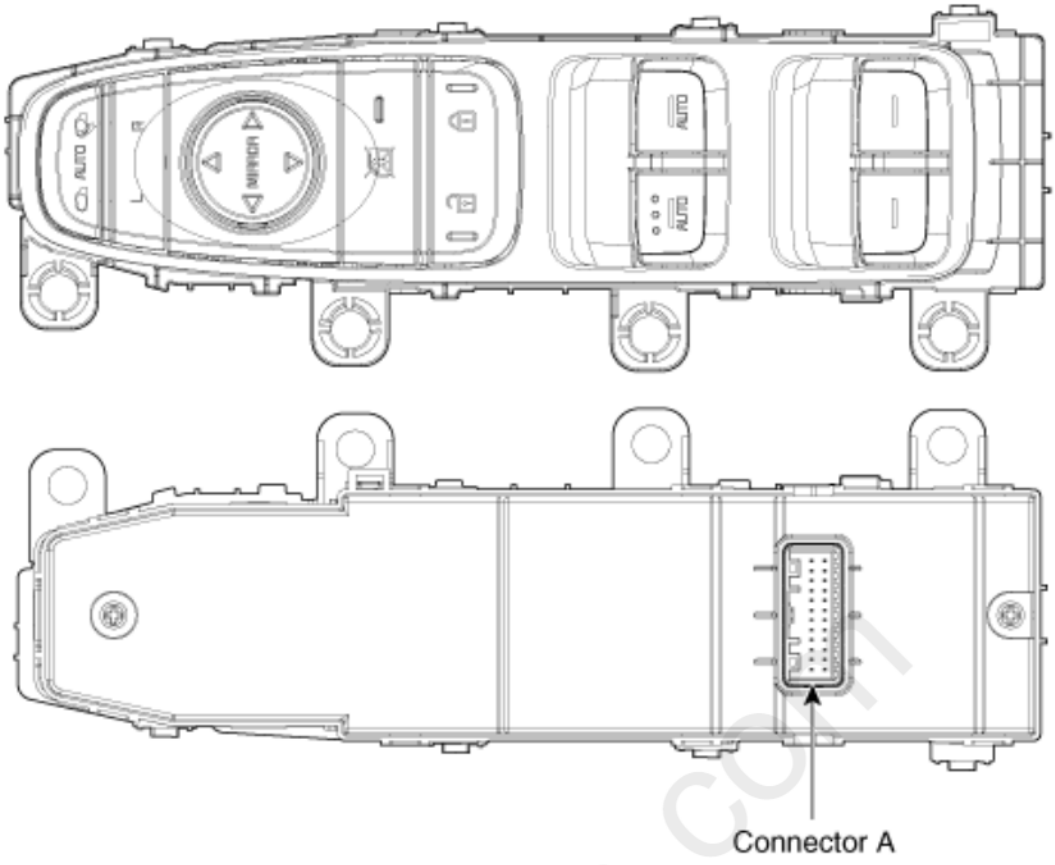

Connector A	Pin	Function	Pin	Function
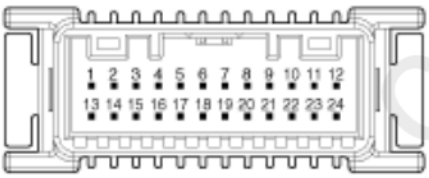	1	Battery (+) ECU	13	Battery (+) LOAD
	2	-	14	IGN1
	3	B-CAN (High)	15	Front left power window (Up)
	4	B-CAN (Low)	16	Front left power window (Down)
	5	-	17	Front left power window (Auto)
	6	Mirror sensor (Power)	18	Front left mirror vertical
	7	Mirror horizontal sensor	19	Front left mirror horizontal
	8	Mirror vertical sensor	20	Front left mirror common
	9	Mirror sensor ground	21	-
	10	Window lock switch	22	-
	11	Rear left power window (Up)	23	Ground
	12	Rear left power window (Down)	24	Ground_LOAD

cardiagn.com

Circuit
Diagram

Driver Power Window Switch (Non-IMS Type)

[Auto Folding Mirror Switch]

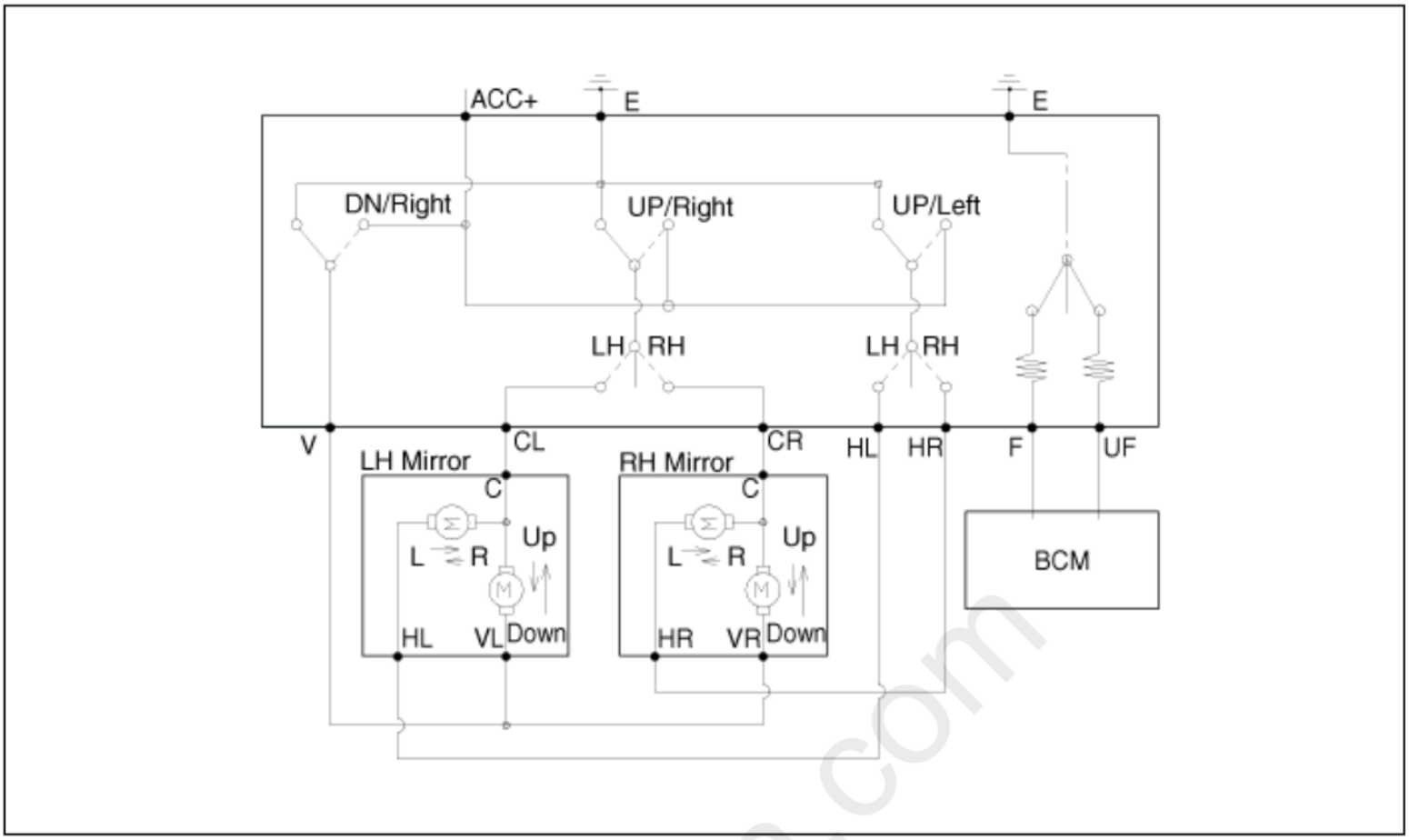

[Non-Folding Mirror Switch]

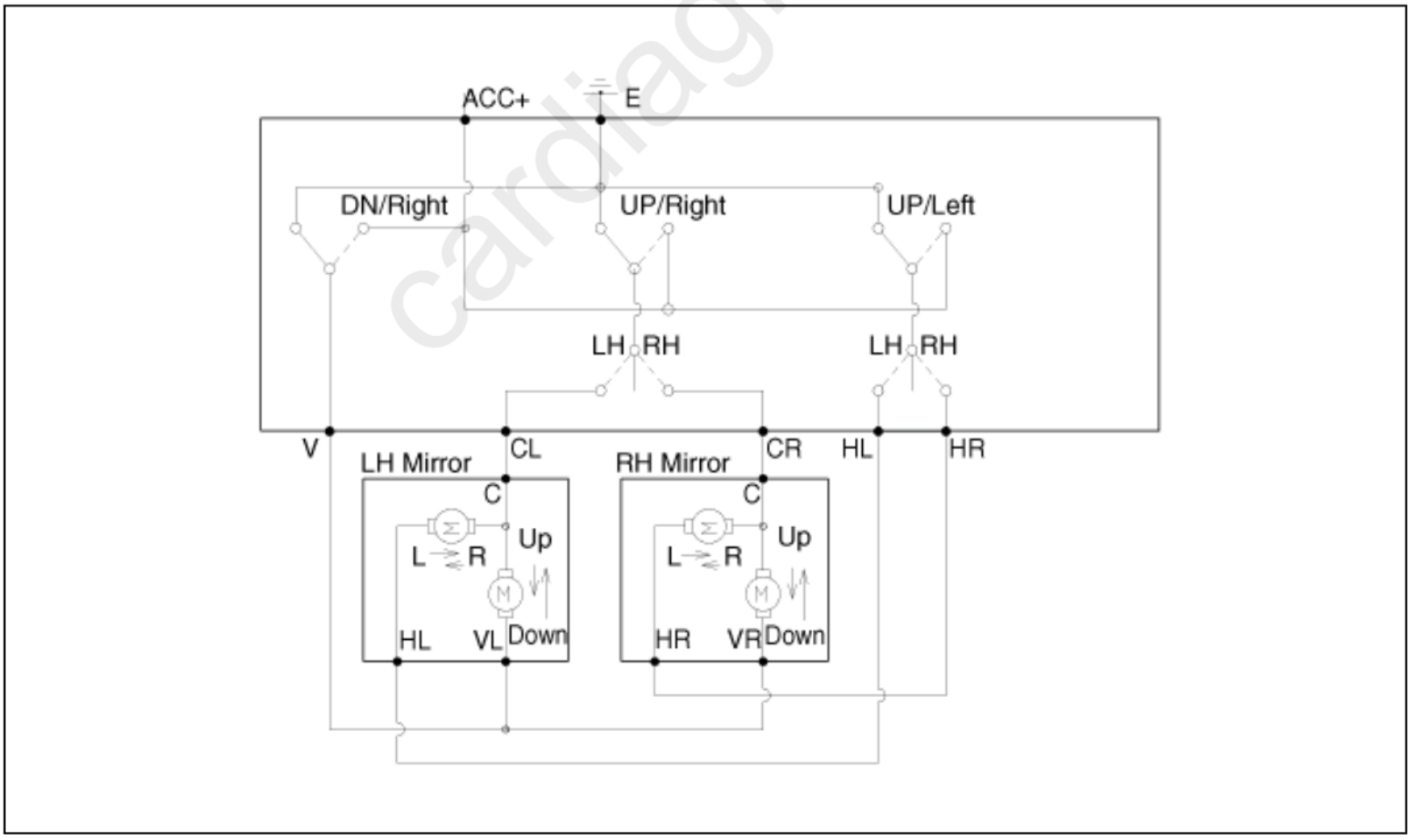

Driver Power Window Module (DDM, IMS Type)

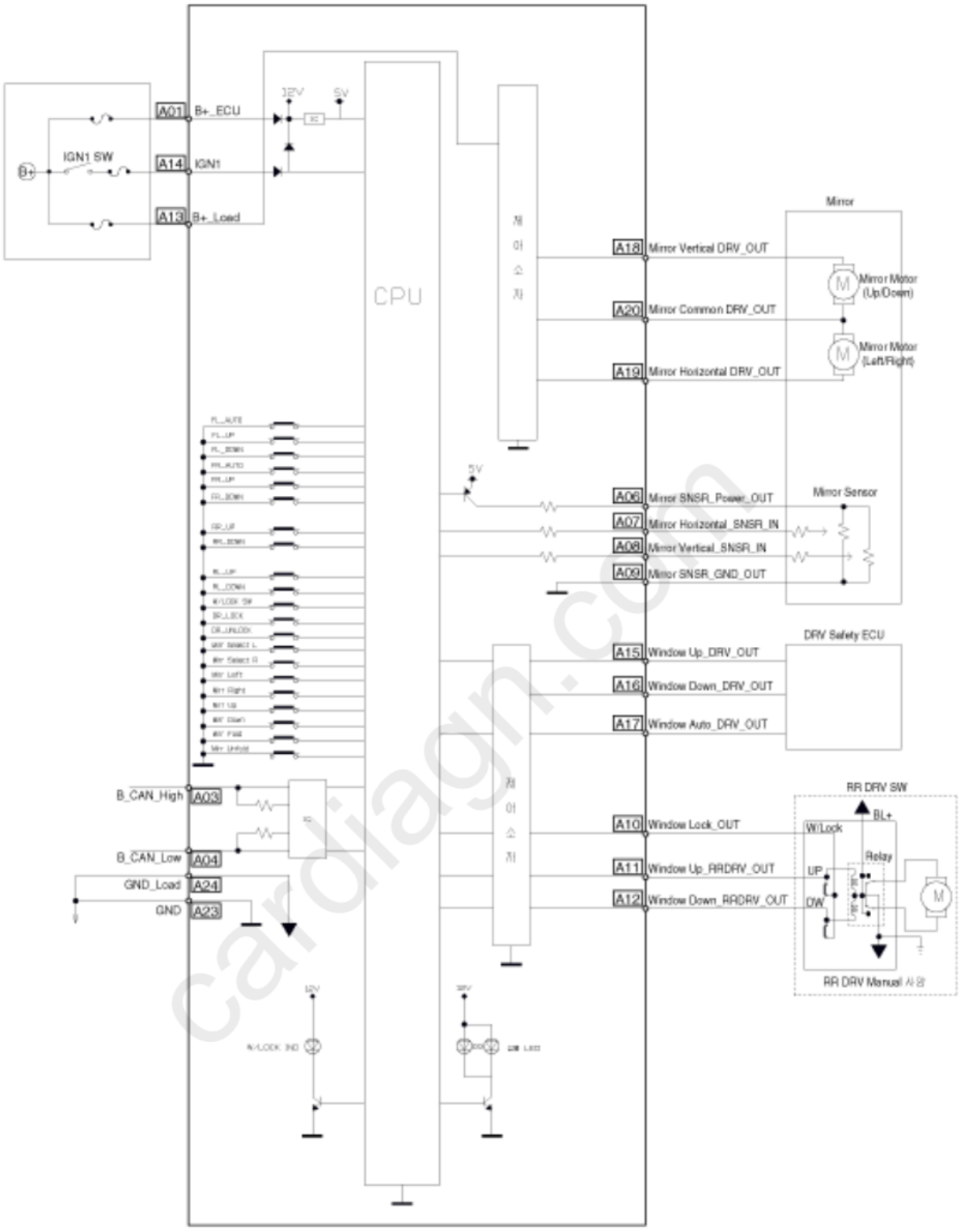

cardiagn.com

Please rate this document after reviewing at the bottom of this page.

Inspection

[Non-IMS Type]

1. Disconnect the negative (-) battery terminal.
2. Remove the front left door trim.
   (Refer to Body - "Front Door Trim")
3. Disconnect the power mirror switch connector from the door trim.

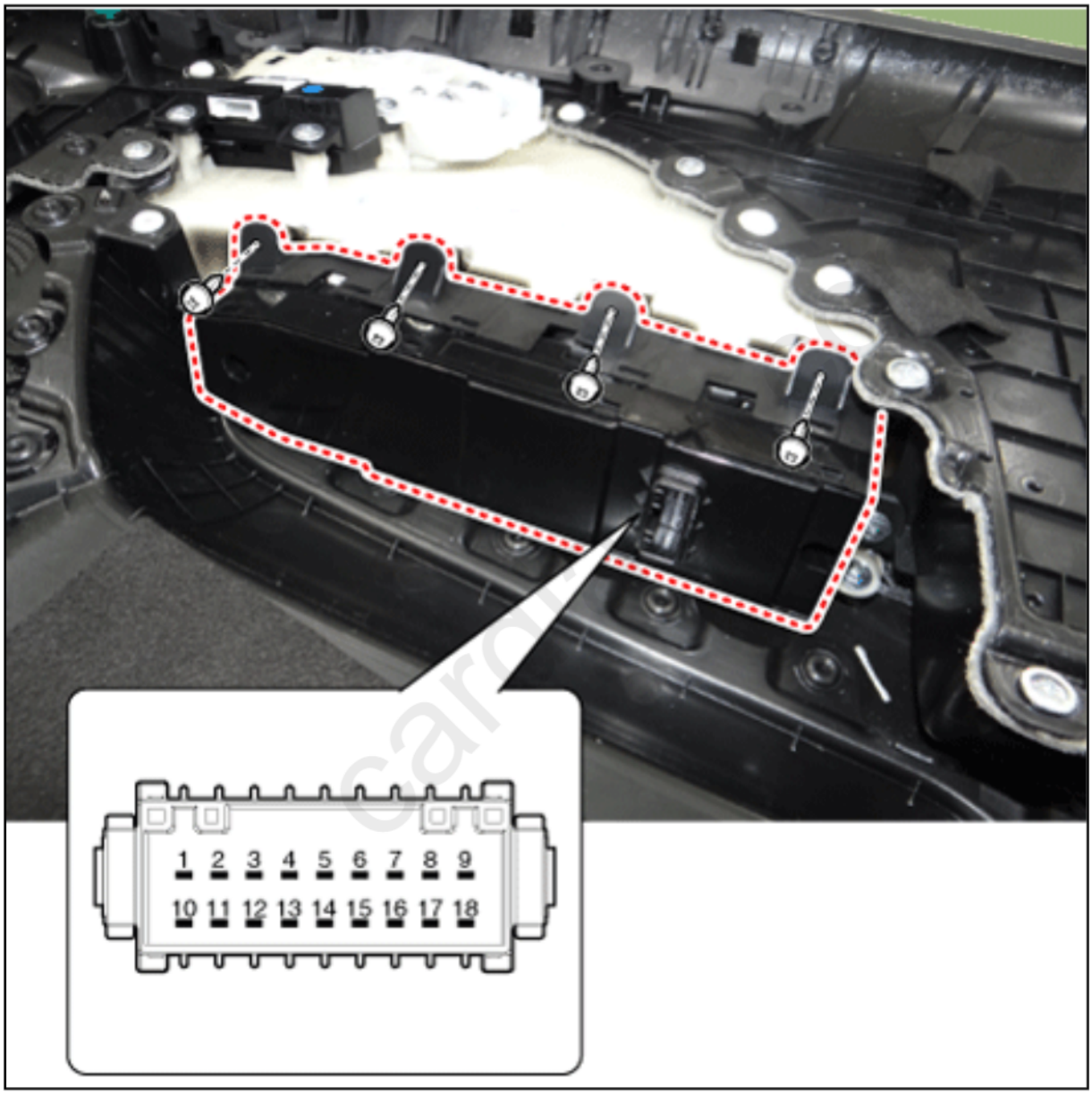

4. Check for continuity between the terminals in each switch position as shown below.

[Power Mirror Switch]

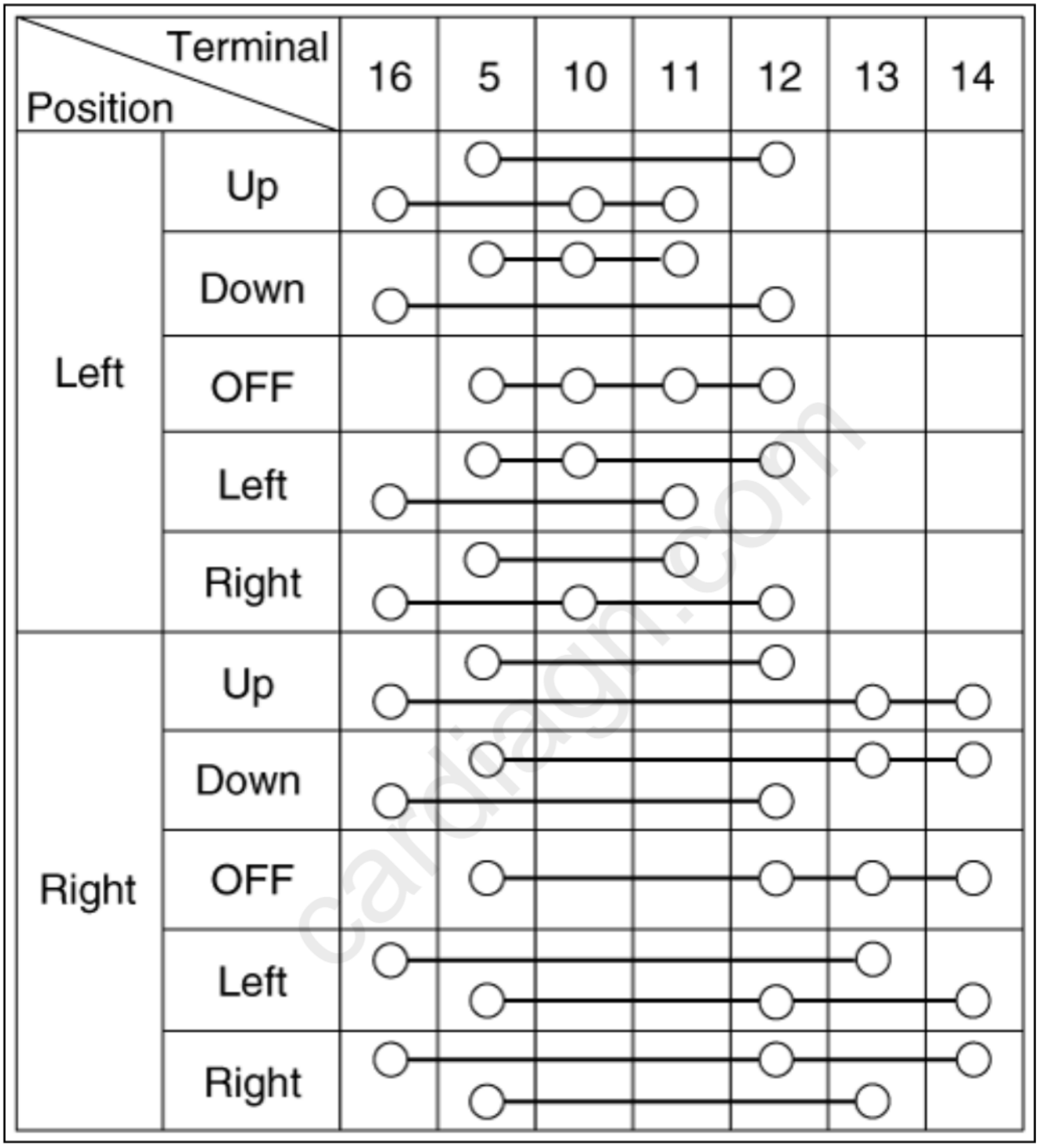

[Power Folding Mirror Switch]

Terminal / Position	7	8	5
Folding	○		○
Unfolding		○	○

[IMS Type]

Diagnosis With KDS

1. The body electrical system can be quickly diagnosed for failed parts by using vehicle diagnostic system (KDS).
   The diagnostic system (KDS) provides the following information.
   (1) Self diagnosis : Checks and displays the failure code (DTC)
   (2) Current data : Checks the system input/output data state
   (3) Actuation test : Checks the system operating condition
   (4) Additional function : Other controls such as the system option and zero point
2. Select the 'Car model' and the system to be checked in order to check the vehicle with the tester.
3. Select the 'Body Control Module (BCM)' to check the driver seat or assist door module (DDM/ ADM).
4. Select the "Current Data" menu to check the current state of the input/output data.
   The input/output data for the sensors corresponding to the driver seat or assist door module (DDM/ ADM) can be checked.
5. To check the power door lock operation by force, select "Actuation test".

Removal

- When removing with a flat-tip screwdriver or remover, wrap protective tape around the tools to prevent damage to components.
- When removing the interior trim pieces, use a plastic panel removal tool not to damage the surface.
- Be careful to store and handle the trim when removing/installing because lubricant and oil can leave a stain on the trim.

1. Disconnect the negative (-) battery terminal.
2. Remove the front door trim.
   (Refer to Body - "Front Door Trim")

cardiagn.com

3. Remove the power window switch assembly (A) after loosening the mounting screws.

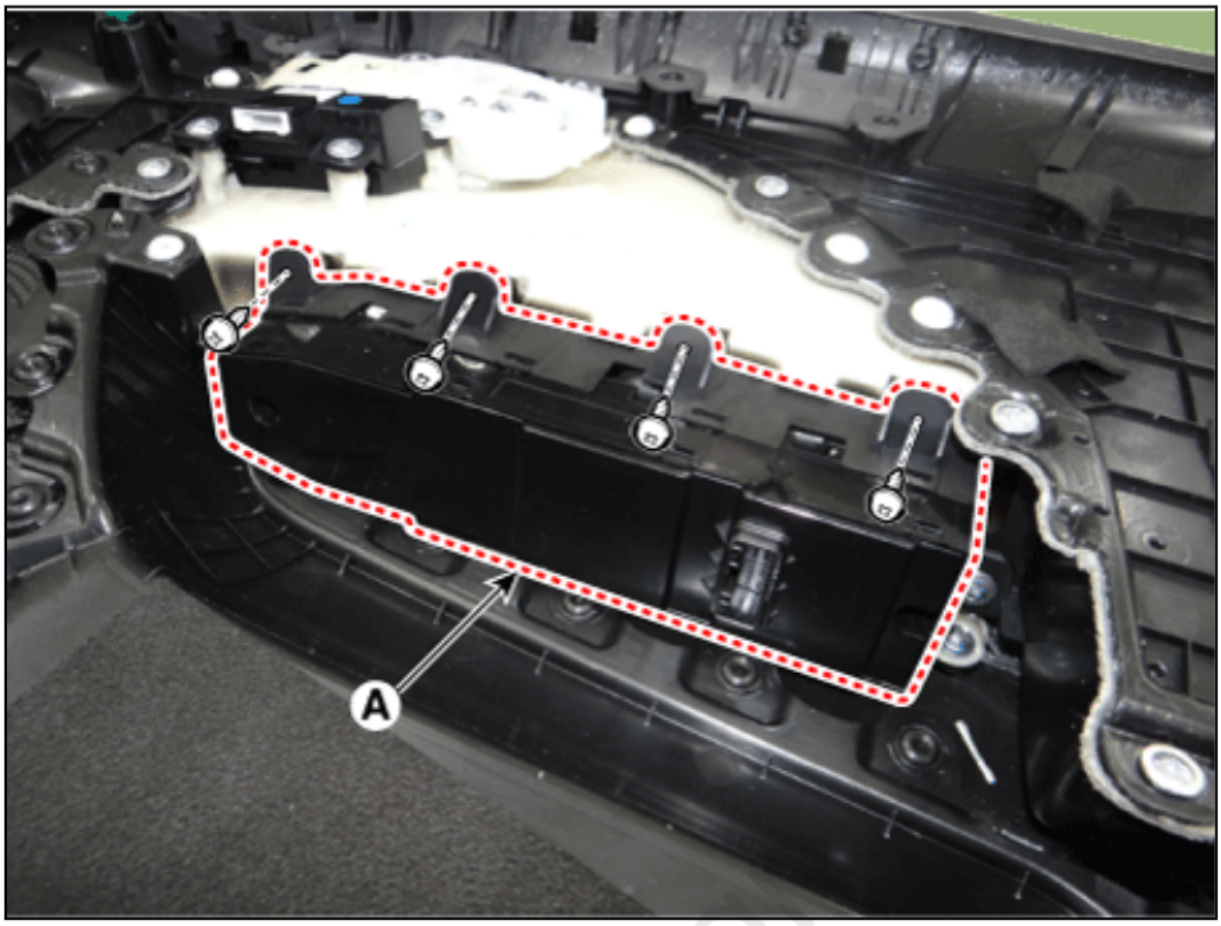

Installation

1. Install in the reverse order of removal.

cardiag

Please rate this document after reviewing at the bottom of this page.

Connector and Terminal
Function

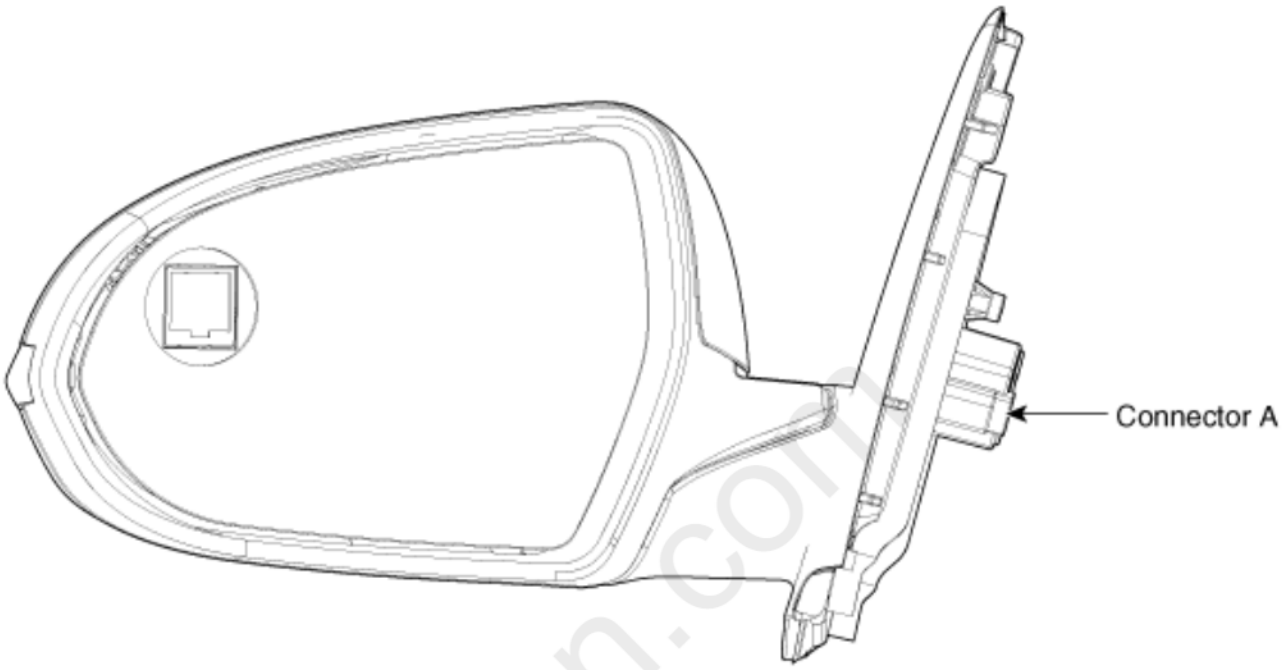

Connector A	No.	Description	No.	Description
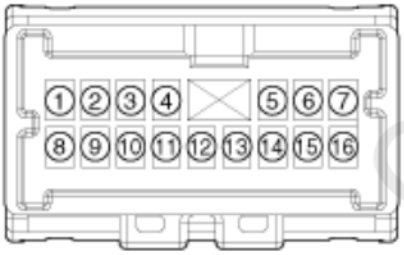	1	Mirror vertical motor	9	-
	2	Mirror motor common	10	-
	3	Mirror horizontal motor	11	BSD Indicator (+)
	4	Mirror heater (+)	12	IMS motor sensor (Vertical)
	5	Mirror heater (-) & Side repeater lamp (-)	13	IMS motor sensor (Horizontal)
	6	Mirror folding	14	IMS mirror motor ground
	7	Mirror unfolding	15	IMS mirror motor power
	8	Side repeater lamp (+)	16	BSD Indicator (-)

cardiagn.com

Please rate this document after reviewing at the bottom of this page.

Inspection

1. Disconnect the negative (-) battery terminal.
2. Remove the front door quadrant inner cover (A).

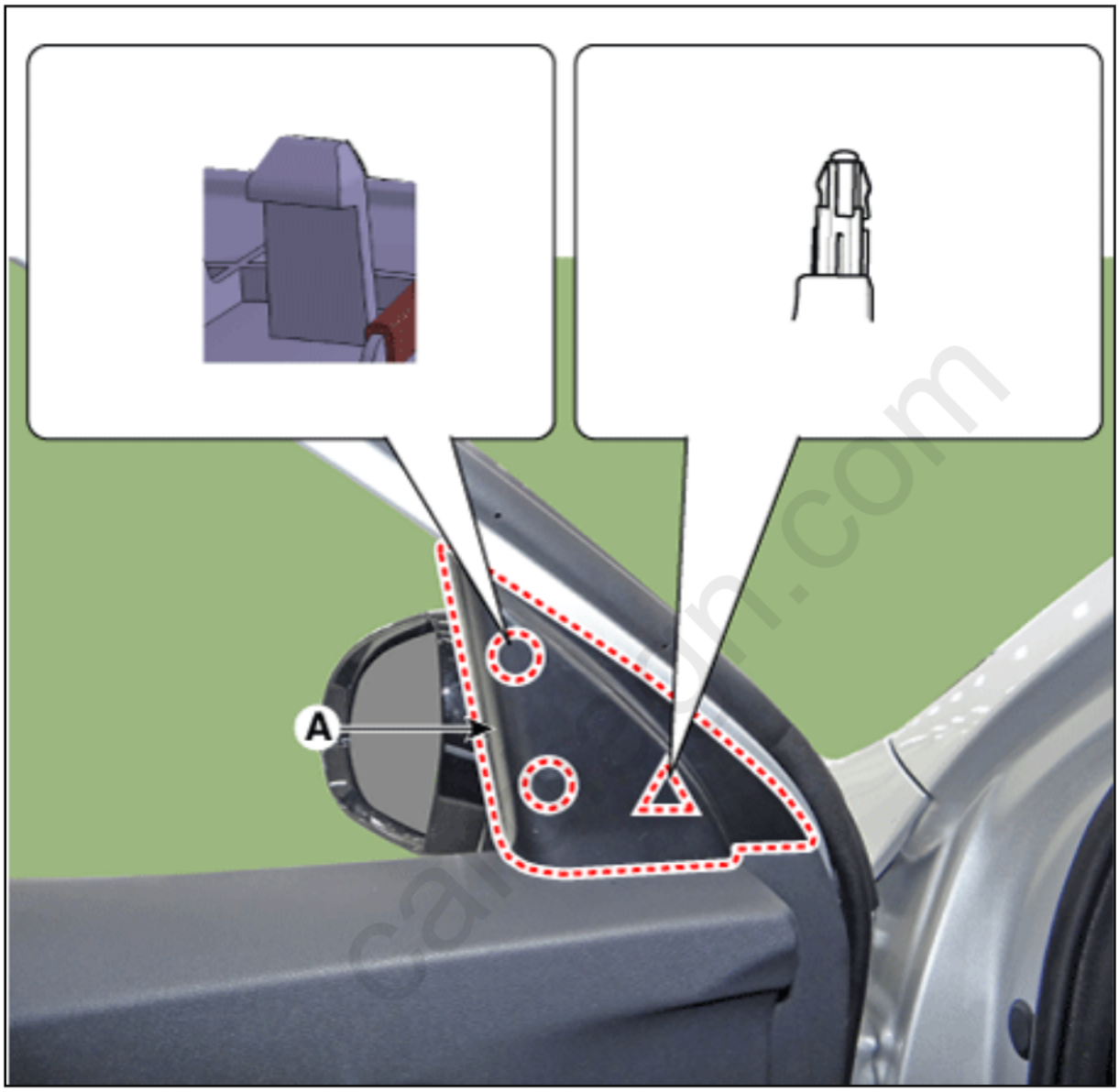

3. Disconnect the power door mirror connector from the harness.



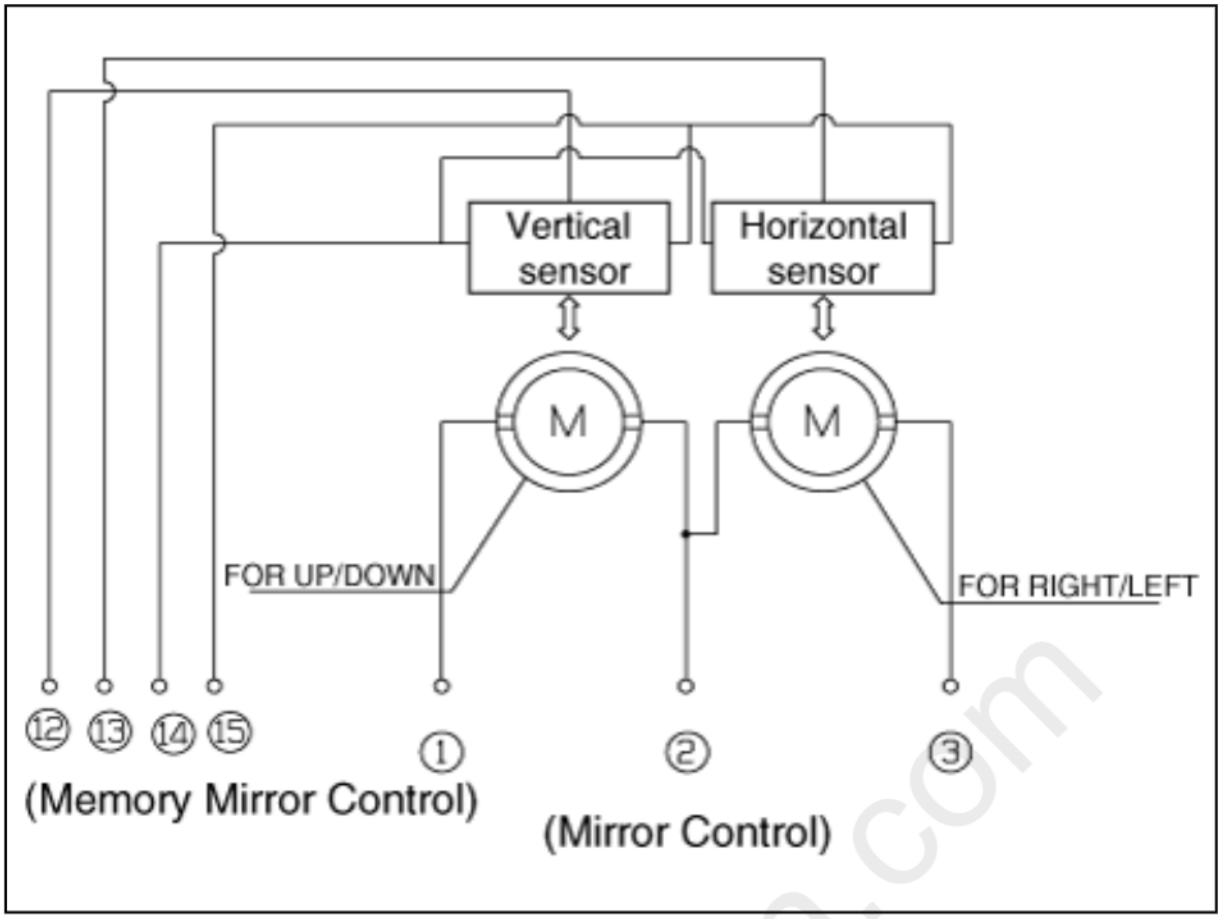

4. Apply battery voltage to each terminal as shown in the table and verify that the mirror operates properly.

[Mirror Control (LH/RT)]

Terminal / Position	1	2	3
Up	⊖	⊕	⊕
Down	⊕	⊖	⊖
Left	⊖	⊖	⊕
Right	⊕	⊕	⊖

[BSD Indicator]

cardiagn.com

Terminal / Position	11	10
ON	⊕	⊖

[Mirror Heater]

Terminal / Position	4	5
ON	⊕	⊖

[Side Repeater Lamp]

Terminal / Position	8	5
ON	⊕	⊖

[Mirror Folding Motor]

Terminal / Position	6	7
ON	⊕	⊖

Removal

cardiagn.com

1. After inserting the flat-bladed screwdriver or remover as shown in the illustration below, remove the mirror (A) by applying a momentary force.

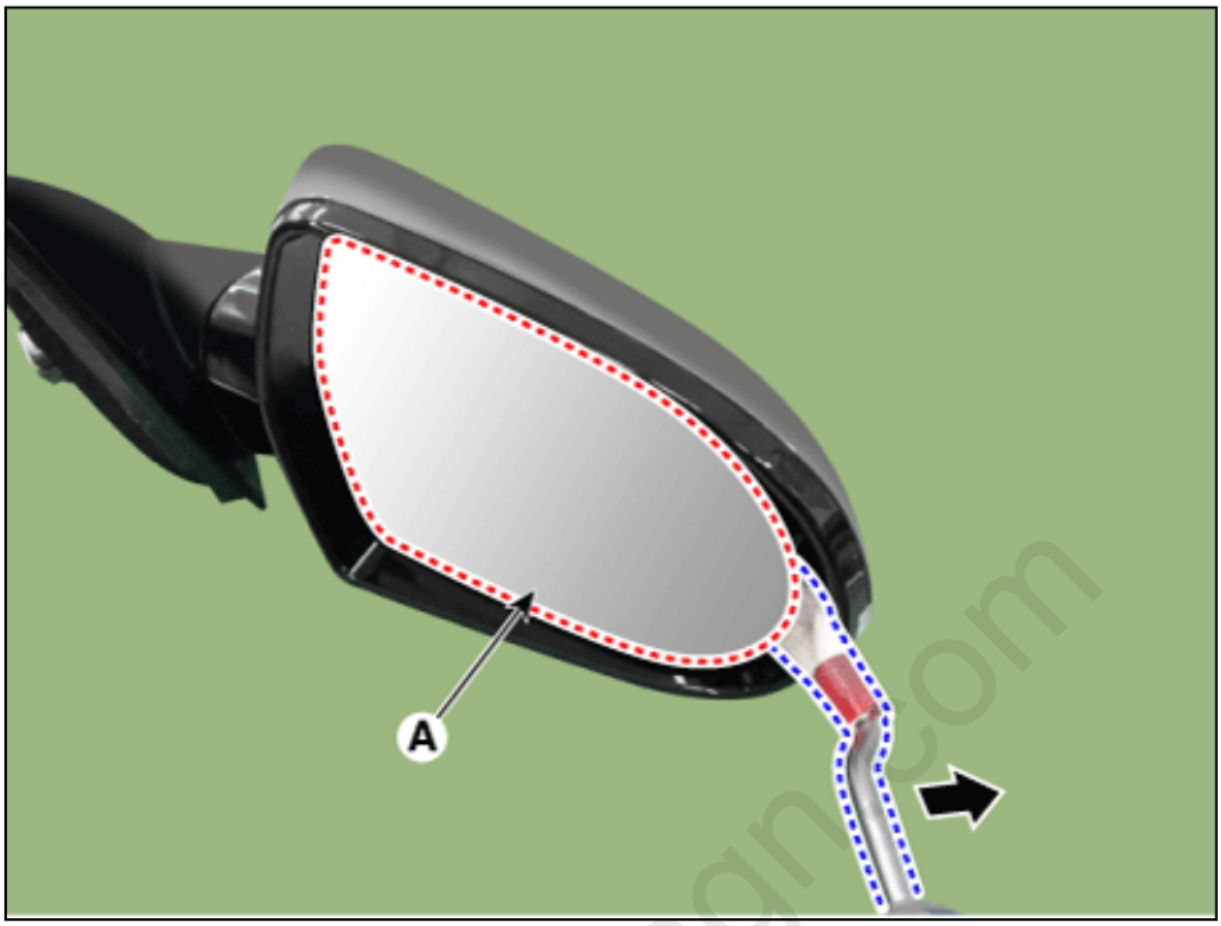

- Wrap the tool with protective tape or cloth to prevent damage to the parts.
- Do not insert the tool too deeply.

2. Disconnect the heater connectors (A) and rear corner radar indicator connector (B).

cardiagn.com

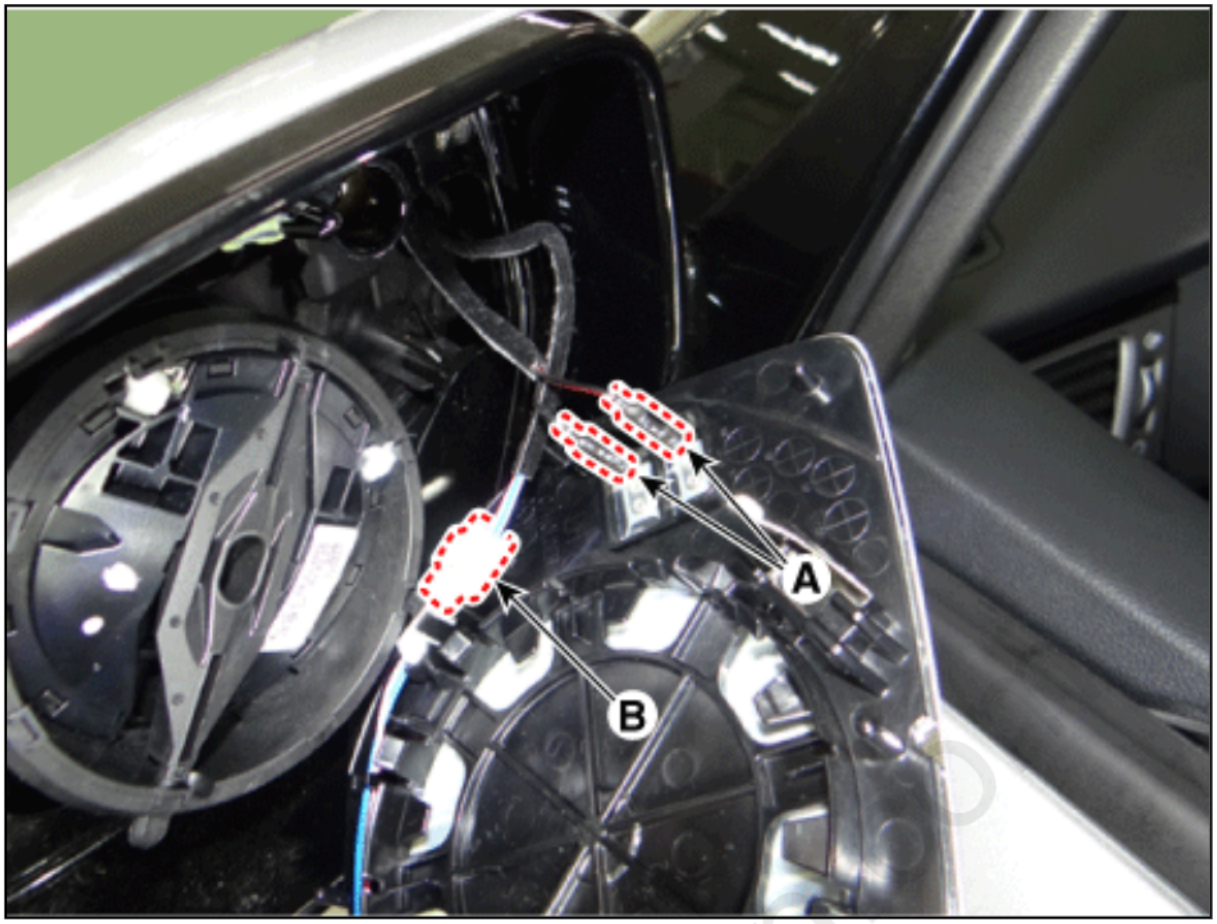

3. Remove the mirror actuator (A) by using flat-bladed screwdriver or remover after loosening the screw.

cardiagn



4. Disconnect the mirror actuator connector (A).



Installation

1. Install in the reverse order of removal.

cardiagn.com

Please rate this document after reviewing at the bottom of this page.

Component
Location



1. Driver power window switch
2. Assist power window switch
3. Rear power window switch
4. Front window motor
5. Rear window motor

Please rate this document after reviewing at the bottom of this page.

Description

Power Window Safety Function

When the driver or passenger power window auto-up switch is operated, the power window safety function is activated.

1. Safety function enable conditions
   When the window is closing and restriction 100N (using the 10N/mm spring) has been detect causing the motor to slow down, the window is reversed.
2. Window reversing distance (except while holding the Auto-Up switch).
   –When jamming (resistance) is detected between 4 - 250mm from the top of the door.
   → the window is lowered to 300mm from the top of the door as shown below.

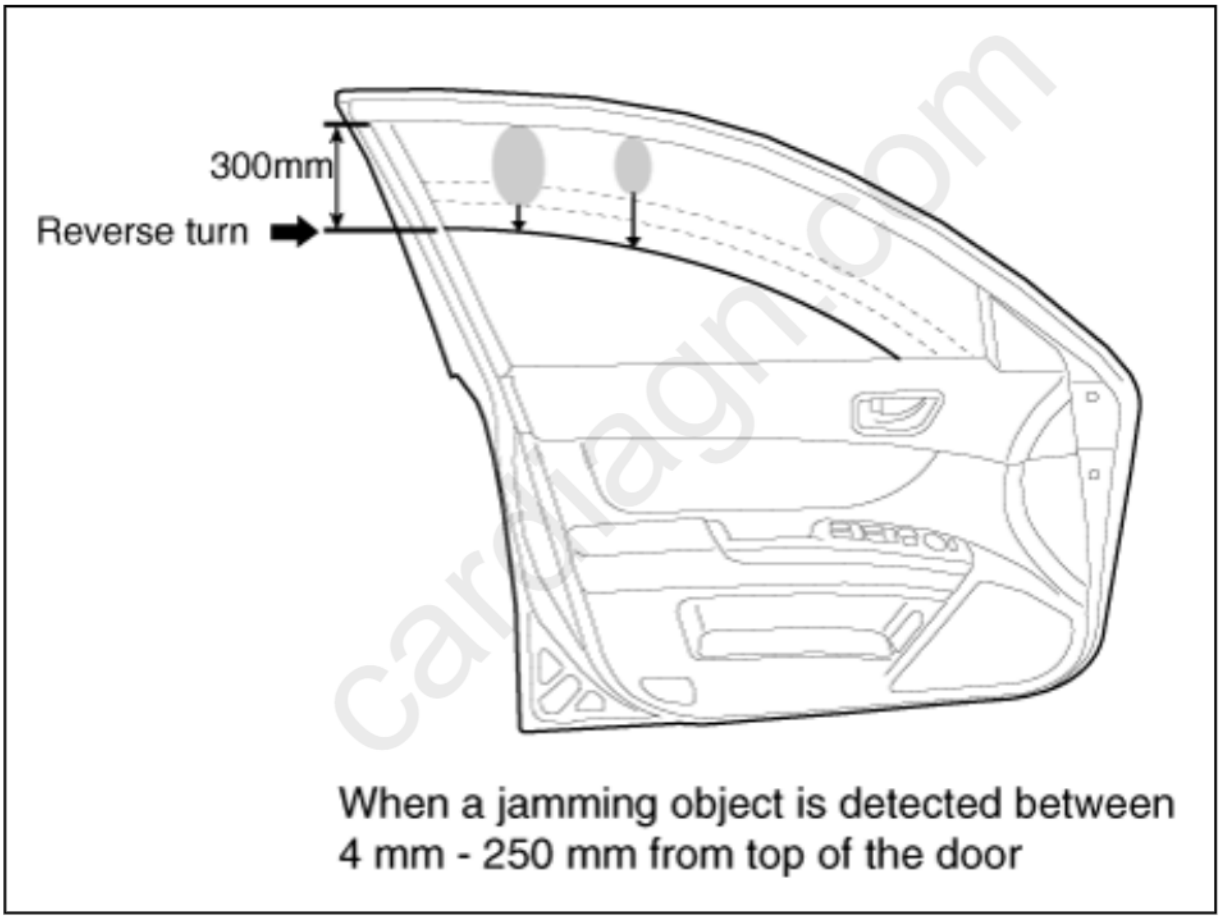

carmagn.com

–When jamming (resistance) is detected from more than 250mm from the top of the door.
→ the window is lowred to the lowest position plus an additional 50mm from the lowest position.

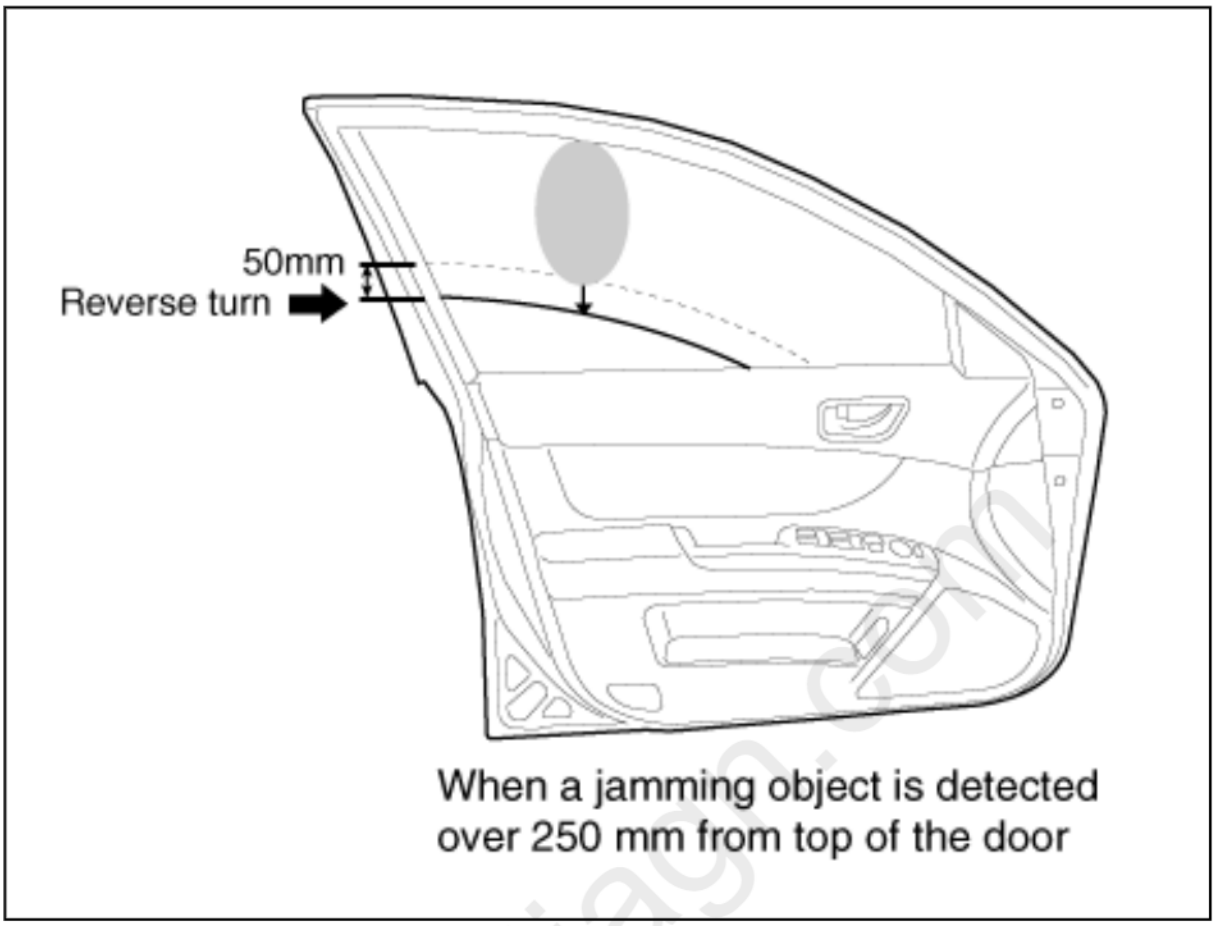

3. Window reversing distance (while holding the Auto-Up switch)
–When jamming (resistance) is detected while holding (actuating) the auto-up switch.
→ Window moves downward by 25mm from jamming position
–Auto-up function is not available for 5 seconds after the above operation.
→ When pulling the auto-up switch, the manual-up function is activated (no safety function).

cardiagn.com

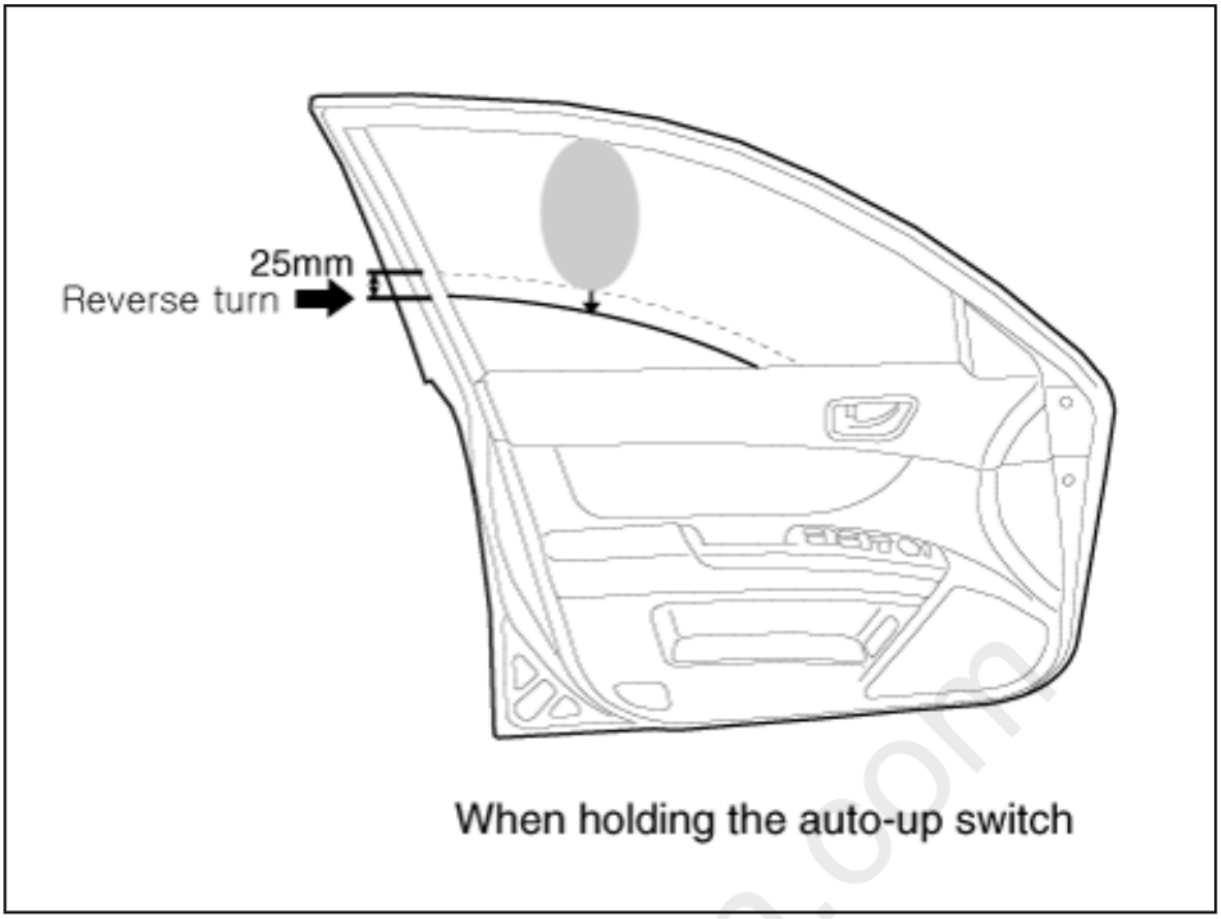

4. The area with the safety function is not applied
   Safety function is not available within the 4mm range from the top of the window frame.

How to initialize the safety power window

1. Initializing of Battery Connection
   When the battery power is removed for more than 5 minutes, the safety power window switch needs to be re-initialized.
   (1) Power window operation before initializing
   – Manual-Up/Down function is available
   – Auto-Up/Down function is not available
   (Only up/down available while holding the switch)
   (2) Initialization
   With the window in the FULL OPEN position, press and hold the UP switch position until it fully closes and hold switch for an additional 0.2 seconds.
   (Procedure will fail if starting initializing with the window in closed position)
   (3) If initializing procedure while the safety system still in jamming status, the safety function is not available.
   (4) The window safety motor uses a hall type sensor that is used to verify the position and direction of the motor, the safety module detects the uppermost (full closed)position of the window and sets the position as "0" or full closed.

cardiagn.com

(5) Deinitialization

The window safety module is deinitialized if the conditions listed below occur. Auto-Up and Safety function are deactivated.

Deinitialization conditions

a. Repeating window downward movement 15 or more times in a row.

b. Power supply is suspended while the motor is in operation.

c. Driver door opens, IGN Off with the window glass positioned in Hard Stop -> IGN On within 2 seconds -> within 5 seconds with IGN On, entering manual down switch signal 3 times -> Deinitialization completed (if power is not on in 2 seconds, or the operation to be performed in 5 seconds, the deinitialization process shall be repeated from the beginning.)

2. Initializing of fail safe mode

System includes motor overheating prevention feature, avoid overrunning/overheating of the window motor.(EEPROM data is stored in safety module)

(1) If the window moved by force and motor has a problem, power window switch could enter in fail safe mode for user's safety.

(2) Power window operation in fail mode

– Auto/Manual-Down function is available

– Auto/Manual-Up function is not available

(When Auto/Manual-up is operated, window rises by 20mm and stops moving.)

cardiagn.com

Please rate this document after reviewing at the bottom of this page.

Connector and Terminal Function

[Safety window motor]

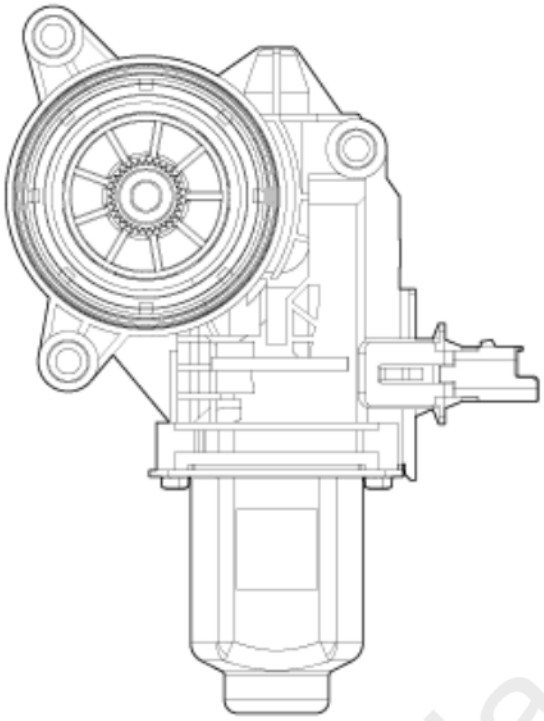

[Standard window motor]

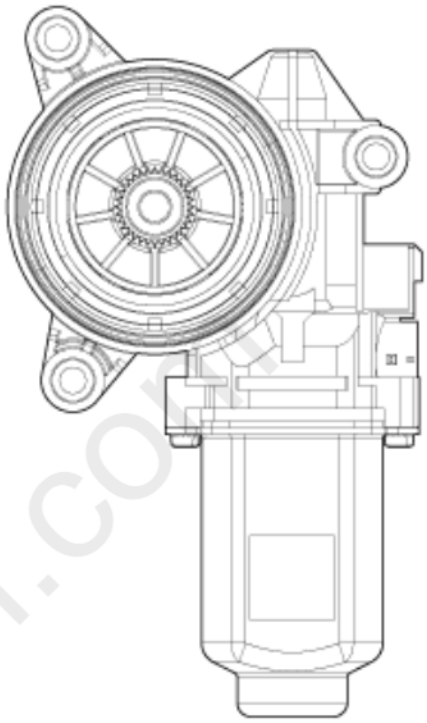

Connector	
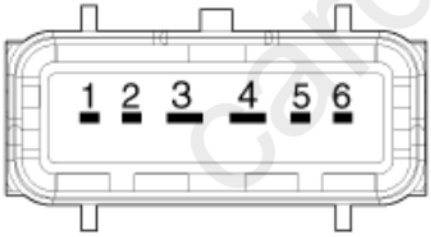	
No.	**Description**
1	Down
2	Up
3	Ground
4	Battery (+)
5	Auto
6	Enable

Connector	
	
No.	**Description**
1	Up
2	Down

cardiagn.com

Circuit Diagram

[Safety window motor]

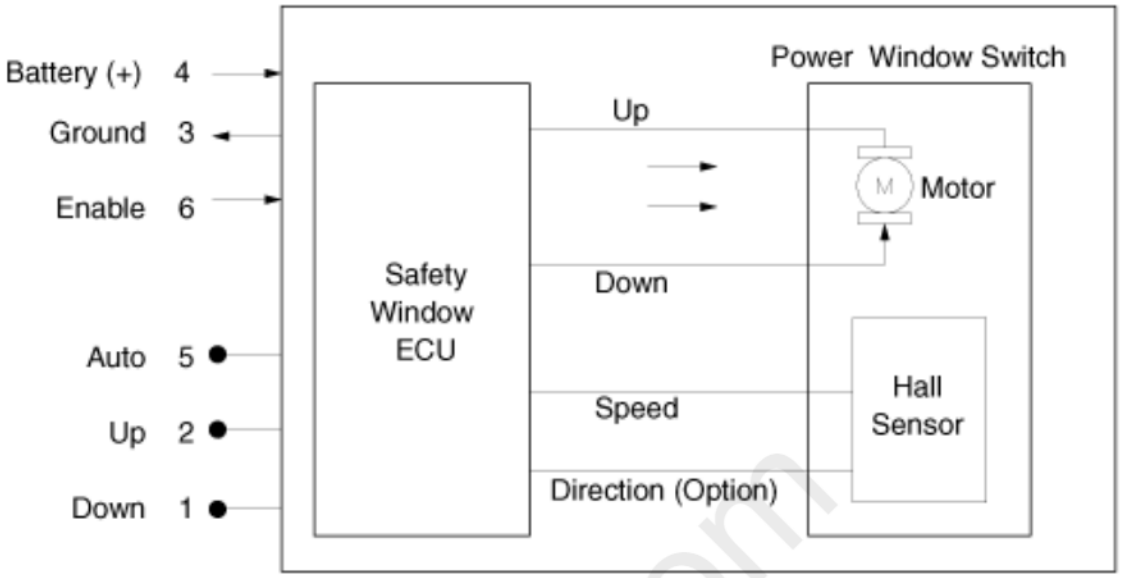

[Standard window motor]

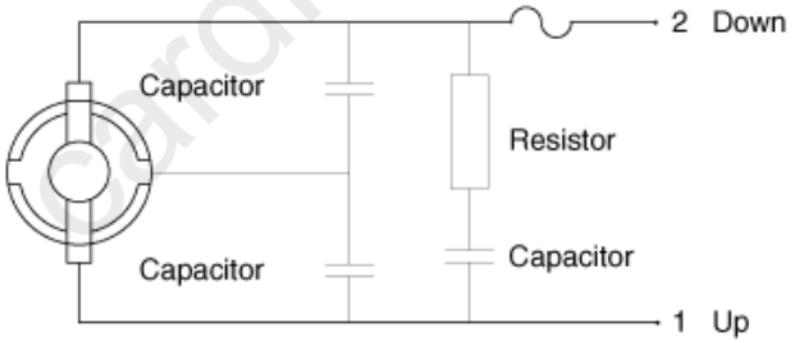

cardiagn.com

Please rate this document after reviewing at the bottom of this page.

Inspection

Front Power Window Motor

1. Remove the front door trim.
   (Refer to Body - "Front Door Trim")
2. Disconnect the motor connector (A) from the motor.

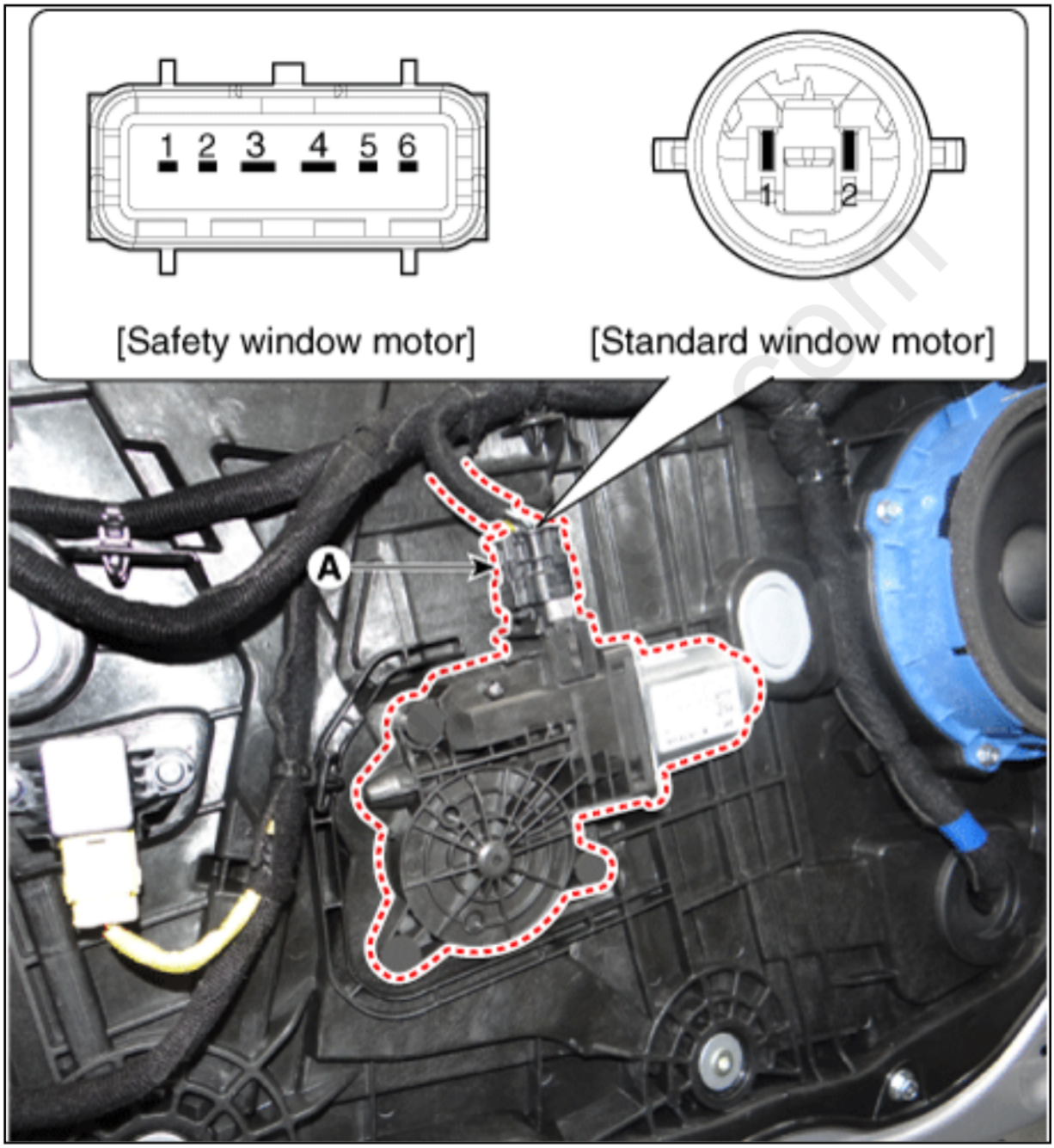

3. Connect the terminal No.2 and No.1 to battery voltage (12V) and check that the motor operates smoothly when connecting the terminals below.

[Safety Window Motor]

Position			2	3(GND)	1
Left	Up	Clockwise	○——	——○	
	Down	Counter-clockwise		○——	——○
Right	Up	Counter-clockwise	○——	——○	
	Down	Clockwise		○——	——○

4. Connect the motor terminals directly to battery voltage (12V) and check that the motor operates smoothly. Next, reverse the polarity and check that the motor operates smoothly in the reverse direction. If the operation is abnormal, replace the motor.

[Standard Window Motor]

Position			1	2
Left	Up	Clockwise	⊕	⊖
	Down	Counter-clockwise	⊖	⊕
Right	Up	Counter-clockwise	⊕	⊖
	Down	Clockwise	⊖	⊕

Rear Power Window Motor

1. Remove the rear door trim.
   (Refer to Body - "Rear Door Trim")

cardiagn.com

2. Disconnect the motor connector (A) from the motor.

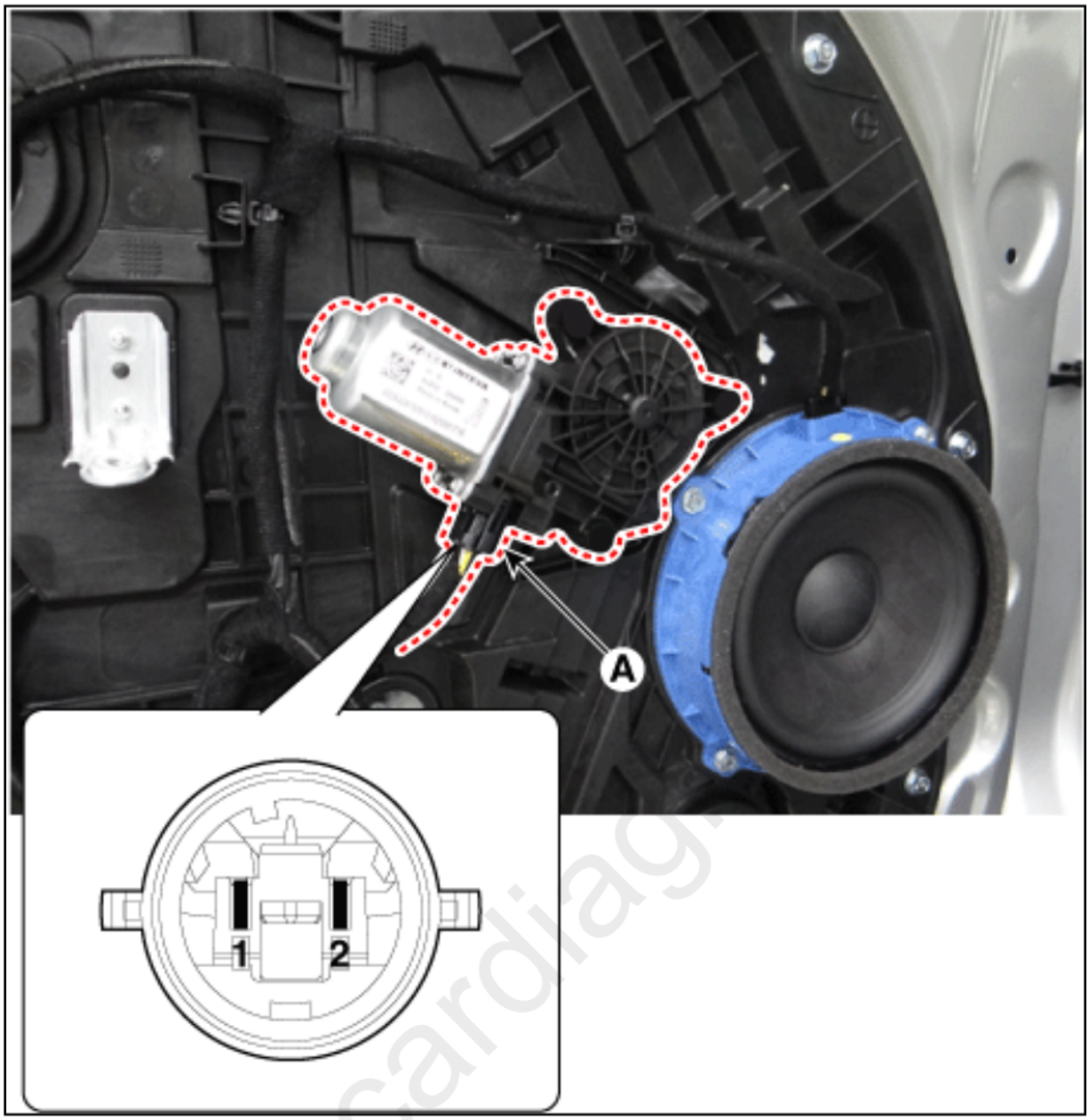

3. Connect the motor terminals No.1 and No.2 directly to battery voltage (12V) and check that the motor operates smoothly.
   If the operation is abnormal, replace the motor.

Position			Terminal 1	2
Left	Up	Counter-clockwise	⊕	⊖
	Down	Clockwise	⊖	⊕
Right	Up	Clockwise	⊕	⊖
	Down	Counter-clockwise	⊖	⊕

Removal

Front Power Window Motor

1. Remove the front door trim.
   (Refer to Body - "Front Door Trim")
2. After disconnecting the motor connector (A), remove the power window motor (B) by loosening the bolts.

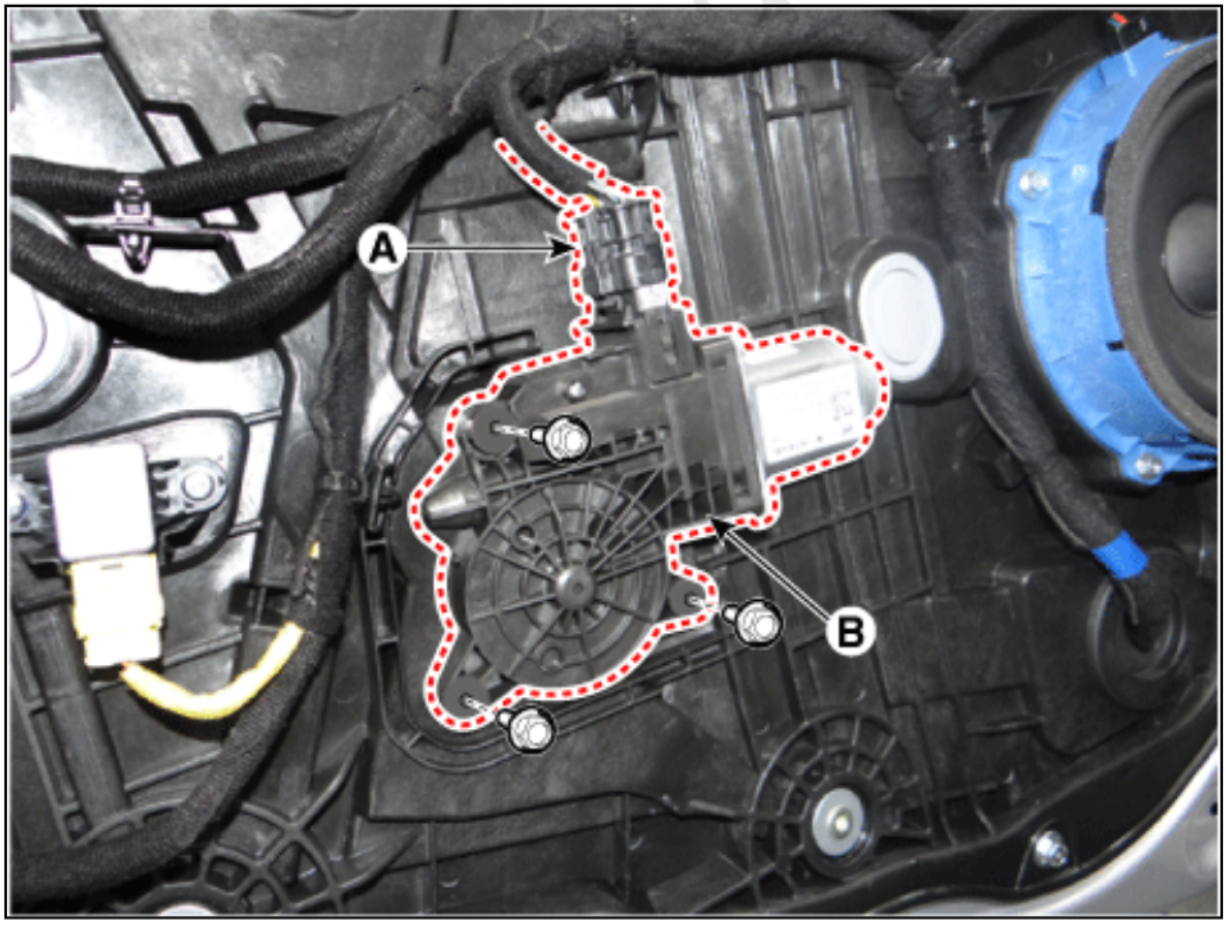

Rear Power Window Motor

1. Remove the rear door trim.
   (Refer to Body - "Rear Door Trim")
2. After disconnecting the motor connector (A), remove the power window motor (B) by loosening the bolts.

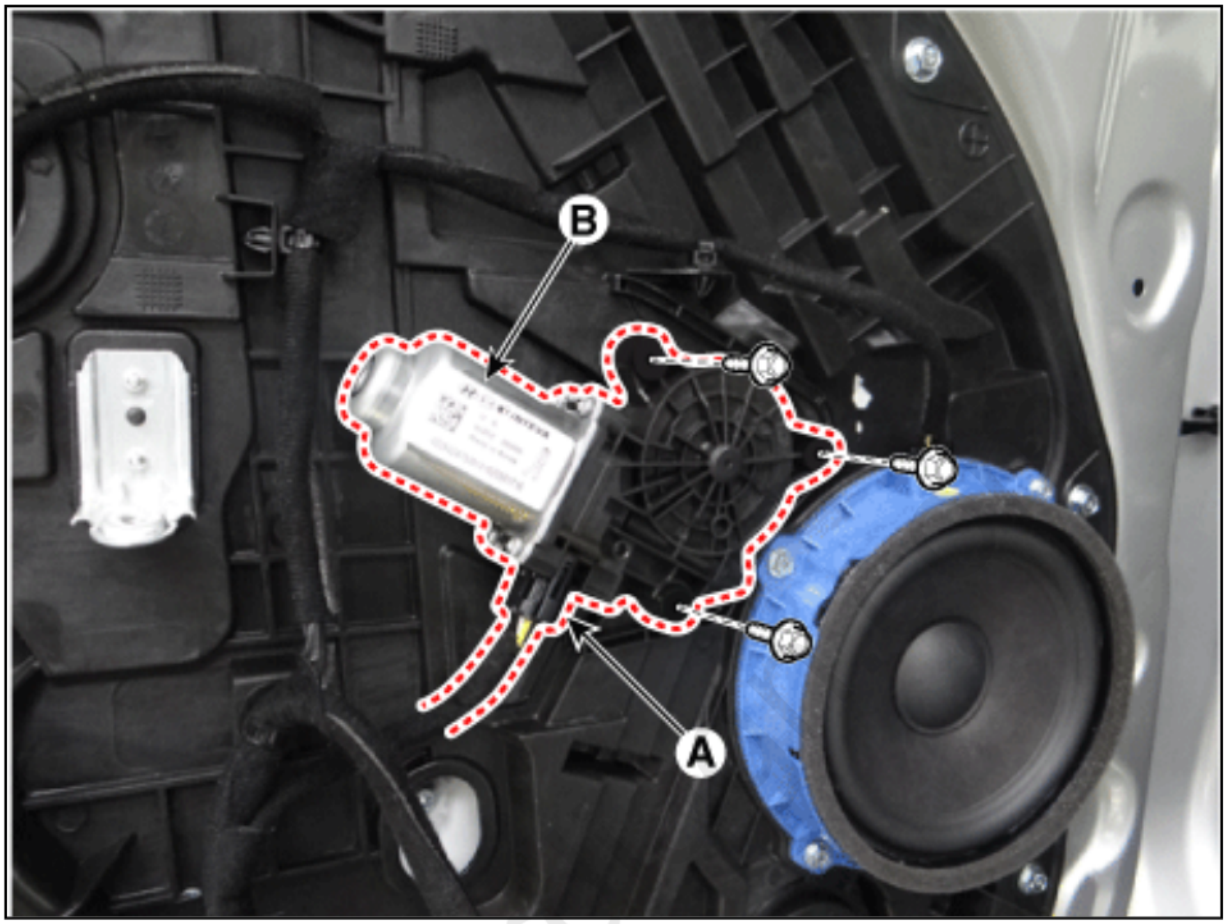

Installation

1. Install in the reverse order of removal.

Please rate this document after reviewing at the bottom of this page.

Connector and Terminal
Function

Power Window Main Switch

Non-IMS type

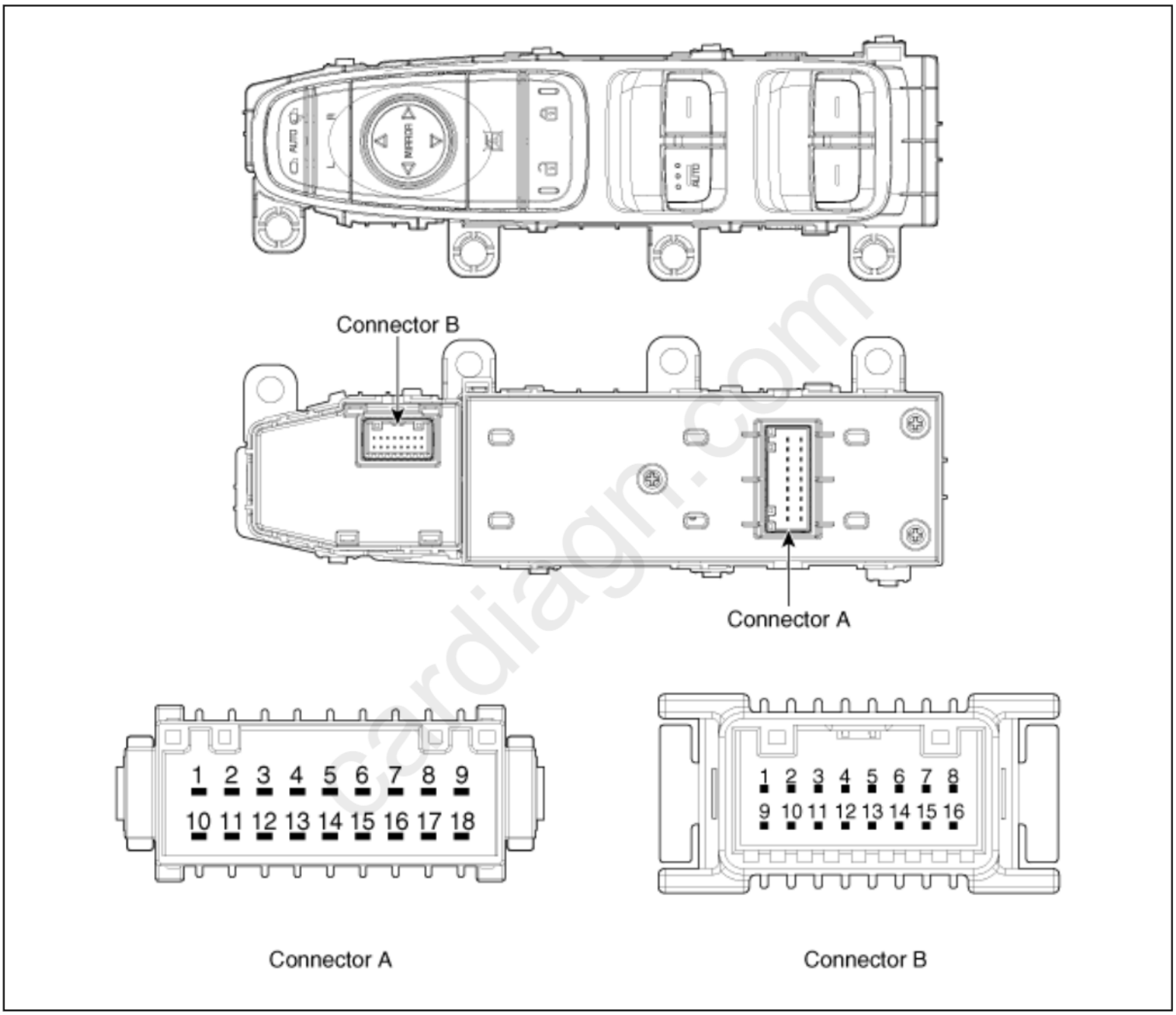

Pin	Function			
	Connector A			Connector B
	Front safety	Driver safety	Auto down	
1	Front window up (Right)	Front window up (Right)	Front window up (Right)	-

2	Front auto up (Right)	-	-	-
3	Front auto up (Right)	Front window down (Right)	Front window down (Right)	-
4	Door lock switch	Door lock switch	Door lock switch	-
5	window lock (Left)	window lock (Left)	window lock (Left)	Ground
6	Door unlock switch	Door unlock switch	Door unlock switch	-
7	Front window up (Left)	Front window up (Left)	Front window up (Left)	Mirror folding switch
8	Ground	Ground	Ground	Mirror unfolding switch
9	Front window down (Left)	Front window down (Left)	Front window down (Left)	-
10	Rear window up (Right)	Rear window up (Right)	Rear window up (Right)	Left Mirror COM
11	Rear window down (Right)	Rear window down (Right)	Rear window down (Right)	Left Mirror control (Left / Right)
12	Battery+ (Right)	Battery+ (Right)	Battery+ (Right)	Mirror control (Up / Down)
13	Tail lamp	Tail lamp	Tail lamp	Right Mirror control (Left / Right)
14	Window lock (Right)	Window lock (Right)	Window lock (Right)	Right Mirror COM
15	Rear window up (Left)	Rear window up (Left)	Rear window up (Left)	-
16	Rear window down (Left)	Rear window down (Left)	Rear window down (Left)	ACC
17	Front auto (Left)	Front auto (Left)	-	
18	Battery+ (Left)	Battery+ (Left)	Battery+ (Left)	

IMS type (DDM : Driver Door Module)

cardiagn.com

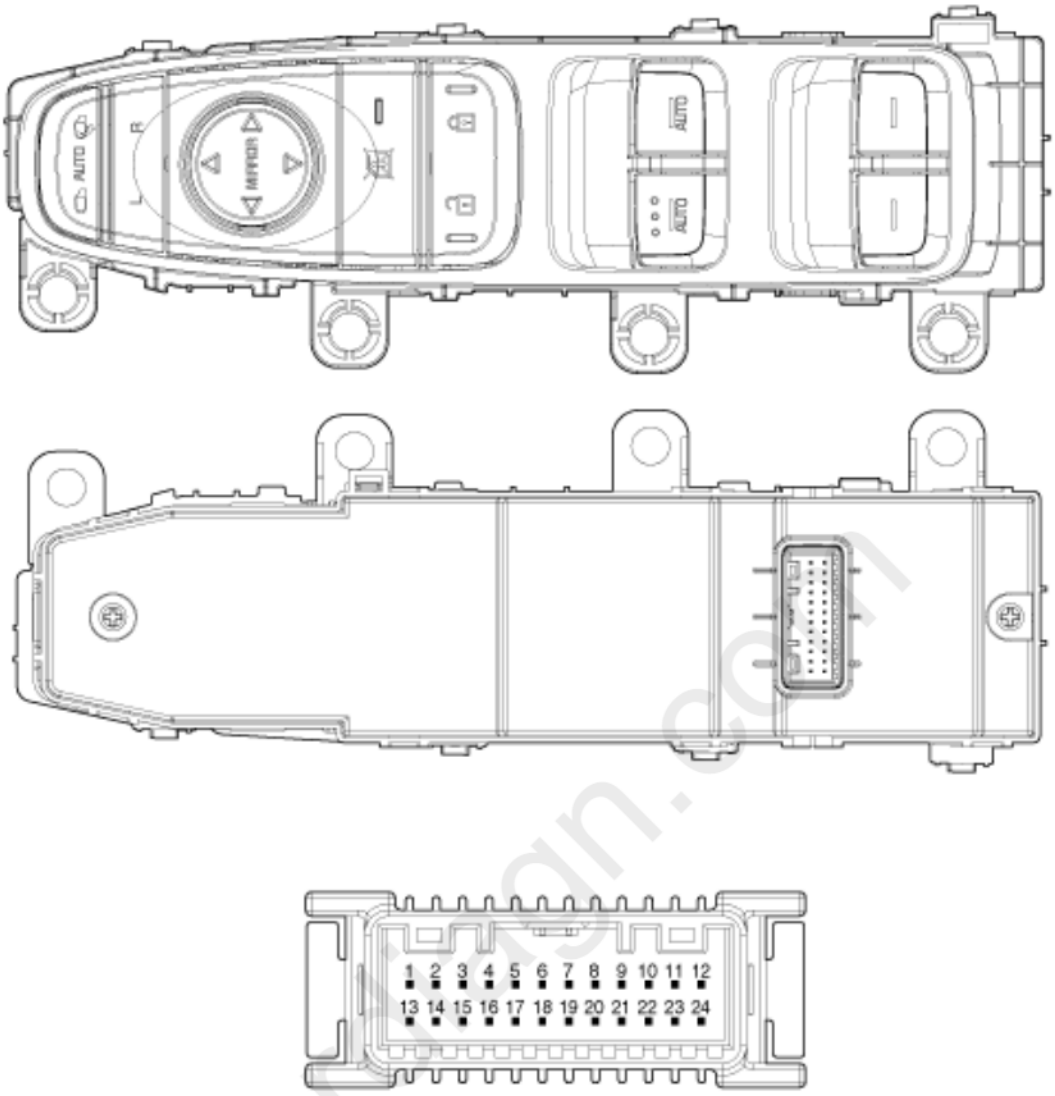

Pin	Function	Pin	Function
1	ECU Battery+	13	Battery Load (+)
2	-	14	IGN1
3	B-CAN (High)	15	Front window up (Left)
4	B-CAN (Low)	16	Front window down(Left)
5	-	17	Front window auto (Left)
6	Mirror sensor power	18	Left mirror control (Up / Down)
7	Mirror sensor (Left / Right)	19	Left mirror control (Left / Right)
8	Mirror sensor (Up / Down)	20	Left mirror COM
9	Mirror sensor ground	21	-
10	Window lock	22	-

11	Rear window up (Left)	23	Ground
12	Rear window down (Left)	24	Ground Load

Assist Power Window Switch

Non-IMS type

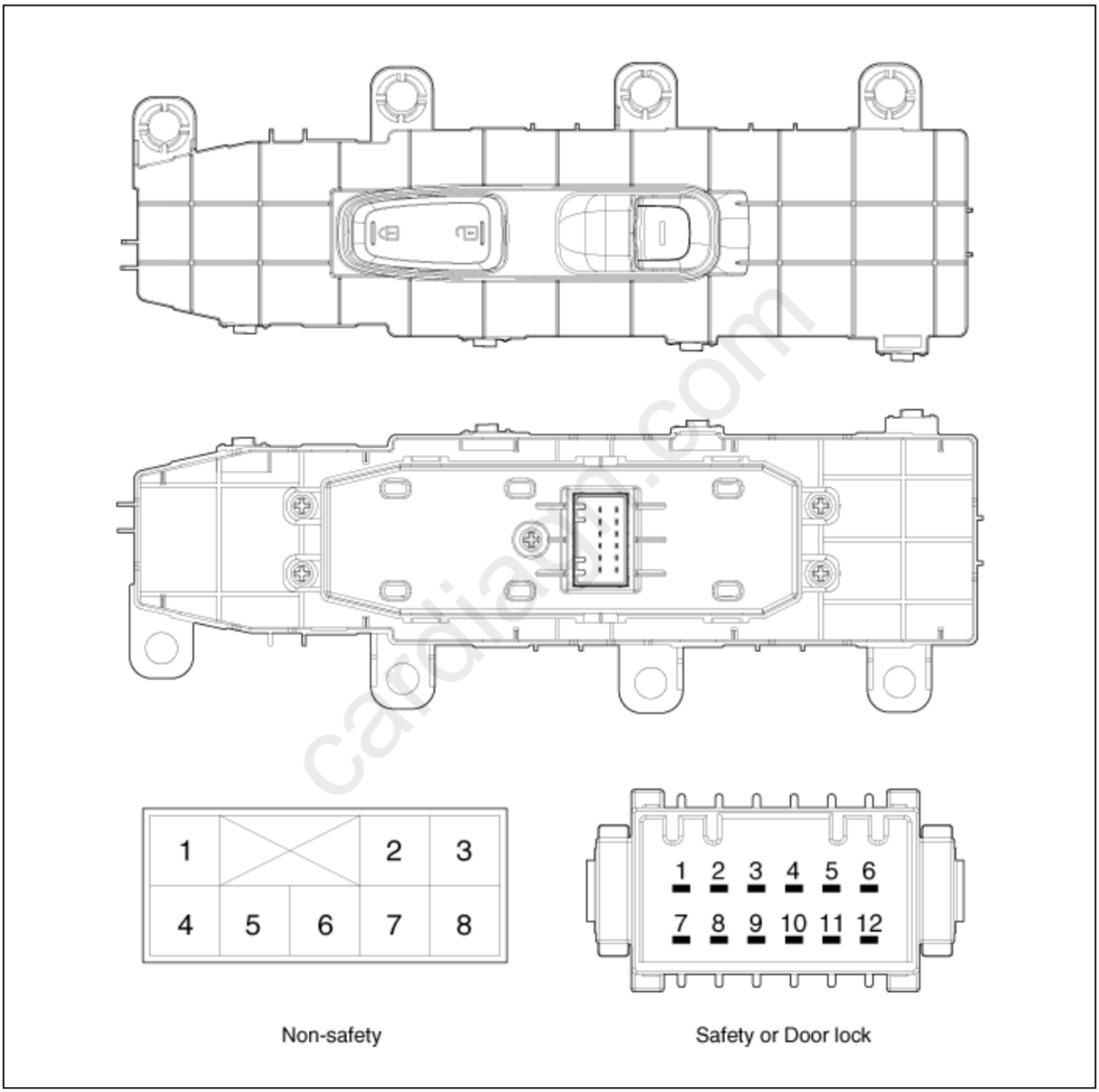

Pin	Function			
	Connector			
	Manual	Manual + Door lock	Safety	Safety + Door lock

1	Window up	Window up	Tail lamp	Tail lamp
2	Window switch up (Left)	Tail lamp	-	-
3	Ground	Door lock switch	Ground	Ground
4	Window down	Ground	-	Door lock switch
5	-	Door unlock switch	-	Door unlock switch
6	Battery (+)	Window down	-	-
7	Window switch down (Left)	-	Window down	Window down
8	Tail lamp	Window switch up (Left)	-	-
9		-	Window up	Window up
10		Ground	-	-
11		Window switch down (Left)	Window auto	Window auto
12		Battery (+)	-	-

IMS type (ADM : Assist Door Module)

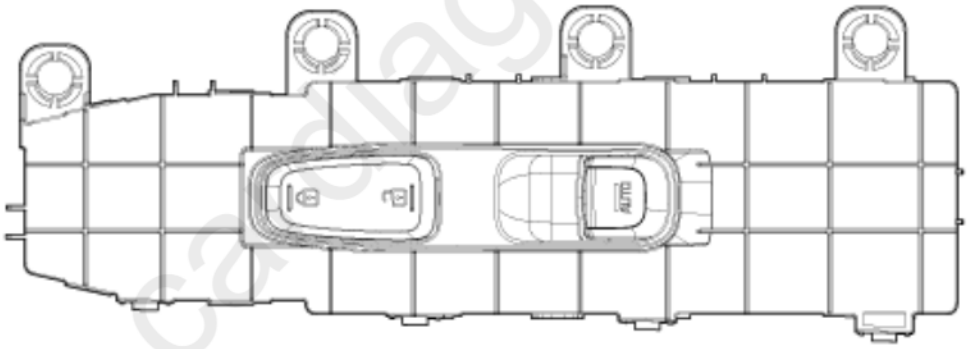

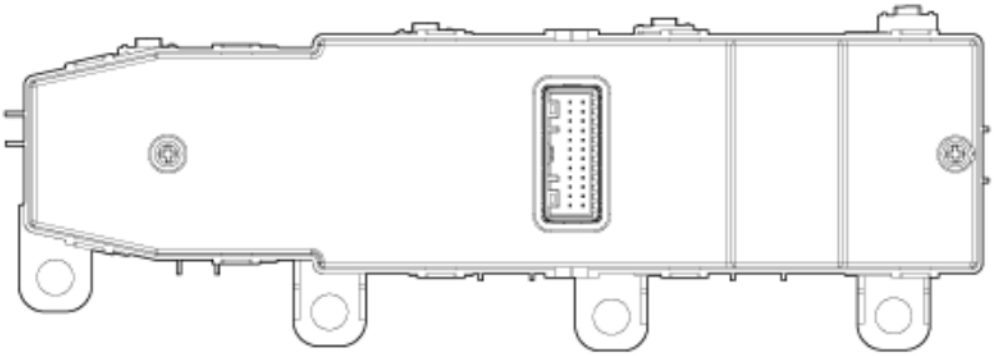

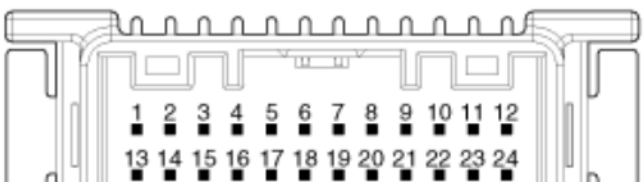

cardiagn.com

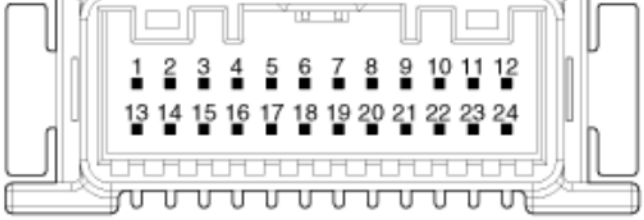

Pin	Function	Pin	Function
1	ECU Battery+	13	Battery Load (+)
2	-	14	IGN1
3	B-CAN (High)	15	Front window up (Right)
4	B-CAN (Low)	16	Front window down (Right)
5	-	17	Front window auto (Right)
6	Mirror sensor power	18	Left mirror control (Up / Down)
7	Mirror sensor (Left / Right)	19	Left mirror control (Left / Right)
8	Mirror sensor (Up / Down)	20	Left mirror COM
9	Mirror sensor ground	21	-
10	Window lock	22	-
11	Rear window up (Right)	23	Ground
12	Rear window down (Right)	24	Ground Load

Rear Power Window Switch

cardiagn.com

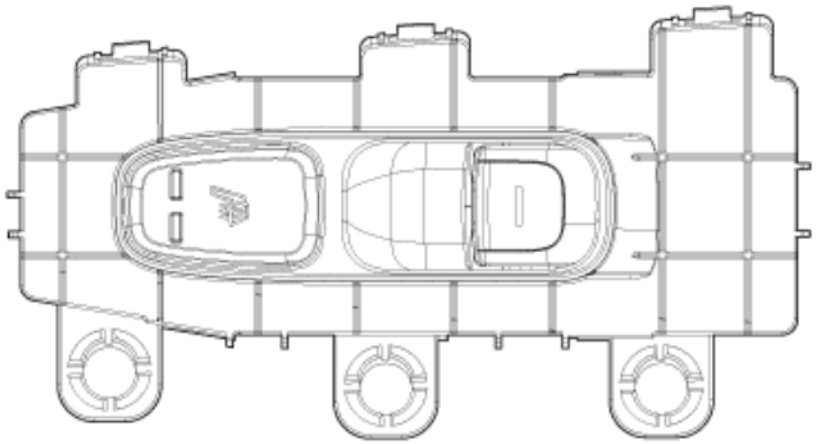

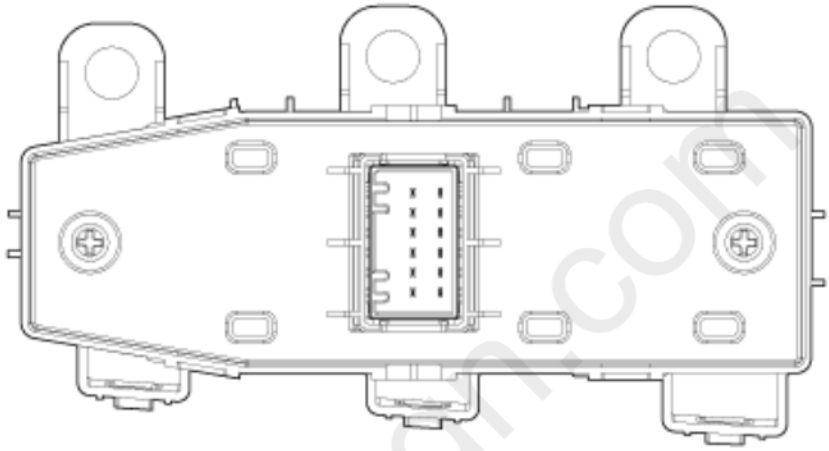

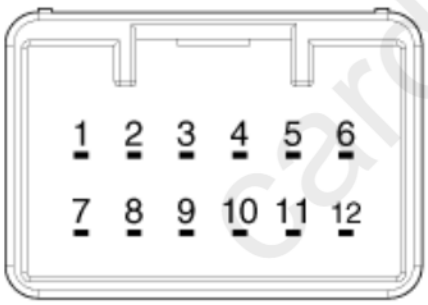

Non-seat warmer

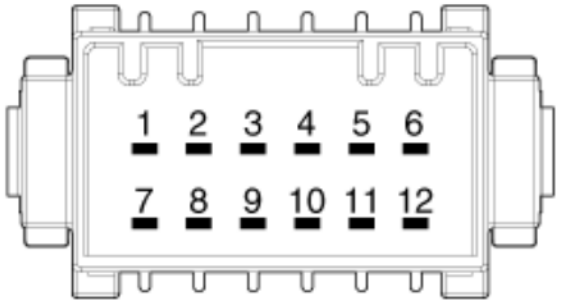

Seat warmer

cardiagn.com

Pin	Function	
	Non-seat warmer	Seat warmer
1	Tail lamp	Window up
2	Window down (Left)	Seat warmer indicator (High)
3	-	Seat warmer indicator (Low)
4	-	Tail lamp
5	-	Seat warmer switch battery (+)

6	Window down	Window down
7	Ground	Window up (Left)
8	Window up (Left)	Ground
9	-	Ground
10	Battery (+)	-
11	-	Window down (Left)
12	Window up	Battery (+)

Circuit
Diagram

Power Window Main Switch

[Non-IMS, Manual]

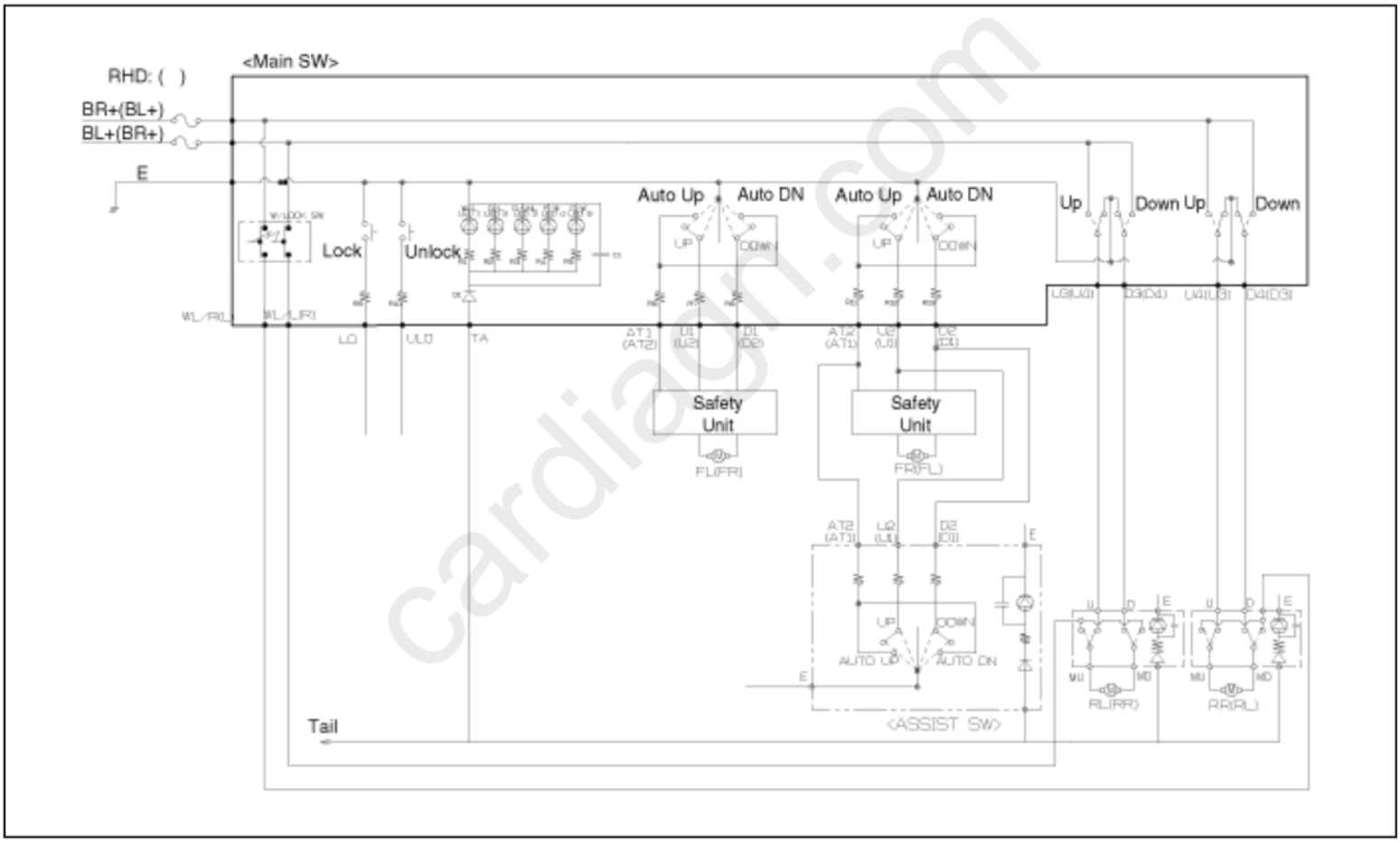

[Non-IMS, Safety]

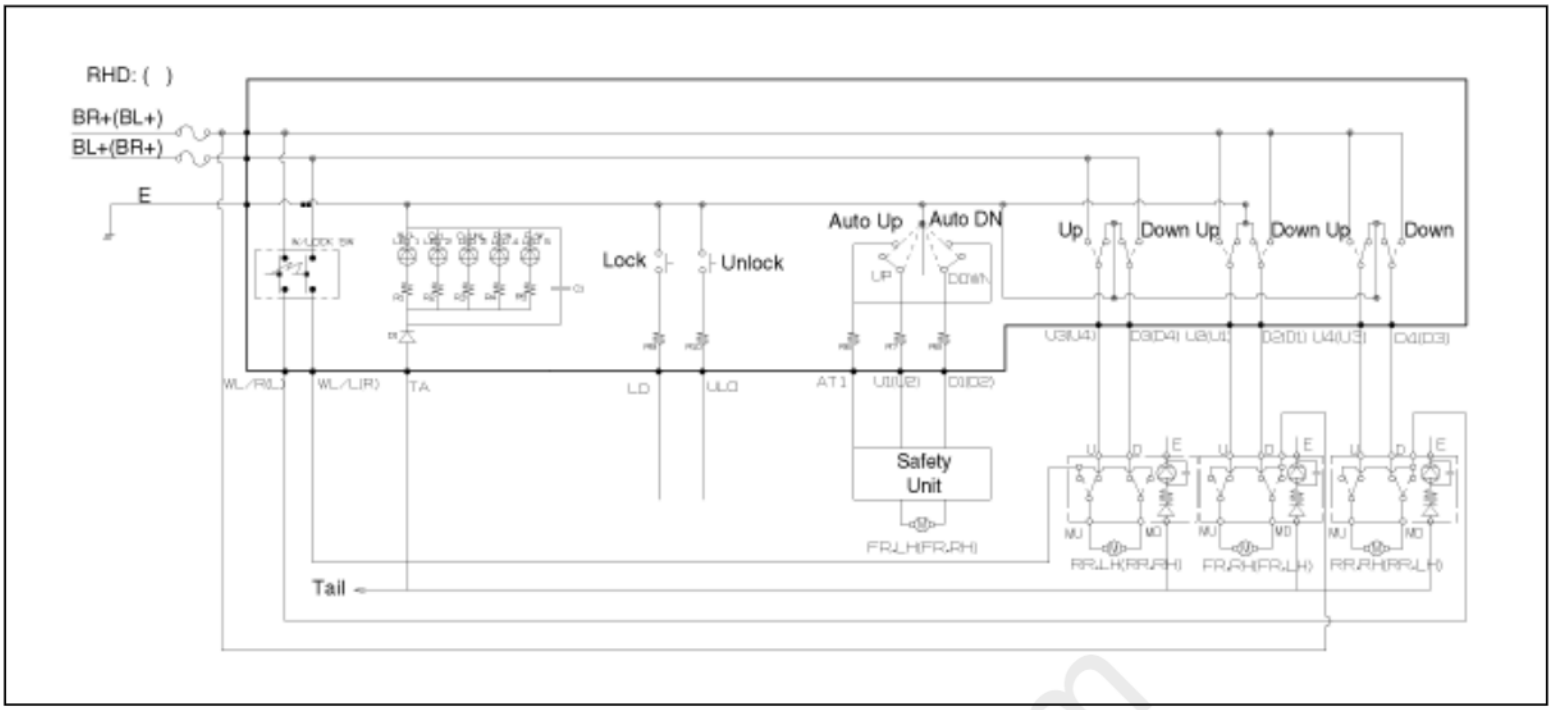

[Non-IMS, Auto down]

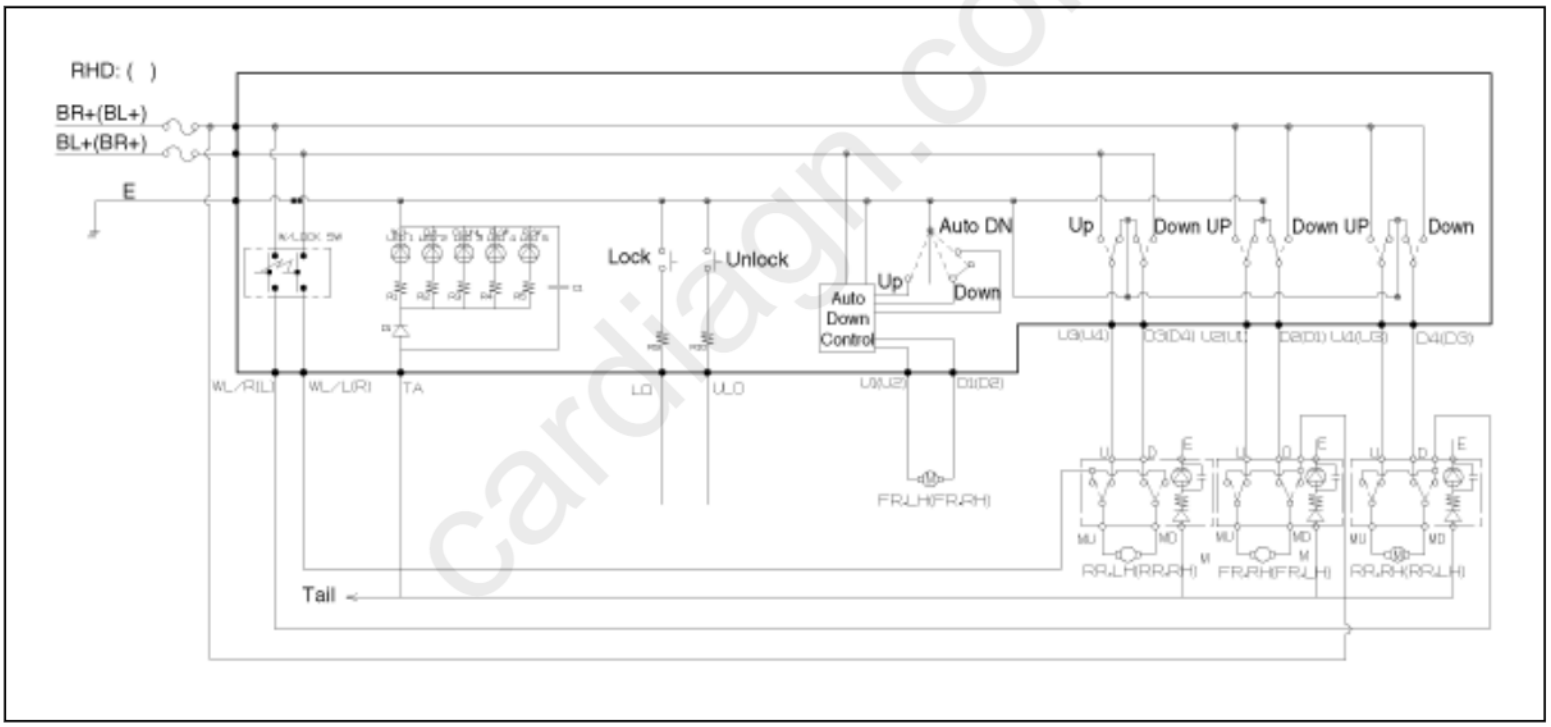

[IMS]

cardiagn.com

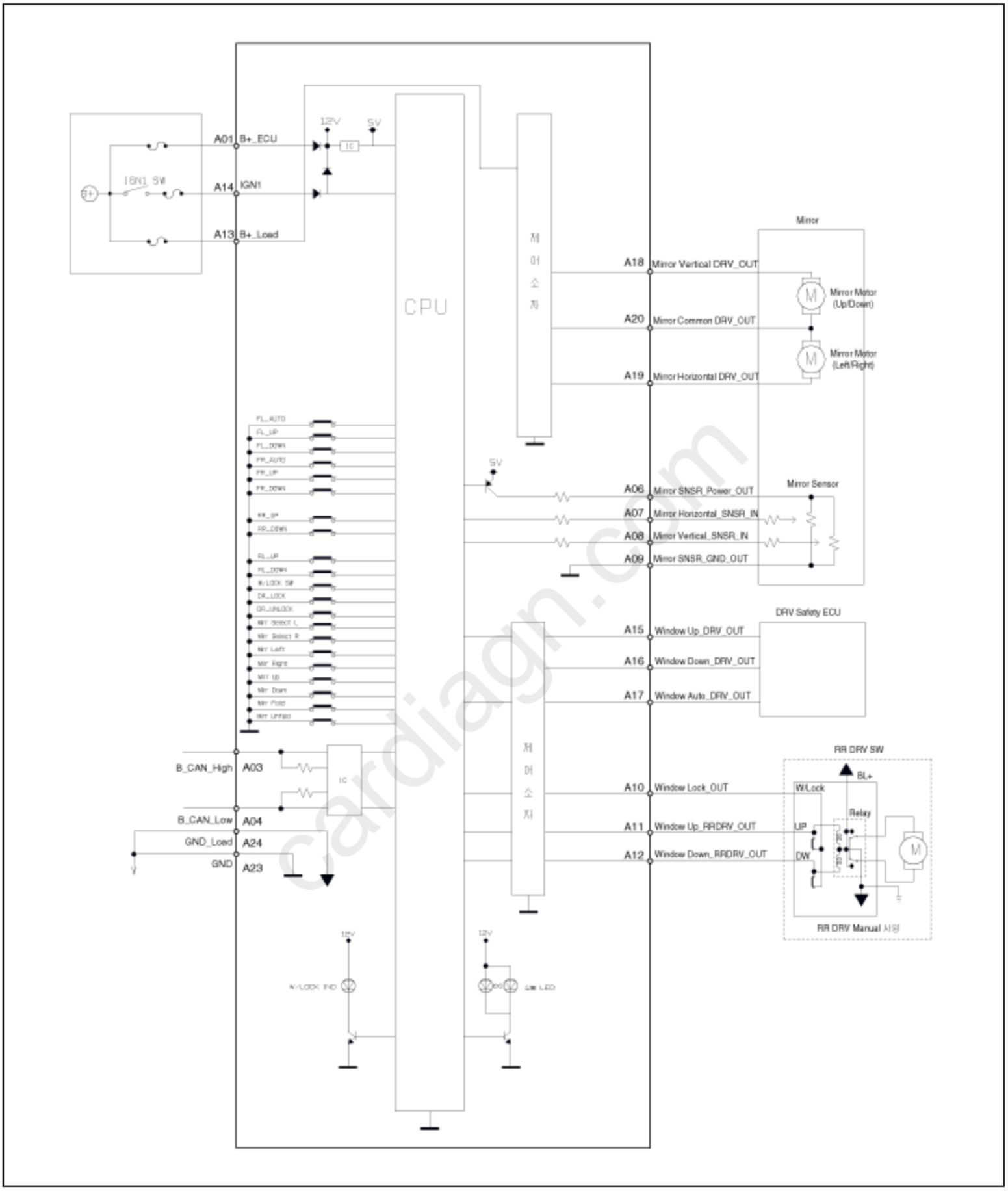

Assist Power Window Switch

[Non-IMS, Manual]

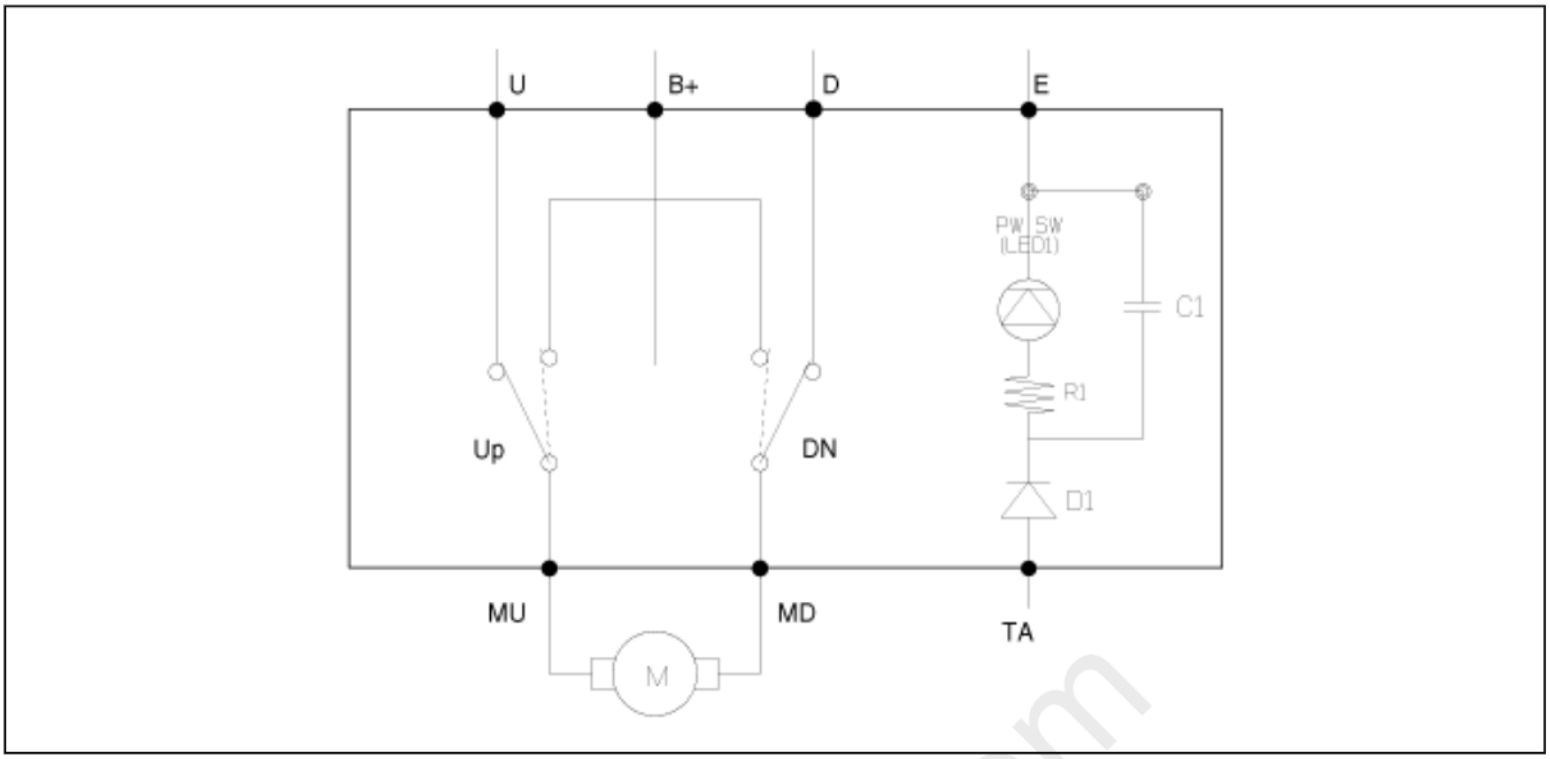

[Non-IMS, Manual, Door lock]

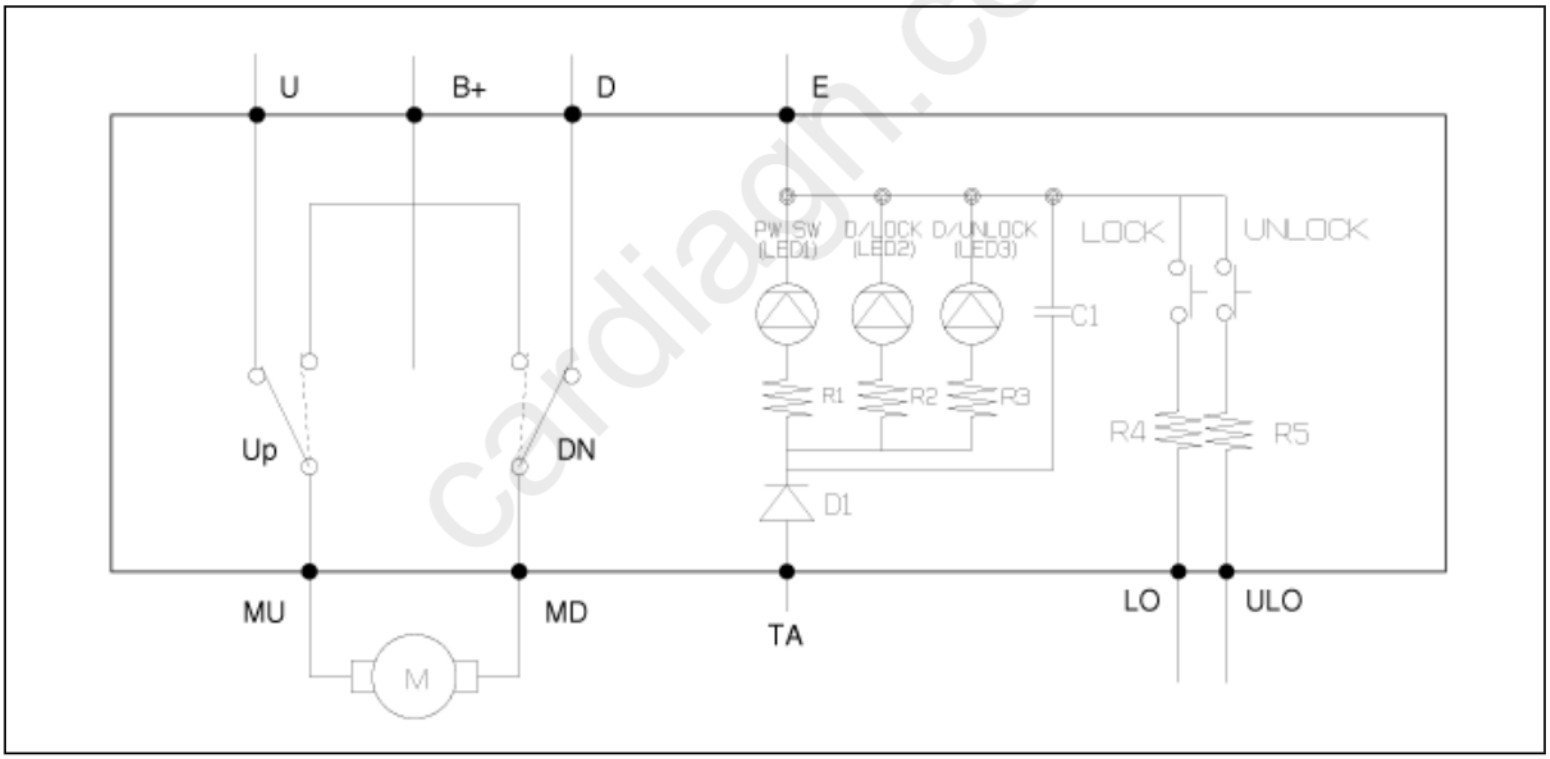

[Non-IMS, Safety]

cardiagn.com

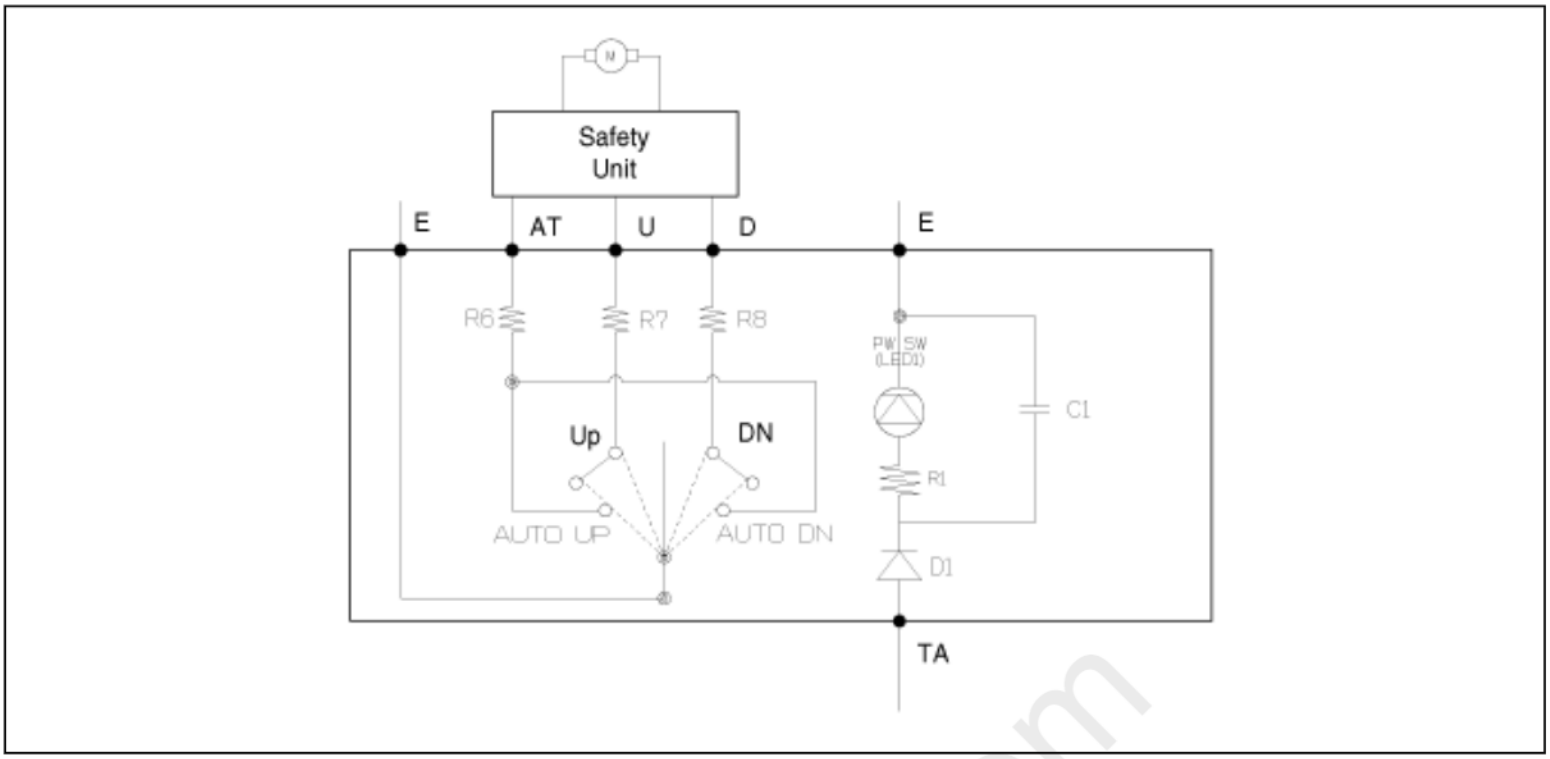

[Non-IMS, Safety, Door lock]

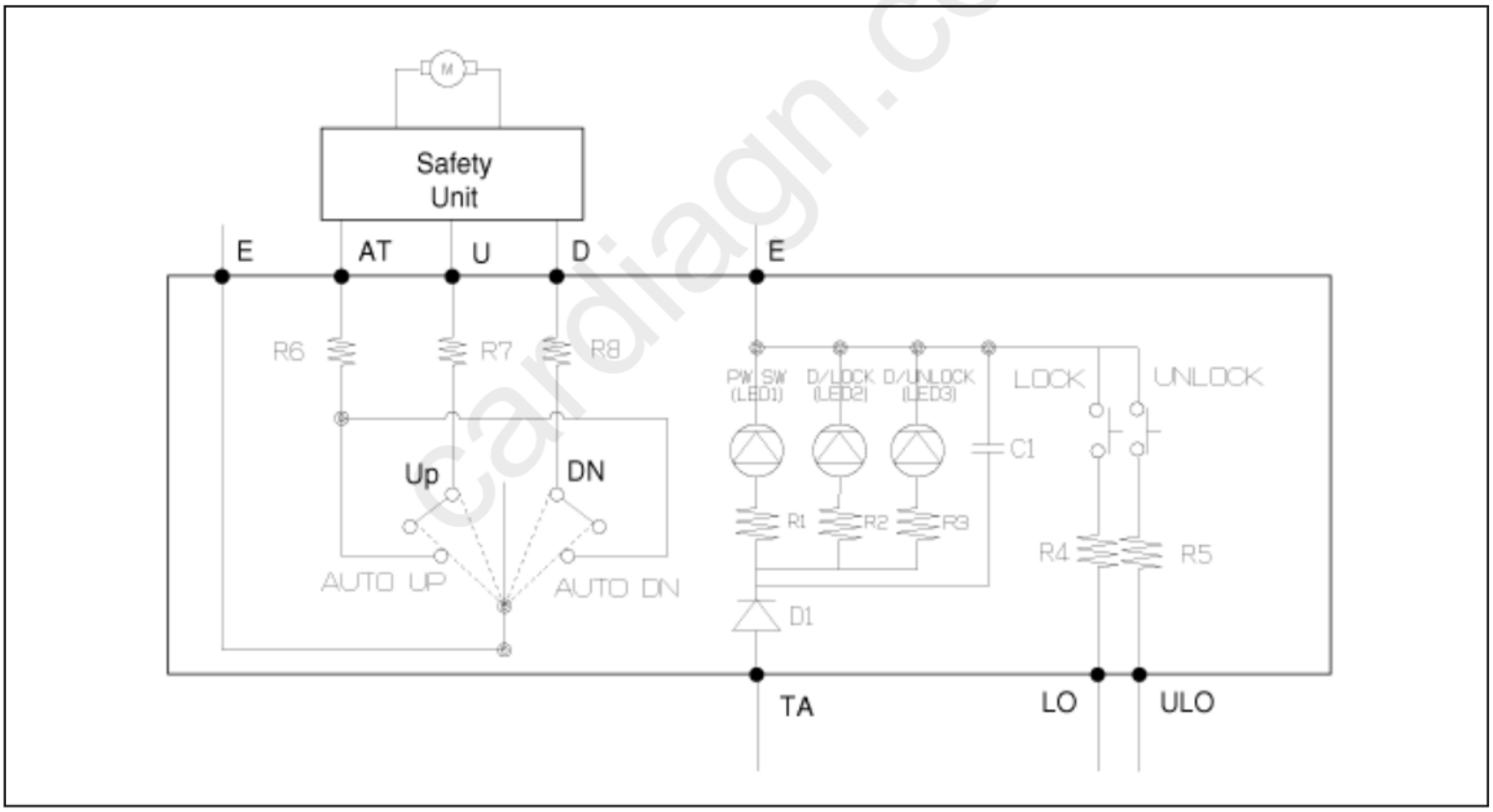

[IMS]

cardiagn.com

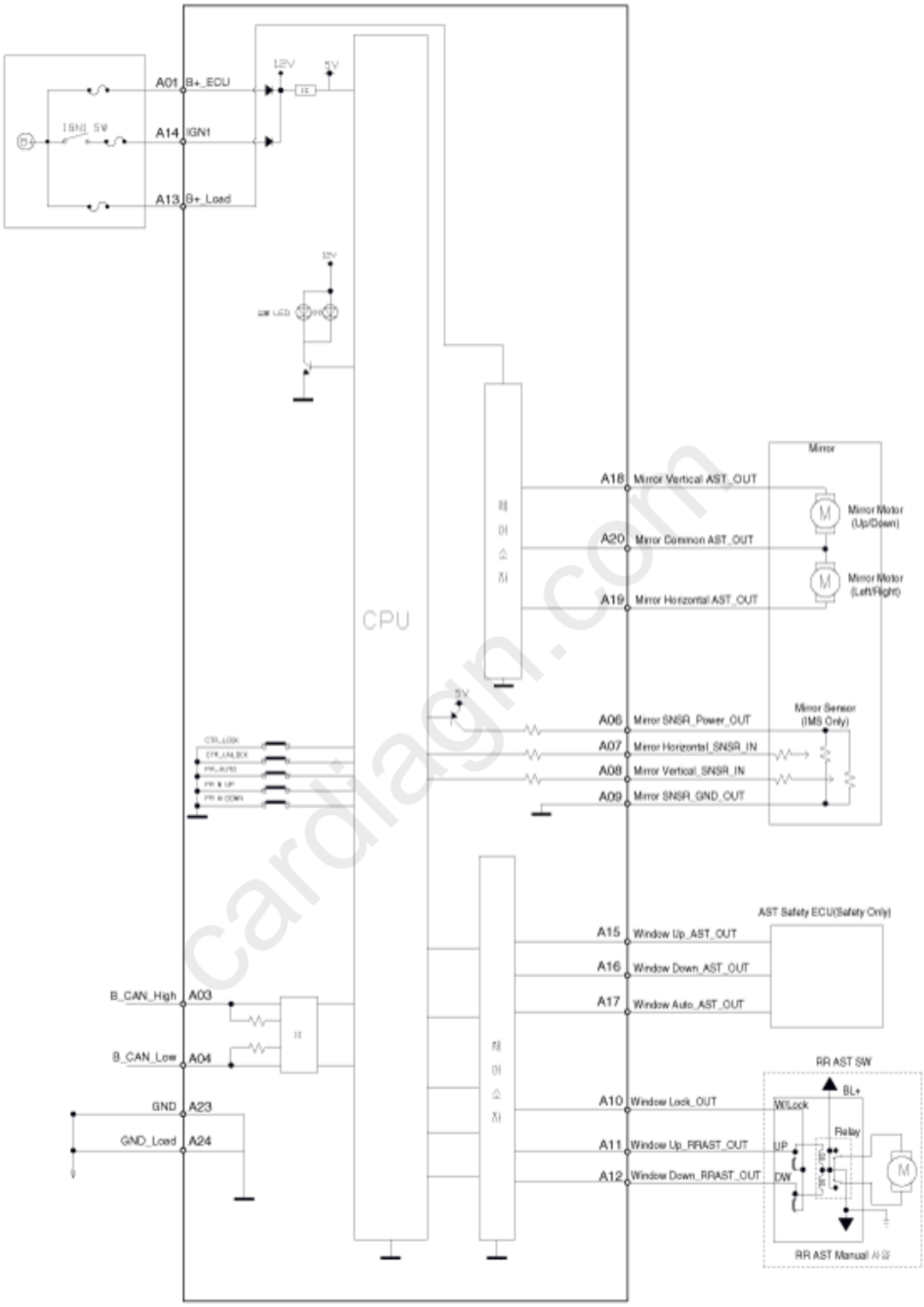

Rear Power Window Switch

[Non-seat warmer]

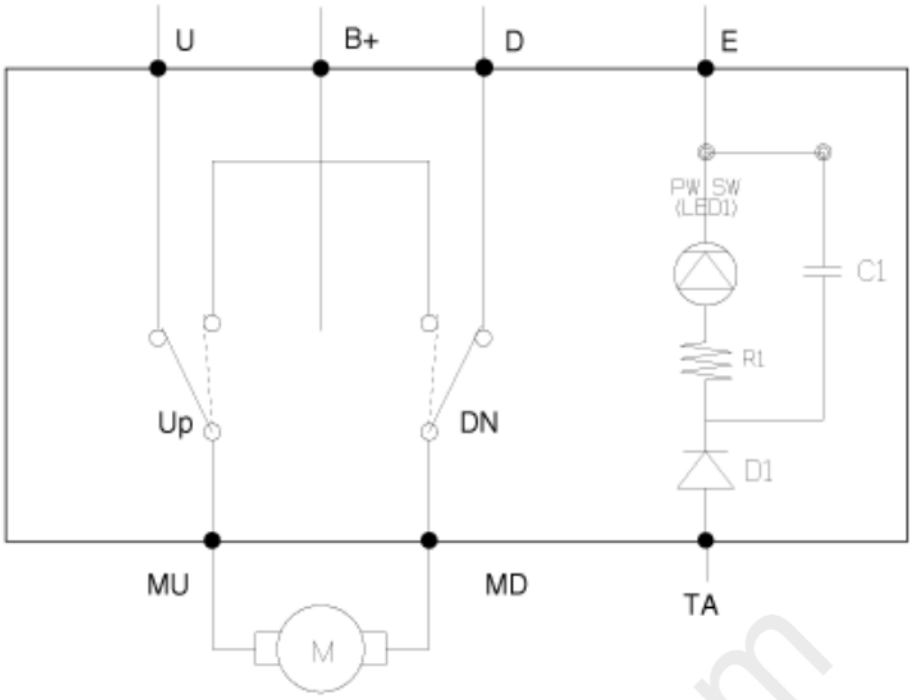

[Seat warmer]

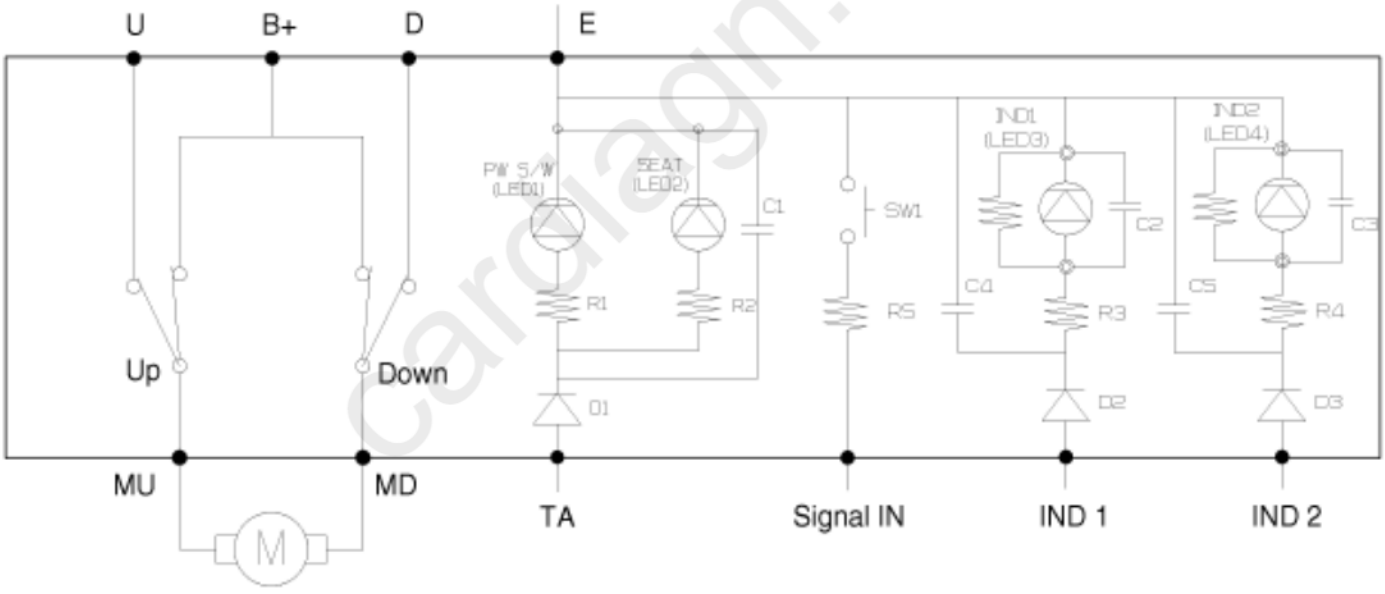

cardiagn.com

Please rate this document after reviewing at the bottom of this page.

Inspection

IMS (DDM / ADM)

1. The body electrical system can be quickly diagnosed for failed parts by using vehicle diagnostic system (KDS).
   The diagnostic system (KDS) provides the following information.
   (1) Self diagnosis : Checks and displays the failure code (DTC).
   (2) Current data : Checks the system input/output data state.
   (3) Actuation test : Checks the system operating condition.
   (4) Additional function : Other controls such as the system option and zero point.
2. Select the 'Car model' and the system to be checked in order to check the vehicle with the tester.
3. Select the 'Body Control Module (BCM)' to check the driver seat or assist door module (DDM/ ADM).
4. Select the "Current Data" menu to check the current state of the input/output data.
   The input/output data for the sensors corresponding to the driver seat or assist door module (DDM/ ADM) can be checked.

Non-IMS

[Power Window Main Switch]

1. Remove the front left door trim.
   (Refer to Body - "Front Door Trim")
2. Check for continuity between the terminals in each switch position according to the table.

cardiagn.com

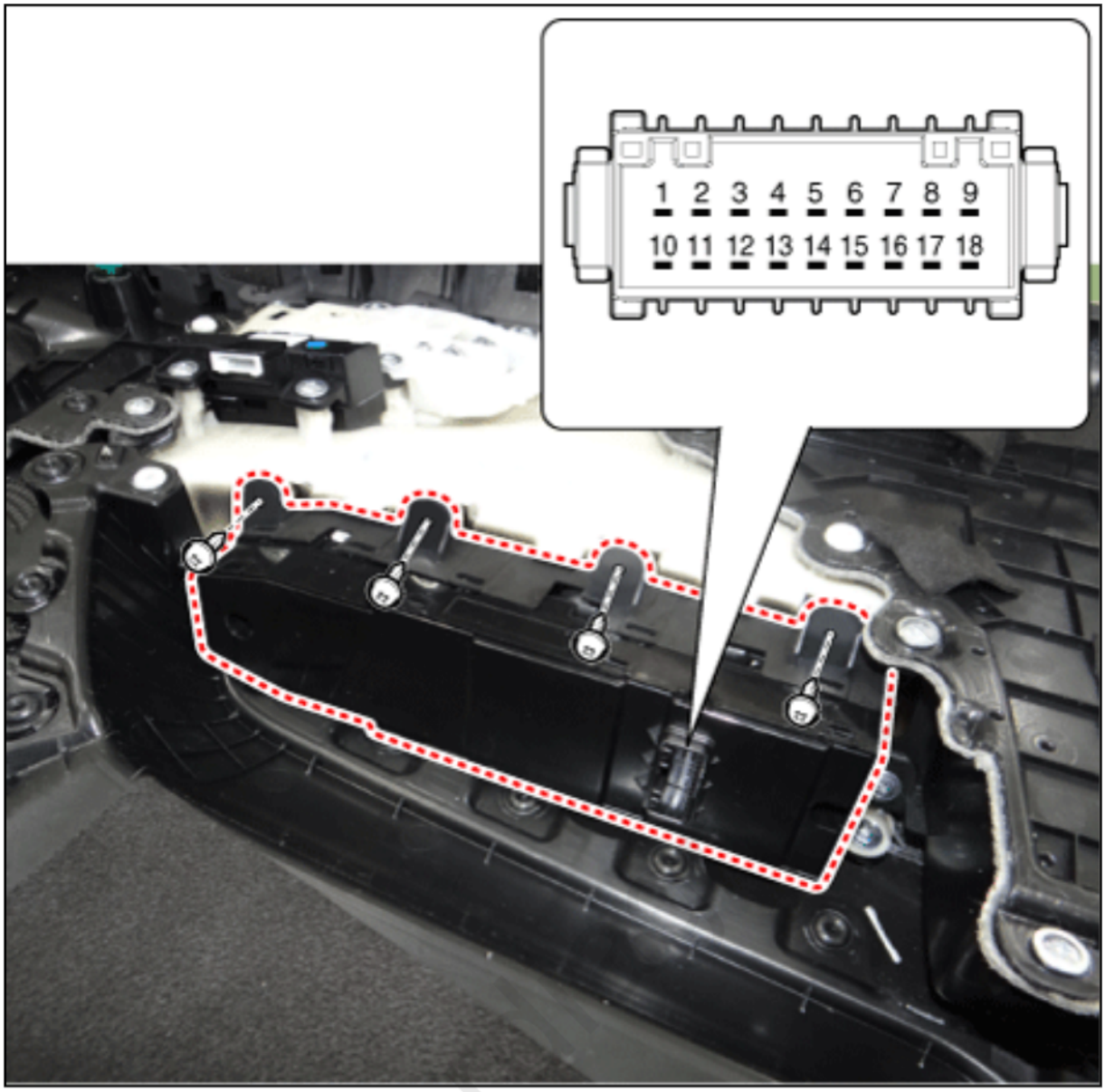

Front safety

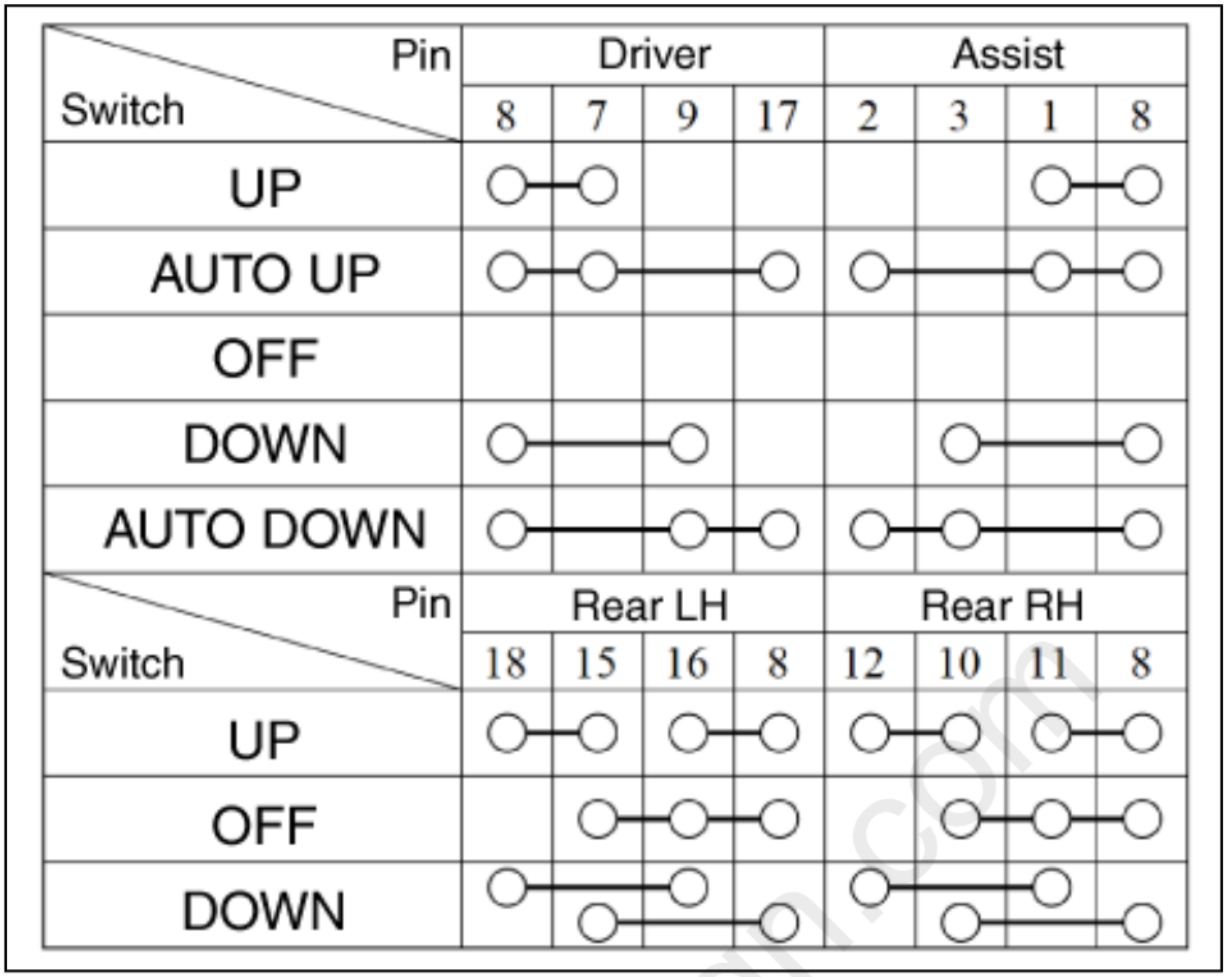

Driver safety

cardiagn.com

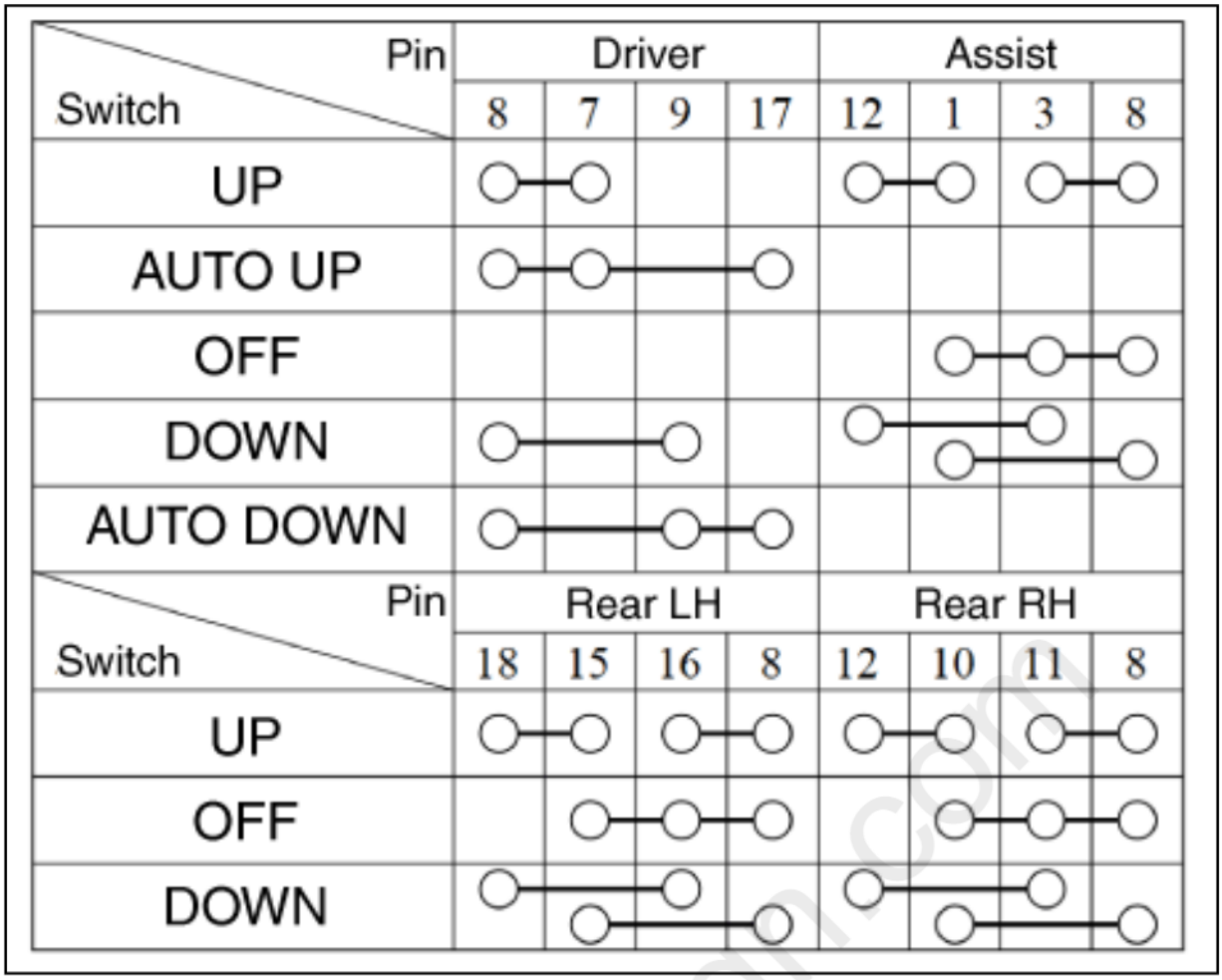

Auto down

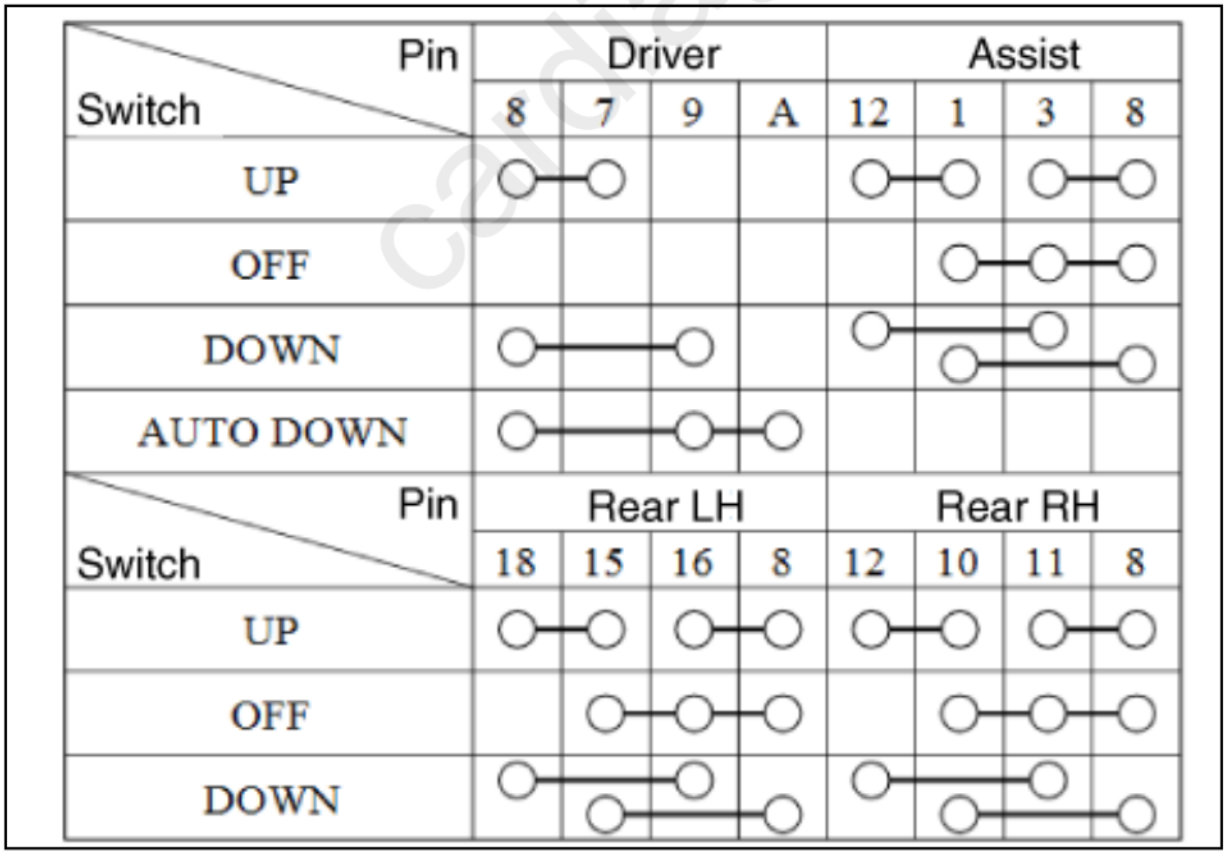

cardiagn.com

[Assist Power Window Switch]

1. Remove the front left door trim.
   (Refer to Body - "Front Door Trim")
2. Check for continuity between the terminals in each switch position according to the table.

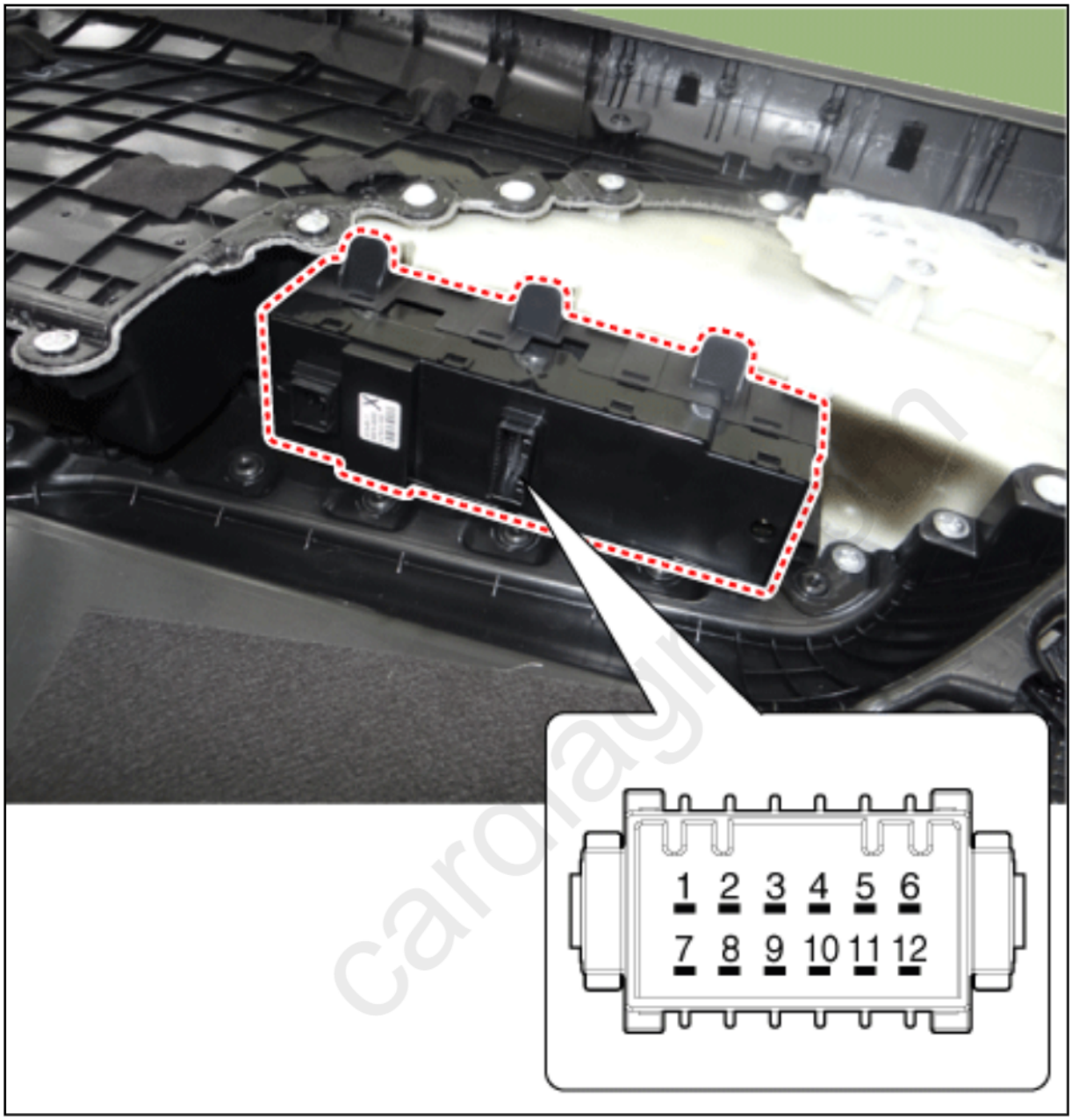

Non-safety

Switch \ Pin	8	1	6	11	12
UP		○	○	○	○
OFF	○	○	○	○	
DOWN	○	○	○		○

Safety

Switch \ Pin	Assist			
	3	9	7	11
UP	○	○		
AUTO UP	○	○		○
OFF				
DOWN	○		○	
AUTO DOWN	○		○	○

cardiagn.com

[Rear Power Window Switch]

1. Remove the rear left door trim.
   (Refer to Body - "Rear Door Trim")

2. Check for continuity between the terminals in each switch position according to the table.



Non-seat warmer

Switch \ Pin	5	3	7	4	12
UP	○		○	○	○
OFF		○	○	○	○
DOWN	○	○	○		○

Seat warmer

Switch \ Pin	12	7	1	11	6
UP	○		○	○	○
OFF		○	○	○	○
DOWN	○	○	○		○

Removal

Power Window Main Switch

1. Remove the driver front door trim.
   (Refer to Body - "Front Door Trim")
2. Remove the power window main switch (A) by loosening the screws.

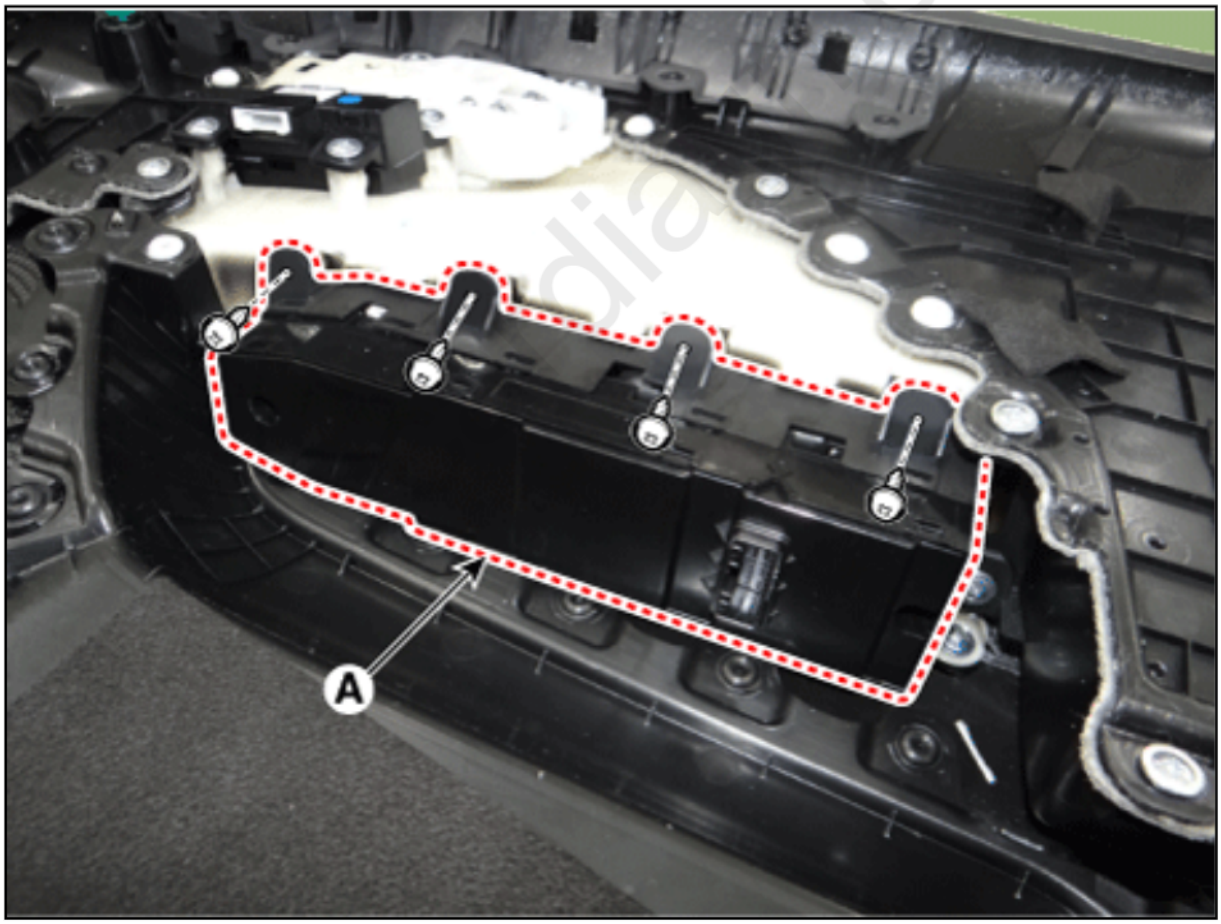

Assist Power Window Switch

1. Remove the driver front door trim.
   (Refer to Body - "Front Door Trim")
2. Remove the assist power window switch (A) by loosening the screws.

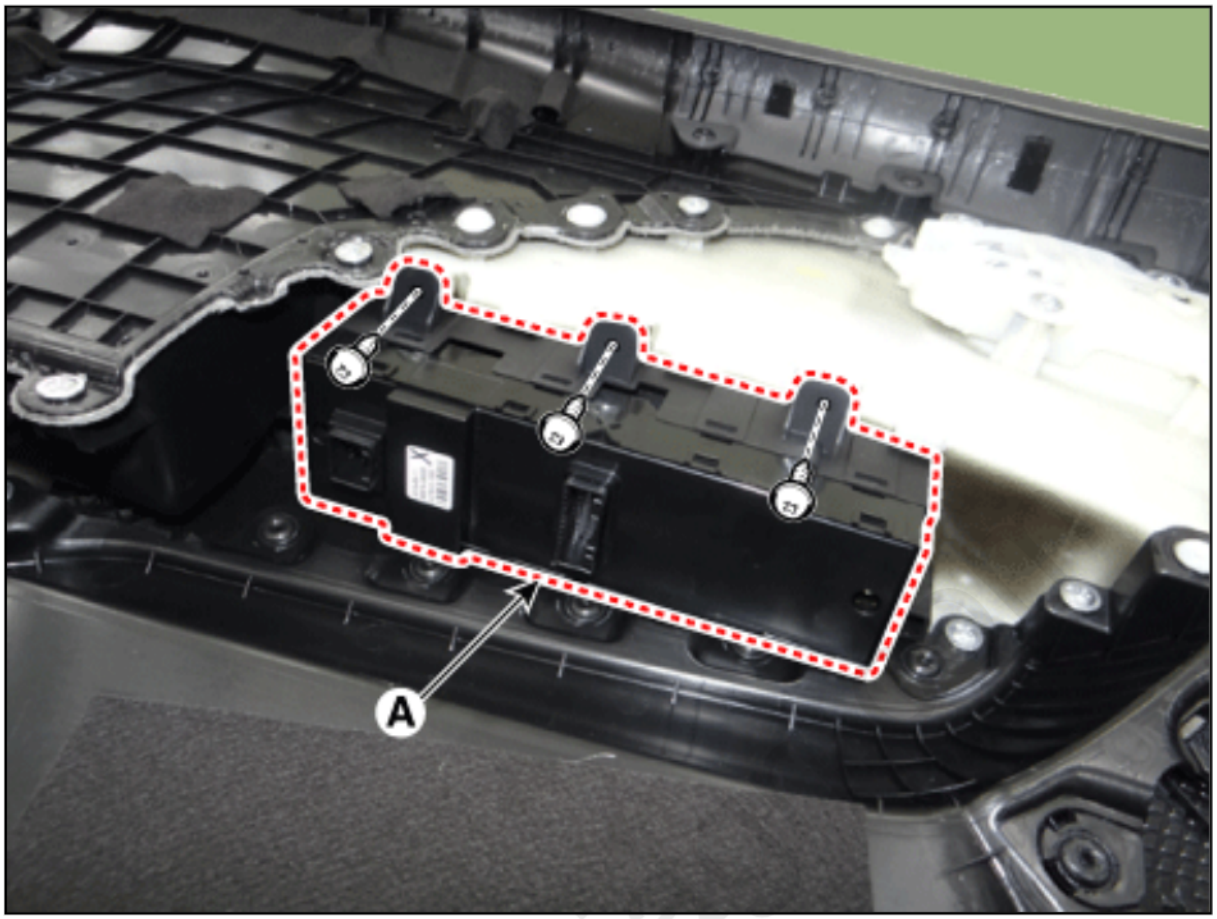

Rear Power Window Switch

1. Remove the rear left door trim.
   (Refer to Body - "Rear Door Trim")
2. Remove the rear power window switch (A) by loosening the screws.

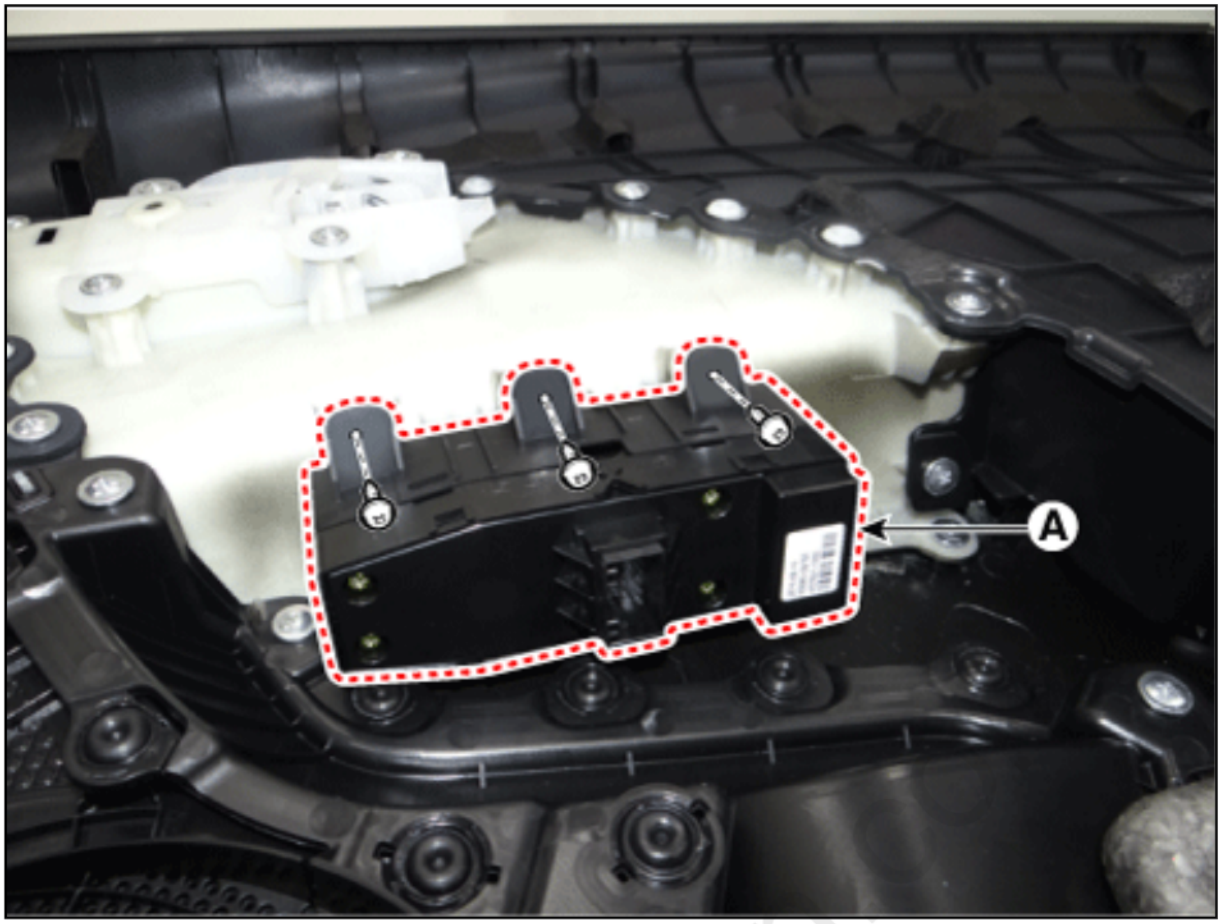

Installation

1. Install in the reverse order of removal.

cardiagn

Please rate this document after reviewing at the bottom of this page.

Component
Location



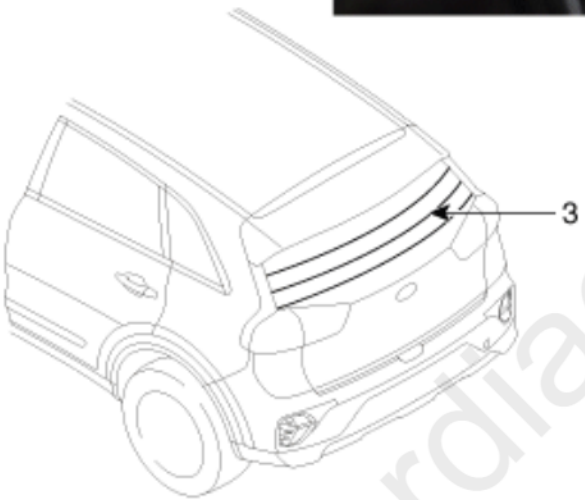

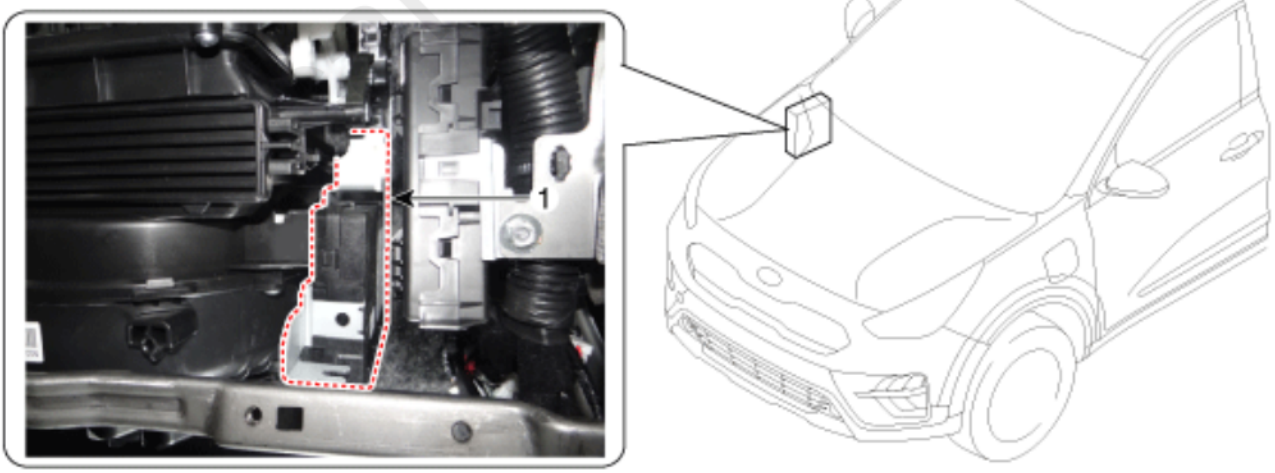

1. Body control module (BCM)
2. Rear glass defogger switch
3. Rear glass defogger

Please rate this document after reviewing at the bottom of this page.

Inspection

- Wrap tin foil around the end of the voltmeter test lead to prevent damaging the heater line. Apply pressure on the tin foil with hand and move the tin foil along the grid line to check for open circuits.

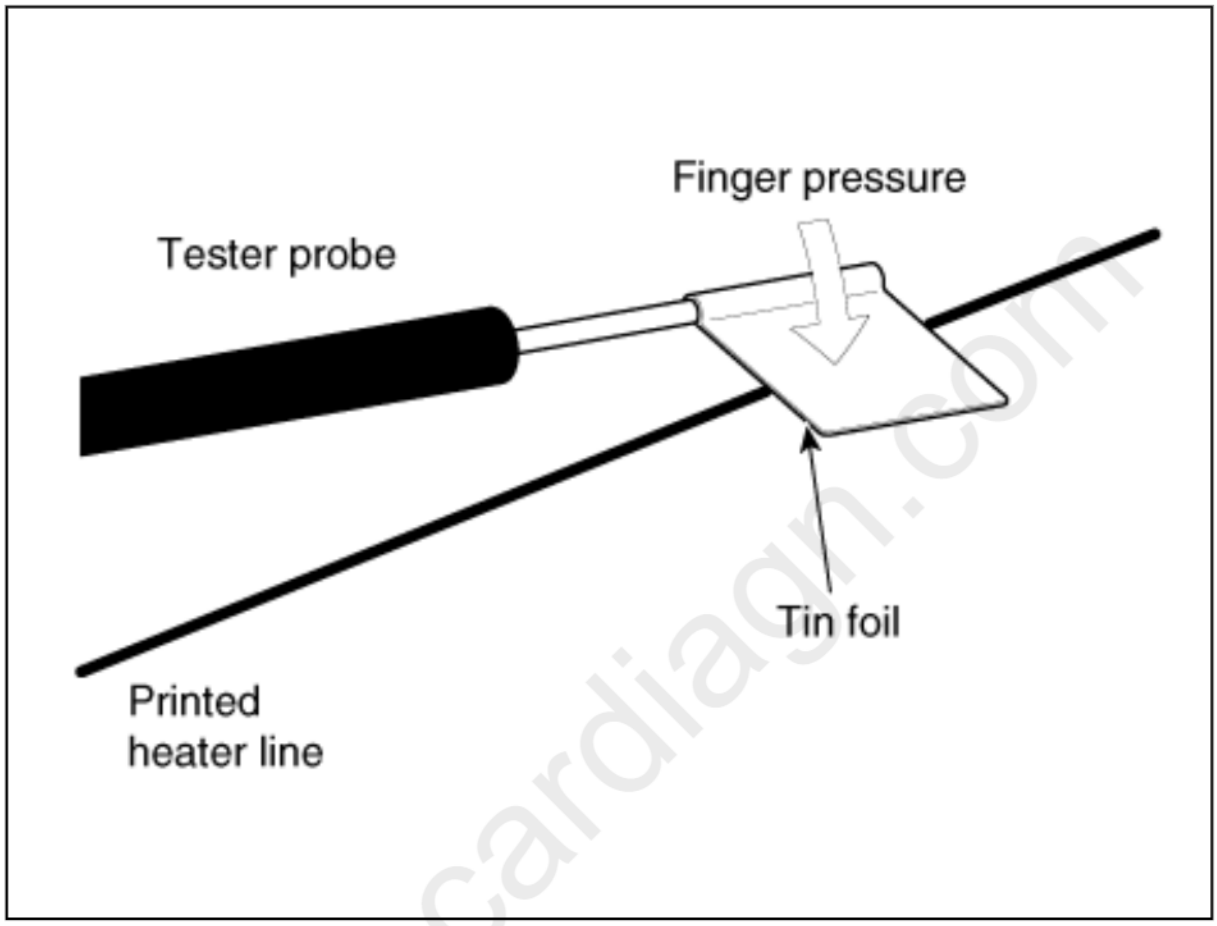

cardiagn.com

1. Turn on the defogger switch and use a voltmeter to measure the voltage of each heater line in the central part of the glass. If the voltmeter indicates 6V for a conductive line, the line of the rear window is considered to be in good condition.

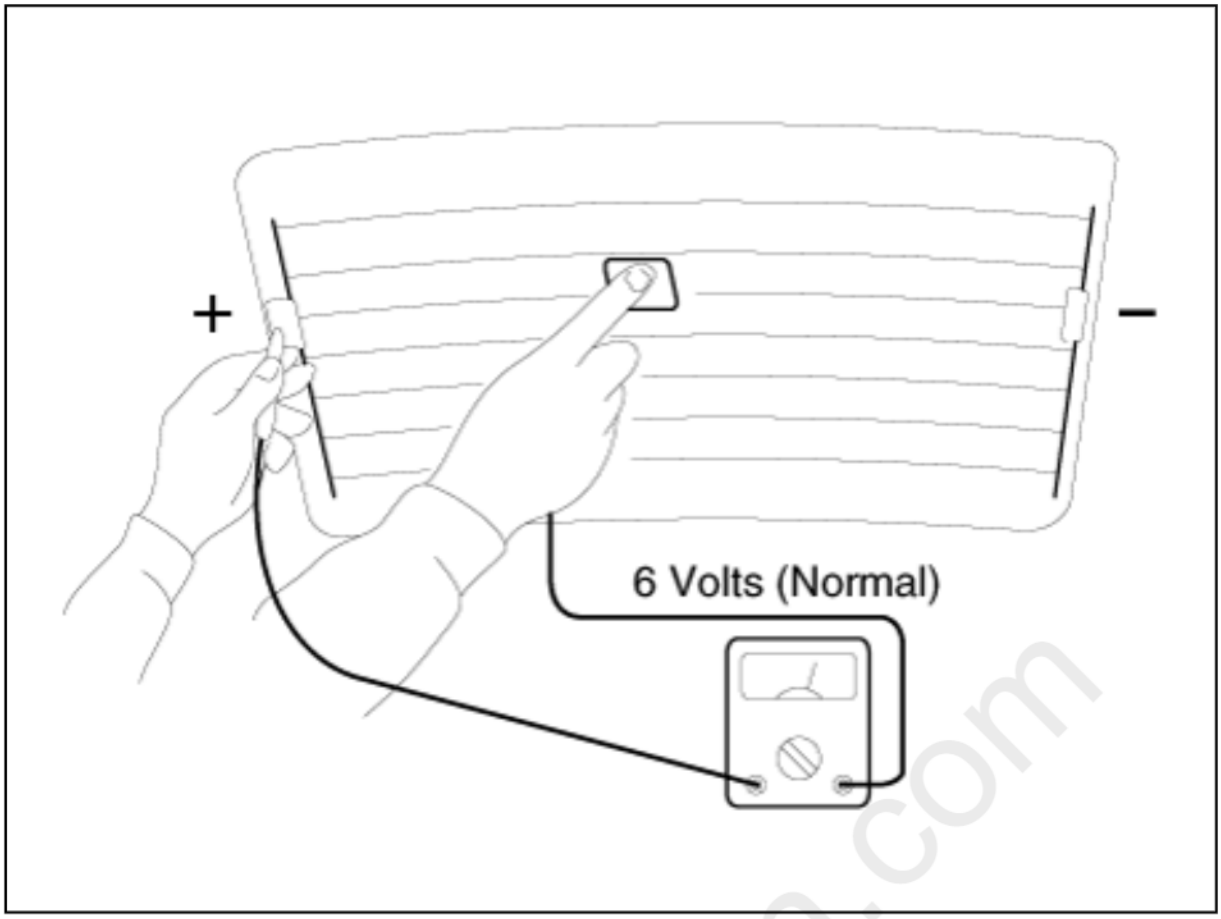

2. If a conductive line is burned out within the area between the central part and (+) terminal, the voltmeter will indicate12V.

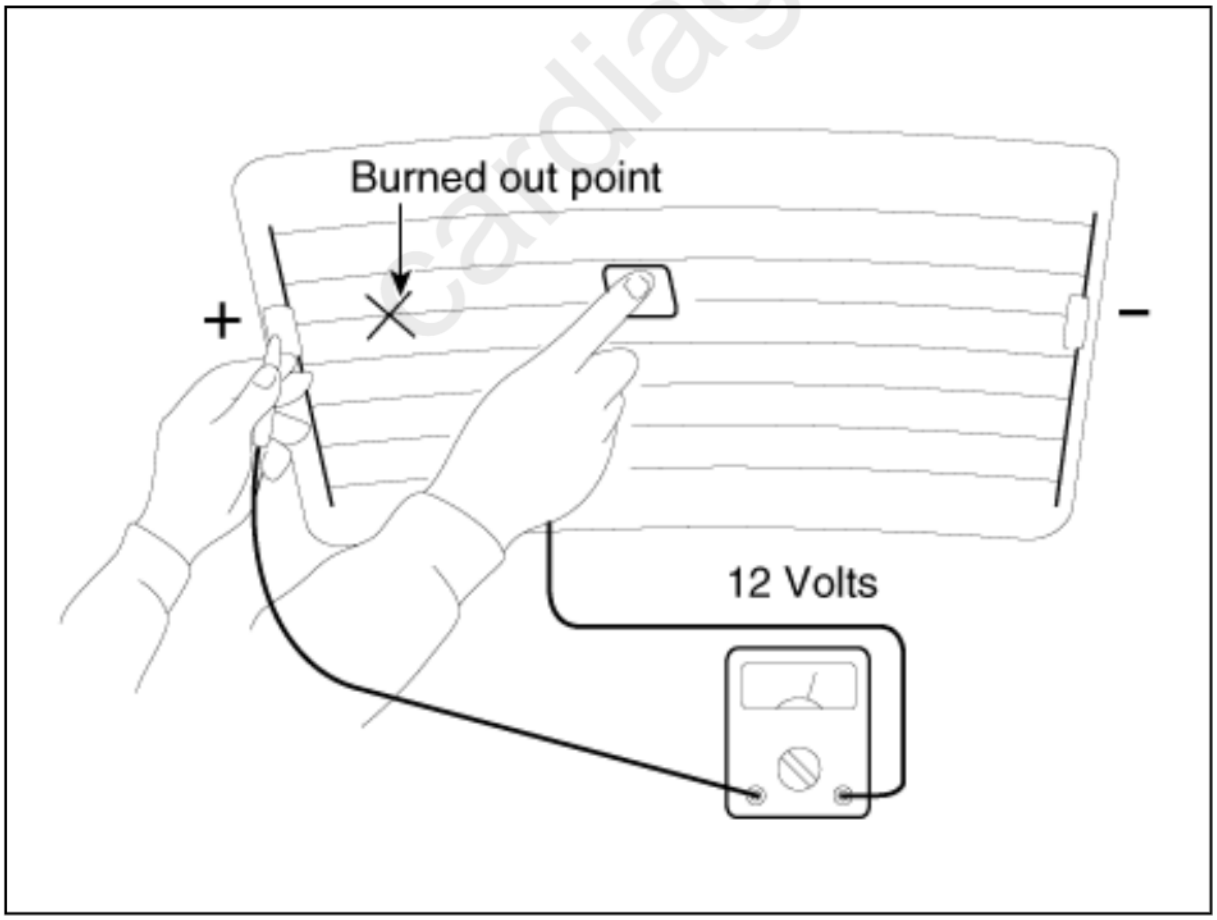

cardiagn.com

3. If a conductive line is burned out within the area between the central part and (-) terminal, the voltmeter will indicate 0V.

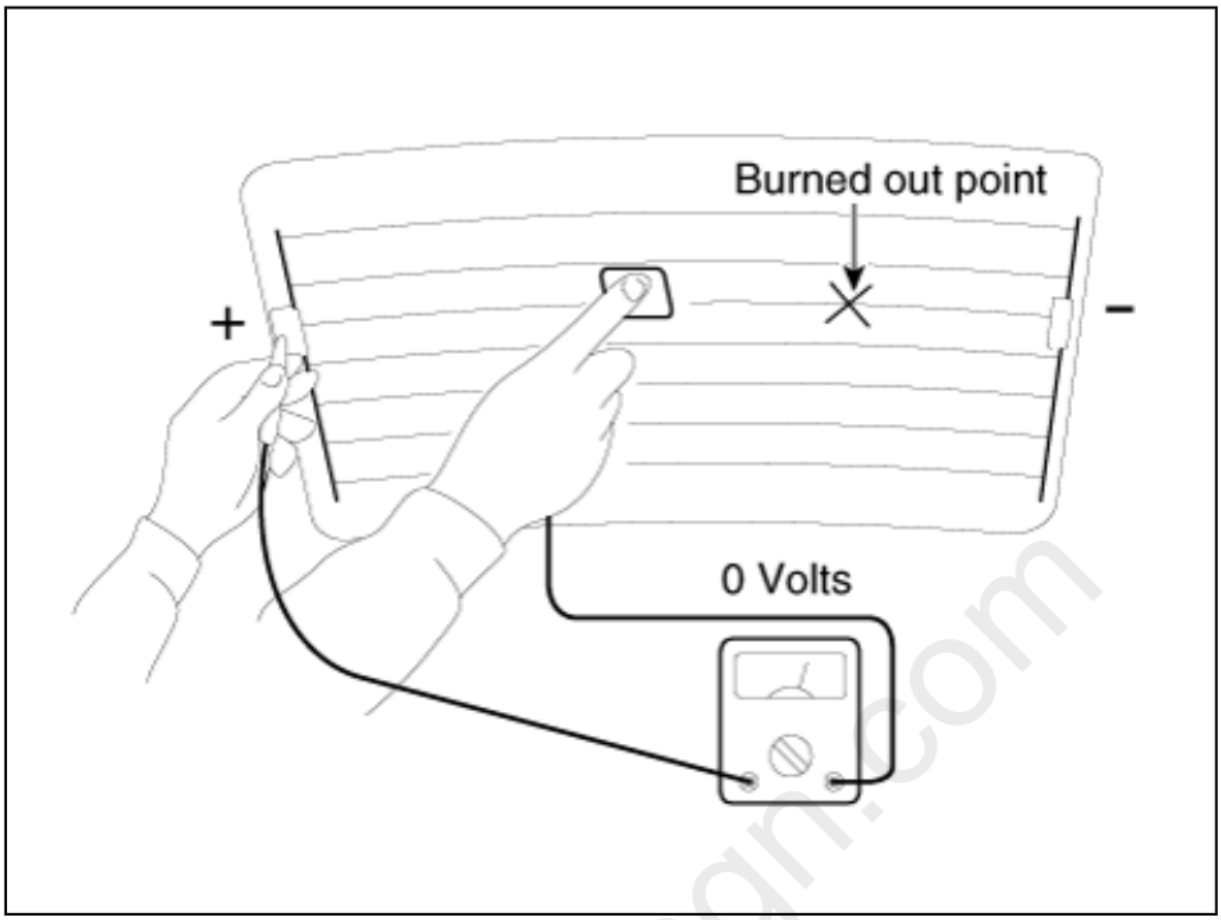

4. To check for open circuits, Slowly move the test lead toward the section where open circuits seem to exist. Try to find a point where the voltage turns to 0V. The point where the voltage has changed is the open-circuit point.

cardiagn.com

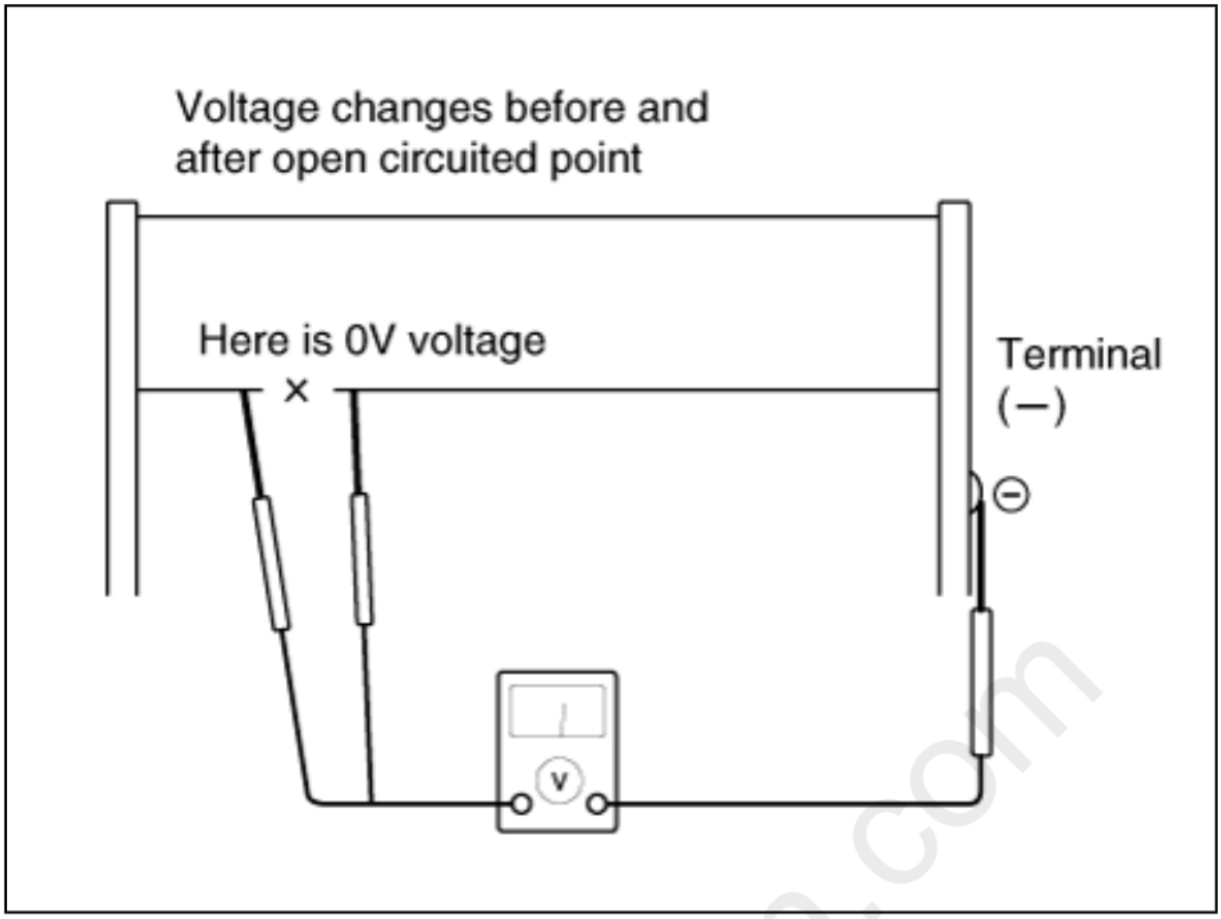

5. Use an ohmmeter to measure the resistance of each heater line between a terminal and the center of a grid line, and between the same terminal and the center of one adjacent heater line. The section with a broken heater line will have a resistance twice that in other sections. In the affected section, move the test lead to a position where the resistance sharply changes.

cardiagn.com

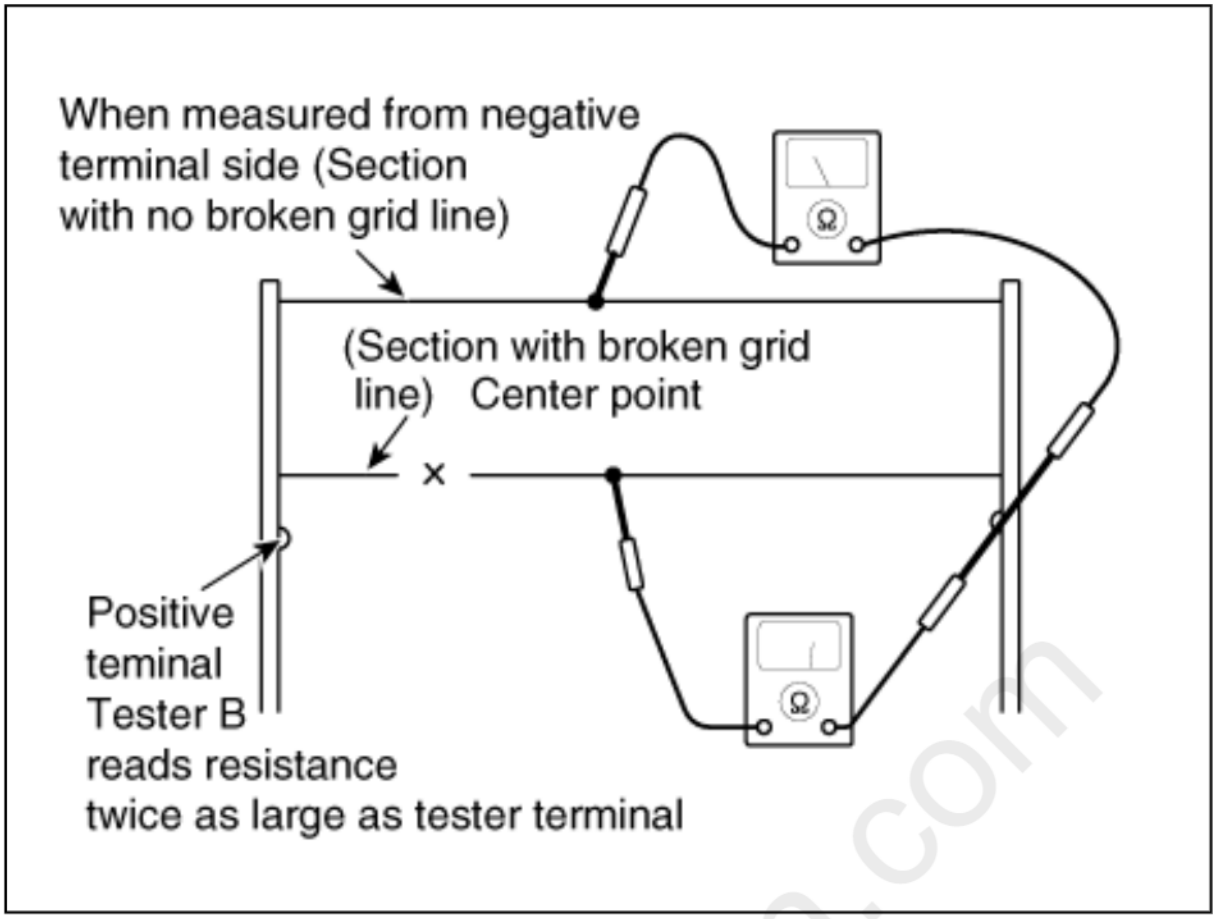

Repair of Broken Heater Line

Prepare the following items :

1. Conductive paint.
2. Paint thinner.
3. Masking tape.
4. Silicone remover.
5. Using a thin brush :

   Wipe the glass adjacent to the broken heater line, clean with silicone remover and attach the masking tape as shown. Shake the conductive paint container well, and apply three coats with a brush at intervals of about 15 minutes apart. Remove the tape and allow sufficient time for drying before applying power. For a better finish, scrape away excess paint with a knife after the paint has completely dried. (Allow 24 hours).

cardiagn.com

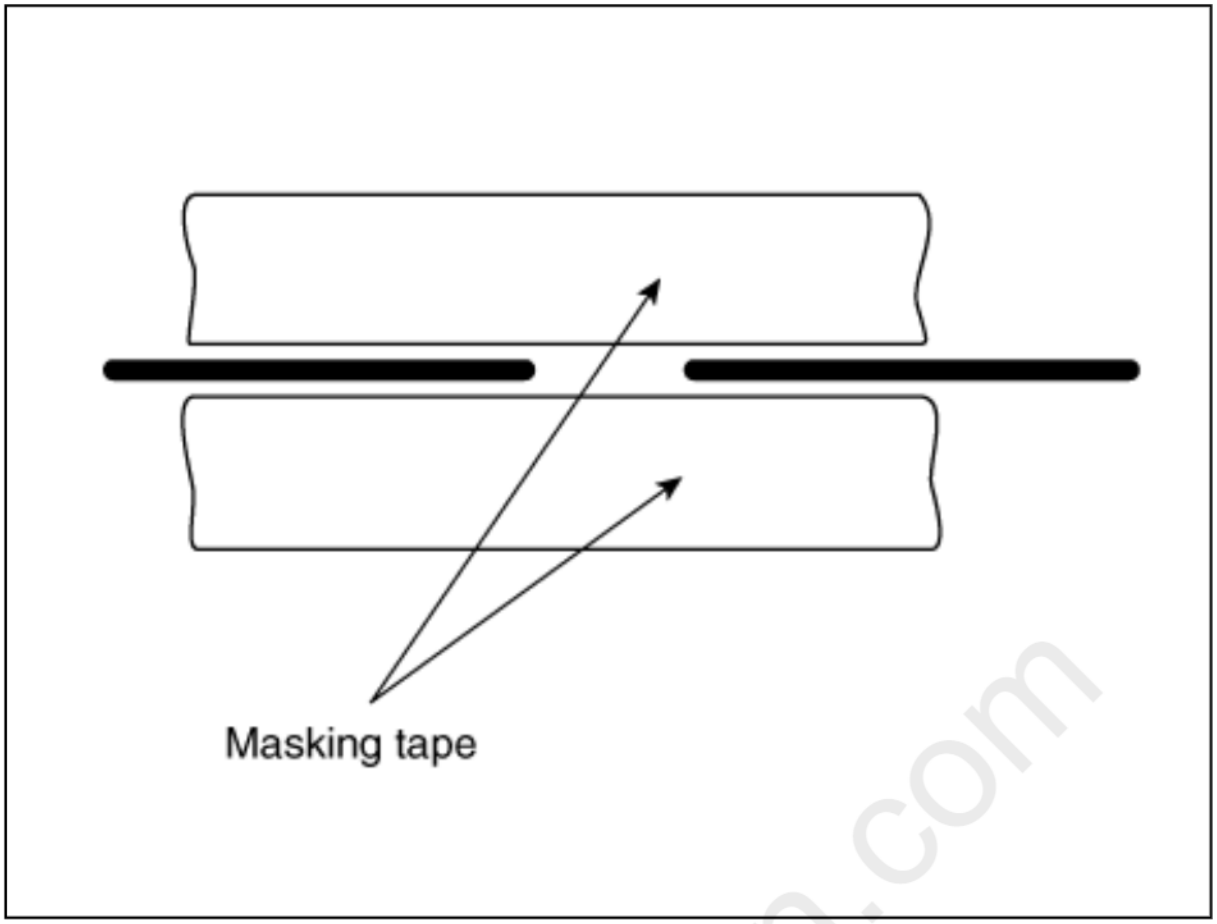

cardiagn.com

Please rate this document after reviewing at the bottom of this page.

Inspection

1. In the body electrical system, failure can be quickly diagnosed by using the vehicle diagnostic system (KDS).
   The diagnostic system (KDS) provides the following information.
   (1) Self diagnosis : Checking failure and code number (DTC).
   (2) Current data : Checking the system input/output data state.
   (3) Actuation test : Checking the system operation condition.
   (4) Additional function : Controlling other features including system option setting and zero point adjustment.
2. Select the 'Car model' and the 'Integrated body control unit (IBU)' to be checked in order to check the vehicle with the tester.
3. Select the 'Current Data' menu to search the current state of the input/output data.
4. To forcibly actuate the input value of the module to be checked, select option 'Actuation Test'

Removal

1. Disconnect the negative battery terminal.
2. Remove the heater and A/C control unit.
   (Refer to Heating, Ventilation, Air conditioning - "Heater & A/C Control Unit")

Installation

1. Install in the reverse order of removal.

cardiagn.com

Please rate this document after reviewing at the bottom of this page.

Component
Location



1. Lumbar support motor (Horizontal)
2. Slide motor
3. Reclining motor
4. Rear height motor
5. Front tilt motor
6. Reclining limit switch
7. Seat cushion switch
8. Seat back switch
9. Lumbar support switch

Please rate this document after reviewing at the bottom of this page.

Inspection

Power Seat Motor

1. Disconnect the connectors for each motor.

[Slide motor (A)]

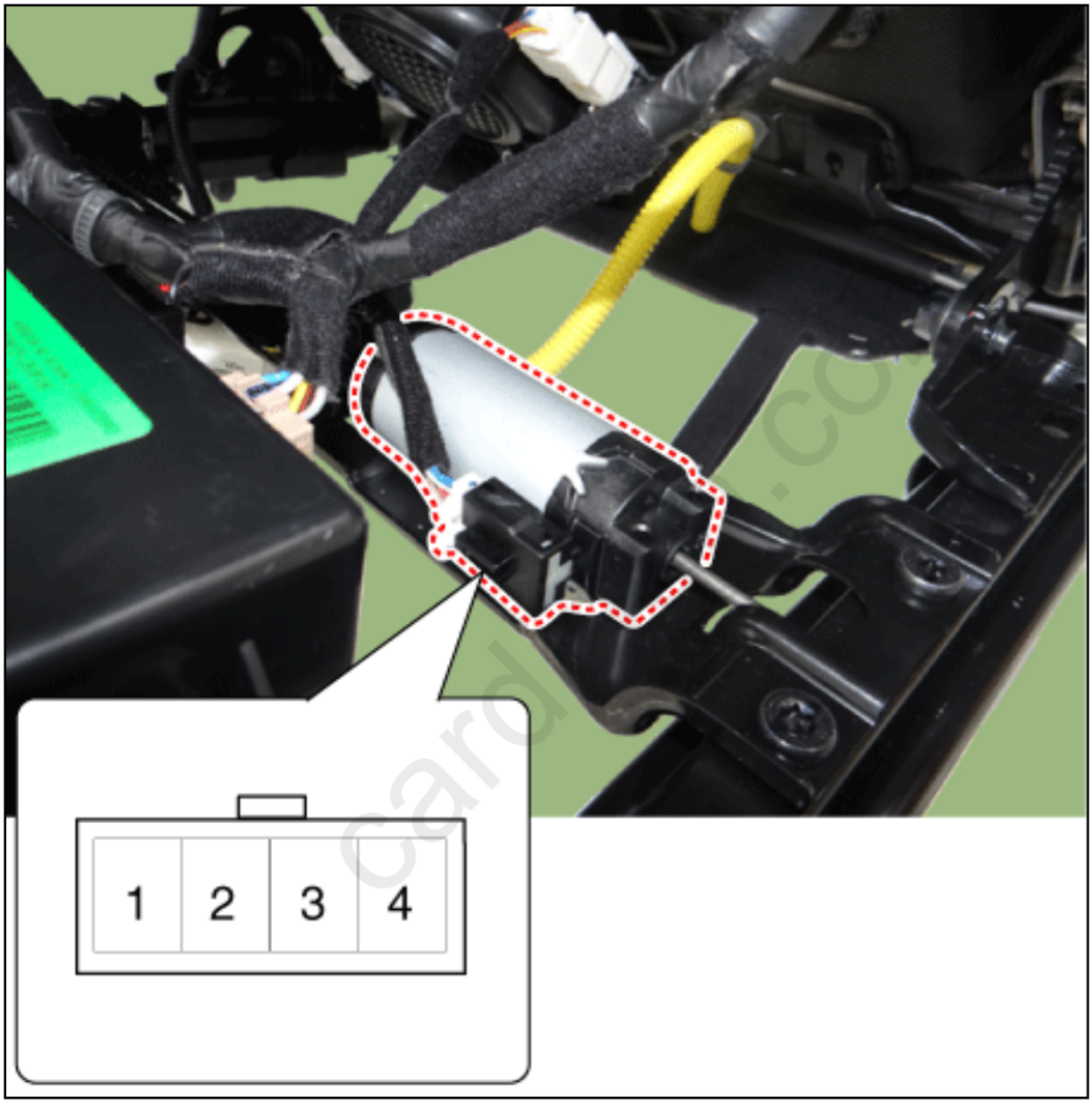

[Rear height motor (B)]

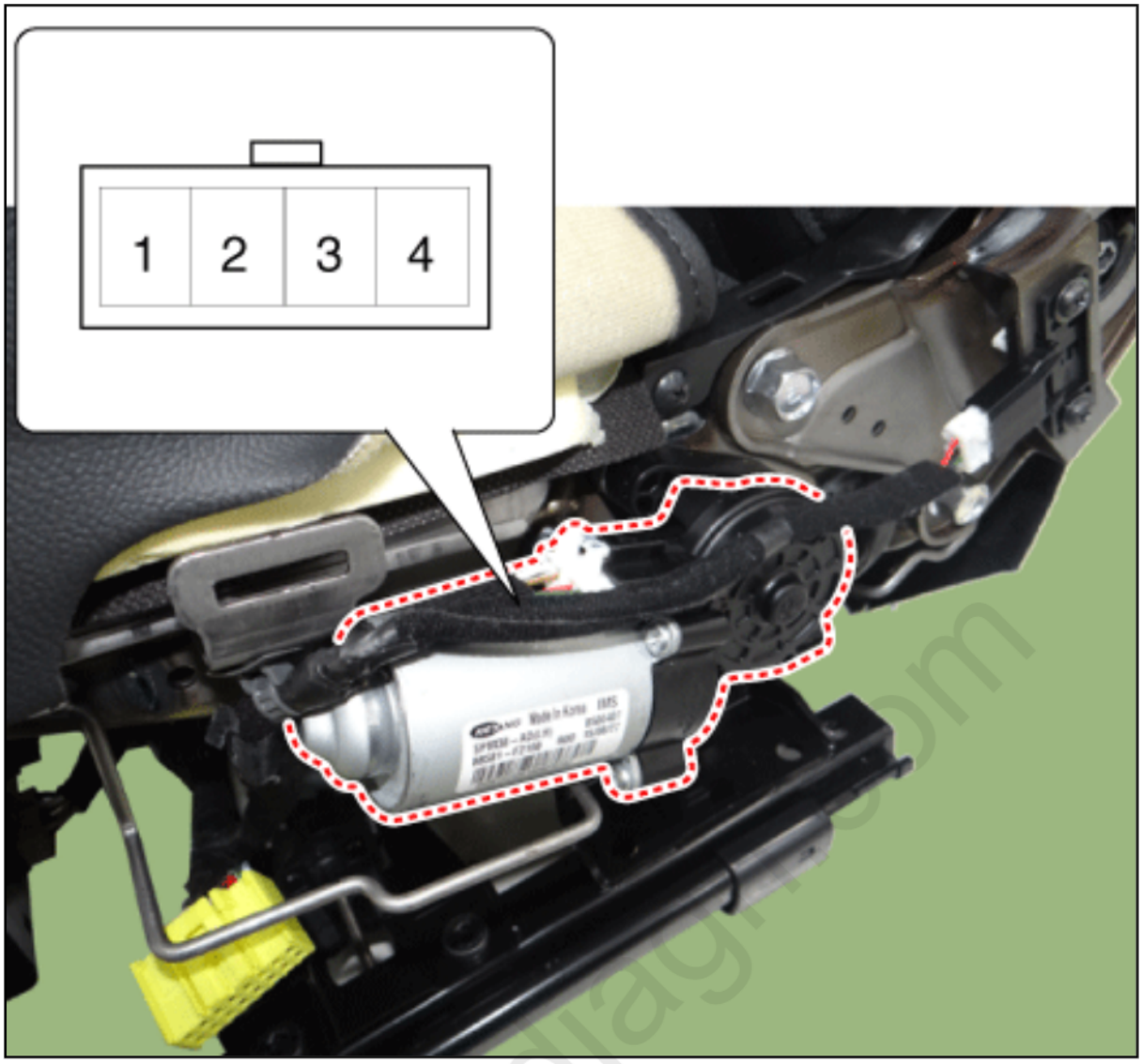

[Front tilt motor (C)]

cardiag.com

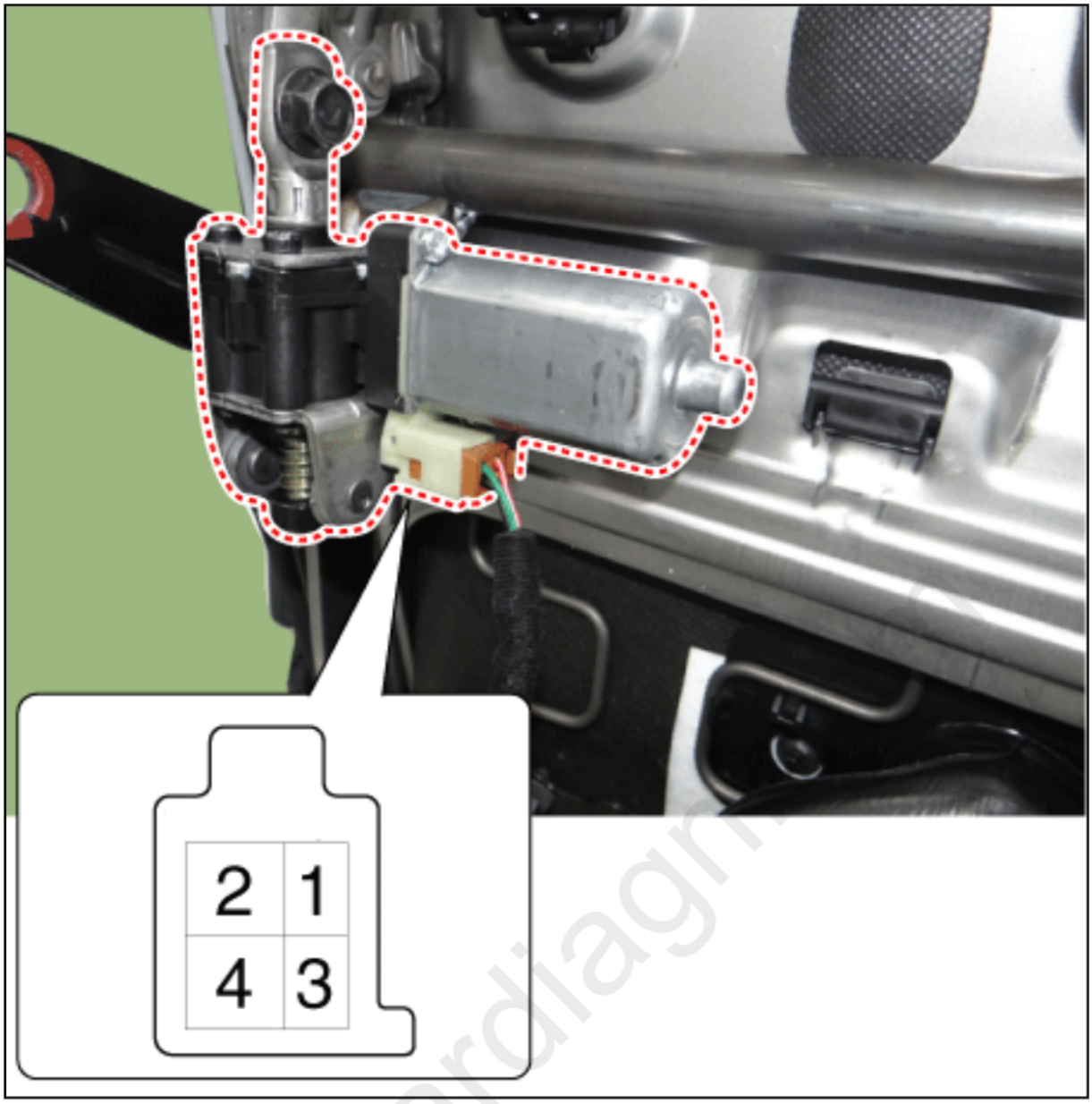

[Reclining motor (D)]

cardiagn

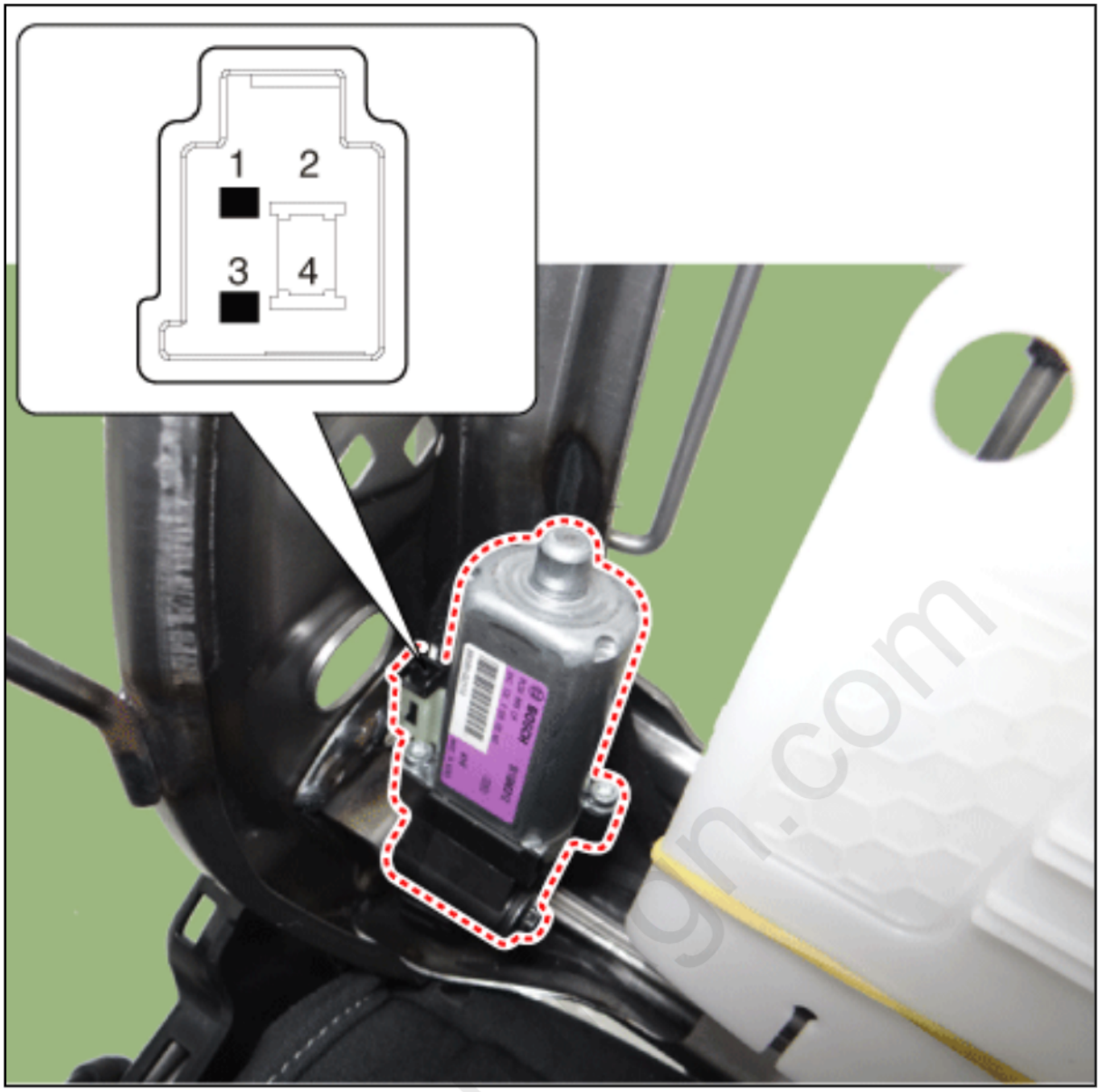

[Lumbar support motor (E)]

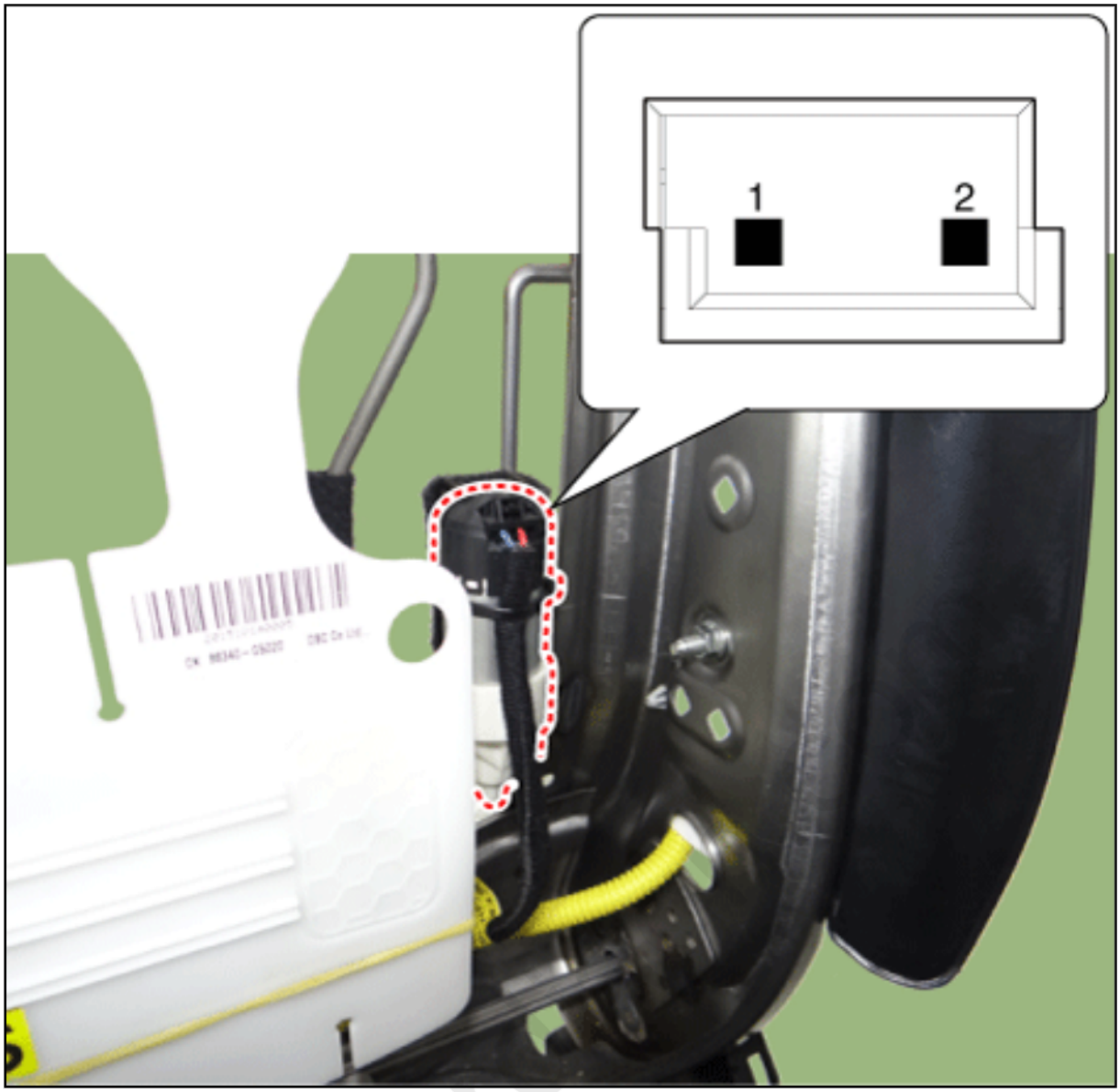

2. When the battery power is supplied to the motor connector, check the motor for smooth operation.
3. Reverse the connections and check that the motor turns in reverse.
4. If the motor runs abnormally, replace it.

[Driver]

Position \ Terminal		1	2	3	4
Slide motor A	Forward	⊕			⊖
	Backward	⊖			⊕
Rear height motor B	Up	⊕			⊖
	Down	⊖			⊕
Front tilt motor C	Up	⊕		⊖	
	Down	⊖		⊕	
Reclining motor D	Forward		⊕		⊖
	Backward		⊖		⊕
Lumber support motor (Horizontal) E	Forward	⊖	⊕		
	Backward	⊕	⊖		

cardiagn.com

Reclining Motor Limit Switch

1. Disconnect the limit switch and operate the limit switch.
2. Check for continuity between the terminals.
3. Make sure that the seat operation is normal in the reverse after the maximum operation.

4. If there is an abnormality, replace the limit switch.

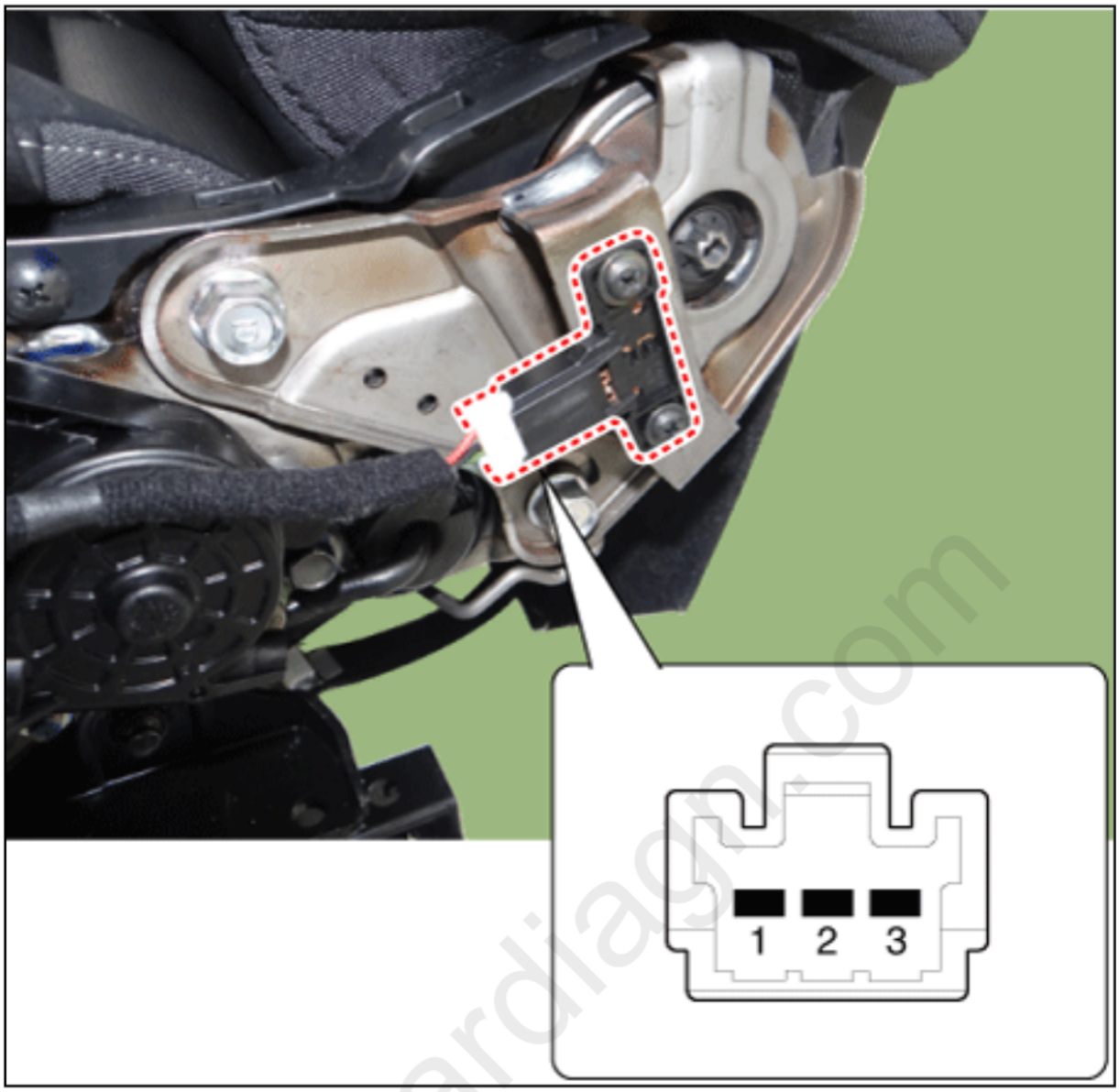

Position \ Terminal	1	2	3
Forward		○	○
Neutral	○	○	○
Backward	○	○	

Remove

Front Seat

cardiagn.com

1. Disconnect the negative (-) battery terminal.
2. Remove the front seat assembly.
   (Refer to Body - "Front Seat Assembly")

cardiagn.com

Please rate this document after reviewing at the bottom of this page.

Circuit
Diagram

[Driver power seat switch]

(Non-IMS Type)

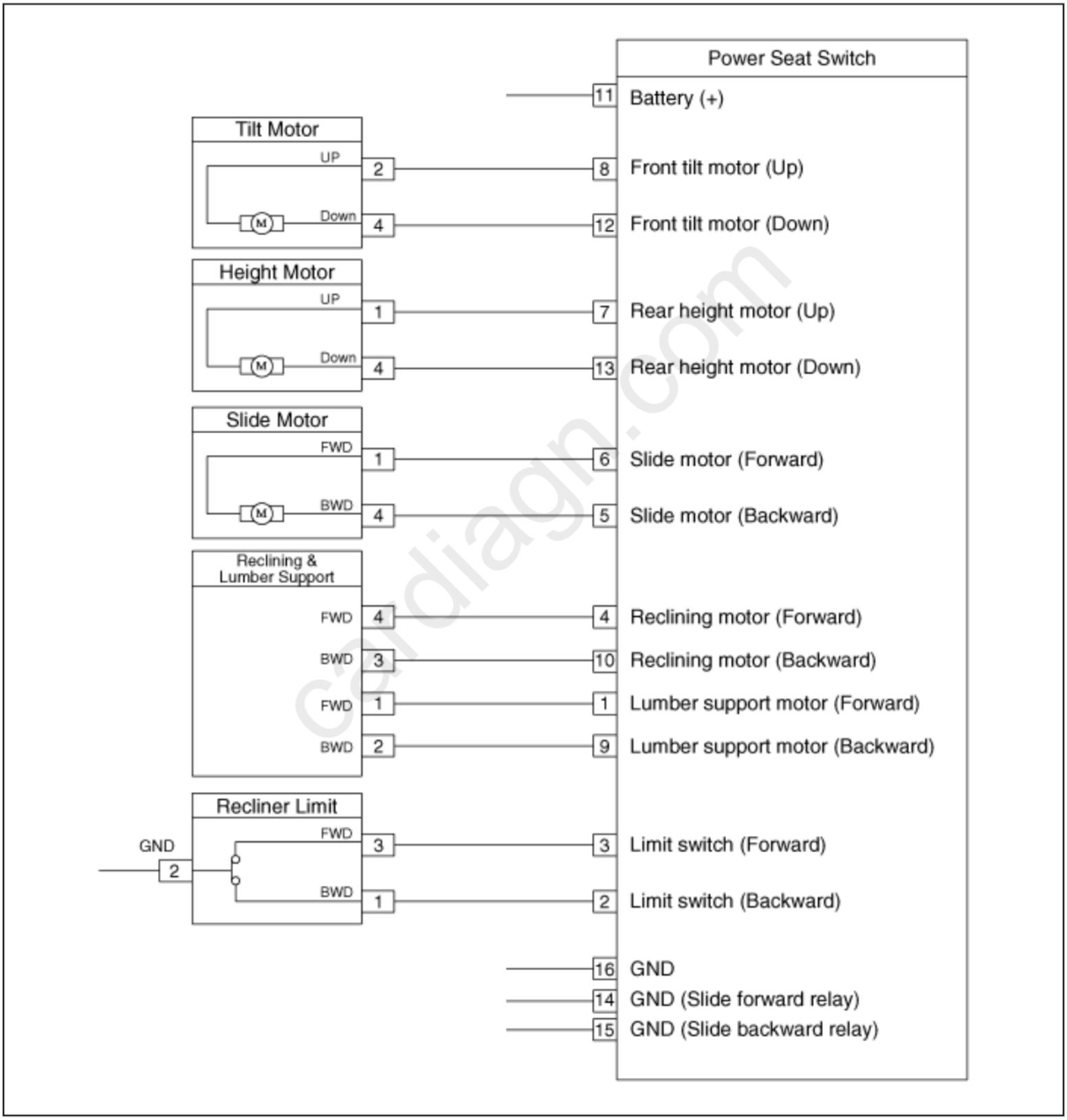

(IMS Type)

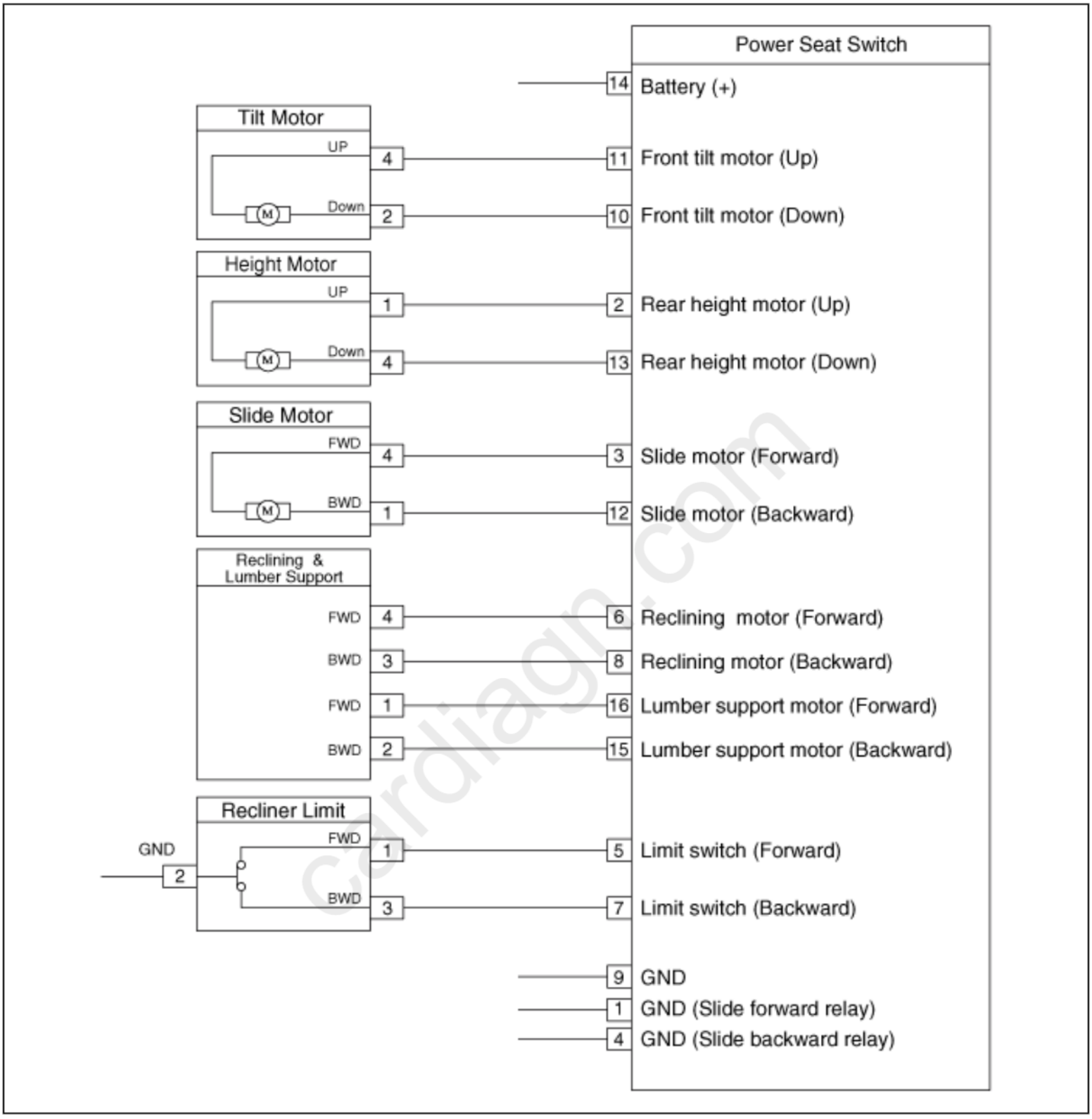
Power Seat Switch
14 Battery (+)
Tilt Motor
UP
4
11 Front tilt motor (Up)
Down
2
10 Front tilt motor (Down)
Height Motor
UP
1
2 Rear height motor (Up)
Down
4
13 Rear height motor (Down)
Slide Motor
FWD
4
3 Slide motor (Forward)
BWD
1
12 Slide motor (Backward)
Reclining & Lumber Support
FWD 4
6 Reclining motor (Forward)
BWD 3
8 Reclining motor (Backward)
FWD 1
16 Lumber support motor (Forward)
BWD 2
15 Lumber support motor (Backward)
Recliner Limit
GND
2
FWD
1
5 Limit switch (Forward)
BWD
3
7 Limit switch (Backward)
9 GND
1 GND (Slide forward relay)
4 GND (Slide backward relay)

Please rate this document after reviewing at the bottom of this page.

Inspection

Diagnosis With KDS

1. The body electrical system can be quickly diagnosed for failed parts by using the vehicle diagnostic system (KDS).
   The diagnostic system (KDS) provides the following information.
   (1) Self diagnosis : Checks and displays the failure code (DTC).
   (2) Current data : Checks the system input/output data state.
   (3) Actuator test : Checks the system operating condition.
   (4) Additional function : Other controls such as the system option and zero point adjustment.
2. Select the 'Car model' and the system to be checked in order to check the vehicle with the tester.
3. Select the 'Power seat module (PSM)' to check the power seat module (PSM).
4. Select the 'Current data' menu to check the current state of the input/output data.
   The input/output data for the sensors corresponding to the power seat module (PSM) can be checked.

Seat Control Switch

1. With the power seat switch in each position, make sure that continuity exists between the terminals below. If continuity is not as specified, replace the power seat switch.

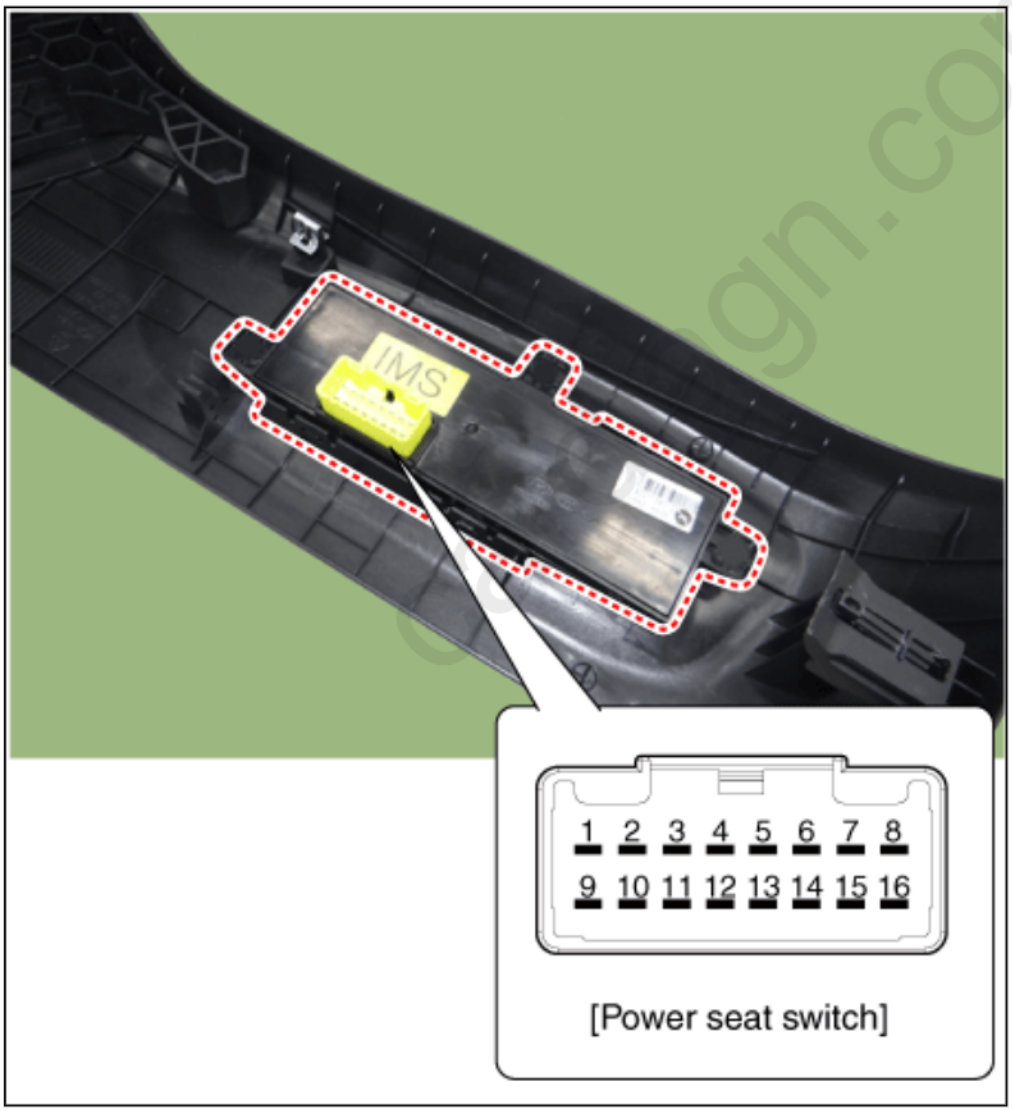

[Power seat control switch]

(Non-IMS Type)

Driver

	Front Tilt Switch		Slide Switch			Rear Height Switch		Reclining Switch			Pin Name
	Up	Down	N	Front		Up	Down	N	Front		
			Tilt	Slide	FWD	BWD			Height	Recline	FWD	BWD	
11													Battery (+)
16	○	○			○	○	○	○			○	○	Ground
8	○												Front tilt motor (Up)
12		○											Front tilt motor (Down)
6					○								Slide motor (Forward)
5						○							Slide motor (Backward)
14													Forward slide motor relay (-)
15													Backward slide motor relay (-)
7							○						Rear height motor (Up)
13								○					Rear height motor (Down)
4											○		Reclining motor (Forward)
10												○	Reclining motor (Backward)

	Lumber Support Switch (Driver only)			Pin Name
	Forward	Backward	N	
11	○	○		Battery (+)
16			○ ○	Ground
1	○		○	Lumber support motor (Forward)
9		○	○	Lumber support motor (Backward)

	Limit Switch (Driver only)			Pin Name
	Forward	Backward	N	
11	○	○		Battery (+)
16			○ ○	Ground
3	○		○	Limit switch (Forward)
2		○	○	Limit switch (Backward)

cardiagn.com

(IMS Type)

Driver

	Front Tilt Switch			Slide Switch			Rear Height Switch			Reclining Switch			Pin Name
	Up	Down	N	Front			Up	Down	N	Front			
			Tilt	Slide	FWD	BWD			Height	Recline	FWD	BWD	
14	○	○			○	○	○	○			○	○	Battery (+)
9			○	○					○	○			Ground
11	○		○										Front tilt motor (Up)
10		○		○									Front tilt motor (Down)
3				○	○								Slide motor (Forward)
12				○		○							Slide motor (Backward)
1				○									Forward slide motor relay (-)
4				○									Backward slide motor relay (-)
2							○		○				Rear height motor (Up)
13								○	○				Rear height motor (Down)
6										○	○		Reclining motor (Forward)
8										○		○	Reclining motor (Backward)

	Lumber Support Switch (Driver only)			Pin Name
	Forward	Backward	N	
14	○	○		Battery (+)
9			○ ○	Ground
16	○		○	Lumber support motor (Forward)
15		○	○	Lumber support motor (Backward)

	Limit Switch (Driver only)			Pin Name
	Forward	Backward	N	
14	○	○		Battery (+)
9			○ ○	Ground
5	○		○	Limit switch (Forward)
7		○	○	Limit switch (Backward)

carmagn.com

Removal

1. After loosening the screw, separate the front seat outer shield cover (A) by pulling it in the direction of arrow.



2. After pushing the hook (A), separate the front seat outer shield cover (B) by pulling it in the direction of arrow.



3. Disconnect the power seat control switch connector (A).



4. Remove the knobs (A) from the power seat control switch.



5. Remove the power seat control switch (A) after loosening the screws.

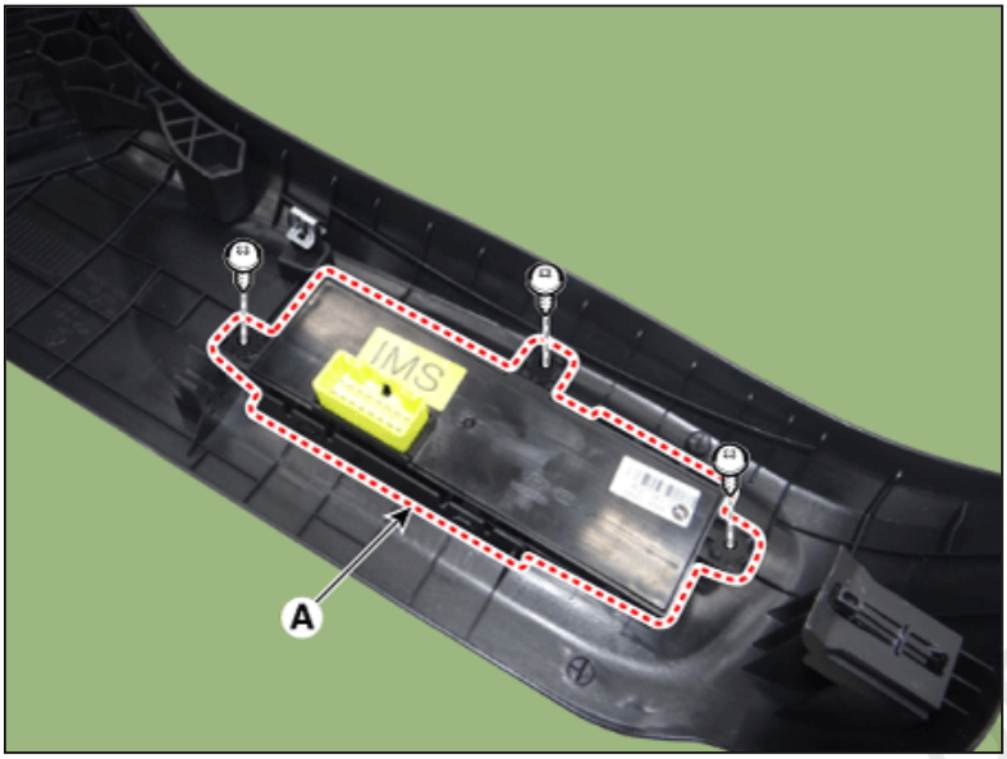

Installation

1. Install in the reverse order of removal.

cardiagn.com

Please rate this document after reviewing at the bottom of this page.

Component
Location

Front Seat Heater



1. Seat heater unit (Assist seat only)
2. Front seat back heater
3. Front seat cushion heater

Front Seat Heater (Air Ventilation)

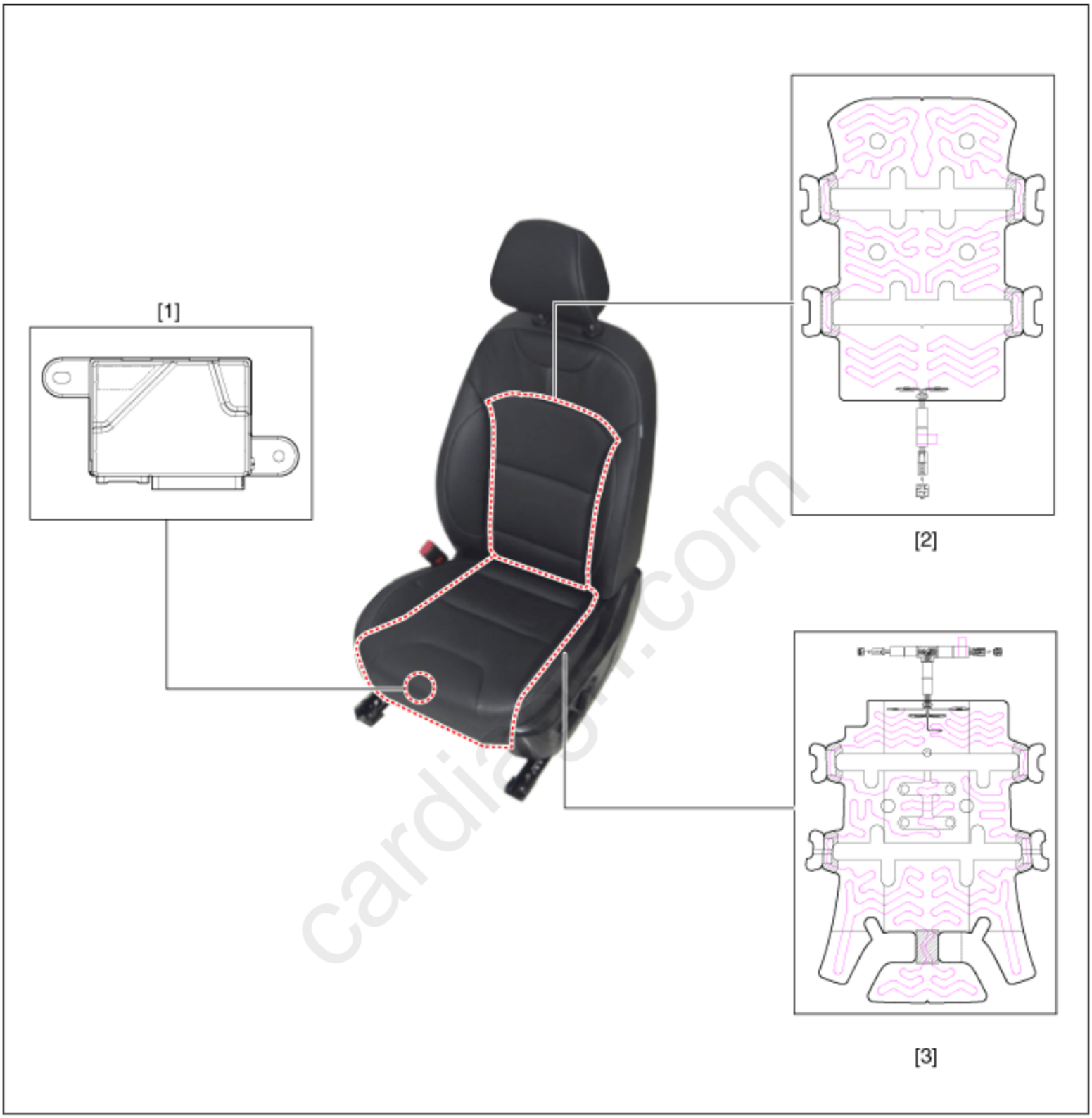

1. Air ventilation seat unit (Assist seat only)
2. Front seat back heater
3. Front seat cushion heater

Rear Seat Heater



1. Rear seat heater unit
2. Rear seat cushion heater

Please rate this document after reviewing at the bottom of this page.

Circuit
Diagram

Front Seat Heater

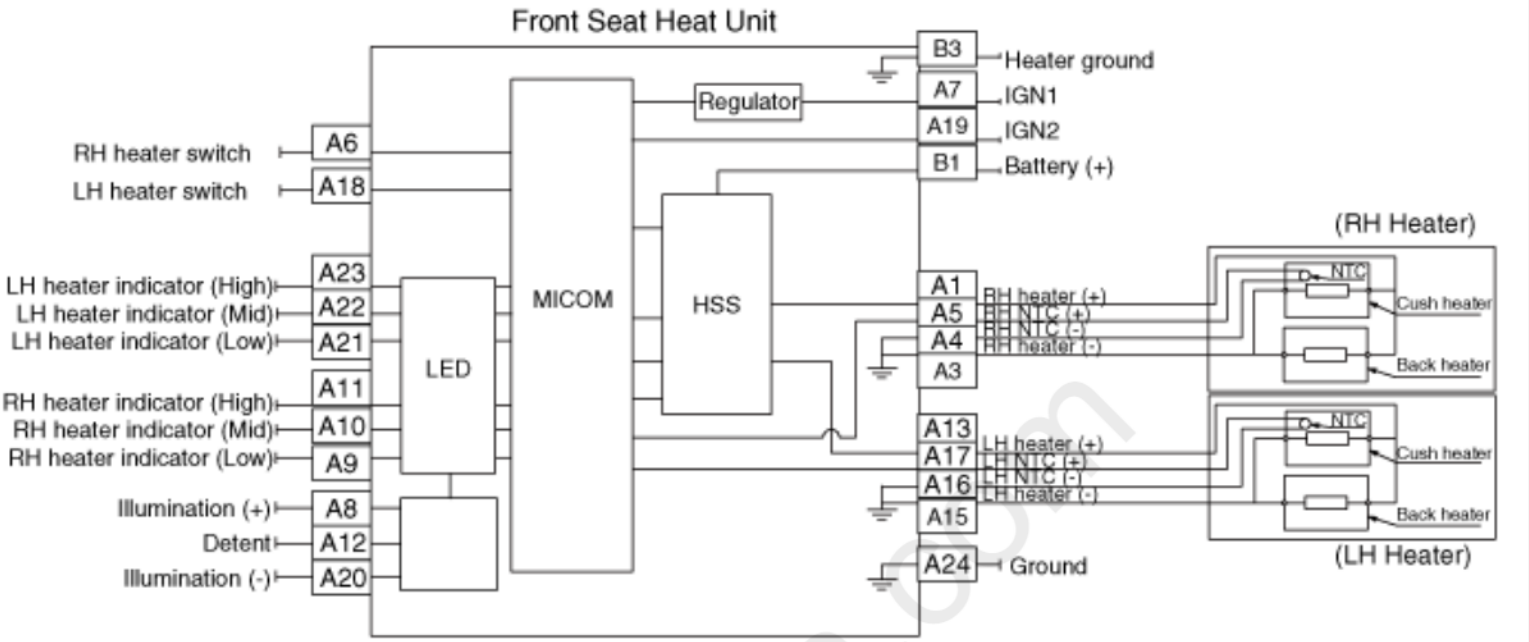

Seat Heater Unit (A)

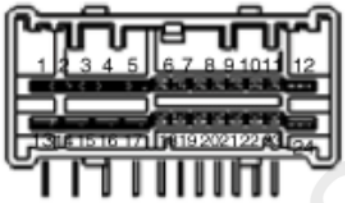

No.	Description	No.	Description
A1	RH seat heater (+)	A13	LH seat heater (+)
A2	-	A14	-
A3	RH seat heater (-)	A15	LH seat heater (-)
A4	RH NTC (-)	A16	LH NTC (-)
A5	RH NTC (+)	A17	LH NTC (+)
A6	RH seat heater switch	A18	LH seat heater switch
A7	IGN1	A19	IGN2
A8	Illumination (+)	A20	Illumination (-)
A9	RH Indicator LED (Low)	A21	LH Indicator LED (Low)
A10	RH Indicator LED (Mid)	A22	LH Indicator LED (Mid)
A11	RH Indicator LED (High)	A23	LH Indicator LED (High)
A12	Detent	A24	Detent

Heater Pad Connector (Back) (B)

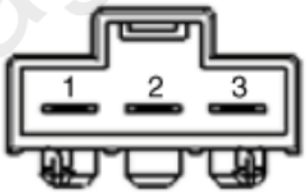

No.	Description
B1	Heater (+)
B2	-
B3	Heater (-)

Heater Pad Connector (Cushion) (C)



No.	Description
C1	-
C2	-
C3	Heater (+)
C4	NTC (+)
C5	NTC (-)
C6	Heater (-)

cardiagn.com

Rear Seat Heater

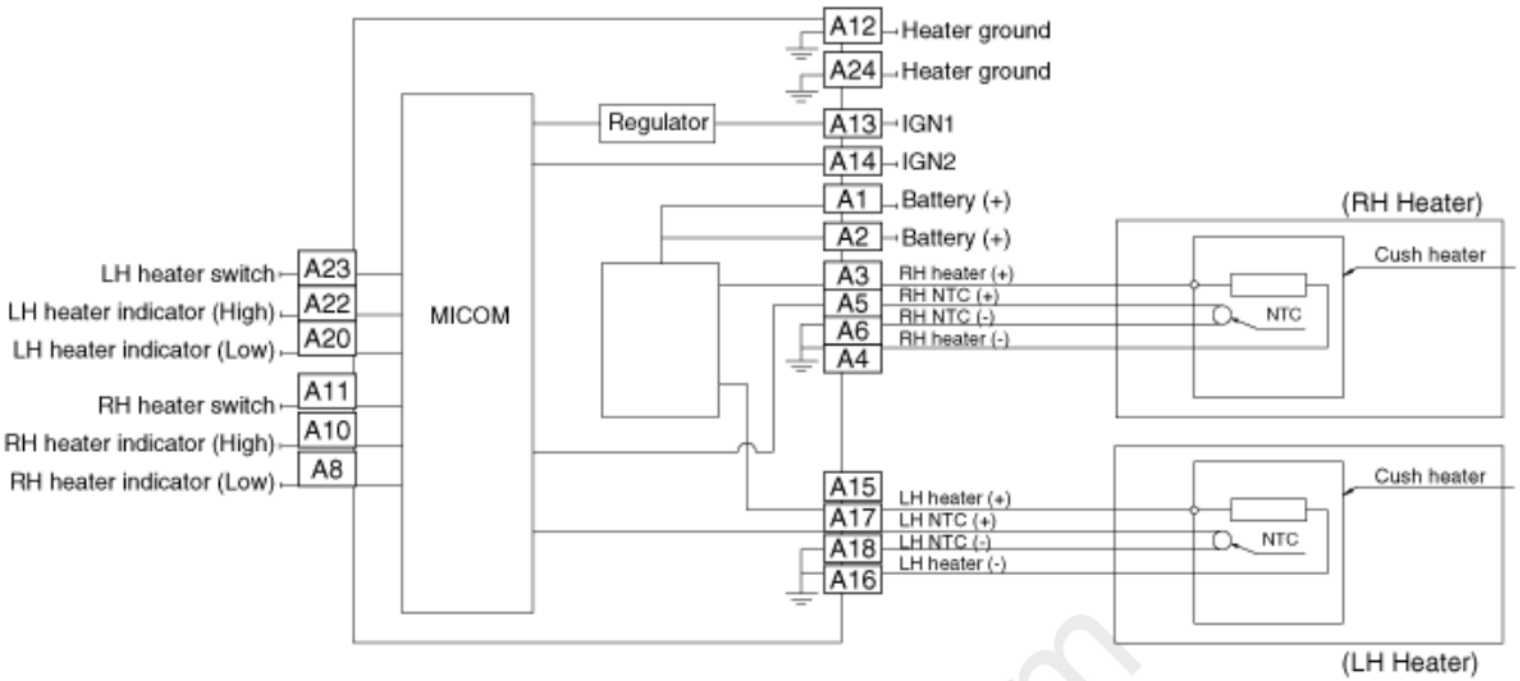

Seat Heater Unit (A)

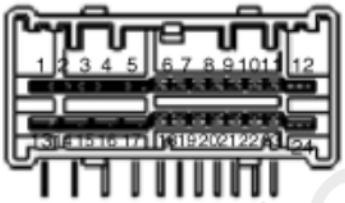

No.	Description	No.	Description
A1	Battery (+)	A13	IGN1
A2	Battery (+)	A14	IGN2
A3	RH seat heater (+)	A15	LH seat heater (+)
A4	RH seat heater (-)	A16	LH seat heater (-)
A5	RH NTC (+)	A17	LH NTC (+)
A6	RH NTC (-)	A18	LH NTC (-)
A7	-	A19	-
A8	RH Indicator LED (Low)	A20	LH Indicator LED (Low)
A9	-	A21	-
A10	RH Indicator LED (High)	A22	LH Indicator LED (High)
A11	RH seat heater switch	A23	LH seat heater switch
A12	Ground	A24	Ground

Heater Pad Connector (Cushion) (B)

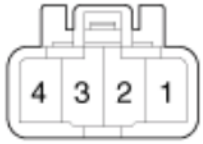

No.	Description
B1	Heater (+)
B2	NTC (+)
B3	NTC (-)
B4	Heater (-)

cardiagn.com

Please rate this document after reviewing at the bottom of this page.

Inspection

Front Seat Heater

1. Check for continuity and measure the resistance between power terminal (heater : 3, ventilation : 4) and ground terminal (6).

Standard value

Driver / Assists (cushion + back)

Heater seat : 1.77Ω±10%/23°C

Ventilation seat : 1.93Ω±10%/23°C

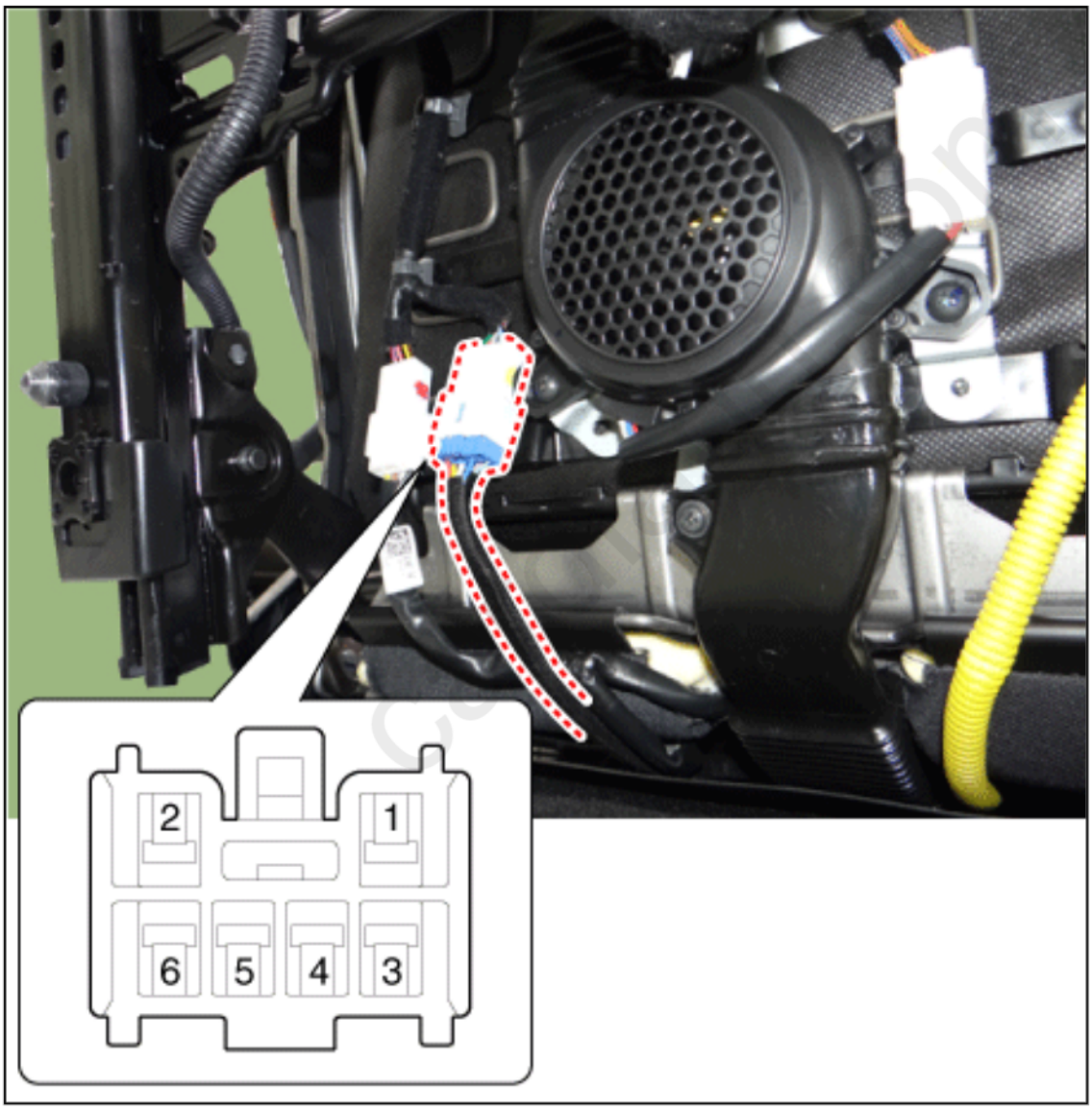

Pin	Function	
	Heater	Heater + Ventilation
1	-	NTC (+)

2	-	-
3	Heater (Power)	NTC (-)
4	NTC (+)	Cushion heater (Power)
5	NTC (-)	Back heater (Power)
6	Ground	Ground

Rear Seat Heater

1. Check for continuity and measure the resistance between terminals No 1 and No 4.

Standard value

Rear seat (Cushion only) : 3.16Ω±10%/23°C



Seat Heater Unit Diagnostic Mode

1. Enter diagnostic mode by operating the seat heater switch.

2. Enter diagnostic mode by referring to the below description.
   - Keep pressing the seat heater switch for over 3 seconds and release the switch. Then, within 2 seconds, press the switch again for over 3 seconds.
   - When diagnostic mode is entered, all switch LEDs will blink once.
3. After entering diagnostic mode, check cause of failure according to blinking or illumination of LEDs.

[Driver Side / Passenger Side Seat Heater]

1st Row Seat Heater Unit



Failure Indication	Inspection Item	Cause of Failure
Low : OFF Mid : OFF High : FLASHING	Detect low voltage	–IGN1 power below 8.5V
	Detect over voltage	–IGN1 power below 16.5V
Low : FLASHING Mid : FLASHING High : FLASHING	Broken fuse	–B (+) fuse disconnected
Low : OFF Mid : ON High : FLASHING	Disconnected / Short NTC	–NTC element defective –Short between NTC connector terminals –NTC (+) wiring disconnected –NTC (-) wiring disconnected
Low : FLASHING Mid : FLASHING High : FLASHING	Disconnected / Short heater	–Heater element defective –Short between heater unit connector terminals –Heater (+) wiring disconnected –Heater (-) wiring disconnected
Low : ON Mid : ON High : FLASHING	Detect loss of temperature	–If target temperature is not reached within 40 minutes

2nd Row Seat Heater Unit

cardiagn.com

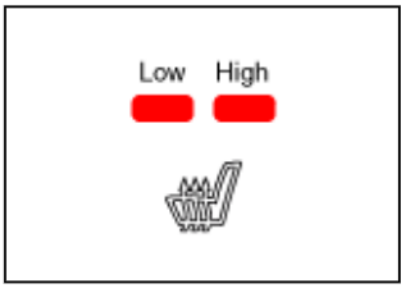

Failure Indication	Inspection Item	Cause of Failure
Low : OFF High : OFF	Detect low voltage	–IGN1 power below 8.5V
	Detect over voltage	–IGN1 power below 16.5V
Low : FLASHING High : FLASHING	Broken fuse	–B (+) fuse disconnected
Low : OFF High : FLASHING	Disconnection/Short in NTC	–NTC element defective –Short between NTC connector terminals –NTC (+) wiring disconnected –NTC (-) wiring disconnected
Low : FLASHING High : FLASHING	Disconnection/Short in heater	–Heater element defective –Short between heater unit connector terminals –Heater (+) wiring disconnected –Heater (-) wiring disconnected
Low : ON High : FLASHING	Detect loss of temperature	–If target temperature is not reached within 40 minutes

4. Check the defective area by the blinking pattern of LED lamps.
5. Error is recorded by the seat heater unit.
6. Error memory can be deleted by pressing the seat heater switch for over 5 seconds with the LED lamps blinking four times.
7. Switching "OFF" the ignition will end the diagnostic mode for seat heater unit.
8. Switch "ON" the ignition and check that seat heater system operates properly. To check the error code, refer to step 2 above.

Removal

Front Seat Heater Unit

cardiagn.com

1. Remove the passenger seat assembly.
   (Refer to Body - "Front Seat assembly")

> Before removing the passenger side seat assembly, pull upward to the maximum by pushing the front seat height adjusting switch (A).

2. Remove the front seat cushion cover.
   (Refer to Body - "Front Seat Cushion Cover")
3. Remove the front seat cushoin panel (A) after loosening the mounting bolts.

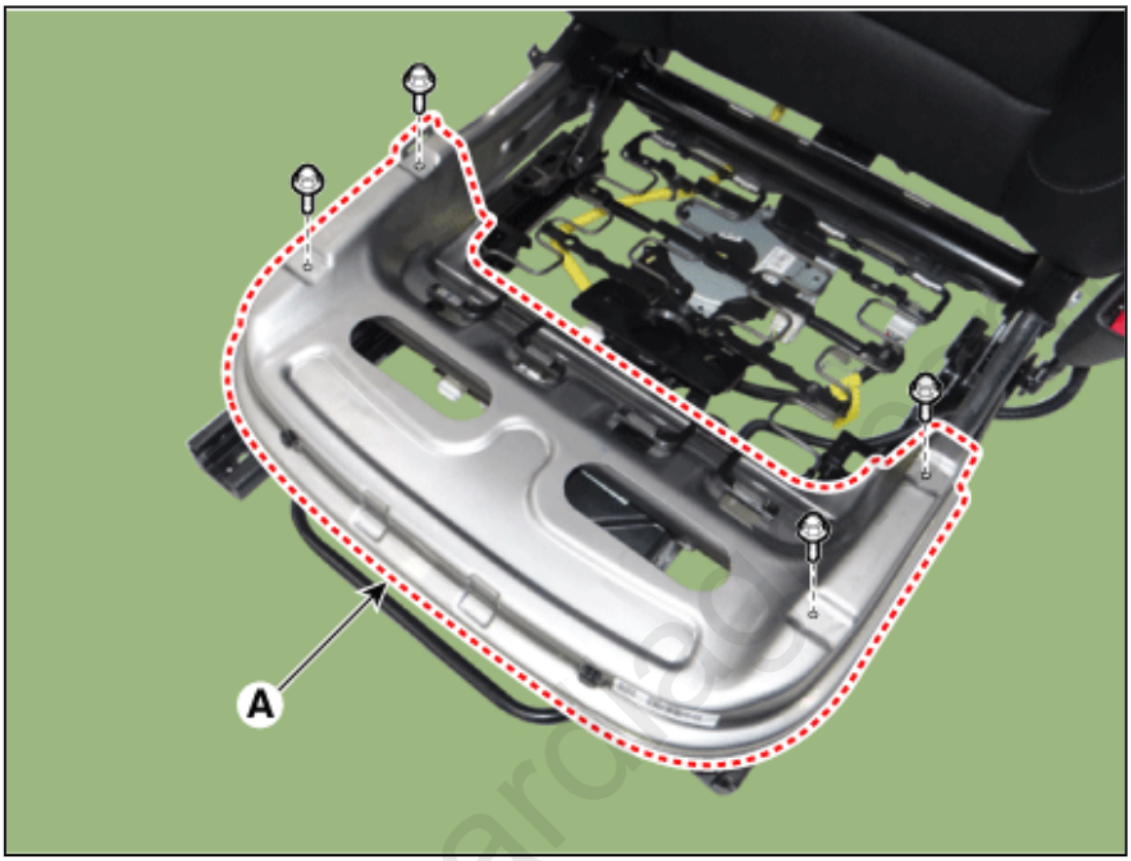

4. Disconnect the ventilation seat unit connectors (A).

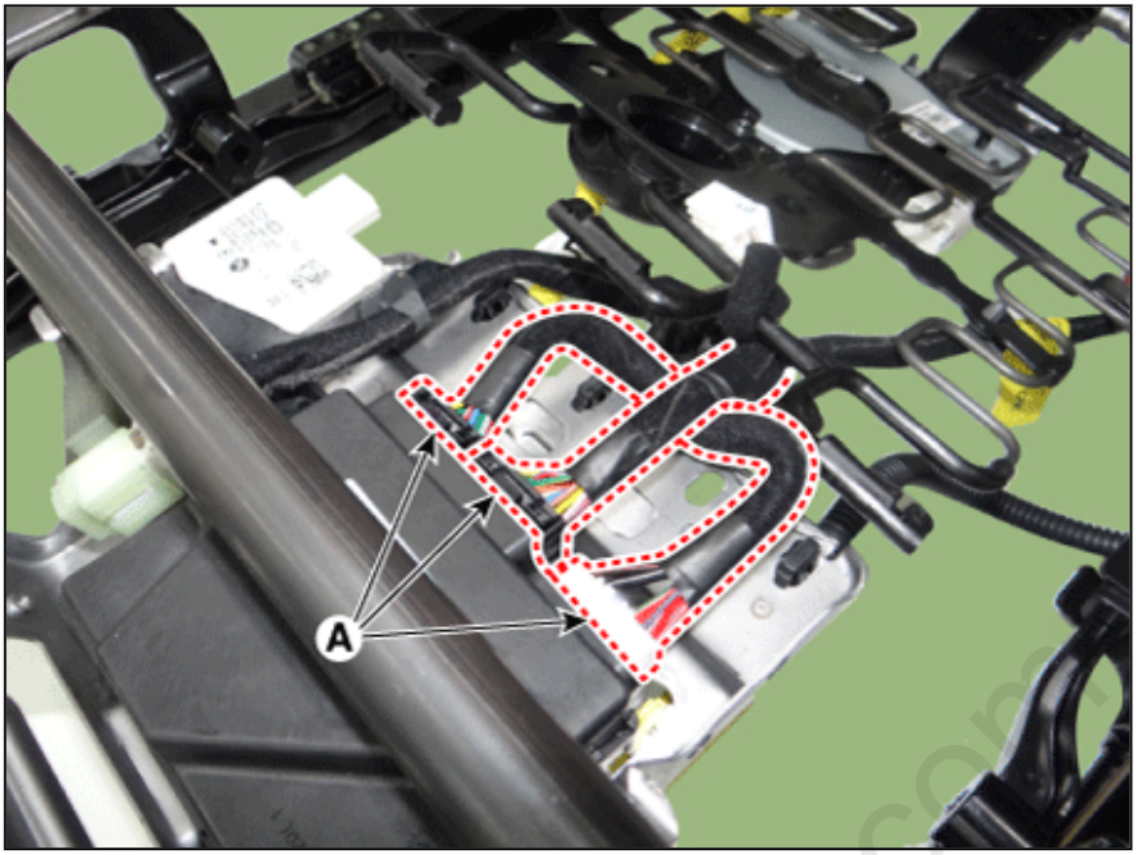

5. Remove the ventilation seat unit (A) after loosening the mounting screws.

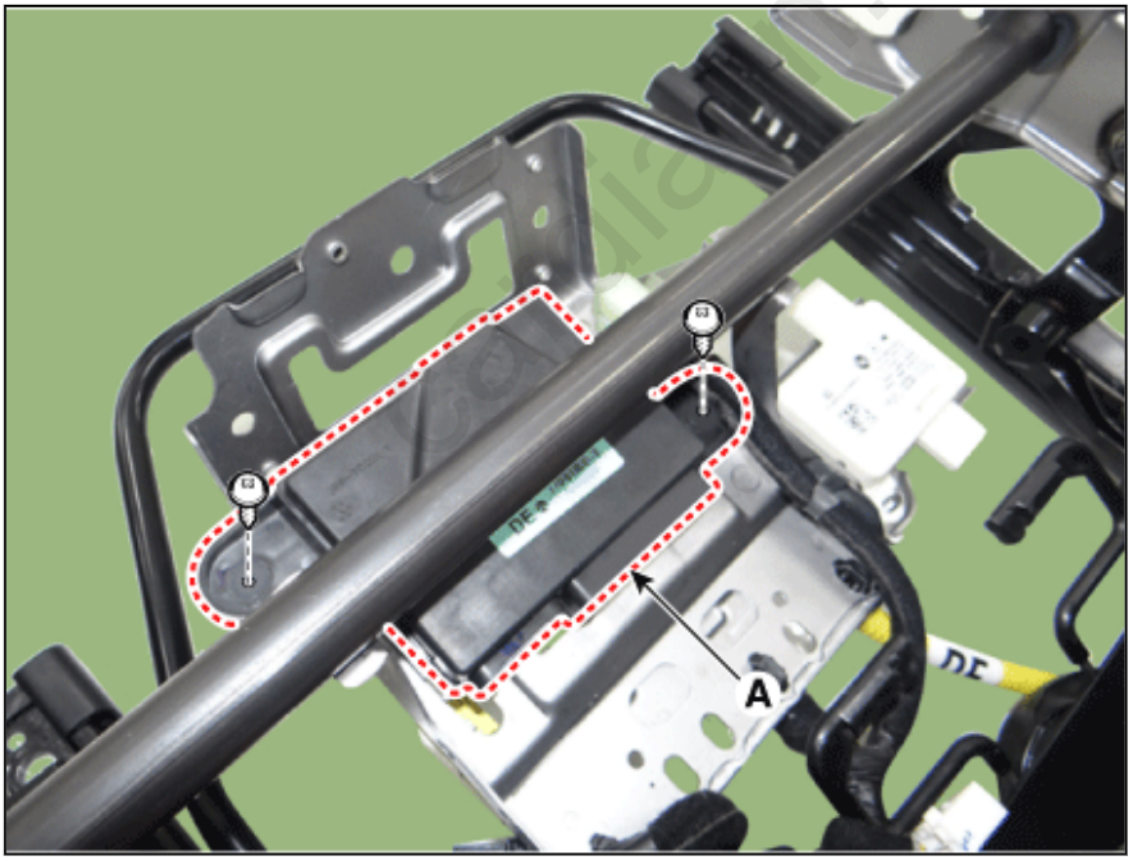

Rear Seat Heater Unit

1. Remove the rear seat cushion.
   (Refer to Body - "Front Seat Cushion Cover")

2. Remove the rear seat heater unit (A) by loosening the screws.

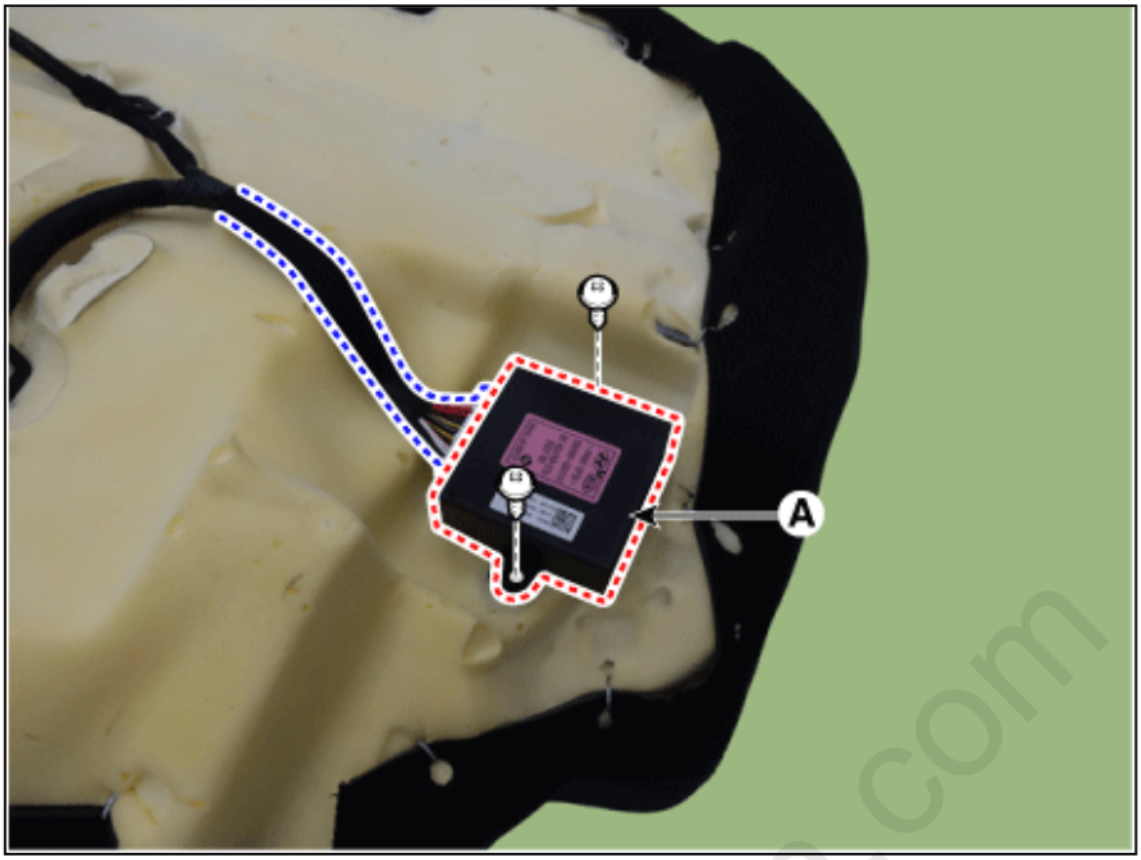

Installation

1. Install in the reverse order of removal.

cardiagn.com

Please rate this document after reviewing at the bottom of this page.

Components

Front Seat Switch



1. Driver side seat heater switch
2. Passenger side seat heater switch

Rear Seat Switch

cardiag1.com



1. Rear seat heater switch (LH/RH)

cardiagn.com

Please rate this document after reviewing at the bottom of this page.

Description

Seat Heater Smart Control Technology

- To prevent low temperature burn, seat heater temperature will automatically be lowered after a certain period of time. (Low temperature burn condition: Over 30 minutes at 50°C)

Seat Heater Smart Control Operation

[1st Row Seat]

- Change to "MID" after 30 minutes in "HIGH", then "LOW" after 60 minutes in "MID"
- Change to "LOW" after 60 minutes in "MID"

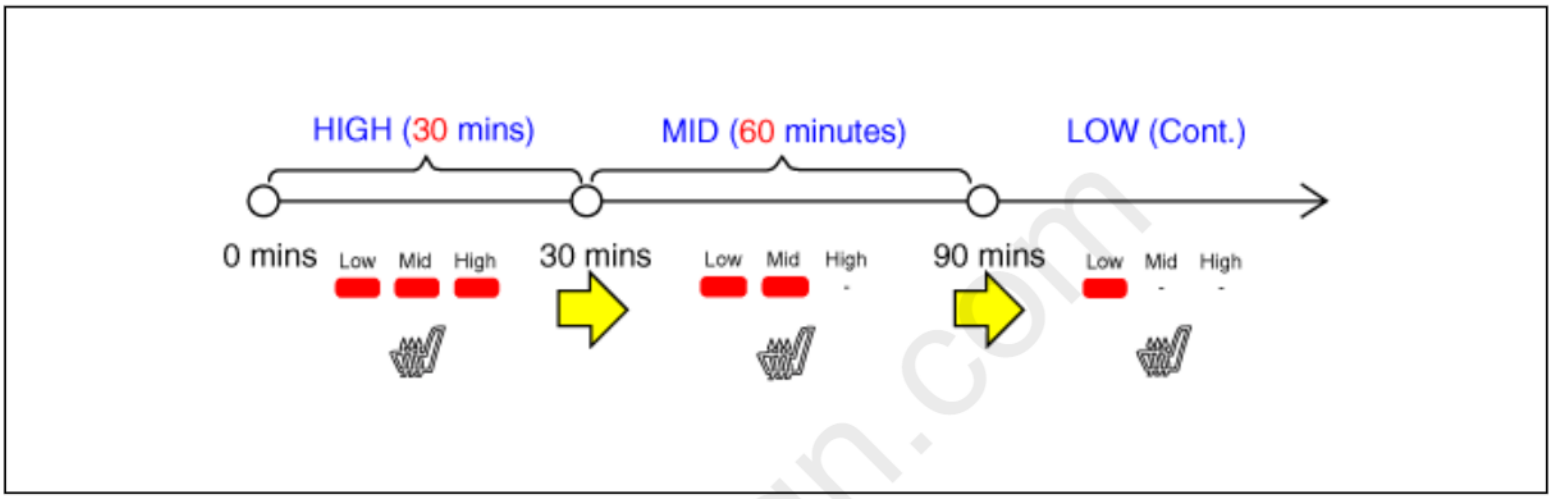

[2nd Row Seat]

- Change to "LOW" after 30 minutes in "HIGH"

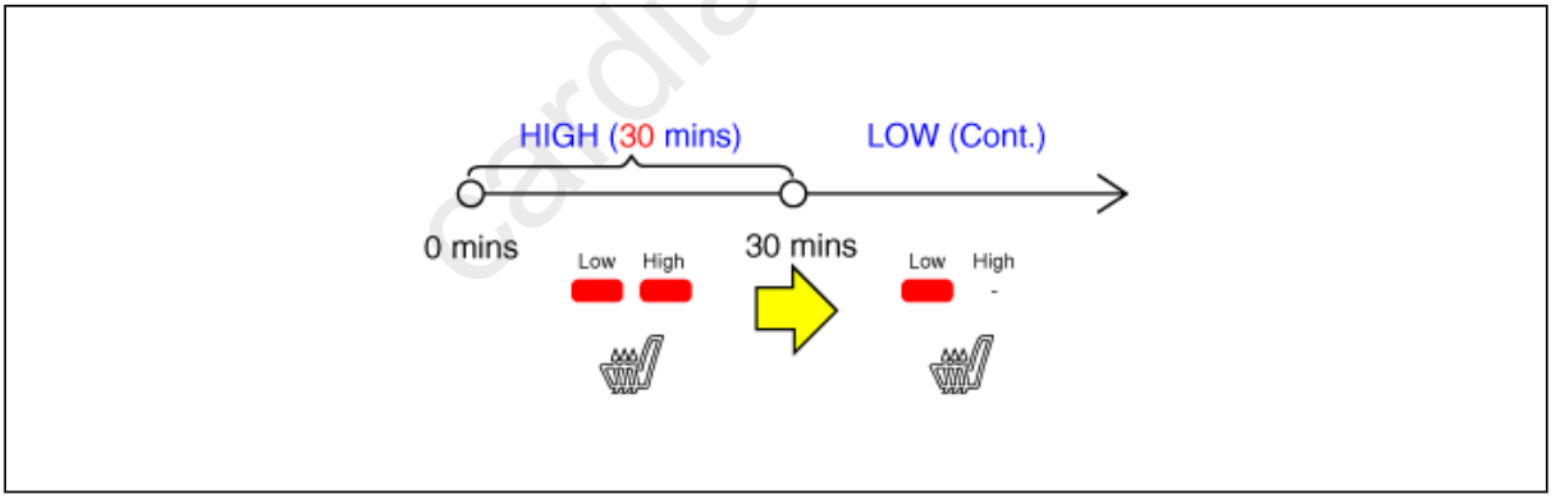

- If temperature is raised manually within certain period of time after the temperature was lowered automatically, it will be lowered again soon to prevent overheating or low temperature burn.
- This is normal operating condition as a safety device.

cardiagn.com

Please rate this document after reviewing at the bottom of this page.

Circuit
Diagram

Front Seat Heater Switch

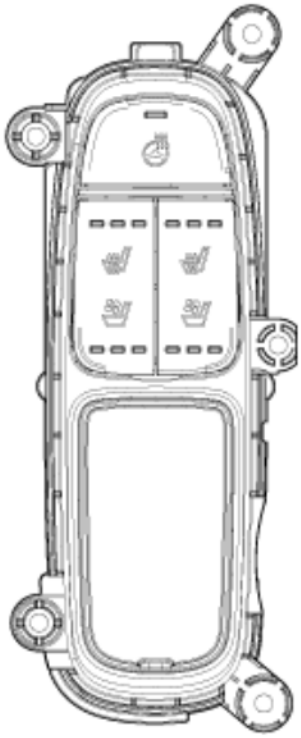

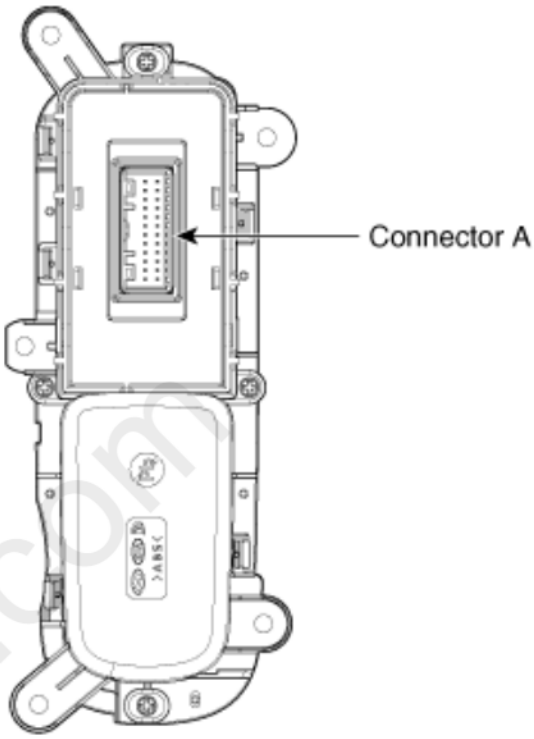

Connector A

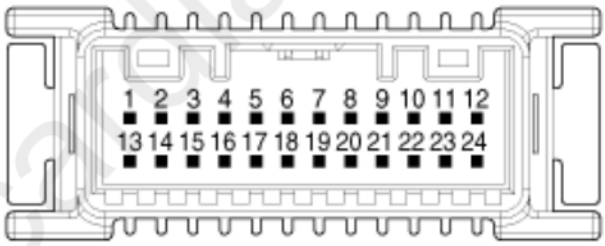

No.	Description	No.	Description
1	RH seat ventilation indicator (High)	13	LH seat ventilation indicator (High)
2	RH seat ventilation indicator (Mid)	14	LH seat ventilation indicator (Mid)
3	RH seat ventilation indicator (Low)	15	LH seat ventilation indicator (Low)
4	RH seat ventilation switch	16	LH seat ventilation swtich
5	-	17	Illumination (+)
6	Ground	18	-
7	-	19	Illumination (-)
8	RH seat heater switch	20	LH seat heater switch
9	RH seat heater indicator (High)	21	LH seat heater indicator (High)
10	RH seat heater indicator (Mid)	22	LH seat heater indicator (Mid)
11	RH seat heater indicator (Low)	23	LH seat heater indicator (Low)
12	Steering heater switch	24	Steering heater indicator

12	Steering heater switch	24	Steering heater indicator

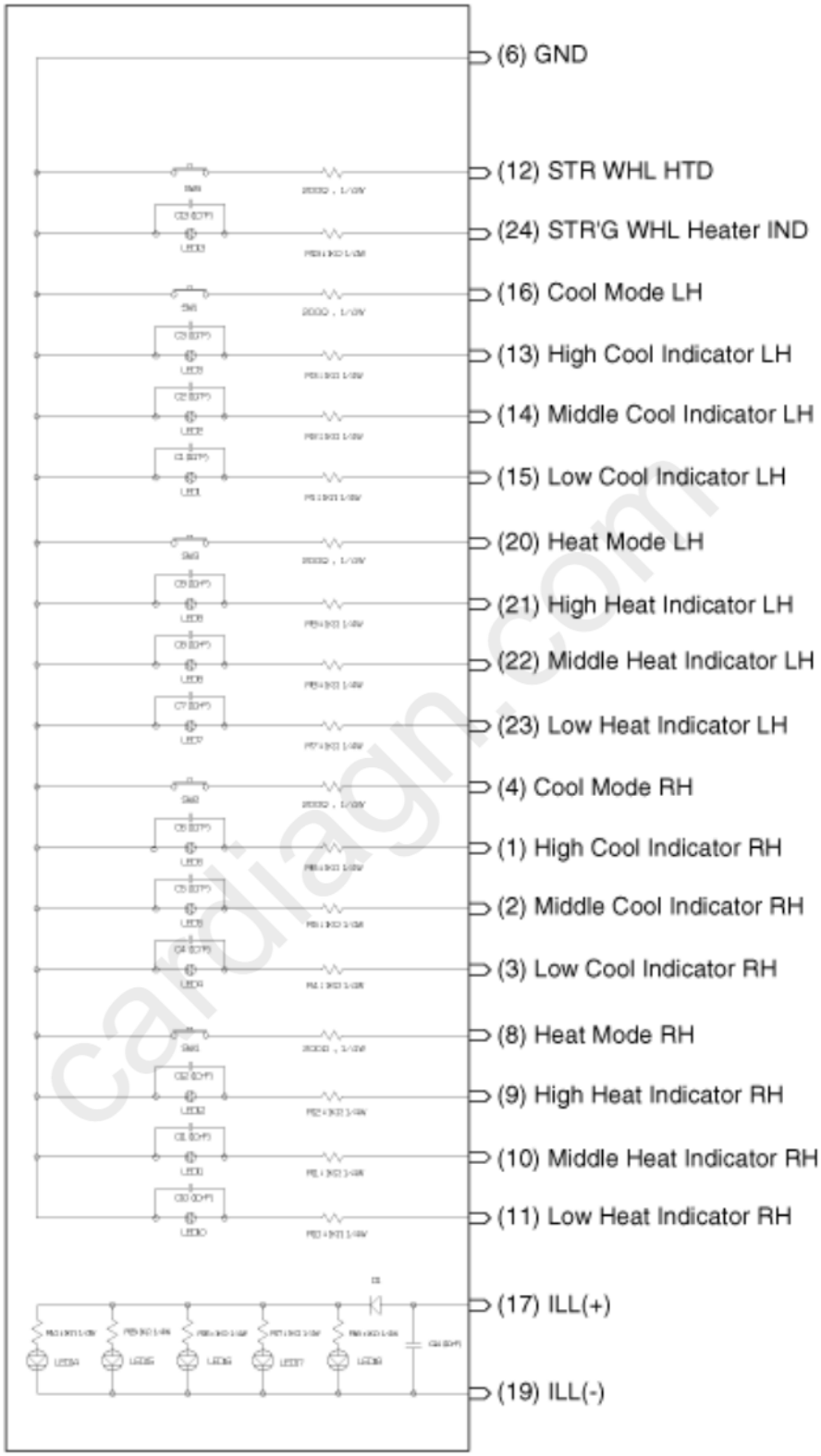

Rear Seat Heater Switch

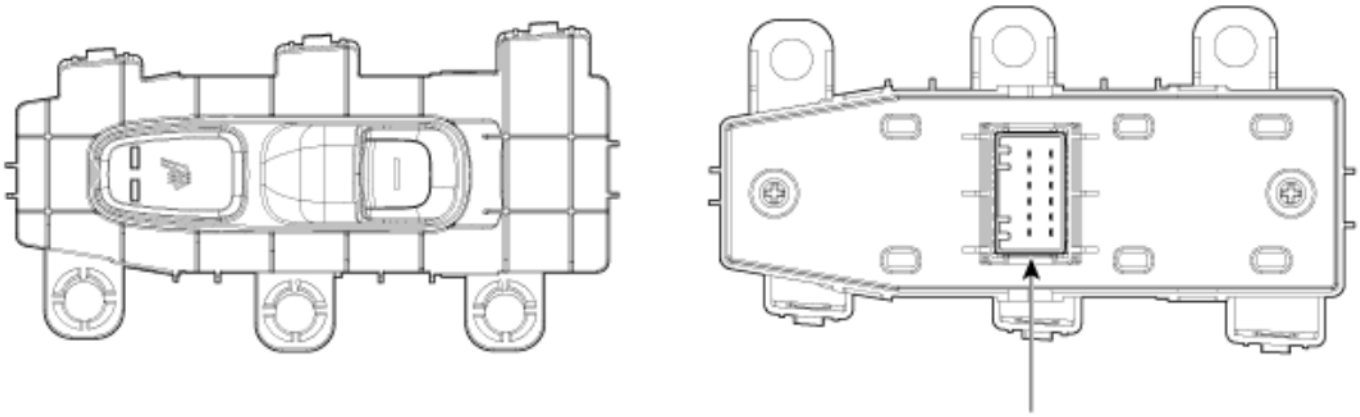

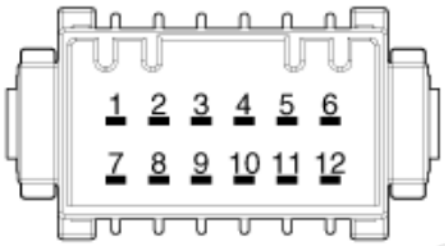

Connector A

(Manual Type)

No.	Description	No.	Description
1	Power window (Up)	7	Window up signal (from main)
2	Seat heater indicator (High)	8	Ground
3	Seat heater indicator (Low)	9	Ground
4	Tail lamp	10	-
5	Battery (+)_Seat warmer	11	Window down signal (from main)
6	Power window (Down)	12	Battery (+)

(Safety Type)

No.	Description	No.	Description
1	Ground	7	Window lock switch
2	-	8	Power window (Up)
3	Seat heater indicator (Low)	9	Power window switch (Up)
4	Seat heater indicator (High)	10	Power window switch (Down)
5	Seat heater switch	11	Power window (Down)
6	Power window switch (Tail lamp)	12	Battery (+)

cardiagn.com

[Manual Type]

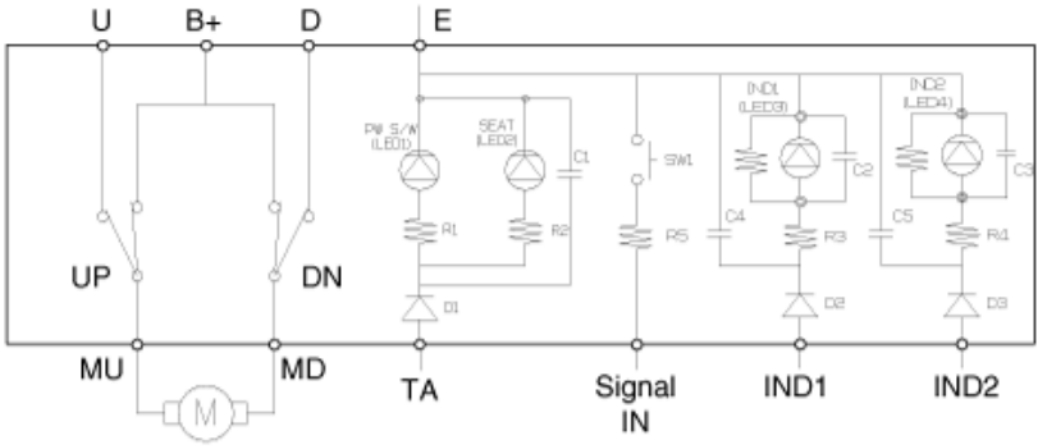

[Safety Type]

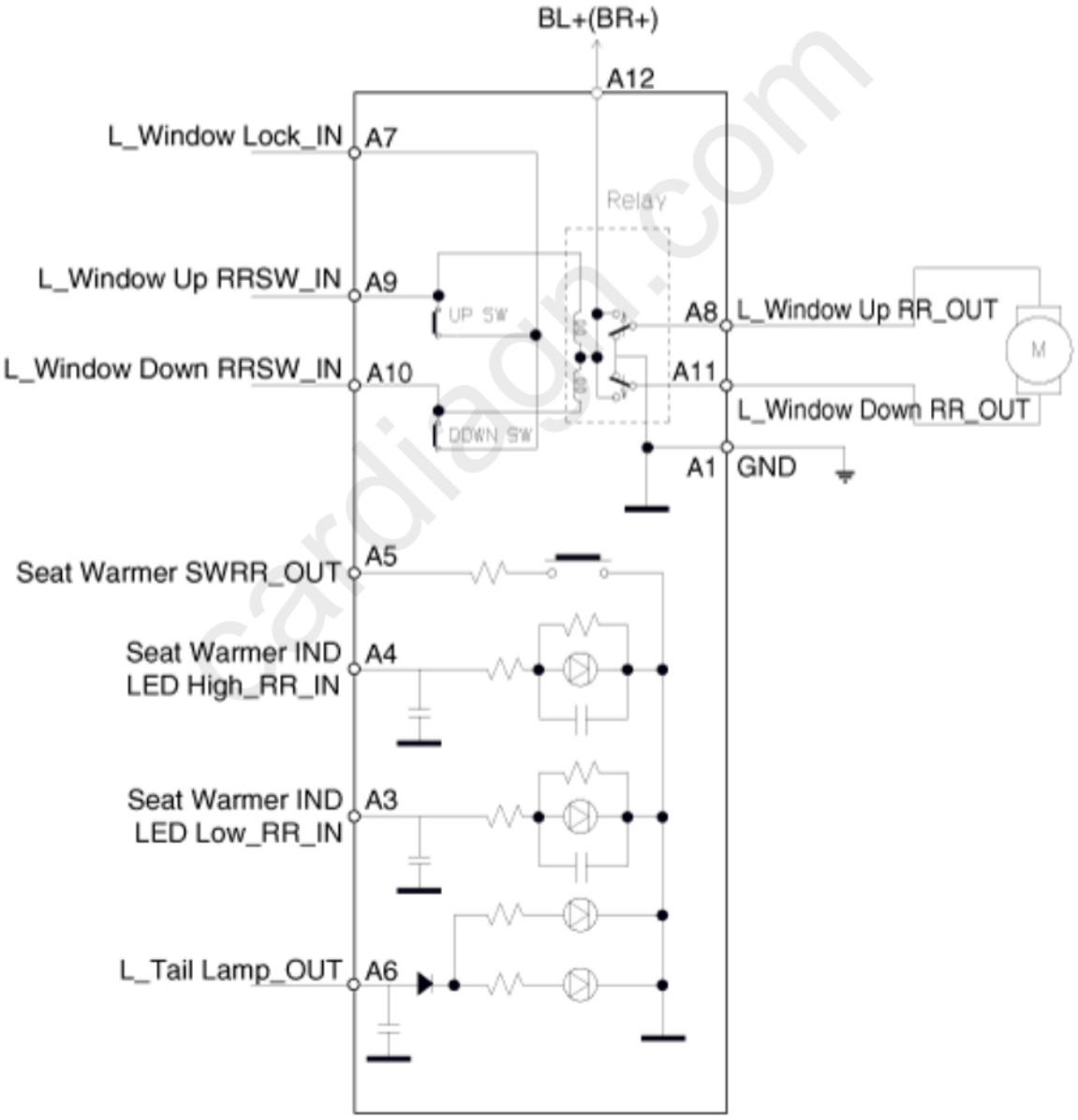

cardiagn.com

Please rate this document after reviewing at the bottom of this page.

Removal

[Front Seat]

1. Remove the floor console assembly.
   (Refer to Body - "Floor Console Assembly")
2. Disconnect the console switch connector (A).

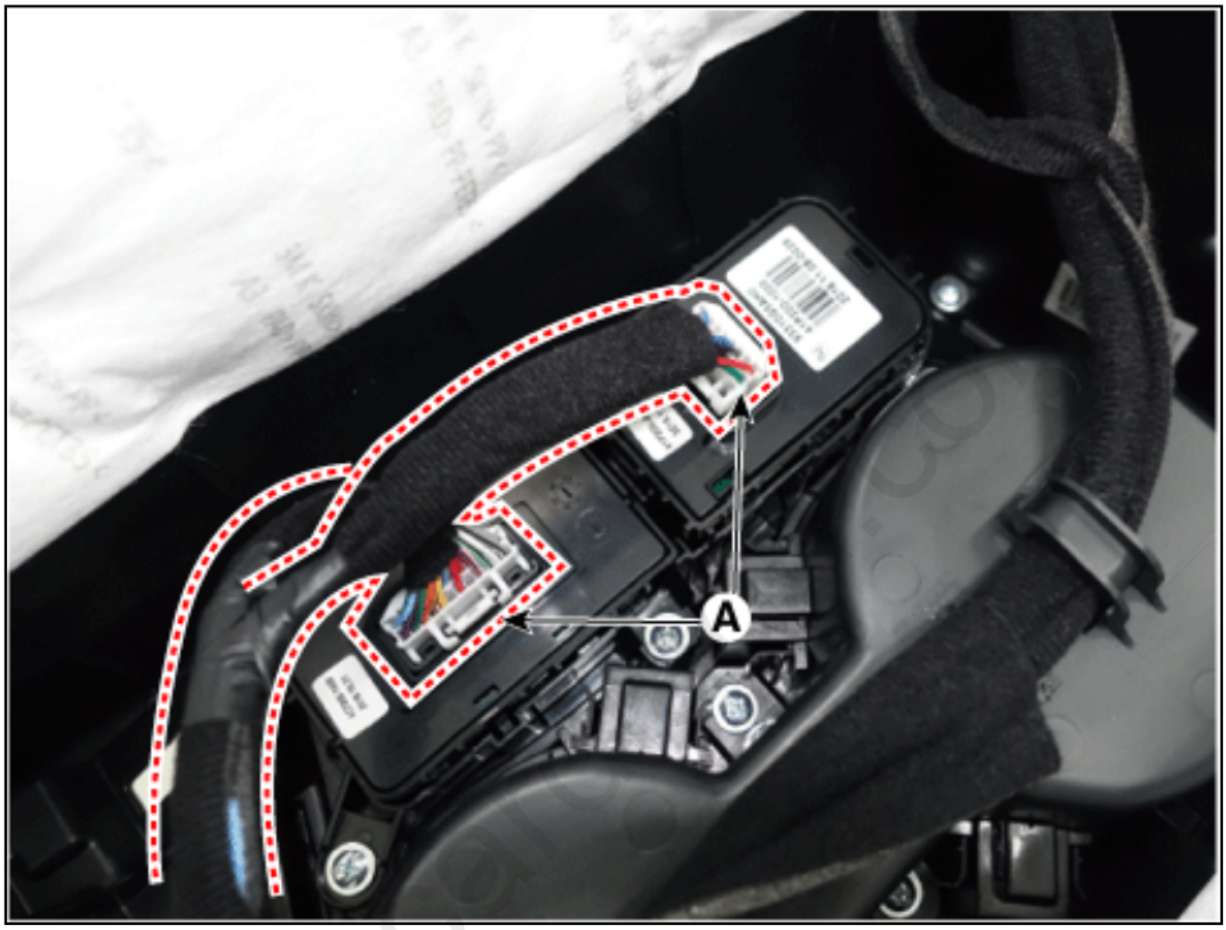

3. Remove the console switch assembly (A) by loosening the screw.

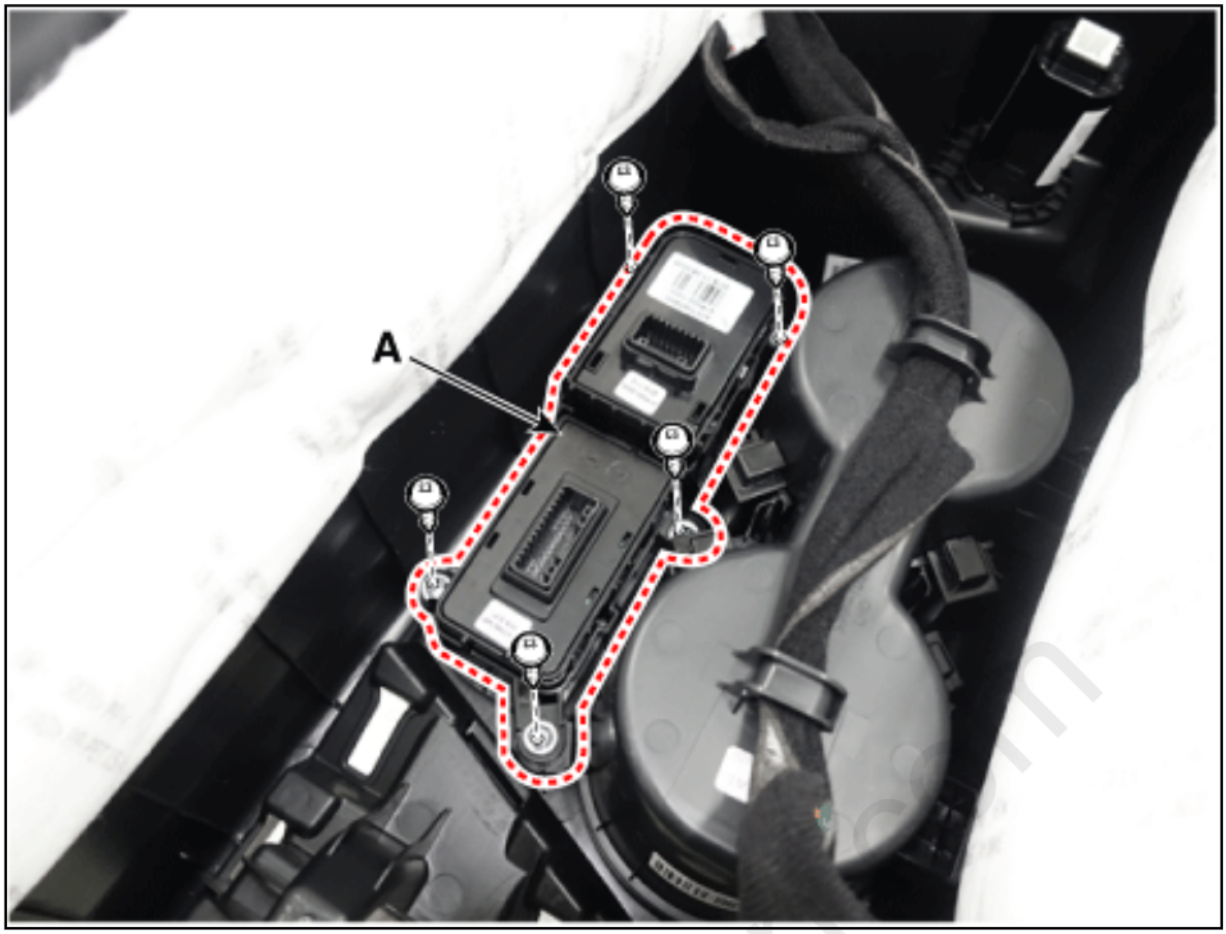

[Rear Seat]

1. Remove the rear door power window switch.
   (Refer to Power Windows - "Power Window Switch")

Installation

1. Install in the reverse order of removal.

cardiagn.com

Please rate this document after reviewing at the bottom of this page.

Component
Location



1. Ventilation seat blower
2. Ventilation seat unit (Assist seat only)

Please rate this document after reviewing at the bottom of this page.

Circuit
Diagram

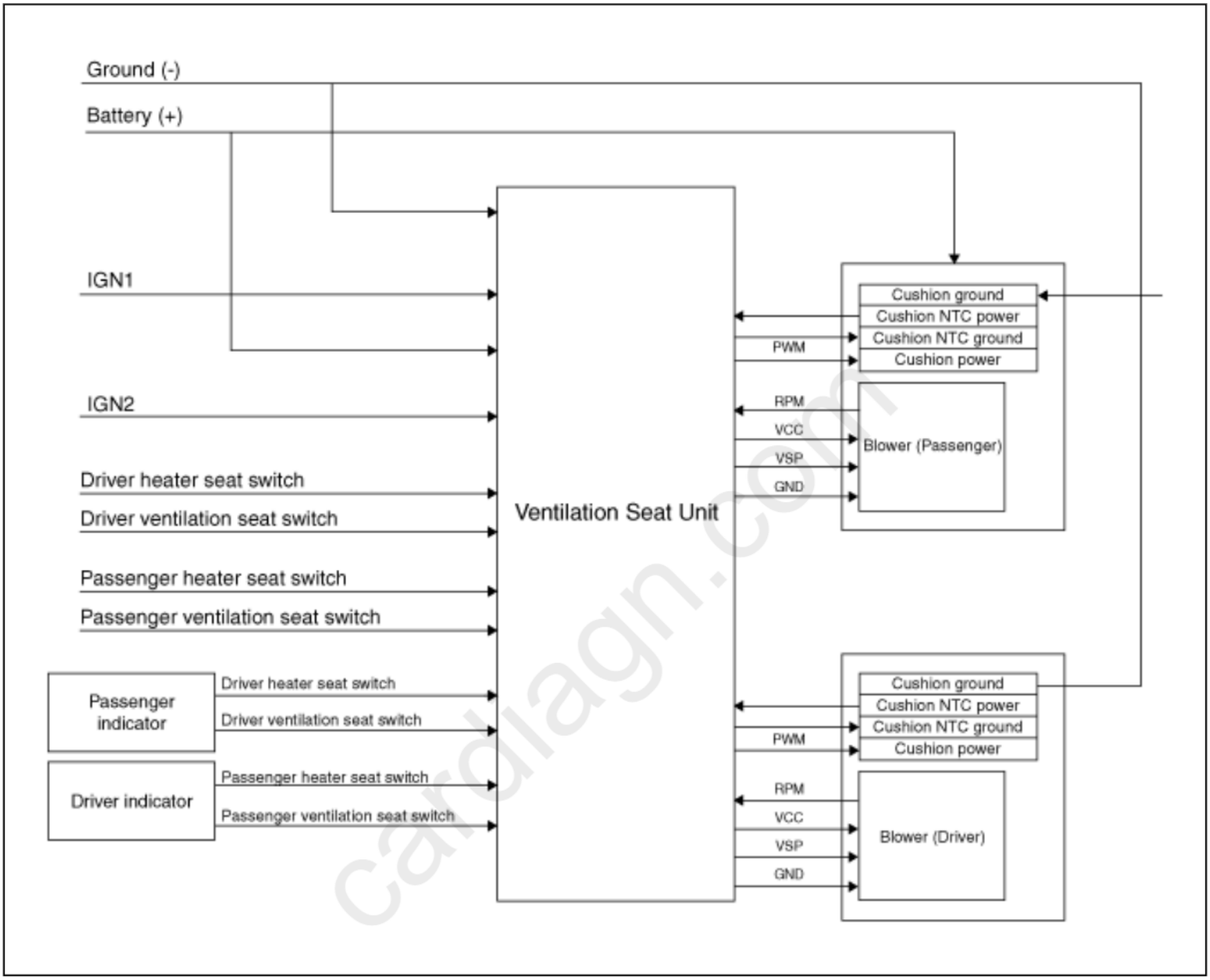

cardiagn.com

Please rate this document after reviewing at the bottom of this page.

Removal

[Ventilation Blower]

1. Disconnect the negative (-) battery terminal.
2. Remove the front seat assembly.
   (Refer to Body - "Front Seat Assembly")
3. Disconnect the ventilation blower connector (A).

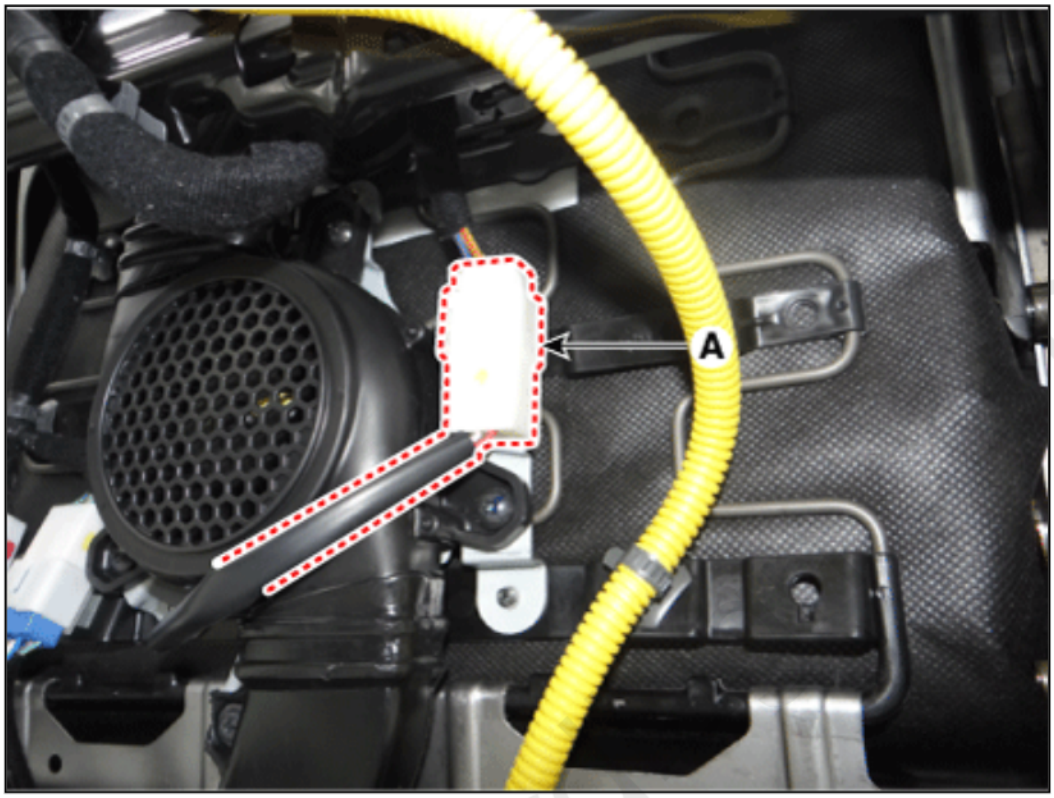

4. Remove the ventilation blower ducts (A) after removing the screw and clips.

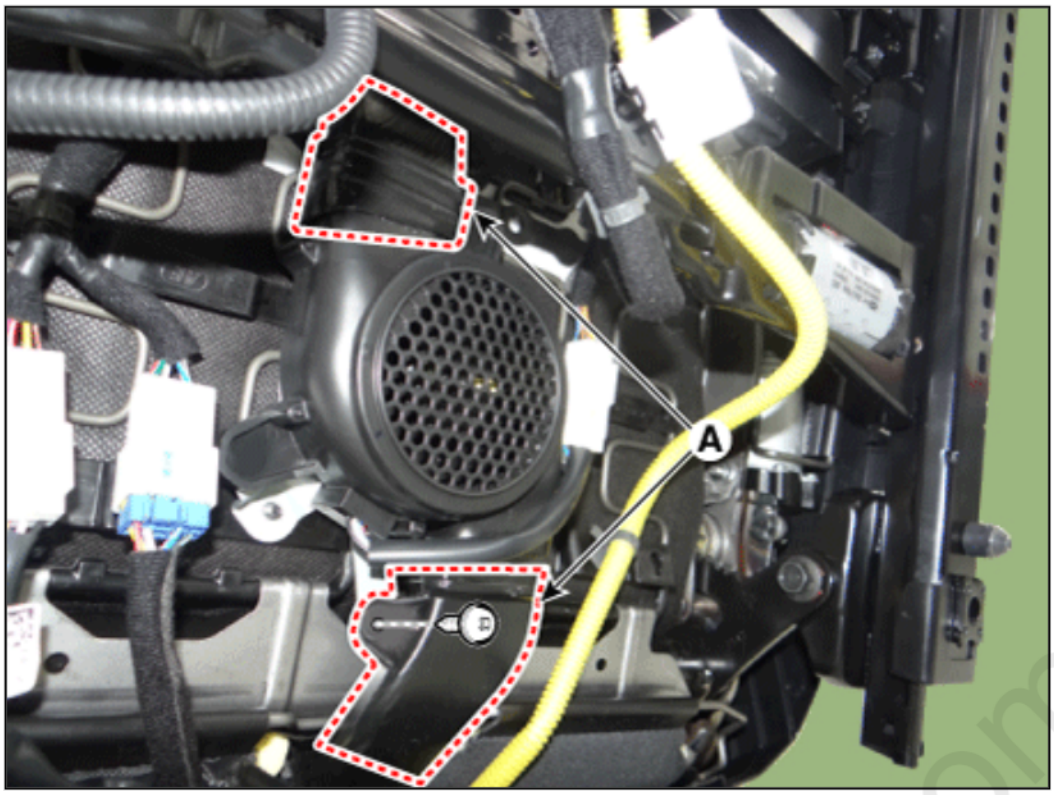

5. Remove the blower fan (A) after removing the screws.

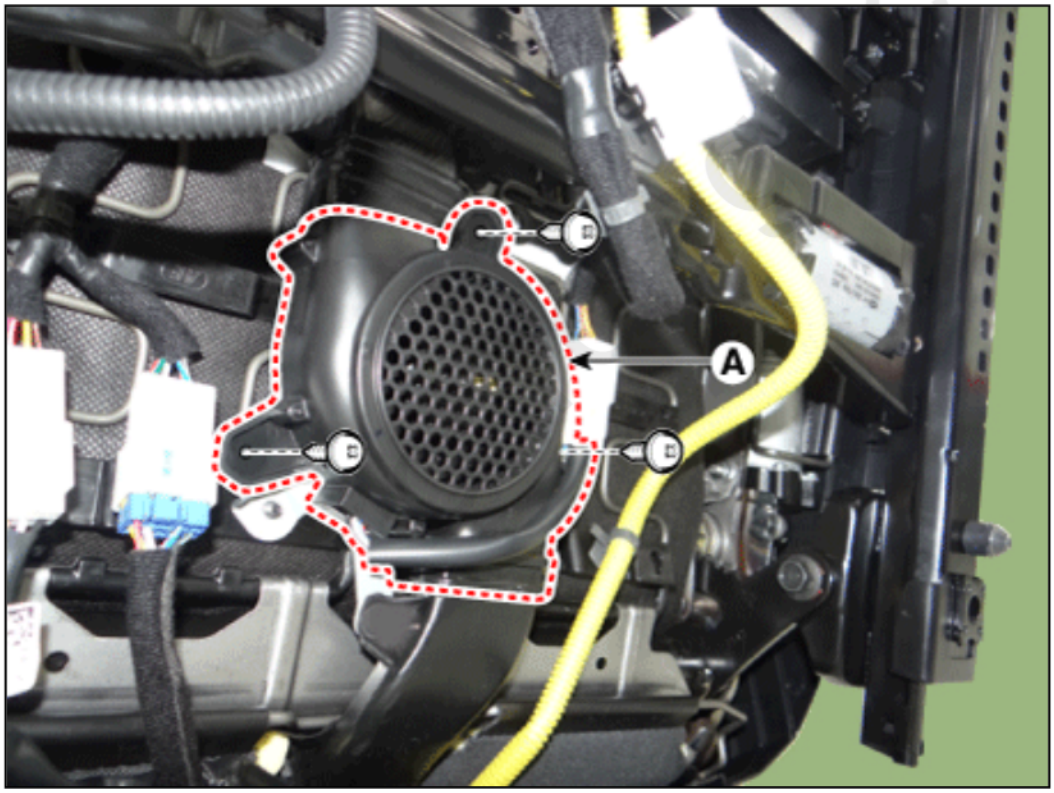

[Ventilation Seat Unit]

1. Disconnect the negative (-) battery terminal.
2. Remove the assist front seat assembly.
   (Refer to Body - "Front Seat Assembly")
3. Remove the front seat cushion cover.
   (Refer to Body - "Front Seat Cushion Cover")

4. Remove the front seat cushion panel (A) after loosening the mounting bolts.

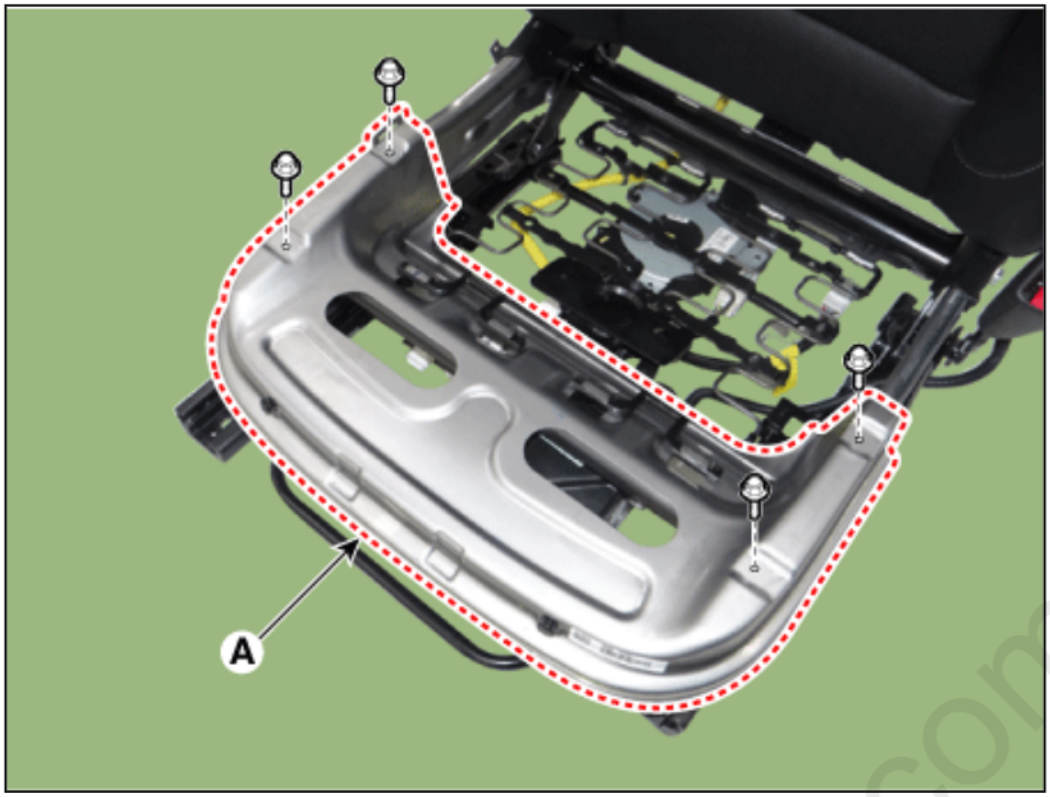

5. Disconnect the ventilation seat unit connectors (A).

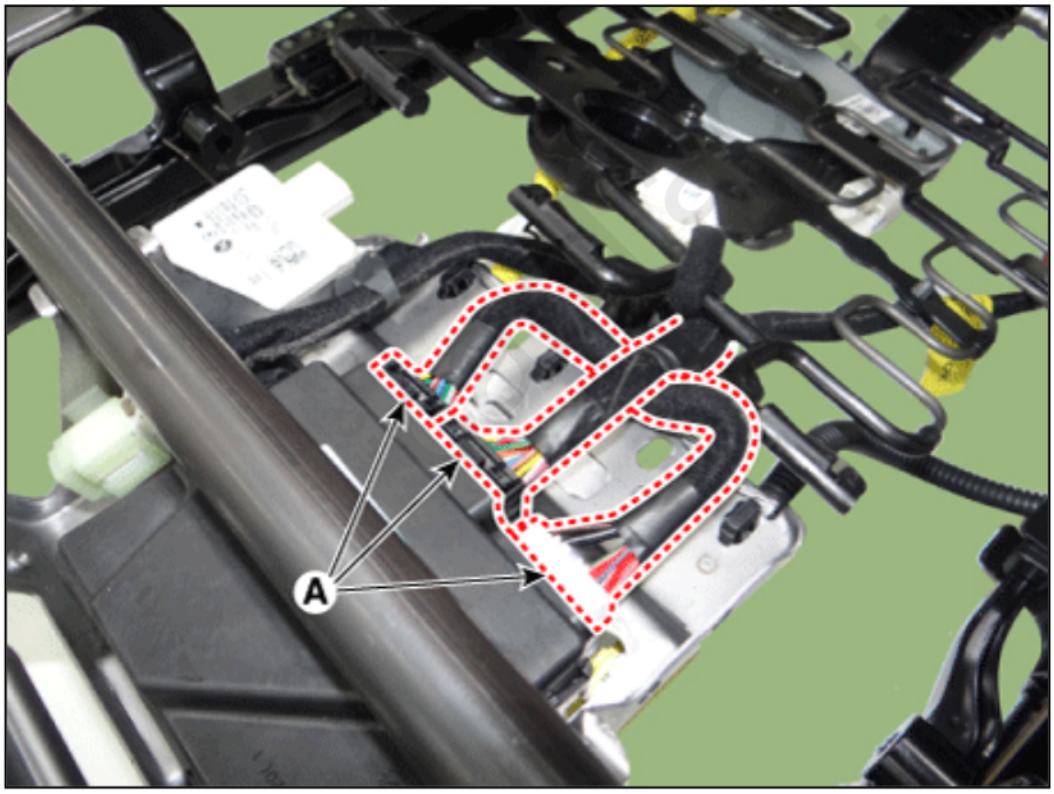

6. Remove the ventilation seat unit (A) after loosening the mounting screws.

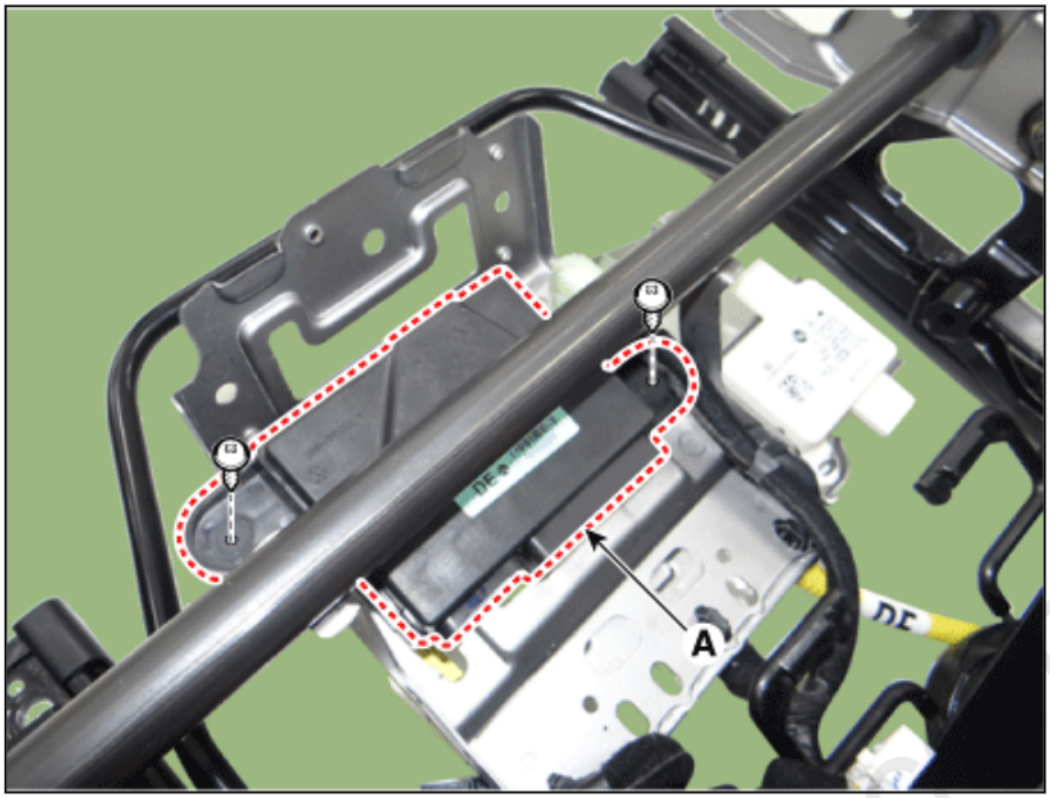

Installation

1. Install in the reverse order of removal.

Inspection

Ventilation Seat Diagnostic Mode

Ventilated seat is largely composed of seat ventilation unit for control, switch for input and blower for output. The diagnostic mode for checking normal operation of these three components has the following functions.

1. Operate seat heater switch to enter diagnostic mode.
2. Enter diagnostic mode by referring to below timing chart and explanation.
3. Press seat heater switch as below.
   (1) Press seat heater switch for over 3 seconds.
   (2) Release the switch for less than 3 seconds, and press again for 1.5-3 seconds.
   (3) Release the switch for less than 3 seconds, and press again for over 3 seconds.

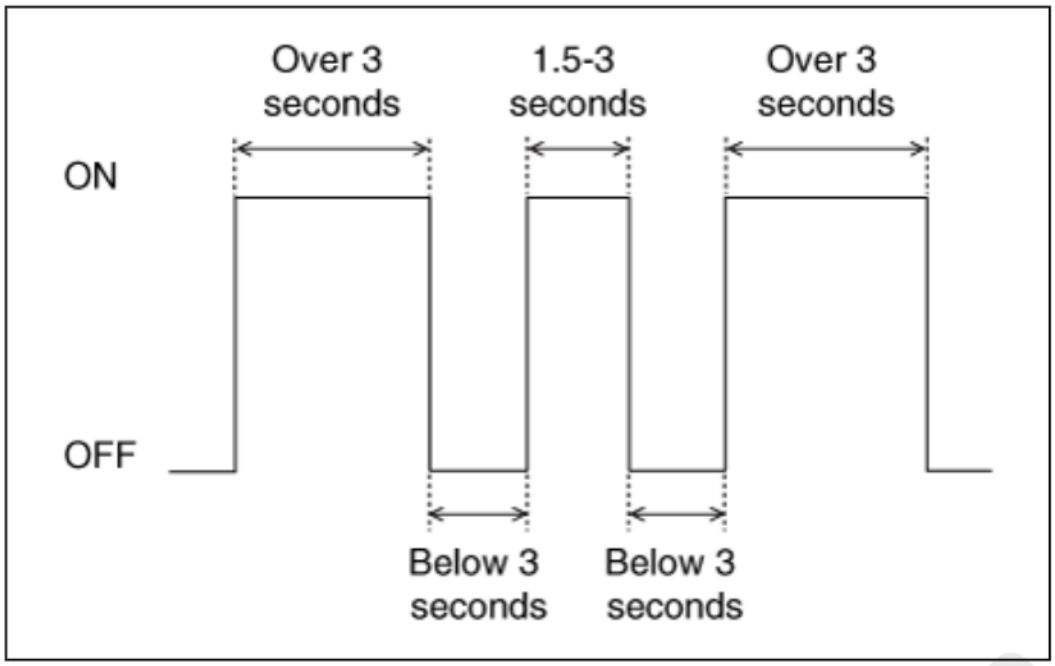

4. Diagnostic mode will start immediately after 3 LED lamps of seat heater switch (Low, Mid, High) blink once.
   (1) In self-diagnostic mode, only the seat heater switch LED lamps will operate.
   (2) If two or more errors are detected, the lamps will blink in sequence with intervals of 2 seconds for each error code.

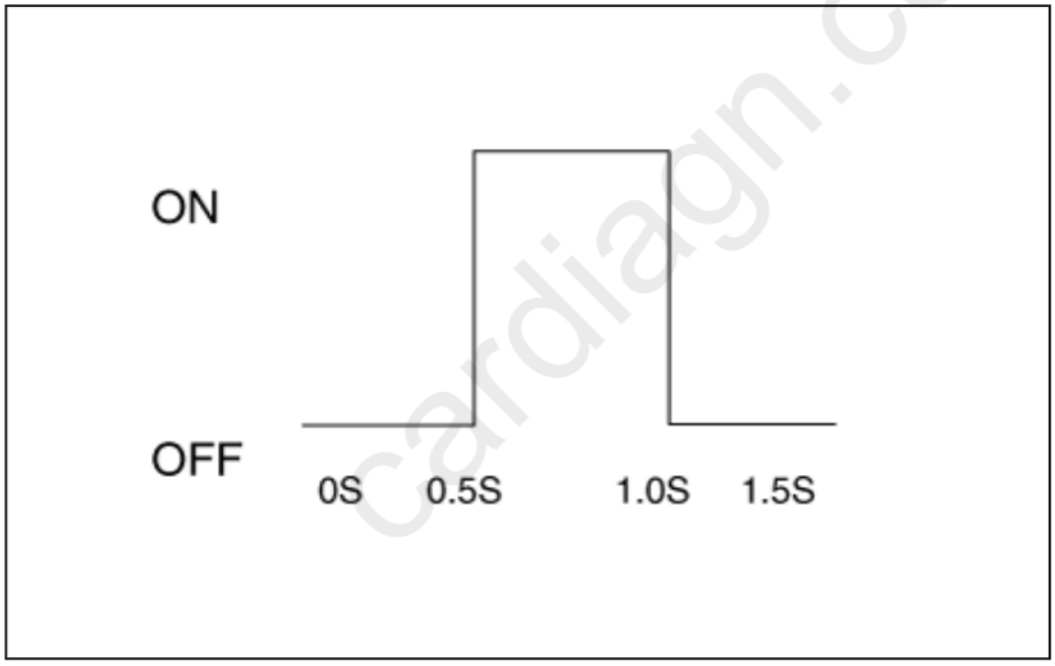

5. After entering diagnostic mode, check LED blinking status to check errors.



Failure Indication	Blinking of LED	Inspection Item	Cause of Failure

cardiagn.com

	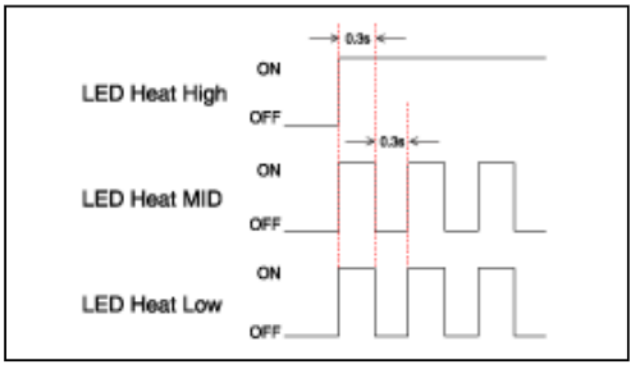	Detect low voltage	Low voltage compared to operating voltage range
		Detect over voltage	Over voltage compared to operating voltage range
	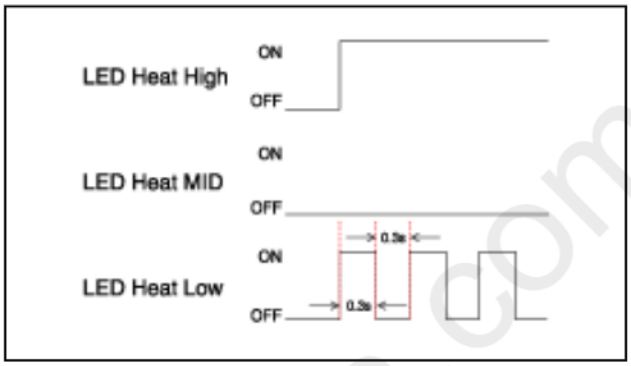	Disconnected fuse	Disconnected B + fuse
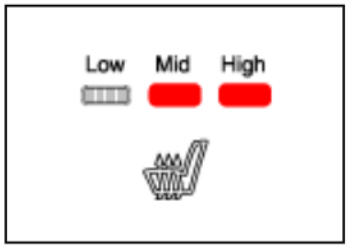	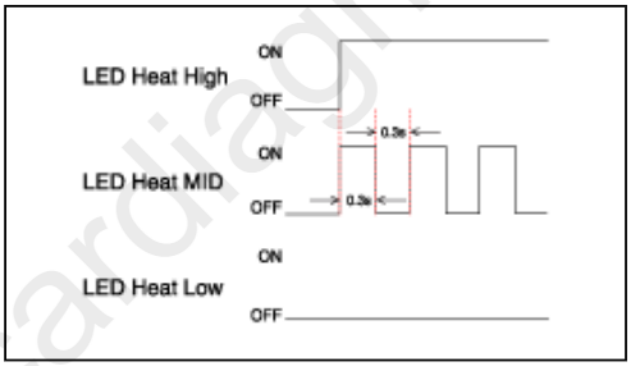		Disconnected IGN2 fuse
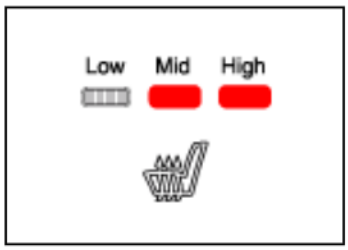	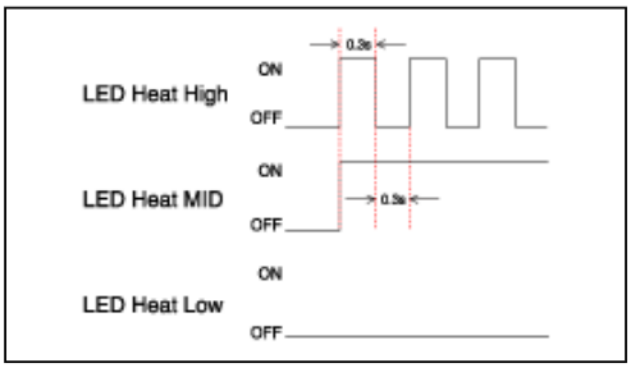	Short in NTC/ HEATER MAT	1) Faulty NTC element 2) Disconnected heater mat 3) Disconnected heater + wiring 4) Disconnected heater system NTC (Over 4.9V)

cardiagn.com

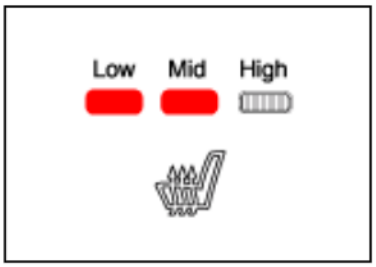	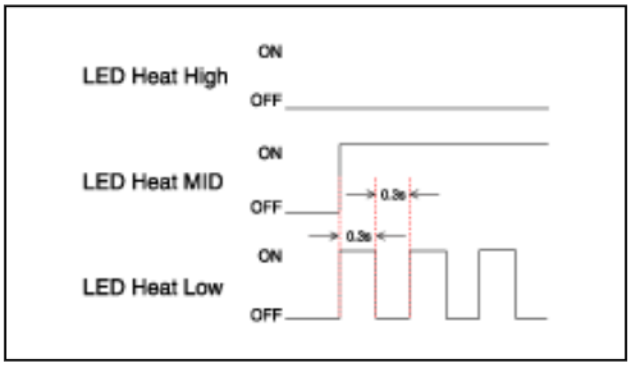	Short in NTC/ HEATER MAT	1) Short between controller connector terminal and NTC 2) Short between controller connector terminal and heater 3) Short in heater system NTC wiring 4) Short in heater system heater + wiring
	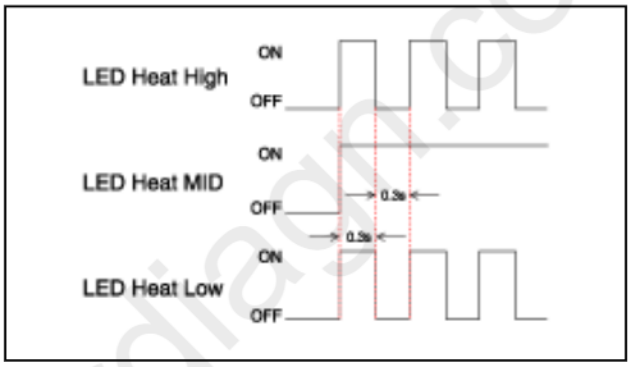	Detect loss of temperature	Target temperature not reached in 40 minutes
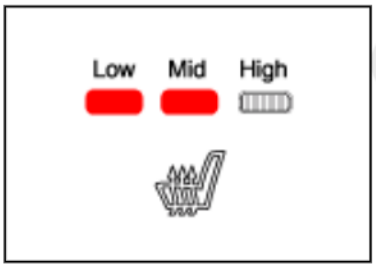	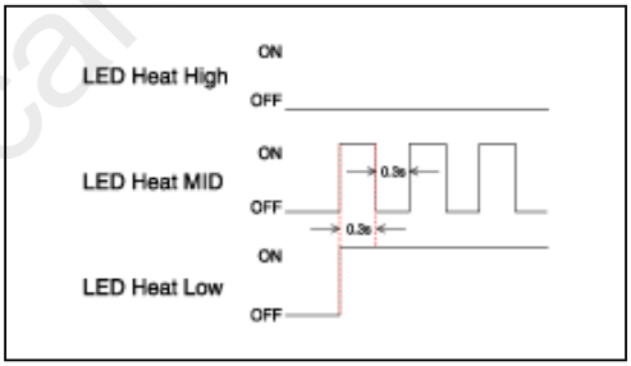	Disconnected ventilation blower power	Disconnected blower power wiring

cardiagn.com

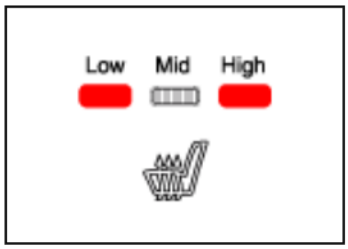	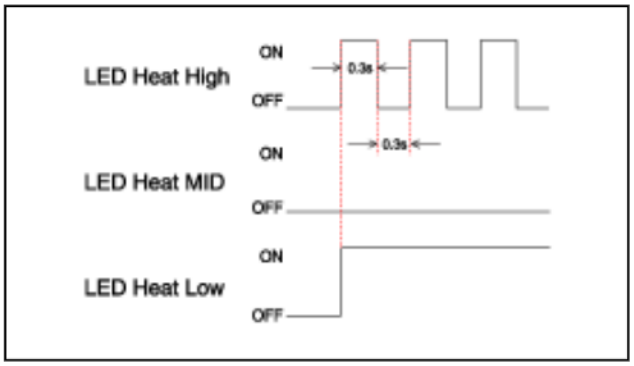	Short in ventilation blower power	Short in blower power wiring
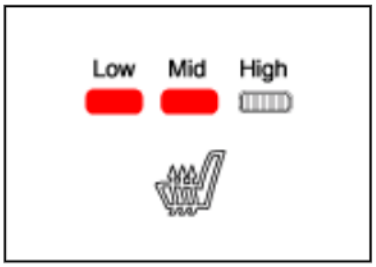	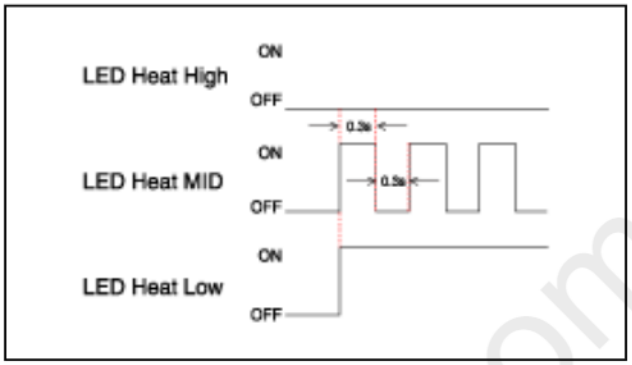	Disconnected ventilation blower speed signal	Disconnected blower speed signal
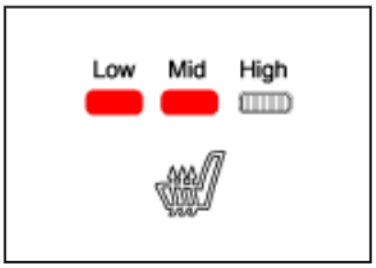	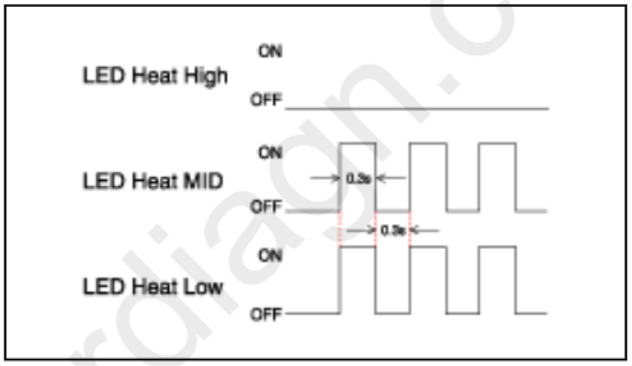	Short in ventilation blower speed signal	Short in ventilation blower speed signal (VCC)
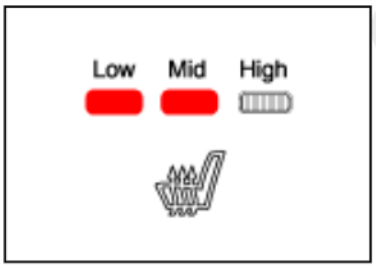	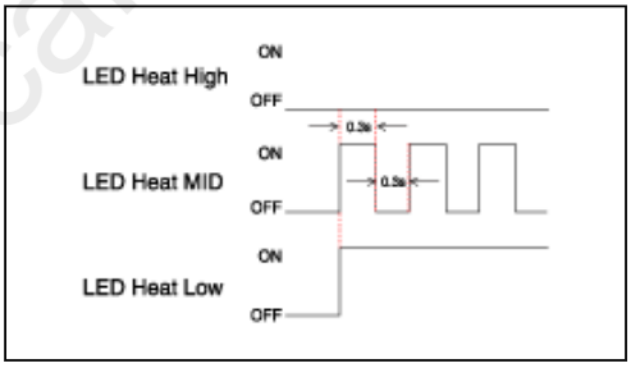	Short in ventilation blower speed signal	Short in ventilation blower speed signal (GND)
		Disconnected ventilation blower rpm signal	Disconnected ventilation blower rpm signal

cardiagn.com

	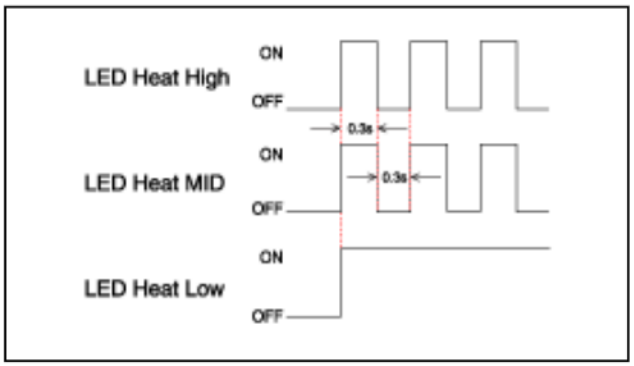	Short in ventilation blower rpm signal	Short in ventilation blower rpm signal (VCC)
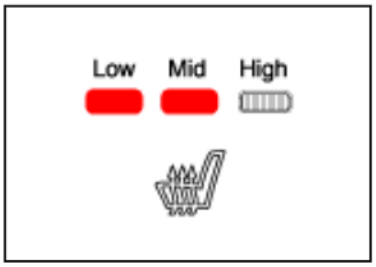	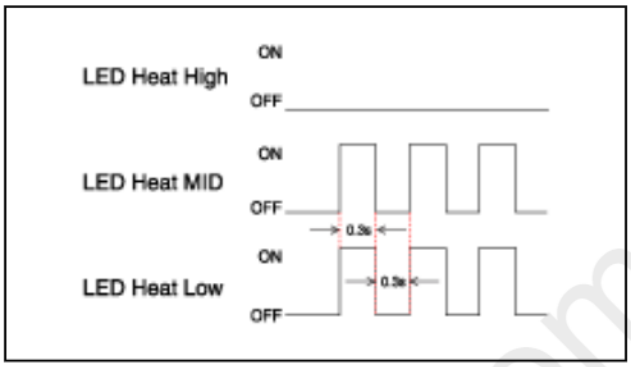	Short in ventilation blower rpm signal	Short in ventilation blower rpm signal

6. Inspect cause of failure indicated by LED status.
7. Trouble code will be recorded by seat ventilation unit.
8. When the passenger side seat heater switch is pressed for over 5 seconds, the LED will blink 4 times and trouble code will be deleted.
9. Switch "OFF" ignition to exit diagnostic mode of ventilated seat.
10. Switch "ON" ignition and check that seat ventilation system works properly. To check trouble code, refer to step 2 again.

cardiagn.com

Please rate this document after reviewing at the bottom of this page.

Removal

1. Disconnect the negative (-) battery terminal.
2. Remove the front seat back cover.
   (Refer to Body - "Front Seat Back Cover")
3. Disconnect the lumbar support motor connector (A).

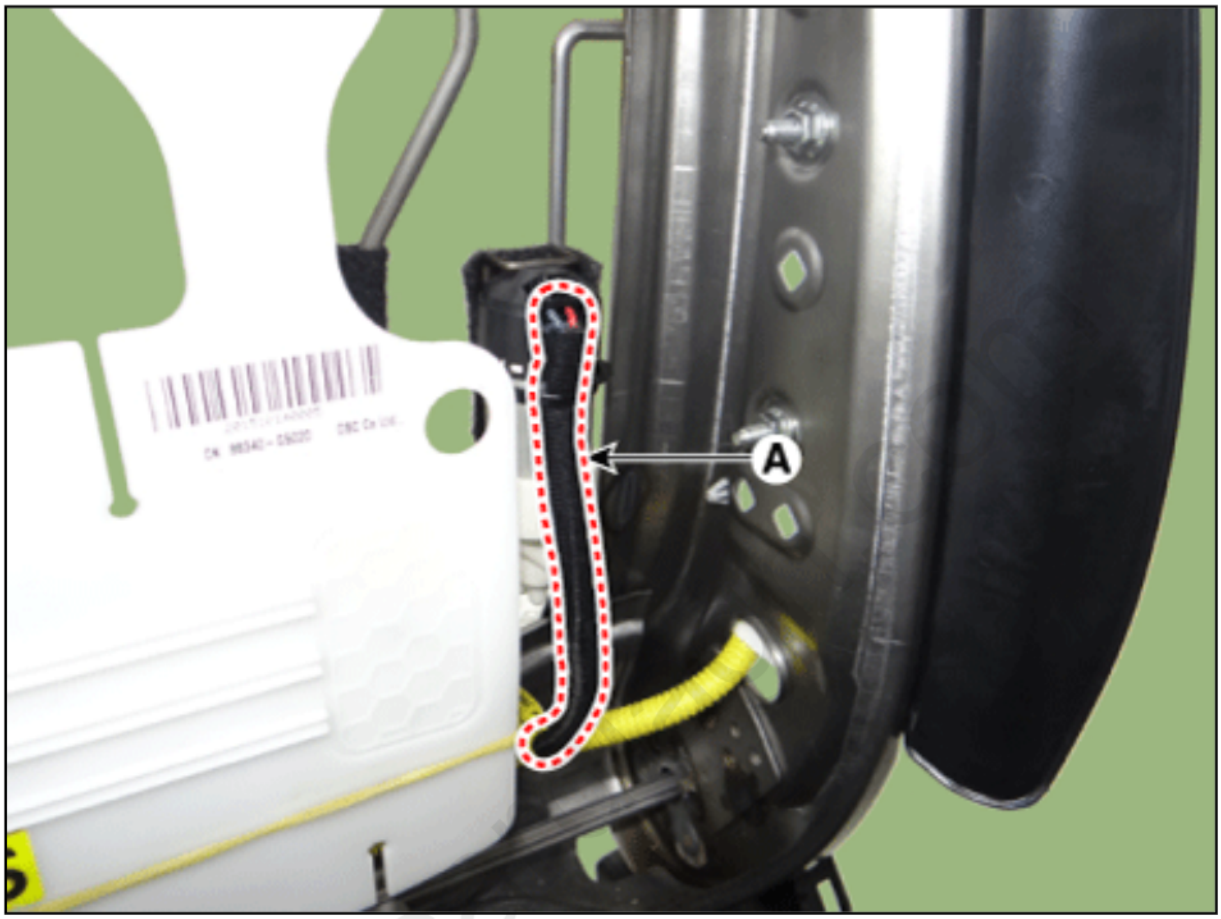

4. Separate the retaining clips (A) from the seat frame.

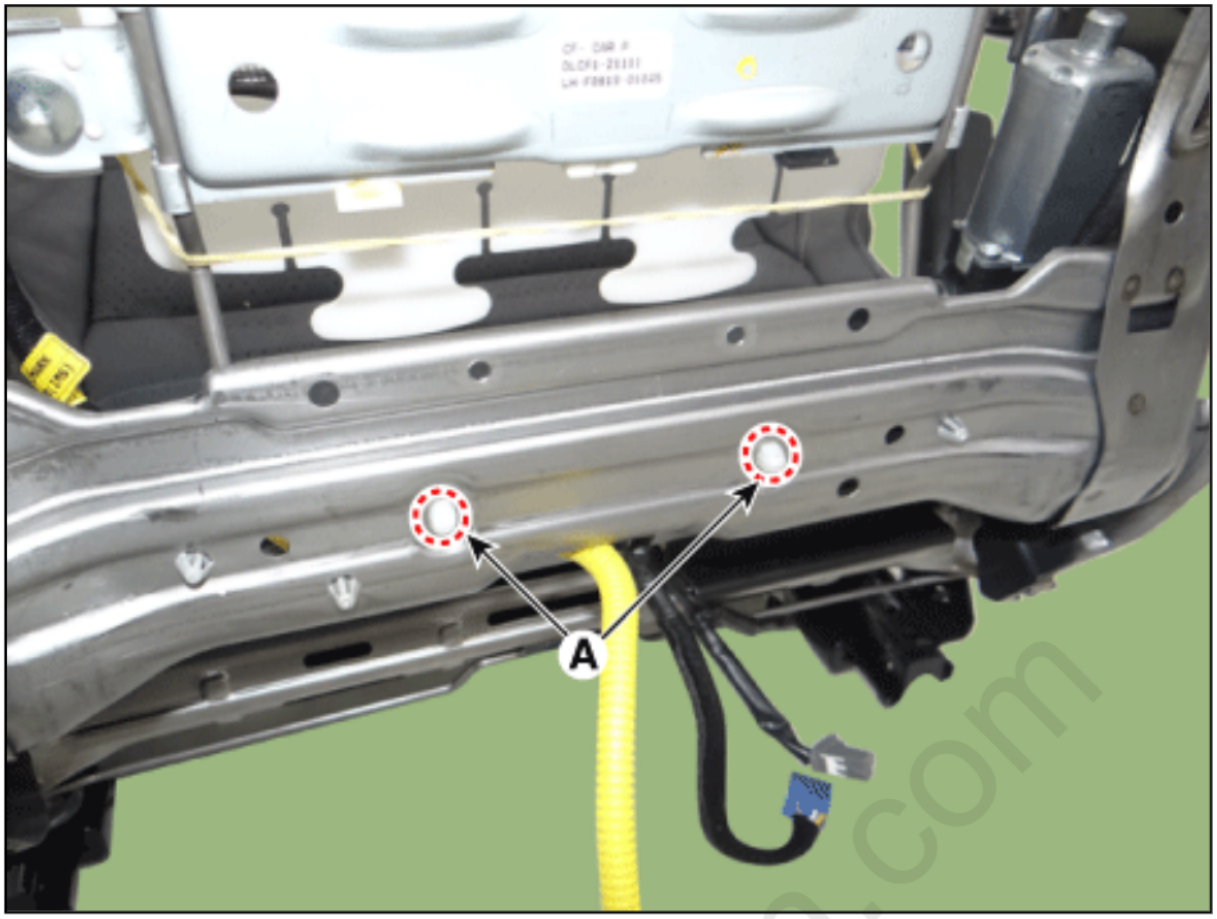

5. Remove the lumbar support assembly (B) after disengaging mounting clip (A).

cardiagn.com

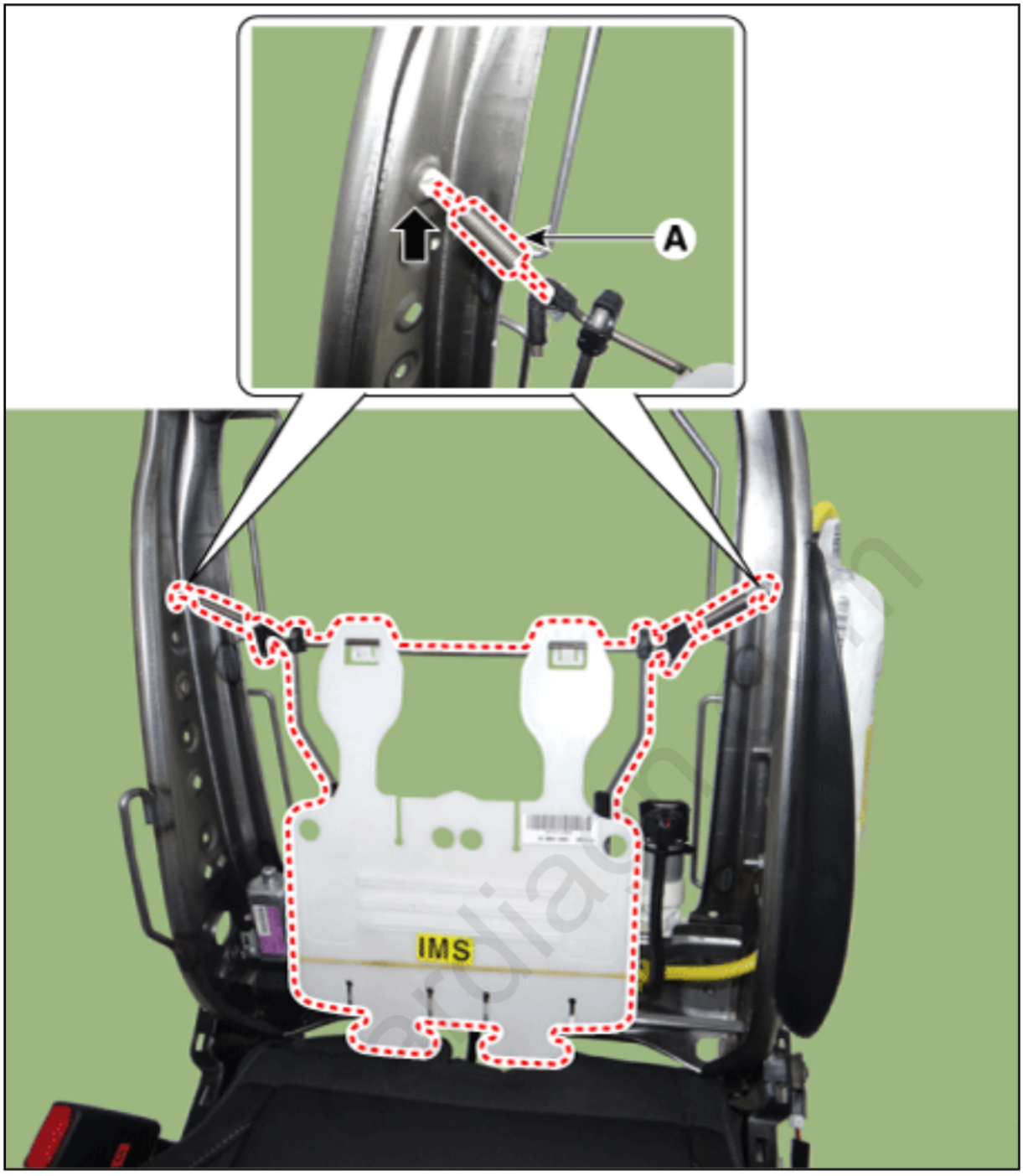
A
IMS

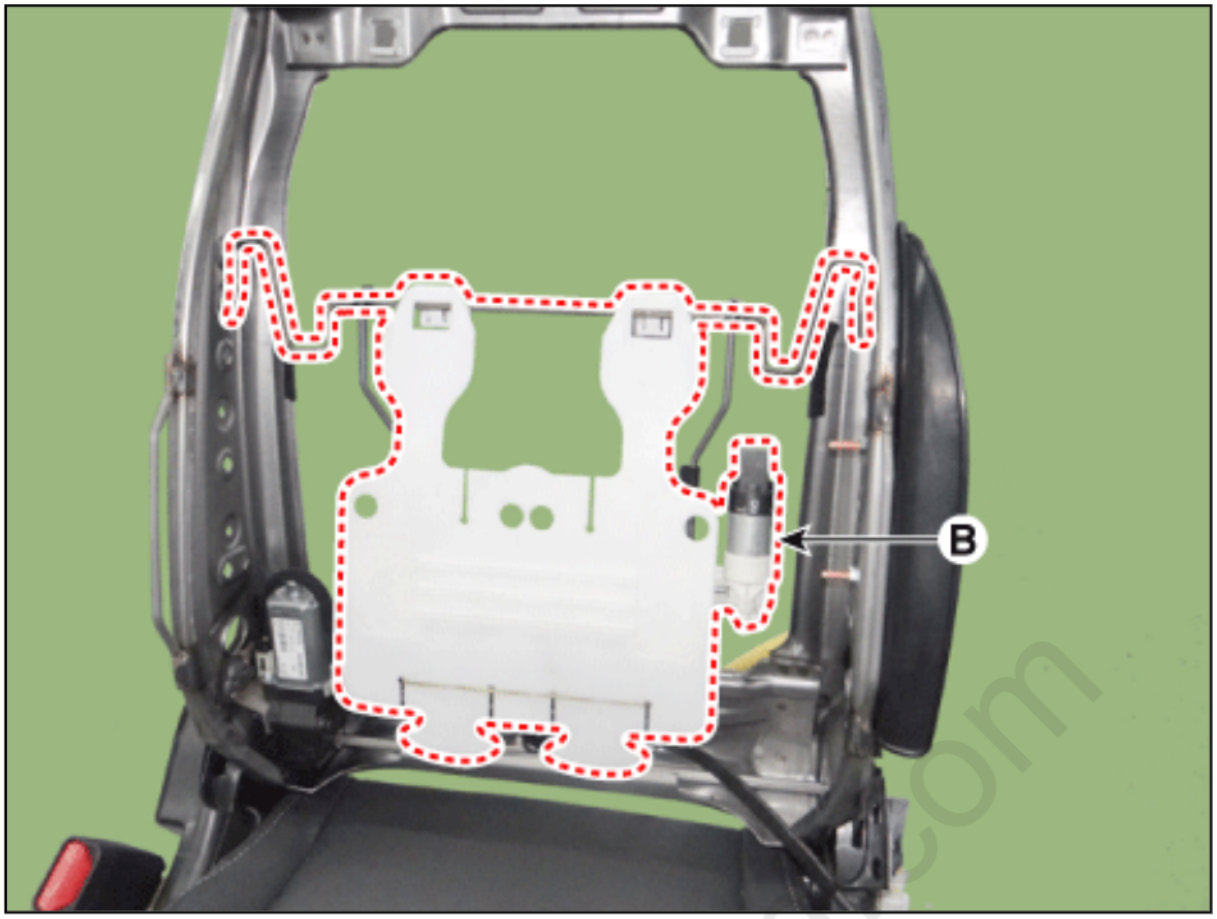

Installation

1. Install in the reverse order of removal.

- Make sure that the connectors are plugged in properly.
- Check the lumbar support system.

Inspection

Lumbar Support Motor

1. Disconnect the connectors for motor.

cardiagn.com

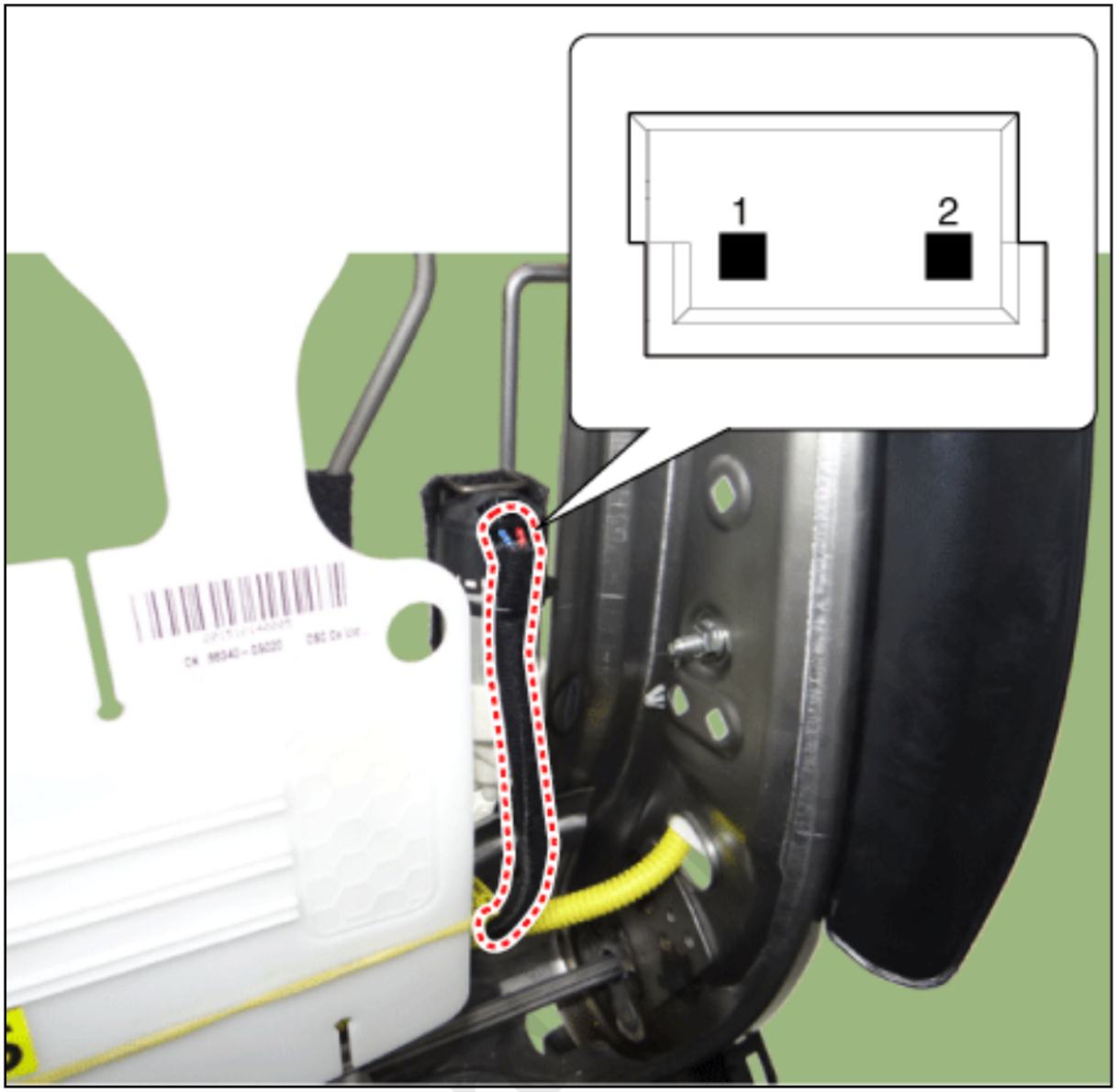

2. When the battery power is supplied to the motor connector, check the motor for smooth operation.
3. Reverse the connections and check that the motor turns in reverse.
4. If the motor runs abnormally, replace it.

Position \ Terminal		1	2
Lumbar support motor (Horizontal)	Forward	⊕	⊖
	Backward	⊖	⊕

Please rate this document after reviewing at the bottom of this page.

Specifications

Smart Key Unit

Items	Specification
Rated voltage	DC 12 V
Operating voltage	DC 9 - 16 V

RF Receiver

Items	Specification
Frequency	433.92 MHz
Antenna type	FSK

Smart Key

Items	Specification
Battery	Lithium battery 3 V 1 unit
Distance	- The distance over which RF(Radio Frequency) Receiver can receive a FOB transmission signal : 30 m (98.4 ft) - The distance over which LF(Low Frequency) antenna(Outer Handle/ Tailgate) can detect FOB : 0.7 m (2.3 ft)
Battery life	More than 2 years (10 times / a day) •An inappropriately disposed battery can be harmful to the environment and human health. •Dispose the battery according to your local law(s) or regulation.
Frequency (LF)	125 kHz
Frequency (RF)	433.92 MHz
Numbers	2 units

Antenna

Items	Specification

carlagn.com

Rated voltage	DC 12 V
Operating voltage	DC 9 - 16 V
Frequency	125kHz
Numbers	Interior (3 units), Door (2 units), Bumper (1 unit)

cardiagn.com

Please rate this document after reviewing at the bottom of this page.

Component Location
(1)

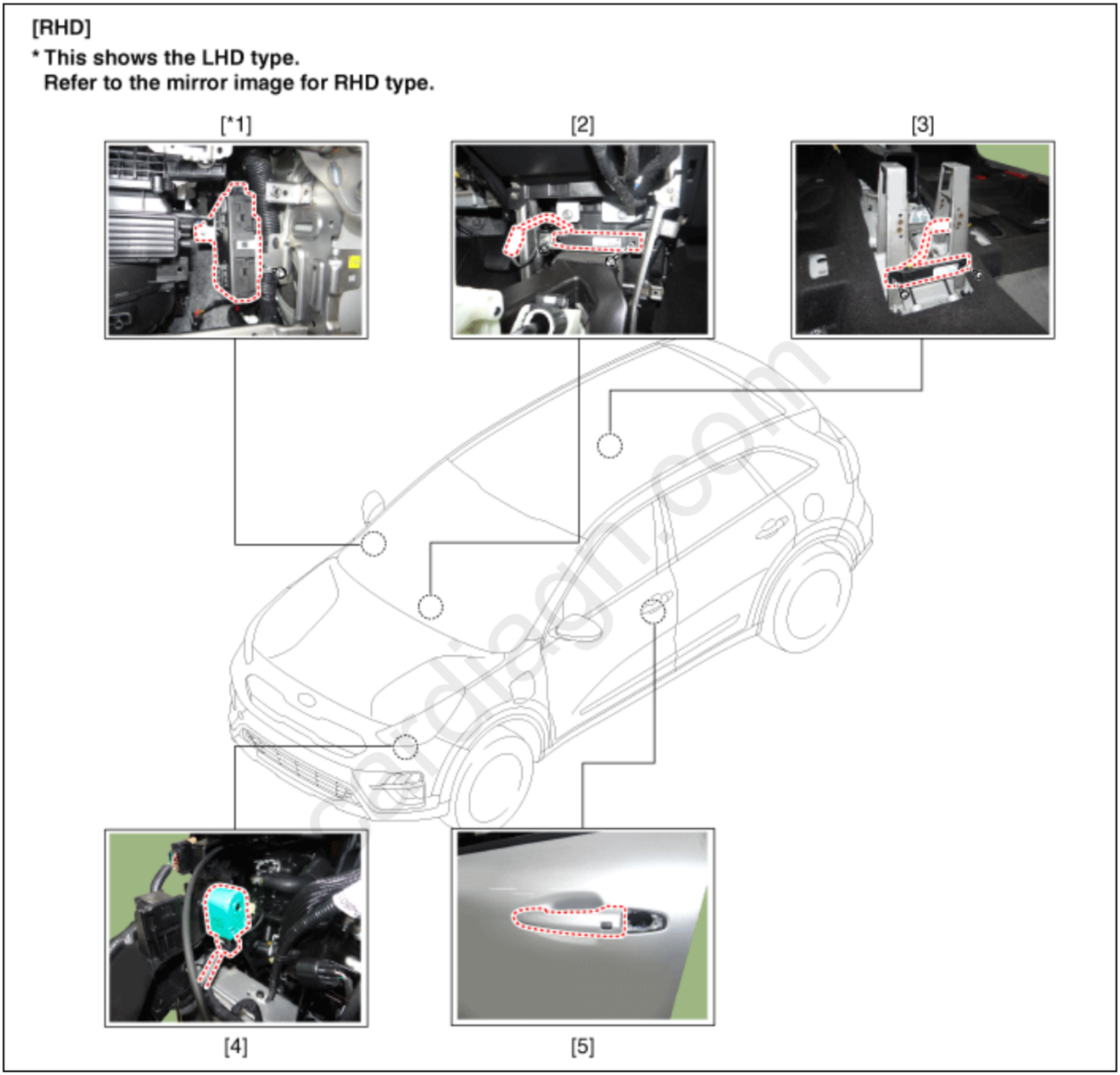

1. Smart key unit (SMK)
2. Interior antenna 1
3. Interior antenna 2
4. Buzzer
5. Door outside handle / Door antenna

Component Location
(2)

[RHD]

* This shows the LHD type.
  Refer to the mirror image for RHD type.

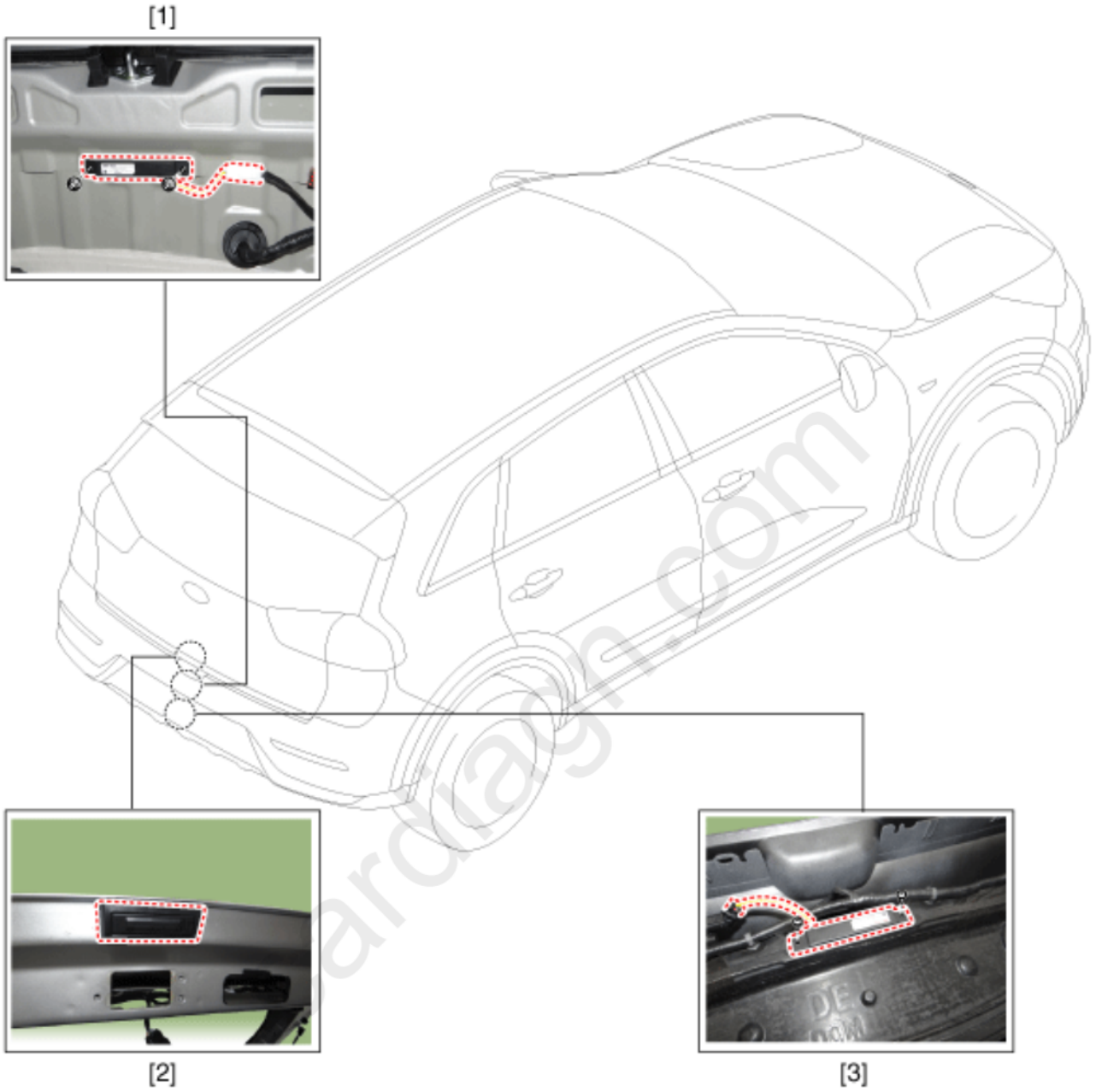

1. Tailgate antenna
2. Tailgate lid handle
3. Bumper antenna

Please rate this document after reviewing at the bottom of this page.

Description

The SMART KEY system is a system that allows the user to access and operate a vehicle in a very convenient way. To access the vehicle, no traditional key or remote control unit is needed.
The user carries a SMART KEY FOB which does not require any conscious actions by the user (e.g. operate a RKE button). The SMART KEY system is triggered by pressing a push button in the door handle.
After being triggered the vehicle sends out a request in a limited range. If the SMART KEY FOB receives this request, it automatically sends a response to the vehicle. Then the system decides whether to perform a particular action (unlocking, locking…) or remain inactive.
Again, a communication between the vehicle and the SMART KEY FOB is needed before any actions will be performed.
The System offers the following features :

- Passive unlock via 2 doors
- Passive locking via 2 doors
- Passive start
- Passive access tailgate via the tailgate lid switch at the tailgate
- Max. 2 fobs can be handled by the system
- Immobilizer backup antenna driver integrated into SSB for TP authentication (i.e. limp home mode)
- Communication with engine management system
- LF-RF communication

1. Passive unlock
   The system allows the user to access (unlock) the vehicle without performing any actions with the SMART KEY FOB.
2. Passive locking
   The system allows the user to lock the vehicle by pushing a button on door handle with the SMART KEY FOB.
3. Button start
   The system allows the user to switch the power modes (Off, Accessory, Ignition), as well as to start and stop the vehicle's engine without performing any actions with the SMART KEY FOB. See Button Engine Start system specification.
4. LIMP HOME Mode
   Additionally, the system offers so called "limp home mode", which is the user can operate all vehicle functions by pushing the key into the SSB.

Smart Key ECU (SMK ECU)
The SMK ECU manages all functions related to "Passive Unlock", "Passive Lock" and "Passive Authorization for Engine Start Operation".
It reads the inputs (Push button in door handle, Start Stop Button (SSB), PARK position Switch), controls the outputs (e.g. exterior and interior antennas), and communicates via the CAN as well as a

cardiagn.com

single line interface to further devices of the car.
For communication with the SMART KEY FOB, SMK ECU generates a request (challenge) as an encoded and modulated 125kHz signal at the inductive antenna outputs and receives the SMART KEY FOB's response via the external RF receiver.
The main functional blocks of the SMK ECU are :

- Power supply
- Microcontroller with FLASH Memory
- Single Line Interface to EMS
- Input stage
- LF antenna amplifier/driver

The LF antenna amplifier/driver generates a 125kHz sinusoidal carrier signal which is distributed to the different antennas.

Smart Key FOB
The system supports up to 2 SMART KEY FOBs.
The main functions of the SMART KEY FOB are :

- Passive functionality: receives LF-challenge and sends automatically RF response.
- Classic RKE function by action up to 3 or 4 buttons.
- Transponder-functionality in case of a flat battery or a disturbed communication.

Antennas

1. Emitting LF Antennas :
   Inductive antennas in and at the vehicle are used to transform the current, driven by the SMK ECU antenna driver, into a 125 (or 134.2) kHz magnetic field, which is the carrier for the SMART KEY challenge.
   Three antennas cover the vehicle's exterior: two antennas in the Door Handles (DS and PS) cover the area around the doors; one antenna in the rear bumper covers the area around the tailgate or tailgate.
   Up to three antennas cover the vehicle's interior and the tailgate or tailgate interior: two in the passenger compartment and one in the tailgate room or tailgate.
2. Bidirectional Immobilizer Antenna (for Limp Home):
   The Immobilizer Backup Antenna is used for sending and receiving data: it emits a magnetic field (125 - 135 kHz challenge) and receives changes in the field strength (response of Transponder).
3. Receiver
   The SMART KEY FOB's response is received via the RF receiver.

Door Handle
The front door handles of the two doors (driver door / passenger door) are equipped with emitting LF-antennas to emit the 125kHz signals. The front door handles are also equipped with a push button.

Push Button
The push button in door handle serves as a trigger to indicate the user's intent to unlock or lock the vehicle.
The push buttons are installed at front doors, integrated into the door handles.

carlaan.com

Another button is installed at the tailgate or tailgate lid.

cardiagn.com

Please rate this document after reviewing at the bottom of this page.

Adjustment

Smart Key Code Saving

1. Connect the VCI II in driver side crash pad lower panel, turn the power on KDS.
2. Select the vehicle model and then do "Smart key code saving".

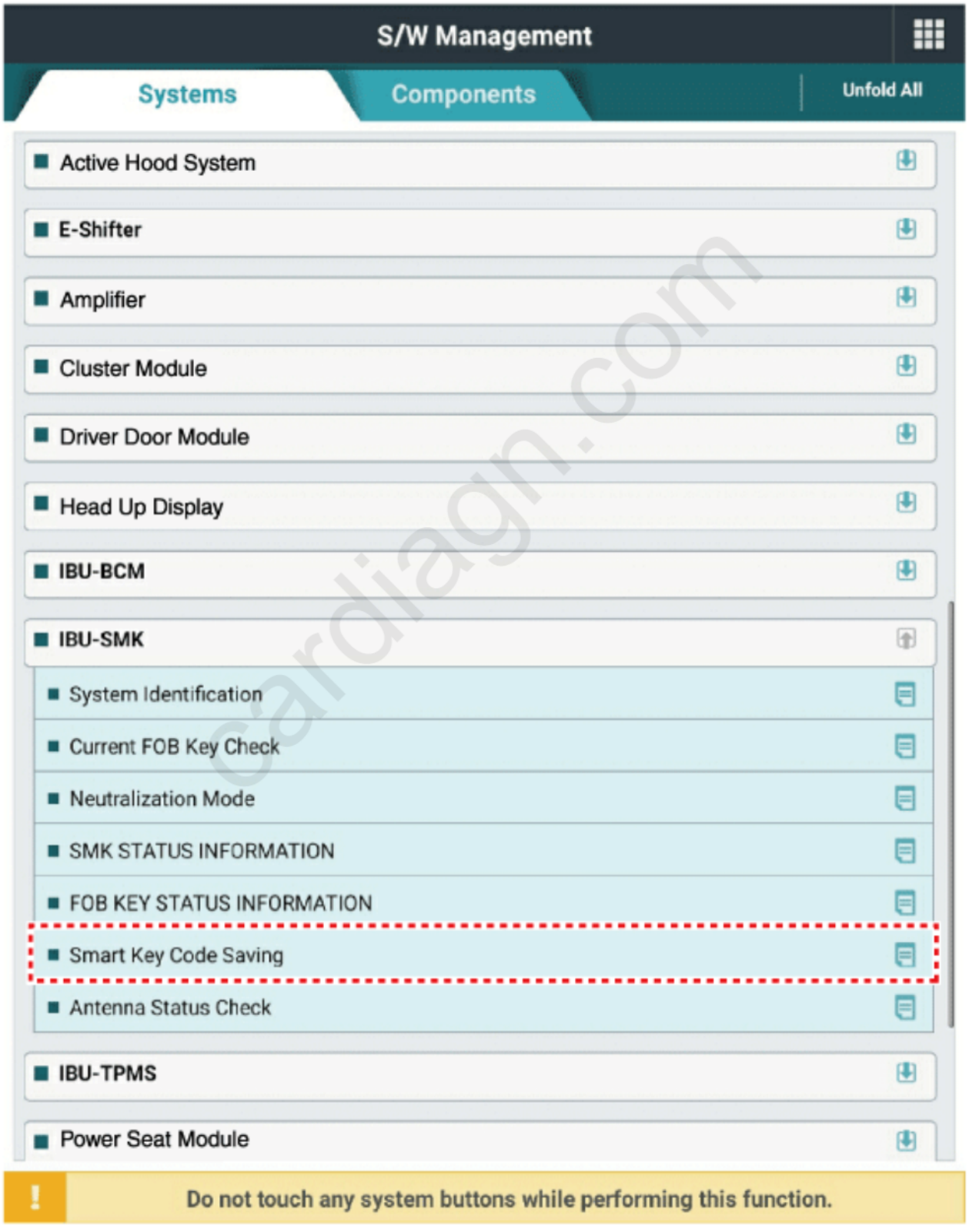

cardiagn.com

S/W Management

• **Smart Key Code Saving**

Purpose	To register smart key to the SMK.
Enable Condition	1.Ignition Switch Off
Concerned Component	Smart Key(SMK) Module, Transponder, PCM/ECM
Concerned DTC	-
Fail Safe	Unable to start engine
Etc	-

cardiagn.com

OK

! Do not touch any system buttons while performing this function.

3. After selecting "Smart Key Code Saving" menu, push "OK" button, then the screen will be shown as below.



cardiagn.com

4. After teaching new smart key, push "OK" button.

5. Input the "Pin code" for first key teaching.

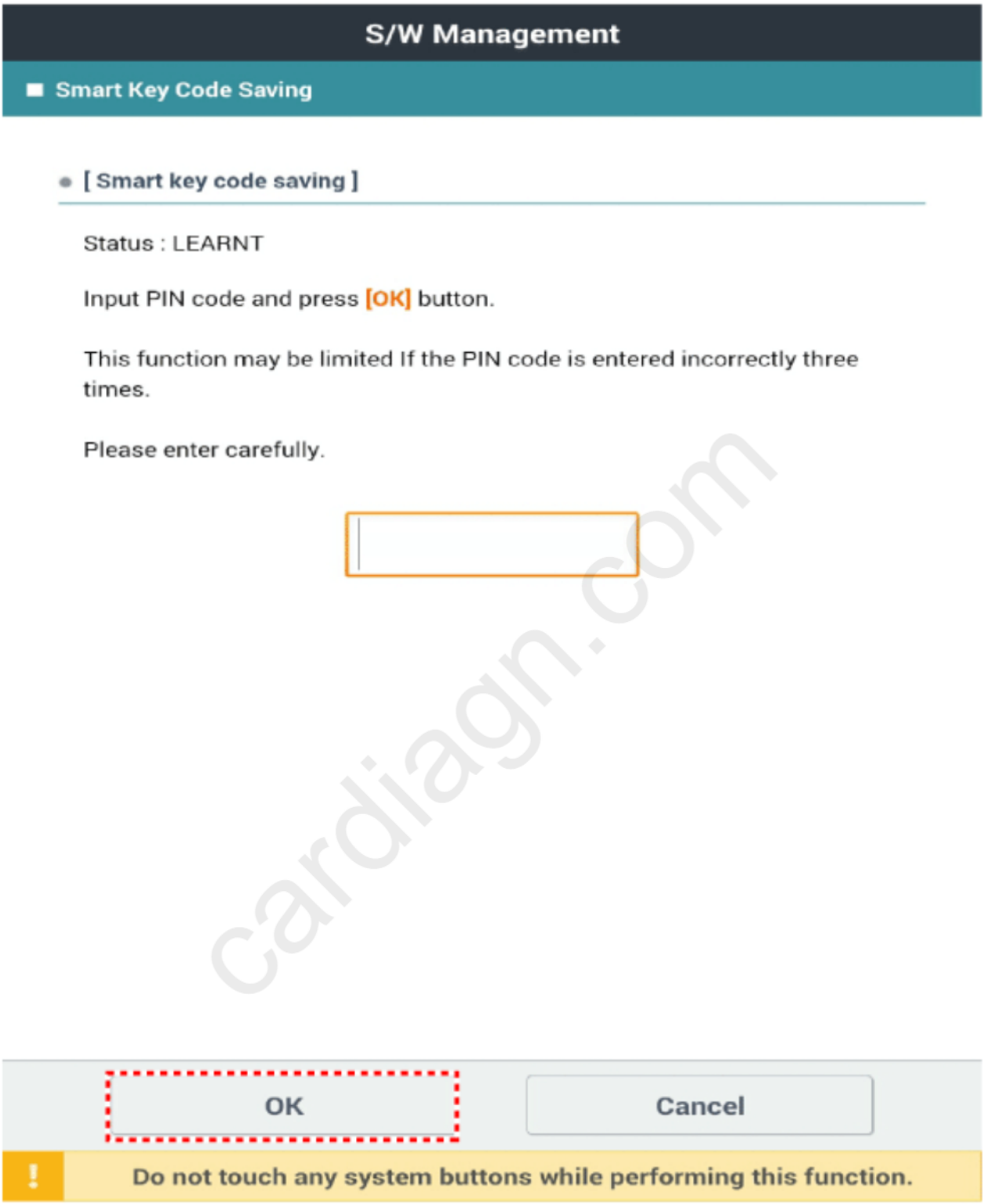

cardiagn.com

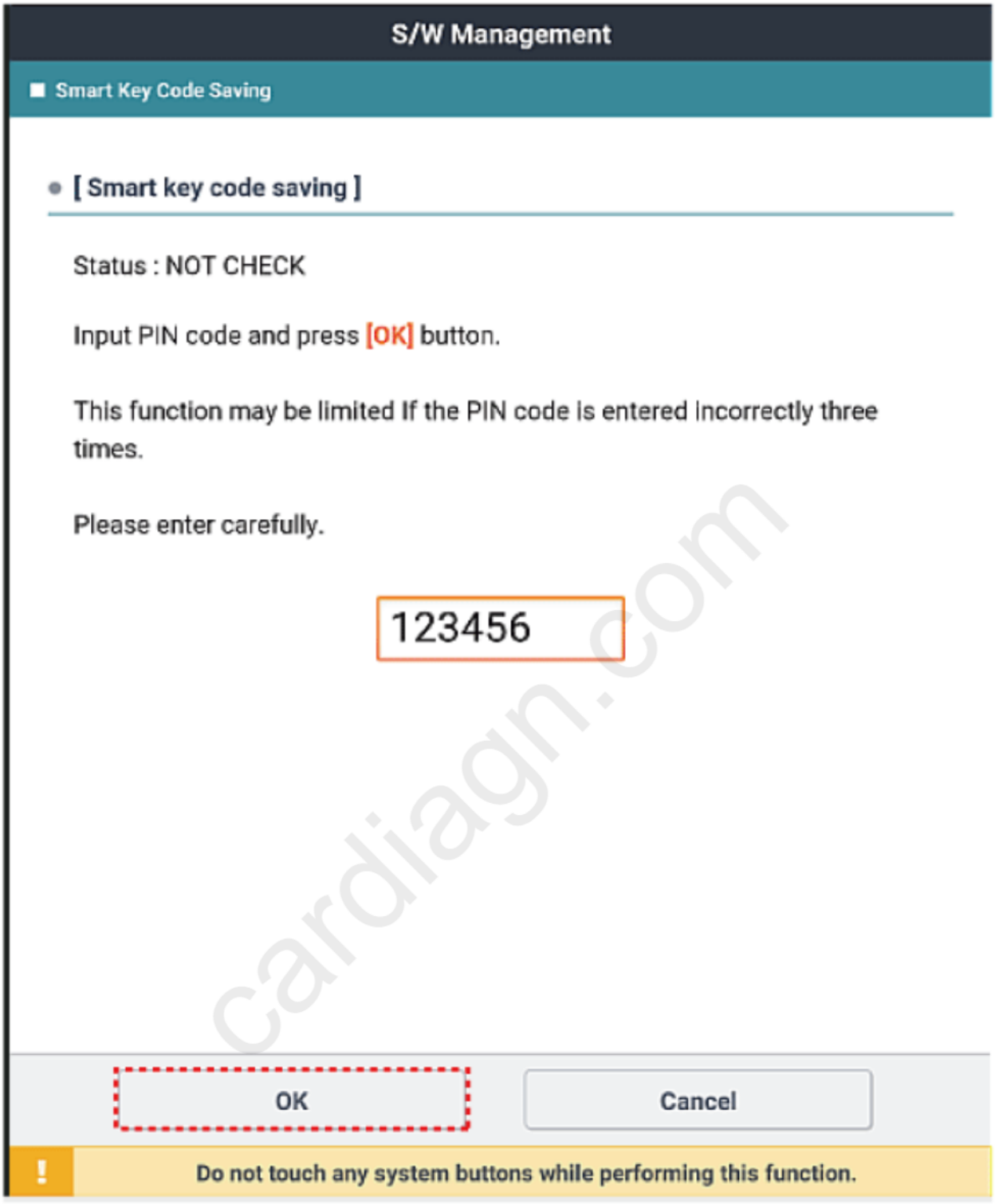

cardiagn.com

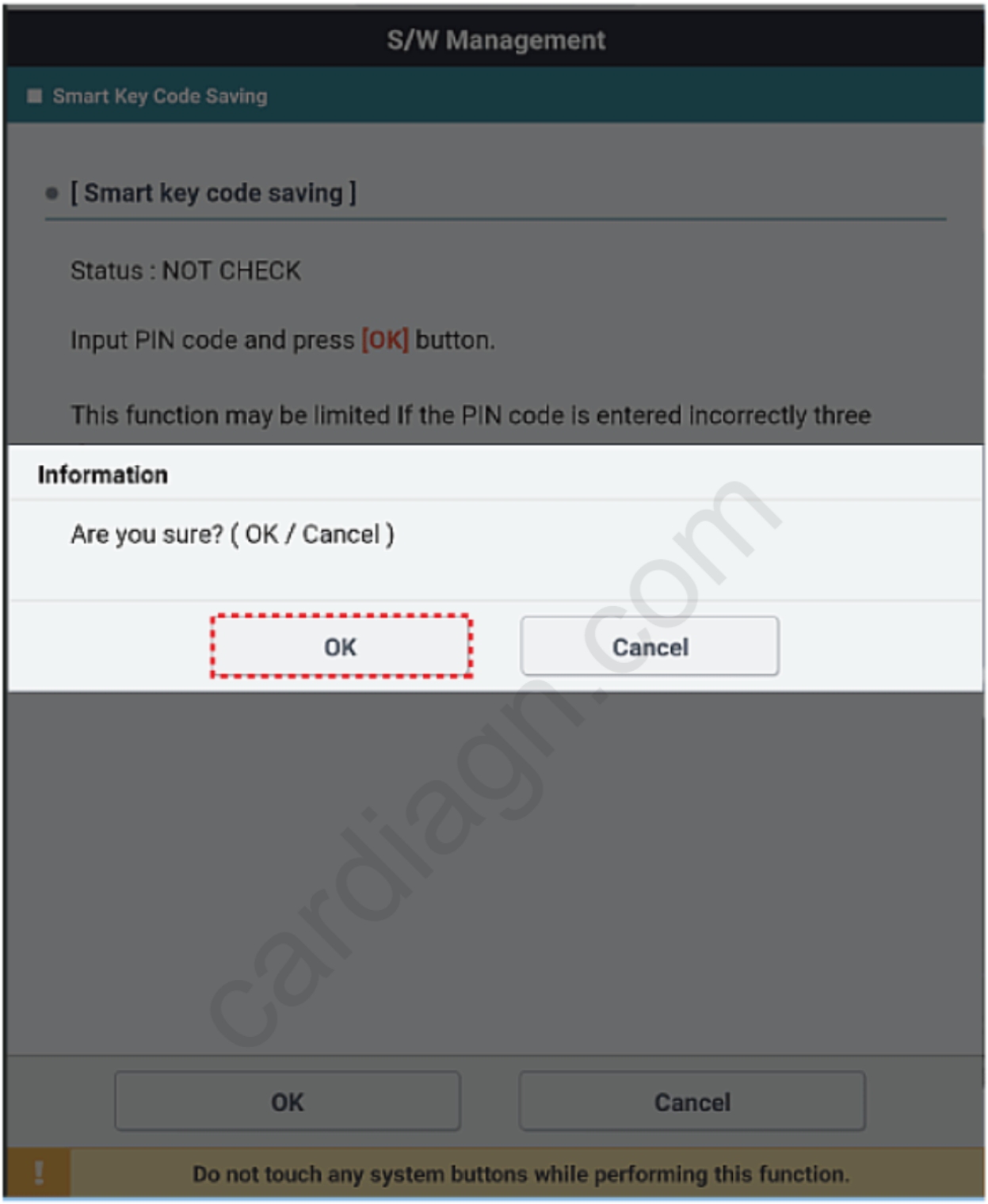
S/W Management
Smart Key Code Saving
[Smart key code saving]
Status : NOT CHECK
Input PIN code and press [OK] button.
This function may be limited If the PIN code is entered incorrectly three
Information
Are you sure? (OK / Cancel)
OK
Cancel
OK
Cancel
Do not touch any system buttons while performing this function.

6. Confirm the message "First key teaching completed".

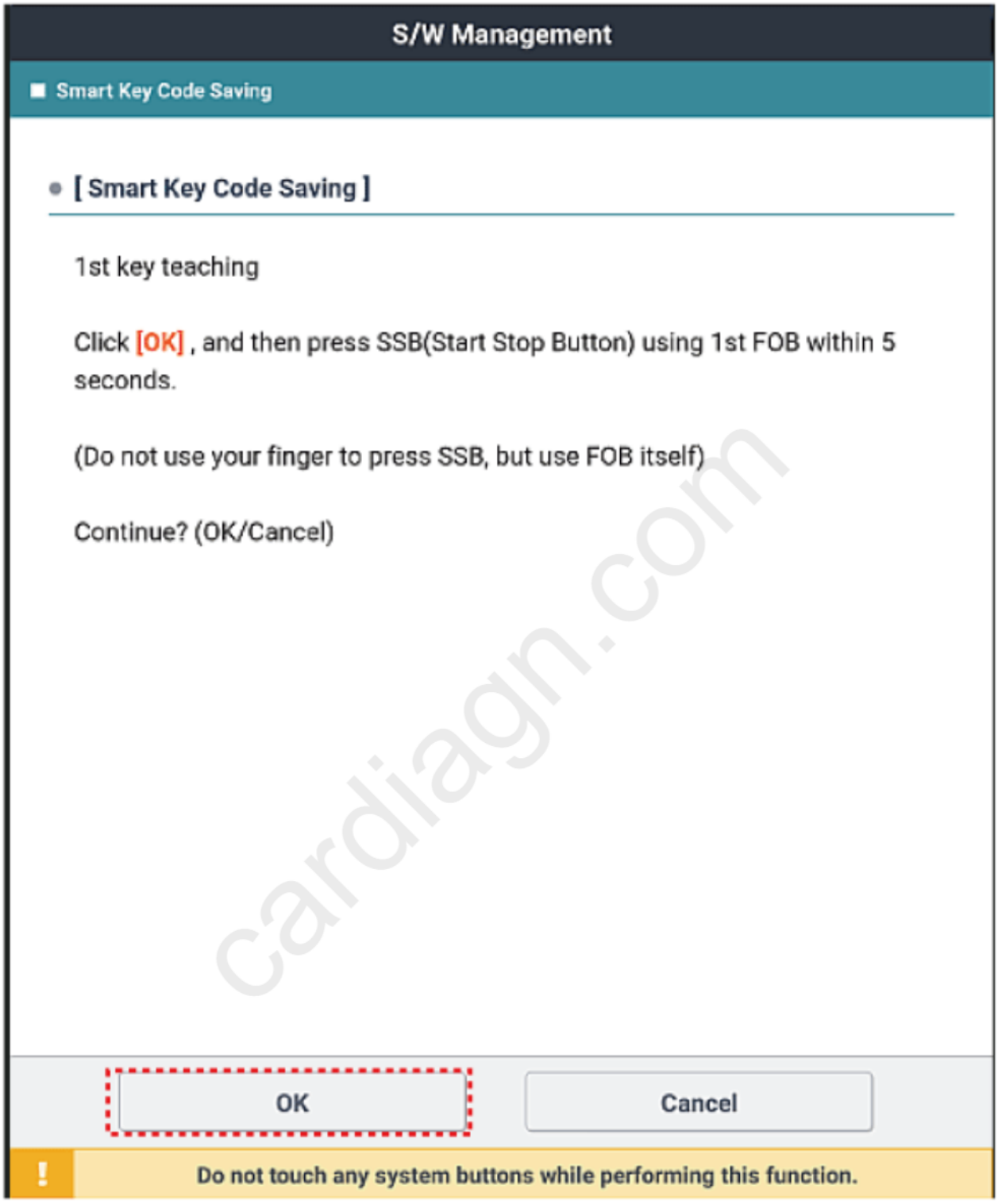

cardiagn.com

7. Press the SSB with smart key within 5 sec after pressing "OK".

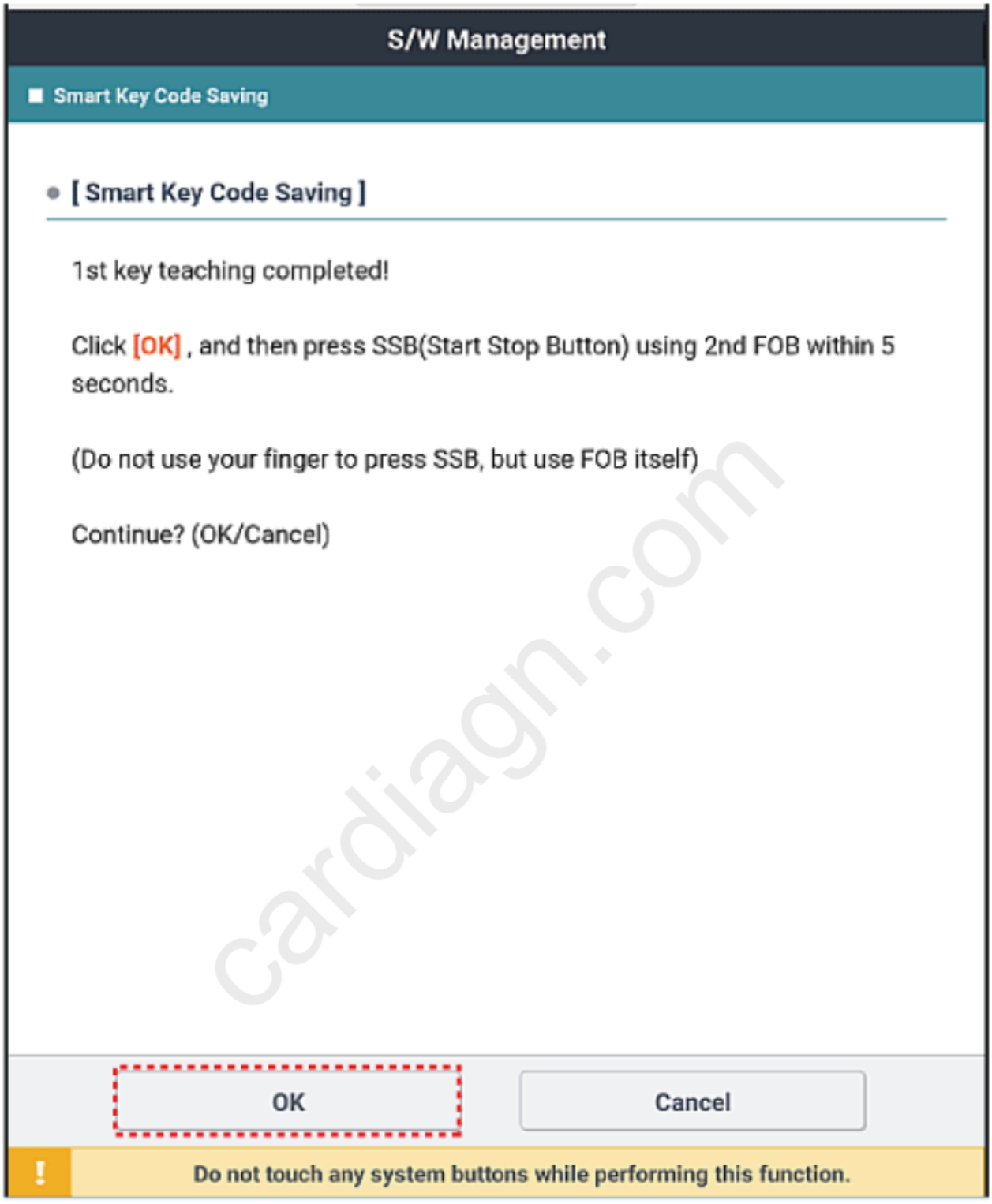

cardiagn.com

8. Confirm the message "Second key teaching completed".

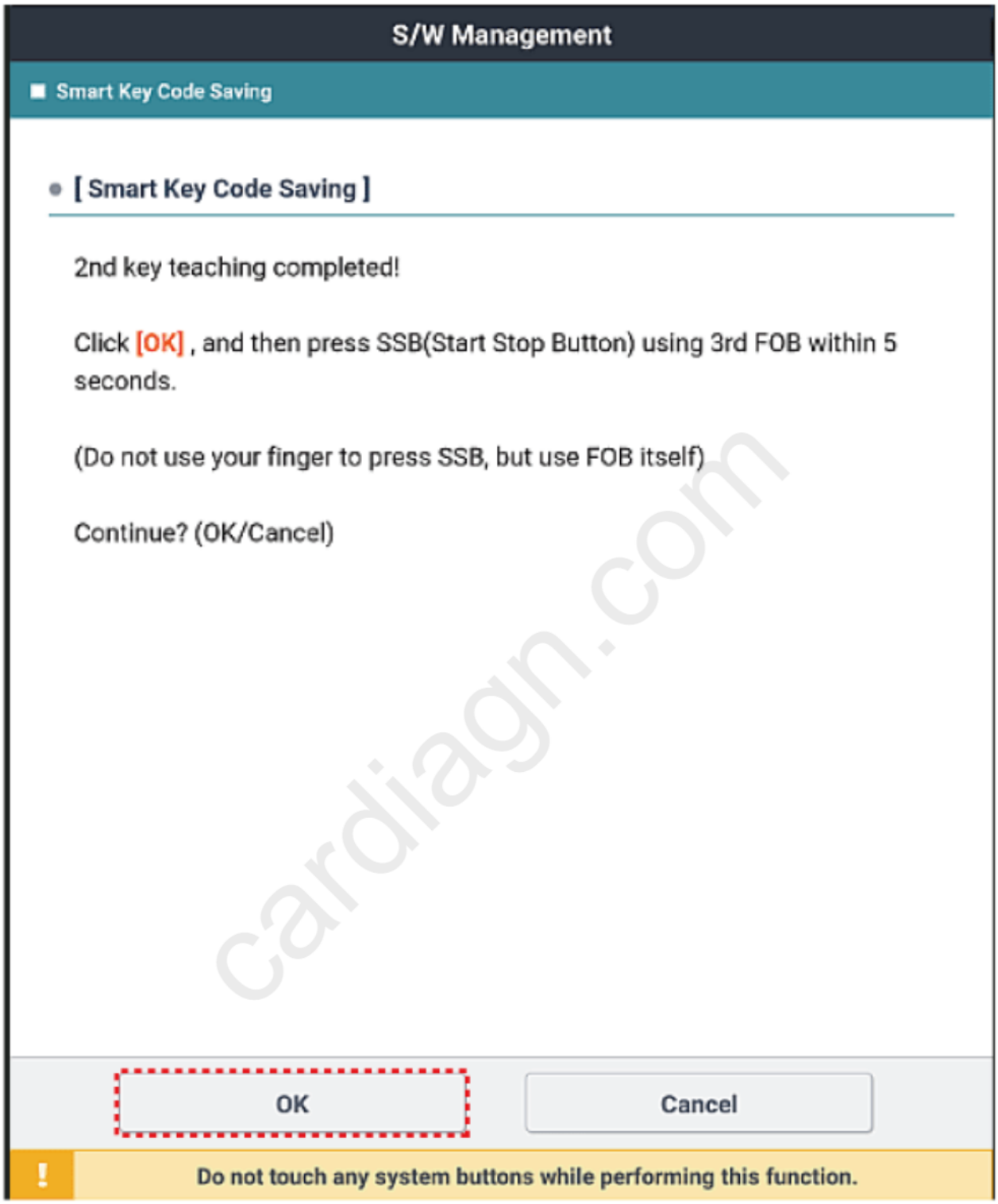

cardiagn.com

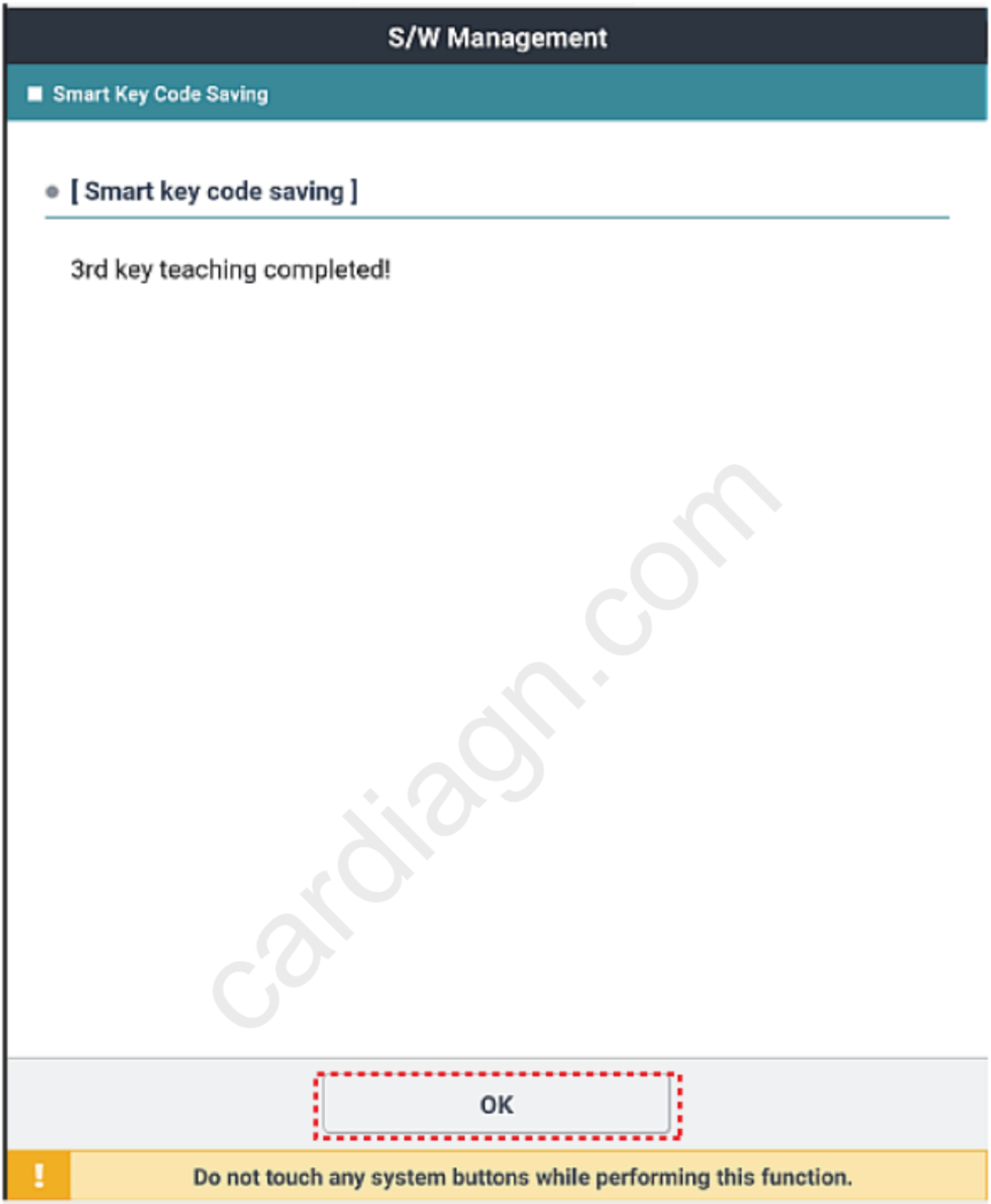

cardiagn.com

9. Then the screen will be shown as below when key teaching process is completed.

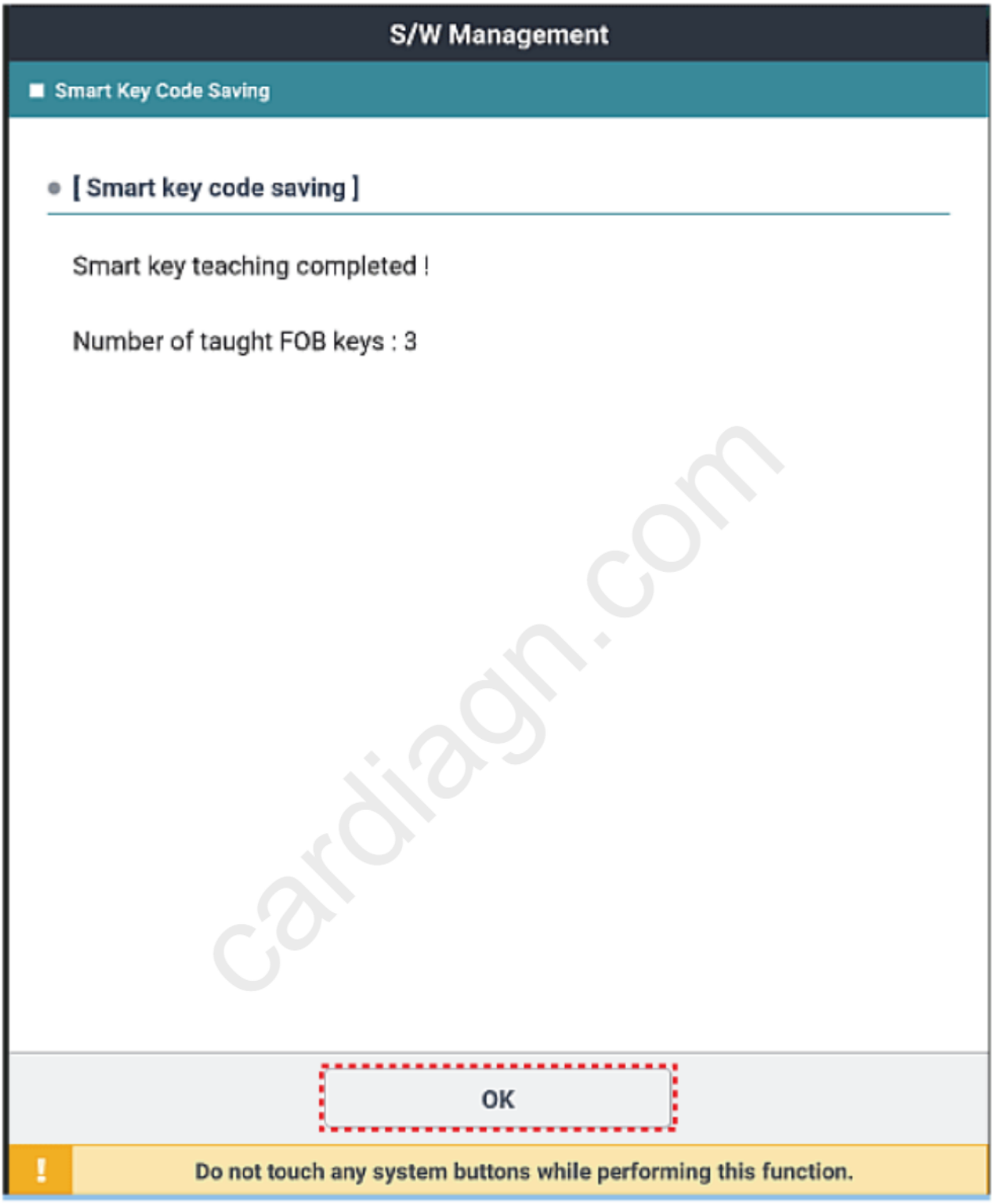

cardiagn.com

Please rate this document after reviewing at the bottom of this page.

Circuit
Diagram

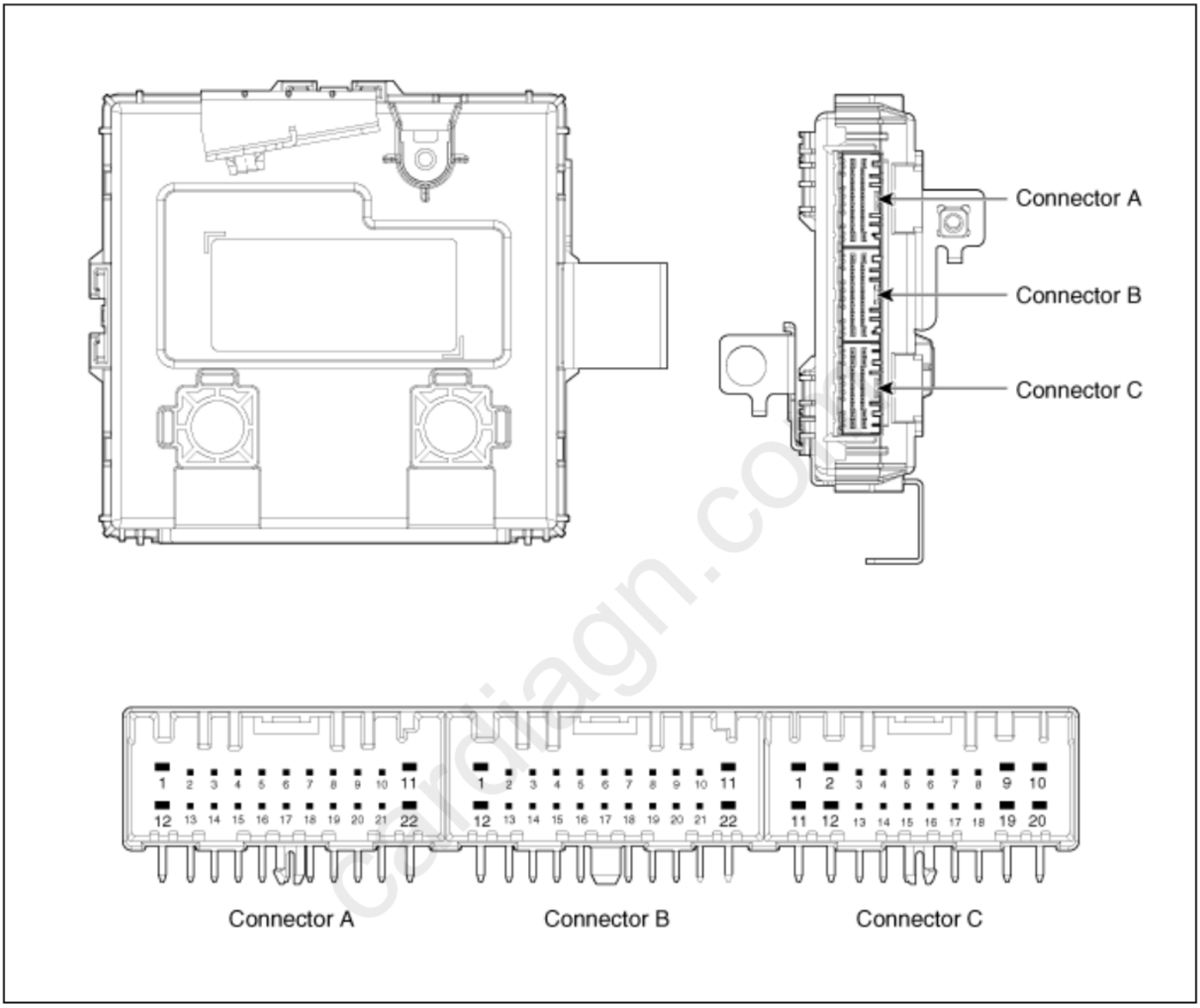

Pin	Function		
	Connector A	Connector B	Connector C
1	Battery (+)	IGN2 relay output	Immoblizer antenna (+) output
2	Battery (+)	IGN1 relay output	Wheel speed signal input
3	Interior antenna 1 (-) output	-	SSB switch1 signal input
4	Bumper antenna (-) output	-	-
5	Interior antenna 2 (-) output	ESCL communication	ESCL Unlock switch input
6	Assist door antenna (-) output	EMS communication	Sunroof position switch input

7	Trunk antenna (-) output	B-CAN (High)	Brake switch input
8	Driver's door antenna (-) output	B-CAN (Low)	IGN2 signal input
9	-	P-CAN (Low)	IGN1 signal input
10	SSB Illumination (+) output	P-CAN (High)	Starter relay output
11	External buzzer output	-	Immoblizer antenna (-) output
12	ESCL (+) output	ACC relay output	RPM signal input
13	-	-	SSB switch2 signal input
14	Interior antenna 1 (+) output	Ground	Driver's door switch signal input
15	Bumper antenna (+) output	-	Assist door switch signal input
16	Interior antenna 2 (+) output	SSB LED (ACC) output	Start signal feedback input
17	Assist door antenna (+) output	SSB LED (IGN) output	Stop lamp fuse signal input
18	Tailgate antenna (+) output	-	ACC signal input
19	Driver's door antenna (+) output	-	-
20	-	SSB Illumination (-) output	Ground
21	ESCL Enable output	-	
22	ESCL (-) output	Wireless charging module output	

cardiagn.com

Please rate this document after reviewing at the bottom of this page.

Removal

Smart Key Unit

1. Remove the BCM.
   (Refer to Body Control Module - "Removal")
2. Remove the smart key unit (A) by loosening the bolt.

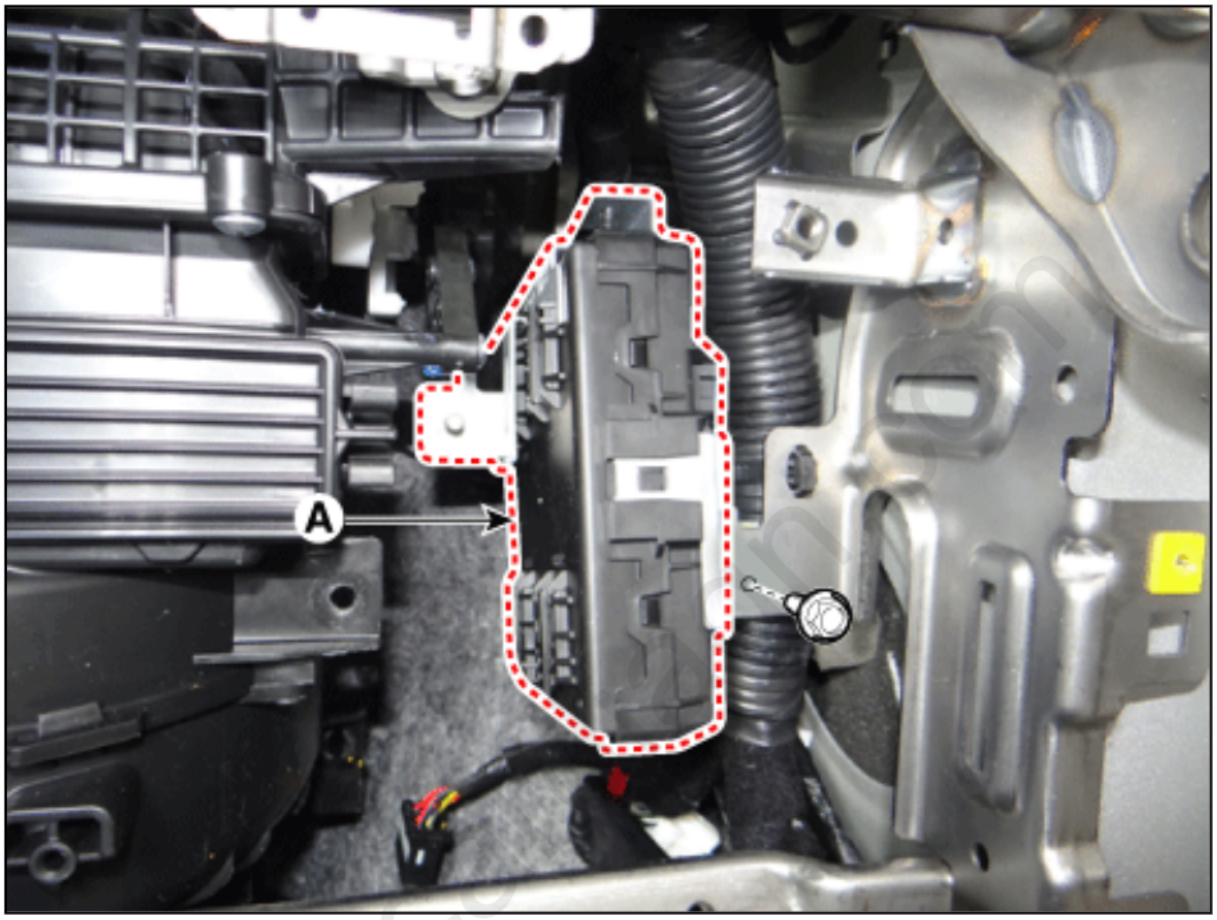

3. Disconnect the connectors (A) from the smart key unit.

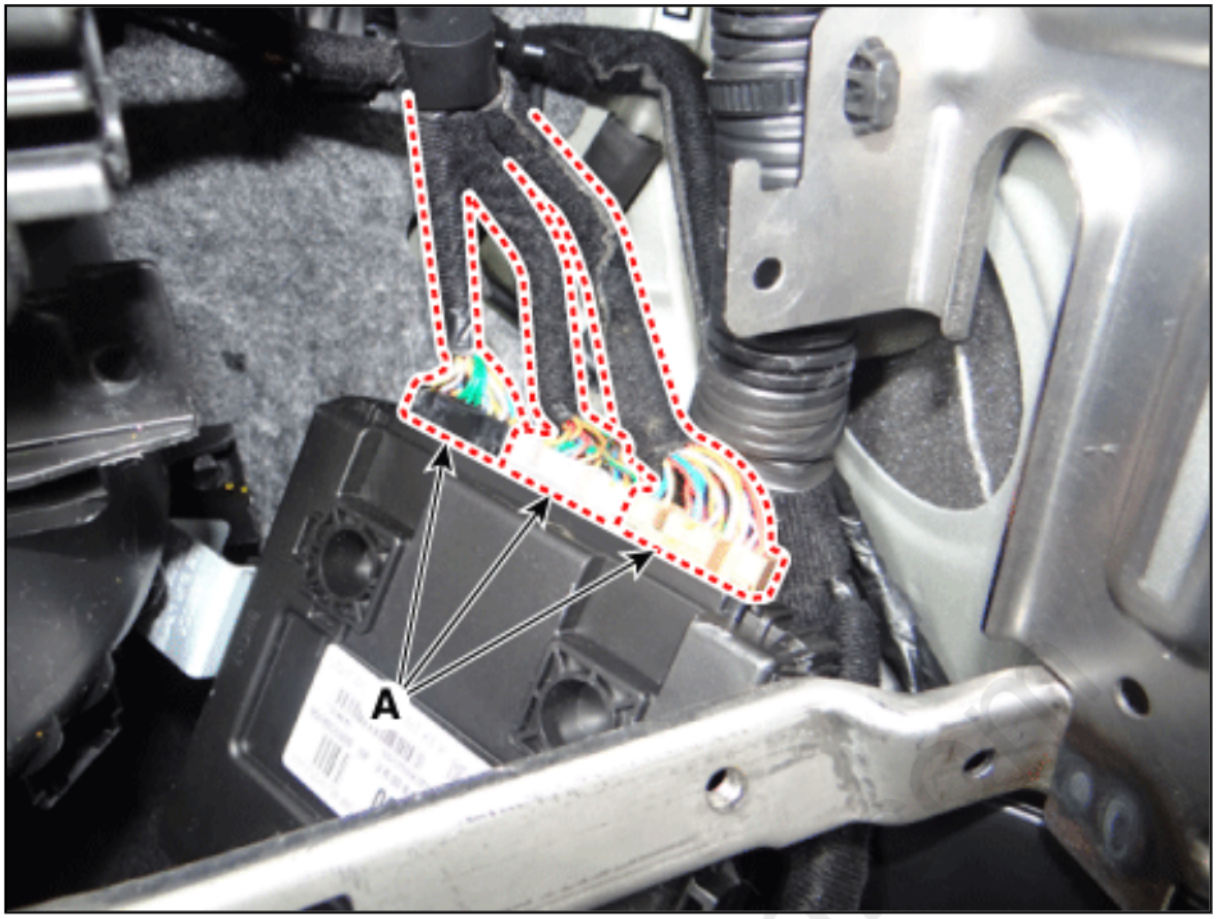

Buzzer

1. After removing the buzzer (A), disconnect the connector from the buzzer.

cardiagn

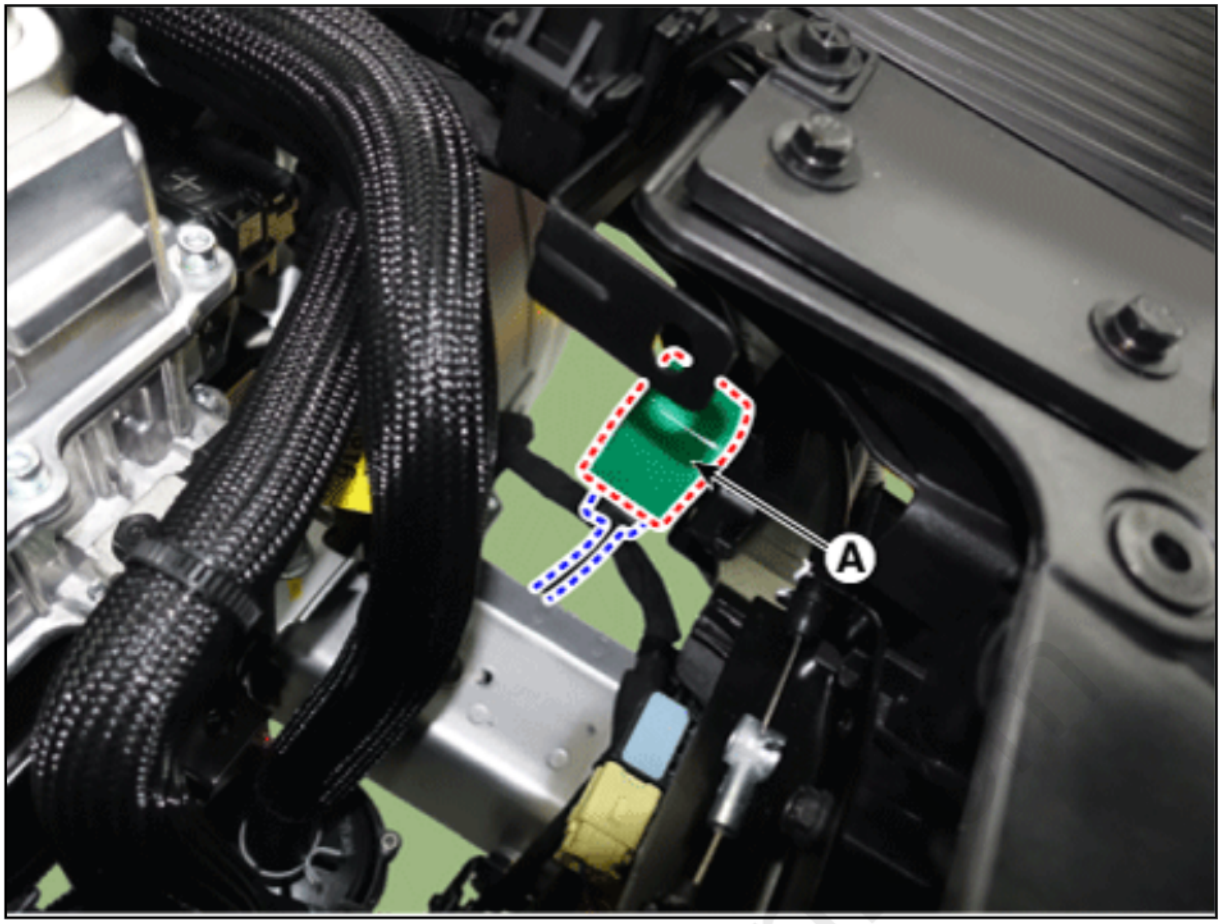

Tailgate Lid Handle

1. Remove the tailgate latch.
   (Refer to Body - "Tailgate Latch")
2. Disconnect the connector (A) and remove the wiring fixing clip.

cardiagn

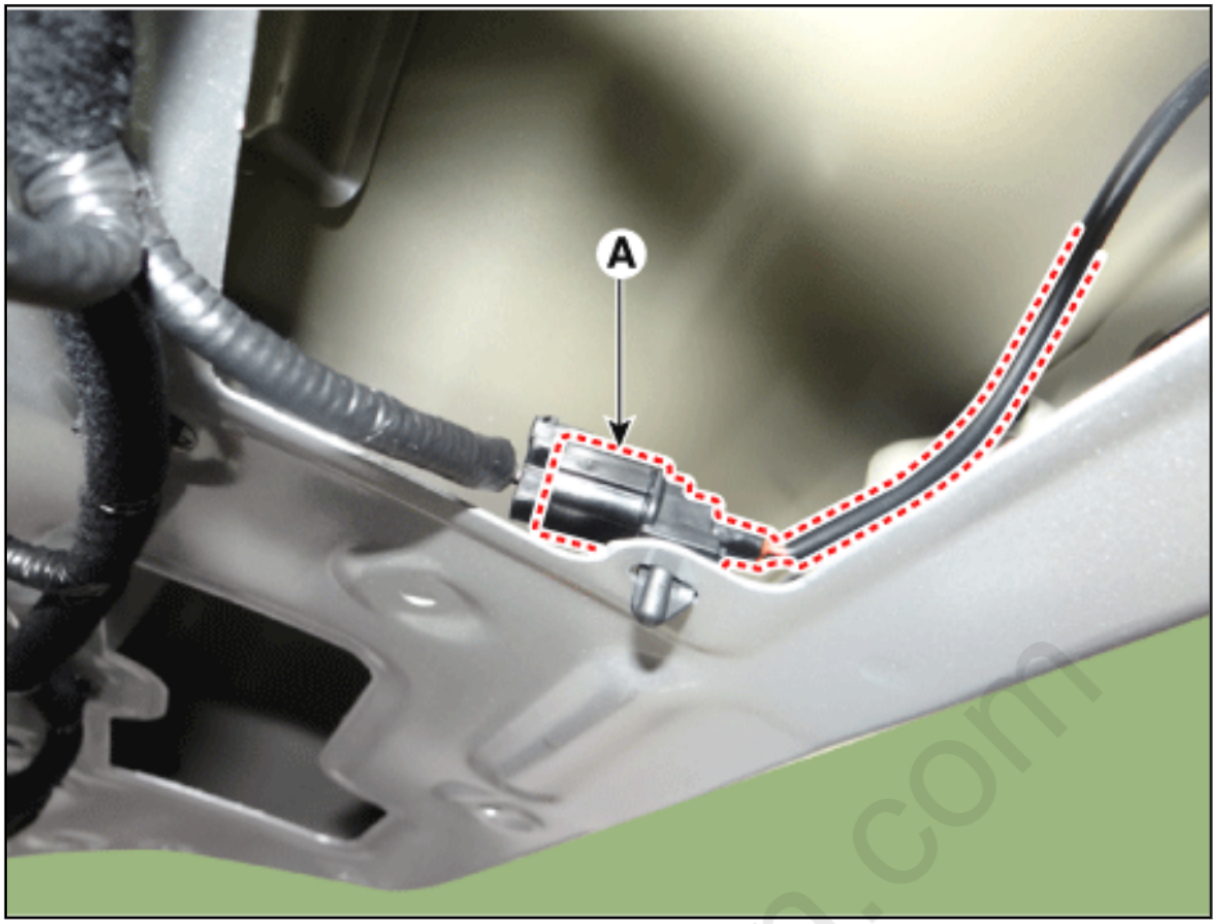

3. Remove the tailgate lid handle (A) after pushing the hooks.

cardiagn.com



Door Outside Handle

1. Remove the front door outside handle.
   (Refer to Body - "Front Door Outside Handle")

Installation

1. Install in the reverse order of removal.

Inspection

Smart Key Unit

1. Inspect the smart key unit by using the KDS.
   (Refer to Smart Key System - "Smart Key Diagnostic")

Buzzer

1. After removing the buzzer (A), disconnect the connector from the buzzer.

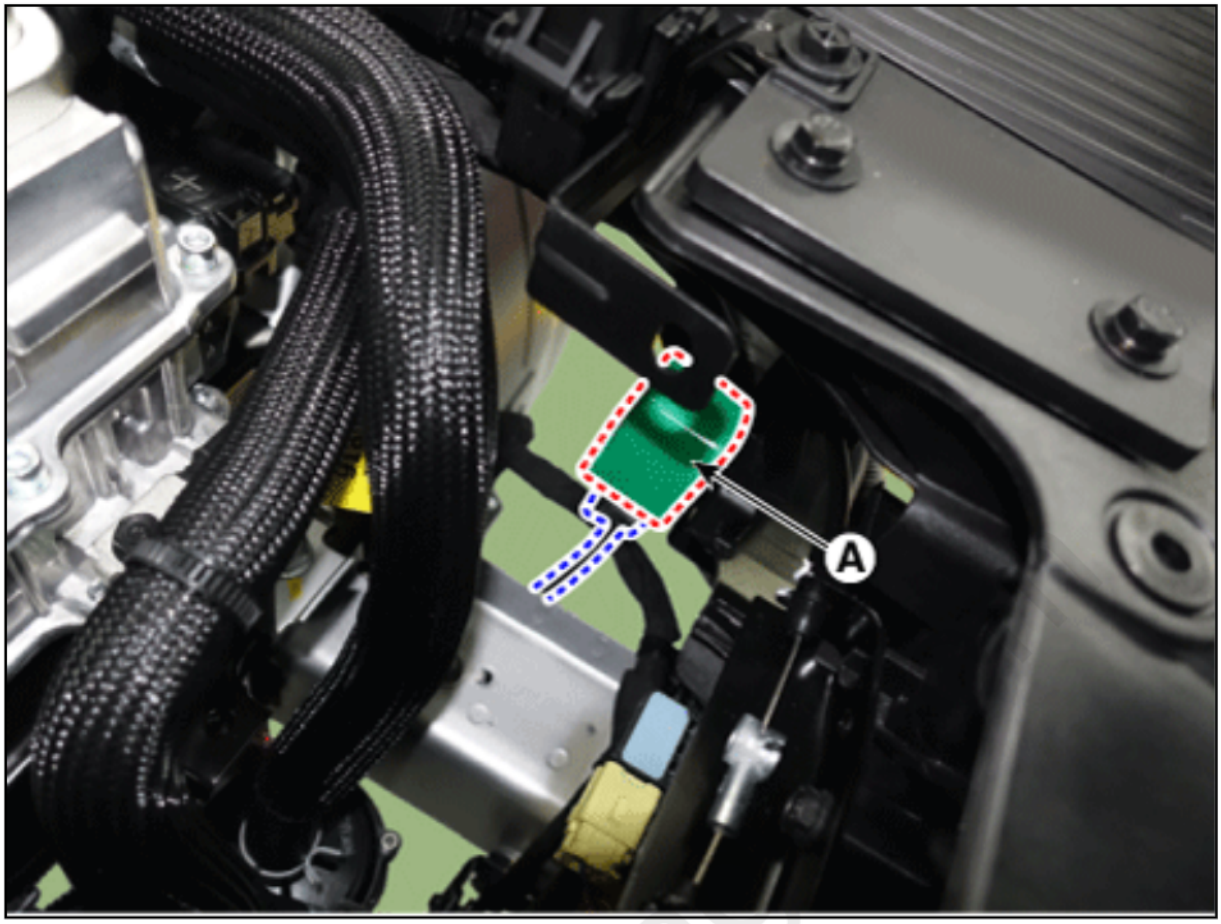

2. Test the buzzer by connecting battery power to the terminal 2 and ground the terminal 1.

Tailgate Lid Handle

1. Remove the tailgate lid trim.
   (Refer to Body - "Tailgate Trim")
2. Check for continuity between the terminals.

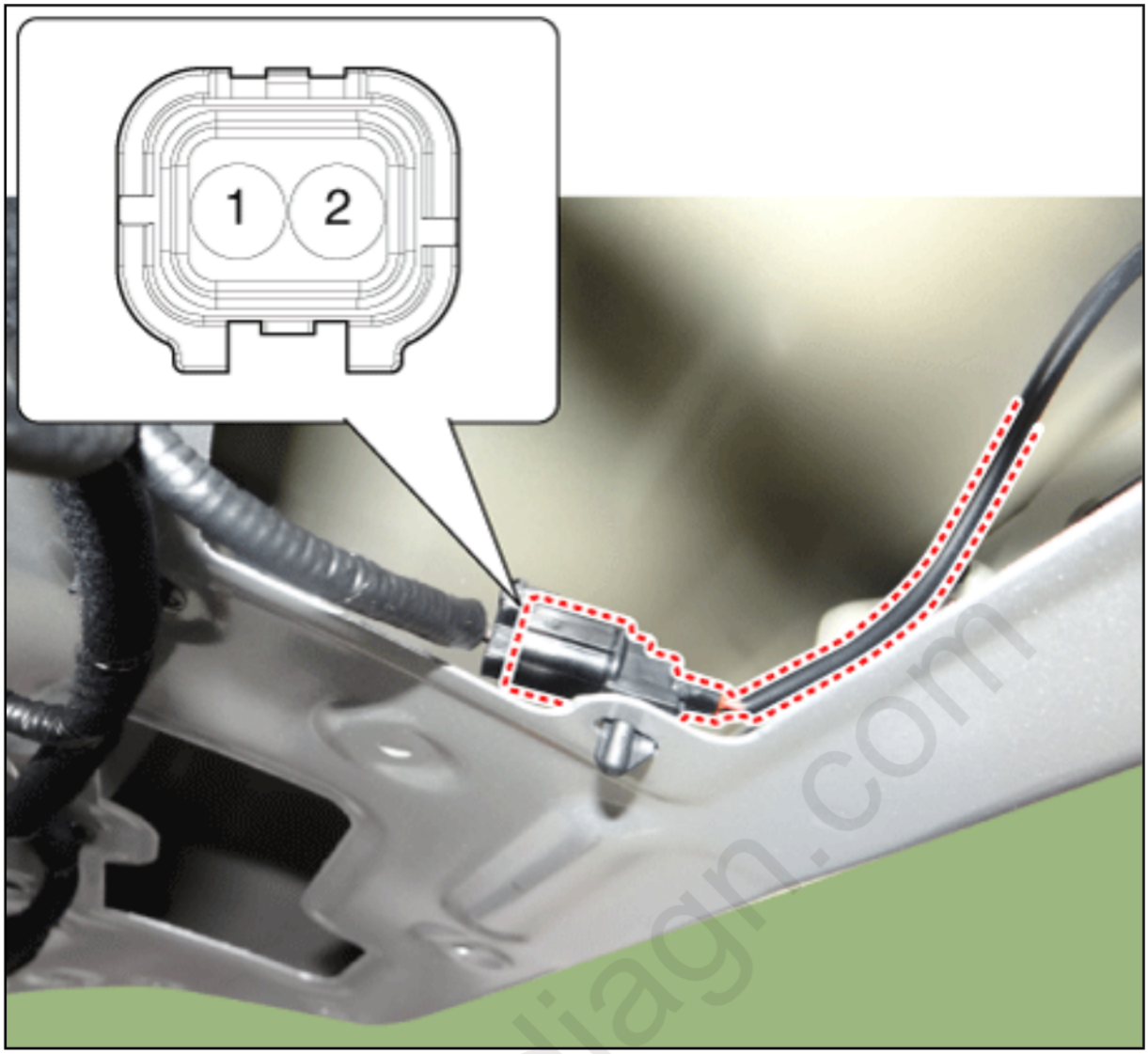

Position / Terminal	OFF	ON(PUSH)
1		
2		

Door Outside Handle

1. Remove the front door outside handle.
   (Refer to Body - "Front Door Outside Handle")

cardiagn.com

2. Disconnect the front door outside handle connector and then check for continuity between terminals No 3 and No 6.

Pin	Function
1	Antenna (Power)
2	Pocket light (Power)
3	Switch
4	Antenna (Ground)
5	Pocket light (Ground)
6	Switch (Ground)

cardiagn.com

Please rate this document after reviewing at the bottom of this page.

Removal

Interior Antenna 1

1. Remove the floor console assembly.
   (Refer to Body - "Floor Console Assembly")
2. Remove the interior antenna 1 (A) by loosening the nut and bolt after disconnecting the connector.

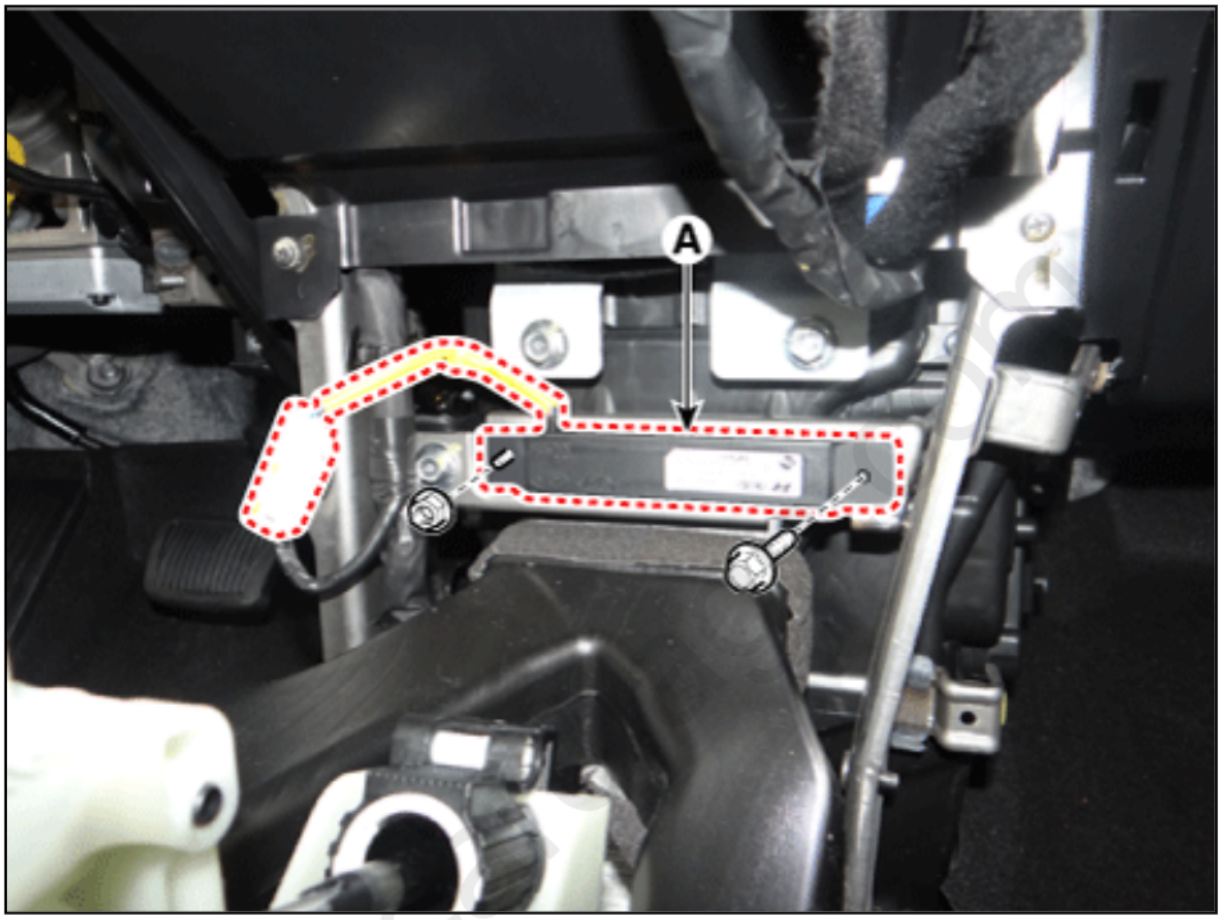

Interior Antenna 2

1. Remove the floor console assembly.
   (Refer to Body - "Floor Console Assembly")

2. Remove the interior antenna 2 (A) by loosening the screws after disconnecting the connector.



Tailgate Antenna

1. Remove the rear transverse trim.
   (Refer to Body - "Rear Transverse Trim")
2. Remove the tailgate antenna (A) by loosening the nuts after disconnecting the connector.

cardiag

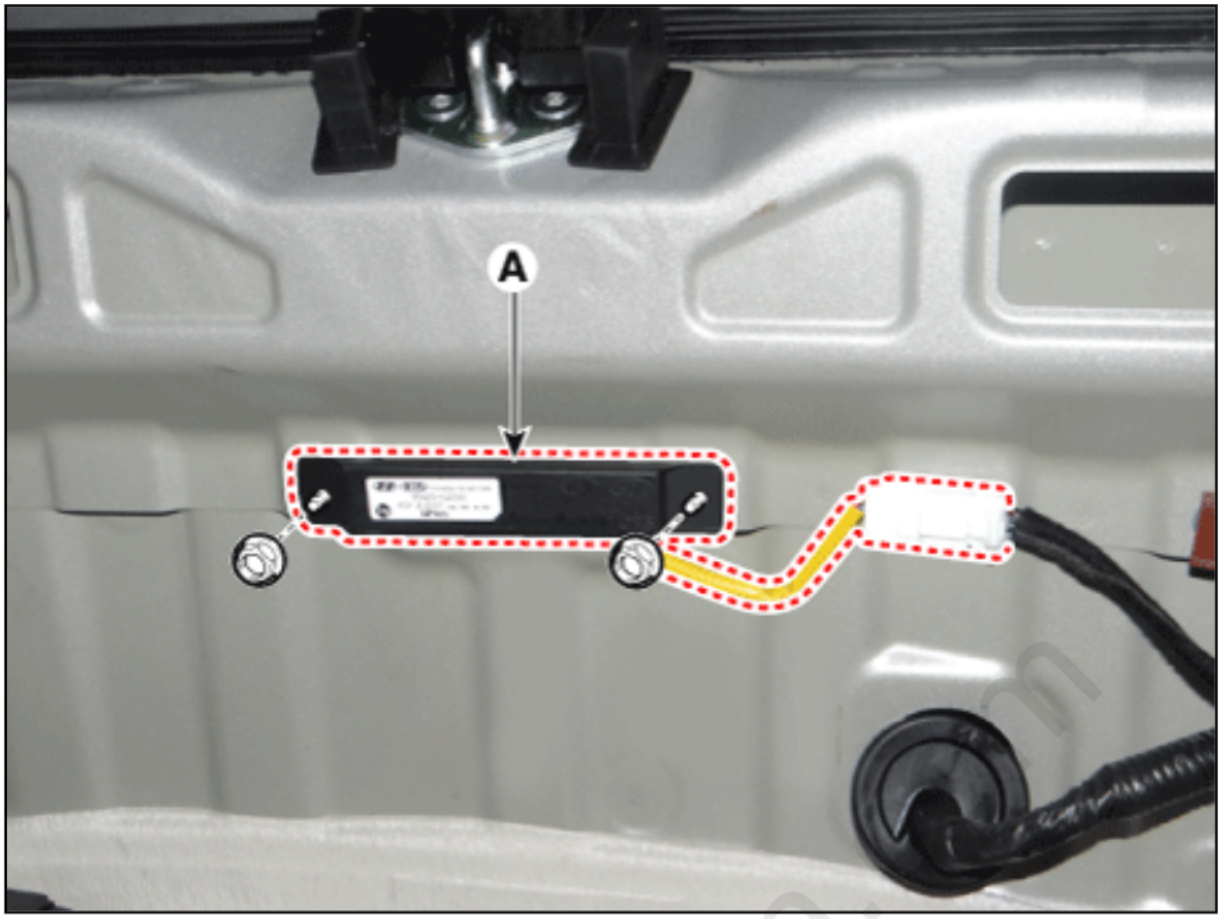

Rear Bumper Antenna

1. Disconnect the negative (-) battery terminal.
2. Remove the rear bumper antenna (A) by loosening the screws after disconnecting the connector.

cardiagn.com

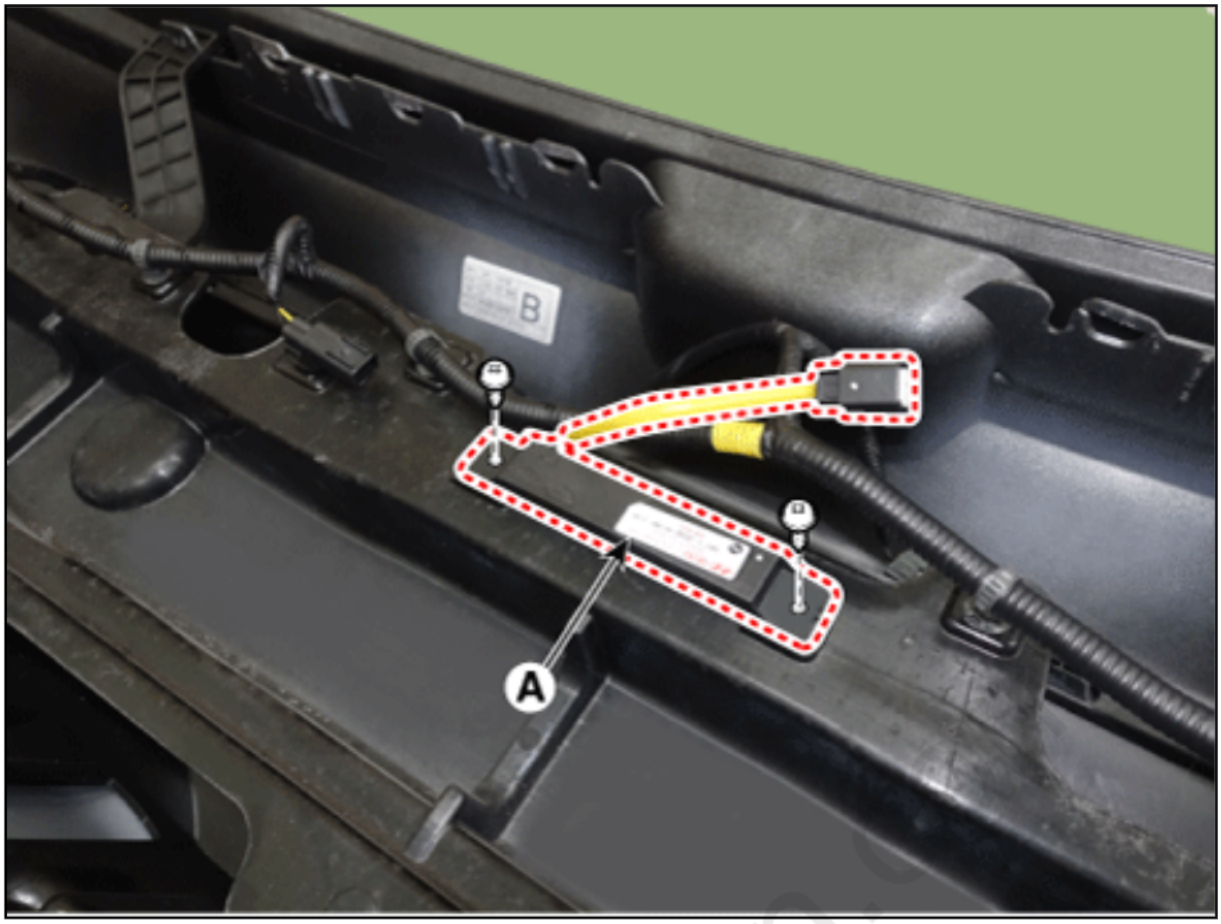

Installation

1. Install in the reverse order of removal.

Inspection

1. Inspect the antenna by using the KDS.
   (Refer to Smart Key System - "Smart Key Diagnostic")

cardiagn

Please rate this document after reviewing at the bottom of this page.

Inspection

1. In the body electrical system, failure can be quickly diagnosed by using the vehicle diagnostic system (KDS). The diagnostic system (KDS) provides the following information.
   (1) Self diagnosis : Checking failure and code number (DTC).
   (2) Current data : Checking the system input/output data state.
   (3) Actuation test : Checking the system operation condition.
   (4) Additional function : Controlling other features including system option setting and zero point adjustment.
2. Select the "Car model" and the 'SMK' to be checked in order to check the vehicle with the tester.
3. Select the 'Current Data' menu to search the current state of the input/output data.
4. If you want to check each module operation forcefully, select "Actuation test".

Antenna Actuation Diagnosis

1. Connect the cable of KDS to the data link connector in driver side crash pad lower panel.
2. After IG ON, select the "Actuation Test".
3. Set the smart key near the related antenna and operate it with a KDS.
4. If the LED of smart key is blinking, the smart key is normal.
5. If the LED of smart key is not blinking, check the voltage of smart key battery.
6. Antenna actuation
   - Interior Antenna 1
   - Interior Antenna 2
   - Tailgate Antenna
   - Bumper Antenna
   - Driver Door Antenna
   - Assist Door Antenna

Antenna Status Check

1. Connect the cable of KDS to the data link connector in driver side crash pad lower panel.
2. Select the "Antenna Status Check".

cardiagn.com

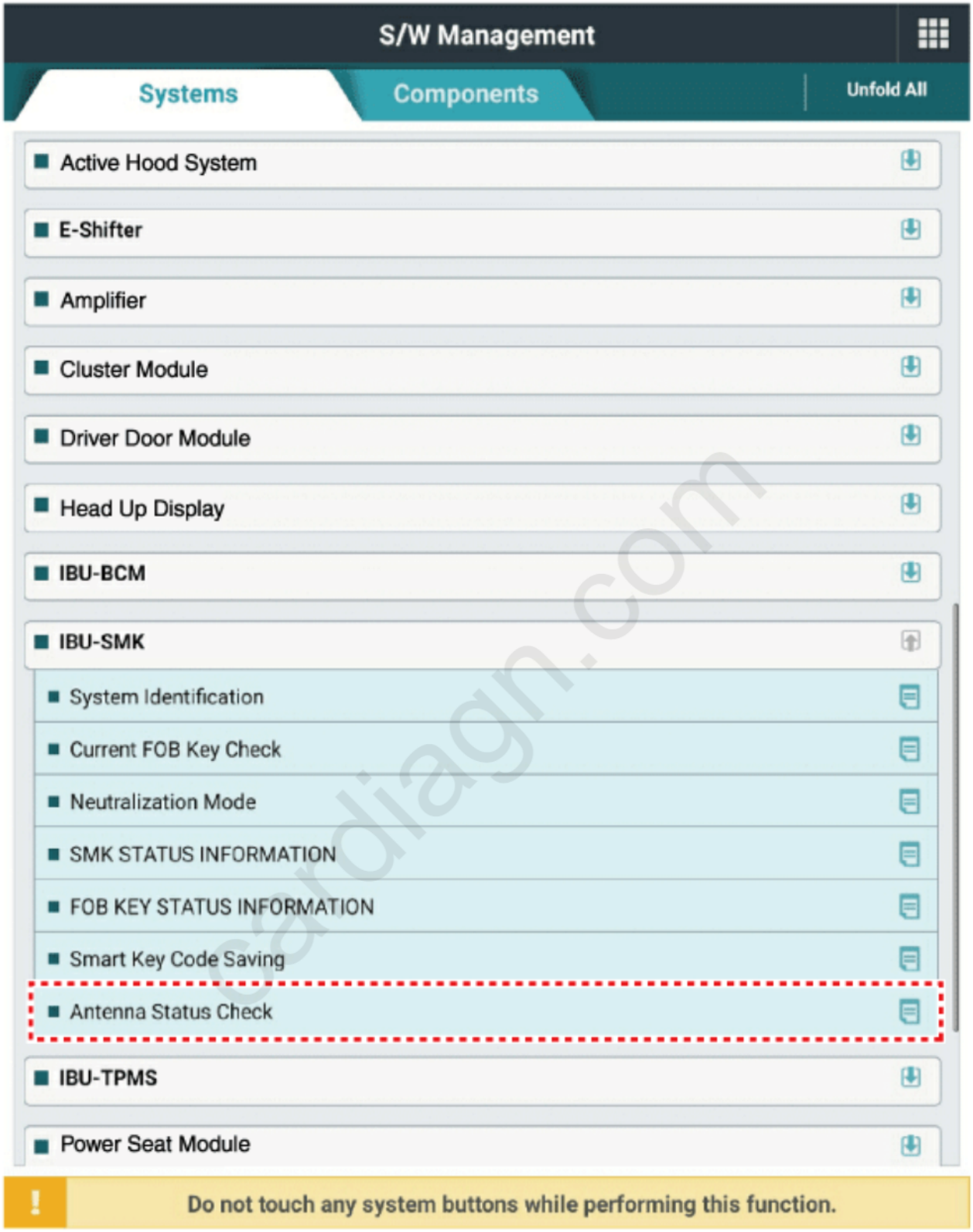

cardiagn.com

S/W Management

• **Antenna Status Check**

Purpose	To check unit's antenna status.
Enable Condition	1.FOB KEY Out 2.Ignition Switch Off
Concerned Component	Smart Key(SMK) Module, Transponder, PCM/ECM, Antenna
Concerned DTC	-
Fail Safe	-
Etc	- Antenna Status Check Interior Antenna1, Interior Antenna 2, Trunk Antenna, Bumper Antenna, Driver Door Handle Antenna, Passenger Door Handle Antenna, Hat Shelf Antenna

cardiagn.com

OK

! Do not touch any system buttons while performing this function.

3. After IG ON, select the "Antenna Status Check".

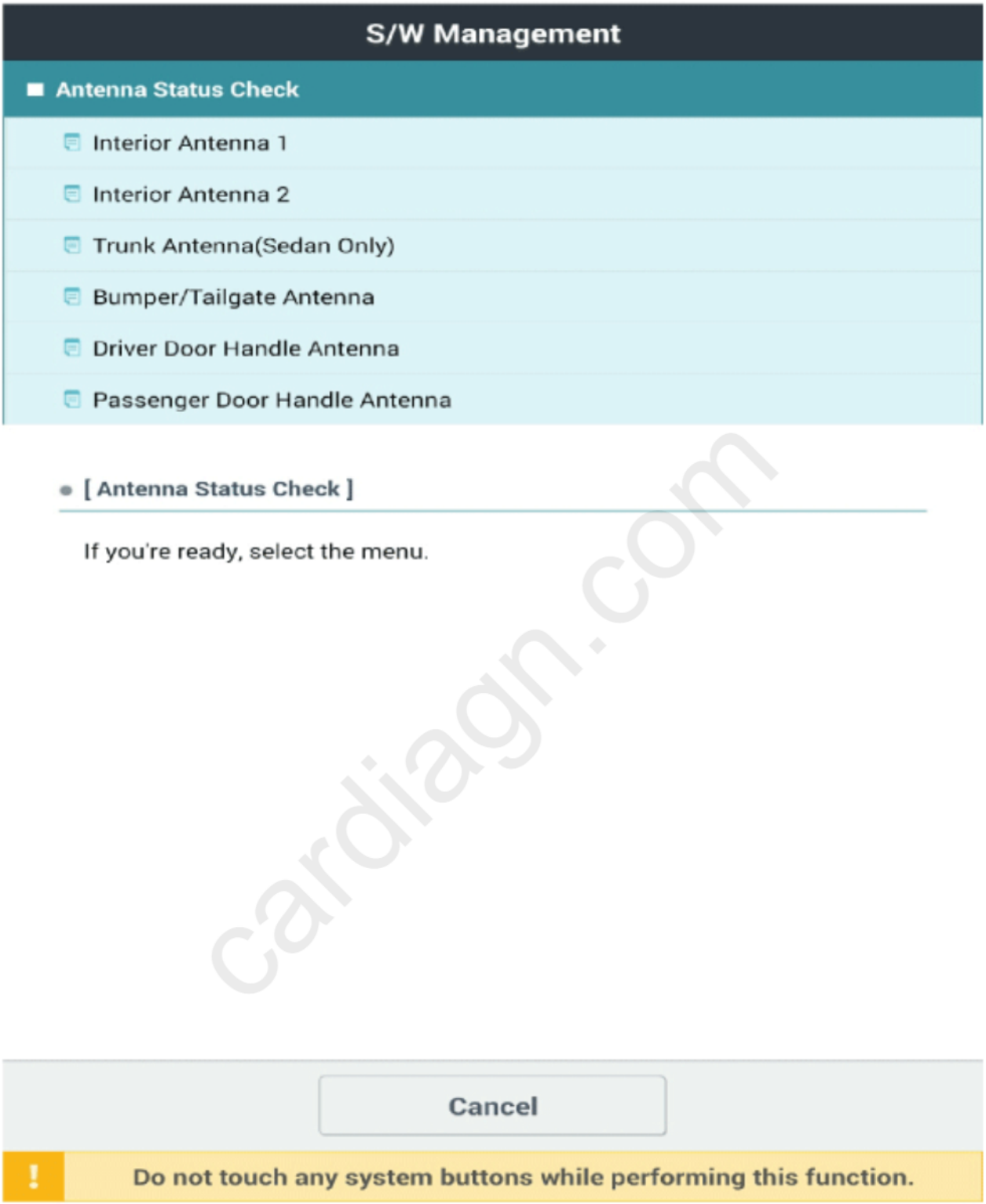

cardiagn.com

4. Set the smart key near the related antenna and operate it with a KDS.

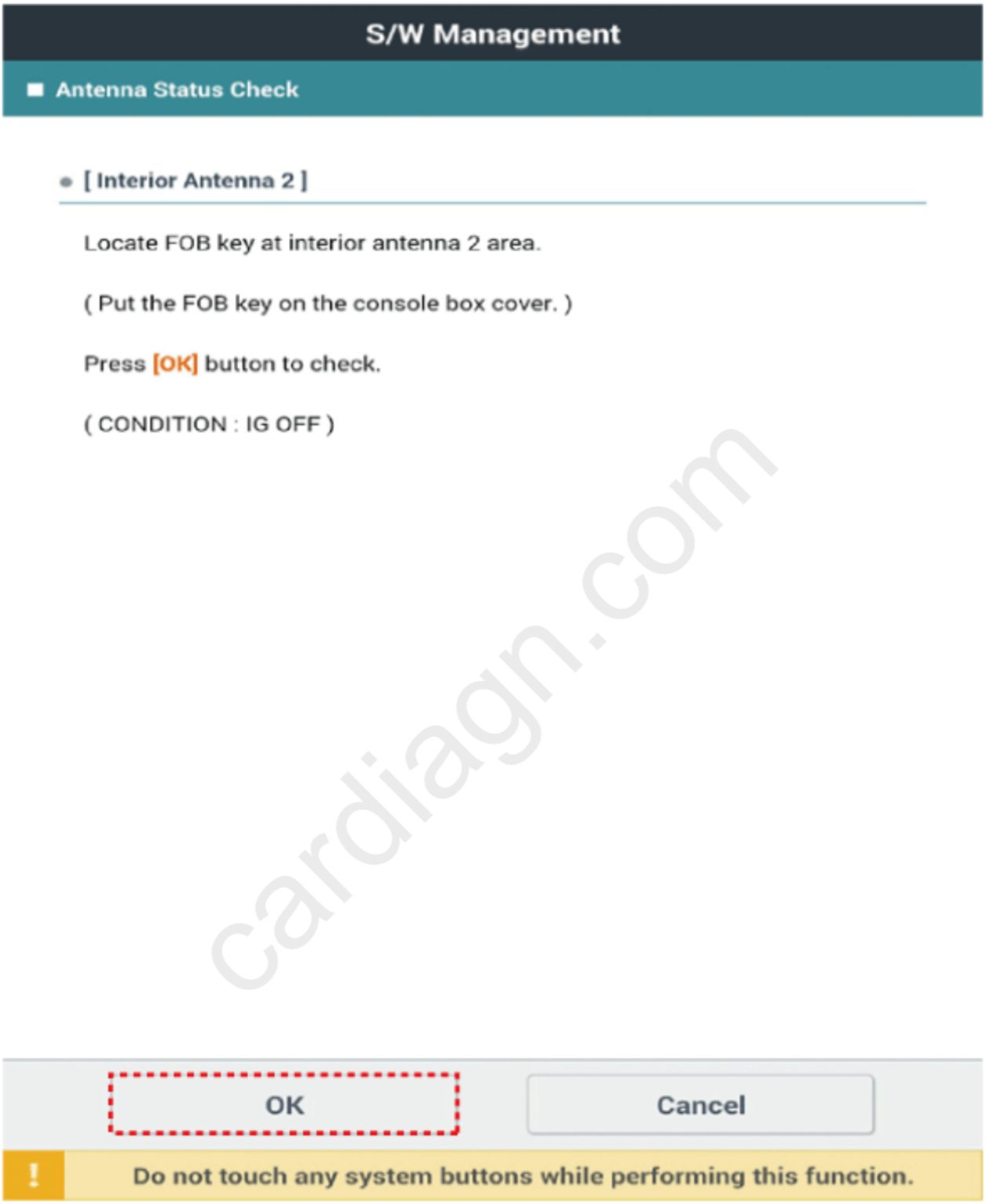

cardiagn.com



cardiagn.com

S/W Management

Antenna Status Check

- [Trunk Antenna(Sedan Only)]

Locate FOB key at Trunk antenna area.

(Put the FOB key on the center rear Trunk.)

Press [OK] button to check.

(CONDITION : IG OFF)

cardiagn.com

OK | Cancel

! Do not touch any system buttons while performing this function.



cardiagn.com

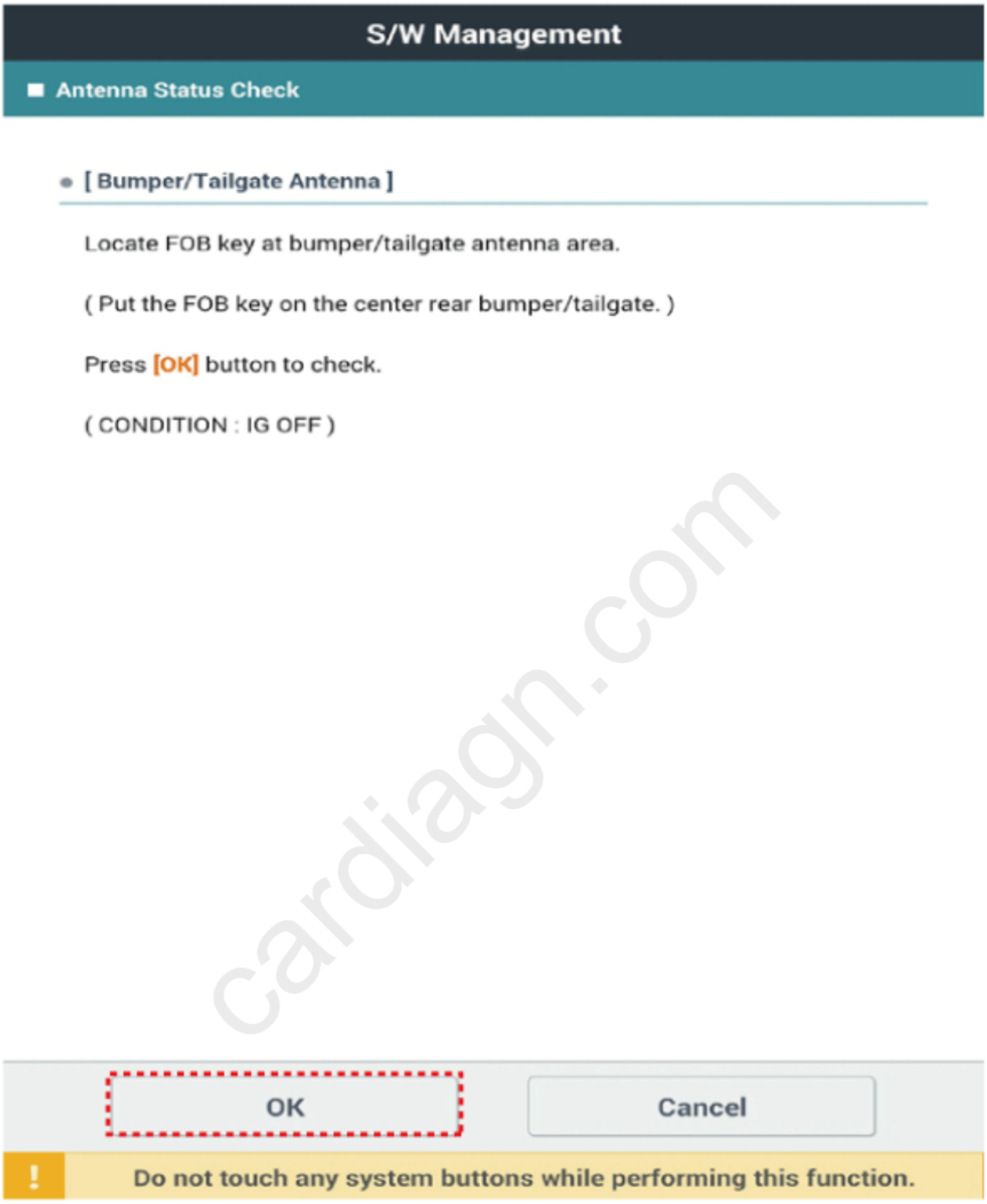

cardiagn.com



cardiagn.com

S/W Management

Antenna Status Check

- **[Driver Door Handle Antenna]**

Locate FOB key at driver door handle antenna area.

(Put the FOB key on the driver door handle of outside.)

Press [OK] button to check.

(CONDITION : IG OFF)

cardiagn.com

OK | Cancel

! Do not touch any system buttons while performing this function.



cardiagn.com

S/W Management

■ Antenna Status Check

- **[Passenger Door Handle Antenna]**

Locate FOB key at passenger door handle antenna area.

(Put the FOB key on the passenger door handle of outside.)

Press [OK] button to check.

(CONDITION : IG OFF)

cardiagn.com

OK Cancel

! Do not touch any system buttons while performing this function.



5. If the smart key runs normal , the related antenna, smart key(transmission, reception) and exterior receiver are normal.

6. Antenna status
   - –Interior Antenna 1
   - –Interior Antenna 2
   - –Tailgate Antenna
   - –Bumper Antenna
   - –Driver Door Antenna
   - –Assist Door Antenna

FOB Status Check

1. Connect the cable of KDS to the data link connector in driver side crash pad lower panel.
2. After IG ON, select the "FOB KEY STATUS INFO".

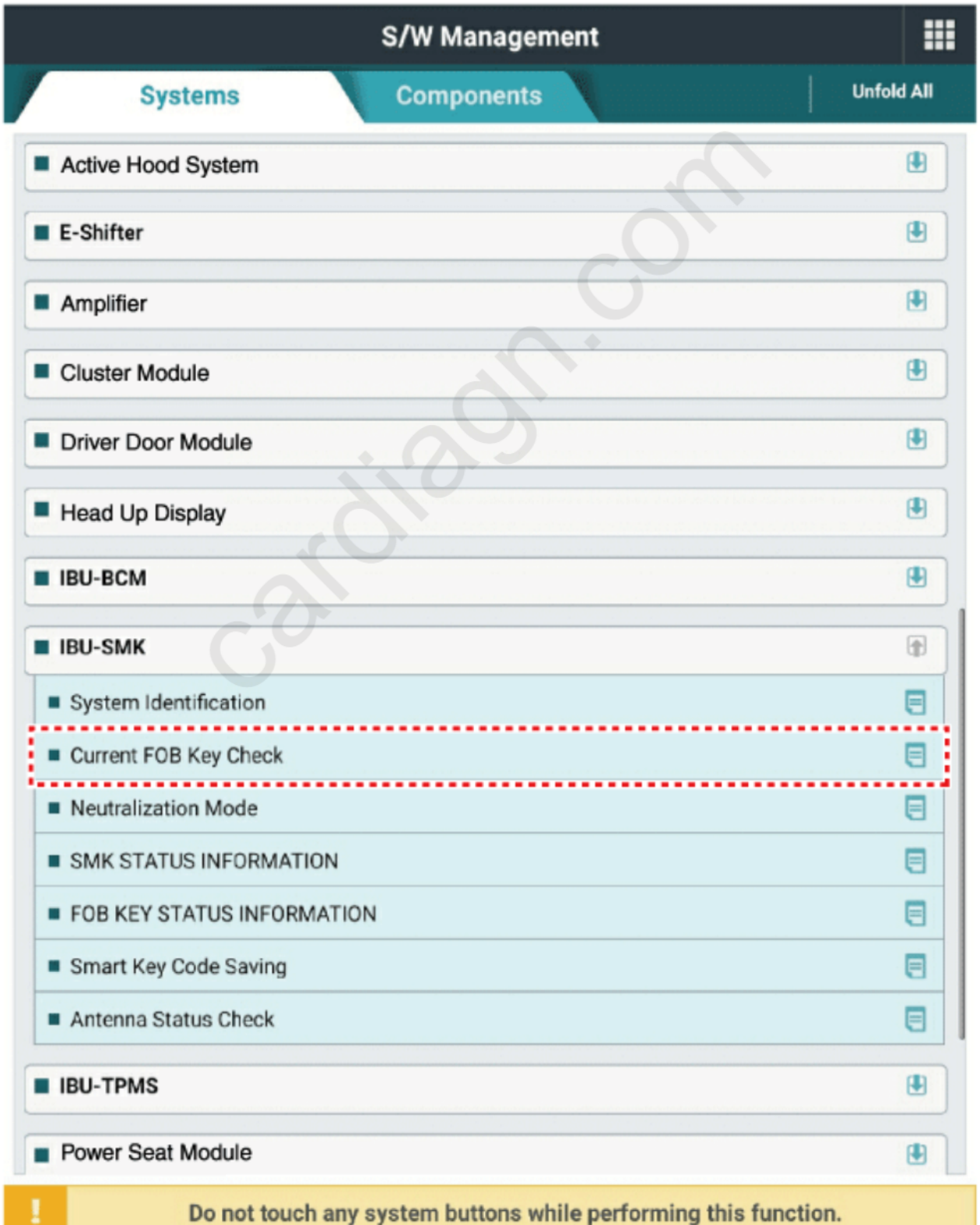

cardiagn.com

■ Power Seat Module

! Do not touch any system buttons while performing this function.

S/W Management

• FOB KEY Status Information

Purpose	To check unit's status.
Enable Condition	1.Engine Off 2.Ignition Switch On
Concerned Component	Smart Key(SMK) Module
Concerned DTC	-
Fail Safe	-
Etc	KEY Status : NORMAL Button Status : UNLOCK

cardiagn.com

OK

! Do not touch any system buttons while performing this function.



cardiagn.com

Smart Key Status Check

1. Connect the cable of KDS to the data link connector in driver side crash pad lower panel.

2. After IG ON, select the "SMK STATUS INFO".

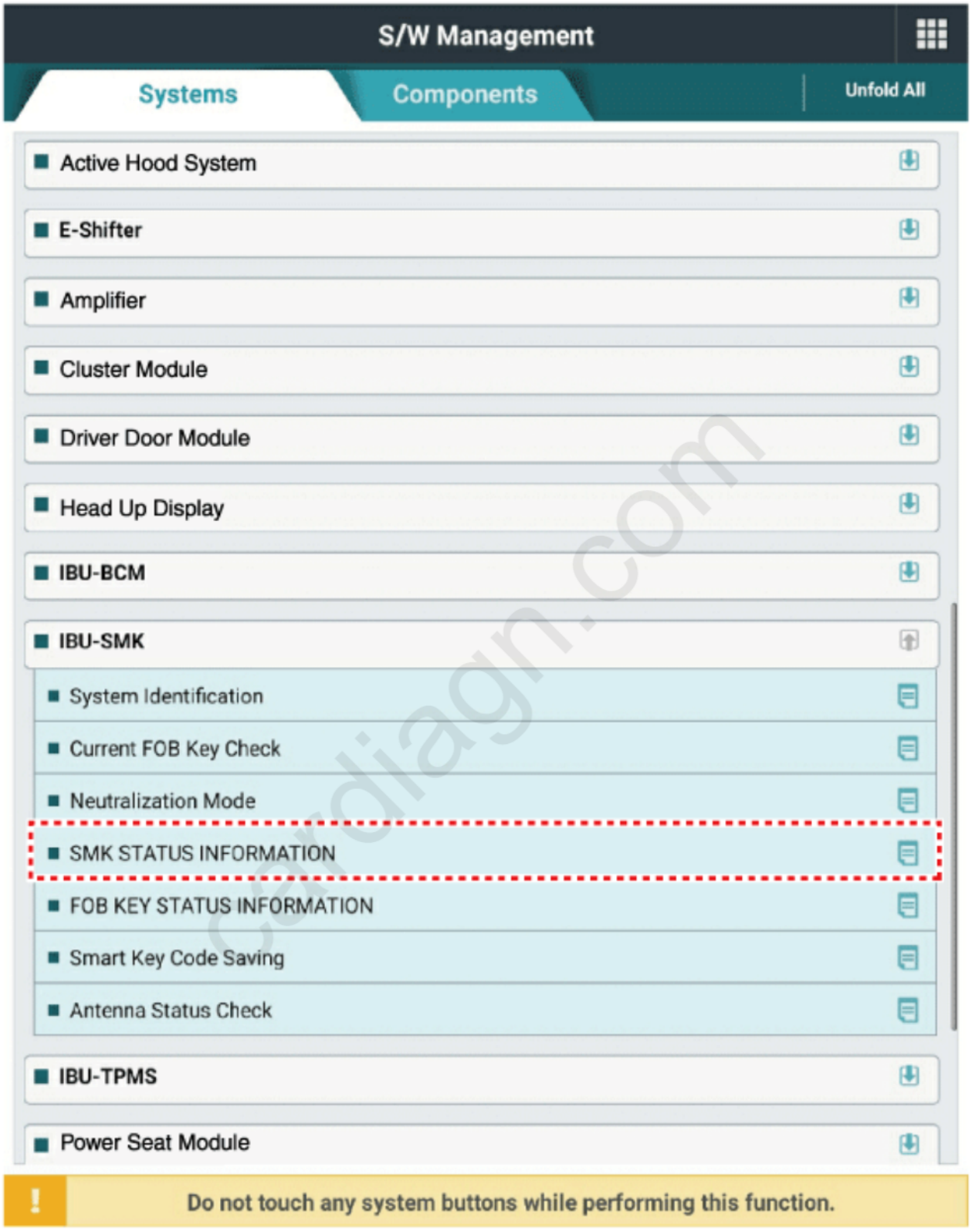

S/W Management

• SMK STATUS INFORMATION

Purpose	To check smart key status.
Enable Condition	1. Engine Off 2. Ignition Switch On
Concerned Component	Smart Key(SMK) Module
Concerned DTC	-
Fail Safe	-
Etc	-

cardiagn.com

OK

! Do not touch any system buttons while performing this function.

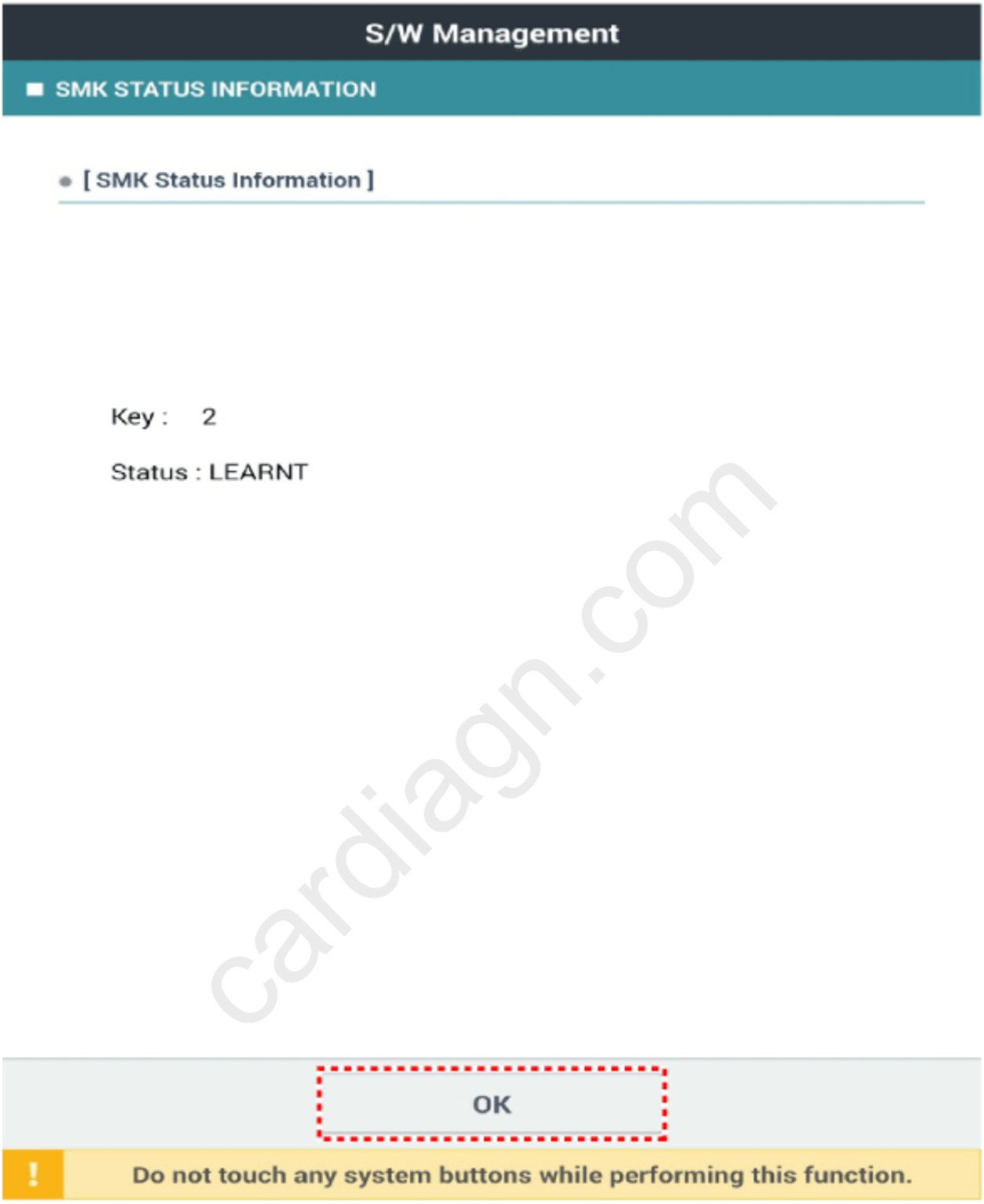

cardiagn.com

Neutralization Status Check

1. Connect the cable of KDS to the data link connector in driver side crash pad lower panel.

2. After IG ON, select the "Neutralization mode".

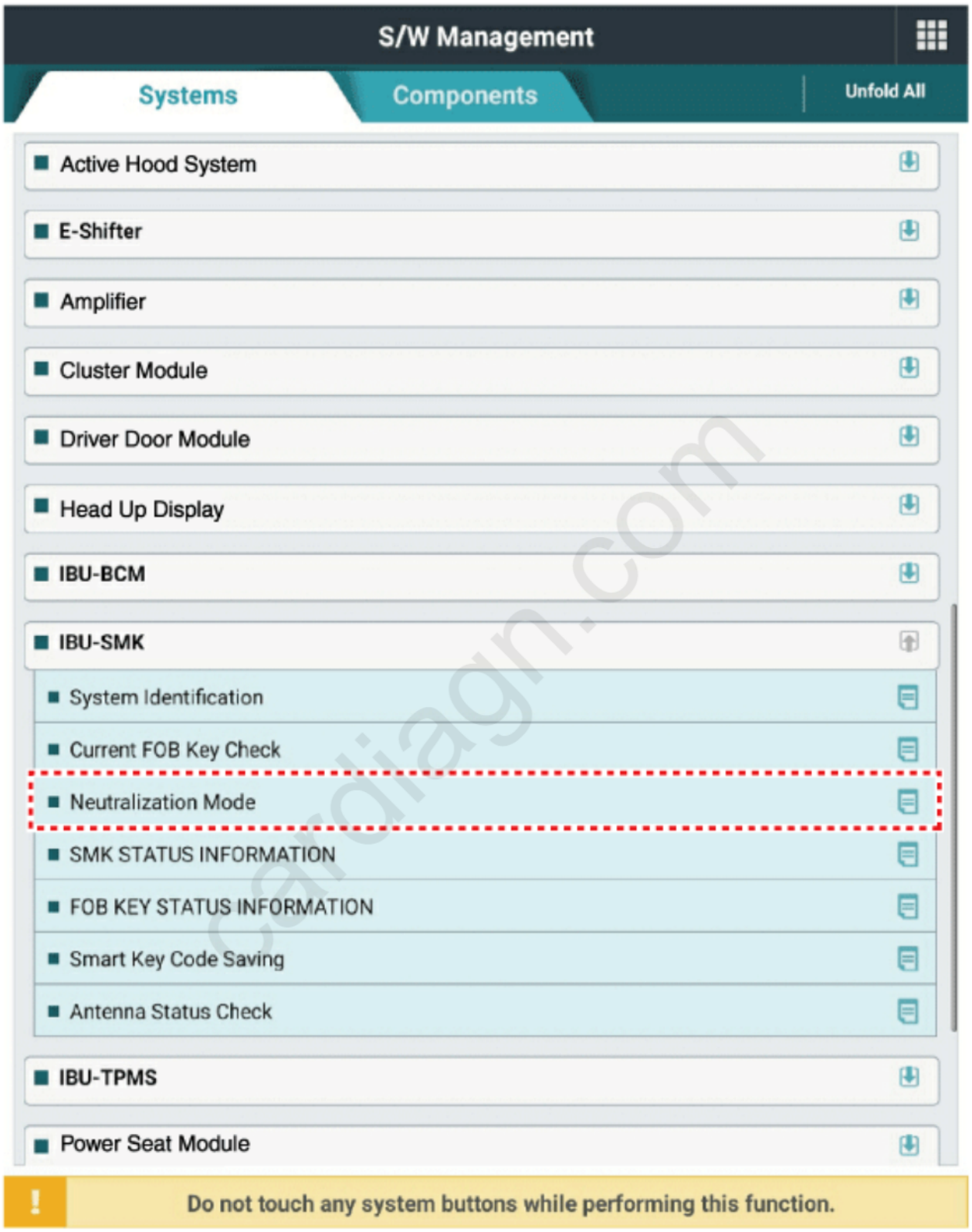

S/W Management

• **Neutralization Mode**

Purpose	To initialize the units that related to SMK.
Enable Condition	1.Engine Off 2.Ignition Switch On
Concerned Component	ECM, Intelligent Power Module(IPM), Power Distribution Module(PDM), Electronic Steering Column Lock(ESCL)
Concerned DTC	-
Fail Safe	-
Etc	- Neutralization Mode ECM Neutralization, IPM Neutralization, PDM Neutralization, ESCL Neutralization

cardiagn.com

OK

! Do not touch any system buttons while performing this function.



[Neutralization Mode]

This function needs only when you do swapping test with normal

vehicle's parts related to SMK except for Smart Key (FOB).

- Related parts : SMK ECU, ECM

[Caution]

In case that Smart Key, SMK ECU, ECM are replaced with new one,
it doesn't need to neutralize and please carry out only Smart Key teaching.

If you're ready, select the menu.

cardiagn.com

Cancel

Do not touch any system buttons while performing this function.

S/W Management

■ Neutralization Mode

● [ECM Neutralization]

Input PIN code and press [OK] button.

(CONDITION : IG OFF)

This function may be limited If the PIN code is entered incorrectly three times.

Please enter carefully.

cardiagn.com

OK Cancel

! Do not touch any system buttons while performing this function.

S/W Management

■ Neutralization Mode

● [ECM Neutralization]

Input PIN code and press [OK] button.

(CONDITION : IG OFF)

This function may be limited If the PIN code is entered incorrectly three times.

Please enter carefully.

123456

cardiagn.com

OK Cancel

! Do not touch any system buttons while performing this function.

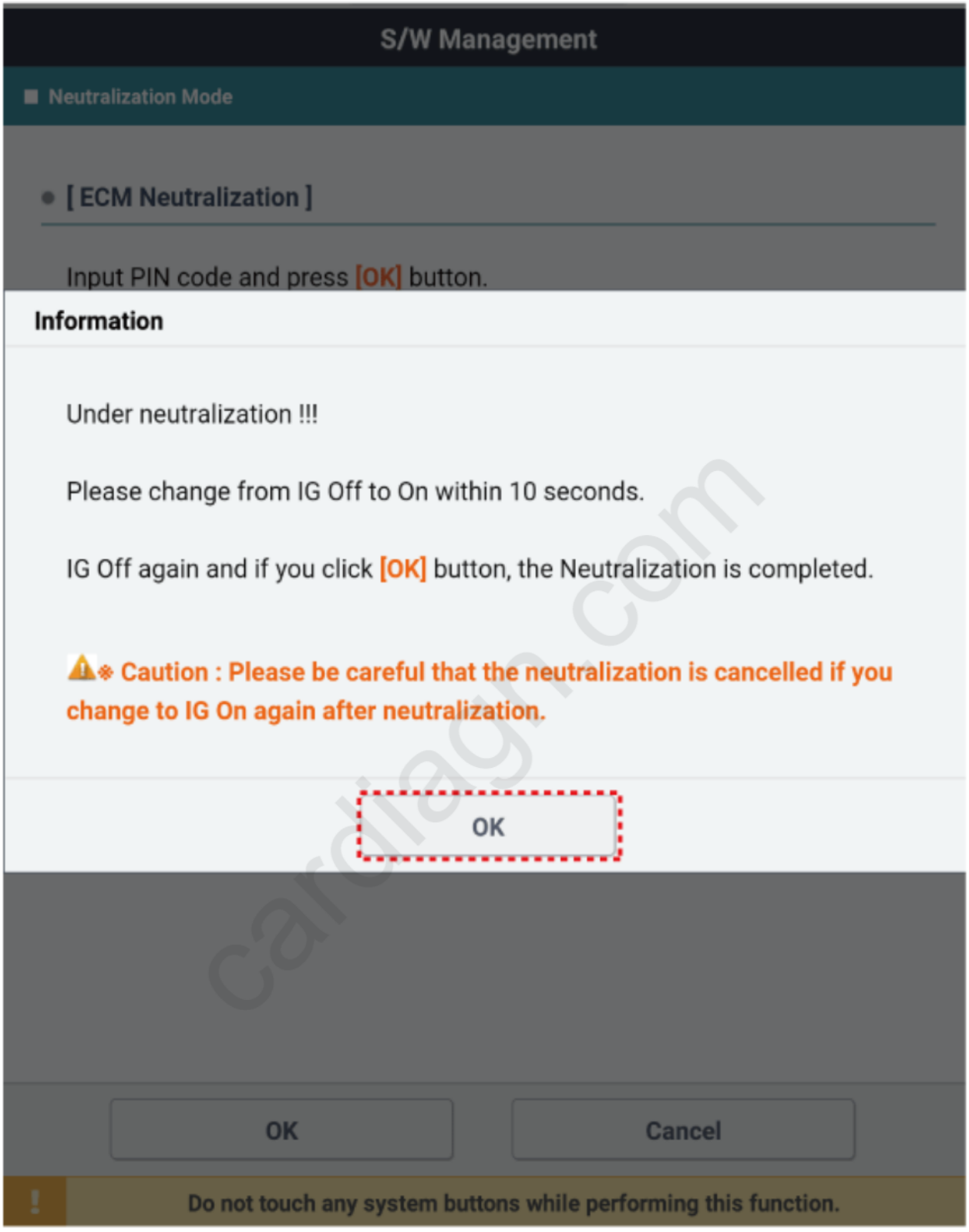

cardiagn.com

S/W Management

■ Neutralization Mode

● [ESCL Neutralization]

Input PIN code and press [OK] button.

(CONDITION : IG OFF)

This function may be limited If the PIN code is entered incorrectly three times.

Please enter carefully.



OK Cancel

! Do not touch any system buttons while performing this function.

cardiagn.com

S/W Management

■ Neutralization Mode

● [ESCL Neutralization]

Input PIN code and press [OK] button.

(CONDITION : IG OFF)

This function may be limited If the PIN code is entered incorrectly three times.

Please enter carefully.

123456

OK

Cancel

! Do not touch any system buttons while performing this function.

cardiagn.com

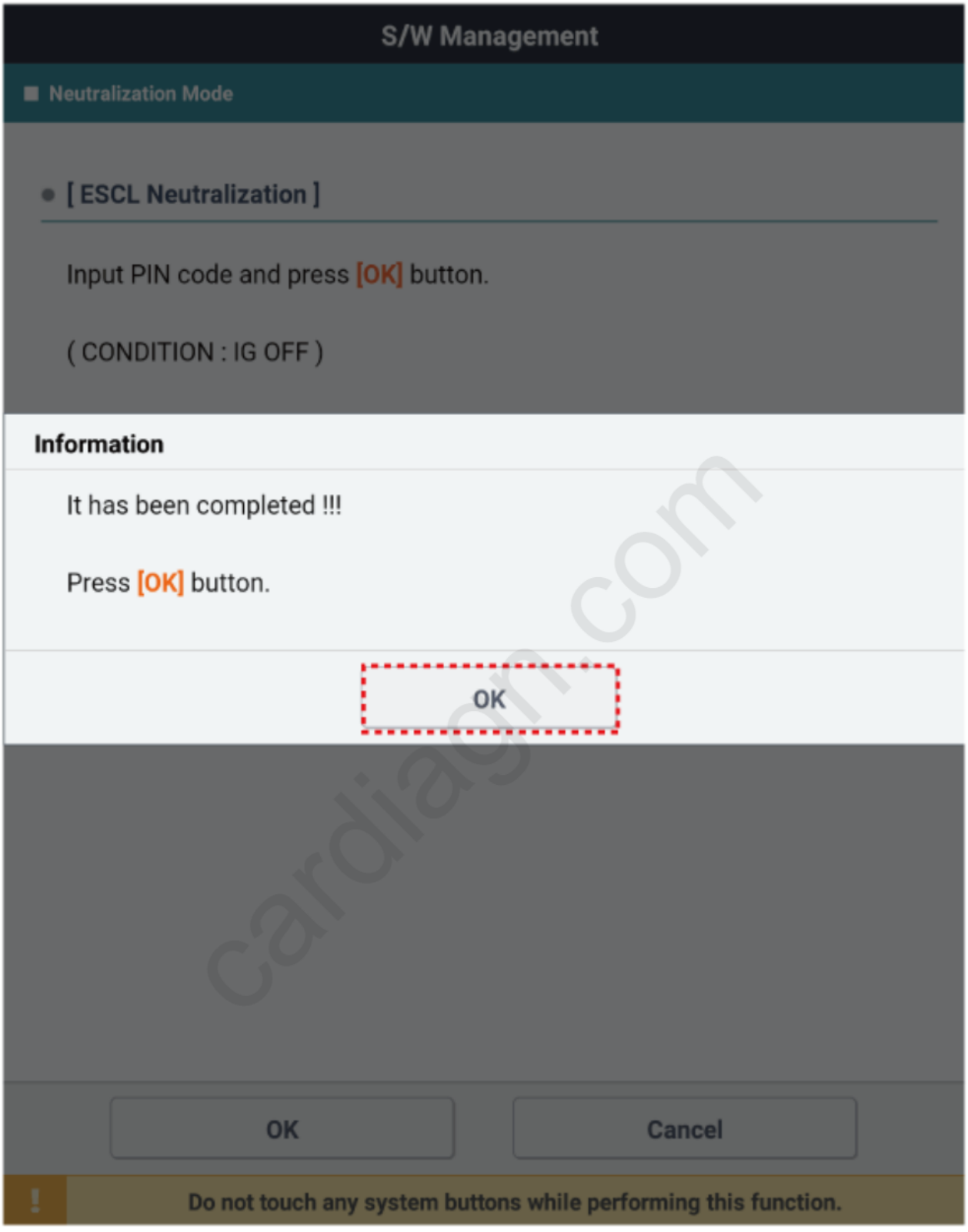

cardiagn.com

S/W Management

■ Neutralization Mode

● [SMK Neutralization]

Input PIN code and press [OK] button.

(CONDITION : IG OFF)

This function may be limited If the PIN code is entered incorrectly three times.

Please enter carefully.

cardiagn.com

OK Cancel

! Do not touch any system buttons while performing this function.

S/W Management

■ Neutralization Mode

● [SMK Neutralization]

Input PIN code and press [OK] button.

(CONDITION : IG OFF)

This function may be limited If the PIN code is entered incorrectly three times.

Please enter carefully.

123456

OK

Cancel

! Do not touch any system buttons while performing this function.

cardiagn.com



cardiagn.com

Please rate this document after reviewing at the bottom of this page.

Component
Location

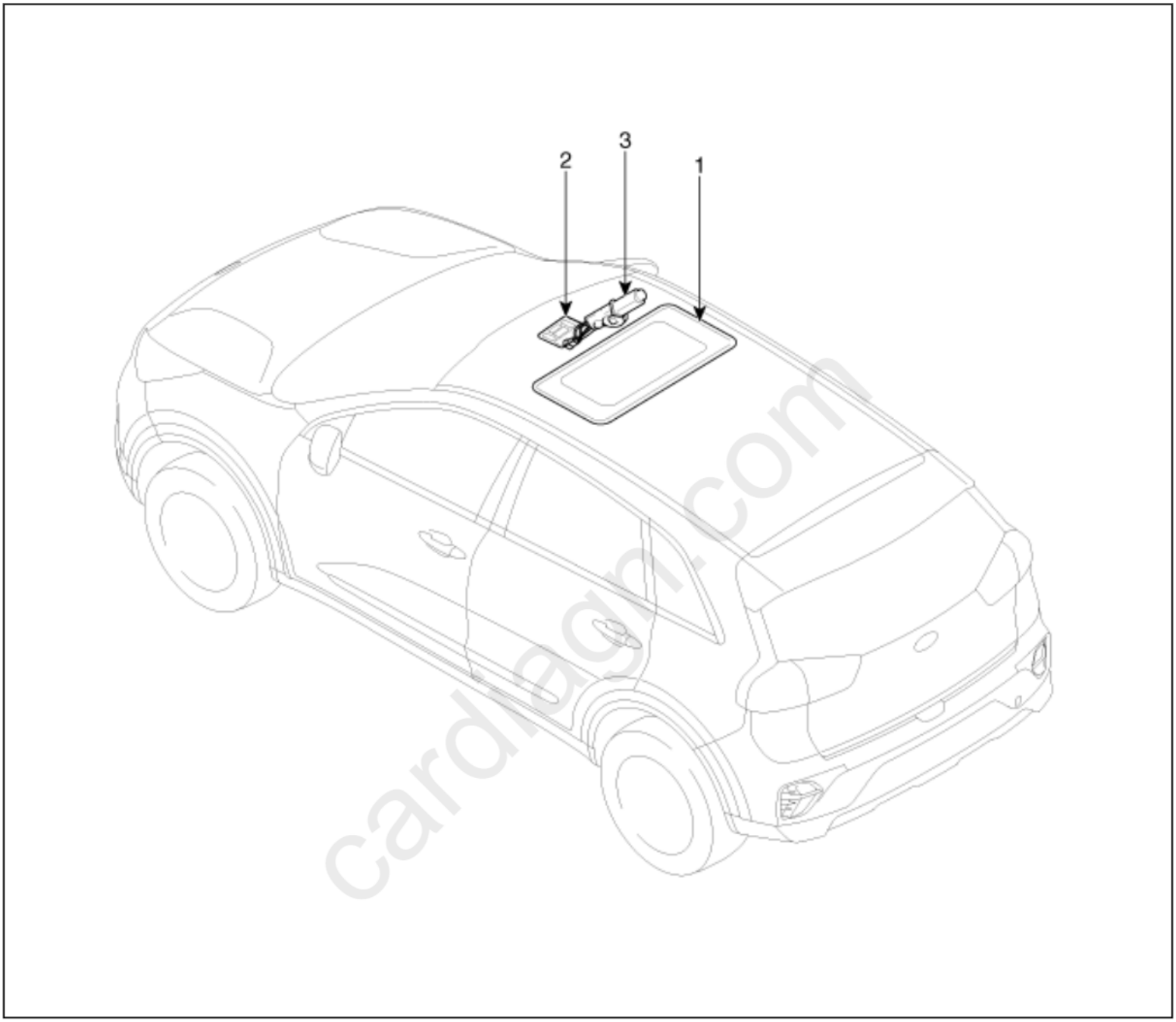

1. Sunroof
2. Sunroof switch
3. Sunroof motor & controller

Please rate this document after reviewing at the bottom of this page.

Description

The Sunroof is quiped with a one touch on/off switch to open and close the glass, and it has an ANTI-PINCH function which prevents objects from jamming while performing AUTO CLOSE feature.

cardiagn.com

Please rate this document after reviewing at the bottom of this page.

Connector and Terminal
Function

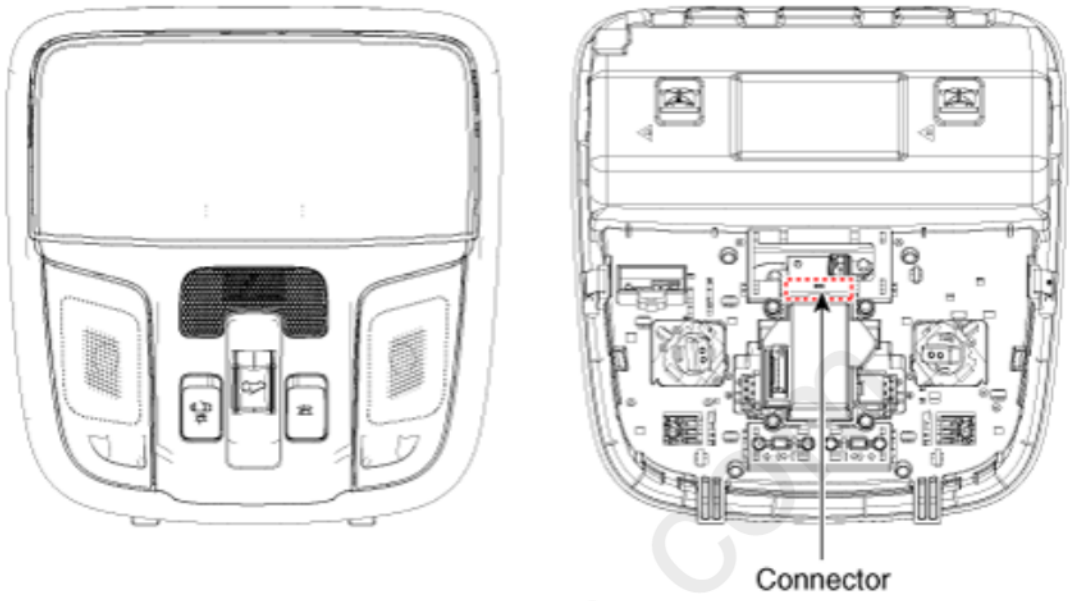

Connector	Pin	Function
	1	Ground
	2	Signal A
	3	Signal B
	4	Signal C
	5	-
	6	-

cardiagn.com

Please rate this document after reviewing at the bottom of this page.

Inspection

1. Remove the overhead console lamp.
   (Refer to Lighting System - "Overhead Console Lamp")
2. Check for continuity between the terminals in each switch position according to the table.

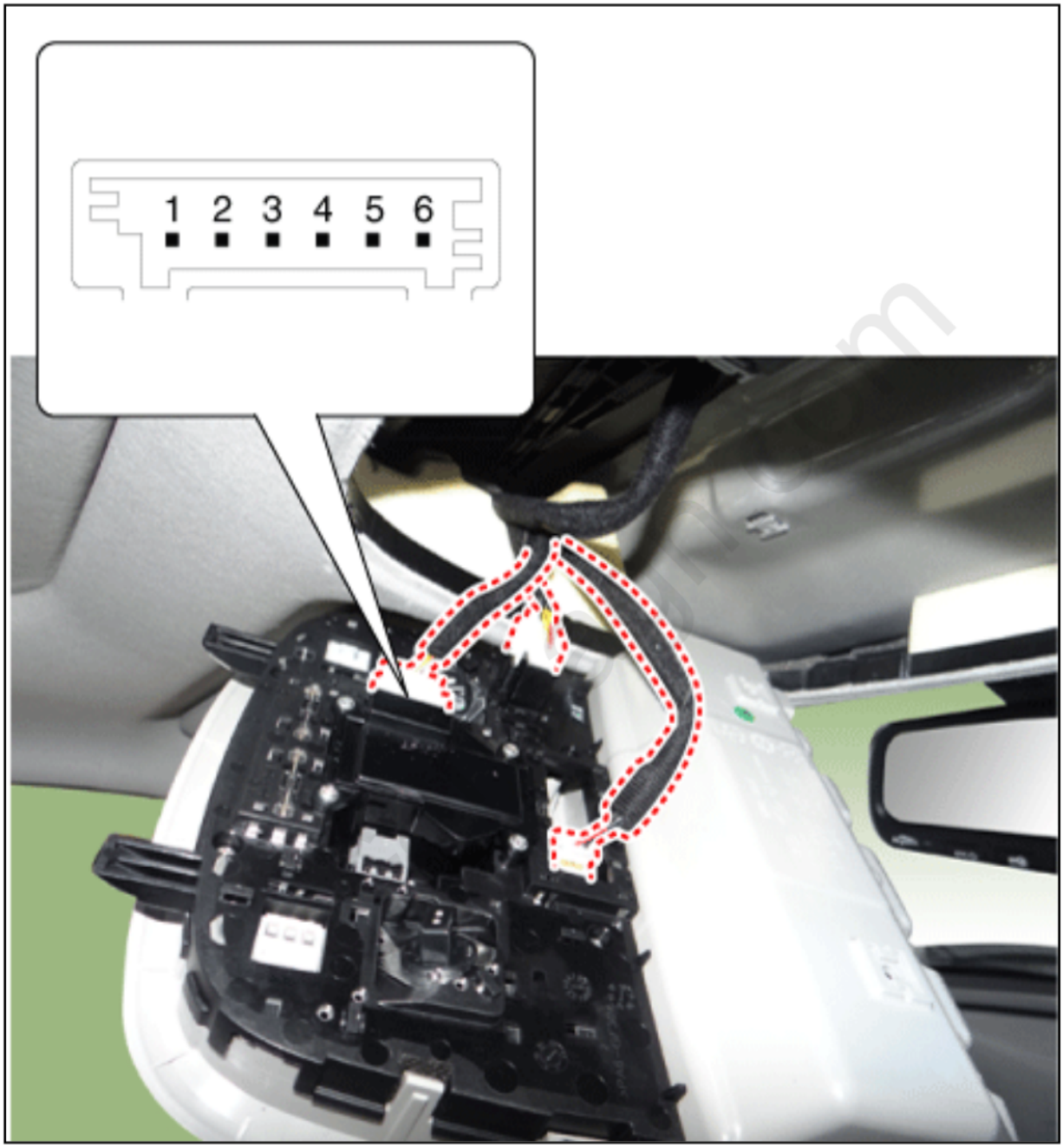

Terminal / Position	1	2	3	4
Maunal Open	○	○		
Auto Open	○	○	○	
Maunal Close	○		○	
Auto Close	○		○	○
Tilt Up	○			○
Tilt Down	○			○

Replacement

1. If the sunroof switch needs to be replaced, replace the overhead console lamp assembly. **(Refer to Lighting System - "Overhead Console Lamp")**

cardiagn.com

Please rate this document after reviewing at the bottom of this page.

Circuit
Diagram

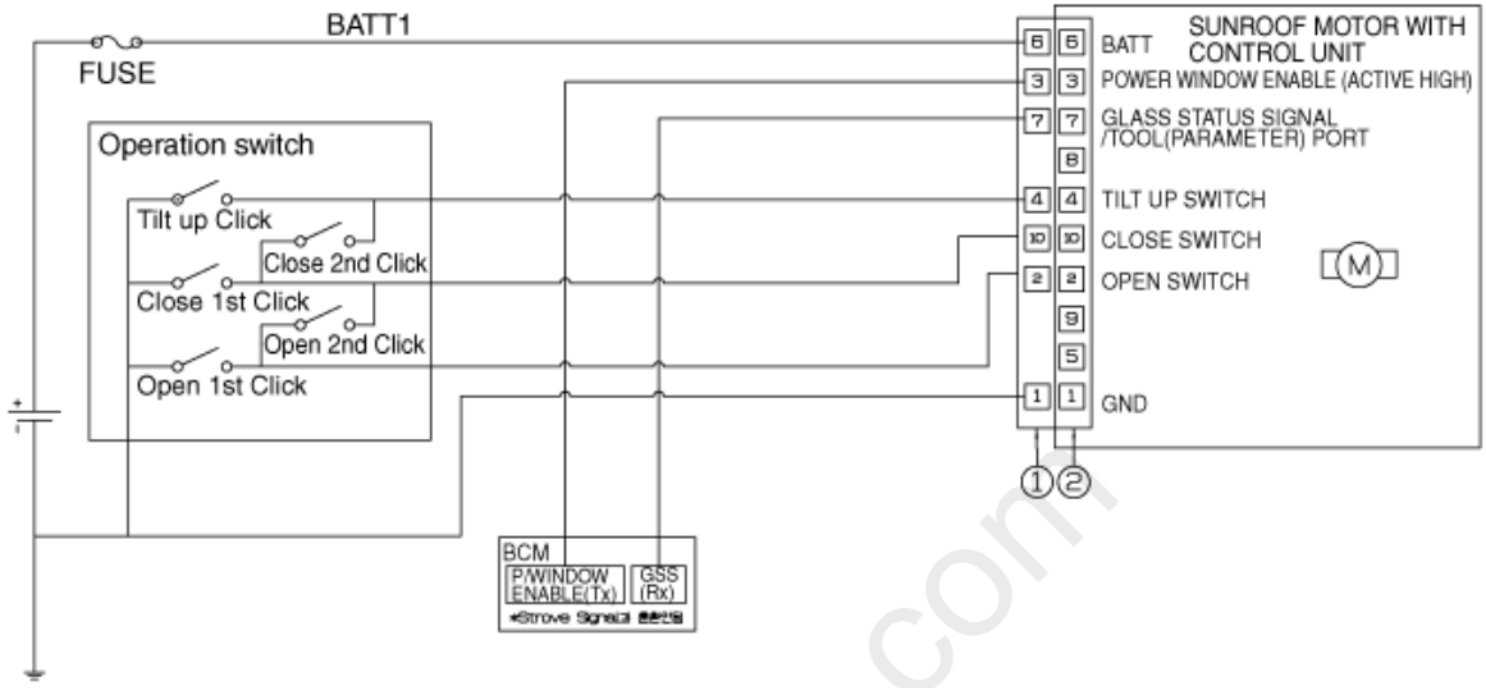

Overhead console lamp



Pin	Function
1	Ground
2	Signal A
3	Signal B
4	Signal C
5	-
6	-

Motor



Pin	Function	Pin	Function
1	Ground	6	Power
2	Open switch	7	Glass status signal
3	IGN2	8	-
4	Tilt switch	9	-
5	-	10	Close switch

cardiagn.com

Please rate this document after reviewing at the bottom of this page.

Inspection

1. Remove the roof trim assembly.
   (Refer to Body - "Roof Trim Assembly")
2. Ground the terminals as below table, and check that the sunroof unit operates after disconnecting the sunroof motor connector.



Terminal / Position	3	4	2	10
Manual close	⊕			⊖
Tilt up	⊕	⊖		
Manual open	⊕		⊖	

3. Make these input tests at the connector. If any test indicates a problem, find and correct the cause, then recheck the system. If all the input tests prove OK, the sunroof motor must be faulty; replace it.

Terminal	Test condition	Test : Desired result
3	IG2 ON	Check for voltage to ground : There should be battery voltage.
1	Under all conditions	Check for continuity to ground : There should be continuity.
6	Under all conditions	Check for voltage to ground : There should be battery voltage.

Removal

1. Remove the roof trim assembly.
   (Refer to Body - "Roof Trim Assembly")
2. Remove the motor (A) by loosenig the screws after disconnecting the connector.

cardiagn.com

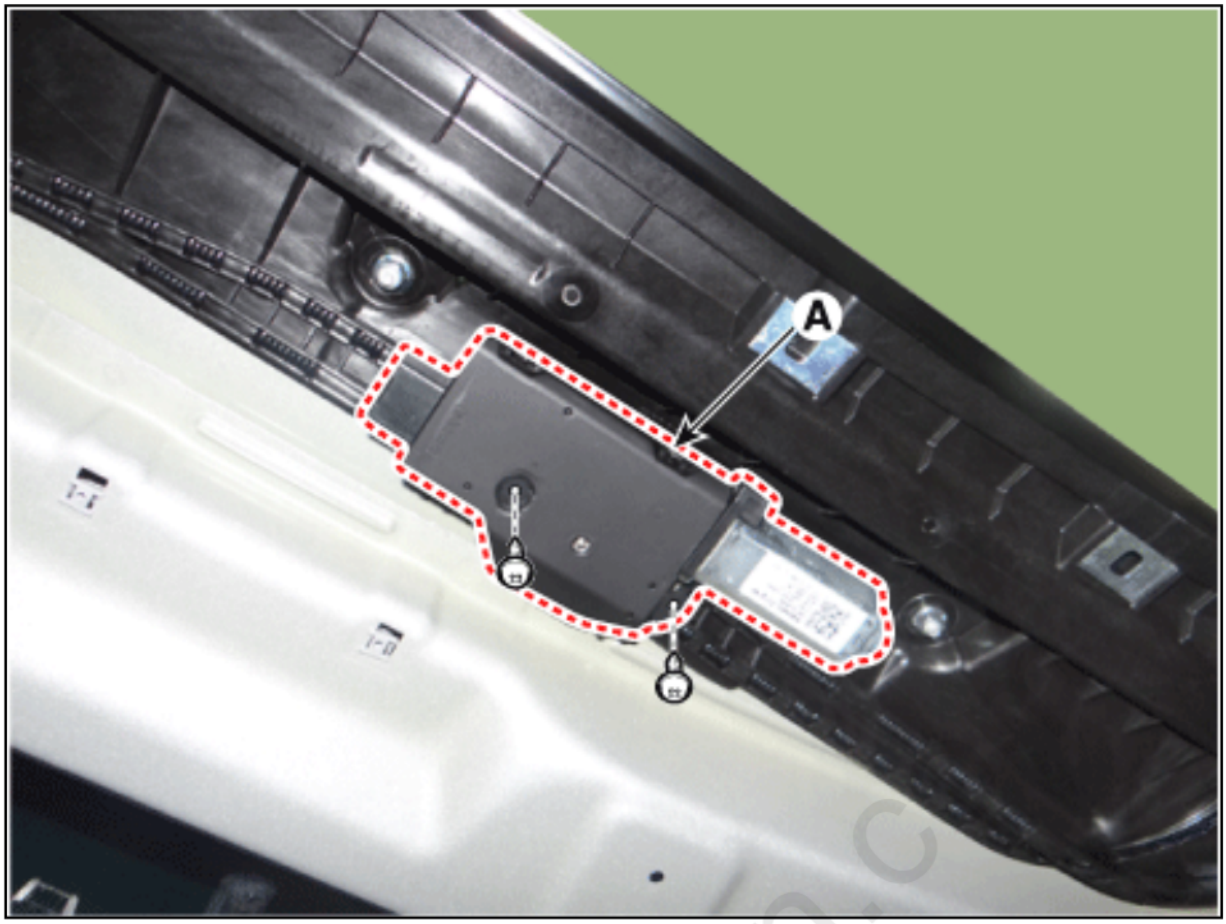

Installation

1. Install in the reverse order of removal.

Adjustment

Resetting The Sunroof

1. Turn the ignition switch to the ON position or start the engine. We recommend resetting the sunroof while the engine is running.
2. Close the sunroof completely if opened
3. Release the sunroof switch.
4. Move the sunroof switch in the direction of close until the sunroof moves tilt up. Then, release the switch.
5. Move the sunroof switch forward in the direction of close, until the sunroof operates as follow again :
   Tilt down → Slide Open → Slide Close

> Do not release the switch until the operation is completed. If you release the switch during operation, try again from step 2.

6. Release the sunroof switch after all operation has completed.
   (The sunroof system has been reset.)

cardiagn.c

Please rate this document after reviewing at the bottom of this page.

Component
Location

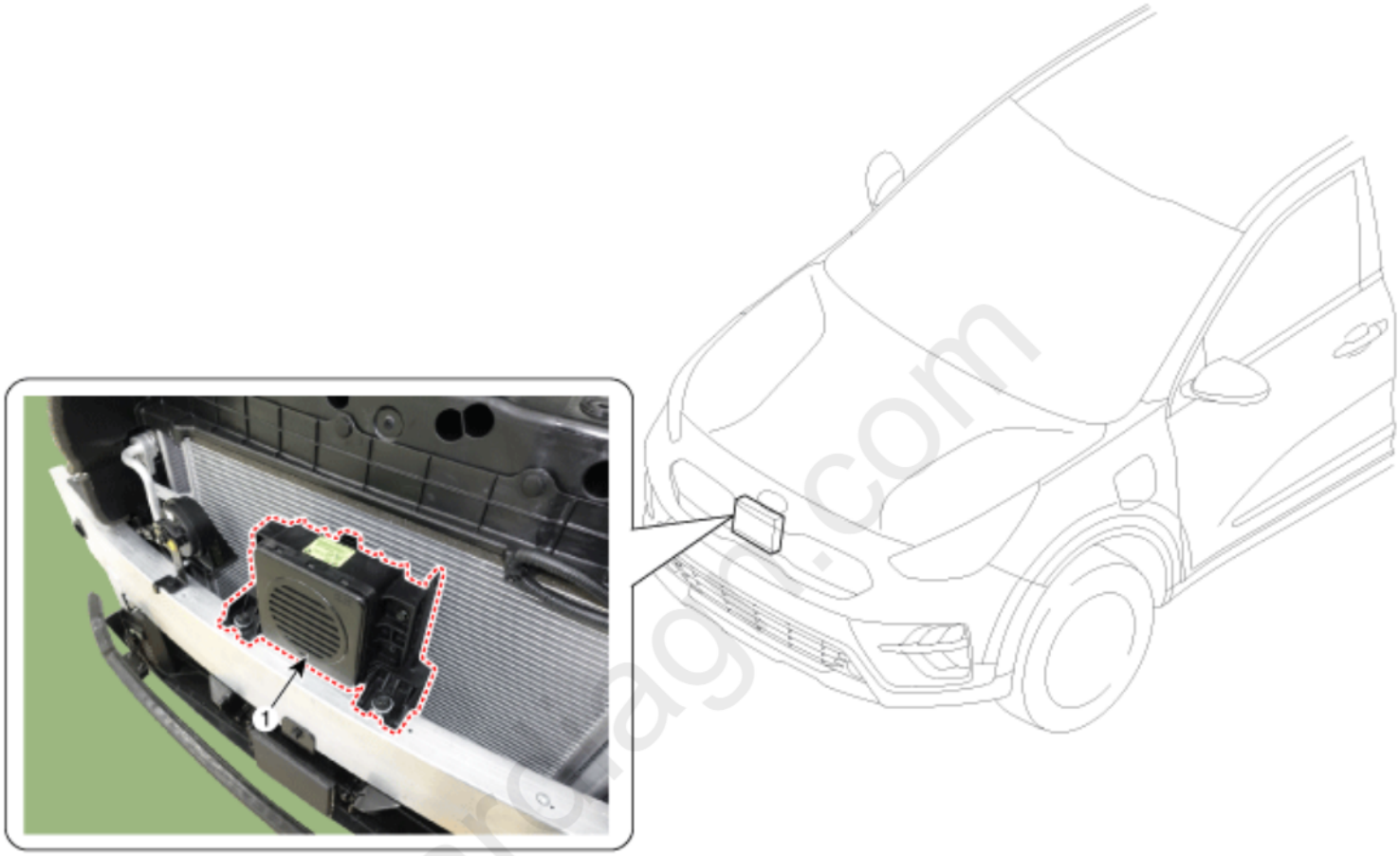

1. Virtual engine sound unit & speaker assembly

Please rate this document after reviewing at the bottom of this page.

Description

The VESS (Virtual engine sound system) generates engine sound when you start the EV system. This sound is for pedestrians to hear vehicle sound because there is no engine sound in EV driving.

cardiagn.com

Please rate this document after reviewing at the bottom of this page.

Connector and Terminal
Function

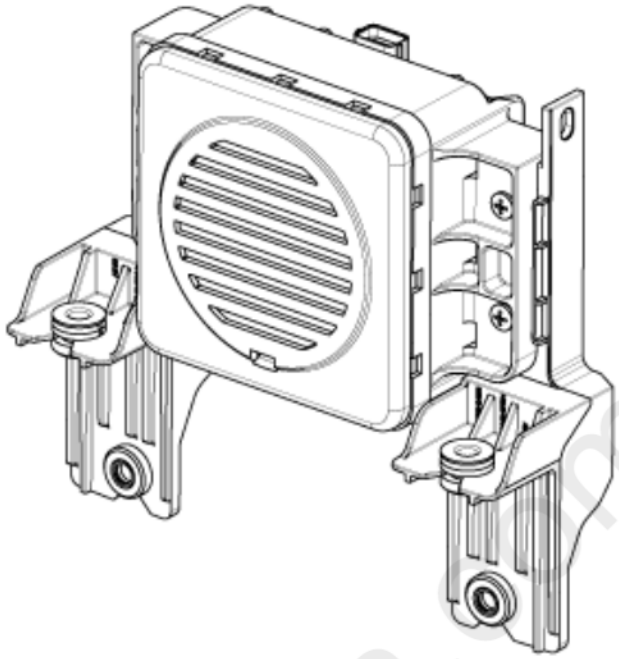

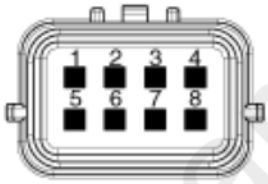

Pin	Function
1	Battery (+)
2	IGN1
3	-
4	P-CAN (High)
5	Ground
6	Ground
7	-
8	P-CAN (Low)

cardiagn.com

Block
Diagram

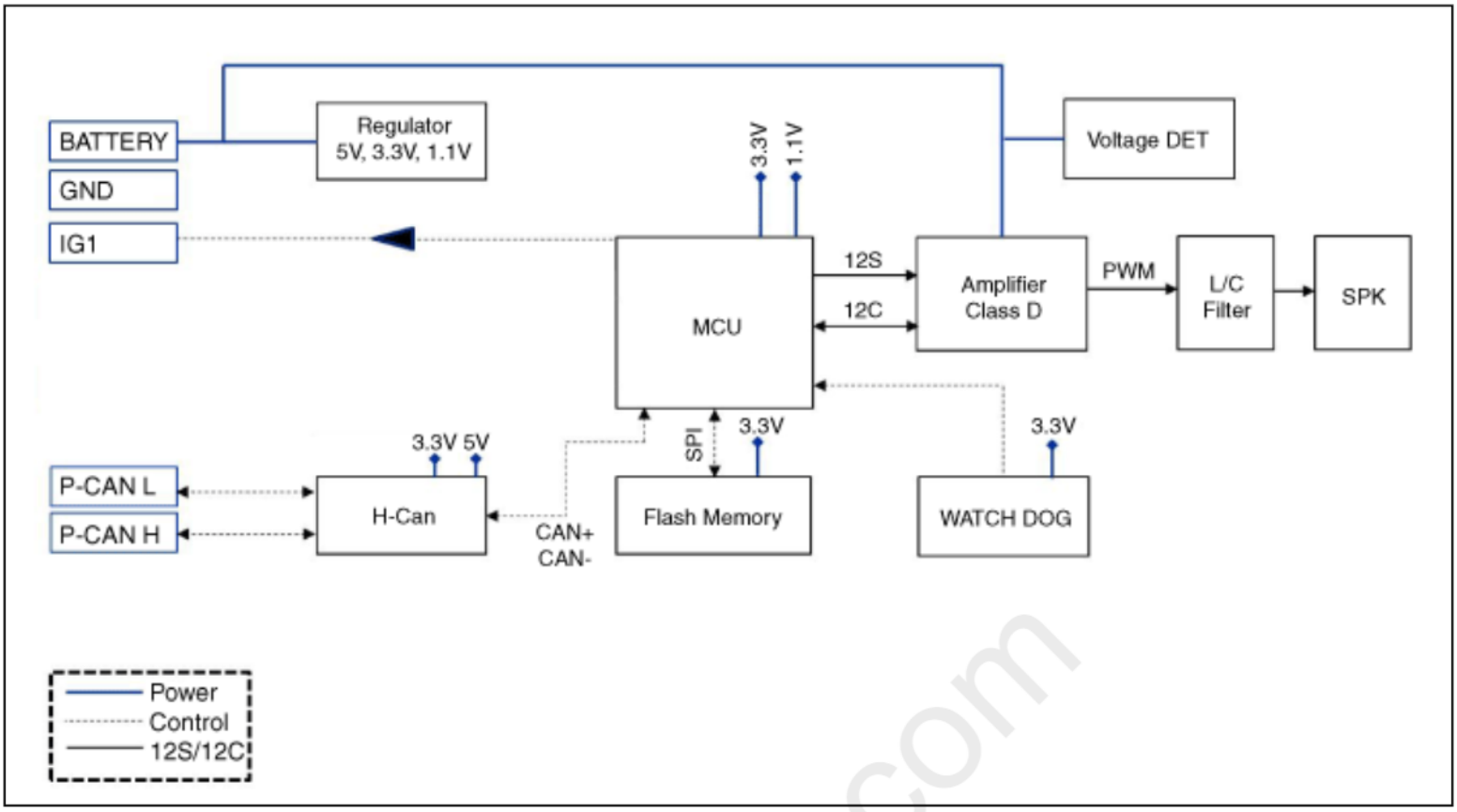

cardiagn.com

Please rate this document after reviewing at the bottom of this page.

Removal

1. Remove the front bumper assembly.
   (Refer to Body - "Front Bumper Assembly")
2. Disconnect the VESS unit & speaker assembly connector (A).

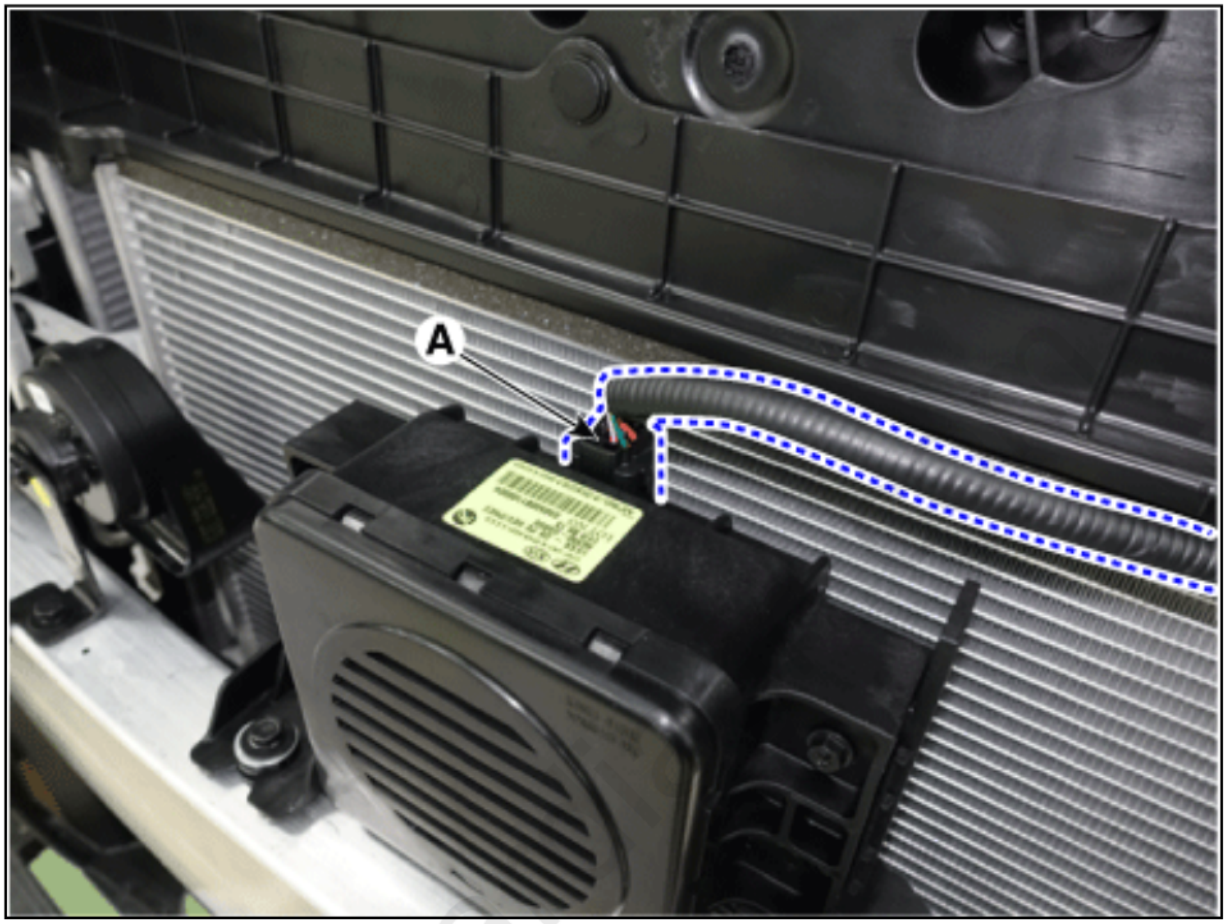

3. Remove the VESS unit & speaker assembly (A) by loosening the bolts.

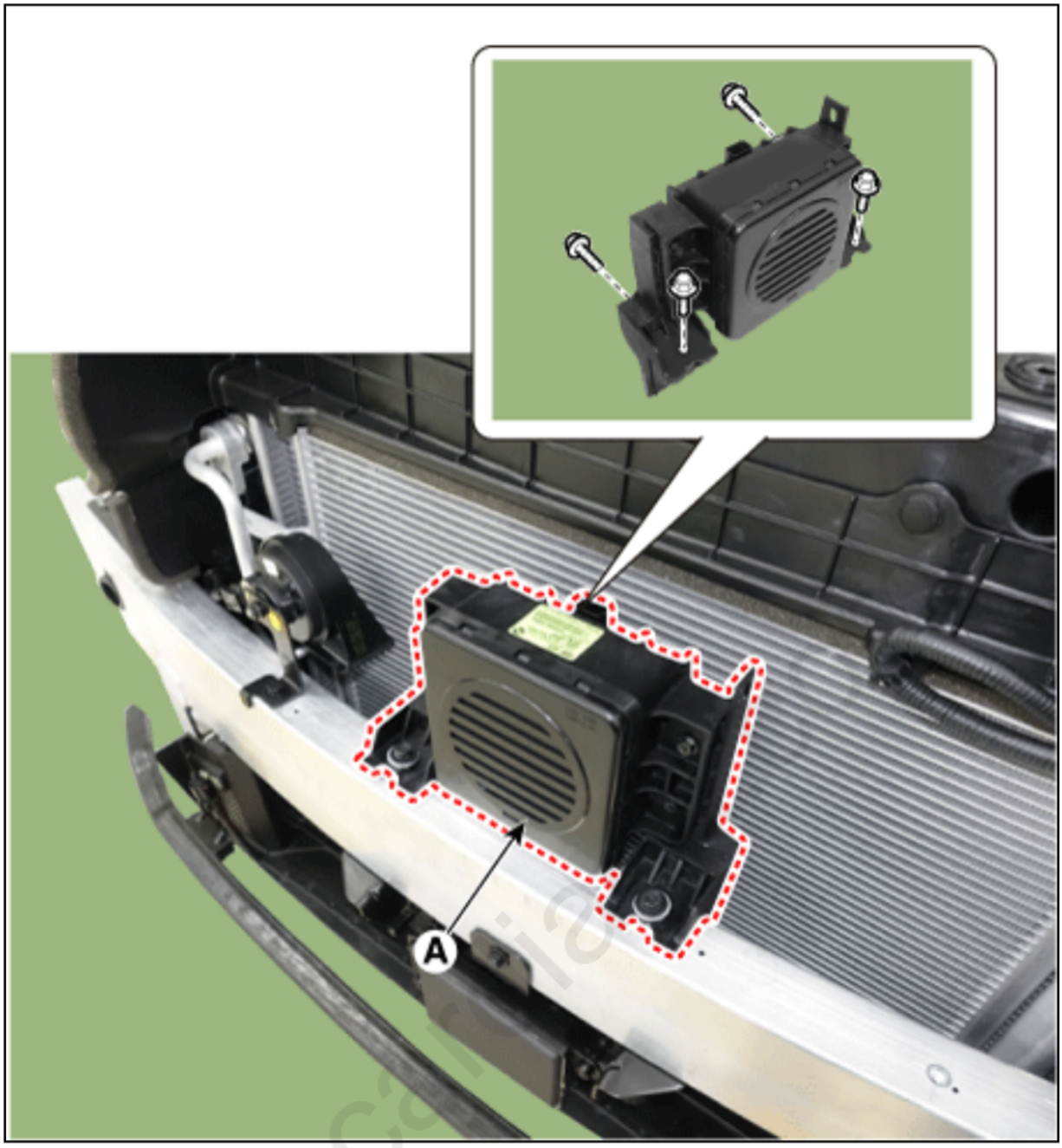

Installation

1. Install in the reverse order of removal.

Please rate this document after reviewing at the bottom of this page.

Connector and Terminal
Function

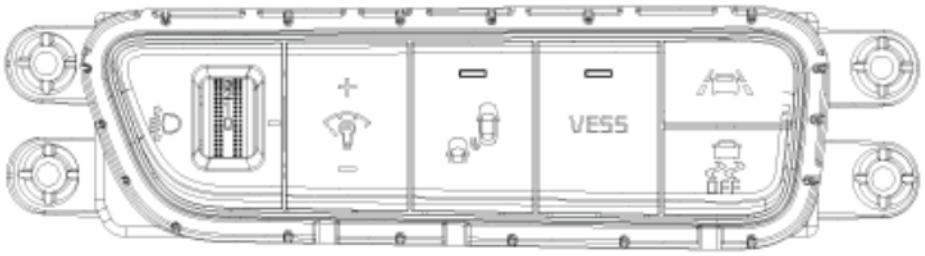

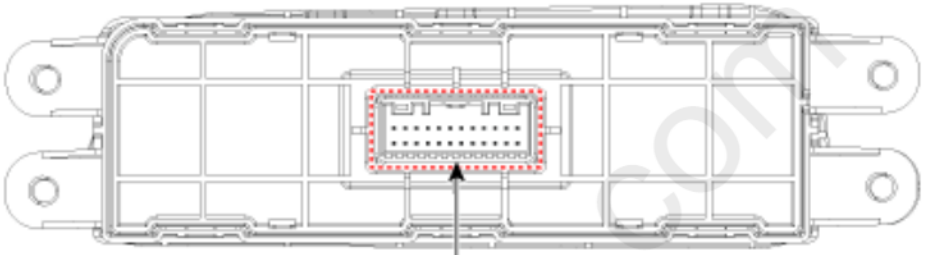

Connector

Connector	Pin	Function	Pin	Function
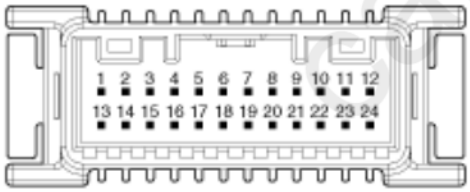	1	IGN1	13	Latch relay power
	2	-	14	-
	3	ESC OFF	15	HLLD signal
	4	-	16	Latch relay signal
	5	LKA mode	17	Rheostat up
	6	BCW mode	18	Rheostat down
	7	BCW indicator	19	-
	8	IGN HLLD	20	Illumination (+)
	9	VESS	21	-
	10	VESS indicator	22	Illumination (-)
	11	-	23	-
	12	HLLD ground	24	Ground

mardiagn.com

Please rate this document after reviewing at the bottom of this page.

Removal

1. Disconnect the negative battery terminal.
2. Remove the crash pad lower panel.
   (Refer to Body - "Crash Pad Lower Panel")
3. Remove the side crash pad switch panel (A) after loosening the screws.

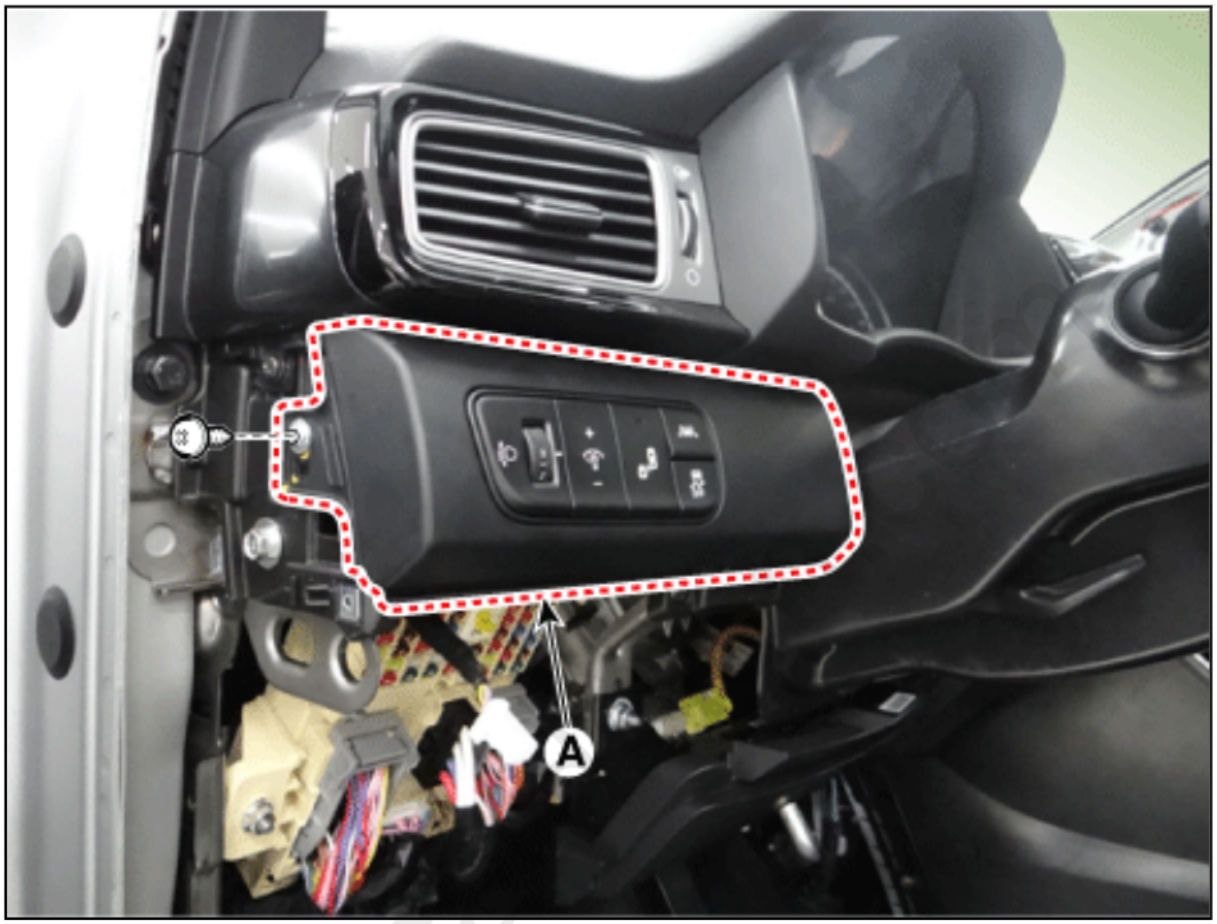

4. Disconnect the side crash pad switch connector (A).



5. Remove the side crash pad switch (A) by loosening the screws.

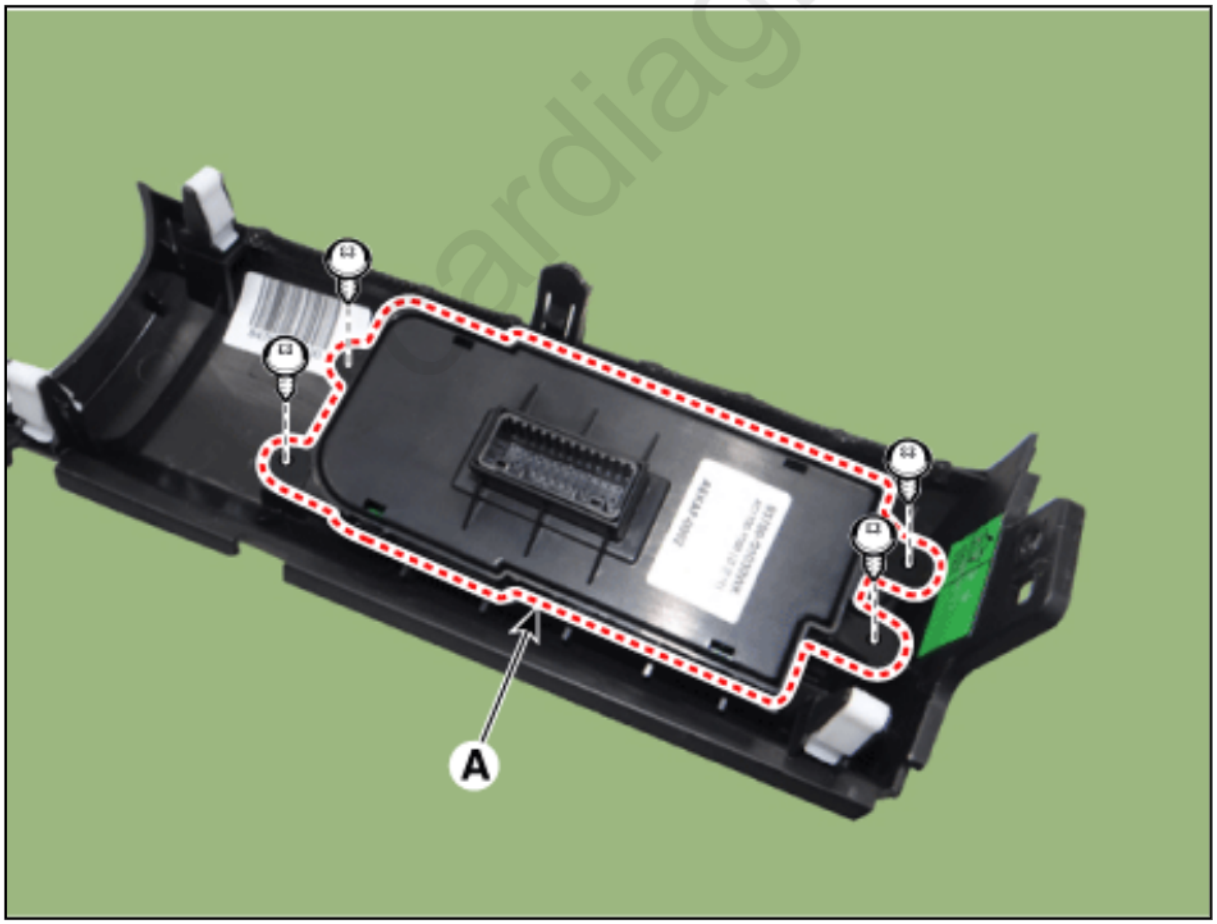

Installation

1. Install in the reverse order of the removal.

Inspection

1. Operate the switch, then check for continuity between terminals.

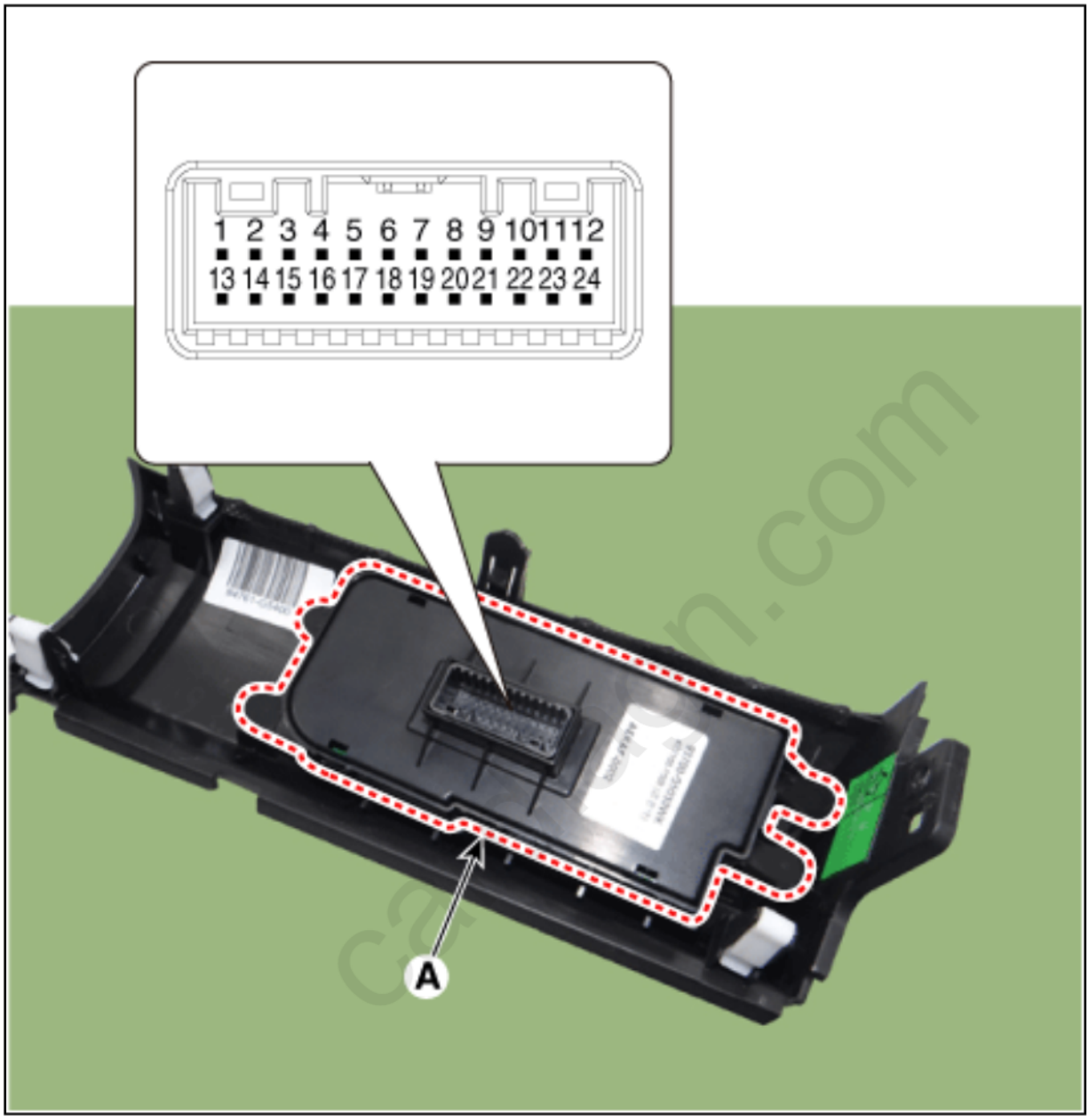

Position / Terminal	OFF	ON	Remarks
24		○	Ground
9		○	Switch

cardiagn.com

Please rate this document after reviewing at the bottom of this page.

Components

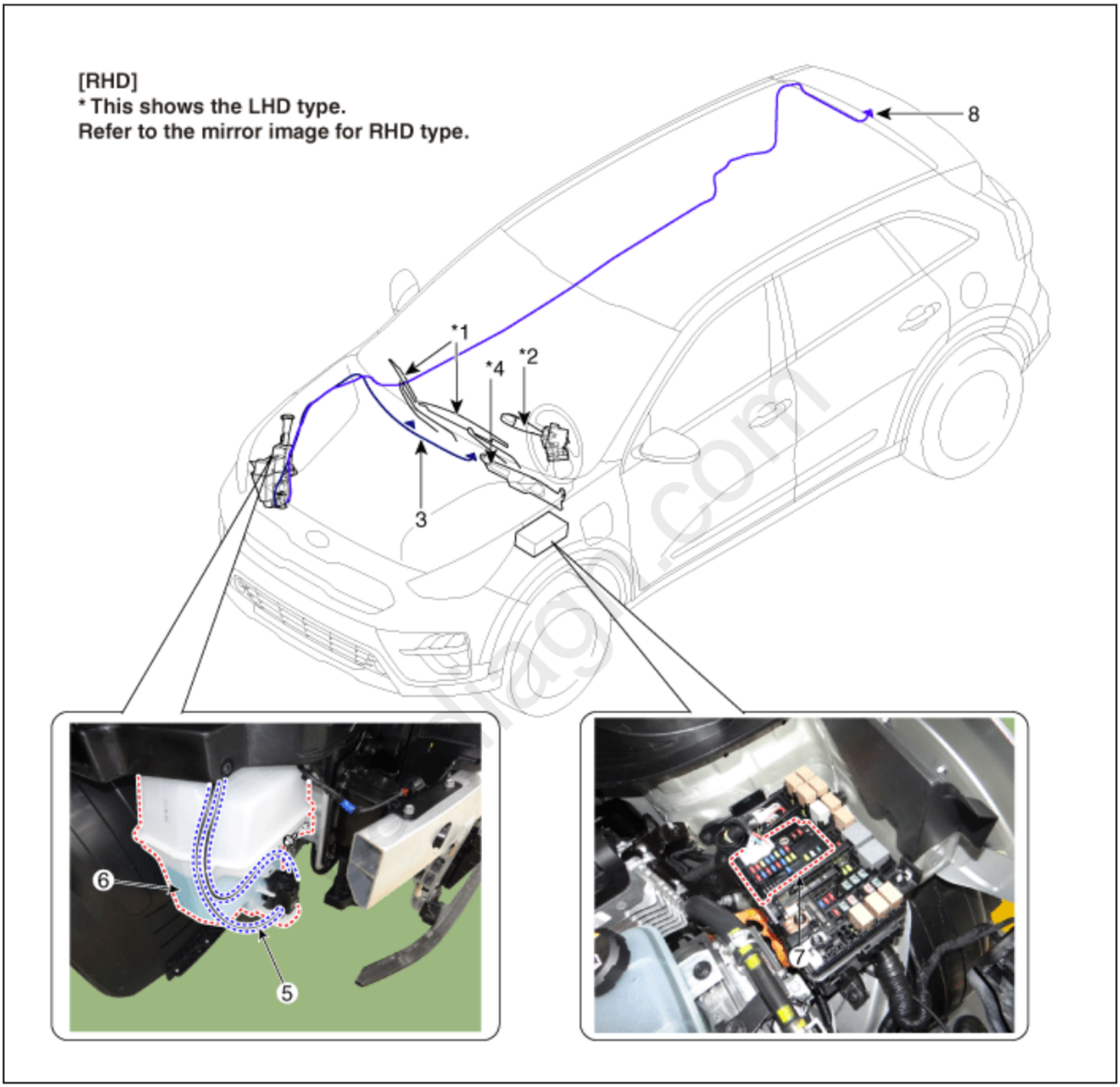

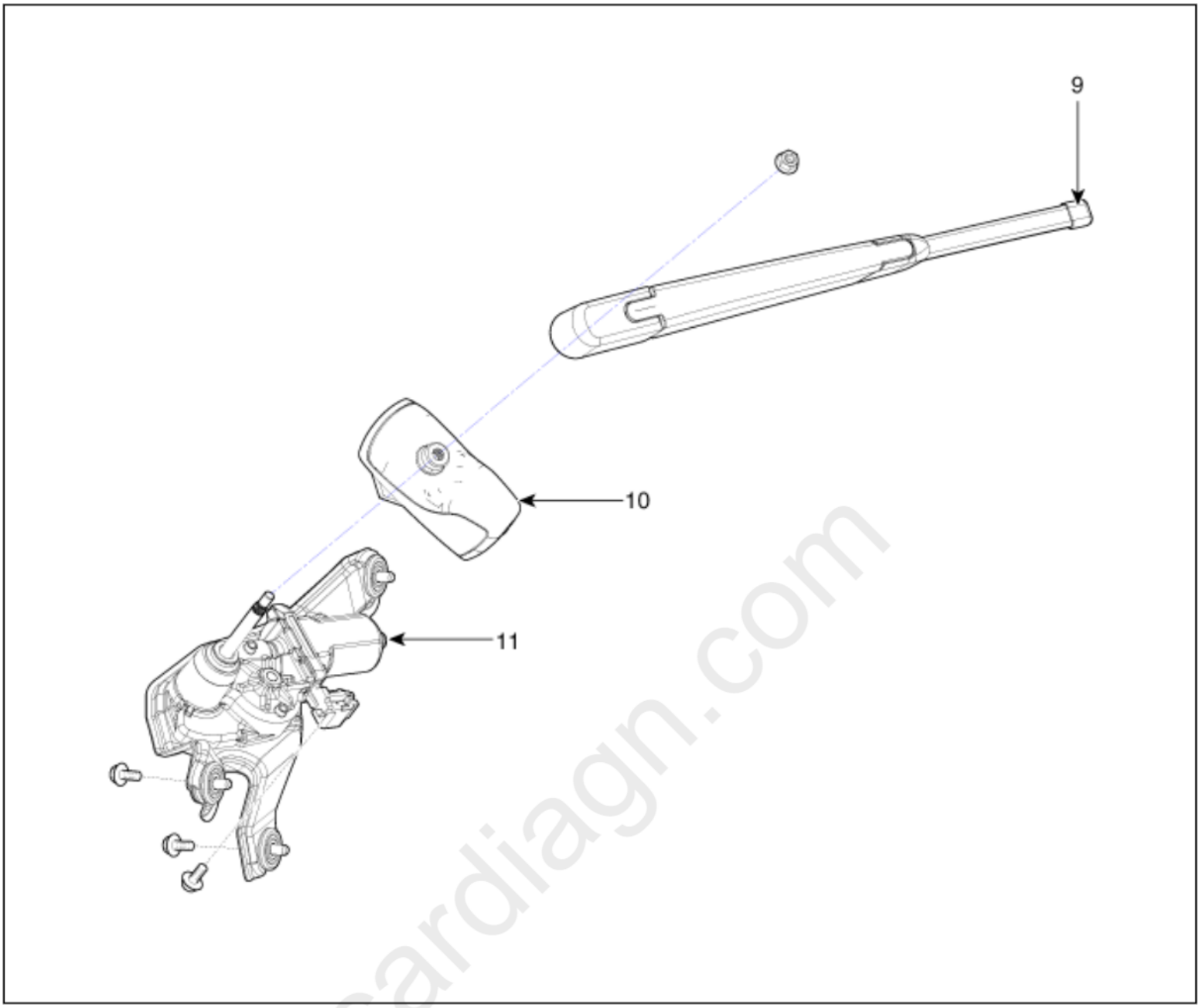

cardiagn.com

1. Front wiper arm & blade
2. Wiper & washer switch
3. Front washer hose & nozzle
4. Front wiper motor & linkage assembly
5. Washer motor
6. Washer reservoir
7. Wiper/Washer relay (Built-in engine room PCB block)
8. Rear washer hose & nolzzle
9. Rear wiper arm & blade
10. Rear view camera
11. Rear wiper motor

Please rate this document after reviewing at the bottom of this page.

Removal

Front Wiper Arm

1. If necessary, remove the blade by pushing it in the direction arrow after opening the hook (A).

- Move the windshield glass wiper blades to the service position as follows;
  After turning off the engine, move the wiper switch to the single wiping (MIST) position within 20 seconds and hold the switch more than 2 seconds until the wiper blade is in the service position.
- After turning ignition to the ON position, move the wiper switch to the single wiping (MIST) and wiper arms will return to the normal operating position.

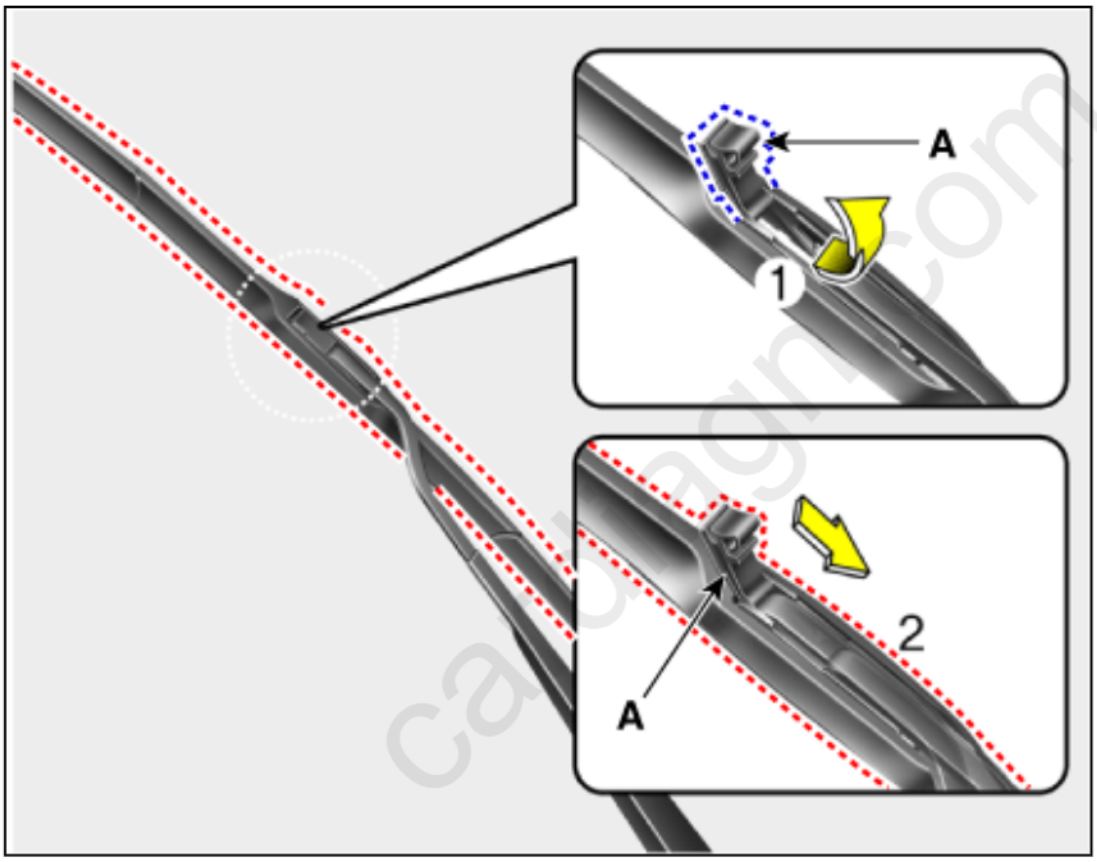

2. Remove the wiper arms (A) by loosening the nuts after removing the caps.

Tightening torque :
22.6 - 26.5 N·m (2.3 - 2.7 kgf·m, 16.6 - 19.5 lb·ft)

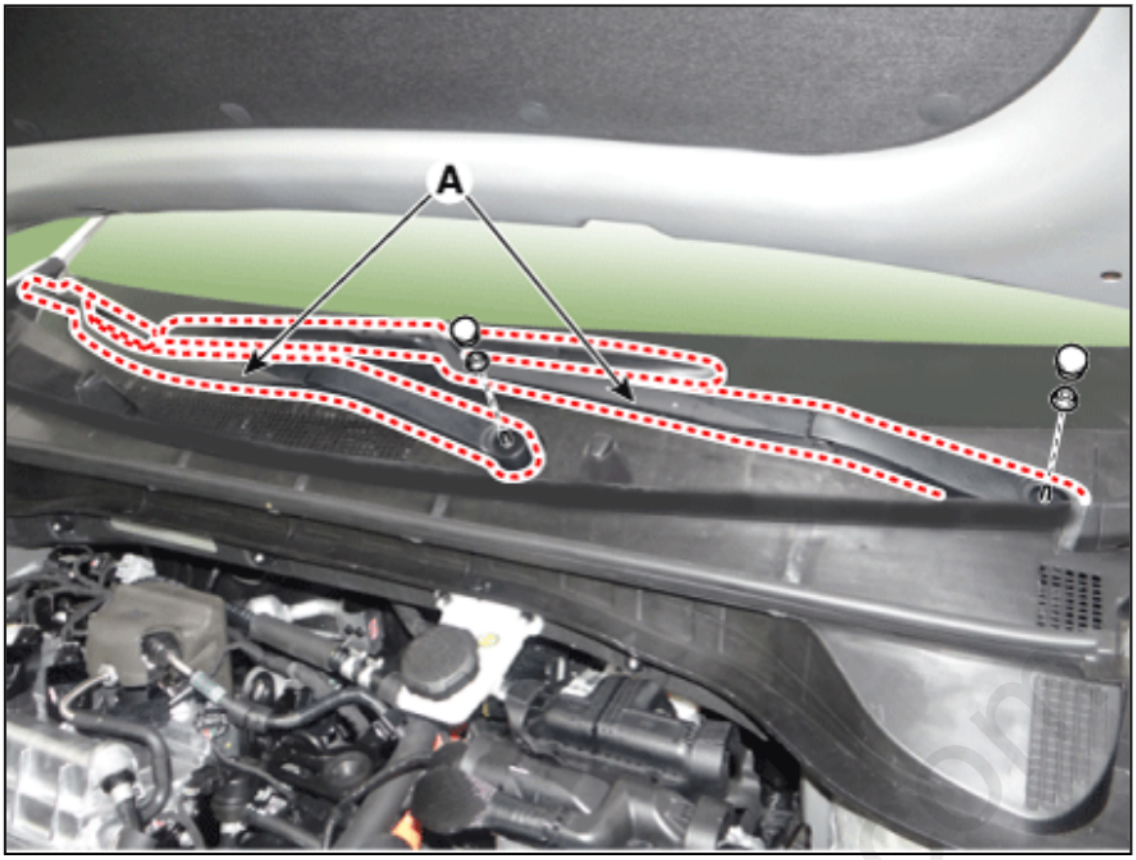

Rear Wiper Arm

1. If necessary, remove the blade (A) by pulling it.

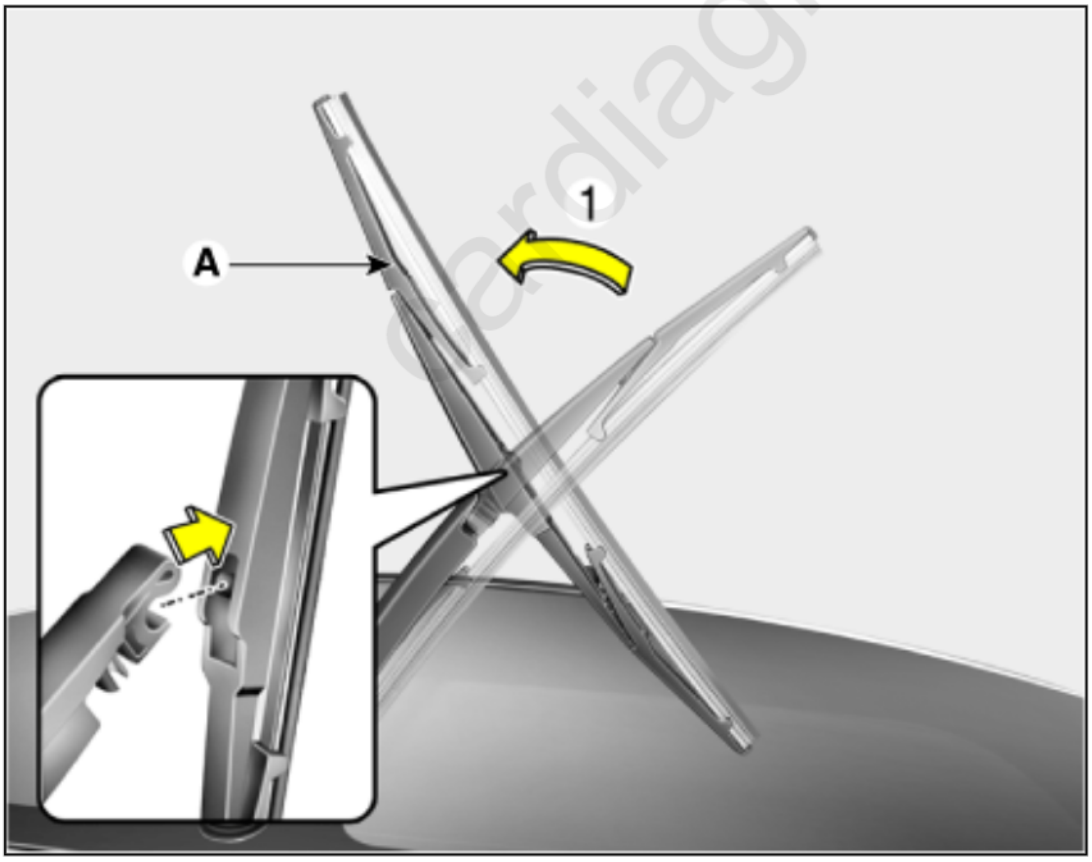

cardiagn.com

2. Remove the rear wiper cap (A).

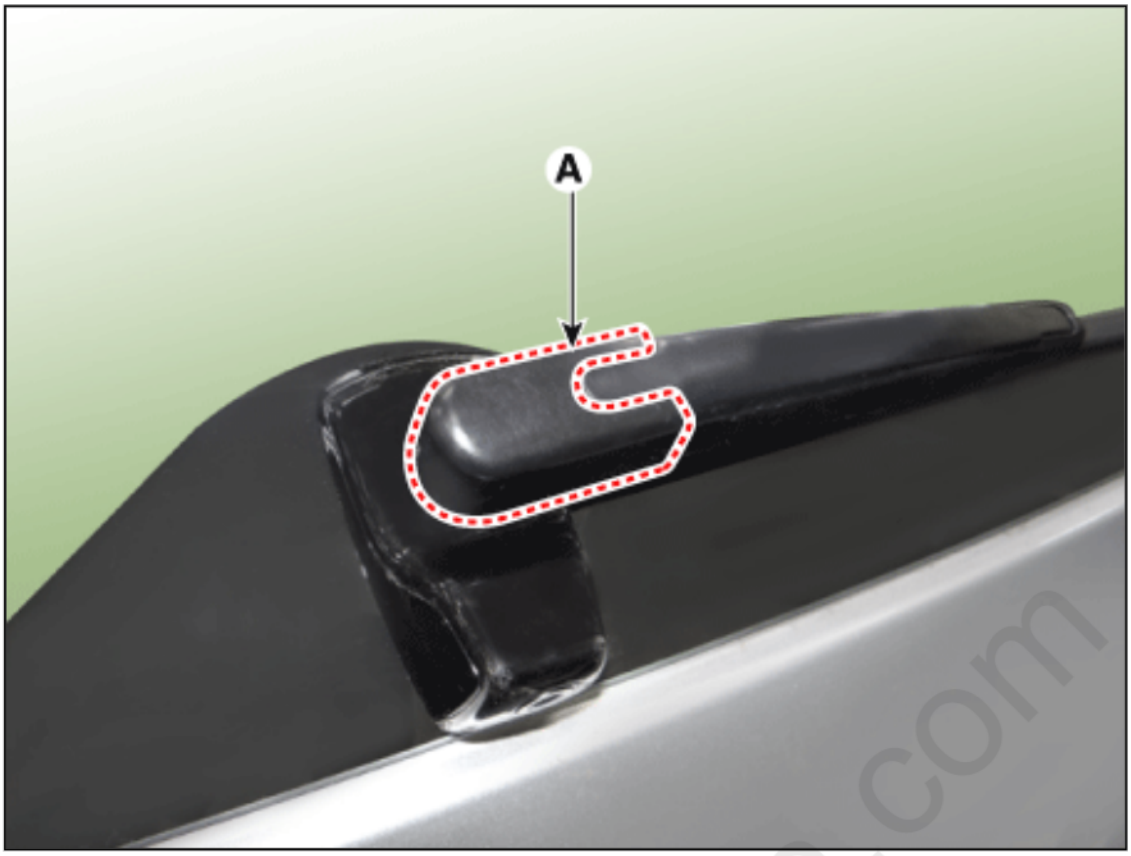

3. Remove the rear wiper arm (A) after loosening the mounting nut.

Tightening torque :
3.9 - 6.9 N·m (0.4 - 0.7 kgf·m, 2.9 - 5.1 lbf·ft)

---

cardiagn.com

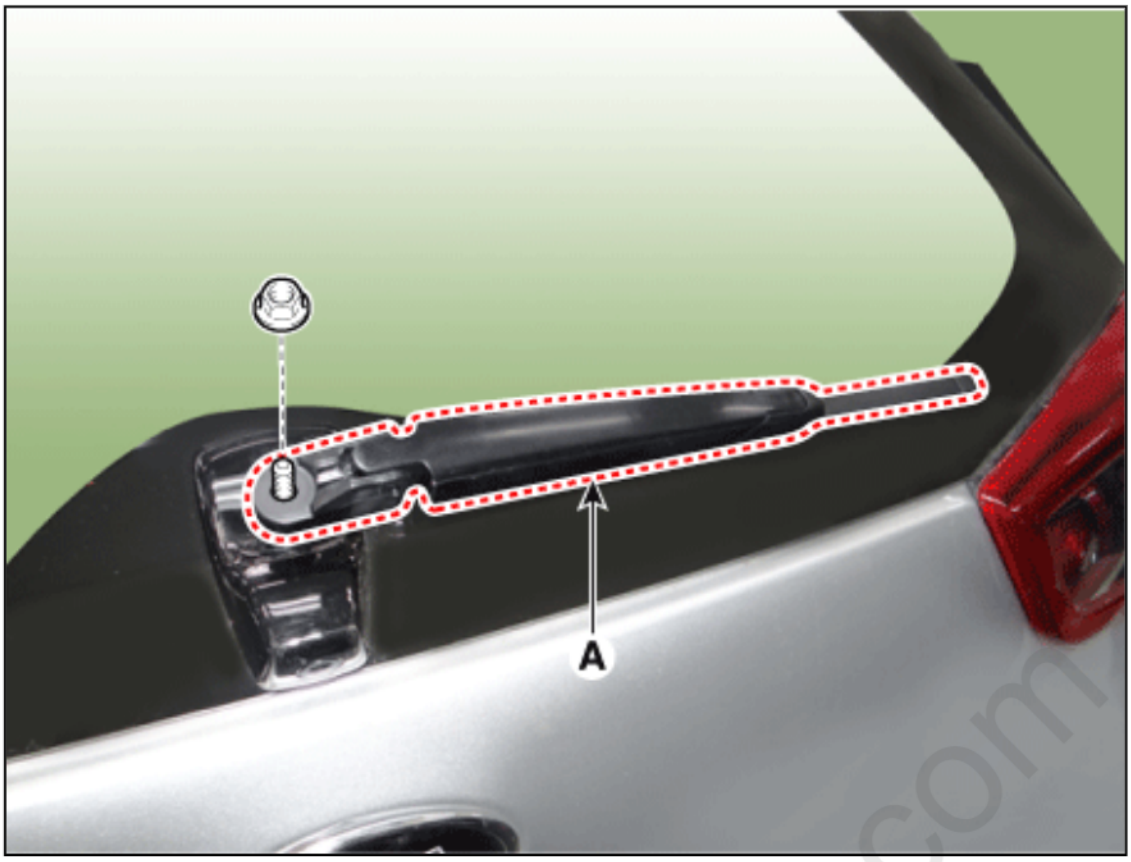

Installation

1. Install in the reverse order of removal.

- When installing, place the wiper arm to the specified position and then tighten the nut.

[Front wiper]

–Place the passenger blade to the setting position at windshield glass clear marking (A).

cardiagn.com

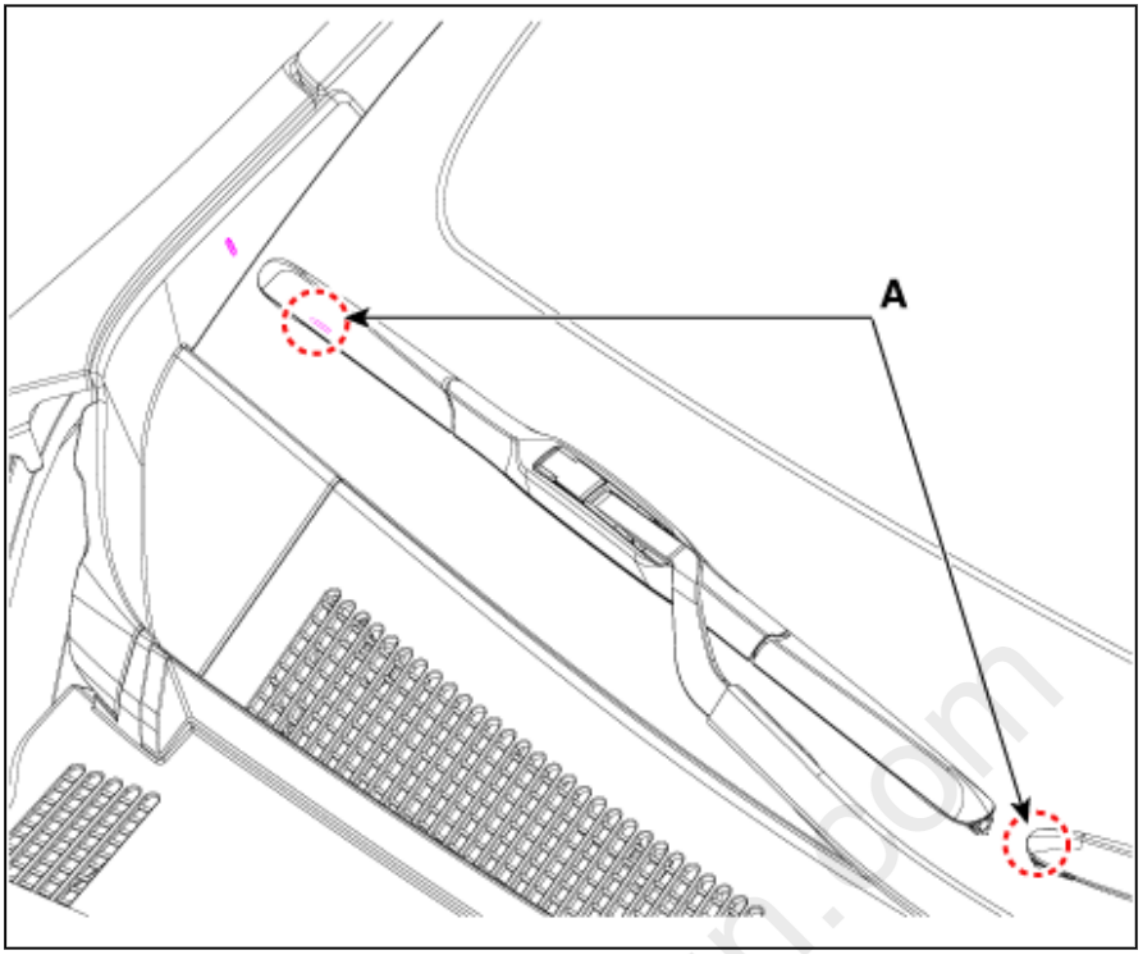

[Rear wiper]

– Wiper blade to be lined up on marking (A).

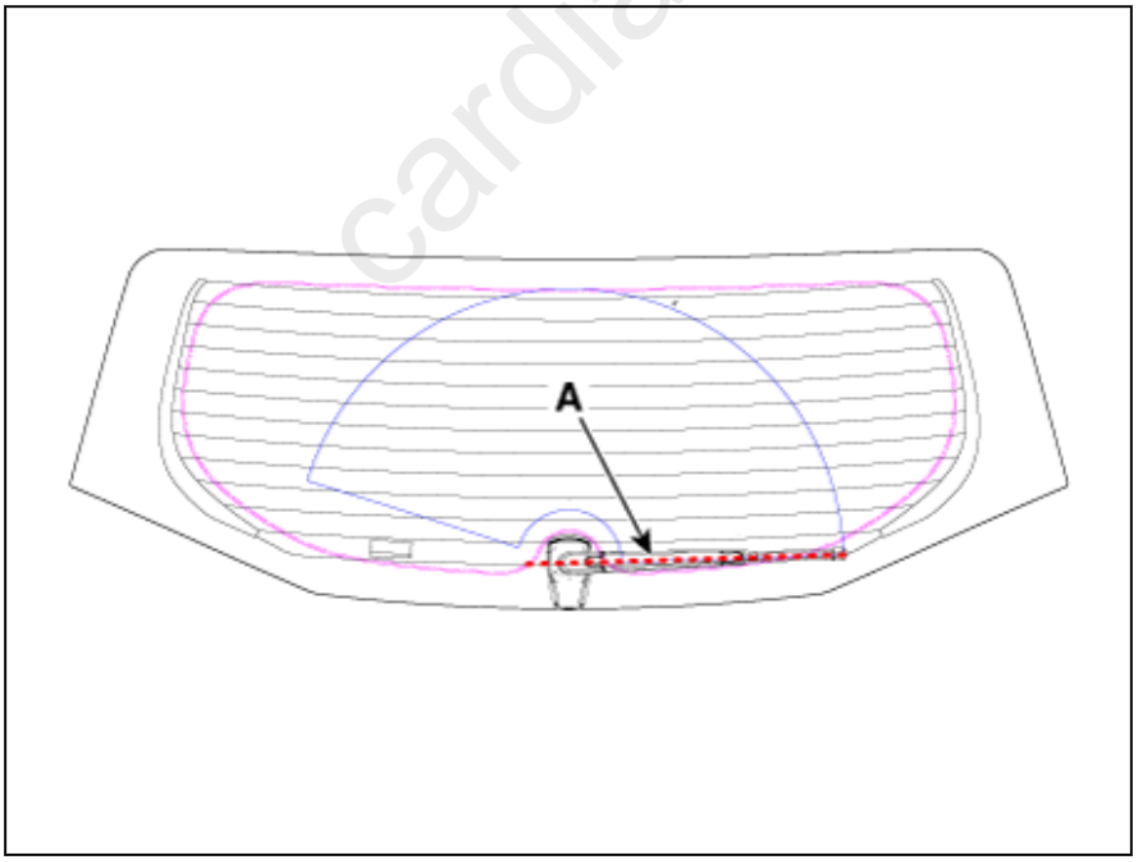

cardiagn.com

cardiagn.com

Please rate this document after reviewing at the bottom of this page.

Connector and Terminal
Function

Front wiper motor

Connector	
	
Pin	Function
1	-
2	IGN 2
3	Parking
4	High
5	Ground
6	Low

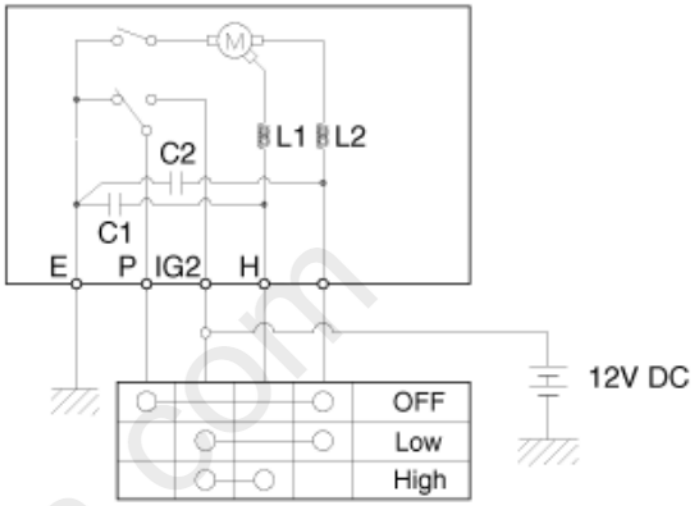

Rear wiper motor

Connector	
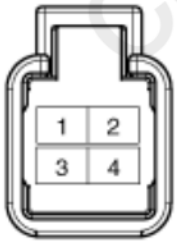	
Pin	Function
1	Power
2	Parking
3	Ground
4	Switch

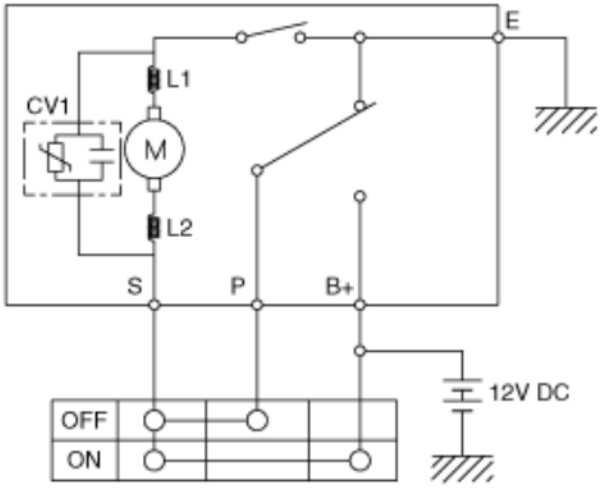

cardiagn.com

Please rate this document after reviewing at the bottom of this page.

Removal

Front Wiper Motor

1. Remove the cowl top cover.
   (Refer to Body - "Cowl Top Cover")
2. Disconnect the wiper motor connector (A).

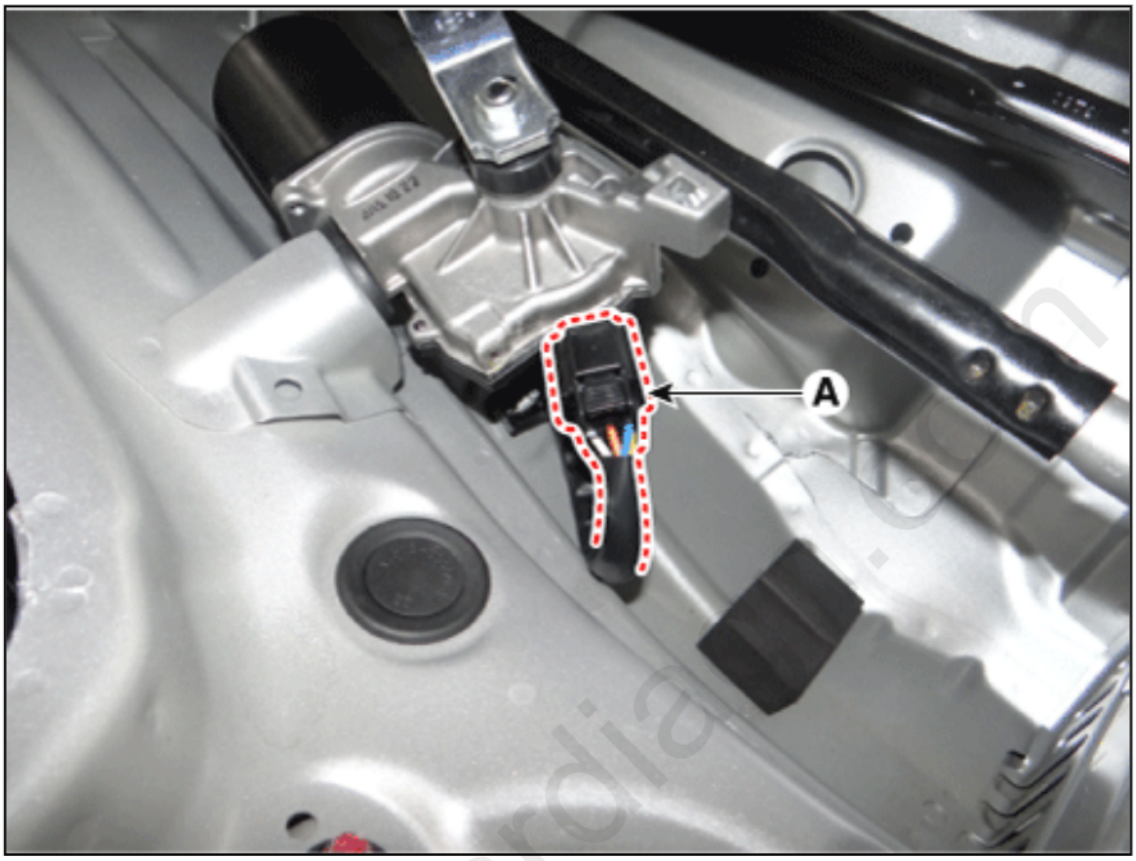

3. Remove the wiper motor & linkage assembly (A) after loosening the mounting bolts.

Tightening torque :
6.9 - 10.8 N·m (0.7 - 1.1 kgf·m, 5.1 - 8.0 lb·ft)

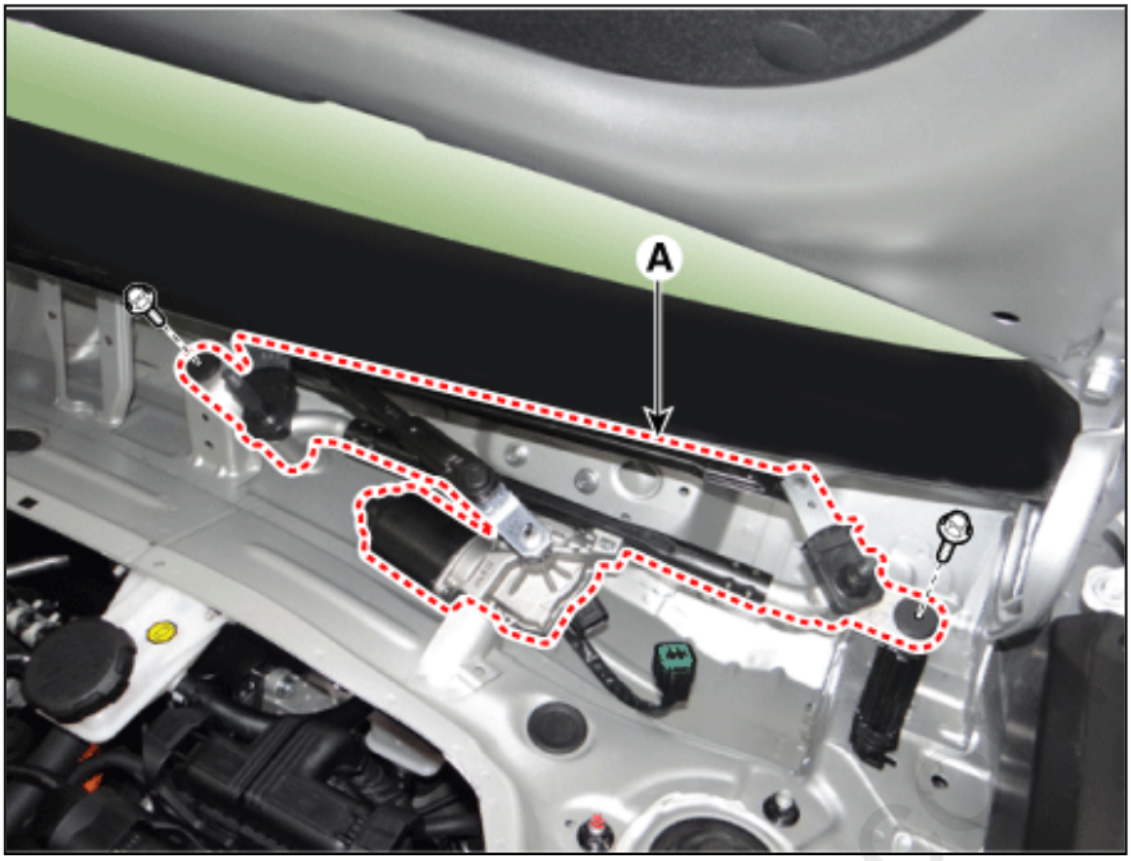

Rear Wiper Motor

1. Remove the rear wiper.
   (Refer to Wiper/Washer - "Wiper Arm")
2. Remove the tailgate trim.
   (Refer to Body - "Tailgate Trim")
3. Disconnect the rear wiper motor connector (A).

cardiagn.com

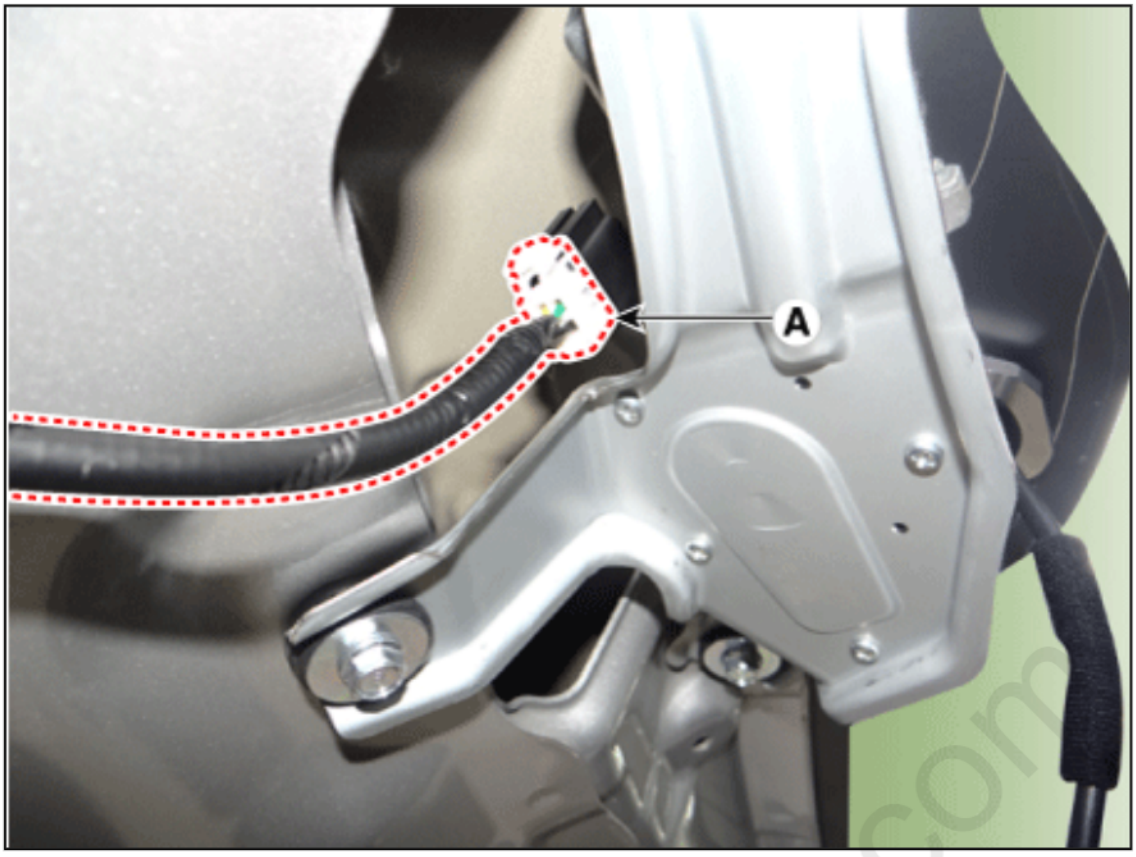

4. Remove the rear wiper motor (A) after loosening the bolts.

Tightening torque :
6.9 - 10.8 N·m (0.7 - 1.1 kgf·m, 5.1 - 8.0 lb·ft)

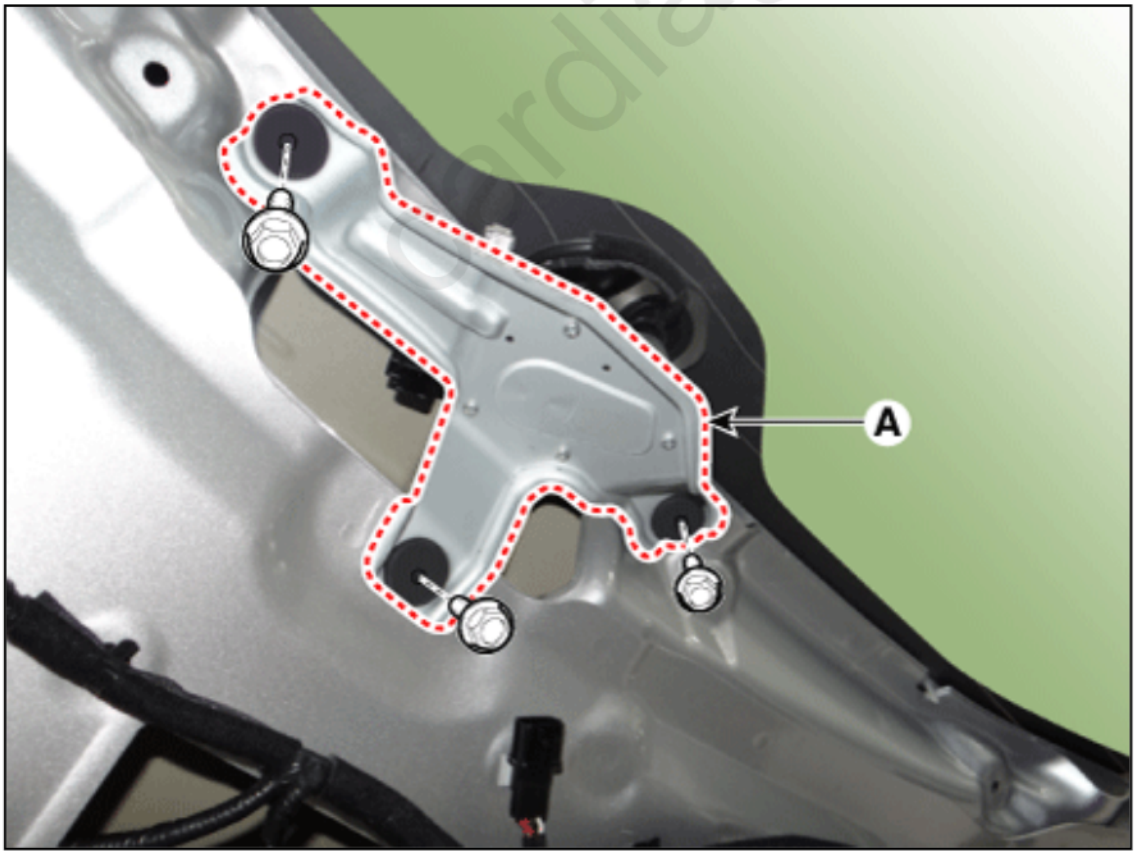

Installation

1. Install in the reverse order of the removal.

Inspection

Diagnosis With KDS

1. In the body electrical system, failure can be quickly diagnosed by using the vehicle diagnostic system (KDS).
   The diagnostic system(KDS) provides the following information.
   (1) Self diagnosis : Checking failure and code number (DTC).
   (2) Current data : Checking the system input/output data state.
   (3) Actuation test : Checking the system operation condition.
   (4) Additional function : Controlling other features including system option setting and zero point adjustment.
2. Select the 'Car model' and the 'Body Control Module (BCM)' to be checked in order to check the vehicle with the tester.
3. Select the 'Current Data' menu to search the current state of the input/output data.

Front Wiper Motor Inspection

1. Disconnect the front wiper motor connector.



Pin	Function
1	-
2	IGN2
3	Parking
4	High
5	Ground
6	Low

2. Attach the positive (+) lead from the battery to terminal 2 and the negative (-) lead to terminal 5.

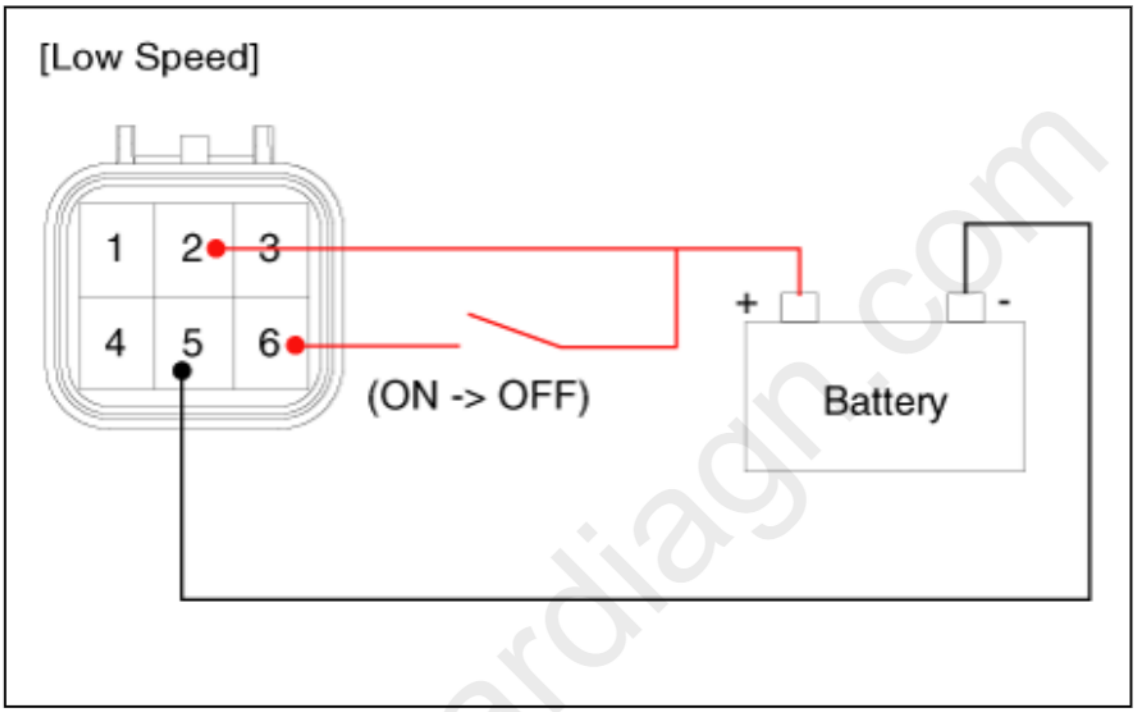

cardiagn.com

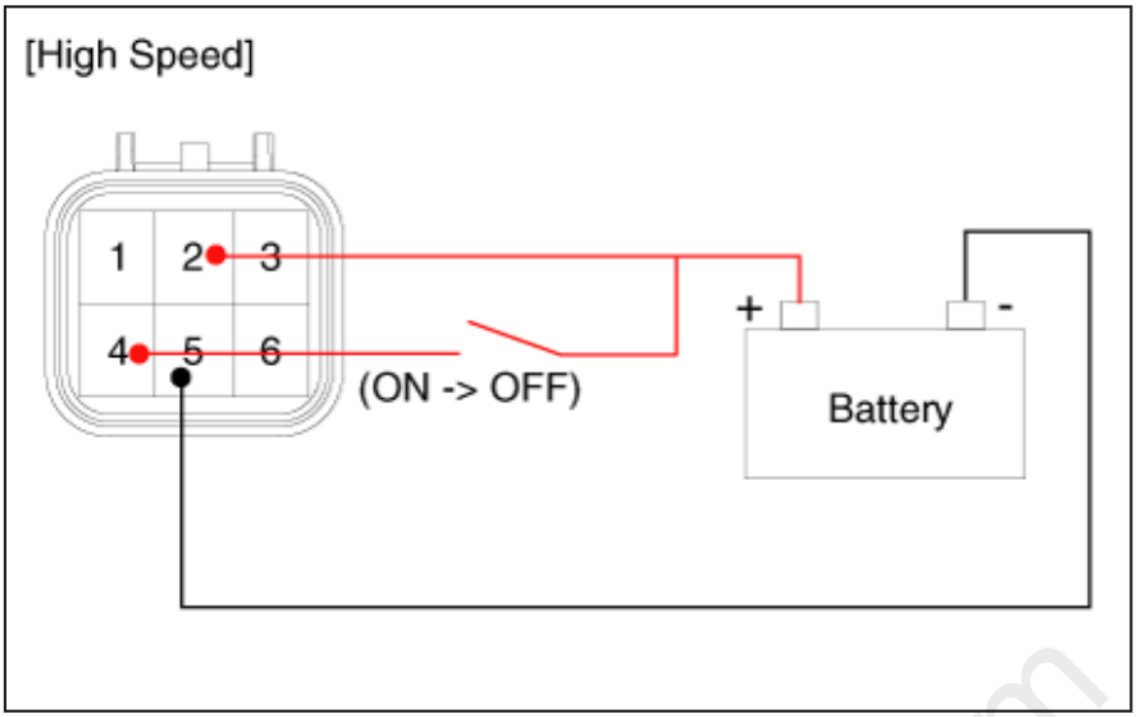

Rear Wiper Motor Inspection

1. Disconnect the rear wiper motor connector.





Pin	Function
1	Battery (+)
2	Parking
3	Ground
4	Switch signal (+)

2. Connect positive (+) battery cables to terminal 4 and negative (-) battery cables to terminal 3 respectively.

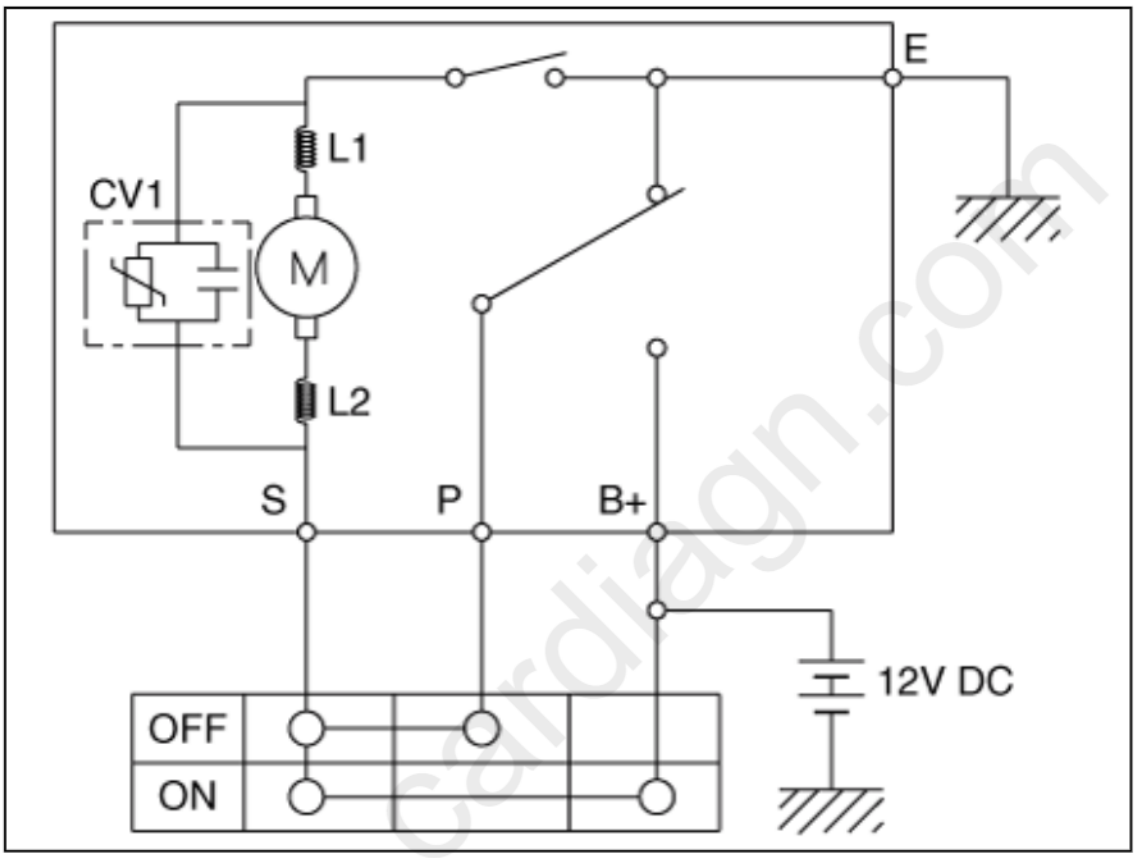

3. Check that the motor operates normally. If they are abnormal, replace the wiper motor.

Rear Wiper Motor Automatic Stop Operation Check

1. Operate the motor at low speed using the stalk control.
2. Stop the motor operation anywhere except at the off position by disconnecting the motor connector.
3. Connect the positive (+) lead from the battery to terminal 1 and the negative (-) lead to terminal 3.
4. Connect the motor terminal 2 and terminal 4.

cardiagn.com

5. Check that the motor stops running at the off position.

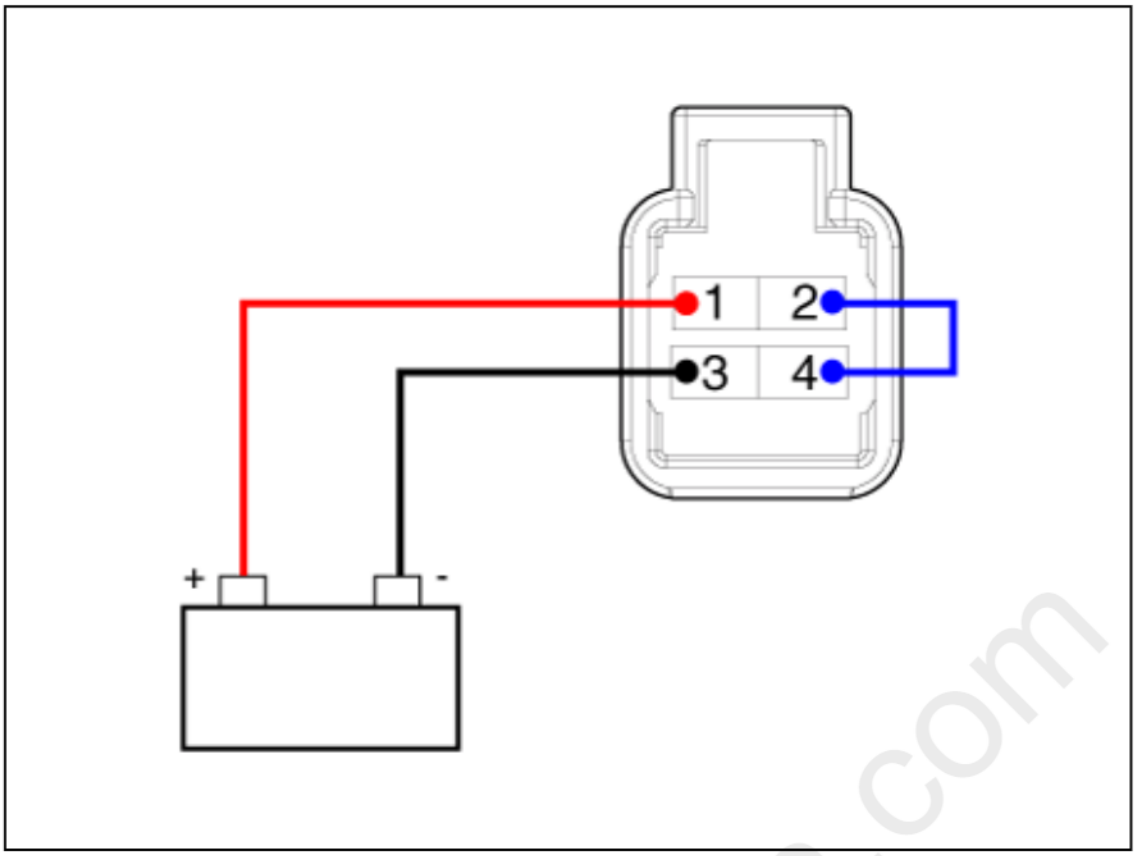

cardiagn.com

Please rate this document after reviewing at the bottom of this page.

Inspection

1. With the washer motor connected to the reservoir tank, fill the reservoir tank with water.

> Before filling the reservoir tank with water, check the filter for foreign material or contamination. if necessary, clean the filter.

2. Connect positive (+) battery cables to power terminal (Front : 1, Rear 3) and negative (-) battery cables to ground terminal 2 respectively.

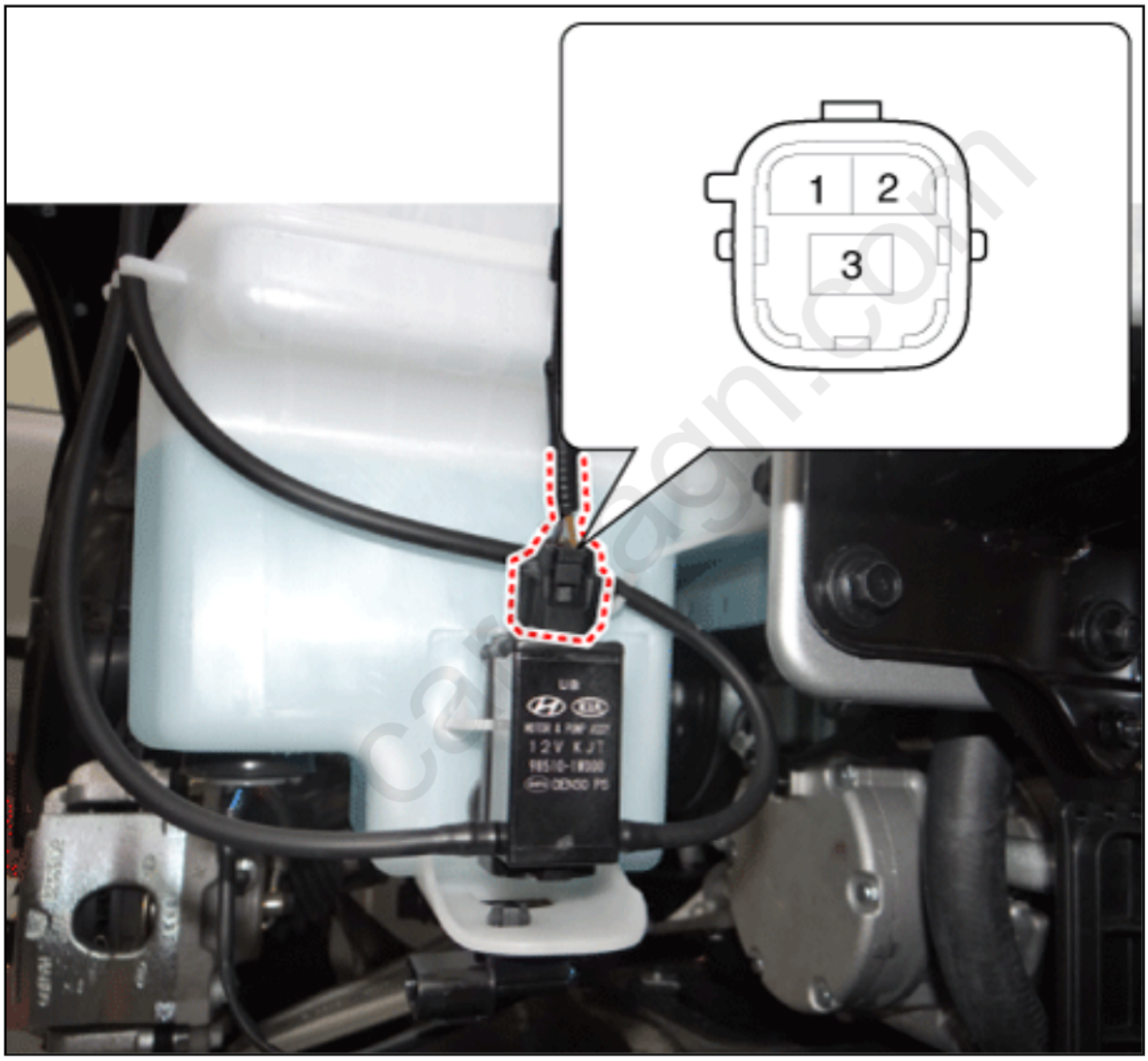

Pin	Function
1	Front washer (+)
2	Ground
3	Rear washer (+)

3. Check that the motor operates normally and the washer motor runs and water sprays from the front nozzles.
4. If they are abnormal, replace the washer motor.

Washer Fluid Level Sensor Switch

1. Drain the washer fluid less than 650 cc.
2. Check for continuity between the No. 1 and No.2 terminal in each float position.
   There should be continuity when the float is down.
   There should be no continuity when the float is up.
3. If the continuity is not as specified, replace the washer fluid level switch

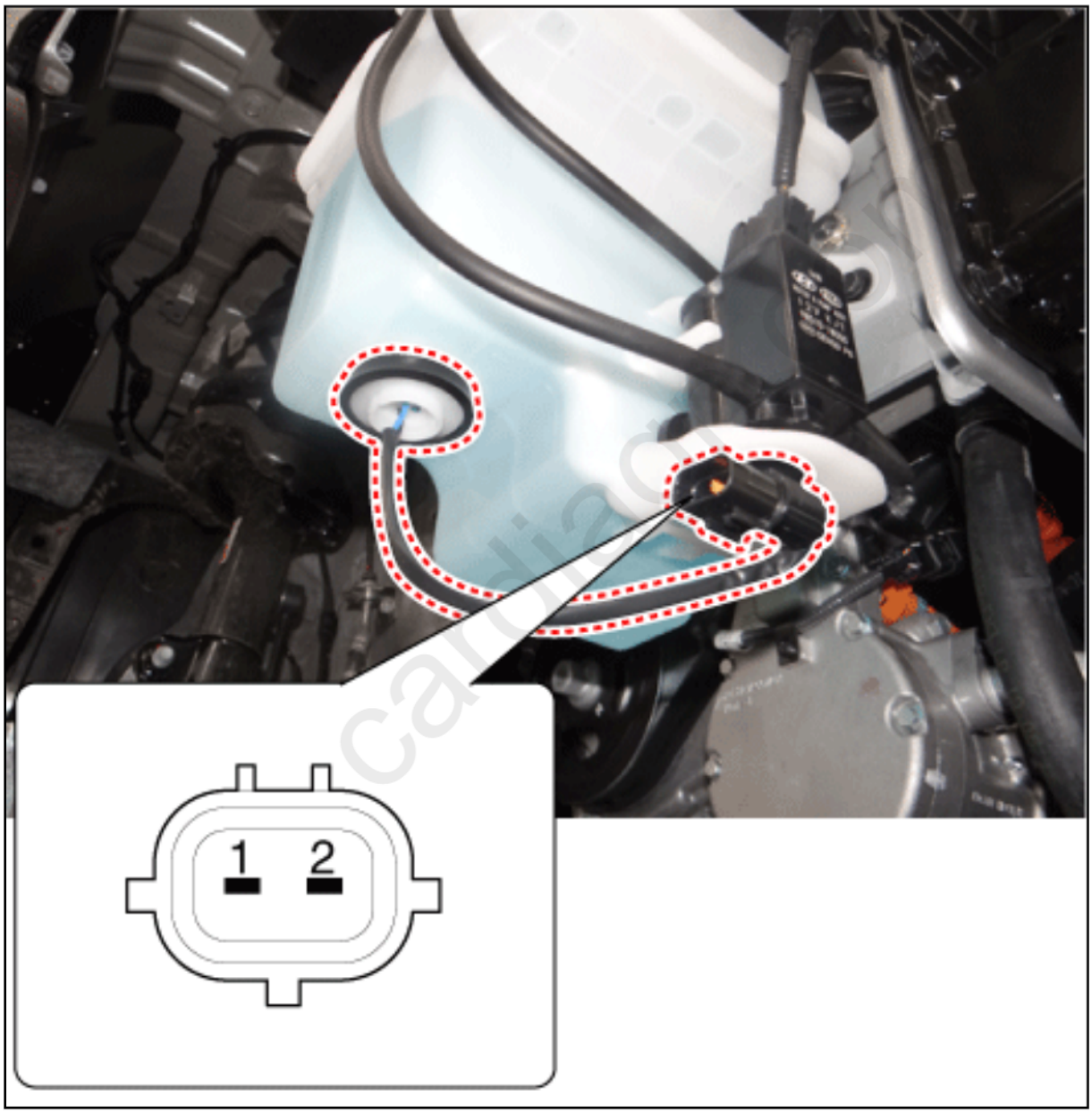

Terminal / Position	1	2
Over 650cc		
Under 650cc	○	○

(Tolerance : -50cc ~ +100cc)

4. If the continuity is not as specified, replace the washer fluid level switch.

Removal

Washer Motor

1. Remove the engine room under cover.
   (Refer to Engine Mechanical System - "Engine Room Under Cover")
2. Drain the washer fluid to less than 650 cc.
3. Disconnect the washer hose (A) and washer motor connector (B).
4. Remove the front washer motor (C).

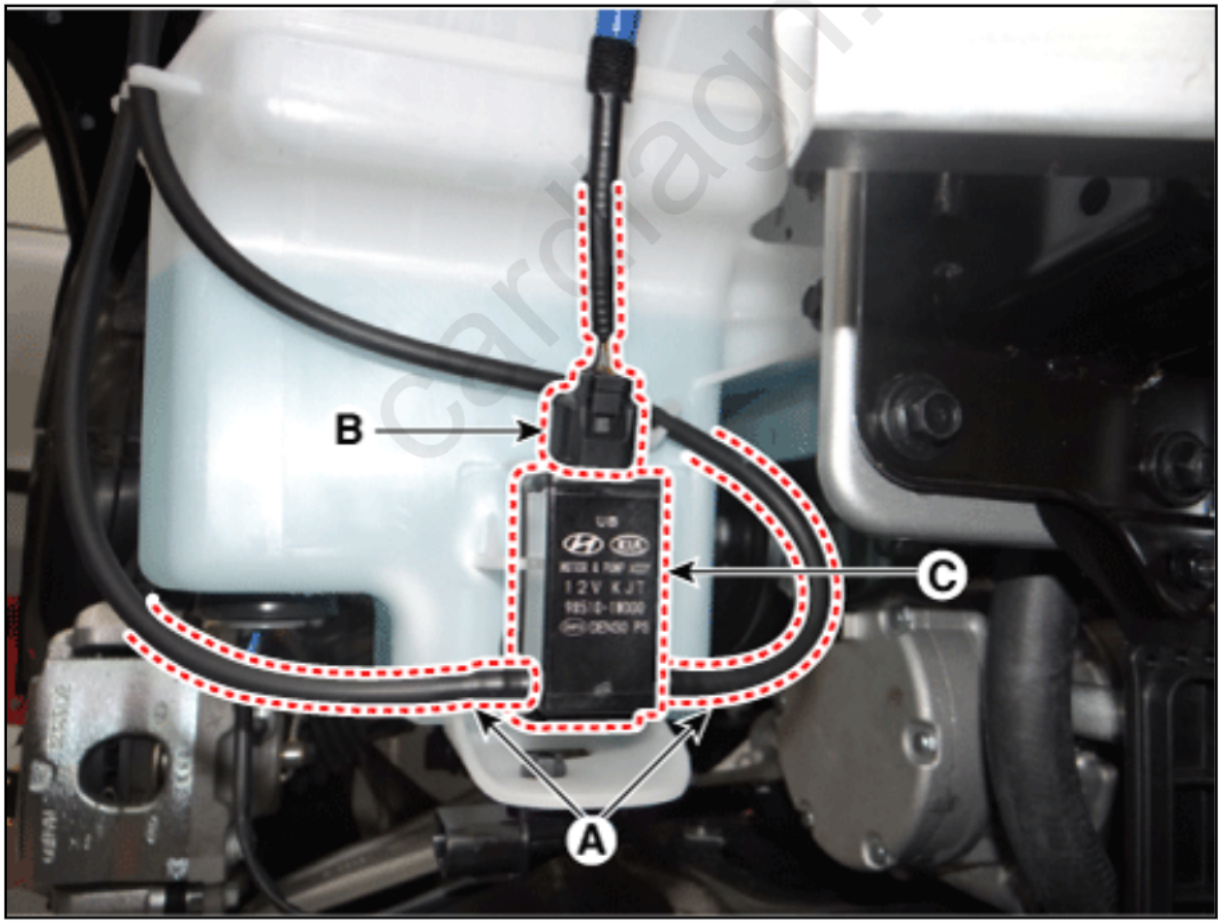

Washer Fluid Level Sensor

1. Remove the engine room under cover.
   (Refer to Engine Mechanical System - "Engine Room Under Cover")
2. Drain the washer fluid to less than 650 cc.
3. Remove the washer fluid level sensor switch (B) after disconnecting the connector (A).

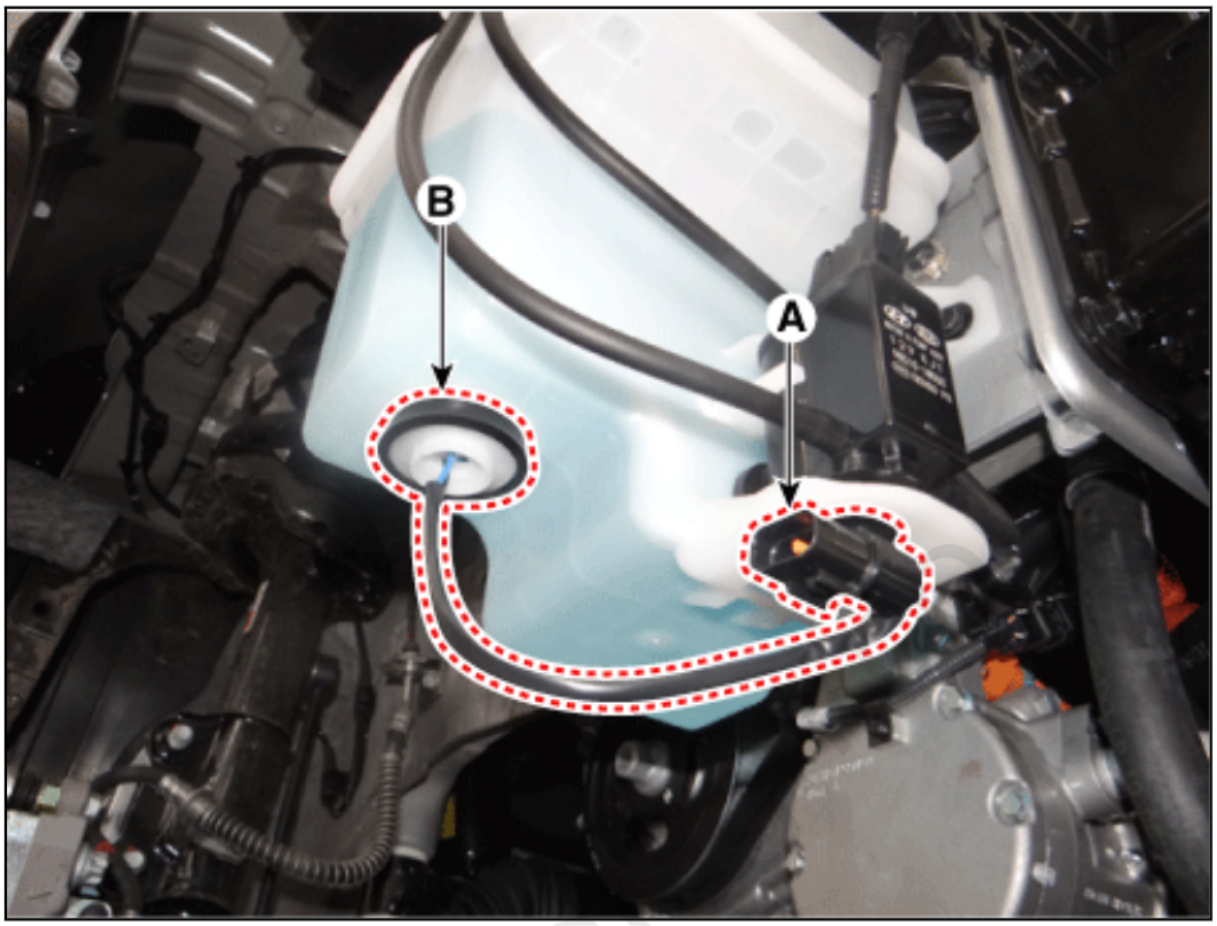

Reservoir

1. Remove the engine room under cover.
   (Refer to Engine Mechanical System - "Engine Room Under Cover")
2. Remove the front wheel guard [RH].
   (Refer to Body - "Front Wheel Guard")
3. Drain the washer fluid to less than 650 cc.

4. Disconnect the washer motor connector (A).

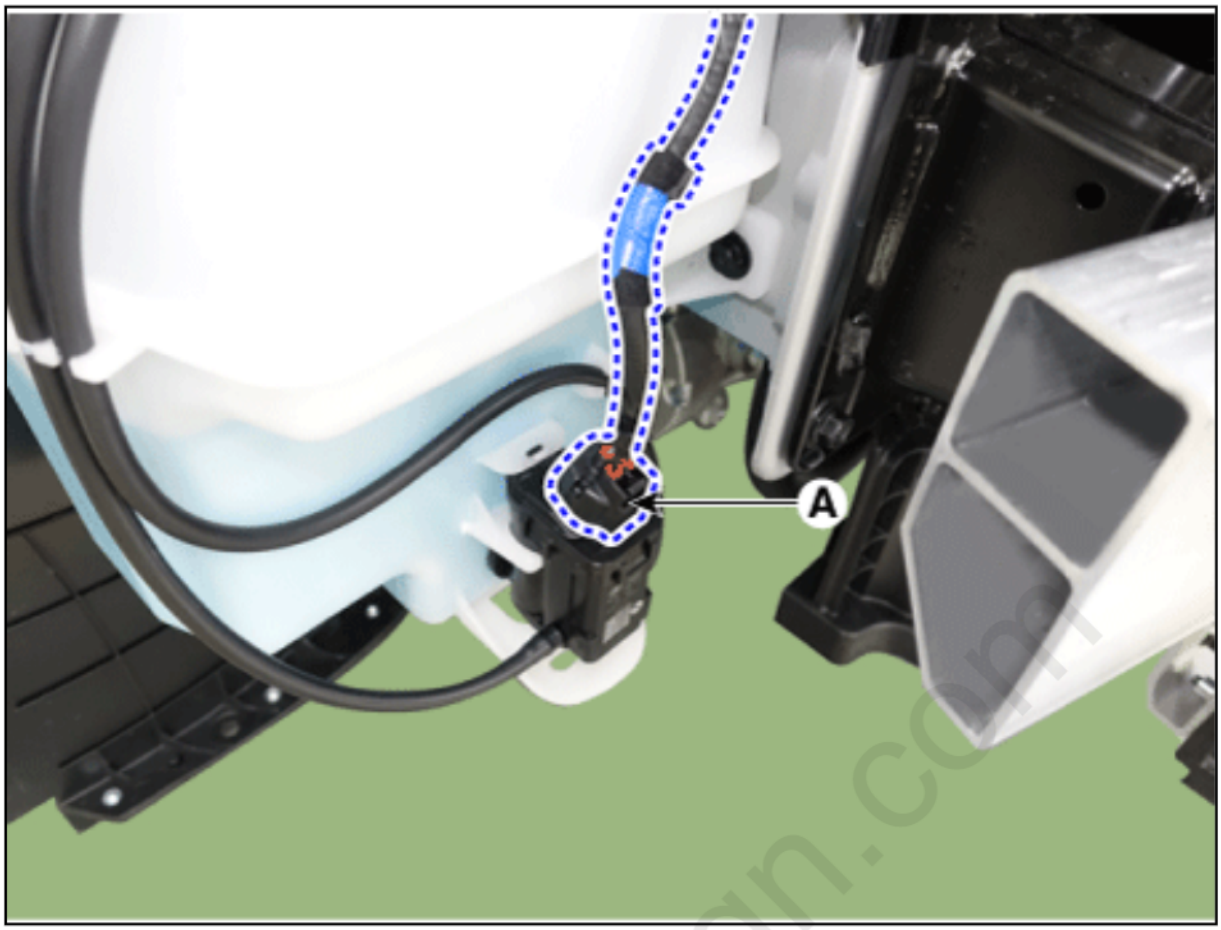

5. Remove the reservoir.
   (1) Separate the washer hose.
   (2) Remove the reservoir by loosening the bolts and screw.

cardiagn.com

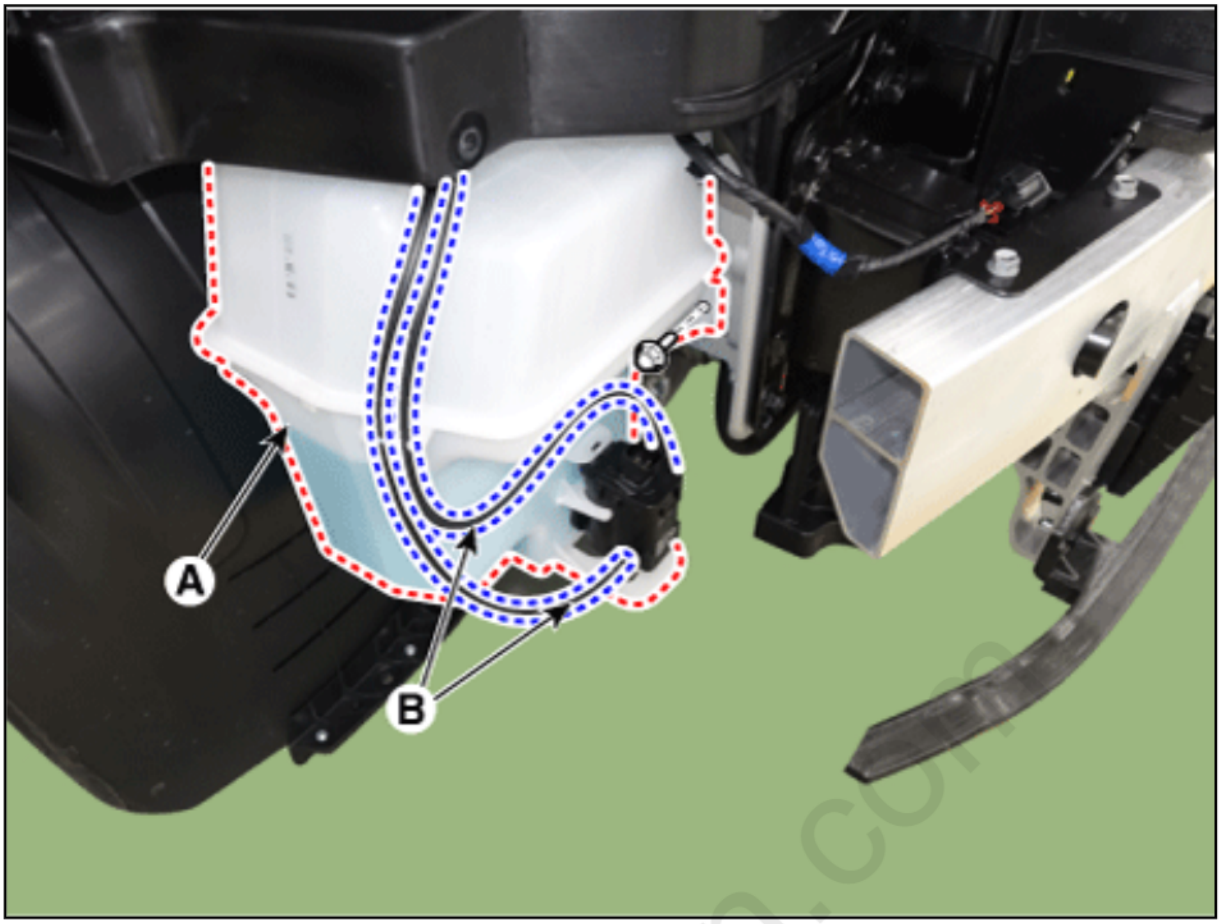

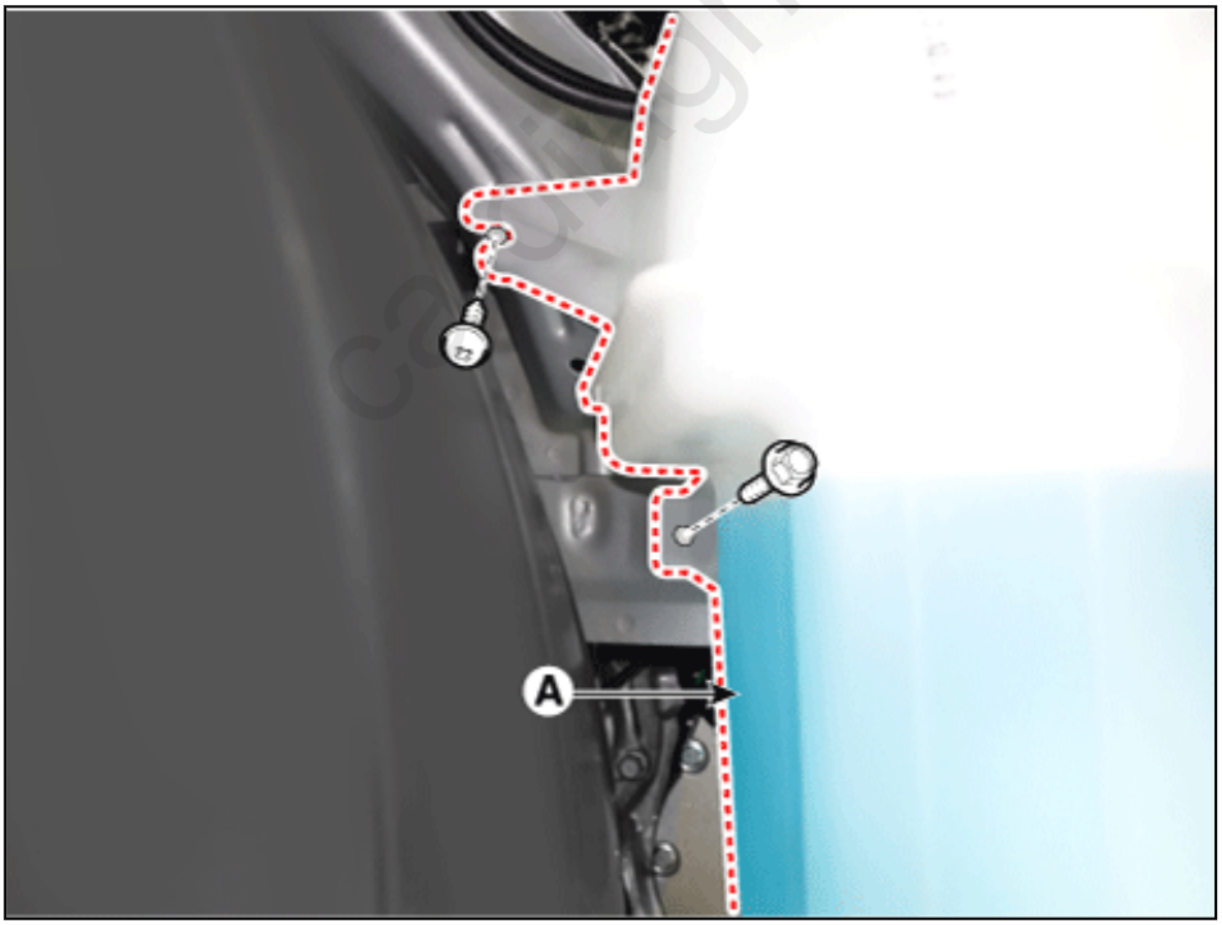

Installation

1. Install in the reverse order of removal.

cardiagn.com

Please rate this document after reviewing at the bottom of this page.

Inspection

Check point for rain sensor:

1. To properly adjust sensitivity if auto wiping operates sensitively or insensitively.



2. To check if a connector of sensor is normally connected



3. To check if sensor and bracket are normally connected.
4. To check if sensor are contaminated by foreign substances (In case that silicone gel pad of rain sensor is polluted by foreign substances, rain sensor can be reusable after they are removed by sticker roller.)

cardiagn.com



5. To check if silicone gel pad on sensor is damaged.
   –If the damaged area of silicone gel pad is more than 1.5mm (0.0591in.), then the perfect appearance and the function are not guaranteed anymore. Therefore, silicone gel pads need to be replaced.
   (Refer to Rain Sensor - "Replacement")

cardiagn.com

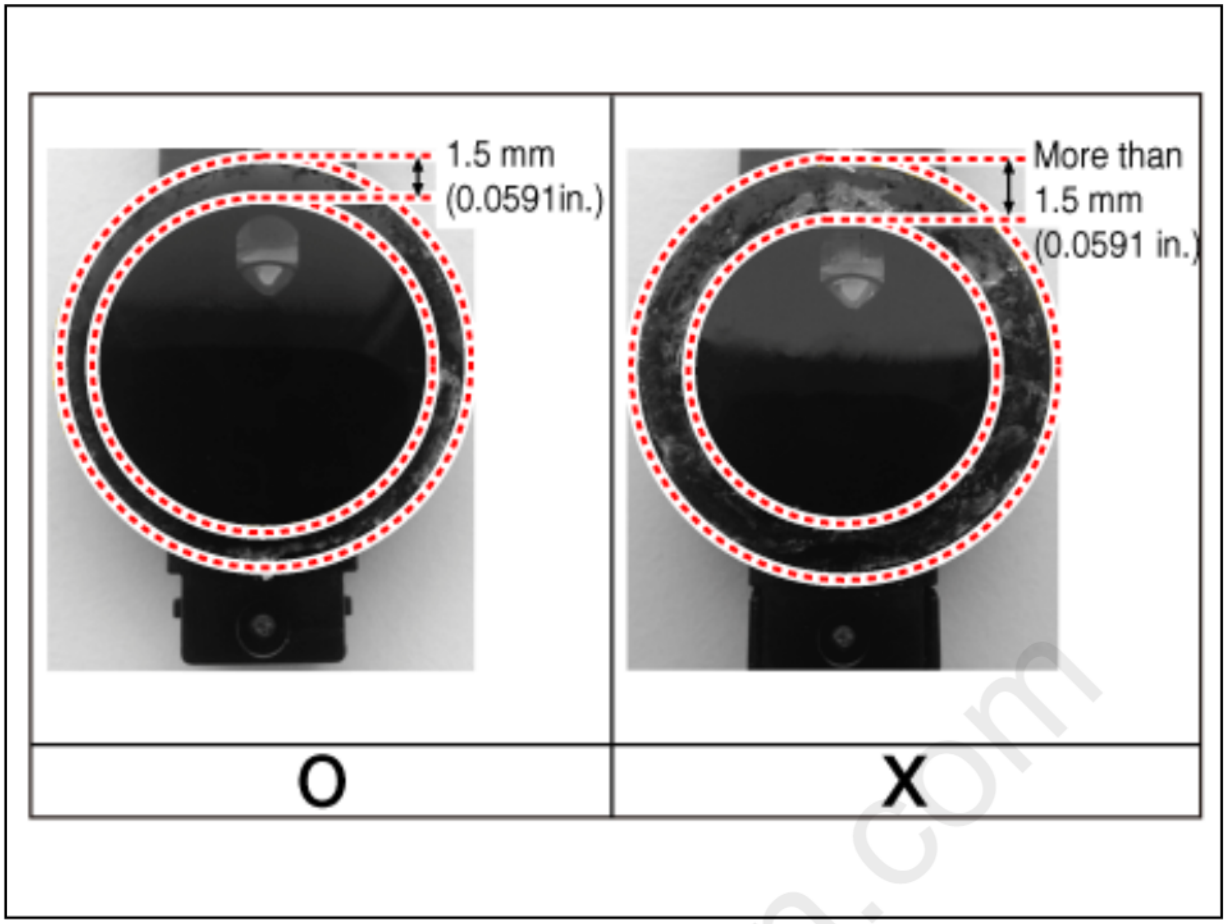

Failure case

NO.	Case	Picture	Status	Remark
1	Damage of silicone gel pad for rain sensor		- Auto wiper does not operate intermittently	Auto wiper does not activate according to damaged silicone gel pad range
2	Detached silicone gel pad from rain sensor		- Auto wiper does not operate intermittently	Auto wiper does not activate according to detached silicone gel pad range

cardiagn.com

3	Completely plugged-out rain sensor from wiring connector		- Auto wiper does not activate - DTC code can be checked through diagnostic device	DTC related with LIN communication error occurs
4	Incompletely plugged-out rain sensor from wiring connector		- Auto wiper does not operate intermittently - DTC code can be checked through diagnostic device	DTC related with LIN communication error could occur if auto wiper does not activate
5	Clamp of rain sensor incompletely assembled with bracket	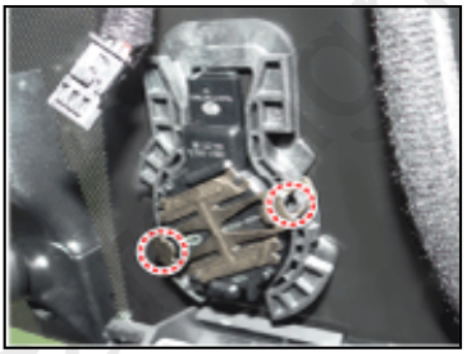	- Auto wiper does not activate	Auto wiper does not operate intermittently according to detached range from windshield
6	LIN communication error	Rain sensor fault Communication fault	- Auto wiper does not activate - DTC code can be checked through diagnostic device	DTC related with LIN communication error occurs or caused by case 3 or case 4

Removal

Caution for handling

- Carefully separate the rain sensor from the windshield as it may be damaged if separated by force.
- Do not touch sensing area of silicone.
- Be careful for contamination of foreign substances on silicone gel pad.
- After removing the rain sensor, protect the sensor surface with protection cover until installing the rain sensor to bracket for accurate function.

1. Remove the mirror wiring cover (A).



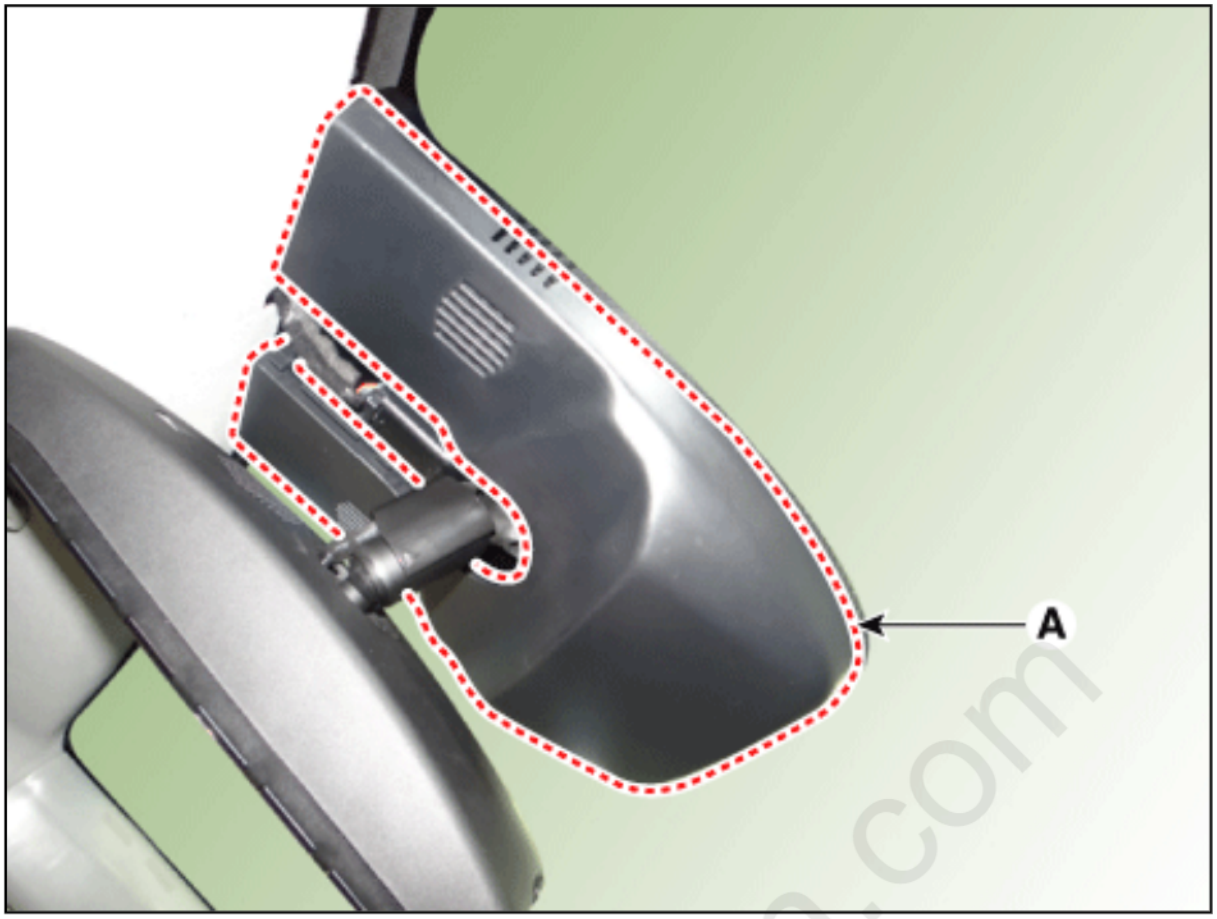

2. Disconnect the rain sensor connector (A).

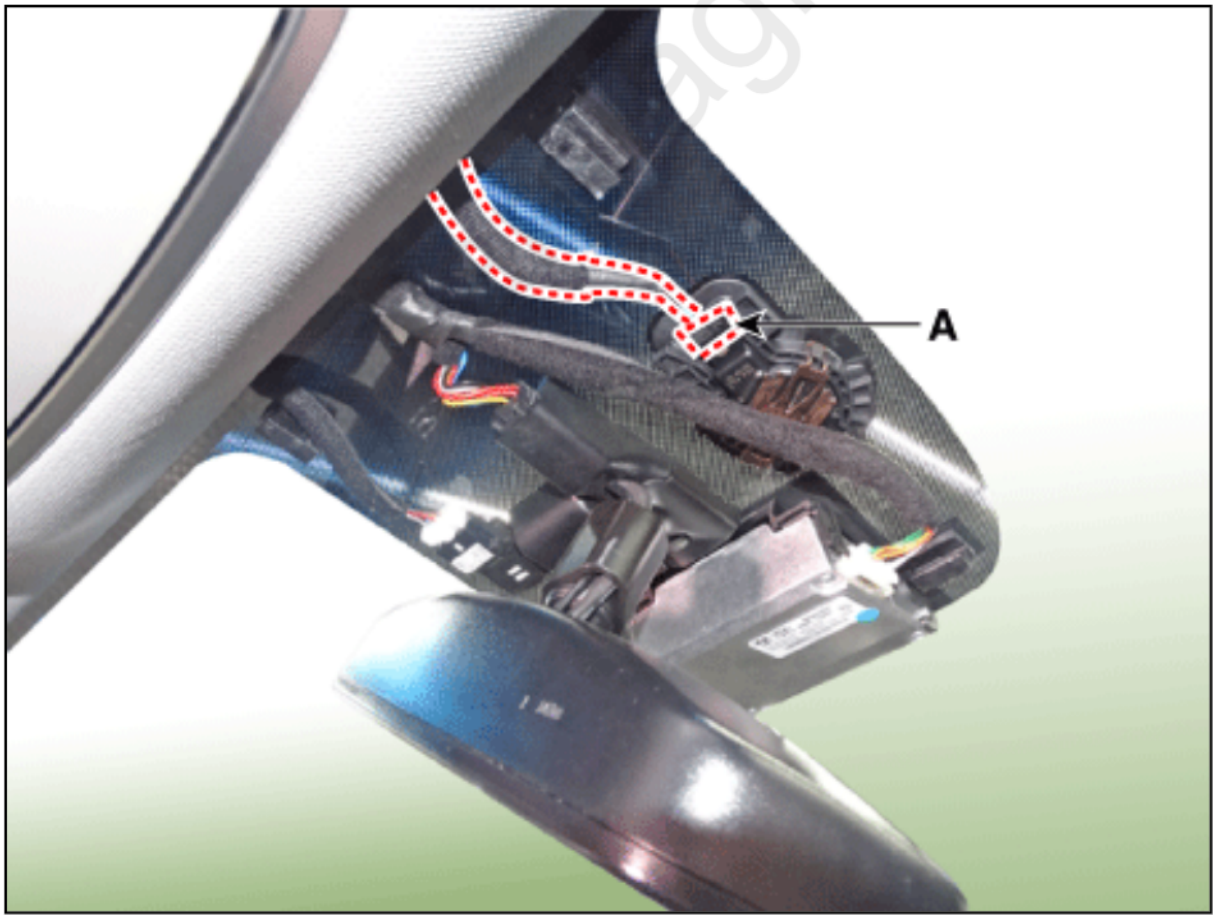

3. Be careful not to damage the cover latch by applying excessive force. To remove the latch, pull aside the latch using the cover hole with a small flat-blade screwdriver (A).

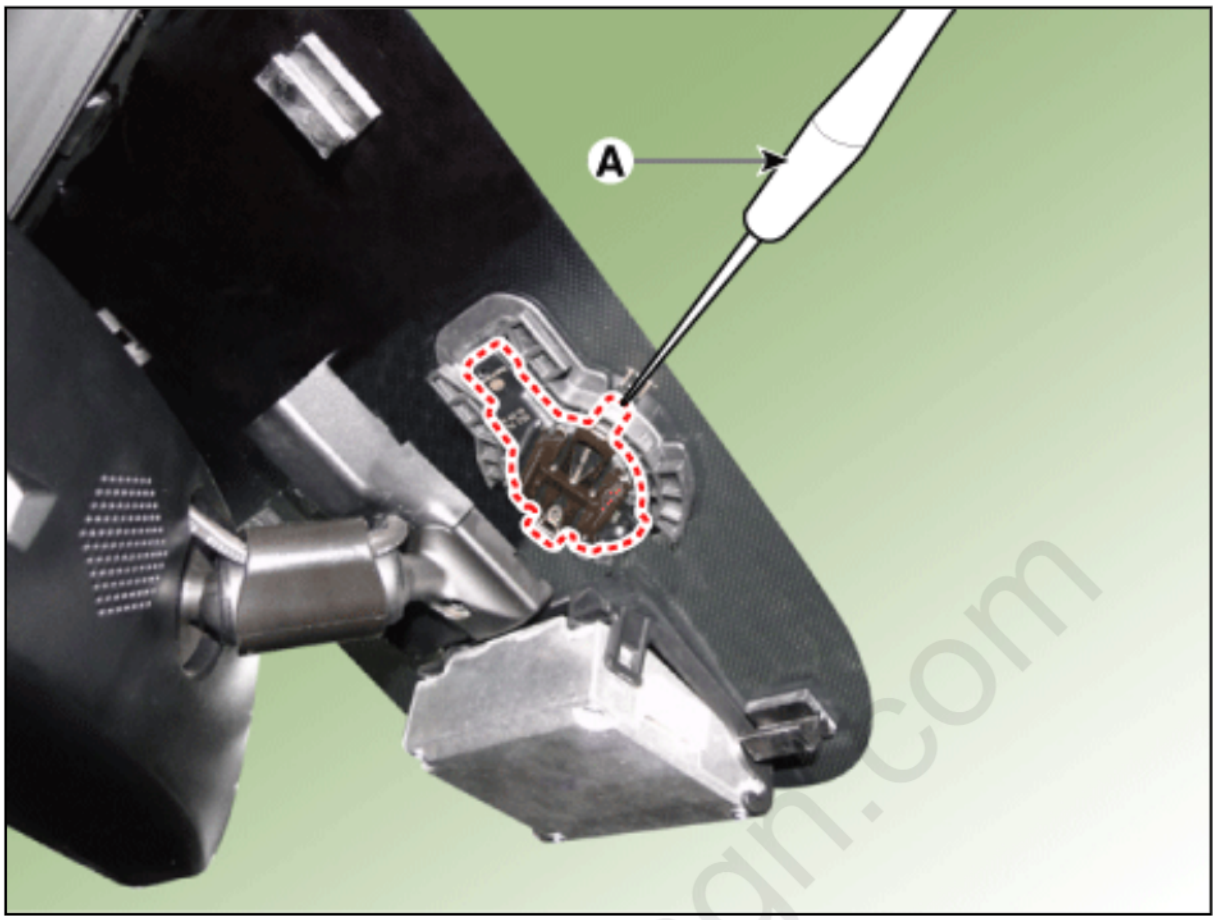

cardiagn.com



4. Rain sensor module is attached to the front windshield by glue. To replace the front windshield, remove the rain sensor module from the existing front windshield and install on the new front windshield.

Installation

1. Install in the reverse order of removal.

- **When reuse the rain sensor, check the silicone gel pad for damages, soiling and air bubbles.**

–If the damaged area of silicone gel pad is more than 1.5mm (0.0591in.), then the perfect appearance and the function are not guaranteed anymore. Therefore, silicone gel pads need to be replaced.
(Refer to Rain Sensor - "Replacement")

cardiagn.com

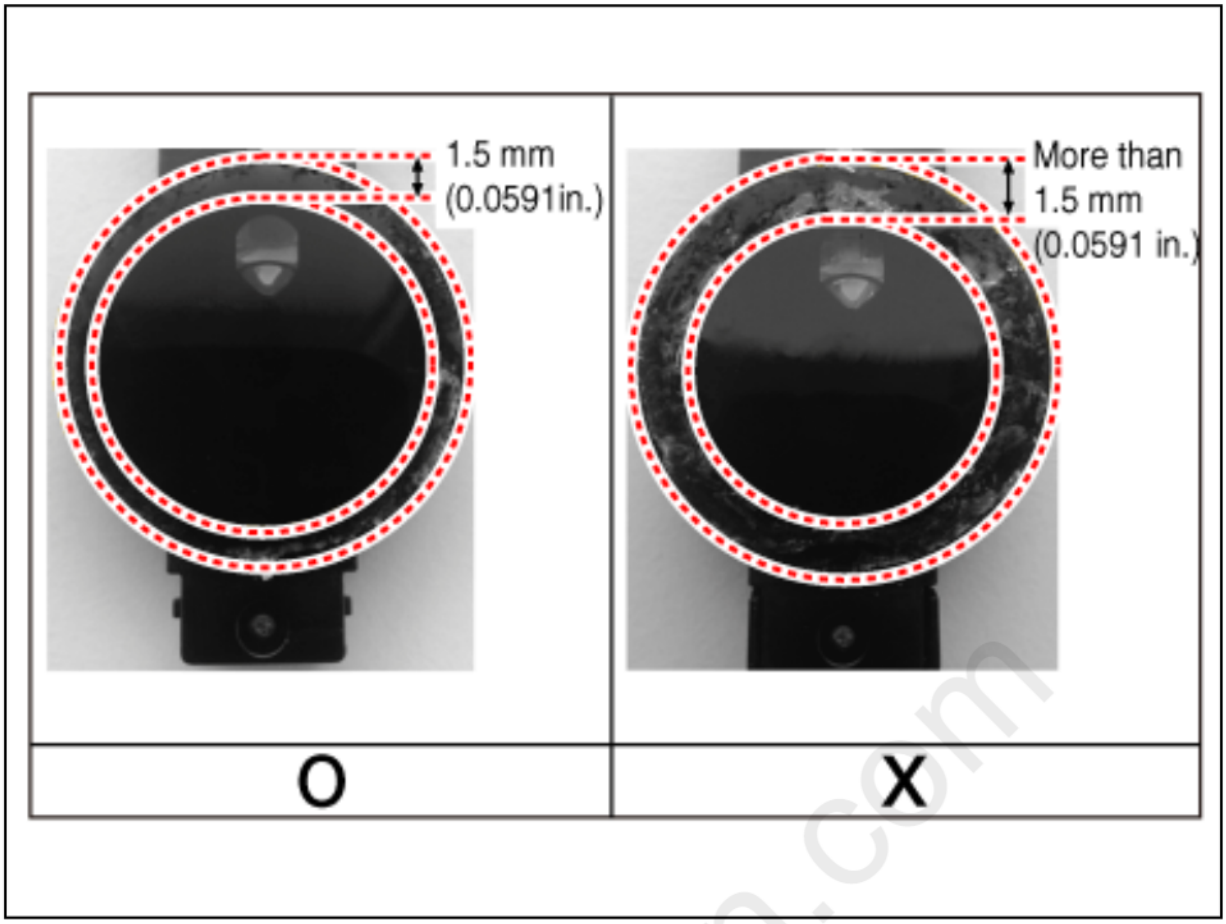

– The silicone gel pad has to be free of dirt. In case that silicone gel pad of rain sensor is polluted by foreign substances, rain sensor can be reusable after they are removed by sticker roller.

cardiagn.com



•Matters that require attention when installing the rain sensor.

–Be careful when detaching protection cover from rain sensor because silicone gel pad could be damaged.

–Do not touch the silicone gel pad.

–Be careful not to damage the silicone gel pad during assembly.

–The windshield glass has to be clean and free of contamination or foreign substances.

–Do not snap both spring arms at the same time. (Important : two times click sound)

–Check the snap fit condition between spring and bracket after installing.

–After installing the rain sensor, check the silicone gel pad for air bubbles. (Press the rain sensor several times, if air bubbles occurred.)

cardiagn.com

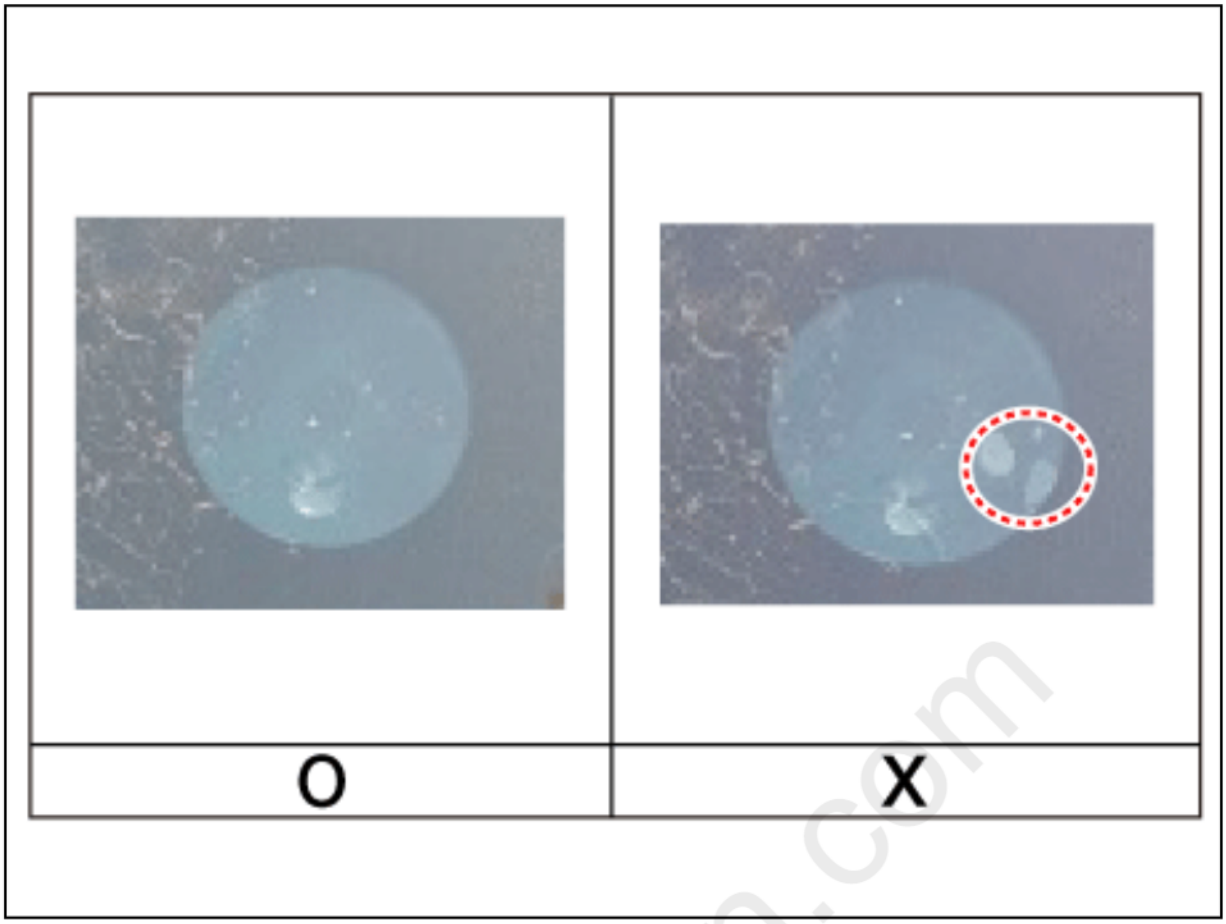



Replacement

Gel pad

1. Remove the damaged silicone gel pad completely on the lens plate of rain sensor.



- The silicone gel must be fully detached from the rain sensor by rubbing it off with the fingers without any tool.
- The surface of the lens plate must neither be damaged nor polluted by this activity.

It is recommended to remove any residues from the lens plate surface with pressurized air.

2. Remove the two protection foils (A) from the gel pad.

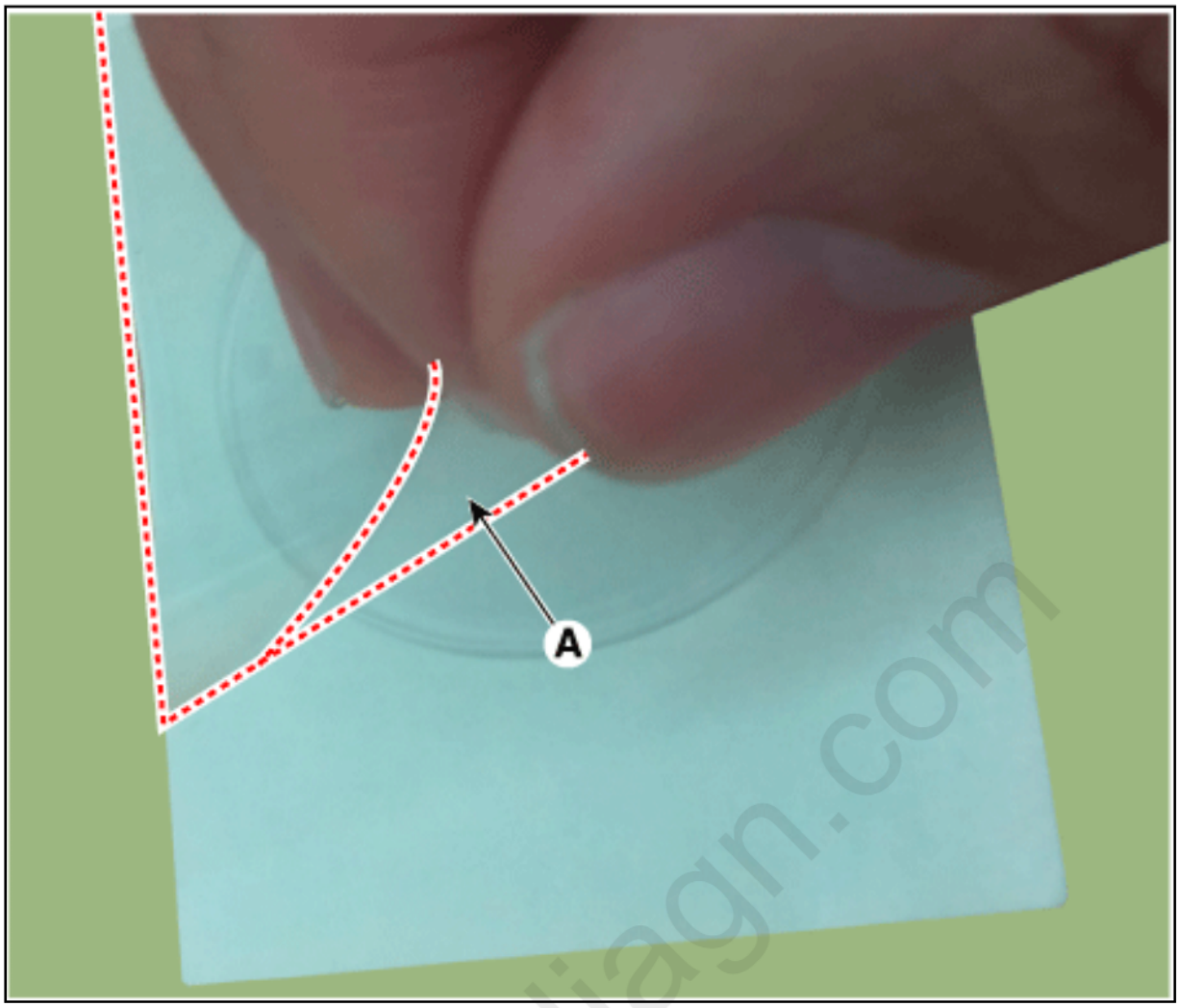

3. Attach the silicone gel pad (A) on the lens plate of rain sensor by hand.

cardiagn.com

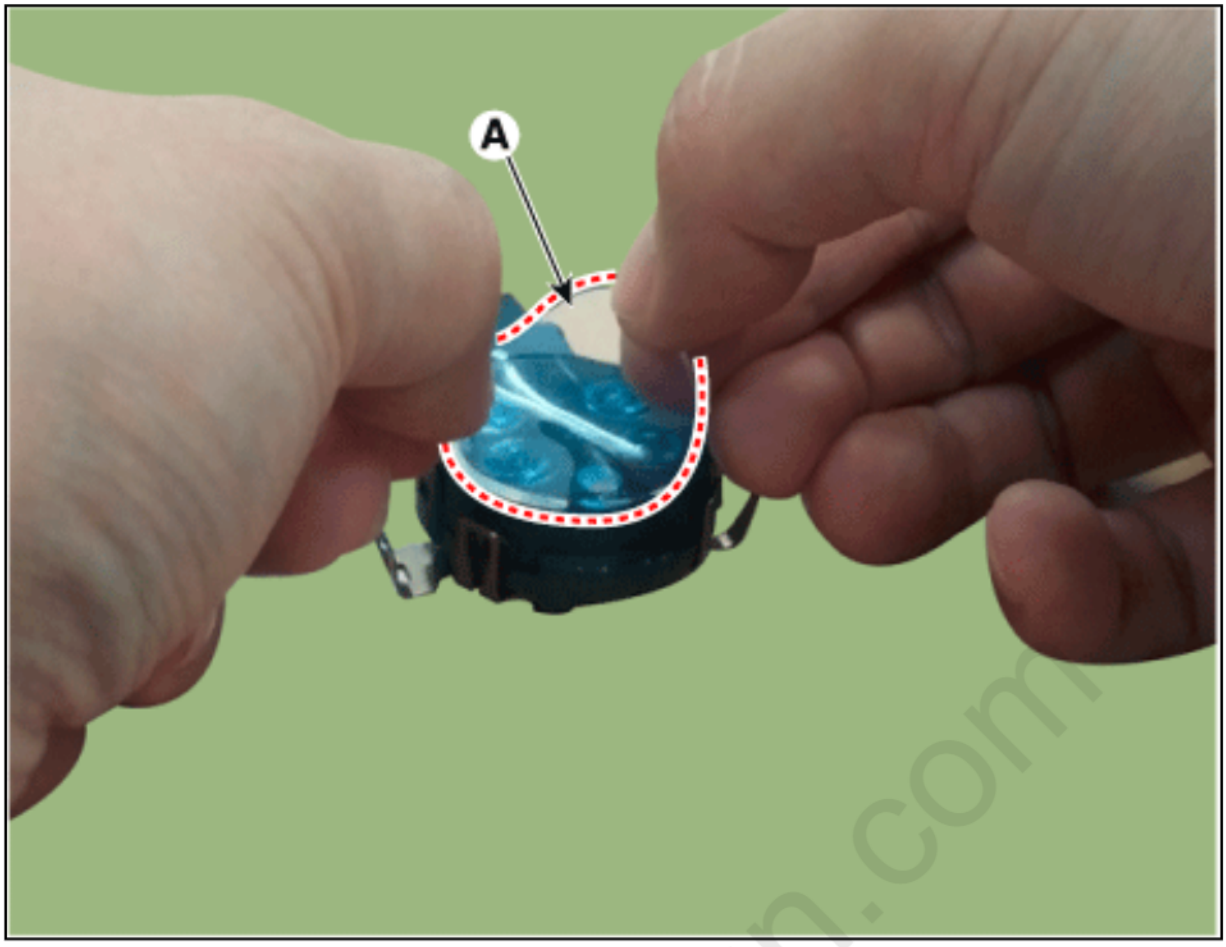

In case that silicone gel pad of rain sensor is polluted by foreign substances, remove the foreign substances by using the sticker roller.

cardiagn.com



cardiagn.com