SPECIFICATIONS

FASTENER TIGHTENING SPECIFICATIONS

Fastener Tightening Specifications

Application	Specification	
	Metric	English
Blower Motor Control Module Retaining Screws	1.6 N.m	14 lb in
Blower Motor Control Processor Retaining Screws	1.6 N.m	14 lb in
Floor Air Outlet Duct Retaining Screws	1.6 N.m	14 lb in
HVAC Control Module Retaining Screws	1.9 N.m	17 lb in
Ignition Switch Retaining Bolts	5.5 N.m	49 lb in
IPC to Steering Column Bracket Retaining Bolts	3.5 N.m	31 lb in
Temperature Actuator Retaining Screws	1.5 N.m	13 lb in
Vacuum Control Solenoid Valve Retaining Screws	1.5 N.m	13 lb in
Vacuum Tank Retaining Screws	3.5 N.m	31 lb in

SENSOR RESISTANCE TABLE (OUTSIDE AIR TEMPERATURE - OHMS)

Sensor Resistance Table (Outside Air Temperature - ohms)

°C / °F	Outside Resistance (ohms)
Temperature vs. Resistance Values (Approximate)	
-40	242,700 ohm
-30 / -22	177,000 ohm
-20 / -4	97,060 ohm
-10 / -14	55,319 ohm
0 / 32	32,654 ohm
10 / 50	19,903 ohm
20 / 68	12,493 ohm
30 / 86	8,056 ohm
40 / 104	5,327 ohm
50 / 122	3,603 ohm
60 / 140	2,488 ohm

SENSOR RESISTANCE TABLE (INSIDE AIR TEMPERATURE - OHMS)

Sensor Resistance Table (Inside Air Temperature - ohms)

Resistance (ohm)	°C	°F	Counts	Volts

100701	-40	-40	248	4.86
72449	-35	-31	246	4.82
52671	-30	-22	242	4.74
38672	-25	-13	238	4.66
28661	-20	-4	232	4.54
21430	-15	5	226	4.43
16159	-10	14	217	4.25
12282	-5	23	208	4.07
9407	0	32	197	3.86
7273	5	41	184	3.60
5666	10	50	171	3.35
4447	15	59	156	3.05
3514	20	68	142	2.78
2795	25	77	127	2.49
2237	30	86	113	2.21
1802	35	95	100	1.96
1549	40	104	87	1.70
1188	45	113	76	1.49
973	50	122	66	1.29
804	55	131	57	1.11
667	60	140	49	0.96
557	65	149	42	0.82
467	70	158	36	0.70
393	75	167	31	0.60
332	80	176	27	0.52
282	85	185	23	0.45

SCHEMATIC AND ROUTING DIAGRAMS

HVAC SCHEMATICS

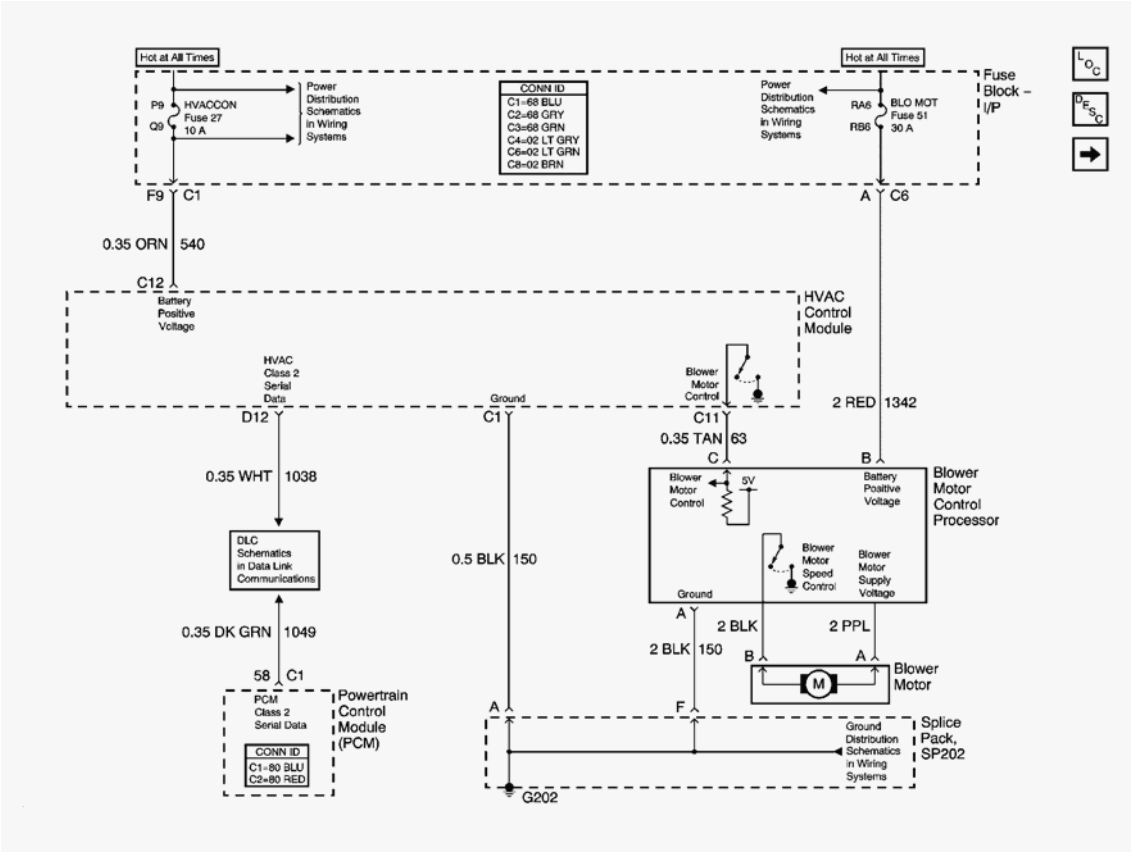

Fig. 1: Blower Controls Schematics
Courtesy of GENERAL MOTORS CORP.

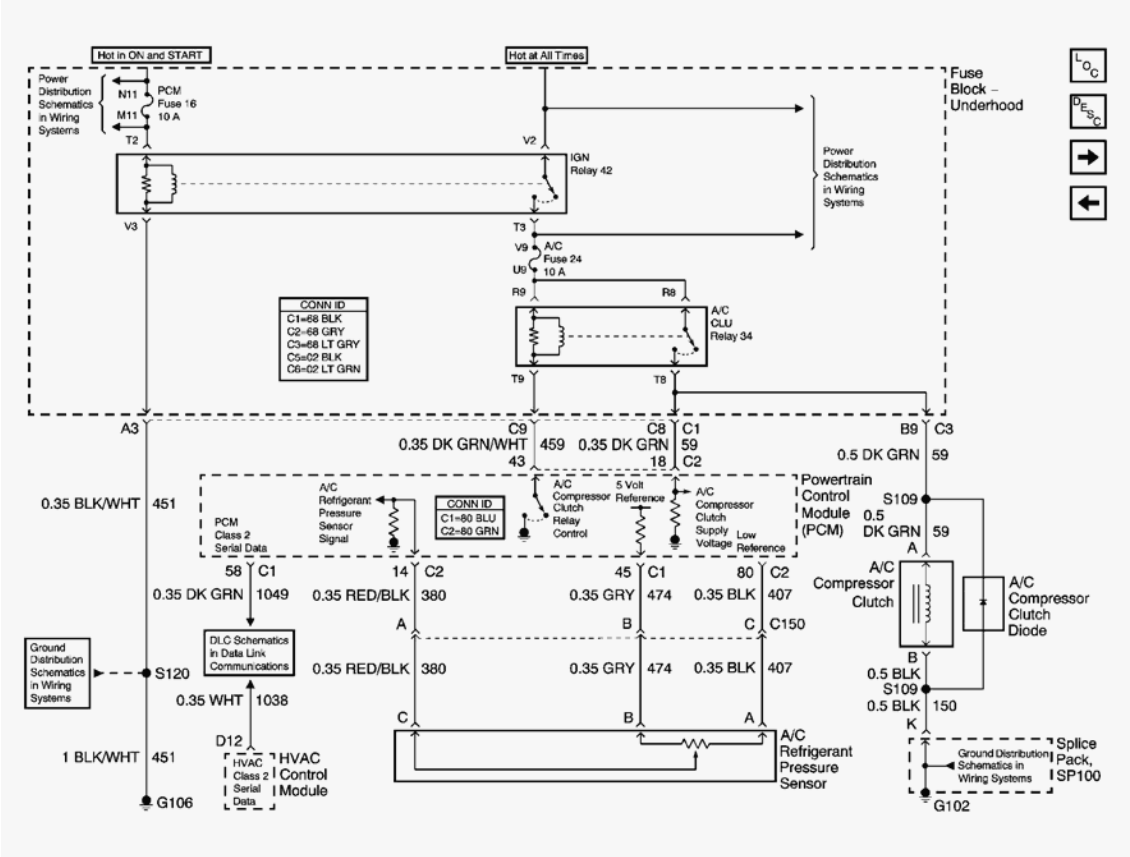

Fig. 2: Compressor Controls Schematics
Courtesy of GENERAL MOTORS CORP.

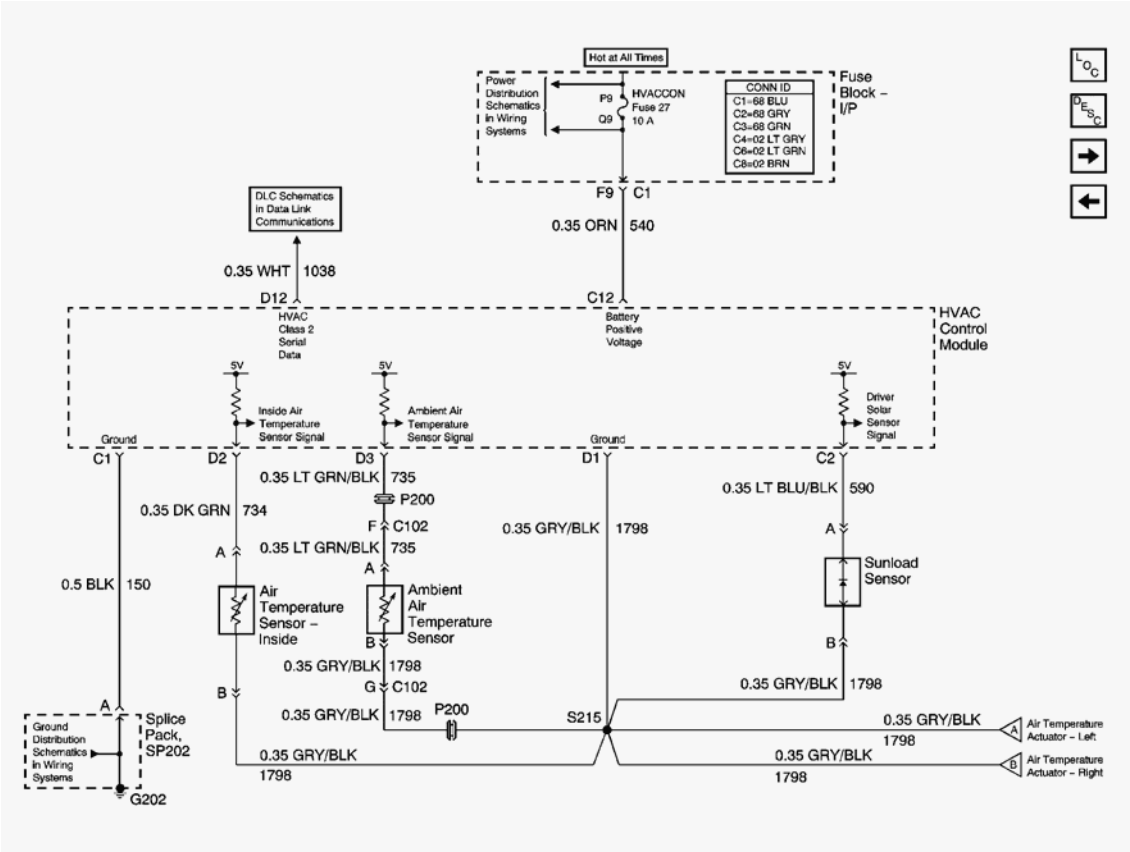

Fig. 3: Air Delivery/Temperature Controls Schematics - Power, Ground And DLC
Courtesy of GENERAL MOTORS CORP.

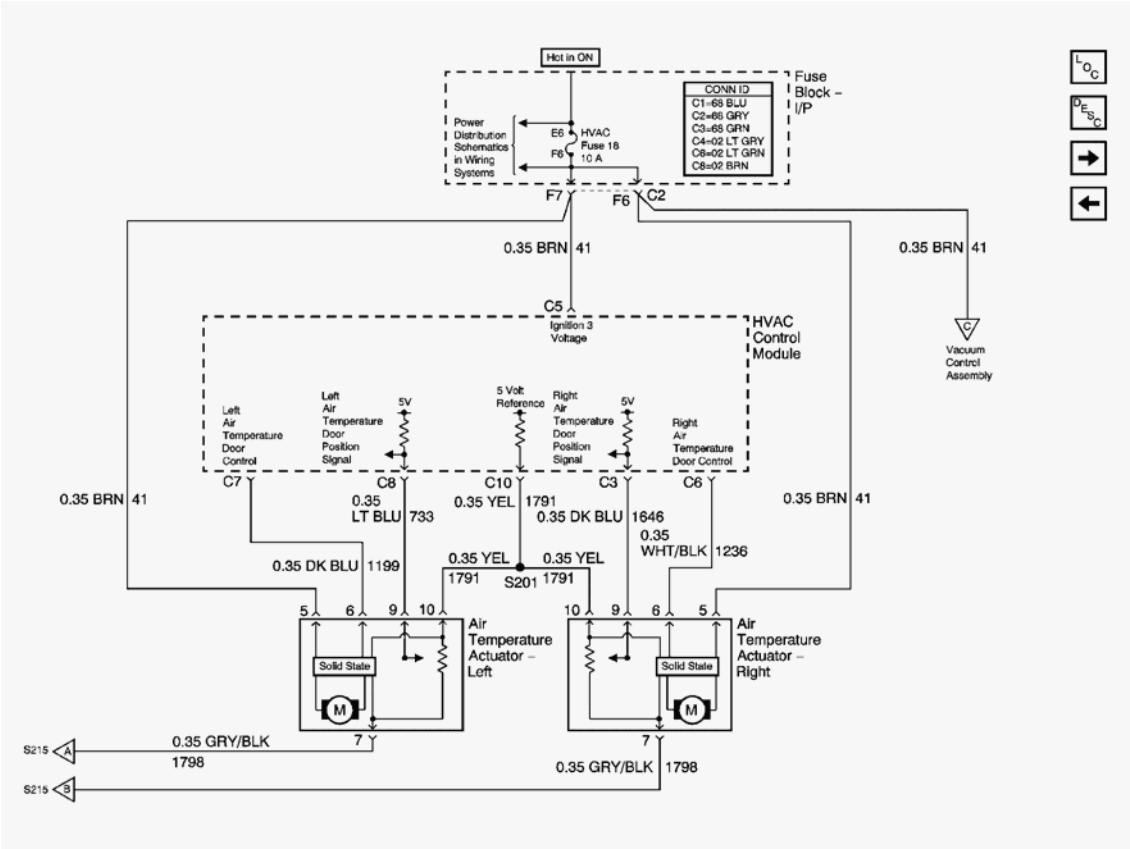

Fig. 4: Air Delivery/Temperature Controls Schematics - Actuator Control
Courtesy of GENERAL MOTORS CORP.

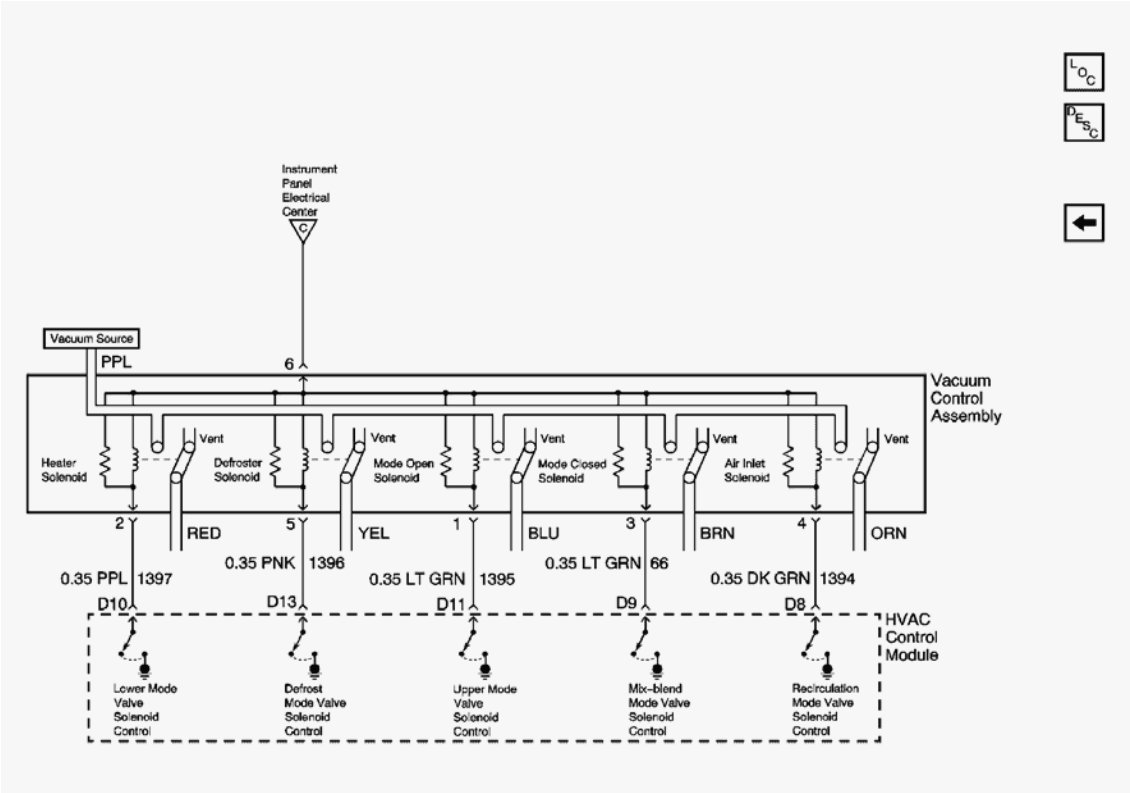

Fig. 5: Air Delivery/Temperature Controls Schematics - Solenoid Control
Courtesy of GENERAL MOTORS CORP.

HVAC VACUUM SCHEMATICS

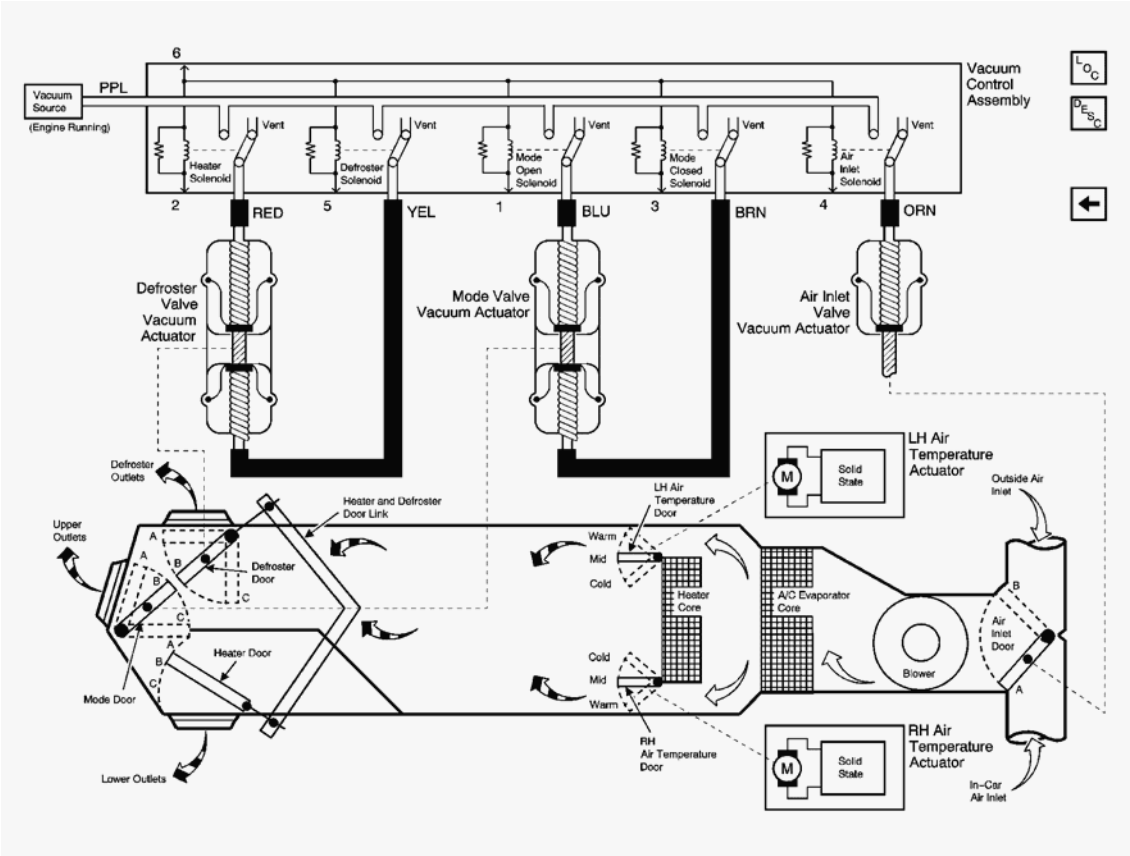

Fig. 6: Air Delivery Schematics (CJ2)
Courtesy of GENERAL MOTORS CORP.

COMPONENT LOCATOR

HVAC COMPONENT VIEWS

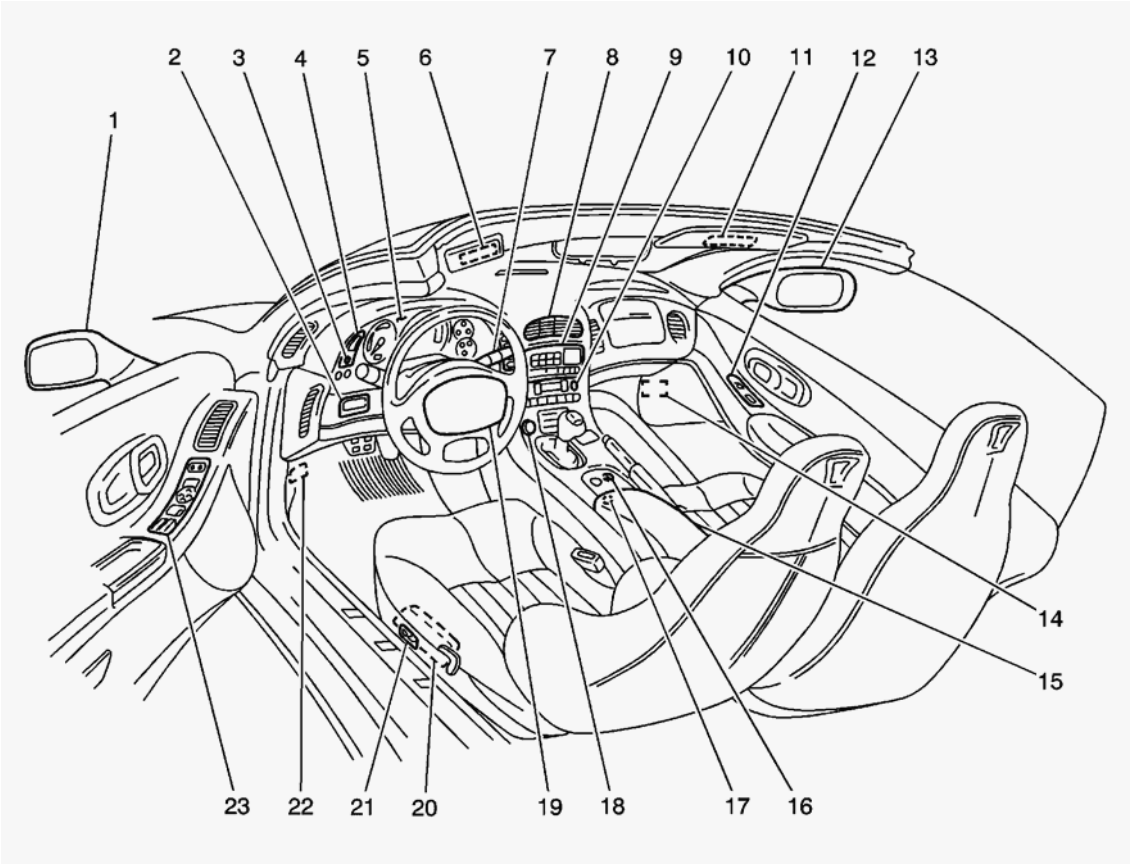

Fig. 7: Cockpit Component View
Courtesy of GENERAL MOTORS CORP.

Callouts For Fig. 7

Callout	Component Name
1	Outside Rearview Mirror-Driver
2	Fog Lamp/Rear Compartment Lid Release Switch (Domestic), Fog Lamp Switch (Export)
3	Dimmer Switch
4	Dimmer/Head Up Display (HUD) Switch
5	Instrument Panel Cluster (IPC)
6	Vanity Mirror Lamp-Left
7	Driver Information Center (DIC) Switch-Right
8	Hazard Switch
9	Radio
10	HVAC Control Module
11	Vanity Mirror Lamp-Right
12	Door Switch-Passenger
13	Outside Rearview Mirror-Passenger
14	Footwell Courtesy Lamp-Right
15	Fuel Door Lock Release Switch (Domestic), Rear Compartment Lid/Fuel Door Lock Release

	Switch (Export)
16	Traction/Suspension Control Switch
17	Auxiliary Power Outlet Connector
18	Cigar Lighter
19	Horn Switch
20	Seat Control Module (SCM)-Driver (W/Memory Seats), Seat Relay Center-Driver (W/O Memory Seats)
21	Seat Adjuster Switch-Driver
22	Footwell Courtesy Lamp-Left
23	Door Switch-Driver

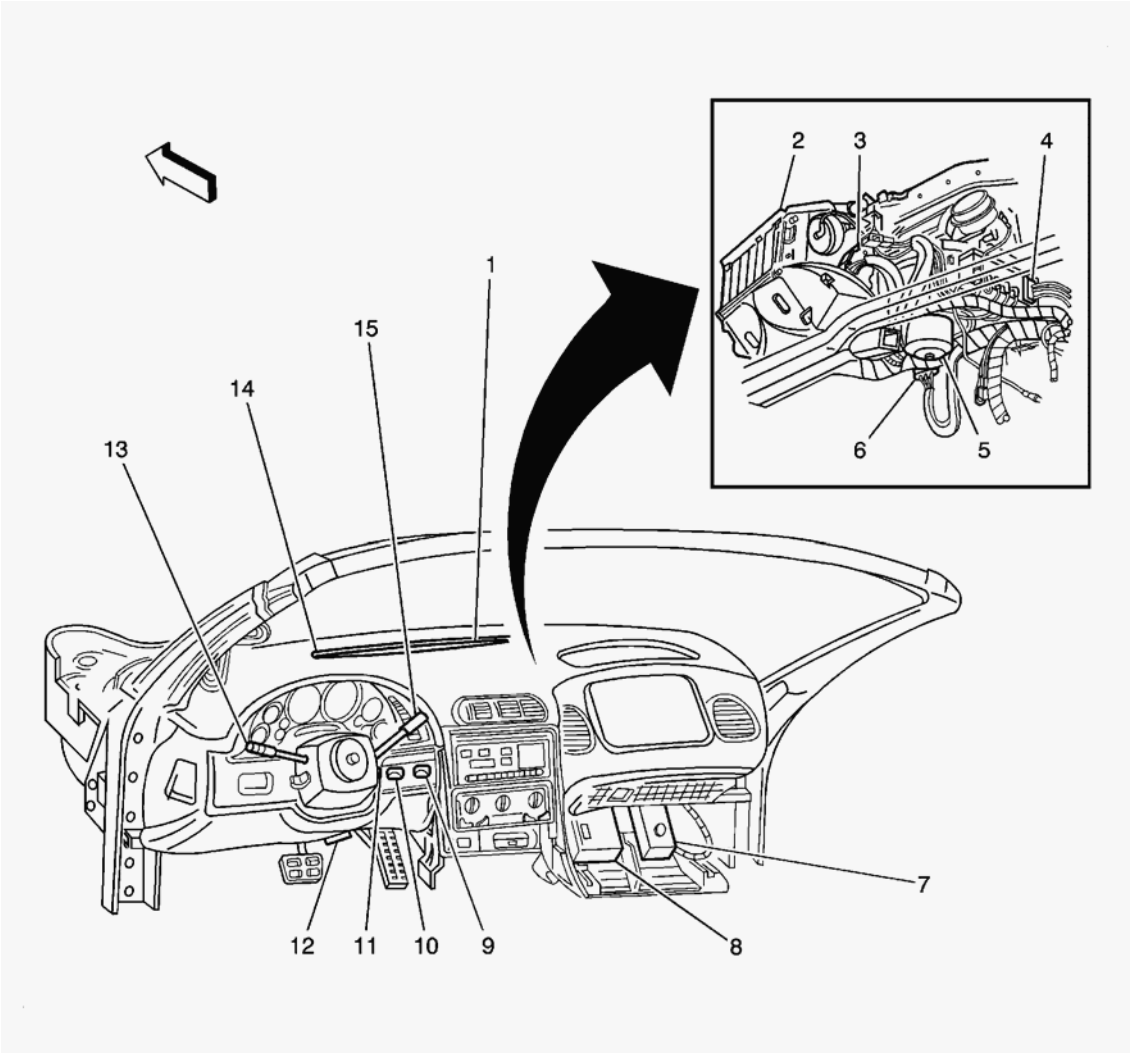

Fig. 8: Instrument Panel Component View
Courtesy of GENERAL MOTORS CORP.

Callouts For Fig. 8

Callout	Component Name

1	Sunload Sensor
2	HVAC Module Assembly
3	Air Temperature Actuator (C60)
4	Vacuum Control Assembly (CJ2)
5	Blower Motor
6	Blower Motor Control Processor
7	Fuse Block-IP
8	Body Control Module (BCM)
9	Ignition Switch
10	Air Temperature Sensor - Inside
11	Telescoping Actuator Switch
12	Data Link Connector (DLC)
13	Multifunction Turn Signal Lever
14	Ambient Light Sensor
15	Windshield Wiper/Washer Switch

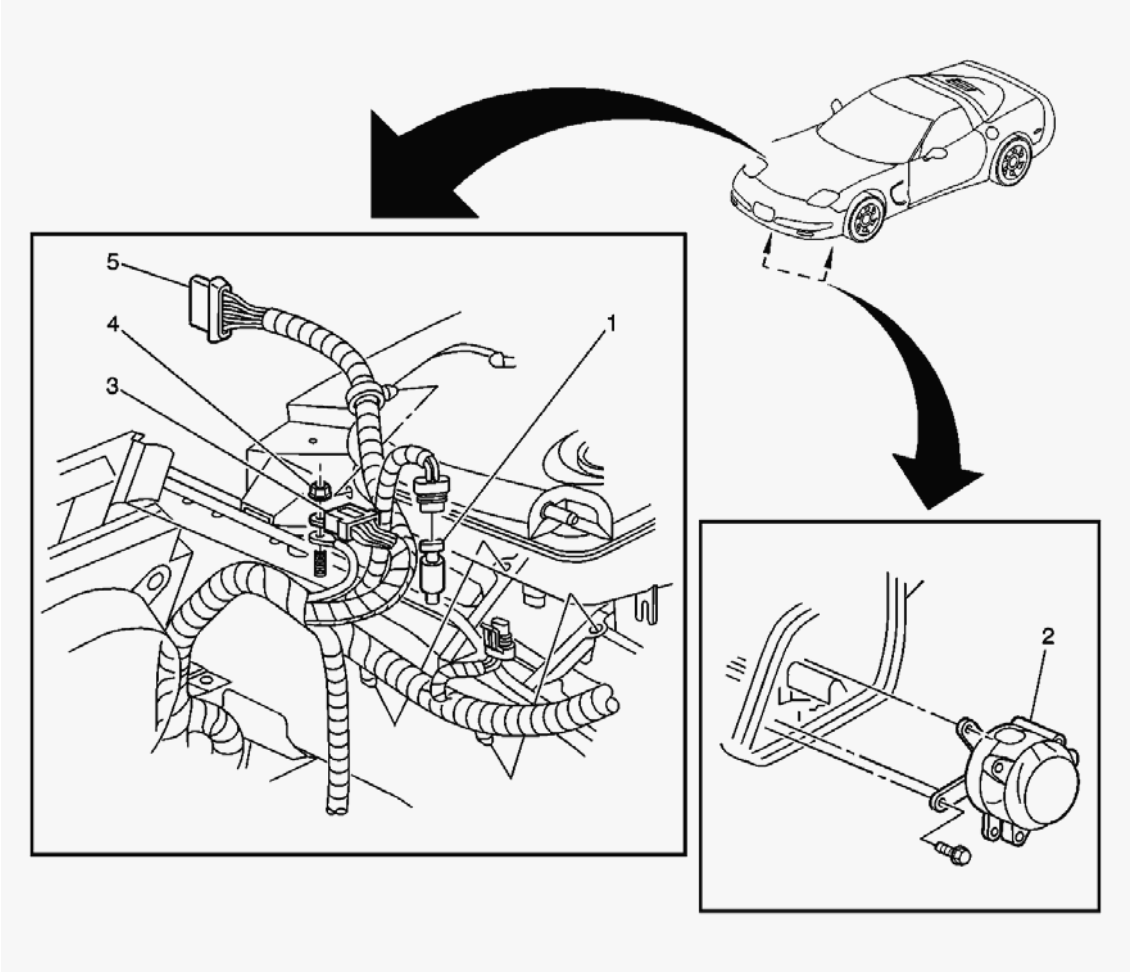

Fig. 9: Front Of Engine Compartment Component View

Courtesy of GENERAL MOTORS CORP.

Callouts For Fig. 9

Callout	Component Name
1	A/C Refrigerant Pressure Sensor
2	Secondary Air Injection (AIR) Pump
3	SP100
4	G102
5	Headlamp Door Assembly-Right Connector

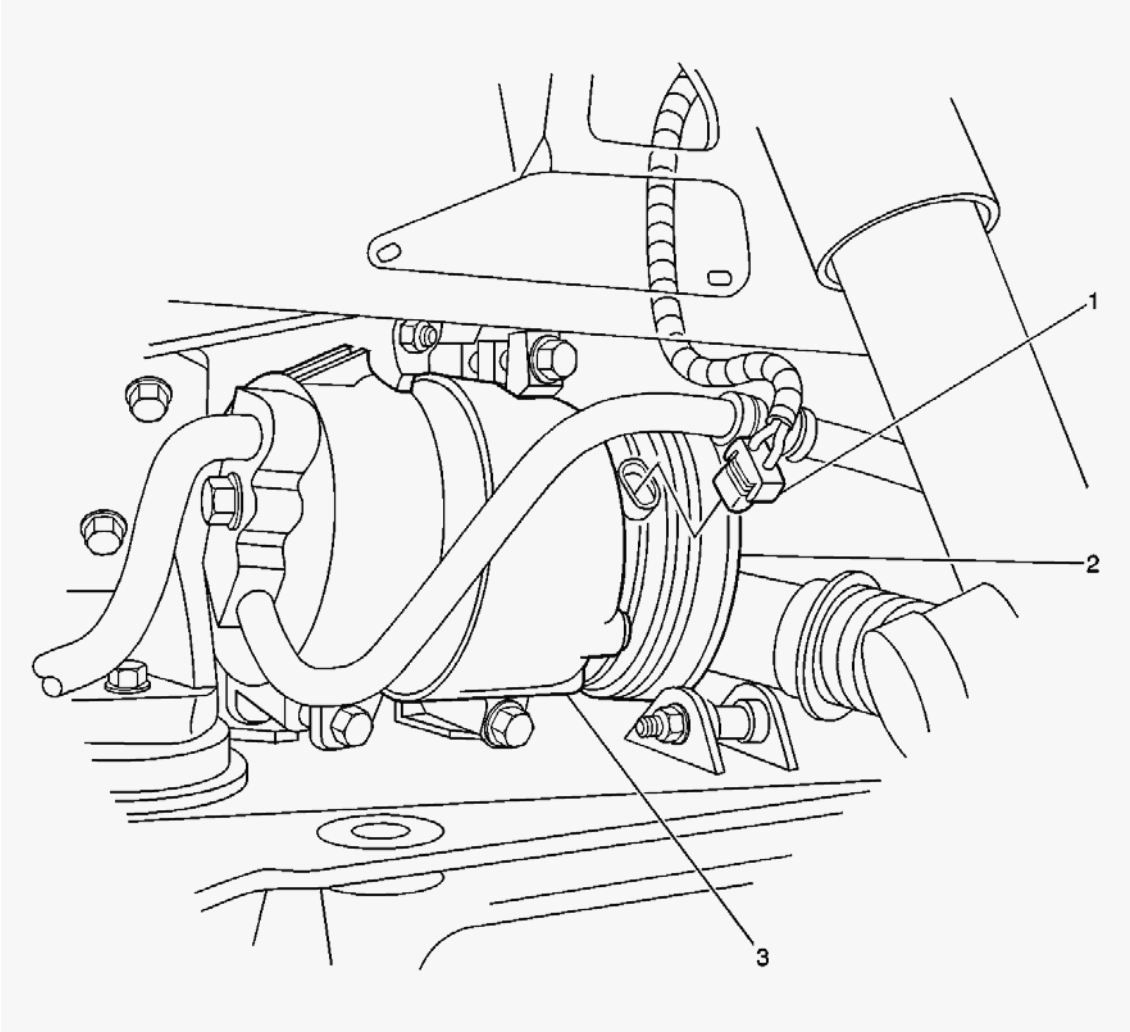

Fig. 10: A/C Compressor Component View
Courtesy of GENERAL MOTORS CORP.

Callouts For Fig. 10

Callout	Component Name
1	A/C Compressor Clutch Diode

2	A/C Compressor Clutch
3	A/C Compressor

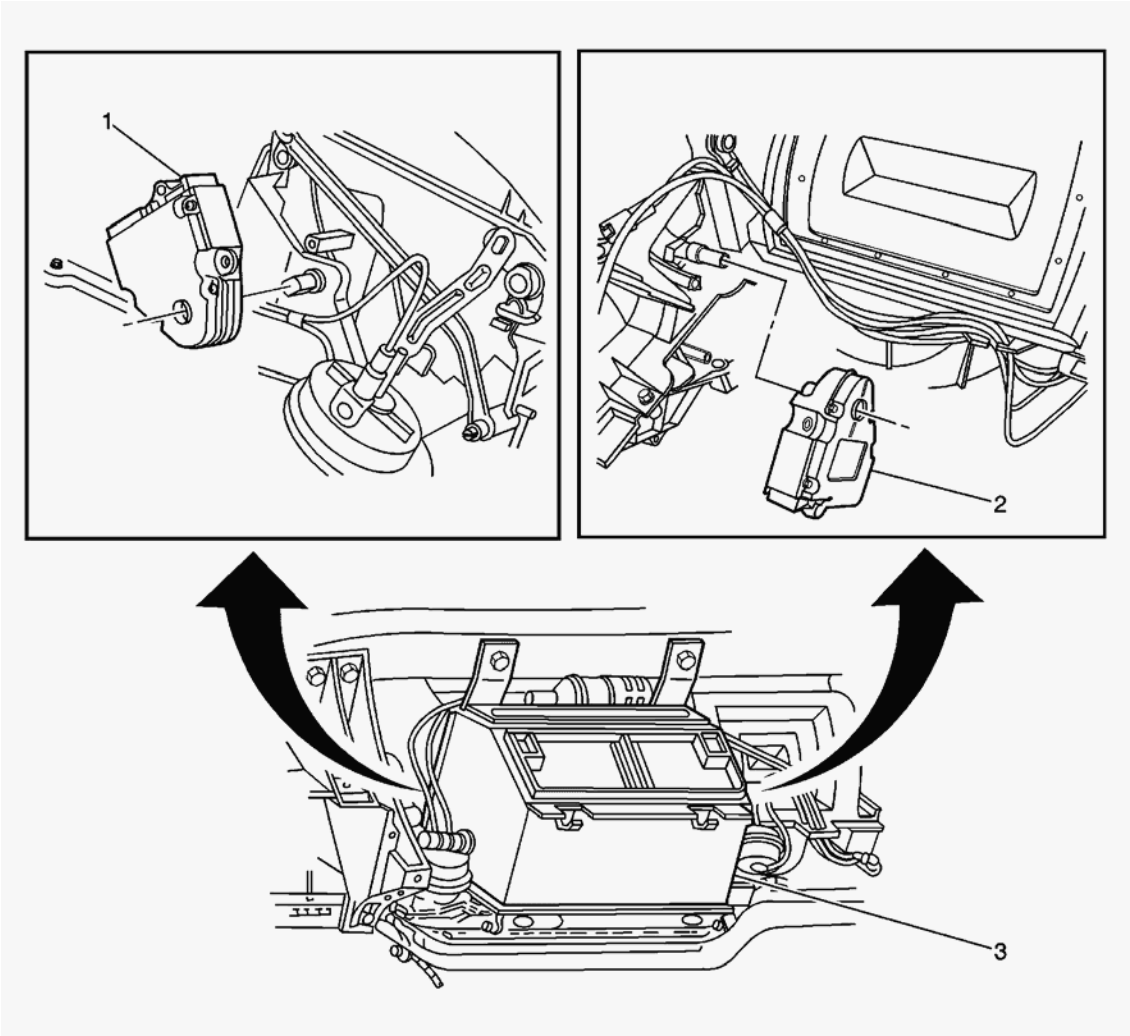

Fig. 11: Behind The Center Of The I/P Component View
Courtesy of GENERAL MOTORS CORP.

Callouts For Fig. 11

Callout	Component Name
1	Air Temperature Actuator - Left
2	Air Temperature Actuator - Right
3	HVAC Module Assembly

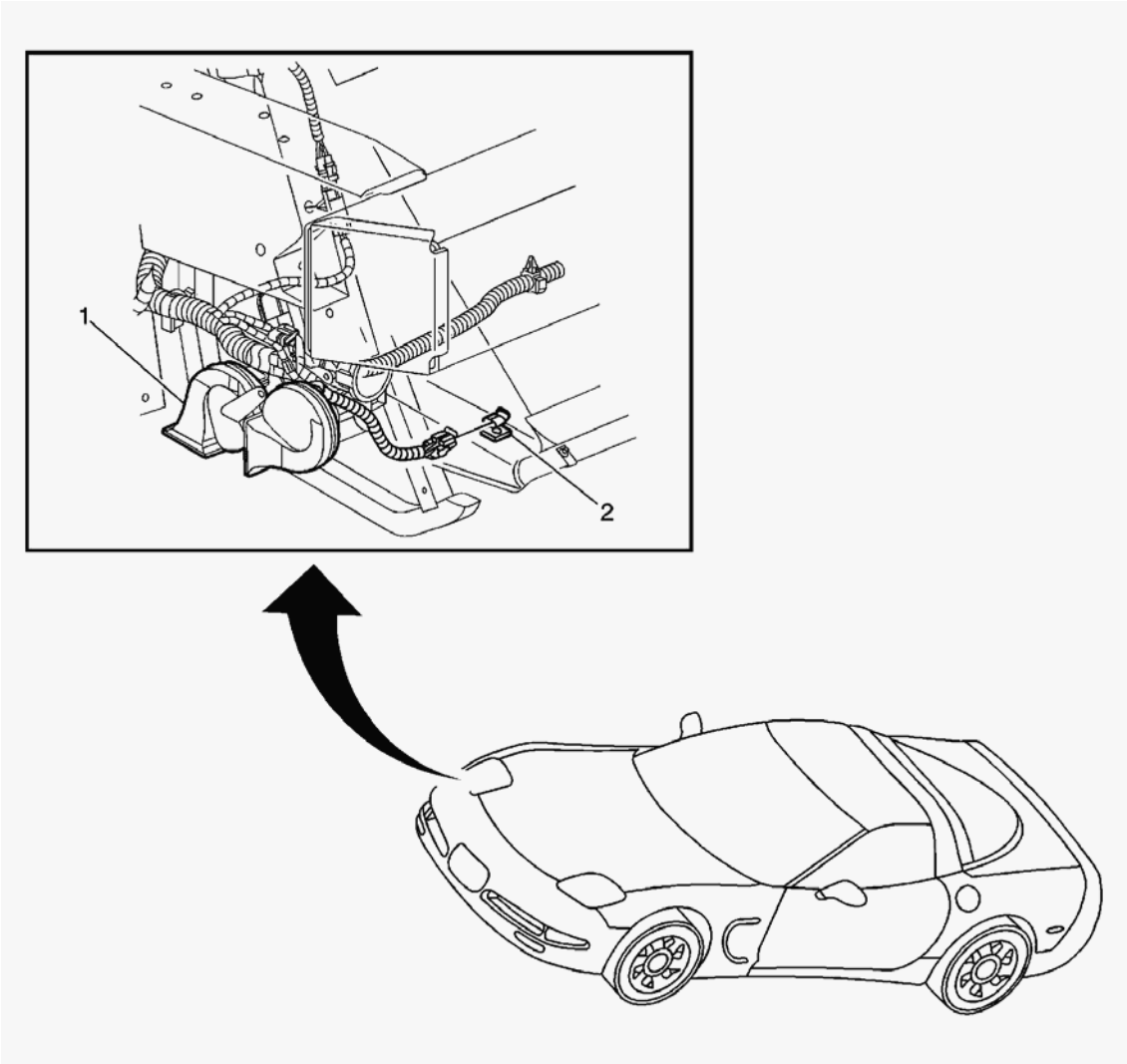

Fig. 12: Lower RF Of The Vehicle Component View
Courtesy of GENERAL MOTORS CORP.

Callouts For Fig. 12

Callout	Component Name
1	Horn Assembly
2	Ambient Air Temperature Sensor

HVAC CONNECTOR END VIEWS

A/C Compressor Clutch Terminal Identification

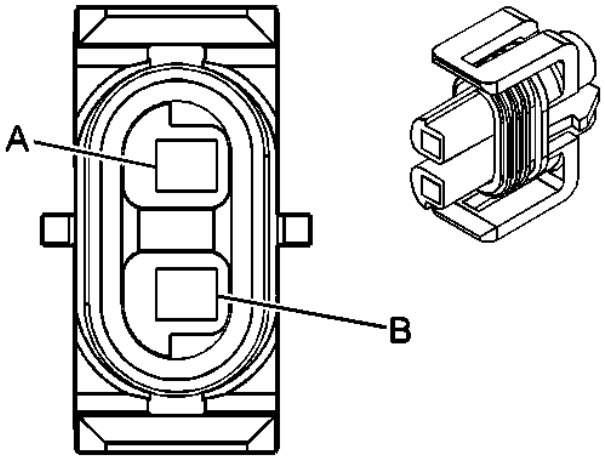

Connector Part Information		• 12162017 • 2-Way F Metri-Pack 150 Series (GRY)	
Pin	**Wire Color**	**Circuit No.**	**Function**
A	DK GRN	59	A/C Compressor Clutch Supply Voltage
B	BLK	150	Ground

A/C Refrigerant Pressure Sensor Terminal Identification

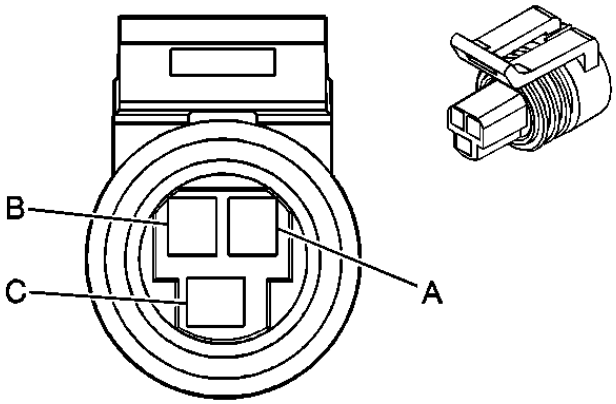

Connector Part Information		• 12065286 • 3-Way F Metri-Pack 150 Series (BLK)	
Pin	**Wire Color**	**Circuit No.**	**Function**
A	BLK	407	Low Reference

B	GRY	474	5 Volt Reference
C	RED/BLK	380	A/C Refrigerant Pressure Sensor Signal

Air Temperature Sensor Terminal Identification - Inside

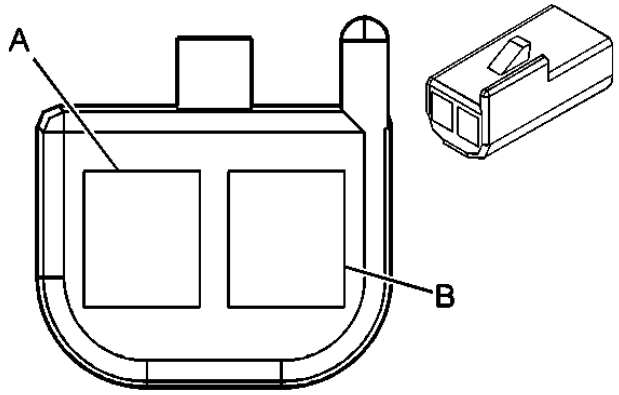

Connector Part Information		• **12047662** • **2-Way F Metri-Pack 150 Series (BLK)**	
Pin	**Wire Color**	**Circuit No.**	**Function**
A	DK GRN	734	Inside Air Temperature Sensor Signal
B	GRY/BLK	1798	Ground

Air Temperature Actuator Terminal Identification - Left

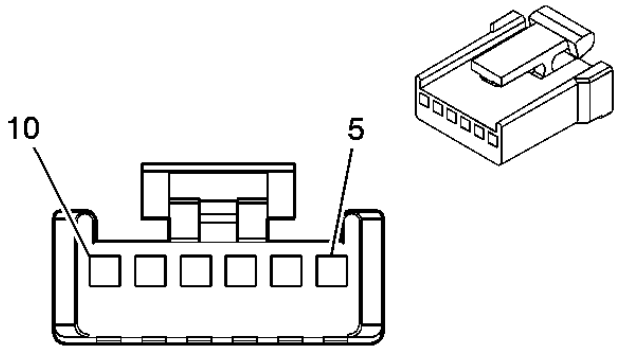

Connector Part Information		• **12040953** • **6-Way F Micro-Pack 100 Series (BLK)**	
Pin	**Wire Color**	**Circuit No.**	**Function**
5	BRN	41	Ignition 3 Voltage

6	DK BLU	1199	Air Temperature Door Control
7	GRY/BLK	1798	Ground
8	-	-	Not Used
9	LT BLU	733	Air Temperature Door Position Signal
10	YEL	1791	5 Volt Reference

Air Temperature Actuator Terminal Identification - Right

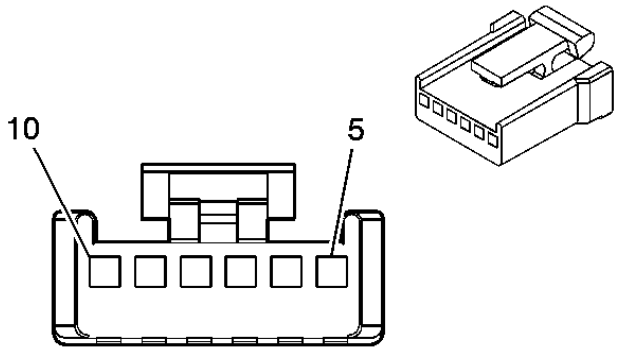

Connector Part Information		• **12040953** • **6-Way F Micro-Pack 100 Series (BLK)**	
Pin	**Wire Color**	**Circuit No.**	**Function**
5	BRN	41	Ignition 3 Voltage
6	WHT/BLK	1236	Air Temperature Door Control-Auxiliary
7	GRY/BLK	1798	Ground
8	-	-	Not Used
9	DK BLU	1646	Air Temperature Door Position Signal-Auxiliary
10	YEL	1791	5 Volt Reference

Ambient Air Temperature Sensor Terminal Identification

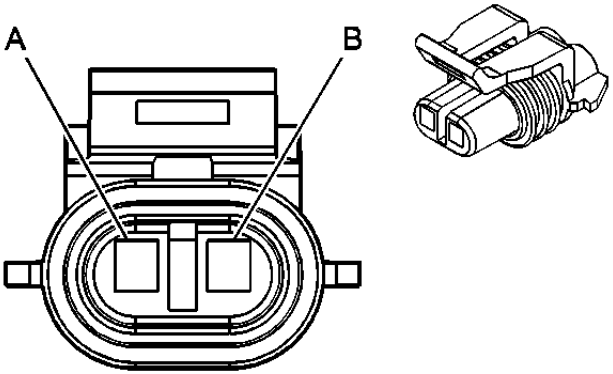

Connector Part Information		• 12052635 • 2-Way F Metri-Pack 150 Series (BLK)	
Pin	**Wire Color**	**Circuit No.**	**Function**
A	LT GRN/BLK	735	Outside Air Temperature Sensor Signal
B	GRY/BLK	1798	Ground

Blower Motor Terminal Identification

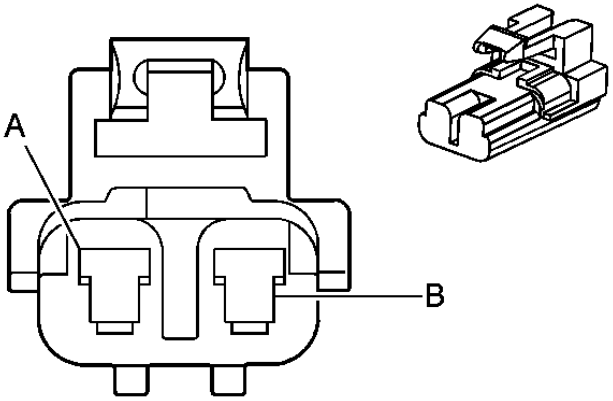

Connector Part Information		• 12084957 • 2-Way F Metri-Pack 280 Series (BLK)	
Pin	**Wire Color**	**Circuit No.**	**Function**
A	PPL	-	Blower Motor Supply Voltage
B	BLK	-	Blower Motor Speed Control

Blower Motor Control Processor Terminal Identification

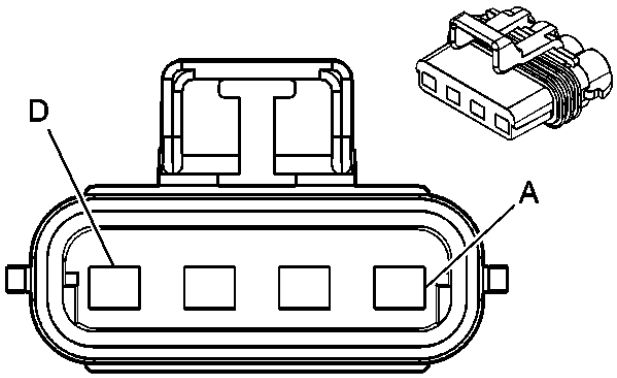

Connector Part Information		• 12129566 • 4-Way F Metri-Pack 280 Series (GRY)	
Pin	**Wire Color**	**Circuit No.**	**Function**
A	BLK	150	Ground
B	RED	1342	Battery Positive Voltage
C	TAN	63	Blower Motor Speed Control
D	-	-	Not Used

HVAC Control Module Terminal Identification

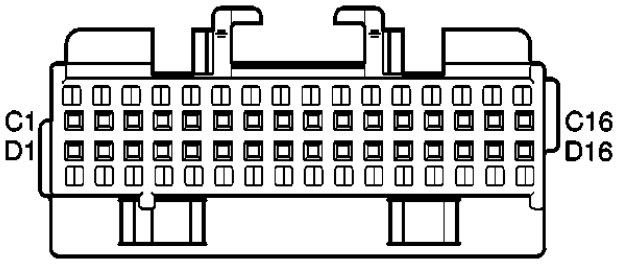

Connector Part Information		• 12045470 • 32-Way F Micro-Pack 100 Series (NAT)	
Pin	**Wire Color**	**Circuit No.**	**Function**
C1	BLK	150	Ground
C2	LT BLU/BLK	590	Driver Solar Sensor Signal
C3	DK BLU	1646	Air Temperature Door Position Signal-Auxiliary
C4	-	-	Not Used
C5	BRN	41	Ignition 3 Voltage

C6	WHT/BLK	1236	Air Temperature Door Control-Auxiliary
C7	DK BLU	1199	Air Temperature Door Control
C8	LT BLU	733	Air Temperature Door Position Signal
C9	-	-	Not Used
C10	YEL	1791	5 Volt Reference
C11	TAN	63	Blower Motor Speed Control
C12	ORN	540	Battery Positive Voltage
C13-C15	-	-	Not Used
C16	YEL	390	Instrument Panel Lamp Supply Voltage - 3
D1	GRY/BLK	1798	Ground
D2	DK GRN	734	Inside Air Temperature Sensor Signal
D3	LT GRN/BLK	735	Outside Air Temperature Sensor Signal
D4-D7	-	-	Not Used
D8	DK GRN	1394	Recirculation Mode Valve Solenoid Control
D9	LT GRN	66	Mix-Blend Mode Valve Solenoid Control
D10	PPL	1397	Lower Mode Valve Solenoid Control
D11	LT GRN	1395	Upper Mode Valve Solenoid Control
D12	WHT	1038	HVAC Class 2 Serial Data
D13	PNK	1396	Defrost Mode Valve Solenoid Control
D14-D16	-	-	Not Used

Sunload Sensor Terminal Identification

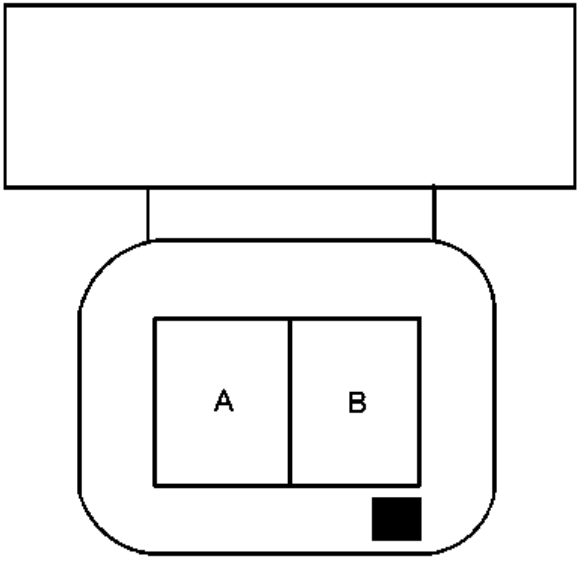

Connector Part Information		• 12048457 • 2-Way M Metri-Pack 150 Series (BLK)	
Pin	**Wire Color**	**Circuit No.**	**Function**
A	LT BLU/BLK	590	Driver Solar Sensor Signal
B	GRY/BLK	1798	Ground

Vacuum Control Assembly Terminal Identification

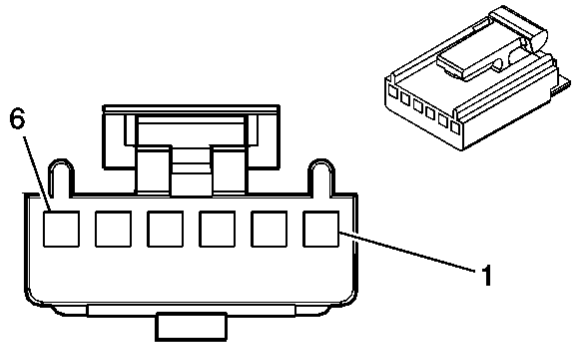

Connector Part Information		• 12064978 • 6-Way F Micro-Pack 100 Series (GRY)	
Pin	**Wire Color**	**Circuit No.**	**Function**
1	LT GRN	1395	Upper Mode Valve Solenoid Control
2	PPL	1397	Lower Mode Valve Solenoid Control
3	LT GRN	66	Mix-Blend Mode Valve Solenoid Control
4	DK GRN	1394	Recirculation Mode Valve Solenoid Control
5	PNK	1396	Defrost Mode Valve Solenoid Control
6	BRN	41	Ignition 3 Voltage

DIAGNOSTIC INFORMATION AND PROCEDURES

DIAGNOSTIC SYSTEM CHECK - HVAC SYSTEMS - AUTOMATIC

Test Description

The number(s) below refer to the step number(s) on the diagnostic table.

3: Lack of communication may be due to a partial malfunction of the class 2 serial data circuit or due to a total malfunction of the class 2 serial data circuit. The specified procedure will determine the particular condition.

4: Determine if the HVAC Control Module, Body Control Module or Powertrain Control Module have set DTC's which may affect HVAC operation are present.

5: The presence of DTCs which begin with "U" indicate some other module is not communicating. The specified procedure will compile all the available information before tests are performed.

6: Answer Yes if the first 3 characters of the DTC name begins with B10; regardless of the last 2 characters.

Diagnostic System Check - HVAC Systems - Automatic

Step	Action	Yes	No
1	Did you review A Diagnostic Starting Point - Heating, Ventilation and Air Conditioning?	Go to **Step 2**	Go to **Diagnostic Starting Point - Heating, Ventilation and Air Conditioning** in Heating, Ventilation and Air Conditioning
2	Install a scan tool. Does the scan tool power up?	Go to **Step 3**	Go to **Scan Tool Does Not Power Up** in Data Link Communications
3	1. Turn ON the ignition, with the engine OFF. 2. Attempt to establish communication with the following control modules: • HVAC Control Module • Body Control Module • Powertrain Control Module Does the scan tool communicate with the control modules?	Go to **Step 4**	Go to **Scan Tool Does Not Communicate with Class 2 Device** in Data Link Communications
4	Select the display DTCs function on the scan tool for the following modules: • HVAC Control Module • Body Control Module • Powertrain Control Module Does the scan tool display any DTCs?	Go to **Step 5**	Go to **Symptoms - HVAC Systems - Automatic**
5	Does the scan tool display any DTCs which begin with a "U"?	Go to **Scan Tool Does Not Communicate with Class 2 Device** in Data Link	

		Communications	Go to **Step 6**
6	Does the scan tool display DTC B10XX?	Go to **Diagnostic Trouble Code (DTC) List** in Body Control Systems	Go to **Step 7**
7	Does the scan tool display any DTCs which begin with a B that are associated with the charging system?	Go to **Diagnostic Trouble Code (DTC) List** in Engine Electrical	Go to **Step 8**
8	Does the scan tool display any DTCs that are associated with the HVAC system?	Go to **Diagnostic Trouble Code (DTC) List**	Go to **Diagnostic Trouble Code (DTC) List** in Engine Controls - 5.7L

SCAN TOOL OUTPUT CONTROLS

Body Control Module (BCM) Scan Tool Output Controls

Scan Tool Output Control	Additional Menu Selection(s)	Description
HVAC Lamp	Lamp Dimming Test	The scan tool displays On or Off selections. This function allows you to command the HVAC control module lights ON and OFF.

Heating and Air Conditioning Scan Tool Output Controls

Scan Tool Output Control	Additional Menu Selection(s)	Description
Blower Motor	Miscellaneous Test	The scan tool displays Off or On selections. This function allows you to command the blower motor on at full speed or off.
Left Mix Motor	Miscellaneous Test	The scan tool displays Off or On selections. Selecting Off allows you to command the motor to its minimum (cold) position. Selecting On allows you to command the motor to its maximum (hot) position.
Right Mix Motor	Miscellaneous Test	The scan tool displays Off or On selections. Selecting Off allows you to command the motor to its minimum (hot) position. Selecting On allows you to command the motor to its maximum (cold) position.
Sol. 1 - Defroster	Solenoid Test	The scan tool displays Off or On selections. This function allows you to command the solenoid ON or OFF.
Sol. 2 - Heater	Solenoid Test	The scan tool displays Off or On selections. This function allows you to command the solenoid ON or OFF.
Sol. 3 - Defrost/Heater	Solenoid Test	The scan tool displays Off or On selections. This function allows you to command the solenoid ON or OFF.
Sol. 4 - Air Inlet	Solenoid Test	The scan tool displays Off or On selections. This function allows you to command the solenoid ON or OFF.
Sol. 5 - A/C Mode	Solenoid Test	The scan tool displays Off or On selections. This function allows you to command the solenoid ON or OFF.

PCM Scan Tool Output Controls

Scan Tool Output Control	Additional Menu Selection(s)	Description
A/C Clutch	Engine Output Controls	The scan tool displays On or Off selections. This function allows you to command the A/C compressor clutch relay ON or OFF.

SCAN TOOL DATA LIST

Use the Scan Tool Data Display Values and Definitions Information in order to assist in diagnosing the Instrument Panel Integration Module (IPM) problems. Compare the vehicles actual scan tool data with the typical data display value table information. Use the data information in order to aid in understanding the nature of the problem when the vehicle does not match with the typical data display values.

The scan tool data values were taken from a known good vehicle under the following conditions:

- The ignition switch is in the ON position.
- The engine is running at idle.
- The vehicle is in PARK.
- The doors are closed.
- The windows are closed.
- The A/C is ON.
- The ambient air temperatures are at 22-27°C (70-80°F).

Body Control Module (BCM) Scan Tool Data List

Scan Tool Parameter	Data List	Units Displayed	Typical Data Value
Operating Conditions: Engine idling, A/C ON, ambient air temperature between 22-27°C (70-80° F)			
HVAC Bulb Illumination	Data	Percentage	15-99%

Heating and Air Conditioning Scan Tool Data List

Scan Tool Parameter	Data List	Units Displayed	Typical Data Value
Operating Conditions: Engine idling, A/C ON, ambient air temperature between 22-27°C (70-80° F)			
A/C Button	Inputs	On/Off	Off
Auto Button	Inputs	On/Off	Off
Calibration ID	Module Information	8-digit alphanumeric	AE017509
Desired Blower Mtr Speed	Data	Counts	15-111 Counts
Driver Temp Dial	Data	°C/°F	15- 31°C/59-89°F
Fan Down Button	Inputs	Off/On	Off
Fan Up Button	Inputs	Off/On	Off
Front Defrost Button	Inputs	Off/On	Off
Inside Temp Sensor	Data	Volts	2.3Volts

LH Mix Mtr Position Feedback	Data	Counts	3-252 Counts
LH Mix Mtr Position Requested	Data	Counts	1-254 Counts
Mix Motor State	Data	Normal/Fault	Normal
Mode Button	Inputs	Off/On	Off
Off Button	Inputs	Off/On	Off
Outside Air Button	Inputs	Off/On	Off
Outside Temp Sensor	Data	Volts	1.7 Volts
Passenger Temp Dial	Data	Counts	26-80 Counts
Rear Defrost Button	Inputs	Off/On	Off
Recirculate Button	Inputs	Off/On	Off
RH Mix Mtr Position Feedback	Data	Counts	22-251 Counts
RH Mix Mtr Position Requested	Data	Counts	1-254 Counts
Rom ID	Module Information	8-digit alphanumeric	AE017414
ROM Part Number	Module Information	6-digit alphanumeric	8F2259
Sun Load Sensor	Data	Volts	4.3 Volts
Vacuum Solenoid 1	Data	Off/On	varies
Vacuum Solenoid 2	Data	Off/On	varies
Vacuum Solenoid 3	Data	Off/On	varies
Vacuum Solenoid 4	Data	Off/On	varies
Vacuum Solenoid 5	Data	Off/On	varies

PCM Scan Tool Data List

Scan Tool Parameter	Data List	Units Displayed	Typical Data Value
Operating Conditions: Engine idling, A/C ON, ambient air temperature between 22-27°C (70-80° F)			
A/C High Side Pressure	Engine Data 2	kPa/psi	965 kPa/140 psi
A/C High Side Pressure	Engine Data 2	Volts	1.65 Volts
A/C Relay Command	Engine Data 1/Engine Data 2/Misfire Data	On/Off	On
A/C Request Signal	Engine Data 1/Engine Data 2/Enhanced EVAP Data	Yes/No	Yes
A/C Clutch Feedback Signal	Engine Data 2	On/Off	On

SCAN TOOL DATA DEFINITIONS

The HVAC Scan Tool Data Definitions contains a brief description of all HVAC related parameters available on the scan tool. The list is in alphabetical order. A given parameter may appear in any one of the data lists. In some cases, the parameter may appear more than once or in more than one data list in order to group certain related parameters together.

Auto Button

The scan tool displays Off or On. When the AUTO button is pressed the scan tool displays On. When released, the scan tool displays Off.

Calibration ID

The scan tool displays the Calibration ID number for service identification.

Desired Blower Mtr Speed

The scan tool displays 0-111 Counts. When the blower motor is OFF, the scan tool displays 0 Counts. When the blower motor controls are placed in the maximum speed setting, the scan tool displays 111 Counts.

Driver Temp Dial

The scan tool displays 15 - 32°C (59 - 89°F). The temperature displayed represents the desired system discharge temperature selected by the driver.

Fan Down Button

The scan tool displays Off or On. When the BLOWER SPEED CONTROL DOWN button is pressed the scan tool displays On. When released, the scan tool displays Off.

Fan Up Button

The scan tool displays Off or On. When the BLOWER SPEED CONTROL DOWN button is pressed the scan tool displays On. When released, the scan tool displays Off.

Front Defrost Button

The scan tool displays Off or On. When the FRONTDEFROST button is pressed the scan tool displays On. When released, the scan tool displays Off.

Inside Temp Sensor

The scan tool displays 0-5.0 Volts. The voltage displayed represents the inside air temperature sensor signal to the HVAC control module.

LH Mix Mtr Position Feedback

The scan tool displays 0-255 Counts. The counts displayed represent the position of the left air temperature actuator.

LH Mix Mtr Position Requested

The scan tool displays 0-255 Counts. The counts displayed represent the commanded position of the left

air temperature actuator.

Mix Motor State

When the left and right air temperature actuators are operating properly, the scan tool displays Normal.

Mode Button

The scan tool displays Off or On. When the MODE button is pressed the scan tool displays On. When released, the scan tool displays Off.

Off Button

The scan tool displays Off or On. When the OFF button is pressed the scan tool displays On. When released, the scan tool displays Off.

Outside Air Button

The scan tool displays Off or On. When the OUTSIDE AIR button is pressed, the scan tool displays On. When released, the scan tool displays Off.

Outside Temp Sensor

The scan tool displays 0-5.0 Volts. The voltage displayed represents the value of the outside air temperature sensor signal.

Passenger Temp Dial

The scan tool displays 80-176 Counts. The counts displayed represent the position of the Passenger temperature dial, 80 being the coolest setting and 176 being the warmest.

PCM - A/C Relay Command

The scan tool displays ON or OFF. ON is displayed when the PCM has energized the A/C compressor clutch relay.

PCM - A/C Request Signal

The scan tool displays Yes or No. Yes is displayed when the HVAC Control Module is requesting A/C system operation.

PCM - A/C Clutch Feedback Signal

The scan tool displays On or Off. Represents the state of the A/C compressor clutch feedback circuit.

PCM - Engine Data 2 - A/C High Side Pressure

The scan tool displays -103 to +3119 kPa (-14 to +452 psi). This parameter represents the A/C refrigerant pressure sensor voltage signal converted to pressure.

PCM - Engine Data 2 - A/C High Side Pressure

The scan tool displays 0.00-5.00 Volts. This parameter represents the A/C refrigerant pressure sensor signal.

Rear Defrost Button

The scan tool displays Off or On. When the REAR DEFROST button is pressed the scan tool displays On. When released, the scan tool displays Off.

Recirculate Button

The scan tool displays Off or On. When the RECIRCULATION button is pressed the scan tool displays On. When released, the scan tool displays Off.

RH Mix Mtr Position Feedback

The scan tool displays 0-255 Counts. The counts displayed represent the position of the right air temperature actuator.

RH Mix Mtr Position Requested

The scan tool displays 0-226 Counts. The counts displayed represent the commanded position of the right air temperature actuator.

Rom ID

The scan tool displays the Rom ID number for service identification.

ROM Part Number

The scan tool displays the ROM part number for service identification.

Sun Load Sensor

The scan tool displays 0-5.0 Volts. The voltage displayed represents the value of the sunload sensor signal.

Vacuum Solenoid 1

The scan tool displays On or Off. When Vacuum Solenoid 1 is energized the scan tool displays On. When the solenoid is de-energized the scan tool displays Off.

Vacuum Solenoid 2

The scan tool displays On or Off. When Vacuum Solenoid 2 is energized the scan tool displays On. When the solenoid is de-energized the scan tool displays Off.

Vacuum Solenoid 3

The scan tool displays On or Off. When Vacuum Solenoid 3 is energized the scan tool displays On. When the solenoid is de-energized the scan tool displays Off.

Vacuum Solenoid 4

The scan tool displays On or Off. When Vacuum Solenoid 4 is energized the scan tool displays On. When the solenoid is de-energized the scan tool displays Off, and the Air Inlet Valve Vacuum Actuator is in the outside air position.

Vacuum Solenoid 5

The scan tool displays On or Off. When Vacuum Solenoid 5 is energized the scan tool displays On. When the solenoid is de-energized the scan tool displays Off.

DIAGNOSTIC TROUBLE CODE (DTC) LIST

Diagnostic Trouble Code (DTC) List

DTC	Diagnostic Procedure	Module
B0332	**DTC B0332, B0333, B0337, or B0338**	HVAC Control Module
B0333	**DTC B0332, B0333, B0337, or B0338**	HVAC Control Module
B0337	**DTC B0332, B0333, B0337, or B0338**	HVAC Control Module
B0338	**DTC B0332, B0333, B0337, or B0338**	HVAC Control Module
B0348	**DTC B0348**	HVAC Control Module
B0361	**DTC B0361, B0363, B0365, or B0367**	HVAC Control Module
B0363	**DTC B0361, B0363, B0365, or B0367**	HVAC Control Module
B0365	**DTC B0361, B0363, B0365, or B0367**	HVAC Control Module
B0367	**DTC B0361, B0363, B0365, or B0367**	HVAC Control Module
B0441	**DTC B0441 or B0446**	HVAC Control Module
B0446	**DTC B0441 or B0446**	HVAC Control Module
P0530	**DTC P0530**	PCM
P0645	**DTC P0645**	PCM
P1539	**DTC P1539**	PCM
P1546	**DTC P1546**	PCM

DTC B0332, B0333, B0337, OR B0338

Circuit Description

The following DTCs are for the ambient air temperature sensor and for the inside air temperature sensor:

- B0332 and B0333 are for the ambient air temperature sensor
- B0337 and B0338 are for the inside air temperature sensor

The ambient air temperature sensor allows the HVAC control module to monitor the temperature of the air surrounding the front of the vehicle. The inside air temperature sensor allows the HVAC control module to monitor the temperature of the air inside the passenger compartment. The module applies 5 volts to internal input resistors that are connected to the signal circuits of the air temperature sensors. The module provides ground to the air temperature sensors through the low reference circuits. The HVAC control module monitors the voltage drops across the air temperature sensors and uses the inputs for automatic control calculations. The HVAC control module also uses the ambient air temperature input to calculate the value of the ambient air temperature display. When the air temperatures are cold, the resistances of the sensors are high and the voltage signals are high. When the air temperatures are hot, the resistances of the sensors are low and the voltage signals are low.

Conditions for Running the DTC

The ignition is turned ON.

Conditions for Setting the DTC

The HVAC control module determines that the voltage applied to the input for the air temperature sensor is less than 0.09 V, for B0332 and B0337, or more than 4.9 V, for B0333 and B0338.

Action Taken When the DTC Sets

- The HVAC control module will store the trouble code in memory.
- A default value will be used for the sensor data by the HVAC control module to allow the A/C system to operate.

Conditions for Clearing the DTC

- The DTC will become history if the HVAC control module no longer detects a failure.
- The history DTC will clear after 100 fault free ignition cycles.
- The DTC can be cleared with a scan tool.

Diagnostic Aids

If condition not present, refer to **Testing for Intermittent Conditions and Poor Connections** in Wiring Systems.

Test Description

The numbers below refer to the step numbers on the diagnostic table.

3: Tests for the proper operation of the circuit in the high voltage range.

4: Tests for the proper operation of the circuit in the low voltage range. If the fuse in the jumper opens when you perform this test, the signal circuit is shorted to voltage.

DTC B0332, B0333, B0337, or B0338

Step	Action	Values	Yes	No
Schematic Reference:HVAC Schematics **Connector End View Reference:HVAC Connector End Views**				
1	Did you perform the HVAC Diagnostic System Check?	-	Go to **Step 2**	Go to **Diagnostic System Check - HVAC Systems - Automatic**
2	1. Install a scan tool. 2. Turn ON the ignition, with the engine OFF. 3. With a scan tool, observe the appropriate Temp Sensor parameter in the Heating and Air Conditioning data list. Does the scan tool indicate that the appropriate Temp Sensor parameter is within the specified range?	0.09-4.90 V	Go to Diagnostic Aids	Go to **Step 3**
3	1. Turn OFF the ignition. 2. Disconnect the appropriate air temperature sensor. 3. Turn ON the ignition, with the engine OFF. 4. With a scan tool, observe the appropriate Temp Sensor parameter. Does the scan tool indicate that the appropriate Temp Sensor parameter is more than the specified value?	4.90 V	Go to **Step 4**	Go to **Step 5**
4	1. Turn OFF the ignition. 2. Connect a 3 amp fused jumper wire between the signal circuit of the appropriate air temperature sensor and the low reference circuit of the appropriate air temperature sensor. 3. Turn ON the ignition, with the engine OFF. 4. With a scan tool, observe the appropriate Temp Sensor parameter. Does the scan tool indicate that the appropriate Temp Sensor parameter is less than the specified value?	0.09 V	Go to **Step 8**	Go to **Step 6**
	Test the signal circuit of the appropriate air temperature sensor for a short to ground. Refer to			

5	**Circuit Testing** and **Wiring Repairs** in Wiring Systems. Did you find and correct the condition?	-	Go to **Step 12**	Go to **Step 9**
6	Test the signal circuit of the appropriate air temperature sensor for a short to voltage, a high resistance, or an open. Refer to **Circuit Testing** and **Wiring Repairs** in Wiring Systems. Did you find and correct the condition?	-	Go to **Step 12**	Go to **Step 7**
7	Test the low reference circuit of the appropriate air temperature sensor for a high resistance or an open. Refer to **Circuit Testing** and **Wiring Repairs** in Wiring Systems. Did you find and correct the condition?	-	Go to **Step 12**	Go to **Step 9**
8	Inspect for poor connections at the harness connector of the appropriate air temperature sensor. Refer to **Testing for Intermittent Conditions and Poor Connections** and **Connector Repairs** in Wiring Systems. Did you find and correct the condition?	-	Go to **Step 12**	Go to **Step 10**
9	Inspect for poor connections at the harness connector of the HVAC control module. Refer to **Testing for Intermittent Conditions and Poor Connections** and **Connector Repairs** in Wiring Systems. Did you find and correct the condition?	-	Go to **Step 12**	Go to **Step 11**
10	Replace the appropriate air temperature sensor. Refer to **Ambient Air Temperature Sensor Replacement** or **Inside Air Temperature Sensor Replacement** . Did you complete the replacement?	-	Go to **Step 12**	-
11	**IMPORTANT:** **Perform the recalibration procedure for the HVAC control module.** Replace the HVAC control module. Refer to **HVAC Control Module Replacement** .Did you complete the replacement?	-	Go to **Step 12**	-
12	1. Use the scan tool in order to clear the DTCs. 2. Operate the vehicle within the Conditions for Running the DTC as specified in the supporting text. Does the DTC reset?	-	Go to **Step 2**	System OK

DTC B0348

Circuit Description

The HVAC control module monitors the ambient light on the inside of the vehicle through a light sensitive photodiode which is called a sunload sensor. The HVAC control module uses this information to compensate for the effect of the sun on the inside air temperature of the vehicle. When the sensor is in direct sunlight, the signal voltage is low. When the sensor is shaded, the signal voltage is high. The HVAC control module requests A/C compressor clutch engagement and controls the air temperature actuator door positions in order to maintain the selected air temperature.

Conditions for Running the DTC

The ignition is turned ON.

Conditions for Setting the DTC

The HVAC control module detects the signal circuit is more than 250 counts (4.90 V).

Action Taken When the DTC Sets

The HVAC control module will store the trouble code in memory.

Conditions for Clearing the DTC

- The DTC will become history if the HVAC control module no longer detects a failure.
- The history DTC will clear after 100 fault free ignition cycles.
- The DTC can be cleared with a scan tool.

Diagnostic Aids

If condition not present, refer to **Testing for Intermittent Conditions and Poor Connections** in Wiring Systems.

Test Description

The numbers below refer to the step numbers on the diagnostic table.

3: Tests for the proper operation of the circuit in the high voltage range.

4: Tests for the proper operation of the circuit in the low voltage range. If the fuse in the jumper opens when you perform this test, the signal circuit is shorted to voltage.

DTC B0348

Step	Action	Values	Yes	No
Schematic Reference:HVAC Schematics **Connector End View Reference:HVAC Connector End Views**				
1	Did you perform the HVAC Diagnostic System Check?	-	Go to **Step 2**	Go to **Diagnostic System Check - HVAC Systems - Automatic**

2	1. Install a scan tool. 2. Turn ON the ignition, with the engine OFF. 3. With a scan tool, observe the Sun Load Sensor parameter in the Heating and Air Conditioning data list. Does the scan tool indicate that the Sun Load Sensor parameter is within the specified range?	0.09-4.90 V	Go to Diagnostic Aids	Go to **Step 3**
3	1. Turn OFF the ignition. 2. Disconnect the sunload sensor. 3. Turn ON the ignition, with the engine OFF. 4. With a scan tool, observe the Sun Load Sensor parameter. Does the scan tool indicate that the Sun Load Sensor parameter is more than the specified value?	4.90 V	Go to **Step 4**	Go to **Step 5**
4	1. Turn OFF the ignition. 2. Connect a 3 amp fused jumper wire between the signal circuit of the sunload sensor and the low reference circuit of the sunload sensor. 3. Turn ON the ignition, with the engine OFF. 4. With a scan tool, observe the Sun Load Sensor parameter. Does the scan tool indicate that the Sun Load Sensor parameter is less than the specified value?	0.09 V	Go to **Step 8**	Go to **Step 6**
5	Test the signal circuit of the sunload sensor for a short to ground. Refer to **Circuit Testing** and **Wiring Repairs** in Wiring Systems. Did you find and correct the condition?	-	Go to **Step 12**	Go to **Step 9**
6	Test the signal circuit of the sunload sensor for a short to voltage, a high resistance, or an open. Refer to **Circuit Testing** and **Wiring Repairs** in Wiring Systems. Did you find and correct the condition?	-	Go to **Step 12**	Go to **Step 7**
7	Test the low reference circuit of the sunload sensor for a high resistance or an open. Refer to **Circuit Testing** and **Wiring Repairs** in Wiring Systems. Did you find and correct the condition?	-	Go to **Step 12**	Go to **Step 9**
8	Inspect for poor connections at the harness connector of the sunload sensor. Refer to **Testing for Intermittent Conditions and Poor Connections** and **Connector Repairs** in Wiring Systems.	-	Go to **Step**	

	Did you find and correct the condition?		**12**	Go to **Step 10**
9	Inspect for poor connections at the harness connector of the HVAC control module. Refer to **Testing for Intermittent Conditions and Poor Connections** and **Connector Repairs** in Wiring Systems. Did you find and correct the condition?	-	Go to **Step 12**	Go to **Step 11**
10	Replace the sunload sensor. Refer to **Sun Load Sensor Replacement** . Did you complete the replacement?	-	Go to **Step 12**	-
11	**IMPORTANT:** **Perform the recalibration procedure for the HVAC control module.** Replace the HVAC control module. Refer to **HVAC Control Module Replacement** .Did you complete the replacement?	-	Go to **Step 12**	-
12	1. Use the scan tool in order to clear the DTCs. 2. Operate the vehicle within the Conditions for Running the DTC as specified in the supporting text. Does the DTC reset?	-	Go to **Step 2**	System OK

DTC B0361, B0363, B0365, OR B0367

Circuit Description

The following DTCs are for the left and right air temperature actuators:

- B0361 and B0363 are for the left air temperature actuator
- B0365 and B0367 are for the right air temperature actuator

The HVAC control module commands the air temperature actuators to move by controlling the voltage supplied on the control circuit. A signal voltage of 0 volts or a signal voltage of 5 volts rotates the air temperature actuator. A voltage of 2.5 volts stops the door. The HVAC control module determines the current position of the actuator by monitoring the voltage on the signal circuit. The feedback potentiometer is a function of the motor position. The HVAC control module controls the air temperature actuator door positions in order to maintain the selected air temperature.

Conditions for Running the DTC

The ignition is turned ON.

Conditions for Setting the DTC

The HVAC control module detects the signal circuit is less than 5 counts (0.09 V), for B0361 and B0365, or more than 250 counts (4.9 V), for B0363 and B0367.

Action Taken When the DTC Sets

A default value will be used for the sensor data by the HVAC control module in an attempt to maintain the air temperature selected by the driver. This default value will be displayed on the scan tool.

Conditions for Clearing the DTC

- The DTC will become history if the HVAC control module no longer detects a failure.
- The history DTC will clear after 100 fault free ignition cycles.
- The DTC can be cleared with a scan tool.

Diagnostic Aids

A disconnected or broken door may also set this DTC by allowing the air temperature actuator to travel to its internal stops, an overtravel condition. If condition not present, refer to **Testing for Intermittent Conditions and Poor Connections** in Wiring Systems.

Test Description

The numbers below refer to the step numbers on the diagnostic table.

3: Tests for a default setting viewed by the scan tool.

4: Tests for the proper operation of the circuit in the high voltage range.

5: Tests for the proper operation of the circuit in the low voltage range. If the fuse in the jumper opens when you perform this test, the signal circuit is shorted to voltage.

6: Tests for a short to ground in the 5 volt reference circuit.

DTC B0361, B0363, B0365, or B0367

Step	Action	Values	Yes	No
Schematic Reference:HVAC Schematics **Connector End View Reference:HVAC Connector End Views**				
1	Did you perform the HVAC Diagnostic System Check?	-	Go to **Step 2**	Go to **Diagnostic System Check - HVAC Systems - Automatic**
2	1. Install a scan tool. 2. Turn ON the ignition, with the engine OFF. 3. With a scan tool, observe the appropriate Mix Mtr Position Feedback parameter in the Heating and Air Conditioning data list.	5-250 counts		

	Does the scan tool indicate that the appropriate Mix Mtr Position Feedback parameter is within the specified range?		Go to **Step 3**	Go to **Step 4**
3	Place the appropriate air temperature switch from the warmest position to the coldest position. Does the scan tool indicate that the value of the appropriate Mix Mtr Position Feedback parameter remains near the specified value?	127 counts	Go to **Step 4**	Go to Diagnostic Aids
4	1. Turn OFF the ignition. 2. Disconnect the appropriate air temperature actuator. 3. Turn ON the ignition, with the engine OFF. 4. Measure the voltage from the signal circuit of the air temperature actuator to a good ground. Is the voltage more than the specified value?	4.90 V	Go to **Step 5**	Go to **Step 9**
5	1. Turn OFF the ignition. 2. Connect a 3 amp fused jumper wire between the signal circuit of the air temperature actuator and the low reference circuit of the air temperature actuator. 3. Turn ON the ignition, with the engine OFF. 4. Measure the voltage from the jumper wire to a good ground. Is the voltage less than the specified value?	0.09 V	Go to **Step 6**	Go to **Step 10**
6	1. Turn OFF the ignition. 2. Disconnect the fused jumper wire. 3. Turn ON the ignition, with the engine OFF. 4. Measure the voltage from the 5 volt reference circuit at the air temperature actuator connector to a good ground. Is the voltage more than the specified value?	4.90 V	Go to **Step 8**	Go to **Step 7**
7	Test the 5 volt reference circuit of the air temperature actuator for a short to ground, or an open. Refer to **Circuit Testing** and **Wiring Repairs** in Wiring Systems. Did you find and correct the condition?	-	Go to **Step 16**	Go to **Step 13**
8	Test the 5 volt reference circuit of the air temperature actuator for a short to voltage, a high resistance, or an open. Refer to **Circuit Testing** and **Wiring Repairs** in Wiring Systems. Did you find and correct the condition?	-	Go to **Step 16**	Go to **Step 12**
9	Test the signal circuit of the air temperature actuator for a short to ground, or an open. Refer to **Circuit Testing** and **Wiring Repairs** in Wiring Systems.	-	Go to **Step**	

	Did you find and correct the condition?		**16**	Go to **Step 13**
10	Test the signal circuit of the air temperature actuator for a short to voltage, a high resistance, or an open. Refer to **Circuit Testing** and **Wiring Repairs** in Wiring Systems. Did you find and correct the condition?	-	Go to **Step 16**	Go to **Step 11**
11	Test the low reference circuit of the air temperature actuator for a high resistance or an open. Refer to **Circuit Testing** and **Wiring Repairs** in Wiring Systems. Did you find and correct the condition?	-	Go to **Step 16**	Go to **Step 13**
12	Inspect for poor connections at the harness connector of the air temperature actuator. Refer to **Testing for Intermittent Conditions and Poor Connections** and **Connector Repairs** in Wiring Systems. Did you find and correct the condition?	-	Go to **Step 16**	Go to **Step 14**
13	Inspect for poor connections at the harness connector of the HVAC control module. Refer to **Testing for Intermittent Conditions and Poor Connections** and **Connector Repairs** in Wiring Systems. Did you find and correct the condition?	-	Go to **Step 16**	Go to **Step 15**
14	**IMPORTANT:** **Perform the recalibration procedure for the air temperature actuator.** Replace the appropriate air temperature actuator. Refer to **Air Temperature Actuator Replacement - Left** or **Air Temperature Actuator Replacement - Right** .Did you complete the replacement?	-	Go to **Step 16**	-
15	**IMPORTANT:** **Perform the recalibration procedure for the HVAC control module.** Replace the HVAC control module. Refer to **HVAC Control Module Replacement** .Did you complete the replacement?	-	Go to **Step 16**	-
16	1. Use the scan tool in order to clear the DTCs. 2. Operate the vehicle within the Conditions for Running the DTC as specified in the supporting text. Does the DTC reset?	-	Go to **Step 2**	System OK

DTC B0441 OR B0446

Circuit Description

The following DTCs are for the left and right air temperature actuators:

- B0441 is for the left air temperature actuator
- B0446 is for the right air temperature actuator

The HVAC control module commands the air temperature actuators to move by controlling the voltage supplied on the control circuit. A signal voltage of 0 volts or a signal voltage of 5 volts rotates the air temperature actuator. A voltage of 2.5 volts stops the door. The HVAC control module determines the current position of the actuator by monitoring the feedback voltage of the air temperature door position signal circuit. The feedback potentiometer position is a function of the air temperature actuator. The HVAC control module controls the air temperature door position in order to maintain the selected air temperature.

Whenever the HVAC control module keep alive memory battery power is interrupted, the HVAC control module will perform a recalibration of the actuators. During recalibration, the HVAC control module will drive the air temperature actuators to their minimum and maximum travel extremes. The HVAC control module will then calculate a travel range from this data and compare it to a calibrated range within the HVAC control module. If the actual travel range is not within the calibrated expected range, the actuator will be considered not calibrated and the DTC will set.

Conditions for Running the DTC

- The ignition is turned ON.
- The HVAC control module power must be interrupted.

Conditions for Setting the DTC

The air temperature actuator actual total travel range is less than or more than the calibrated limits.

Action Taken When the DTC Sets

- The HVAC control module will continue to make use of whatever air temperature actuator travel range is still available.
- Each time the ignition switch is turned ON the HVAC control module will perform a recalibration of the actuator.

Conditions for Clearing the DTC

The air temperature actuator travel range error must be corrected.

Diagnostic Aids

- The range fault code can only be detected following a check of the air temperature actuator travel range. The air temperature actuator travel range check can only be initiated by disrupting power to the HVAC control module or with the scan tool.
- The calibration limit is 147-220 counts (2.9-4.4 V). An actual range below this limit suggests an obstruction, something stuck in the door limiting travel. An actual range above this limit suggests an over travel condition, damaged or missing foam seals.
- If condition not present, refer to **Testing for Intermittent Conditions and Poor Connections** in Wiring

Systems.

DTC B0441 or B0446

Step	Action	Values	Yes	No
Schematic Reference:HVAC Schematics **Connector End View Reference:HVAC Connector End Views**				
1	Did you perform the HVAC Diagnostic System Check?	-	Go to **Step 2**	Go to **Diagnostic System Check - HVAC Systems - Automatic**
2	1. Install a scan tool. 2. Turn ON the ignition, with the engine OFF. 3. With a scan tool, command the appropriate Mix Motor ON and OFF to display the maximum and the minimum counts of the appropriate Mix Motor Position Feedback in the Heating and Air Conditioning, Special Functions, Miscellaneous Test list. 4. Subtract the minimum appropriate Mix Motor Position Feedback from the maximum appropriate Mix Motor Position Feedback. Does the result of the calculation indicate that the actual travel of the appropriate air temperature actuator is within the specified range?	147-220 counts	Go to Diagnostic Aids	Go to **Step 3**
3	Test the ignition 3 voltage circuit of the appropriate air temperature actuator for an open or high resistance. Refer to **Circuit Testing** and **Wiring Repairs** in Wiring Systems. Did you find and correct the condition?	-	Go to **Step 13**	Go to **Step 4**
4	Test the air temperature door control circuit of the appropriate air temperature actuator for an open, high resistance, short to ground or short to voltage. Refer to **Circuit Testing** and **Wiring Repairs** in Wiring Systems. Did you find and correct the condition?	-	Go to **Step 13**	Go to **Step 5**
5	Test the 5 volt reference circuit of the appropriate air temperature actuator for an open or high resistance. Refer to **Circuit Testing** and **Wiring Repairs** in Wiring Systems. Did you find and correct the condition?	-	Go to **Step 13**	Go to **Step 6**
	IMPORTANT: **The appropriate air temperature actuator connector and the HVAC control module**			

6	**connector must be connected to correctly perform test.** 1. Turn ON the ignition, with the engine OFF. 2. With the scan tool, observe the appropriate Mix Motor Position Feedback data parameter. 3. Connect a 3 amp fused jumper wire between the air temperature door control circuit and the 5 volt reference circuit of the appropriate air temperature actuator. This action drives the actuator to the full HOT position, for the left air temperature actuator, or full COLD for the right air temperature actuator. 4. Remove and reconnect the jumper wire between the air temperature door control circuit and the low reference circuit of the appropriate air temperature actuator. This action drives the actuator to the full COLD position, for the left air temperature actuator, or full HOT for the right air temperature actuator. Does the appropriate air temperature actuator drive shaft rotate and do the counts change?	-	Go to **Step 7**	Go to **Step 9**
7	1. Measure the voltage from the temperature door control circuit of the appropriate air temperature actuator to a good ground. 2. With a scan tool, command the appropriate Temp Door Position from Hot to Cold. Does the voltage measure near the specified value when increasing temperature, near the specified value when decreasing temperature and near the specified value when stationary?	0 V decreasing 5 V increasing 2.5 V stationary	Go to **Step 8**	Go to **Step 10**
8	Inspect the appropriate air temperature door and the appropriate air temperature actuator for the following conditions: • A misaligned air temperature actuator Refer to **Air Temperature Actuator Replacement - Left** or **Air Temperature Actuator Replacement - Right** • A broken or binding linkages or air	-		

	temperature door • An obstruction that prevents the air temperature door from operating within its full range of motion • Missing seals to the air temperature door • Misaligned seals to the air temperature door Did you find and correct the condition?		Go to **Step 13**	Go to Diagnostic Aids
9	Inspect for poor connections at the harness connector of the appropriate air temperature actuator. Refer to **Testing for Intermittent Conditions and Poor Connections** and **Connector Repairs** in Wiring Systems. Did you find and correct the condition?	-	Go to **Step 13**	Go to **Step 11**
10	Inspect for poor connections at the harness connector of the HVAC control module. Refer to **Testing for Intermittent Conditions and Poor Connections** and **Connector Repairs** in Wiring Systems. Did you find and correct the condition?	-	Go to **Step 13**	Go to **Step 12**
11	**IMPORTANT:** **Perform the recalibration procedure for the appropriate air temperature actuator.** Replace the appropriate air temperature actuator. Refer to **Air Temperature Actuator Replacement - Left** or **Air Temperature Actuator Replacement - Right** .Did you complete the replacement?	-	Go to **Step 13**	-
12	**IMPORTANT:** **Perform the recalibration procedure for the HVAC control module.** Replace the HVAC control module. Refer to **HVAC Control Module Replacement** .Did you complete the replacement?	-	Go to **Step 13**	-
13	1. Use the scan tool in order to clear the DTCs. 2. Operate the vehicle within the Conditions for Running the DTC as specified in the supporting text. Does the DTC reset?	-	Go to **Step 2**	System OK

DTC P0530

Circuit Description

The powertrain control module (PCM) monitors the high side refrigerant pressure through a A/C refrigerant pressure sensor. When the pressure is high the signal voltage is high. When the pressure is low the signal voltage is low. When pressure is high the PCM commands the cooling fans on. When pressure is too high or too low the PCM will not allow the A/C compressor clutch to engage.

Conditions for Running the DTC

- The engine is running.
- A/C has been requested.

Conditions for Setting the DTC

- The PCM detects the signal circuit is less than 0.09 volts or more than 4.9 volts.
- The condition exists for 5 seconds.

Action Taken When the DTC Sets

- The PCM will not illuminate the Malfunction Indicator Lamp (MIL).
- The PCM stores the failure records.
- The A/C compressor clutch is disabled.

Conditions for Clearing the DTC

- The DTC will become history if the PCM no longer detects a failure.
- The history DTC will clear after 40 fault-free ignition cycles.
- The DTC can be cleared with a scan tool.

Diagnostic Aids

If condition not present, refer to **Testing for Intermittent Conditions and Poor Connections** in Wiring Systems.

Test Description

The numbers below refer to the step numbers on the diagnostic table.

4: Tests for the proper operation of the circuit in the low voltage range.

5: Tests for the proper operation of the circuit in the high voltage range. If the fuse in the jumper opens when you perform this test, the signal circuit is shorted to ground.

6: Tests for a short to voltage in the 5 volt reference circuit.

DTC P0530

Step	Action	Values	Yes	No

Schematic Reference:HVAC Schematics
Connector End View Reference:HVAC Connector End Views

1	Did you perform the HVAC Diagnostic System Check?	-	Go to **Step 2**	Go to **Diagnostic System Check - HVAC Systems - Automatic**
2	**IMPORTANT:** **The ambient air temperature must be above 3° C (38°F).** 1. Turn OFF the ignition. 2. Inspect the A/C compressor for free rotation operation. 3. Start the engine. 4. Turn OFF the HVAC controls. Does the A/C compressor operate?	-	Go to **HVAC Compressor Clutch Does Not Disengage**	Go to **Step 3**
3	1. Install a scan tool. 2. Turn ON the ignition, with the engine OFF. 3. With a scan tool, observe the A/C High Side Pressure parameter in the powertrain control module Engine Data 2 list. Does the scan tool indicate that the A/C High Side Pressure parameter is within the specified range?	0.09-4.90 V	Go to Diagnostic Aids	Go to **Step 4**
4	1. Turn OFF the ignition. 2. Disconnect the A/C refrigerant pressure sensor. 3. Turn ON the ignition, with the engine OFF. 4. With a scan tool, observe the A/C High Side Pressure parameter. Does the scan tool indicate that the A/C High Side Pressure parameter is less than the specified value?	0.09 V	Go to **Step 5**	Go to **Step 11**
	1. Turn OFF the ignition. 2. Connect a 3 amp fused jumper wire between the 5 volt reference circuit of the A/C refrigerant pressure sensor and the signal circuit of the A/C refrigerant			

5	pressure sensor. 3. Turn ON the ignition, with the engine OFF. 4. With a scan tool, observe the A/C High Side Pressure parameter. Does the scan tool indicate that the A/C High Side Pressure parameter is more than the specified value?	4.90 V	Go to **Step 6**	Go to **Step 9**
6	1. Disconnect the fused jumper wire. 2. Measure the voltage between the 5 volt reference circuit of the A/C refrigerant pressure sensor and the low reference circuit of the A/C refrigerant pressure sensor. Does the voltage measure less than the specified value?	5.1 V	Go to **Step 7**	Go to **Step 8**
7	1. Turn OFF the ignition. 2. Disconnect the negative battery cable. 3. Measure the resistance from the low reference circuit of the A/C refrigerant pressure sensor to a good ground. Does the resistance measure less than the specified value?	5 ohm	Go to **Step 13**	Go to **Step 12**
8	Test the 5 volt reference circuit of the A/C refrigerant pressure sensor for a short to voltage. Refer to **Circuit Testing** and **Wiring Repairs** in Wiring Systems. Did you find and correct the condition?	-	Go to **Step 17**	Go to **Step 14**
9	Test the 5 volt reference circuit of the A/C refrigerant pressure sensor for a short to ground, a high resistance or a open. Refer to **Circuit Testing** and **Wiring Repairs** in Wiring Systems. Did you find and correct the condition?	-	Go to **Step 17**	Go to **Step 10**
10	Test the signal circuit of the A/C refrigerant pressure sensor for a short to ground, a high resistance or an open. Refer to **Circuit Testing** and **Wiring Repairs** in Wiring Systems. Did you find and correct the condition?	-	Go to **Step 17**	Go to **Step 14**
	Test the signal circuit of the A/C refrigerant pressure sensor for a short to voltage. Refer to			

11	**Circuit Testing** and **Wiring Repairs** in Wiring Systems. Did you find and correct the condition?	-	Go to **Step 17**	Go to **Step 14**
12	1. Disconnect the PCM. 2. Test the low reference circuit of the A/C refrigerant pressure sensor for a high resistance or an open. Refer to **Circuit Testing** and **Wiring Repairs** in Wiring Systems. Did you find and correct the condition?	-	Go to **Step 17**	Go to **Step 14**
13	Inspect for poor connections at the harness connector of the A/C refrigerant pressure sensor. Refer to **Testing for Intermittent Conditions and Poor Connections** and **Connector Repairs** in Wiring Systems. Did you find and correct the condition?	-	Go to **Step 17**	Go to **Step 15**
14	Inspect for poor connections at the harness connector of the PCM. Refer to **Testing for Intermittent Conditions and Poor Connections** and **Connector Repairs** in Wiring Systems. Did you find and correct the condition?	-	Go to **Step 17**	Go to **Step 16**
15	Replace the A/C refrigerant pressure sensor. Refer to **Air Conditioning (A/C) Refrigerant Pressure Sensor Replacement** in Heating, Ventilation and Air Conditioning. Did you complete the replacement?	-	Go to **Step 17**	-
16	**IMPORTANT:** **Perform the recalibration procedure for the PCM.** Replace the PCM. Refer to **Powertrain Control Module (PCM) Replacement** in Engine Controls.Did you complete the replacement?	-	Go to **Step 17**	-
17	1. Use the scan tool in order to clear the DTCs. 2. Operate the vehicle within the Conditions for Running the DTC as specified in the supporting text. Does the DTC reset?	-	Go to **Step 2**	System OK

DTC P0645

Circuit Description

Ignition voltage is supplied directly to the A/C compressor clutch relay. The powertrain control module (PCM) controls the relay by grounding the control circuit through an internal solid state device called a driver. The primary function of the driver is to supply the ground for the component being controlled. Each driver has a fault line which is monitored by the PCM. When the PCM is commanding a component ON, the voltage of the control circuit should be near 0 volts. When the PCM is commanding the control circuit to a component OFF, the voltage potential of the circuit should be near battery voltage. If the fault detection circuit senses a voltage other than what is expected, this DTC will set.

Conditions for Running the DTC

- The ignition voltage is between 9.0-18.0 volts.
- The engine speed is more than 80 RPM.
- The PCM driver is activated.

Conditions for Setting the DTC

- The PCM detects an improper voltage level on the output circuit that controls the A/C relay.
- The condition is present for at least 5 seconds.

Action Taken When the DTC Sets

- The PCM will not illuminate the Malfunction Indicator Lamp (MIL).
- The PCM stores the failure records.
- The A/C compressor clutch is disabled.

Conditions for Clearing the DTC

- The DTC will become history if the PCM no longer detects a failure.
- The history DTC will clear after 40 fault-free ignition cycles.
- The DTC can be cleared with a scan tool.

Test Description

The numbers below refer to the step numbers on the diagnostic table.

2: Listen for an audible click when the A/C compressor clutch relay operates. Command both the ON and OFF states. Repeat the commands as necessary.

3: Tests for voltage at the coil side of the A/C compressor clutch relay. The 10 amp fuse supplies power to the coil side of the A/C compressor clutch relay.

4: Verifies that the PCM is providing ground to the A/C compressor clutch relay.

5: Tests if ground is constantly being applied to the A/C compressor clutch relay.

6: Tests for a short to voltage or an open.

10: If the A/C fuse is open ensure to test the A/C compressor clutch supply voltage circuit for short to ground.

12: Perform the recalibration procedure for the PCM.

DTC P0645

Step	Action	Yes	No
Schematic Reference:HVAC Schematics **Connector End View Reference:HVAC Connector End Views**			
1	Did you perform the HVAC Diagnostic System Check?	Go to **Step 2**	Go to **Diagnostic System Check - HVAC Systems - Automatic**
2	1. Install a scan tool. 2. Turn ON the ignition, with the engine OFF. 3. With a scan tool, command the A/C Relay ON and OFF in the PCM Special Functions, Engine Output Controls list. Does the A/C Relay turn ON and OFF with each command?	Go to **Testing for Intermittent Conditions and Poor Connections** in Wiring Systems	Go to **Step 3**
3	1. Turn OFF the ignition. 2. Disconnect the A/C compressor clutch relay. 3. Turn ON the ignition, with the engine OFF. 4. Probe the battery positive voltage circuit of the A/C compressor clutch relay with a test lamp that is connected to a good ground. Does the test lamp illuminate?	Go to **Step 4**	Go to **Step 10**
4	1. Connect a test lamp between the control circuit of the A/C compressor clutch relay and the battery positive voltage circuit of the A/C compressor clutch relay. 2. With a scan tool, command the A/C Relay ON and OFF. Does the test lamp turn ON and OFF with each command?	Go to **Step 8**	Go to **Step 5**
5	Does the test lamp remain illuminated with each command?	Go to **Step 7**	Go to **Step 6**

6	Test the control circuit of the A/C compressor clutch relay for a short to voltage or an open. Refer to **Circuit Testing** and **Wiring Repairs** in Wiring Systems. Did you find and correct the condition?	Go to **Step 13**	Go to **Step 9**
7	Test the control circuit of the A/C compressor clutch relay for a short to ground. Refer to **Circuit Testing** and **Wiring Repairs** in Wiring Systems. Did you find and correct the condition?	Go to **Step 13**	Go to **Step 9**
8	Inspect for poor connections at the A/C compressor clutch relay. Refer to **Testing for Intermittent Conditions and Poor Connections** and **Connector Repairs** in Wiring Systems. Did you find and correct the condition?	Go to **Step 13**	Go to **Step 11**
9	Inspect for poor connections at the harness connector of the PCM. Refer to **Testing for Intermittent Conditions and Poor Connections** and **Connector Repairs** in Wiring Systems. Did you find and correct the condition?	Go to **Step 13**	Go to **Step 12**
10	Repair the battery positive voltage circuit of the A/C compressor clutch relay. Refer to **Wiring Repairs** in Wiring Systems. Did you complete the repair?	Go to **Step 13**	-
11	Replace the A/C compressor clutch relay. Did you complete the replacement?	Go to **Step 13**	-
12	**IMPORTANT:** **Perform the recalibration procedure for the PCM.** Replace the PCM. Refer to **Powertrain Control Module (PCM) Replacement** in Engine Controls.Did you complete the replacement?	Go to **Step 13**	-
13	1. Use the scan tool in order to clear the DTCs. 2. Operate the vehicle within the Conditions for Running the DTC as specified in the supporting text. Does the DTC reset?	Go to **Step 2**	System OK

DTC P1539

Circuit Description

The powertrain control module (PCM) will activate the A/C clutch relay when the PCM detects that A/C has been requested. When the PCM activates the relay, voltage should be present at both the A/C compressor clutch and the A/C compressor clutch supply voltage circuit at the PCM. If voltage is detected when A/C is not requested this DTC sets.

Conditions for Running the DTC

The ignition is turned ON.

Conditions for Setting the DTC

- The PCM detects a voltage on the A/C compressor clutch supply voltage circuit when the A/C is not requested.
- The condition is present for at least 20 seconds.

Action Taken When the DTC Sets

- The PCM will not illuminate the Malfunction Indicator Lamp (MIL).
- The PCM stores the failure records.
- The A/C compressor clutch is disabled.

Conditions for Clearing the DTC

- The DTC will become history if the PCM no longer detects a failure.
- The history DTC will clear after 40 fault-free ignition cycles.
- The DTC can be cleared with a scan tool.

Test Description

The numbers below refer to the step numbers on the diagnostic table.

3: Verifies the condition is present.
4: Determines if the A/C compressor clutch relay is at fault.
5: Determines if the PCM is at fault or the A/C compressor clutch supply voltage circuit is at fault.
7: Perform the recalibration procedure for the PCM.

DTC P1539

Step	Action	Yes	No
Schematic Reference:HVAC Schematics **Connector End View Reference:HVAC Connector End Views**			
1	Did you perform the HVAC Diagnostic System Check?	Go to **Step 2**	Go to **Diagnostic System Check - HVAC Systems - Automatic**

2	**IMPORTANT:** **Diagnose P0645 first if it is set.** 1. Install a scan tool. 2. Start the engine. 3. Turn OFF the A/C and let the engine idle. 4. With a scan tool, observe the A/C Request Signal and the A/C Relay Command parameters in the Powertrain, Engine Data 2 list. Does the A/C Request Signal display YES and the A/C Relay Command display ON when the A/C is not requested?	Go to **HVAC Compressor Clutch Does Not Engage** or **HVAC Compressor Clutch Does Not Disengage**	Go to **Step 3**
3	With a scan tool, observe the A/C Clutch Feedback Signal parameter in the Powertrain, Engine Data 2 list. Does the A/C Clutch Feedback Signal parameter display ON?	Go to **Step 4**	Go to **Testing for Intermittent Conditions and Poor Connections** in Wiring Systems
4	Remove the A/C compressor clutch relay. Does the A/C Clutch Feedback Signal parameter display OFF?	Go to **Step 6**	Go to **Step 5**
5	Test the A/C compressor clutch supply voltage circuit for a short to voltage. Refer to **Circuit Testing** and **Wiring Repairs** in Wiring Systems. Did you find and correct the condition?	Go to **Step 8**	Go to **Step 7**
6	Replace the A/C compressor clutch relay. Did you complete the replacement?	Go to **Step 8**	-
7	**IMPORTANT:** **Perform the recalibration procedure for the PCM.** Replace the PCM. Refer to **Powertrain Control Module (PCM) Replacement** in Engine Controls.Did you complete the replacement?	Go to **Step 8**	-
	1. Use the scan tool in order to clear the DTCs. 2. Operate the vehicle within the		

8	Conditions for Running the DTC as specified in the supporting text. Does the DTC reset?	Go to **Step 2**	System OK

DTC P1546

Circuit Description

The powertrain control module (PCM) will activate the A/C clutch relay when the PCM detects that A/C has been requested. When the PCM activates the relay, voltage should be present at both the A/C compressor clutch and the A/C compressor clutch supply voltage circuit at the PCM. If voltage is not detected when A/C is requested this DTC sets.

Conditions for Running the DTC

The ignition is turned ON.

Conditions for Setting the DTC

- The PCM detects that A/C has been requested.
- The PCM commands the A/C compressor clutch driver.
- The PCM does not detect a voltage on the A/C compressor clutch supply voltage circuit that supplies voltage to the A/C compressor clutch.
- The condition is present for at least 20 seconds.

Action Taken When the DTC Sets

- The PCM will not illuminate the Malfunction Indicator Lamp (MIL).
- The PCM stores the failure records.
- The A/C compressor clutch is disabled.

Conditions for Clearing the DTC

- The DTC will become history if the PCM no longer detects a failure.
- The history DTC will clear after 40 fault-free ignition cycles.
- The DTC can be cleared with a scan tool.

Test Description

The numbers below refer to the step numbers on the diagnostic table.

3: Verifies that battery voltage is supplied to the A/C compressor clutch relay.

4: Tests if the A/C relay is at fault or the A/C compressor clutch supply voltage circuit is at fault.

5: If the A/C clutch feedback signal parameter displays OFF, this indicates the PCM does not recognize voltage from the A/C compressor clutch supply voltage circuit.

6: Tests for a high resistance or an open.

12: Perform the recalibration procedure for the PCM.

DTC P1546

Step	Action	Yes	No
Schematic Reference: HVAC Schematics **Connector End View Reference:HVAC Connector End Views**			
1	Did you perform the HVAC Diagnostic System Check?	Go to **Step 2**	Go to **Diagnostic System Check - HVAC Systems - Automatic**
2	**IMPORTANT:** **Diagnose P0645 first if it is set.** 1. Install a scan tool. 2. Start the engine. 3. Turn ON the A/C and let the engine idle for 5 minutes. 4. With a scan tool, observe the A/C Clutch Feedback Signal parameter in the Powertrain, Engine Data 2 list. Does the A/C Clutch Feedback Signal parameter display ON when the A/C clutch is engaged?	Go to **Testing for Intermittent Conditions and Poor Connections** in Wiring Systems	Go to **Step 3**
3	**IMPORTANT:** **For underhood electrical center relay terminal identification refer to Electrical Center Identification Views in Wiring Systems.** 1. Turn OFF the ignition. 2. Disconnect the A/C compressor clutch relay. 3. Turn ON the ignition, with the engine OFF. 4. Probe the ignition 1 voltage circuit at the A/C compressor relay terminal with the test lamp that is connected to a good ground. Does the test lamp illuminate?	Go to **Step 4**	Go to **Step 9**
	Install a 10-amp fused Jumper wire between the		

4	ignition 1 voltage circuit to the A/C compressor clutch supply voltage circuit. Does the A/C compressor clutch engage?	Go to **Step 5**	Go to **Step 10**
5	**IMPORTANT:** **The fused jumper wire should still be installed with the ignition on.** With a scan tool, observe the A/C Clutch Feedback Signal parameter.Does the scan tool indicate that the A/C Clutch Feedback Signal parameter is ON?	Go to **Step 7**	Go to **Step 6**
6	Test the A/C compressor clutch supply voltage circuit for a high resistance or an open. Refer to **Wiring Repairs** in Wiring Systems. Did you find and correct the condition?	Go to **Step 13**	Go to **Step 8**
7	Inspect for poor connections at the A/C compressor relay. Refer to **Testing for Intermittent Conditions and Poor Connections** and **Connector Repairs** in Wiring Systems. Did you find and correct the condition?	Go to **Step 13**	Go to **Step 11**
8	Inspect for poor connections at the harness connector of the PCM. Refer to **Testing for Intermittent Conditions and Poor Connections** and **Connector Repairs** in Wiring Systems. Did you find and correct the condition?	Go to **Step 13**	Go to **Step 12**
9	Repair the ignition 1 voltage circuit of the A/C compressor clutch relay. Refer to **Wiring Repairs** in Wiring Systems. Did you complete the repair?	Go to **Step 13**	-
10	Repair the A/C compressor clutch supply voltage circuit between the A/C compressor clutch relay and the A/C compressor clutch. Refer to **Wiring Repairs** in Wiring Systems. Did you complete the repair?	Go to **Step 13**	-
11	Replace the A/C compressor clutch relay. Did you complete the replacement?	Go to **Step 13**	-
12	**IMPORTANT:** **Perform the programming procedure for the PCM.** Replace the PCM. Refer to **Powertrain Control Module (PCM) Replacement** in Engine Controls.Did you complete the replacement?	Go to **Step 13**	-

13	1. Use the scan tool in order to clear the DTCs. 2. Operate the vehicle within the Conditions for Running the DTC as specified in the supporting text. Does the DTC reset?	Go to **Step 2**	System OK

SYMPTOMS - HVAC SYSTEMS - AUTOMATIC

IMPORTANT: The following steps must be completed before using the symptom tables.

1. Perform the **Diagnostic System Check - HVAC Systems - Automatic** before using the Symptom Tables in order to verify that all of the following are true:
   - There are no DTCs set.
   - The control modules can communicate through the serial data link.
2. Review the system operation in order to familiarize yourself with the system functions. Refer to
   - **Air Delivery Description and Operation**
   - **Air Temperature Description and Operation**

Visual/Physical Inspection

- Inspect for aftermarket devices which could affect the operation of the HVAC System. Refer to **Checking Aftermarket Accessories** in Wiring Systems.
- Inspect the easily accessible or visible system components for obvious damage or conditions which could cause the symptom.
- Verify the A/C compressor clutch turns freely and is not seized.
- Verify that the customer is using the correct key to enable personalization and is not inadvertently activating passenger HVAC controls.
- The A/C compressor will not operate in cold outside air temperatures. Refer to **Air Temperature Description and Operation** .
- The following conditions may cause window fogging:
  - Wet carpet or mats
  - High humidity
  - Interior water leak
  - Blocked A/C evaporator drain tube
  - Maximum passenger capacity
  - Blocked body pressure relief valves
- Inspect the air distribution system for causes of reduced air flow:
  - Obstructed or dirty passenger compartment air filter, if equipped
  - Blocked or damaged air inlet or outlet vents

Intermittent

Faulty electrical connections or wiring may be the cause of intermittent conditions. Refer to **Testing for Intermittent Conditions and Poor Connections** in Wiring Systems.

Symptom List

Refer to a symptom diagnostic procedure from the following list in order to diagnose the symptom:

- **HVAC Compressor Clutch Does Not Engage**
- **HVAC Compressor Clutch Does Not Disengage**
- **Blower Motor Always On**
- **Blower Motor Inoperative**
- **Blower Motor Malfunction**
- **Too Hot in Vehicle**
- **Too Cold in Vehicle**
- **Air Delivery Improper**
- **Air Recirculation Malfunction**
- **Vacuum Control System Diagnostic**
- **Leak Testing** in Heating, Ventilation and Air Conditioning
- **Defrosting Insufficient** in Heating, Ventilation and Air Conditioning
- **Noise Diagnosis - Blower Motor** in Heating, Ventilation and Air Conditioning
- **Noise Diagnosis - Air Conditioning (A/C) System** in Heating, Ventilation and Air Conditioning
- **Noise Diagnosis - HVAC Module** in Heating, Ventilation and Air Conditioning
- **Odor Diagnosis** in Heating, Ventilation and Air Conditioning

HVAC COMPRESSOR CLUTCH DOES NOT ENGAGE

Test Description

The numbers below refer to the step numbers on the diagnostic table.

2: The A/C compressor relay output is disabled if engine coolant temperature is above 121°C (250°F).

3: Placing the mode switch in any position other than OFF, along with placing the air temperature control switch in a cold setting, activates A/C operation. For the purpose of this and future steps where A/C operation is necessary, bi-level mode is used for consistent testing.

6: The HVAC control module is inoperative when the module does not respond to any operator control requests to enable the A/C compressor. The blower motor may still operate independent of the A/C controls.

HVAC Compressor Clutch Does Not Engage

Step	Action	Yes	No
Schematic Reference:HVAC Schematics **Connector End View Reference:HVAC Connector End Views** DEFINITION: The A/C compressor clutch will not engage when an A/C request has been made and a Powertrain DTC has not been set.			
1	Did you perform the HVAC Diagnostic System Check?	Go to **Step 2**	Go to **Diagnostic System Check - HVAC Systems - Automatic**
2	1. Install a scan tool. 2. Start the engine. 3. With a scan tool, observe the ECT Sensor parameter in the Powertrain data list. Does the scan tool indicate that the ECT Sensor parameter is below 121°C (250°F)?	Go to **Step 3**	Go to **Engine Overheating** in Engine Cooling
3	**IMPORTANT:** **For A/C compressor operation, ambient air temperature must be above 3°C (38°F).** 1. Start the engine. 2. Place the blower motor switch in the maximum speed position. 3. Place the A/C request switch in the ON position. 4. Place the air temperature switch in the coldest position. Does the A/C compressor operate?	Go to **Testing for Intermittent Conditions and Poor Connections** in Wiring Systems	Go to **Step 4**
4	1. Park the vehicle inside or in the shade. 2. Open the windows in order to ventilate the interior of the vehicle. 3. If the A/C system was operating, allow the A/C system to equalize, about 2 minutes. 4. Turn OFF the ignition. 5. Install the **J 43600** ACR 2000. 6. Record the ambient air temperature at the vehicle. 7. Record readings of the low and high side STATIC pressures. 8. Compare the pressure values with the specifications for the ambient air		

	temperature. Refer to **Air Conditioning (A/C) System Performance Test** in Heating, Ventilation and Air Conditioning. Does the system pass the A/C System Performance Test?	Go to **Step 5**	Go to **Leak Testing** in Heating, Ventilation and Air Conditioning
5	1. Turn ON the ignition, with the engine OFF. 2. With a scan tool, observe the A/C High Side Pressure parameter in the powertrain data 2 list. 3. Compare the A/C High Side Pressure parameter on the scan tool to the high side pressure value on the ACR2000. Are the pressure values within 103 kPa (15 psi) of each other?	Go to **Step 6**	Go to **Step 16**
6	Is the HVAC control module inoperative?	Go to **Step 15**	Go to **Step 7**
7	1. Start the engine. 2. With a scan tool, observe the A/C Request Signal parameter in the powertrain data list. 3. Place the air temperature switch in the coldest position. 4. Place the A/C request switch in the ON position. Does the scan tool indicate that the A/C Request Signal parameter is YES?	Go to **Step 8**	Go to **Step 27**
8	With a scan tool, observe the A/C Relay Command status in the powertrain data list. Does the scan tool indicate that the A/C Relay Command status is ON?	Go to **Step 9**	Go to **Step 28**
9	With a scan tool, command the A/C compressor clutch relay ON and OFF. Does the A/C compressor clutch relay turn ON and OFF with each command?	Go to **Step 13**	Go to **Step 10**
10	1. Turn OFF the ignition. 2. Disconnect the A/C compressor clutch relay. 3. Turn ON the ignition, with the engine OFF. 4. Probe the coil side voltage supply circuit of the A/C compressor clutch relay with a test lamp that is connected to a good ground. Does the test lamp illuminate?	Go to **Step 11**	Go to **Step 23**

11	1. Connect a test lamp between the control circuit of the A/C compressor clutch relay and the coil side voltage supply circuit of the A/C compressor clutch relay. 2. With a scan tool, command the A/C compressor clutch relay ON and OFF. Does the test lamp turn ON and OFF with each command?	Go to **Step 25**	Go to **Step 12**
12	Does the test lamp remain illuminated with each command?	Go to **Step 19**	Go to **Step 18**
13	1. Turn OFF the ignition. 2. Disconnect the A/C compressor clutch relay. 3. Probe the switch side voltage supply circuit of the A/C compressor clutch relay with a test lamp that is connected to a good ground. Does the test lamp illuminate?	Go to **Step 14**	Go to **Step 22**
14	1. Connect a 10 amp fused jumper wire between the switch side voltage circuit of the A/C compressor clutch relay and the A/C compressor clutch supply voltage circuit of the A/C compressor clutch. 2. Turn ON the ignition, with the engine OFF. Does the A/C compressor clutch engage?	Go to **Step 25**	Go to **Step 20**
15	Test the ignition 3 voltage circuit of the HVAC control module for a short to ground, a high resistance, or an open. Refer to **Circuit Testing** and **Wiring Repairs** in Wiring Systems. Did you find and correct the condition?	Go to **Step 34**	Go to **Step 17**
16	Test the low reference circuit of the A/C refrigerant pressure sensor for an open. Refer to **Circuit Testing** and **Wiring Repairs** in Wiring Systems. Did you find and correct the condition?	Go to **Step 34**	Go to **Step 24**
17	Test the ground circuit of the HVAC control module for an open. Refer to **Circuit Testing** and **Wiring Repairs** in Wiring Systems. Did you find and correct the condition?	Go to **Step 34**	Go to **Step 27**
18	Test the control circuit of the A/C compressor clutch relay for an open. Refer to **Circuit Testing** and **Wiring Repairs** in Wiring Systems. Did you find and correct the condition?	Go to **Step 34**	Go to **Step 28**

19	Test the control circuit of the A/C compressor clutch relay for a short to ground. Refer to **Circuit Testing** and **Wiring Repairs** in Wiring Systems. Did you find and correct the condition?	Go to **Step 34**	Go to **Step 28**
20	Test the A/C compressor clutch supply voltage circuit at the A/C compressor clutch for a short to ground, a high resistance, or an open. Refer to **Circuit Testing** and **Wiring Repairs** in Wiring Systems. Did you find and correct the condition?	Go to **Step 34**	Go to **Step 21**
21	Test the ground circuit of the A/C compressor clutch for a high resistance or an open. Refer to **Circuit Testing** and **Wiring Repairs** in Wiring Systems. Did you find and correct the condition?	Go to **Step 34**	Go to **Step 26**
22	Repair the switch side voltage supply circuit of the A/C compressor clutch relay. Refer to **Wiring Repairs** in Wiring Systems. Did you complete the repair?	Go to **Step 34**	-
23	Repair the coil side voltage supply circuit of the A/C compressor clutch relay. Refer to **Wiring Repairs** in Wiring Systems. Did you complete the repair?	Go to **Step 34**	-
24	Inspect for poor connections at the harness connector of the A/C refrigerant pressure sensor. Refer to **Testing for Intermittent Conditions and Poor Connections** and **Connector Repairs** in Wiring Systems. Did you find and correct the condition?	Go to **Step 34**	Go to **Step 29**
25	Inspect for poor connections at the A/C compressor clutch relay. Refer to **Testing for Intermittent Conditions and Poor Connections** and **Connector Repairs** in Wiring Systems. Did you find and correct the condition?	Go to **Step 34**	Go to **Step 30**
26	Inspect for poor connections at the harness connector of the A/C compressor clutch. Refer to **Testing for Intermittent Conditions and Poor Connections** and **Connector Repairs** in Wiring Systems. Did you find and correct the condition?	Go to **Step 34**	Go to **Step 31**
27	Inspect for poor connections at the harness connector of the HVAC control module. Refer to **Testing for Intermittent Conditions and Poor Connections** and **Connector Repairs** in Wiring Systems. Did you find and correct the condition?	Go to **Step 34**	Go to **Step 32**

28	Inspect for poor connections at the harness connector of the powertrain control module (PCM). Refer to **Testing for Intermittent Conditions and Poor Connections** and **Connector Repairs** in Wiring Systems. Did you find and correct the condition?	Go to **Step 34**	Go to **Step 33**
29	Replace the A/C refrigerant pressure sensor. Refer to **Air Conditioning (A/C) Refrigerant Pressure Sensor Replacement** in Heating, Ventilation and Air Conditioning. Did you complete the replacement?	Go to **Step 34**	-
30	Replace the A/C compressor clutch relay. Refer to **Compressor Relay Replacement** in Heating, Ventilation and Air Conditioning. Did you complete the replacement?	Go to **Step 34**	-
31	Replace the A/C compressor clutch coil. Refer to **Compressor Clutch Coil Removal** and **Compressor Clutch Coil Install** in Heating, Ventilation and Air Conditioning. Did you complete the replacement?	Go to **Step 34**	-
32	**IMPORTANT:** **Perform the recalibration procedure for the HVAC control module.** Replace the HVAC control module. Refer to **HVAC Control Module Replacement** .Did you complete the replacement?	Go to **Step 34**	-
33	**IMPORTANT:** **Perform the programming procedure for the PCM.** Replace the PCM. Refer to **Powertrain Control Module (PCM) Replacement** in Engine Controls.Did you complete the replacement?	Go to **Step 34**	-
34	Operate the system in order to verify the repair. Did you correct the condition?	System OK	Go to **Step 4**

HVAC COMPRESSOR CLUTCH DOES NOT DISENGAGE

HVAC Compressor Clutch Does Not Disengage

Step	Action	Values	Yes	No
Schematic Reference:HVAC Schematics **Connector End View Reference:HVAC Connector End Views** DEFINITION: The A/C compressor clutch will not disengage when an A/C request has not been made and a Powertrain DTC has not been set.				

1	Did you perform the HVAC Diagnostic System Check?	-	Go to **Step 2**	Go to **Diagnostic System Check - HVAC Systems - Automatic**
2	1. Start the engine. 2. Place the blower motor switch in the OFF position. 3. Place the A/C request switch in the OFF position. Does the A/C compressor operate?	-	Go to **Step 3**	Go to **Testing for Intermittent Conditions and Poor Connections** in Wiring Systems
3	With a scan tool, observe the A/C Relay Command parameter in the powertrain data list. Does the scan tool indicate that the A/C Relay Command parameter is ON?	-	Go to **Step 4**	Go to **Step 5**
4	With a scan tool, observe the A/C Request Signal parameter in the powertrain data list. Does the scan tool indicate that the A/C Request Signal parameter is YES?	-	Go to **Step 10**	Go to **Step 11**
5	Remove the A/C compressor clutch relay. Does the A/C compressor clutch turn OFF?	-	Go to **Step 6**	Go to **Step 8**
6	Measure the resistance between the switch side A/C compressor clutch relay terminals. Does the resistance measurement equal the specified value?	infinity	Go to **Step 7**	Go to **Step 9**
7	Test the A/C clutch relay control circuit for a short to ground. Refer to **Circuit Testing** and **Wiring Repairs** in Wiring Systems. Did you find and correct the condition?	-	Go to **Step 16**	Go to **Step 11**
8	Test the A/C compressor clutch supply voltage circuit for a short to voltage. Refer to **Circuit Testing** and **Wiring Repairs** in Wiring Systems. Did you find and correct the condition?	-	Go to **Step 16**	Go to **Step 13**
9	Inspect for poor connections at the A/C compressor clutch relay. Refer to **Testing for Intermittent Conditions and Poor Connections** and **Connector Repairs** in Wiring Systems. Did you find and correct the condition?	-	Go to **Step 16**	Go to **Step 12**
10	Inspect for poor connections at the harness connector of the HVAC control module. Refer to **Testing for Intermittent Conditions and Poor Connections** and **Connector Repairs** in Wiring Systems. Did you find and correct the condition?	-	Go to **Step 16**	Go to **Step 14**
11	Inspect for poor connections at the harness connector of the powertrain control module (PCM). Refer to **Testing for Intermittent Conditions and Poor Connections** and **Connector Repairs** in Wiring Systems.	-	Go to	

	Did you find and correct the condition?		**Step 16**	Go to **Step 15**
12	Replace the A/C compressor clutch relay. Refer to **Compressor Relay Replacement** in Heating, Ventilation and Air Conditioning. Did you complete the replacement?	-	Go to **Step 16**	-
13	Replace the A/C compressor clutch. Refer to **Compressor Clutch Plate and Hub Assembly Removal (V7 - Direct Mount)** and **Compressor Clutch Plate/Hub Assembly Install (V7 - Direct Mount)** in Heating, Ventilation and Air Conditioning. Did you complete the replacement?	-	Go to **Step 16**	-
14	**IMPORTANT:** **Perform the recalibration procedure for the HVAC control module.** Replace the HVAC control module. Refer to **HVAC Control Module Replacement** .Did you complete the replacement?	-	Go to **Step 16**	-
15	**IMPORTANT:** **Perform the programming procedure for the PCM.** Replace the PCM. Refer to **Powertrain Control Module (PCM) Replacement** in Engine Controls.Did you complete the replacement?	-	Go to **Step 16**	-
16	Operate the system in order to verify the repair. Did you correct the condition?	-	System OK	Go to **Step 3**

BLOWER MOTOR ALWAYS ON

Blower Motor Always On

Step	Action	Values	Yes	No
Schematic Reference:HVAC Schematics **Connector End View Reference:HVAC Connector End Views** DEFINITION: The blower motor is ON while the HVAC control is in the OFF position.				
1	Did you perform the HVAC Diagnostic System Check?	-	Go to **Step 2**	Go to **Diagnostic System Check - HVAC Systems - Automatic**
2	1. Turn ON the ignition, with the engine OFF. 2. Turn OFF the HVAC controls. Is the blower motor OFF?	-	Go to **Testing for Intermittent Conditions and Poor Connections** in Wiring Systems	Go to **Step 3**
	With the scan tool observe the Desired Blower			

3	Mtr Speed parameter in the Heating and Air Conditioning data list. Does the scan tool indicate that the Desired Blower Mtr Speed parameter is near the specified value?	0 counts	Go to **Step 4**	Go to **Step 7**
4	Disconnect the HVAC control module. Does the blower motor continue to operate?	-	Go to **Step 5**	Go to **Step 7**
5	Inspect or test the blower motor housing and the blower motor control circuit in the blower motor harness for a short to ground. Refer to **Circuit Testing** and **Wiring Repairs** in Wiring Systems. Did you find and correct the condition?	-	Go to **Step 10**	Go to **Step 6**
6	Inspect for poor connections at the harness connector of the blower motor control processor. Refer to **Testing for Intermittent Conditions and Poor Connections** and **Connector Repairs** in Wiring Systems. Did you find and correct the condition?	-	Go to **Step 10**	Go to **Step 8**
7	Inspect for poor connections at the harness connector of the HVAC control module. Refer to **Testing for Intermittent Conditions and Poor Connections** and **Connector Repairs** in Wiring Systems. Did you find and correct the condition?	-	Go to **Step 10**	Go to **Step 9**
8	Replace the blower motor control processor. Refer to **Blower Motor Control Processor Replacement** . Did you complete the replacement?	-	Go to **Step 10**	-
9	**IMPORTANT:** **Perform the recalibration procedure for the HVAC control module.** Replace the HVAC control module. Refer to **HVAC Control Module Replacement** .Did you complete the replacement?	-	Go to **Step 10**	-
10	Operate the system in order to verify the repair. Did you correct the condition?	-	System OK	Go to **Step 3**

BLOWER MOTOR INOPERATIVE

Blower Motor Inoperative

Step	Action	Values	Yes	No
Schematic Reference:HVAC Schematics				

Connector End View Reference:HVAC Connector End Views
DEFINITION: The blower motor is inoperative in all speed positions.

1	Did you perform the HVAC Diagnostic System Check?	-	Go to **Step 2**	Go to **Diagnostic System Check - HVAC Systems - Automatic**
2	1. Turn ON the ignition, with the engine OFF. 2. Place the blower switch in each position. Does the blower motor operate in any of the speed positions?	-	Go to **Blower Motor Malfunction**	Go to **Step 3**
3	1. Place the blower switch in the maximum speed position. 2. With the scan tool observe the Desired Blower Mtr Speed parameter in the Heating and Air Conditioning data list. Does the scan tool indicate that the Desired Blower Mtr Speed parameter is near the specified value?	111 counts	Go to **Step 4**	Go to **Step 12**
4	1. Turn OFF the ignition. 2. Disconnect the blower motor connector. 3. Turn ON the ignition, with the engine OFF. 4. Connect a test lamp between the blower motor supply voltage circuit and the blower motor speed control circuit. 5. Place the blower switch in the minimum speed position. Does the test lamp illuminate?	-	Go to **Step 10**	Go to **Step 5**
5	Test the battery positive voltage circuit of the blower motor control processor for an open, high resistance or short to ground. Refer to **Circuit Testing** and **Wiring Repairs** in Wiring Systems. Did you find and correct the condition?	-	Go to **Step 16**	Go to **Step 6**
6	Test the ground circuit of the blower motor control processor for an open or high resistance. Refer to **Circuit Testing** and **Wiring Repairs** in Wiring Systems. Did you find and correct the condition?	-	Go to **Step 16**	Go to **Step 7**
	IMPORTANT: **The blower motor control processor connector and the HVAC control module connectors must be connected to correctly perform the test.**			

7	1. Backprobe and measure the voltage from the blower speed control circuit at the HVAC control module to a good ground. 2. With a scan tool, command the blower motor OFF and ON. Does the voltage measure near the specified values for each commanded state?	5.0 V OFF 1.0 V ON	Go to **Step 11**	Go to **Step 8**
8	1. Turn the ignition OFF. 2. Disconnect the HVAC control module. 3. Turn ON the ignition, with the engine OFF. 4. Measure the voltage from the blower speed control circuit of the HVAC control module to a good ground. Does the voltage measure near the specified value?	5.0 V	Go to **Step 12**	Go to **Step 9**
9	Test the blower speed control circuit of the HVAC control module for an open, short to ground or short to voltage. Refer to **Circuit Testing** and **Wiring Repairs** in Wiring Systems. Did you find and correct the condition?	-	Go to **Step 16**	Go to **Step 11**
10	Inspect for poor connections at the harness connector of the blower motor. Refer to **Testing for Intermittent Conditions and Poor Connections** and **Connector Repairs** in Wiring Systems. Did you find and correct the condition?	-	Go to **Step 16**	Go to **Step 13**
11	Inspect for poor connections at the harness connector of the blower motor control processor. Refer to **Testing for Intermittent Conditions and Poor Connections** and **Connector Repairs** in Wiring Systems. Did you find and correct the condition?	-	Go to **Step 16**	Go to **Step 14**
12	Inspect for poor connections at the harness connector of the HVAC control module. Refer to **Testing for Intermittent Conditions and Poor Connections** and **Connector Repairs** in Wiring Systems. Did you find and correct the condition?	-	Go to **Step 16**	Go to **Step 15**
13	Replace the blower motor. Refer to **Blower Motor Replacement** in Heating, Ventilation and Air Conditioning. Did you complete the replacement?	-	Go to **Step 16**	-
14	Replace the blower motor control processor. Refer to **Blower Motor Control Processor**	-		-

	Replacement . Did you complete the replacement?		Go to **Step 16**	
15	**IMPORTANT:** **Perform the recalibration procedure for the HVAC control module.** Replace the HVAC control module. Refer to **HVAC Control Module Replacement** .Did you complete the replacement?	-	Go to **Step 16**	-
16	Operate the system in order to verify the repair. Did you correct the condition?	-	System OK	Go to **Step 2**

BLOWER MOTOR MALFUNCTION

Test Description

The numbers below refer to the step numbers on the diagnostic table.

2: This step will determine if one or more blower speeds are inoperative.

4: This step determines if the HVAC control module and blower motor control processor are attempting to control the blower motor speed.

6: The measured voltage on the blower speed control circuit should steadily decrease from 4.60 V to 1.1 V as the blower speed is adjusted from the minimum speed position to the maximum speed position.

Blower Motor Malfunction

Step	Action	Values	Yes	No
Schematic Reference:HVAC Schematics **Connector End View Reference: HVAC Connector End Views** DEFINITION: The blower motor operates in at least one, but not all, speed positions.				
1	Did you perform the HVAC Diagnostic System Check?	-	Go to **Step 2**	Go to **Diagnostic System Check - HVAC Systems - Automatic**
2	1. Turn ON the ignition, with the engine OFF. 2. Place the blower motor switch in each speed position. Does the blower motor operate at the desired speed in each speed position?	-	Go to **Testing for Intermittent Conditions and Poor Connections** in Wiring Systems	Go to **Step 3**
	1. With a scan tool, observe the Desired Blower Mtr Speed parameter in the Heating and Air Conditioning data list. 2. Gradually adjust the blower motor			

3	switch from the minimum speed position to the maximum speed position. Does scan tool indicate that the Desired Blower Mtr Speed parameter continuously increases within the specified range?	15-111 counts	Go to **Step 4**	Go to **Step 10**
4	1. Turn the ignition OFF. 2. Disconnect the blower motor connector. 3. Turn ON the ignition, with the engine OFF. 4. Connect a test lamp between the blower motor supply voltage circuit and the blower motor control circuit. 5. Adjust the blower motor switch from the minimum speed position to the maximum speed position. Does the test lamp illuminate and increase intensity?	-	Go to **Step 8**	Go to **Step 5**
5	Test the battery positive voltage circuit and ground circuit of the blower motor control processor for high resistance. Refer to **Circuit Testing** and **Wiring Repairs** in Wiring Systems. Did you find and correct the condition?	-	Go to **Step 14**	Go to **Step 6**
6	**IMPORTANT:** **The blower motor control processor and HVAC control module connectors must be connected to correctly perform the test.** 1. Backprobe and measure the voltage from the blower speed control circuit at the HVAC control module to a good ground. 2. Gradually adjust the blower motor switch from the minimum speed position to the maximum speed position. Does the measured voltage continuously decrease between the specified values?	4.7-1.0 V	Go to **Step 9**	Go to **Step 7**
	1. Turn the ignition OFF. 2. Disconnect the HVAC control module.			

7	3. Turn ON the ignition, with the engine OFF. 4. Measure the voltage from the blower speed control circuit of the HVAC control module to a good ground. Does the voltage measure near the specified value?	5.0 V	Go to **Step 10**	Go to **Step 9**
8	Inspect for poor connections at the harness connector of the blower motor. Refer to **Testing for Intermittent Conditions and Poor Connections** and **Connector Repairs** in Wiring Systems. Did you find and correct the condition?	-	Go to **Step 14**	Go to **Step 11**
9	Inspect for poor connections at the harness connector of the blower motor control processor. Refer to **Testing for Intermittent Conditions and Poor Connections** and **Connector Repairs** in Wiring Systems. Did you find and correct the condition?	-	Go to **Step 14**	Go to **Step 12**
10	Inspect for poor connections at the harness connector of the HVAC control module. Refer to **Testing for Intermittent Conditions and Poor Connections** and **Connector Repairs** in Wiring Systems. Did you find and correct the condition?	-	Go to **Step 14**	Go to **Step 13**
11	Replace the blower motor. Refer to **Blower Motor Replacement** in Heating, Ventilation and Air Conditioning. Did you complete the replacement?	-	Go to **Step 14**	-
12	Replace the blower motor control processor. Refer to **Blower Motor Control Processor Replacement** . Did you complete the replacement?	-	Go to **Step 14**	-
13	**IMPORTANT:** **Perform the recalibration procedure for the HVAC control module.** Replace the HVAC control module. Refer to **HVAC Control Module Replacement** .Did you complete the replacement?	-	Go to **Step 14**	-
14	Operate the system in order to verify the repair. Did you correct the condition?	-	System OK	Go to **Step 2**

TOO HOT IN VEHICLE

Test Description

The numbers below refer to the step numbers on the diagnostic table.

2: This step clears the HVAC control module memory and checks for current air temperature actuator diagnostic trouble codes.

3: Ambient air temperature must be above 3°C (38°F) in order for this A/C Compressor test to be run.

7: The specified values are from the A/C System Performance Test

Too Hot in Vehicle

Step	Action	Values	Yes	No
Schematic Reference:HVAC Schematics **Connector End View Reference: HVAC Connector End Views** DEFINITION: The temperature cannot be adjusted, or the cooling is insufficient during A/C operation.				
1	Did you perform the HVAC Diagnostic System Check?	-	Go to **Step 2**	Go to **Diagnostic System Check - HVAC Systems - Automatic**
2	1. Recalibrate actuators. Refer to **Re-Calibrating Actuators** . 2. Install a scan tool. 3. Turn ON the ignition, with the engine OFF. 4. Observe the Diagnostic Trouble Code (DTC) List in Heating and Air Conditioning. Does the scan tool display any DTC B0361, B0363, B0365, B0367, B0441 or B0446?	-	Go to **Diagnostic Trouble Code (DTC) List**	Go to **Step 3**
3	**IMPORTANT:** **Ambient air temperature must be above 3°C (38°F).** 1. Cover the sunload sensor. 2. Start the engine. 3. Fully open all panel outlets. 4. Adjust the temperature control to maximum cooling. 5. Select PANEL (upper) mode. 6. Adjust the blower speed to maximum. 7. Ensure that the VENT (outside air)	-		

	mode indicator is not illuminated. Does the A/C compressor operate?		Go to **Step 4**	Go to **HVAC Compressor Clutch Does Not Engage**
4	Place the blower motor switch in each speed position. Does the blower motor operate correctly for each speed position?	-	Go to **Step 5**	Go to **Blower Motor Inoperative**
5	Does the blower motor provide sufficient air flow?	-	Go to **Step 6**	Go to **Blower Motor Malfunction**
6	1. Place the blower motor switch in the maximum speed position. 2. Place the mode switch in the bi-level position. 3. Place the outside air switch in the ON position. 4. Place the recirculation switch in the ON position. Does the recirculation door operate properly?	-	Go to **Step 7**	Go to **Air Recirculation Malfunction**
7	Perform the A/C system performance test. Refer to **Air Conditioning (A/C) System Performance Test** in Heating, Ventilation and Air Conditioning. Does the system pass the A/C System Performance Test?	-	Go to **Step 8**	Go to **Air Conditioning (A/C) System Performance Test** in Heating, Ventilation and Air Conditioning
8	1. Install a thermometer near the inside air temperature sensor. 2. With a scan tool, observe the Inside Temp Sensor data parameters in the Heating and Air Conditioning data list. Does the scan tool indicate that the sensor temperatures are within 3°C (5°F) of the thermometer temperatures?	-	Go to **Step 10**	Go to **Step 9**
9	Inspect for a blocked or malfunctioning inside air temperature sensor. Refer to **Inside Air Temperature Sensor Replacement** . Did you find and correct the condition?	-	Go to **Step 20**	Go to **Step 13**
	1. Turn the engine OFF. 2. Install a scan tool. 3. Cover the sunload sensor. 4. Start the engine. 5. Adjust driver side temperature to 22°C			

10	(72°F). 6. With a scan tool, observe the Sun Load Sensor data parameter in the Heating and Air Conditioning data list. Does the scan tool indicate that the sunload sensor parameter is greater than the specified value?	4.3 V	Go to **Step 11**	Go to **Step 15**
11	1. Uncover the sunload sensor. 2. Direct a light source at the sunload sensor. Does the voltage change?	-	Go to **Step 12**	Go to **Step 15**
12	Does the customer need to change the set temperature frequently to maintain comfort?	-	Go to **Symptoms - HVAC Systems - Automatic**	System OK
13	Inspect for poor connections at the harness connector of the inside air temperature sensor. Refer to **Testing for Intermittent Conditions and Poor Connections** and **Connector Repairs** in Wiring Systems. Did you find and correct the condition?	-	Go to **Step 20**	Go to **Step 14**
14	1. Turn OFF the ignition. 2. Test the inside air temperature sensor resistance. Refer to **Sensor Resistance Table (Outside Air Temperature - ohms)** or **Sensor Resistance Table (Inside Air Temperature - ohms)** . Does the resistance measure near the specified value?	-	Go to **Step 16**	Go to **Step 17**
15	Inspect for poor connections at the harness connector of the sunload sensor. Refer to **Testing for Intermittent Conditions and Poor Connections** and **Connector Repairs** in Wiring Systems. Did you find and correct the condition?	-	Go to **Step 20**	Go to **Step 18**
16	Inspect for poor connections at the harness connector of the HVAC control module. Refer to **Testing for Intermittent Conditions and Poor Connections** and **Connector Repairs** in Wiring Systems. Did you find and correct the condition?	-	Go to **Step 20**	Go to **Step 19**
	Replace the inside air temperature sensor.			

17	Refer to **Inside Air Temperature Sensor Replacement** . Did you complete the replacement?	-	Go to **Step 20**	-
18	Replace the sunload sensor. Refer to **Sun Load Sensor Replacement** . Did you complete the replacement?	-	Go to **Step 20**	-
19	**IMPORTANT:** **Perform the recalibration procedure for the HVAC control module.** Replace the HVAC control module. Refer to **HVAC Control Module Replacement** .Did you complete the replacement?	-	Go to **Step 20**	-
20	Operate the system in order to verify the repair. Did you correct the condition?	-	System OK	Go to **Step 3**

TOO COLD IN VEHICLE

Test Description

The numbers below refer to the numbers on the diagnostic table.

2: This step clears the HVAC control module memory and checks for current air temperature actuator diagnostic trouble codes.

3: This step checks for A/C compressor clutch always on.

7: This test is to insure cooling system is operating normally.

Too Cold in Vehicle

Step	Action	Values	Yes	No
Schematic Reference:HVAC Schematics **Connector End View Reference: HVAC Connector End Views** DEFINITION: The temperature cannot be adjusted, or the heating is insufficient.				
1	Did you perform the HVAC Diagnostic System Check?	-	Go to **Step 2**	Go to **Diagnostic System Check - HVAC Systems - Automatic**
2	1. Recalibrate actuators. Refer to **Re-Calibrating Actuators** . 2. Install a scan tool. 3. Turn ON the ignition, with the engine OFF. 4. Observe the Diagnostic Trouble Code	-		

	(DTC) List in Heating and Air Conditioning. Does the scan tool display any DTC B0361, B0363, B0365, B0367, B0441 or B0446?		Go to **Diagnostic Trouble Code (DTC) List**	Go to **Step 3**
3	**IMPORTANT:** **Ambient air temperature must be above 3°C (38°F).** 1. Start the engine. 2. Turn OFF the HVAC controls. Does the A/C compressor operate?	-	Go to **HVAC Compressor Clutch Does Not Disengage**	Go to **Step 4**
4	Place the blower motor switch in each speed position. Does the blower motor operate in each speed position?	-	Go to **Step 5**	Go to **Blower Motor Inoperative**
5	Does the blower motor provide sufficient air flow?	-	Go to **Step 6**	Go to **Blower Motor Malfunction**
6	1. Place the blower motor switch in the maximum speed position. 2. Place the mode switch in the bi-level position. 3. Place the outside air switch in the ON position. 4. Place the recirculation switch in the ON position. Does the recirculation door operate properly?	-	Go to **Step 7**	Go to **Air Recirculation Malfunction**
7	Inspect the cooling system for the following conditions: • A low coolant level • A loose or worn accessory drive belt • A leaking radiator hose or heater hose • A kinked radiator hose or heater hose • A missing radiator cap pressure seal • A leaking radiator cap Did you find and correct the condition?	-	Go to **Step 20**	Go to **Step 8**
	1. Install a thermometer near the inside air temperature sensor.			

8	2. With a scan tool, observe the Inside Temp Sensor data parameters in the Heating and Air Conditioning data list. Does the scan tool indicate that the sensor temperatures are within 3°C (5°F) of the thermometer temperatures?	-	Go to **Step 10**	Go to **Step 9**
9	Inspect for a blocked, malfunctioning, or incorrectly installed inside air temperature sensor. Refer to **Inside Air Temperature Sensor Replacement** . Did you find and correct the condition?	-	Go to **Step 20**	Go to **Step 13**
10	1. Turn the engine OFF. 2. Install a scan tool. 3. Cover the sunload sensor. 4. Start the engine. 5. Adjust driver side temperature to 22°C (72°F). 6. With a scan tool, observe the Sun Load Sensor data parameter in the Heating and Air Conditioning data list. Does the scan tool indicate that the Sunload Sensor parameter is greater than the specified value?	4.3 V	Go to **Step 11**	Go to **Step 15**
11	1. Uncover the sunload sensor. 2. Direct a light source at the sunload sensor. Does the voltage change?	-	Go to **Step 12**	Go to **Step 15**
12	Perform the Heating Performance Diagnostic. Refer to **Heating Performance Diagnostic** in Heating, Ventilation and Air Conditioning. Did you find and correct the condition?	-	Go to **Step 20**	System OK
13	Inspect for poor connections at the harness connector of the inside air temperature sensor. Refer to **Testing for Intermittent Conditions and Poor Connections** and **Connector Repairs** in Wiring Systems. Did you find and correct the condition?	-	Go to **Step 20**	Go to **Step 14**
	1. Turn OFF the ignition. 2. Test the inside air temperature sensor resistance. Refer to **Sensor Resistance**			

14	**Table (Outside Air Temperature - ohms)** or **Sensor Resistance Table (Inside Air Temperature - ohms)** . Does the resistance measure near the specified value?	-	Go to **Step 16**	Go to **Step 17**
15	Inspect for poor connections at the harness connector of the sunload sensor. Refer to **Testing for Intermittent Conditions and Poor Connections** and **Connector Repairs** in Wiring Systems. Did you find and correct the condition?	-	Go to **Step 20**	Go to **Step 18**
16	Inspect for poor connections at the harness connector of the HVAC control module. Refer to **Testing for Intermittent Conditions and Poor Connections** and **Connector Repairs** in Wiring Systems. Did you find and correct the condition?	-	Go to **Step 20**	Go to **Step 19**
17	Replace the inside air temperature sensor. Refer to **Inside Air Temperature Sensor Replacement** . Did you complete the replacement?	-	Go to **Step 20**	-
18	Replace the sunload sensor. Refer to **Sun Load Sensor Replacement** . Did you complete the replacement?	-	Go to **Step 20**	-
19	**IMPORTANT:** **Perform the recalibration procedure for the HVAC control module.** Replace the HVAC control module. Refer to **HVAC Control Module Replacement** .Did you complete the replacement?	-	Go to **Step 20**	-
20	Operate the system in order to verify the repair. Did you correct the condition?	-	System OK	Go to **Step 3**

AIR DELIVERY IMPROPER

Test Description

The numbers below refer to the step numbers on the diagnostic table.

5: Test the HVAC control module front defrost button and the mode button for proper operation.

6: Can you hear the recirculation door switch from outside air to the recirculation position.

8: Tests the HVAC control module for the proper commanded state. The ON/OFF positions for each mode are as follows:FLOOR POSITION - solenoids 1 and 5 OFF, solenoids 2 and 3 ON, solenoid 4 ON

or OFF.VENT POSITION - solenoids 1 and 3 OFF, solenoids 2 and 5 ON, solenoid 4 ON or OFF.VENT/FLOOR POSITION - solenoids 1, 3 and 5 OFF, solenoid 2 ON, solenoid 4 ON or OFF.FLOOR/DEFROST POSITION - solenoids 1, 2, 4 and 5 OFF and solenoid 3 ON.DEFROST POSITION - solenoids 1 and 3 ON and solenoids 2, 4 and 5 OFF.

10: Tests the solenoid circuits for an open or short.

11: Tests the solenoid circuits for an open or short.

12: Tests the vacuum control assembly solenoids.

13: Tests for a constant ground, constant voltage and an open on the solenoid control circuits.

Air Delivery Improper

Step	Action	Values	Yes	No
Schematic Reference:HVAC Schematics **Connector End View Reference:HVAC Connector End Views** DEFINITION: Air does not flow correctly from the air distribution outlets.				
1	Did you perform the HVAC Diagnostic System Check?	-	Go to **Step 2**	Go **Diagnostic System Check - HVAC Systems - Automatic** to
2	1. Start the engine. 2. Place the blower motor switch in the OFF position. Is the blower motor OFF?	-	Go to **Step 3**	Go to **Blower Motor Always On**
3	Place the blower motor switch in each speed position. Does the blower motor operate in any of the speed positions?	-	Go to **Step 4**	Go to **Blower Motor Inoperative**
4	Does the blower motor operate at the desired speed in each speed position?	-	Go to **Step 5**	Go to **Blower Motor Malfunction**
5	1. Install a scan tool. 2. With a scan tool, observe the Mode Button parameter in the Heating and Air Conditioning data list. 3. Activate the mode switch. 4. With a scan tool, observe the Front Defrost Button parameter in the Heating and Air Conditioning data list. 5. Activate the front defrost switch. Does the scan tool indicate that both the Mode Button and Front Defrost Button parameters change state?	-	Go to **Step 6**	Go to **Step 15**

6	1. Place the blower motor switch in the maximum speed position. 2. Place the mode switch in the vent position. 3. Place the outside air switch in the OFF position. 4. Place the recirculation switch in the ON position. Does the recirculation door operate properly?	-	Go to **Step 7**	Go to **Air Recirculation Malfunction**
7	1. Place the mode switch in each mode position. 2. Place the defrost switch in the defrost position. Does the air flow from the correct air distribution outlets in each mode position?	-	Go to **Testing for Intermittent Conditions and Poor Connections** in Wiring Systems	Go to **Step 8**
8	1. Install a scan tool. 2. With a scan tool, observe the Vacuum Solenoid parameters in the Heating and Air Conditioning data list. 3. Place the mode switch in each position. Does the scan tool indicate that each observed solenoid parameter changes to ON when the corresponding mode is activated?	-	Go to **Step 9**	Go to **Step 15**
9	1. Turn OFF the ignition. 2. Disconnect the vacuum control assembly. 3. Turn ON the ignition, with the engine OFF. 4. Probe the ignition 3 voltage circuit of the vacuum control assembly with a test lamp that is connected to a good ground. Does the test lamp illuminate?	-	Go to **Step 10**	Go to **Step 16**
10	1. Place the mode switch in the VENT position. 2. Place the RECIRC air switch in the RECIRCULATION position. 3. Measure the voltage between the ignition 3 voltage circuit and solenoid	-		

	circuits 1, 2, 3, 4 and 5 of the vacuum control assembly connector. Does solenoid circuits 1 and 3 measure 0 volts and solenoids 2, 4 and 5 measure 12 volts?		Go to **Step 11**	Go to **Step 13**
11	1. Place the DEFROST switch in the DEFROST position. 2. Measure the voltage between the ignition 3 voltage circuit and solenoid circuits 1, 2, 3, 4 and 5 of the vacuum control assembly connector. Does solenoid circuits 1 and 3 measure 12 volts and solenoids 2, 4 and 5 measure 0 volts?	-	Go to **Step 12**	Go to **Step 13**
12	1. Remove the vacuum control assembly. 2. Measure the resistance between the ignition 3 voltage circuit pin and solenoid circuit pins 1, 2, 3, 4 and 5 of the vacuum control assembly. Is the resistance for each solenoid between the specified value?	70 to 110 ohm	Go to **Vacuum Control System Diagnostic**	Go to **Step 14**
13	Test the appropriate control circuit for an open, short to ground or short to voltage. Refer to **Circuit Testing** in Wiring Systems. Did you find and correct the condition?	12 V	Go to **Step 19**	Go to **Step 15**
14	Inspect for poor connections at the harness connector of the vacuum control assembly. Refer to **Testing for Intermittent Conditions and Poor Connections** and **Connector Repairs** in Wiring Systems. Did you find and correct the condition?	-	Go to **Step 19**	Go to **Step 17**
15	Inspect for poor connections at the harness connector of the HVAC control module. Refer to **Testing for Intermittent Conditions and Poor Connections** and **Connector Repairs** in Wiring Systems. Did you find and correct the condition?	-	Go to **Step 19**	Go to **Step 18**
16	Repair the ignition 3 voltage circuit of the vacuum control assembly for an open or high resistance. Refer to **Wiring Repairs** in Wiring Systems. Did you complete the repair?	-	Go to **Step 19**	-
	Replace the vacuum control assembly. Refer to **Vacuum Control Assembly**			

17	**Replacement** . Did you complete the replacement?	-	Go to **Step 19**	-
18	Replace the HVAC control module. Refer to **HVAC Control Module Replacement** . Did you complete the replacement?	-	Go to **Step 19**	-
19	Operate the system in order to verify the repair. Did you correct the condition?	-	System OK	Go to **Step 2**

AIR RECIRCULATION MALFUNCTION

Test Description

The numbers below refer to the step numbers on the diagnostic table.

4: Listen for an audible click or feel for the click when the vacuum control assembly operates. Repeat the test as necessary.

5: Tests for voltage at the vacuum control assembly.

6: Verifies that the HVAC control module is providing ground to the vacuum control assembly.

7: Tests if ground is constantly being applied to the vacuum control assembly.

Air Recirculation Malfunction

Step	Action	Values	Yes	No
Schematic Reference:HVAC Schematics **Connector End View Reference: HVAC Connector End Views** DEFINITION: Air recirculation is inoperative or is always ON.				
1	Did you perform the HVAC Diagnostic System Check?	-	Go to **Step 2**	Go to **Diagnostic System Check - HVAC Systems - Automatic**
2	1. Install a scan tool. 2. With a scan tool, observe the Outside Air Button parameter in the Heating and Air Conditioning data list. 3. Activate the outside air switch. 4. With a scan tool, observe the Recirculate Button parameter in the Heating and Air Conditioning data list. 5. Activate the recirculation switch. Does the scan tool indicate that both the Outside Air Button and Recirculate Button parameters change state?	-	Go to **Step 3**	Go to **Step 11**

3	1. Start the engine. 2. Place the blower motor switch in the maximum speed position. 3. Place the mode switch in the bi-level position. 4. Place the outside air switch in the ON position. 5. Place the recirculation switch in the ON position. Does the recirculation door operate properly?	-	Go to **Testing for Intermittent Conditions and Poor Connections** in Wiring Systems	Go to **Step 4**
4	With a scan tool, command the recirculation mode valve solenoid (Sol. 4-Air Inlet) ON and OFF. Does the recirculation mode valve solenoid turn ON and OFF?	-	Go to **Vacuum Control System Diagnostic**	Go to **Step 5**
5	1. Turn OFF the ignition. 2. Disconnect the vacuum control assembly. 3. Turn ON the ignition, with the engine OFF. 4. Probe the ignition 3 voltage circuit of the vacuum control assembly with a test lamp that is connected to a good ground. Does the test lamp illuminate?	-	Go to **Step 6**	Go to **Step 12**
6	1. Measure the voltage between the ignition 3 voltage circuit of the vacuum control assembly and the recirculation mode valve solenoid control circuit of the vacuum control assembly. 2. With a scan tool, command the recirculation mode valve solenoid ON and OFF. Does the measured voltage change between the specified values?	0-12 V	Go to **Step 10**	Go to **Step 7**
7	Does the measured voltage remain near the specified value?	12 V	Go to **Step 9**	Go to **Step 8**
8	Test the recirculation mode valve solenoid control circuit of the vacuum control assembly for a short to voltage or an open.	-		

	Refer to **Circuit Testing** and **Wiring Repairs** in Wiring Systems. Did you find and correct the condition?		Go to **Step 15**	Go to **Step 11**
9	Test the recirculation mode valve solenoid control circuit of the vacuum control assembly for a short to ground. Refer to **Circuit Testing** and **Wiring Repairs** in Wiring Systems. Did you find and correct the condition?	-	Go to **Step 15**	Go to **Step 10**
10	Inspect for poor connections at the vacuum control assembly. Refer to **Testing for Intermittent Conditions and Poor Connections** and **Connector Repairs** in Wiring Systems. Did you find and correct the condition?	-	Go to **Step 15**	Go to **Step 13**
11	Inspect for poor connections at the harness connector of the HVAC control module. Refer to **Testing for Intermittent Conditions and Poor Connections** and **Connector Repairs** in Wiring Systems. Did you find and correct the condition?	-	Go to **Step 15**	Go to **Step 14**
12	Repair the ignition 3 voltage circuit of the vacuum control assembly. Refer to **Wiring Repairs** in Wiring Systems. Did you complete the repair?	-	Go to **Step 15**	-
13	Replace the vacuum control assembly. Refer to **Vacuum Control Assembly Replacement** . Did you complete the replacement?	-	Go to **Step 15**	-
14	**IMPORTANT:** **Perform the recalibration procedure for the HVAC control module.** Replace the HVAC control module. Refer to **HVAC Control Module Replacement** .Did you complete the replacement?	-	Go to **Step 15**	-
15	Operate the system in order to verify the repair. Did you correct the condition?	-	System OK	Go to **Step 4**

VACUUM CONTROL SYSTEM DIAGNOSTIC

Vacuum Control System Diagnostic

Step	Action	Yes	No
DEFINITION: Improper air delivery.			

- Vacuum applied to the wrong actuator
- Vacuum leak

1	Were you sent here from Symptoms or another diagnostic table?	Go to **Step 2**	Go to **Symptoms - HVAC Systems - Automatic**
2	1. Start the engine. 2. Turn the blower motor fan ON and select an air outlet mode. Does air flow out of the selected HVAC outlet ducts?	Go to **Step 4**	Go to **Step 3**
3	Did the customer concern mention that the air discharges out the correct ducts at first, but then changes during higher engine RPM?	Go to **Step 8**	Go to **Step 4**
4	With the engine running, cycle the HVAC controls through all the modes. Does the air come out of the selected outlet ducts?	Go to **Step 19**	Go to **Step 5**
5	With the engine running, take a vacuum reading at the manifold vacuum port that supplies vacuum to the vacuum control assembly. Is there engine vacuum?	Go to **Step 7**	Go to **Step 6**
6	Repair the no vacuum condition. Is the repair complete?	Go to **Step 20**	-
7	Take a vacuum reading at the vacuum supply line at the vacuum control assembly. Is the vacuum reading the same as the engine vacuum?	Go to **Step 12**	Go to **Step 9**
8	1. Disconnect the vacuum supply line from the vacuum control assembly. 2. With the vacuum gauge connected to the vacuum supply line, re-start the engine and turn the engine OFF. Does the system lose vacuum after turning OFF the engine?	Go to **Step 9**	Go to **Step 12**
9	Inspect for leaking or collapsed vacuum lines between the engine manifold vacuum port and the vacuum control assembly. Are the vacuum lines leaking?	Go to **Step 10**	Go to **Step 11**
10	Repair or replace the collapsed or leaking vacuum line. Is the repair complete?	Go to **Step 20**	-
11	Replace the vacuum reservoir tank. Refer to **Vacuum Tank Replacement** . Is the repair complete?	Go to **Step 20**	-
12	Using an external vacuum source, apply vacuum to the appropriate vacuum line at the vacuum control assembly connector. Refer to **HVAC Schematics** . Does the actuator retract?	Go to **Step 18**	Go to **Step 13**

13	Inspect for leaking or collapsed vacuum lines between the actuator and the vacuum control assembly connector. Are the vacuum lines leaking?	Go to **Step 10**	Go to **Step 14**
14	1. Disconnect the vacuum line from the actuator. 2. Apply an external vacuum source to the actuator. Did the actuator retract?	Go to **Step 15**	Go to **Step 17**
15	With the actuator disconnected, inspect the door for binding. Does the door move freely?	Go to **Step 17**	Go to **Step 16**
16	Repair the binding door. Refer to the appropriate repair. • **Defroster Door Replacement** • **Mode Door Replacement** • **Recirculation Door Replacement** • **Heater Door Replacement** Is the repair complete?	Go to **Step 20**	-
17	Replace the vacuum actuator. Refer to the appropriate repair. • **Defroster Actuator Replacement** • **Mode Actuator Replacement** • **Recirculation Actuator Replacement** Is the repair complete?	Go to **Step 20**	-
18	Test the operation of the vacuum control assembly. Refer to **Air Delivery Improper** . Is the vacuum control assembly operating properly?	Go to **Step 20**	Go to **Step 19**
19	Replace the vacuum control assembly. Refer to **Vacuum Control Assembly Replacement** . Is the repair complete?	Go to **Step 20**	-
20	Cycle the HVAC controls through all modes to verify proper operation. Did you find and correct the condition?	System OK	Go to **Step 2**

RE-CALIBRATING ACTUATORS

Use the following steps to perform the calibration update:

1. Turn OFF the ignition.
2. Remove the battery positive voltage circuit fuse of the HVAC Control Module.

IMPORTANT: The module memory will not clear if the battery positive voltage circuit fuse is installed in less than 60 seconds.

3. Wait 60 seconds.
4. Install the fuse.

REPAIR INSTRUCTIONS

HVAC CONTROL MODULE REPLACEMENT

Removal Procedure

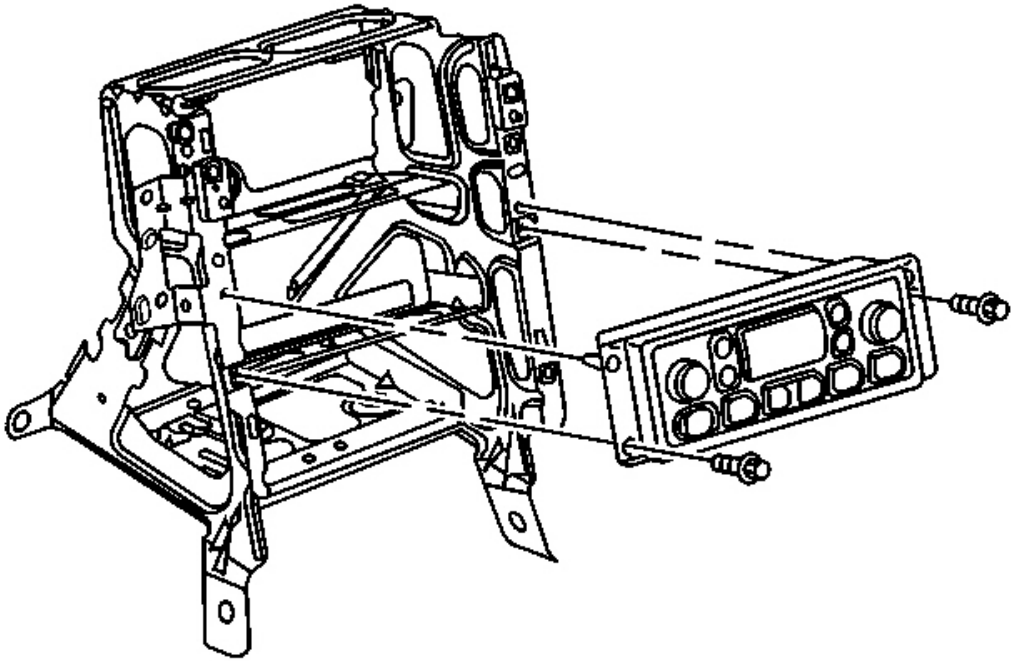

Fig. 13: I/P Center Support Bracket, HVAC Control Module & Screws
Courtesy of GENERAL MOTORS CORP.

1. Remove the I/P accessory trim plate. Refer to **Trim Plate Replacement - Instrument Panel (I/P) Accessory** in Instrument Panel, Gages and Console.
2. Remove the HVAC control module retaining screws.
3. Pull the HVAC control module out from the I/P center support bracket.

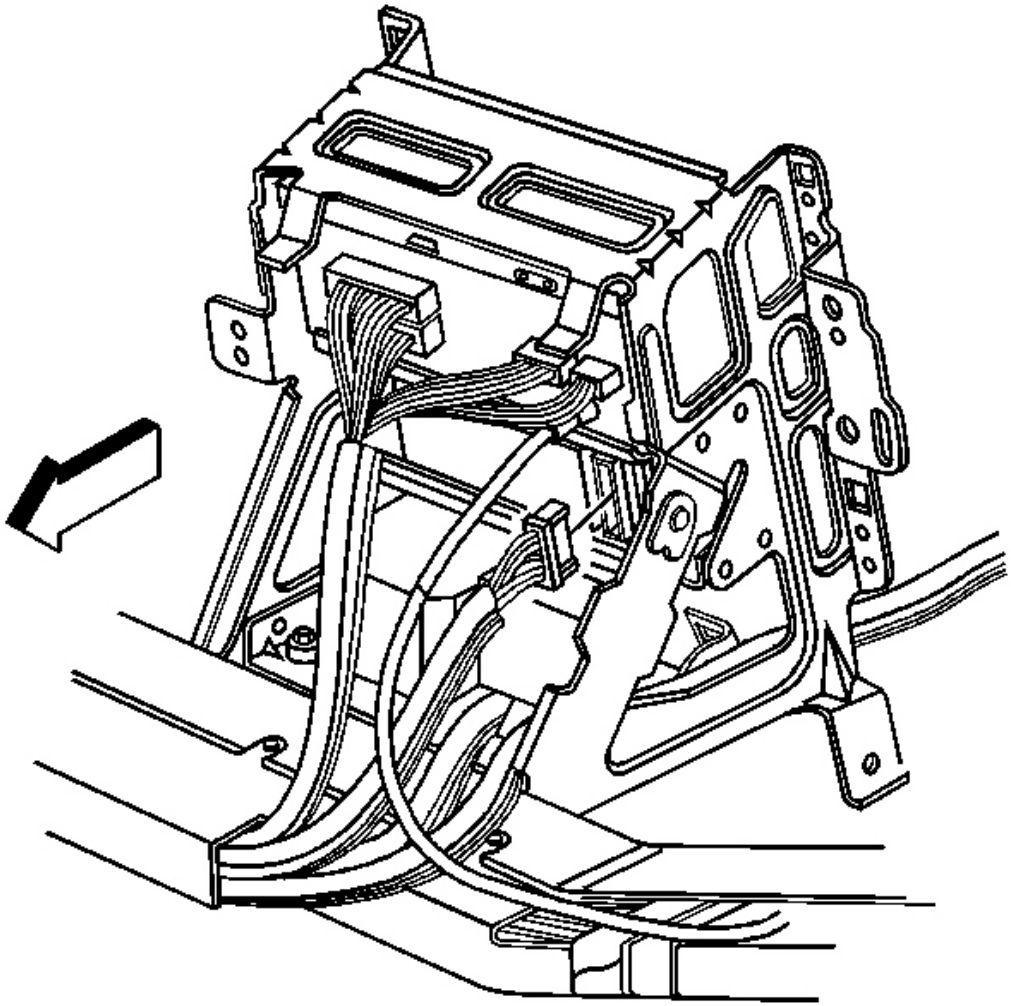

Fig. 14: HVAC Control Module & Electrical Connector
Courtesy of GENERAL MOTORS CORP.

4. Disconnect the electrical connector from the HVAC control module.
5. Remove the HVAC control module from the vehicle.

Installation Procedure

1. Install the HVAC control module to the vehicle.

IMPORTANT: The key should be in the off position when connecting the HVAC control

module electrical connector to ensure proper calibration.

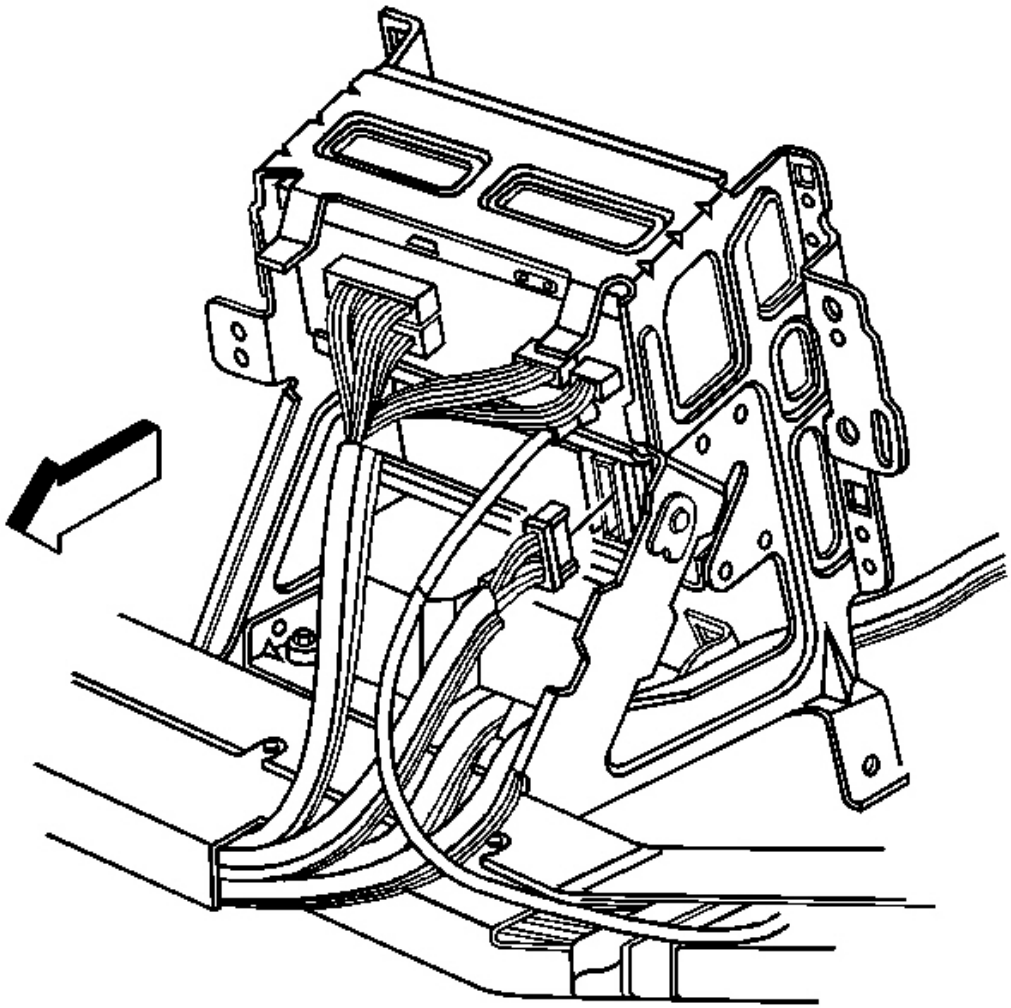

Fig. 15: HVAC Control Module & Electrical Connector
Courtesy of GENERAL MOTORS CORP.

2. Connect the electrical connector to the HVAC control module.

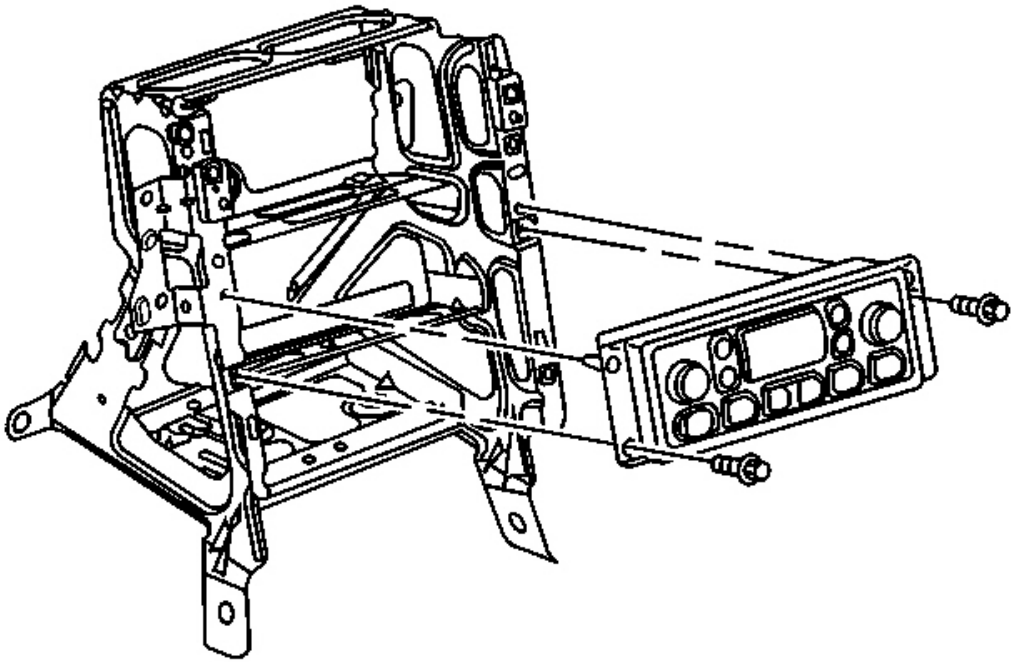

Fig. 16: I/P Center Support Bracket, HVAC Control Module & Screws
Courtesy of GENERAL MOTORS CORP.

3. Install the HVAC control module to the I/P center support bracket.

NOTE: **Refer to Fastener Notice in Cautions and Notices.**

4. Install the HVAC control module retaining screws.

Tighten: Tighten the screws to 1.9 N.m (17 lb in).

5. Install the I/P accessory trim plate. Refer to **Trim Plate Replacement - Instrument Panel (I/P) Accessory** in Instrument Panel, Gages and Console.

IMPORTANT: Do not adjust any controls on the HVAC control module while the HVAC control module is self-calibrating. If interrupted, improper HVAC performance will result.
The engine must be running for proper calibration to occur.

6. Start and allow the engine to run for a least one minute.

BLOWER MOTOR CONTROL PROCESSOR REPLACEMENT

Removal Procedure

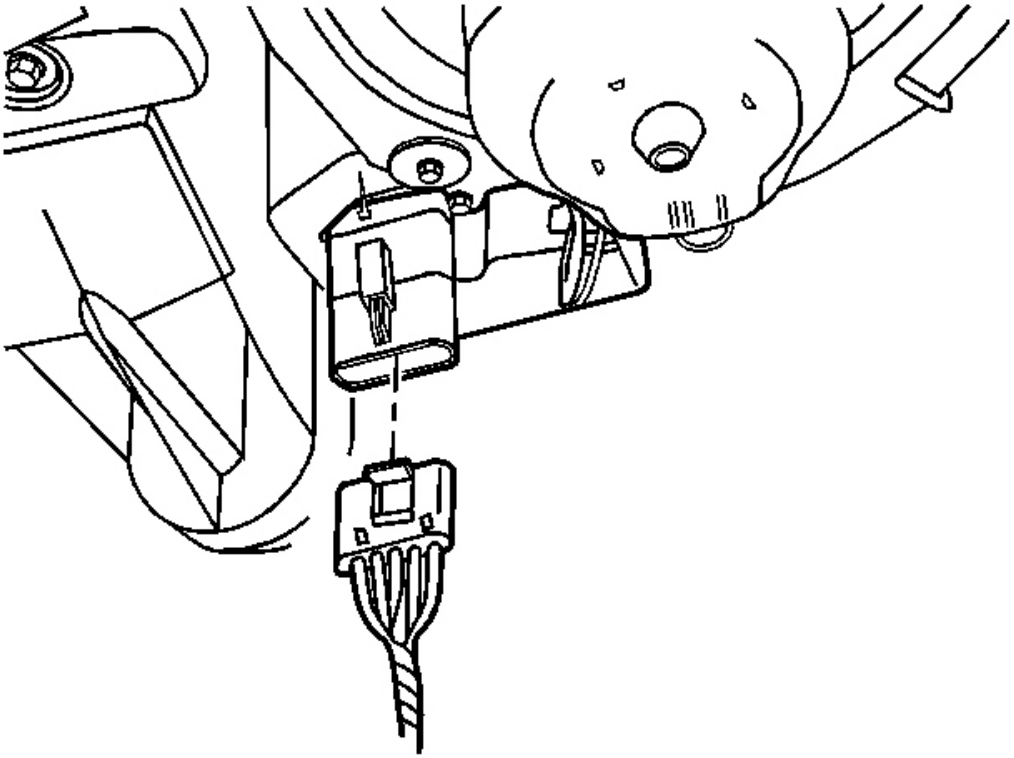

Fig. 17: Blower Motor Control Module Electrical Connector
Courtesy of GENERAL MOTORS CORP.

1. Remove the I/P lower insulator panel - RH. Refer to **Closeout/Insulator Panel Replacement - Right** in Instrument Panel, Gages and Console.

CAUTION: Unplug the blower motor before removal. Blower motor case contact with any ground may start the fan and cause personal injury.

2. Disconnect the blower motor control module electrical connector.

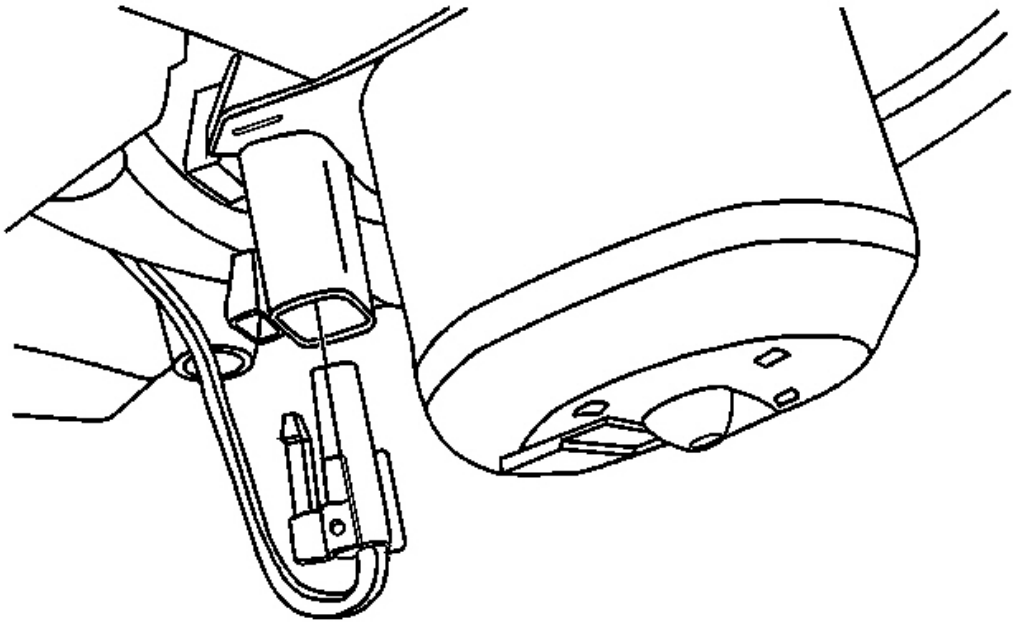

Fig. 18: Blower Motor & Electrical Connector
Courtesy of GENERAL MOTORS CORP.

3. Disconnect the blower motor control module electrical connector from the blower motor.

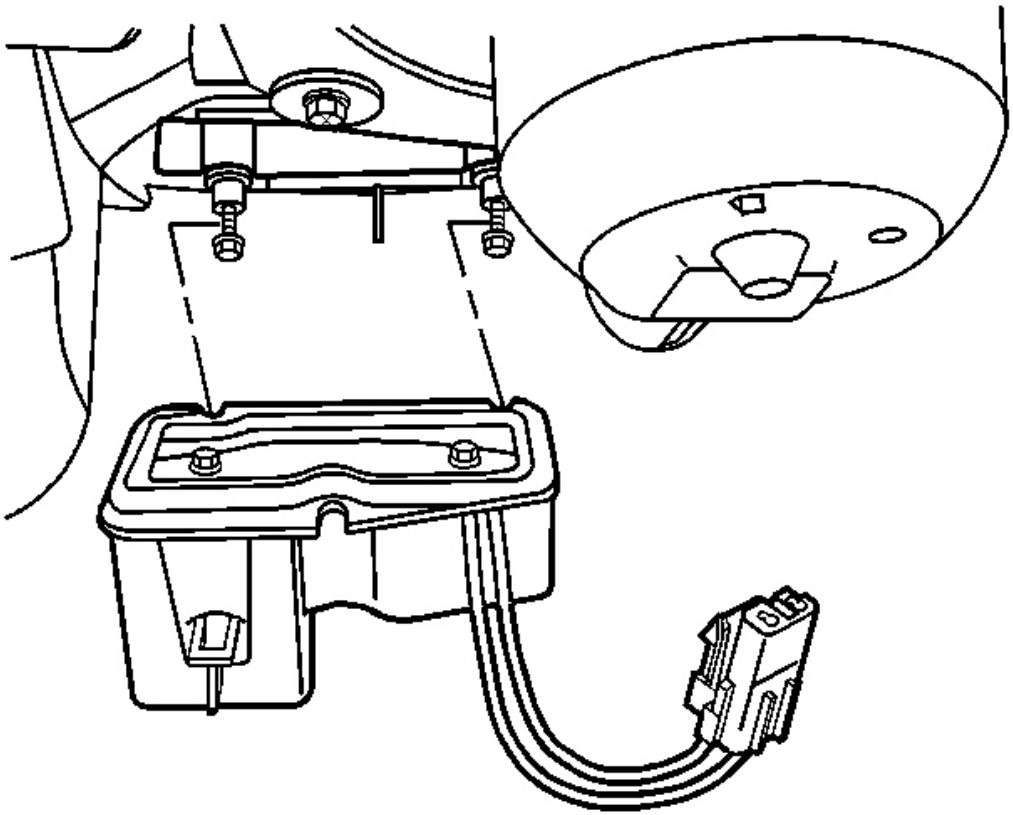

Fig. 19: Rear Blower Motor Control Module & Retaining Screw
Courtesy of GENERAL MOTORS CORP.

4. Loosen the blower motor control module forward two retaining screws (nearest the dash mat) approximately 5 mm (0.197 in).

   The control module is slotted at the forward retaining locations.

5. Remove the rear blower motor control module retaining screw.
6. Tilt down the rear of the blower motor control module.
7. Remove the blower motor control module from the HVAC module.

Installation Procedure

1. Install the blower motor control module to the HVAC module.

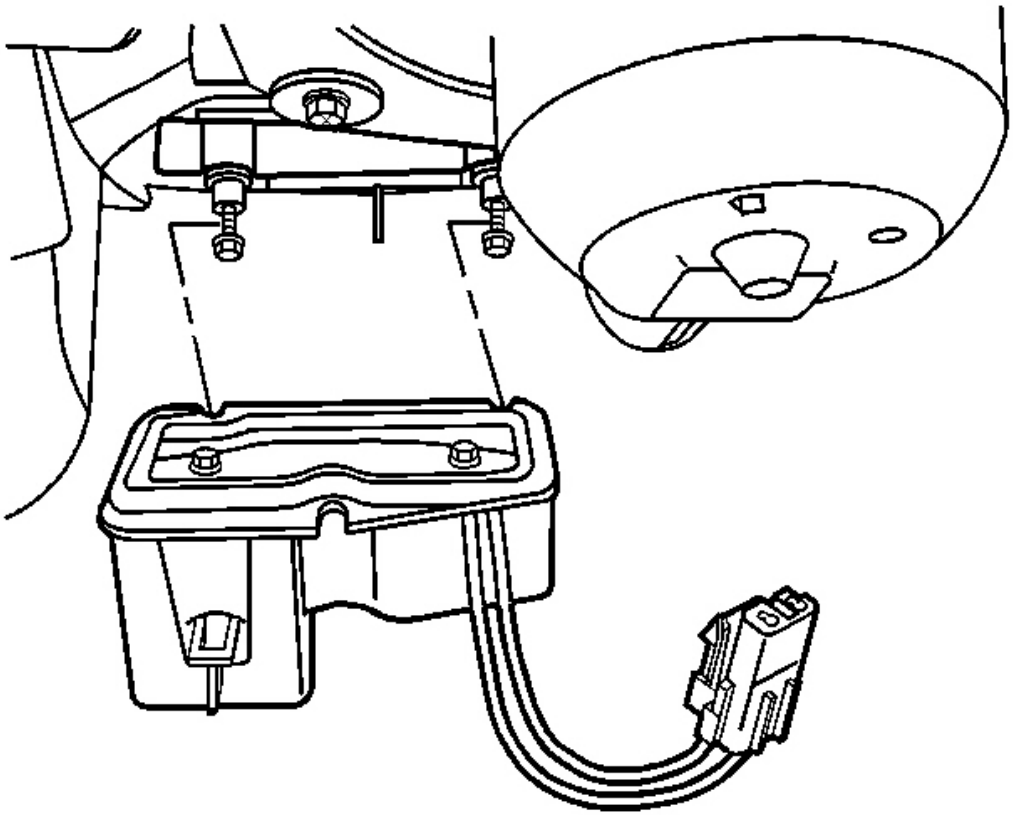

Fig. 20: Rear Blower Motor Control Module & Retaining Screw
Courtesy of GENERAL MOTORS CORP.

2. Position the blower motor control module forward retaining slots onto the forward retaining screws.
3. Align and seat the blower control module to the HVAC module.
4. Install the rear blower motor control module retaining screw.

NOTE: Refer to Fastener Notice in Cautions and Notices.

5. Tighten all the blower motor control module retaining screws.

Tighten: Tighten the screws to 1.6 N.m (14 lb in).

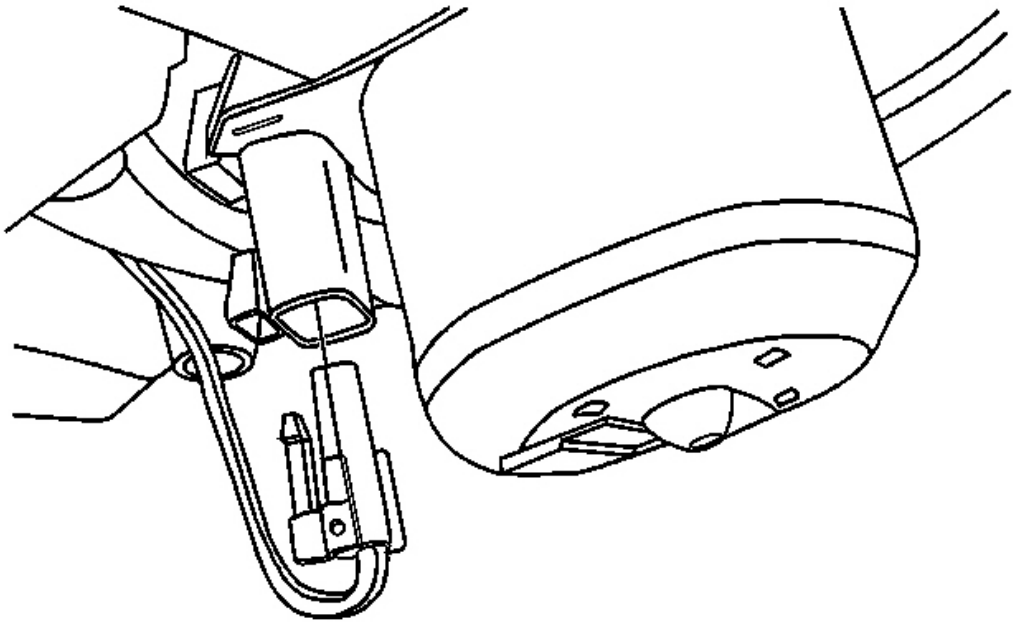

Fig. 21: Blower Motor & Electrical Connector
Courtesy of GENERAL MOTORS CORP.

6. Connect the blower motor electrical connector.

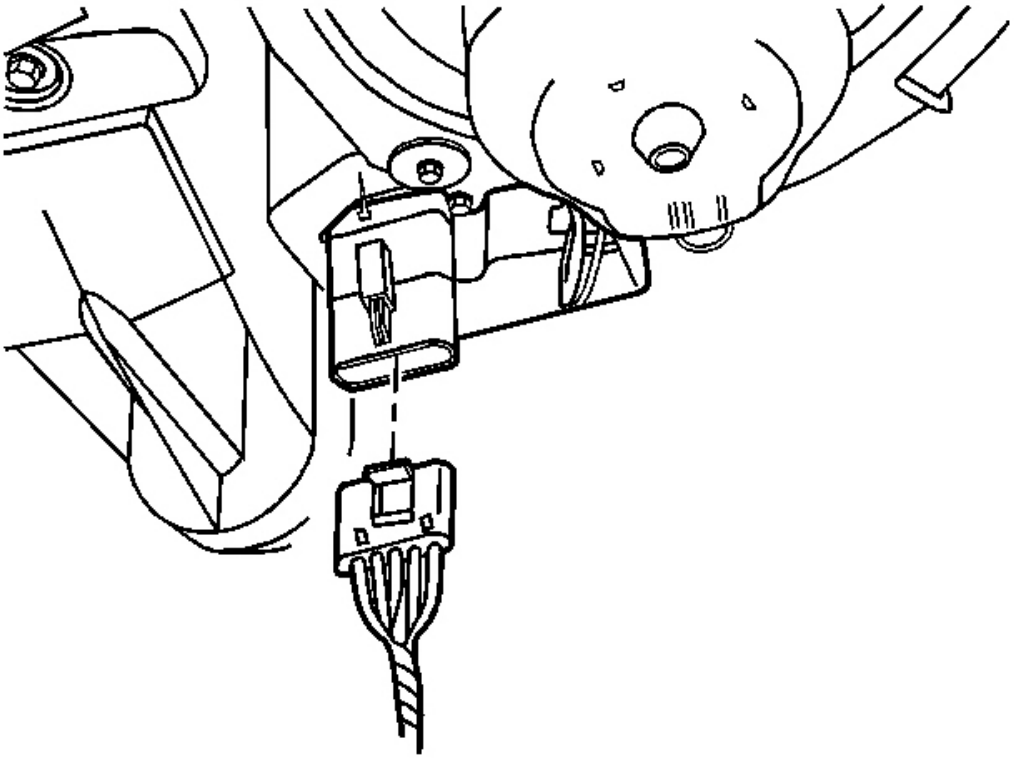

Fig. 22: Blower Motor Control Module Electrical Connector
Courtesy of GENERAL MOTORS CORP.

7. Connect the blower motor control module electrical connector.
8. Install the I/P lower insulator panel - RH. Refer to **Closeout/Insulator Panel Replacement - Right** in Instrument Panel, Gages and Console.

RECIRCULATION ACTUATOR REPLACEMENT

Removal Procedure

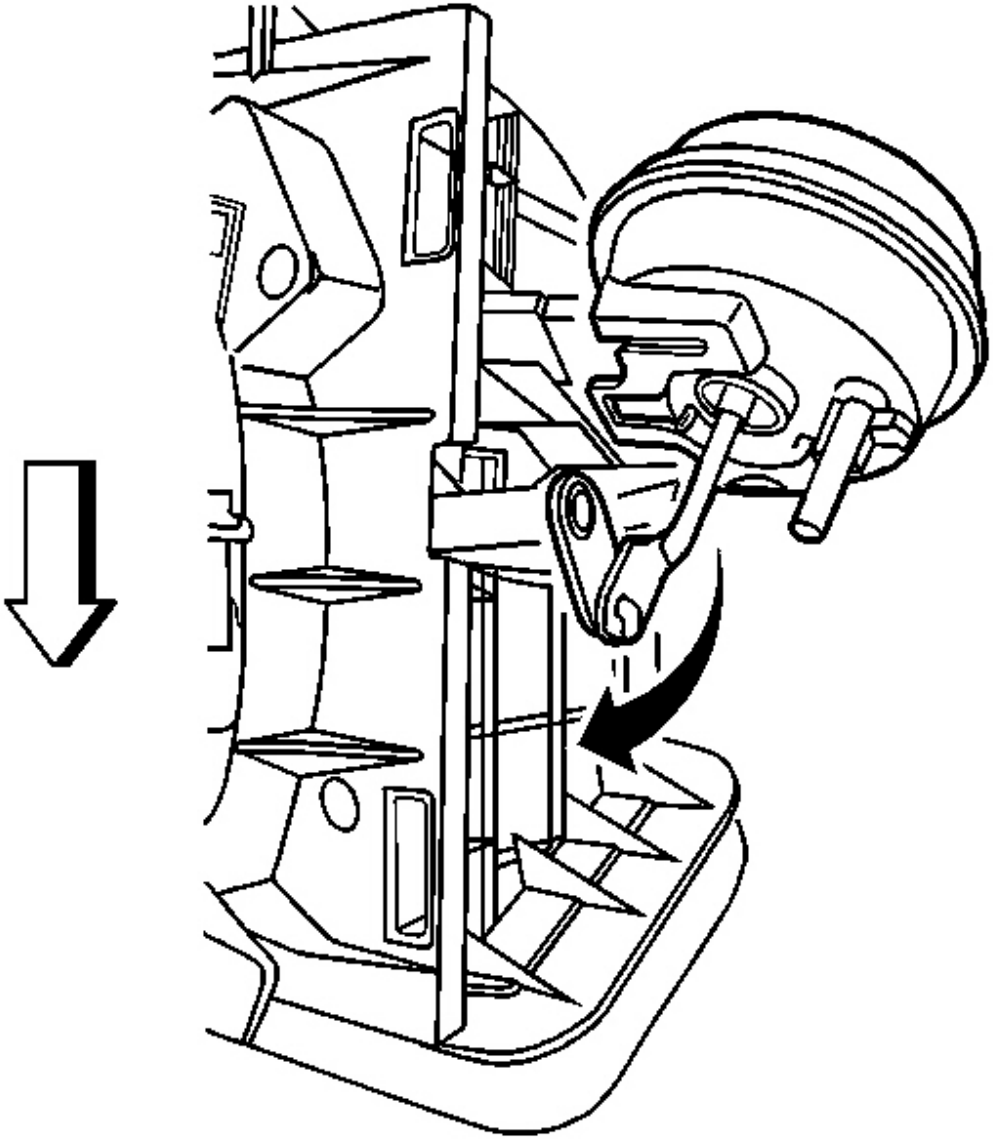

Fig. 23: Recirculation Actuator & Vacuum Harness Connector
Courtesy of GENERAL MOTORS CORP.

1. Remove the SIR bracket. Refer to **Bracket Replacement - SIR** in Instrument Panel, Gages and Console.
2. Disconnect the vacuum harness connector from the recirculation actuator.
3. Lift to release the recirculation actuator retaining tab and begin to slide the recirculation actuator toward the outside of the vehicle.

4. Rotate the recirculation door lever fully forward/clockwise, to extend the actuator plunger.

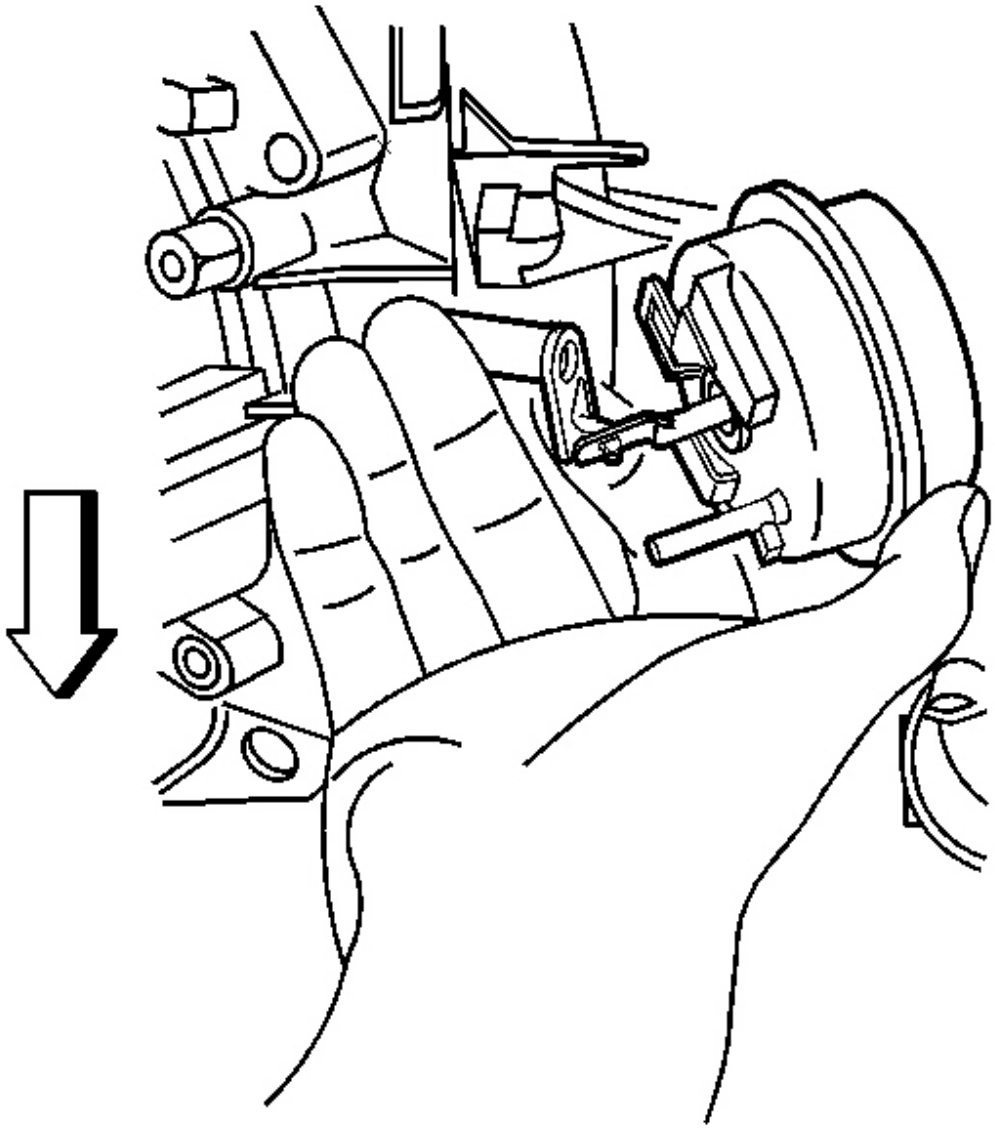

Fig. 24: Vacuum Actuator & Recirculation Actuator
Courtesy of GENERAL MOTORS CORP.

5. Disconnect the recirculation actuator from the recirculation door lever and remove the vacuum actuator.
6. Release the recirculation door lever.

Installation Procedure

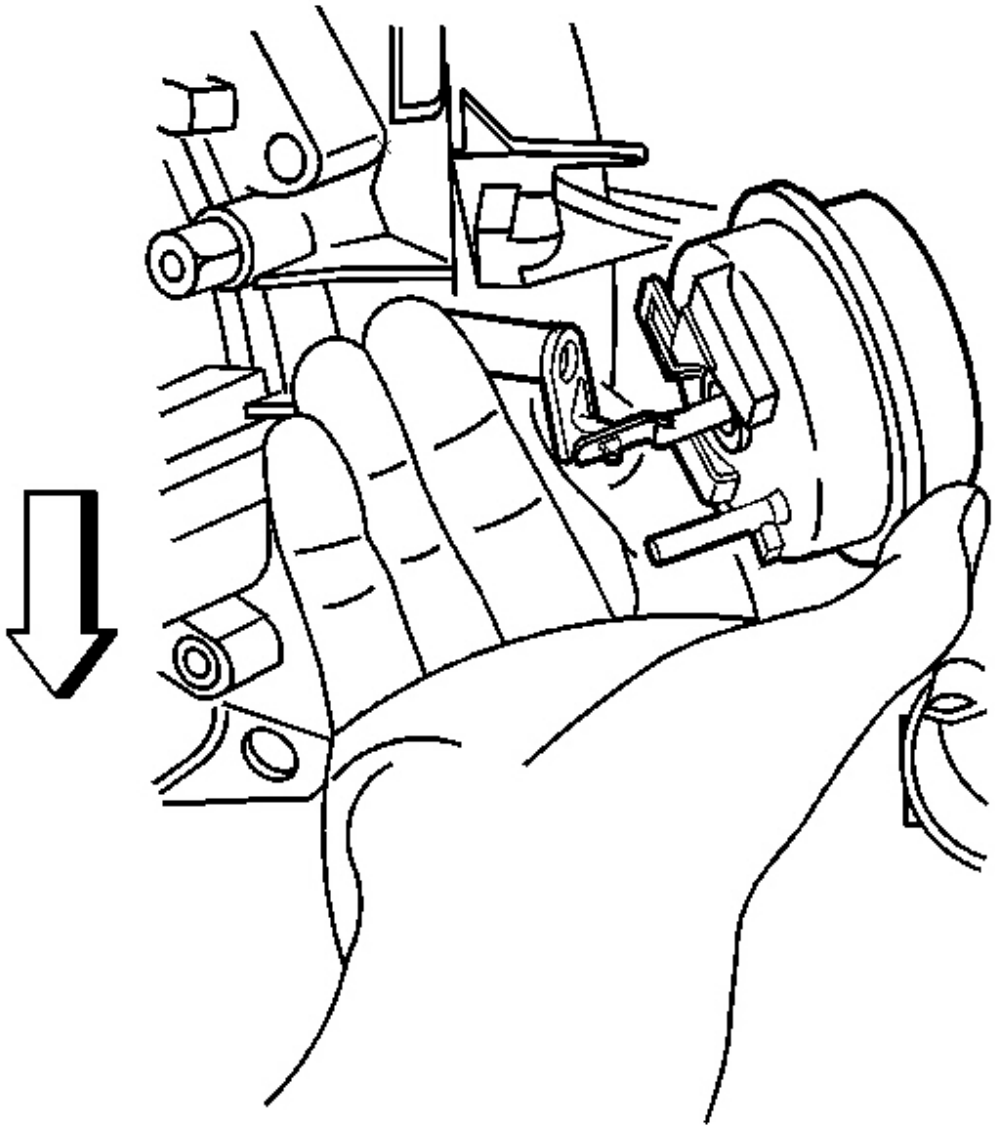

Fig. 25: Vacuum Actuator & Recirculation Actuator
Courtesy of GENERAL MOTORS CORP.

1. Rotate the recirculation door lever fully forward/clockwise and hold in place.
2. Connect the recirculation actuator to the recirculation door lever, then extend the plunger.

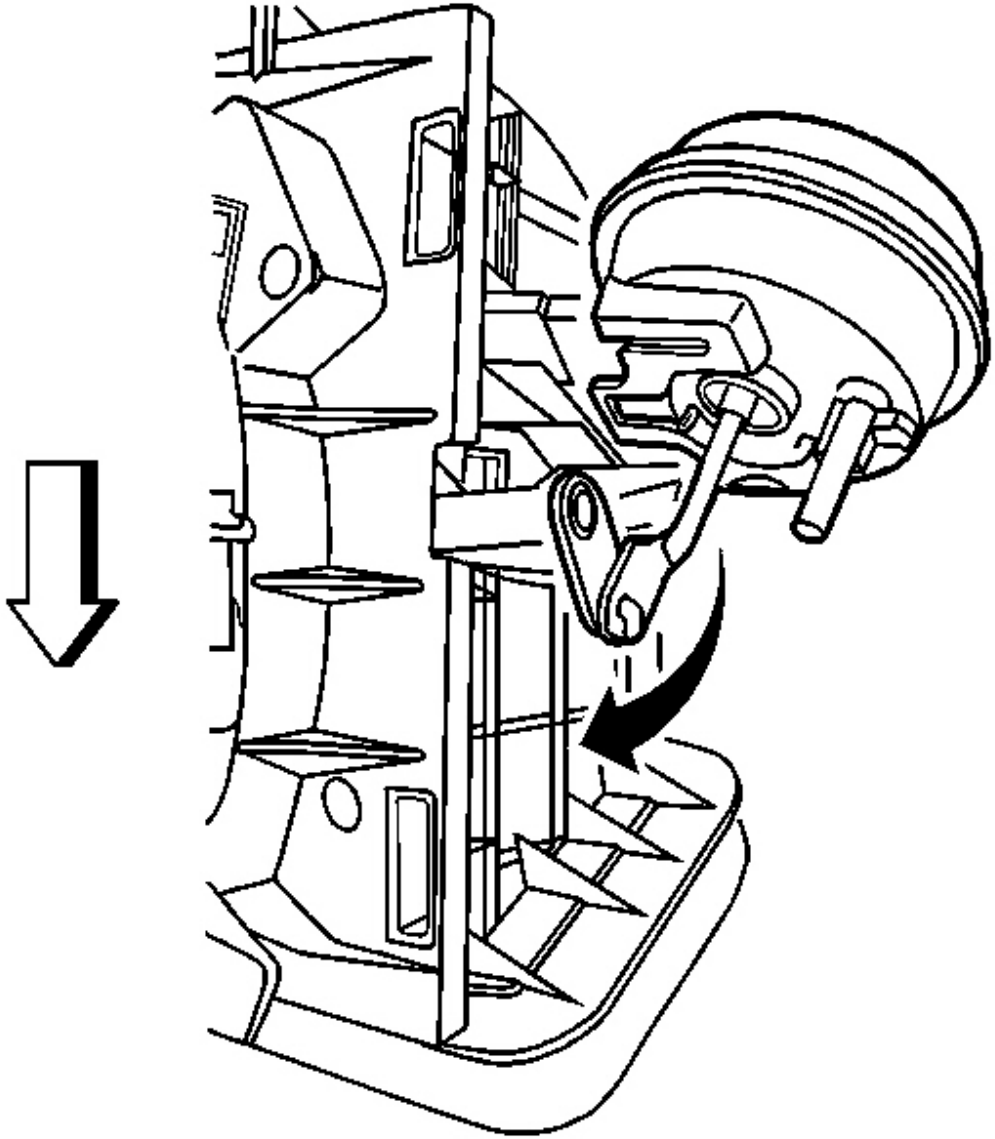

Fig. 26: Recirculation Actuator & Vacuum Harness Connector
Courtesy of GENERAL MOTORS CORP.

IMPORTANT: During installation, ensure that the recirculation actuator retaining tab is positioned ABOVE the mating base on the HVAC module case.

3. Inspect that the actuator pushrod is not binding on the recirculation door lever.

4. Push the actuator toward the HVAC module case to secure the retaining tab.
5. Release the recirculation door lever.
6. Connect the vacuum harness connector to the recirculation actuator.
7. Install the SIR bracket. Refer to **Bracket Replacement - SIR** in Instrument Panel, Gages and Console.
8. Recalibrate the actuators. Refer to **Re-Calibrating Actuators** .

MODE ACTUATOR REPLACEMENT

Removal Procedure

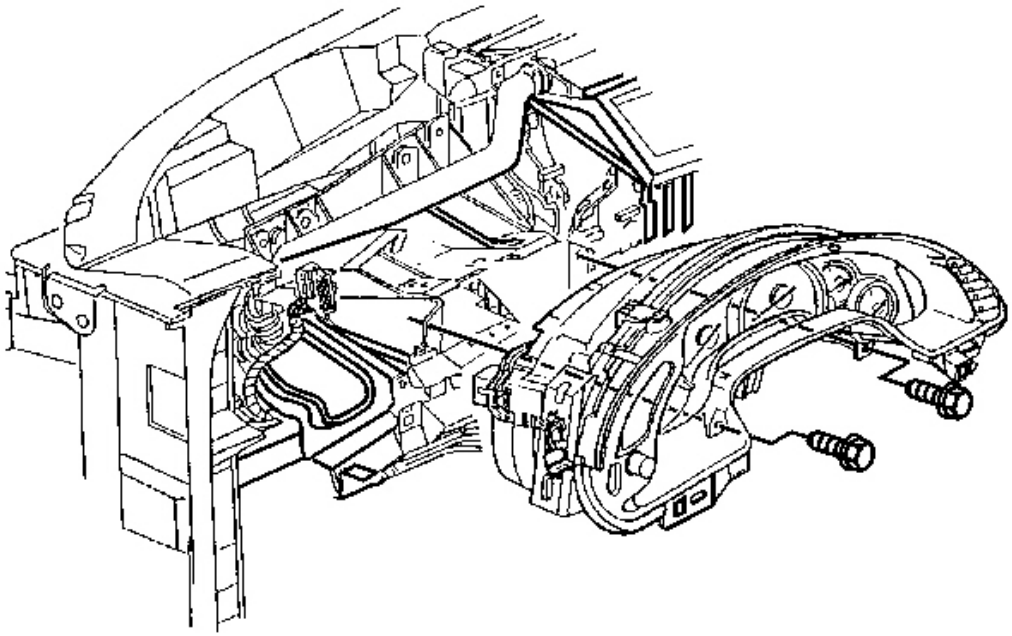

Fig. 27: Steering Column Bracket, IPC & Screws
Courtesy of GENERAL MOTORS CORP.

1. Remove the I/P upper trim pad. Refer to **Trim Pad Replacement - Instrument Panel (I/P) Upper** in Instrument Panel, Gages and Console.
2. Remove the instrument panel cluster (IPC) to steering column bracket retaining screws.
3. Reposition the IPC to better access the inside air temperature sensor duct.

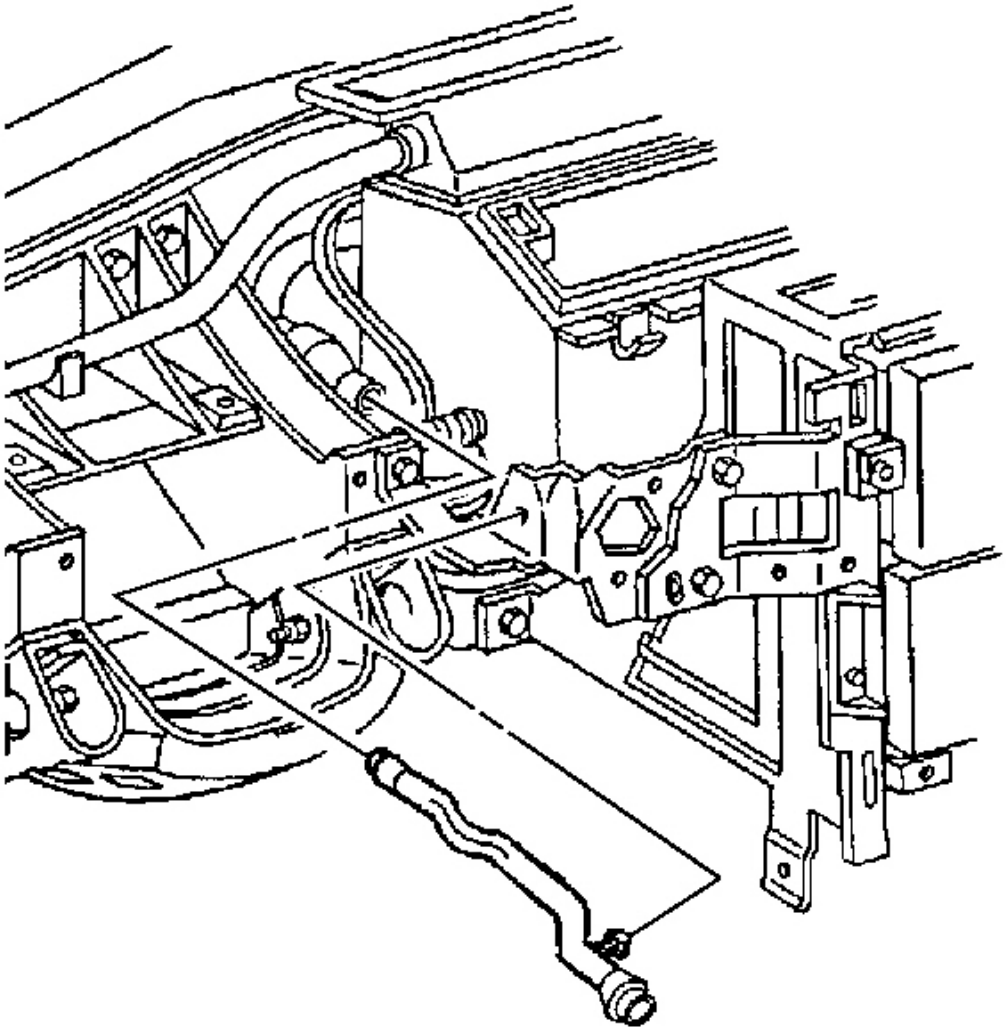

Fig. 28: Inside Air Temperature Sensor Aspirator Duct
Courtesy of GENERAL MOTORS CORP.

4. Remove the inside air temperature sensor aspirator duct.
    1. Depress the duct retaining tab and remove the duct from the ignition switch housing bracket.
    2. Use a twisting motion to release the duct from the duct muffler.

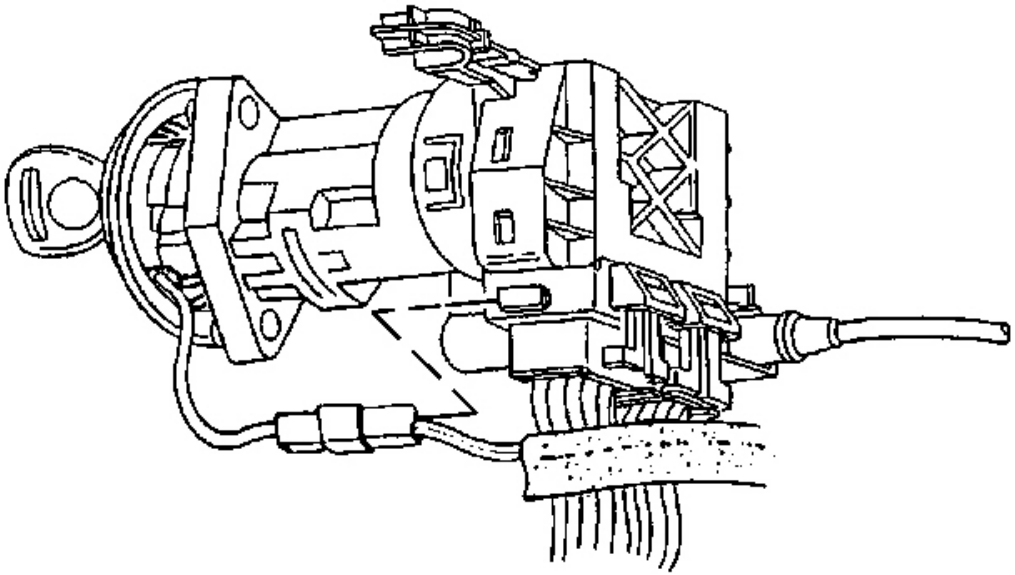

Fig. 29: Ignition Switch Lock Cylinder Electrical Connector
Courtesy of GENERAL MOTORS CORP.

5. Remove the driver knee bolster bracket. Refer to **Trim Panel Replacement - Knee Bolster** in Instrument Panel, Gages and Console.
6. Disconnect the ignition switch lock cylinder electrical connector from the retaining tab on the side of the ignition switch.

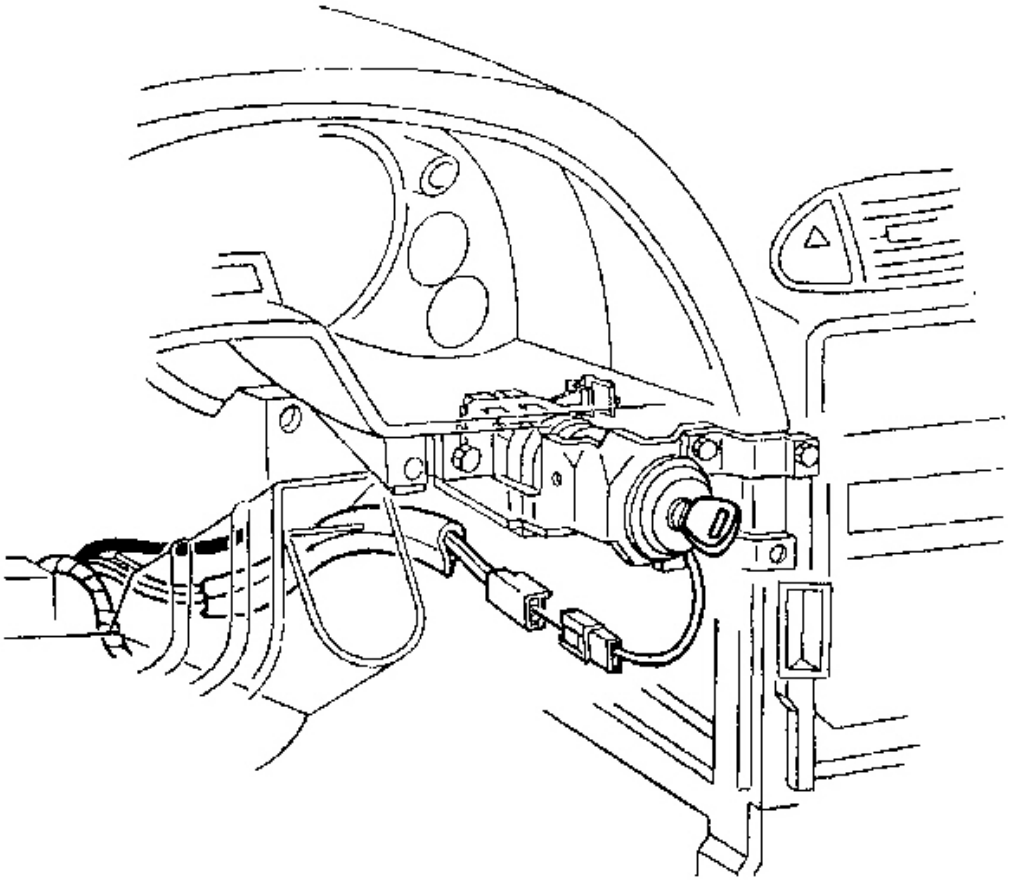

Fig. 30: Lock Cylinder Electrical Connector & Ignition Switch Bezel
Courtesy of GENERAL MOTORS CORP.

7. Disconnect the lock cylinder electrical connector.

IMPORTANT: Take note of how the ignition switch lock cylinder wire is wrapped around the base of the ignition switch bezel.

8. Remove the ignition switch bezel.

   Carefully pull to unsnap.

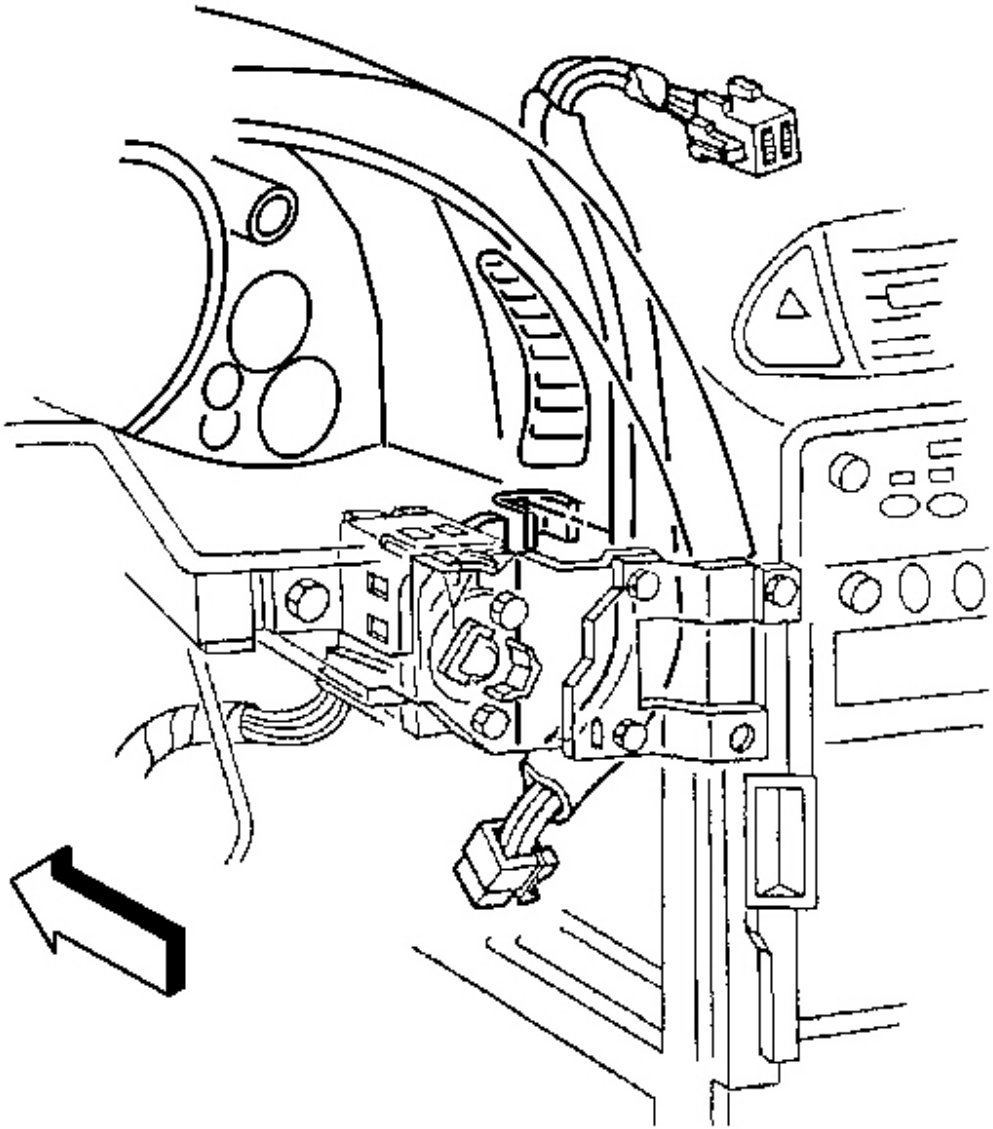

Fig. 31: Ignition Switch Retainer & Hazard Warning Switch Wiring Harness
Courtesy of GENERAL MOTORS CORP.

9. Remove the hazard warning switch wiring harness from the ignition switch retainer.

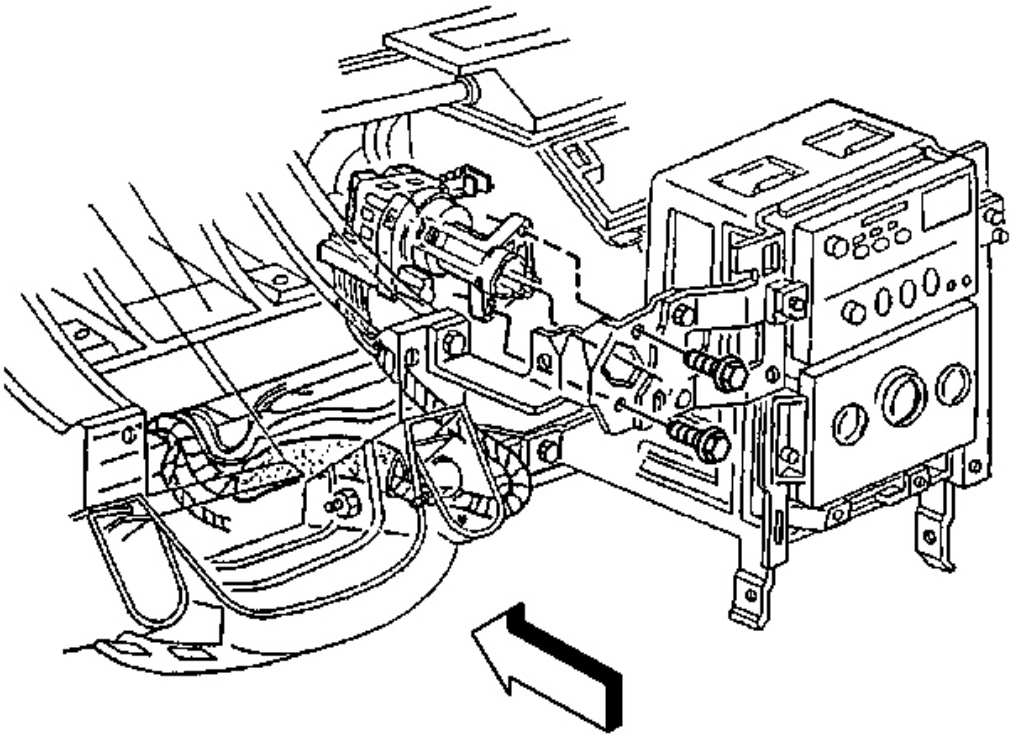

Fig. 32: Ignition Switch Retaining Bolts
Courtesy of GENERAL MOTORS CORP.

10. Remove the ignition switch retaining bolts.
11. Reposition the ignition switch downward.

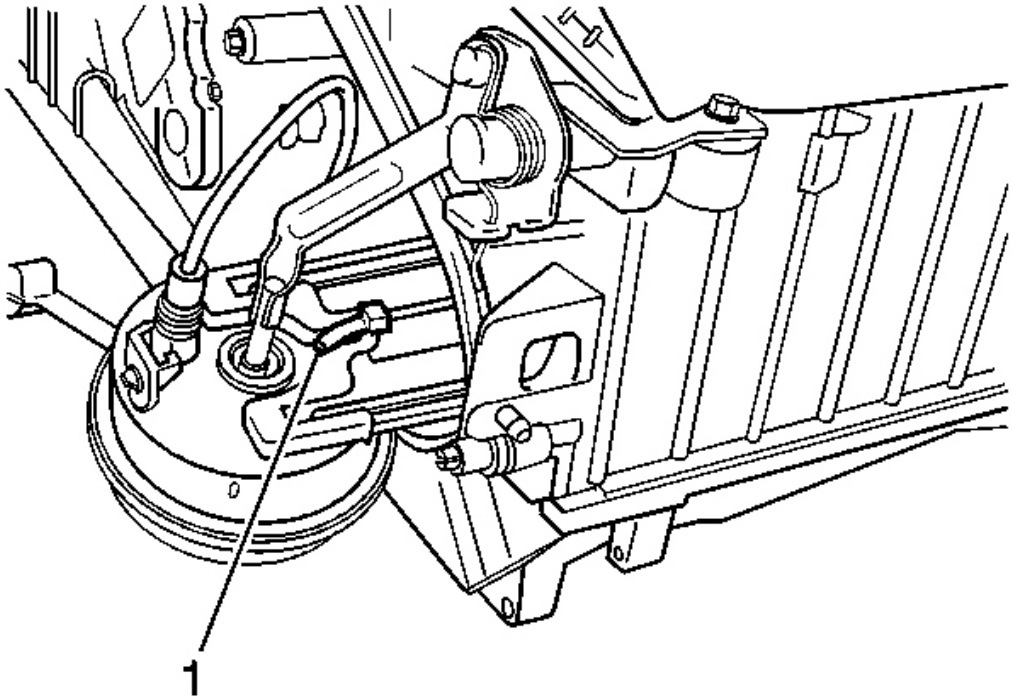

Fig. 33: Mode Actuator & Vacuum Harness Connectors
Courtesy of GENERAL MOTORS CORP.

12. Disconnect the vacuum harness connectors from the mode actuator.
13. Cut and remove the adjustable plastic tie strap (1) from the base of the mode actuator.

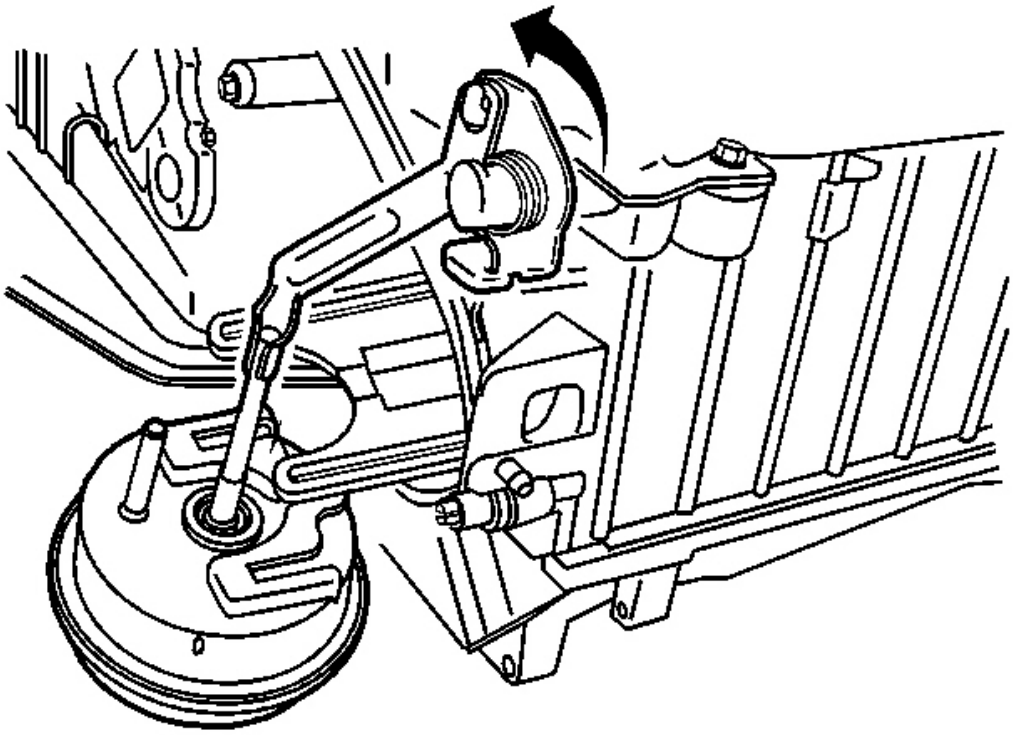

Fig. 34: Steering Column Bracket & Mode Actuator
Courtesy of GENERAL MOTORS CORP.

14. Lift to release the mode actuator retaining tab and just begin to slide the actuator toward the steering column bracket.
15. Remove the air distribution case cover screws.
16. Remove the air distribution case cover with the mode actuator attached.
17. Remove the mode actuator from the mode door lever.

Installation Procedure

1. Connect the mode actuator pushrod to the mode door lever.
2. Install the air distribution case cover with the mode actuator attached.

NOTE: Refer to Fastener Notice in Cautions and Notices.

3. Install the air distribution case cover screws.

Tighten: Tighten the screws to 1.6 N.m (14 lb in).

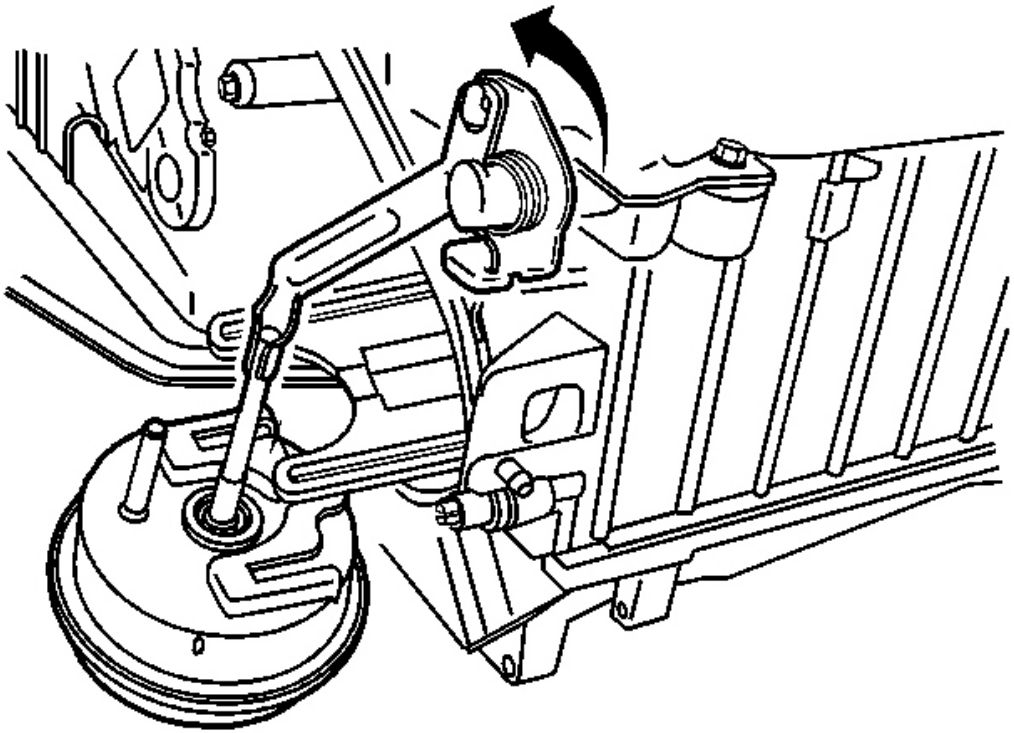

Fig. 35: Steering Column Bracket & Mode Actuator
Courtesy of GENERAL MOTORS CORP.

4. Position the pod of the mode actuator between the steering column bracket and the ignition switch housing bracket.
5. Inspect that the actuator pushrod is not binding on the mode door lever.
6. Push the actuator toward the HVAC module case to secure the retaining tab.

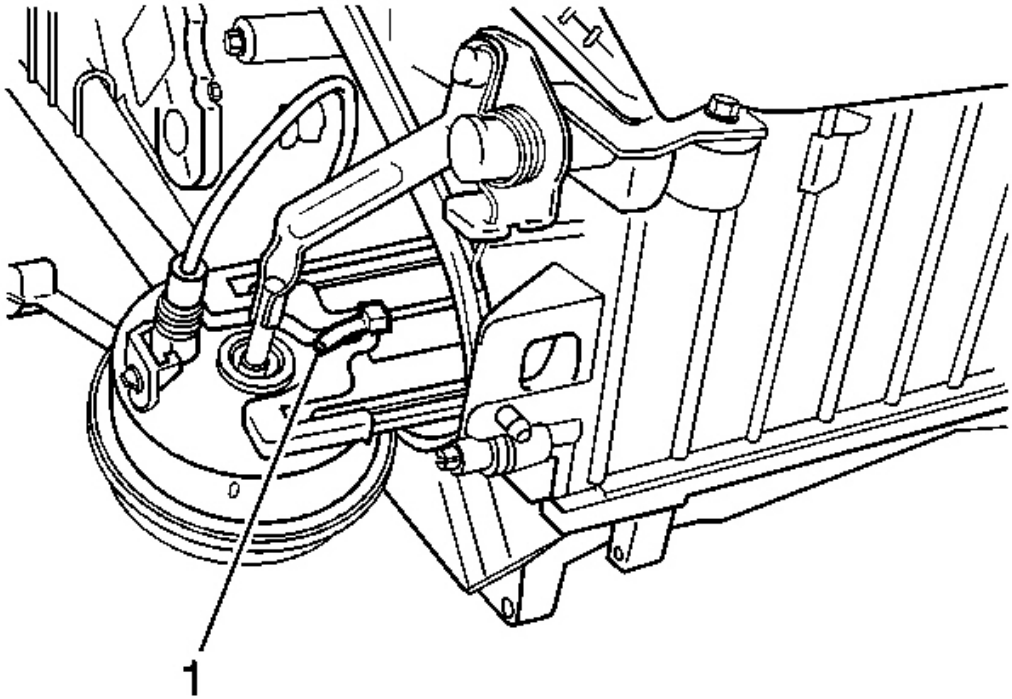

Fig. 36: Mode Actuator & Vacuum Harness Connectors
Courtesy of GENERAL MOTORS CORP.

7. Install a new adjustable plastic tie strap (1) to the base of the mode actuator.
8. Connect the vacuum harness connectors to the mode actuator.

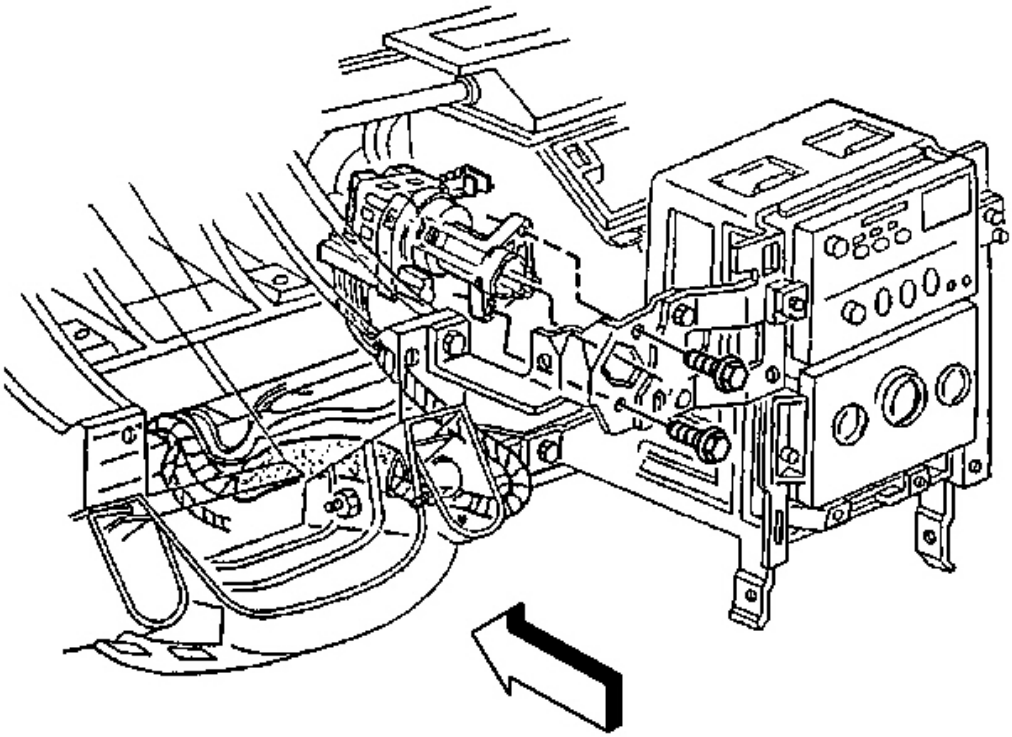

Fig. 37: Ignition Switch Retaining Bolts
Courtesy of GENERAL MOTORS CORP.

9. Position the ignition switch to the ignition switch housing bracket.
10. Install the ignition switch retaining bolts.

Tighten: Tighten the bolts to 5.5 N.m (49 lb in).

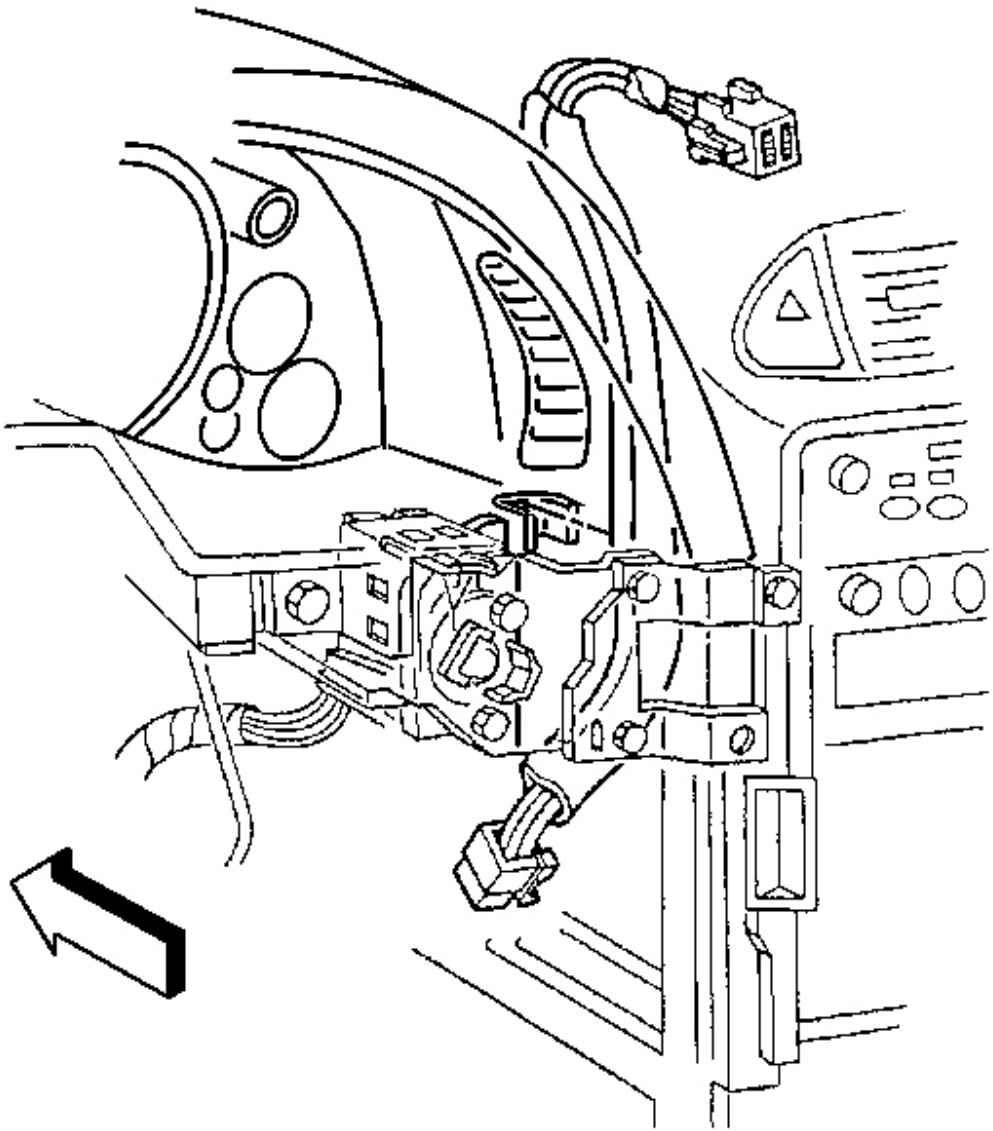

Fig. 38: Ignition Switch Retainer & Hazard Warning Switch Wiring Harness
Courtesy of GENERAL MOTORS CORP.

11. Install the hazard warning switch wiring harness to the ignition switch retainer.

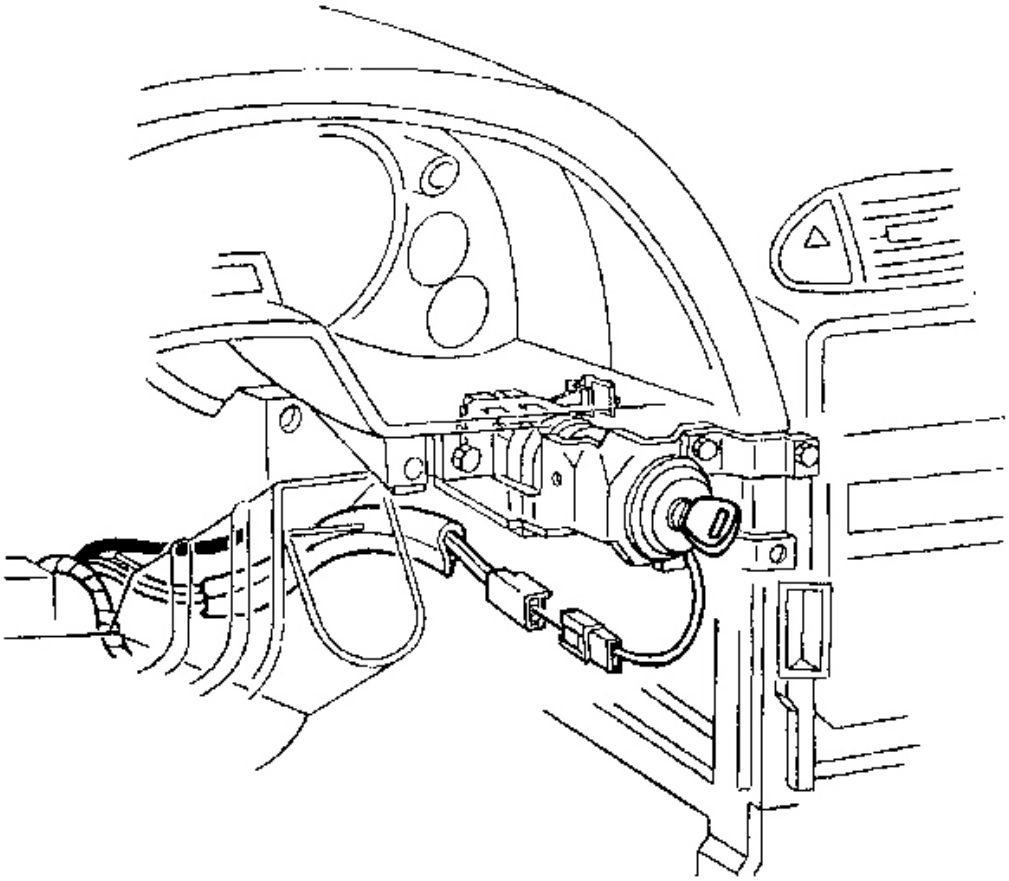

Fig. 39: Lock Cylinder Electrical Connector & Ignition Switch Bezel
Courtesy of GENERAL MOTORS CORP.

12. Install the ignition switch bezel to the switch.
    1. Wrap the ignition switch lock cylinder wire around the base of the ignition switch bezel, as noted during removal.
    2. Align the bezel slots to the lock cylinder pins, then push to secure.
13. Connect the lock cylinder electrical connector.

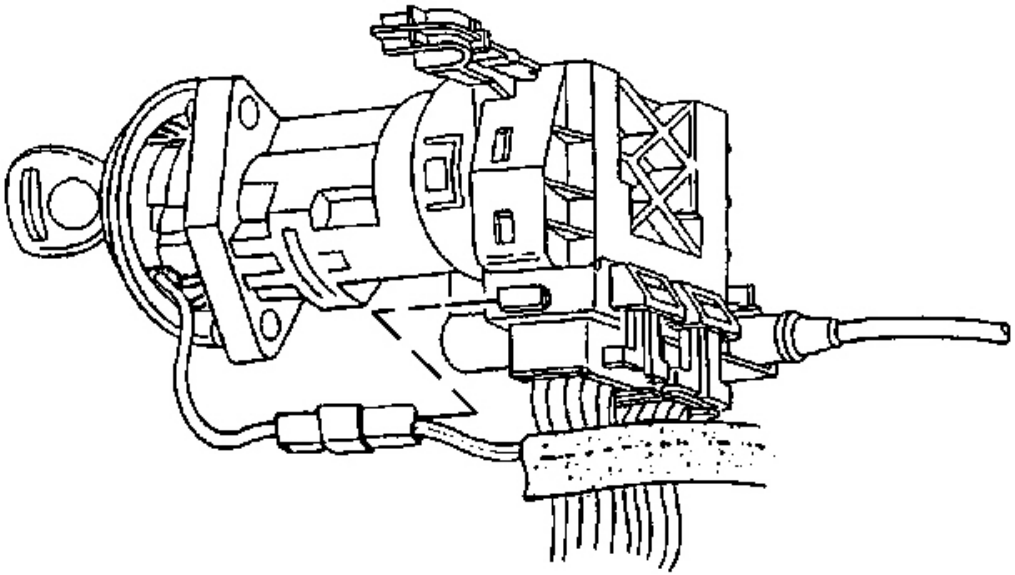

Fig. 40: Ignition Switch Lock Cylinder Electrical Connector
Courtesy of GENERAL MOTORS CORP.

14. Connect the lock cylinder electrical connector to the retaining tab on the side of the ignition switch.
15. Install the driver knee bolster bracket. Refer to **Trim Panel Replacement - Knee Bolster** in Instrument Panel, Gages and Console.

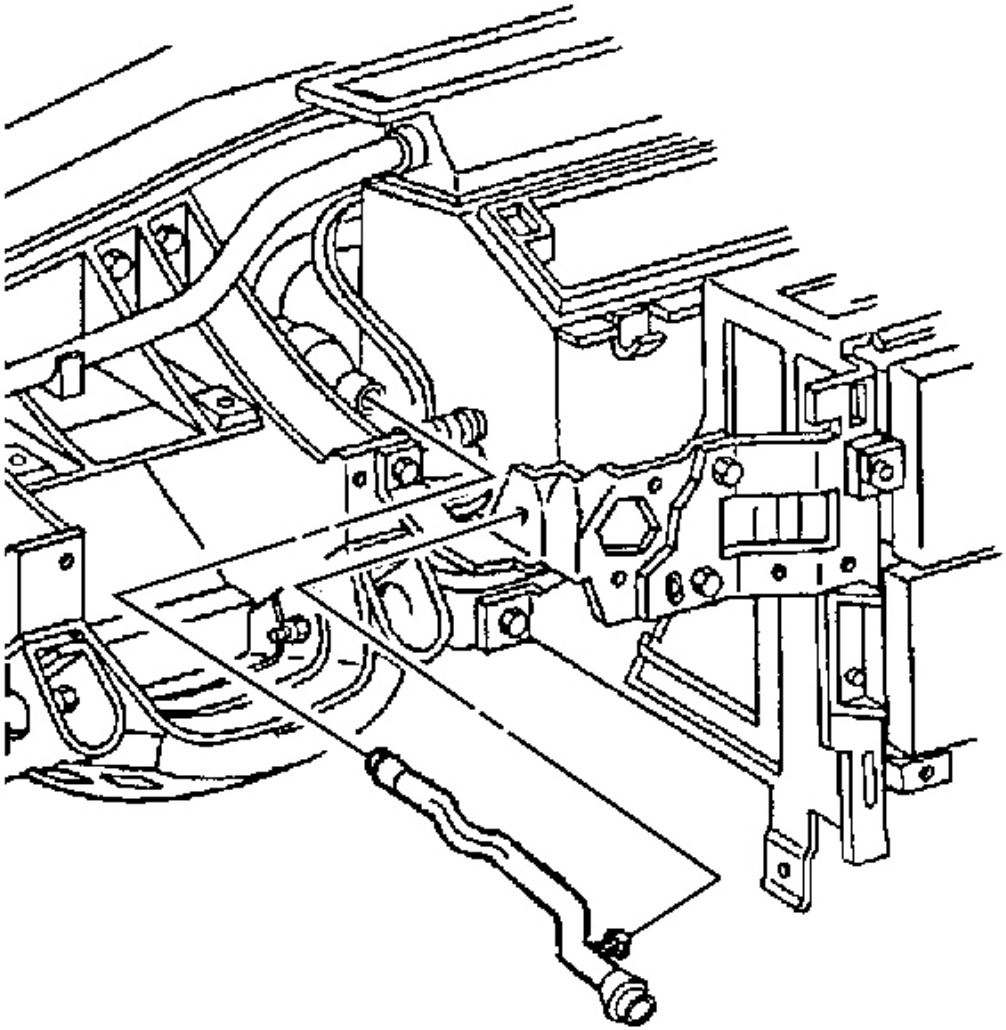

Fig. 41: Inside Air Temperature Sensor Aspirator Duct
Courtesy of GENERAL MOTORS CORP.

16. Install the inside air temperature sensor aspirator duct.
    1. Use a twisting motion to secure the duct to the duct muffler.
    2. Install the duct retaining tab to the ignition switch housing bracket.

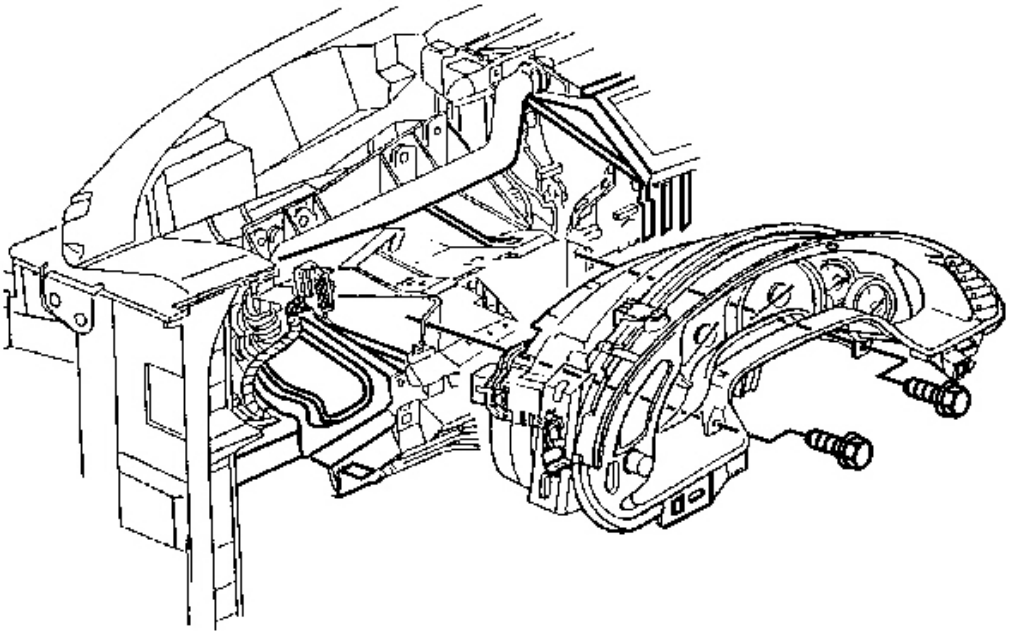

Fig. 42: Steering Column Bracket, IPC & Screws
Courtesy of GENERAL MOTORS CORP.

17. Install the IPC into position.
18. Install the IPC to steering column bracket retaining screws.

    Tighten: Tighten the screws to 3.5 N.m (31 lb in).

19. Install the I/P upper trim pad. Refer to **Trim Pad Replacement - Instrument Panel (I/P) Upper** in Instrument Panel, Gages and Console.
20. Recalibrate the actuators. Refer to **Re-Calibrating Actuators** .

DEFROSTER ACTUATOR REPLACEMENT

Removal Procedure

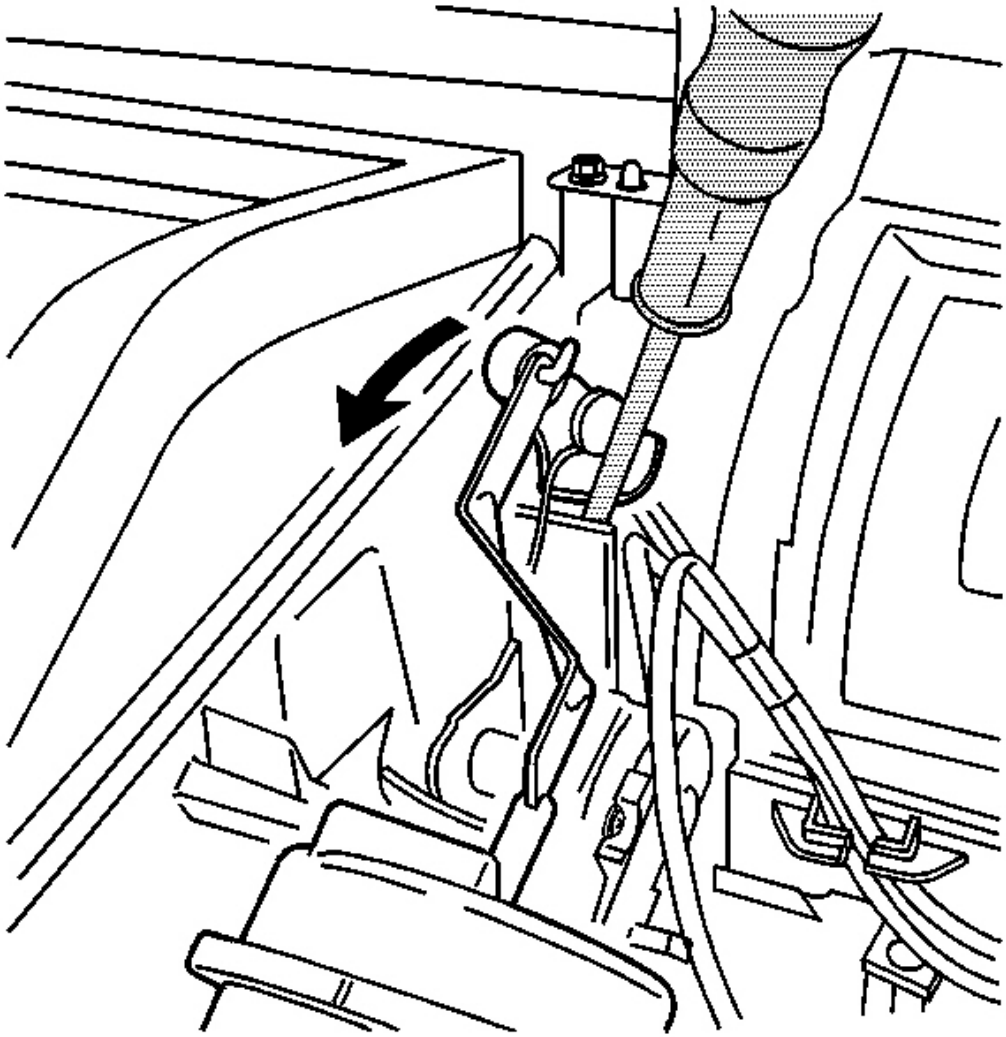

Fig. 43: RH Side Window Defogger Lower Outlet Duct
Courtesy of GENERAL MOTORS CORP.

1. Remove the I/P upper trim pad. Refer to **Trim Pad Replacement - Instrument Panel (I/P) Upper** in Instrument Panel, Gages and Console.
2. Disconnect the RH side window defogger lower outlet duct from the windshield defroster duct, then reposition the side window defogger duct forward.
3. Disconnect the vacuum harness connectors from the defroster actuator.
4. Rotate the defrost door lever fully rearward/counterclockwise, then carefully insert a flat bladed tool between the bottom of the defrost door lever and the protruding wall of the HVAC module case below the

door lever in order to keep the door lever in place.

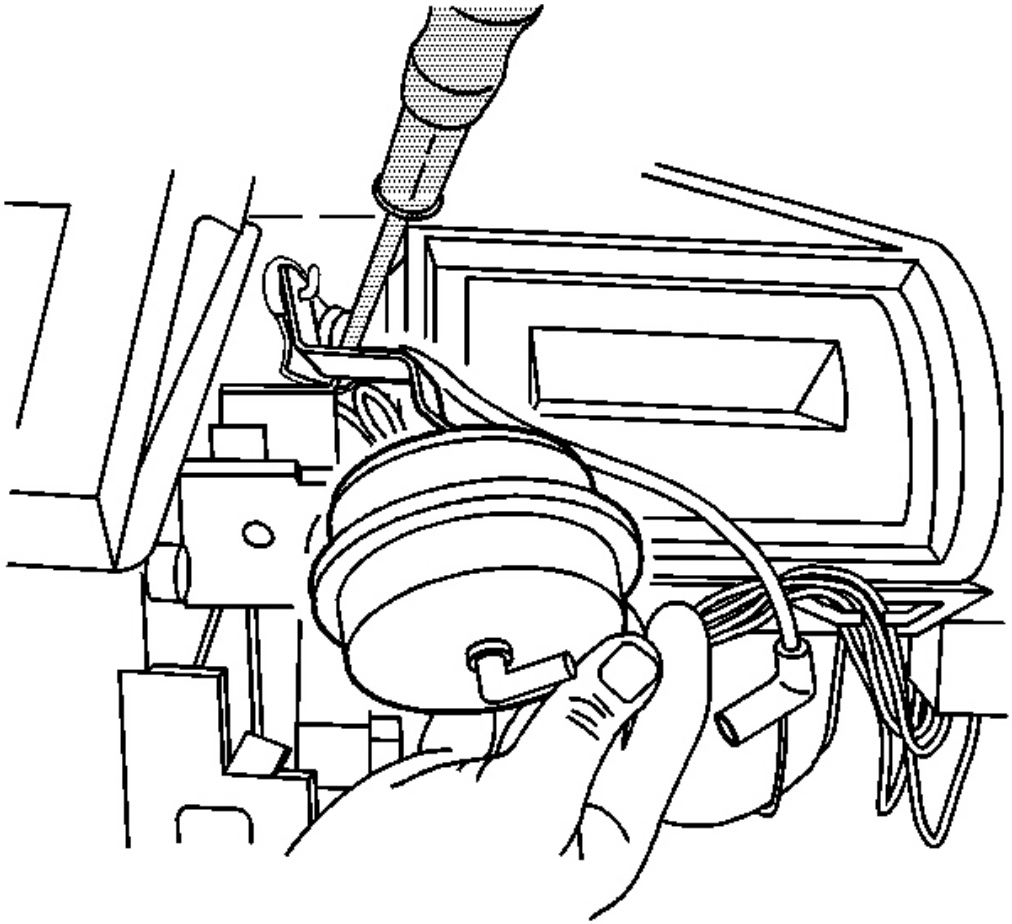

Fig. 44: Passenger SIR Bracket & Defroster Actuator
Courtesy of GENERAL MOTORS CORP.

5. Lift to release the defroster actuator retaining tab and begin to slide the actuator toward the passenger SIR bracket.
6. Carefully rotate the actuator upward and forward until the actuator clears the passenger SIR bracket.

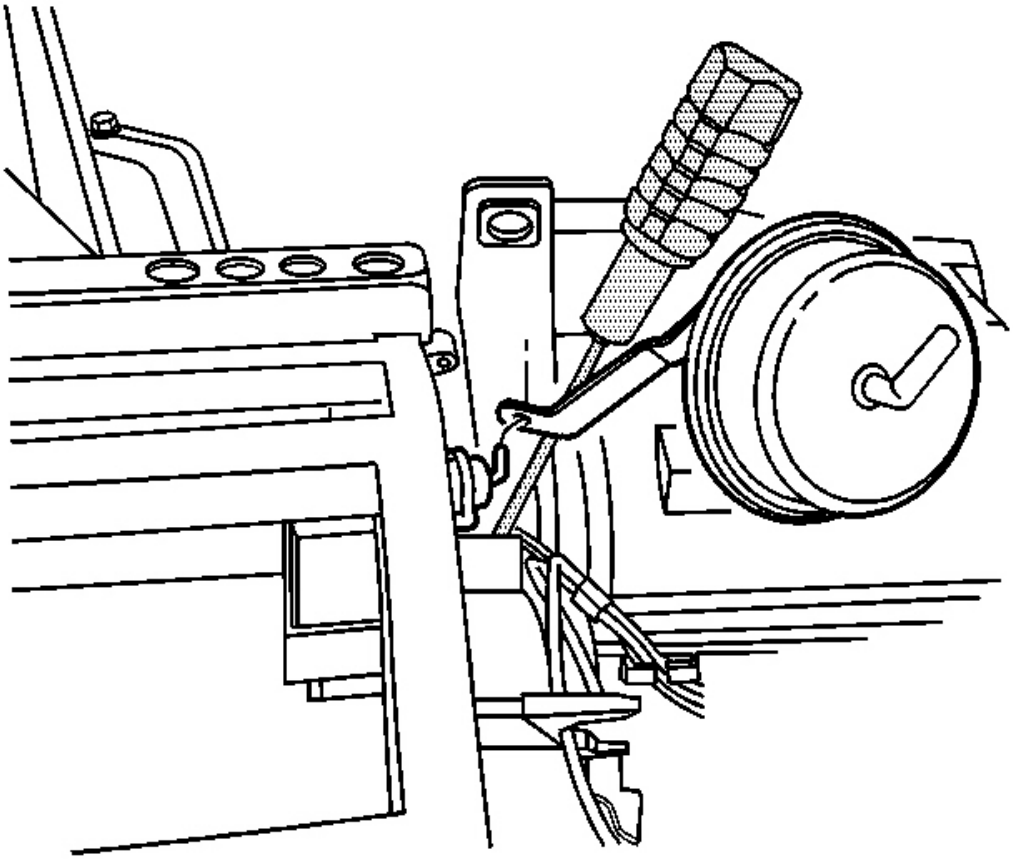

Fig. 45: Defrost Door Lever & Actuator Pushrod
Courtesy of GENERAL MOTORS CORP.

7. Disconnect the actuator pushrod from the defrost door lever and remove the actuator.

Installation Procedure

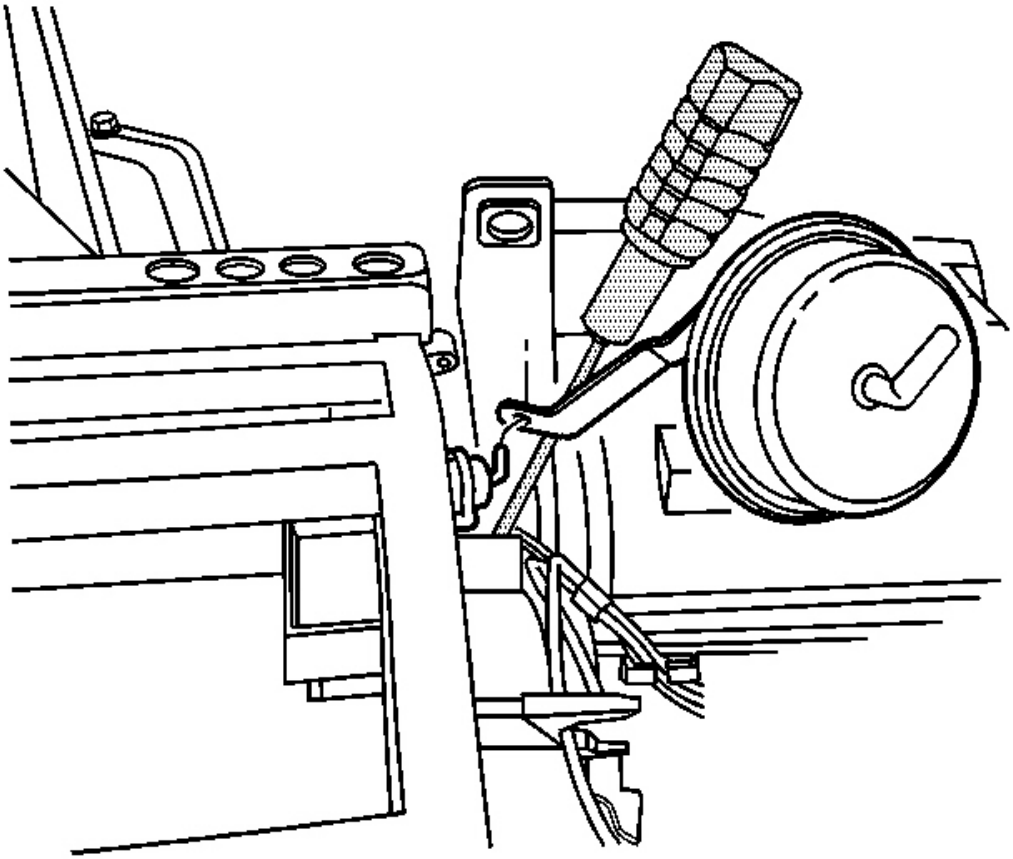

Fig. 46: Defrost Door Lever & Actuator Pushrod
Courtesy of GENERAL MOTORS CORP.

1. Connect the defroster actuator pushrod to the defrost door lever.

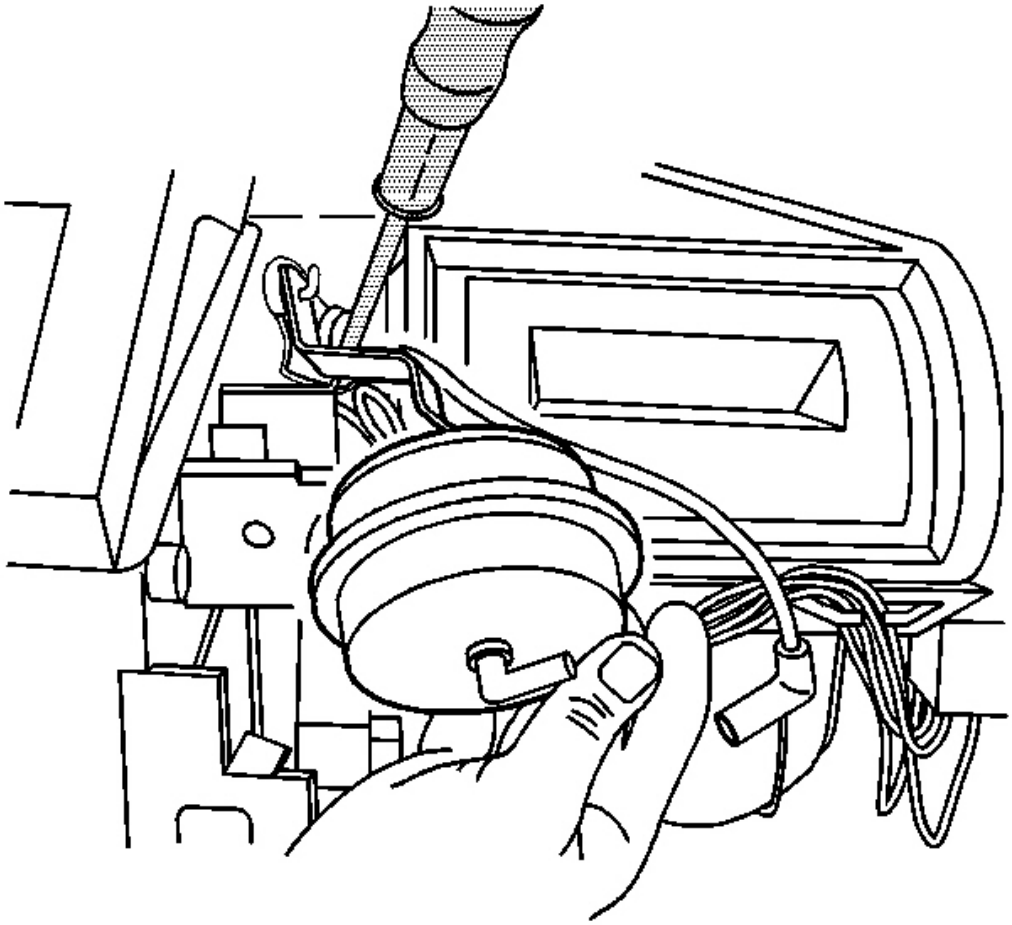

Fig. 47: Passenger SIR Bracket & Defroster Actuator
Courtesy of GENERAL MOTORS CORP.

2. Position the actuator along side of the passenger SIR bracket in line with the mounting pins on the HVAC module case.
3. Carefully rotate the actuator past the passenger SIR bracket, rearward and downward, until the actuator slots align with the HVAC module mounting pins.
4. Inspect that the actuator pushrod is not binding on the defrost door lever.
5. Push the actuator toward the HVAC module case to secure the retaining tab.

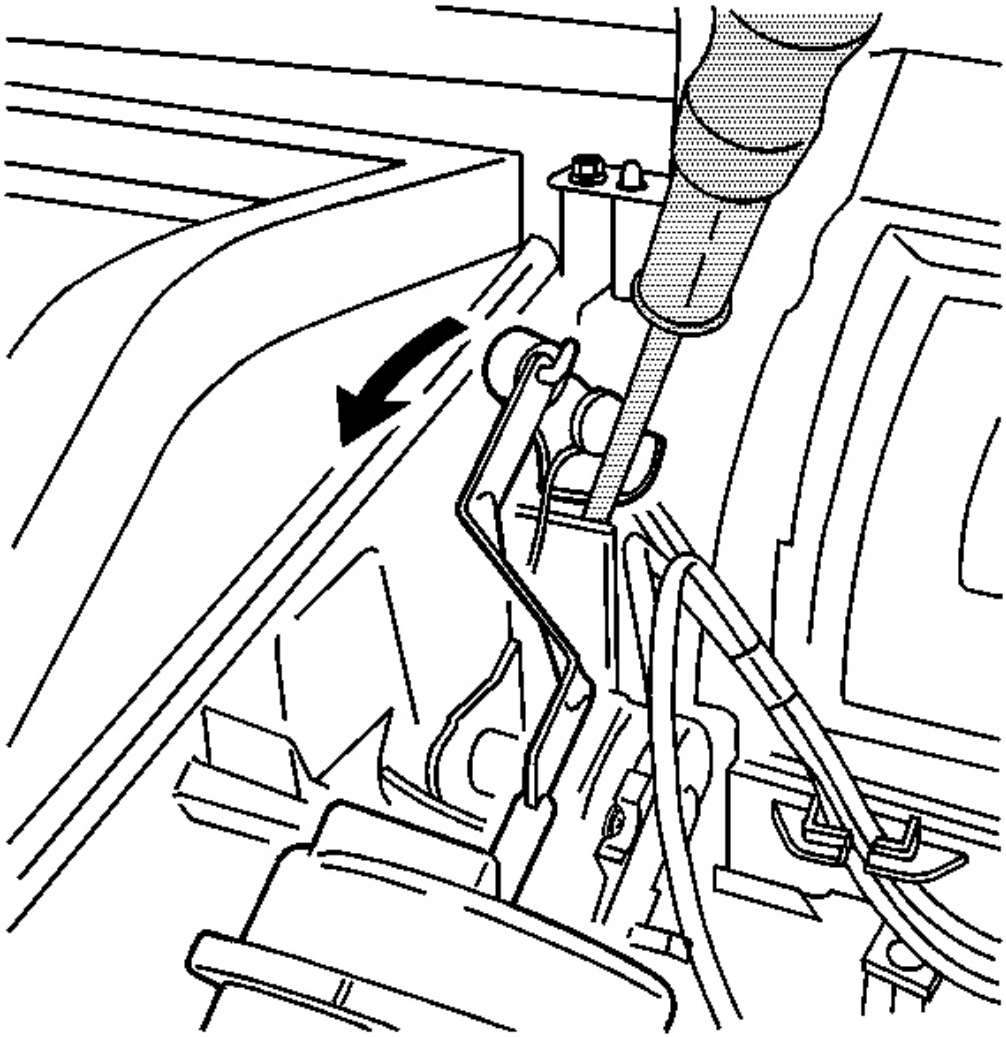

Fig. 48: RH Side Window Defogger Lower Outlet Duct
Courtesy of GENERAL MOTORS CORP.

6. Remove the flat bladed tool maintaining the defrost door lever in position.
7. Connect the vacuum harness connectors to the defroster actuator.
8. Position and connect the RH side window defogger lower outlet duct to the windshield defroster duct.
9. Install the I/P upper trim pad. Refer to **Trim Pad Replacement - Instrument Panel (I/P) Upper** in Instrument Panel, Gages and Console.
10. Recalibrate the actuators. Refer to **Re-Calibrating Actuators** .

AIR TEMPERATURE ACTUATOR REPLACEMENT - RIGHT

Removal Procedure

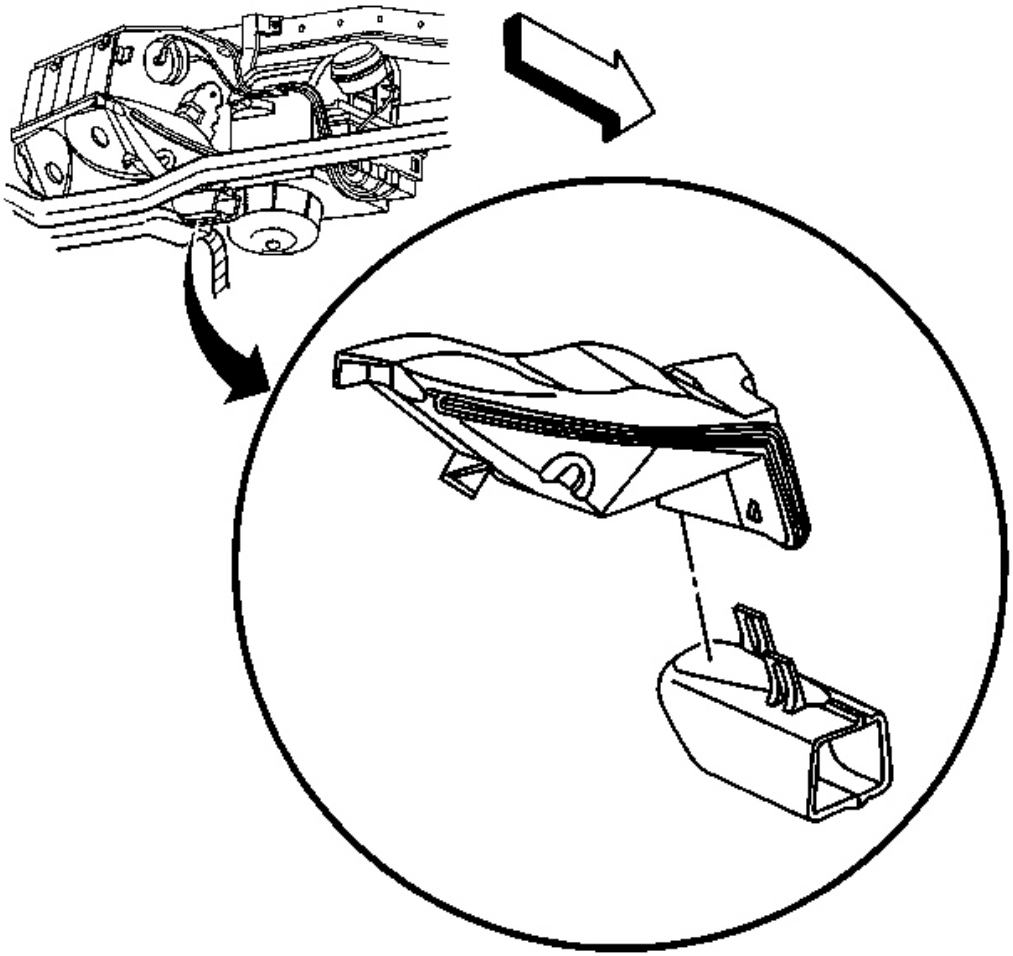

Fig. 49: Lower RH Side Window Defogger Outlet Duct
Courtesy of GENERAL MOTORS CORP.

1. Remove the front floor kick-up panel. Refer to **Kick-Up Panel Replacement - Front Floor** in Interior Trim.
2. Remove the cover from the I/P electrical center.
3. Remove the I/P upper trim pad. Refer to **Trim Pad Replacement - Instrument Panel (I/P) Upper** in Instrument Panel, Gages and Console.
4. Disconnect the RH side window defogger outlet duct - lower from the windshield defroster duct, then

reposition the side window defogger outlet duct forward.

5. Remove the defroster door actuator.
6. Remove the I/P lower insulator panel - RH. Refer to **Closeout/Insulator Panel Replacement - Right** in Instrument Panel, Gages and Console.
7. Remove the lower half of the RH floor air outlet duct.

   Using a flat bladed tool, release the retaining tabs, then remove the lower duct.

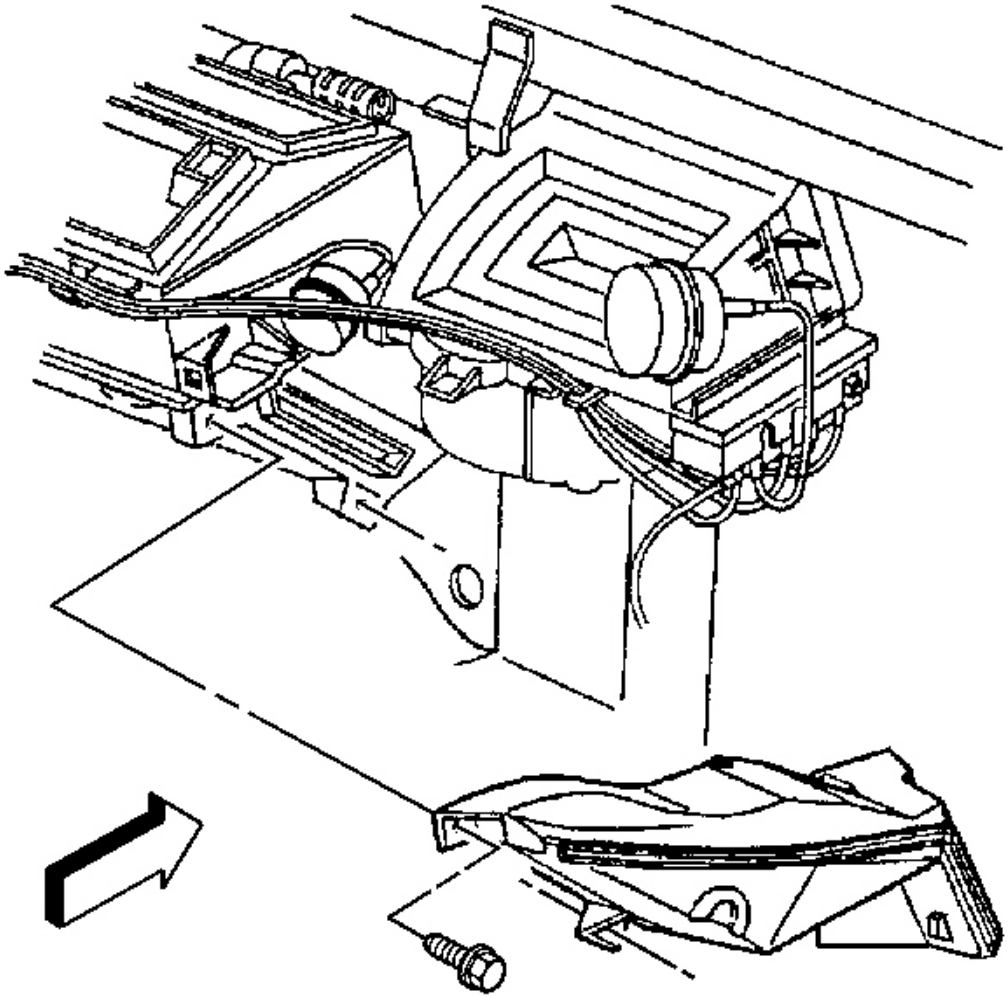

Fig. 50: Floor Air Outlet Duct & Retaining Screws
Courtesy of GENERAL MOTORS CORP.

8. Remove the floor air outlet duct retaining screws.
9. Reposition the floor air outlet duct downward to better access the air temperature actuator.

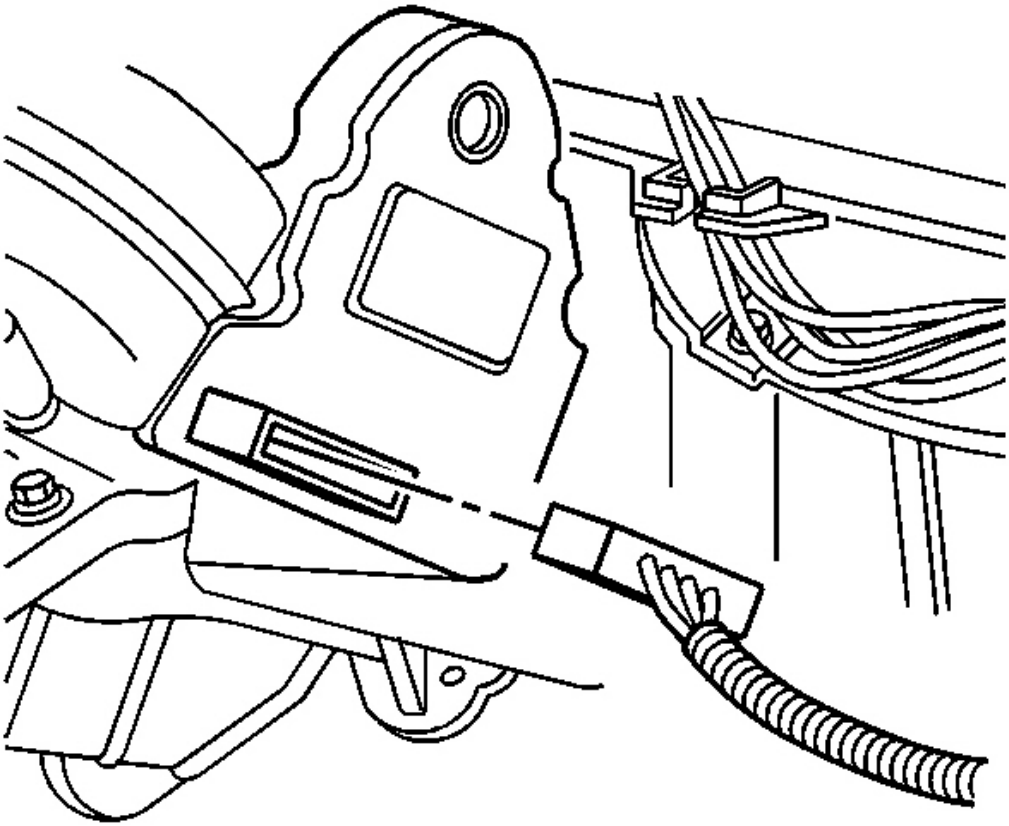

Fig. 51: Right Air Temperature Actuator Electrical Connector
Courtesy of GENERAL MOTORS CORP.

10. Disconnect the air temperature actuator electrical connector.

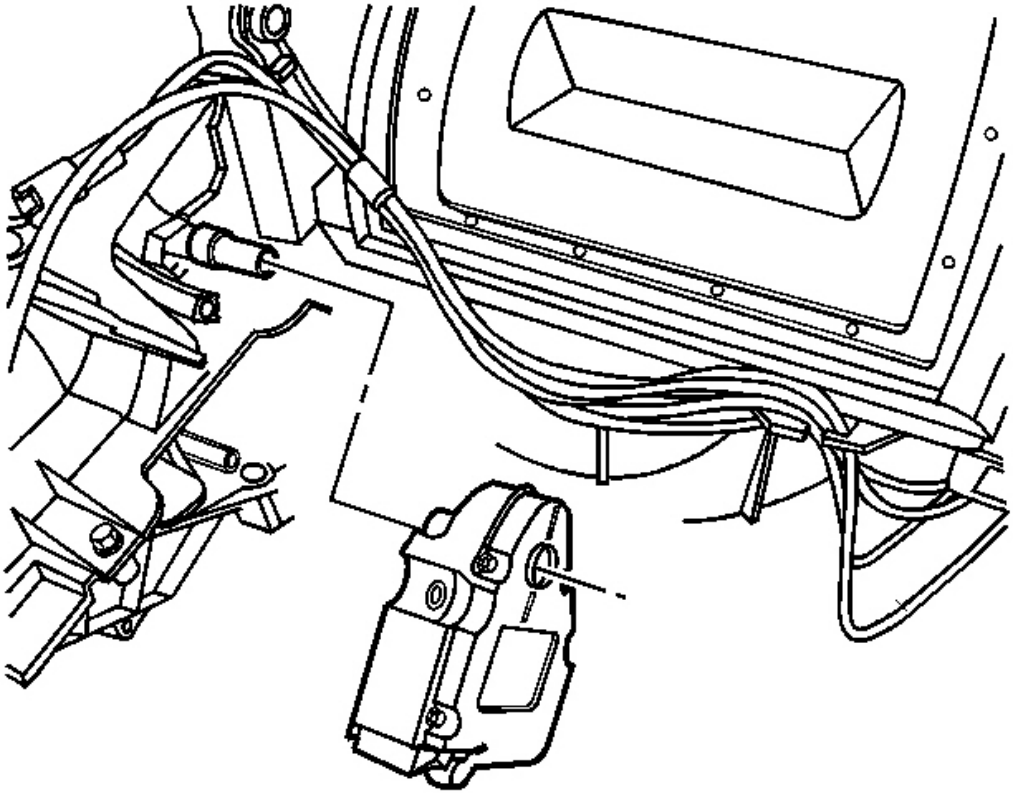

Fig. 52: Right Air Temperature Actuator Screws
Courtesy of GENERAL MOTORS CORP.

11. Remove the air temperature actuator screws.
12. Remove the air temperature actuator.

Installation Procedure

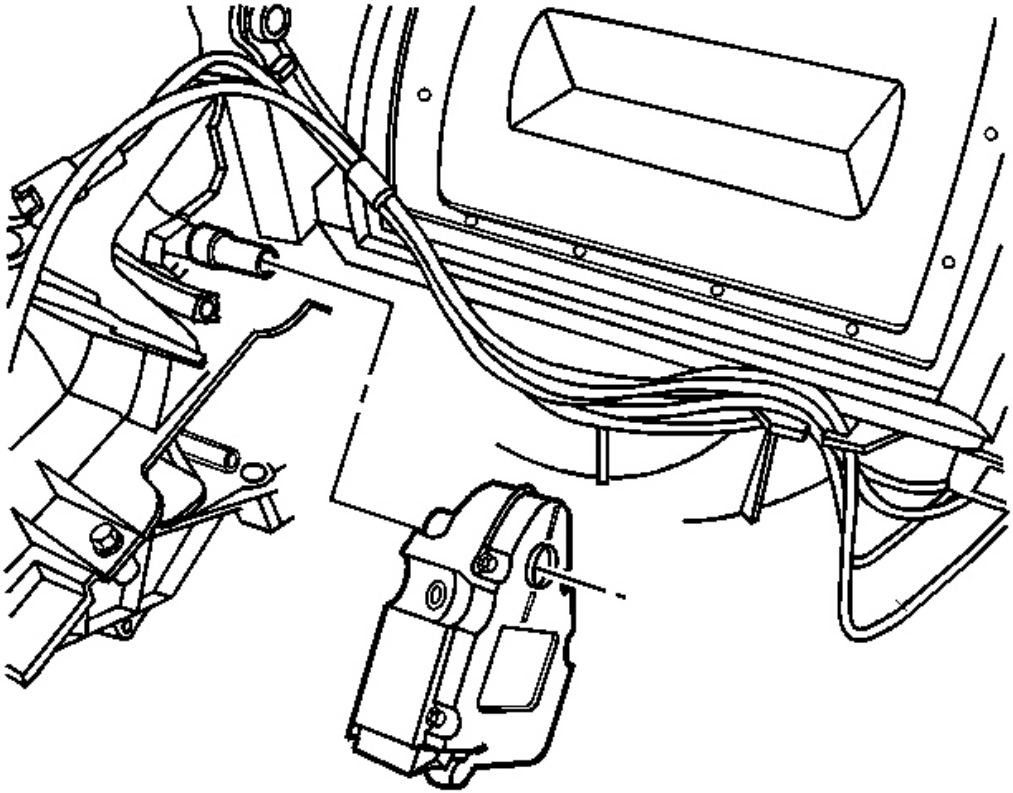

Fig. 53: Right Air Temperature Actuator Screws
Courtesy of GENERAL MOTORS CORP.

1. Position the air temperature actuator, then align the slots in the actuator driver to the flats on the RH temperature door shaft.
2. Slide the air temperature actuator onto the shaft, while aligning the actuator locating hole to the forward alignment pin on the HVAC module case.

   The actuator should be completely seated onto the temperature door shaft and the actuator mounting holes should be flush with the mounting bosses on the HVAC module case.

   NOTE: Refer to Fastener Notice in Cautions and Notices.

3. Install the air temperature actuator retaining screws.

   Tighten: Tighten the screws to 1.5 N.m (13 lb in).

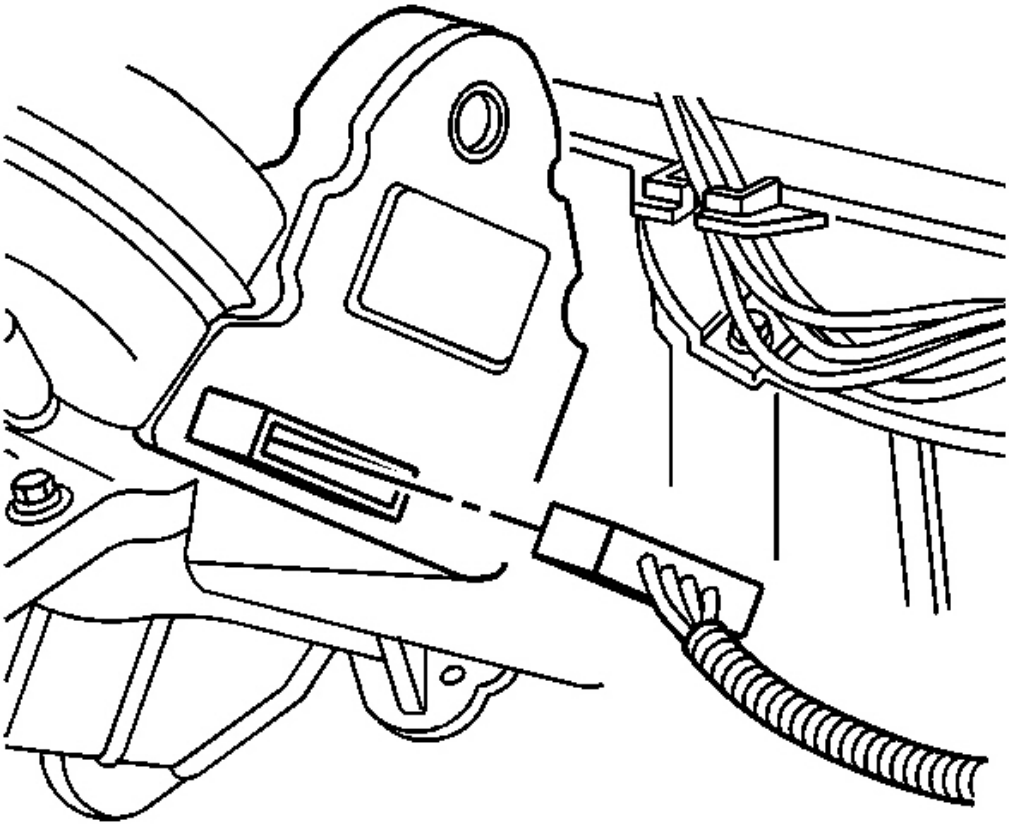

Fig. 54: Right Air Temperature Actuator Electrical Connector
Courtesy of GENERAL MOTORS CORP.

4. Connect the air temperature actuator electrical connector.

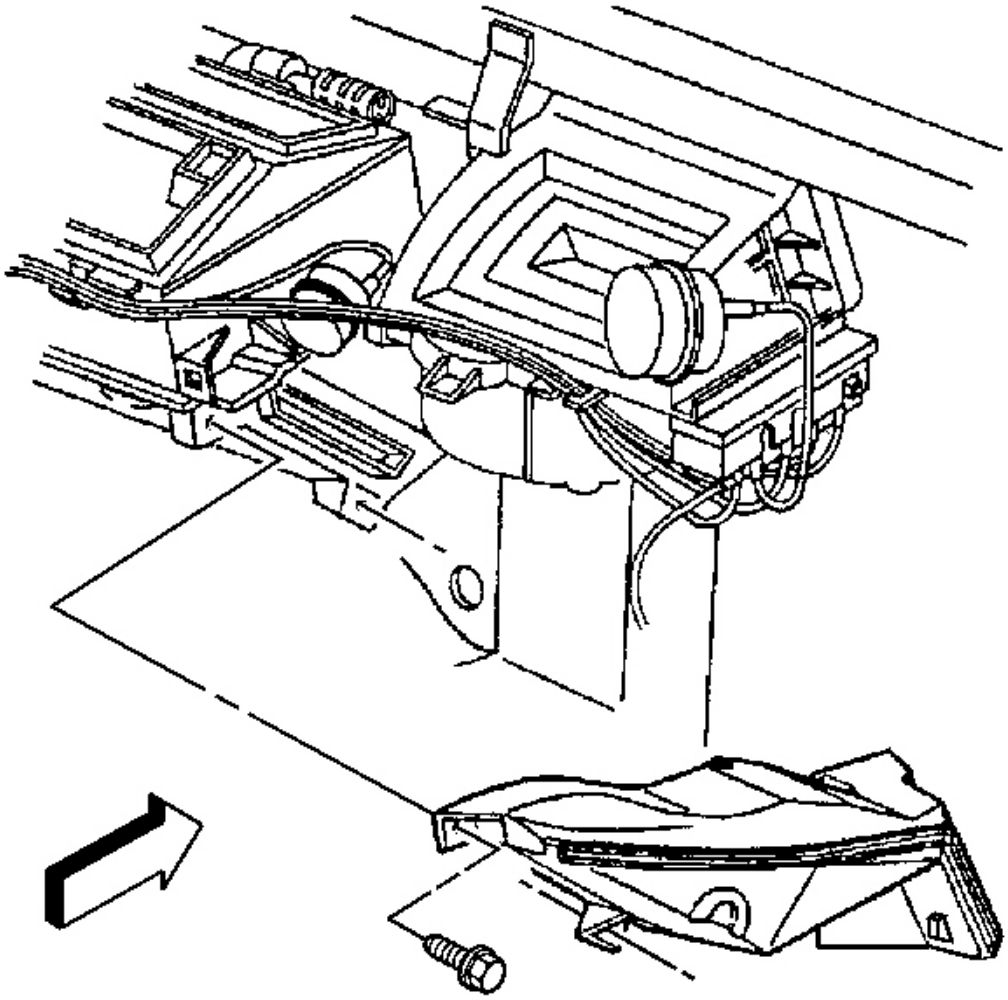

Fig. 55: Floor Air Outlet Duct & Retaining Screws
Courtesy of GENERAL MOTORS CORP.

5. Position the floor air outlet duct to the HVAC module case.
6. Install the floor air outlet duct retaining screws.

   Tighten: Tighten the screws to 1.6 N.m (14 lb in).

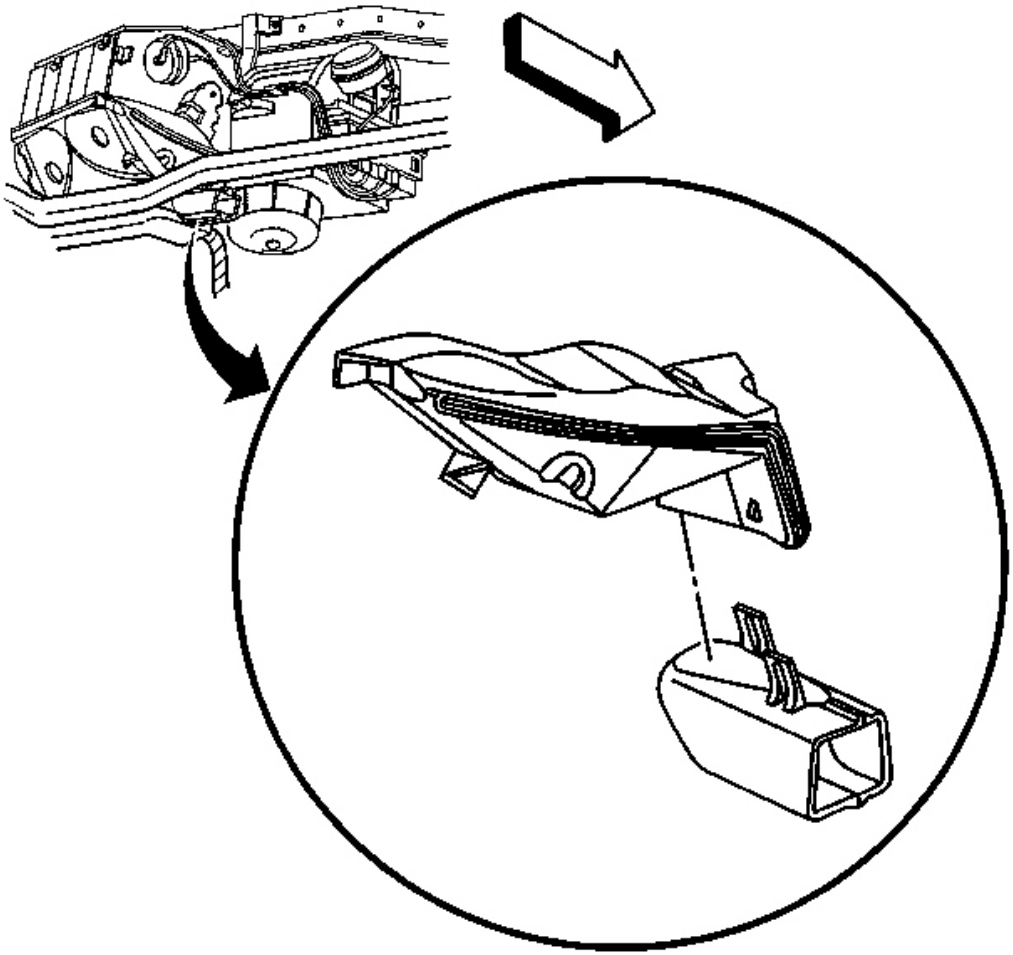

Fig. 56: Lower RH Side Window Defogger Outlet Duct
Courtesy of GENERAL MOTORS CORP.

7. Install the lower half of the RH floor air outlet duct.

   Align the retaining tabs and snap into place.

8. Install the I/P lower insulator panel - RH. Refer to **Closeout/Insulator Panel Replacement - Right** in Instrument Panel, Gages and Console.
9. Install the defroster door actuator.
10. Position and connect the RH side window defogger outlet duct - lower to the windshield defroster duct.
11. Install the I/P upper trim pad. Refer to **Trim Pad Replacement - Instrument Panel (I/P) Upper** in Instrument Panel, Gages and Console.

12. Install the cover to the I/P electrical center.
13. Install the front floor kick-up panel. Refer to **Kick-Up Panel Replacement - Front Floor** in Interior Trim.
14. Recalibrate the actuators. Refer to **Re-Calibrating Actuators** .

AIR TEMPERATURE ACTUATOR REPLACEMENT - LEFT

Removal Procedure

1. Remove the front floor kick-up panel. Refer to **Kick-Up Panel Replacement - Front Floor** in Interior Trim.
2. Remove the Bose module. Refer to **Bose Module Replacement** in Entertainment.

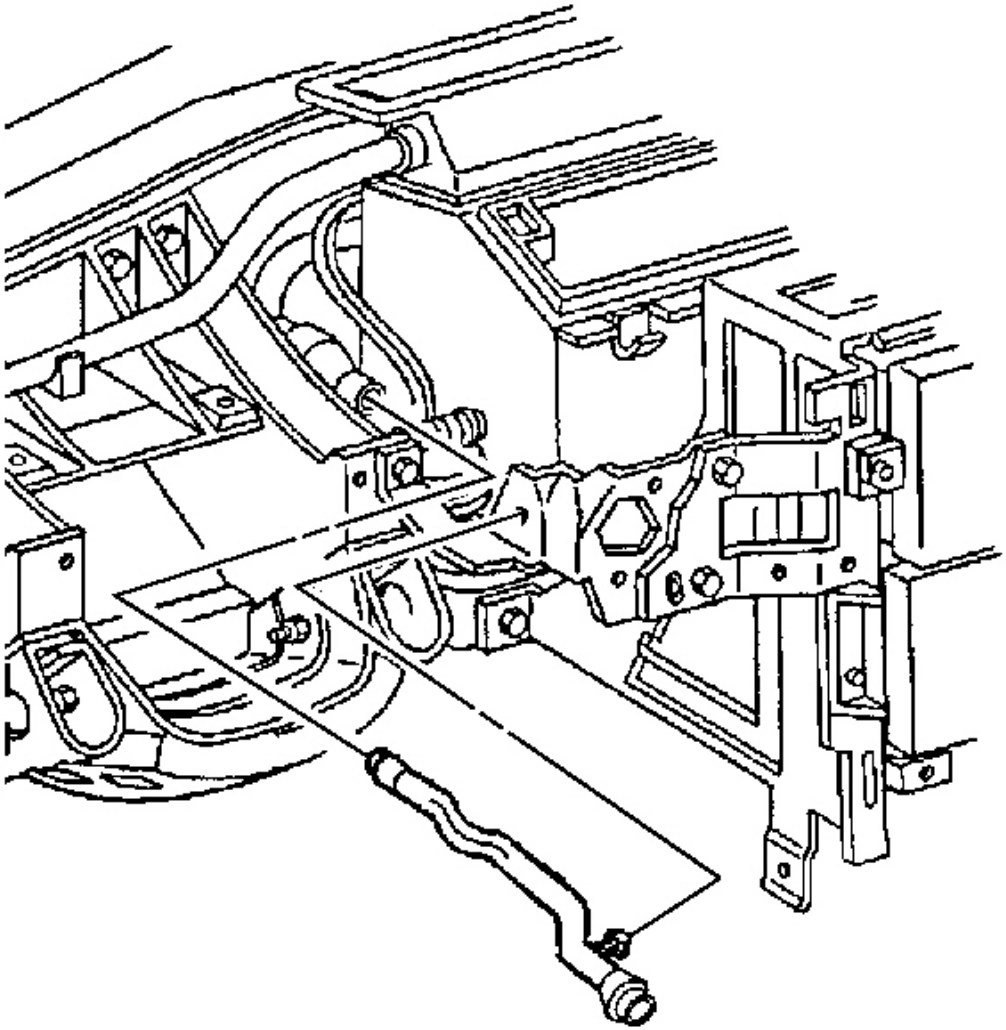

Fig. 57: Inside Air Temperature Sensor Aspirator Duct
Courtesy of GENERAL MOTORS CORP.

3. Disconnect the inside air temperature sensor aspirator duct.
    1. Depress the duct retaining tab and remove the duct from the ignition switch housing bracket.
    2. Use a twisting motion to release the duct from the duct muffler.

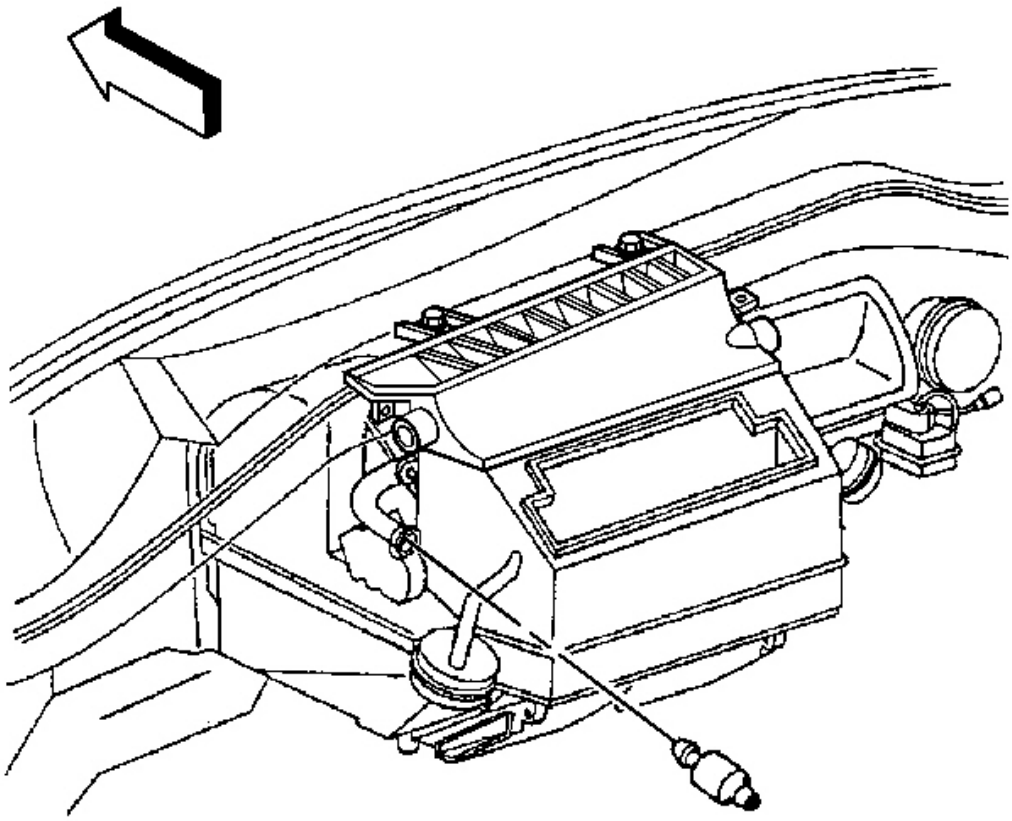

Fig. 58: Inside Air Temperature Sensor Aspirator Duct Muffler
Courtesy of GENERAL MOTORS CORP.

4. Remove the inside air temperature sensor aspirator duct muffler.

   Use a twisting motion to release the duct muffler.

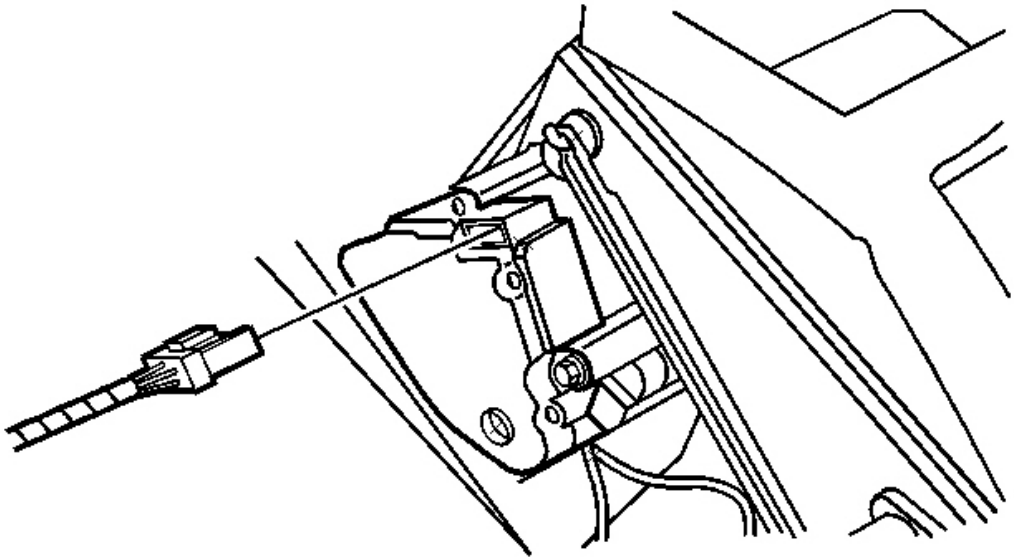

Fig. 59: Left Air Temperature Actuator Electrical Connector
Courtesy of GENERAL MOTORS CORP.

5. Disconnect the air temperature actuator electrical connector.

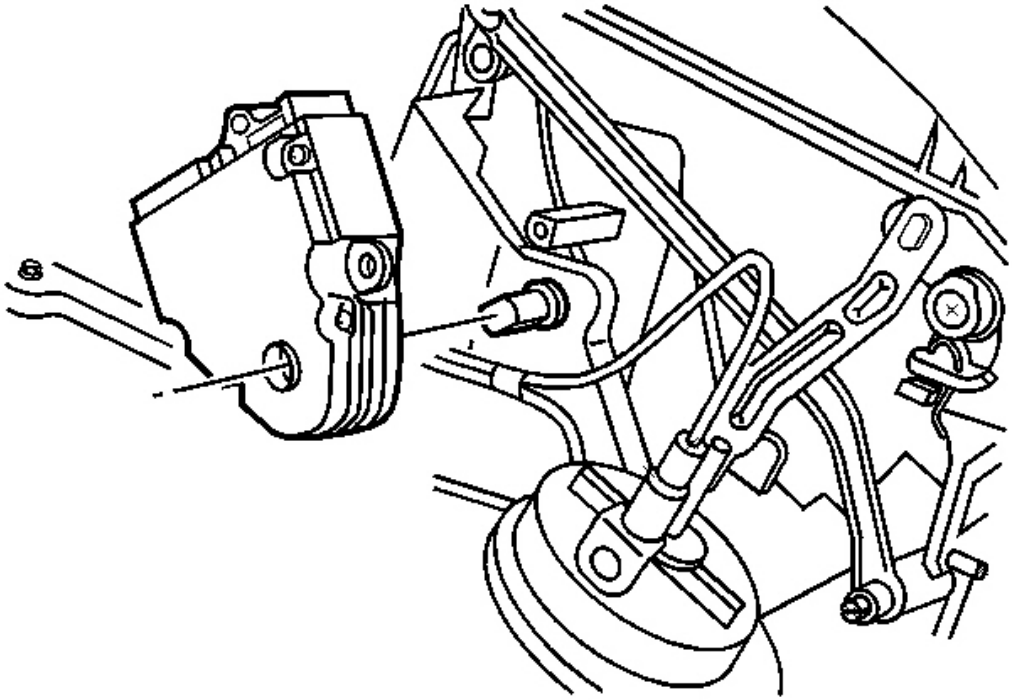

Fig. 60: Left Air Temperature Actuator Screws
Courtesy of GENERAL MOTORS CORP.

6. Remove the air temperature actuator screws.
7. Remove the air temperature actuator.

Installation Procedure

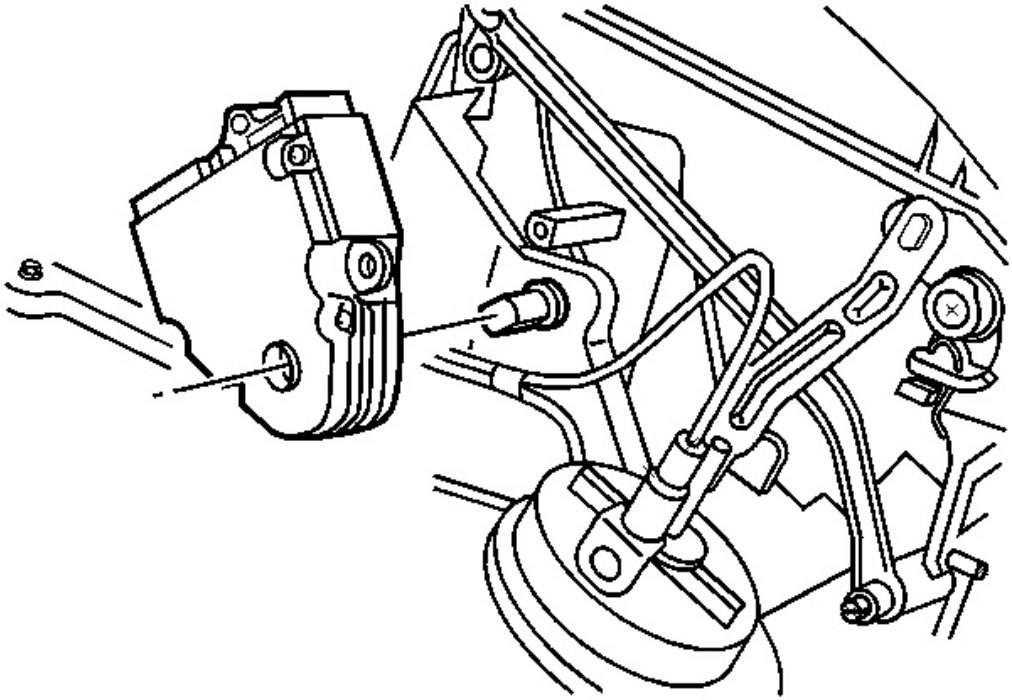

Fig. 61: Left Air Temperature Actuator Screws
Courtesy of GENERAL MOTORS CORP.

1. Position the air temperature actuator, then align the slots in the actuator driver to the flats on the temperature door shaft.
2. Slide the air temperature actuator onto the shaft, while aligning the actuator locating hole to the forward alignment pin on the HVAC module case.

   The actuator should be completely seated onto the temperature door shaft and be the actuator mounting holes should be flush with the mounting bosses on the HVAC module case.

   NOTE: Refer to Fastener Notice in Cautions and Notices.

3. Install the temperature actuator retaining screws.

   Tighten: Tighten the screws to 1.5 N.m (13 lb in).

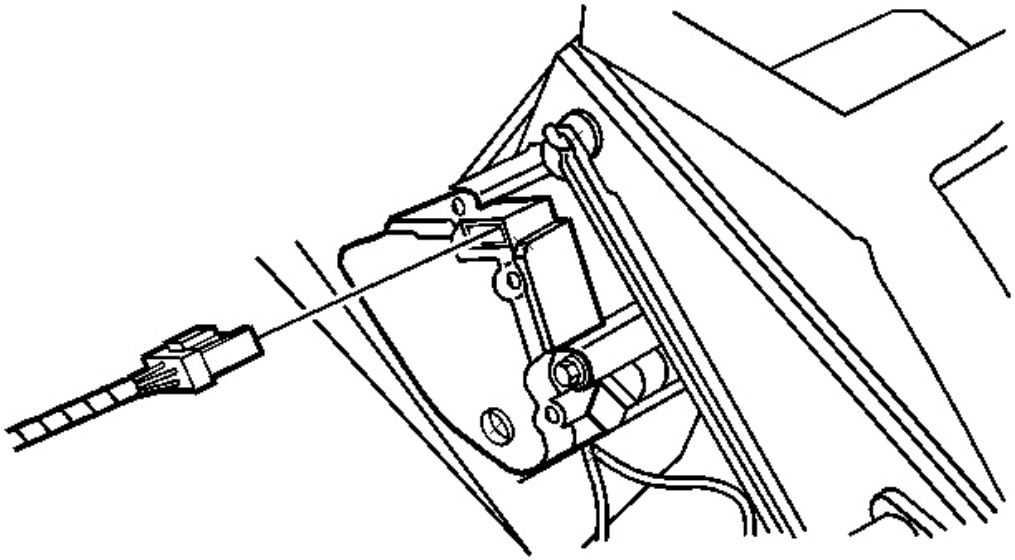

Fig. 62: Left Air Temperature Actuator Electrical Connector
Courtesy of GENERAL MOTORS CORP.

4. Connect the air temperature actuator electrical connector.

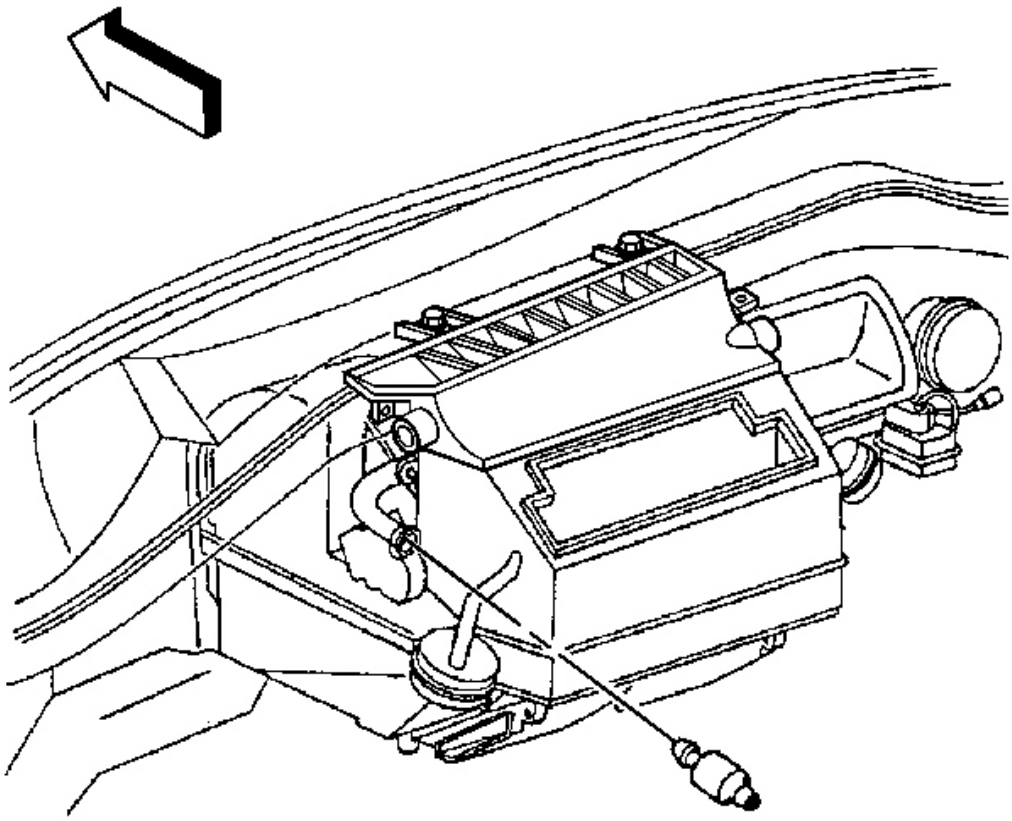

Fig. 63: Inside Air Temperature Sensor Aspirator Duct Muffler
Courtesy of GENERAL MOTORS CORP.

5. Install the inside air temperature sensor aspirator duct muffler.

   Use a twisting motion to secure the duct muffler.

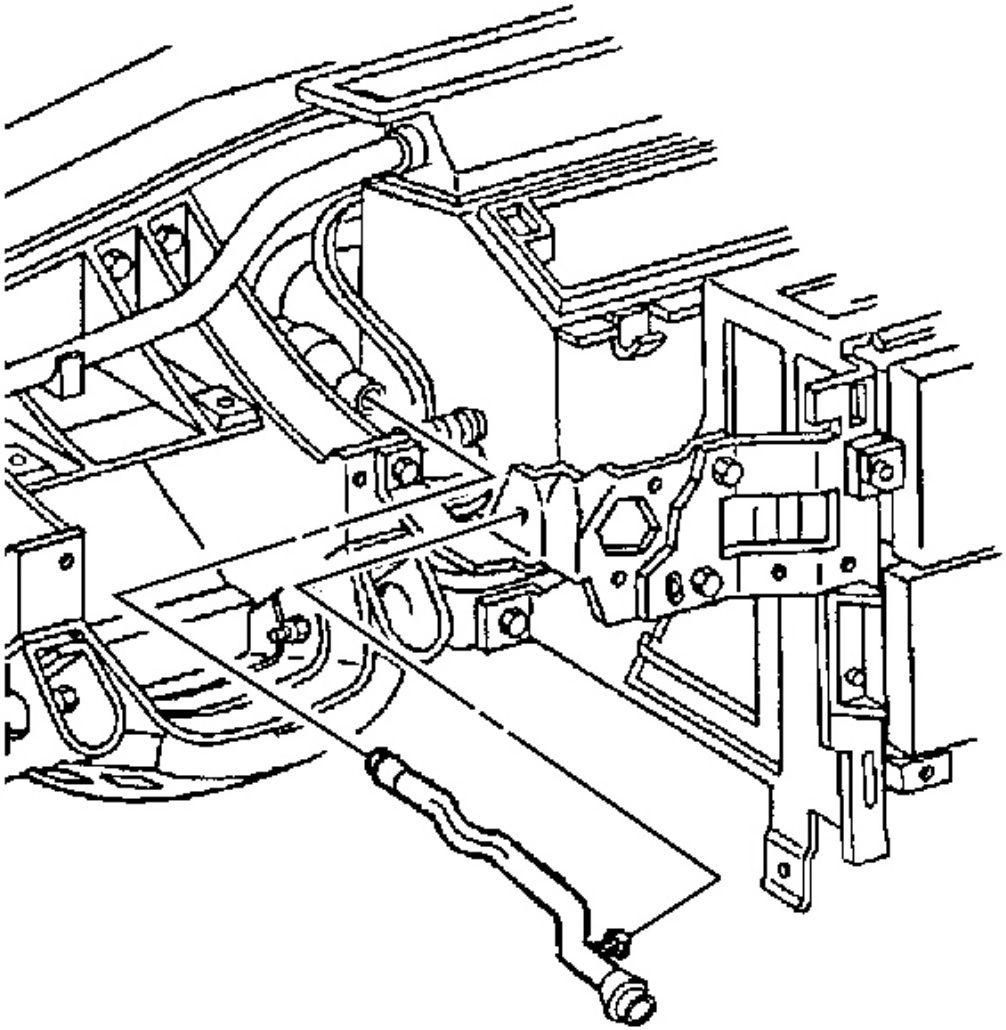

Fig. 64: Inside Air Temperature Sensor Aspirator Duct
Courtesy of GENERAL MOTORS CORP.

6. Install the inside air temperature sensor aspirator duct.
    1. Use a twisting motion to secure the duct to the duct muffler.
    2. Install the duct retaining tab to the ignition switch housing bracket.
7. Install the Bose amplifier. Refer to **Bose Module Replacement** in Entertainment.
8. Install the front floor kick-up panel. Refer to **Kick-Up Panel Replacement - Front Floor** in Interior Trim.
9. Recalibrate the actuators. Refer to **Re-Calibrating Actuators** .

VACUUM CONTROL ASSEMBLY REPLACEMENT

Removal Procedure

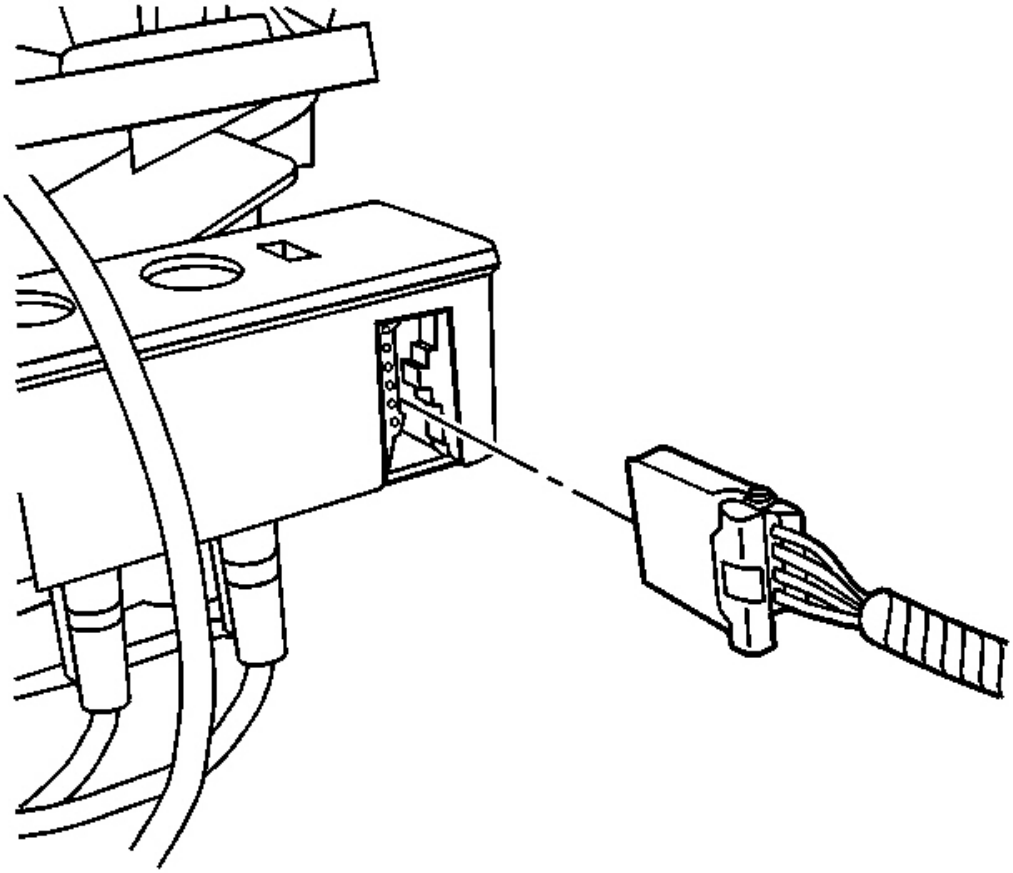

Fig. 65: Vacuum Control Solenoid Electrical Connector
Courtesy of GENERAL MOTORS CORP.

1. Remove the right instrument panel (I/P) lower insulator panel. Refer to **Closeout/Insulator Panel Replacement - Right** in Instrument Panel, Gages and Console.
2. Disconnect the electrical connector from the vacuum control solenoid.

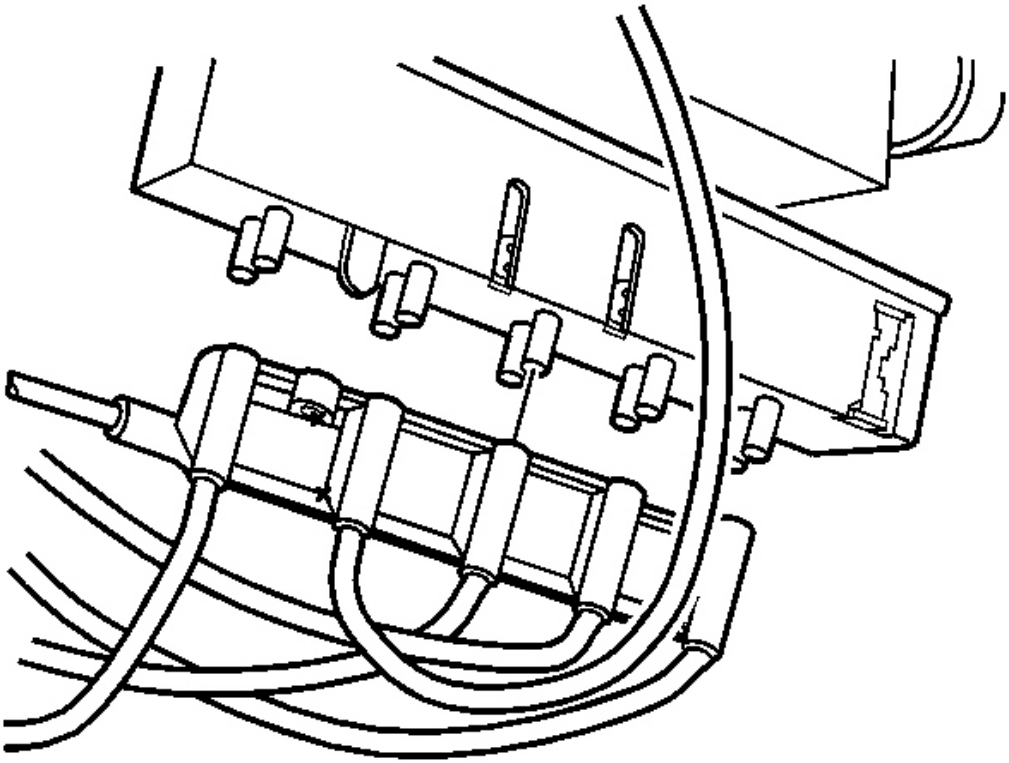

Fig. 66: Vacuum Control Solenoid & Vacuum Harness Connector
Courtesy of GENERAL MOTORS CORP.

3. Disconnect the vacuum harness connector from the vacuum control solenoid.

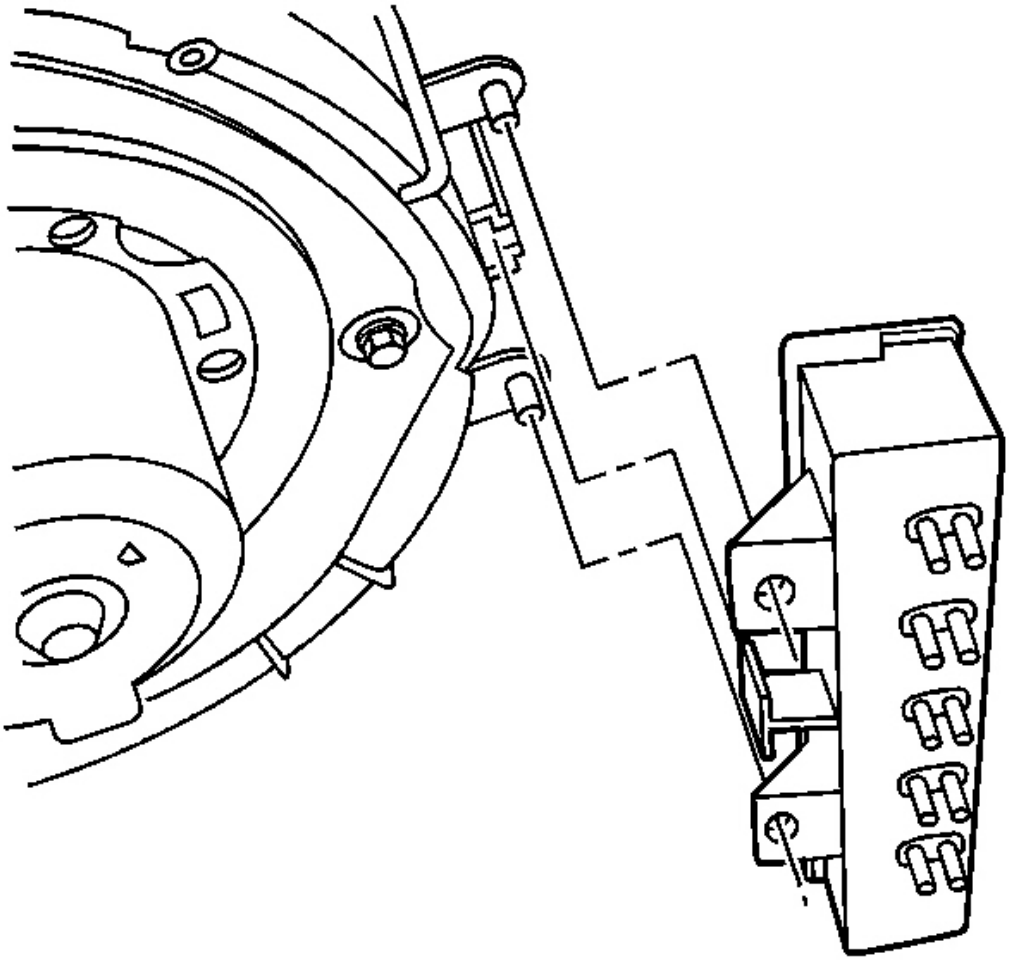

Fig. 67: Vacuum Control Solenoid Retaining Screws
Courtesy of GENERAL MOTORS CORP.

4. Remove the vacuum control solenoid valve retaining screws.
5. Remove the control solenoid.

   Pull the control solenoid straight down to release the tab from the slot in the HVAC module case.

Installation Procedure

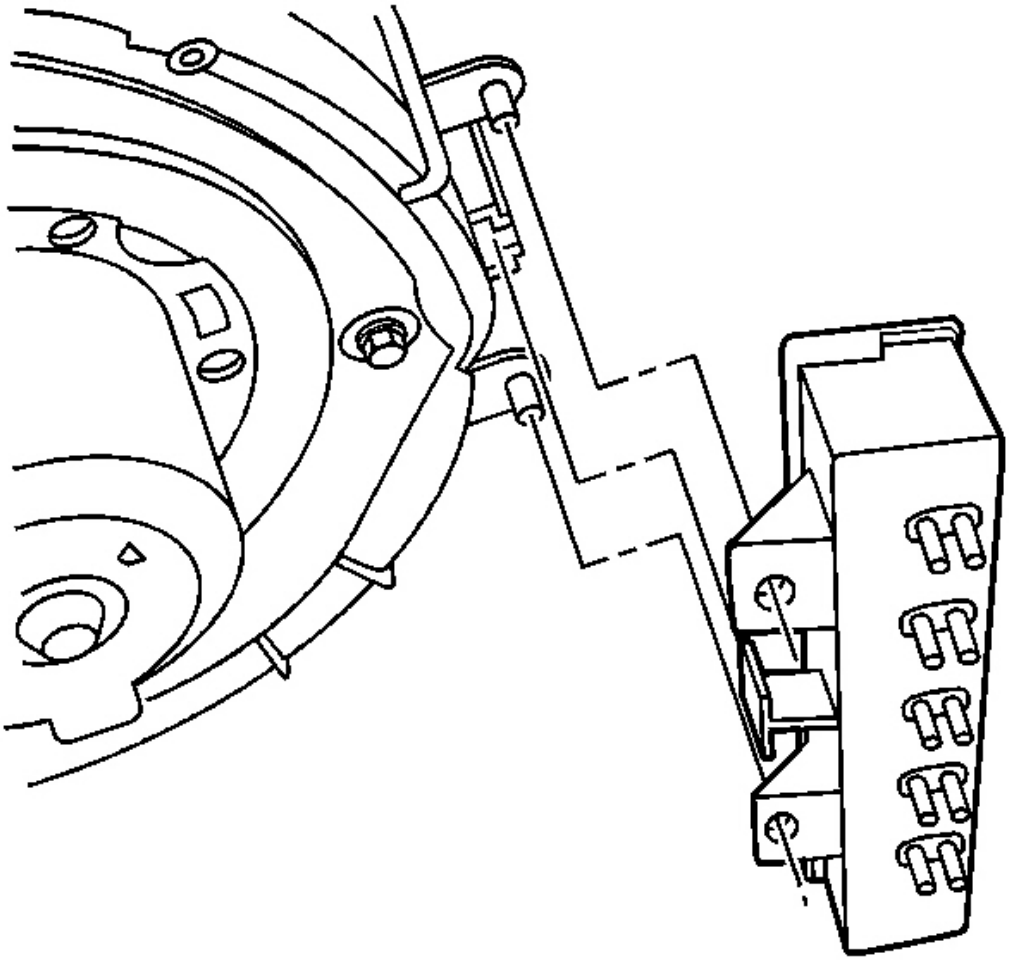

Fig. 68: Vacuum Control Solenoid Retaining Screws
Courtesy of GENERAL MOTORS CORP.

1. Align the vacuum control solenoid tab to the slot in the HVAC module case, then push up to seat the control solenoid.

NOTE: **Refer to Fastener Notice in Cautions and Notices.**

2. Install the vacuum control solenoid retaining screws.

Tighten: Tighten the screws to 1.5 N.m (13 lb in).

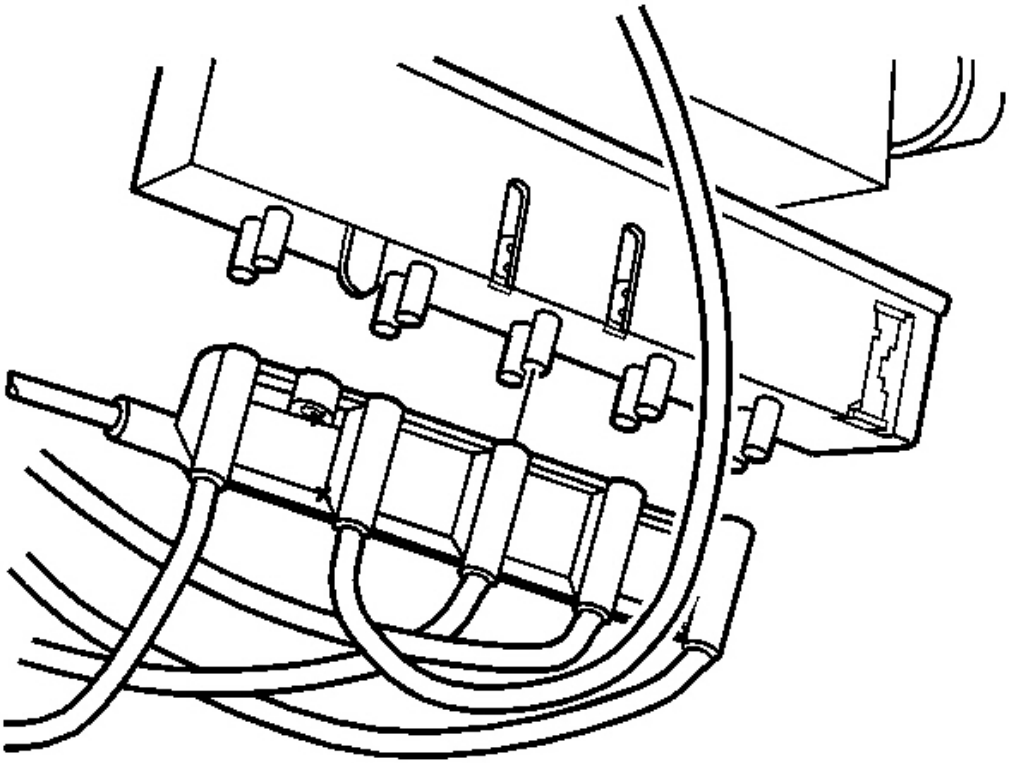

Fig. 69: Vacuum Control Solenoid & Vacuum Harness Connector
Courtesy of GENERAL MOTORS CORP.

3. Connect the vacuum harness connector to the vacuum control solenoid.

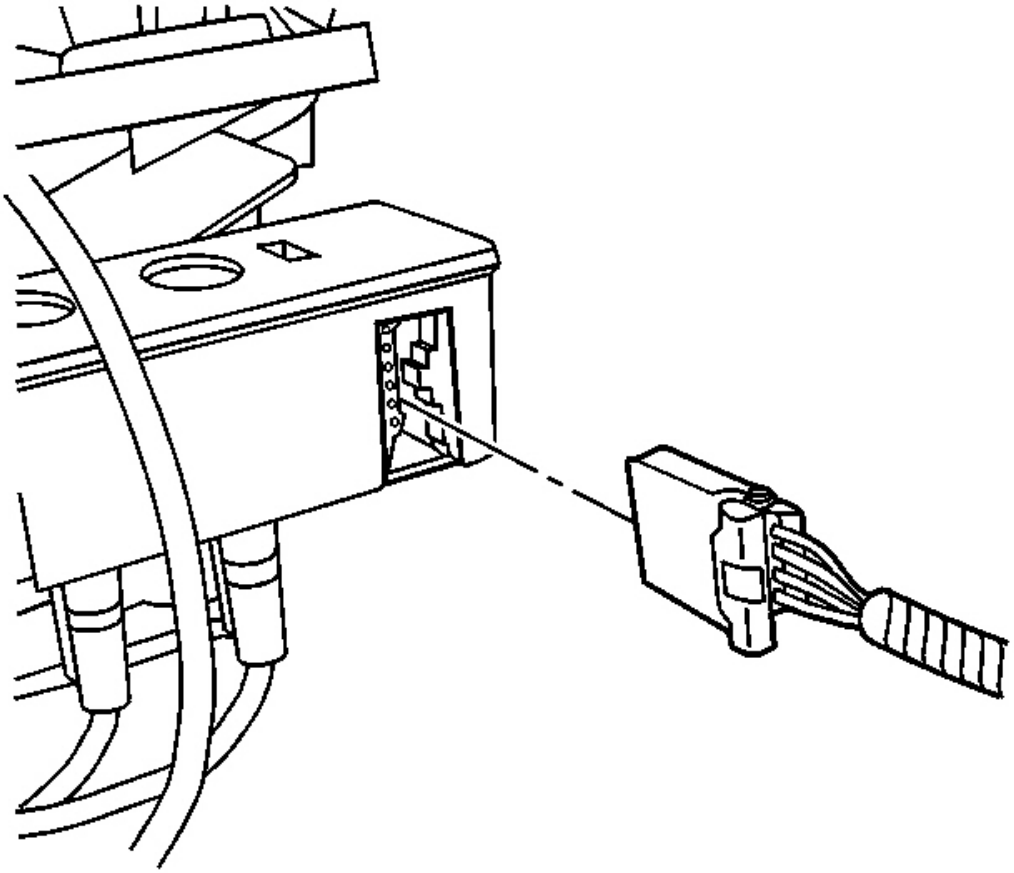

Fig. 70: Vacuum Control Solenoid Electrical Connector
Courtesy of GENERAL MOTORS CORP.

4. Connect the electrical connector to the vacuum control solenoid.
5. Install the right I/P lower insulator panel. Refer to **Closeout/Insulator Panel Replacement - Right** in Instrument Panel, Gages and Console.

VACUUM TANK REPLACEMENT

Removal Procedure

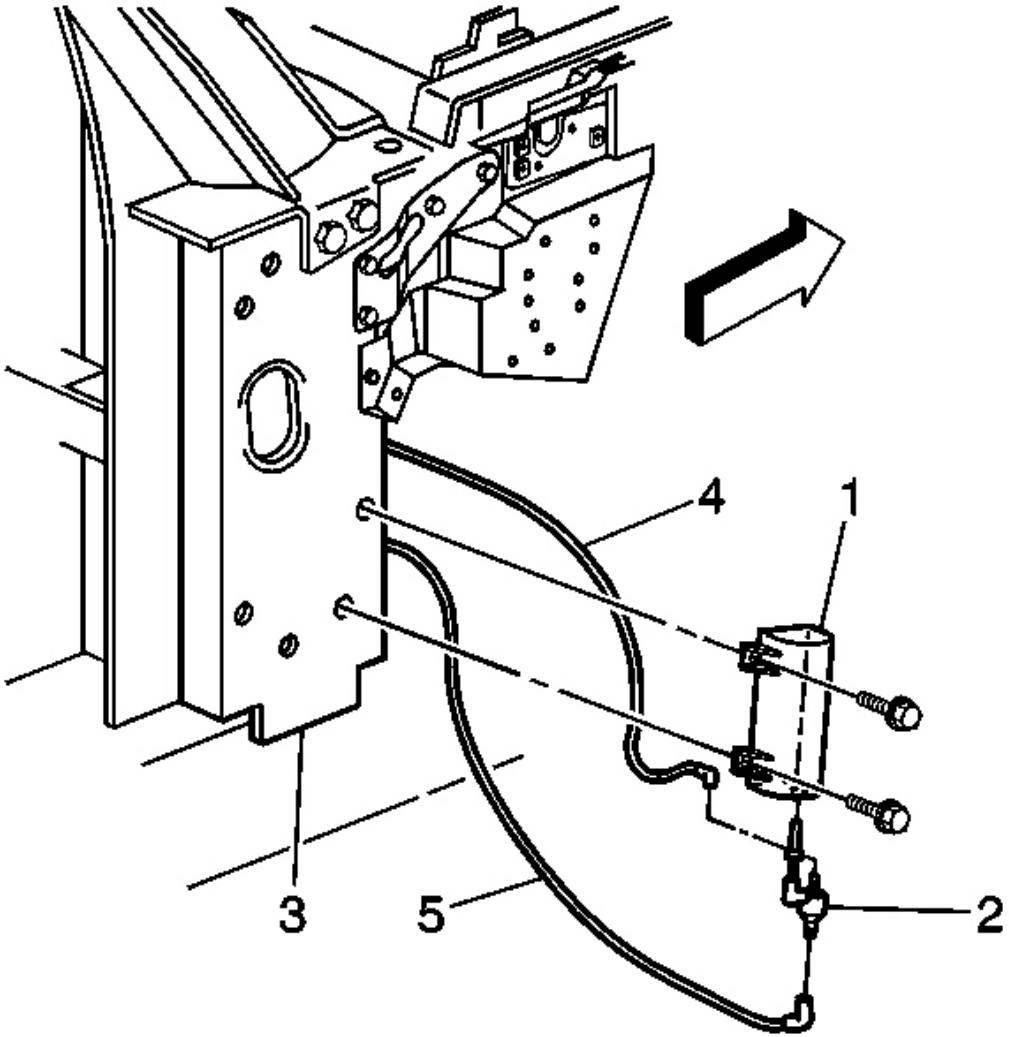

Fig. 71: Engine Harness Vacuum Connector, Hinge Pillar, Vacuum Tank & I/P Harness Vacuum Connector
Courtesy of GENERAL MOTORS CORP.

1. Remove the RH front tire and wheel assembly. Refer to **Tire and Wheel Removal and Installation** in Tires and Wheels.
2. Remove the RH front wheelhouse filler panel. Refer to **Wheelhouse Filler Replacement** in Body Front End.
3. Remove the PCM. Refer to **Powertrain Control Module (PCM) Replacement** in Engine Controls.
4. Tape off the rear edge of the RH fender and the front edge of the RH door to prevent scuffing.

5. Open the RH door.
6. Utilizing the opening between the fender and the door, remove the screws retaining the vacuum tank (1) to the hinge pillar (3).
7. Working through the wheelhouse opening, disconnect the I/P harness vacuum connector (4) from the vacuum check valve (2).
8. Disconnect the engine harness vacuum connector (5) from the vacuum check valve (2).
9. Remove the vacuum tank (1) from the vehicle.
10. Disconnect the vacuum check valve (2) from the vacuum tank (1).

Installation Procedure

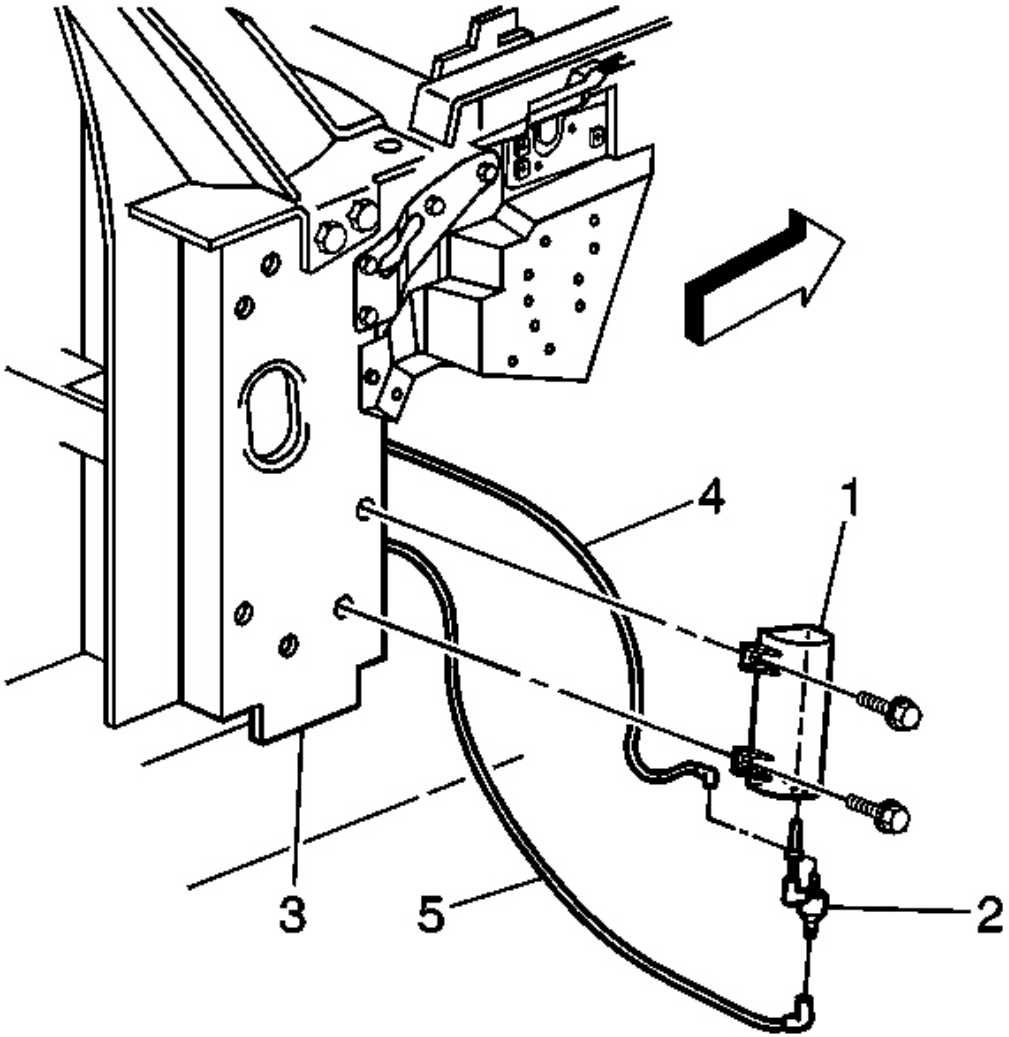

Fig. 72: Engine Harness Vacuum Connector, Hinge Pillar, Vacuum Tank & I/P Harness Vacuum Connector
Courtesy of GENERAL MOTORS CORP.

1. Connect the vacuum check valve (2) to the vacuum tank (1).
2. Position the vacuum tank (1) to the vehicle.
3. Connect the engine harness vacuum connector (5) to the vacuum check valve (2).
4. Connect the I/P harness vacuum connector (4) to the vacuum check valve (2).
5. Have an assistant position and hold the vacuum tank (1) against the hinge pillar (3).

NOTE: **Refer to Fastener Notice in Cautions and Notices.**

6. Utilizing the opening between the fender and the door, install the vacuum tank (1) to hinge pillar (3) UPPER retaining screw FIRST (net locating position), then install the lower screw.

   Tighten: Tighten the vacuum tank retaining screws to 3.5 N.m (31 lb in).

7. Close the RH door.
8. Remove the protective tape from the edges of the RH fender and door.
9. Install the PCM. Refer to **Powertrain Control Module (PCM) Replacement** in Engine Controls.
10. Install the wheelhouse filler panel. Refer to **Wheelhouse Filler Replacement** in Body Front End.
11. Install the tire and wheel assembly. Refer to **Tire and Wheel Removal and Installation** in Tires and Wheels.

AMBIENT AIR TEMPERATURE SENSOR REPLACEMENT

Removal Procedure

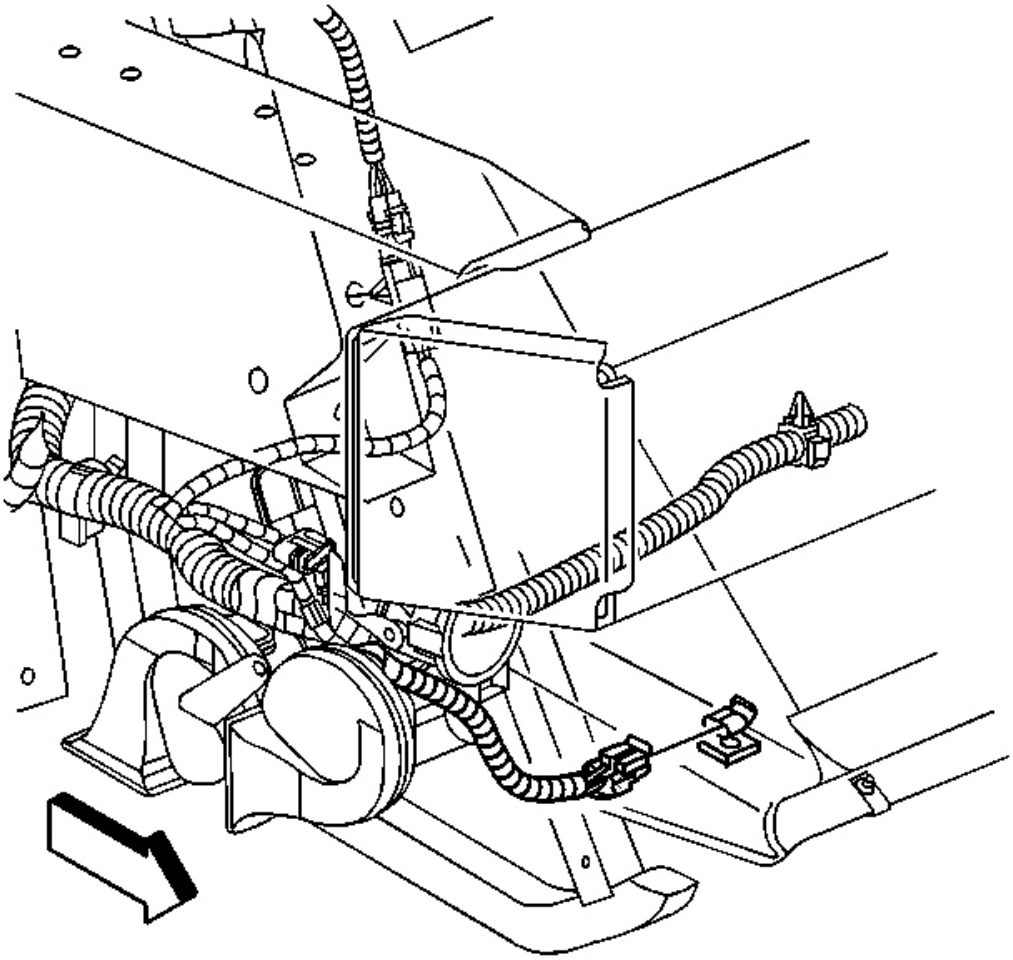

Fig. 73: Ambient Air Temperature Sensor Electrical Connector
Courtesy of GENERAL MOTORS CORP.

1. Disconnect the ambient air temperature sensor electrical connector.

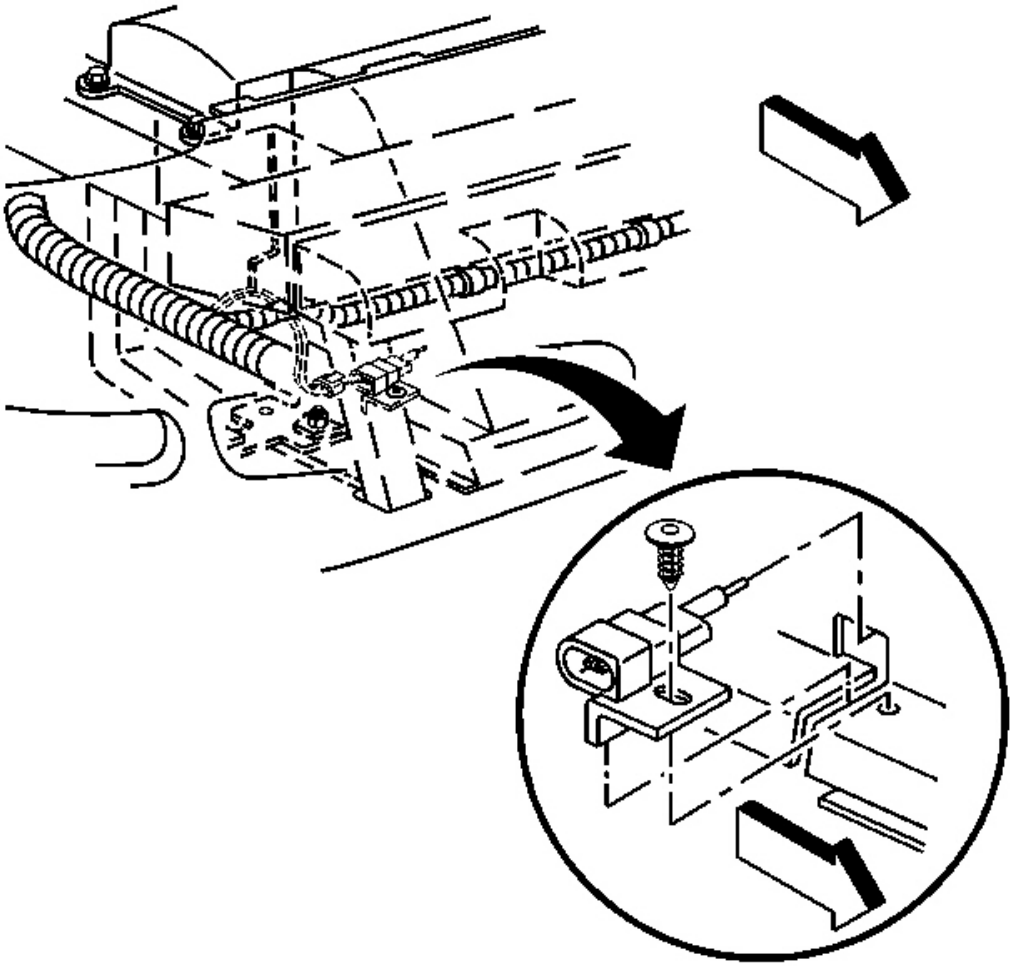

Fig. 74: Radiator Support & Ambient Air Temperature Sensor
Courtesy of GENERAL MOTORS CORP.

2. Remove the push-in retainer securing the ambient air temperature sensor to the lower RH side of the radiator support.
3. Remove the ambient air temperature sensor from the radiator support.

Installation Procedure

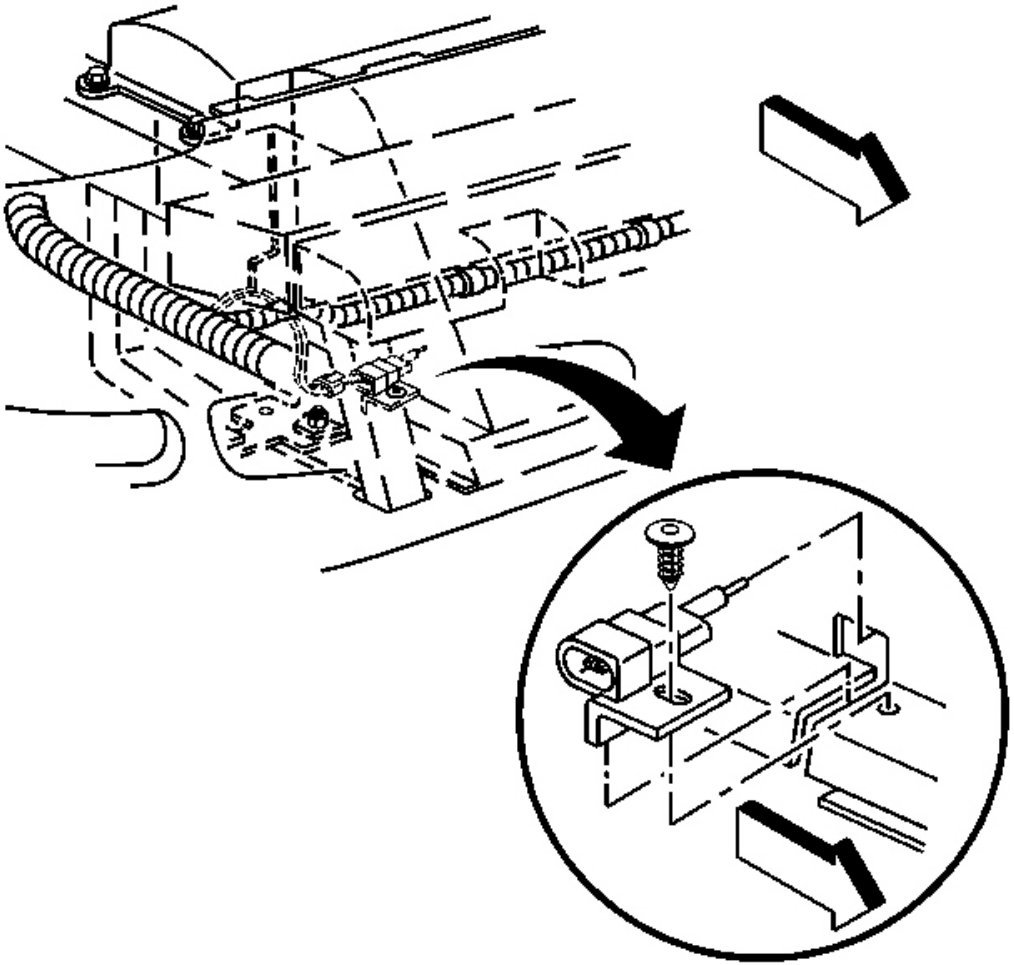

Fig. 75: Radiator Support & Ambient Air Temperature Sensor
Courtesy of GENERAL MOTORS CORP.

IMPORTANT: The ambient air temperature sensor must be orientated so that the sensor probe end is inboard and the electrical connector is outboard.

1. Install the ambient air temperature sensor to the lower radiator support.
2. Install the push-in retainer to secure the ambient air temperature sensor to the radiator support.

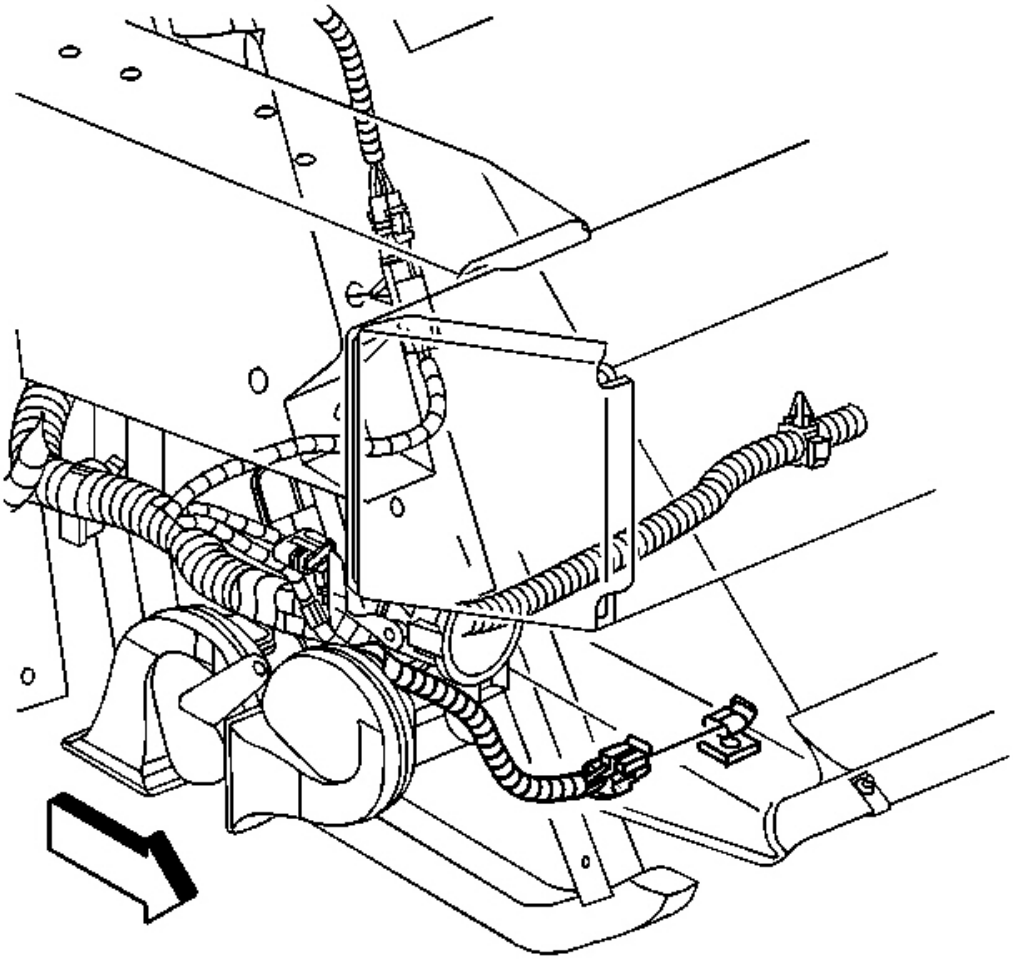

Fig. 76: Ambient Air Temperature Sensor Electrical Connector
Courtesy of GENERAL MOTORS CORP.

3. Connect the ambient air temperature sensor electrical connector.

INSIDE AIR TEMPERATURE SENSOR REPLACEMENT

Removal Procedure

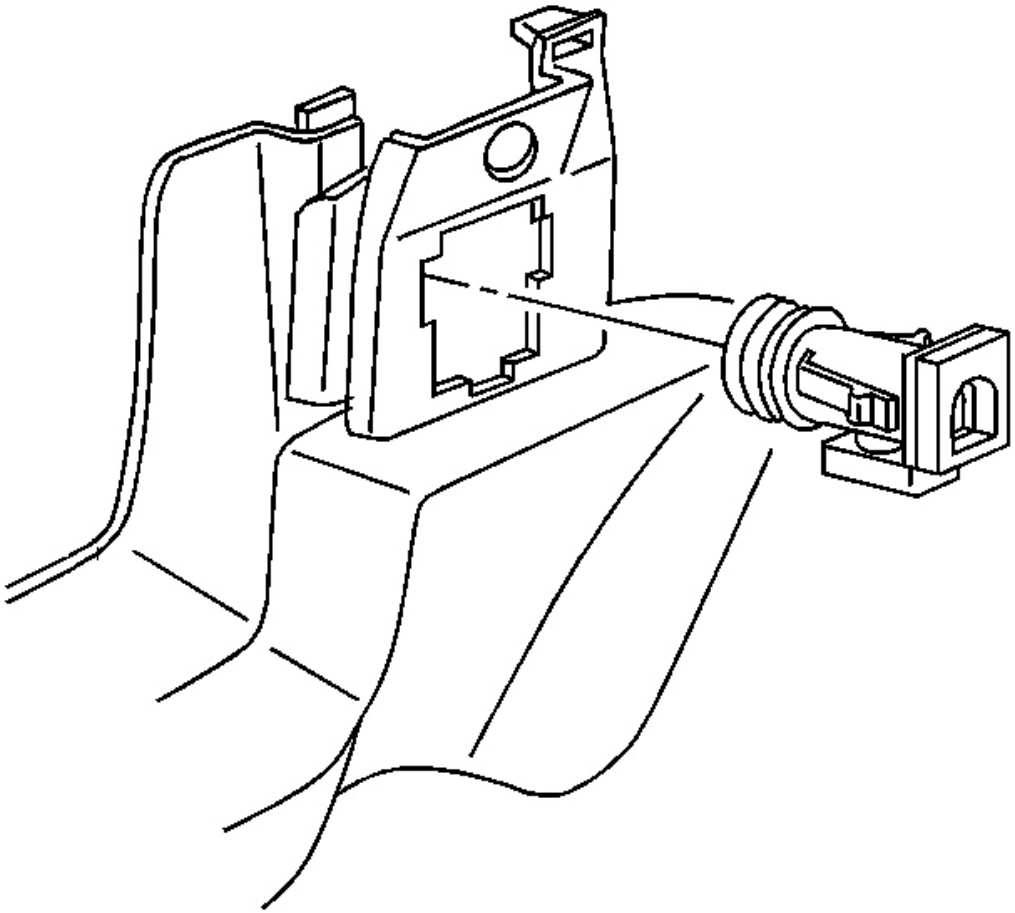

Fig. 77: Driver Knee Bolster Trim Panel & Inside Air Temperature Sensor
Courtesy of GENERAL MOTORS CORP.

1. Remove the center instrument panel accessory trim plate. Refer to **Trim Plate Replacement - Instrument Panel (I/P) Accessory** in Instrument Panel, Gages and Console.
2. Remove the driver knee bolster trim panel. Refer to **Trim Panel Replacement - Knee Bolster** in Instrument Panel, Gages and Console.
3. Carefully depress the sensor retaining tabs and remove the inside air temperature sensor from the driver knee bolster trim panel.

Installation Procedure

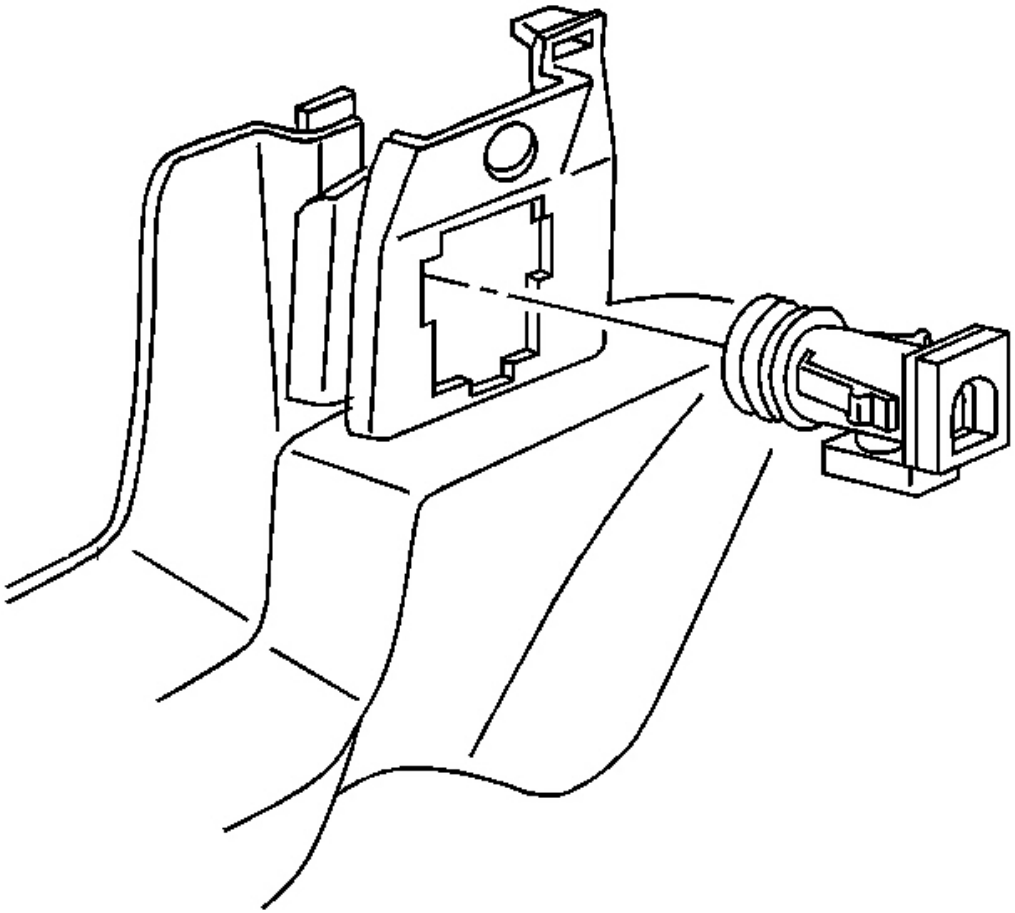

Fig. 78: Driver Knee Bolster Trim Panel & Inside Air Temperature Sensor
Courtesy of GENERAL MOTORS CORP.

1. Align the inside air temperature sensor to the driver knee bolster trim panel, then push to secure the retaining tabs.

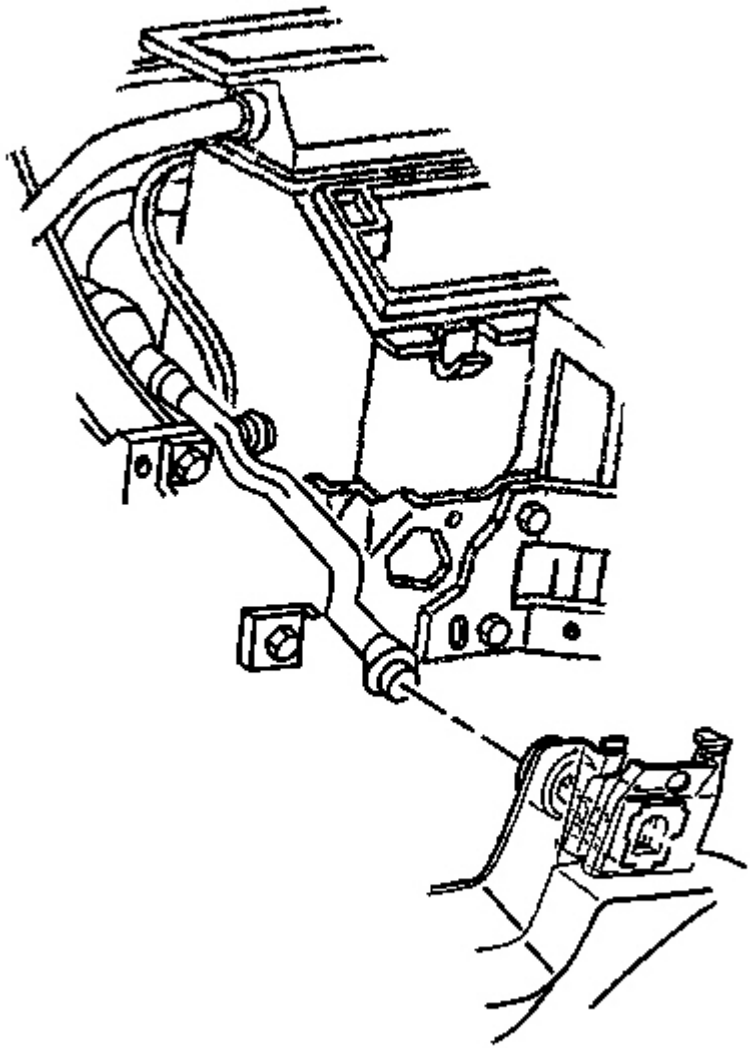

Fig. 79: Drivers Knee Bolster Trim Panel, I/P Accessory Trim Plate & Inside Air Temperature Sensor Aspirator Duct
Courtesy of GENERAL MOTORS CORP.

IMPORTANT: The inside air temperature sensor must be aligned with and fit into the end of the inside air temperature sensor aspirator duct.

2. Be sure to ALIGN the inside air temperature sensor with the inside air temperature sensor aspirator duct, while installing the driver knee bolster trim panel.

3. Install the drivers knee bolster trim panel. Refer to **Trim Panel Replacement - Knee Bolster** in Instrument Panel, Gages and Console.
4. Install the I/P accessory trim plate. Refer to **Trim Plate Replacement - Instrument Panel (I/P) Accessory** in Instrument Panel, Gages and Console.

SUN LOAD SENSOR REPLACEMENT

Removal Procedure

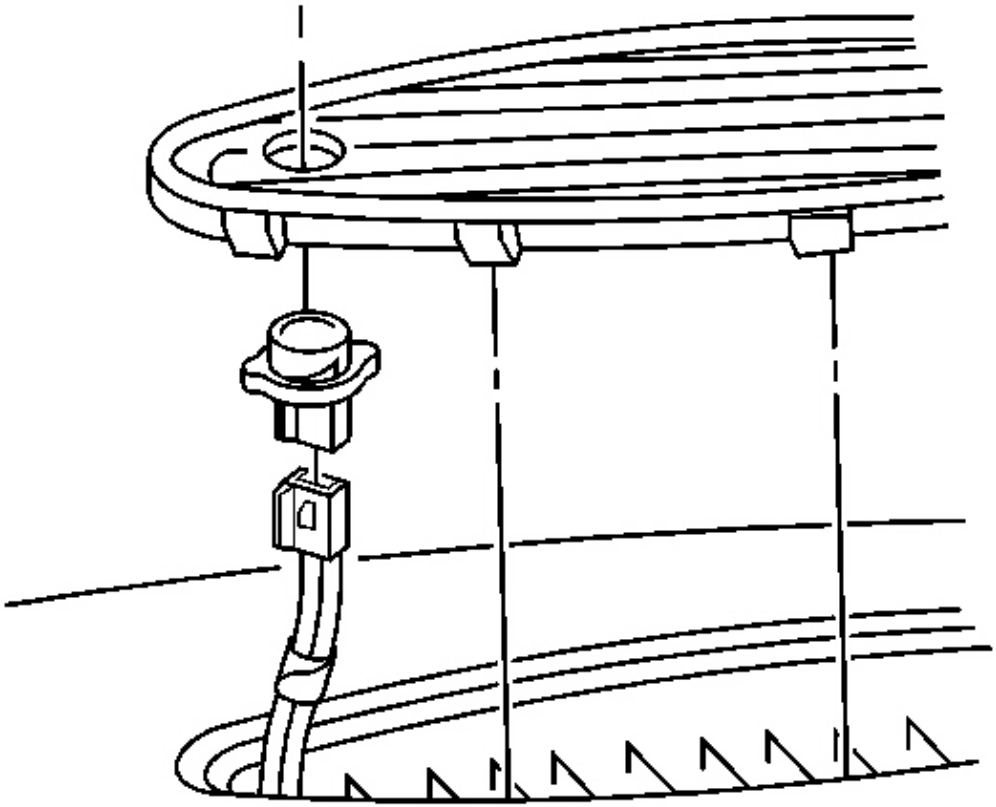

Fig. 80: I/P Upper Trim Pad & Windshield Defroster Grille
Courtesy of GENERAL MOTORS CORP.

1. Release and lift the windshield defroster grille from the I/P upper trim pad.
    1. Insert two small flat bladed tools, close to each other between the rear edge of the defroster grille and the upper trim pad near one corner of the grille.
    2. Begin to CAREFULLY lift the grille up from the trim pad.

3. Work the flat bladed tools gradually to the other corner of the grille while continuing to CAREFULLY pry the grille up.

2. Lift the grille to access the sun load sensor, and/or DRL sensor, if equipped.
3. Rotate to release the DRL sensor from the grille, if equipped.

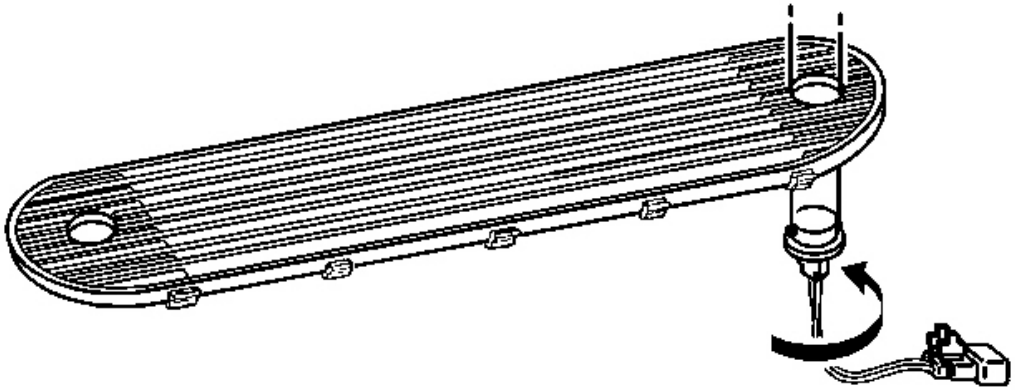

Fig. 81: Disconnecting Sun Load Sensor Electrical Connector
Courtesy of GENERAL MOTORS CORP.

4. Rotate to release the sun load sensor from the grille.
5. Disconnect the sun load sensor electrical connector.
6. Remove the sun load sensor from the vehicle.

Installation Procedure

1. Install the sun load sensor to the vehicle.

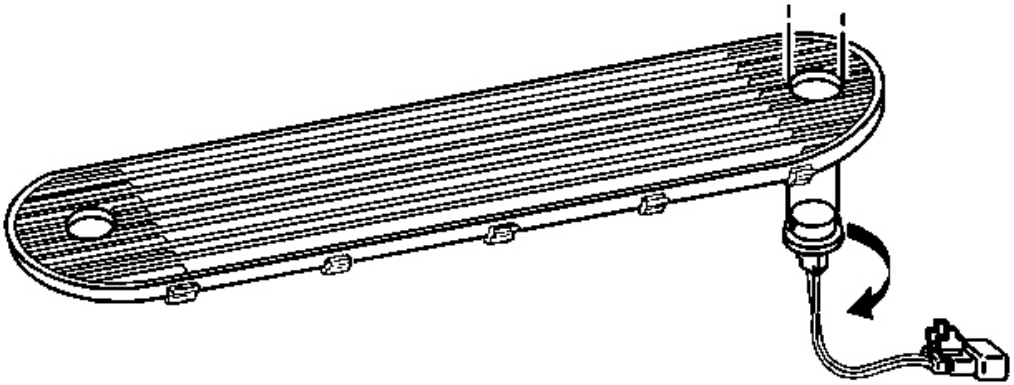

Fig. 82: Connecting Sun Load Sensor Electrical Connector
Courtesy of GENERAL MOTORS CORP.

2. Connect the sun load sensor electrical connector.
3. Rotate to secure the sun load sensor to the defroster grille.

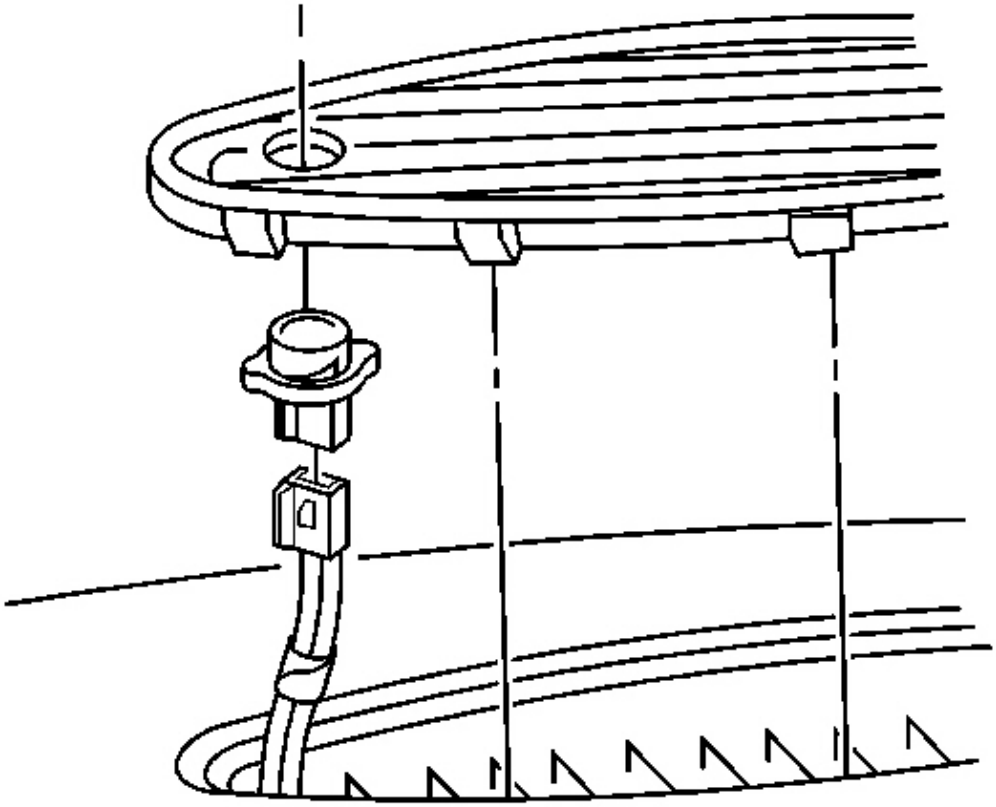

Fig. 83: I/P Upper Trim Pad & Windshield Defroster Grille
Courtesy of GENERAL MOTORS CORP.

4. Rotate to secure the DRL sensor to the defroster grille, if equipped.
5. Position the tabs along the front edge of the defroster grille down into the slots in the upper trim pad.
6. Lower the rear edge of the grille into position, then CAREFULLY press the rear tabs into place.

DESCRIPTION AND OPERATION

AIR DELIVERY DESCRIPTION AND OPERATION

The air delivery description and operation are divided into five areas:

- HVAC Control Components
- Air Speed

- Air Delivery
- Recirculation Operation
- Automatic Operation

HVAC Control Components

HVAC Control Module

The HVAC control module is a class 2 device that interfaces between the operator and the HVAC system to maintain air temperature and distribution settings. The battery positive voltage circuit provides power that the control module uses for keep alive memory (KAM). If the battery positive voltage circuit loses power, all HVAC DTCs and settings will be erased from KAM. The ignition 3 voltage circuit provides a device on signal. Three integrated potentiometers control mode and air temperature door positions and blower motor speed. The control assembly communicates the mode door position to the vacuum control assembly through 5 solenoid control circuits. The control module supports the following features:

Air Delivery Description and Operation

Feature	Availability
Afterblow	No
Purge	No
Personalization	No
Actuator Calibration	Yes

Air Speed

The blower motor circulates air through the vehicle's interior. The vehicle operator determines the blower motor's speed by pressing the blower motor switch manually or by using the automatic mode. The blower motor will only operate if the blower motor switch is in any position other than OFF, as long as the ignition switch is in the RUN position. The blower motor and mode switches are located within the HVAC control module.

Power is provided to the blower motor from the blower motor control processor through the blower motor supply voltage circuit. The blower motor control processor receives power from the instrument panel fuse block through the battery positive voltage circuit. Ground is provided by the blower motor control processor, ground circuit and splice pack.

The HVAC control module receives power from the instrument panel fuse block on the ignition 3 voltage circuit along with the battery positive voltage circuit. The module is grounded by the ground circuits and splice pack. The HVAC control module communicates directly to the powertrain control module (PCM) on the class 2 serial data circuit through the star connector.

When any blower speed is selected, whether manual or automatic, the blower motor control processor will control blower motor speeds based on voltage signals from the HVAC control module. A 5-volt signal is sent from the blower motor control processor to the HVAC control module on the blower motor speed control circuit. When the driver manually selects a blower speed or the automatic HVAC system determines a needed speed, the HVAC control module will provide a pulse width modulated (PWM) ground. The remaining voltage at the blower motor control processor is used to provide a blower motor speed signal. A 12-volt signal is sent to

the blower motor from the blower motor control processor on the blower motor supply voltage circuit. The blower motor control processor varies the ground on the blower motor control circuit internally with a separate PWM signal. An open circuit, short to ground or short to battery on the blower motor speed control circuit will disrupt the PWM signal and cause the blower motor to not operate. In automatic operation, the HVAC control module will determine what blower speed is necessary in order to achieve or maintain a desired temperature.

When in manual mode, the driver can change the blower speed by pressing the blower motor switch. If the driver presses the blower motor switch once, the blower speed will increase/decrease 1 level. Holding the blower motor switch down will increase/decrease the blower speed to the maximum/minimum speed.

Off

Press the OFF switch to turn OFF the HVAC system. When the vehicle is moving, air flowing over the vehicle increases the air pressure just ahead of the windshield. This forces air into the HVAC air inlet and out through any desired mode setting. The HVAC control module attempts to match the inside air temperature and HVAC control module selected temperatures. Driver set temperature and passenger temperature offset can be adjusted. Since the A/C compressor is not running, the incoming air may be warmed but not cooled.

Air Delivery

When the mode switch is pressed, a signal is sent from the HVAC control module to the vacuum control assembly. The HVAC control module will provide ground for the necessary mode actuator solenoid, connecting the desired mode actuator to vacuum. The instrument panel fuse block provides power to the vacuum control assembly through the ignition 3 voltage circuit. Ground is provided by the HVAC control module.

Mode Switch

Use the MODE switch in order to change the air delivery mode in the vehicle. Selection of the MODE switch when in AUTO mode will lock in the air flow mode that AUTO was controlling. The system will stay in that mode until the MODE or AUTO switch is pressed. Pressing the MODE button also activates the digital display for the mode selected. If an airflow mode is currently displayed, pressing the MODE button selects the next air flow mode. The air flow direction will sequence through the following modes:

- PANEL
- BI-LEVEL
- DEFOG
- FLOOR

Defog

When the driver selects the MIX-BLEND mode, air delivery is divided between the floor and windshield outlets. The HVAC control module ground the mix-blend mode valve solenoid control circuit. When the solenoid is grounded, vacuum is applied to the mode actuator through the Blue vacuum line, and to the defrost actuator through the Red and the Yellow vacuum lines. The mode actuator will retract, closing the vent door. Applying vacuum to both sides of the defroster actuator will hold the defroster door stationary in the half open position. The heater door will also be held stationary in the half open position through mechanical linkage.

Floor

When the driver selects the FLOOR mode, air is delivered through the floor outlets with some toward the windshield and side vents. The HVAC control module grounds both the lower mode valve solenoid control and the mix-blend mode valve solenoid control circuit. When the solenoids are grounded, vacuum is applied to the mode actuator through the Blue vacuum line, and to the defrost actuator through the Red vacuum line. The mode actuator will retract, closing the vent door. The defroster actuator will retract, closing the defroster door and open the heater door through mechanical linkage.

Bi-Level

When the driver selects the BI-LEVEL mode, cool air is delivered through the instrument panel outlets while warm air is delivered through the floor outlets. The HVAC control module grounds the lower mode valve solenoid control circuit. When the solenoid is grounded, vacuum is applied to the mode actuator through the Brown and the Blue vacuum lines, and to the defrost actuator through the Red vacuum line. Applying vacuum to both sides of the mode actuator will hold the vent door stationary in the half open position. The defroster actuator will retract, closing the defroster door and open the heater door through mechanical linkage.

Panel

When the driver selects the panel mode, air is delivered through the instrument panel outlets and a small amount is delivered to the floor. The HVAC control module grounds the lower mode valve solenoid control and defrost mode valve solenoid control circuit. When the solenoids are grounded, vacuum is applied to the mode actuator through the Brown vacuum line, and to the defrost actuator through the Red vacuum line. The mode actuator will retract, opening the panel door. The defroster actuator will retract, closing the defroster door and open the heater door through mechanical linkage.

Front Defrost

If the HVAC system is in front defrost mode when you turn the vehicle OFF, the HVAC system will restart in front defrost unless the engine is OFF longer than 40 minutes. If the engine is OFF longer than 40 minutes, the system will restart in the previous operating mode set prior to using front defrost, with outside air being drawn into the vehicle.

The front defrost mode is the only setting that is not controlled by the automatic HVAC system. When FRONT DEFROST is selected, the A/C compressor is activated and outside air is brought into the vehicle. The blower motor will be activated and air will be directed toward the windshield with a small amount of air toward the side window outlets. Pressing the AUTO or OFF button will turn OFF front defrost mode. Pressing the FRONT DEFROST button will return the HVAC system to the last operating mode. Recirculation mode is not available in front defrost. The rear window defogger does not affect the HVAC system at all.

The HVAC control module grounds the upper mode valve solenoid control and the mix-blend mode valve solenoid control circuits. When the solenoids are grounded, vacuum is applied to the mode actuator through the Blue vacuum line and to the defrost actuator through the Yellow vacuum line.

Recirculation Operation

Outside Air

When the OUTSIDE AIR switch is pressed, outside air is brought into the vehicle. This mode has no effect on the system when FRONT DEFROST mode is selected. OUTSIDE AIR and RECIRCULATION are separate modes and are not available together. When OUTSIDE AIR is selected, when in automatic mode, the HVAC system will stay in this mode until AUTO is pressed again.

Recirculation

When the recirculation is requested, whether manual or automatic, a solenoid inside the vacuum control assembly connects the recirculation actuator to the vacuum source. Power is provided to the recirculation solenoid by the ignition 3 voltage circuit. Ground is provided by the recirculation valve solenoid control circuit and HVAC control module. When the solenoid is grounded, vacuum is supplied to the recirculation actuator. The recirculation actuator retracts, closing the recirculation door. This draws air from inside the vehicle instead of fresh air from the outside.

Recirculation can be used in both automatic and manual operation. The only time recirculation is not available is when FRONT DEFROST or MIX-BLEND is selected. The RECIRC LED will flash three times to alert the driver that recirculation mode is not available. When in automatic mode, recirculation will stay ON until either the vehicle operator selects OUTSIDE AIR or the automatic system has cooled the vehicle sufficiently.

Automatic Operation

Automatic

The automatic HVAC system will warm up/cool down and maintain the interior temperature of the vehicle by controlling the A/C compressor clutch, blower motor, air temperature, mode and recirculation actuators to achieve the desired temperature. For fully automatic operation, both the blower and mode switches must be in the AUTO position. Blower speeds will change automatically based on inputs to the HVAC control module. The HVAC control module will always come back to the last settings after an ignition cycle or, if equipped, to the last settings of the driver by pressing the UNLOCK button on the remote keyless entry fob and placing the ignition in RUN.

In cold temperatures, the automatic HVAC system will provide heat in the most efficient manner. To warm the interior quickly, maximum heat is used where the blower is at maximum speed, floor mode, air temperature is in full hot and outside air is being drawn in. The vehicle operator can select the extreme warm setting, but the system will not warm the vehicle any faster. Once the desired temperature is reached, the blower motor, mode, recirculation and temperature will be adjusted automatically by the HVAC control module.

In warm temperatures, the automatic HVAC system will provide A/C in the most efficient manner. To cool the interior quickly, full cold is used where the blower is at maximum speed, air temperature actuator is in full cold and the recirculation actuator is drawing air from inside the vehicle. The vehicle operator can select the extreme cool setting, but the system will not cool the vehicle any faster. Once the desired temperature is reached, the blower motor, mode, recirculation and temperature will be adjusted automatically by the HVAC control module.

AIR TEMPERATURE DESCRIPTION AND OPERATION

The air temperature controls are divided into five areas:

- HVAC Control Components
- Heating and A/C Operation
- Automatic Operation
- Engine Coolant
- A/C Cycle

HVAC Control Components

HVAC Control Module

The HVAC control module is a class 2 device that interfaces between the operator and the HVAC system to maintain air temperature and distribution settings. The battery positive voltage circuit provides power that the control module uses for keep alive memory (KAM). If the battery positive voltage circuit loses power, all HVAC DTCs and settings will be erased from KAM. The ignition 3 voltage circuit provides a device on signal. Three integrated potentiometers control mode and air temperature door positions and blower motor speed. The control assembly communicates the mode door position to the vacuum control assembly through five solenoid control circuits. The control module supports the following features:

Air Temperature Description and Operation

Feature	Availability
Afterblow	No
Purge	No
Personalization	No
Actuator Calibration	Yes

Air Temperature Actuator

The air temperature actuators are a 5 wire bi-directional electric motor that incorporates a feedback potentiometer. Ignition 3 voltage, low reference, control, 5 volt reference and position signal circuits enable the actuator to operate. The control circuit uses either a 0, 2.5 or 5 volt signal to command the actuator movement. When the actuator is at rest, the control circuit value is 2.5 volts. A 0 or 5 volt control signal commands the actuator movement in opposite directions. When the actuator shaft rotates, the potentiometer's adjustable contact changes the door position signal between 0-5 volts.

The HVAC control module uses a range of 0-255 counts to index the actuator position. The door position signal voltage is converted to a 0-255 count range. When the module sets a commanded, or targeted, value, the control signal is changed to either 0 or 5 volts depending upon the direction that the actuator needs to rotate to reach the commanded value. As the actuator shaft rotates the changing position signal is sent to the module. Once the position signal and the commanded value are the same, the module changes the control signal to 2.5 volts.

Air Temperature Sensors

The air temperature sensors are a 2 wire negative temperature co-efficient thermistor. The vehicle uses the following air temperature sensors:

- Ambient Air Temperature Sensor
- Inside Air Temperature Sensor

A signal and low reference circuit enables the sensor to operate. As the air temperature surrounding the sensor increases, the sensor resistance decreases. The sensor signal voltage decreases as the resistance decreases. The sensor operates within a temperature range between -40 °C (-40 °F) to 101 °C (215 °F). The sensor signal varies between 0-5 volts.

The input of the duct sensor temperature is different from the ambient and inside sensors. The HVAC control module converts the signal to a range between 0-255 counts. As the air temperature increases the count value will decrease.

If the HVAC control module detects a malfunctioning sensor, then the control module software will use a defaulted air temperature value. The default action ensures that the HVAC system can adjust the inside air temperature near the desired temperature until the condition is corrected.

The Driver Information Center (DIC) displays the ambient air temperature value that it receives from the HVAC control module through a class 2 message. The scan tool has the ability to update the displayed ambient air temperature. The ambient air temperature value is displayed or updated under the following conditions:

Air Temperature Description and Operation

Condition	Display
At start up with the engine off more than 3 hours	Displays real-time temperature
At start up with the engine off less than 3 hours	Displays last stores temperature
Vehicle moving above 26 km/h (16 mph) for 1.5 minutes	Displays real-time temperature
Vehicle moving above 72 km/h (45 mph) for 1 minute	Displays real-time temperature

Sunload Sensor

The sunload sensor is a 2 wire photo diode. Low reference and signal circuits enable the sensor to operate. As the light shining upon the sensor gets brighter, the sensor conductance increases. The sensor signal decreases as the conductance increases. The sensor operates within an intensity range between completely dark and bright. The sensor signal varies between 0-5 volts. The HVAC control module converts the signal to a range between 0-255 counts.

The sunload sensor provides the HVAC control module a measurement of the amount of light shining on the vehicle. Bright, or high intensity, light causes the vehicles inside temperature to increase. The HVAC system compensates for the increased temperature by diverting additional cool air into the vehicle.

If the HVAC control module detects a malfunctioning sensor, then the control module software will use a defaulted sunload value. The default action ensures that the HVAC system can adjust the inside air temperature near the desired temperature until the condition is fixed.

A/C Pressure Sensor

The A/C refrigerant pressure sensor is a 3 wire piezoelectric pressure transducer. A 5 volt reference, low

reference, and signal circuits enable the sensor to operate. The A/C pressure signal can be between 0-5 volts. . When the A/C refrigerant pressure is low, the signal value is near 0 volts. When the A/C refrigerant pressure is high, the signal value is near 5 volts. The PCM converts the voltage signal to a pressure value.

Heating and A/C Operation

The purpose of the heating and A/C system is to provide heated and cooled air to the interior of the vehicle. The A/C system will also remove humidity from the interior and reduce windshield fogging. The vehicle operator can determine the passenger compartment temperature by adjusting the air temperature switch. Regardless of the temperature setting, the following can effect the rate that the HVAC system can achieve the desired temperature:

- Recirculation actuator setting
- Difference between inside and desired temperature
- Difference between ambient and desired temperature
- Blower motor speed setting
- Mode setting

The control module makes the following actions when automatic operation is not selected, and an air temperature setting is selected:

- When the air temperature switch is placed in the warmest position, the control module commands the air temperature door to divert maximum air past the heater core.
- When the air temperature switch is placed in the coldest position, the control module commands the air temperature door to direct air to bypass the heater core.
- When the air temperature switch is placed between the warmest and coldest positions, the control module monitors the following sensor inputs to determine the air temperature door position that diverts the appropriate amount of air past the heater core in order to achieve the desired temperature:
    - Sunload
    - Ambient temperature
    - Inside temperature

The A/C system can be engaged by pressing the A/C switch. The A/C switch will illuminate when the A/C switch is pressed to the on position. Pressing the A/C switch the control module grounds A/C request signal circuit from the powertrain control module (PCM). The following conditions must be obtained before A/C compressor engagement is allowed:

- Engine coolant temperature (ECT) is less than 121°C (250°F)
- Engine RPM is more than 550 RPM
- A/C Pressure is between 207 kPa (30 psi) and 2826 kPa (410 psi)
- The A/C request signal circuit is grounded.

Once engaged, the compressor clutch will be disengaged for the following conditions:

- Throttle position is 100%
- A/C Pressure is more than 2826 kPa (410 psi)
- A/C Pressure is less than 207 kPa (30 psi)
- Engine coolant temperature (ECT) is more than 121°C (250°F)
- Engine speed is more than 5500 RPM
- Transmission shift
- PCM detects excessive torque load
- PCM detects insufficient idle quality
- PCM detects a hard launch condition

When the compressor clutch disengages, the compressor clutch diode protects the electrical system from a voltage spike.

Automatic Operation

In automatic operation, the HVAC control module will maintain the comfort level inside of the vehicle by controlling the A/C compressor clutch, the blower motor, the air temperature actuators, the mode actuator and the recirculation actuator.

To place the HVAC system in Automatic mode, the following is required:

- The Auto switch must be activated
- The air temperature switch must be in any other position other than full hot or full cold position

Once the desired temperature is reached, the blower motor, mode, recirculation and temperature actuators will automatically be adjusted to maintain the temperature selected. The HVAC control module performs the following functions to maintain the desired air temperature:

- Monitor the following sensors:
  - Inside air temperature sensor
  - Ambient air temperature sensor
  - Sunload sensor
- Regulate blower motor speed
- Position the air temperature actuators
- Position the mode actuator
- Position the recirculation actuator
- Request A/C operation

Engine Coolant

Engine coolant is the essential element of the heating system. The thermostat controls the normal engine operating coolant temperature. The thermostat also creates a restriction for the cooling system that promotes a

positive coolant flow and helps prevent cavitation.

Coolant enters the heater core through the inlet heater hose, in a pressurized state. The heater core is located inside the HVAC module. The ambient air drawn through the HVAC module absorbs the heat of the coolant flowing through the heater core. Heated air is distributed to the passenger compartment, through the HVAC module, for passenger comfort. Opening or closing the air temperature door controls the amount of heat delivered to the passenger compartment. The coolant exits the heater core through the return heater hose and recirculated back through the engine cooling system.

A/C Cycle

Refrigerant is the key element in an air conditioning system. R-134a is presently the only EPA approved refrigerant for automotive use. R-134a is a very low temperature gas that can transfer the undesirable heat and moisture from the passenger compartment to the outside air.

The A/C system used on this vehicle is a non-cycling system. Non-cycling A/C systems use a high pressure switch to protect the A/C system from excessive pressure. The high pressure switch will OPEN the electrical signal to the compressor clutch, if the refrigerant pressure becomes excessive. After the high and the low sides of the A/C system pressure equalize, the high pressure switch will CLOSE. This completes the electrical circuit to the compressor clutch. The A/C system is also mechanically protected with the use of a high pressure relief valve. If the high pressure switch were to fail or if the refrigerant system becomes restricted and refrigerant pressure continues to rise, the high pressure relief will pop open and release refrigerant from the system.

The A/C compressor is belt driven and operates when the magnetic clutch is engaged. The compressor builds pressure on the vapor refrigerant. Compressing the refrigerant also adds heat. The refrigerant is discharged from the compressor through the discharge hose, and forced through the condenser and then through the balance of the A/C system.

Compressed refrigerant enters the condenser at a high-temperature, high-pressure vapor state. As the refrigerant flows through the condenser, the heat is transferred to the ambient air passing through the condenser. Cooling causes the refrigerant to condense and change from a vapor to a liquid state.

The condenser is located in front of the radiator for maximum heat transfer. The condenser is made of aluminum tubing and aluminum cooling fins, which allows rapid heat transfer for the refrigerant. The semi-cooled liquid refrigerant exits the condenser and flows through the liquid line to the orifice tube.

The orifice tube is located in the liquid line between the condenser and the evaporator. The orifice tube is the dividing point for the high and the low pressure sides of the A/C system. As the refrigerant passes through the orifice tube, the pressure on the refrigerant is lowered, causing the refrigerant to vaporize at the orifice tube. The orifice tube also measures the amount of liquid refrigerant that can flow into the evaporator.

Refrigerant exiting the orifice tube flows into the evaporator core in a low-pressure, liquid state. Ambient air is drawn through the HVAC module and passes through the evaporator core. Warm and moist air will cause the liquid refrigerant to boil inside the evaporator core. The boiling refrigerant absorbs heat from the ambient air and draws moisture onto the evaporator. The refrigerant exits the evaporator through the suction line and flows back to the compressor in a vapor state, completing the A/C cycle of heat removal. At the compressor, the refrigerant is compressed again and the cycle of heat removal is repeated.

The conditioned air is distributed through the HVAC module for passenger comfort. The heat and moisture removed from the passenger compartment condenses, and discharges from the HVAC module as water.

SPECIAL TOOLS AND EQUIPMENT

SPECIAL TOOLS

Special Tools

Illustration	Tool Number/Description
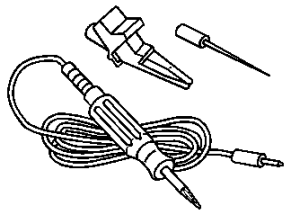	J 34142-B Test Light
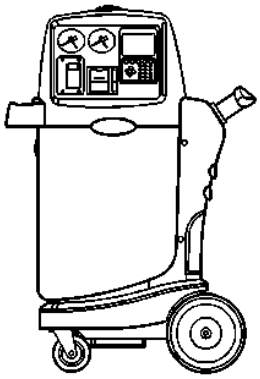	J43600 ACR 2000 Air Conditioning Service Center
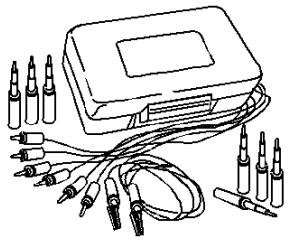	J 35616-A Connector Test Adapter Kit

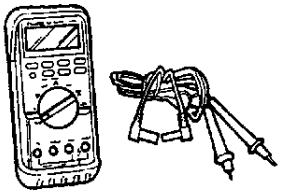	J 39200 Digital Multimeter
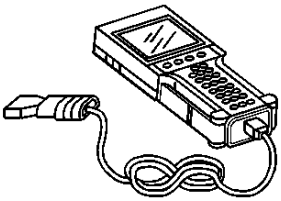	7000081 Tech 2 Kit