ANTI-LOCK BRAKE SYSTEM

PRECAUTION

1. EXPRESSIONS OF IGNITION SWITCH

The type of ignition switch used on this model differs according to the specifications of the vehicle.
The expressions listed in the table below are used in this section.

Expression	Switch Type	
	Ignition Switch (Position)	Engine Switch (Condition)
Ignition switch off	LOCK	off
Ignition switch on (IG)	ON	on (IG)
Ignition switch on (ACC)	ACC	on (ACC)
Engine start	START	start

2. TROUBLESHOOTING PRECAUTION

HINT:
The anti-lock brake system includes the ABS and EBD.

(a) When there is a malfunction in the terminal contact points or installation problems with parts, removing and installing the suspected problem parts may return the system to normal, either completely or temporarily.

(b) In order to determine the malfunctioning area, be sure to check the conditions at the time the malfunction occurred, such as by the DTC output and the freeze frame data output, and record it before disconnecting each connector or removing and installing parts.

(c) Be sure to remove and install the brake actuator and each individual sensor with the ignition switch off unless otherwise specified in the inspection procedure.

(d) If the brake actuator or a sensor has been removed and installed, it is necessary to check the system for problems after the parts have been reassembled. Check for DTCs using the intelligent tester, also check that system functions and signals received by the ECU are normal using test mode.

3. CAN COMMUNICATION SYSTEM PRECAUTION

(a) The CAN communication system is used for data communication between each of the ECUs and sensors. If there is trouble in the CAN communication line, a DTC of the communication line is output.

(b) If a DTC of the CAN communication line is output, repair the malfunction in the communication line and troubleshoot the anti-lock brake system.

(c) In order to enable CAN communication, a specific type of wiring is used for the CAN communication lines. The wiring used for each communication line is a twisted pair of wires that have an equal length. A bypass wire should not be used, because the data being transmitted will be corrupted.

PARTS LOCATION

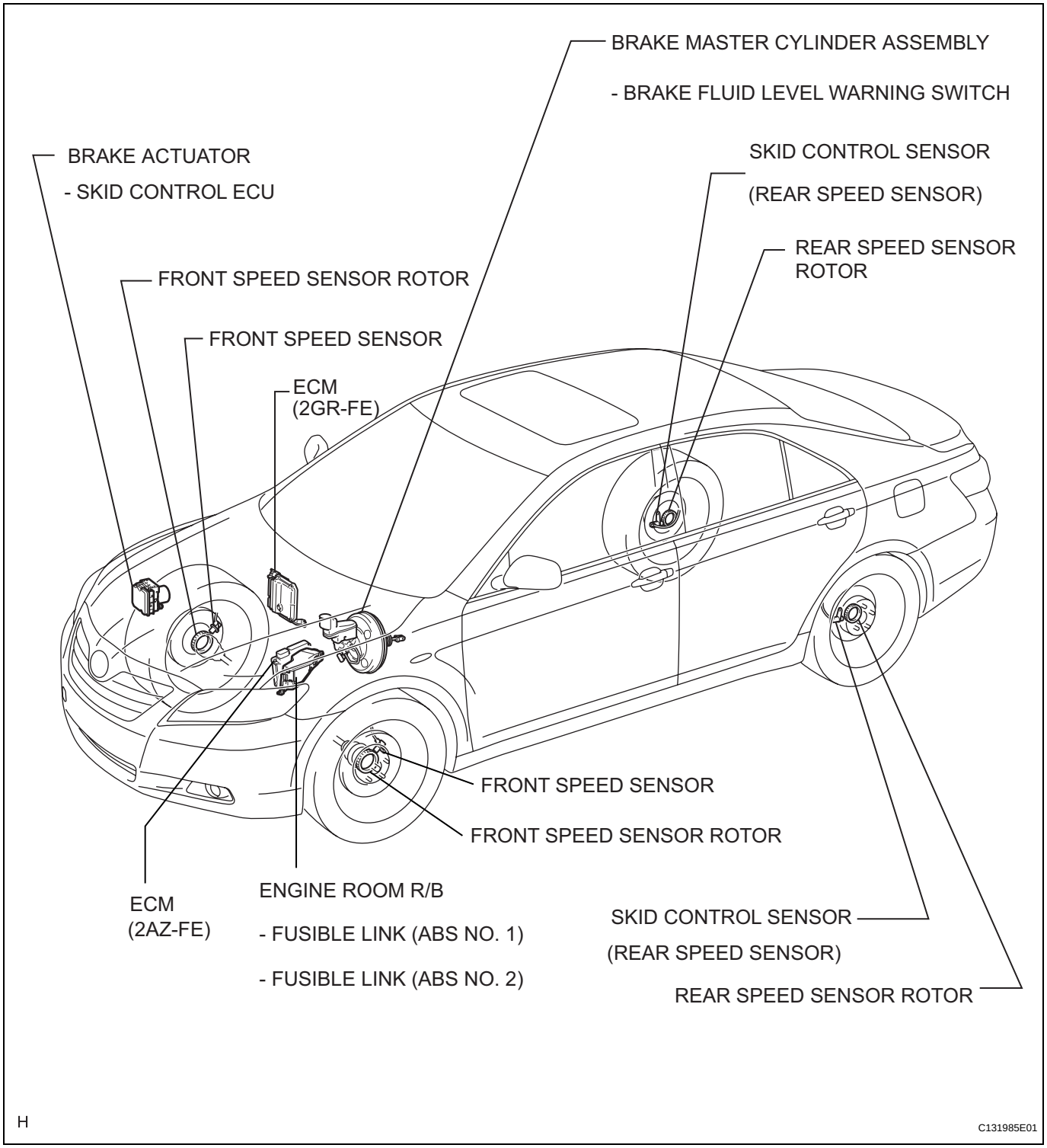

BC

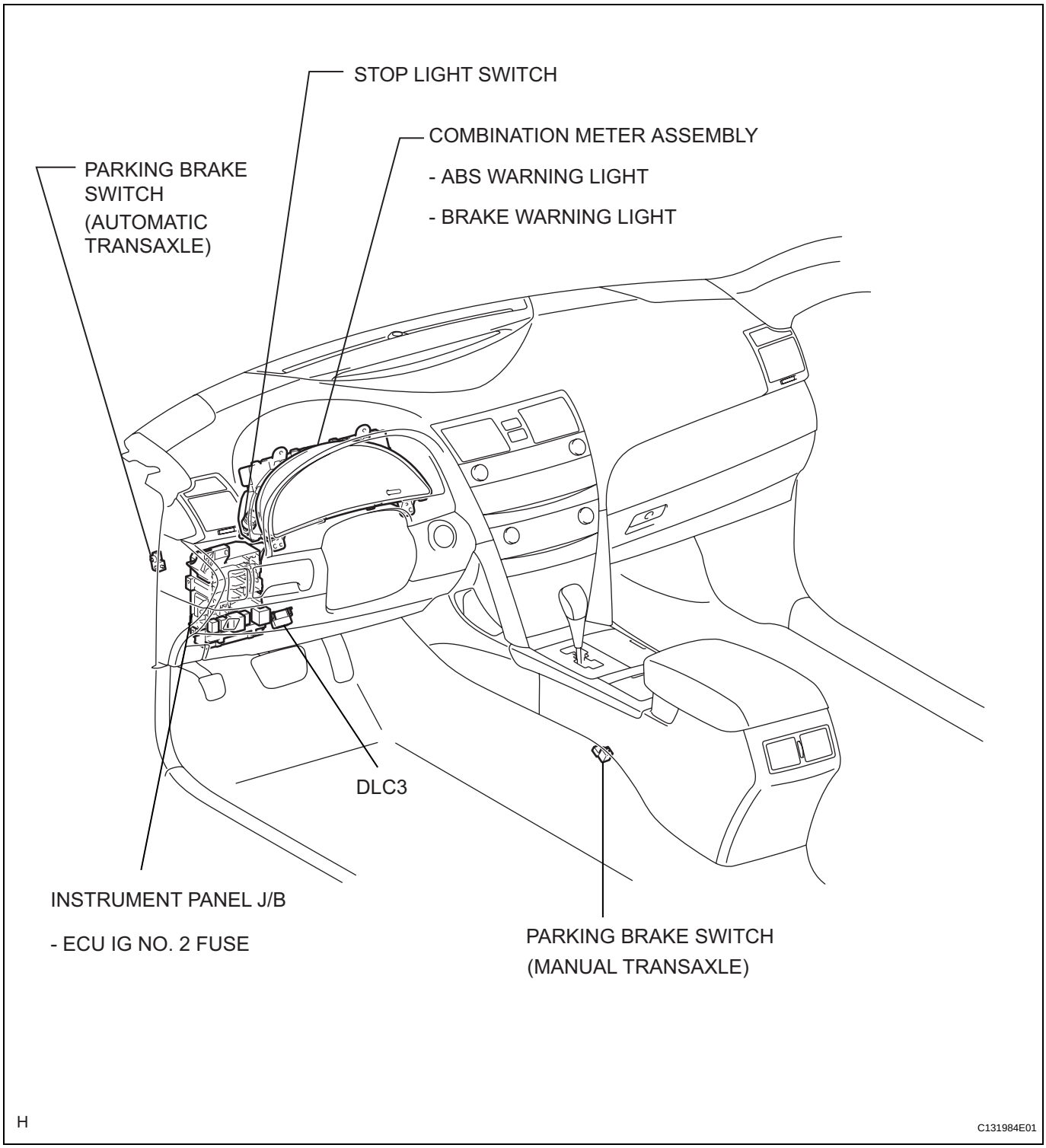
STOP LIGHT SWITCH
COMBINATION METER ASSEMBLY
- ABS WARNING LIGHT
- BRAKE WARNING LIGHT
PARKING BRAKE SWITCH (AUTOMATIC TRANSAXLE)
DLC3
INSTRUMENT PANEL J/B
- ECU IG NO. 2 FUSE
PARKING BRAKE SWITCH (MANUAL TRANSAXLE)
H
C131984E01

SYSTEM DIAGRAM

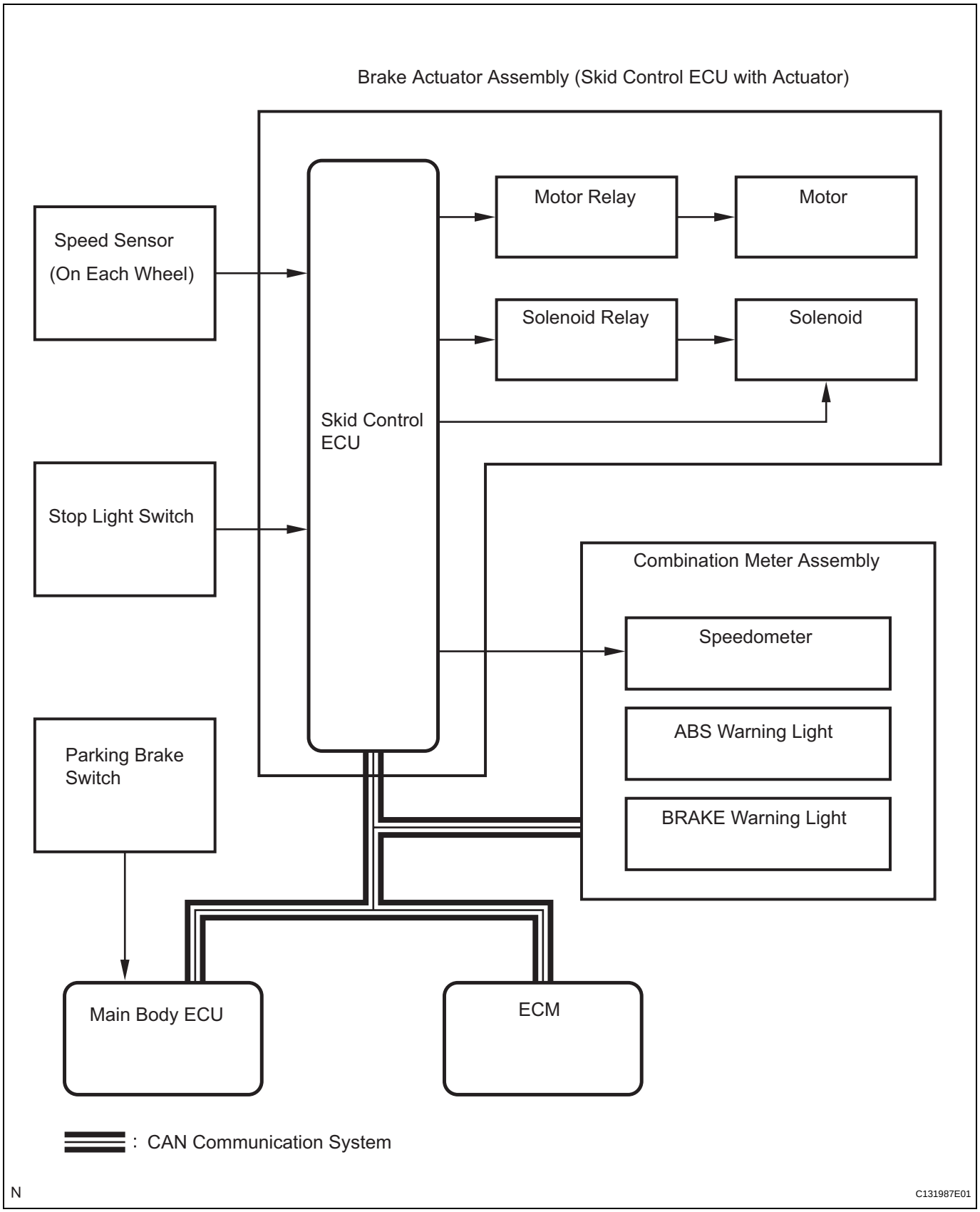

Transmitting ECU	Receiving ECU	Signals	Communication method
Skid control ECU	Combination meter	• ABS warning light signal • BRAKE warning light signal	CAN communication system

BC

Transmitting ECU	Receiving ECU	Signals	Communication method
ECM	Skid control ECU	Shift position signal	CAN communication system

SYSTEM DESCRIPTION

1. SYSTEM DESCRIPTION

HINT:
The skid control ECU is located within the brake actuator assembly.

(a) ABS
(Anti-lock Brake System)
The ABS helps prevent the wheels from locking when the brakes are applied firmly or when braking on a slippery surface.

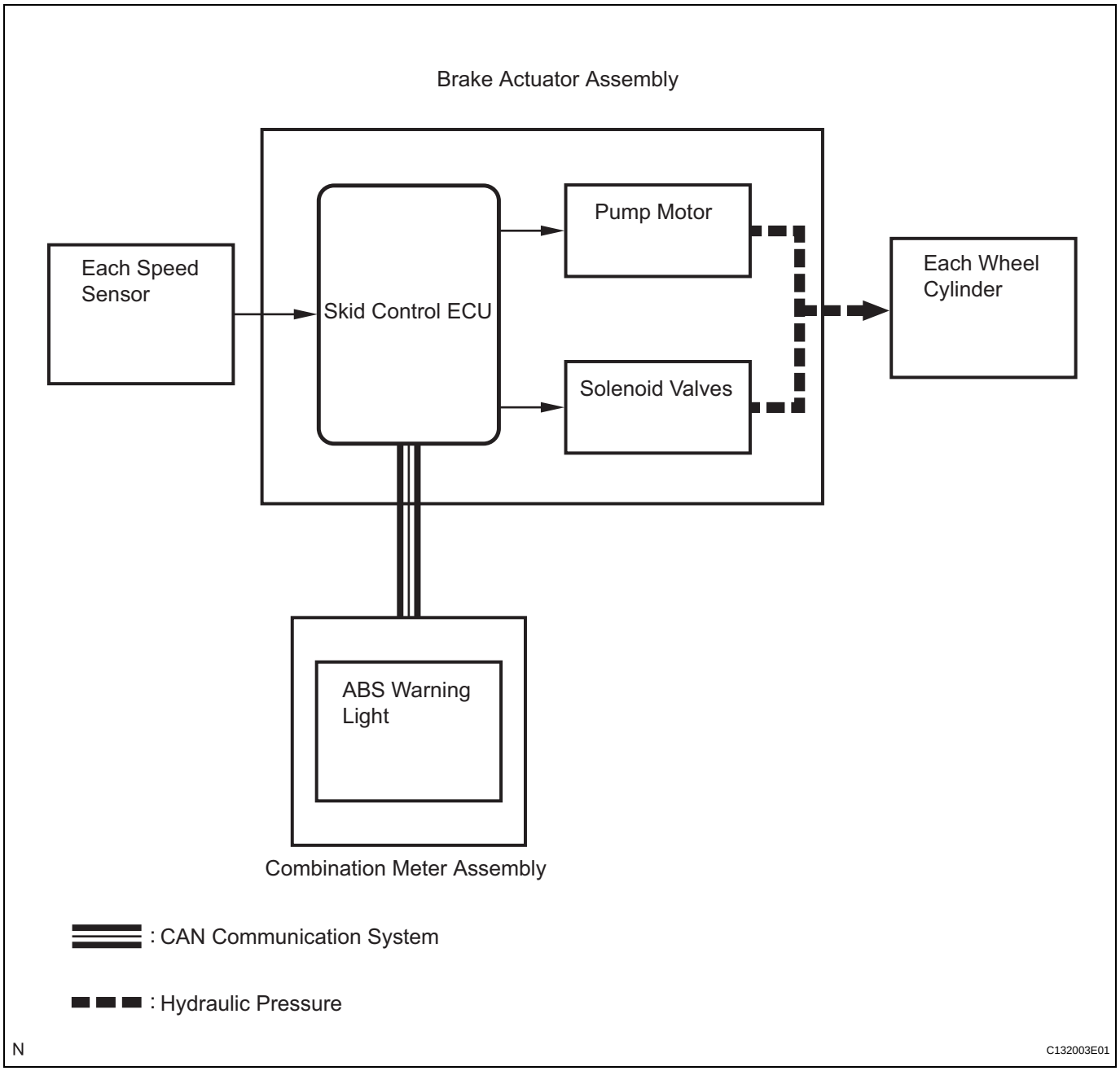

Operation description

The skid control ECU detects wheel lock based on speed signals it receives from the wheel speed sensors. Based on this information, the skid control ECU controls the pump motor and solenoid valves. The pump motor and solenoid valves are used to prevent wheel lock by controlling the hydraulic pressure applied to the brakes at each wheel. The ABS warning light will come on when the system is malfunctioning.

(b) EBD
(Electronic Brake force Distribution)
The EBD control utilizes ABS, realizing proper brake force distribution between the front and rear wheels in accordance with driving conditions.
In addition, when braking while cornering, it also controls the brake forces of the right and left wheels, helping to maintain vehicle behavior.

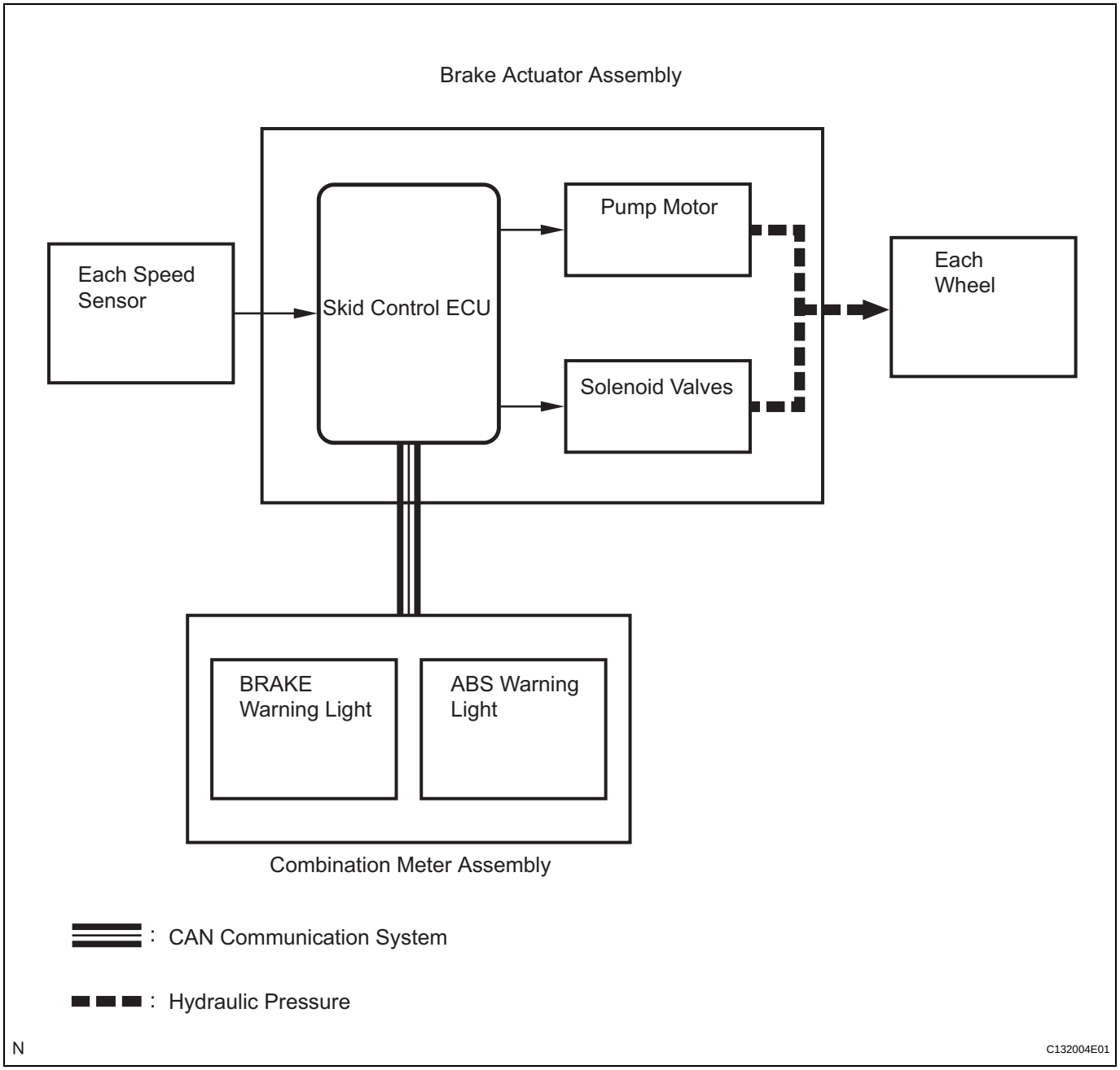

Operation description
The skid control ECU receives a speed signal from each wheel speed sensor, and uses these signals to detect locking of the wheels. The ECU uses this information in order to determine appropriate control of the solenoid valves. The solenoid valves control the hydraulic pressure applied to the brake cylinder at each wheel. In this way, the solenoid valves are used to control the brake power split between the front and rear, and left and right wheels. The ABS and BRAKE warning lights come on if there is a malfunction in the EBD system.

2. ABS with EBD OPERATION

(a) Based on the signals received from the 4 wheel speed sensors, the skid control ECU calculates the deceleration and speed of each wheel, while monitoring for wheel lock. If wheel lock is occurring, the ECU controls the solenoid valves in the brake actuator in order to adjust the hydraulic pressure applied to the brakes at each wheel.

3. FAIL SAFE FUNCTION

(a) When a failure occurs in the anti-lock brake system, the ABS warning light comes on and operation is prohibited. In addition, when a failure which disables EBD operation occurs, the brake warning light also comes on and operation is prohibited (See page BC-24).

4. INITIAL CHECK

(a) When the vehicle speed first becomes approximately 4 mph (6 km/h) or more after the ignition switch is turned on (IG), each solenoid valve and motor of the brake actuator is sequentially activated to perform an electrical check. During the initial check, the operating sound of solenoid valve and motor can be heard from the engine compartment, but this is not a malfunction.

5. FUNCTION OF COMPONENTS

Components	Function
Brake actuator assembly	• Composed of the holding solenoid valve, pressure reduction solenoid valve, pump motor, reservoir, etc., and adjusts the hydraulic pressure applied to each wheel cylinder. • Houses the skid control ECU.
Skid control ECU	Processes the signals sent from each sensor to control ABS and EBD.
Speed sensor	Detects speed of each wheel and inputs the data into the skid control ECU.
Master cylinder	Generates pressure according to pedal effort.
Stop light switch	Illuminates the stop light when the brake pedal is depressed. (Sends a brake on signal to the skid control ECU)
Solenoid relay	• Supplies power to each solenoid. • Housed in the skid control ECU.
Motor relay	• Supplies power to the pump motor. • Housed in the skid control ECU.
ABS warning light	• Comes on to inform the driver that a malfunction in the ABS and EBD has occurred. • Blinks to output DTC.

Components	Function
BRAKE warning light	• Comes on to inform the driver that the parking brake is on when the system is normal or the brake fluid level has decreased. • Comes on to inform the driver that a malfunction in the EBD has occurred.

HOW TO PROCEED WITH TROUBLESHOOTING

1 VEHICLE BROUGHT TO WORKSHOP

NEXT

2 CUSTOMER PROBLEM ANALYSIS

(a) Interview the customer to confirm the trouble.

NEXT

3 CHECK CAN COMMUNICATION SYSTEM

BC

(a) Check for DTCs (See page BC-21).
HINT:
The skid control ECU is connected to the CAN communication system.
Therefore, before starting troubleshooting, make sure to check that there is no trouble in the CAN communication system.

Result

Result	Proceed to
DTC is not output	A
DTC is output	B

B → CHECK CAN COMMUNICATION CIRCUIT

A

4 CHECK DTC AND FREEZE FRAME DATA

(a) Check for DTCs and Freeze Frame Data (See page BC-21 for DTC Check / Clear, BC-23 for Freeze Frame Data).
  (1) Record the DTCs and Freeze Frame Data.
(b) Clear the DTCs.
(c) Recheck for DTCs.
  (1) Reproduce the malfunction and check if the DTCs are output again.

Result

Result	Proceed to
DTC is output	A
DTC is not output (Problem symptom does not occur)	B
DTC is not output (Problem symptom occurs)	C

B → GO TO STEP 9

C → **GO TO STEP 10**

A

5	**DIAGNOSTIC TROUBLE CODE CHART**

(a) Go to "DIAGNOSTIC TROUBLE CODE CHART" (See page BC-27).

NEXT

6	**CIRCUIT INSPECTION**

NEXT

7	**REPAIR OR REPLACE**

NEXT

8	**CONFIRMATION TEST**

NEXT

END

9	**SYMPTOM SIMULATION**

NEXT

10	**PROBLEM SYMPTOMS TABLE**

(a) Go to "PROBLEM SYMPTOMS TABLE" (See page BC-16).

NEXT

11	**CIRCUIT INSPECTION**

NEXT

12	REPAIR OR REPLACE

NEXT

13	CONFIRMATION TEST

NEXT

END

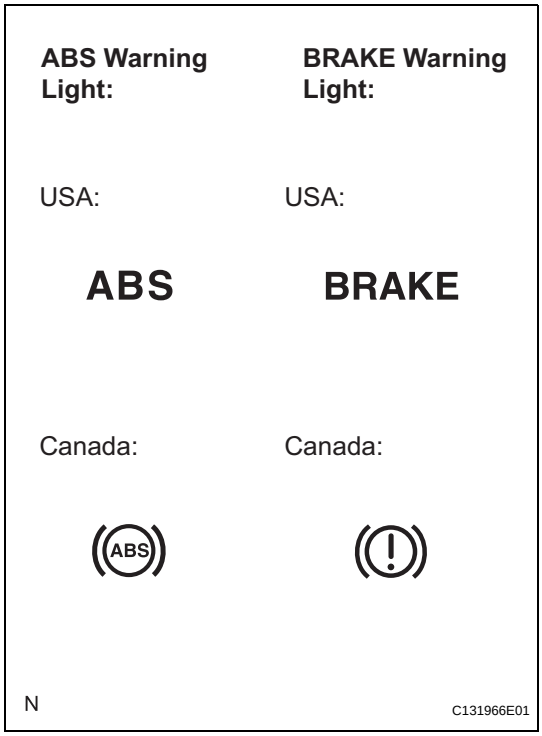

TEST MODE PROCEDURE

1. WARNING LIGHT AND INDICATOR LIGHT INITIAL CHECK

(a) Release the parking brake.

NOTICE:

Before releasing the parking brake, move the shift lever to the P position for safety (AT model) or set the chocks to hold the vehicle for safety (MT model).

HINT:

When the parking brake is applied or the level of the brake fluid is low, the BRAKE warning light comes on.

(b) When the ignition switch is turned on (IG), check that the ABS warning light comes on for approximately 3 seconds.

HINT:

- If the skid control ECU stores any DTCs, the ABS and BRAKE warning lights come on.
- If the indicator remains on or does not come on, proceed to troubleshooting for the light circuits listed below.

Trouble Area	See procedure
ABS warning light (Remains on)	BC-74
ABS warning light circuit (Does not come on)	BC-78
BRAKE warning light (Remains on)	BC-81
BRAKE warning light (Does not come on)	BC-91

2. SENSOR SIGNAL CHECK USING TEST MODE (SIGNAL CHECK) (INTELLIGENT TESTER)

HINT:

If the ignition switch is turned from on (IG) to on (ACC) or off during Test Mode (signal check), DTCs recorded during the signal check function will be erased.

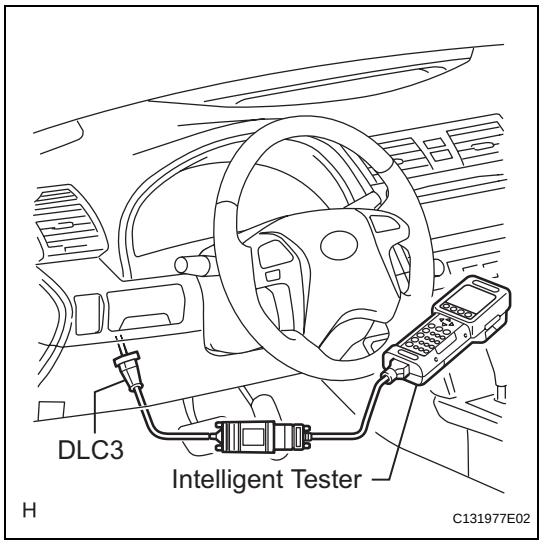

(a) Procedure to enter Test Mode.
(1) Turn the ignition switch off.
(2) Connect the intelligent tester to the DLC3.
(3) Check that the steering wheel is centered and move the shift lever to the P position (for Automatic Transaxle) or apply the parking brake (Manual Transaxle).
(4) Turn the ignition switch on (IG).

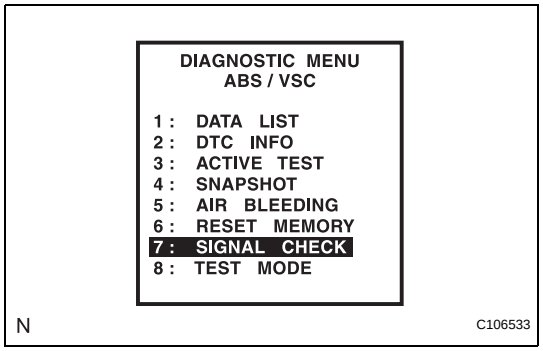

(5) Set the intelligent tester to Test Mode (select "SIGNAL CHECK").
HINT:
Refer to the intelligent tester operator's manual for further details.

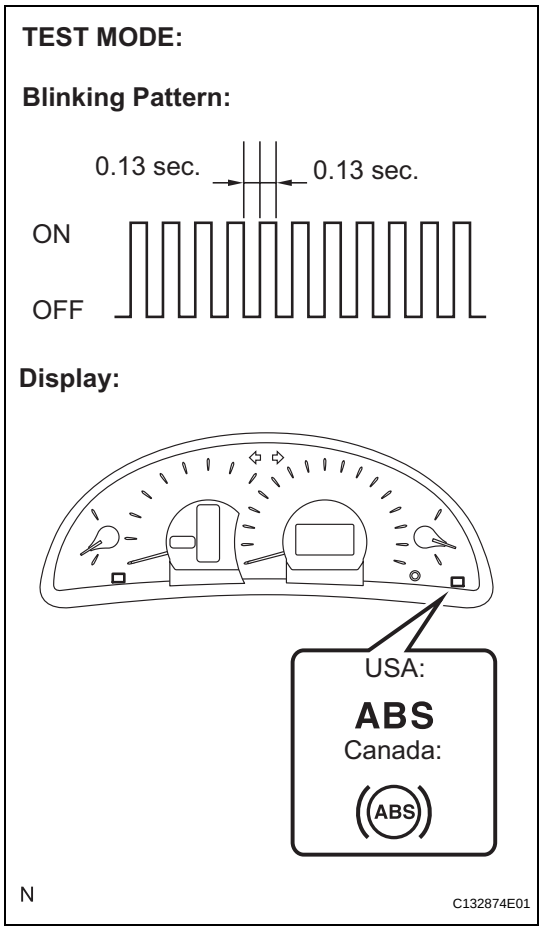

(6) Check that the ABS warning light comes on for several seconds and then blinks in test mode.
HINT:
If the ABS warning light does not blink, inspect the ABS warning light circuit.

Trouble Area	See procedure
ABS warning light (Does not come on)	BC-78

(b) Check the sensor signal.
(1) Drive the vehicle straight ahead.
Accelerate the vehicle to a speed of 28 mph (45 km/h) or more for several seconds and check that the ABS warning light goes off when the brake pedal is depressed.
HINT:
- The sensor check may not be completed if wheel spin occurs, or if the steering wheel is turned during this check.
- The ABS warning light goes off when the sensor signal check has been completed and the brake pedal is depressed.
- The ABS warning light comes on immediately after a malfunction has been detected during the speed sensor signal check.

BC

(c) Stop the vehicle.

NOTICE:

- **The speed sensor check may not be completed if the speed sensor check is started while turning the steering wheel or spinning the wheels.**
- **If the signal check has not been completed, the ABS warning light will blink while driving and the ABS system will not operate.**

(d) Read the DTC(s) by following the tester screen.

NOTICE:

- **If only the DTCs are displayed, repair the malfunction area and clear the DTCs.**
- **If the DTCs or Test Mode codes (DTC of signal check function) are displayed, repair the malfunction area, clear the DTCs and perform the Test Mode inspection.**

HINT:

See the list of DTCs (See procedure "A").

3. SENSOR SIGNAL CHECK BY TEST MODE (SIGNAL CHECK) (SST CHECK WIRE)

HINT:

If the ignition switch is turned from on (IG) to on (ACC) or off during Test Mode (signal check), DTCs recorded during the signal check will be erased.

(a) Procedure for Test Mode.

(1) Turn the ignition switch off.

(2) Check that the steering wheel is centered and move the shift lever to the P position (Automatic Transaxle) or apply the parking brake (Manual Transaxle).

(3) Using SST, connect terminals TS and CG of the DLC3.

SST 09843-18040

(4) Turn the ignition switch on (IG).

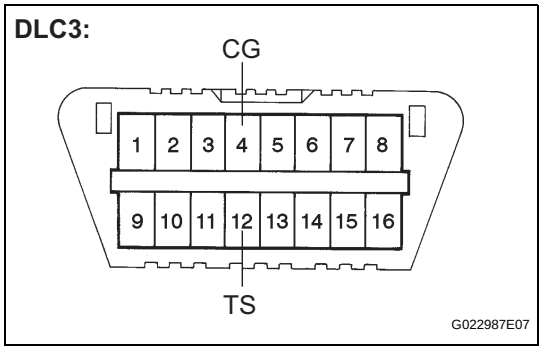

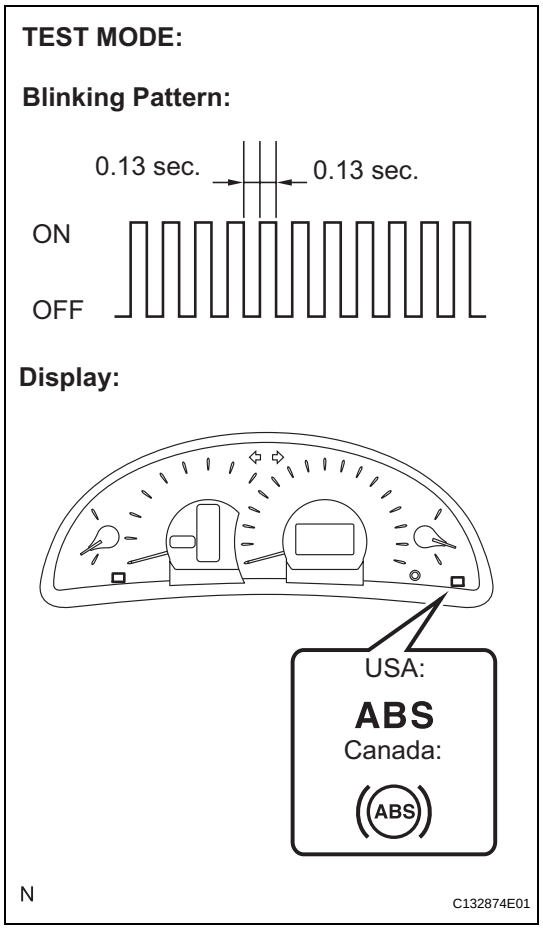

(5) Check that the ABS warning light comes on for several seconds and then blinks in Test Mode.
HINT:
If the ABS warning light does not blink, inspect the TS and CG terminal circuit, and ABS warning light circuit.

Trouble Area	See procedure
TS and CG terminal circuit	BC-97
ABS warning light circuit (Does not come on)	BC-78

(b) Check the sensor signal.
(1) Drive the vehicle straight ahead.
Accelerate the vehicle to a speed of 28 mph (45 km/h) or more for several seconds and check that the ABS warning light goes off when the brake pedal is depressed.
HINT:
- The sensor check may not be completed if wheel spin occurs, or if the steering wheel is turned during this check.
- The ABS warning light goes off when the sensor signal check has been completed and the brake pedal is depressed.
- The ABS warning light comes on immediately after a malfunction has been detected during the speed sensor signal check.

(c) Stop the vehicle.
NOTICE:
- **The speed sensor check may not be completed if the speed sensor check is started while turning the steering wheel or spinning the wheels.**
- **If the signal check has not been completed, the ABS warning light will blink while driving and the ABS system will not operate.**

(d) Using SST, connect terminals TC and CG of the DLC3.
SST 09843-18040

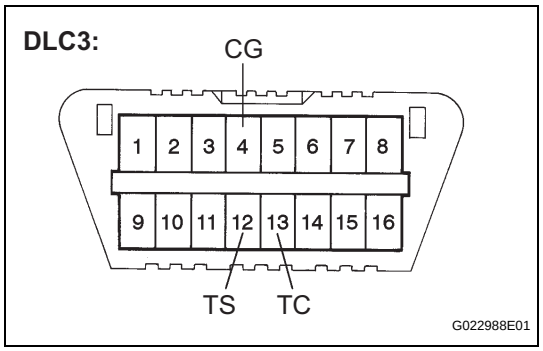

BC

(e) Count the number of blinks of the ABS warning light.

Blinking Pattern of Normal System Code:

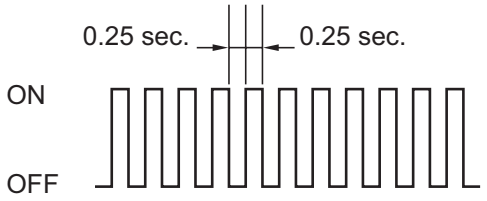

Blinking Pattern of Trouble Code (Example Codes 71 and 72):

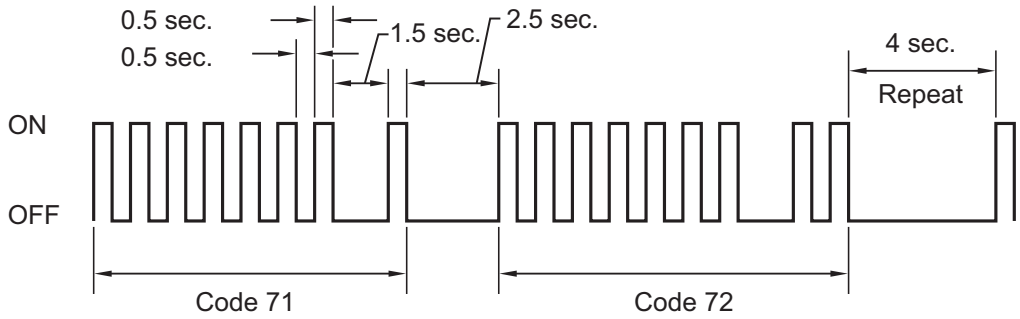

N

C132876E01

NOTICE:

- **If only the DTCs are displayed, repair the malfunction area and clear the DTCs.**
- **If the DTCs or Test Mode codes (DTC of signal check function) are displayed, repair the malfunction area, clear the DTCs and perform the Test Mode inspection.**

HINT:

- If more than 1 malfunction is detected at the same time, the lowest numbered code will be displayed first.
- See the list of DTCs (See procedure "A").

(f) After performing the check, disconnect the SST from terminals TS and CG, and TC and CG of the DLC3, and turn the ignition switch off.

(g) Turn the ignition switch on (IG) to cancel the test mode.

HINT:

- If the ignition switch is not turned on (IG) after the SST is removed from the DLC3, the previous Test Mode will continue.
- If the ignition switch is turned on (IG) with terminals TS and CG shorted, the previous Test Mode will continue.

4. DTC OF TEST MODE (SIGNAL CHECK) FUNCTION (Procedure "A")

DTC of Test Mode (Signal Check):

Code No.	Diagnosis	Trouble Area
C1271/71	Low output signal of front speed sensor RH	• Front speed sensor RH • Sensor installation • Speed sensor rotor
C1272/72	Low output signal of front speed sensor LH	• Front speed sensor LH • Sensor installation • Speed sensor rotor
C1273/73	Low output signal of rear speed sensor RH	• Rear speed sensor RH • Sensor installation • Speed sensor rotor
C1274/74	Low output signal of rear speed sensor LH	• Rear speed sensor LH • Sensor installation • Speed sensor rotor
C1275/75	Abnormal change in output signal of front speed sensor RH	• Front speed sensor RH • Front speed sensor circuit RH • Sensor installation
C1276/76	Abnormal change in output signal of front speed sensor LH	• Front speed sensor LH • Front speed sensor circuit LH • Sensor installation
C1277/77	Abnormal change in output signal of rear speed sensor RH	• Rear speed sensor RH • Rear speed sensor circuit RH • Sensor installation
C1278/78	Abnormal change in output signal of rear speed sensor LH	• Rear speed sensor LH • Rear speed sensor circuit LH • Sensor installation

HINT:
The codes in this table are output only in Test Mode (signal check).

PROBLEM SYMPTOMS TABLE

If a normal code is displayed during the DTC check but the problem still occurs, check the circuits for each problem symptom in the order given in the table below and proceed to the relevant troubleshooting page.

NOTICE:

When replacing the skid control ECU, sensor, etc., turn the ignition switch off.

HINT:

- Inspect the fuses and relays before investigating the suspected areas as shown in the table below.
- Inspect each malfunction circuit in numerical order for the corresponding symptoms.

ANTI-LOCK BRAKE SYSTEM:

Symptom	Suspected area	See page
ABS does not operate	1. Check the DTC reconfirming that the normal system code is output	BC-21
	2. IG power source circuit	BC-63
	3. Front speed sensor circuit	BC-30
	4. Rear speed sensor circuit	BC-38
	5. Check the brake actuator assembly with the intelligent tester (Check brake actuator assembly operation using the active test function) If abnormal, check the hydraulic circuit for leakage	BR-42
	6. If the symptoms still occur even after the above circuits in suspected areas have been inspected and proved to be normal, replace the brake actuator assembly (skid control ECU)	BC-432
ABS does not operate efficiently	1. Check the DTC reconfirming that the normal system code is output.	BC-21
	2. Front speed sensor circuit	BC-30
	3. Rear speed sensor circuit	BC-38
	4. Stop light switch circuit	BC-67
	5. Check the brake actuator assembly with the intelligent tester (Check brake actuator assembly operation using the active test function)	BR-42
	6. If the symptoms still occur even after the above circuits in suspected areas have been inspected and proved to be normal, replace the brake actuator assembly (skid control ECU)	BC-432
ABS warning light malfunction (Remains on)	1. ABS warning light circuit	BC-74
	2. Brake actuator assembly (skid control ECU)	BC-432
ABS warning light malfunction (Does not come on)	1. ABS warning light circuit	BC-78
Brake warning light malfunction (Remains on)	1. Brake warning light circuit	BC-81
	2. Brake actuator assembly (skid control ECU)	BC-432
Brake warning light malfunction (Does not come on)	1. Brake warning light circuit	BC-91
	2. Brake actuator assembly (skid control ECU)	BC-432
ABS sensor DTC check cannot be done	1. Check the DTC again and make sure that the normal system code is output	BC-21
	2. TS and CG terminal circuit	BC-97
	3. TC and CG terminal circuit	BC-94
	4. If the symptoms still occur even after the above circuits in suspected areas have been inspected and proved to be normal, replace the brake actuator assembly (skid control ECU)	BC-432

TERMINALS OF ECU

1. TERMINALS OF ECU

Skid Control ECU (Brake Actuator Assembly):

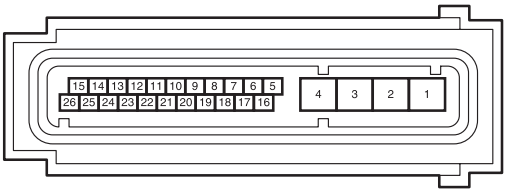

N

C131974E01

Symbols (Terminal No.)	Terminal Description
GND2 (1)	Actuator pump motor ground
+BM (2)	Motor relay power supply
+BS (3)	Solenoid valves power supply
GND1 (4)	Skid control ground
FL+ (5)	Front LH (+) wheel speed signal input
FL- (6)	Front LH (-) wheel speed signal input
RL+ (7)	Rear LH (+) wheel speed signal input
RR- (8)	Rear RH (-) wheel speed signal input
FR- (9)	Front RH (-) wheel speed signal input
FR+ (10)	Front RH (+) wheel speed signal input
D/G (11)	Diagnosis tester communication line
CANL (15)	CAN communication line L
RL- (17)	Rear LH (-) wheel speed signal input
IG1 (18)	ECU power supply
RR+ (19)	Rear RH (+) wheel speed signal input
STP (20)	Stop light switch input
SP1 (23)	Speed signal output for speedometer
TS (25)	Sensor check input
CANH (26)	CAN communication line H

2. TERMINAL INSPECTION

(a) Disconnect the connector and measure the voltage or resistance on the wire harness side.
HINT:
Voltage cannot be measured with the connector connected to the skid control ECU as the connector is watertight.

Skid Control ECU (Harness Side Connector Front View):

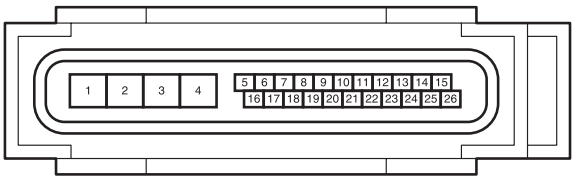

N

C131969E01

Symbols (Terminal No.)	Wiring Color	Terminal Description	Condition	Specified Condition
GND2 (1) - Body ground	W-B - Body ground	Actuator pump motor ground	Always	Below 1 Ω
+BM (2) - Body ground	B - Body ground	Motor relay power supply	Always	10 to 14 V
+BS (3) - Body ground	L - Body ground	Solenoid valves power supply	Always	10 to 14 V
GND1 (4) - Body ground	W-B - Body ground	Skid control ECU ground	Always	Below 1 Ω
IG1 (18) - Body ground	P - Body ground	ECU power supply	Ignition switch on (IG)	10 to 14 V
STP (20) - Body ground	P - Body ground	Stop light switch input	Stop light switch ON (Brake pedal depressed)	8 to 14 V
STP (20) - Body ground	P - Body ground	Stop light switch input	Stop light switch OFF (Brake pedal released)	Below 3 V

DIAGNOSIS SYSTEM

1. DIAGNOSIS SYSTEM

(a) Inspect the battery voltage.

Standard voltage:

11 to 14 V

If the voltage is below 11 V, recharge the battery before proceeding.

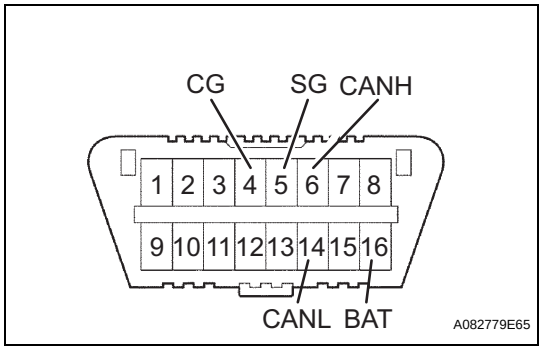

(b) The vehicle's ECU uses the ISO 15765-4 for communication protocol. The terminal arrangement of the DLC3 complies with SAE J1962 and matches the ISO 15765-4 format.

HINT:

Connect the cable of the intelligent tester to the DLC3, turn the ignition switch on (IG) and attempt to use the intelligent tester. If the screen displays a communication error message, a problem exists on either the vehicle side or the tester side.

If the communication is normal when the tester is connected to another vehicle, inspect the DLC3 on the original vehicle.

If the communication is still impossible when the tester is connected to another vehicle, the problem is probably in the tester itself. Consult the Service Department listed in the tester's instruction manual.

Symbols (Terminal No.)	Terminal Description	Condition	Specified Condition
CG (4) - Body ground	Chassis ground	Always	Below 1 Ω
SG (5) - Body ground	Signal ground	Always	Below 1 Ω
BAT (16) - Body ground	Battery positive	Always	9 to 14 V
CANH (6) - CANL (14)	HIGH-level CAN bus line	Ignition switch OFF*	54 to 69 Ω
CANH (6) - Battery positive	HIGH-level CAN bus line	Ignition switch OFF*	6 kΩ or higher
CANH (6) - CG (4)	HIGH-level CAN bus line	Ignition switch OFF*	200 Ω or higher
CANL (14) - Battery positive	LOW-level CAN bus line	Ignition switch OFF*	6 kΩ or higher
CANL (14) - CG (4)	LOW-level CAN bus line	Ignition switch OFF*	200 Ω or higher

NOTICE:

***: Before measuring the resistance, leave the vehicle as is for at least 1 minute and do not operate the ignition switch, any other switches or the doors.**

2. DIAGNOSIS

NOTICE:

When releasing the parking brake, set chocks to hold the vehicle for safety.

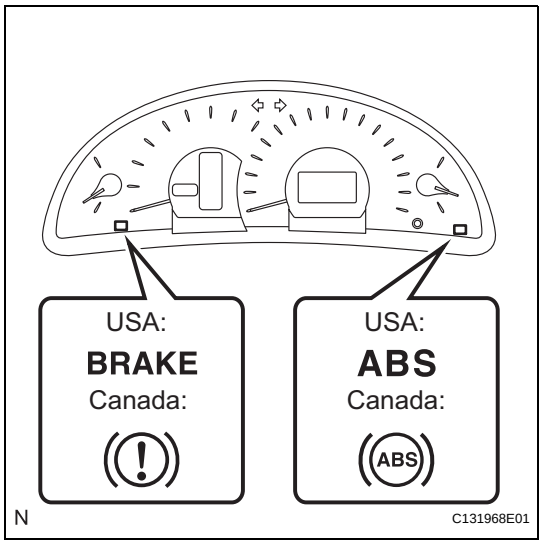

(a) Release the parking brake.
(b) Turn the ignition switch on (IG).
(c) If the skid control ECU detects a malfunction, the ABS warning light and brake warning light will come on to warn the driver. The table below indicates which light will come on when there is a malfunction in a particular function.

Item/Trouble Area	ABS System	EBD System	Skid Control ECU
ABS Warning light	○	○	○
Brake Warning light	-	○	○

○: Light ON
-: Light OFF

- The DTCs are simultaneously stored in the memory. The DTCs can be read by connecting the SST (09843-18043) between the TC and CG terminals of the DLC3 and observing the blinking pattern of the ABS warning light, or by connecting an intelligent tester (See page BC-21).
- This system has a sensor signal check function (See page BC-11).

3. WARNING LIGHT INITIAL CHECK

NOTICE:

When releasing the parking brake, set chocks to hold the vehicle for safety.

HINT:

When the parking brake is applied or the level of the brake fluid is low, the brake warning light comes on.

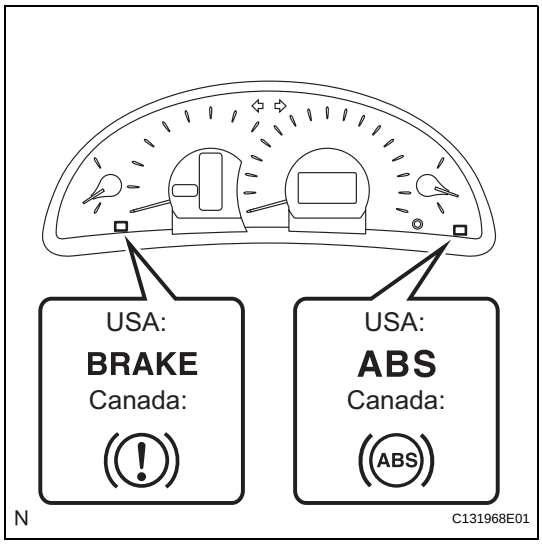

(a) Release the parking brake.
(b) Check that the ABS warning light and brake warning light come on when the ignition switch is turned on (IG) and go off in approximately 3 seconds.
(c) If the warning lights do not come on or remain on, inspect the ABS warning light circuit and/or brake warning light circuit.

Trouble Area	See procedure
ABS warning light circuit (Remains on)	BC-74
ABS warning light circuit (Does not come on)	BC-78
Brake warning light circuit (Remains on)	BC-81
Brake warning light circuit (Does not come on)	BC-91

BC

4. SYMPTOM SIMULATION

HINT:

The most difficult case in troubleshooting is when no symptoms occur. In such cases, a thorough customer problem analysis must be carried out. Then the same or similar conditions and environment in which the problem occurred in the customer's vehicle should be reproduced. No matter how experienced or skilled a technician may be, if he proceeds to troubleshoot without confirming the problem symptoms, he will likely overlook something important and make a wrong guess at some points in the repair operation. This leads to a standstill in troubleshooting.

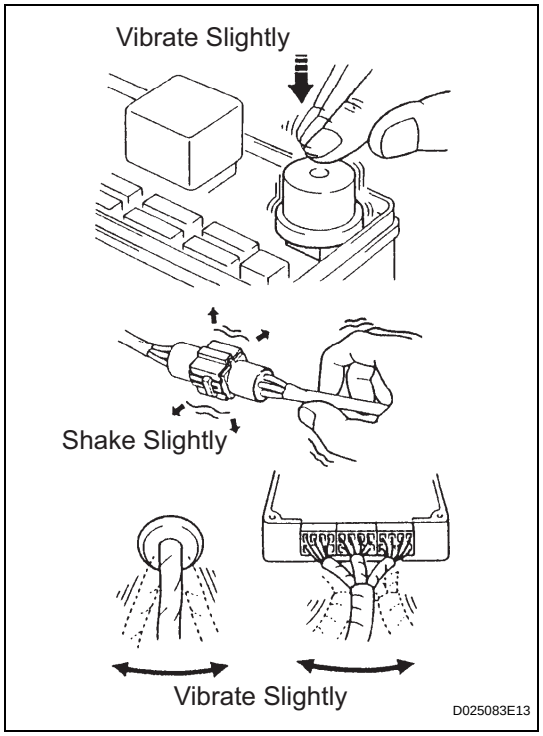

(a) Vibration method: When vibration seems to be the major cause.

HINT:

Perform the simulation method only during the primary check period (for approximately 6 seconds after the ignition switch is turned on (IG)).

(1) Slightly vibrate the part of the sensor considered to be the problem cause with your fingers and check whether the malfunction occurs.

(2) Slightly shake the connector vertically and horizontally.

HINT:

Shaking the relays too strongly may result in open relays.

(3) Slightly shake the wire harness vertically and horizontally. The connector joint and fulcrum of the vibration are the major areas to be checked thoroughly.

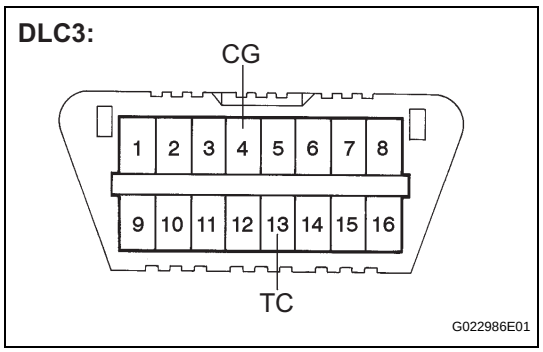

DTC CHECK / CLEAR

1. DTC CHECK / CLEAR (SST CHECK WIRE)

(a) DTC check

(1) Using SST, connect terminals TC and CG of the DLC3.

SST 09843-18040

(2) Turn the ignition switch on (IG).

(3) Read the DTCs from the ABS warning light on the combination meter.

HINT:

If no code appears, inspect the TC and CG terminal circuit and the ABS warning light circuit.

Trouble Area	See procedure
TC and CG terminal circuit	BC-94
ABS warning light circuit (Remains on)	BC-74
ABS warning light circuit (Does not come on)	BC-78

BC

(4) As an example, refer to the chart below for the blinking patterns of the normal system code and trouble codes 11 and 21.

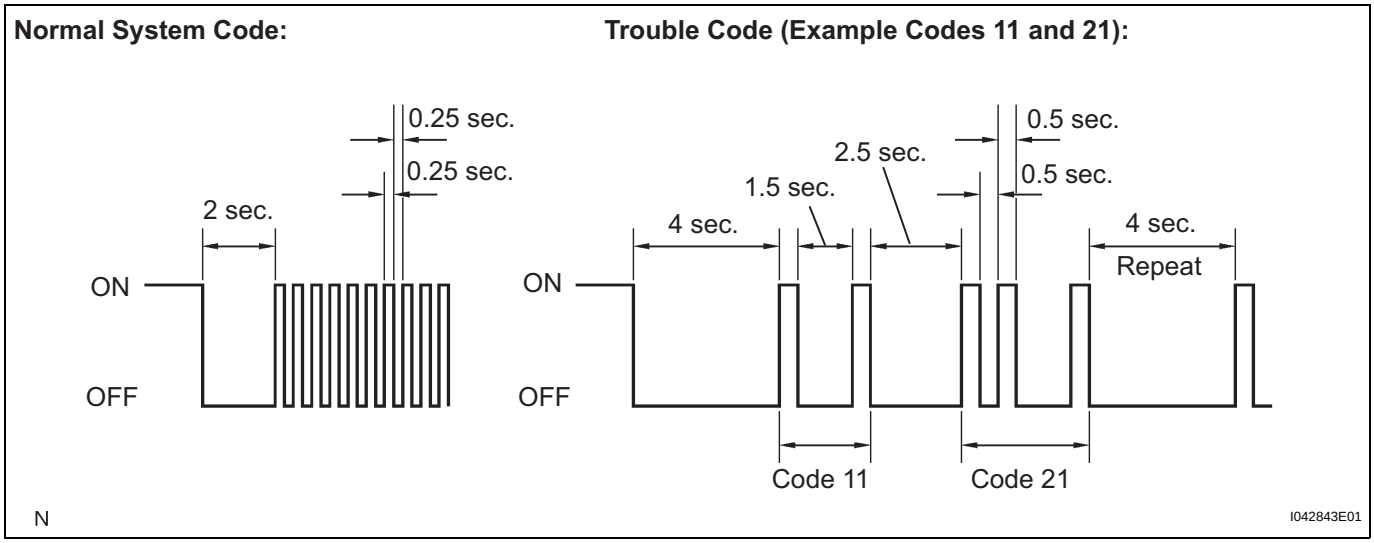

(5) The codes are explained in the code table (See page BC-27).

(6) After completing the check, disconnect terminals TC and CG of the DLC3, and turn off the display. If 2 or more DTCs are detected at the same time, the DTCs will be displayed in ascending order.

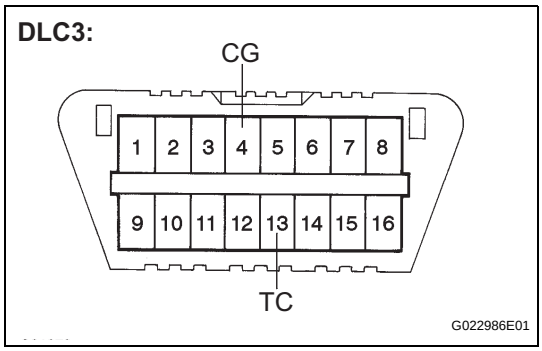

(b) DTC clear

(1) Using SST, connect terminals TC and CG of the DLC3.
SST 09843-18040

(2) Turn the ignition switch on (IG).

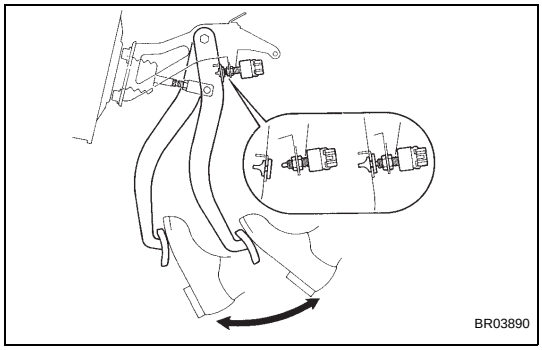

(3) Clear the DTCs stored in the ECU by depressing the brake pedal 8 times or more within 5 seconds.

(4) Check that the warning light indicates the normal system code.

(5) Remove the SST from the terminals of the DLC3.
HINT:
Clearing the DTCs cannot be performed by disconnecting the battery terminal or the ECU-IG fuse.

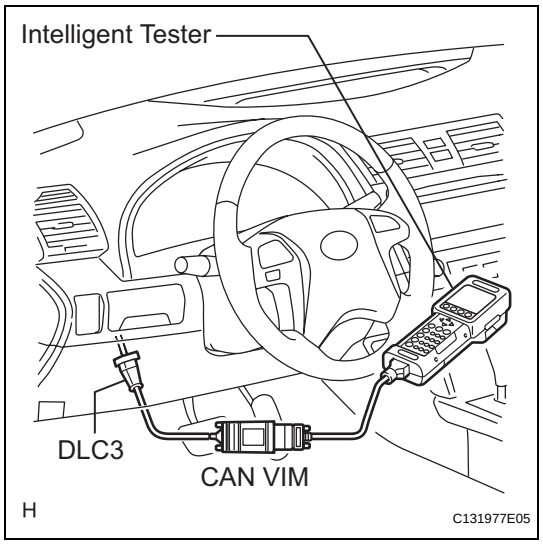

2. DTC CHECK/CLEAR (WHEN USING INTELLIGENT TESTER:)

(a) DTC check
  (1) Connect the intelligent tester to the DLC3.
  (2) Turn the ignition switch on (IG).
  (3) Read the DTCs by following the prompts on the tester screen.

(b) DTC clear
  (1) Connect the intelligent tester to the DLC3.
  (2) Turn the ignition switch on (IG).
  (3) Operate the intelligent tester to clear the codes.
    HINT:
    Refer to the intelligent tester operator's manual for further details.

3. END OF DTC CHECK/CLEAR

(a) Turn the ignition switch on (IG).

(b) Check that the ABS warning light goes off within approximately 3 seconds.

FREEZE FRAME DATA

1. FREEZE FRAME DATA

(a) Whenever a DTC is detected or the ABS operates, the skid control ECU stores the current vehicle (sensor) status as Freeze Frame Data.

(b) The skid control ECU stores the number of times (maximum: 31) the ignition switch has been turned from off to on (IG) since the last time the ABS was activated.

HINT:

- Freeze frame data at the time the ABS operates: The skid control ECU stores and updates data whenever the ABS system operates.
  When the skid control ECU stores data at the time a DTC is detected, the data stored during ABS operation is erased.
- Freeze frame data at the time a DTC is detected: When the skid control ECU stores data at the time a DTC is detected, no updates will be performed until the data is cleared.

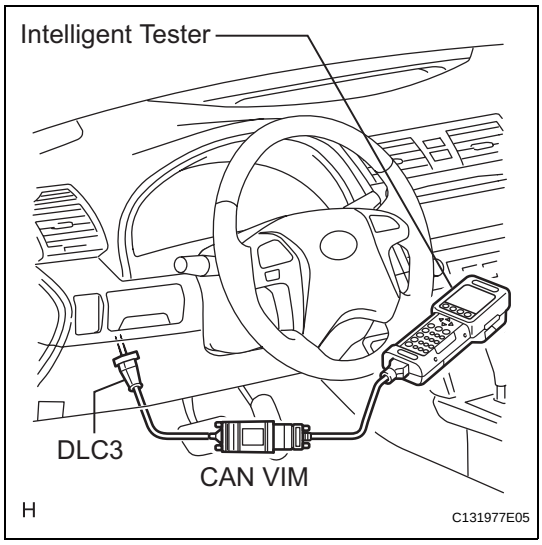

(c) Connect the intelligent tester to the DLC3.

(d) Turn the ignition switch on (IG).

(e) Select "DTC INFO" on the tester display.

(f) On the DTC data display screen, select the DTC data display with "*".

Intelligent Tester Display	Measurement Item	Reference Value
TROUBLE CODE	Freeze DTC	min.: 0, max.: 65535
#DTC	Number of trouble codes	min.: 0, max.: 255
FREEZE TIME	Elapsed time after freeze trigger	Min.: 0 ms, Max.: 500 ms
#IG ON	Number of operations of ignition switch on (IG) after storing freeze frame data	0 to 31
STOP LAMP SW	Stop light switch signal	Stop light switch ON: ON, OFF: OFF
PARKING BRAKE SW	Parking brake condition	ON: Parking brake on OFF: Parking brake off
OPERATED SYSTEM	Operated system	ABS operated: ABS
FR WHEEL SPD	Front right wheel speed	Min.: 0 MPH (0 km/h), Max.: 202 MPH (326 km/h)
FL WHEEL SPD	Front left wheel speed	Min.: 0 MPH (0 km/h), Max.: 202 MPH (326 km/h)
RR WHEEL SPD	Rear right wheel speed	Min.: 0 MPH (0 km/h), Max.: 202 MPH (326 km/h)

Intelligent Tester Display	Measurement Item	Reference Value
RL WHEEL SPD	Rear left wheel speed	Min.: 0 MPH (0 km/h), Max.: 202 MPH (326 km/h)
VEHICLE SPD	Vehicle speed reading	Speed indication on the meter
SPD GRADE	Vehicle speed grade	Min.: -1.869 G, Max.: 1.869 G

FAIL-SAFE CHART

1. FAIL SAFE OPERATION

If there is a problem with sensor signals or brake actuator systems, the skid control ECU will prohibit power supply to the brake actuator and terminate ABS control.

ABS control will be prohibited, but EBD control continues as much as possible. If EBD control is impossible, the brake warning light will come on to warn the driver (See page BC-19).

Malfunction Area	Control Method
ABS system	Prohibits the ABS control
EBD system	Prohibits the ABS and EBD control

HINT:

If the ABS system has a malfunction, the brake system will operate normally without ABS control.

DATA LIST / ACTIVE TEST

1. DATA LIST

HINT:
According to the DATA LIST displayed by the intelligent tester, the value of the switch, sensor, actuator and other items can be read without removing any parts. Reading the DATA LIST as a first step in troubleshooting is one of the methods to save labor time.

(a) Connect the intelligent tester to the DLC3.
(b) Turn the ignition switch on (IG).
(c) According to the display on the tester, read the "DATA LIST".

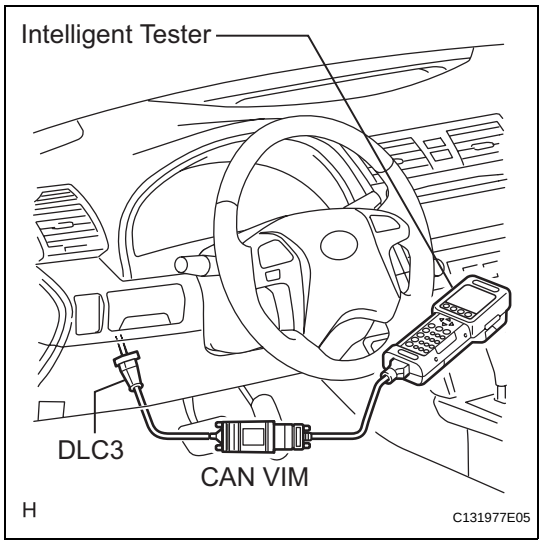

DATA LIST:

Item	Measurement Item / Range (Display)	Normal Condition	Diagnostic Note
ABS MOT RELAY	ABS motor relay / ON or OFF	ON: During pump motor operation OFF: No pump motor operation	-
SOL RELAY	Solenoid relay / ON or OFF	ON: Solenoid relay ON OFF: Solenoid relay OFF	-
STOP LAMP SW	Stop light switch / ON or OFF	ON: Brake pedal depressed OFF: Brake pedal released	-
PARKING BRAKE SW	Parking brake switch / ON or OFF	ON: Parking brake applied OFF: Parking brake released	-
FR WHEEL SPD	Wheel speed sensor (FR) reading / min.: 0 km/h (0 MPH), max.: 326 km/h (202 MPH)	Actual wheel speed	Speed indicated on speedometer
FL WHEEL SPD	Wheel speed sensor (FL) reading / min.: 0 km/h (0 MPH), max.: 326 km/h (202 MPH)	Actual wheel speed	Speed indicated on speedometer
RR WHEEL SPD	Wheel speed sensor (RR) reading / min.: 0 km/h (0 MPH), max.: 326 km/h (202 MPH)	Actual wheel speed	Speed indicated on speedometer
RL WHEEL SPD	Wheel speed sensor (RL) reading / min.: 0 km/h (0 MPH), max.: 326 km/h (202 MPH)	Actual wheel speed	Speed indicated on speedometer
VEHICLE SPD	Vehicle speed reading / min.: 0 km/h (0 MPH), max.: 326 km/h (202 MPH)	Actual wheel speed	Speed indicated on speedometer
IG VOLTAGE	ECU power supply voltage / NORMAL or TOO LOW	NORMAL: 9.5 V or over TOO LOW: Below 9.5 V	-
SFRR	ABS solenoid (SFRR) ON / OFF	ON: Operates	-
SFRH	ABS solenoid (SFRH) ON / OFF	ON: Operates	-
SFLR	ABS solenoid (SFLR) ON / OFF	ON: Operates	-

Item	Measurement Item / Range (Display)	Normal Condition	Diagnostic Note
SFLH	ABS solenoid (SFLH) ON / OFF	ON: Operates	-
SRRR	ABS solenoid (SRRR (SRR)) ON / OFF	ON: Operates	-
SRRH	ABS solenoid (SRRH (SRH)) ON / OFF	ON: Operates	-
SRLR	ABS solenoid (SRLR) ON / OFF	ON: Operates	-
SRLH	ABS solenoid (SRLH) ON / OFF	ON: Operates	-
TEST MODE	Test mode / NORMAL or TEST	NORMAL: Normal mode TEST: During test mode	-
#CODES	Number of DTCs recorded / min.: 0, max.: 255	Min.: 0, max.: 19	-
ABS WARN LAMP	ABS warning light ON /OFF	ON: ABS warning light ON OFF: ABS warning light off	-
BRAKE WARN LAMP	Brake warning light ON / OFF	ON: Brake warning light ON OFF: Brake warning light off	-
FR WHEEL ACCEL	Front right wheel acceleration / Min.: -200.84 m/s, Max.: 199.27 m/s	0 m/s	-
FL WHEEL ACCEL	Front left wheel acceleration / Min.: -200.84 m/s, Max.: 199.27 m/s	0 m/s	-
RR WHEEL ACCEL	Rear right wheel acceleration / Min.: -200.84 m/s, Max.: 199.27 m/s	0 m/s	-
RL WHEEL ACCEL	Rear left wheel acceleration / Min.: -200.84 m/s, Max.: 199.27 m/s	0 m/s	-
FR ABS STATUS	Front right ABS control status / ON or OFF	ON: During ABS control OFF: Not ABS control	-
FL ABS STATUS	Front left ABS control status / ON or OFF	ON: During ABS control OFF: Not ABS control	-
RR ABS STATUS	Rear right ABS control status / ON or OFF	ON: During ABS control OFF: Not ABS control	-
RL ABS STATUS	Rear left ABS control status / ON or OFF	ON: During ABS control OFF: Not ABS control	-
FR EBD STATUS	Front right EBD control status / ON or OFF	ON: During EBD control OFF: Not EBD control	-
FL EBD STATUS	Front left EBD control status / ON or OFF	ON: During EBD control OFF: Not EBD control	-
RR EBD STATUS	Rear right EBD control status / ON or OFF	ON: During EBD control OFF: Not EBD control	-
RL EBD STATUS	Rear left EBD control status / ON or OFF	ON: During EBD control OFF: Not EBD control	-

BC

2. ACTIVE TEST

HINT:

Performing the ACTIVE TEST using the intelligent tester allows the relay, actuator and other items to operate without removing any parts. Performing the ACTIVE TEST as a first step in troubleshooting is one of the methods to save labor time.

It is possible to display the DATA LIST during the ACTIVE TEST.

(a) Connect the intelligent tester to the DLC3.

(b) Turn the ignition switch on (IG).

(c) According to the display on the tester, perform the "ACTIVE TEST".

ACTIVE TEST:

Item	Vehicle Condition / Test Details	Diagnostic Note
SFRR	Turns ABS solenoid (SFRR) ON / OFF	Operating sound of solenoid (clicking sound) can be heard
SFRH	Turns ABS solenoid (SFRH) ON / OFF	Operating sound of solenoid (clicking sound) can be heard
SFLR	Turns ABS solenoid (SFLR) ON / OFF	Operating sound of solenoid (clicking sound) can be heard
SFLH	Turns ABS solenoid (SFLH) ON / OFF	Operating sound of solenoid (clicking sound) can be heard
SRRR	Turns ABS solenoid (SRRR) ON / OFF	Operating sound of solenoid (clicking sound) can be heard
SRRH	Turns ABS solenoid (SRRH) ON / OFF	Operating sound of solenoid (clicking sound) can be heard
SRLR	Turns ABS solenoid (SRLR) ON / OFF	Operating sound of solenoid (clicking sound) can be heard
SRLH	Turns ABS solenoid (SRLH) ON / OFF	Operating sound of solenoid (clicking sound) can be heard
MOT RELAY	Turns ABS motor relay ON / OFF	Operating sound of motor can be heard
ABS WRN LIGHT	Turns ABS warning light ON / OFF	Observe combination meter
BRAKE WRN LIGHT	Turns Brake warning light ON / OFF	Observe combination meter

DIAGNOSTIC TROUBLE CODE CHART

NOTICE:
Turn the ignition switch off before removing parts.
HINT:
- If no abnormality is found when inspecting parts, inspect the skid control ECU and ground points for poor contact.
- If a malfunction code is displayed during the DTC check, check the circuit indicated by the DTC. For details of each code, refer to the "See page" for respective "DTC No." in the DTC chart.
- When 2 or more DTCs are detected, perform circuit inspection one by one until the problem is identified.

ANTI-LOCK BRAKE SYSTEM:

DTC No.	Detection Item	Trouble Area	See page
C0200/31	Right Front Wheel Speed Sensor Signal Malfunction	1. Front speed sensor RH 2. Front speed sensor RH circuit 3. Front speed sensor rotor RH 4. Sensor installation 5. Brake actuator assembly (skid control ECU)	BC-30
C0205/32	Left Front Wheel Speed Sensor Signal Malfunction	1. Front speed sensor LH 2. Front speed sensor LH circuit 3. Front speed sensor rotor LH 4. Sensor installation 5. Brake actuator assembly (skid control ECU)	BC-30
C0210/33	Right Rear Wheel Speed Sensor Signal Malfunction	1. Rear speed sensor RH 2. Rear speed sensor RH circuit 3. Rear speed sensor rotor RH 4. Sensor installation 5. Brake actuator assembly (skid control ECU)	BC-38
C0215/34	Left Rear Wheel Speed Sensor Signal Malfunction	1. Rear speed sensor LH 2. Rear speed sensor LH circuit 3. Rear speed sensor rotor LH 4. Sensor installation 5. Brake actuator assembly (skid control ECU)	BC-38
C0226/21	SFR Solenoid Circuit	1. SFRR or SFRH circuit 2. Brake actuator assembly	BC-47
C0236/22	SFL Solenoid Circuit	1. SFLR or SFLH circuit 2. Brake actuator assembly	BC-47
C0246/23	SRR Solenoid Circuit	1. SRRR or SRRH circuit 2. Brake actuator assembly	BC-47
C0256/24	SRL Solenoid Circuit	1. SRLR or SRLH circuit 2. Brake actuator assembly	BC-47
C0273/13	Open or Short Circuit in ABS Motor Relay Circuit	1. Brake actuator assembly (motor relay) 2. ABS No. 1 fuse (Fusible link) 3. Wire harness (+BM circuit)	BC-49
C0278/11	Open or Short Circuit in ABS Solenoid Relay Circuit	1. Brake actuator assembly (solenoid relay) 2. ABS No. 2 fuse (Fusible link) 3. Wire harness (+BS circuit)	BC-53

DTC No.	Detection Item	Trouble Area	See page
C1237/37	Speed Sensor Rotor Faulty	1. Brake actuator assembly (skid control ECU) 2. Speed sensor rotor (Front) 3. Rear axle hub and bearing assembly 4. Speed sensor 5. Speed sensor circuit 6. Tire and wheel size 7. Tire deformation	BC-56
C1241/41	Low Battery Positive Voltage or Abnormally High Battery Positive Voltage	1. Battery 2. Charging system 3. Power source circuit 4. Brake actuator assembly (Skid control ECU)	BC-63
C1249/49	Open in Stop Light Switch Circuit	1. Stop light switch 2. Stop light switch circuit 3. Brake actuator assembly (Skid control ECU)	BC-67
C1271/71	Low Output Signal of Front Speed Sensor RH (Test Mode DTC)	1. Front speed sensor RH 2. Sensor installation 3. Skid control rotor	BC-30
C1272/72	Low Output Signal of Front Speed Sensor LH (Test Mode DTC)	1. Front speed sensor LH 2. Sensor installation 3. Skid control rotor	BC-30
C1273/73	Low Output Signal of Rear Speed Sensor RH (Test Mode DTC)	1. Rear speed sensor RH 2. Sensor installation 3. Skid control rotor	BC-38
C1274/74	Low Output Signal of Rear Speed Sensor LH (Test Mode DTC)	1. Rear speed sensor LH 2. Sensor installation 3. Skid control rotor	BC-38
C1275/75	Abnormal Change in Output Signal of Front Speed Sensor RH (Test Mode DTC)	1. Front speed sensor RH 2. Front speed sensor circuit RH 3. Sensor installation	BC-30
C1276/76	Abnormal Change in Output Signal of Front Speed Sensor LH (Test Mode DTC)	1. Front speed sensor LH 2. Front speed sensor circuit LH 3. Sensor installation	BC-30
C1277/77	Abnormal Change in Output Signal of Rear Speed Sensor RH (Test Mode DTC)	1. Rear speed sensor RH 2. Sensor installation 3. Sensor rotor	BC-38
C1278/78	Abnormal Change in Output Signal of Rear Speed Sensor LH (Test Mode DTC)	1. Rear speed sensor LH 2. Sensor installation 3. Sensor rotor	BC-38
C1300/62	Skid Control ECU Malfunction	Brake actuator assembly (skid control ECU)	BC-72
C1330/35	Right Front Speed Sensor Circuit	1. Front speed sensor RH 2. Front speed sensor RH circuit 3. Sensor installation	BC-30
C1331/36	Left Front Speed Sensor Circuit	1. Front speed sensor LH 2. Front speed sensor LH circuit 3. Sensor installation	BC-30
C1332/38	Right Rear Speed Sensor Circuit	1. Rear speed sensor RH 2. Rear speed sensor RH circuit 3. Sensor installation	BC-38
C1333/39	Left Rear Speed Sensor Circuit	1. Rear speed sensor LH 2. Rear speed sensor LH circuit 3. Sensor installation	BC-38
U0073/94	Control Module Communication Bus OFF	1. Wire harness (CANL, CANH circuit) 2. Brake actuator assembly (skid control ECU)	BC-73

DTC	C0200/31	Right Front Wheel Speed Sensor Signal Malfunction
DTC	C0205/32	Left Front Wheel Speed Sensor Signal Malfunction
DTC	C1271/71	Low Output Signal of Front Speed Sensor RH (Test Mode DTC)
DTC	C1272/72	Low Output Signal of Front Speed Sensor LH (Test Mode DTC)
DTC	C1275/75	Abnormal Change in Output Signal of Front Speed Sensor RH (Test Mode DTC)
DTC	C1276/76	Abnormal Change in Output Signal of Front Speed Sensor LH (Test Mode DTC)
DTC	C1330/35	Right Front Speed Sensor Circuit
DTC	C1331/36	Left Front Speed Sensor Circuit

DESCRIPTION

The speed sensors detect wheel speed and transmit the signals to the skid control ECU. These signals are used for control of the ABS control system. Each of the front and rear rotors has 48 serrations. When the rotors rotate, the magnetic field generated by the permanent magnet in the speed sensor induces AC voltage. Since the frequency of this AC voltage changes in direct proportion to the speed of the rotor, the frequency is used by the ECU to detect the speed of each wheel.
DTCs C1271/71 to C1276/76 can be deleted when the speed sensor sends a wheel speed signal or the test mode ends. DTCs C1271/71 to C1276/76 are output only in the test mode.

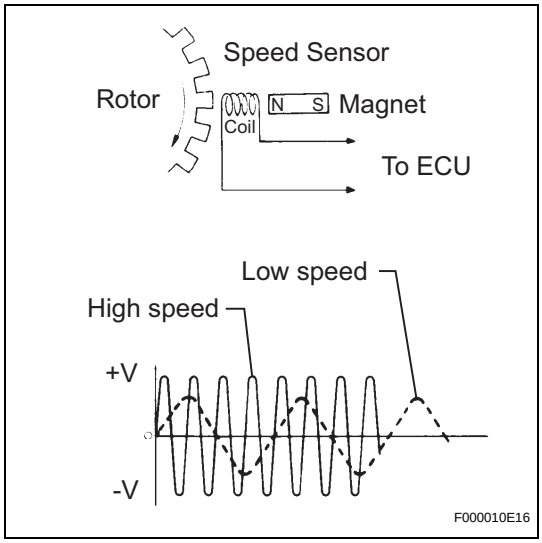

DTC No.	DTC Detecting Condition	Trouble Area
C0200/31 C0205/32	When either of the following is detected: • Vehicle speed is more than 25 mph (40 km/h), and pulses are not input for 0.03 sec. • When the vehicle speed has reached 8 mph (12 km/h) after the initial start or restart, a wheel speed of 0 mph (0 km/h) is detected.	• Front speed sensor RH and/or LH • Front speed sensor circuit RH and/or LH • Front speed sensor rotor RH and/or LH • Sensor installation • Brake actuator assembly (skid control ECU)
C1330/35 C1331/36	Abnormality in the resistance value of each speed sensor is detected.	• Front speed sensor RH and/or LH • Front speed sensor circuit RH and/or LH • Sensor installation
C1271/71 C1272/72	Detected only during test mode.	• Front speed sensor • Sensor installation • Sensor rotor
C1275/75 C1276/76	Detected only during test mode.	• Front speed sensor • Front speed sensor circuit • Sensor installation

HINT:
DTC No. C0200/31 and C1330/35 are for the front speed sensor RH.
DTC No. C0205/32 and C1331/36 are for the front speed sensor LH.

BC

WIRING DIAGRAM

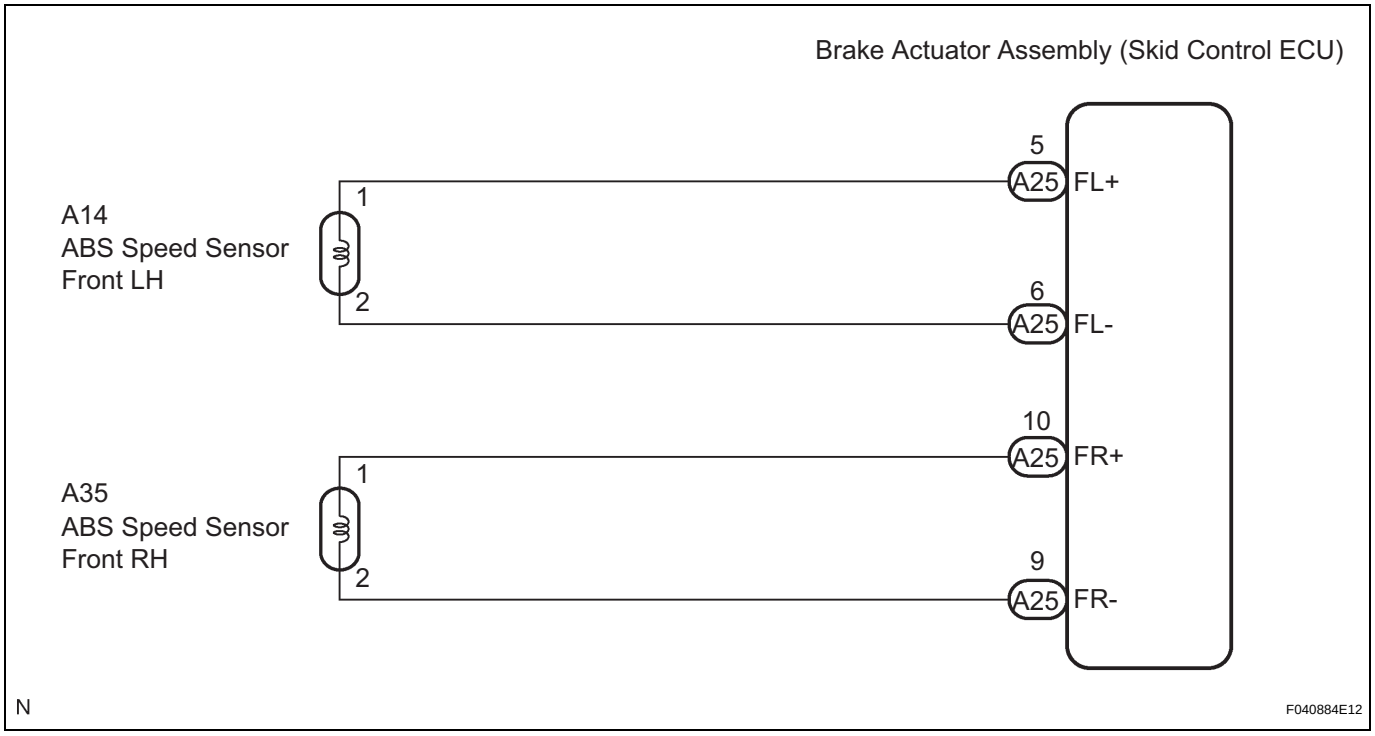

INSPECTION PROCEDURE

HINT:
Check the condition of each related circuit connector before troubleshooting (See page IN-40).

1	READ VALUE OF INTELLIGENT TESTER (FRONT SPEED SENSOR)

(a) Connect the intelligent tester to the DLC3.
(b) Start the engine.

(c) Select "DATA LIST" and read the value displayed on the intelligent tester (See page BC-25).

DATA LIST: ABS

Item	Measurement Item / Range (Display)	Normal Condition
FR WHEEL SPD	Wheel speed sensor (FR) reading / min.: 0 MPH (0 km/h), max.: 202 MPH (326 km/h)	Actual wheel speed
FL WHEEL SPD	Wheel speed sensor (FL) reading / min.: 0 MPH (0 km/h), max.: 202 MPH (326 km/h)	Actual wheel speed

(d) Check that there is no difference between the speed value output from the speed sensor displayed on the intelligent tester and the speed value displayed on the speedometer when driving the vehicle.

OK:

The speed value output from the speed sensor displayed on the intelligent tester is the same as the actual vehicle speed.

NG → **Go to step 5**

BC

OK

2 PERFORM TEST MODE INSPECTION (SIGNAL CHECK)

(a) Check if test mode (signal check) DTCs are detected (See page BC-11).

Result

Condition	Proceed to
Test mode (signal check) DTC is not output	A
Test mode (signal check) DTC is output	B

B → **Go to step 5**

A

3 INSPECT SPEED SENSOR SIGNAL WAVEFORM

Front Speed Sensor (Wire Harness Side) Connector Front View:

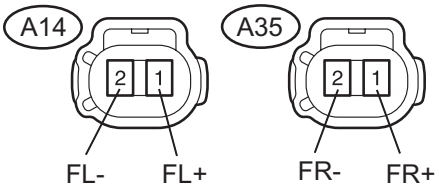

Normal Signal Waveform:

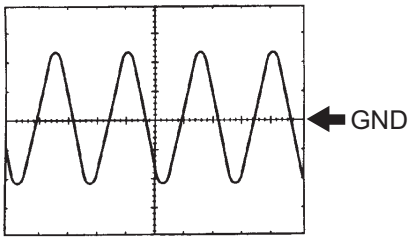

1 V/Division, 2 ms./Division

C132005E01

(a) Lift up the vehicle.
(b) Perform the inspection using an oscilloscope.
  (1) Disconnect the front speed sensor connector.
  (2) Connect the oscilloscope to terminals 1 and 2 of the front speed sensor.
  (3) Check that a waveform is output when the tires are rotated.
  OK:
  The same waveform is output from front wheels and there is no noise or interference in the waveform.
  HINT:
  - As vehicle speed (wheel rotation speed) increases, the width of the waveform narrows and the output voltage becomes greater.
  - When noise is identified in the waveform on the oscilloscope, the erratic signals are generated due to rotor scratches, looseness or foreign matter attached to the speed sensor.
(c) Connect the connector.

NG → **Go to step 11**

OK

4 RECONFIRM DTC

(a) Clear the DTCs (See page BC-21).
(b) Drive the vehicle at a speed of approximately 25 mph (40 km/h) or more for 60 seconds or more.
(c) Check if the same DTCs are recorded (See page BC-21).
  HINT:
  Reinstall the sensors, connectors, etc. and restore the vehicle to its prior condition before rechecking for DTCs.

Result

Condition	Proceed to
DTCs (C0200/31, C0205/32, C1330/35 and C1331/36) are output	A
DTCs (C0200/31, C0205/32, C1330/35 and C1331/36) are output (When troubleshooting in accordance with the PROBLEM SYMPTOMS TABLE)	B
DTCs (C0200/31, C0205/32, C1330/35 and C1331/36) are not output (When troubleshooting in accordance with the DTC CHART)	C

B → **PROCEED TO NEXT CIRCUIT INSPECTION SHOWN IN PROBLEM SYMPTOMS TABLE (See page BC-16)**

C → **END**

BC

A

5 INSPECT FRONT SPEED SENSOR INSTALLATION

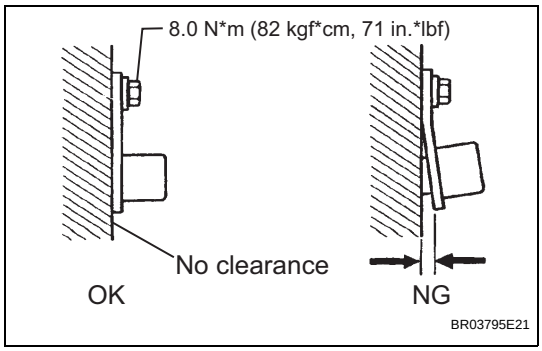

(a) Check the front speed sensor installation.
OK:
The installation bolt is tightened properly.
There is no clearance between the sensor and front steering knuckle.

Torque: 8.0 N*m (82 kgf*cm, 71 in.*lbf)

NOTICE:
Check the speed sensor signal after replacement (See page BC-11).

NG → **REPLACE FRONT SPEED SENSOR (See page BC-438)**

BC

OK

6 INSPECT FRONT SPEED SENSOR

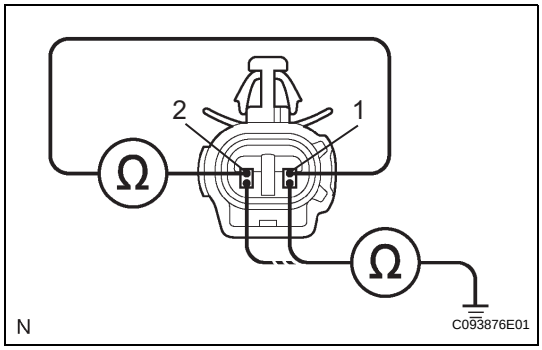

(a) Make sure that there is no looseness at the locking part and the connecting part of the connectors.
(b) Disconnect the front speed sensor connectors.
(c) Measure the resistance according to the value(s) in the table below.
Standard resistance:
LH

Tester Connection	Specified Condition
A14-1 (FL+) - A14-2 (FL-)	0.92 to 1.22 kΩ at 20 °C (68°F)
A14-1 (FL+) - Body ground	10 kΩ or higher
A14-2 (FL-) - Body ground	10 kΩ or higher

RH

Tester Connection	Specified Condition
A35-1 (FR+) - A35-2 (FR-)	0.92 to 1.22 kΩ at 20 °C(68°F)
A35-1 (FR+) - Body ground	10 kΩ or higher
A35-2 (FR-) - Body ground	10 kΩ or higher

NOTICE:
Check the speed sensor signal after replacement (See page BC-11).

NG → **REPLACE FRONT SPEED SENSOR (See page BC-438)**

OK

7 CHECK HARNESS AND CONNECTOR (FRONT SPEED SENSOR TO SKID CONTROL ECU)

Skid Control ECU (Wire Harness Side) Connector Front View:

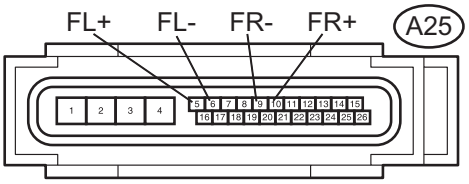

Front Speed Sensor (Wire Harness Side) Connector Front View:

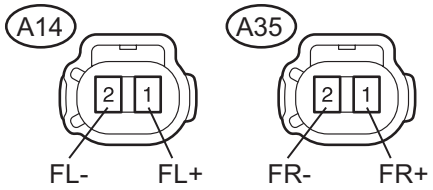

N C132908E02

(a) Disconnect the skid control ECU connector.
(b) Measure the resistance according to the value(s) in the table below.
Standard resistance:
LH

Tester Connection	Specified Condition
A25-5 (FL+) - A14-1 (FL+)	Below 1 Ω
A25-6 (FL-) - A14-2 (FL-)	Below 1 Ω
A14-1 (FL+) - Body ground	10 kΩ or higher
A14-2 (FL-) - Body ground	10 kΩ or higher

RH

Tester Connection	Specified Condition
A25-10 (FR+) - A35-1 (FR+)	Below 1 Ω
A25-9 (FR-) - A35-2 (FR-)	Below 1 Ω
A35-1 (FR+) - Body ground	10 kΩ or higher
A35-2 (FR-) - Body ground	10 kΩ or higher

(c) Connect the connectors.

NG → **REPAIR OR REPLACE HARNESS OR CONNECTOR (FRONT SPEED SENSOR TO SKID CONTROL ECU)**

OK

8 INSPECT SPEED SENSOR SIGNAL WAVEFORM

Front Speed Sensor (Wire Harness Side) Connector Front View:

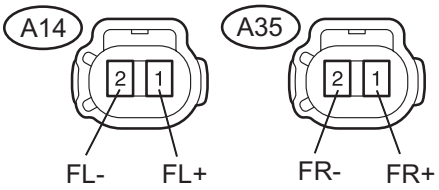

Normal Signal Waveform:

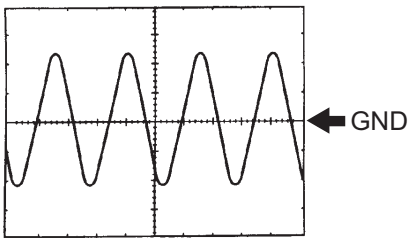

1 V/Division, 2 ms./Division

C132005E01

(a) Lift up the vehicle.
(b) Perform the inspection using an oscilloscope.
  (1) Disconnect the front speed sensor connector.
  (2) Connect the oscilloscope to terminals 1 and 2 of the front speed sensor.
  (3) Check that a waveform is output when the tires are rotated.
  OK:
  The same waveforms is output from front wheels and there is no noise or interference in the waveform.
  HINT:
  - As vehicle speed (wheel rotation speed) increases, the width of the waveform narrows and the output voltage becomes greater.
  - When noise is identified in the waveform on the oscilloscope, the erratic signals are generated due to rotor scratches, looseness or foreign matter attached to the speed sensor.
  (4) Connect the connector.

NG → **Go to step 11**

BC

OK

9	READ VALUE OF INTELLIGENT TESTER (FRONT SPEED SENSOR)

(a) Connect the intelligent tester to the DLC3.
(b) Start the engine.
(c) Select "DATA LIST" and read the value displayed on the intelligent tester (See page BC-25).

DATA LIST: ABS

Item	Measurement Item / Range (Display)	Normal Condition
FR WHEEL SPD	Wheel speed sensor (FR) reading / min.: 0 MPH (0 km/h), max.: 202 MPH (326 km/h)	Actual wheel speed
FL WHEEL SPD	Wheel speed sensor (FL) reading / min.: 0 MPH (0 km/h), max.: 202 MPH (326 km/h)	Actual wheel speed

BC

(d) Check that there is no difference between the speed value output from the speed sensor displayed on the intelligent tester and the speed value displayed on the speedometer when driving the vehicle.
OK:
The speed value output from the speed sensor displayed on the intelligent tester is the same as the actual vehicle speed.
HINT:
If troubleshooting has been carried out according to the "PROBLEM SYMPTOMS TABLE", refer back to the table and proceed to the next step before replacing the part (See page BC-16).

NG → **REPLACE BRAKE ACTUATOR ASSEMBLY (See page BC-432)**

OK

10	RECONFIRM DTC

(a) Clear the DTCs (See page BC-21).
(b) Drive the vehicle at a speed of approximately 25 mph (40 km/h) or more for 60 seconds or more.
(c) Check if the same DTCs are recorded (See page BC-21).
HINT:
Reinstall the sensors, connectors, etc. and restore the vehicle to its prior condition before rechecking for DTCs.

Result

Condition	Proceed to
DTCs (C0200/31, C0205/32, C1330/35 and C1331/36) are output	A
DTCs (C0200/31, C0205/32, C1330/35 and C1331/36) are not output	B

B → **END**

A

11	INSPECT SPEED SENSOR TIP

(a) Remove the front speed sensor (See page BC-438).
(b) Check the sensor tip.
OK:
No scratches or foreign matter on the sensor tip.
NOTICE:
Check the speed sensor signal after cleaning or replacement (See page BC-11).
(c) Install the speed sensor.

NG → **CLEAN OR REPLACE SPEED SENSOR**

OK

CLEAN OR REPLACE SPEED SENSOR ROTOR

DTC	**C0210/33**	**Right Rear Wheel Speed Sensor Signal Malfunction**

DTC	**C0215/34**	**Left Rear Wheel Speed Sensor Signal Malfunction**

DTC	**C1273/73**	**Low Output Signal of Rear Speed Sensor RH (Test Mode DTC)**

DTC	**C1274/74**	**Low Output Signal of Rear Speed Sensor LH (Test Mode DTC)**

DTC	**C1277/77**	**Abnormal Change in Output Signal of Rear Speed Sensor RH (Test Mode DTC)**

DTC	**C1278/78**	**Abnormal Change in Output Signal of Rear Speed Sensor LH (Test Mode DTC)**

DTC	**C1332/38**	**Right Rear Speed Sensor Circuit**

DTC	**C1333/39**	**Left Rear Speed Sensor Circuit**

DESCRIPTION

Refer to DTCs C0200/31, C0205/32, C1330/35, and C1331/36 (See page BC-30).
DTCs from C1273/73 to C1278/78 can be deleted when the speed sensor sends a vehicle speed signal or the test mode ends. DTCs from C1273/73 to C1278/78 are output only in the test mode.

DTC No.	DTC Detecting Condition	Trouble Area
C0210/33 C0215/34	When either of the following is detected: • Vehicle speed is more than 25 mph (40 km/h), and pulses are not input for 0.03 sec. • When the vehicle speed has reached 8 mph (12 km/h), after the initial start or restart a wheel speed of 0 mph (0 km/h) is detected.	• Rear speed sensor RH and/or LH • Rear speed sensor circuit RH and/or LH • Rear speed sensor rotor RH and/or LH • Sensor installation • Brake actuator assembly (skid control ECU)
C1332/38 C1333/39	Abnormality in the resistance value of each speed sensor is detected.	• Rear speed sensor RH and/or LH • Rear speed sensor circuit RH and/or LH • Sensor installation
C1273/73 C1274/74	Detected only during test mode.	• Rear speed sensor • Sensor installation • Sensor rotor
C1277/77 C1278/78	Detected only during test mode.	• Rear speed sensor • Sensor installation • Sensor rotor

HINT:
DTC No. C0210/33 and C1332/38 are for the rear speed sensor RH.
DTC No. C0215/34 and C1333/39 are for the rear speed sensor LH.

WIRING DIAGRAM

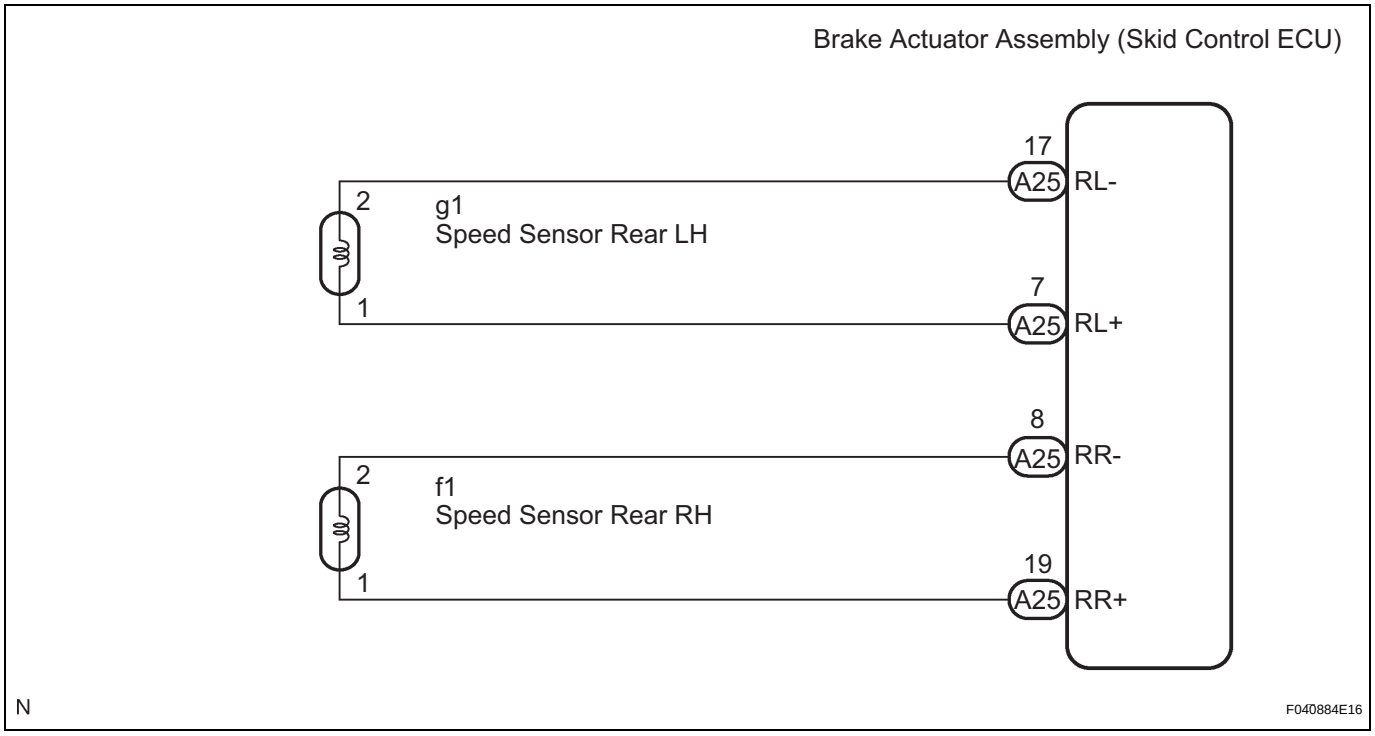

INSPECTION PROCEDURE

HINT:
Check the condition of each related circuit connector before troubleshooting (See page IN-40).

1	READ VALUE OF INTELLIGENT TESTER (REAR SPEED SENSOR)

(a) Connect the intelligent tester to the DLC3.
(b) Start the engine.
(c) Select "DATA LIST" and read the value displayed on the intelligent tester (See page BC-25).

DATA LIST: ABS

Item	Measurement Item / Range (Display)	Normal Condition
RR WHEEL SPD	Wheel speed sensor (RR) reading / min.: 0 MPH (0 km/h), max.: 202 MPH (326 km/h)	Actual wheel speed
RL WHEEL SPD	Wheel speed sensor (RL) reading / min.: 0 MPH (0 km/h), max.: 202 MPH (326 km/h)	Actual wheel speed

(d) Check that there is no difference between the speed value output from the speed sensor displayed on the intelligent tester and the speed value displayed on the speedometer when driving the vehicle.
OK:
The speed value output from the speed sensor displayed on the intelligent tester is the same as the actual vehicle speed.

NG → **Go to step 5**

OK

BC

2	PERFORM TEST MODE INSPECTION (SIGNAL CHECK)

(a) Check if test mode (signal check) DTCs are detected (See page BC-11).

Result

Condition	Proceed to
Test mode (signal check) DTC is not output	A
Test mode (signal check) DTC is output	B

B → **Go to step 5**

A

3	INSPECT SPEED SENSOR SIGNAL WAVEFORM

BC

Skid Control ECU (Harness Side Connector Front View):

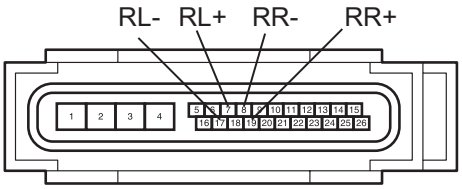

Normal Signal Waveform:

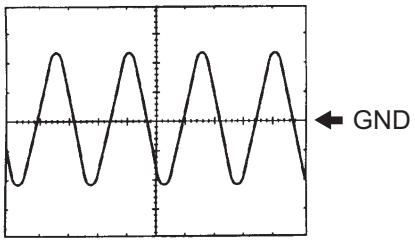

1 V/Division, 2 ms./Division

C132907E02

(a) Lift up the vehicle.
(b) Perform the inspection using an oscilloscope.
  (1) Disconnect the skid control ECU connector.
  (2) Connect the oscilloscope to terminals of the skid control ECU.
  (3) Check that a waveform is output when the tires are rotated.
  OK:
  The same waveform is output from rear wheels and there is no noise or interference in the waveform.
  HINT:
  - As vehicle speed (wheel rotation speed) increases, the width of the waveform narrows and the output voltage becomes greater.
  - When noise is identified in the waveform on the oscilloscope, the erratic signals are generated due to rotor scratches, looseness or foreign matter attached to the speed sensor.
  (4) Connect the connector.

NG → **CLEAN OR REPLACE SPEED SENSOR AND SENSOR ROTOR**

OK

4	RECONFIRM DTC

(a) Clear the DTCs (See page BC-21).
(b) Drive the vehicle at a speed of approximately 25 mph (40 km/h) or more for 60 seconds or more.

(c) Check if the same DTCs are recorded (See page BC-21).
HINT:
Reinstall the sensors, connectors, etc. and restore the vehicle to its prior condition before rechecking for DTCs.

Result

Condition	Proceed to
DTCs (C0210/33, C0215/34, C1332/38 and C1333/39) are output	A
DTCs (C0210/33, C0215/34, C1332/38 and C1333/39) are output (When troubleshooting in accordance with the PROBLEM SYMPTOMS TABLE)	B
DTCs (C0210/33, C0215/34, C1332/38 and C1333/39) are not output (When troubleshooting in accordance with the DTC CHART)	C

B → **PROCEED TO NEXT CIRCUIT INSPECTION SHOWN IN PROBLEM SYMPTOMS TABLE (See page BC-16)**

C → **END**

BC

A

5 INSPECT SPEED SENSOR INSTALLATION

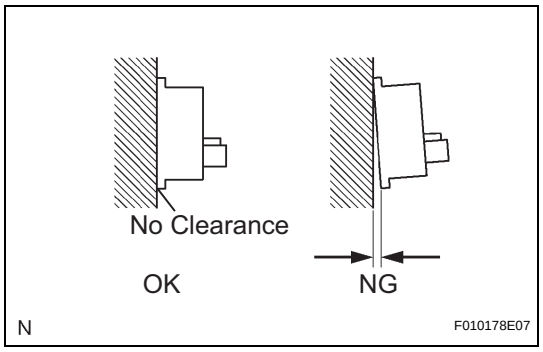

(a) Check the rear speed sensor installation.
OK:
There is no clearance between the sensor and rear axle carrier.
NOTICE:
Check the speed sensor signal after replacement (See page BC-11).

NG → **REPLACE REAR SPEED SENSOR (See page BC-443)**

OK

6	INSPECT REAR SPEED SENSOR

Rear Speed Sensor:

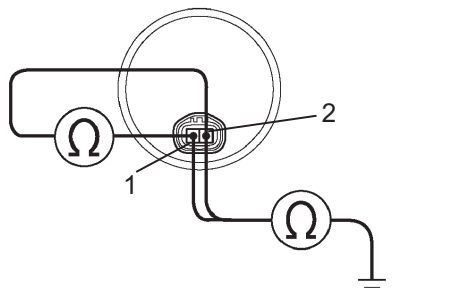

(a) Disconnect the rear speed sensor connector.
(b) Measure the resistance according to the value(s) in the table below.
Standard resistance:
LH

Tester Connection	Specified Condition
g1-1 (RL+) - g1-2 (RL-)	Below 2.2 kΩ
g1-1 (RL+) - Body ground	10 kΩ or higher
g1-2 (RL-) - Body ground	10 kΩ or higher

RH

Tester Connection	Specified Condition
f1-1 (RR+) - f1-2 (RR-)	Below 2.2 kΩ
f1-1 (RR+) - Body ground	10 kΩ or higher
f1-2 (RR-) - Body ground	10 kΩ or higher

NOTICE:
Check the speed sensor signal after replacement (See page BC-11).

NG → **REPLACE REAR SPEED SENSOR (See page BC-443)**

OK

BC

7 CHECK HARNESS AND CONNECTOR (SKID CONTROL SENSOR WIRE TO SKID CONTROL ECU)

Skid Control ECU (Wire Harness Side) Connector Front View:

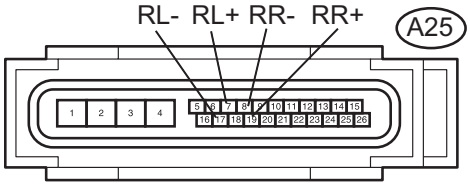

Front Speed Sensor (Wire Harness Side) Connector Front View:

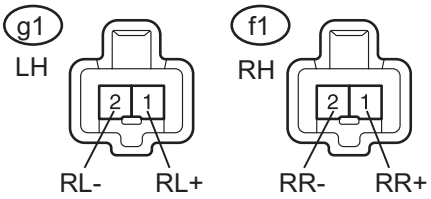

N C132909E03

(a) Check harness and connector.
(1) Disconnect the skid control ECU connector.
(2) Disconnect the skid control sensor wire.
(3) Measure the resistance according to the value(s) in the table below.

Standard resistance:

LH

Tester Connection	Specified Condition
A25-7 (RL+) - g1-1 (RL+)	Below 1 Ω
A25-17 (RL-) - g1-2 (RL-)	Below 1 Ω
g1-1 (RL+) - Body ground	10 kΩ or higher
g1-2 (RL-) - Body ground	10 kΩ or higher

RH

Tester Connection	Specified Condition
A25-19 (RR+) - f1-1 (RR+)	Below 1 Ω
A25-8 (RR-) - f1-2 (RR-)	Below 1 Ω
f1-1 (RR+) - Body ground	10 kΩ or higher
f1-2 (RR-) - Body ground	10 kΩ or higher

NG → **REPAIR OR REPLACE HARNESS OR CONNECTOR (SKID CONTROL ECU TO SKID CONTROL SENSOR WIRE)**

OK

8 CHECK HARNESS AND CONNECTOR (SKID CONTROL SENSOR WIRE TO REAR SPEED SENSOR)

Skid Control Sensor Wire:

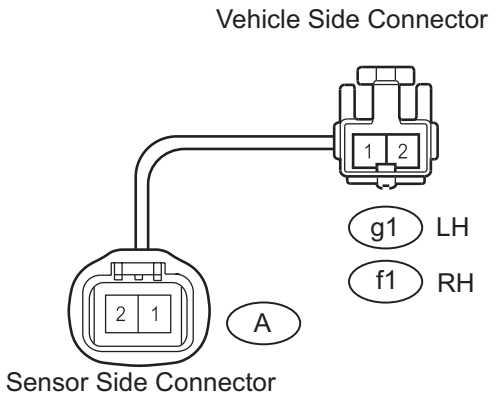

C113396E04

(a) Check harness and connector (skid control sensor wire).
(1) Measure the resistance according to the value(s) in the table below.

Standard resistance:

LH

Tester Connection	Specified Condition
g1-1 - A-1	Below 1 Ω
g1-1 - A-2	10 kΩ or higher
g1-1 - Body ground	10 kΩ or higher
g1-2 - A-2	Below 1 Ω
g1-2 - A-1	10 kΩ or higher
g1-2 - Body ground	10 kΩ or higher

RH

Tester Connection	Specified Condition
f1-1 - A-1	Below 1 Ω

Tester Connection	Specified Condition
f1-1 - A-2	10 kΩ or higher
f1-1 - Body ground	10 kΩ or higher
f1-2 - A-2	Below 1 Ω
f1-2 - A-1	10 kΩ or higher
f1-2 - Body ground	10 kΩ or higher

NG → **REPAIR OR REPLACE SKID CONTROL SENSOR WIRE**

OK

9 INSPECT SPEED SENSOR SIGNAL WAVEFORM

BC

Skid Control ECU (Harness Side Connector Front View):

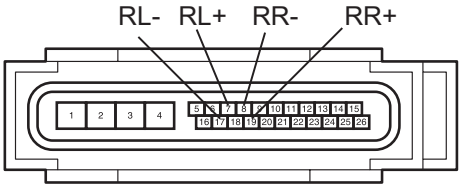

Normal Signal Waveform:

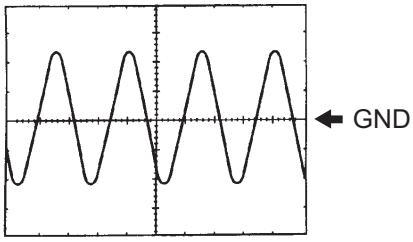

1 V/Division, 2 ms./Division

C132907E02

(a) Lift up the vehicle.
(b) Perform the inspection using the oscilloscope.
  (1) Disconnect the skid control ECU connector.
  (2) Connect the oscilloscope to terminals of the skid control ECU.
  (3) Check that a waveform is output when the tires are rotated.
  OK:
  The same waveforms is output from rear wheels and there is no noise or interference in the waveform.
  HINT:
  - As vehicle speed (wheel rotation speed) increases, the width of the waveform narrows and the output voltage becomes greater.
  - When noise is identified in the waveform on the oscilloscope, the erratic signals are generated due to rotor scratches, looseness or foreign matter attached to the speed sensor.
  (4) Connect the connectors.

NG → **CLEAN OR REPLACE SPEED SENSOR AND SENSOR ROTOR**

OK

10 READ VALUE OF INTELLIGENT TESTER (REAR SPEED SENSOR)

(a) Connect the intelligent tester to the DLC3.
(b) Start the engine.

(c) Select "DATA LIST" and read the value displayed on the intelligent tester (See page BC-25).

DATA LIST: ABS

Item	Measurement Item / Range (Display)	Normal Condition
RR WHEEL SPD	Wheel speed sensor (RR) reading / min.: 0 MPH (0 km/h), max.: 202 MPH (326 km/h)	Actual wheel speed
RL WHEEL SPD	Wheel speed sensor (RL) reading / min.: 0 MPH (0 km/h), max.: 202 MPH (326 km/h)	Actual wheel speed

(d) Check that there is no difference between the speed value output from the speed sensor displayed on the intelligent tester and the speed value displayed on the speedometer when driving the vehicle.

OK:

The speed value output from the speed sensor displayed on the intelligent tester is the same as the actual vehicle speed.

HINT:

- It is suspected that the DTCs were output due to a bad connection of the connector terminal.
- If troubleshooting has been carried out according to the "PROBLEM SYMPTOMS TABLE", refer back to the table and proceed to the next step (See page BC-16).

NG → **REPLACE BRAKE ACTUATOR ASSEMBLY (See page BC-432)**

OK

11 RECONFIRM DTC

(a) Clear the DTCs (See page BC-21).

(b) Drive the vehicle at a speed of approximately 25 mph (40 km/h) or more for 60 seconds or more.

(c) Check if the same DTCs are recorded (See page BC-21).

HINT:

Reinstall the sensors, connectors, etc. and restore the vehicle to its prior condition before rechecking for DTCs.

Result

Condition	Proceed to
DTCs (C0210/33, C0215/34, C1332/38 and C1333/39) are output	A
DTCs (C0210/33, C0215/34, C1332/38 and C1333/39) are not output	B

B → **END**

A

12 INSPECT SPEED SENSOR ROTOR

(a) Turn the ignition switch off.

(b) Remove the rear axle (See page AH-15).

BC

(c) Check the rotor.

OK:

No scratches, cracks, oil, or foreign matter on the rotors.

NOTICE:

Check the speed sensor signal after cleaning or replacement (See page BC-11).

(d) Install the rear axle (See page AH-16).

NG → **CLEAN OR REPLACE SPEED SENSOR ROTOR**

OK

REPLACE BRAKE ACTUATOR ASSEMBLY (See page BC-432)

DTC	C0226/21	SFR Solenoid Circuit

DTC	C0236/22	SFL Solenoid Circuit

DTC	C0246/23	SRR Solenoid Circuit

DTC	C0256/24	SRL Solenoid Circuit

DESCRIPTION

These solenoids turn on when signals are received from the ECU and they control the pressure acting on the wheel cylinders thus controlling braking force.

DTC No.	DTC Detecting Condition	Trouble Area
C0226/21 C0236/22 C0246/23 C0256/24	Solenoid valve signal does not match the check result.	• Each solenoid circuit • Brake actuator assembly

BC

WIRING DIAGRAM

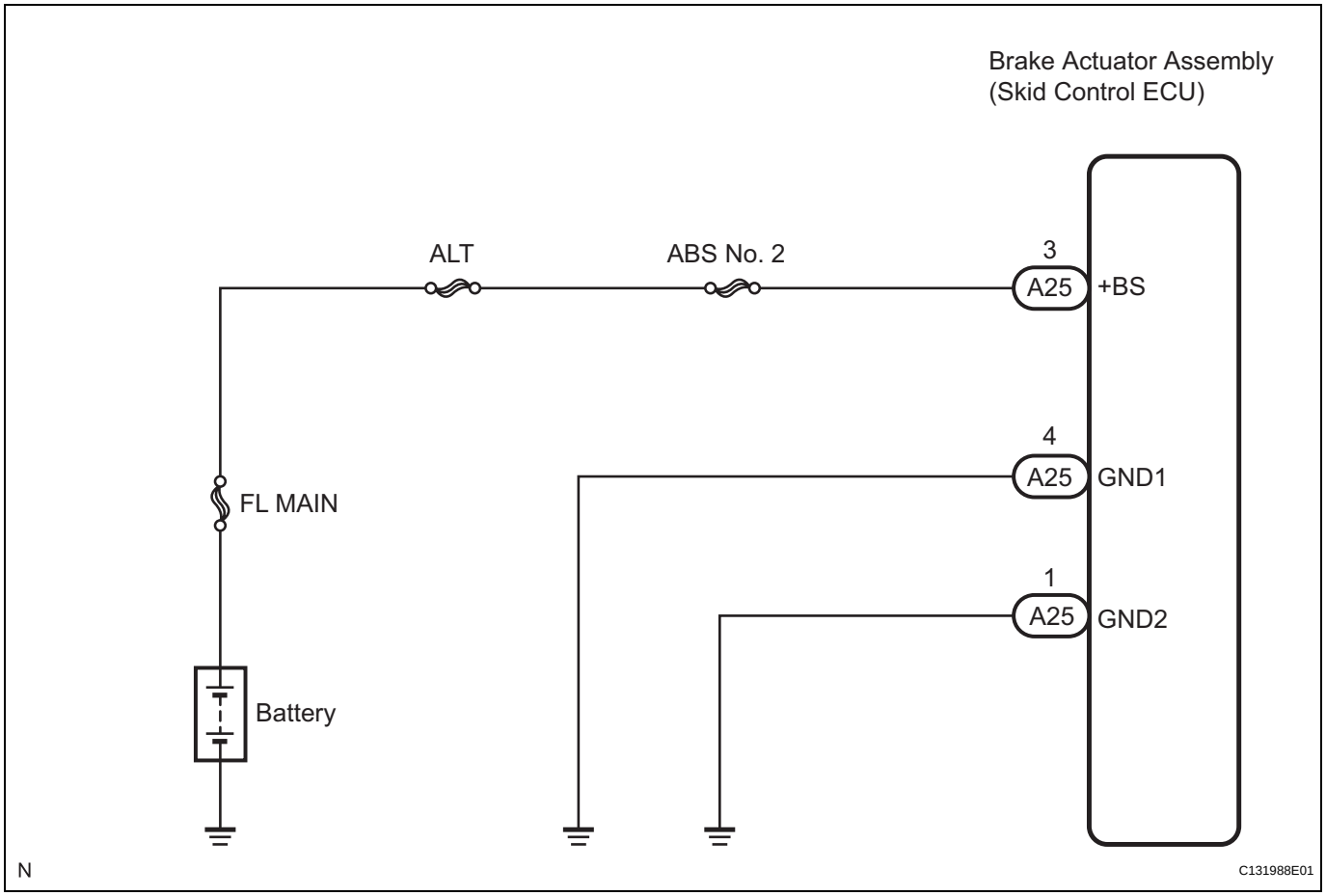

INSPECTION PROCEDURE

1	RECONFIRM DTC

HINT:
These codes are detected when a problem is identified in the brake actuator assembly.
The solenoid circuit is in the brake actuator assembly. Therefore, solenoid circuit inspection and solenoid unit inspection cannot be performed. Be sure to check if the DTC is output before replacing the brake actuator assembly.

(a) Clear the DTC (See page BC-21).
(b) Start the engine.
(c) Drive the vehicle at a speed of 12 mph (20 km/h) or more for 30 seconds or more.
(d) Check if the same DTC is recorded (See page BC-21).

Result

BC

Condition	Proceed to
DTC is not output	A
DTC is output	B

HINT:
- If the normal system code is output (the trouble code is not output), slightly jiggle the connectors, wire harness, and fuses of the brake actuator assembly. Make sure that no DTCs are output.
- If any DTCs are output while jiggling a connector or wire harness of the brake actuator (skid control ECU), inspect and repair the connector or wire harness.
- It is suspected that the DTCs were output due to a bad connection of the connector terminal.

B → **REPAIR BRAKE ACTUATOR ASSEMBLY (See page BC-432)**

A

END

DTC	C0273/13	Open or Short Circuit in ABS Motor Relay Circuit

DESCRIPTION

The ABS motor relay supplies power to the ABS pump motor. While the ABS is activated, the ECU turns the motor relay on and operates the ABS pump motor.
If the voltage supplied to the motor relay (+BM) is below the DTCs detection threshold due to low voltage from the battery or alternator, the DTC may be stored.

DTC No.	DTC Detecting Condition	Trouble Area
C0273/13	When any of the following is detected: • When the motor relay is actuated, voltage is not supplied to the pump motor within 0.1 second. • When the motor relay is changed from ON to OFF, the remaining high voltage is more than 2 V for 1 second. • For 30 to 125 msec. after the motor relay is turned from ON to OFF, the remaining high voltage is out of range. The voltage is still out of range when the motor relay is turned from ON to OFF 3 times.	• ABS No. 1 fuse (Fusible link) • Wire harness (+BM circuit) • Brake actuator assembly (motor relay)

BC

WIRING DIAGRAM

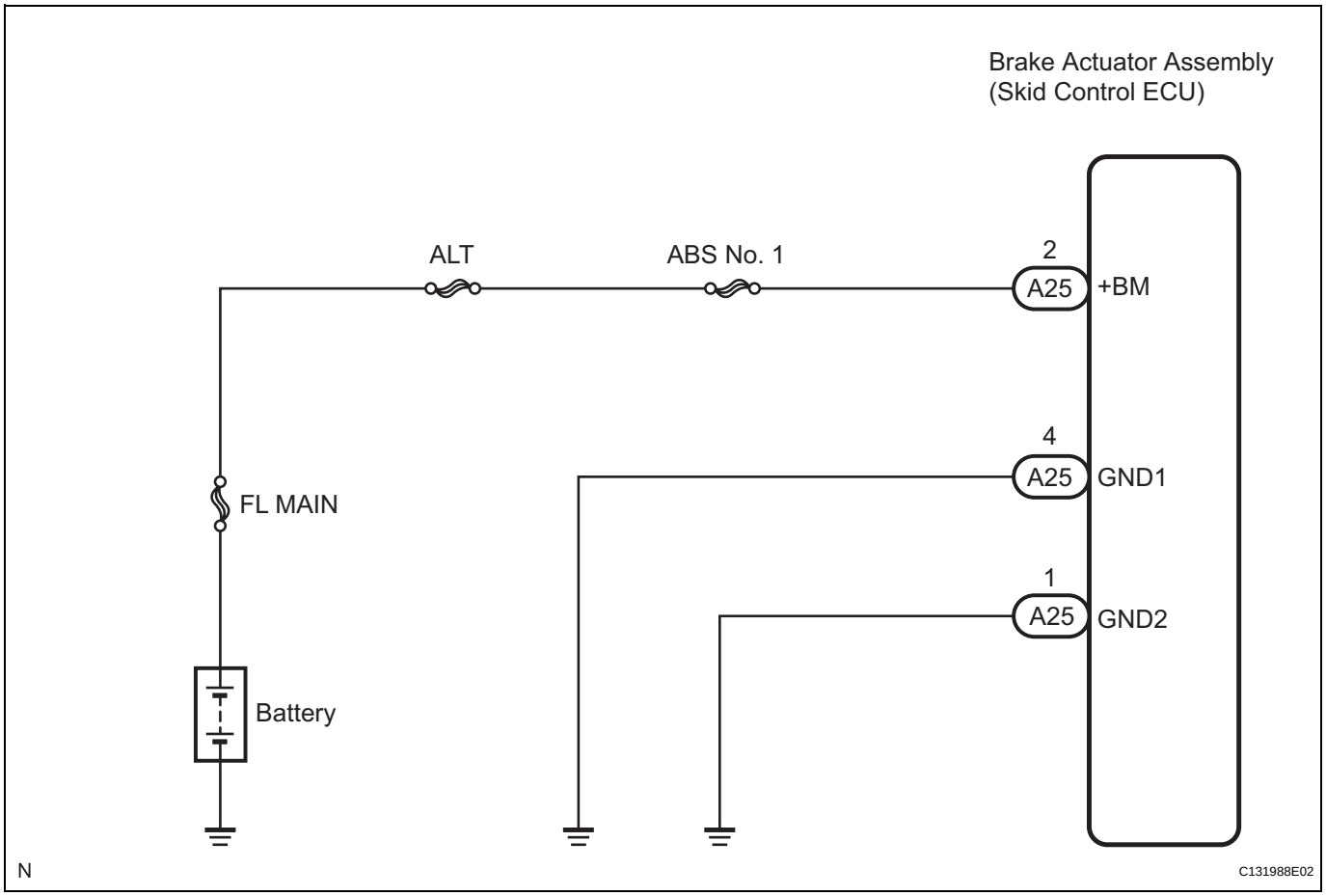

INSPECTION PROCEDURE

HINT:

- When C1241/41 is output together with C0273/13, inspect and repair the trouble areas indicated by C1241/41 (See page BC-63).

- Check the condition of each related circuit connector before troubleshooting (See page IN-40).

1 INSPECT FUSIBLE LINK (ABS NO. 1 FUSE)

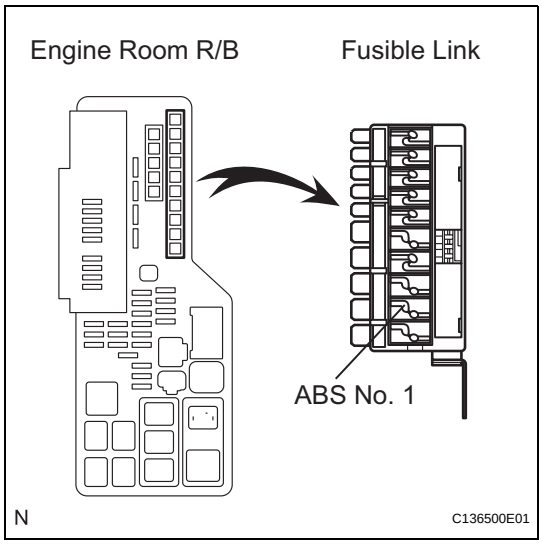

(a) Remove the fusible link from the engine room R/B.
(b) Check if the fusible link is melted.
OK:
The fusible link is not melted.
(c) Install the fusible link to the engine room R/B with the nut.
Torque: 5.4 N*m (55 kgf*cm, 48 in.*lbf)

NG → **REPLACE FUSIBLE LINK**

OK

2 PERFORM ACTIVE TEST BY INTELLIGENT TESTER (ABS MOTOR RELAY)

(a) Connect the intelligent tester to the DLC3.
(b) Start the engine.
(c) Select "ACTIVE TEST" on the intelligent tester (See page BC-25).

ACTIVE TEST: ABS

Item	Measurement Item / Range (Display)	Normal Condition
ABS MTR RELAY	Turns ABS motor relay ON / OFF	Operating sound of motor is heard

(d) Check the operating sound of the ABS motor relay when operating it with the intelligent tester.
OK:
The operating sound of the ABS motor relay should be heard.

Result

Result	Proceed to
The operating sound is not heard	A
The operating sound is heard	B

B → **Go to step 5**

A

3 INSPECT SKID CONTROL ECU CONNECTOR (+BM TERMINAL VOLTAGE)

Skid Control ECU (Harness Side Connector Front View):

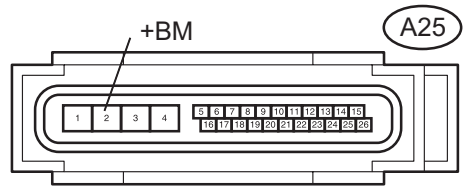

N C131970E02

(a) Disconnect the skid control ECU connector.
(b) Measure the voltage according to the value(s) in the table below.

Standard voltage

Tester Connection	Condition	Specified Condition
A25-2 (+BM) - Body ground	Always	10 to 14 V

NG → **REPAIR OR REPLACE HARNESS OR CONNECTOR (+BM CIRCUIT)**

OK

4 INSPECT SKID CONTROL ECU CONNECTOR (GND TERMINAL CONTINUITY)

BC

Skid Control ECU (Harness Side Connector Front View):

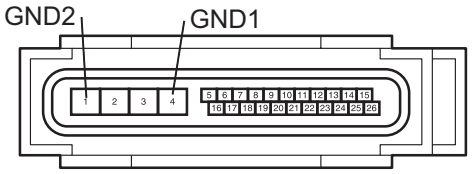

N C131970E03

(a) Measure the resistance according to the value(s) in the table below.

Standard resistance

Tester Connection	Specified Condition
A25-4 (GND1) - Body ground	Below 1 Ω
A25-1 (GND2) - Body ground	Below 1 Ω

(b) Connect the connector.

NG → **REPAIR OR REPLACE HARNESS OR CONNECTOR (GND CIRCUIT)**

OK

5 RECONFIRM DTC

HINT:
This code is detected when a problem is identified in the brake actuator assembly.
The ABS motor relay is in the brake actuator assembly. Therefore, ABS motor relay inspection and motor relay unit inspection cannot be performed. Be sure to check if the DTC is output before replacing the brake actuator assembly.

(a) Clear the DTC (See page BC-21).
(b) Start the engine.
(c) Drive the vehicle at a speed of 12 mph (20 km/h) or more for 30 seconds or more.
(d) Check if the same DTC is recorded (See page BC-21).
HINT:
Reinstall the sensors, connectors, etc. and restore the vehicle to its prior condition before rechecking for DTCs.

Result

Condition	Proceed to
DTC is not output	A

Condition	Proceed to
DTC is output	B

HINT:
- If the normal system code is output (the trouble code is not output), slightly jiggle the connectors, wire harness, and fuses of the brake actuator assembly. Make sure that no DTCs are output.
- If any DTCs are output while jiggling a connector or wire harness of the brake actuator (skid control ECU), inspect and repair the connector or wire harness.
- It is suspected that the DTCs were output due to a bad connection of the connector terminal.

B

REPLACE BRAKE ACTUATOR ASSEMBLY (See page BC-432)

A

CHECK FOR INTERMITTENT PROBLEMS (SYMPTOM SIMULATION) (See page BC-19)

DTC	C0278/11	Open or Short Circuit in ABS Solenoid Relay Circuit

DESCRIPTION

This relay supplies power to each ABS solenoid. If the ABS initial check is OK after the ignition switch is turned on (IG), the skid control ECU will turn the ABS solenoid relay on.

DTC No.	DTC Detecting Condition	Trouble Area
C0278/11	When any of the following is detected: • 3 or more solenoid valves are found faulty and simultaneously valve supply voltage is detected to be abnormal. • Solenoid valve relay is not switched off. • Valve relay is stuck open even through the valve relay supply voltage is high.	• Wire harness (+BS circuit) • ABS No. 2 fuse (Fusible link) • Brake actuator assembly (Solenoid relay)

WIRING DIAGRAM

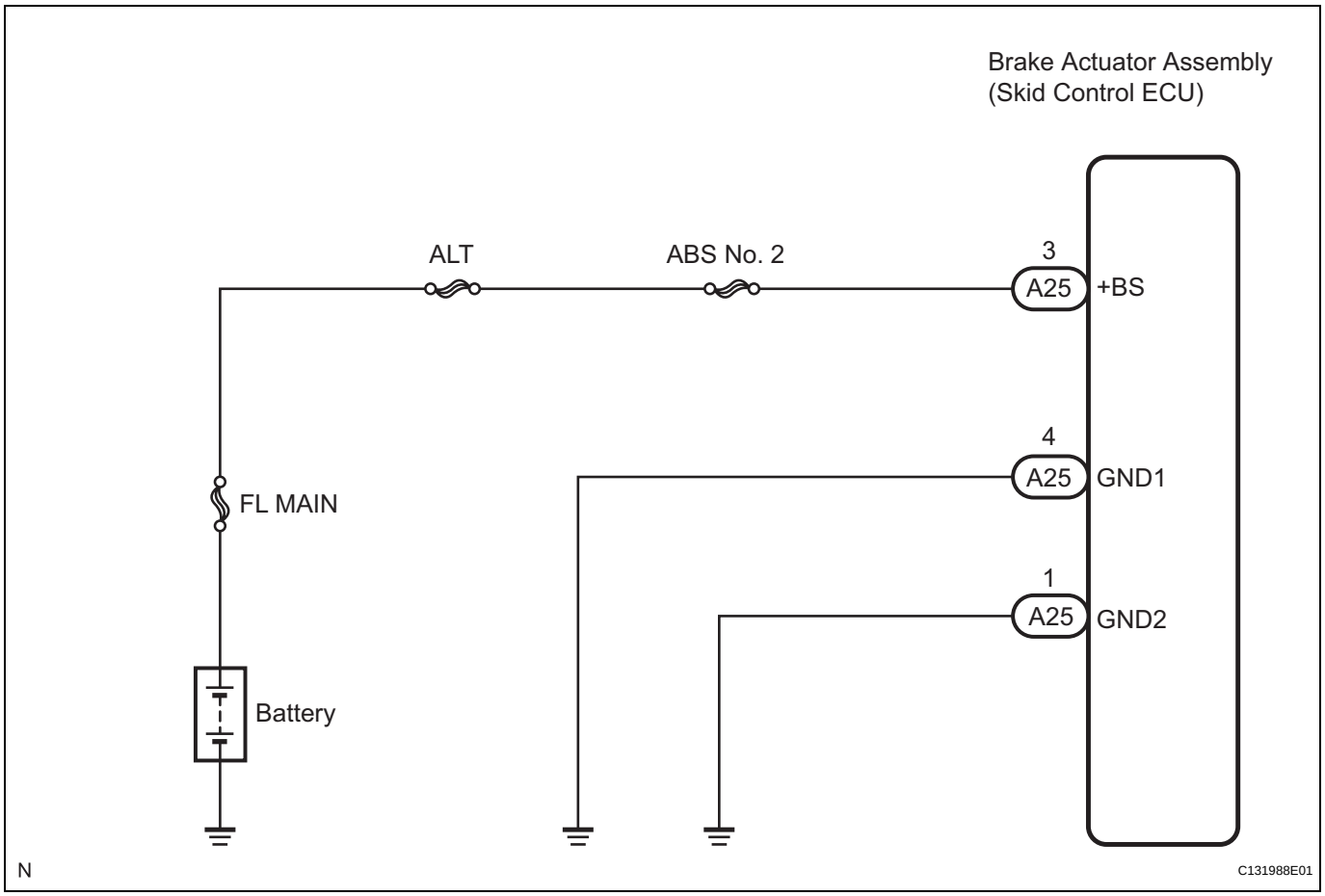

INSPECTION PROCEDURE

HINT:

- When C1241/41 is output together with C0278/11, inspect and repair the trouble areas indicated by C1241/41 (See page BC-63).
- Check the condition of each related circuit before troubleshooting (See page IN-40).

1 INSPECT FUSIBLE LINK (ABS NO. 2 FUSE)

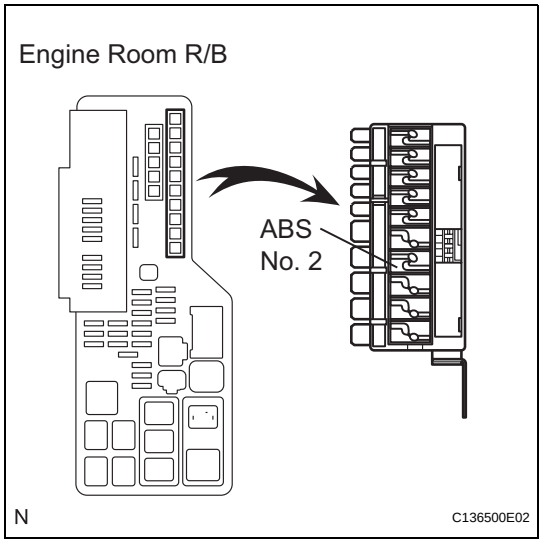

(a) Remove the fusible link from the engine room R/B.
(b) Check if the fusible link is melted.
OK:
The fusible link is not melted.
(c) Install the fusible link to the engine room R/B with the nut.
Torque: 5.4 N*m (55 kgf*cm, 48 in.*lbf)

NG → **REPLACE FUSIBLE LINK**

BC

OK

2 INSPECT SKID CONTROL ECU CONNECTOR (+BS CIRCUIT)

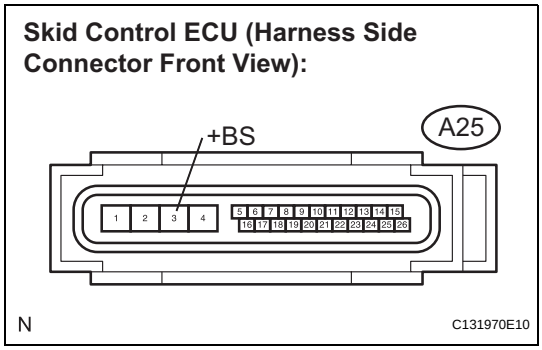

(a) Disconnect the skid control ECU connector.
(b) Measure the voltage according to the value(s) in the table below.
Standard voltage

Tester Connection	Condition	Specified Condition
A25-3 (+BS) - Body ground	Always	10 to 14 V

NG → **REPAIR OR REPLACE HARNESS OR CONNECTOR (+BS CIRCUIT)**

OK

3 INSPECT SKID CONTROL ECU CONNECTOR (GND TERMINAL CONTINUITY)

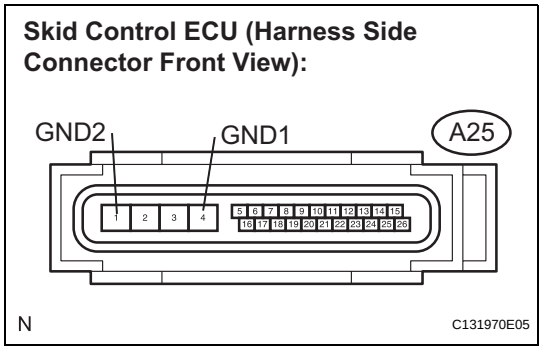

(a) Measure the resistance according to the value(s) in the table below.
Standard resistance

Tester Connection	Specified Condition
A25-4 (GND1) - Body ground	Below 1 Ω
A25-1 (GND2) - Body ground	Below 1 Ω

(b) Connect the connector.

NG → **REPAIR OR REPLACE HARNESS OR CONNECTOR (GND CIRCUIT)**

OK

4	RECONFIRM DTC

HINT:
This code is detected when a problem is identified in the brake actuator assembly.
The solenoid circuit is in the brake actuator assembly. Therefore, solenoid circuit inspection and solenoid unit inspection cannot be performed. Be sure to check if the DTC is output before replacing the brake actuator assembly.

(a) Clear the DTC (See page BC-21).
(b) Start the engine.
(c) Drive the vehicle at a speed of 12 mph (20 km/h) or more for 30 seconds or more.
(d) Check if the same DTC is recorded (See page BC-21).
HINT:
Reinstall the sensors, connectors, etc. and restore the vehicle to its prior condition before rechecking for DTCs.

BC

Result

Condition	Proceed to
DTC is not output	A
DTC is output	B

HINT:
- If the normal system code is output (the trouble code is not output), slightly jiggle the connectors, wire harnesses, and fuses of the brake actuator assembly. Make sure that no DTCs are output.
- If any DTCs are output while jiggling a connector or wire harness of the brake actuator (skid control ECU), inspect and repair the connector or wire harness.
- It is suspected that the DTCs were output due to a bad connection of the connector terminal.

B → **REPLACE BRAKE ACTUATOR ASSEMBLY (See page BC-432)**

A

CHECK FOR INTERMITTENT PROBLEMS (SYMPTOM SIMULATION) (See page BC-19)

DTC	C1237/37	Speed Sensor Rotor Faulty

DESCRIPTION

The skid control ECU measures the speed of each wheel by receiving signals from the speed sensor. These signals are used for recognizing that all 4 wheels are operating properly.
Therefore, all wheel signals must be equal.

DTC No.	DTC Detecting Condition	Trouble Area
C1237/37	When any of the following is detected: • Wheel speed difference between the wheels. • Wheel sensor signal failure. • ABS control continues for 60 sec. or more.	• Brake actuator assembly (skid control ECU) • Speed sensor rotor (Front) • Rear axle hub and bearing assembly • Speed sensor • Speed sensor circuit • Tire and wheel size • Tire deformation

WIRING DIAGRAM

BC

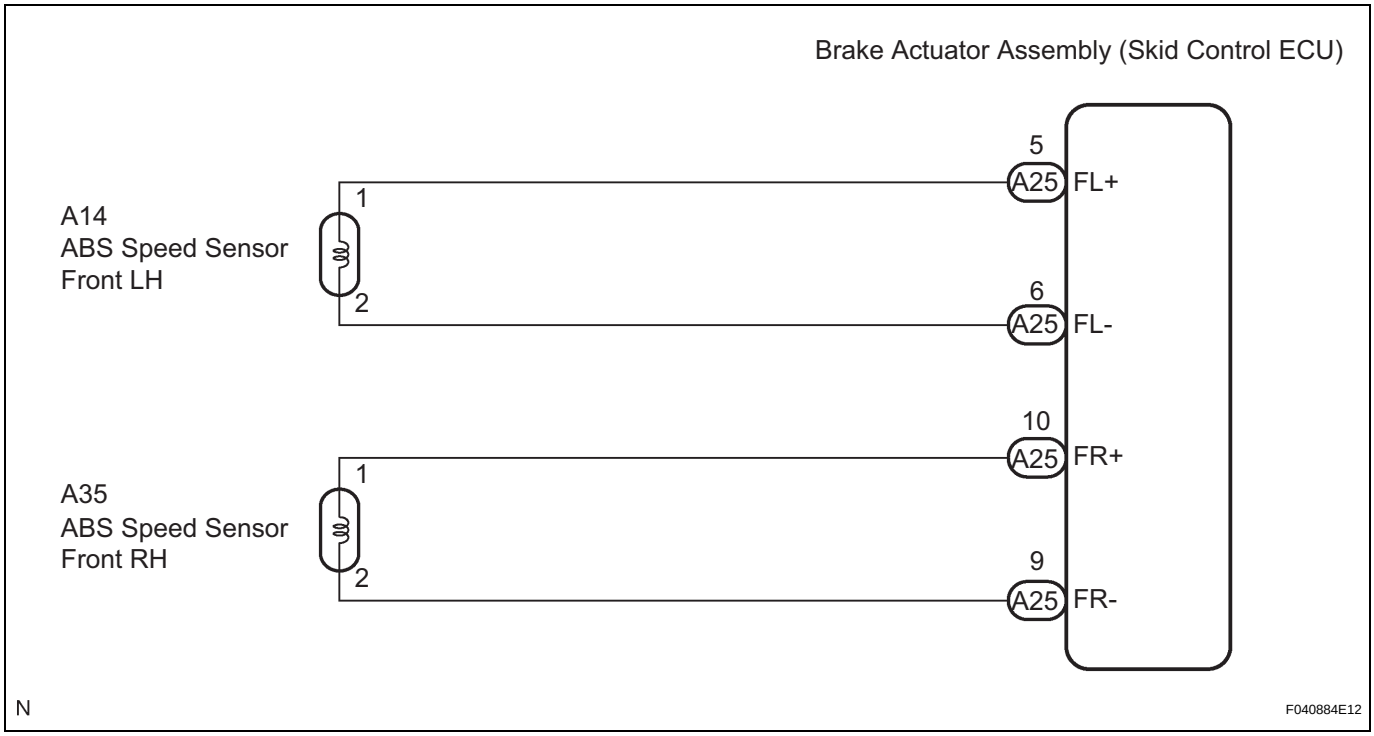

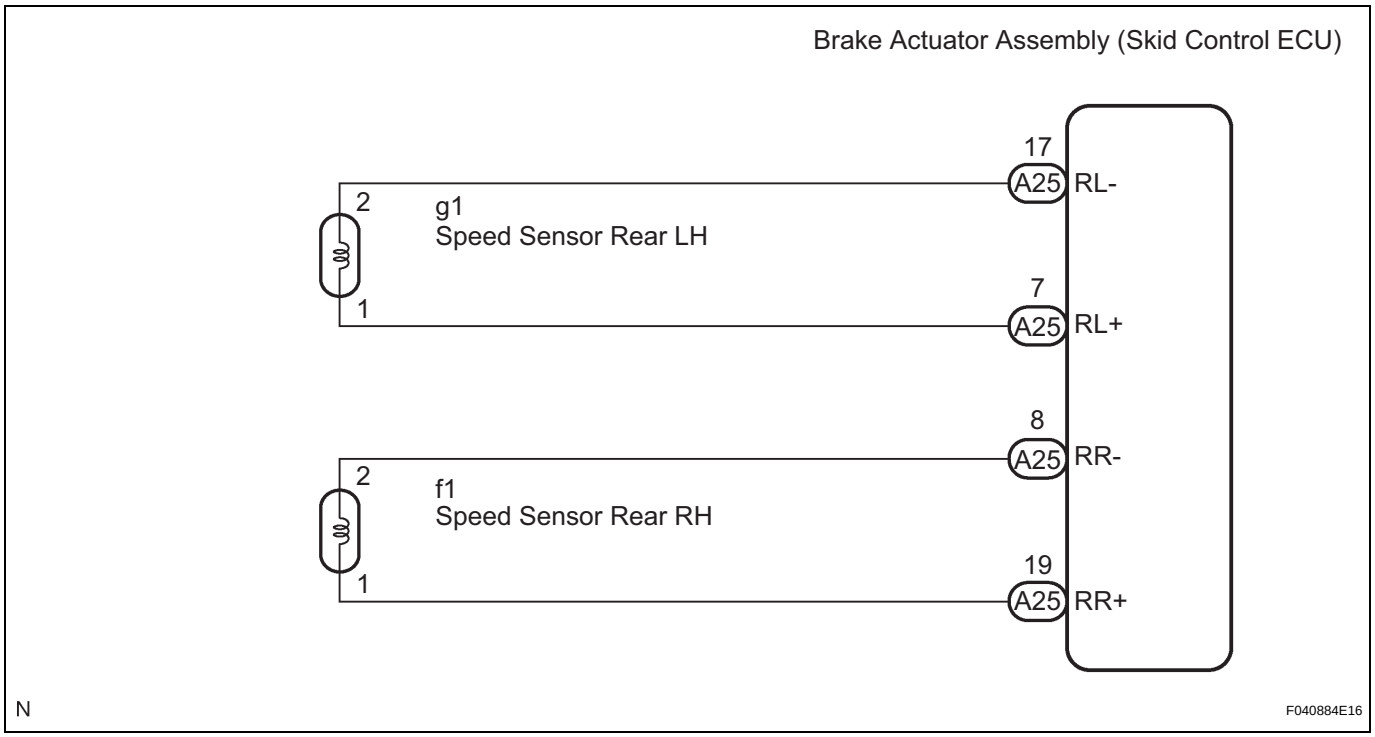

INSPECTION PROCEDURE

HINT:
Check the condition of each related circuit connector before troubleshooting (See page IN-40).

1	CHECK TIRES

(a) Check the size and condition of all 4 tires (See page TW-3).
HINT:
This DTC is output when tire deformation or a difference in tire size is detected.
OK:
The diameters of all 4 tires and air pressure are the same.

NG → **REPLACE TIRES SO THAT ALL 4 TIRES ARE THE SAME SIZE**

OK

BC

2 INSPECT SPEED SENSOR AND SENSOR ROTOR SERRATIONS

Skid Control ECU (Harness Side Connector Front View):

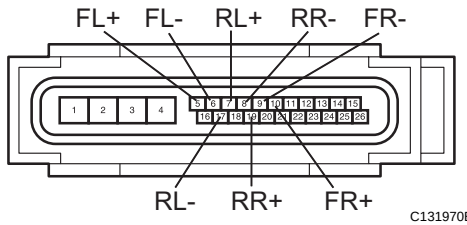

(a) Disconnect the skid control ECU connector.
(b) Connect the oscilloscope to each speed sensor terminal of the skid control ECU connector.
Terminals

Connector	Circuit
A25-5 (FL+) - A25-6 (FL-)	Front left speed sensor
A25-10 (FR+) - A25-9 (FR-)	Front right speed sensor
A25-7 (RL+) - A25-17 (RL-)	Rear left speed sensor
A25-19 (RR+) - A25-8 (RR-)	Rear right speed sensor

Normal Signal Waveform:

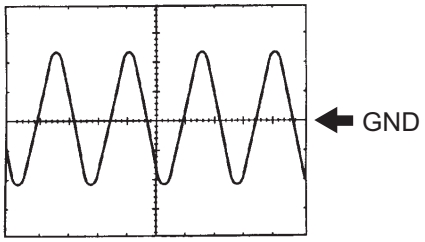

(c) Check that a waveform is output when the tires are rotated (by the sensor circuit).
OK:
A waveform as shown in the figure should be output.
HINT:
- Each sensor circuit outputs the same waveform without noise.
- As vehicle speed (wheel rotation speed) increases, the width of the waveform narrows and the output voltage becomes greater.
- When noise is identified in the waveform on the oscilloscope, the erratic signals are generated due to rotor scratches, looseness or foreign matter attached to the speed sensor.

(d) Make sure that the waveform does not change while jiggling a connector or a wire harness.
OK:
The waveform does not change.
HINT:
If the waveform changes while jiggling a connector or a wire harness, there may be a malfunction in the connector or the wire harness.
(e) Connect the connector.

NG → **Go to step 4**

OK

3 RECONFIRM DTC

(a) Clear the DTC (See page BC-21).
(b) Start the engine.
(c) Drive the vehicle at a speed of 20 mph (32 km/h) or more for 60 seconds or more.
(d) Check if the same DTC is recorded (See page BC-21).
HINT:
Reinstall the sensors, connectors, etc. and restore the vehicle to its prior condition before rechecking for DTCs.

Result

Condition	Proceed to
DTC is not output	A
DTC is output	B

B → **REPLACE BRAKE ACTUATOR ASSEMBLY (See page BC-432)**

A

CHECK FOR INTERMITTENT PROBLEMS (SYMPTOM SIMULATION) (See page BC-19)

4 CHECK SPEED SENSOR ROTOR

(a) Check the speed sensor rotor.
Front Speed Sensor Rotor: (See page DS-25)
Rear Speed Sensor Rotor: (See page AH-15)
OK:
No scratches or foreign matter on the rotors.
NOTICE:
Check the speed sensor signal after the cleaning/ replacement (See page BC-11).

NG → **CLEAN OR REPLACE SPEED SENSOR ROTOR**

OK

5 CHECK SPEED SENSOR TIP

(a) Remove each speed sensor.
(b) Check the speed sensor tip.
OK:
No scratches or foreign matter on the sensor tip.
NOTICE:
Check the speed sensor signal after the cleaning/ replacement (See page BC-11).
(c) Install speed sensor.

NG → **CLEAN OR REPLACE SPEED SENSOR**

OK

BC

6 INSPECT EACH SPEED SENSOR

Front Speed Sensor:

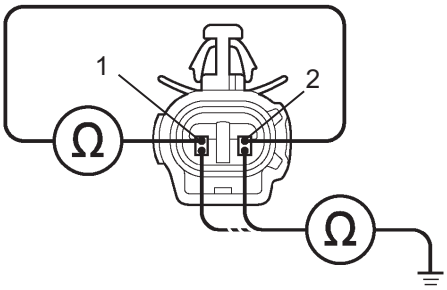

Rear Speed Sensor:

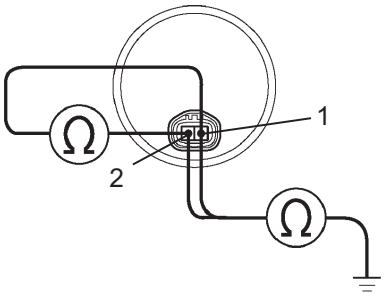

C136027E01

(a) Disconnect each speed sensor connector.

(b) Measure the resistance according to the value(s) in the table below.

Standard resistance:

FRONT

Tester Connection	Condition	Specified Condition
A14-1 (FL+) - A14-2 (FL-)	Always	1.4 to 1.8 kΩ at 20°C (68°F)
A14-1 (FL+) - Body ground	Always	10 kΩ or higher
A14-2 (FL-) - Body ground	Always	10 kΩ or higher
A35-1 (FR+) - A35-2 (FR-)	Always	1.4 to 1.8 kΩ at 20°C (68°F)
A35-1 (FR+) - Body ground	Always	10 kΩ or higher
A35-2 (FR-) - Body ground	Always	10 kΩ or higher

REAR

Tester Connection	Condition	Specified Condition
g1-1 (RL+) - g1-2 (RL-)	Always	Below 2.2 kΩ
g1-1 (RL+) - Body ground	Always	10 kΩ or higher
g1-2 (RL-) - Body ground	Always	10 kΩ or higher
f1-1 (RR+) - f1-2 (RR-)	Always	Below 2.2 kΩ
f1-1 (RR+) - Body ground	Always	10 kΩ or higher
f1-2 (RR-) - Body ground	Always	10 kΩ or higher

(c) Connect the connector.

NOTICE:

Check the speed sensor signal after replacement (See page BC-11).

NG → **REPLACE EACH SPEED SENSOR**

OK

BC

7 CHECK HARNESS AND CONNECTOR (SKID CONTROL ECU TO EACH SPEED SENSOR)

Skid Control ECU Harness Side Connector Front View:

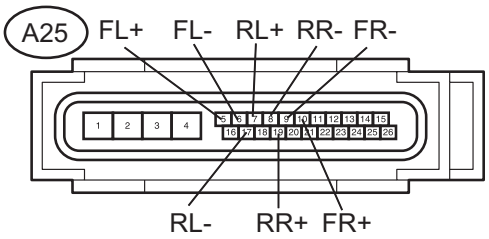

Front Speed Sensor Harness Side Connector Front View:

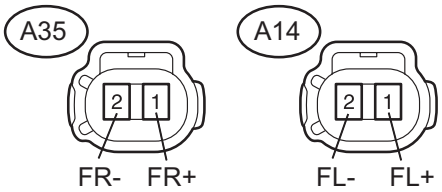

Rear Speed Sensor Harness Side Connector Front View:

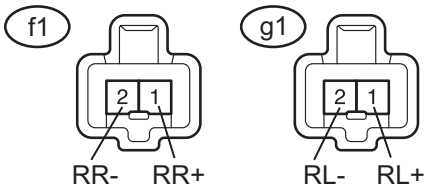

C136491E02

(a) Disconnect the skid control ECU connector.

(b) Measure the resistance according to the value(s) in the table below.

Standard resistance:

FRONT

Tester Connection	Condition	Specified Condition
A25-5 (FL+) - A14-1 (FL+)	Always	Below 1 Ω
A25-6 (FL-) - A14-2 (FL-)	Always	Below 1 Ω
A25-10 (FR+) - A35-1 (FR+)	Always	Below 1 Ω
A25-9 (FR-) - A35-2 (FR-)	Always	Below 1 Ω
A25-5 (FL+) - Body ground	Always	10 kΩ or higher
A25-6 (FL-) - Body ground	Always	10 kΩ or higher
A25-10 (FR+) - Body ground	Always	10 kΩ or higher
A25-9 (FR-) - Body ground	Always	10 kΩ or higher

REAR

Tester Connection	Condition	Specified Condition
A25-7 (RL+) - g1-1 (RL+)	Always	Below 1 Ω
A25-17 (RL-) - g1-2 (RL-)	Always	Below 1 Ω
A25-19 (RR+) - f1-1 (RR+)	Always	Below 1 Ω
A25-8 (RR-) - f1-2 (RR-)	Always	Below 1 Ω
A25-7 (RL+) - Body ground	Always	10 kΩ or higher
A25-17 (RL-) - Body ground	Always	10 kΩ or higher
A25-19 (RR+) - Body ground	Always	10 kΩ or higher
A25-8 (RR-) - Body ground	Always	10 kΩ or higher

(c) Connect the connector.

NG → **REPAIR OR REPLACE HARNESS OR CONNECTOR (SKID CONTROL ECU TO EACH SPEED SENSOR)**

OK

8 RECONFIRM DTC

(a) Clear the DTC (See page BC-21).

(b) Start the engine.

BC

(c) Drive the vehicle at the speed of 20 mph (32 km/h) or more for at least 60 seconds.

(d) Check if the same DTC is recorded (See page BC-21).
HINT:
Reinstall the sensors, connectors, etc. and restore the vehicle to its prior condition before rechecking for DTCs.

Result

Condition	Proceed to
DTC (C1237/37) is not output	A
DTC (C1237/37) is output	B

B → **REPLACE BRAKE ACTUATOR ASSEMBLY (See page BC-432)**

A

CHECK FOR INTERMITTENT PROBLEMS (SYMPTOM SIMULATION) (See page BC-19)

DTC	C1241/41	Low Battery Positive Voltage or Abnormally High Battery Positive Voltage

DESCRIPTION

If a malfunction is detected in the power supply circuit of the brake actuator assembly (skid control ECU), the skid control ECU (housed in the actuator assembly) stores this DTC and the fail-safe function prohibits ABS operation (See page BC-24).

This DTC is output when the IG1 terminal voltage deviates from the normal condition due to a malfunction in the power supply or charging circuit such as the battery or alternator circuit, etc.

This DTC is cancelled when the IG1 terminal voltage returns to normal (only when the voltage returns to normal from a voltage lower than the specified value).

DTC No.	DTC Detecting Condition	Trouble Area
C1241/41	With vehicle speed more than 4 mph (6 km/h), when any of the following is detected: • Battery voltage is 16.9 V or more. • Battery voltage is 9.4 V or less when ABS does not operate. • Battery voltage is 9.2 V or less when ABS operates.	• Battery • Charging system • Power source circuit • Brake actuator assembly (Skid control ECU)

WIRING DIAGRAM

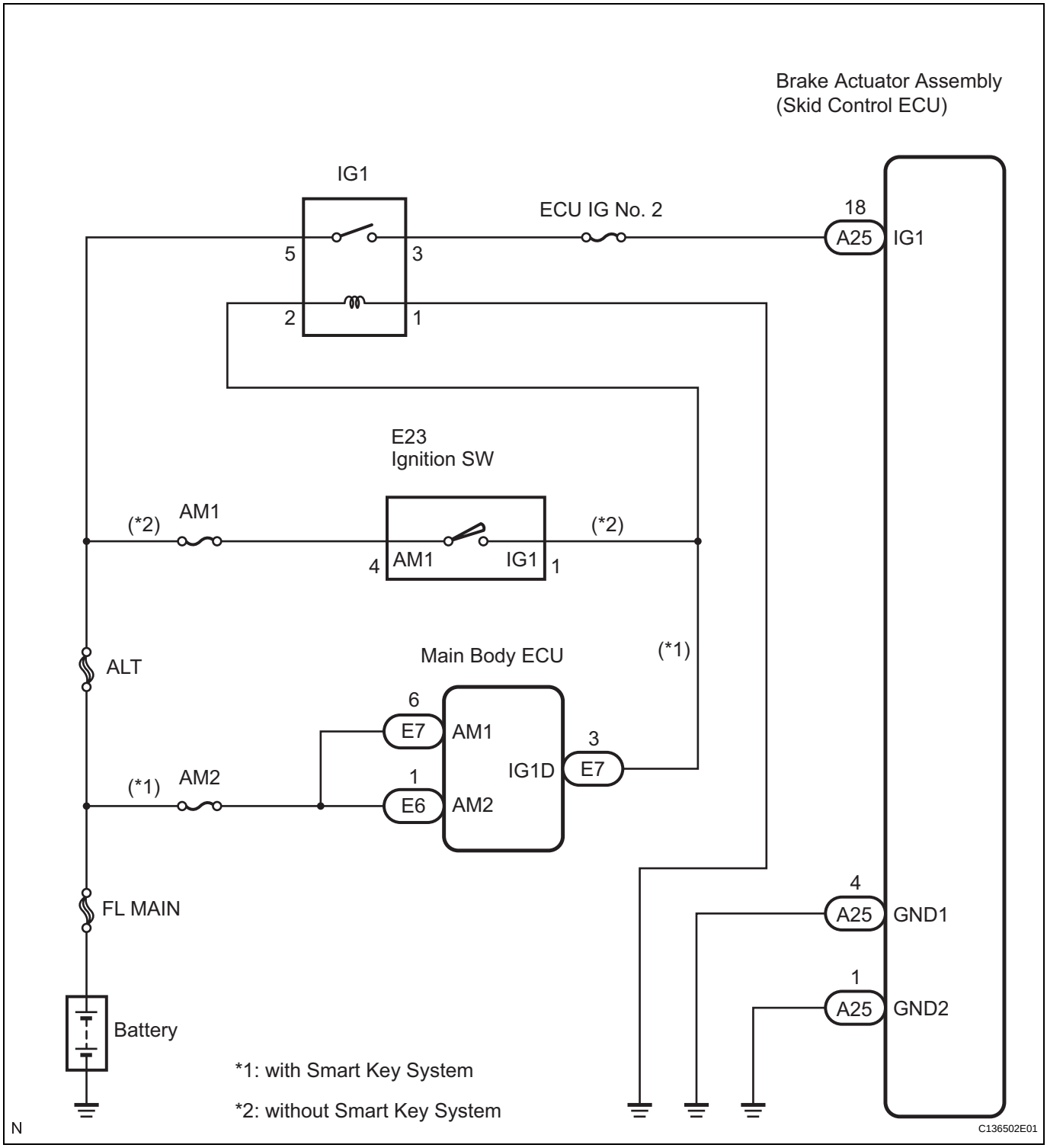

INSPECTION PROCEDURE

HINT:

Check the condition of each related circuit connector before troubleshooting (See page IN-40).

1 INSPECT FUSE (ECU-IG NO. 2 FUSE)

Instrument Panel J/B:

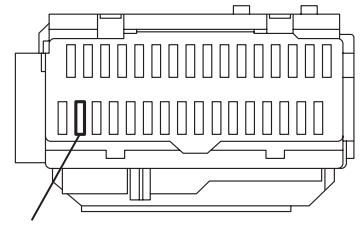

(a) Remove the ECU-IG No. 2 fuse from the instrument panel J/B.
(b) Measure the resistance according to the value(s) in the table below.
Standard resistance

Tester Connection	Specified Condition
ECU-IG No. 2 fuse	Below 1 Ω (Continuity)

(c) Install the fuse.

NG → **REPLACE FUSE**

OK

2 INSPECT BATTERY

BC

(a) Check the battery voltage.
Standard voltage:
11 to 14 V

NG → **INSPECT CHARGING SYSTEM**

OK

3 INSPECT SKID CONTROL ECU CONNECTOR (IG1 TERMINAL VOLTAGE)

Skid Control ECU (Harness Side Connector Front View):

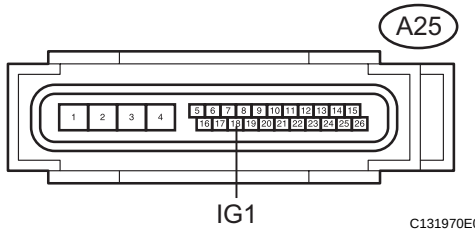

(a) Disconnect the skid control ECU connector.
(b) Turn the ignition switch on (IG).
(c) Measure the voltage according to the value(s) in the table below.
Standard voltage

Tester Connection	Condition	Specified Condition
A25-18 (IG1) - Body ground	Ignition switch on (IG)	10 to 14 V

NG → **REPAIR OR REPLACE HARNESS OR CONNECTOR (IG1 CIRCUIT)**

OK

4 INSPECT SKID CONTROL ECU CONNECTOR (GND TERMINAL CONTINUITY)

Skid Control ECU (Harness Side Connector Front View):

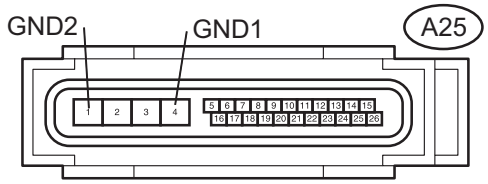

(a) Measure the resistance according to the value(s) in the table below.

Standard resistance

Tester Connection	Specified Condition
A25-4 (GND1) - Body ground	Below 1 Ω
A25-1 (GND2) - Body ground	Below 1 Ω

(b) Connect the connector.

NG → **REPAIR OR REPLACE HARNESS OR CONNECTOR (GND CIRCUIT)**

OK

BC

5 RECONFIRM DTC

(a) Clear the DTC (See page BC-21).
(b) Turn the ignition switch on (IG).
(c) Check if the same DTC is recorded (See page BC-21).
HINT:
Reinstall the sensors, connectors, etc. and restore the vehicle to its prior condition before rechecking for DTCs.

Result

Condition	Proceed to
DTC (C1241/41) is output	A
DTC (C1241/41) is output (When troubleshooting in accordance with the PROBLEM SYMPTOMS TABLE)	B
DTC (C1241/41) is not output (When troubleshooting in accordance with the DTC CHART)	C

B → **PROCEED TO NEXT CIRCUIT INSPECTION SHOWN IN PROBLEM SYMPTOMS TABLE (See page BC-16)**

C → **END**

A

REPLACE BRAKE ACTUATOR ASSEMBLY (See page BC-432)

DTC	C1249/49	Open in Stop Light Switch Circuit

DESCRIPTION

This circuit recognizes brake operation by sending a stop light signal to the skid control ECU.
The skid control ECU has an open detection circuit, which outputs this DTC when detecting an open in the stop light signal input line (STP terminal) or the ground line of the stop light circuit with the stop light switch off (brake pedal not depressed).

DTC No.	DTC Detecting Condition	Trouble Area
C1249/49	Stop light switch circuit is open, and stop light switch voltage is 40% or more and less than 67% of the battery voltage.	• Stop light switch • Stop light switch circuit • Brake actuator assembly (Skid Control ECU)

WIRING DIAGRAM

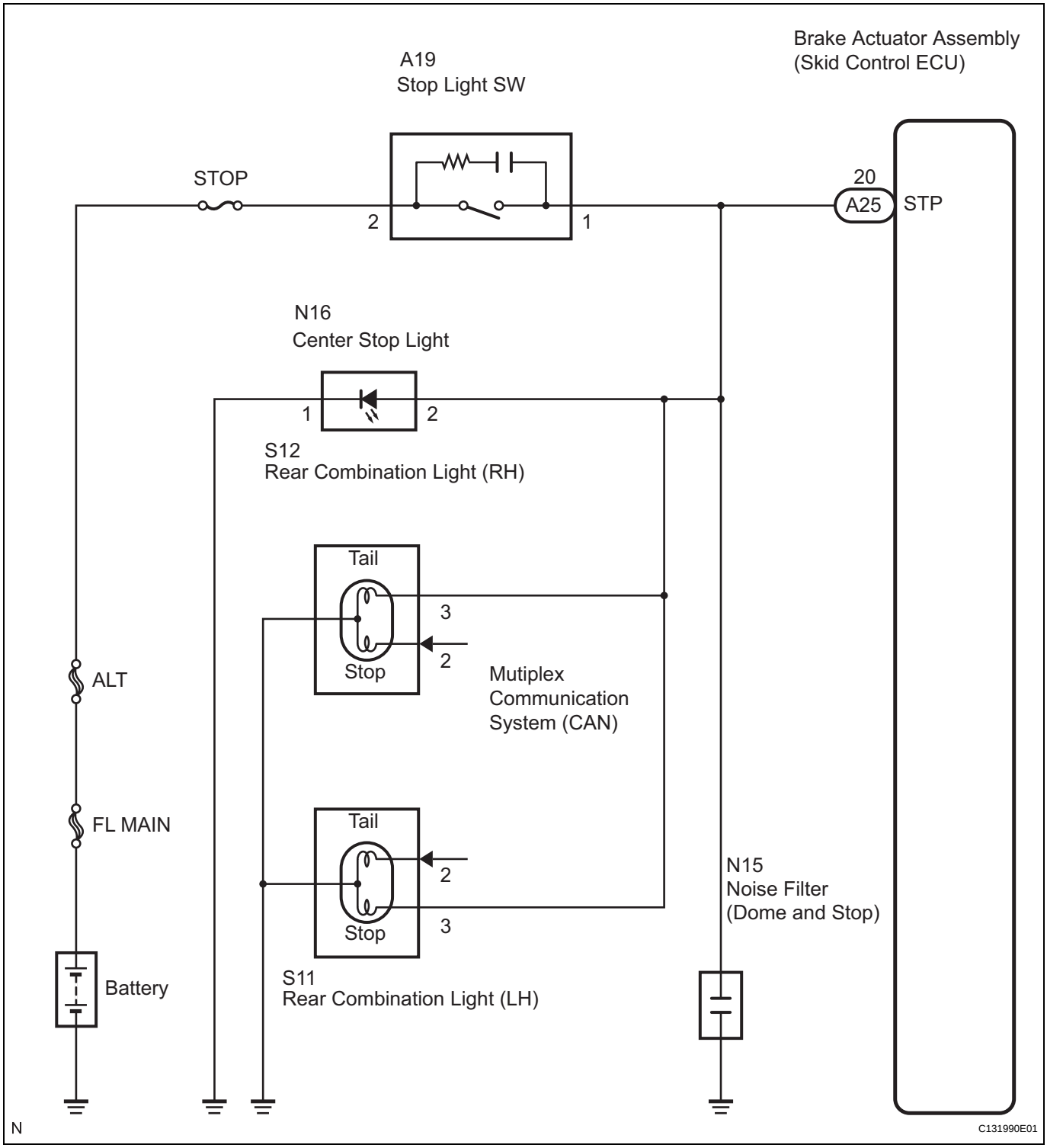

INSPECTION PROCEDURE

HINT:

Check the condition of each related circuit connector before troubleshooting (See page IN-40).

1 CHECK STOP LIGHT SWITCH OPERATION (STOP LIGHT SWITCH CIRCUIT)

(a) Check that the stop lights come on when the brake pedal is depressed and goes off when the brake pedal is released.

OK

Pedal Condition	Illumination Condition
Brake pedal depressed	ON
Brake pedal released	OFF

NG → **Go to step 5**

OK

2 INSPECT SKID CONTROL ECU CONNECTOR (STP TERMINAL)

BC

Skid Control ECU (Harness Side Connector Front View):

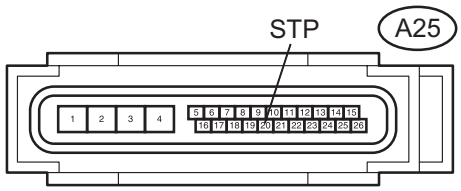

N C131970E08

(a) Disconnect the skid control ECU connector.
(b) Measure the voltage according to the value(s) in the table below.

Standard voltage

Tester Connection	Switch Condition	Specified Condition
A25-20 (STP) - Body ground	Brake pedal depressed	8 to 14 V
A25-20 (STP) - Body ground	Brake pedal released	Below 4.0 V

NG → **Go to step 7**

OK

3 INSPECT SKID CONTROL ECU CONNECTOR (GND TERMINAL CONTINUITY)

Skid Control ECU (Harness Side Connector Front View):

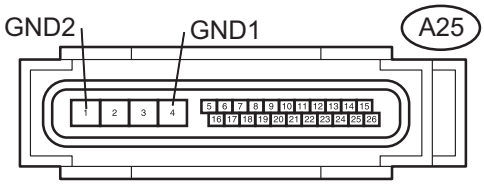

N C131970E05

(a) Measure the resistance according to the value(s) in the table below.

Standard resistance

Tester Connection	Specified Condition
A25-4 (GND1) - Body ground	Below 1 Ω
A25-1 (GND2) - Body ground	Below 1 Ω

(b) Connect the connector.

NG → **REPAIR OR REPLACE HARNESS OR CONNECTOR (GND CIRCUIT)**

OK

4 RECONFIRM DTC

(a) Clear the DTC (See page BC-21).
(b) Start the engine.

(c) Depress the brake pedal several times to test the stop light circuit.
(d) Check if the same DTC is recorded (See page BC-21).
HINT:
Reinstall the sensors, connectors, etc. and restore the vehicle to its prior condition before rechecking for DTCs.

Result

Condition	Proceed to
DTC is not output	A
DTC is output (When troubleshooting in accordance with the DTC CHART)	B
DTC is output (When troubleshooting in accordance with the PROBLEM SYMPTOMS TABLE)	C

B → **REPLACE BRAKE ACTUATOR ASSEMBLY (See page BC-432)**

C → **PROCEED TO NEXT CIRCUIT INSPECTION SHOWN IN PROBLEM SYMPTOMS TABLE (See page BC-16)**

A

CHECK FOR INTERMITTENT PROBLEMS (SYMPTOM SIMULATION) (See page BC-19)

5 INSPECT STOP LIGHT SWITCH ASSEMBLY (POWER SOURCE TERMINAL VOLTAGE)

Stop Light Switch (Wire Harness Side) Connector Front View:

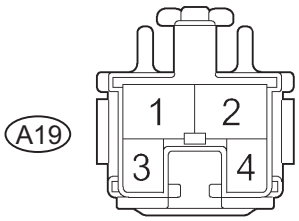

I042363E17

(a) Disconnect the stop light switch connector.
(b) Measure the voltage according to the value(s) in the table below.

Standard voltage

Tester Connection	Condition	Specified Condition
A19-2 - Body ground	Always	10 to 14 V

NG → **REPAIR OR REPLACE HARNESS OR CONNECTOR (POWER SOURCE CIRCUIT)**

OK

6 INSPECT STOP LIGHT SWITCH ASSEMBLY

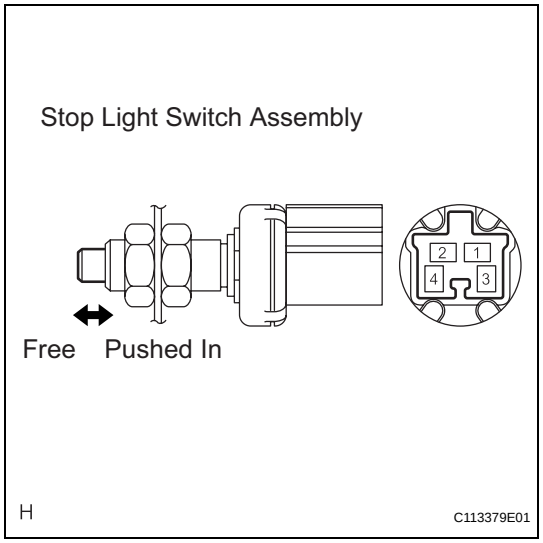

(a) Measure the resistance according to the value(s) in the table below.

Standard resistance

Tester Connection	Condition	Specified Condition
Switch pin free	1 - 2	Below 1 Ω
Switch pin pushed in	1 - 2	10 kΩ or higher

NG → **REPLACE STOP LIGHT SWITCH ASSEMBLY (See page BR-71)**

OK

7 CHECK HARNESS AND CONNECTOR (STOP LIGHT SWITCH TO SKID CONTROL ECU)

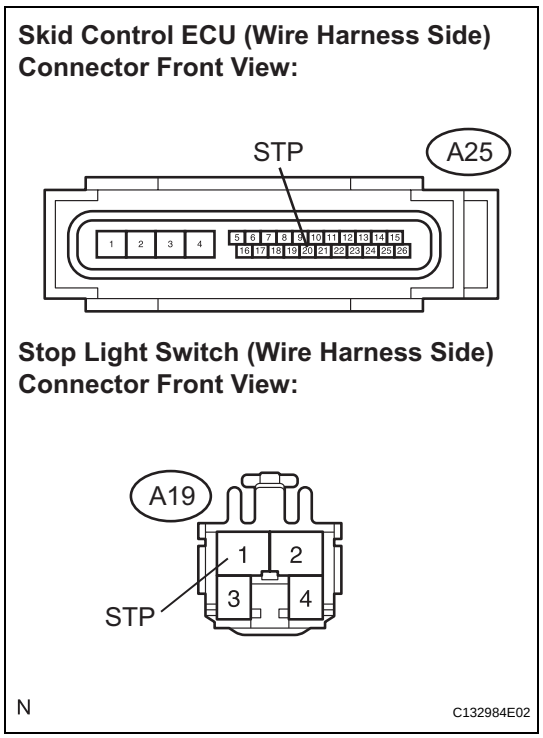

(a) Disconnect the stop light switch connector and skid control ECU connector.

(b) Measure the resistance according to the value(s) in the table below.

Standard resistance

Tester Connection	Specified Condition
A25-20 (STP) - A19-1 (STP)	Below 1 Ω

(c) Connect the connector.

NG → **REPAIR OR REPLACE HARNESS OR CONNECTOR (STOP LIGHT SWITCH TO SKID CONTROL ECU)**

OK

REPAIR OR REPLACE HARNESS OR CONNECTOR (STOP LIGHT CIRCUIT)

BC

DTC	C1300/62	Skid Control ECU Malfunction

DESCRIPTION

The skid control ECU outputs this DTC, if malfunctions are found in the circuit inside the computer by self diagnosis.

DTC No.	DTC Detecting Condition	Trouble Area
C1300/62	Internal failure of the skid control ECU control unit	Brake actuator assembly (skid control ECU)

INSPECTION PROCEDURE

1	REPLACE BRAKE ACTUATOR ASSEMBLY

(a) Replace the brake actuator assembly (skid control ECU) (See page BC-432).
HINT:
This DTC is output when the skid control ECU detects a malfunction in the internal circuit.

(b) Clear the DTC (See page BC-21).

NEXT

END

BC

DTC	U0073/94	Control Module Communication Bus OFF

DESCRIPTION

- The skid control ECU receives the signal sent from the ECM via the CAN communication system.
- When DTCs indicating a CAN communication system malfunction are output, repair the CAN communication system before repairing each corresponding sensor.

DTC No.	DTC Detecting Condition	Trouble Area
U0073/94	When any of the following is detected: 1. The skid control ECU cannot send a signal (30 cycles). 2. The condition that bus OFF state occurs for 300 msec.	• Wire harness (CANL, CANH circuit) • Brake actuator assembly (Skid control ECU)

INSPECTION PROCEDURE

Proceed to CAN communication system troubleshooting (See page CA-8).
HINT:
When DTCs indicating a CAN communication system malfunction are output, repair the CAN communication system before repairing each corresponding sensor.

ABS Warning Light Remains ON

DESCRIPTION

The skid control ECU sends the indicator signals to the combination meter assembly via the CAN communication system.
If any of the following is detected, the ABS warning light remains on.

- The skid control ECU connectors are disconnected from the skid control ECU.
- There is a malfunction in the skid control ECU internal circuit.
- There is an open in the wire harness between the combination meter and the skid control ECU.
- The ABS and/or EBD is defective.

HINT:
The intelligent tester may not be used when the skid control ECU is abnormal.

WIRING DIAGRAM

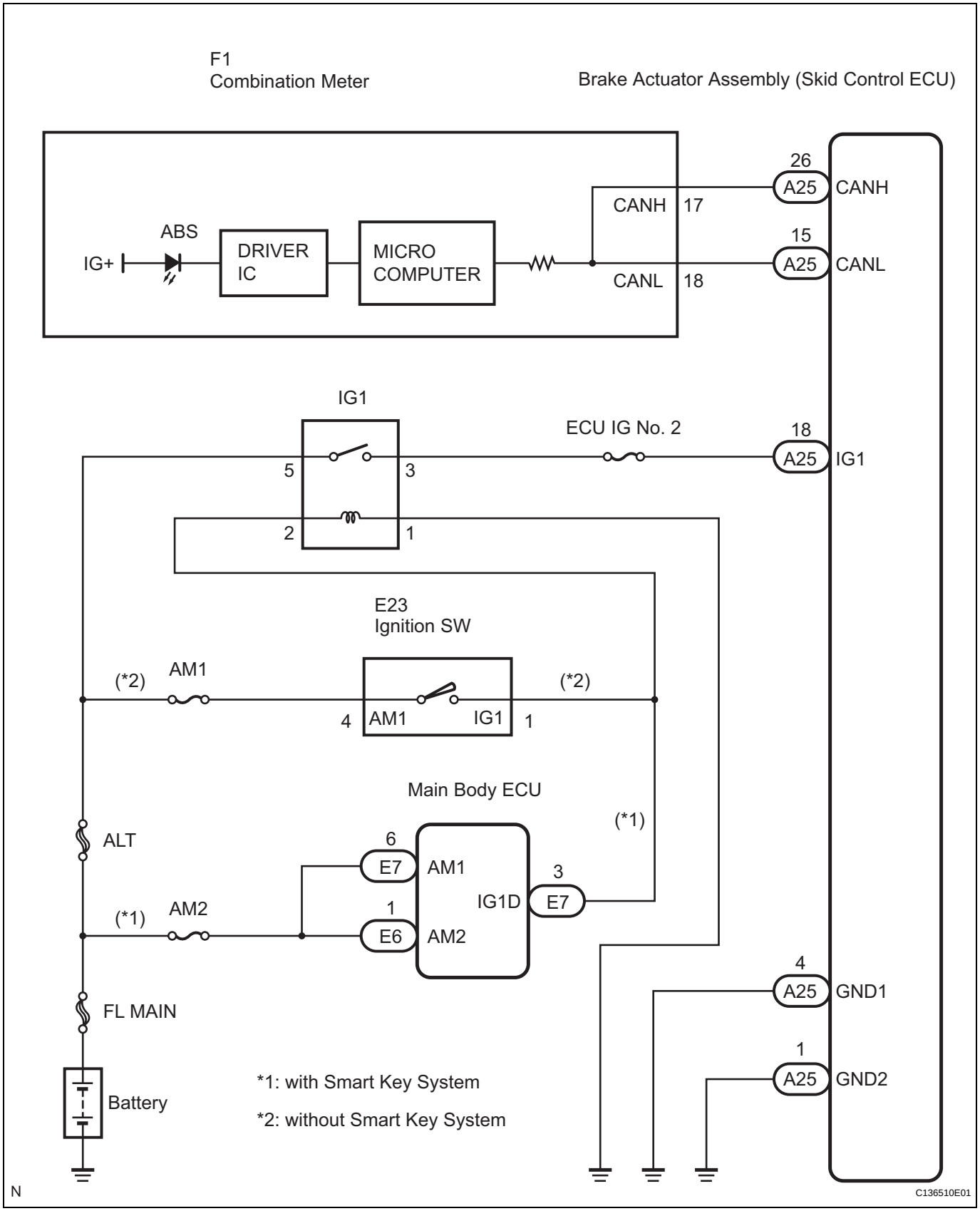

INSPECTION PROCEDURE

HINT:

Check the condition of each related circuit before troubleshooting (See page IN-40).

1 INSPECT CAN COMMUNICATION SYSTEM

(a) Check if a CAN communication system DTC is output (See page BC-21).

Result

Condition	Proceed to
CAN communication system DTC is not output	A
CAN communication system DTC is output	B

B → **INSPECT CAN COMMUNICATION SYSTEM (See page CA-8)**

A

2 CHECK SKID CONTROL ECU CONNECTOR SECURELY CONNECTED

BC

(a) Check if the skid control ECU connector is connected.
OK:
The connector is securely connected.

NG → **CONNECT CONNECTOR TO ECU CORRECTLY**

OK

3 CHECK BATTERY

(a) Check the battery voltage.
Standard voltage:
11 to 14 V

NG → **INSPECT CHARGING SYSTEM**

OK

4 INSPECT SKID CONTROL ECU CONNECTOR (IG1 TERMINAL VOLTAGE)

Skid Control ECU (Harness Side Connector Front View):

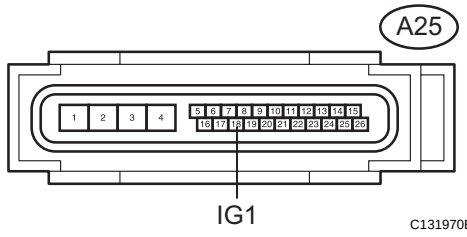

(a) Disconnect the skid control ECU connector.
(b) Turn the ignition switch on (IG).
(c) Measure the voltage according to the value(s) in the table below.
Standard voltage

Tester Connection	Condition	Specified Condition
A25-18 (IG1) - Body ground	Ignition switch on (IG)	10 to 14 V

NG → **REPAIR OR REPLACE HARNESS OR CONNECTOR (IG1 CIRCUIT)**

OK

5 INSPECT SKID CONTROL ECU CONNECTOR (GND TERMINAL CONTINUITY)

Skid Control ECU (Harness Side Connector Front View):

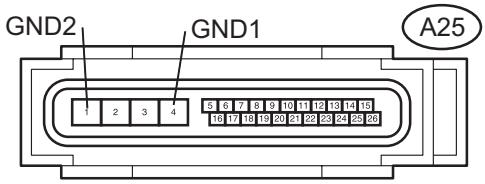

(a) Measure the resistance according to the value(s) in the table below.

Standard resistance

Tester Connection	Specified Condition
A25-4 (GND1) - Body ground	Below 1 Ω
A25-1 (GND2) - Body ground	Below 1 Ω

(b) Connect the connector.

NG → **REPAIR OR REPLACE HARNESS OR CONNECTOR (GND CIRCUIT)**

OK

6 INSPECT COMBINATION METER ASSEMBLY

BC

(a) Connect the intelligent tester to the DLC3.
(b) Select the "ACTIVE TEST" on the tester (See page BC-25).

ACTIVE TEST: ABS

Item	Vehicle Condition / Test Details	Diagnostic Note
ABS WRN LIGHT	Turn ABS warning light ON / OFF	Observe combination meter

(c) Check the ABS warning light operation.

OK:

The ABS warning light turns on or off in accordance with the intelligent tester.

Result

Condition	Proceed to
OK	A
OK (When troubleshooting in accordance with the PROBLEM SYMPTOMS TABLE)	B
NG	C

B → **PROCEED TO NEXT CIRCUIT INSPECTION SHOWN IN PROBLEM SYMPTOMS TABLE (See page BC-16)**

C → **REPLACE COMBINATION METER ASSEMBLY (See page ME-63)**

A

REPLACE BRAKE ACTUATOR ASSEMBLY (See page BC-432)

ABS Warning Light does not Come ON

WIRING DIAGRAM

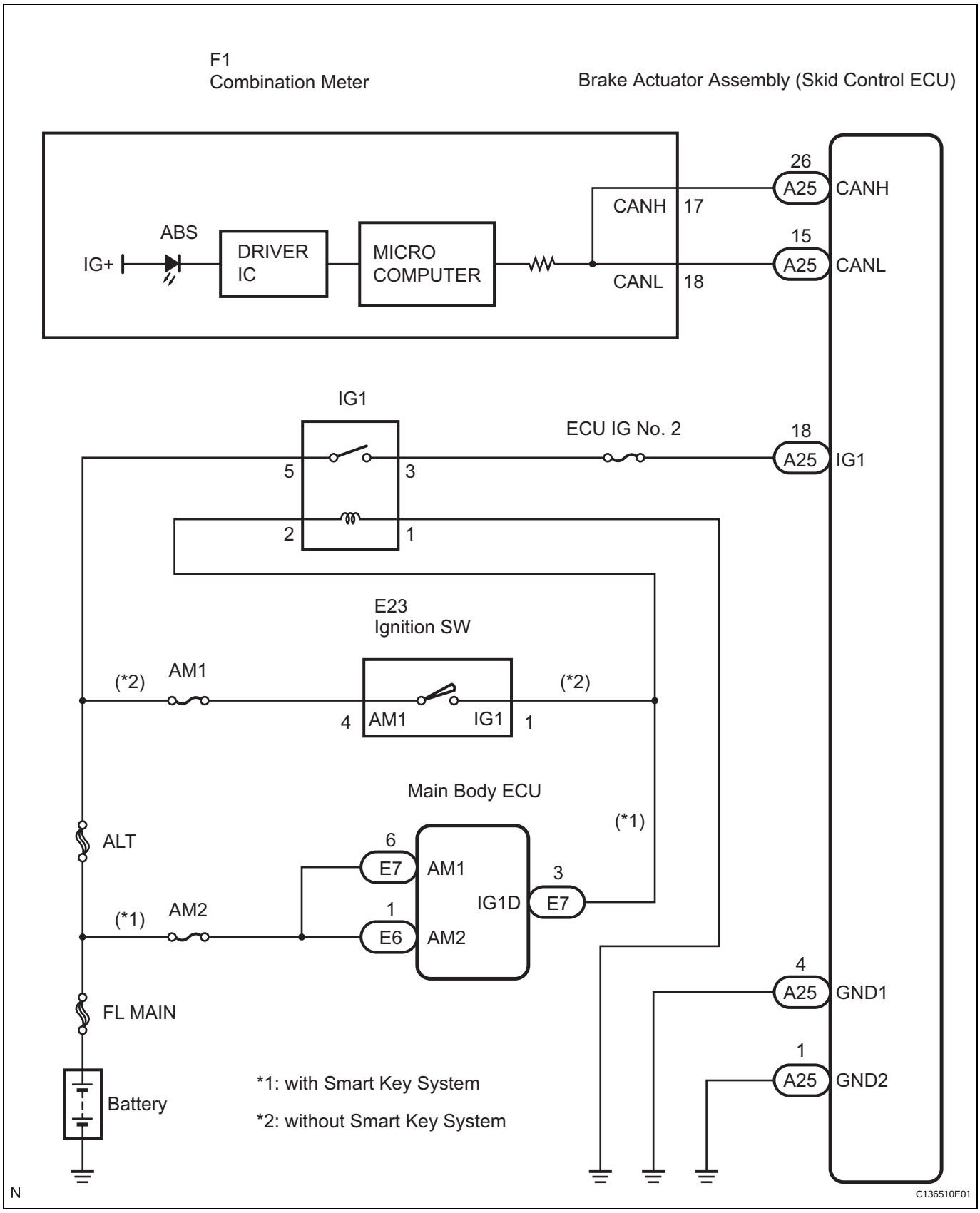

BC

INSPECTION PROCEDURE

HINT:
Check the condition of each related circuit connector before troubleshooting (See page IN-40).

1 INSPECT CAN COMMUNICATION SYSTEM

(a) Check if a CAN communication system DTC is output (See page BC-21).

Result

Condition	Proceed to
CAN communication system DTC is not output	A
CAN communication system DTC is output	B

B → **REPAIR CAN COMMUNICATION SYSTEM (See page CA-8)**

A

2 INSPECT ABS WARNING LIGHT

HINT:
When disconnecting the skid control ECU connector, the ABS warning light comes on.

(a) Turn the ignition switch off.
(b) Disconnect the skid control ECU connector.
(c) Turn the ignition switch on (IG).
(d) Check that the ABS warning light comes on.
OK:
The ABS warning light comes on.
(e) Connect the connector.

NG → **Go to step 3**

OK

REPLACE BRAKE ACTUATOR ASSEMBLY (See page BC-432)

3 INSPECT COMBINATION METER ASSEMBLY

(a) Connect the intelligent tester to the DLC3.
(b) Select the "ACTIVE TEST" on the tester (See page BC-25).

ACTIVE TEST: METER

Item	Vehicle Condition / Test Details	Diagnostic Note
ABS WRN LIGHT	Turn ABS warning light ON / OFF	Observe combination meter

(c) Check the ABS warning light operation.
OK:
The ABS warning light turns on or off in accordance with the intelligent tester.

NG → **REPLACE COMBINATION METER ASSEMBLY (See page ME-63)**

OK

REPLACE BRAKE ACTUATOR ASSEMBLY (See page BC-432)

Brake Warning Light Remains ON

DESCRIPTION

The skid control ECU sends the indicator signals to the combination meter assembly via the CAN communication system.

If any of the following is detected, the brake warning light remains on:

- The skid control ECU connector is disconnected from the skid control ECU.
- The brake fluid level is insufficient.
- The parking brake is applied.
- EBD operation is not possible.

WIRING DIAGRAM

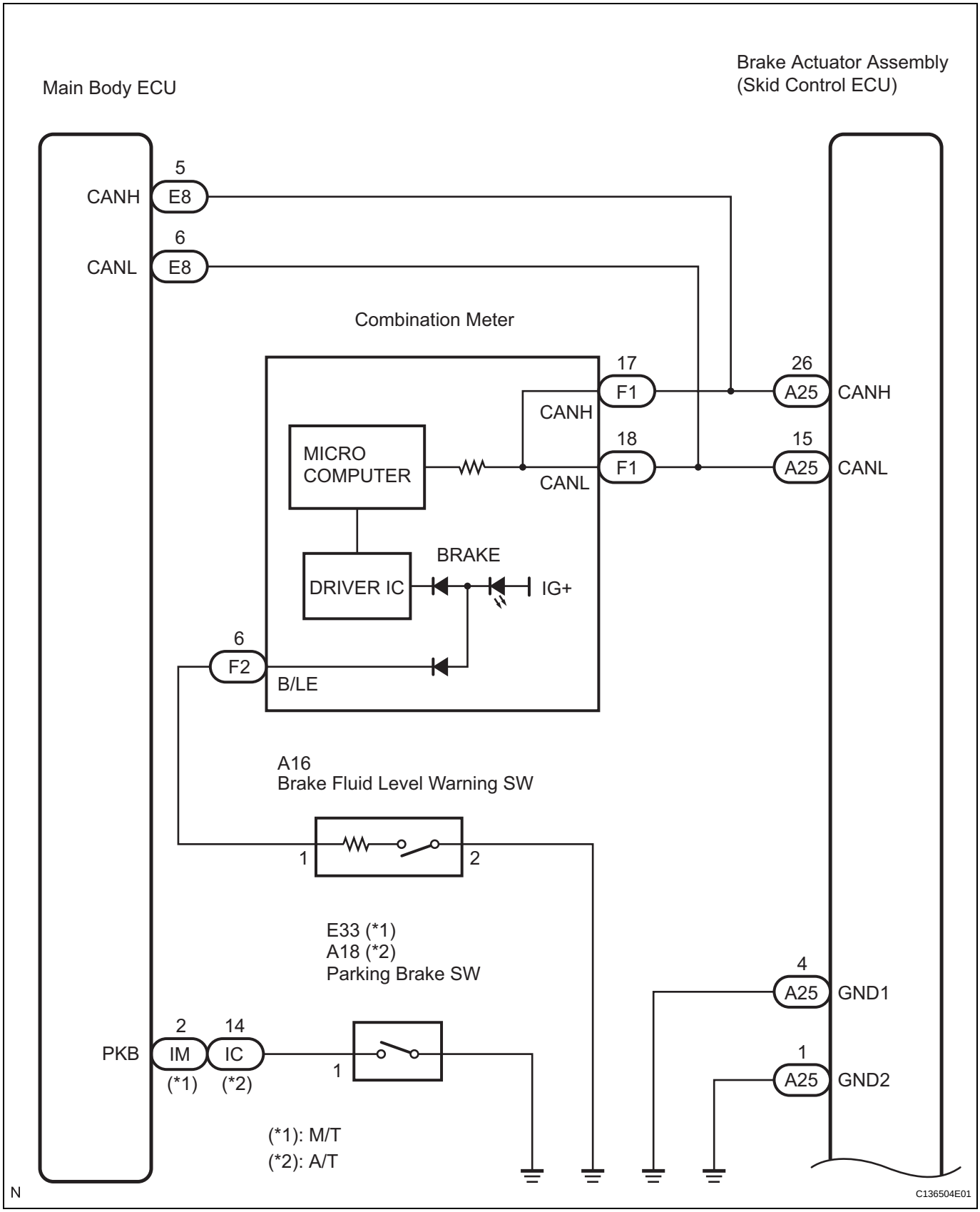

BC

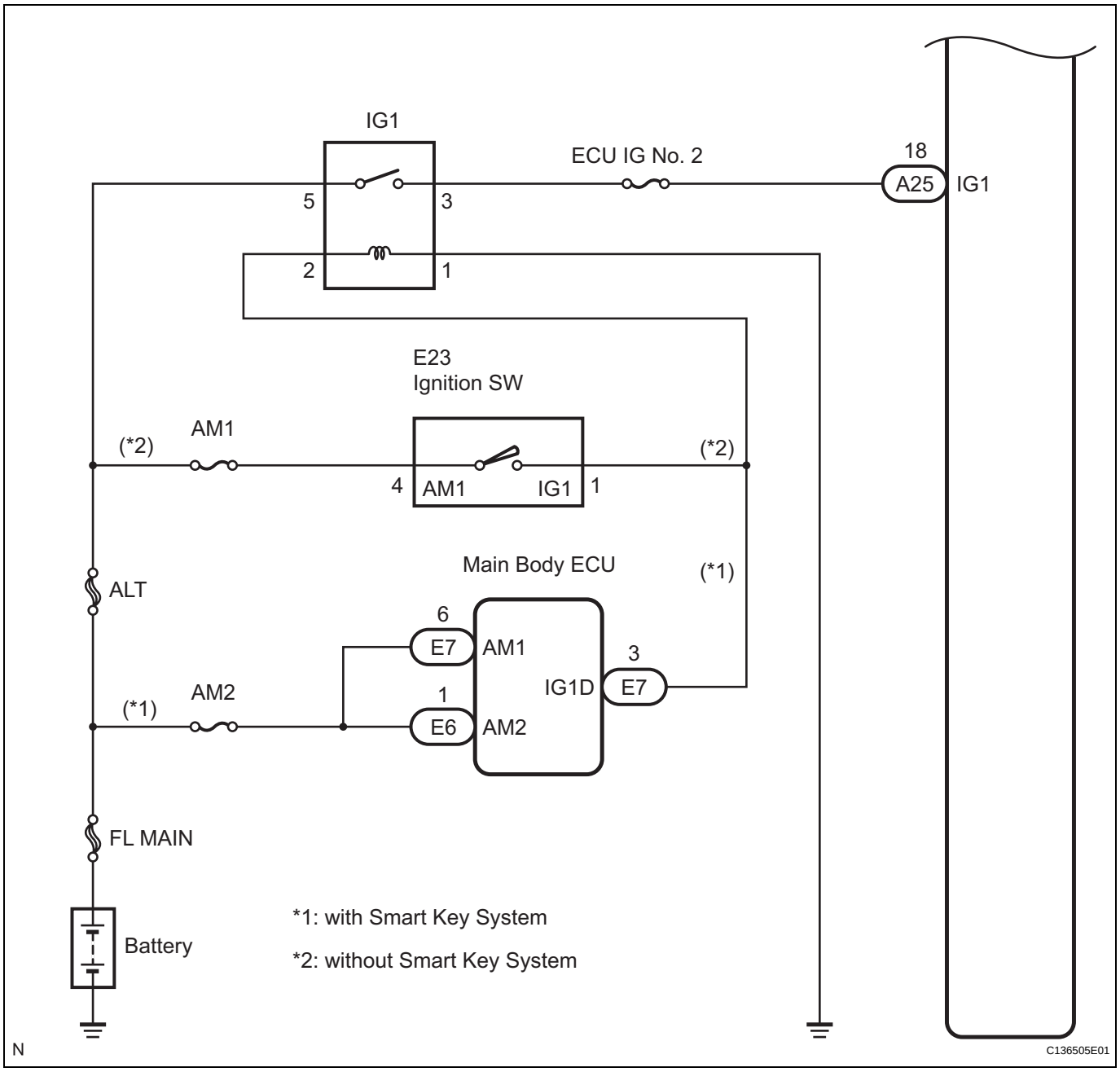

BC

INSPECTION PROCEDURE

HINT:

Check the condition of each related circuit connector before troubleshooting (See page IN-40).

1	CHECK DTC

(a) Check if an ABS DTC is output (See page BC-21).

Result

Condition	Proceed to
CAN communication system DTC is not output	A
CAN communication system DTC is output	B

B → **REPAIR CIRCUITS INDICATED BY OUTPUT DTCS (See page BC-27)**

A

2 INSPECT CAN COMMUNICATION SYSTEM

(a) Check if a CAN communication system DTC is output (See page BC-21).

Result

Condition	Proceed to
DTC is not output	A
DTC is output	B

B → **REPAIR CAN COMMUNICATION SYSTEM (See page CA-8)**

A

3 CHECK IF SKID CONTROL ECU CONNECTOR SECURELY CONNECTED

(a) Check if the skid control ECU connector is connected securely.
OK:
The connector should be securely connected.

NG → **CONNECT CONNECTOR TO ECU CORRECTLY**

OK

4 CHECK BATTERY

(a) Check the battery voltage.
Standard voltage:
11 to 14 V

NG → **INSPECT CHARGING SYSTEM**

OK

5 INSPECT SKID CONTROL ECU CONNECTOR (IG1 TERMINAL VOLTAGE)

Skid Control ECU (Harness Side Connector Front View):

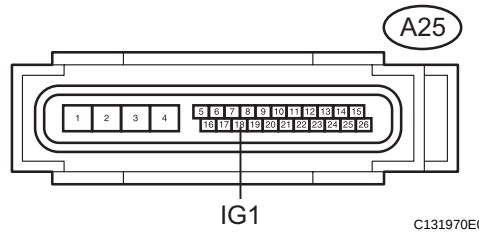

(a) Disconnect the skid control ECU connector.
(b) Turn the ignition switch on (IG).
(c) Measure the voltage according to the value(s) in the table below.

Standard voltage

Tester Connection	Condition	Specified Condition
A25-18 (IG1) - Body ground	Ignition switch on (IG)	10 to 14 V

NG → **REPAIR OR REPLACE HARNESS OR CONNECTOR (IG1 CIRCUIT)**

OK

6 INSPECT SKID CONTROL ECU CONNECTOR (GND TERMINAL CONTINUITY)

Skid Control ECU (Harness Side Connector Front View):

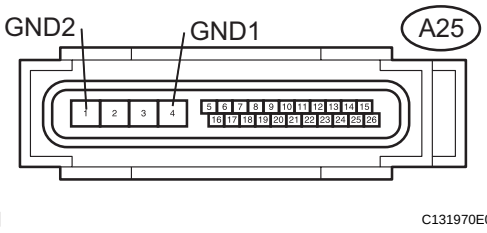

(a) Measure the resistance according to the value(s) in the table below.

Standard resistance

Tester Connection	Specified Condition
A25-4 (GND1) - Body ground	Below 1 Ω
A25-1 (GND2) - Body ground	Below 1 Ω

NG → **REPAIR OR REPLACE HARNESS OR CONNECTOR (GND CIRCUIT)**

OK

BC

7	INSPECT PARKING BRAKE SWITCH

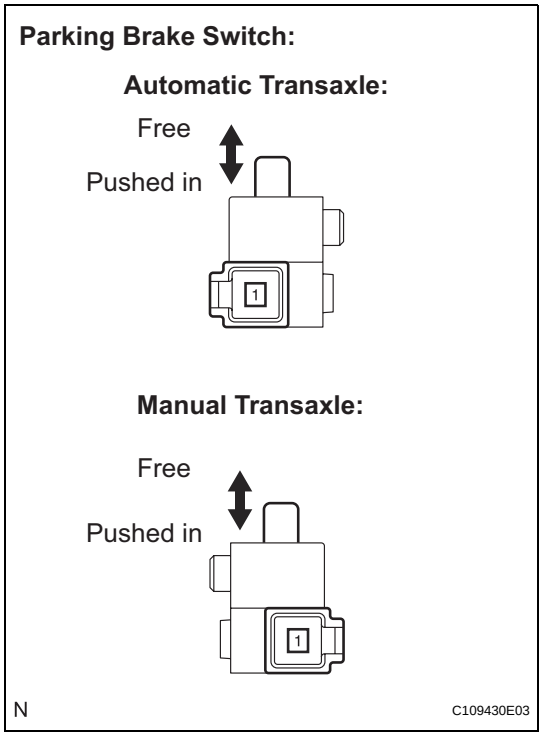

(a) Remove the parking brake switch.
(b) Disconnect the parking brake switch connector.
(c) Measure the resistance according to the value(s) in the table below.

Standard resistance

Automatic Transaxle

Tester Connection	Condition	Specified Condition
(A18-1) - Ground part	Free	Below 1 Ω
(A18-1) - Ground part	Pushed in	10 kΩ or higher

Manual Transaxle

Tester Connection	Condition	Specified Condition
(E33-1) - Ground part	Free	Below 1 Ω
(E33-1) - Ground part	Pushed in	10 kΩ or higher

NG → **REPLACE PARKING BRAKE SWITCH**

OK

BC

8 CHECK HARNESS AND CONNECTOR (MAIN BODY ECU TO PARKING BRAKE SWITCH)

Main Body ECU Wire Harness View:

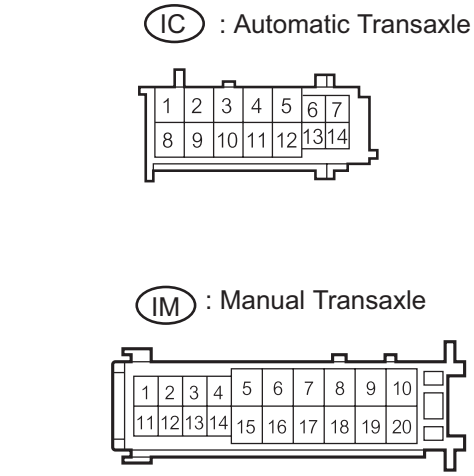

Parking Brake Switch Harness Side Connector Front View:

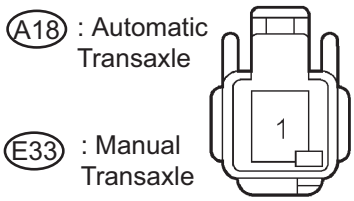

C136418E03

(a) Disconnect the main body ECU connector.

(b) Measure the resistance according to the value(s) in the table below.

Standard resistance:

Automatic Transaxle

Tester Connection	Specified Condition
IC-14 - A18-1 (PKB)	Below 1 Ω
A18-1 (PKB) - Body ground	10 kΩ or higher

Manual Transaxle

Tester Connection	Specified Condition
IM-2 (PKB) - E33-1 (PKB)	Below 1 Ω
E33-1 (PKB) - Body ground	10 kΩ or higher

(c) Connect the connector.

NG → **REPAIR OR REPLACE HARNESS OR CONNECTOR (MAIN BODY ECU TO PARKING BRAKE SWITCH)**

OK

BC

9	INSPECT BRAKE FLUID LEVEL WARNING SWITCH ASSEMBLY

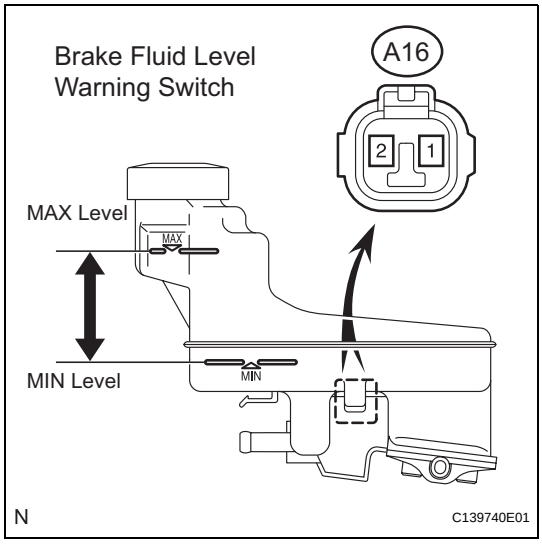

(a) Remove the reservoir tank cap.
(b) Disconnect the brake fluid level warning switch connector.
(c) Measure the resistance according to the value(s) in the table below.
HINT:
A float is located inside the reservoir.
Its position can be changed by increasing or decreasing the level of brake fluid.

Standard resistance

Tester Connection	Condition	Specified Condition
(A16-1) - (A16-2)	Float UP	10 kΩ or higher (No Continuity)
(A16-1) - (A16-2)	Float DOWN	Below 1 Ω (Continuity)

HINT:
If there is no problem after finishing the above check, adjust the brake fluid level to the MAX level.

NG → **REPLACE BRAKE MASTER CYLINDER RESERVOIR SUB-ASSEMBLY (BRAKE FLUID LEVEL WARNING SWITCH)**

OK

BC

10 CHECK HARNESS AND CONNECTOR (BRAKE FLUID LEVEL WARNING SWITCH TO COMBINATION METER)

Combination Meter Wire Harness View:

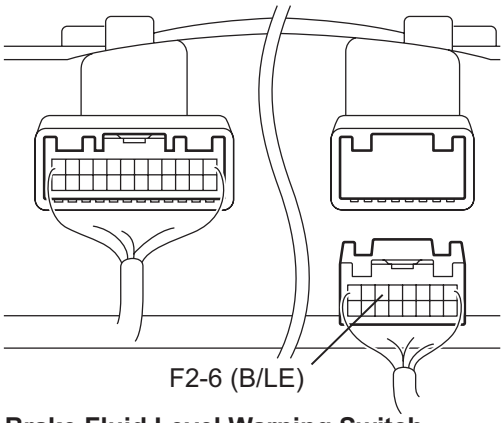

Brake Fluid Level Warning Switch Harness Side Connector Front View:

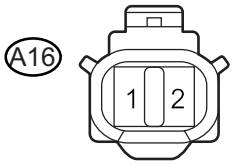

C136033E01

(a) Disconnect the combination meter assembly connector.
(b) Measure the resistance according to the value(s) in the table below.
Standard resistance

Tester Connection	Specified Condition
A16-1 - F2-6 (B/LE)	Below 1 Ω
F2-6 (B/LE) - Body ground	10 kΩ or higher
A16-2 - Body ground	Below 1 Ω

(c) Connect the connector.

NG → **REPAIR OR REPLACE HARNESS OR CONNECTOR (BRAKE FLUID LEVEL WARNING SWITCH TO COMBINATION METER)**

BC

OK

11 INSPECT COMBINATION METER ASSEMBLY

(a) Connect the intelligent tester to the DLC3.
(b) Select the "ACTIVE TEST" on the tester (See page BC-25).

ACTIVE TEST: ABS

Item	Vehicle Condition / Test Details	Diagnostic Note
BRAKE WARN LIGHT	Turn brake warning light ON / OFF	Observe combination meter

(c) Check the ABS warning light operation.
OK:
The BRAKE warning light turns on or off in accordance with the intelligent tester.

Result

Condition	Proceed to
OK	A
OK (When troubleshooting in accordance with the PROBLEM SYMPTOMS TABLE)	B
NG	C

B

PROCEED TO NEXT CIRCUIT INSPECTION SHOWN IN PROBLEM SYMPTOMS TABLE (See page BC-16)

C

REPLACE COMBINATION METER ASSEMBLY (See page ME-63)

A

REPLACE BRAKE ACTUATOR ASSEMBLY (See page BC-432)

Brake Warning Light does not Come ON

WIRING DIAGRAM

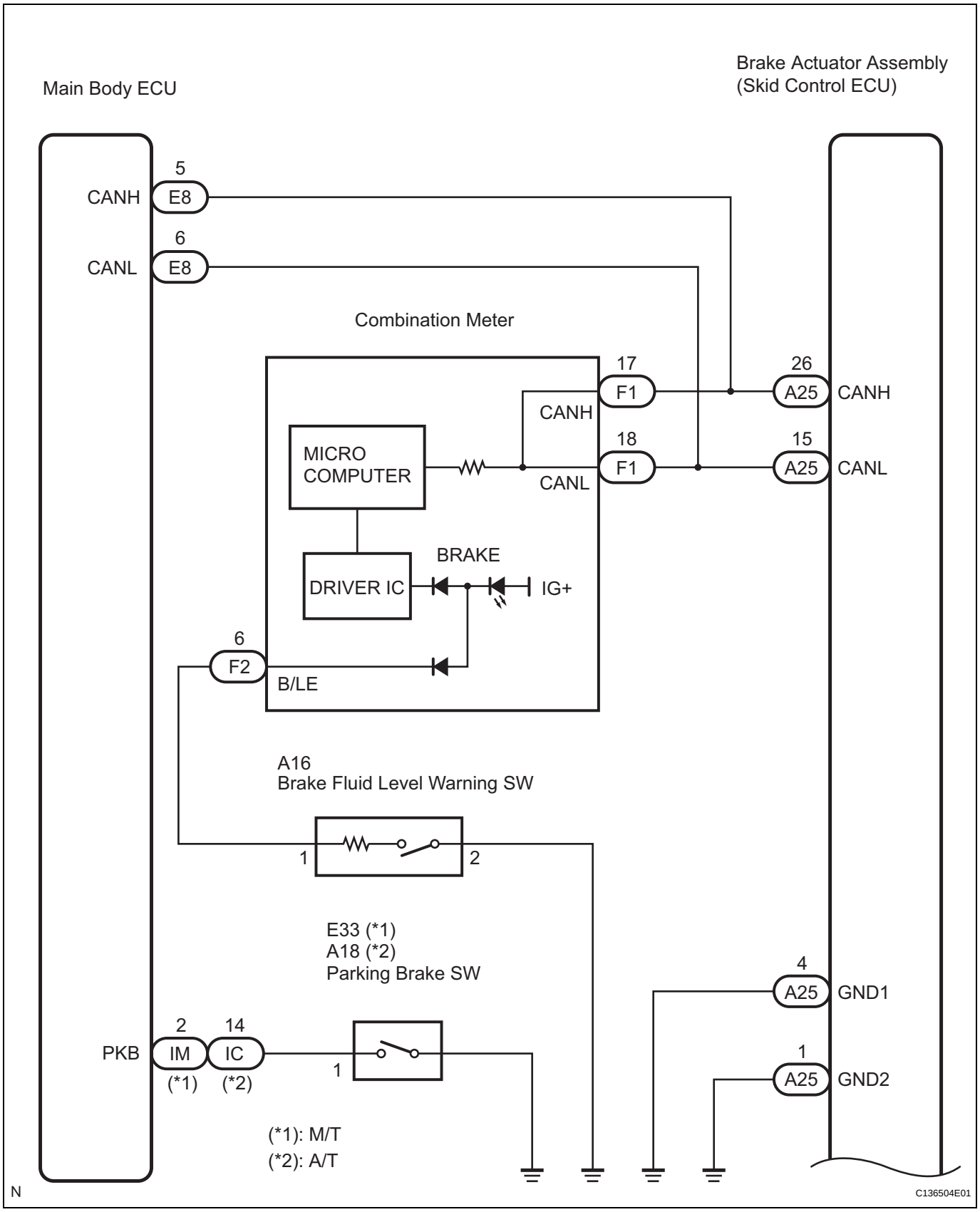

BC

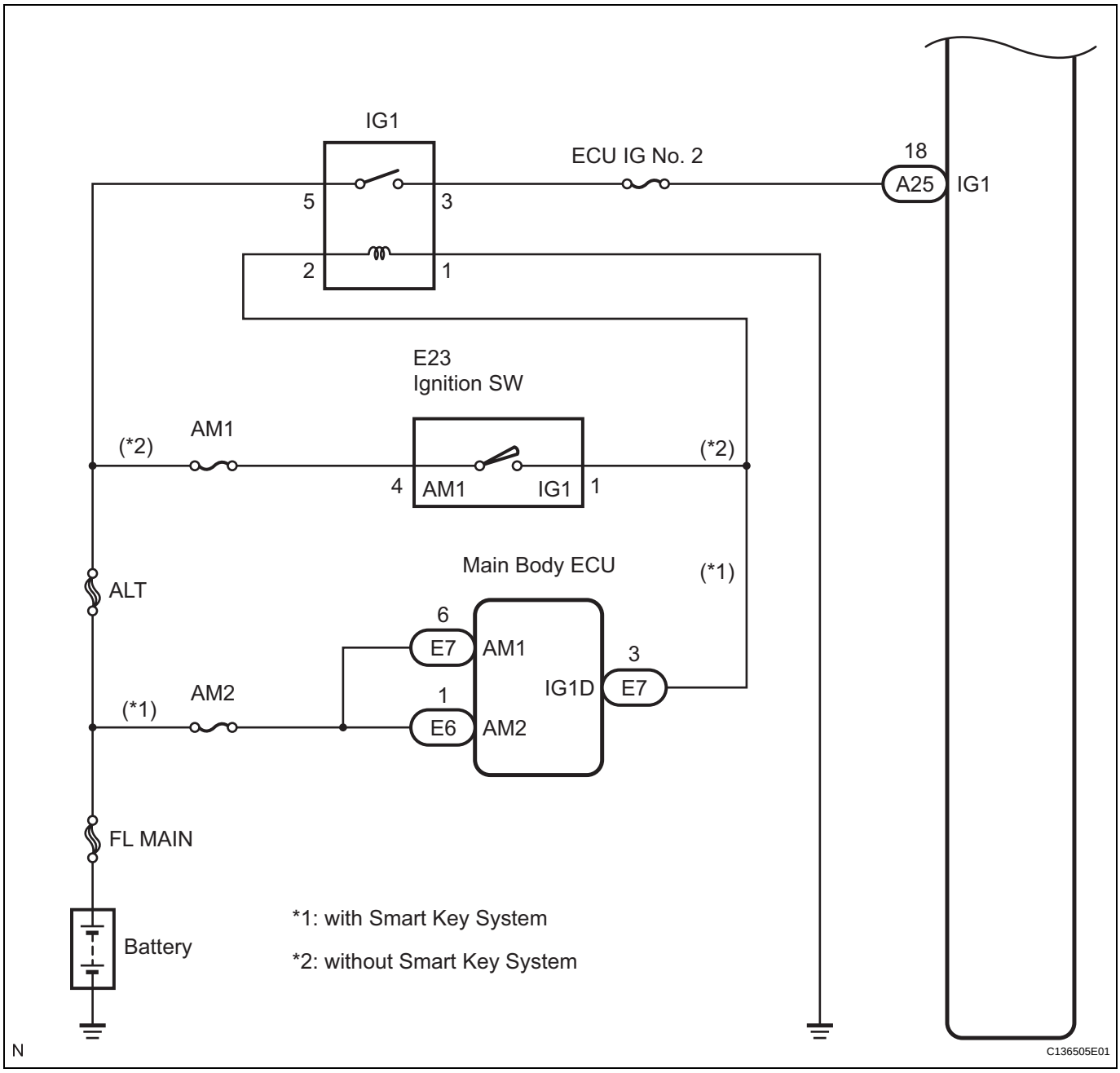

INSPECTION PROCEDURE

HINT:
Check the condition of each related circuit connector before troubleshooting (See page IN-40).

1	INSPECT CAN COMMUNICATION SYSTEM

(a) Check if a CAN communication system DTC is output (See page BC-21).

Result

Condition	Proceed to
CAN communication system DTC is not output	A
CAN communication system DTC is output	B

B → **REPAIR CAN COMMUNICATION SYSTEM (See page CA-8)**

A

2 INSPECT BRAKE WARNING LIGHT

HINT:
When disconnecting the skid control ECU connector, the brake warning light comes on.

(a) Turn the ignition switch off.
(b) Disconnect the skid control ECU connector.
(c) Turn the ignition switch on (IG).
(d) Check that the brake warning light comes on.
OK:
The brake warning light comes on.

NG → **Go to step 3**

BC

OK

REPLACE BRAKE ACTUATOR ASSEMBLY (See page BC-432)

3 INSPECT COMBINATION METER ASSEMBLY

(a) Connect the intelligent tester to the DLC3.
(b) Select the "ACTIVE TEST" on the tester (See page BC-25).

ACTIVE TEST: METER

Item	Vehicle Condition / Test Details	Diagnostic Note
BRAKE WARN LIGHT	Turn brake warning light ON / OFF	Observe combination meter

(c) Check the ABS warning light operation.
OK:
The BRAKE warning light turns on or off in accordance with the intelligent tester.

NG → **REPLACE COMBINATION METER ASSEMBLY (See page ME-63)**

OK

REPLACE BRAKE ACTUATOR ASSEMBLY (See page BC-432)

TC and CG Terminal Circuit

DESCRIPTION

DTC output mode is set by connecting terminals TC and CG of the DLC3.
DTCs are indicated by the blinking pattern of the ABS warning light.

WIRING DIAGRAM

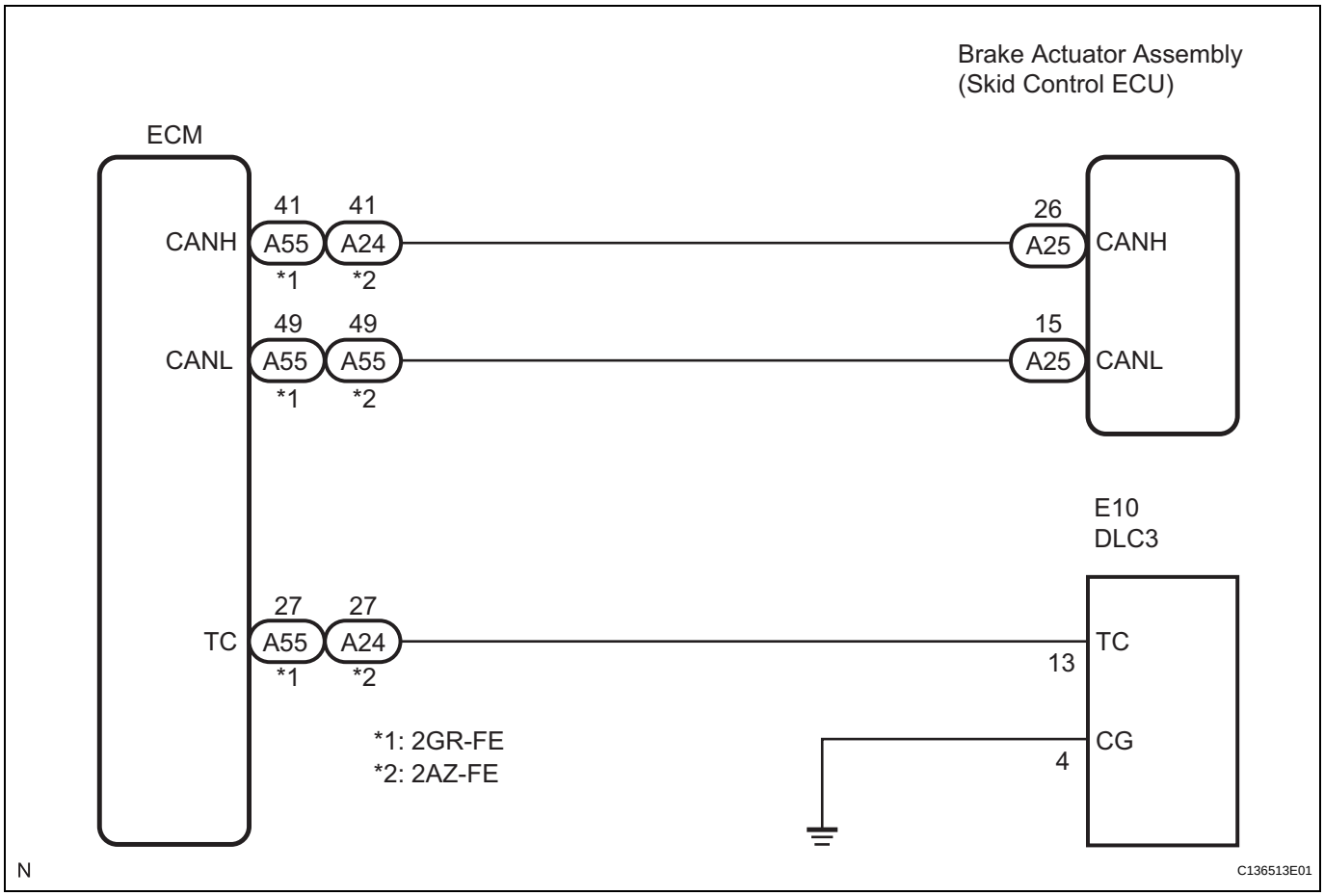

HINT:
When warning lights continue to blink, a ground short in the wiring of terminal TC of the DLC3 or an internal ground short in one or more ECUs is suspected.

INSPECTION PROCEDURE

HINT:
Check the condition of each related circuit connector before troubleshooting (See page IN-40).

1	CHECK CAN COMMUNICATION SYSTEM

(a) Check if a CAN communication DTC is output (See page BC-21).

Result

Result	Proceed to
CAN communication system DTC is output	A
CAN communication system DTC is not output	B

B → Go to step 2

A

GO TO CAN COMMUNICATION SYSTEM (See page CA-8)

2 CHECK HARNESS AND CONNECTOR (ECM TO DLC3)

DLC3:

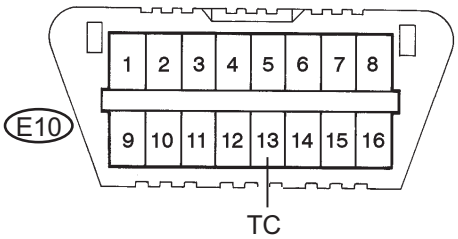

ECM Wire Harness View:

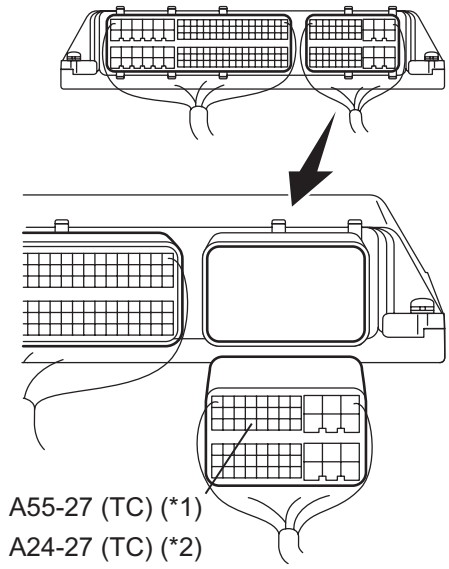

(*1): 2GR-FE (*2): 2AZ-FE

C136035E02

(a) Disconnect the ECM connector.
(b) Measure the resistance according to the value(s) in the table below.

Standard resistance

2GR-FE

Tester Connection	Specified Condition
A55-27 (TC) - E10-13 (TC)	Below 1 Ω
E10-13 (TC) - Body ground	10 kΩ or higher

2AZ-FE

Tester Connection	Specified Condition
A24-27 (TC) - E10-13 (TC)	Below 1 Ω
E10-13 (TC) - Body ground	10 kΩ or higher

(c) Connect the connector.

NG → **REPAIR OR REPLACE HARNESS OR CONNECTOR (TC TERMINAL CIRCUIT)**

OK

BC

3	CHECK HARNESS AND CONNECTOR (DLC3 CG CIRCUIT)

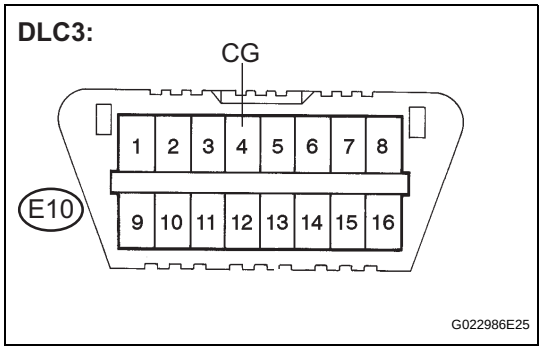

(a) Measure the resistance according to the value(s) in the table below.

Standard resistance

Tester Connection	Specified Condition
E10-4 (CG) - Body ground	Below 1 Ω

NG → **REPAIR OR REPLACE HARNESS OR CONNECTOR (CG TERMINAL CIRCUIT)**

OK

BC

4	REPAIR OR REPLACE HARNESS OR CONNECTOR (TC TERMINAL CIRCUIT)

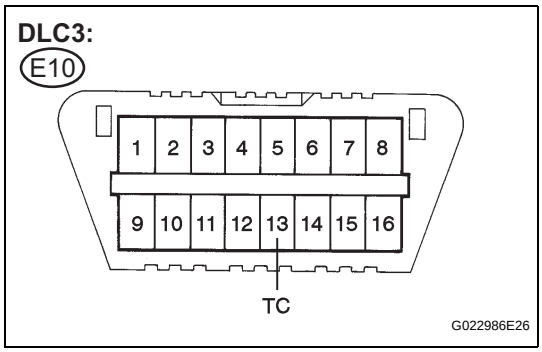

(a) Measure the resistance according to the value(s) in the table below.

Standard resistance

Tester Connection	Specified Condition
E10-13 (TC) - Body ground	10 kΩ or higher

NG → **CHECK HARNESS AND CONNECTOR (TC TERMINAL CIRCUIT)**

OK

REPLACE BRAKE ACTUATOR ASSEMBLY (See page BC-432)

TS and CG Terminal Circuit

DESCRIPTION

In the Test Mode (signal check), a malfunction of the speed sensor that cannot be detected when the vehicle is stopped can be detected while driving.
Transition to the sensor check mode can be performed by connecting terminals TS and CG of the DLC3 and turning the ignition switch from off to on (IG).

WIRING DIAGRAM

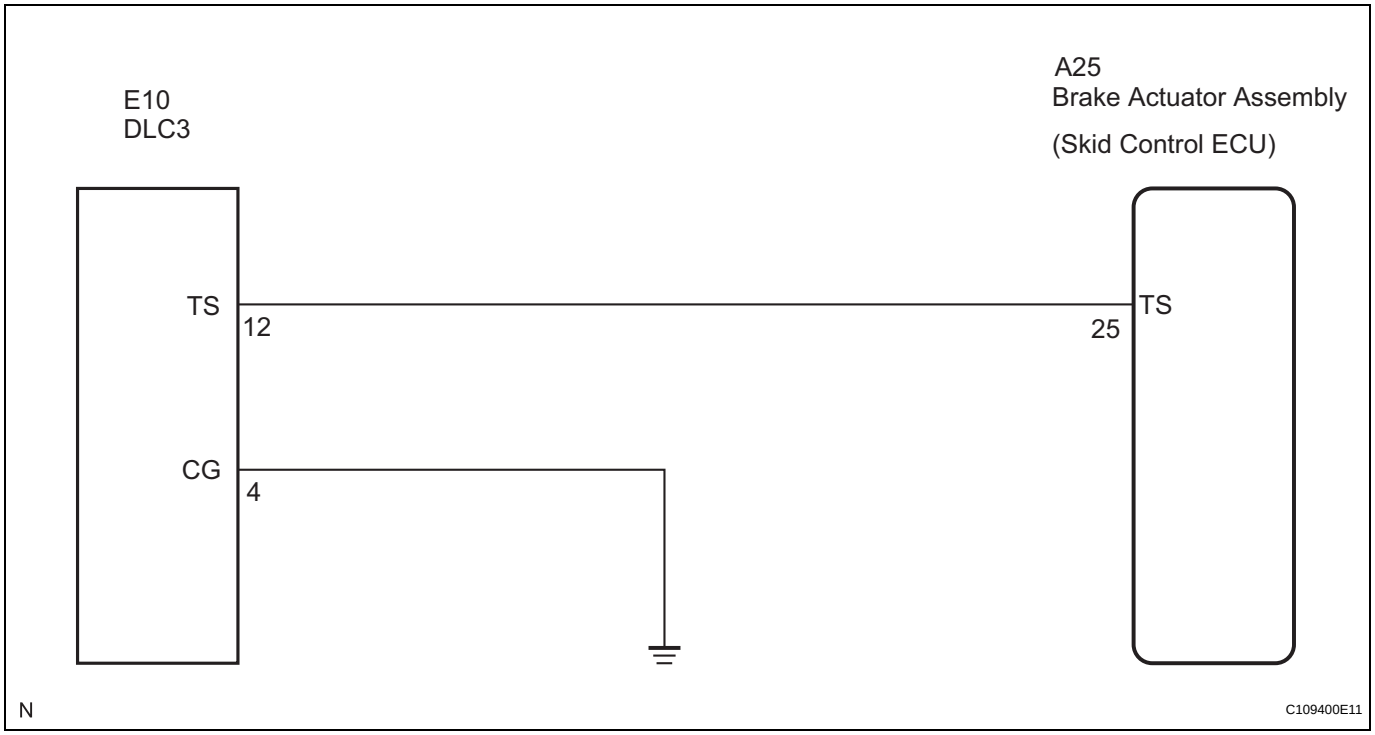

INSPECTION PROCEDURE

HINT:
Check the condition of each related circuit connector before troubleshooting (See page IN-40).

1 CHECK HARNESS AND CONNECTOR (SKID CONTROL ECU TO DLC3)

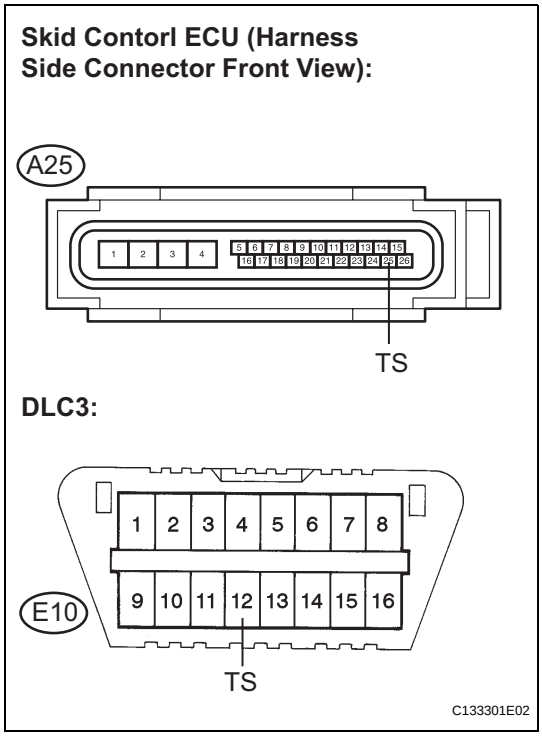

(a) Disconnect the skid control ECU connector.

(b) Measure the resistance according to the value(s) in the table below.

Standard resistance

Tester Connection	Condition	Specified Condition
A25-25 (TS) - E10-12 (TS)	Always	Below 1 Ω

(c) Connect the connector.

NG → **REPAIR OR REPLACE HARNESS OR CONNECTOR (SKID CONTROL ECU TO DLC3)**

OK

2 CHECK HARNESS AND CONNECTOR (DLC3 TO BODY GROUND)

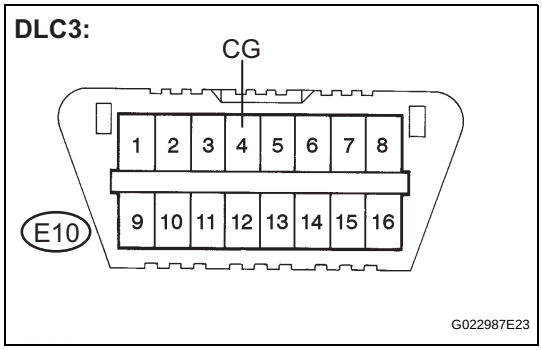

(a) Measure the resistance according to the value(s) in the table below.

Standard resistance

Tester Connection	Condition	Specified Condition
E10-4 (CG) - Body ground	Always	Below 1 Ω

NG → **REPAIR OR REPLACE HARNESS OR CONNECTOR (DLC3 TO BODY GROUND)**

OK

BC

3	CHECK HARNESS AND CONNECTOR (DLC3 TO BODY GROUND)

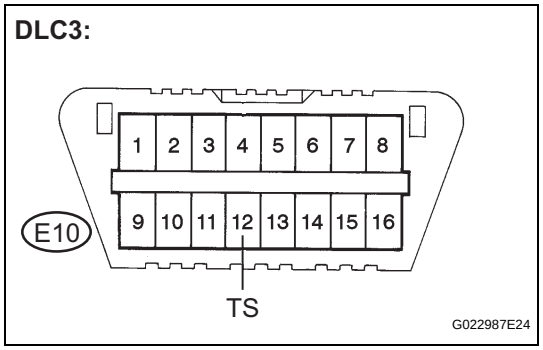

(a) Measure the resistance according to the value(s) in the table below.

Standard resistance

Tester Connection	Condition	Specified Condition
E10-12 (TS) - Body ground	Always	10 kΩ or higher

NG → **REPAIR OR REPLACE HARNESS OR CONNECTOR (DLC3 TO BODY GROUND)**

OK

REPLACE BRAKE ACTUATOR ASSEMBLY (See page BC-432)

VEHICLE STABILITY CONTROL SYSTEM (for ADVICS Made)

PRECAUTION

1. EXPRESSIONS OF IGNITION SWITCH

The type of ignition switch used on this model differs according to the specifications of the vehicle.
The expressions listed in the table below are used in this section.

Expression	Switch Type	
	Ignition Switch (Position)	Engine Switch (Condition)
Ignition switch off	LOCK	off
Ignition switch on (IG)	ON	on (IG)
Ignition switch on (ACC)	ACC	on (ACC)
Engine start	START	start

BC

2. TROUBLESHOOTING PRECAUTIONS

(a) When there is a malfunction with terminal contact points or part installation problems, removal and installation of the suspected problem parts may return the system to the normal condition either completely or temporarily.

(b) In order to determine the malfunctioning area, be sure to check the conditions at the time the malfunction occurred, such as DTC output and the Freeze Frame Data, and record it before disconnecting each connector or removing and installing parts.

(c) Since the system may be influenced by malfunctions in systems other than the brake control system, be sure to check for DTCs in other systems.

3. HANDLING PRECAUTIONS

(a) Do not remove or install VSC parts such as the steering angle sensor or yaw rate sensor (acceleration sensor included) except when required, as they cannot be adjusted correctly after removal or installation.

(b) Be sure to perform preparation before work and confirmation after work is completed by following the direction in the repair manual when working on the VSC system.

(c) Be sure to remove and install the ECU, actuator, each sensor, etc. with the ignition switch off unless it is not specified in the inspection procedure.

(d) If the ECU, brake actuator, or a sensor has been removed and installed, it is necessary to check the system for problems after the parts have been reassembled. Check for DTCs using the intelligent tester, also check that system functions and signals received by the ECU are normal using Test Mode.

4. DTC PRECAUTION

(a) Warnings for some DTCs cannot be cleared only by repairing the malfunctioning parts. If the warning is displayed after repair work, the DTC should be cleared after turning the ignition switch off.

NOTICE:

If a DTC for a malfunctioning part reappears after it was cleared, then it has been stored again.

5. CHASSIS DYNAMOMETER PRECAUTION

(a) Enter Test Mode to disable TRAC and VSC control when using a chassis dynamometer.

HINT:

The vehicle may move unexpectedly out of the dynamometer because of TRAC and VSC operations.

NOTICE:

- **Make sure that the VSC warning light is blinking (for vehicles without the multi information display) or "CHECK VSC SYSTEM" is displayed on the multi information display (for vehicles with the multi information display) (Test Mode is achieved).**
- **Secure the vehicle with the lock chain for safety.**

6. CAN COMMUNICATION SYSTEM PRECAUTIONS

(a) The CAN communication system is used for the data communication between the skid control ECU, the steering angle sensor, the yaw rate sensor (acceleration sensor included) and other ECUs. If there is trouble in the CAN communication line, corresponding DTCs in the communication line are output.

(b) If the DTC in the CAN communication line is output, repair the malfunction in the communication line and troubleshoot the VSC system while data communication is normal.

(c) In order to enable CAN communication, a specific type of wiring is used for the CAN communication lines. The wiring used for each communication line is a twisted pair of wires that have an equal length. A bypass wire should not be used, because the data being transmitted will be corrupted.

PARTS LOCATION

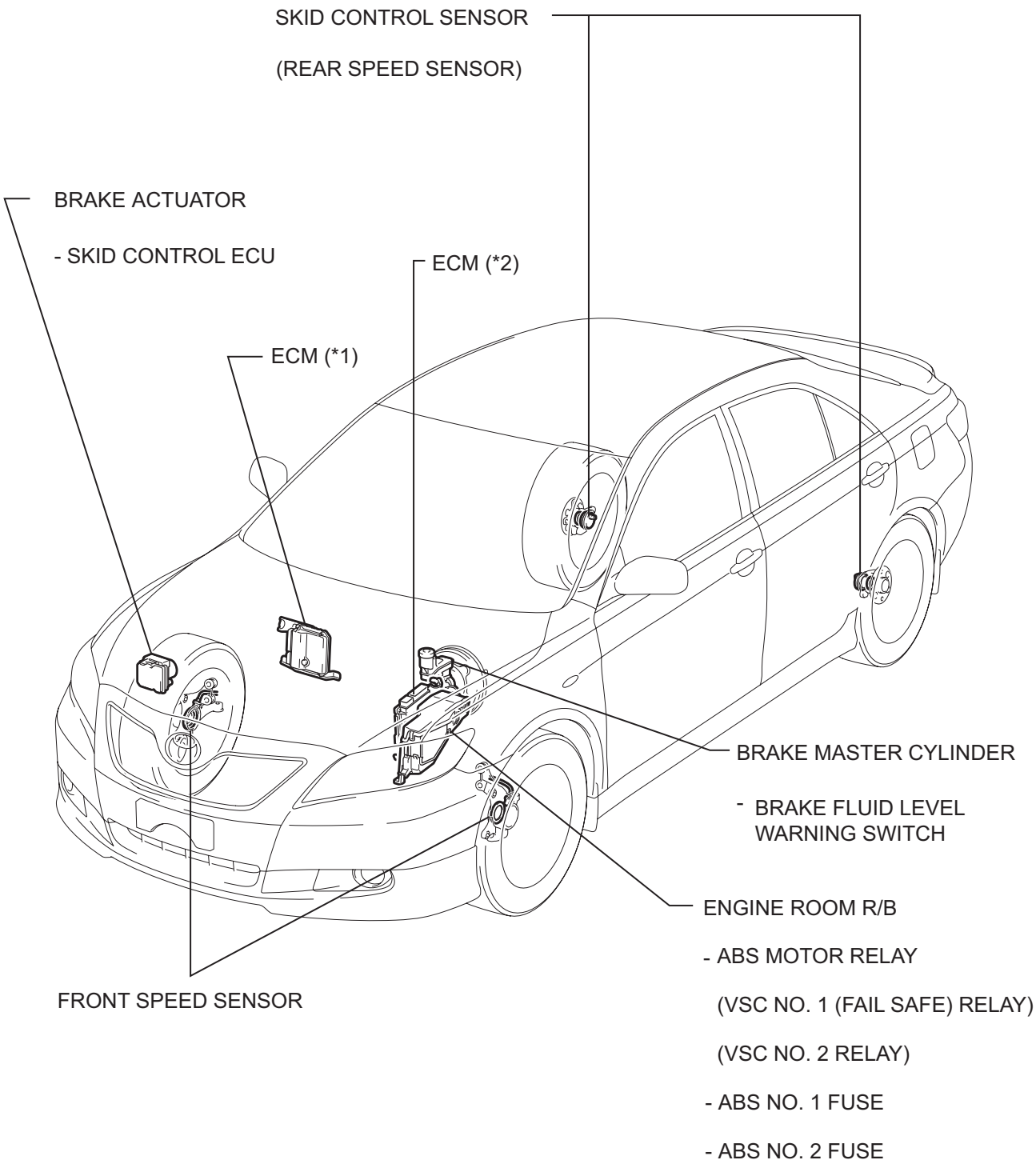

(*1): 2GR-FE (*2): 2AZ-FE

P

C135800E01

BC

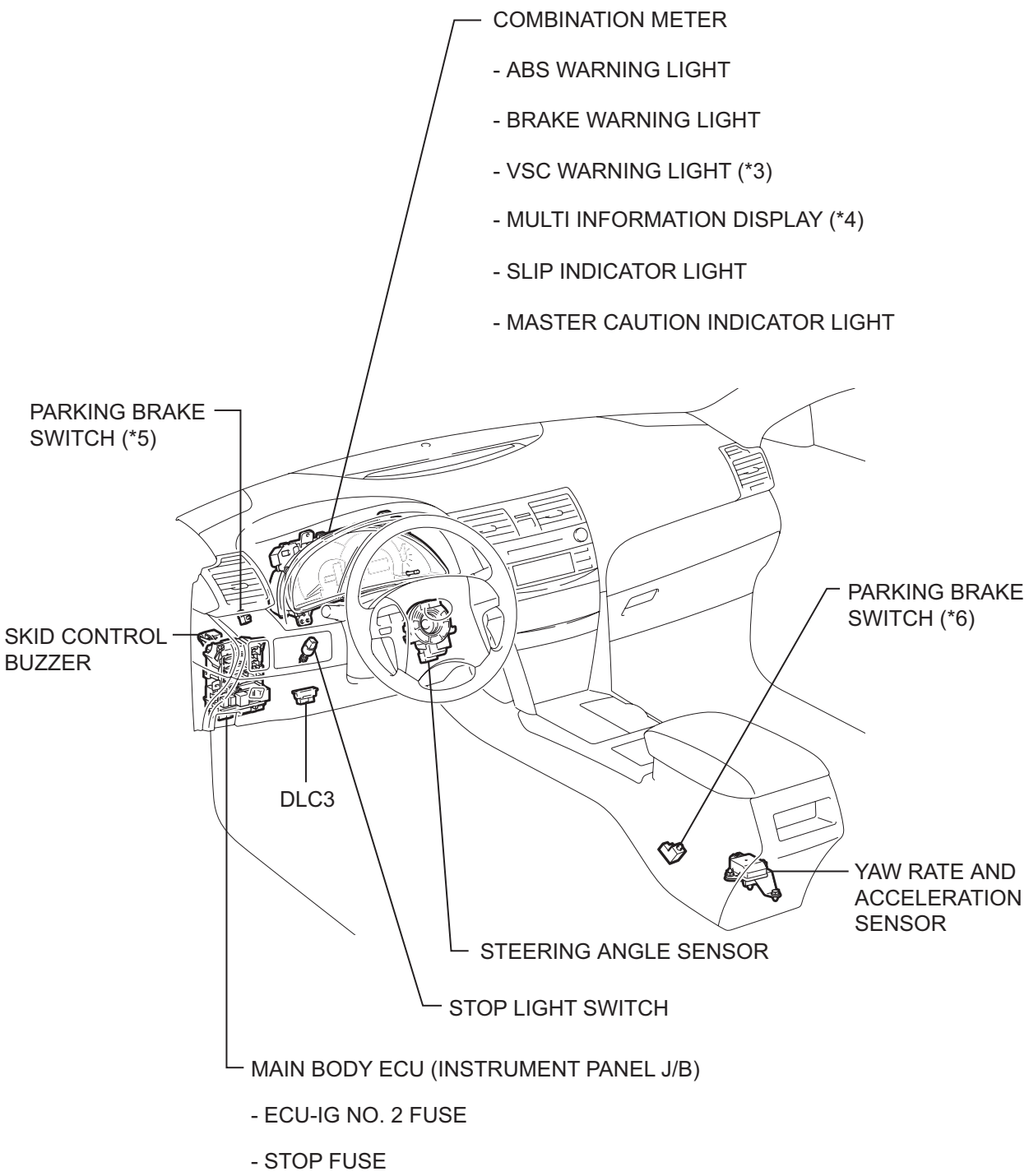

(*3): Models without Multi Information Display (*5): A/T

(*4): Models with Multi Information Display (*6): M/T

P C135801E04

BC

SYSTEM DIAGRAM

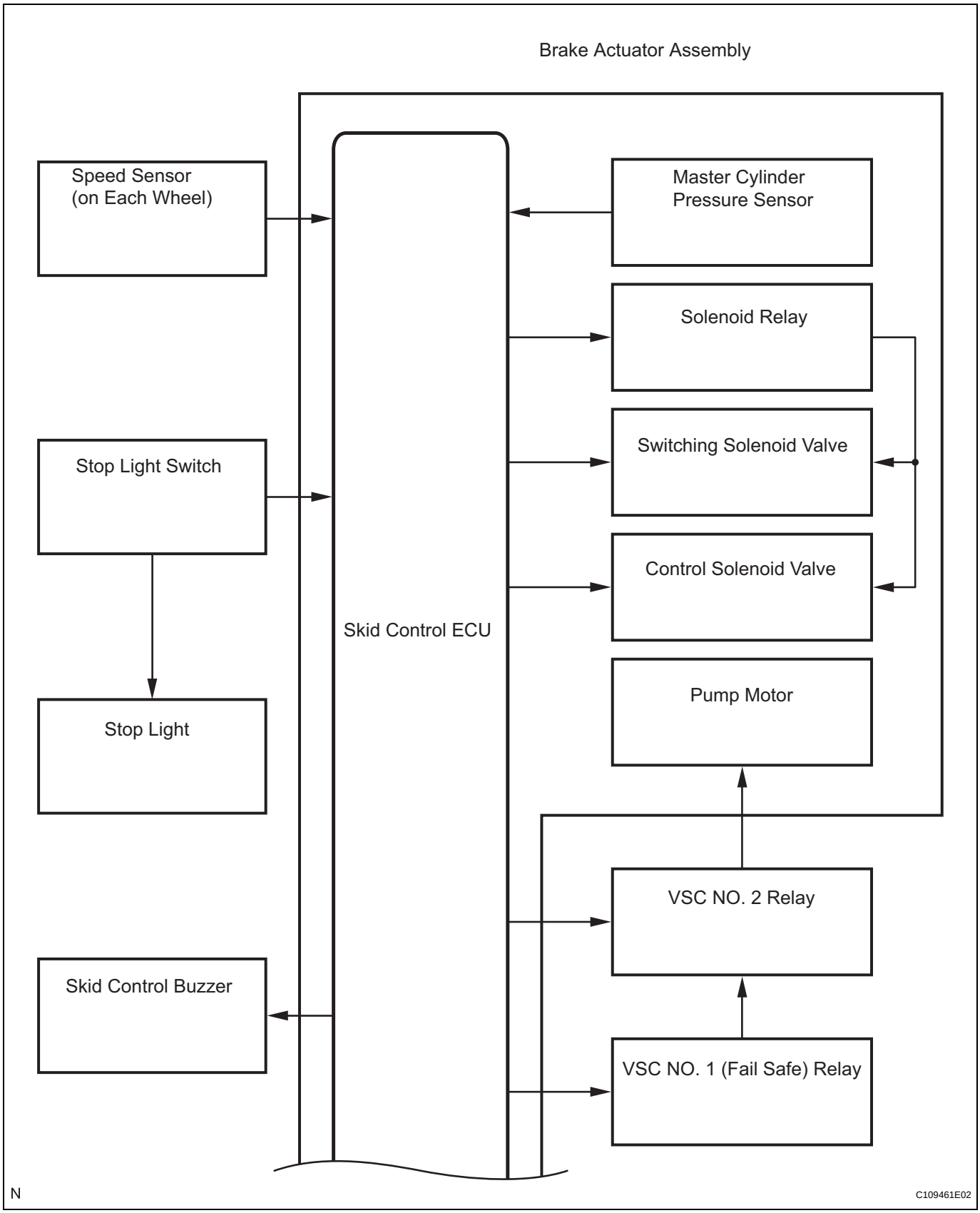

BC

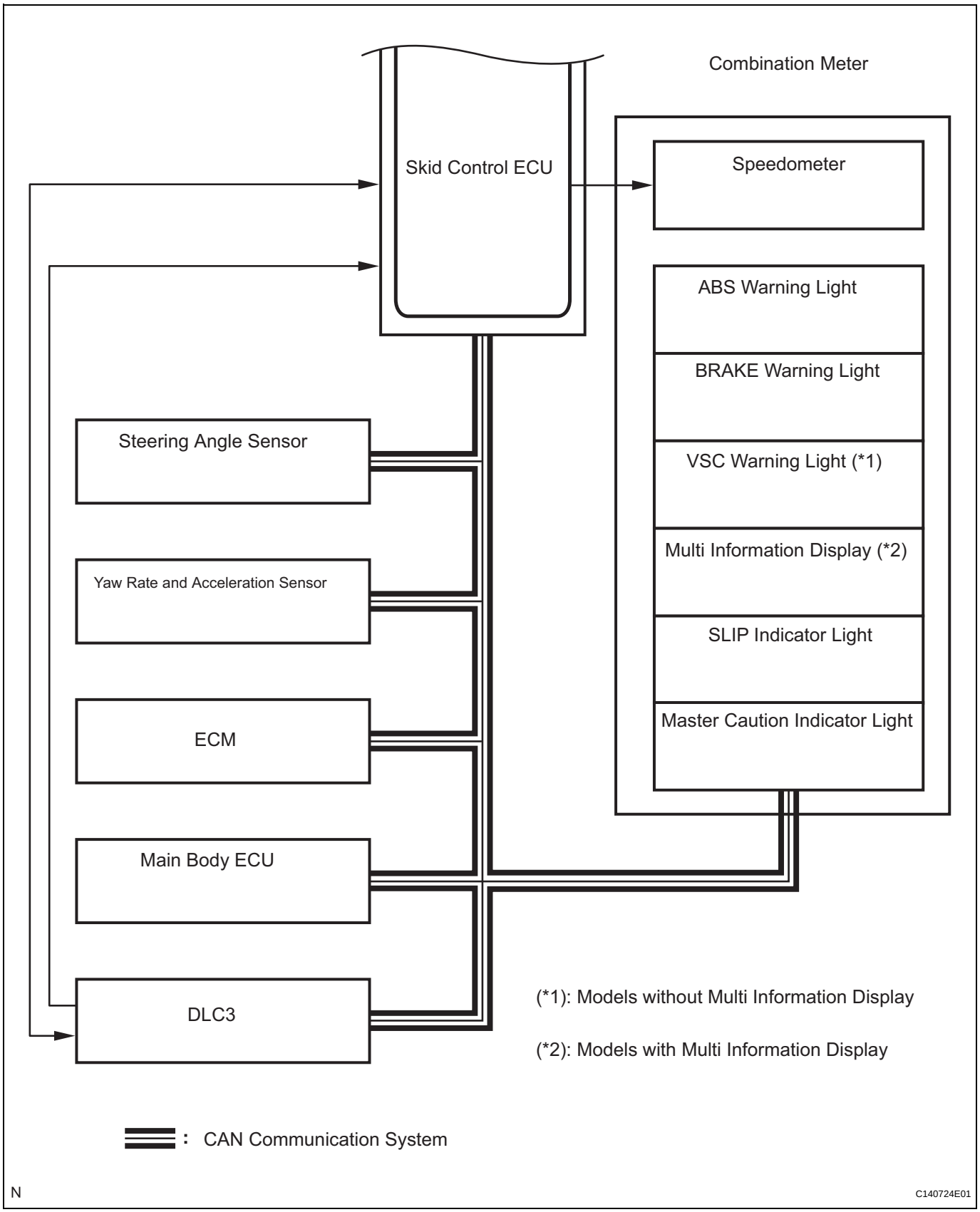
Combination Meter
Skid Control ECU
Speedometer
ABS Warning Light
BRAKE Warning Light
VSC Warning Light (*1)
Multi Information Display (*2)
SLIP Indicator Light
Master Caution Indicator Light
Steering Angle Sensor
Yaw Rate and Acceleration Sensor
ECM
Main Body ECU
DLC3
(*1): Models without Multi Information Display
(*2): Models with Multi Information Display
: CAN Communication System
N
C140724E01

Transmitting ECU (transmitter)	Receiving ECU	Signals	Communication method
ECM	Skid control ECU	• Shift position signal • Throttle position signal • Engine revolution signal • Intake air temperature signal • Engine torque request signal • Accelerator pedal position signal	CAN communication system
Skid control ECU	Yaw rate and acceleration sensor	Yaw rate and acceleration request signal	CAN communication system
Skid control ECU	Steering angle sensor	Steering angle sensor request signal	CAN communication system
Skid control ECU	ECM	• Wheel speed signal • VSC data signal	CAN communication system
Skid control ECU	Combination meter	• ABS warning light ON signal • BRAKE warning light ON signal • VSC warning light ON signal (*1) • Multi information display ON signal (*2) • SLIP indicator light ON signal • Master caution indicator light ON signal • Wheel speed signal	CAN communication system
Main body ECU	Skid control ECU	Parking brake switch signal	CAN communication system

(*1): Models without multi information display
(*2): Models with multi information display

SYSTEM DESCRIPTION

1. FUNCTION DESCRIPTION

HINT:

- The skid control ECU is located within the brake actuator assembly.
- The yaw rate sensor and acceleration sensor are combined in a single unit. This unit communicates with the skid control ECU through CAN communication.

(a) ABS (Anti-lock Brake System)

The ABS helps prevent the wheels from locking when the brakes are applied firmly or when braking on a slippery surface.

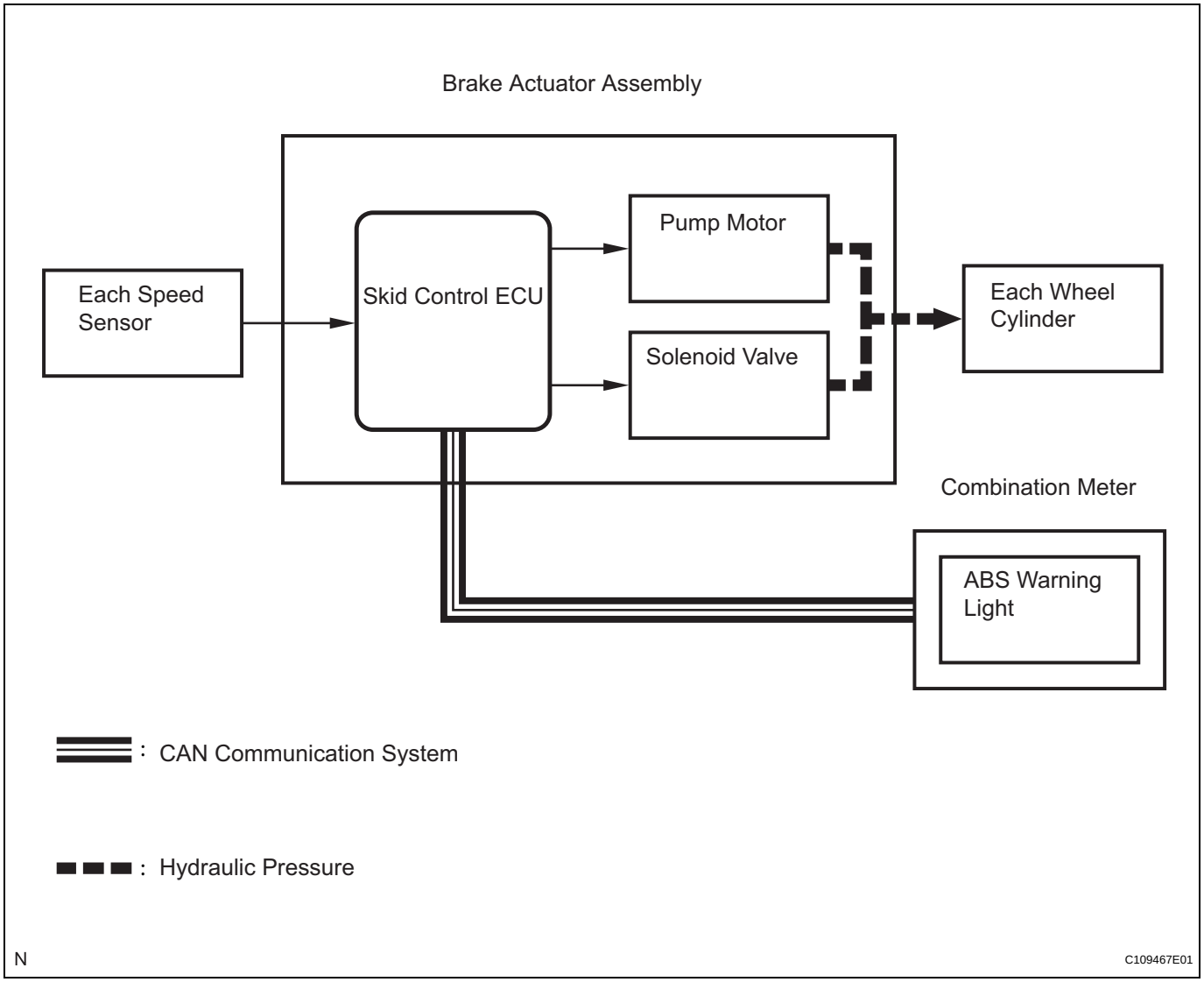

(1) Operation description
The skid control ECU detects wheel lock based on speed signals it receives from the wheel speed sensors. Based on this information, the skid control ECU controls the pump motor and solenoid valves. The pump motor and solenoid valves are used to prevent wheel lock by controlling the hydraulic pressure applied to the brakes at each wheel. The ABS warning light will come on when the system is malfunctioning.

(b) EBD (Electronic Brake force Distribution)
The EBD control utilizes ABS, and performs proper brake force distribution between the front and rear wheels in accordance with driving conditions.
When braking while cornering, it also controls the brake forces of the right and left wheels, helping to maintain vehicle behavior.

BC

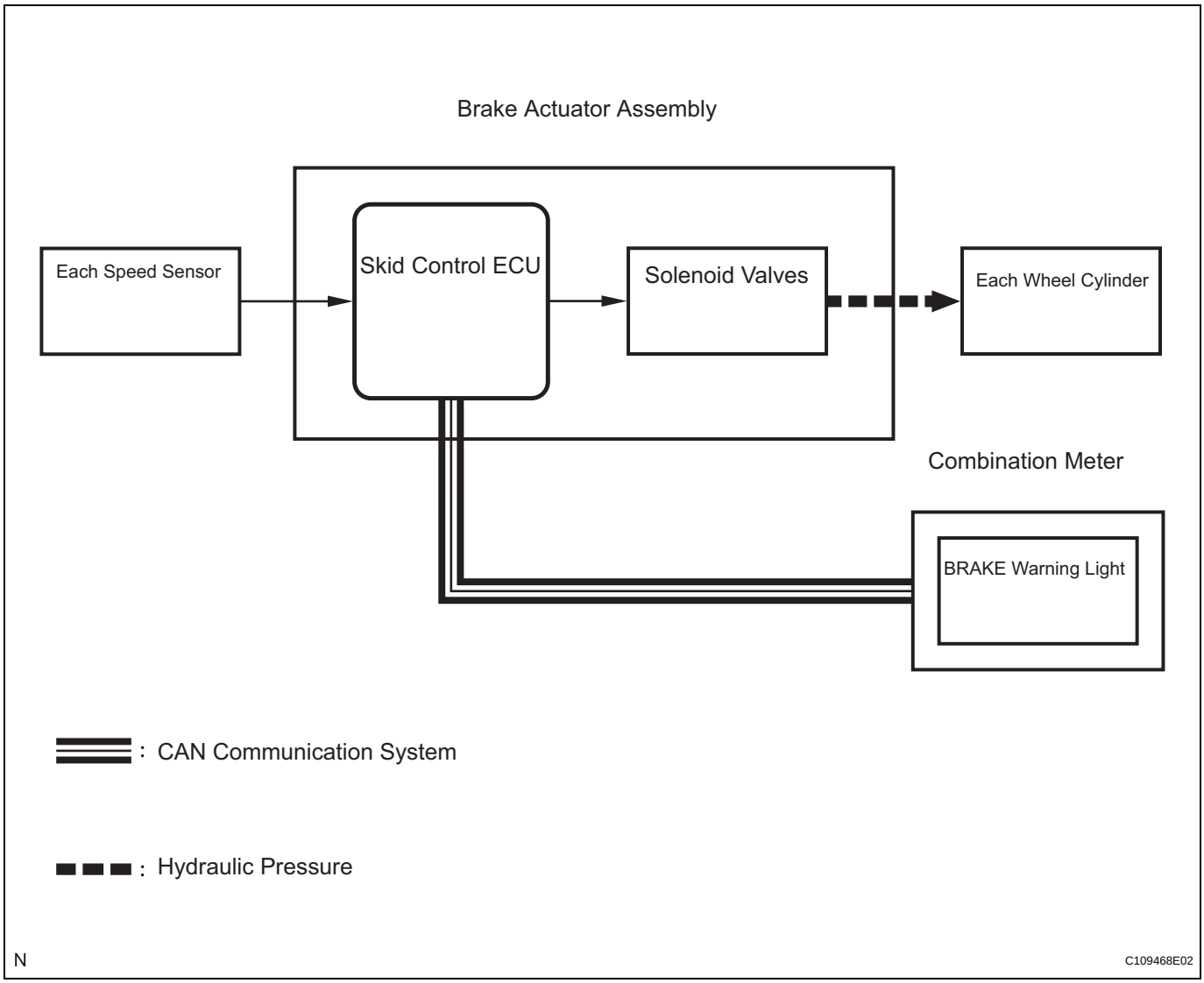

(1) Operation description

The skid control ECU receives a speed signal from each wheel speed sensor, and uses these signals to detect locking of the wheels. The ECU uses this information in order to determine appropriate control of the solenoid valves.
The solenoid valves control the hydraulic pressure applied to the brake cylinder at each wheel. In this way, the solenoid valves are used to control the brake power split between the front and rear, and left and right wheels. The BRAKE warning light will come on if there is a malfunction in the EBD system.

(c) BA (Brake Assist)
The primary purpose of the brake assist system is to provide auxiliary brake force to assist the driver who cannot generate a large enough brake force during emergency braking, thus helping to maximize the brake performance of the vehicle.

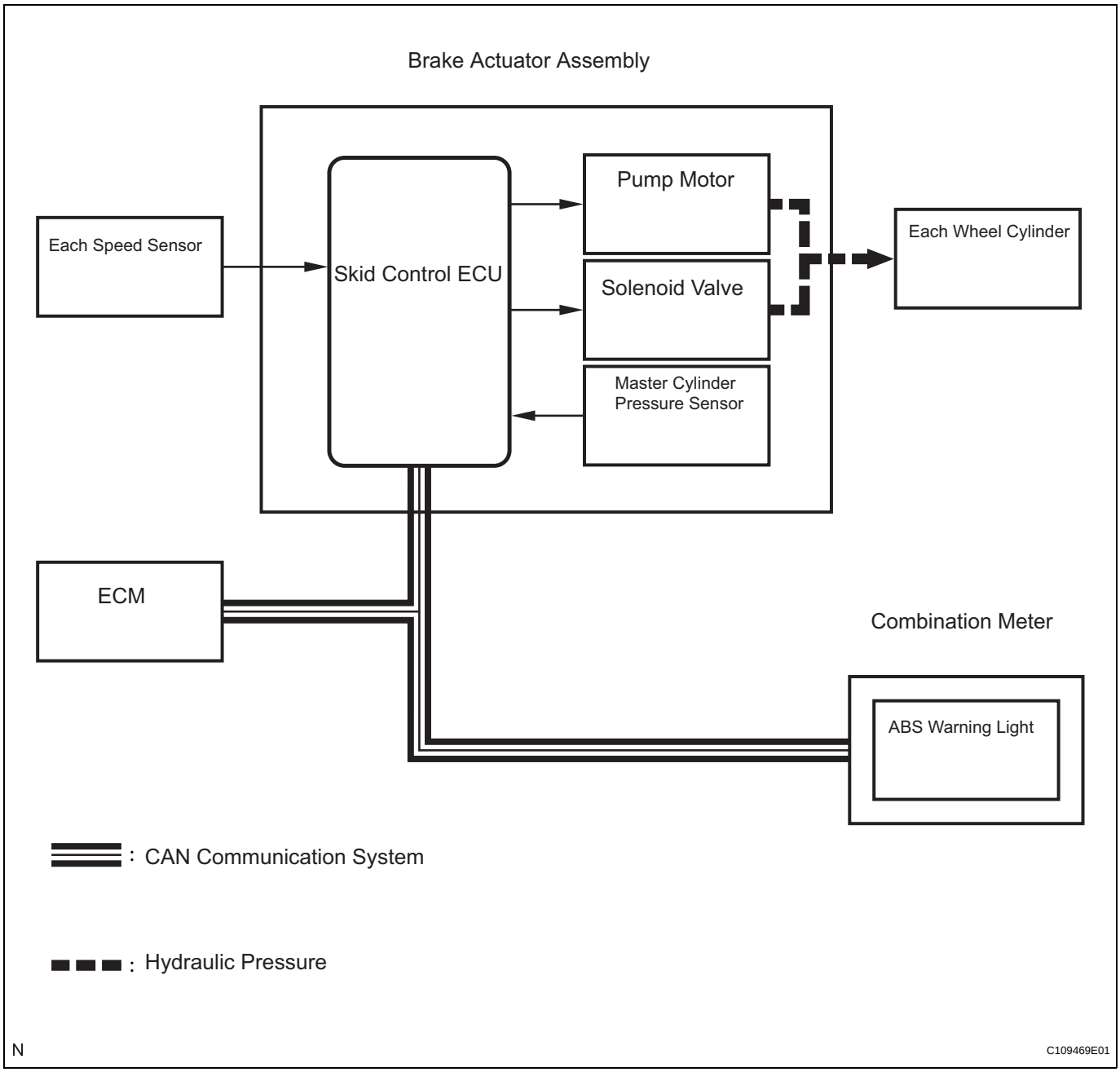

(1) Operation description

The skid control ECU receives the speed signal from each speed sensor and the fluid pressure signal from the master cylinder pressure sensor to determine whether brake assist is necessary. If brake assist is necessary, the skid control ECU sends control signals to the pump motor and solenoid. The pump and the solenoid valve then control the pressure applied to each wheel cylinder.

The ABS warning light comes on to indicate a malfunction in the BA system.

(d) TRAC (Traction Control)
The TRAC system helps prevent the drive wheels from slipping when the driver depresses the accelerator pedal excessively when starting off or accelerating on a slippery surface.

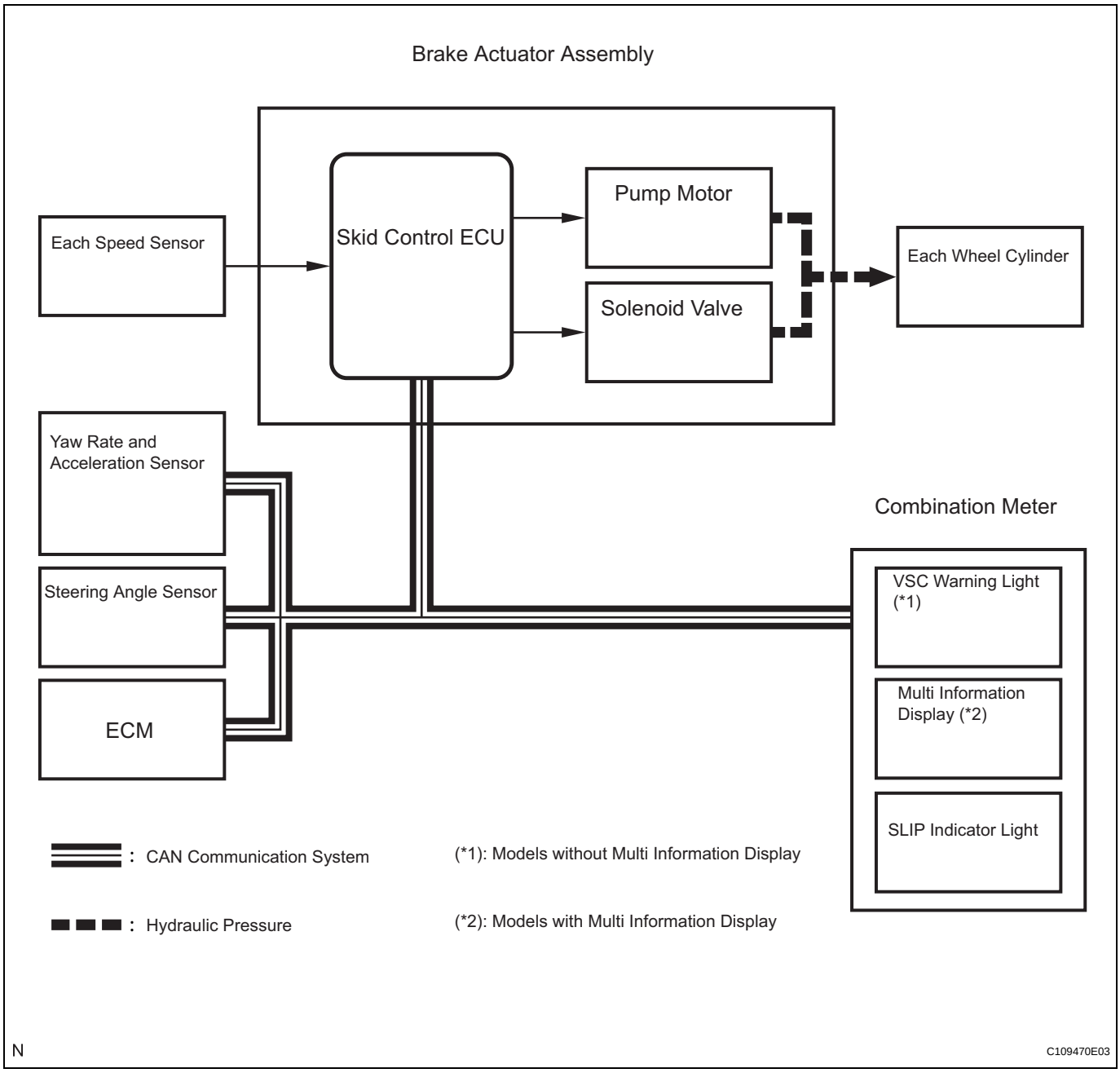

(1) Operation description

The skid control ECU detects wheelspin by receiving signals from each speed sensor and the ECM via CAN communication. The skid control ECU controls engine torque with the ECM via CAN communication and brake hydraulic pressure through the pump and solenoid valve.

The SLIP indicator light blinks when the system is operating. When there is a malfunction in the TRAC system, both VSC warning light (models without multi information display) and SLIP indicator light will come on and the DTC will be displayed on the multi information display (models with multi information display).

(e) VSC (Vehicle Stability Control)
The VSC system helps prevent the vehicle from slipping sideways as a result of strong front or rear wheel skid during cornering.

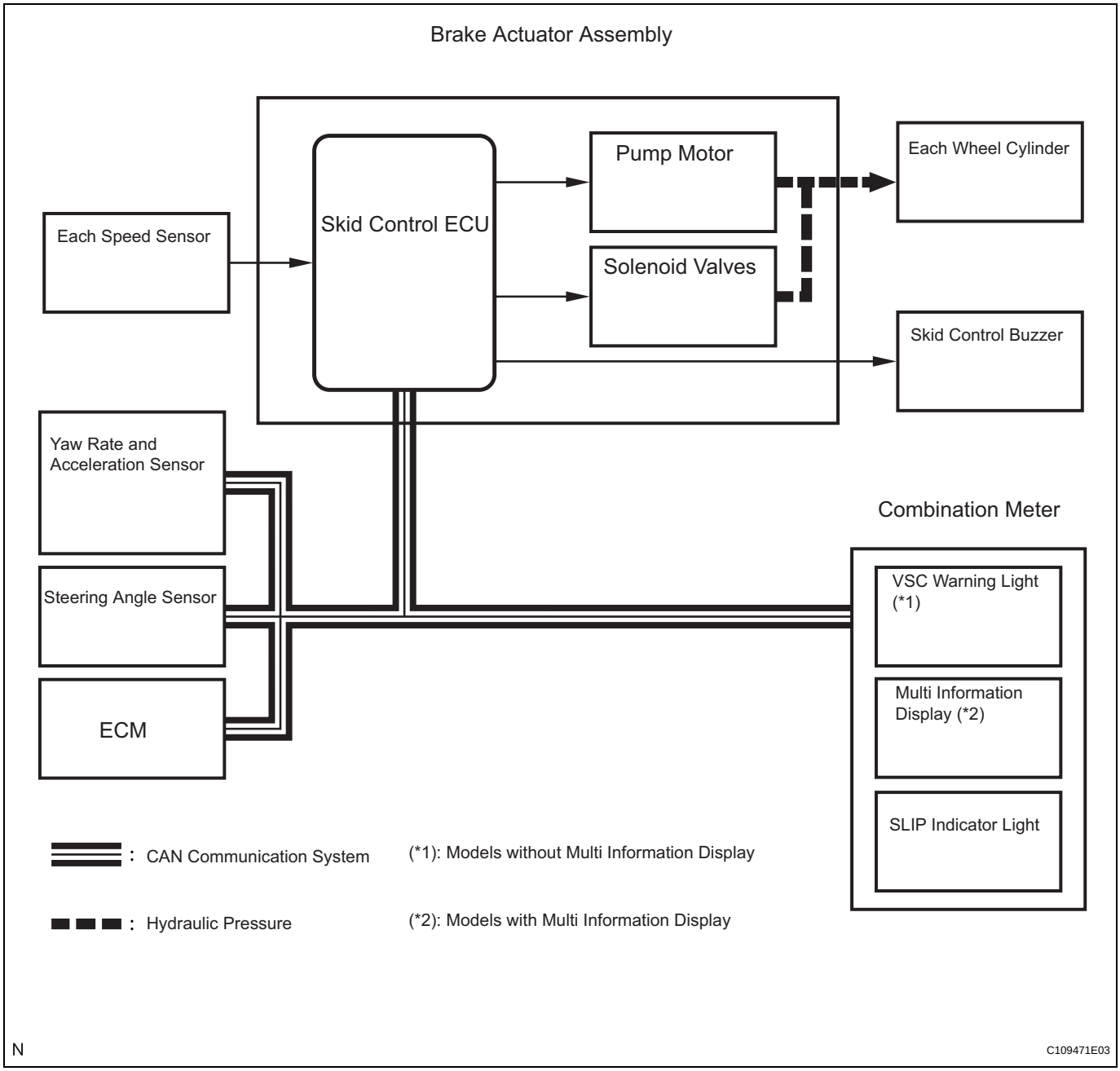

(1) Operation description
The skid control ECU determines the vehicle operating conditions based on signals received from the wheel speed sensors, yaw rate and acceleration sensor, and steering angle sensor. The skid control ECU sends signals via CAN communication to the ECM in order to control engine torque. The skid control ECU controls brake hydraulic pressure using the pump and solenoid valves.
The SLIP indicator light will blink, and the skid control buzzer will sound when the system is operating. If a malfunction occurs in the VSC system, both the VSC warning light (models without multi information display) and the SLIP indicator light will come on. In addition, the DTC will appear on the multi information display (models with multi information display).

2. ABS with EBD, BA, TRAC and VSC OPERATION

(a) The skid control ECU calculates vehicle stability tendency based on the signals from the speed sensor, yaw rate and acceleration sensor, and steering angle sensor. In addition, it evaluates the results of the calculations to determine whether any control actions (control of the engine output torque by electronic throttle control and of the wheel brake pressure by the brake actuator assembly) should be implemented.

(b) The SLIP indicator blinks and the skid control buzzer sounds to inform the driver that the VSC system is operating. The SLIP indicator also blinks when traction control is operating, and the operation being performed is displayed.

3. FAIL SAFE

(a) When a failure occurs in the ABS with BA, TRAC and VSC systems, the ABS warning, VSC warning (models without multi information display), and SLIP indicator lights come on or the DTC will be displayed on the multi information display (models with multi information display) and ABS with BA, TRAC and VSC operations are prohibited. In addition, when there is a failure that disables the EBD operation, the BRAKE warning light also comes on and the EBD operation is prohibited.

(b) If control is prohibited due to a malfunction during operation, control will be disabled gradually.
This is to avoid sudden vehicle instability.

4. INITIAL CHECK

(a) When the vehicle speed first becomes approximately 4 mph (6 km/h) or more after the ignition switch is turned on (IG), each solenoid valve and motor of the brake actuator is sequentially activated to perform an electrical check. During the initial check, the operating sound of solenoid valve and motor can be heard from the engine compartment, but this is not a malfunction.

5. INSPECTION MODE

(a) VSC operation can be disabled by operating the intelligent tester.
HINT:
Refer to the intelligent tester operator's manual for further details.

6. FUNCTION OF COMPONENTS

Components	Function
Speed sensor	Detects the wheel speed and sends the signal to the skid control ECU.
Skid control ECU (housed in brake actuator assembly)	• Processes the signals sent from each sensor to control the ABS, BA, TRAC, and VSC. • Sends and receives the control signals to or from the ECM, yaw rate and acceleration sensor, and steering angle sensor, etc. via CAN communication.
Brake actuator assembly	• Consists of the master cylinder cut solenoid valve, retention solenoid valve, pressure reduction solenoid valve, pump motor, and reservoir, and adjusts the brake fluid pressure applied to each wheel cylinder. • Houses the skid control ECU.
Solenoid relay	• Supplies power to each solenoid. • Housed in the skid control ECU.
Motor relay (VSC NO. 2 relay)	Supplies power to the pump motor.
Fail safe relay (VSC NO. 1 relay)	Cuts off power to the motor when the pump motor circuit malfunctions.
Steering angle sensor	• Installed in the combination switch. • Detects the steering amount and direction and sends the signals to the skid control ECU via CAN communication. • Has the magnetic resistance element which detects the rotation of the magnet housed in the detection gear in order to detect the changes of magnetic resistance and the steering amount and direction.
Yaw rate and acceleration sensor	• Acceleration sensor measures the capacity of the condenser that changes the distance between the electrodes depending on G force, which occurs when the vehicle is accelerated, and converts the measured value into electrical signals. • Yaw rate sensor detects the vehicle's angular velocity (yaw rate) in the vertical direction based on the amount and direction of the piezoelectric ceramics deflection. • Sends signals to the skid control ECU via CAN communication.
Master cylinder pressure sensor	• Detects the fluid pressure in the master cylinder. • Housed in the brake actuator assembly.
Stop light switch	Detects the brake operating conditions and inputs the results to the skid control ECU.
ECM	Controls the engine output when TRAC and VSC are operating with the skid control ECU via CAN communication.
Skid control buzzer	Intermittently sounds to inform the driver that the VSC is operating.
ABS warning light	• Comes on to inform the driver that a malfunction in the ABS or BA has occurred. • Blinks to output DTC.
BRAKE warning light	• Comes on to inform the driver that the parking brake is ON when the system is normal, or the brake fluid has decreased. • Comes on to inform the driver that a malfunction in the EBD has occurred.

Components	Function
VSC warning light (*1)	• Comes on to inform the driver that a malfunction in the VSC system has occurred. • Blinks to output DTC.
Multi information display (*2)	• Displays to inform the driver that a malfunction in the VSC system has occurred. • Displays to output DTC.
SLIP indicator light	Blinks to inform the driver that TRAC and VSC are operating.
Master caution indicator light	Comes on to inform the driver that a malfunction.

(*1): Models without multi information display
(*2): Models with multi information display

HOW TO PROCEED WITH TROUBLESHOOTING

HINT:
The intelligent tester can be used at steps 3, 7, and 10.

1	VEHICLE BROUGHT TO WORKSHOP

NEXT

2	CUSTOMER PROBLEM ANALYSIS

(a) Interview the customer and confirm the trouble (See page IN-45).

NEXT

BC

3	CHECK DTC AND FREEZE FRAME DATA

(a) Check and record a DTC and Freeze Frame Data.
(b) Clear the DTC and Freeze Frame Data (See page BC-141).
(c) Reconfirm the DTC.
  (1) Reconfirm the DTC based on the recorded DTC and Freeze Frame Data (See page BC-141 for DTC Check/Clear, and BC-144 for Freeze Frame Data).
  HINT:
  If any of the DTCs U0100/65, U0123/62, U0124/95, and U0126/63 is output together with a CAN communication DTC, first check the appropriate sensor for a momentary open circuit (See page BC-118).

Result

Condition	Proceed to
DTC is output	A
DTC is not output (Problem symptom does not occur)	B
DTC is not output (Problem symptom occurs)	C

B → GO TO STEP 5

C → GO TO STEP 6

A

4	DIAGNOSTIC TROUBLE CODE CHART

(a) Proceed to Diagnostic Trouble Code Chart (See page BC-151).

NEXT

GO TO STEP 7

5	**SYMPTOM SIMULATION**

(a) Proceed to Diagnosis System (See page BC-138).

NEXT

6	**PROBLEM SYMPTOMS TABLE**

(a) Proceed to Problem Symptoms Table (See page BC-134).

NEXT

7	**CIRCUIT INSPECTION**

NEXT

8	**IDENTIFICATION OF PROBLEM**

NEXT

9	**REPAIR OR REPLACEMENT**

NEXT

10	**CONFIRMATION TEST**

NEXT

END

CHECK FOR INTERMITTENT PROBLEMS

1. CHECK FOR INTERMITTENT PROBLEMS

HINT:
A momentary interruption (open circuit) in the connectors and/or wire harness between the sensors and ECUs can be detected using the ECU Data List function of the intelligent tester.

(a) Turn the ignition switch off and connect the intelligent tester to the DLC3.

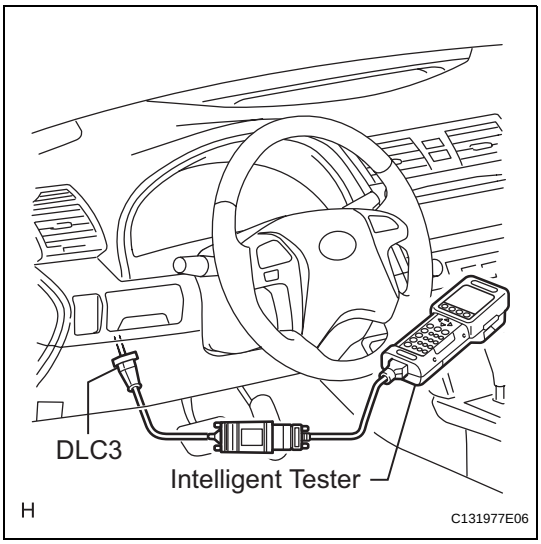

(b) Turn the ignition switch on (IG). Follow the directions on the intelligent tester to display the Data List and select areas where momentary interruption should be monitored.

HINT:
- A momentary interruption (open circuit) cannot be detected for 3 seconds after the ignition switch is turned on (IG) (initial check).
- If the status remains on (ERROR displayed), check the continuity between the ECU and the sensors, or between ECUs.
- The ERROR display on the intelligent tester remains on for 1 second after the harness signal changes from momentary interruption (open circuit) to normal condition.

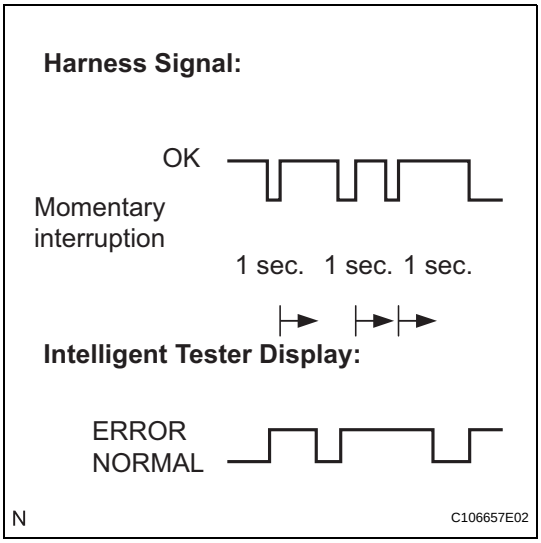

Item (Display)	Measurement Item / Range (Display)	Normal Condition	Diagnostic Note
FR SPD OPN	FR speed sensor open detection / ERROR or NORMAL	ERROR: Momentary interruption NORMAL: Normal	-
FL SPD OPN	FL speed sensor open detection / ERROR or NORMAL	ERROR: Momentary interruption NORMAL: Normal	-
RR SPD OPN	RR speed sensor open detection / ERROR or NORMAL	ERROR: Momentary interruption NORMAL: Normal	-
RL SPD OPN	RL speed sensor open detection / ERROR or NORMAL	ERROR: Momentary interruption NORMAL: Normal	-
EFI COM OPN	EFI communication open detection / ERROR or NORMAL	ERROR: Momentary interruption NORMAL: Normal	-

Item (Display)	Measurement Item / Range (Display)	Normal Condition	Diagnostic Note
YAW RATE OPN	Yaw rate sensor open detection / ERROR or NORMAL	ERROR: Momentary interruption NORMAL: Normal	-
DECELERAT OPN	Acceleration sensor open detection / ERROR or NORMAL	ERROR: Momentary interruption NORMAL: Normal	-
STEERING OPN	Steering angle sensor open detection / ERROR or NORMAL	ERROR: Momentary interruption NORMAL: Normal	-
M/C OPN	Master cylinder pressure sensor open detection / ERROR or NORMAL	ERROR: Momentary interruption NORMAL: Normal	-

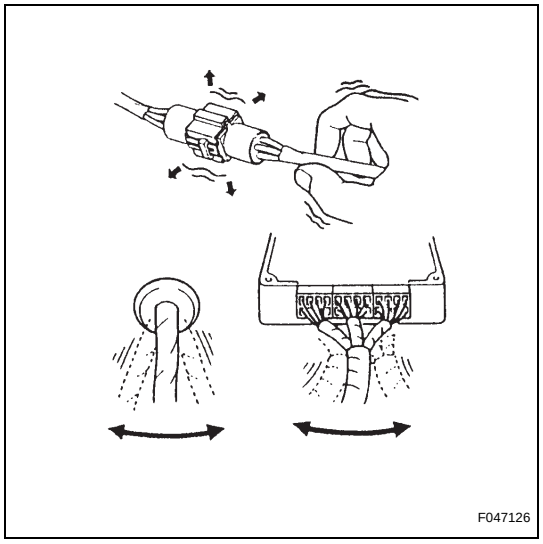

(c) While observing the screen, gently jiggle the connector or wire harness between the ECU and sensors, or between ECUs.

Result:

ERROR display does not change.

HINT:

The connector and/or wire harness will be in momentary interruption (open circuit) if the display changes. Repair or replace the connector and/or wire harness as one of them is faulty.

PROBLEM SYMPTOMS TABLE

If there are no DTCs output and the problem still occurs, check the circuits for each problem symptom in the order given in the table below and proceed to the relevant troubleshooting page.

HINT:

- Inspect the fuse and relay before investigating the suspected areas as shown in the table below.
- Inspect each malfunction circuit in numerical order for the corresponding symptom.

Vehicle Stability Control System:

Symptom	Suspected Area	See page
ABS, BA and/or EBD does not operate	1. Check the DTC again and make sure that the normal system code is output.	BC-141
	2. IG power source circuit	BC-207
	3. Front speed sensor circuit	BC-156
	4. Rear speed sensor circuit	BC-164
	5. Check the brake actuator assembly with the intelligent tester. (Check brake actuator assembly operation using the Active Test function.) If abnormal, check the hydraulic circuit for leakage.	BC-425
	6. If the symptoms still occur even after the above circuits in suspected areas have been inspected and proved to be normal, replace the brake actuator assembly (skid control ECU).	BC-426
ABS, BA and/or EBD does not operate efficiently	1. Check the DTC again and make sure that the normal system code is output.	BC-141
	2. Front speed sensor circuit	BC-156
	3. Rear speed sensor circuit	BC-164
	4. Stop light switch circuit	BC-213
	5. Check the brake actuator assembly with the intelligent tester. (Check brake actuator assembly operation using the Active Test function.) If abnormal, check the hydraulic circuit for leakage.	BC-425
	6. If the symptoms still occur even after the above circuits in suspected areas have been inspected and proved to be normal, replace the brake actuator assembly (skid control ECU).	BC-426
ABS sensor DTC check cannot be done	1. Check the DTC again and make sure that the normal system code is output.	BC-141
	2. TC and CG terminal circuit	BC-266
	3. If the symptoms still occur even after the above circuit in suspected areas has been inspected and proved to be normal, replace the brake actuator assembly (skid control ECU).	BC-426
ABS warning light abnormal (Remains on)	1. ABS warning light circuit	BC-229
	2. Brake actuator assembly (Skid control ECU)	BC-426
ABS warning light abnormal (Does not come on)	1. ABS warning light circuit	BC-233
	2. Brake actuator assembly (Skid control ECU)	BC-426
BRAKE warning light abnormal (Remains on)	1. BRAKE warning light circuit	BC-244
	2. Brake actuator assembly (Skid control ECU)	BC-426
BRAKE warning light abnormal (Does not come on)	1. BRAKE warning light circuit	BC-252
	2. Brake actuator assembly (Skid control ECU)	BC-426

Symptom	Suspected Area	See page
VSC and/or TRAC does not operate	1. Check the DTC again and make sure that the normal system code is output.	BC-141
	2. IG power source circuit	BC-207
	3. Check the hydraulic circuit for leakage	-
	4. Front speed sensor circuit	BC-156
	5. Rear speed sensor circuit	BC-164
	6. Yaw rate and acceleration sensor circuit	BC-193
	7. Steering angle sensor circuit	BC-190
	8. If the symptoms still occur even after the above circuits in suspected areas have been inspected and proved to be normal, replace the brake actuator assembly (skid control ECU).	BC-426
VSC sensor DTC check cannot be done	1. Check the DTC again and make sure that the normal system code is output.	BC-141
	2. TC and CG terminal circuit	BC-266
	3. If the symptoms still occur even after the above circuit in suspected areas has been inspected and proved to be normal, replace the brake actuator assembly (skid control ECU).	BC-426
VSC warning light abnormal (Remains on) (*1)	1. VSC warning light circuit	BC-236
	2. Brake actuator assembly (Skid control ECU)	BC-426
VSC warning light abnormal (Does not come on) (*1)	1. VSC warning light circuit	BC-240
	2. Brake actuator assembly (Skid control ECU)	BC-426
Multi information display abnormal (Remains on) (*2)	1. VSC warning light circuit	BC-236
	2. Brake actuator assembly (Skid control ECU)	BC-426
Multi information display abnormal (Does not come on) (*2)	1. VSC warning light circuit	BC-240
	2. Brake actuator assembly (Skid control ECU)	BC-426
SLIP indicator light abnormal (Remains on)	1. SLIP indicator light circuit	BC-255
	2. Brake actuator assembly (Skid control ECU)	BC-426
SLIP indicator light abnormal (Does not come on)	1. SLIP indicator light circuit	BC-259
	2. Brake actuator assembly (Skid control ECU)	BC-426
Sensor check cannot be done	1. TS and CG terminal circuit	BC-269
	2. Brake actuator assembly (Skid control ECU)	BC-426
Skid control buzzer abnormal	1. Skid control buzzer circuit	BC-263
	2. Brake actuator assembly (Skid control ECU)	BC-426

(*1): Models without multi information display
(*2): Models with multi information display

TERMINALS OF ECU

1. Terminal of ECU

Skid Control ECU:

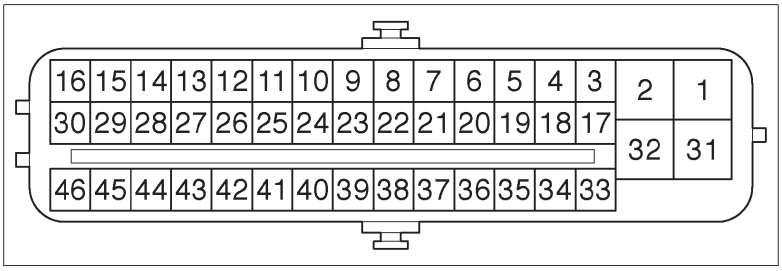

N

F045080E06

Symbols (Terminal No.)	Terminal Description
GND2 (1)	Pump motor ground
BM (2)	Motor relay input
FR+ (3)	Front wheel speed RH signal power supply output
FL- (4)	Front wheel speed LH signal input
RR+ (5)	Rear wheel speed RH signal power supply output
RL- (6)	Rear wheel speed LH signal input
CANH (11)	CAN communication line H
SP1 (12)	Speed signal output for combination meter
D/G (13)	Diagnosis tester communication line
MRF (14)	Fail safe motor relay output
MR (15)	Motor relay output
FR- (17)	Front wheel speed RH signal input
FL+ (18)	Front wheel speed LH signal power supply output
RR- (19)	Rear wheel speed RH signal input
RL+ (20)	Rear wheel speed LH signal power supply output
TS (24)	Test mode (signal check) input
CANL (25)	CAN communication line L
STP (27)	Stop light switch input
BZ (30)	Skid control buzzer output
+BS (31)	Solenoid relay power supply
GND1 (32)	Skid control ECU ground
WFSE (42)	WFSE input
R+ (45)	Power supply for motor relay
IG1 (46)	IG1 power supply

2. Terminal Inspection

(a) Disconnect the connector and measure the voltage or resistance on the wire harness side.

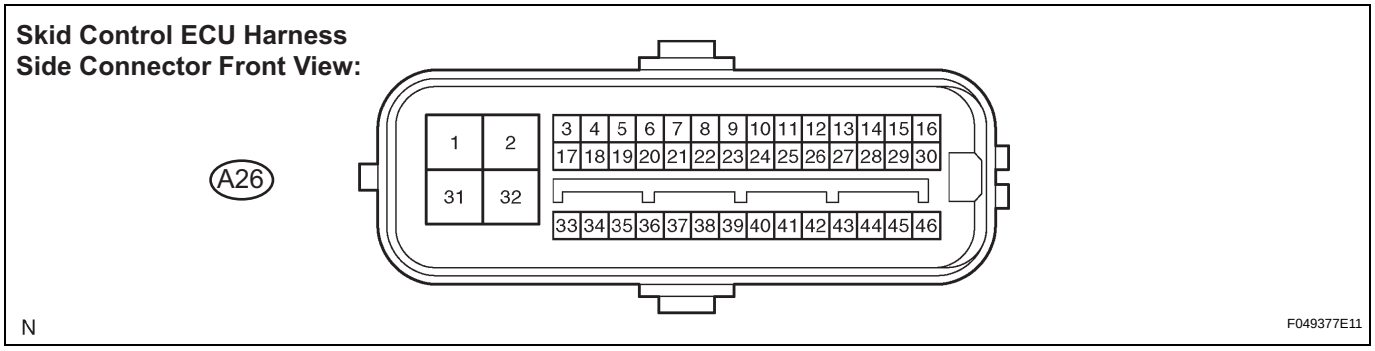

HINT:
Voltage cannot be measured with the connector connected to the skid control ECU because the connector is watertight.

Standard

Symbols (Terminal No.)	Wiring Color	Terminal Description	Condition	Specified Condition
GND2 (A26-1) - Body ground	W-B - Body ground	Pump motor ground	Ignition switch off	Below 1 Ω
STP (A26-27) - Body ground	P - Body ground	Stop light switch input	Stop light switch ON → OFF (Brake pedal depressed → released)	8 to 14 V → Below 1.5 V
BZ (A26-30) - Body ground	R - Body ground	Buzzer output	Ignition switch on (IG), when buzzer not sounding	6 to 10 V
+BS (A26-31) - Body ground	L - Body ground	Solenoid relay power supply	Always	10 to 14 V
GND1 (A26-32) - Body ground	W-B - Body ground	Skid control ECU ground	Always	Below 1 Ω
IG1 (A26-46) - Body ground	P - Body ground	IG1 power supply	Ignition switch on (IG)	10 to 14 V

CALIBRATION

1. DESCRIPTION

- After replacing the VSC relevant components or performing "Front wheel alignment adjustment", clear and read the sensor calibration data.
- Follow the chart to perform calibration.

Replacing Parts / Operation	Necessary Operation
Skid control ECU	Yaw rate and acceleration sensor zero point calibration.
Yaw rate and acceleration sensor	1. Clearing zero point calibration data. 2. Yaw rate and acceleration sensor zero point calibration.
Front wheel alignment adjustment	1. Clearing zero point calibration data. 2. Yaw rate and acceleration sensor zero point calibration.

2. OBTAIN ZERO POINT OF YAW RATE AND ACCELERATION SENSOR (INTELLIGENT TESTER)

NOTICE:

- **While obtaining the zero point, keep the vehicle stationary and do not vibrate, tilt, move, or shake it. (Do not start the engine.)**
- **Be sure to perform this procedure on a level surface (with an inclination of less than 1 degree).**

(a) Clear the zero point calibration data.
(1) Turn the ignition switch off.
(2) Connect the intelligent tester to the DLC3.
(3) Check that the steering wheel is centered and move the shift lever to the P position (A/T) or apply the parking brake (M/T).
(4) Turn the ignition switch on (IG).

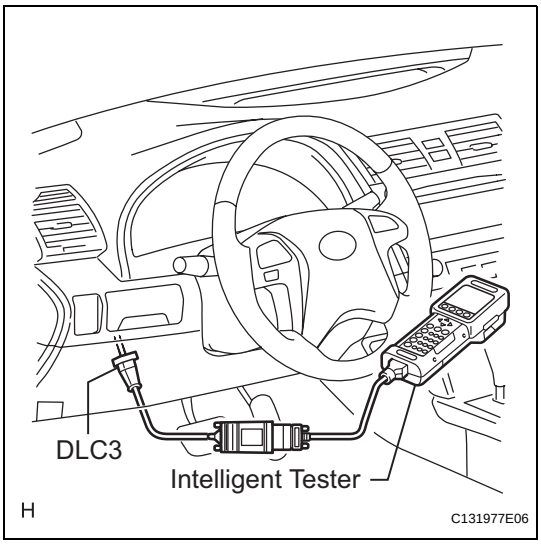

(5) Operate the intelligent tester to erase the codes (select "RESET MEMORY").
HINT:
Refer to the intelligent tester operator's manual for further details.

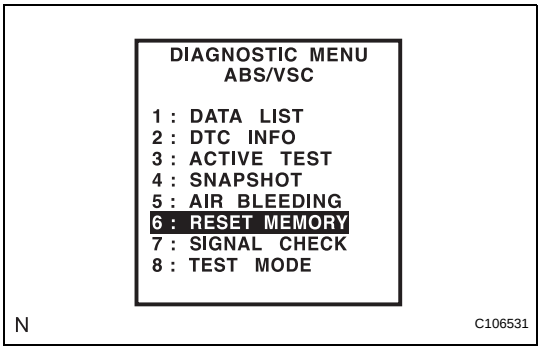

BC

(6) Turn the ignition switch off.

NOTICE:

If the ignition switch is turned on (IG) for more than 15 seconds with the shift lever in the P position (A/T) or the parking brake applied (M/T) after zero point of the yaw rate and acceleration sensor has been cleared, only the zero point of the yaw rate sensor will be stored. If the vehicle is driven under these conditions, the skid control ECU will store the zero point calibration for the acceleration sensor as not being completed. The skid control ECU will then also indicate this as a malfunction of the VSC system using the indicator lights (models without multi information display) or multi information display (models with multi information display).

(b) Perform zero point calibration of the yaw rate and acceleration sensor.

(1) Turn the ignition switch off.

(2) Check that the steering wheel is centered and move the shift lever to the P position (A/T) or apply the parking brake (M/T).

NOTICE:

DTCs C1210/36 and C1336/39 will be recorded if the shift lever is not in the P position (A/T) or the parking brake is not applied (M/T) (See page BC-188).

(3) Connect the intelligent tester to the DLC3.

(4) Turn the ignition switch on (IG).

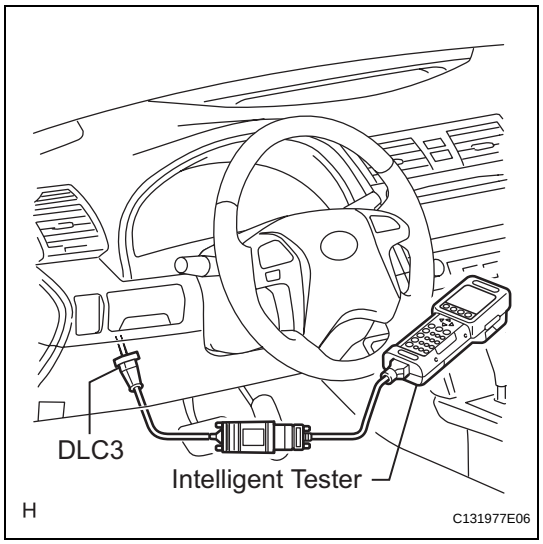

BC

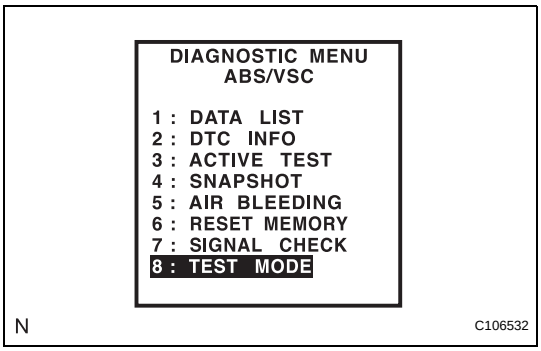

(5) Set the intelligent tester to Test Mode (select "TEST MODE").
HINT:
Refer to the intelligent tester operator's manual for further details.

(6) After the Test Mode has been entered, keep the vehicle stationary on a level surface for 2 seconds or more.

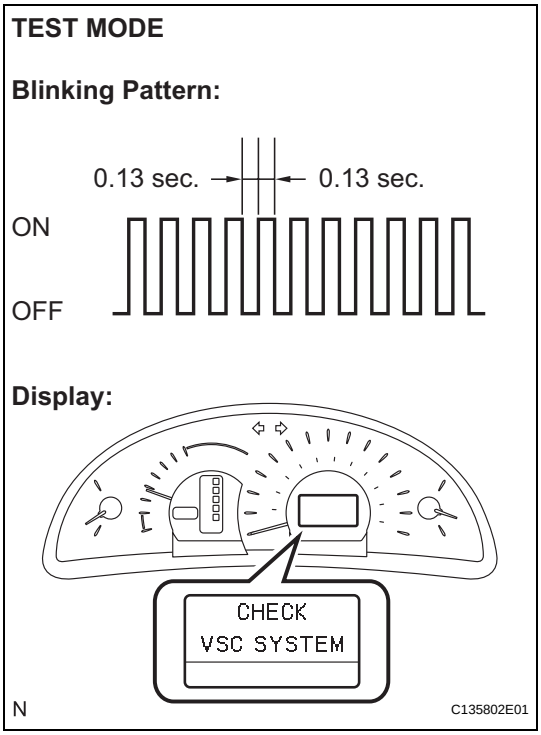

(7) Check that the VSC warning light blinks (models without multi information display) or "CHECK VSC SYSTEM" is displayed on the multi information display (models with multi information display) (Test Mode).
HINT:
- The SLIP indicator light remains on during Test Mode because TRAC is prohibited.
- If the VSC warning light does not blink (models without multi information display) or "CHECK VSC SYSTEM" is not displayed on the multi information display (models with multi information display), perform zero point calibration again.
- The zero point calibration is performed only once after the system enters the Test Mode.
- Calibration cannot be performed again until the stored data is cleared.

(8) Turn the ignition switch off and disconnect the intelligent tester.

3. OBTAIN ZERO POINT OF YAW RATE AND ACCELERATION SENSOR (SST CHECK WIRE)
NOTICE:
- **While obtaining the zero point, keep the vehicle stationary and do not vibrate, tilt, move, or shake it. (Do not start the engine.)**
- **Be sure to perform the procedure on a level surface (with an inclination of less than 1 degree).**

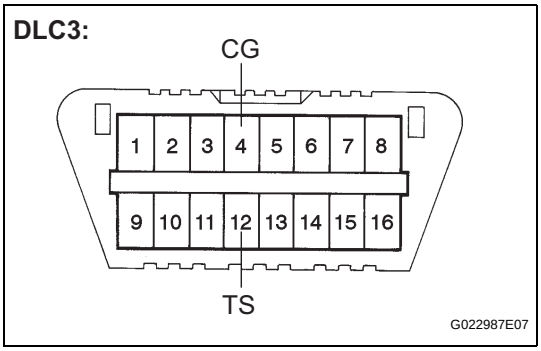

(a) Clear the zero point calibration data.
(1) Turn the ignition switch off.
(2) Check that the steering wheel is centered and move the shift lever to the P position (A/T) or apply the parking brake (M/T).
(3) Turn the ignition switch on (IG).
(4) The warning light and indicator light come on for 3 seconds to indicate that the initial check is completed.
(5) Using SST, connect and disconnect terminals TS and CG of the DLC3 4 times or more within 8 seconds.
SST 09843-18040

NOTICE:
If the ignition switch is turned on (IG) for more than 15 seconds with the shift lever in the P position (A/T) or the parking brake applied (M/T) after zero point of the yaw rate and acceleration sensor has been cleared, only the zero point of the yaw rate sensor will be stored. If the vehicle is driven under these conditions, the skid control ECU will store the zero point calibration for the acceleration sensor as not being completed. The skid control ECU will then also indicate this as a malfunction of the VSC system using the indicator lights (models without multi information display) or multi information display (models with multi information display).

(b) Perform zero point calibration of the yaw rate and acceleration sensor.
   (1) Turn the ignition switch off.
   (2) Check that the steering wheel is centered and move the shift lever to the P position (A/T) or apply the parking brake (M/T).
   NOTICE:
   DTCs C1210/36 and C1336/39 will be recorded if the shift lever is not in the P position (A/T) or the parking brake is not applied (M/T) (See page BC-188).
   (3) Using SST, connect terminals TS and CG of the DLC3.
   SST 09843-18040
   (4) Turn the ignition switch on (IG).
   (5) Keep the vehicle stationary on a level surface for 2 seconds or more.

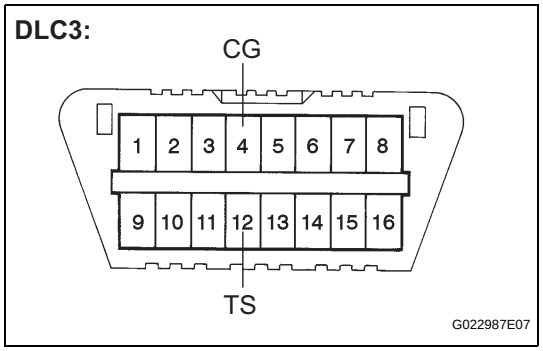

BC

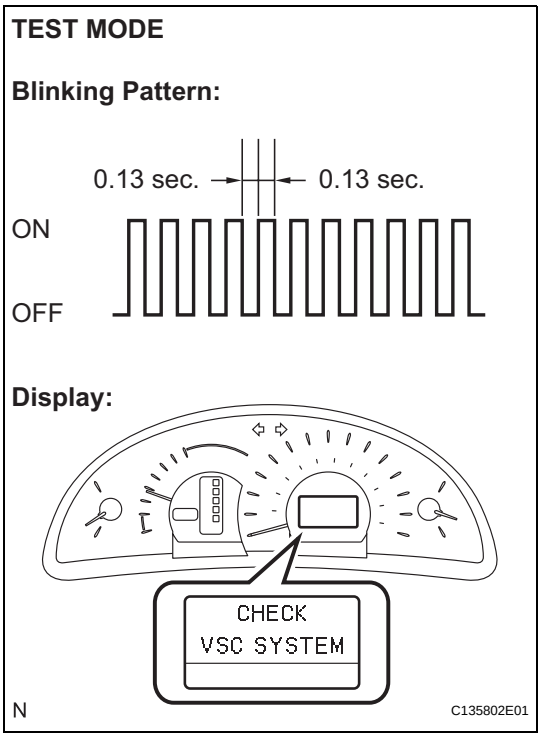

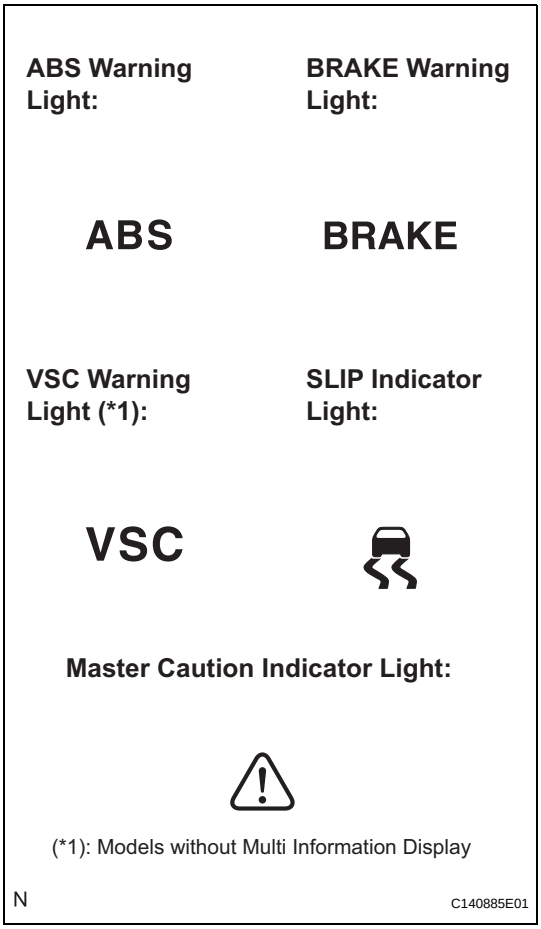

(6) Check that the VSC warning light blinks (models without multi information display) or "CHECK VSC SYSTEM" is displayed on the multi information display (models with multi information display) (Test Mode).
HINT:
- The SLIP indicator light remains on during Test Mode because TRAC is prohibited.
- If the VSC warning light does not blink (models without multi information display) or "CHECK VSC SYSTEM" is not displayed on the multi information display (models with multi information display), perform zero point calibration again.
- The zero point calibration is performed only once after the system enters the Test Mode.
- Calibration cannot be performed again until the stored data is cleared.

(7) Turn the ignition switch off and disconnect the SST from the DLC3.

TEST MODE PROCEDURE

1. WARNING LIGHT AND INDICATOR LIGHT INITIAL CHECK

(a) Release the parking brake.
NOTICE:
Before releasing the parking brake, move the shift lever to the P position for safety (A/T) or set the chocks to hold the vehicle for safety (M/T).
HINT:
When the parking brake is applied or the level of the brake fluid is low, the BRAKE warning light comes on.

(b) When the ignition switch is turned on (IG), check that the ABS warning, BRAKE warning, SLIP indicator, and master caution indicator lights come on for approximately 3 seconds. Vehicles equipped with VSC, which are not equipped with a multi information display, the VSC warning light will illuminate instead of the master caution indicator light.
HINT:
If the ECU stores a DTC, the ABS warning, BRAKE warning, VSC warning and SLIP indicator lights will come on.

If the vehicle is equipped with a multi information display, and the vehicle stores a DTC, the master caution indicator light will illuminate, and the multi information display will indicate the malfunction instead of the VSC warning light. In this case, the ABS warning, BRAKE warning, and SLIP indicator lights will also come on.
If the indicator remains on or does not come on, proceed to troubleshooting for the light circuits listed below.

Trouble Area	See procedure
ABS warning light circuit	BC-229 or BC-233
BRAKE warning light circuit	BC-244 or BC-252
VSC warning light circuit	BC-236 or BC-240
SLIP indicator light circuit	BC-255 or BC-259

2. SENSOR CHECK USING TEST MODE (SIGNAL CHECK) (INTELLIGENT TESTER)

NOTICE:

After replacement of the brake actuator assembly and/or yaw rate and acceleration sensor, perform zero point calibration of the yaw rate and acceleration sensor.

HINT:

- If the ignition switch is turned from on (IG) to on (ACC) or off during Test Mode (signal check), DTCs of the signal check function will be erased.
- During Test Mode (signal check), the skid control ECU records all DTCs of the signal check function. By performing the Test Mode (signal check), the codes are erased if a normal condition is confirmed. The remaining codes are the codes where an abnormality was found.

(a) Procedure to enter Test Mode.
  (1) Turn the ignition switch off.
  (2) Connect the intelligent tester to the DLC3.
  (3) Check that the steering wheel is centered and move the shift lever to the P position (A/T) or apply the parking brake (M/T).
  (4) Turn the ignition switch on (IG).

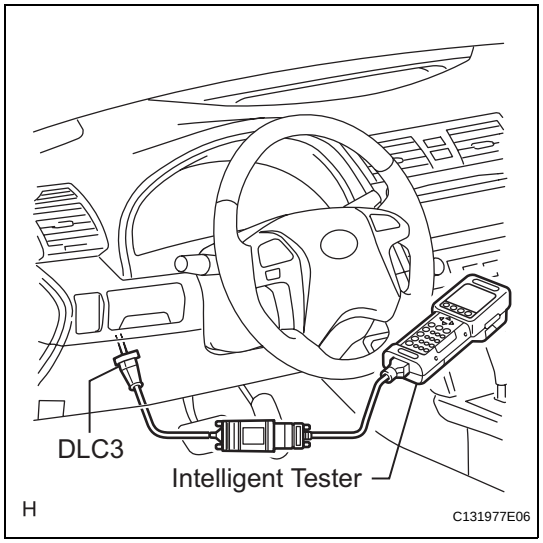

BC

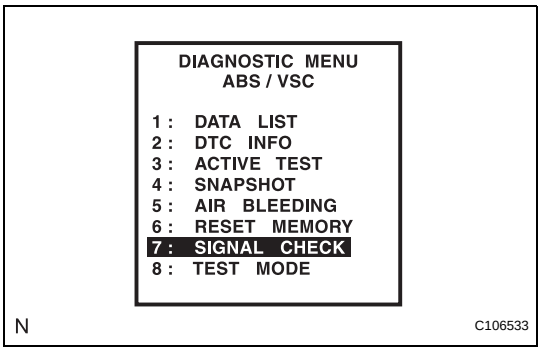

(5) Set the intelligent tester to Test Mode (select "SIGNAL CHECK").
HINT:
Refer to the intelligent tester operator's manual for further details.

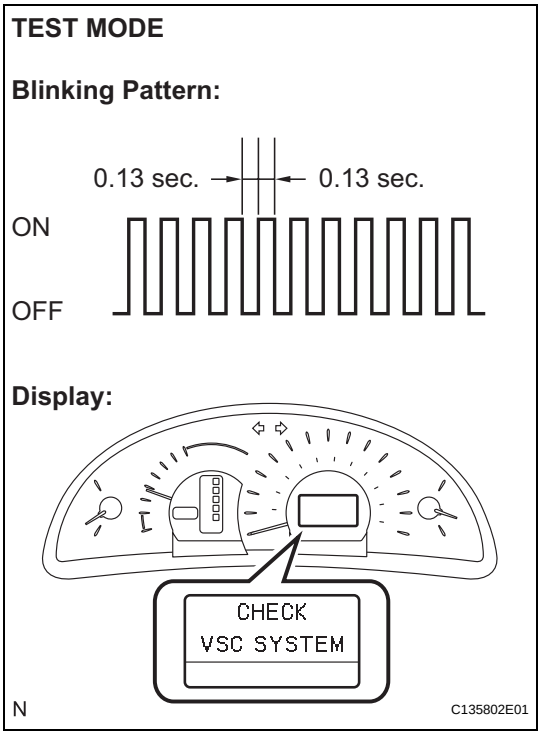

(6) Check that the ABS and VSC (models without multi information display) warning lights blink or "CHECK VSC SYSTEM" is displayed on the multi information display (models with multi information display) (Test Mode).
HINT:
- The SLIP indicator light remains on during Test Mode because TRAC is prohibited.
- If the ABS and VSC (models without multi information display) warning lights do not blink or "CHECK VSC SYSTEM" is not displayed on the multi information display (models with multi information display), inspect the TS and CG terminal circuit, and ABS and VSC warning light circuits.

Trouble Area	See procedure
TS and CG terminal circuit	BC-269
ABS warning light circuit	BC-233
VSC warning light circuit	BC-240

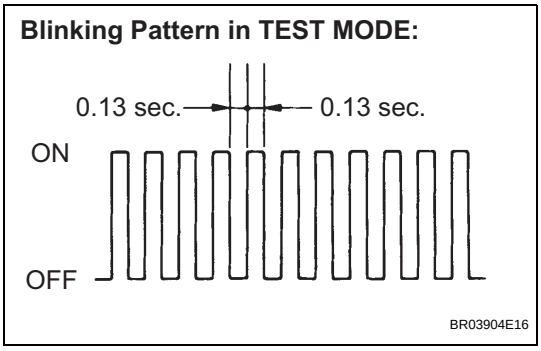

(7) Check the ABS sensor.
HINT:
Check that the ABS warning light is blinking in Test Mode and perform the check.

3. ACCELERATION SENSOR CHECK (INTELLIGENT TESTER)

(a) Keep the vehicle stationary on a level surface for 1 second or more.
HINT:
Acceleration sensor check can be performed with the master cylinder pressure sensor check below.

4. MASTER CYLINDER PRESSURE SENSOR CHECK (INTELLIGENT TESTER)

(a) Leave the vehicle in a stationary condition and release the brake pedal for 1 second or more, and quickly and continuously depress the brake pedal with a force of 98 N (10 kgf, 22 lbf) or more for 1 second.

BC

(b) Check that the ABS warning light stays on for 3 seconds.
HINT:
- Ensure that the ABS warning light comes on.
- While the ABS warning light stays on, continue to depress the brake pedal with a force of 98 N (10 kgf, 22 lbf) or more.
- The ABS warning light comes on for 3 seconds every time brake pedal operation above is performed.
- If the check of the master cylinder pressure sensor is not completed, depressing the brake pedal causes further decrease in the negative pressure, making the sensor check difficult to be completed.
- If the negative pressure is insufficient, the master cylinder pressure sensor check may not be completed. In this case, run the engine at idle to obtain sufficient negative pressure.
- If the brake pedal is strongly depressed when the negative pressure is insufficient, the BRAKE warning light may come on in accordance with the booster pressure control. In this case, run the engine at idle to obtain sufficient negative pressure.

5. SPEED SENSOR CHECK (INTELLIGENT TESTER)

(a) Check the speed sensor signal.

(1) Drive the vehicle straight ahead.
Accelerate the vehicle to a speed of 28 mph (45 km/h) or more for several seconds and check that the ABS warning light goes off.
HINT:
The sensor check may not be completed if wheelspin occurs.

(b) Stop the vehicle.
NOTICE:
- **Before performing the speed sensor check, complete the acceleration sensor and master cylinder pressure sensor checks.**
- **The speed sensor check may not be completed if the speed sensor check is started while turning the steering wheel or spinning the wheels.**
- **After the ABS warning light goes off and if the vehicle speed exceeds 50 mph (80 km/h), a signal check code will be stored again. Accelerate or stop the vehicle before the speed reaches 50 mph (80 km/h).**
- **If the signal check has not been completed, the ABS warning light blinks while driving and the ABS system does not operate.**

HINT:
When the sensor check has been completed, the ABS warning light goes off while driving and blinks in the Test Mode pattern while stationary.

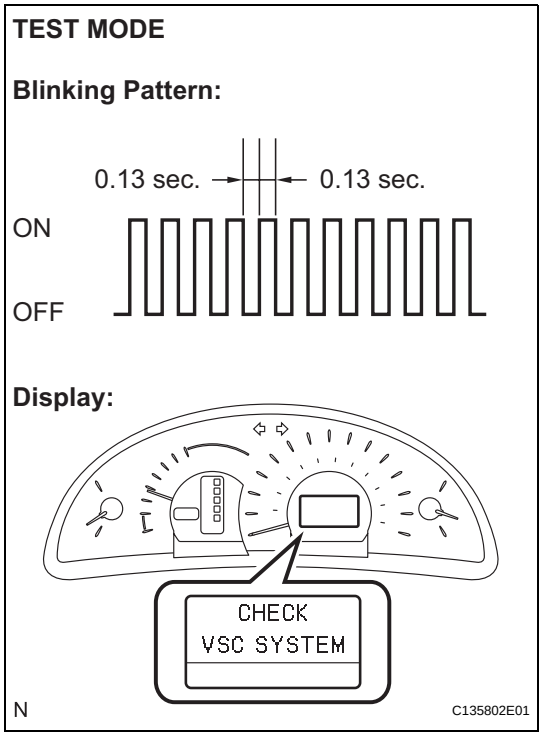

(c) Check the VSC sensor.
Check that the VSC warning light (models without multi information display) blinks or "CHECK VSC SYSTEM" is displayed on the multi information display (models with multi information display), and perform the check.

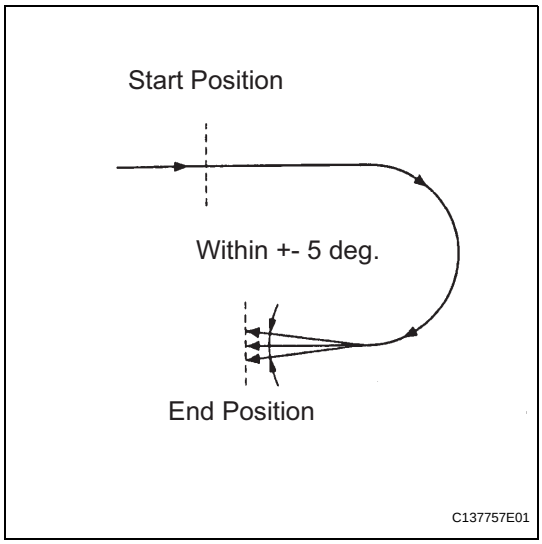

6. YAW RATE SENSOR CHECK (INTELLIGENT TESTER)

(a) Check the output of the yaw rate sensor.
(1) Keep the vehicle in a stationary condition on a level surface for 1 second or more.
(2) Move the shift lever from P to the D position (A/T) or release the parking brake (M/T) and drive the vehicle at a speed of approximately 3 mph (5 km/h), and turn the steering wheel either to the left or right 90° or more until the vehicle makes a 180° turn.
(3) Stop the vehicle and move the shift lever to the P position (A/T) or apply the parking brake (M/T). Check that the skid control buzzer sounds for 3 seconds.
HINT:
- If the skid control buzzer sounds, the sensor check is completed normally.
- If the skid control buzzer does not sound, check the skid control buzzer circuit (See page BC-263), then perform the sensor check again.
- If the skid control buzzer still does not sound, there is a malfunction in the yaw rate sensor, so check the DTC.
- Make a 180° turn. At the end of the turn, the direction of the vehicle should be within 180° +- 5° of its start position.

- Do not spin the wheels.
- Do not turn the ignition switch off while turning.
- Do not move the shift lever to the P position (A/T) or do not apply the parking brake (M/T) while turning, but changing in the vehicle speed, stopping, or driving in reverse is possible.
- Complete the turn within 20 seconds.

Blinking Pattern in TEST MODE:

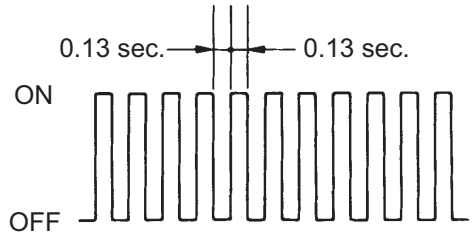

BR03904E16

7. END OF SENSOR CHECK (INTELLIGENT TESTER)

(a) If the sensor check is completed, the ABS warning light blinks (Test Mode) when the vehicle stops and the ABS warning light is off while the vehicle is driving.

NOTICE:

- **When the yaw rate sensor, acceleration sensor, speed sensor, and master cylinder pressure sensor checks are completed, the sensor check is completed.**
- **If the sensor check is not completed, the ABS warning light blinks even while the vehicle is driving and the ABS does not operate.**

8. READ DTC OF SIGNAL CHECK FUNCTION (INTELLIGENT TESTER)

(a) Read the DTC(s) by following the tester screen.

NOTICE:

- **If only the DTCs are displayed, repair the malfunction area and clear the DTCs.**
- **If the DTCs or Test Mode codes (DTC of signal check function) are displayed, repair the malfunction area, clear the DTCs and perform the Test Mode inspection.**

HINT:

See the list of DTC (See procedure "A").

9. SENSOR CHECK USING TEST MODE (SIGNAL CHECK) (SST CHECK WIRE)

NOTICE:

After replacement of the brake actuator assembly and/or yaw rate and acceleration sensor, perform zero point calibration of the yaw rate and acceleration sensor.

HINT:

- If the ignition switch is turned from on (IG) to on (ACC) or off during Test Mode (signal check), DTCs of the signal check function will be erased.
- During Test Mode (signal check), the skid control ECU records all DTCs of the signal check function. By performing the Test Mode (signal check), the codes are erased if a normal condition is confirmed. The remaining codes are the codes where an abnormality was found.

(a) Procedure to enter Test Mode.

(1) Turn the ignition switch off.

BC

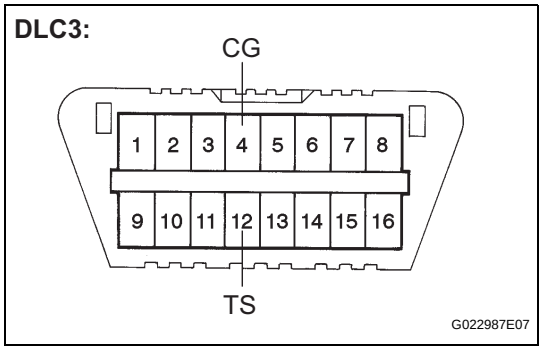

(2) Check that the steering wheel is centered and move the shift lever to the P position (A/T) or apply the parking brake (M/T).

(3) Using SST, connect terminals TS and CG of the DLC3.
SST 09843-18040

(4) Turn the ignition switch on (IG).

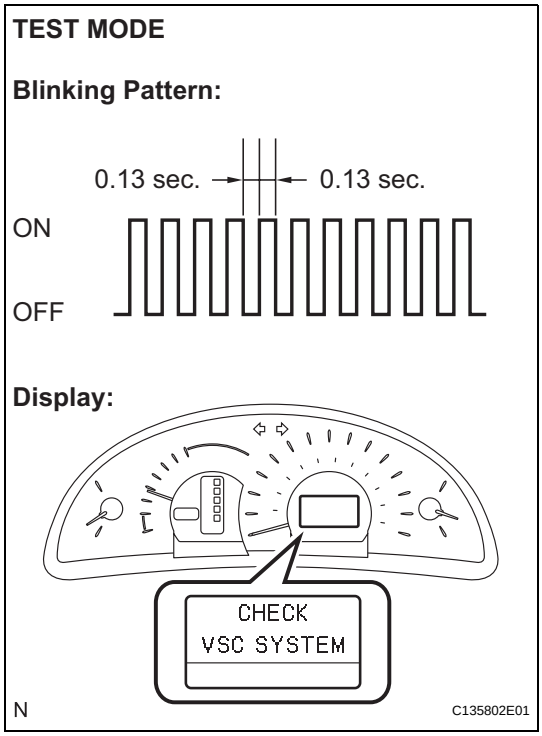

(5) Check that the ABS and VSC (models without multi information display) warning lights blink or "CHECK VSC SYSTEM" is displayed on the multi information display (models with multi information display) (Test Mode).
HINT:
- The SLIP indicator light remains on during Test Mode because TRAC is prohibited.
- If the ABS and VSC (models without multi information display) warning lights do not blink or "CHECK VSC SYSTEM" is not displayed on the multi information display (models with multi information display), inspect the TS and CG terminal circuit, and ABS and VSC warning light circuits.

Trouble Area	See procedure
TS and CG terminal circuit	BC-269
ABS warning light circuit	BC-233
VSC warning light circuit	BC-240

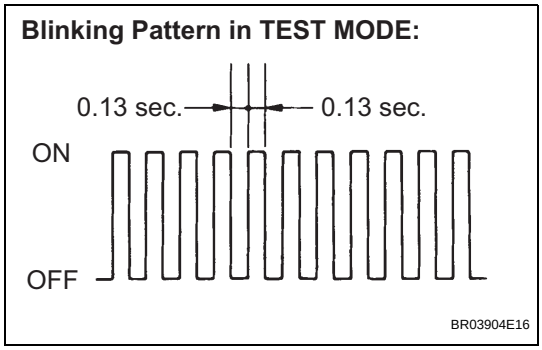

(6) Check the ABS sensor.
HINT:
Check that the ABS warning light is blinking in Test Mode and perform the check.

10. ACCELERATION SENSOR CHECK (SST CHECK WIRE)

(a) Keep the vehicle stationary on a level surface for 1 second or more.
HINT:
Acceleration sensor check can be performed with the master cylinder pressure sensor check below.

11. MASTER CYLINDER PRESSURE SENSOR CHECK (SST CHECK WIRE)

(a) Leave the vehicle in a stationary condition and release the brake pedal for 1 second or more, and quickly and continuously depress the brake pedal with a force of 98 N (10 kgf, 22 lbf) or more for 1 second.

(b) Check that the ABS warning light stays on for 3 seconds.
HINT:
- Ensure that the ABS warning light comes on.
- While the ABS warning light stays on, continue to depress the brake pedal with a force of 98 N (10 kgf, 22 lbf) or more.
- The ABS warning light comes on for 3 seconds every time the brake pedal operation above is performed.
- If the check of the master cylinder pressure sensor is not completed, depressing the brake pedal causes further decrease in the negative pressure, making the sensor check difficult to be completed.
- If the negative pressure is insufficient, the master cylinder pressure sensor check may not be completed. In this case, run the engine at idle to obtain sufficient negative pressure.
- If the brake pedal is strongly depressed when the negative pressure is insufficient, the BRAKE warning light may come on in accordance with the booster pressure control. In this case, run the engine at idle to obtain sufficient negative pressure.

12. SPEED SENSOR CHECK (SST CHECK WIRE)

(a) Check the speed sensor signal.

(1) Drive the vehicle straight ahead.
Accelerate the vehicle to a speed of 28 mph (45 km/h) or more for several seconds and check that the ABS warning light goes off.
HINT:
The sensor check may not be completed if wheelspin occurs.

(b) Stop the vehicle.
NOTICE:
- **Before performing the speed sensor check, complete the acceleration sensor and master cylinder pressure sensor checks.**
- **The speed sensor check may not be completed if the speed sensor check is started while turning the steering wheel or spinning the wheels.**
- **After the ABS warning light goes off, if vehicle speed exceeds 50 mph (80 km/h), a signal check code will be stored again. Accelerate or stop the vehicle before the speed reaches 50 mph (80 km/h).**
- **If the signal check has not been completed, the ABS warning light blinks while driving and the ABS system does not operate.**

HINT:
When the sensor check has been completed, the ABS warning light goes off while driving and blinks in the Test Mode pattern while stationary.

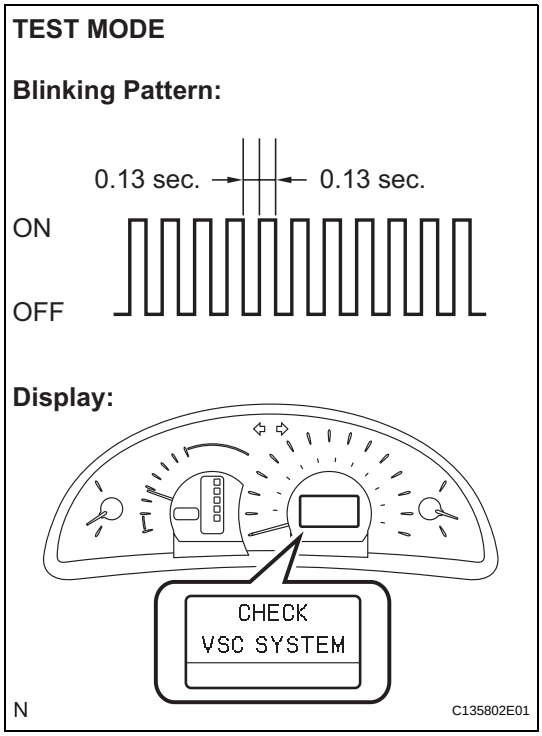

(c) Check the VSC sensor.
Check that the VSC warning light (models without multi information display) blinks or "CHECK VSC SYSTEM" is displayed on the multi information display (models with multi information display), and perform the check.

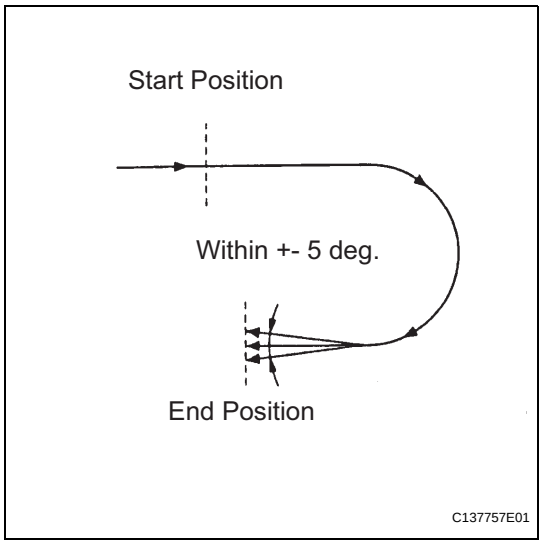

13. YAW RATE SENSOR CHECK (SST CHECK WIRE)

(a) Check the output of the yaw rate sensor.
(1) Keep the vehicle stationary on a level surface for 1 second or more.
(2) Move the shift lever from P to the D position (A/T) or release the parking brake (M/T) and drive the vehicle at a vehicle speed of approximately 3 mph (5 km/h) and turn the steering wheel either to the left or right 90° or more and until the vehicle makes a 180° turn.
(3) Stop the vehicle and move the shift lever to the P position (A/T) or apply the parking brake (M/T). Check that the skid control buzzer sounds for 3 seconds.
HINT:
- If the skid control buzzer sounds, the sensor check is completed normally.
- If the skid control buzzer does not sound, check the skid control buzzer circuit (See page BC-263), then perform the sensor check again.
- If the skid control buzzer still does not sound, there is a malfunction in the yaw rate sensor, so check the DTC.
- Make a 180° turn. At the end of the turn, the direction of the vehicle should be within 180° +- 5° of its start position.
- Do not spin the wheels.

- Do not turn the ignition switch off while turning.
- Do not move the shift lever to the P position (A/T) or do not apply the parking brake (M/T) while turning, but changing in the vehicle speed, stopping, or driving in reverse is possible.
- Complete the turn within 20 seconds.

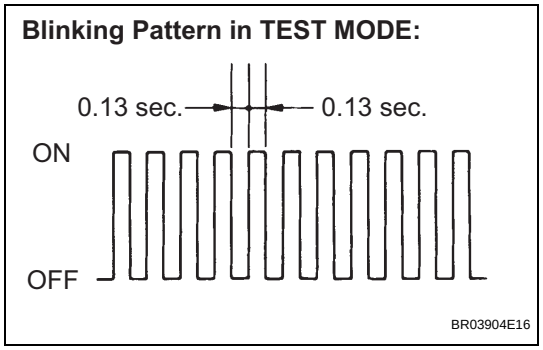

14. END OF SENSOR CHECK (SST CHECK WIRE)

(a) If the sensor check is completed, the ABS warning light blinks (Test Mode) when the vehicle stops and the ABS warning light is off while the vehicle is driving.

NOTICE:

- **When the yaw rate sensor, acceleration sensor, speed sensor, and master cylinder pressure sensor checks are completed, the sensor check is completed.**
- **If the sensor check is not completed, the ABS warning light blinks even while the vehicle is driving and the ABS does not operate.**

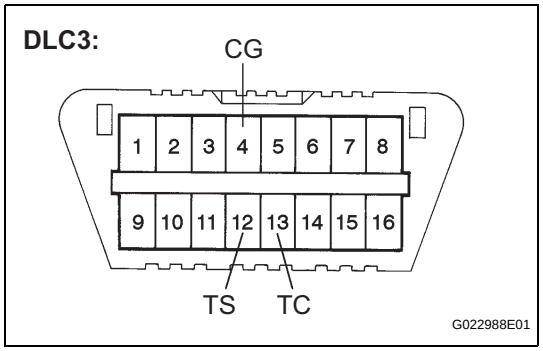

15. READ DTC OF SIGNAL CHECK FUNCTION (SST CHECK WIRE)

(a) Using SST, connect terminals TC and CG of the DLC3.

SST 09843-18040

BC

(b) Count the number of blinks of the ABS and VSC (models without multi information display) warning lights or read "DIAG VSC" on the multi information display (models with multi information display).

Blinking Pattern in Normal System Code:

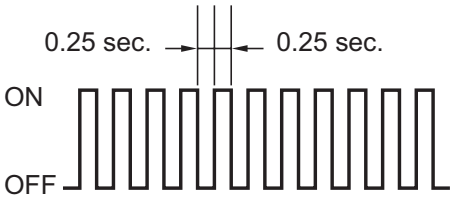

Display of Normal System Code:

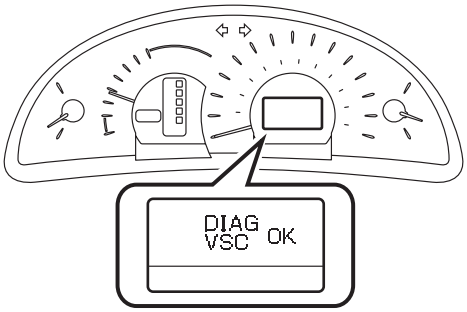

BC

Blinking Pattern in Trouble Code (Example Codes 71 and 72):

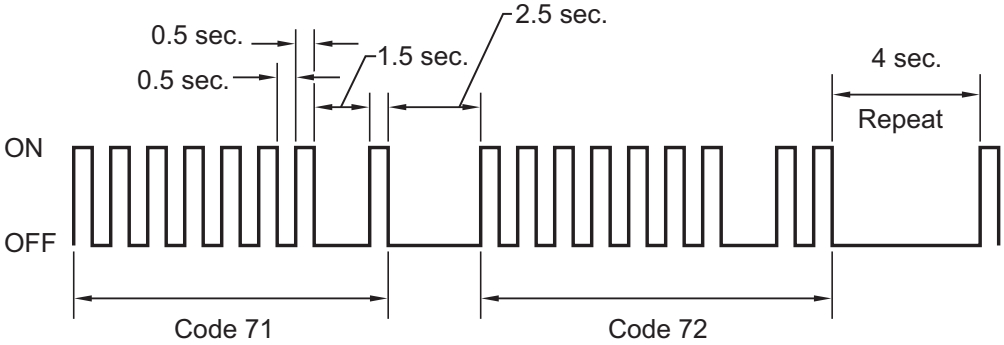

Display of Trouble Code (Example Code 71):

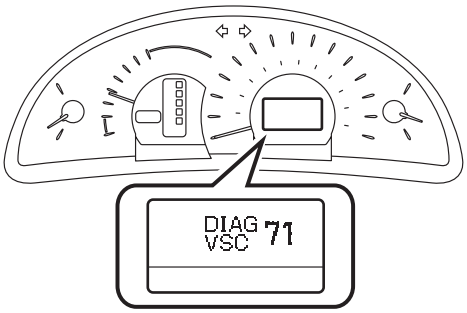

N C135803E02

NOTICE:

- **If only the DTCs are displayed, repair the malfunction area and clear the DTCs.**
- **If the DTCs or Test Mode codes (DTC of signal check function) are displayed, repair the malfunction area, clear the DTCs and perform the Test Mode inspection.**

HINT:

- If more than 1 malfunction is detected at the same time, the lowest numbered code will be displayed first.
- See the list of DTC (See procedure "A").

(c) After performing the check, disconnect the SST from terminals TS and CG, and TC and CG of the DLC3 and turn the ignition switch off.

(d) Turn the ignition switch on (IG).
HINT:
- If the ignition switch is not turned on (IG) after the SST is removed from the DLC3, the previous Test Mode will continue.
- If the ignition switch is turned on (IG) with terminals TS and CG shorted, the previous Test Mode will continue.

16. DTC OF TEST MODE (SIGNAL CHECK) FUNCTION (Procedure "A")

ABS sensor:

Code No.	Diagnosis	Trouble Area
C1271/71	Low output signal of front speed sensor RH	• Front speed sensor RH • Sensor installation • Speed sensor rotor
C1272/72	Low output signal of front speed sensor LH	• Front speed sensor LH • Sensor installation • Speed sensor rotor
C1273/73	Low output signal of rear speed sensor RH	• Rear speed sensor RH • Sensor installation • Speed sensor rotor
C1274/74	Low output signal of rear speed sensor LH	• Rear speed sensor LH • Sensor installation • Speed sensor rotor
C1275/75	Abnormal change in output signal of front speed sensor RH	Speed sensor rotor
C1276/76	Abnormal change in output signal of front speed sensor LH	Speed sensor rotor
C1277/77	Abnormal change in output signal of rear speed sensor RH	Speed sensor rotor
C1278/78	Abnormal change in output signal of rear speed sensor LH	Speed sensor rotor
C1279/79	Acceleration sensor output voltage malfunction	• Yaw rate and acceleration sensor • Sensor installation
C1281/81	Master cylinder pressure sensor output malfunction	• Stop light switch • Master cylinder pressure sensor

VSC sensor:

Code No.	Diagnosis	Trouble Area
C0371/71	Yaw rate sensor	Yaw rate and acceleration sensor

HINT:
The codes in this table are output only in Test Mode (signal check).

DIAGNOSIS SYSTEM

1. DESCRIPTION

When troubleshooting a vehicle with the diagnosis system, the only difference from the usual troubleshooting procedure is connecting the intelligent tester to the vehicle and reading various data output from the vehicle's skid control ECU.

The skid control ECU records DTCs when the computer detects a malfunction in the computer itself or in its circuits.

To check the DTCs, connect the intelligent tester to the DLC3 on the vehicle. The intelligent tester enables you to erase the DTCs, activate the various actuators, and check the Freeze Frame Data and Data List.

(a) Check the battery voltage.

Standard voltage:

11 to 14 V

If the voltage is below 11 V, recharge the battery before proceeding.

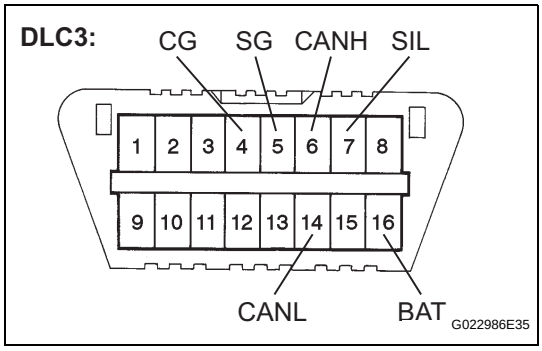

(b) Check the DLC3.

The ECU uses ISO 15765-4 for communication. The terminal arrangement of the DLC3 complies with SAE J1962 and matches the ISO 15765-4 format.

If the result is not as specified, the DLC3 may have a malfunction. Repair or replace the harness and connector.

Verify the conditions listed in the table below.

Symbols (Terminal No.)	Terminal Description	Condition	Specified condition
SIL (7) - SG (5)	Bus "+" line	During transmission	Pulse generation
CG (4) - Body ground	Chassis ground	Always	Below 1 Ω
SG (5) - Body ground	Signal ground	Always	Below 1 Ω
BAT (16) - Body ground	Battery positive	Always	11 to 14 V
CANH (6) - CANL (14)	CAN bus line	*Ignition switch off	54 to 69 Ω
CANH (6) - CG (4)	HIGH-level CAN bus line	*Ignition switch off	200 Ω or higher
CANL (14) - CG (4)	LOW-level CAN bus line	*Ignition switch off	200 Ω or higher
CANH (6) - BAT (16)	HIGH-level CAN bus line	*Ignition switch off	6 kΩ or higher
CANL (14) - BAT (16)	LOW-level CAN bus line	*Ignition switch off	6 kΩ or higher

NOTICE:

***: Before measuring the resistance, leave the vehicle as is for at least 1 minute and do not operate the ignition switch, any other switches or the doors.**

HINT:

Connect the cable of the intelligent tester to the DLC3, turn the ignition switch on (IG) and attempt to use the tester. If the display indicates that a communication error has occurred, there is a problem either with the vehicle or with the tester.

- If communication is normal when the tester is connected to another vehicle, inspect the DLC3 on the original vehicle.
- If communication is still not possible when the tester is connected to another vehicle, the problem may be in the tester itself. Consult the Service Department listed in the tester's operator's manual.

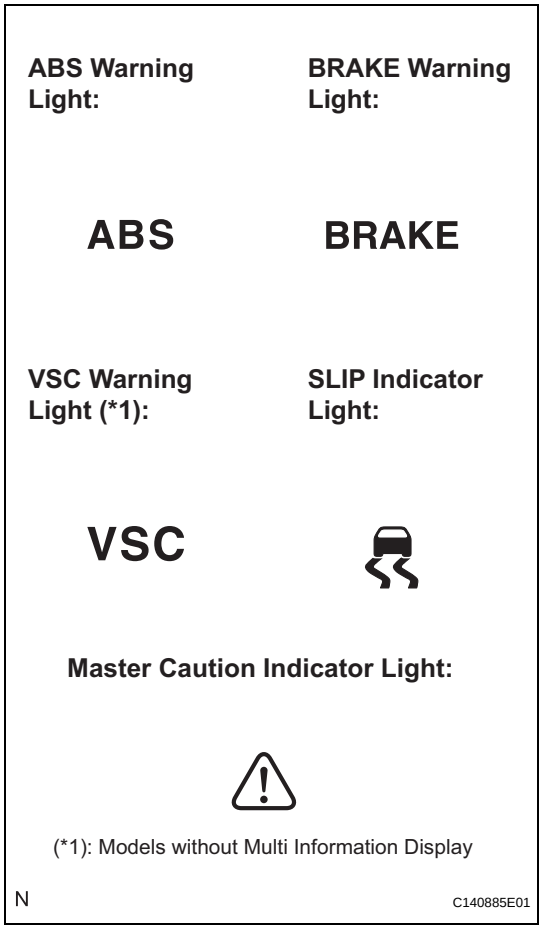

2. DIAGNOSIS

(a) If the skid control ECU detects a malfunction, the ABS, BRAKE, and VSC (models without multi information display) warning lights, and SLIP indicator light will come on and the multi information display (models with multi information display) shows warning messages in order to warn the driver.
The table below indicates which lights will come on when there is a malfunction in a particular function.

BC

Item / Trouble Area	ABS	EBD	BA	TRAC	VSC
ABS warning light	○	○	○	-	-
BRAKE warning light	-	○	-	-	-
VSC warning light (*1)	○	○	○	○	○
Multi information display (*2)	○	○	○	○	○
SLIP indicator light	○	○	○	○	○

○: Light ON
-: Light OFF
(*1): Models without multi information display
(*2): Models with multi information display

- The DTCs are simultaneously stored in the memory. The DTCs can be read by connecting the SST between terminals TC and CG of the DLC3 and observing the blinking pattern of the ABS and VSC (models without multi information display) warning lights, by reading the multi information display (models with multi information display), or by connecting the intelligent tester.
- This system has a Test Mode (signal check) function (See page BC-123).
  The DTC can be read by connecting the intelligent tester and observing the blinking pattern of the ABS and VSC (models without multi information display) warning lights or by reading the multi information display (models with multi information display).

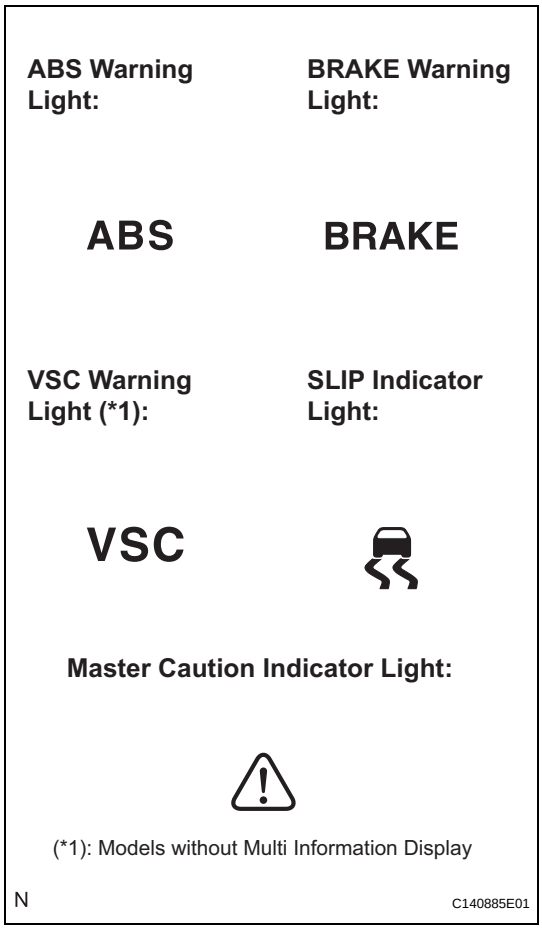

3. WARNING LIGHT AND INDICATOR LIGHT CHECK

(a) Release the parking brake.

NOTICE:

When releasing the parking brake, move the shift lever to the P position for safety (A/T) or set the chocks to hold the vehicle for safety (M/T).

HINT:

When the parking brake is applied or the level of the brake fluid is low, the BRAKE warning light comes on.

(b) When the ignition switch is turned on (IG), check that the ABS, BRAKE and VSC (models without multi information display) warning lights, and SLIP, and master caution indicator lights come on for approximately 3 seconds.

HINT:

If the warning light and indicator light check result is not normal, proceed to troubleshooting for the ABS, BRAKE and VSC warning light circuits and SLIP indicator light circuit.

If the indicator remains on, proceed to troubleshooting for the light circuit below.

Trouble Area	See procedure
ABS warning light circuit	BC-229
BRAKE warning light circuit	BC-244
VSC warning light circuit	BC-236
SLIP indicator light circuit	BC-255

4. SYMPTOM SIMULATION

HINT:

The most difficult case in troubleshooting is when no symptoms occur. In such cases, a thorough customer problem analysis must be carried out. Then the same or similar conditions and environment in which the problem occurred in the customer's vehicle should be reproduced. No matter how experienced or skilled a technician may be, if he proceeds to troubleshoot without confirming the problem symptoms, he will likely overlook something important and make a wrong guess at some points in the repair operation. This leads to a standstill in troubleshooting.

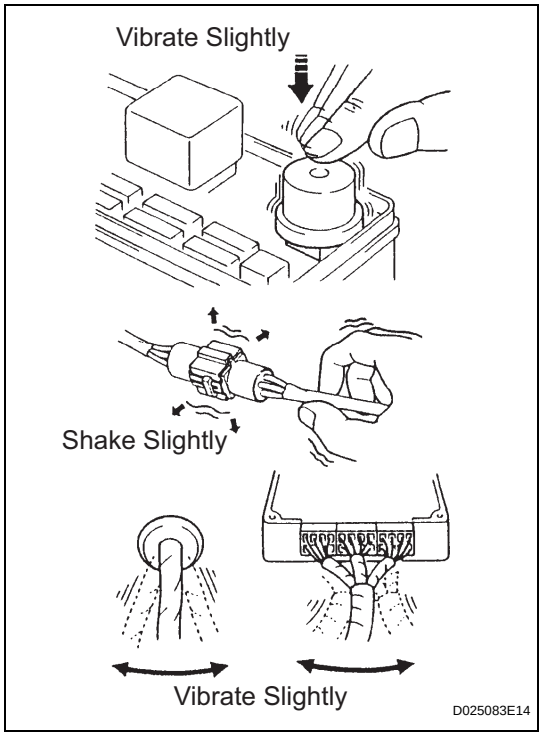

(a) Vibration method: When vibration seems to be the major cause.

HINT:

Perform the simulation method only during the primary check period (for approximately 6 seconds after the ignition switch is on (IG)).

(1) Slightly vibrate the part of the sensor considered to be the problem cause with your fingers and check whether the malfunction occurs.

(2) Slightly shake the connector vertically and horizontally.

HINT:

Shaking the relays too strongly may result in open relays.

(3) Slightly shake the wire harness vertically and horizontally. The connector joint and fulcrum of the vibration are the major areas to be checked thoroughly.

BC

DTC CHECK / CLEAR

1. DTC CHECK/CLEAR (INTELLIGENT TESTER)

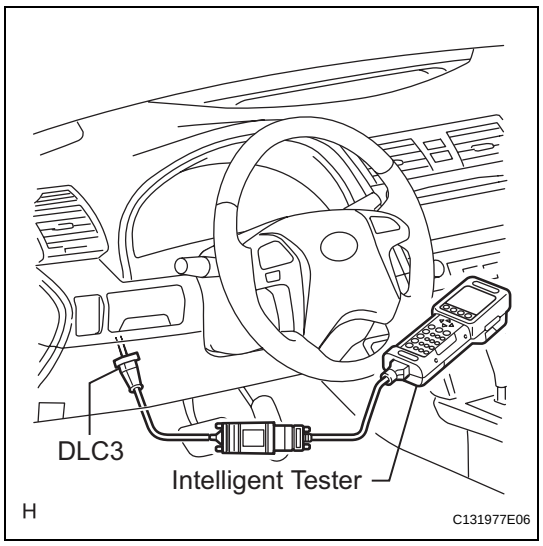

(a) Check the DTC.

(1) Connect the intelligent tester to the DLC3.

(2) Turn the ignition switch on (IG).

(3) Read the DTCs following the prompts on the tester screen.

(b) Clear the DTC.

(1) Connect the intelligent tester to the DLC3.

(2) Turn the ignition switch on (IG).

(3) Operate the intelligent tester to clear the codes.

HINT:

Refer to the intelligent tester operator's manual for further details.

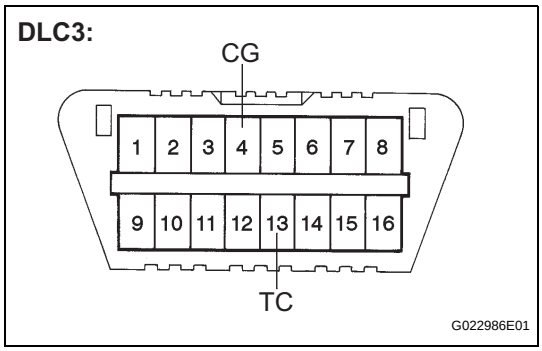

2. DTC CHECK/CLEAR (SST CHECK WIRE)

(a) Check the DTC.

(1) Using SST, connect terminals TC and CG of the DLC3.
SST 09843-18040

(2) Turn the ignition switch on (IG).

(3) Observe the blinking pattern of the ABS and VSC (models without multi information display) warning lights or read the multi information display (models with multi information display) in order to identify the DTC.
HINT:
If no code appears, inspect the TC and CG terminal circuit, and ABS and VSC warning light circuits.

Trouble Area	See procedure
TC and CG terminal circuit	BC-266
ABS warning light circuit	BC-229 or BC-233
VSC warning light circuit	BC-236 or BC-240

(4) As an example, the illustration below shows the blinking patterns of the normal system code and trouble codes 11 and 21 for ABS and VSC (models without multi information display) warning lights or display of the normal system code and trouble code 43 for the VSC on the multi information display (models with multi information display).

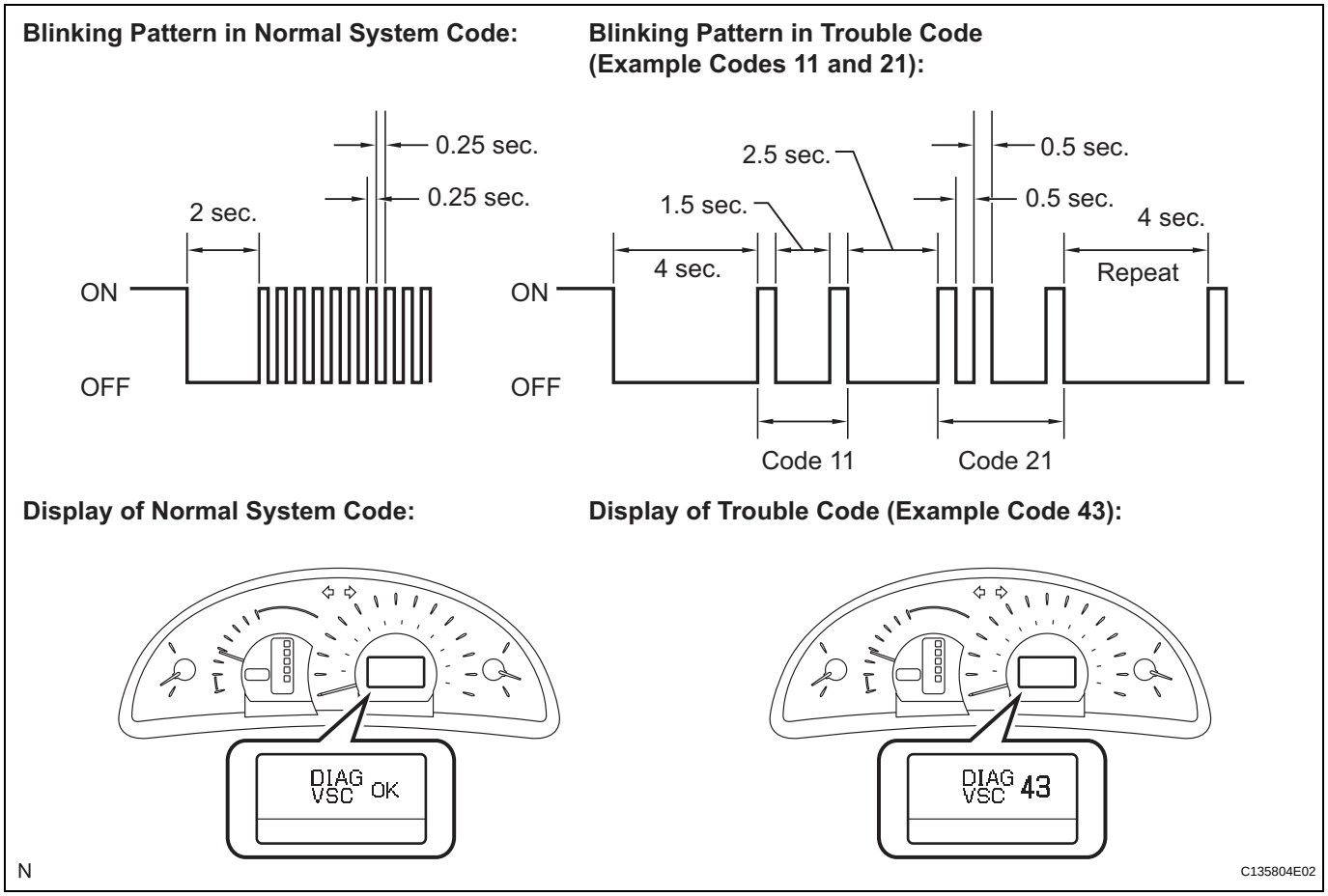

(5) The codes are explained in the code table (See page BC-151).

(6) After completing the check, disconnect terminals TC and CG of the DLC3, and turn off the display. If 2 or more DTCs are detected at the same time, the DTCs will be displayed in ascending order.

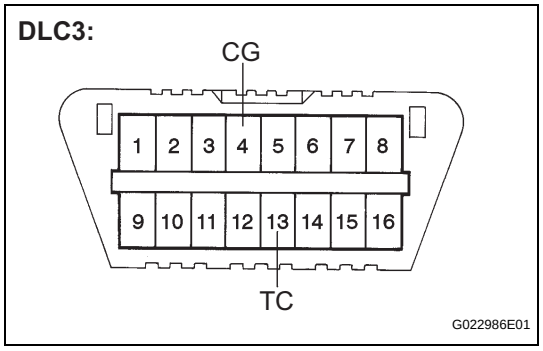

(b) Clear the DTC.

(1) Using SST, connect terminals TC and CG of the DLC3.
SST 09843-18040

(2) Turn the ignition switch on (IG).

BC

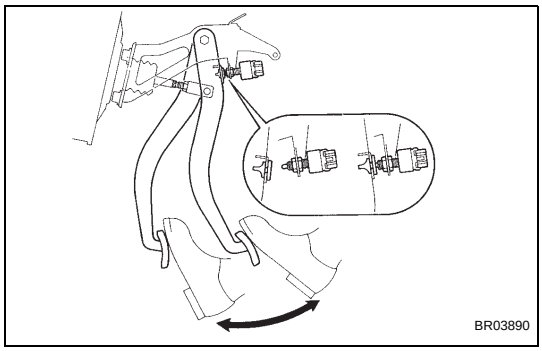

(3) Clear the DTCs stored in the ECU by depressing the brake pedal 8 times or more within 5 seconds.
(4) Check that the warning light or multi information display indicates the normal system code.
(5) Remove the SST from the terminals of the DLC3.
HINT:
Clearing the DTCs cannot be performed by disconnecting the battery terminal or the ECU-IG NO. 2 fuse.

3. END OF DTC CHECK/CLEAR

(a) Turn the ignition switch on (IG).
(b) Check that the ABS warning light goes off within approximately 3 seconds.

FREEZE FRAME DATA

1. FREEZE FRAME DATA

(a) Whenever an ABS DTC is detected, the skid control ECU stores the current vehicle (sensor) state as Freeze Frame Data.
The skid control ECU stores the number of times (maximum: 31) the ignition switch has been turned from off to on (IG) since the last time the ABS was activated.
HINT:
- However, if the vehicle is stopped or at a low speed (4.3 mph (7 km/h) or less), or if a DTC is detected, the skid control ECU will stop counting the number.
- Freeze Frame Data at the time the ABS operates:
  The skid control ECU stores and updates data whenever the ABS system operates.
  When the ECU stores data at the time a DTC is detected, the data stored during ABS operation is erased.
- Freeze Frame Data at the time a DTC is detected:
  When the skid control ECU stores data at the time a DTC is detected, no updates will be performed until the data is cleared.

(b) Connect the intelligent tester to the DLC3.
(c) Turn the ignition switch on (IG).
(d) On the tester display, select the Freeze Frame Data.

Item (Display)	Measurement Item	Reference Value
VEHICLE SPD	Vehicle speed reading	Min.: 0 mph (0 km/h), Max.: 202 mph (326.4 km/h)
STOP LAMP SW	Stop light switch signal	Stop light switch ON: ON, OFF: OFF
#IG ON	Number of operations of ignition switch on (IG) after storing Freeze Frame Data	0 to 31
MAS CYL PRESS 1	Master cylinder pressure sensor reading	Brake pedal released: 0.3 to 0.5 V
M/C PRESS GRADE	Master cylinder pressure sensor change	Min.: -30 MPa/s, Max.: 225 MPa/s
YAW RATE	Yaw rate sensor reading	Min.: -128 deg/s, Max.: 127 deg/s
STEERING SEN	Steering angle sensor reading	Left turn: Increase Right turn: Decrease
FORWARD & REA G	Forward and backward G	Min.: -25.11 m/s^2, Max.: 24.91 m/s^2
SPD GRADE	Vehicle speed grade	Min.: -25.11 m/s^2, Max.: 24.91 m/s^2
BUZZER	Skid control buzzer signal	Skid control buzzer ON: ON, OFF: OFF
ACCELERATOR %	Accelerator opening angle %	Min.: 0 %, Max.: 128 %
PARKING BRAKE SW	Parking brake switch signal	Parking brake switch ON: ON, OFF: OFF
ENGINE TORQUE	Real engine torque	Min.: -1,024 Nm, Max.: 1,023 Nm
FR WHEEL SPD	FR wheel speed	Min.: 0 mph (0 km/h), Max.: 202 mph (326.4 km/h)
FL WHEEL SPD	FL wheel speed	Min.: 0 mph (0 km/h), Max.: 202 mph (326.4 km/h)
RR WHEEL SPD	RR wheel speed	Min.: 0 mph (0 km/h), Max.: 202 mph (326.4 km/h)

Item (Display)	Measurement Item	Reference Value
RL WHEEL SPD	RL wheel speed	Min.: 0 mph (0 km/h), Max.: 202 mph (326.4 km/h)
LATERAL G	Lateral G	Min.: -25.11 m/s^2, Max.: 24.91 m/s^2
GEAR POSITION	Gear position information	FAIL 1st 2nd 3rd 4th 5th 6th P, N R NOT R
LEVER POSITION	Shift lever position information	FAIL 1st 2nd 3rd 4th 5th 6th/B D/M P, N R
OPERATED SYSTEM	Operated system status	ABS activated: ABS VSC activated: VSC TRAC activated: TRAC BA activated: BA Fail safe mode activated: FAIL No system activated: NON System prohibited: SYS
FREEZE TIME	Elapsed time after freeze trigger	Min.: 0 ms, Max.: 500 ms
TROUBLE CODE	Freeze frame DTC	Displays to output DTC
INSPECTION MODE	Inspection mode	OTHER: Normal, INSPECT: Service

FAIL-SAFE CHART

1. FAIL SAFE OPERATION

- If there is a problem with sensor signals or actuator systems, the skid control ECU prohibits power supply to the brake actuator assembly and informs the ECM of VSC system failure.
  The brake actuator assembly turns off each solenoid and the ECM shuts off VSC control (traction control signal) from the skid control ECU accordingly, which turns out to be as if the ABS, TRAC and VSC systems were not installed.
  The ABS control will be prohibited, but EBD control continues as much as possible. If EBD control is impossible, the BRAKE warning light comes on to warn the driver (See page BC-138).
- If system components have any malfunction before starting control, immediately stop the operation. If system components have any malfunction during control, gradually stop the control so as not to trigger a sudden change in vehicle conditions.
  If it is impossible to control the systems, the warning light comes on to inform the driver of termination of the systems (See page BC-138).

HINT:
If the hydraulic brake booster encounters a malfunction, brake performance is gradually lost and ABS, BA, TRAC and VSC systems are prohibited.

BC

ABS, EBD and BA system:

Malfunction Area	Control Method
ABS system	ABS, BA, TRAC and VSC control prohibited
BA system	ABS, BA, TRAC and VSC control prohibited
EBD system	ABS, EBD, BA, TRAC and VSC control prohibited

HINT:
A malfunction in either the ABS or BA system will result in an identical operation, with ABS, BA, TRAC and VSC system control prohibited.

TRAC and VSC system:

Malfunction Area	Control Method
Engine control system (TRAC and VSC systems)	Before control: Disables control During control: Uses only the brakes to effect control
Brake control system (VSC system)	Before control: Disables control During control: Uses only the engine to effect control
Brake control system (TRAC system)	Before control: Disables control During control: Disables control (by gradually ending control)

HINT:
As for the TRAC and VSC systems, different systems prohibit different controls depending on a malfunctioning part.

DATA LIST / ACTIVE TEST

1. DATA LIST

HINT:
With the intelligent tester connected to the DLC3 and the ignition switch on (IG), the ABS, TRAC and VSC Data List can be displayed. Follow the prompts on the tester screen to access the Data List.

Item (Display)	Measurement Item / Range (Display)	Normal Condition	Diagnostic Note
ABS MTR RELAY	ABS motor relay / ON or OFF	ON: Motor relay ON OFF: Motor relay OFF	-
SOL RELAY	Solenoid relay / ON or OFF	ON: Solenoid relay ON OFF: Solenoid relay OFF	-
FAIL MTR RELAY	Fail safe motor relay / ON or OFF	ON: Motor relay ON OFF: Motor relay OFF	-
IDLE SW	Main idle switch / ON or OFF	ON: Accelerator pedal released OFF: Accelerator pedal depressed	-
STOP LAMP SW	Stop light switch / ON or OFF	ON: Brake pedal depressed OFF: Brake pedal released	-
PARKING BRAKE SW	Parking brake switch / ON or OFF	ON: Parking brake applied OFF: Parking brake released	-
ENG REVOLUTIONS	Engine revolutions / min.: 0 r/min, max.: 65535 r/min	-	-
GEAR POSITION	Gear position information / P/N, R, 1st-6th, FAIL, NOT R	-	-
LEVER POSITION	Shift lever position information / P/N, R, D/M, 1st-6th/B, FAIL	-	-
SHIFT INFO	Shift information / ON or OFF	ON: During gear change	-
FR WHEEL SPD	FR wheel speed sensor reading / min.: 0 mph (0 km/h), max.: 202 mph (326 km/h)	Actual wheel speed	Similar speed as indicated on speedometer
FL WHEEL SPD	FL wheel speed sensor reading / min.: 0 mph (0 km/h), max.: 202 mph (326 km/h)	Actual wheel speed	Similar speed as indicated on speedometer
RR WHEEL SPD	RR wheel speed sensor reading / min.: 0 mph (0 km/h), max.: 202 mph (326 km/h)	Actual wheel speed	Similar speed as indicated on speedometer
RL WHEEL SPD	RL wheel speed sensor reading / min.: 0 mph (0 km/h), max.: 202 mph (326 km/h)	Actual wheel speed	Similar speed as indicated on speedometer
DECELERAT SEN	Acceleration sensor 1 reading / min.: -1.889 G, max.: 1.875 G	Approximately 0+-0.13 G while stationary	Reading changes when vehicle is bounced
DECELERAT SEN 2	Acceleration sensor 2 reading / min.: -1.889 G, max.: 1.875 G	Approximately 0+-0.13 G while stationary	Reading changes when vehicle is bounced
SFRR	ABS solenoid (SFRR) / ON or OFF	ON: Operates	-
SFRH	ABS solenoid (SFRH) / ON or OFF	ON: Operates	-
SFLR	ABS solenoid (SFLR) / ON or OFF	ON: Operates	-
SFLH	ABS solenoid (SFLH) / ON or OFF	ON: Operates	-
SRRR	ABS solenoid (SRRR) / ON or OFF	ON: Operates	-
SRRH	ABS solenoid (SRRH) / ON or OFF	ON: Operates	-

Item (Display)	Measurement Item / Range (Display)	Normal Condition	Diagnostic Note
SRLR	ABS solenoid (SRLR) / ON or OFF	ON: Operates	-
SRLH	ABS solenoid (SRLH) / ON or OFF	ON: Operates	-
SM1	Master cut solenoid (SM1) / ON or OFF	ON: Operates	-
SM2	Master cut solenoid (SM2) / ON or OFF	ON: Operates	-
VEHICLE SPD	Maximum wheel speed sensor reading / min.: 0 mph (0 km/h), max.: 202 mph (326 km/h)	Actual vehicle speed	Speed indicated on speedometer
YAW RATE SENS 1	Yaw rate sensor 1 / min.: -128 deg/s, max.: 127 deg/s	Min.: -128 deg/s Max.: 127 deg/s	-
ZERO YAW RATE	Memorized zero value / min.: -128 deg/s, max.: 127 deg/s	Min.: -128 deg/s Max.: 127 deg/s	-
STEERING SEN	Steering angle sensor / min.: -3,276.8 deg, max.: 3,276.7 deg	Left turn: Increase Right turn: Decrease	-
MAS CYL PRESS 1	Master cylinder pressure sensor 1 reading / min.: 0 V, max.: 5 V	When brake pedal is released: 0.3 to 0.5 V	Reading increases when brake pedal is depressed
ACCELERATOR %	The difference of a present accelerator / min.: 0%, max.: 128%	-	-
ENGINE TORQUE	Real engine torque / min.: -1,024 N*m, max.: 1,023 N*m	-	-
FR SPD OPN	FR speed sensor open detection / ERROR or NORMAL	ERROR: Momentary interruption NORMAL: Normal	-
FL SPD OPN	FL speed sensor open detection / ERROR or NORMAL	ERROR: Momentary interruption NORMAL: Normal	-
RR SPD OPN	RR speed sensor open detection / ERROR or NORMAL	ERROR: Momentary interruption NORMAL: Normal	-
RL SPD OPN	RL speed sensor open detection / ERROR or NORMAL	ERROR: Momentary interruption NORMAL: Normal	-
YAW RATE OPN	Yaw rate sensor open detection / ERROR or NORMAL	ERROR: Momentary interruption NORMAL: Normal	-
DECELERAT OPN	Acceleration sensor open detection / ERROR or NORMAL	ERROR: Momentary interruption NORMAL: Normal	-
STEERING OPN	Steering angle sensor open detection / ERROR or NORMAL	ERROR: Momentary interruption NORMAL: Normal	-
M/C OPN	Master cylinder pressure sensor open detection / ERROR or NORMAL	ERROR: Momentary interruption NORMAL: Normal	-
EFI COM OPN	EFI communication open detection / ERROR or NORMAL	ERROR: Momentary interruption NORMAL: Normal	-
#DTC	Number of DTC / min.: 0, max.: 255	-	-
ABS WARN LAMP	ABS warning light / ON or OFF	ON: Warning light ON OFF: Warning light OFF	-
BRAKE WARN LAMP	BRAKE warning light / ON or OFF	ON: Warning light ON OFF: Warning light OFF	-
SLIP INDI LAMP	SLIP indicator light / ON or OFF	ON: Indicator light ON OFF: Indicator light OFF	-
BUZZER	Skid control buzzer / ON or OFF	ON: Buzzer ON OFF: Buzzer OFF	-
VSC WARN LAMP	VSC warning light (*1) or multi information display (*2) / ON or OFF	ON: Indicator ON OFF: Indicator OFF	-
ZERO M/C SEN	Memorized zero value / min.: -12.5 MPa, max.: 12.4 MPa	Min.: -12.5 MPa Max.: 12.4 MPa	-

Item (Display)	Measurement Item / Range (Display)	Normal Condition	Diagnostic Note
FR WHEEL ACCEL	FR wheel acceleration / min.: -200.84 m/s^2, max.: 199.27 m/s^2	Min.: -200.84 m/s^2 Max.: 199.27 m/s^2	-
FL WHEEL ACCEL	FL wheel acceleration / min.: -200.84 m/s^2, max.: 199.27 m/s^2	Min.: -200.84 m/s^2 Max.: 199.27 m/s^2	-
RR WHEEL ACCEL	RR wheel acceleration / min.: -200.84 m/s^2, max.: 199.27 m/s^2	Min.: -200.84 m/s^2 Max.: 199.27 m/s^2	-
RL WHEEL ACCEL	RL wheel acceleration / min.: -200.84 m/s^2, max.: 199.27 m/s^2	Min.: -200.84 m/s^2 Max.: 199.27 m/s^2	-
ZERO DECELERAT	Memorized zero value / min.: -25.11 m/s^2, max.: 24.91 m/s^2	Min.: -25.11 m/s^2 Max.: 24.91 m/s^2	-
ZERO DECELERAT 2	Memorized zero value / min.: -25.11 m/s^2, max.: 24.91 m/s^2	Min.: -25.11 m/s^2 Max.: 24.91 m/s^2	-
ZERO STEERING	Memorized zero value / min.: -3,276.8 deg, max.: 3,276.7 deg	Min.: -3,276.8 deg Max.: 3,276.7 deg	-
LATERAL G	Lateral G / min.: -25.11 m/s^2, max.: 24.91 m/s^2	Min.: -25.11 m/s^2 Max.: 24.91 m/s^2	-
FORWARD&REA G	Forward and rearward G / min.: -25.11 m/s^2, max.: 24.91 m/s^2	Min.: -25.11 m/s^2 Max.: 24.91 m/s^2	-
YAW RATE VALUE	Yaw rate value / min.: -128 deg/s, max.: 127 deg/s	Min.: -128 deg/s Max.: 127 deg/s	-
STEERING ANGLE	Steering angle value / min.: -3,276.8 deg, max.: 3,276.7 deg	Min.: -3,276.8 deg Max.: 3,276.7 deg	-
TRAC STATUS	TRAC control status / ON or OFF	ON: During the control	-
TRAC ENG STATUS	TRAC engine control status / ON or OFF	ON: During the control	-
TRAC BRK STATUS	TRAC brake control status / ON or OFF	ON: During the control	-
FR VSC STATUS	FR wheel VSC control status / ON or OFF	ON: During the control	-
FL VSC STATUS	FL wheel VSC control status / ON or OFF	ON: During the control	-
RR VSC STATUS	RR wheel VSC control status / ON or OFF	ON: During the control	-
RL VSC STATUS	RL wheel VSC control status / ON or OFF	ON: During the control	-
FR ABS STATUS	FR wheel ABS control status / ON or OFF	ON: During the control	-
FL ABS STATUS	FL wheel ABS control status / ON or OFF	ON: During the control	-
RR ABS STATUS	RR wheel ABS control status / ON or OFF	ON: During the control	-
RL ABS STATUS	RL wheel ABS control status / ON or OFF	ON: During the control	-
RR EBD STATUS	RR wheel EBD control status / ON or OFF	ON: During the control	-
RL EBD STATUS	RL wheel EBD control status / ON or OFF	ON: During the control	-
BA STATUS	BA control status / ON or OFF	ON: During the control	-
PBA STATUS	PBA control status / ON or OFF	ON: During the control	-
INSPECTION MODE	Inspection mode / OTHER or INSPECT	-	-
#IG ON2	Number of ignition switch on (IG) after entering the inspection mode / min.: 0, max.: 255	-	-

Item (Display)	Measurement Item / Range (Display)	Normal Condition	Diagnostic Note
TROUBLE CODE	Freeze frame DTC / min.:0, max.: 65,535	-	-

(*1): Models without multi information display
(*2): Models with multi information display

2. ACTIVE TEST

HINT:
Performing the Active Test using the intelligent tester allows the relay, actuator, and other items to operate without removing any parts. Performing the Active Test as the first step in troubleshooting is one of the methods to save labor time.
It is possible to display the Data List during the Active Test.

(a) Connect the intelligent tester to the DLC3.
(b) Turn the ignition switch on (IG).
(c) On the tester display, select the Active Test.
HINT:
The ignition switch must be turned on (IG) to proceed to the Active Test using the intelligent tester.

BC

Item (Display)	Vehicle Condition / Test Details	Diagnostic Note
SFRR	Turns ABS solenoid (SFRR) ON / OFF	Operating sound of solenoid (clicking sound) can be heard
SFRH	Turns ABS solenoid (SFRH) ON / OFF	Operating sound of solenoid (clicking sound) can be heard
SFLR	Turns ABS solenoid (SFLR) ON / OFF	Operating sound of solenoid (clicking sound) can be heard
SFLH	Turns ABS solenoid (SFLH) ON / OFF	Operating sound of solenoid (clicking sound) can be heard
SRRR	Turns ABS solenoid (SRRR) ON / OFF	Operating sound of solenoid (clicking sound) can be heard
SRRH	Turns ABS solenoid (SRRH) ON / OFF	Operating sound of solenoid (clicking sound) can be heard
SRLR	Turns ABS solenoid (SRLR) ON / OFF	Operating sound of solenoid (clicking sound) can be heard
SRLH	Turns ABS solenoid (SRLH) ON / OFF	Operating sound of solenoid (clicking sound) can be heard
SMF	Turns master cut solenoid (SM1) ON / OFF	Operating sound of solenoid (clicking sound) can be heard
SMR	Turns master cut solenoid (SM2) ON / OFF	Operating sound of solenoid (clicking sound) can be heard
SOL RELAY	Turns ABS solenoid relay ON / OFF	-
MOTOR RELAY	Turns ABS motor relay ON / OFF	Operating sound of relay (clicking sound) and motor can be heard
ABS WARN LAMP	Turns ABS warning light ON / OFF	Observe combination meter
VSC WARN LAMP	Turns VSC warning light (*1) or multi information display (*2) ON / OFF	Observe combination meter
SLIP INDI LAMP	Turns SLIP indicator light ON / OFF	Observe combination meter
BRAKE WARN LAMP	Turns BRAKE warning light ON / OFF	Observe combination meter
BUZZER	Turns skid control buzzer ON / OFF	Buzzer can be heard

(*1): Models without multi information display
(*2): Models with multi information display

DIAGNOSTIC TROUBLE CODE CHART

- If a trouble code is displayed during the DTC check, check the circuit indicated by the DTC. For details of each code, refer to the page for the respective "DTC No." in the DTC chart.
- Inspect the fuse and relay before investigating the trouble areas as shown in the table below.

DTC chart of ABS:

DTC No.	Detection Item	Trouble Area	See page
C0200/31 (*1)	Front Speed Sensor RH Circuit	1. Front speed sensor RH 2. Speed sensor circuit 3. Speed sensor rotor 4. Sensor installation 5. Brake actuator assembly (Skid control ECU)	BC-156
C0205/32 (*1)	Front Speed Sensor LH Circuit	1. Front speed sensor LH 2. Speed sensor circuit 3. Speed sensor rotor 4. Sensor installation 5. Brake actuator assembly (Skid control ECU)	BC-156
C0210/33 (*1)	Rear Speed Sensor RH Circuit	1. Rear speed sensor RH 2. Speed sensor circuit 3. Speed sensor rotor 4. Sensor installation 5. Brake actuator assembly (Skid control ECU)	BC-164
C0215/34 (*1)	Rear Speed Sensor LH Circuit	1. Rear speed sensor LH 2. Speed sensor circuit 3. Speed sensor rotor 4. Sensor installation 5. Brake actuator assembly (Skid control ECU)	BC-164
C0226/21	SFR Solenoid Circuit	1. Brake actuator assembly 2. SFRH or SFRR circuit	BC-172
C0236/22	SFL Solenoid Circuit	1. Brake actuator assembly 2. SFLH or SFLR circuit	BC-172
C0246/23	SRR Solenoid Circuit	1. Brake actuator assembly 2. SRRH or SRRR circuit	BC-172
C0256/24	SRL Solenoid Circuit	1. Brake actuator assembly 2. SRLH or SRLR circuit	BC-172
C0273/13 (*1)	Open in ABS Motor Relay Circuit	1. ABS NO. 1 fuse 2. VSC NO. 2 relay 3. VSC NO. 2 relay circuit 4. Brake actuator assembly	BC-175
C0274/14	Short to B+ in ABS Motor Relay Circuit	1. ABS NO. 1 fuse 2. VSC NO. 2 relay 3. VSC NO. 2 relay circuit 4. Brake actuator assembly	BC-175
C0278/11	Open in ABS Solenoid Relay Circuit	1. ABS NO. 2 fuse 2. ABS solenoid relay 3. ABS solenoid relay circuit 4. Brake actuator assembly	BC-181
C0279/12	Short to B+ in ABS Solenoid Relay Circuit	Brake actuator assembly	BC-181
C1225/25	SM Solenoid Circuit	1. Brake actuator assembly 2. SM1 or SM2 circuit	BC-172
C1235/35	Foreign Object is Attached on Tip of Front Speed Sensor RH	1. Front speed sensor RH 2. Speed sensor rotor 3. Sensor installation 4. Brake actuator assembly (Skid control ECU)	BC-197

DTC No.	Detection Item	Trouble Area	See page
C1236/36	Foreign Object is Attached on Tip of Front Speed Sensor LH	1. Front speed sensor LH 2. Speed sensor rotor 3. Sensor installation 4. Brake actuator assembly (Skid control ECU)	BC-197
C1238/38	Foreign Object is Attached on Tip of Rear Speed Sensor RH	1. Rear speed sensor RH 2. Speed sensor rotor 3. Sensor installation 4. Brake actuator assembly (Skid control ECU)	BC-197
C1239/39	Foreign Object is Attached on Tip of Rear Speed Sensor LH	1. Rear speed sensor LH 2. Speed sensor rotor 3. Sensor installation 4. Brake actuator assembly (Skid control ECU)	BC-197
C1241/41	Low Battery Positive Voltage	1. ECU-IG NO. 2 fuse 2. Battery 3. Charging system 4. Power source circuit 5. Internal power supply circuit of the skid control ECU	BC-207
C1243/43 (*1)	Acceleration Sensor Stuck Malfunction	1. Yaw rate and acceleration sensor 2. Yaw rate and acceleration sensor circuit	BC-193
C1244/44	Open or Short in Acceleration Sensor Circuit	1. Yaw rate and acceleration sensor 2. Yaw rate and acceleration sensor circuit	BC-193
C1245/45 (*1)	Acceleration Sensor Output Malfunction	1. Yaw rate and acceleration sensor 2. Yaw rate and acceleration sensor circuit	BC-193
C1246/46 (*2)	Master Cylinder Pressure Sensor Malfunction	1. Master cylinder pressure sensor 2. Master cylinder pressure sensor circuit 3. Stop light switch circuit 4. Brake actuator assembly	BC-210
C1249/49	Open in Stop Light Switch Circuit	1. STOP fuse 2. Stop light switch 3. Stop light switch circuit 4. Brake actuator assembly (Skid control ECU)	BC-213
C1251/51 (*1)	Open in Pump Motor Circuit	1. Brake actuator assembly (GND circuit) 2. Brake actuator assembly (Motor circuit)	BC-219
C1361/91	Short Circuit in ABS Motor Fail Safe Relay Circuit	1. ABS NO. 1 fuse 2. VSC NO. 1 (fail safe) relay 3. VSC NO. 1 (fail safe) relay circuit 4. Brake actuator assembly	BC-175
C1381/97	Yaw Rate and / or Acceleration Sensor Power Supply Voltage Malfunction	1. Yaw rate and acceleration sensor 2. Yaw rate and acceleration sensor power source circuit	BC-193
U0073/94	Control Module Communication Bus OFF	CAN communication system	BC-224
U0124/95	Lost Communication with Lateral Acceleration Sensor Module	CAN communication system (Skid control ECU to yaw rate and acceleration sensor)	BC-224

(*1, *2):

Even after the trouble areas are repaired, the ABS warning light will not go off unless the following operations are performed:

- (*1):
  (a) Drive the vehicle at 12 mph (20 km/h) for 30 seconds or more and check that the ABS warning light goes off.
  (b) Clear the DTC.
- (*2):
  (a) Keep the vehicle stationary for 5 seconds or more and depress the brake pedal lightly 2 or 3 times.
  (b) Drive the vehicle at the vehicle speed of 31 mph (50 km/h) and keep depressing the brake pedal strongly for approximately 3 seconds.
  (c) Repeat the above operation 3 times or more and check that the ABS warning light goes off.
  (d) Clear the DTC.

HINT:
In some cases, the intelligent tester cannot be used when the ABS warning light remains on.

DTC chart of VSC:

DTC No.	Detection Item	Trouble Area	See page
43	ABS Control System Malfunction	ABS control system	BC-155
C1201/51	Engine Control System Malfunction	Engine control system	BC-186
C1203/53	ECM Communication Circuit Malfunction	ECM	BC-187
C1210/36	Zero Point Calibration of Yaw Rate Sensor Undone	1. Brake actuator assembly (Skid control ECU) 2. Yaw rate and acceleration sensor 3. Zero point calibration undone	BC-188
C1231/31	Steering Angle Sensor Circuit Malfunction	1. Steering angle sensor 2. Steering angle sensor circuit 3. Steering angle sensor power supply 4. Brake actuator assembly (Skid control ECU)	BC-190
C1232/32	Stuck in Acceleration Sensor	1. Yaw rate and acceleration sensor 2. Yaw rate and acceleration sensor circuit	BC-193
C1234/34	Yaw Rate Sensor Malfunction	1. Yaw rate and acceleration sensor 2. Yaw rate and acceleration sensor circuit	BC-193
C1290/66	Steering Angle Sensor Zero Point Malfunction	1. Yaw rate and acceleration sensor zero point calibration incomplete 2. Poor adjustment of the centered position of the steering wheel 3. Poor adjustment of front wheel alignment	BC-222
C1336/39	Zero Point Calibration of Acceleration Sensor Undone	1. Brake actuator assembly (Skid control ECU) 2. Yaw rate and acceleration sensor 3. Zero point calibration undone	BC-188
U0100/65	Lost Communication with ECM / PCM	CAN communication system (Skid control ECU to ECM)	BC-224

DTC No.	Detection Item	Trouble Area	See page
U0123/62	Lost Communication with Yaw Rate Sensor Module	CAN communication system (Skid control ECU to yaw rate and acceleration sensor)	BC-224
U0126/63	Lost Communication with Steering Angle Sensor Module	CAN communication system (Skid control ECU to steering angle sensor)	BC-224

HINT:
In some cases, the intelligent tester cannot be used when the VSC warning light (models without multi information display) or multi information display (models with multi information display) remains on.

Test Mode DTC of ABS:

DTC No.	Detection Item	Trouble Area	See page
C1271/71	Low Output Signal of Front Speed Sensor RH (Test Mode DTC)	1. Front speed sensor RH 2. Sensor installation 3. Speed sensor rotor	BC-156
C1272/72	Low Output Signal of Front Speed Sensor LH (Test Mode DTC)	1. Front speed sensor LH 2. Sensor installation 3. Speed sensor rotor	BC-156
C1273/73	Low Output Signal of Rear Speed Sensor RH (Test Mode DTC)	1. Rear speed sensor RH 2. Sensor installation 3. Speed sensor rotor	BC-164
C1274/74	Low Output Signal of Rear Speed Sensor LH (Test Mode DTC)	1. Rear speed sensor LH 2. Sensor installation 3. Speed sensor rotor	BC-164
C1275/75	Abnormal Change in Output Signal of Front Speed Sensor RH (Test Mode DTC)	Speed sensor rotor	BC-197
C1276/76	Abnormal Change in Output Signal of Front Speed Sensor LH (Test Mode DTC)	Speed sensor rotor	BC-197
C1277/77	Abnormal Change in Output Signal of Rear Speed Sensor RH (Test Mode DTC)	Speed sensor rotor	BC-197
C1278/78	Abnormal Change in Output Signal of Rear Speed Sensor LH (Test Mode DTC)	Speed sensor rotor	BC-197
C1279/79	Acceleration Sensor Output Voltage Malfunction (Test Mode DTC)	1. Yaw rate and acceleration sensor 2. Sensor installation	BC-193
C1281/81	Master Cylinder Pressure Sensor Output Malfunction (Test Mode DTC)	1. Stop light switch 2. Master cylinder pressure sensor	BC-210

Test Mode DTC of VSC:

DTC No.	Detection Item	Trouble Area	See page
C0371/71	Yaw Rate Sensor (Test Mode DTC)	Yaw rate and acceleration sensor	BC-193

DTC	43	ABS Control System Malfunction

DESCRIPTION

This DTC is output when the VSC system detects a malfunction in the ABS control system.

DTC No.	DTC Detection Condition	Trouble Area
43	Malfunction in the ABS control system.	ABS control system

INSPECTION PROCEDURE

NOTICE:

When replacing the brake actuator assembly, perform zero point calibration (See page BC-119).

BC

1 CHECK ABS CONTROL SYSTEM

(a) Clear the DTC (See page BC-141).
(b) Turn the ignition switch on (IG).
(c) Check if the same DTC is recorded (See page BC-141).

Result

Condition	Proceed to
DTC (ABS control system DTC) is not output	A
DTC (ABS control system DTC) is output	B

B → **REPAIR CIRCUIT INDICATED BY OUTPUT DTC (See page BC-151)**

A

2 RECONFIRM DTC

(a) Clear the DTC (See page BC-141).
(b) Turn the ignition switch on (IG).
(c) Check if the same DTC is recorded (See page BC-141).

Result

Condition	Proceed to
DTC (43) is not output	A
DTC (43) is output	B

B → **REPLACE BRAKE ACTUATOR ASSEMBLY**

A

USE SIMULATION METHOD TO CHECK

DTC	C0200/31	Front Speed Sensor RH Circuit

DTC	C0205/32	Front Speed Sensor LH Circuit

DTC	C1271/71	Low Output Signal of Front Speed Sensor RH (Test Mode DTC)

DTC	C1272/72	Low Output Signal of Front Speed Sensor LH (Test Mode DTC)

DESCRIPTION

The speed sensors detect wheel speed and transmit the signals to the ECU. These signals are used for control of the ABS control system. Each of the front and rear rotors have 48 serrations.
When the rotors rotate, the magnetic field generated by the permanent magnet in the speed sensor induces an AC voltage.
Since the frequency of this AC voltage changes in direct proportion to the speed of the rotor, the frequency is used by the ECU to detect the speed of each wheel.
DTCs C1271/71 and C1272/72 can be deleted when the speed sensor sends a wheel speed signal or the Test Mode ends. DTCs C1271/71 and C1272/72 are output only in the Test Mode.

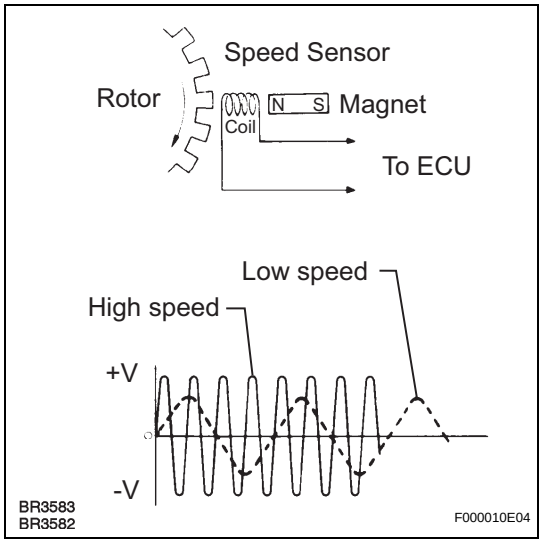

DTC No.	DTC Detection Condition	Trouble Area
C0200/31 C0205/32	When any of the following is detected: 1. At a vehicle speed of 6 mph (10 km/h) or more, an open or short in the sensor signal circuit continues for 1 second or more. 2. Momentary interruption of the sensor signal from the abnormal wheel occurs 7 times or more. 3. An open in the speed sensor signal circuit continues for 0.5 seconds or more.	• Front speed sensor RH/LH • Speed sensor circuit • Speed sensor rotor • Sensor installation • Brake actuator assembly (Skid control ECU)

HINT:
- DTC C0200/31 is for the front speed sensor RH.
- DTC C0205/32 is for the front speed sensor LH.

WIRING DIAGRAM

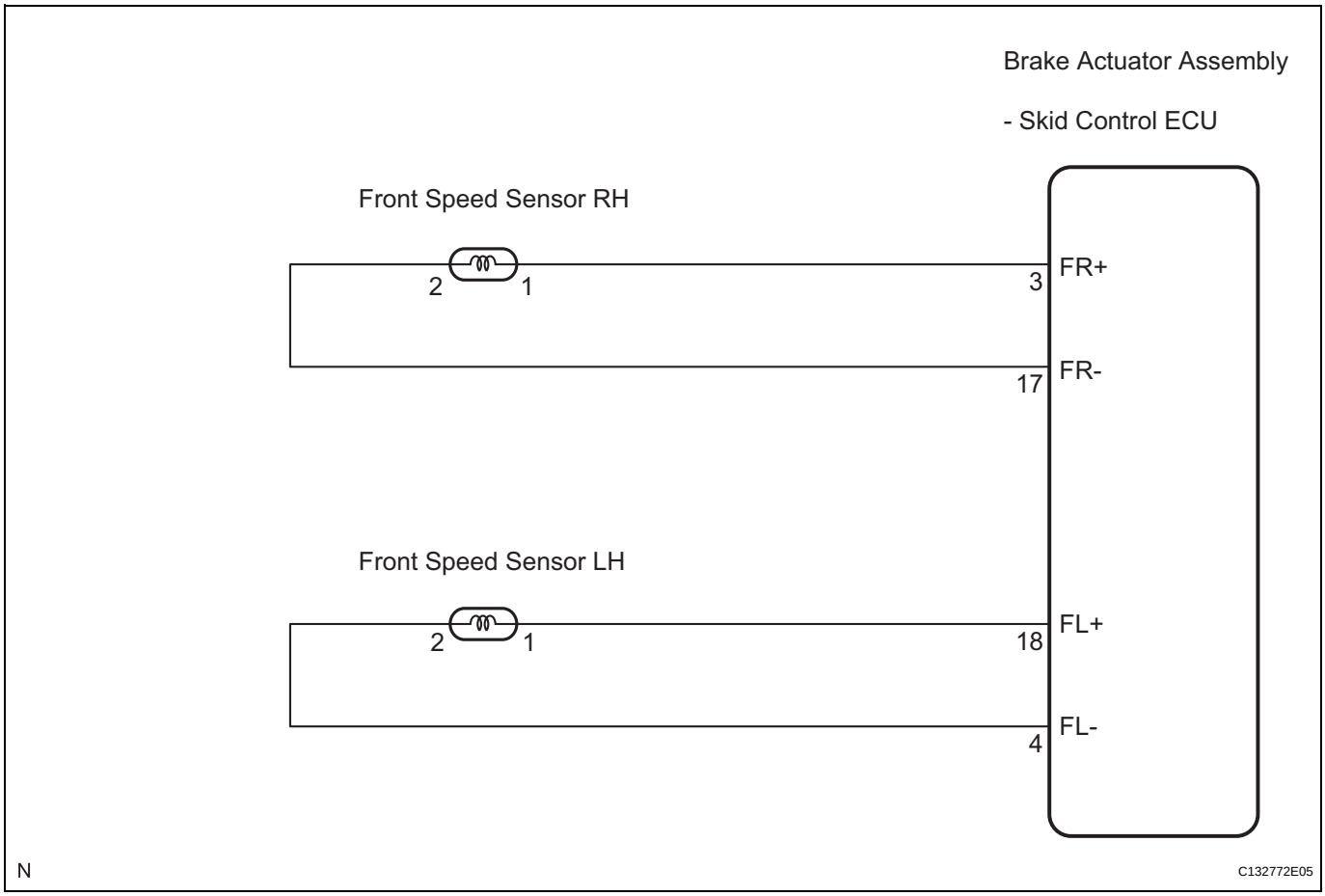

INSPECTION PROCEDURE

NOTICE:

When replacing the brake actuator assembly, perform zero point calibration (See page BC-119).

1	CHECK HARNESS AND CONNECTOR (MOMENTARY INTERRUPTION)

(a) Using the intelligent tester, check for any momentary interruption in the wire harness and connector corresponding to a DTC (See page BC-118).

ABS / VSC:

Item (Display)	Measurement Item / Range (Display)	Normal Condition
FR SPD OPN	FR speed sensor open detection / ERROR or NORMAL	ERROR: Momentary interruption NORMAL: Normal
FL SPD OPN	FL speed sensor open detection / ERROR or NORMAL	ERROR: Momentary interruption NORMAL: Normal

Result

Condition	Proceed to
There are no momentary interruptions	**A**
There are momentary interruptions	**B**
There is a constant open circuit	**C**

HINT:
Perform the above inspection before removing the sensor and connector.

B → Go to step 11

C → Go to step 5

A

2 READ VALUE OF INTELLIGENT TESTER (FRONT SPEED SENSOR)

(a) Turn the ignition switch off.
(b) Connect the intelligent tester to the DLC3.
(c) Start the engine.
(d) Select the Data List mode on the intelligent tester.

ABS / VSC:

Item (Display)	Measurement Item / Range (Display)	Normal Condition
FR WHEEL SPD	FR wheel speed sensor reading / min.: 0 mph (0 km/h), max.: 202 mph (326 km/h)	Actual wheel speed
FL WHEEL SPD	FL wheel speed sensor reading /min.: 0 mph (0 km/h), max.: 202 mph (326 km/h)	Actual wheel speed

BC

(e) Check that there is no difference between the speed value output from the speed sensor displayed on the intelligent tester and the speed value displayed on the speedometer when driving the vehicle.
OK:
The speed value output from the speed sensor displayed on the intelligent tester is the same as the actual vehicle speed.

NG → Go to step 5

OK

3 PERFORM TEST MODE (SIGNAL CHECK)

(a) Perform sensor check in the Test Mode procedure (See page BC-123).
OK:
All Test Mode DTCs are erased.

NG → Go to step 5

OK

4 RECONFIRM DTC

(a) Turn the ignition switch off.
(b) Clear the DTC (See page BC-141).
(c) Start the engine.
(d) Drive the vehicle at the speed of 20 mph (32 km/h) or more for at least 60 seconds.
(e) Check if the same DTC is recorded (See page BC-141).

Result

Condition	Proceed to
DTCs (C0200/31 and/or C0205/32) are not output	A
DTCs (C0200/31 and/or C0205/32) are output	B

HINT:
If troubleshooting has been carried out according to the Problem Symptoms Table, refer back to the table and proceed to the next step (See page BC-134).

B → **Go to step 7**

A

USE SIMULATION METHOD TO CHECK

BC

5 CHECK FRONT SPEED SENSOR INSTALLATION

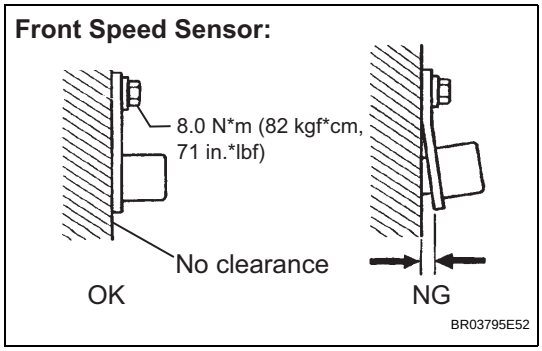

(a) Turn the ignition switch off.
(b) Check the speed sensor installation.
OK:
There is no clearance between the sensor and the front steering knuckle.
The installation bolt is tightened properly.
Torque:
8.0 N*m (82 kgf*cm, 71 in.*lbf)

NG → **INSTALL FRONT SPEED SENSOR CORRECTLY**

OK

6 CHECK FRONT SPEED SENSOR TIP

(a) Remove the front speed sensor (See page BC-438).
(b) Check the speed sensor tip.
OK:
No scratches or foreign matter on the sensor tip.
NOTICE:
Check the speed sensor signal after cleaning or replacement (See page BC-123).

NG → **CLEAN OR REPLACE FRONT SPEED SENSOR**

OK

7 INSPECT FRONT SPEED SENSOR

Front Speed Sensor:

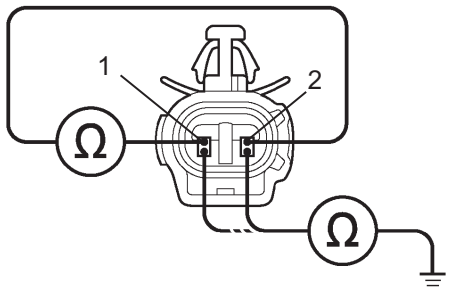

C136017E01

(a) Turn the ignition switch off.
(b) Install the front speed sensor.
(c) Disconnect the front speed sensor connector.
(d) Measure the resistance according to the value(s) in the table below.

Standard resistance:

RH

Tester Connection	Condition	Specified Condition
1 (FR+) - 2 (FR-)	Always	1.4 to 1.8 kΩ at 20°C (68 °F)
1 (FR+) - Body ground	Always	10 kΩ or higher
2 (FR-) - Body ground	Always	10 kΩ or higher

LH

Tester Connection	Condition	Specified Condition
1 (FL+) - 2 (FL-)	Always	1.4 to 1.8 kΩ at 20°C (68 °F)
1 (FL+) - Body ground	Always	10 kΩ or higher
2 (FL-) - Body ground	Always	10 kΩ or higher

NOTICE:
Check the speed sensor signal after replacement (See page BC-123).

NG → **REPLACE FRONT SPEED SENSOR**

OK

BC

8	CHECK HARNESS AND CONNECTOR (SKID CONTROL ECU - FRONT SPEED SENSOR)

Skid Control ECU Harness Side Connector Front View:

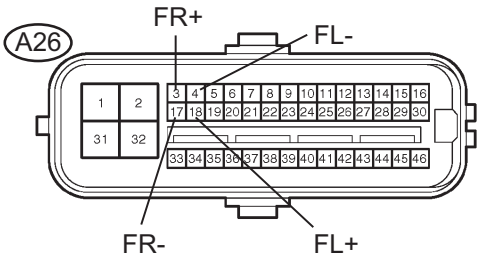

Front Speed Sensor Harness Side Connector Front View:

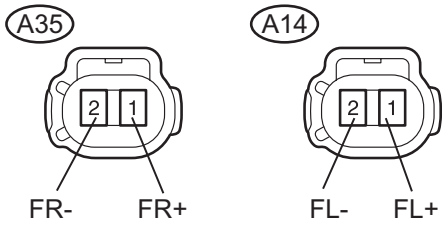

C136018E01

(a) Disconnect the skid control ECU connector.

(b) Measure the resistance according to the value(s) in the table below.

Standard resistance:

RH

Tester Connection	Condition	Specified Condition
A26-3 (FR+) - A35-1 (FR+)	Always	Below 1 Ω
A26-3 (FR+) - Body ground	Always	10 kΩ or higher
A26-17 (FR-) - A35-2 (FR-)	Always	Below 1 Ω
A26-17 (FR-) - Body ground	Always	10 kΩ or higher

LH

Tester Connection	Condition	Specified Condition
A26-18 (FL+) - A14-1 (FL+)	Always	Below 1 Ω
A26-18 (FL+) - Body ground	Always	10 kΩ or higher
A26-4 (FL-) - A14-2 (FL-)	Always	Below 1 Ω
A26-4 (FL-) - Body ground	Always	10 kΩ or higher

NG → **REPAIR OR REPLACE HARNESS OR CONNECTOR**

OK

BC

9 CHECK SPEED SENSOR AND SPEED SENSOR ROTOR SERRATIONS

Skid Control ECU Harness Side Connector Front View:

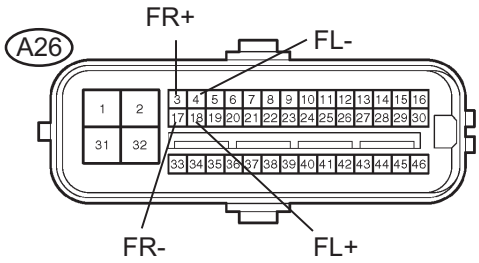

Normal Signal Waveform:

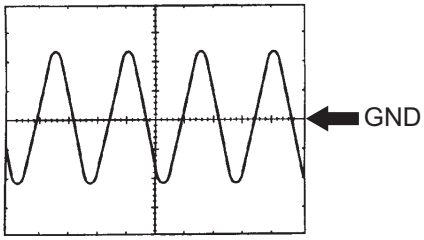

1 V/Division, 2 ms/Division

C136019E04

(a) Reconnect the front speed sensor connector.
(b) Connect the oscilloscope to the front speed sensor terminal of the skid control ECU.
(c) Check that a waveform is output when the tires are rotated.

OK:

The same waveform is output from all the 4 wheels and there is no noise or interference in the waveform.

HINT:

- As the vehicle speed (wheel revolution speed) increases, a cycle of the waveform narrows and the output voltage becomes greater.
- When noise is identified in the waveform on the oscilloscope, the erratic signals are generated due to speed sensor rotor's scratches, looseness or foreign matter attached to it.

NG → **REPLACE BRAKE ACTUATOR ASSEMBLY**

OK

10 RECONFIRM DTC

(a) Reconnect the skid control ECU connector.
(b) Clear the DTC (See page BC-141).
(c) Start the engine.
(d) Drive the vehicle at the speed of 20 mph (32 km/h) or more for at least 60 seconds.
(e) Check if the same DTC is recorded (See page BC-141).

Result

Condition	Proceed to
DTCs (C0200/31 and/or C0205/32) are output	A
DTCs (C0200/31 and/or C0205/32) are not output	B

HINT:
If troubleshooting has been carried out according to the Problem Symptoms Table, refer back to the table and proceed to the next step (See page BC-134).

B → **USE SIMULATION METHOD TO CHECK**

BC

A

REPLACE BRAKE ACTUATOR ASSEMBLY

11	REPAIR OR REPLACE HARNESS OR CONNECTOR (SKID CONTROL ECU - FRONT SPEED SENSOR)

(a) Turn the ignition switch off.
(b) Repair or replace the harness or connector.
(c) Check for any momentary interruption between the skid control ECU and front speed sensor (See page BC-118).
(d) Check that there is no momentary interruption.

NEXT

BC

12	RECONFIRM DTC

(a) Clear the DTC (See page BC-141).
(b) Start the engine.
(c) Drive the vehicle at the speed of 20 mph (32 km/h) or more for at least 60 seconds.
(d) Check if the same DTC is recorded (See page BC-141).

Result

Condition	Proceed to
DTCs (C0200/31 and/or C0205/32) are not output	A
DTCs (C0200/31 and/or C0205/32) are output	B

HINT:
If troubleshooting has been carried out according to the Problem Symptoms Table, refer back to the table and proceed to the next step (See page BC-134).

B → **Go to step 2**

A

END

DTC	C0210/33	Rear Speed Sensor RH Circuit

DTC	C0215/34	Rear Speed Sensor LH Circuit

DTC	C1273/73	Low Output Signal of Rear Speed Sensor RH (Test Mode DTC)

DTC	C1274/74	Low Output Signal of Rear Speed Sensor LH (Test Mode DTC)

DESCRIPTION

The speed sensors detect wheel speed and transmit the signals to the ECU. These signals are used for control of the ABS control system. Each of the front and rear rotors have 48 serrations.
When the rotors rotate, the magnetic field generated by the permanent magnet in the speed sensor induces an AC voltage.
Since the frequency of this AC voltage changes in direct proportion to the speed of the rotor, the frequency is used by the ECU to detect the speed of each wheel.
DTCs C1273/73 and C1274/74 can be deleted when the speed sensor sends a wheel speed signal or the Test Mode ends. DTCs C1273/73 and C1274/74 are output only in the Test Mode.

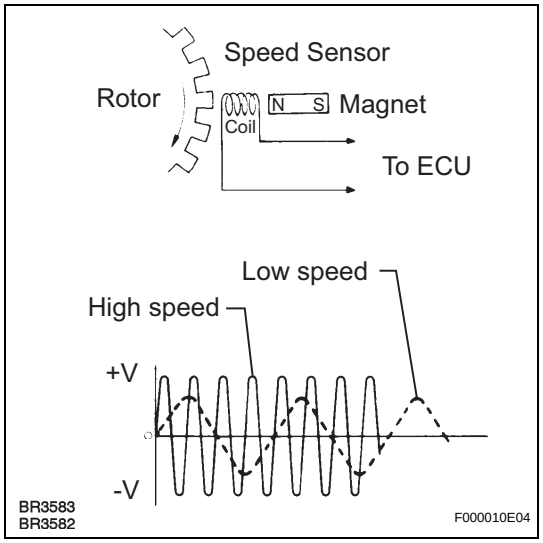

DTC No.	DTC Detection Condition	Trouble Area
C0210/33 C0215/34	When any of the following is detected: 1. At a vehicle speed of 6 mph (10 km/h) or more, an open or short in the sensor signal circuit continues for 1 second or more. 2. Momentary interruption of the sensor signal from the abnormal wheel occurs 7 times or more. 3. An open in the speed sensor signal circuit continues for 0.5 seconds or more.	• Rear speed sensor RH/LH • Speed sensor circuit • Speed sensor rotor • Sensor installation • Brake actuator assembly (Skid control ECU)

HINT:
- DTC C0210/33 is for the rear speed sensor RH.
- DTC C0215/34 is for the rear speed sensor LH.

WIRING DIAGRAM

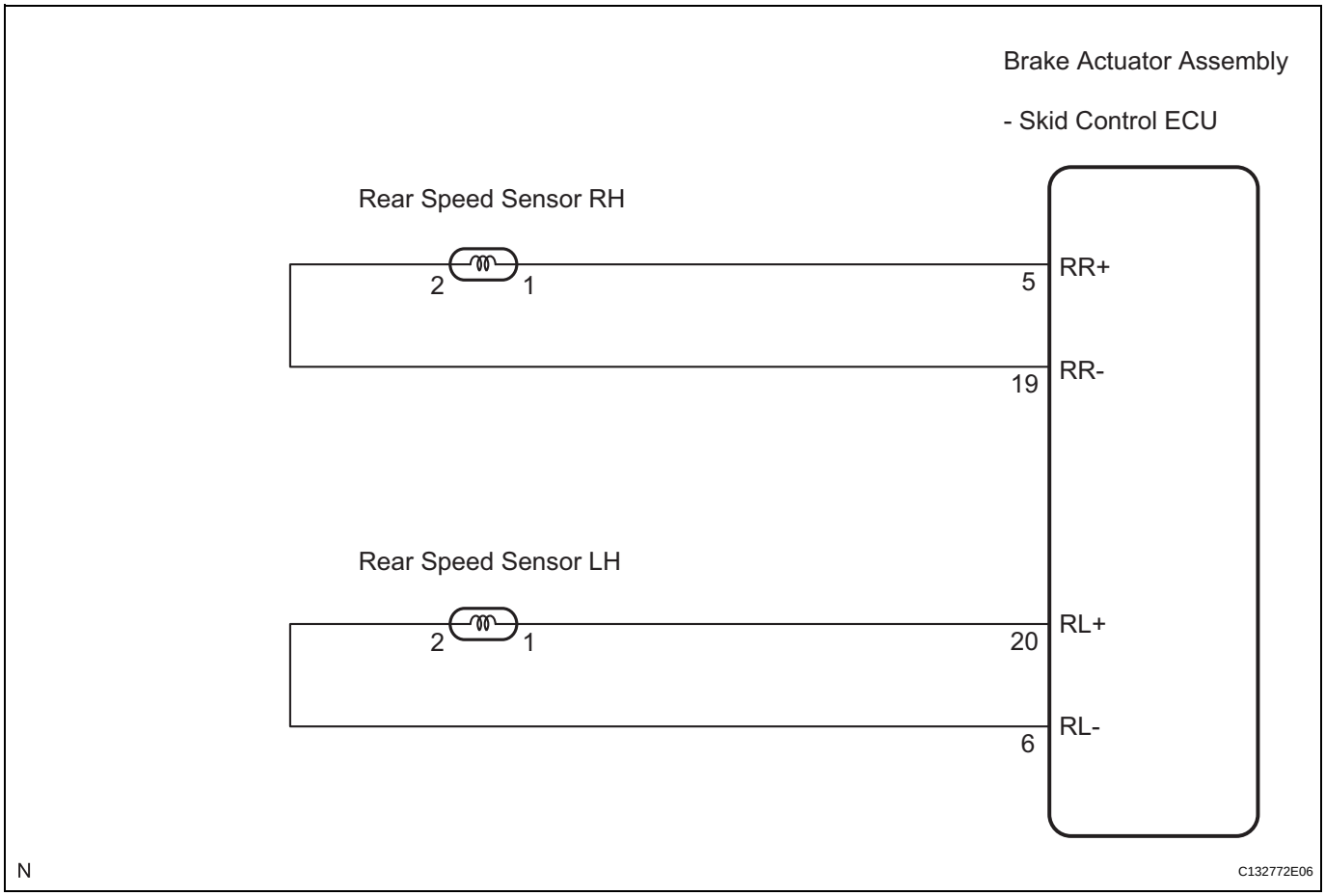

INSPECTION PROCEDURE

NOTICE:

When replacing the brake actuator assembly, perform zero point calibration (See page BC-119).

1	CHECK HARNESS AND CONNECTOR (MOMENTARY INTERRUPTION)

(a) Using the intelligent tester, check for any momentary interruption in the wire harness and connector corresponding to a DTC (See page BC-118).

ABS / VSC:

Item (Display)	Measurement Item / Range (Display)	Normal Condition
RR SPD OPN	RR speed sensor open detection / ERROR or NORMAL	ERROR: Momentary interruption NORMAL: Normal
RL SPD OPN	RL speed sensor open detection / ERROR or NORMAL	ERROR: Momentary interruption NORMAL: Normal

Result

Condition	Proceed to
There are no momentary interruptions	**A**
There are momentary interruptions	**B**
There is a constant open circuit	**C**

HINT:
Perform the above inspection before removing the sensor and connector.

B → Go to step 11

C → Go to step 5

A

2 READ VALUE OF INTELLIGENT TESTER (REAR SPEED SENSOR)

(a) Turn the ignition switch off.
(b) Connect the intelligent tester to the DLC3.
(c) Start the engine.
(d) Select the Data List mode on the intelligent tester.

ABS / VSC:

Item (Display)	Measurement Item / Range (Display)	Normal Condition
RR WHEEL SPD	RR wheel speed sensor reading / min.: 0 mph (0 km/h), max.: 202 mph (326 km/h)	Actual wheel speed
RL WHEEL SPD	RL wheel speed sensor reading / min.: 0 mph (0 km/h), max.: 202 mph (326 km/h)	Actual wheel speed

BC

(e) Check that there is no difference between the speed value output from the speed sensor displayed on the intelligent tester and the speed value displayed on the speedometer when driving the vehicle.
OK:
The speed value output from the speed sensor displayed on the intelligent tester is the same as the actual vehicle speed.

NG → Go to step 5

OK

3 PERFORM TEST MODE (SIGNAL CHECK)

(a) Perform sensor check in the Test Mode procedure (See page BC-123).
OK:
All Test Mode DTCs are erased.

NG → Go to step 5

OK

4 RECONFIRM DTC

(a) Turn the ignition switch off.
(b) Clear the DTC (See page BC-141).
(c) Start the engine.
(d) Drive the vehicle at the speed of 20 mph (32 km/h) or more for at least 60 seconds.
(e) Check if the same DTC is recorded (See page BC-141).

Result

Condition	Proceed to
DTCs (C0210/33 and/or C0215/34) are not output	A
DTCs (C0210/33 and/or C0215/34) are output	B

HINT:
If troubleshooting has been carried out according to the Problem Symptoms Table, refer back to the table and proceed to the next step (See page BC-134).

B → **Go to step 6**

A

USE SIMULATION METHOD TO CHECK

BC

5 CHECK REAR SPEED SENSOR INSTALLATION

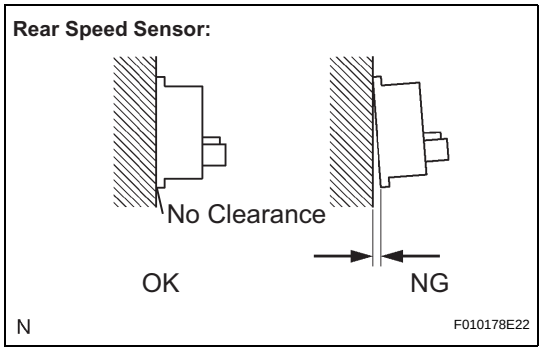

(a) Turn the ignition switch off.
(b) Check the speed sensor installation.
OK:
There is no clearance between the sensor and rear axle carrier.

NG → **INSTALL REAR SPEED SENSOR CORRECTLY**

OK

6 INSPECT REAR SPEED SENSOR

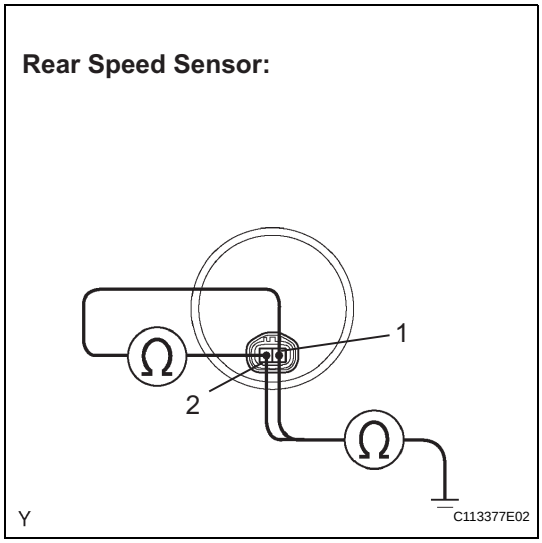

(a) Turn the ignition switch off.
(b) Disconnect the rear speed sensor connector.
(c) Measure the resistance according to the value(s) in the table below.
Standard resistance:
RH

Tester Connection	Condition	Specified Condition
2 (RR+) - 1 (RR-)	Always	0.9 to 2.1 kΩ
2 (RR+) - Body ground	Always	10 kΩ or higher
1 (RR-) - Body ground	Always	10 kΩ or higher

LH

Tester Connection	Condition	Specified Condition
2 (RL+) - 1 (RL-)	Always	0.9 to 2.1 kΩ
2 (RL+) - Body ground	Always	10 kΩ or higher
1 (RL-) - Body ground	Always	10 kΩ or higher

NOTICE:
Check the speed sensor signal after replacement (See page BC-123).

NG → **REPLACE REAR SPEED SENSOR**

OK

7 CHECK HARNESS AND CONNECTOR (SKID CONTROL SENSOR WIRE)

Skid Control Sensor Wire:

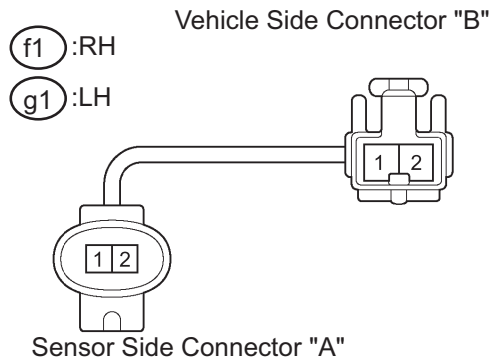

(a) Disconnect the skid control sensor wire.
(b) Measure the resistance according to the value(s) in the table below.

Standard resistance:

RH

Tester Connection	Condition	Specified Condition
f1 ("A"-1) - f1 ("B"-2)	Always	Below 1 Ω
f1 ("A"-1) - f1 ("B"-1)	Always	10 kΩ or higher
f1 ("A"-1) - Body ground	Always	10 kΩ or higher
f1 ("A"-2) - f1 ("B"-1)	Always	Below 1 Ω
f1 ("A"-2) - f1 ("B"-2)	Always	10 kΩ or higher
f1 ("A"-2) - Body ground	Always	10 kΩ or higher

LH

Tester Connection	Condition	Specified Condition
g1 ("A"-1) - g1 ("B"-2)	Always	Below 1 Ω
g1 ("A"-1) - g1 ("B"-1)	Always	10 kΩ or higher
g1 ("A"-1) - Body ground	Always	10 kΩ or higher
g1 ("A"-2) - g1 ("B"-1)	Always	Below 1 Ω
g1 ("A"-2) - g1 ("B"-2)	Always	10 kΩ or higher
g1 ("A"-2) - Body ground	Always	10 kΩ or higher

NOTICE:
Check the speed sensor signal after replacement (See page BC-123).

NG → **REPLACE SKID CONTROL SENSOR WIRE**

OK

BC

8 CHECK HARNESS AND CONNECTOR (SKID CONTROL ECU - REAR SPEED SENSOR)

Skid Control ECU Harness Side Connector Front View:

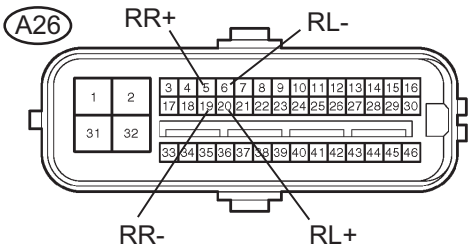

Rear Speed Sensor Harness Side Connector Front View:

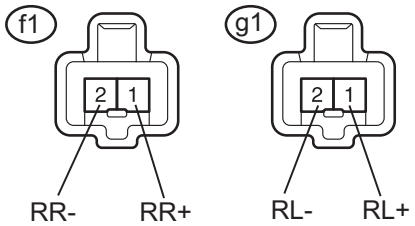

N C136020E01

(a) Disconnect the skid control ECU connector.

(b) Measure the resistance according to the value(s) in the table below.

Standard resistance:

RH

Tester Connection	Condition	Specified Condition
A26-5 (RR+) - f1-1 (RR+)	Always	Below 1 Ω
A26-5 (RR+) - Body ground	Always	10 kΩ or higher
A26-19 (RR-) - f1-2 (RR-)	Always	Below 1 Ω
A26-19 (RR-) - Body ground	Always	10 kΩ or higher

LH

Tester Connection	Condition	Specified Condition
A26-20 (RL+) - g1-1 (RL+)	Always	Below 1 Ω
A26-20 (RL+) - Body ground	Always	10 kΩ or higher
A26-6 (RL-) - g1-2 (RL-)	Always	Below 1 Ω
A26-6 (RL-) - Body ground	Always	10 kΩ or higher

NG → **REPAIR OR REPLACE HARNESS OR CONNECTOR**

OK

BC

9 CHECK SPEED SENSOR AND SPEED SENSOR ROTOR SERRATIONS

Skid Control ECU Harness Side Connector Front View:

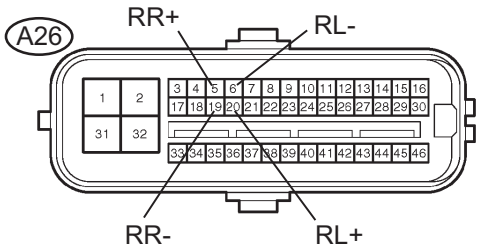

Normal Signal Waveform:

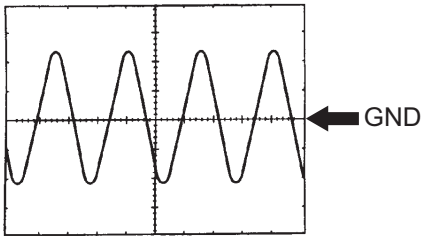

1 V/Division, 2 ms/Division

C136019E02

(a) Reconnect the skid control sensor wire.
(b) Reconnect the rear speed sensor connector.
(c) Connect the oscilloscope to the rear speed sensor terminal of the skid control ECU.
(d) Check that a waveform is output when the tires are rotated.

OK:

The same waveform is output from all the 4 wheels and there is no noise or interference in the waveform.

HINT:

- As the vehicle speed (wheel revolution speed) increases, a cycle of the waveform narrows and the output voltage becomes greater.
- When noise is identified in the waveform on the oscilloscope, the erratic signals are generated due to speed sensor rotor's scratches, looseness or foreign matter attached to it.

NG → **REPLACE BRAKE ACTUATOR ASSEMBLY**

OK

10 RECONFIRM DTC

(a) Reconnect the skid control ECU connector.
(b) Clear the DTC (See page BC-141).
(c) Start the engine.
(d) Drive the vehicle at the speed of 20 mph (32 km/h) or more for at least 60 seconds.
(e) Check if the same DTC is recorded (See page BC-141).

Result

Condition	Proceed to
DTCs (C0210/33 and/or C0215/34) are output	A
DTCs (C0210/33 and/or C0215/34) are not output	B

HINT:
If troubleshooting has been carried out according to the Problem Symptoms Table, refer back to the table and proceed to the next step (See page BC-134).

B → **USE SIMULATION METHOD TO CHECK**

BC

A

REPLACE BRAKE ACTUATOR ASSEMBLY

11	REPAIR OR REPLACE HARNESS OR CONNECTOR (SKID CONTROL ECU - REAR SPEED SENSOR)

(a) Turn the ignition switch off.
(b) Repair or replace the harness or connector.
(c) Check for any momentary interruption between the skid control ECU and rear speed sensor (See page BC-118).
(d) Check that there is no momentary interruption.

NEXT

BC

12	RECONFIRM DTC

(a) Clear the DTC (See page BC-141).
(b) Start the engine.
(c) Drive the vehicle at the speed of 20 mph (32 km/h) or more for at least 60 seconds.
(d) Check if the same DTC is recorded (See page BC-141).

Result

Condition	Proceed to
DTCs (C0210/33 and/or C0215/34) are not output	A
DTCs (C0210/33 and/or C0215/34) are output	B

HINT:
If troubleshooting has been carried out according to the Problem Symptoms Table, refer back to the table and proceed to the next step (See page BC-134).

B → **Go to step 2**

A

END

DTC	C0226/21	SFR Solenoid Circuit

DTC	C0236/22	SFL Solenoid Circuit

DTC	C0246/23	SRR Solenoid Circuit

DTC	C0256/24	SRL Solenoid Circuit

DTC	C1225/25	SM Solenoid Circuit

DESCRIPTION

These solenoids turn on when signals are received from the skid control ECU and they control the pressure acting on the wheel cylinders to control the braking force.

DTC No.	DTC Detection Condition	Trouble Area
C0226/21 C0236/22 C0246/23 C0256/24	Open or short in the solenoid circuit continues for 0.05 seconds or more.	• Brake actuator assembly • Solenoid circuit
C1225/25	When any of the following is detected: • While outputting switching solenoid (SM1 or SM2) ON, overcurrent continues for 0.05 seconds or more. • While outputting switching solenoid (SM1 or SM2) OFF, an open circuit continues for 0.05 seconds or more. • While outputting switching solenoid (SM1 or SM2) ON, an open circuit continues for 0.1 second or more. • While outputting switching solenoid (SM1 or SM2) OFF, current continues to be applied for 0.1 second or more. • Short to GND in the switching solenoid (SM1 or SM2) continues for 0.1 second or more. • Switching solenoids SM1 and SM2 are shorted for 0.1 second or more.	• Brake actuator assembly • SM1 or SM2 circuit

WIRING DIAGRAM

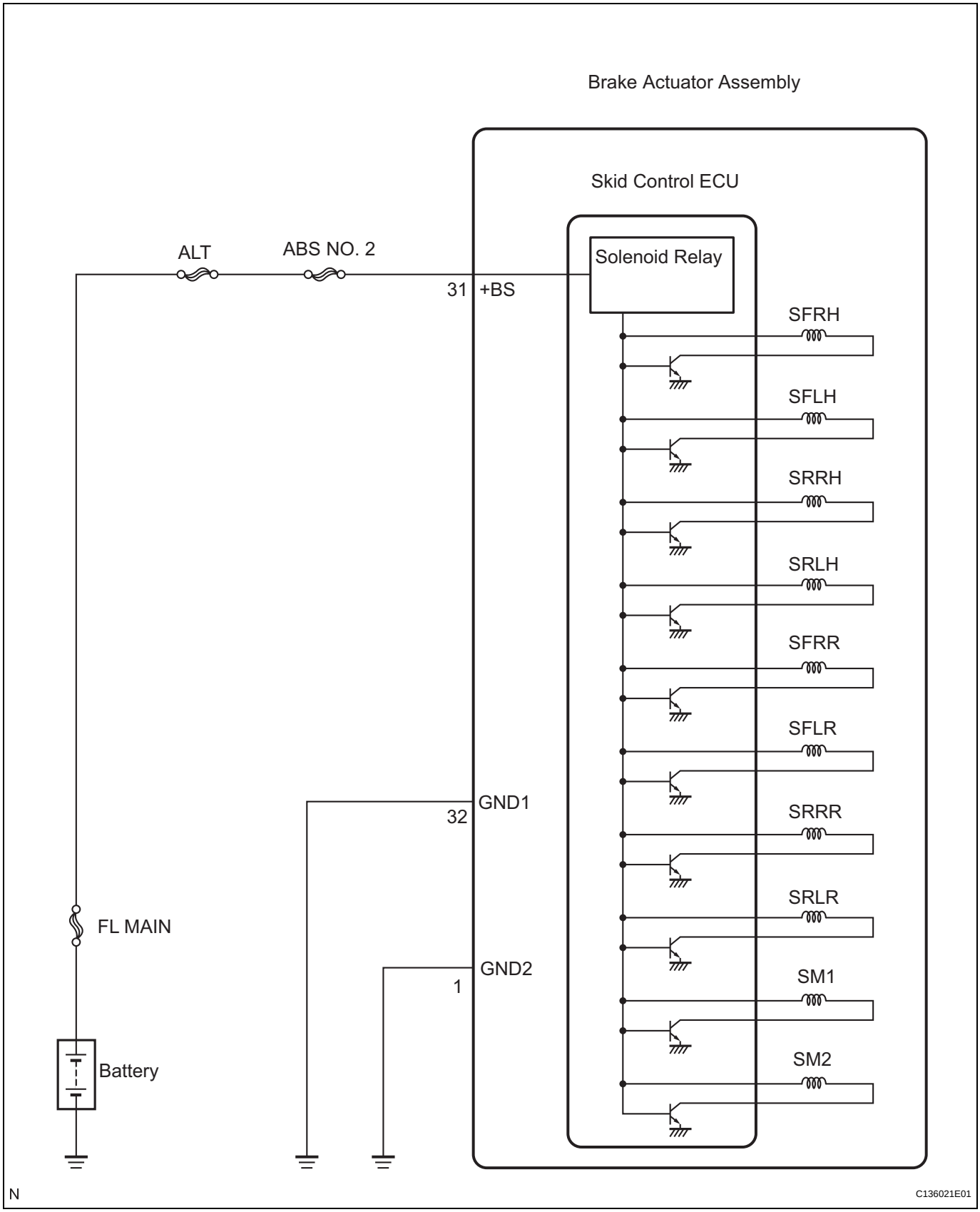

INSPECTION PROCEDURE

NOTICE:

When replacing the brake actuator assembly, perform zero point calibration (See page BC-119).

1	RECONFIRM DTC

HINT:
These codes are detected when a problem is determined in the brake actuator assembly.
The solenoid circuits are in the brake actuator assembly. Therefore, solenoid circuit inspection and solenoid unit inspection cannot be performed. Be sure to check if any DTC code is output before replacing the brake actuator assembly.

(a) Clear the DTC (See page BC-141).
(b) Start the engine.
(c) Drive the vehicle at the speed of 4 mph (6 km/h) or more.
(d) Check if the same DTC is recorded (See page BC-141).

Result

Condition	Proceed to
DTCs (C0226/21, C0236/22, C0246/23, C0256/24 and/or C1225/25) are not output	A
DTCs (C0226/21, C0236/22, C0246/23, C0256/24 and/or C1225/25) are output	B

BC

HINT:
- If a speed signal of 4 mph (6 km/h) or more is input to the skid control ECU, with the ignition switch on (IG) and the stop light switch off, the ECU performs self diagnosis of the motor and solenoid circuits.
- If the normal system code is output (the trouble code is not output), slightly jiggle the connectors, wire harness, and fuses of the brake actuator assembly. Make sure that no DTCs are output.
- If any DTCs are output while jiggling a connector or wire harness of the brake actuator assembly (skid control ECU), inspect and repair the connector or wire harness.

B → **REPLACE BRAKE ACTUATOR ASSEMBLY**

A

USE SIMULATION METHOD TO CHECK

DTC	C0273/13	Open in ABS Motor Relay Circuit

DTC	C0274/14	Short to B+ in ABS Motor Relay Circuit

DTC	C1361/91	Short Circuit in ABS Motor Fail Safe Relay Circuit

DESCRIPTION

If a DTC of the motor line is stored, the VSC NO. 1 (fail safe) relay cuts off the power supply to the VSC NO. 2 relay and performs fail safe.
While any of the ABS, TRAC, VSC, or BA is operating, the skid control ECU (housed in the actuator assembly) turns the VSC NO. 2 relay on and activates the pump motor in the brake actuator.
This code may be stored if the motor relay (BM) voltage becomes lower than the DTC detecting condition due to insufficient output from the battery or alternator.

DTC No.	DTC Detection Condition	Trouble Area
C0273/13	When any of the following (1 or 2) is detected: 1. All of the following conditions continue for 0.12 seconds or more. • The IG1 terminal voltage is between 9.5 and 17.2 V. • During initial check and ABS, BA, TRAC, or VSC are operating. • Relay contact is open when the relay is ON. 2. All of the following conditions continue for 0.12 seconds. • The IG1 terminal voltage is 9.5 V or less. • Relay contact remains open when the relay is ON.	• ABS NO. 1 fuse • VSC NO. 2 relay • VSC NO. 2 relay circuit • Brake actuator assembly
C0274/14	When the motor relay is OFF, the VSC NO. 2 relay remains closed for 4 seconds or more.	• ABS NO. 1 fuse • VSC NO. 2 relay • VSC NO. 2 relay circuit • Brake actuator assembly
C1361/91	Immediately after the ignition switch is turned on (IG), the relay contact is closed for 4 seconds when the VSC NO. 1 (fail safe) relay is OFF.	• ABS NO. 1 fuse • VSC NO. 1 (fail safe) relay • VSC NO. 1 (fail safe) relay circuit • Brake actuator assembly

WIRING DIAGRAM

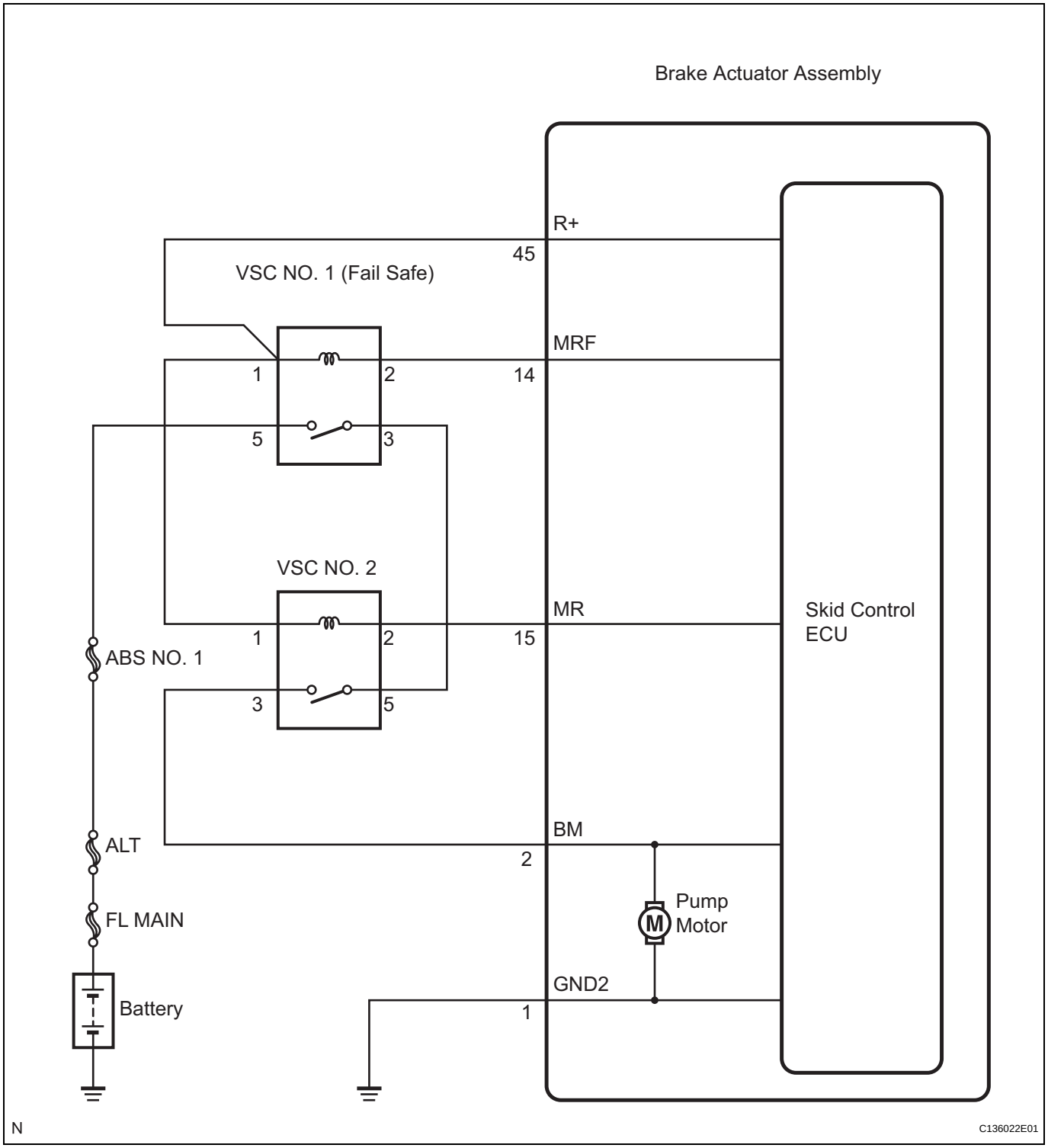

INSPECTION PROCEDURE

NOTICE:

When replacing the brake actuator assembly, perform zero point calibration (See page BC-119).

BC

1	INSPECT ABS NO. 1 FUSE

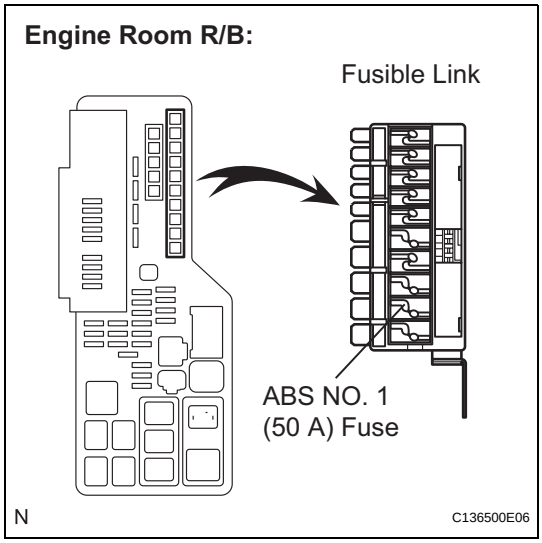

(a) Remove the fusible link from the engine room R/B.

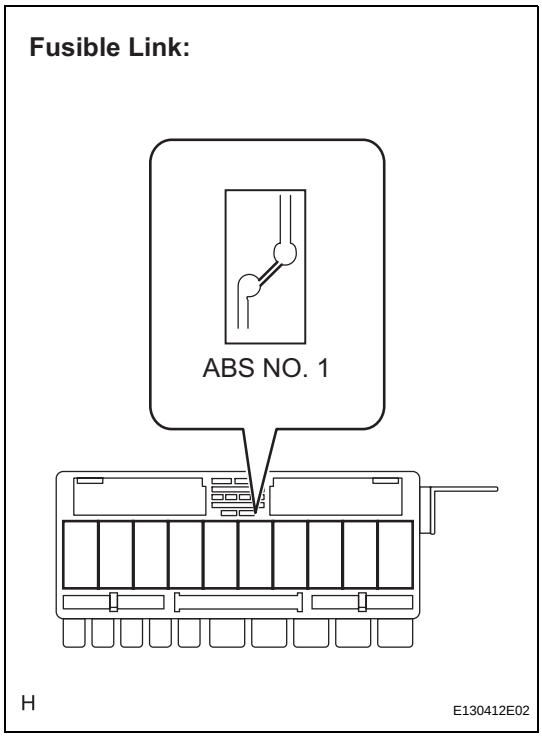

(b) Check if the fusible link is melted.
OK:
The fusible link is melted.

(c) Install the fusible link to the engine room R/B with the nut.

Torque: 5.4 N*m (55 kgf*cm, 48 in.*lbf)

NG → **REPLACE FUSIBLE LINK (ABS NO. 1 FUSE)**

OK

BC

2 INSPECT VSC NO. 2 RELAY

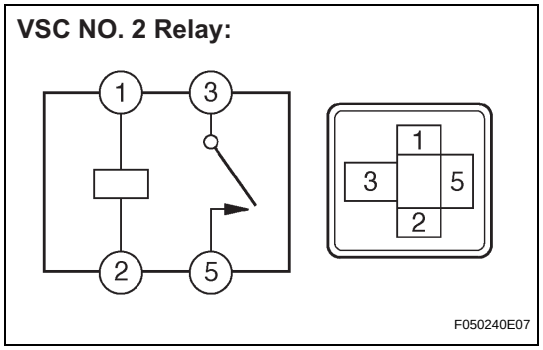

(a) Remove the VSC NO. 2 relay.
(b) Measure the resistance according to the value(s) in the table below.

Standard resistance

Tester Connection	Condition	Specified Condition
3 - 5	Always	10 kΩ or higher
3 - 5	Apply B+ between terminals 1 and 2	Below 1 Ω

NG → **REPLACE VSC NO. 2 RELAY**

OK

3 INSPECT VSC NO. 1 (FAIL SAFE) RELAY

BC

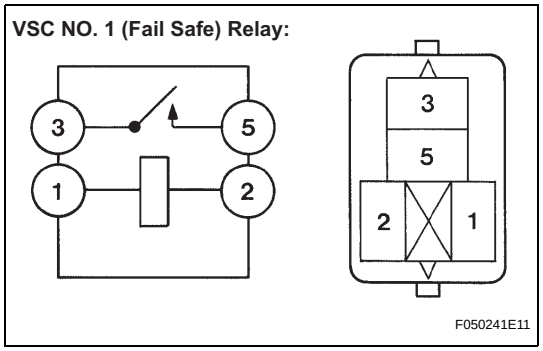

(a) Remove the VSC NO. 1 (fail safe) relay.
(b) Measure the resistance according to the value(s) in the table below.

Standard resistance

Tester Connection	Condition	Specified Condition
3 - 5	Always	10 kΩ or higher
3 - 5	Apply B+ between terminals 1 and 2	Below 1 Ω

NG → **REPLACE VSC NO. 1 (FAIL SAFE) RELAY**

OK

4 INSPECT ENGINE ROOM RELAY BLOCK (POWER SOURCE TERMINAL)

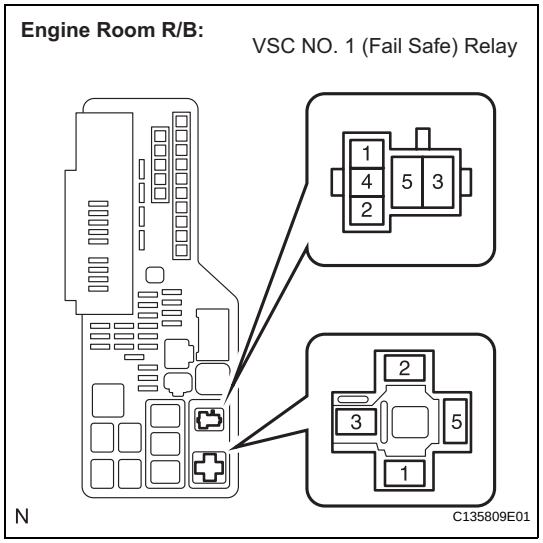

(a) Measure the voltage according to the value(s) in the table below.

Standard voltage

Tester Connection	Condition	Specified Condition
VSC NO. 1 (fail safe) relay terminal 5 - Body ground	Always	10 to 14 V

NG → **REPAIR OR REPLACE HARNESS OR CONNECTOR (POWER SOURCE CIRCUIT)**

OK

5 INSPECT ENGINE ROOM RELAY BLOCK

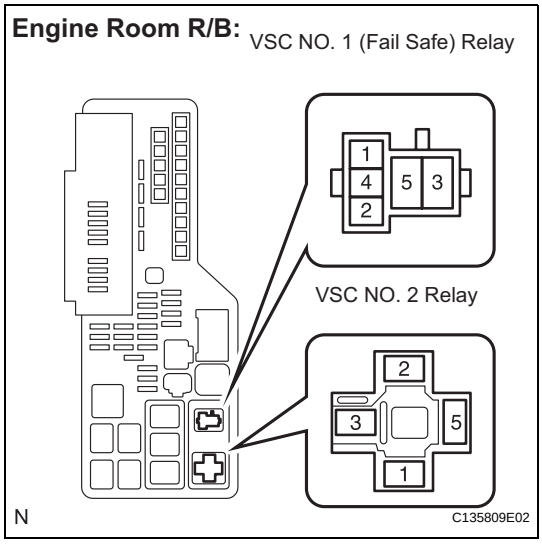

(a) Measure the resistance according to the value(s) in the table below.

Standard resistance

Tester Connection	Condition	Specified Condition
VSC NO. 1 (fail safe) relay terminal 3 - VSC NO. 2 relay terminal 5	Always	Below 1 Ω
VSC NO. 1 (fail safe) relay terminal 3 - Body ground	Always	10 kΩ or higher

NG → **REPAIR OR REPLACE ENGINE ROOM RELAY BLOCK**

OK

6 CHECK HARNESS AND CONNECTOR (SKID CONTROL ECU - ENGINE ROOM RELAY BLOCK)

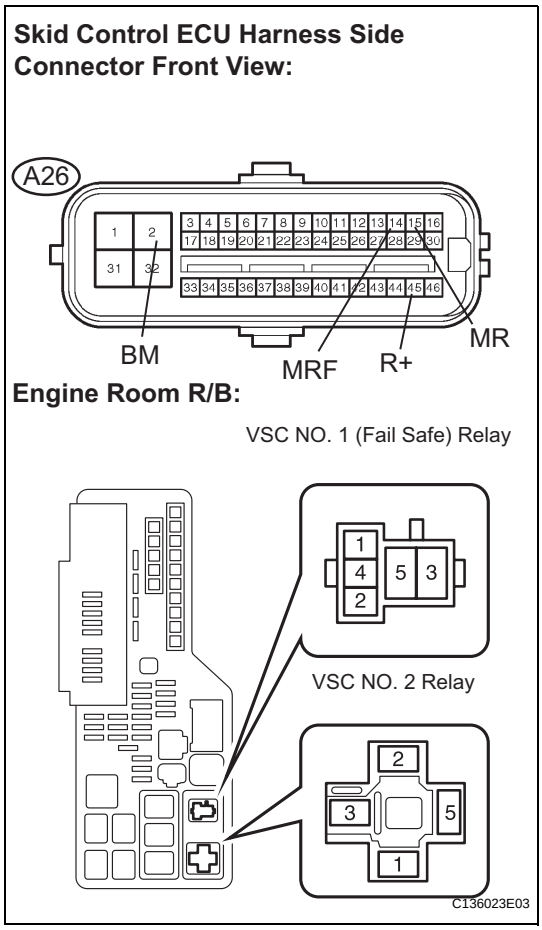

(a) Disconnect the skid control ECU connector.

(b) Measure the resistance according to the value(s) in the table below.

Standard resistance

Tester Connection	Condition	Specified Condition
A26-2 (BM) - VSC NO. 2 relay terminal 3	Always	Below 1 Ω
A26-2 (BM) - Body ground	Always	10 kΩ or higher
A26-14 (MRF) - VSC NO. 1 (fail safe) relay terminal 2	Always	Below 1 Ω
A26-14 (MRF) - Body ground	Always	10 kΩ or higher
A26-15 (MR) - VSC NO. 2 relay terminal 2	Always	Below 1 Ω
A26-15 (MR) - Body ground	Always	10 kΩ or higher
A26-45 (R+) - VSC NO. 1 (fail safe) relay terminal 1	Always	Below 1 Ω
A26-45 (R+) - Body ground	Always	10 kΩ or higher

NG → **REPAIR OR REPLACE HARNESS OR CONNECTOR**

OK

7	RECONFIRM DTC

(a) Clear the DTC (See page BC-141).
(b) Start the engine.
(c) Drive the vehicle at the speed of 4 mph (6 km/h) or more.
(d) Check if the same DTC is recorded (See page BC-141).
HINT:
Reinstall the relays, connectors, etc. and restore the vehicle to its prior condition before rechecking for DTCs.

Result

Condition	Proceed to
DTCs (C0273/13, C0274/14 and/or C1361/91) are not output	A
DTCs (C0273/13, C0274/14 and/or C1361/91) are output	B

HINT:
- If a speed signal of 4 mph (6 km/h) or more is input to the skid control ECU, with the ignition switch on (IG) and the stop light switch off, the ECU performs self diagnosis of the motor and solenoid circuits.
- If the normal system code is output (the trouble code is not output), slightly jiggle the connectors, wire harness, and fuses of the brake actuator assembly. Make sure that no DTCs are output.
- If any DTCs are output while jiggling a connector or wire harness of the brake actuator assembly (skid control ECU), inspect and repair the connector or wire harness.

B → **REPLACE BRAKE ACTUATOR ASSEMBLY**

A

USE SIMULATION METHOD TO CHECK

BC

DTC	C0278/11	Open in ABS Solenoid Relay Circuit

DTC	C0279/12	Short to B+ in ABS Solenoid Relay Circuit

DESCRIPTION

The ABS solenoid relay supplies power to the ABS solenoid and TRAC solenoid.
The solenoid relay is turned on 1.5 seconds after the ignition switch is turned on (IG), and is turned off if an open or short in the solenoid is detected by self diagnosis performed when the vehicle starts running.
The ABS solenoid relay is housed in the skid control ECU in the actuator assembly.
HINT:
If a speed signal of 4 mph (6 km/h) or more is input to the skid control ECU, with the ignition switch on (IG) and the stop light switch off, the ECU performs self diagnosis of the motor and solenoid circuits.

DTC No.	DTC Detection Condition	Trouble Area
C0278/11	When any of the following (1 or 2) is detected: 1. Both of the following conditions continue for 0.2 seconds or more. • The IG1 terminal voltage is between 9.5 and 17.2 V. • The solenoid relay contact is open when the relay is ON. 2. Both of the following conditions continue for 0.2 seconds or more. • IG1 terminal voltage becomes lower than 9.5 V or less when the relay is turned on. • The relay contact remains open.	• ABS NO. 2 fuse • ABS solenoid relay • ABS solenoid relay circuit • Brake actuator assembly
C0279/12	Immediately after the ignition switch is turned on (IG), the solenoid relay contact is closed for 0.2 seconds when the relay is turned off.	Brake actuator assembly

WIRING DIAGRAM

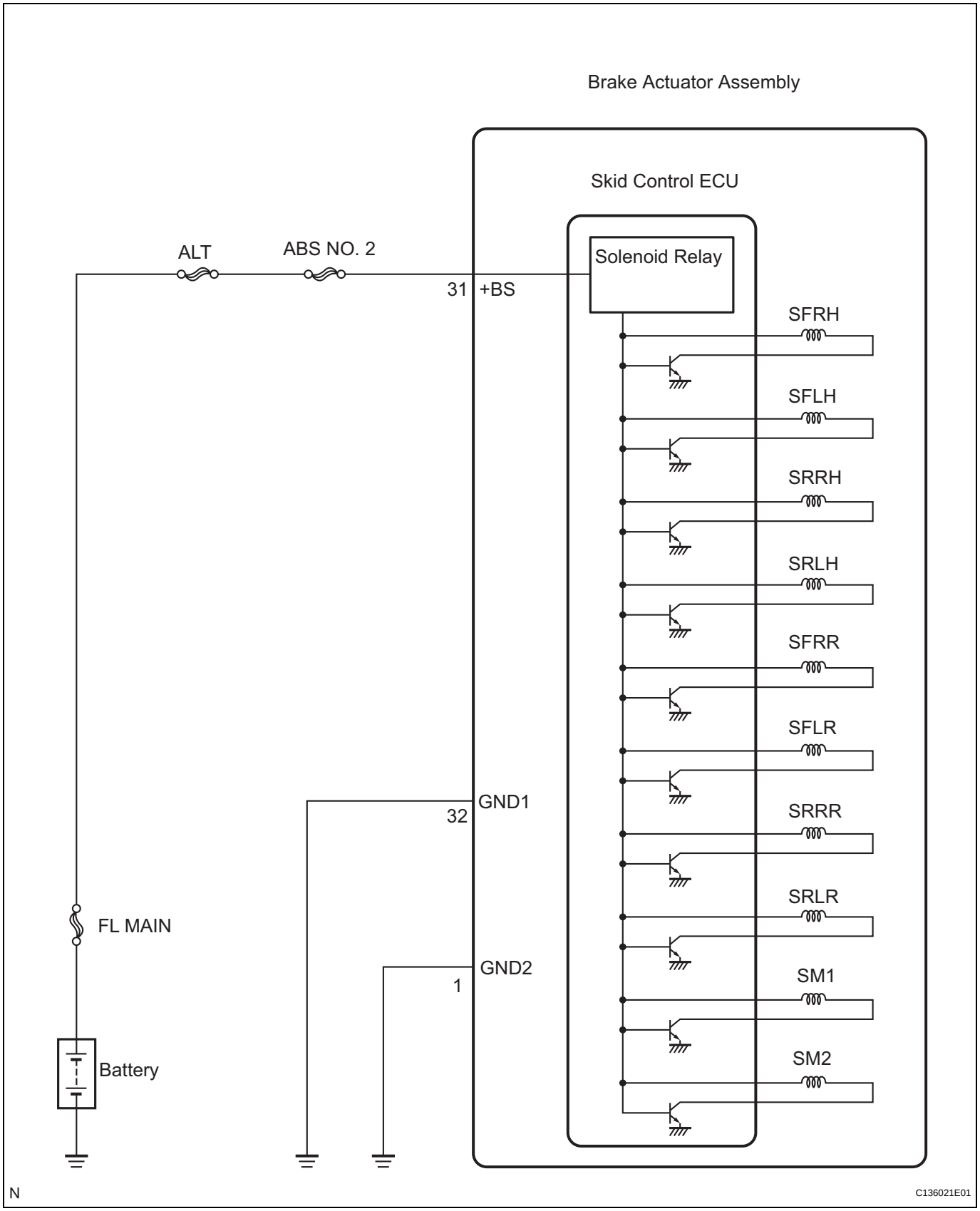

INSPECTION PROCEDURE

NOTICE:

When replacing the brake actuator assembly, perform zero point calibration (See page BC-119).

BC

1	INSPECT ABS NO. 2 FUSE

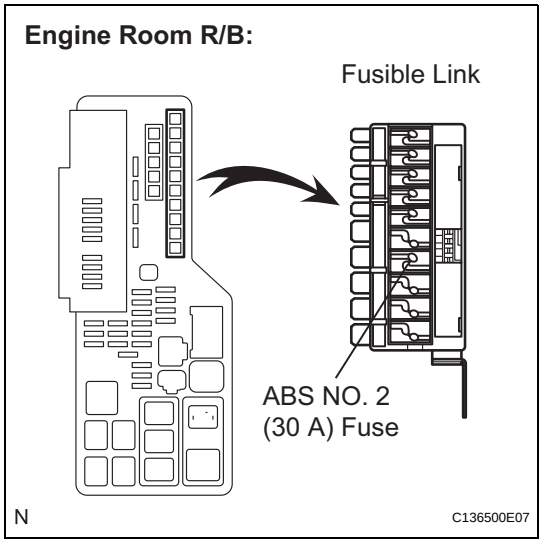

(a) Remove the fusible link from the engine room R/B.

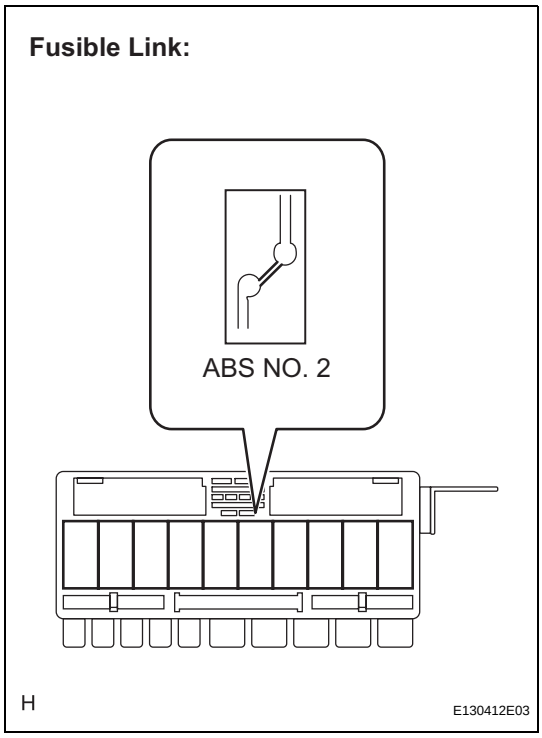

(b) Check if the fusible link is melted.
OK:
The fusible link is melted.

(c) Install the fusible link to the engine room R/B with the nut.

Torque: 5.4 N*m (55 kgf*cm, 48 in.*lbf)

NG → **REPLACE FUSIBLE LINK (ABS NO. 2 FUSE)**

OK

BC

2 INSPECT SKID CONTROL ECU (+BS TERMINAL)

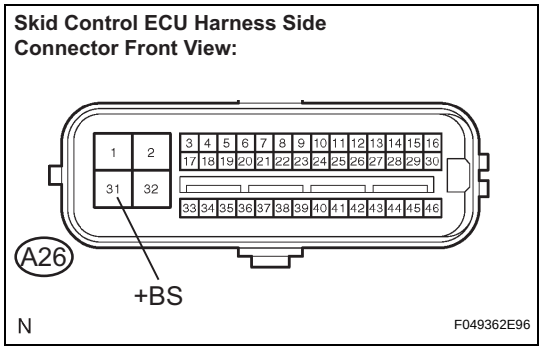

(a) Disconnect the skid control ECU connector.
(b) Measure the voltage according to the value(s) in the table below.

Standard voltage

Tester Connection	Condition	Specified Condition
A26-31 (+BS) - Body ground	Always	10 to 14 V

NG → **REPAIR OR REPLACE HARNESS OR CONNECTOR (+BS CIRCUIT)**

OK

3 INSPECT SKID CONTROL ECU (GND TERMINAL)

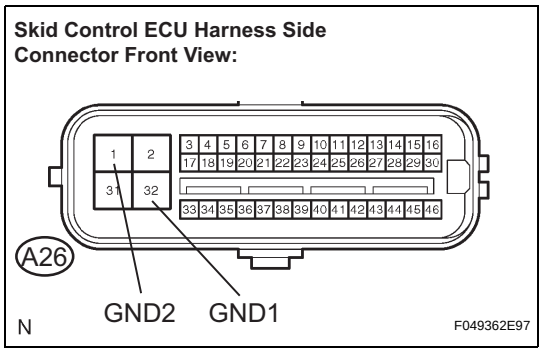

(a) Measure the resistance according to the value(s) in the table below.

Standard resistance

Tester Connection	Condition	Specified Condition
A26-32 (GND1) - Body ground	Always	Below 1 Ω
A26-1 (GND2) - Body ground	Always	Below 1 Ω

NG → **REPAIR OR REPLACE HARNESS OR CONNECTOR (GND CIRCUIT)**

OK

4 RECONFIRM DTC

(a) Reconnect the skid control ECU connector.
(b) Clear the DTC (See page BC-141).
(c) Start the engine.
(d) Drive the vehicle at the speed of 4 mph (6 km/h) or more.
(e) Check if the same DTC is recorded (See page BC-141).

Result

Condition	Proceed to
DTCs (C0278/11 and/or C0279/12) are not output	A
DTCs (C0278/11 and/or C0279/12) are output	B

HINT:
- If a speed signal of 4 mph (6 km/h) or more is input to the skid control ECU, with the ignition switch on (IG) and the stop light switch off, the ECU performs self diagnosis of the motor and solenoid circuits.
- If the normal system code is output (the trouble code is not output), slightly jiggle the connectors, wire harnesses, and fuses of the brake actuator assembly. Make sure that no DTCs are output.

BC

- If any DTCs are output while jiggling a connector or wire harness of the brake actuator assembly (skid control ECU), inspect and repair the connector or wire harness.

B → **REPLACE BRAKE ACTUATOR ASSEMBLY**

A

USE SIMULATION METHOD TO CHECK

DTC	C1201/51	Engine Control System Malfunction

DESCRIPTION

If a malfunction in the engine control system is detected, the operations of VSC and TRAC are prohibited by the fail safe function. When the signals from the engine are input normally, the fail safe is cancelled and the DTC is not stored.

DTC No.	DTC Detection Condition	Trouble Area
C1201/51	Engine control system malfunction signal continues for 5 seconds.	Engine control system

INSPECTION PROCEDURE

1	CHECK ENGINE CONTROL SYSTEM

(a) Check if the engine control system DTC is output (See page ES-45 for 2GR-FE, or ES-38 for 2AZ-FE).

BC

Result

Condition	Proceed to
DTC is not output	A
DTC is output	B

B → INSPECT ENGINE CONTROL SYSTEM

A

REPLACE ECM

DTC	C1203/53	ECM Communication Circuit Malfunction

DESCRIPTION

The circuit is used to send TRAC and VSC control information from the skid control ECU to the ECM, and engine control information from the ECM to the skid control ECU.

DTC No.	DTC Detection Condition	Trouble Area
C1203/53	Engine, drive source and destination variations that are sent from the ECM do not match the ones of the skid control ECU.	ECM

INSPECTION PROCEDURE

1 CHECK PART NUMBER (ECM AND BRAKE ACTUATOR ASSEMBLY)

(a) Check that the proper ECM and brake actuator assembly (skid control ECU) are installed.
OK:
Proper ECUs are installed.

NG → **REPLACE ECUS WITH PROPER ONES**

OK

REPLACE ECM

BC

DTC	C1210/36	Zero Point Calibration of Yaw Rate Sensor Undone

DTC	C1336/39	Zero Point Calibration of Acceleration Sensor Undone

DESCRIPTION

The skid control ECU receives signals from the yaw rate and acceleration sensor via the CAN communication system.
The yaw rate sensor has the built in acceleration sensor and detects the vehicle's condition using 2 circuits (GL1, GL2). If there is trouble in the bus lines between the yaw rate and acceleration sensor and the CAN communication system, the DTCs U0123/62 (yaw rate sensor communication trouble) and U0124/95 (acceleration sensor communication trouble) are output.
The DTCs are also output when the calibration has not been completed.

DTC No.	DTC Detection Condition	Trouble Area
C1210/36	Zero point calibration of yaw rate sensor undone.	• Brake actuator assembly (Skid control ECU) • Yaw rate and acceleration sensor • Zero point calibration undone (Perform zero point calibration and check DTC. If DTC is not output again, the sensor is normal)
C1336/39	When either of the following is detected: 1. The vehicle runs in the normal mode with zero point calibration undone. 2. After the zero point has been obtained, the zero point voltage of the sensor is not between 2.38 and 2.62 V.	• Brake actuator assembly (Skid control ECU) • Yaw rate and acceleration sensor • Zero point calibration undone (Perform zero point calibration and check DTC. If DTC is not output again, the sensor is normal)

BC

INSPECTION PROCEDURE

NOTICE:

When replacing the brake actuator assembly, perform zero point calibration (See page BC-119).

HINT:

When U0123/62, U0124/95 or U0126/63 is output along with C1210/36 or C1336/39, inspect and repair trouble areas indicated by U0123/62, U0124/95 or U0126/63 first.

1	PERFORM ZERO POINT CALIBRATION OF YAW RATE AND ACCELERATION SENSOR

(a) Perform zero point calibration of the yaw rate and acceleration sensor (See page BC-119).

NEXT

2	RECONFIRM DTC

(a) Clear the DTC (See page BC-141).
(b) Check if the same DTCs are recorded (See page BC-141).

Result

Condition	Proceed to
DTCs (C1210/36 and/or C1336/39) are output	A
DTCs (C1210/36 and/or C1336/39) are not output	B

HINT:
- The DTCs are recorded because zero point calibration has not been completed.
- End the procedure as the same DTCs are not recorded after completion of zero point calibration.

B → **END**

A

3	CHECK YAW RATE AND ACCELERATION SENSOR INSTALLATION

(a) Turn the ignition switch off.
(b) Check that the yaw rate and acceleration sensor has been installed properly (See page BC-448).
OK:
The sensor should be tightened to the specified torque.
The sensor should not be tilted.

NG → **INSTALL YAW RATE AND ACCELERATION SENSOR CORRECTLY**

OK

REPLACE BRAKE ACTUATOR ASSEMBLY

DTC	C1231/31	Steering Angle Sensor Circuit Malfunction

DESCRIPTION

The steering angle sensor signal is sent to the skid control ECU via the CAN communication system. When there is a malfunction in the CAN communication system, it will be detected by the steering angle sensor zero point malfunction diagnostic function.

DTC No.	DTC Detection Condition	Trouble Area
C1231/31	When ECU IG1 terminal voltage is 9.5 V or more, the steering angle sensor malfunction signal is received.	• Steering angle sensor • Steering angle sensor circuit • Steering angle sensor power supply • Brake actuator assembly (Skid control ECU)

WIRING DIAGRAM

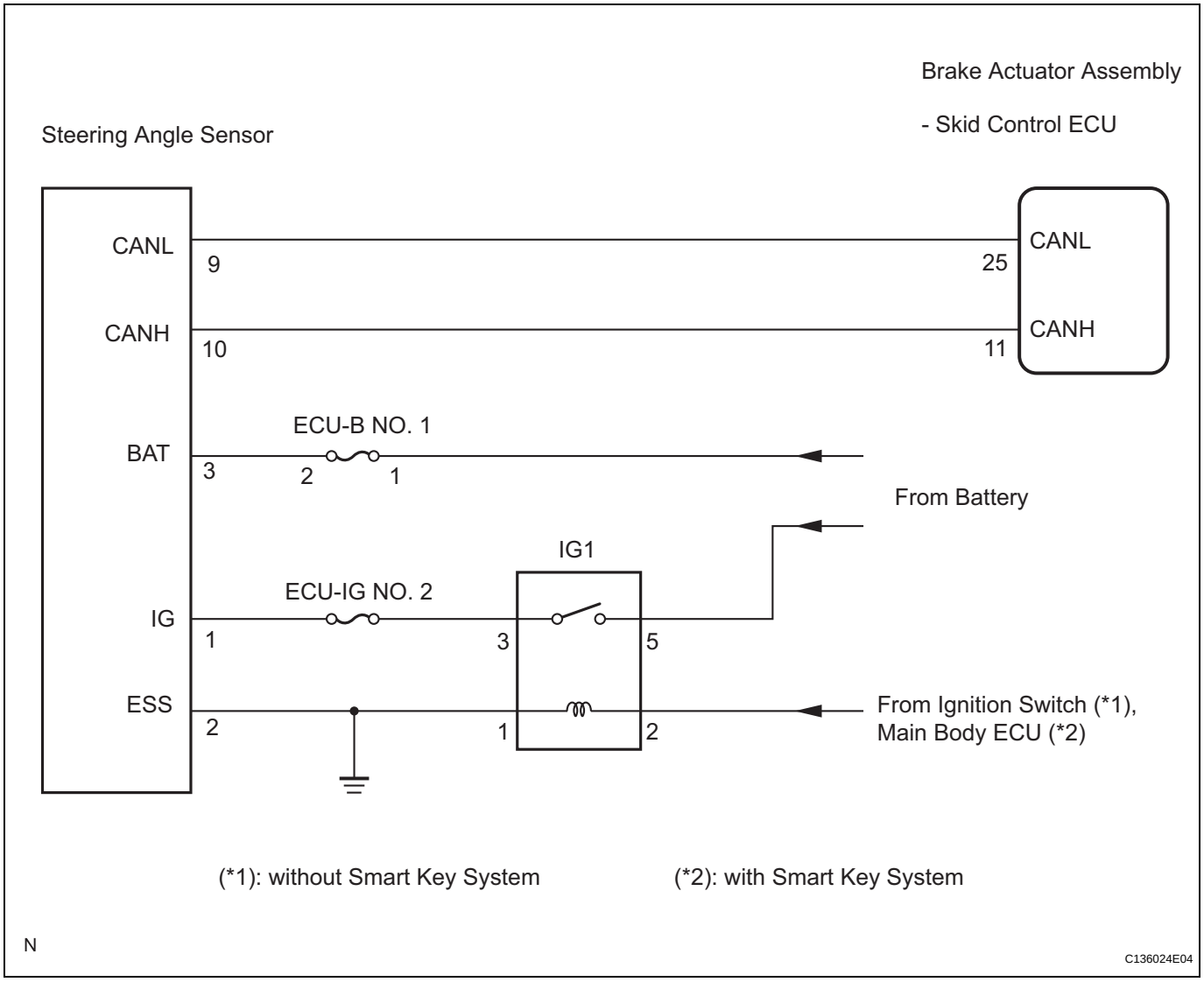

INSPECTION PROCEDURE

HINT:

- When U0073/94, U0123/62, U0124/95 or U0126/63 is output together with C1231/31, inspect and repair the trouble areas indicated by U0073/94, U0123/62, U0124/95 or U0126/63 first.

- When the speed sensor or the yaw rate sensor has trouble, DTCs for the steering angle sensor may be output even when the steering angle sensor is normal. When DTCs for the speed sensor or yaw rate sensor are output together with other DTCs for the steering angle sensor, inspect and repair the speed sensor and yaw rate sensor first, and then inspect and repair the steering angle sensor.

1 CHECK DTC

(a) Clear the DTC (See page BC-141).
(b) Turn the ignition switch off.
(c) Turn the ignition switch on (IG) again and check that no CAN communication system DTC is output.
(d) Drive the vehicle and turn the steering wheel to the right and left at the speed of 22 mph (35 km/h) and check that no speed sensor and yaw rate sensor DTCs are output.

Result

Condition	Proceed to
No CAN communication system DTC and the speed sensor or yaw rate sensor DTC are output	A
CAN communication system DTC is output	B
Speed sensor or yaw rate sensor DTC is output	C

HINT:
- If there is a malfunction in the speed sensor or the yaw rate sensor, an abnormal value may be output although the steering angle sensor is normal.
- If the speed sensor and the yaw rate sensor DTCs are output simultaneously, repair the sensors and inspect the steering angle sensor.

B → **INSPECT CAN COMMUNICATION SYSTEM**

C → **REPAIR CIRCUIT INDICATED BY OUTPUT DTC (See page BC-151)**

A

2 INSPECT STEERING ANGLE SENSOR (POWER SOURCE TERMINAL)

Steering Angle Sensor Wire Harness View:

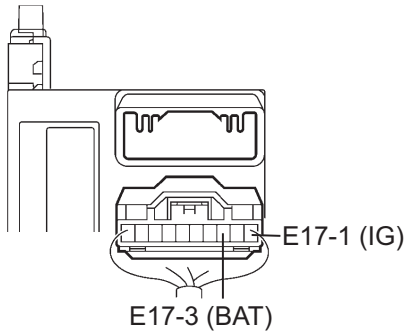

(a) Turn the ignition switch off.
(b) Remove the steering wheel and the column cover lower.
(c) Disconnect the steering angle sensor connector.
(d) Measure the voltage according to the value(s) in the table below.

Standard voltage

Tester Connection	Condition	Specified Condition
E17-1 (IG) - Body ground	Ignition switch on (IG)	10 to 14 V
E17-3 (BAT) - Body ground	Always	10 to 14 V

NG → **REPAIR OR REPLACE HARNESS OR CONNECTOR (POWER SOURCE CIRCUIT)**

OK

3	INSPECT STEERING ANGLE SENSOR (GROUND TERMINAL)

Steering Angle Sensor Wire Harness View:

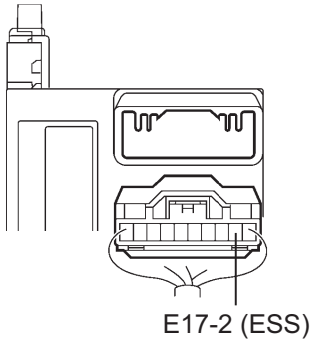

(a) Turn the ignition switch off.
(b) Measure the resistance according to the value(s) in the table below.

Standard resistance

Tester Connection	Condition	Specified Condition
E17-2 (ESS) - Body ground	Always	Below 1 Ω

HINT:
If troubleshooting has been carried out according to the Problem Symptoms Table, refer back to the table and proceed to the next step (See page BC-134).

NG → **REPAIR OR REPLACE HARNESS OR CONNECTOR (GROUND CIRCUIT)**

BC

OK

REPLACE STEERING ANGLE SENSOR

DTC	**C1232/32**	**Stuck in Acceleration Sensor**
DTC	**C0371/71**	**Yaw Rate Sensor (Test Mode DTC)**
DTC	**C1234/34**	**Yaw Rate Sensor Malfunction**
DTC	**C1243/43**	**Acceleration Sensor Stuck Malfunction**
DTC	**C1244/44**	**Open or Short in Acceleration Sensor Circuit**
DTC	**C1245/45**	**Acceleration Sensor Output Malfunction**
DTC	**C1279/79**	**Acceleration Sensor Output Voltage Malfunction (Test Mode DTC)**
DTC	**C1381/97**	**Yaw Rate and / or Acceleration Sensor Power Supply Voltage Malfunction**

DESCRIPTION

The skid control ECU receives signals from the yaw rate and acceleration sensor via the CAN communication system.
The yaw rate sensor has a built in acceleration sensor and detects the vehicle's condition using 2 circuits (GL1, GL2).
If there is trouble in the bus lines between the yaw rate and acceleration sensor and the CAN communication system, the DTC U0123/62 (malfunction in CAN communication with the yaw rate sensor) and U0124/95 (malfunction in CAN communication with the acceleration sensor) are output.
These DTCs are also output when calibration has not been completed.
DTCs C0371/71 and C1279/79 can be deleted when the yaw rate and acceleration sensor sends a yaw rate and/or acceleration signal or the Test Mode ends. DTCs C0371/71 and C1279/79 are output only in the Test Mode.

DTC No.	DTC Detection Condition	Trouble Area
C1232/32	At a vehicle speed of 6 mph (10 km/h) or more, either GL1 or GL2 (input signal) does not change for 30 seconds or more.	• Yaw rate and acceleration sensor • Yaw rate and acceleration sensor circuit
C1234/34	Sensor malfunction signal is received from the yaw rate sensor.	• Yaw rate and acceleration sensor • Yaw rate and acceleration sensor circuit
C1243/43	While the vehicle speed changes from 19 mph (30 km/h) to 0 mph (0 km/h), the condition that the values of GL1 and GL2 do not change occurs 16 times or more.	• Yaw rate and acceleration sensor • Yaw rate and acceleration sensor circuit
C1244/44	When either of the following is detected: 1. A data malfunction signal is received from the acceleration sensor. 2. After the difference between GL1 and GL2 becomes 0.6 G or more with the vehicle stationary, the difference remains 0.4 G or more for 60 seconds or more.	• Yaw rate and acceleration sensor • Yaw rate and acceleration sensor circuit
C1245/45	At a vehicle speed of 19 mph (30 km/h) or more, the difference between the forward and backward G calculated from the acceleration sensor value and that calculated from the vehicle speed sensor exceeds 0.35 G for 60 seconds or more.	• Yaw rate and acceleration sensor • Yaw rate and acceleration sensor circuit
C1381/97	At a vehicle speed of more than 2 mph (3 km/h), the acceleration sensor power source malfunction signal is received for 10 seconds or more.	• Yaw rate and acceleration sensor • Yaw rate and acceleration sensor power source circuit

WIRING DIAGRAM

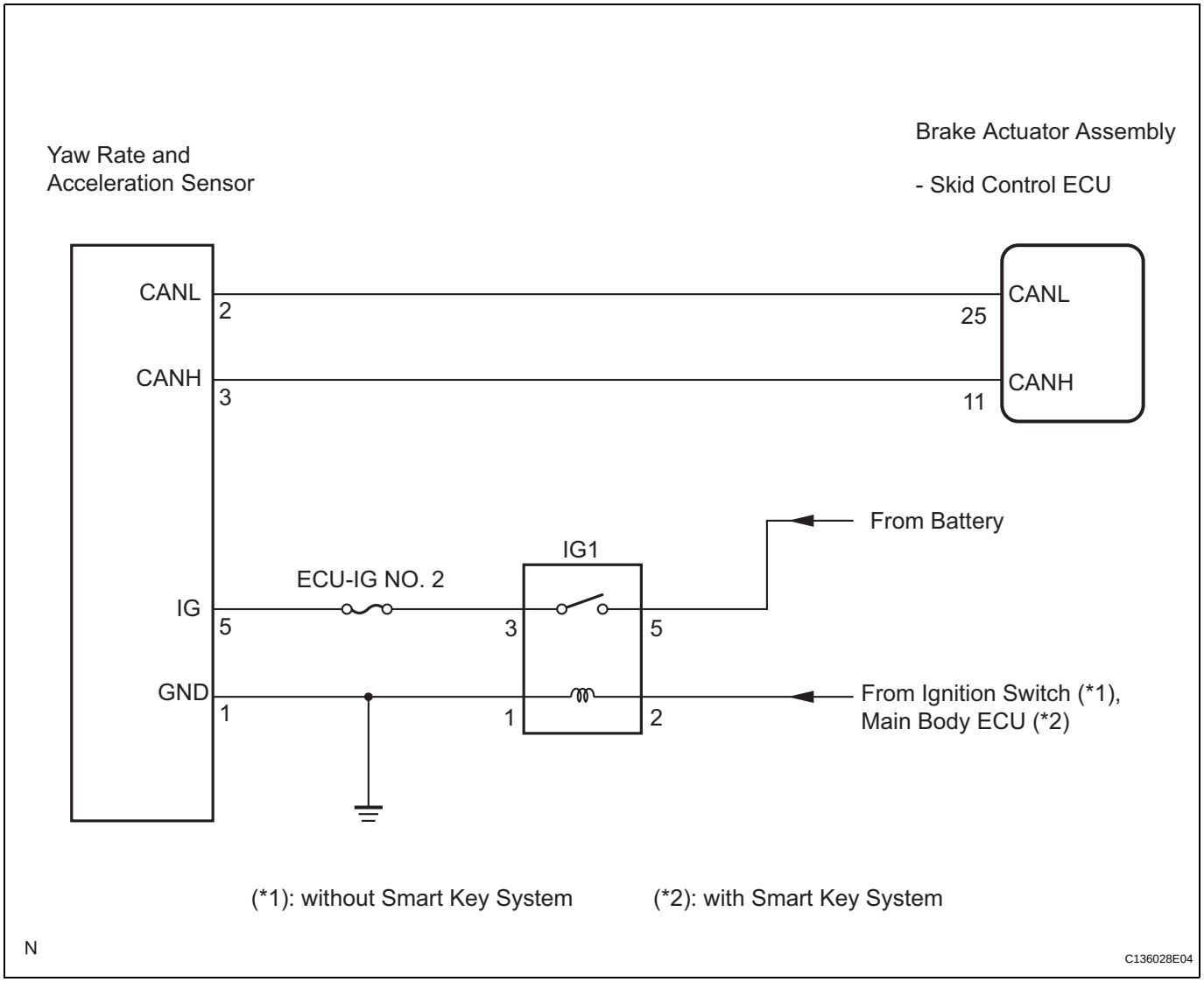

INSPECTION PROCEDURE

NOTICE:

When replacing the yaw rate and acceleration sensor, perform zero point calibration (See page BC-119).

HINT:

When U0123/62, U0124/95 or U0126/63 is output together with C1232/32, C1234/34, C1243/43, C1244/44, C1245/45, or C1381/97, inspect and repair the trouble areas indicated by U0123/62, U0124/95 or U0126/63 first.

1	CHECK DTC

(a) Clear the DTC (See page BC-141).
(b) Turn the ignition switch off.
(c) At a speed of 19 mph (30 km/h) or more, drive the vehicle, turn the steering wheel, and decelerate the vehicle (depress the brake pedal).

(d) Turn the ignition switch on (IG) again and check that no CAN communication system DTC is output.
(e) Check if DTCs for zero point calibration of the yaw rate sensor undone (C1210/36) or for zero point calibration of the acceleration sensor undone (C1336/39) are output.

Result

Condition	Proceed to
DTCs (C1210/36, C1336/39 and/or CAN communication system DTC) are not output	A
CAN communication system DTC is output	B
DTCs (C1210/36 and/or C1336/39) are output	C

B → **INSPECT CAN COMMUNICATION SYSTEM**

C → **REPAIR CIRCUIT INDICATED BY OUTPUT DTC (See page BC-151)**

A

BC

2 CHECK YAW RATE AND ACCELERATION SENSOR INSTALLATION

(a) Turn the ignition switch off.
(b) Check that the yaw rate and acceleration sensor has been installed properly (See page BC-448).
OK:
The sensor is tightened to the specified torque.
The sensor is not tilted.

NG → **INSTALL YAW RATE AND ACCELERATION SENSOR CORRECTLY**

OK

3 INSPECT YAW RATE AND ACCELERATION SENSOR (IG TERMINAL)

Yaw Rate and Acceleration Sensor Harness Side Connector Front View:

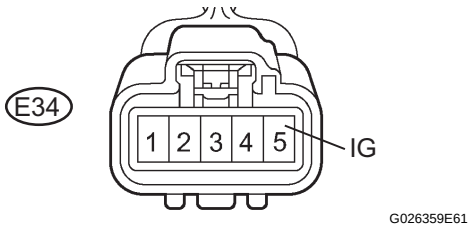

(a) Disconnect the yaw rate and acceleration sensor connector.
(b) Turn the ignition switch on (IG).
(c) Measure the voltage according to the value(s) in the table below.
Standard voltage

Tester Connection	Condition	Specified Condition
E34-5 (IG) - Body ground	Ignition switch on (IG)	10 to 14 V

NG → **REPAIR OR REPLACE HARNESS OR CONNECTOR (IG CIRCUIT)**

OK

4 INSPECT YAW RATE AND ACCELERATION SENSOR (GND TERMINAL)

Yaw Rate and Acceleration Sensor Harness Side Connector Front View:

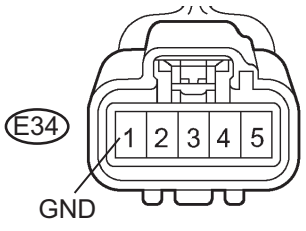

(a) Turn the ignition switch off.

(b) Measure the resistance according to the value(s) in the table below.

Standard resistance

Tester Connection	Condition	Specified Condition
E34-1 (GND) - Body ground	Always	Below 1 Ω

NOTICE:

Check the yaw rate and acceleration sensor signal after replacement (See page BC-123).

HINT:

If troubleshooting has been carried out according to the Problem Symptoms Table, refer back to the table and proceed to the next step (See page BC-134).

NG → **REPAIR OR REPLACE HARNESS OR CONNECTOR (GND CIRCUIT)**

OK

REPLACE YAW RATE AND ACCELERATION SENSOR

BC

DTC	C1235/35	Foreign Object is Attached on Tip of Front Speed Sensor RH
DTC	C1236/36	Foreign Object is Attached on Tip of Front Speed Sensor LH
DTC	C1238/38	Foreign Object is Attached on Tip of Rear Speed Sensor RH
DTC	C1239/39	Foreign Object is Attached on Tip of Rear Speed Sensor LH
DTC	C1275/75	Abnormal Change in Output Signal of Front Speed Sensor RH (Test Mode DTC)
DTC	C1276/76	Abnormal Change in Output Signal of Front Speed Sensor LH (Test Mode DTC)
DTC	C1277/77	Abnormal Change in Output Signal of Rear Speed Sensor RH (Test Mode DTC)
DTC	C1278/78	Abnormal Change in Output Signal of Rear Speed Sensor LH (Test Mode DTC)

DESCRIPTION

The speed sensors detect wheel speed and transmit the signals to the ECU. These signals are used for control of the ABS control system. Each of the front and rear rotors have 48 serrations.
When the rotors rotate, the magnetic field generated by the permanent magnet in the speed sensor induces an AC voltage.
Since the frequency of this AC voltage changes in direct proportion to the speed of the rotor, the frequency is used by the ECU to detect the speed of each wheel.
DTCs C1275/75 to C1278/78 can be deleted when the speed sensor sends a vehicle speed signal or the Test Mode ends. DTCs from C1275/75 to C1278/78 are output only in the Test Mode.

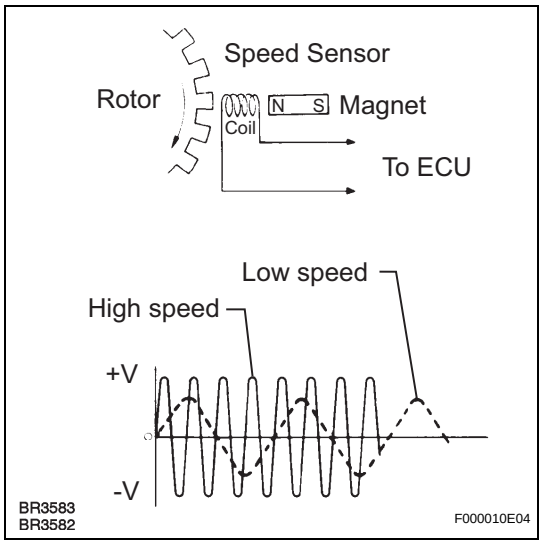

DTC No.	DTC Detection Condition	Trouble Area
C1235/35 C1236/36 C1238/38 C1239/39	At a vehicle speed of 12 mph (20 km/h) or more, noise occurs in the sensor signal from the abnormal wheel for 5 seconds or more.	• Speed sensor • Speed sensor rotor • Sensor installation • Brake actuator assembly (Skid control ECU)

BC

HINT:
- DTC C1235/35 is for the front speed sensor RH.
- DTC C1236/36 is for the front speed sensor LH.
- DTC C1238/38 is for the rear speed sensor RH.
- DTC C1239/39 is for the rear speed sensor LH.

WIRING DIAGRAM

Front Speed Sensor Circuit:

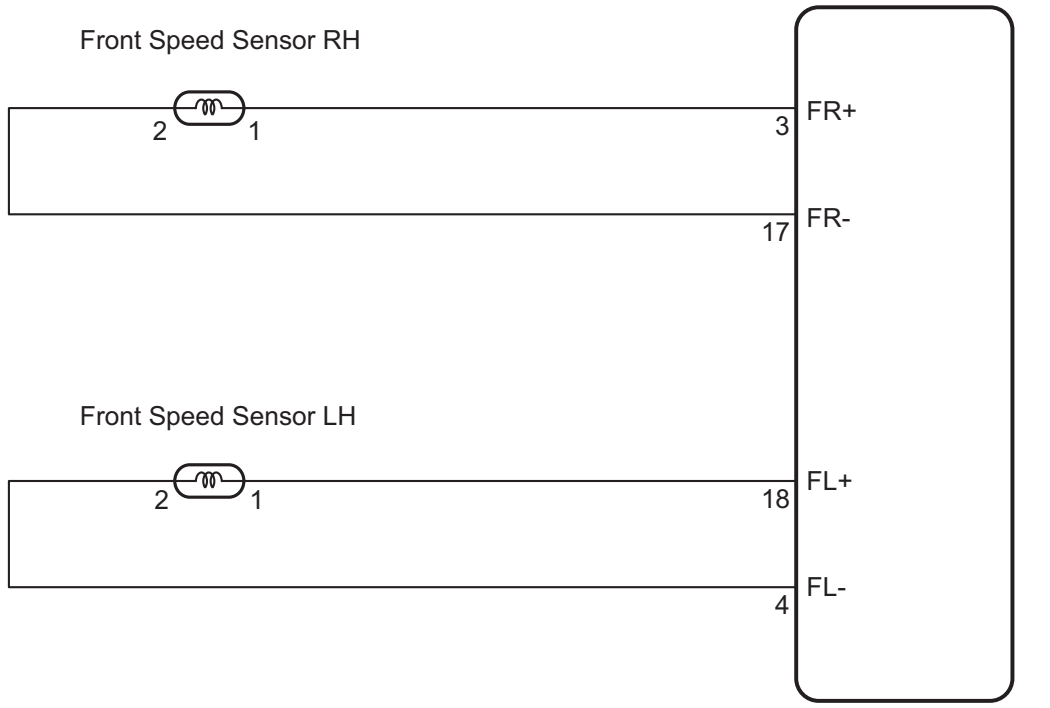

N

C132772E07

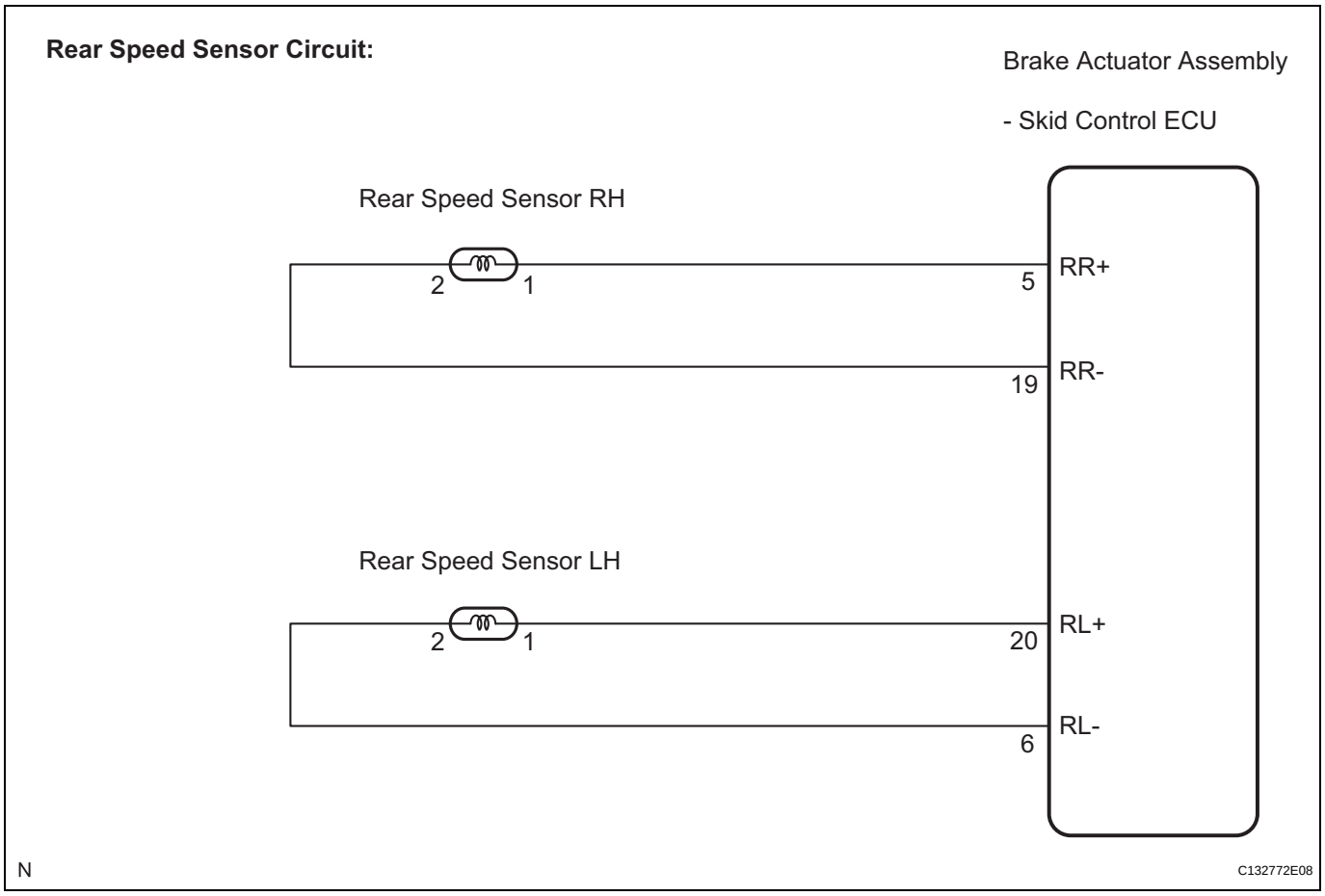

INSPECTION PROCEDURE

NOTICE:

When replacing the brake actuator assembly, perform zero point calibration (See page BC-119).

HINT:

When C0200/31, C0205/32, C0210/33, or C0215/34 is output together with C1235/35, C1236/36, C1238/38, or C1239/39, inspect and repair the trouble areas indicated by C0200/31, C0205/32, C0210/33, or C0215/34 first.

1 CHECK SPEED SENSOR AND SPEED SENSOR ROTOR SERRATIONS

Skid Control ECU Harness Side Connector Front View:

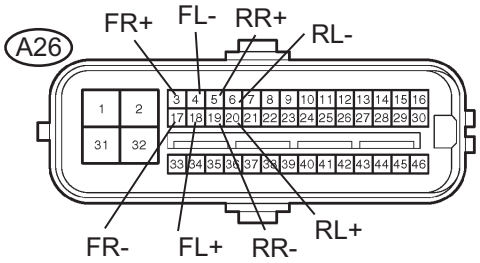

Normal Signal Waveform:

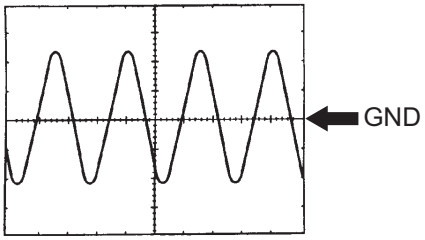

1 V/Division, 2 ms/Division

C136019E05

(a) Disconnect the skid control ECU connector.
(b) Connect the oscilloscope to each speed sensor terminal of the skid control ECU.
(c) Check that a waveform is output when the tires are rotated (by the sensor circuit).

OK:

The same waveform is output from all the 4 wheels and there is no noise or interference in the waveform.

(d) Check that the waveform does not change while jiggling a connector or a wire harness.

OK:

The waveform does not change.

HINT:

- As the vehicle speed (wheel revolution speed) increases, a cycle of the waveform narrows and the output voltage becomes greater.
- When noise is identified in the waveform on the oscilloscope, the erratic signals are generated due to speed sensor rotor's scratches, looseness or foreign matter attached to it.

NG → **Go to step 3**

OK

2 RECONFIRM DTC

(a) Reconnect the skid control ECU connector.
(b) Clear the DTC (See page BC-141).
(c) Start the engine.
(d) Drive the vehicle at the speed of 12 mph (20 km/h) or more for at least 60 seconds.
(e) Check if the same DTC is recorded (See page BC-141).

Result

Condition	Proceed to
DTCs (C1235/35, C1236/36, C1238/38 and/or C1239/39) are not output	A
DTCs (C1235/35, C1236/36, C1238/38 and/or C1239/39) are output	B

B → **REPLACE BRAKE ACTUATOR ASSEMBLY**

A

USE SIMULATION METHOD TO CHECK

3 INSPECT EACH SPEED SENSOR

Front Speed Sensor:

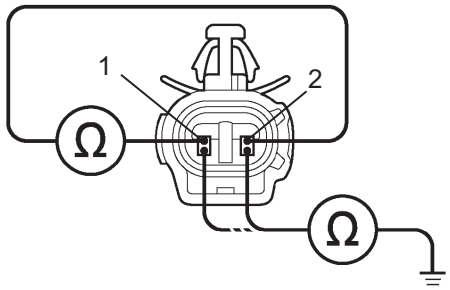

Rear Speed Sensor:

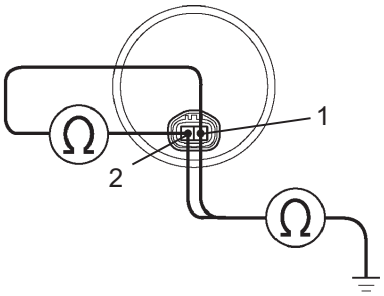

C136027E01

(a) Disconnect each speed sensor connector.

(b) Measure the resistance according to the value(s) in the table below.

Standard resistance:

RH

Tester Connection	Condition	Specified Condition
1 (FR+) - 2 (FR-)	Always	1.4 to 1.8 kΩ at 20°C (68 °F)
1 (FR+) - Body ground	Always	10 kΩ or higher
2 (FR-) - Body ground	Always	10 kΩ or higher
2 (RR+) - 1 (RR-)	Always	0.9 to 2.1 kΩ
2 (RR+) - Body ground	Always	10 kΩ or higher
1 (RR-) - Body ground	Always	10 kΩ or higher

LH

Tester Connection	Condition	Specified Condition
1 (FL+) - 2 (FL-)	Always	1.4 to 1.8 kΩ at 20°C (68 °F)
1 (FL+) - Body ground	Always	10 kΩ or higher
2 (FL-) - Body ground	Always	10 kΩ or higher
2 (RL+) - 1 (RL-)	Always	0.9 to 2.1 kΩ
2 (RL+) - Body ground	Always	10 kΩ or higher
1 (RL-) - Body ground	Always	10 kΩ or higher

BC

Result

Result	Proceed to
OK (for rear)	A
OK (for front)	B
NG	C

B → **Go to step 5**

C → **REPLACE EACH SPEED SENSOR**

A

4 CHECK HARNESS AND CONNECTOR (SKID CONTROL SENSOR WIRE)

Skid Control Sensor Wire:

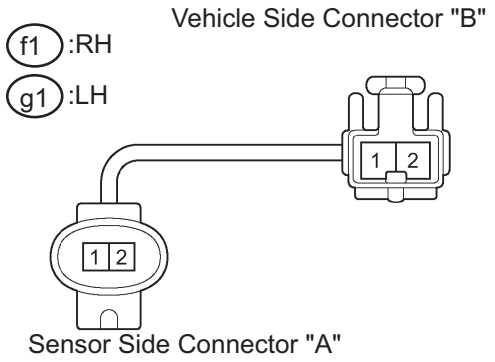

(a) Disconnect the skid control sensor wire.

(b) Measure the resistance according to the value(s) in the table below.

Standard resistance:

RH

Tester Connection	Condition	Specified Condition
f1 ("A"-1) - f1 ("B"-2)	Always	Below 1 Ω
f1 ("A"-1) - f1 ("B"-1)	Always	10 kΩ or higher
f1 ("A"-1) - Body ground	Always	10 kΩ or higher
f1 ("A"-2) - f1 ("B"-1)	Always	Below 1 Ω
f1 ("A"-2) - f1 ("B"-2)	Always	10 kΩ or higher
f1 ("A"-2) - Body ground	Always	10 kΩ or higher

LH

Tester Connection	Condition	Specified Condition
g1 ("A"-1) - g1 ("B"-2)	Always	Below 1 Ω
g1 ("A"-1) - g1 ("B"-1)	Always	10 kΩ or higher
g1 ("A"-1) - Body ground	Always	10 kΩ or higher
g1 ("A"-2) - g1 ("B"-1)	Always	Below 1 Ω
g1 ("A"-2) - g1 ("B"-2)	Always	10 kΩ or higher
g1 ("A"-2) - Body ground	Always	10 kΩ or higher

NOTICE:
Check the speed sensor signal after replacement (See page BC-123).

NG → **REPLACE SKID CONTROL SENSOR WIRE**

OK

BC

5 CHECK HARNESS AND CONNECTOR (SKID CONTROL ECU - EACH SPEED SENSOR)

Skid Control ECU Harness Side Connector Front View:

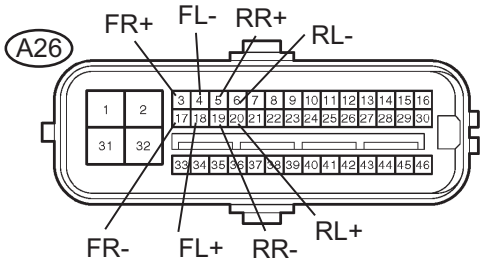

Front Speed Sensor Harness Side Connector Front View:

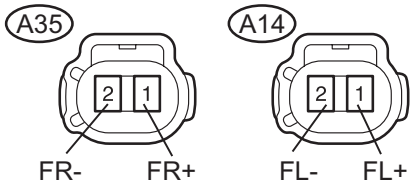

Rear Speed Sensor Harness Side Connector Front View:

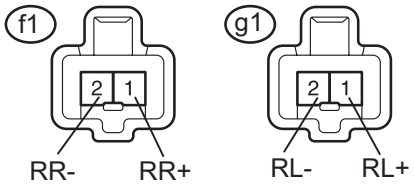

C136025E01

(a) Measure the resistance according to the value(s) in the table below.

Standard resistance:

RH

Tester Connection	Condition	Specified Condition
A26-3 (FR+) - A35-1 (FR+)	Always	Below 1 Ω
A26-3 (FR+) - Body ground	Always	10 kΩ or higher
A26-17 (FR-) - A35-2 (FR-)	Always	Below 1 Ω
A26-17 (FR-) - Body ground	Always	10 kΩ or higher
A26-5 (RR+) - f1-1 (RR+)	Always	Below 1 Ω
A26-5 (RR+) - Body ground	Always	10 kΩ or higher
A26-19 (RR-) - f1-2 (RR-)	Always	Below 1 Ω
A26-19 (RR-) - Body ground	Always	10 kΩ or higher

LH

Tester Connection	Condition	Specified Condition
A26-18 (FL+) - A14-1 (FL+)	Always	Below 1 Ω
A26-18 (FL+) - Body ground	Always	10 kΩ or higher
A26-4 (FL-) - A14-2 (FL-)	Always	Below 1 Ω
A26-4 (FL-) - Body ground	Always	10 kΩ or higher
A26-20 (RL+) - g1-1 (RL+)	Always	Below 1 Ω
A26-20 (RL+) - Body ground	Always	10 kΩ or higher
A26-6 (RL-) - g1-2 (RL-)	Always	Below 1 Ω
A26-6 (RL-) - Body ground	Always	10 kΩ or higher

NG → **REPAIR OR REPLACE HARNESS OR CONNECTOR**

OK

6 RECONFIRM DTC

(a) Reconnect the skid control sensor wire.
(b) Reconnect the skid control ECU connector and the speed sensor connector.
(c) Clear the DTC (See page BC-141).
(d) Start the engine.
(e) Drive the vehicle at the speed of 12 mph (20 km/h) or more for at least 60 seconds.
(f) Check if the same DTC is recorded (See page BC-141).

Result

Condition	Proceed to
DTCs (C1235/35, C1236/36, C1238/38 and/or C1239/39) are output (for front)	A
DTCs (C1235/35, C1236/36, C1238/38 and/or C1239/39) are output (for rear)	B

BC

Condition	Proceed to
DTCs (C1235/35, C1236/36, C1238/38 and/or C1239/39) are not output	C

B → Go to step 8

C → USE SIMULATION METHOD TO CHECK

A

7 CHECK FRONT SPEED SENSOR TIP

(a) Turn the ignition switch off.
(b) Remove the front speed sensor (See page BC-438).
(c) Check the speed sensor tip.
OK:
No scratches or foreign matter on the sensor tip.
NOTICE:
Check the speed sensor signal after cleaning or replacement (See page BC-123).

NG → CLEAN OR REPLACE FRONT SPEED SENSOR

OK

8 CHECK EACH SPEED SENSOR ROTOR

(a) Turn the ignition switch off.
(b) Remove each speed sensor rotor.
(c) Check the speed sensor rotor.
OK:
No scratches, missing teeth, or foreign matter on the rotors.
NOTICE:
Check the speed sensor signal after cleaning or replacement (See page BC-123).

NG → CLEAN OR REPLACE EACH SPEED SENSOR ROTOR

OK

9 RECONFIRM DTC

(a) Install the front speed sensor and the speed sensor rotor.
(b) Clear the DTC (See page BC-141).
(c) Start the engine.
(d) Drive the vehicle at the speed of 12 mph (20 km/h) or more for at least 60 seconds.
(e) Check if the same DTC is recorded (See page BC-141).

Result

Condition	Proceed to
DTCs (C1235/35, C1236/36, C1238/38 and/or C1239/39) are output	A
DTCs (C1235/35, C1236/36, C1238/38 and/or C1239/39) are not output	B

B → **USE SIMULATION METHOD TO CHECK**

A

REPLACE BRAKE ACTUATOR ASSEMBLY

DTC	C1241/41	Low Battery Positive Voltage

DESCRIPTION

If a malfunction is detected in the power supply circuit, the skid control ECU (housed in the actuator assembly) stores this DTC and the fail safe function prohibits ABS operation.
This DTC is stored when the IG1 terminal voltage deviates from the DTC detection condition due to a malfunction in the power supply or charging circuit such as the battery or alternator circuit, etc.
The DTC is cancelled when the IG1 terminal voltage returns to normal.

DTC No.	DTC Detection Condition	Trouble Area
C1241/41	When any of the following is detected: 1. At a vehicle speed of 2 mph (3 km/h) or more, the IG1 terminal voltage is 9.5 V or less for 10 seconds or more. 2. When the solenoid relay remains ON and the IG1 terminal voltage is 9.5 V or less, the relay contact is open for 0.2 seconds or more. 3. While the VSC NO. 1 (fail safe) relay is ON after VSC NO. 2 relay ON, the IG1 terminal voltage is 9.5 V or less and the actuator pump drive motor is OFF for 0.1 second or more.	• ECU-IG NO. 2 fuse • Battery • Charging system • Power source circuit • Internal power supply circuit of the skid control ECU

BC

WIRING DIAGRAM

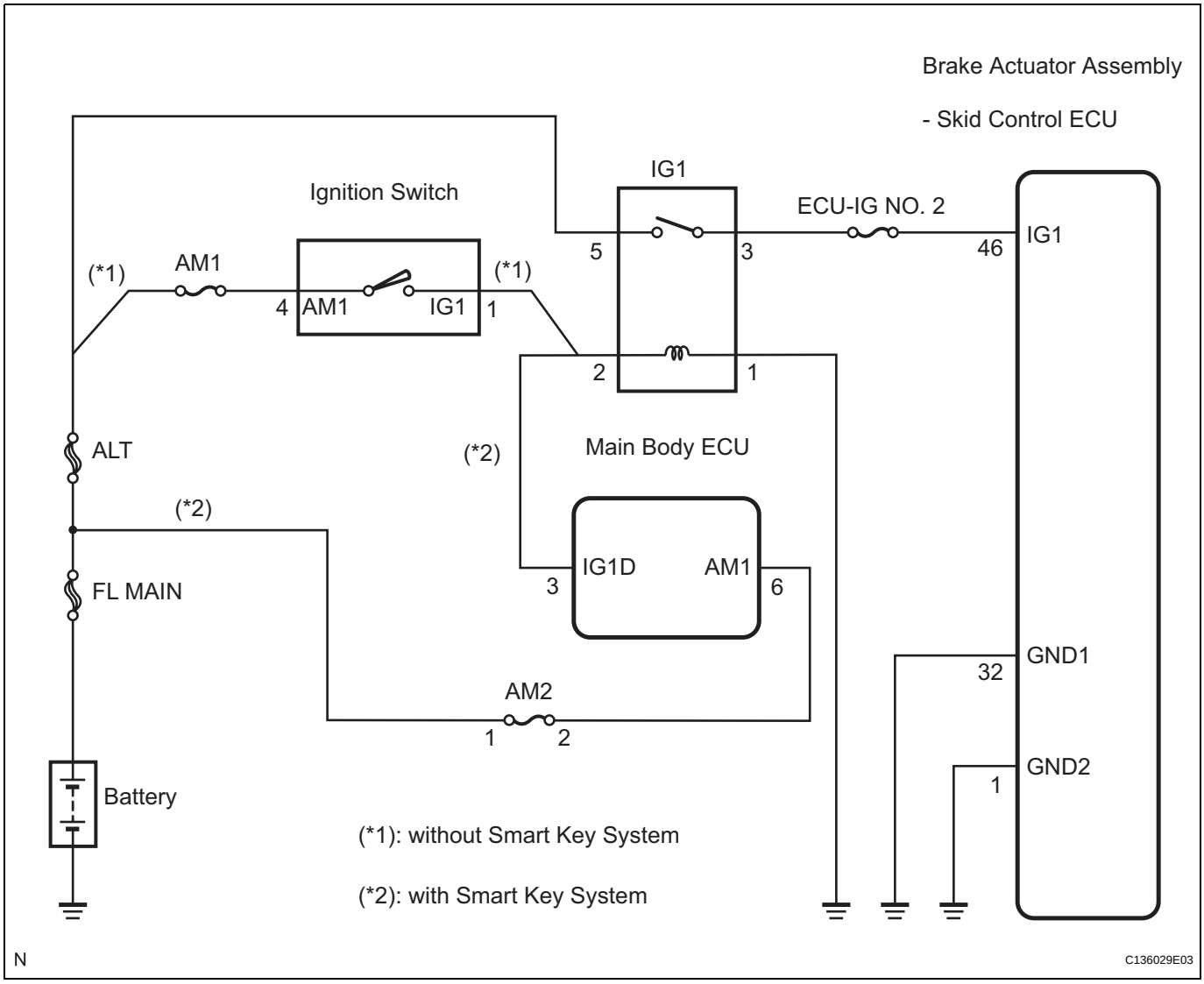

INSPECTION PROCEDURE

NOTICE:

When replacing the brake actuator assembly, perform zero point calibration (See page BC-119).

1 INSPECT ECU-IG NO. 2 FUSE

Main Body ECU:

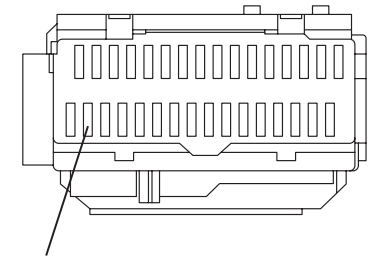

N C135806E01

(a) Remove the ECU-IG NO. 2 fuse from the main body ECU.

(b) Measure the resistance according to the value(s) in the table below.

Standard resistance

Tester Connection	Condition	Specified Condition
ECU-IG NO. 2 (7.5 A) fuse	Always	Below 1 Ω

NG → **REPLACE ECU-IG NO. 2 FUSE**

OK

2 CHECK BATTERY

(a) Install the ECU-IG NO. 2 fuse.

(b) Check the battery voltage.

Standard voltage:

10 to 14 V

NG → **CHECK AND REPLACE CHARGING SYSTEM OR BATTERY**

OK

3 INSPECT SKID CONTROL ECU (IG1 TERMINAL)

Skid Control ECU Harness Side Connector Front View:

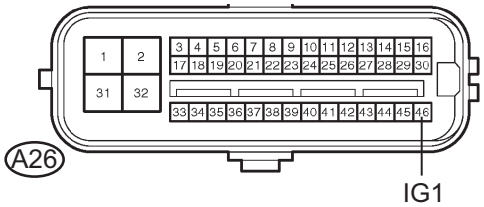

N F049362E98

(a) Disconnect the skid control ECU connector.

(b) Turn the ignition switch on (IG).

(c) Measure the voltage according to the value(s) in the table below.

Standard voltage

Tester Connection	Condition	Specified Condition
A26-46 (IG1) - Body ground	Ignition switch on (IG)	10 to 14 V

NG → **REPAIR OR REPLACE HARNESS OR CONNECTOR (IG1 CIRCUIT)**

BC

OK

4 INSPECT SKID CONTROL ECU (GND TERMINAL)

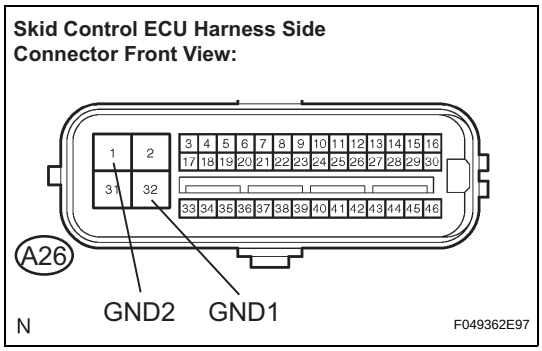

(a) Turn the ignition switch off.
(b) Measure the resistance according to the value(s) in the table below.

Standard resistance

Tester Connection	Condition	Specified Condition
A26-32 (GND1) - Body ground	Always	Below 1 Ω
A26-1 (GND2) - Body ground	Always	Below 1 Ω

NG → **REPAIR OR REPLACE HARNESS OR CONNECTOR (GND CIRCUIT)**

OK

BC

5 RECONFIRM DTC

(a) Reconnect the skid control ECU connector.
(b) Clear the DTC (See page BC-141).
(c) Turn the ignition switch on (IG).
(d) Check if the same DTC is recorded (See page BC-141).

Result

Condition	Proceed to
DTC (C1241/41) is not output	A
DTC (C1241/41) is output	B

HINT:
If troubleshooting has been carried out according to the Problem Symptoms Table, refer back to the table and proceed to the next step (See page BC-134).

B → **REPLACE BRAKE ACTUATOR ASSEMBLY**

A

USE SIMULATION METHOD TO CHECK

DTC	C1246/46	Master Cylinder Pressure Sensor Malfunction

DTC	C1281/81	Master Cylinder Pressure Sensor Output Malfunction (Test Mode DTC)

DESCRIPTION

Master cylinder pressure sensor is connected to the skid control ECU in the brake actuator assembly. DTC C1281/81 can be deleted when the master cylinder pressure sensor sends a master cylinder pressure signal or the Test Mode ends. DTC C1281/81 is output only in the Test Mode.

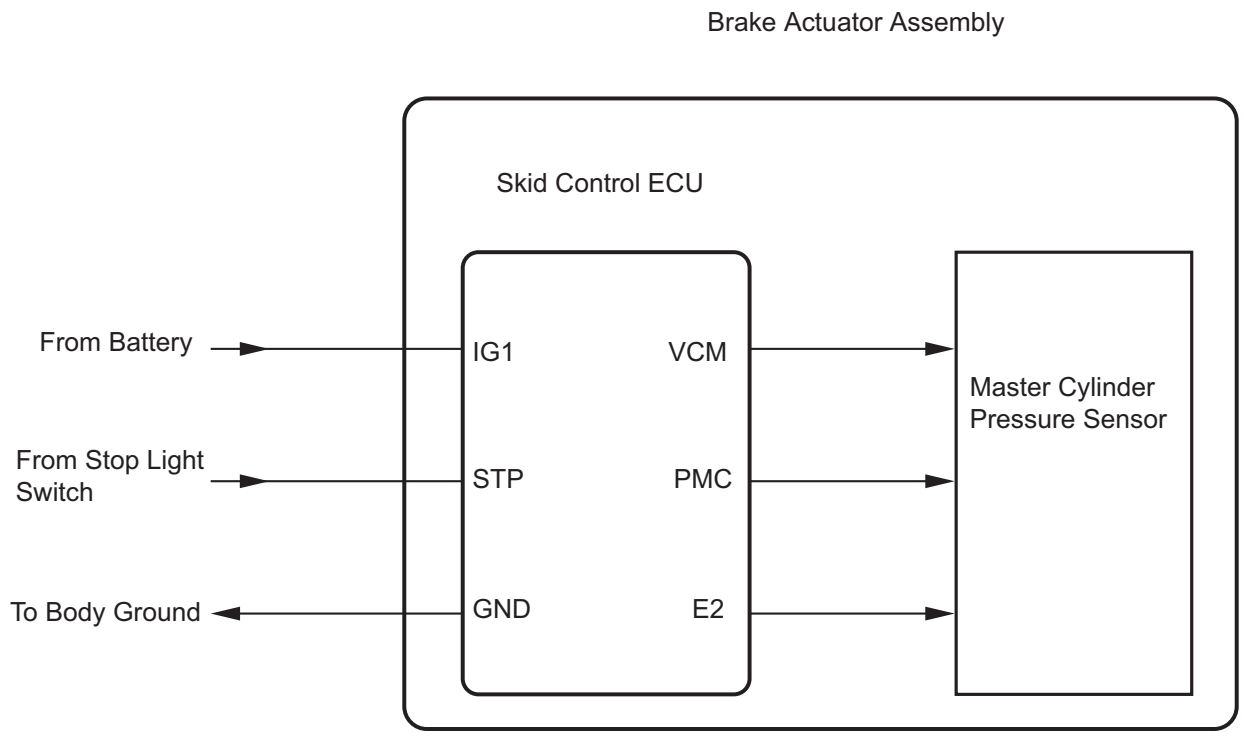

VCM: Power Supply for Master Cylinder Pressure Sensor

PMC: Master Cylinder Pressure Sensor Input

E2: Master Cylinder Pressure Sensor Ground

N

C106656E05

BC

DTC No.	DTC Detection Condition	Trouble Area
C1246/46	When any of the following is detected: • At a vehicle speed of 4.3 mph (7 km/h) or more, when the PMC terminal voltage is over 0.86 V, it does not change by 0.005 V or more for 30 seconds. • Noise occurs in the PMC terminal 7 times or more within 5 seconds. • When the stop light switch is OFF, the PMC terminal voltage is more than 0.86 V or less than 0.3 V for 5 seconds or more. • With the IG1 terminal voltage between 9.5 and 17.2 V, the VCM terminal voltage is not between 4.4 and 5.6 V for 1.2 seconds or more. • When the VCM terminal voltage between 4.4 and 5.6 V, the PCM terminal voltage is not between 0.14 and 4.85 V for 1.2 seconds or more.	• Master cylinder pressure sensor • Master cylinder pressure sensor circuit • Stop light switch circuit • Brake actuator assembly

INSPECTION PROCEDURE

NOTICE:

When replacing the brake actuator assembly, perform zero point calibration (See page BC-119).

BC

1 CHECK STOP LIGHT OPERATION

(a) Check that the stop light comes on when the brake pedal is depressed, and goes off when the brake pedal is released.

OK

Condition	Illumination Condition
Brake pedal depressed	**ON**
Brake pedal released	**OFF**

NG → **INSPECT STOP LIGHT CIRCUIT**

OK

2 READ VALUE OF INTELLIGENT TESTER (MASTER CYLINDER PRESSURE SENSOR)

(a) Connect the intelligent tester to the DLC3.
(b) Start the engine.
(c) Select the Data List mode on the intelligent tester.

ABS / VSC:

Item (Display)	Measurement Item / Range (Display)	Normal Condition
MAS CYL PRESS 1	Master cylinder pressure sensor 1 reading / min.: 0 V, max.: 5 V	When brake pedal is released: 0.3 to 0.5 V

(d) Check that the brake fluid pressure value of the master cylinder pressure sensor observed on the intelligent tester changes when the brake pedal is depressed.
OK:
When the pedal is depressed, voltage displayed on the intelligent tester increases.

NG → **REPLACE BRAKE ACTUATOR ASSEMBLY**

OK

3 READ VALUE OF INTELLIGENT TESTER (STOP LIGHT SWITCH)

(a) Select the Data List mode on the intelligent tester.

ABS / VSC:

Item (Display)	Measurement Item / Range (Display)	Normal Condition
STOP LAMP SW	Stop light switch / ON or OFF	ON: Brake pedal depressed OFF: Brake pedal released

(b) Check that the stop light condition observed on the intelligent tester changes when the brake pedal is depressed.

OK:

When the brake pedal is depressed, the intelligent tester displays "ON".

NG → **REPLACE BRAKE ACTUATOR ASSEMBLY**

OK

BC

4 RECONFIRM DTC

(a) Turn the ignition switch off.
(b) Clear the DTC (See page BC-141).
(c) Start the engine.
(d) At a speed of 18 mph (30 km/h) or more, drive the vehicle and perform braking test (decelerate the vehicle by depressing the brake pedal).
(e) Check if the same DTC is recorded (See page BC-141).

Result

Condition	Proceed to
DTC (C1246/46) is not output	**A**
DTC (C1246/46) is output	**B**

B → **REPLACE BRAKE ACTUATOR ASSEMBLY**

A

USE SIMULATION METHOD TO CHECK

DTC	C1249/49	Open in Stop Light Switch Circuit

DESCRIPTION

The skid control ECU (housed in the actuator assembly) inputs the stop light switch signal and the condition of brake operation.
The skid control ECU has an open detection circuit, which outputs this DTC when detecting an open in the stop light input line while the stop light switch is OFF.

DTC No.	DTC Detection Condition	Trouble Area
C1249/49	When IG1 terminal voltage is 9.5 to 17.2 V, an open circuit of the stop light switch continues for 0.3 seconds or more.	• STOP fuse • Stop light switch • Stop light switch circuit • Brake actuator assembly (Skid control ECU)

WIRING DIAGRAM

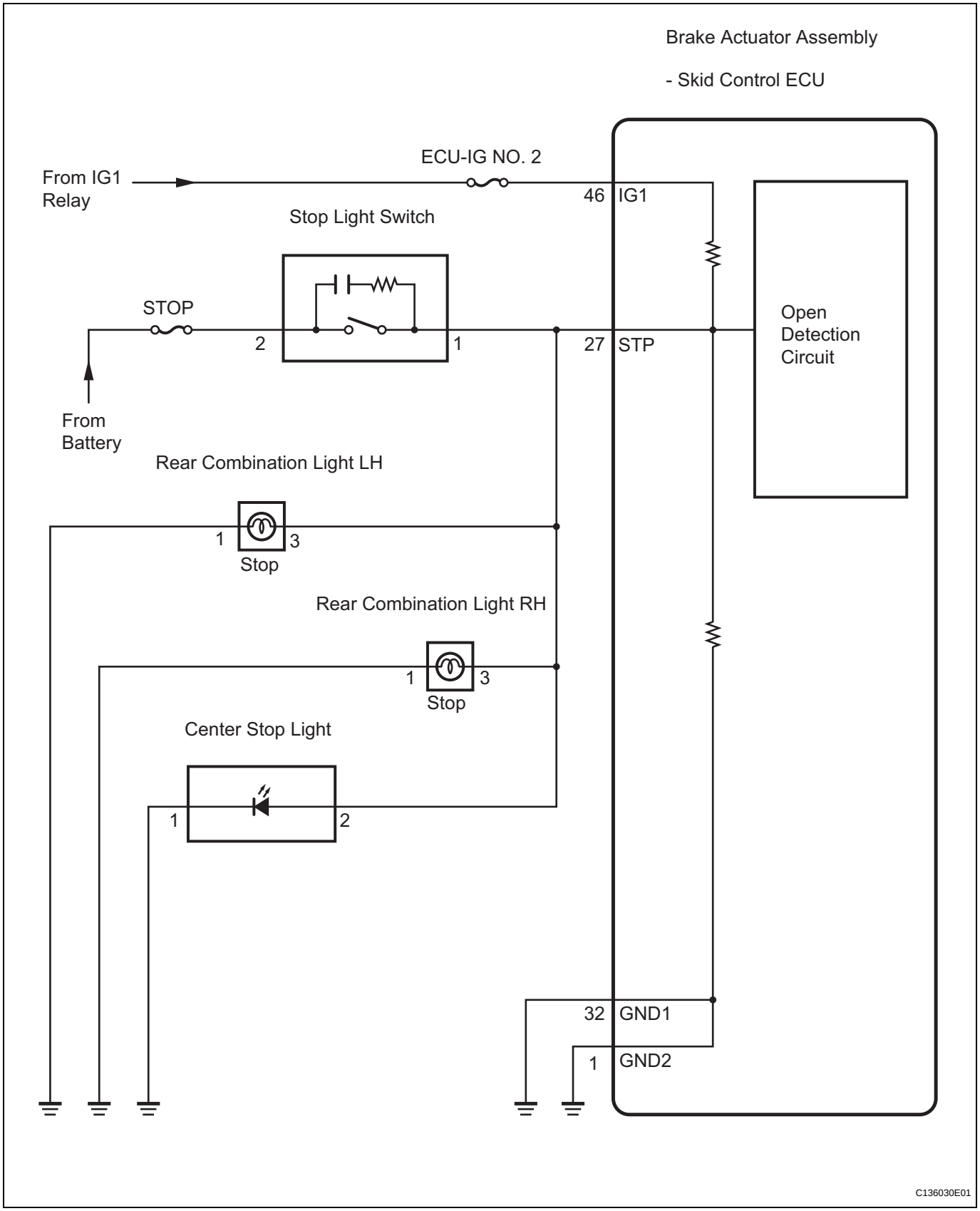

INSPECTION PROCEDURE

NOTICE:

When replacing the brake actuator assembly, perform zero point calibration (See page BC-119).

BC

1 INSPECT STOP FUSE

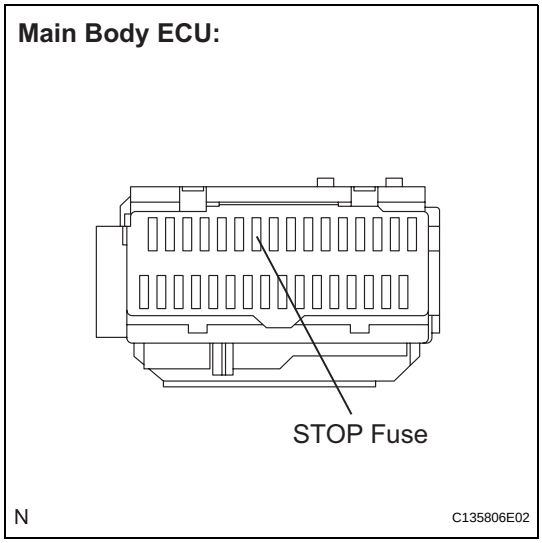

(a) Remove the STOP fuse from the main body ECU.
(b) Measure the resistance according to the value(s) in the table below.

Standard resistance

Tester Connection	Condition	Specified Condition
STOP (10 A) fuse	Always	Below 1 Ω

NG → **REPLACE STOP FUSE**

OK

2 CHECK STOP LIGHT OPERATION

(a) Install the STOP fuse.
(b) Check that the stop light comes on when the brake pedal is depressed, and goes off when the brake pedal is released.

OK

Condition	Illumination Condition
Brake pedal depressed	ON
Brake pedal released	OFF

NG → **Go to step 7**

OK

3 INSPECT SKID CONTROL ECU (STP TERMINAL)

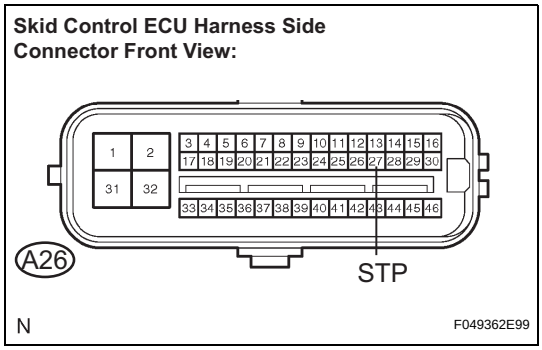

(a) Disconnect the skid control ECU connector.
(b) Measure the voltage according to the value(s) in the table below.

Standard voltage

Tester Connection	Condition	Specified Condition
A26-27 (STP) - Body ground	Stop light switch ON (Brake pedal depressed)	8 to 14 V
A26-27 (STP) - Body ground	Stop light switch OFF (Brake pedal released)	Below 1.5 V

NG → **REPAIR OR REPLACE HARNESS OR CONNECTOR (STP CIRCUIT)**

OK

4 INSPECT SKID CONTROL ECU (IG1 TERMINAL)

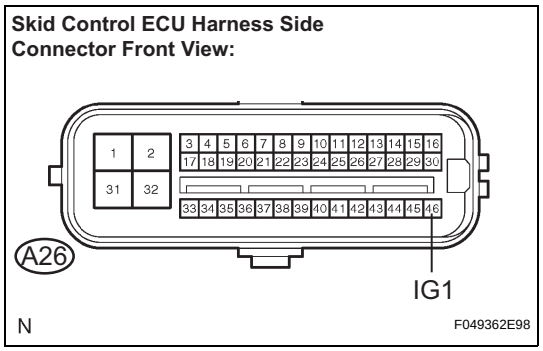

(a) Turn the ignition switch on (IG).
(b) Measure the voltage according to the value(s) in the table below.

Standard voltage

Tester Connection	Condition	Specified Condition
A26-46 (IG1) - Body ground	Ignition switch on (IG)	10 to 14 V

NG → **REPAIR OR REPLACE HARNESS OR CONNECTOR (IG1 CIRCUIT)**

OK

BC

5 INSPECT SKID CONTROL ECU (GND TERMINAL)

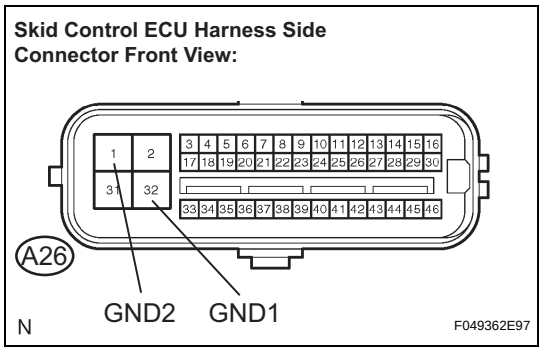

(a) Turn the ignition switch off.
(b) Measure the resistance according to the value(s) in the table below.

Standard resistance

Tester Connection	Condition	Specified Condition
A26-32 (GND1) - Body ground	Always	Below 1 Ω
A26-1 (GND2) - Body ground	Always	Below 1 Ω

NG → **REPAIR OR REPLACE HARNESS OR CONNECTOR (GND CIRCUIT)**

OK

6 RECONFIRM DTC

(a) Reconnect the skid control ECU connector.
(b) Clear the DTC (See page BC-141).
(c) Start the engine.
(d) Depress the brake pedal several times to test the stop light circuit.
(e) Check if the same DTC is recorded (See page BC-141).

Result

Condition	Proceed to
DTC (C1249/49) is not output	A
DTC (C1249/49) is output	B

HINT:
If troubleshooting has been carried out according to the Problem Symptoms Table, refer back to the table and proceed to the next step (See page BC-134).

B → **REPLACE BRAKE ACTUATOR ASSEMBLY**

A

USE SIMULATION METHOD TO CHECK

7 INSPECT STOP LIGHT SWITCH (POWER SOURCE TERMINAL)

Stop Light Switch Harness Side Connector Front View:

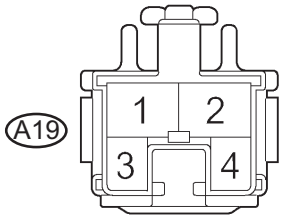

I042363E16

(a) Disconnect the stop light switch connector.
(b) Measure the voltage according to the value(s) in the table below.

Standard voltage

Tester Connection	Condition	Specified Condition
A19-2 - Body ground	Always	10 to 14 V

NG → **REPAIR OR REPLACE HARNESS OR CONNECTOR (POWER SOURCE CIRCUIT)**

OK

8 INSPECT STOP LIGHT SWITCH

Stop Light Switch:

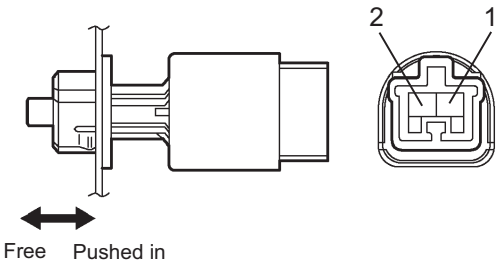

C124796E03

(a) Measure the resistance according to the value(s) in the table below.

Standard resistance

Tester Connection	Condition	Specified Condition
1 - 2	Switch pin free	Below 1 Ω
1 - 2	Switch pin pushed in	10 kΩ or higher

NG → **REPLACE STOP LIGHT SWITCH**

OK

BC

9 CHECK HARNESS AND CONNECTOR (SKID CONTROL ECU - STOP LIGHT SWITCH)

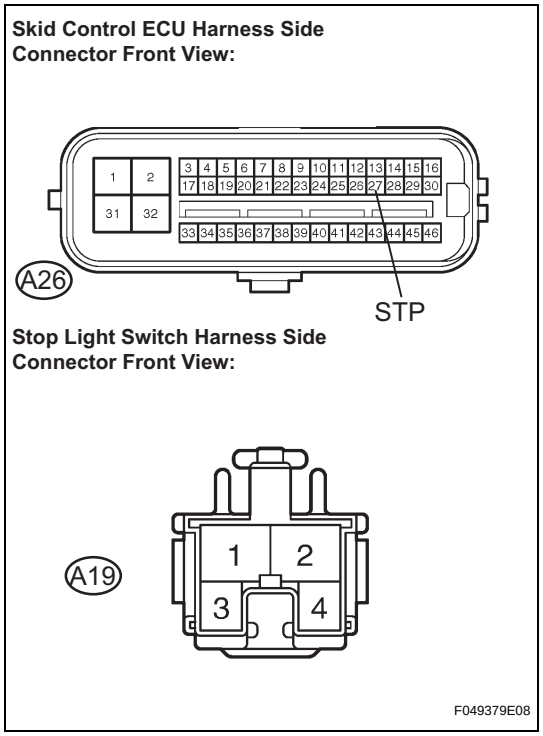

(a) Disconnect the skid control ECU connector.
(b) Measure the resistance according to the value(s) in the table below.

Standard resistance

Tester Connection	Condition	Specified Condition
A26-27 (STP) - A19-1	Always	Below 1 Ω
A26-27 (STP) - Body ground	Always	10 kΩ or higher

NG → **REPAIR OR REPLACE HARNESS OR CONNECTOR**

OK

10 RECONFIRM DTC

(a) Reconnect the skid control ECU connector and the stop light switch connector.
(b) Clear the DTC (See page BC-141).
(c) Start the engine.
(d) Depress the brake pedal several times to test the stop light circuit.
(e) Check if the same DTC is recorded (See page BC-141).

Result

Condition	Proceed to
DTC (C1249/49) is not output	A
DTC (C1249/49) is output	B

HINT:
If troubleshooting has been carried out according to the Problem Symptoms Table, refer back to the table and proceed to the next step (See page BC-134).

B → **REPLACE BRAKE ACTUATOR ASSEMBLY**

A

INSPECT LIGHTING SYSTEM (STOP LIGHT CIRCUIT)

BC

DTC	C1251/51	Open in Pump Motor Circuit

DESCRIPTION

DTC No.	DTC Detection Condition	Trouble Area
C1251/51	• Actuator pump motor does not operate properly. • Open in actuator pump motor circuit continues for at least 2 seconds.	• Brake actuator assembly (GND circuit) • Brake actuator assembly (Motor circuit)

WIRING DIAGRAM

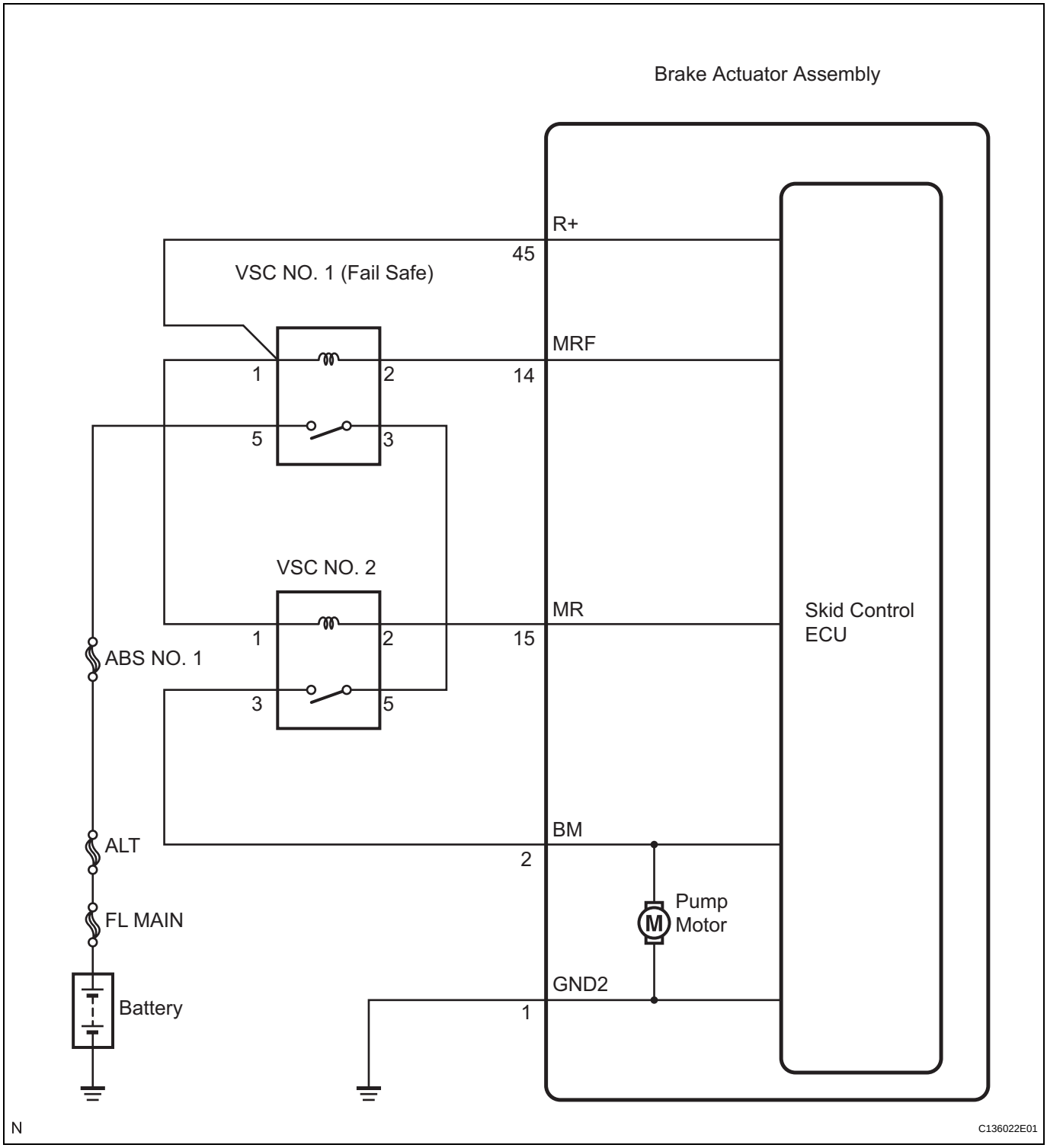

BC

INSPECTION PROCEDURE

NOTICE:

When replacing the brake actuator assembly, perform zero point calibration (See page BC-119).

1 PERFORM ACTIVE TEST BY INTELLIGENT TESTER (ABS MOTOR RELAY)

(a) Connect the intelligent tester to the DLC3.
(b) Start the engine.
(c) Select the Active Test mode on the intelligent tester.

ABS / VSC:

Item (Display)	Vehicle Condition / Test Details	Diagnostic Note
MOTOR RELAY	Turns ABS motor relay ON / OFF	Operating sound of relay (clicking sound) and motor can be heard

(d) Check the operating sound of the ABS motor relay and motor when operating it with the intelligent tester.
OK:
The operating sound of the ABS motor relay and motor can be heard.

OK → **Go to step 3**

NG

BC

2 INSPECT SKID CONTROL ECU (GND2 TERMINAL)

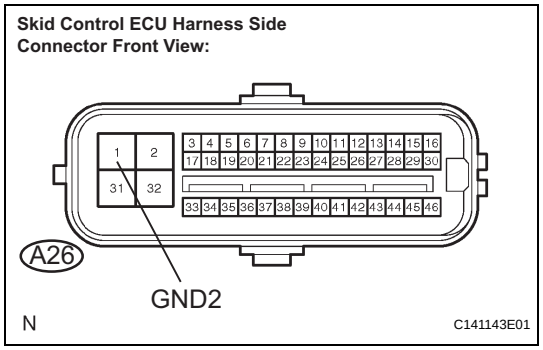

(a) Turn the ignition switch off.
(b) Disconnect the skid control ECU connector.
(c) Measure the resistance according to the value(s) in the table below.
Standard resistance

Tester Connection	Condition	Specified Condition
A26-1 (GND2) - Body ground	Always	Below 1 Ω

NG → **REPAIR OR REPLACE HARNESS OR CONNECTOR (GND2 CIRCUIT)**

OK

3 RECONFIRM DTC

(a) Reconnect the skid control ECU connector.
(b) Clear the DTC (See page BC-141).
(c) Start the engine.
(d) Drive the vehicle at the speed of 4.3 mph (7 km/h) or more.
(e) Check if the same DTC is recorded (See page BC-141).

Result

Condition	Proceed to
DTC (C1251/51) is not output	A
DTC (C1251/51) is output	B

HINT:

- If a speed signal of 4 mph (6 km/h) or more is input to the skid control ECU, with the ignition switch on (IG) and the stop light switch off, the ECU performs self diagnosis of the motor and solenoid circuits.
- If a normal system code is output (the trouble code is not output), slightly jiggle the connectors, wire harness, and fuses of the brake actuator assembly. Make sure that no DTCs are output.
- If any DTCs are output while jiggling a connector or wire harness of the brake actuator assembly (skid control ECU), inspect and repair the connector or wire harness.

B → **REPLACE BRAKE ACTUATOR ASSEMBLY**

A

BC

USE SIMULATION METHOD TO CHECK

DTC	C1290/66	Steering Angle Sensor Zero Point Malfunction

DESCRIPTION

The skid control ECU acquires steering angle sensor zero point every time the ignition switch is turned on (IG) and the vehicle is driven at 22 mph (35 km/h) or more for approximately 5 seconds. The ECU also stores the previous zero point.
If front wheel alignment or steering wheel position is adjusted without disconnecting the negative battery terminal, or if yaw rate and acceleration sensor zero point is not acquired after the adjustments have been completed, the skid control ECU detects the difference between the previous zero point and newly acquired zero point and outputs this DTC to indicate a poor adjustment.
Warning of the steering angle sensor zero point malfunction will be cancelled by turning the ignition switch off.

DTC No.	DTC Detection Condition	Trouble Area
C1290/66	The steering angle sensor zero point calibration position vastly differs from the recorded value	• Yaw rate and acceleration sensor zero point calibration incomplete • Poor adjustment of the centered position of the steering wheel • Poor adjustment of front wheel alignment

BC

INSPECTION PROCEDURE

NOTICE:
When replacing the brake actuator assembly, perform zero point calibration (See page BC-119).

1	PERFORM ZERO POINT CALIBRATION OF YAW RATE AND ACCELERATION SENSOR

(a) Perform zero point calibration of the yaw rate and acceleration sensor (See page BC-119).
HINT:
- When the stored zero point of the yaw rate and acceleration sensor is erased, steering angle sensor zero point will also be erased.
- If the zero point and output value of the yaw rate and acceleration sensor and the output value of the speed sensors are not normal, steering angle sensor zero point cannot be acquired normally even if the vehicle is driven straight ahead at 22 mph (35 km/h) or more.

NEXT

2	CHECK STEERING ANGLE SENSOR ZERO POINT CALIBRATION

(a) Drive the vehicle straight ahead at 22 mph (35 km/h) or more for at least 5 seconds.
(b) Check that the centered position of the steering wheel is correctly set while driving straight ahead.
HINT:
If front wheel alignment and steering position are adjusted as a result of abnormal centered position of the steering wheel, acquire yaw rate and acceleration sensor zero point again after the adjustments are completed.

OK:
The centered position of the steering wheel is correctly set.

NG → **ADJUST FRONT WHEEL ALIGNMENT OR STEERING POSITION**

OK

3	RECONFIRM DTC

(a) Turn the ignition switch off.
(b) Clear the DTC (See page BC-141).
(c) Start the engine.
(d) Drive the vehicle and turn the steering wheel to the right and left at the speed of 22 mph (35 km/h) or more.
(e) Check if the same DTC is recorded (See page BC-141).

Result

BC

Condition	Proceed to
DTC (C1290/66) is not output	A
DTC (C1290/66) is output	B

B → **REPLACE BRAKE ACTUATOR ASSEMBLY**

A

END

DTC	U0073/94	Control Module Communication Bus OFF

DTC	U0100/65	Lost Communication with ECM / PCM

DTC	U0123/62	Lost Communication with Yaw Rate Sensor Module

DTC	U0124/95	Lost Communication with Lateral Acceleration Sensor Module

DTC	U0126/63	Lost Communication with Steering Angle Sensor Module

DESCRIPTION

The skid control ECU receives the signals from the ECM, steering angle sensor, and yaw rate and acceleration sensor via the CAN communication system.

BC

DTC No.	DTC Detection Condition	Trouble Area
U0073/94	When any of the following is detected: 1. With the IG1 terminal voltage 10 V or more, after the output of data from the skid control ECU is completed, the sending continues for 5 seconds or more. 2. With the IG1 terminal voltage 10 V or more, the condition that bus OFF state occurs once or more within 100 ms occurs 10 times in succession. (Sent signals cannot be received.) 3. With the IG1 terminal voltage 10 V or more, a delay in receiving data from the yaw rate and acceleration sensor and steering angle sensor continues for 1 second or more. 4. With the IG1 terminal voltage 10 V or more, the condition that a delay in receiving data from the yaw rate and acceleration sensor and steering angle sensor occurs more than once within 5 seconds occurs 10 times in succession within 60 seconds.	CAN communication system
U0100/65	When either of the following is detected: 1. With the IG1 terminal voltage 10 V or more and the vehicle speed 9 mph (15 km/h) or more, data cannot be sent to the ECM for 2 seconds or more. 2. The IG1 terminal voltage 10 V or more and the vehicle speed 9 mph (15 km/h) or more for 2 seconds or more.	CAN communication system (Skid control ECU to ECM)
U0123/62	When either of the following is detected: 1. With the IG1 terminal voltage 10 V or more, data from the yaw rate sensor cannot be received for 1 second or more. 2. With the IG1 terminal voltage 10 V or more, the following occurs 10 times in succession within 60 seconds. • The condition that data from the yaw rate sensor cannot be received occurs once or more within 5 seconds.	CAN communication system (Skid control ECU to yaw rate and acceleration sensor)
U0124/95	When either of the following is detected: 1. With the IG1 terminal voltage 10 V or more, data from the acceleration sensor cannot be received for 1 second or more. 2. With the IG1 terminal voltage 10 V or more, the following occurs 10 times in succession within 60 seconds. • The condition that data from the acceleration sensor cannot be received occurs once or more within 5 seconds.	CAN communication system (Skid control ECU to yaw rate and acceleration sensor)

DTC No.	DTC Detection Condition	Trouble Area
U0126/63	When either of the following is detected: 1. With the IG1 terminal voltage 10 V or more, data from the steering angle sensor cannot be received for 1 second or more. 2. With the IG1 terminal voltage 10 V or more, the following occurs 10 times in succession within 60 seconds. • The condition that data from the steering angle sensor cannot be received occurs once or more within 5 seconds.	CAN communication system (Skid control ECU to steering angle sensor)

WIRING DIAGRAM

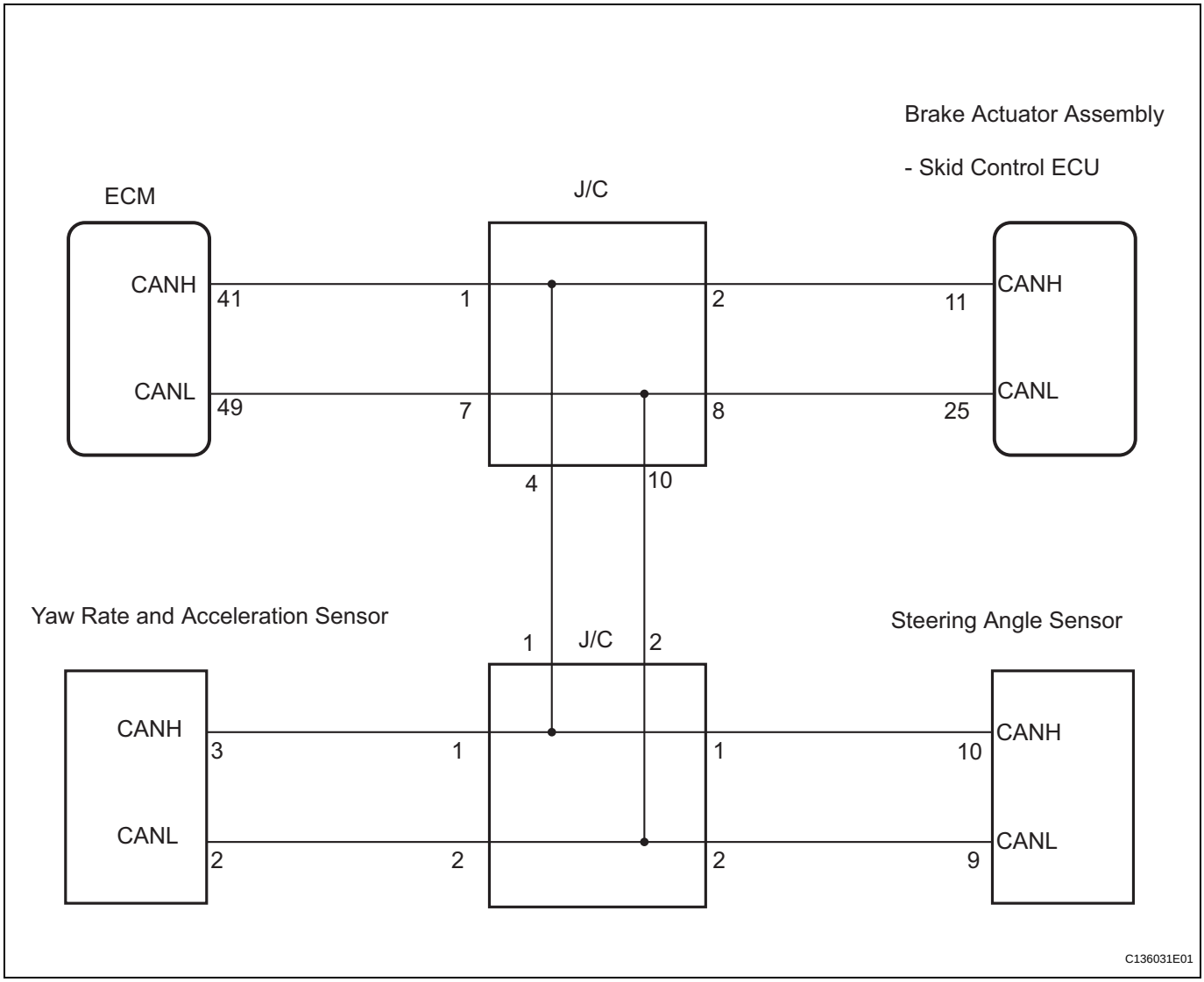

BC

INSPECTION PROCEDURE

1 CHECK HARNESS AND CONNECTOR (MOMENTARY INTERRUPTION)

(a) Using the intelligent tester, check for any momentary interruption in the wire harness and connector corresponding to a DTC (See page BC-118).

ABS / VSC:

Item (Display)	Measurement Item / Range (Display)	Normal Condition
EFI COM OPN	EFI communication open detection / ERROR or NORMAL	ERROR: Momentary interruption NORMAL: Normal
STEERING OPN	Steering sensor open detection / ERROR or NORMAL	ERROR: Momentary interruption NORMAL: Normal
YAW RATE OPN	Yaw rate sensor open detection / ERROR or NORMAL	ERROR: Momentary interruption NORMAL: Normal

Result

Condition	Proceed to
There is a constant open circuit	**A**
There are no momentary interruptions	**B**
There are momentary interruptions	**C**

BC

HINT:
Perform the above inspection before removing the sensor and connector.

B → **Go to step 3**

C → **Go to step 4**

A

2 CHECK IF EACH SENSOR AND ECM CONNECTOR IS SECURELY CONNECTED

(a) Turn the ignition switch off.
(b) Check if each sensor or ECM connector is securely connected.
OK:
The connector should be securely connected.

NG → **CONNECT CONNECTOR TO EACH SENSOR OR ECM CORRECTLY**

OK

3 RECONFIRM DTC

(a) Turn the ignition switch off.
(b) Record the output DTCs (for ABS, VSC, and CAN communication) (See page BC-141).

HINT:
If the CAN communication system DTC and the relevant sensor DTCs are output simultaneously, troubleshoot the relevant sensor DTCs (for ABS and VSC) after the CAN communication system returns to normal.

Result

Condition	Proceed to
DTC (CAN communication system DTC) is output	A
DTC (ABS and/or VSC DTC) is output	B
DTC is not output	C

B → **REPAIR CIRCUIT INDICATED BY OUTPUT DTC (See page BC-151)**

C → **USE SIMULATION METHOD TO CHECK**

A

BC

INSPECT CAN COMMUNICATION SYSTEM

4 REPAIR OR REPLACE HARNESS OR CONNECTOR

(a) Turn the ignition switch off.
(b) Repair or replace the harness or connector.
(c) Check for any momentary interruption between the skid control ECU and each sensor or ECM (See page BC-118).
(d) Check that there is no momentary interruption.

NEXT

5 RECONFIRM DTC

(a) Turn the ignition switch off.
(b) Clear the DTC (See page BC-141).
(c) Start the engine.
(d) Drive the vehicle and turn the steering wheel to the right and left at a speed of 9 mph (15 km/h) or more.
(e) Check that no CAN communication system DTC is output.
(f) If ABS and VSC DTCs are output, record them.

Result

Condition	Proceed to
DTC output for the CAN communication system	A
No DTC is output (ABS and/or VSC DTC is output)	B
No DTC is output (No ABS and/or VSC DTC is output)	C

HINT:
The CAN communication system must be normal when repairing each sensor DTC (for ABS and VSC).

B → **REPAIR CIRCUIT INDICATED BY OUTPUT DTC (See page BC-151)**

C → **END**

A

INSPECT CAN COMMUNICATION SYSTEM

ABS Warning Light Remains ON

DESCRIPTION

The skid control ECU is connected to the combination meter via CAN communication.
If any of the following is detected, the ABS warning light remains on.

- The skid control ECU connectors are disconnected from the skid control ECU.
- There is a malfunction in the skid control ECU internal circuit.
- There is an open in the harness between the combination meter and the skid control ECU.

HINT:
In some cases, the intelligent tester cannot be used when the skid control ECU is abnormal.

WIRING DIAGRAM

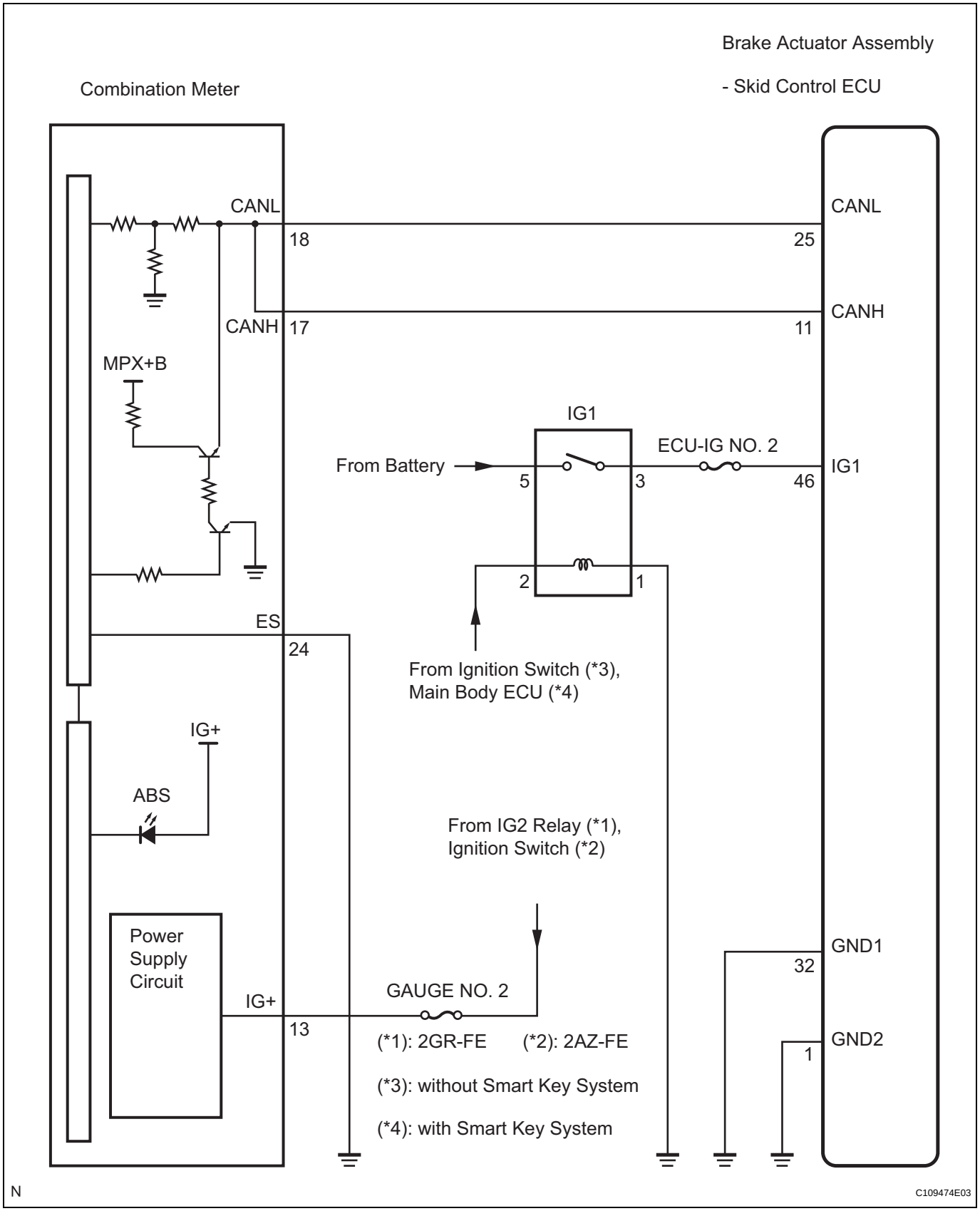

INSPECTION PROCEDURE

NOTICE:

When replacing the brake actuator assembly, perform zero point calibration (See page BC-119).

BC

1 CHECK CAN COMMUNICATION SYSTEM

(a) Check if the CAN communication system DTC is output (See page CA-25).

Result

Condition	Proceed to
DTC is not output	A
DTC is output	B

B → **INSPECT CAN COMMUNICATION SYSTEM**

A

2 CHECK IF SKID CONTROL ECU CONNECTOR IS SECURELY CONNECTED

BC

(a) Check if the skid control ECU connector is securely connected.
OK:
The connector should be securely connected.

NG → **CONNECT CONNECTOR TO ECU CORRECTLY**

OK

3 CHECK BATTERY

(a) Check the battery voltage.
Standard voltage:
11 to 14 V

NG → **CHECK AND REPLACE CHARGING SYSTEM OR BATTERY**

OK

4 INSPECT SKID CONTROL ECU (IG1 TERMINAL)

Skid Control ECU Harness Side Connector Front View:

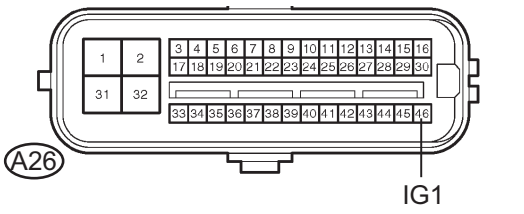

(a) Disconnect the skid control ECU connector.
(b) Turn the ignition switch on (IG).
(c) Measure the voltage according to the value(s) in the table below.
Standard voltage

Tester Connection	Condition	Specified Condition
A26-46 (IG1) - Body ground	Ignition switch on (IG)	10 to 14 V

NG → **REPAIR OR REPLACE HARNESS OR CONNECTOR (IG1 CIRCUIT)**

OK

5 INSPECT SKID CONTROL ECU (GND TERMINAL)

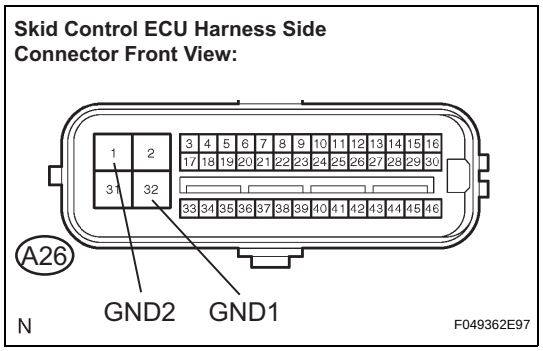

(a) Turn the ignition switch off.
(b) Measure the resistance according to the value(s) in the table below.
Standard resistance

Tester Connection	Condition	Specified Condition
A26-32 (GND1) - Body ground	Always	Below 1 Ω
A26-1 (GND2) - Body ground	Always	Below 1 Ω

NG → **REPAIR OR REPLACE HARNESS OR CONNECTOR (GND CIRCUIT)**

OK

BC

6 INSPECT COMBINATION METER ASSEMBLY

(a) Reconnect the skid control ECU connector.
(b) Perform Active Test of the combination meter (meter CPU) using the intelligent tester (See page ME-32).
OK:
The ABS warning light turns on or off in accordance with the intelligent tester.
HINT:
If troubleshooting has been carried out according to the Problem Symptoms Table, refer back to the table and proceed to the next step before replacing the part (See page BC-134).

NG → **REPLACE COMBINATION METER ASSEMBLY**

OK

REPLACE BRAKE ACTUATOR ASSEMBLY

ABS Warning Light does not Come ON

DESCRIPTION

The skid control ECU is connected to the combination meter via CAN communication.

WIRING DIAGRAM

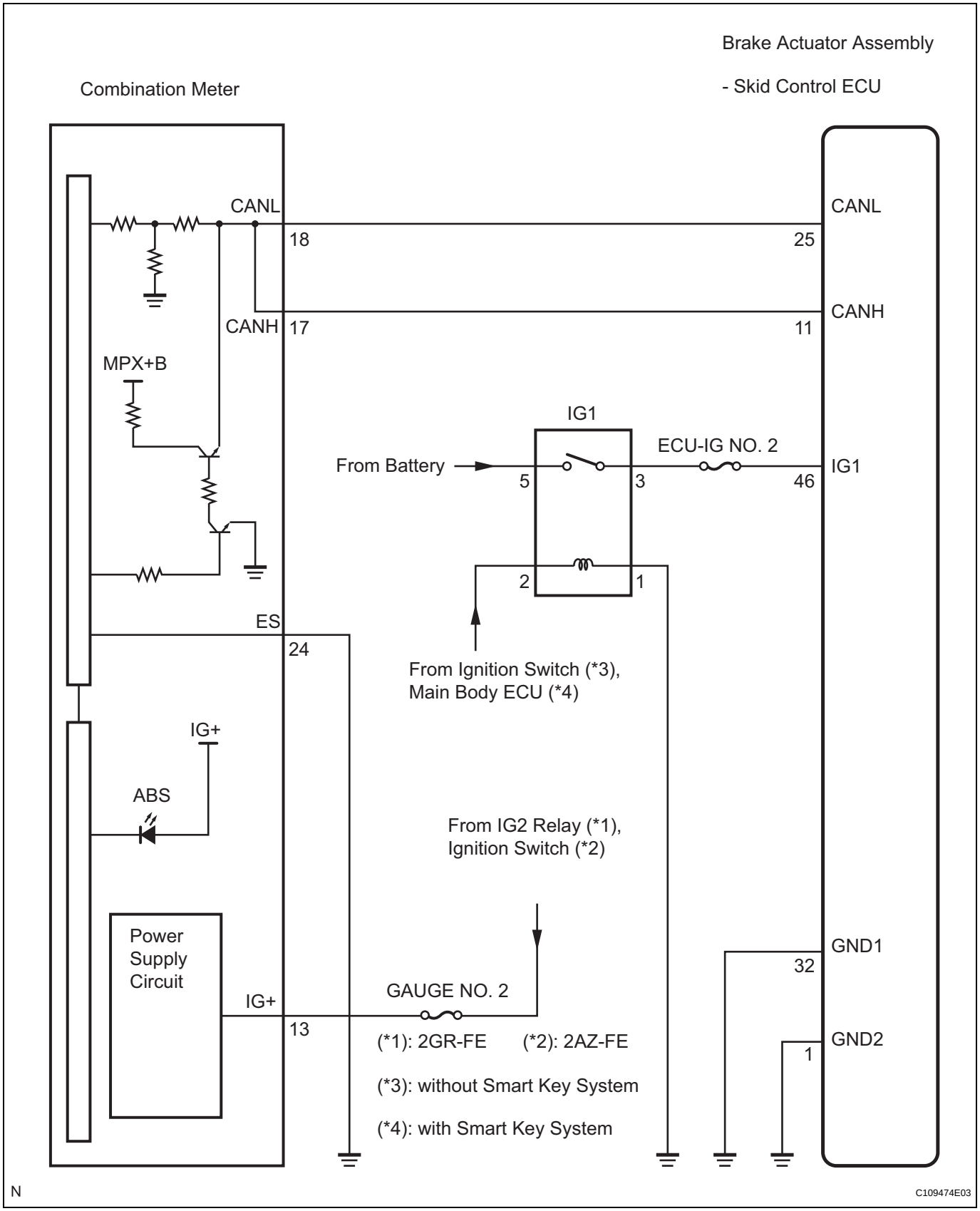

INSPECTION PROCEDURE

NOTICE:

When replacing the brake actuator assembly, perform zero point calibration (See page BC-119).

BC

1	CHECK CAN COMMUNICATION SYSTEM

(a) Check if the CAN communication system DTC is output (See page CA-25).

Result

Condition	Proceed to
DTC is not output	A
DTC is output	B

B → **INSPECT CAN COMMUNICATION SYSTEM**

A

2	CHECK ABS WARNING LIGHT

BC

(a) Disconnect the skid control ECU connector.
(b) Turn the ignition switch on (IG).
(c) Check that the ABS warning light comes on.
OK:
The ABS warning light comes on.
HINT:
If troubleshooting has been carried out according to the Problem Symptoms Table, refer back to the table and proceed to the next step before replacing the part (See page BC-134).

OK → **REPLACE BRAKE ACTUATOR ASSEMBLY**

NG

3	INSPECT COMBINATION METER ASSEMBLY

(a) Turn the ignition switch off.
(b) Reconnect the skid control ECU connector.
(c) Perform Active Test of the combination meter (meter CPU) using the intelligent tester (See page ME-32).
OK:
The ABS warning light turns on or off in accordance with the intelligent tester.
HINT:
If troubleshooting has been carried out according to the Problem Symptoms Table, refer back to the table and proceed to the next step (See page BC-134).

NG → **REPLACE COMBINATION METER ASSEMBLY**

OK

REPLACE BRAKE ACTUATOR ASSEMBLY

VSC Warning Light Remains ON

DESCRIPTION

The skid control ECU communicates with the combination meter via CAN communication. If the ECU stores a DTC, the DTC will be displayed on the multi information display in the combination meter (models with multi information display). On models without a multi information display, the VSC warning light will come on when the skid control ECU stores a DTC.

WIRING DIAGRAM

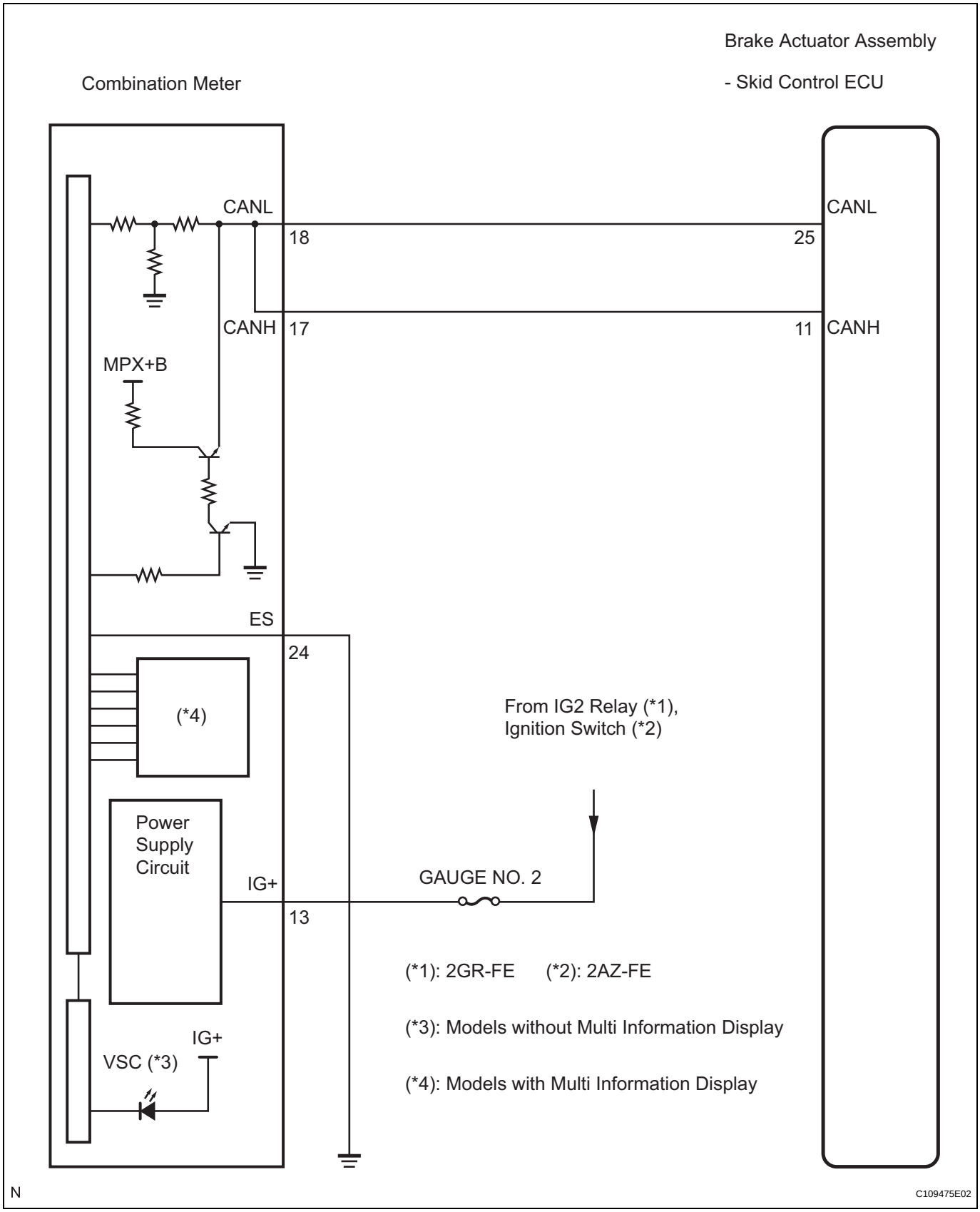

INSPECTION PROCEDURE

NOTICE:

When replacing the brake actuator assembly, perform zero point calibration (See page BC-119).

1	CHECK CAN COMMUNICATION SYSTEM

(a) Check if the CAN communication system DTC is output (See page CA-25).

Result

Condition	Proceed to
DTC is not output	A
DTC is output	B

B → **INSPECT CAN COMMUNICATION SYSTEM**

A

2	CHECK IF SKID CONTROL ECU CONNECTOR IS SECURELY CONNECTED

(a) Check if the skid control ECU connector is securely connected.
OK:
The connector should be securely connected.

NG → **CONNECT CONNECTOR TO ECU CORRECTLY**

OK

3	CHECK BATTERY

(a) Check the battery voltage.
Standard voltage:
11 to 14 V

NG → **CHECK AND REPLACE CHARGING SYSTEM OR BATTERY**

OK

4	INSPECT COMBINATION METER ASSEMBLY

(a) Perform Active Test of the combination meter (meter CPU) using the intelligent tester (See page ME-32).
OK:
The VSC warning light (models without multi information display) or multi information display (models with multi information display) turns on or off in accordance with the intelligent tester.
HINT:
If troubleshooting has been carried out according to the Problem Symptoms Table, refer back to the table and proceed to the next step before replacing the part (See page BC-134).

BC

NG → **REPLACE COMBINATION METER ASSEMBLY**

OK

REPLACE BRAKE ACTUATOR ASSEMBLY

VSC Warning Light does not Come ON

DESCRIPTION

The skid control ECU communicates with the combination meter via CAN communication. If the ECU stores a DTC, the DTC will be displayed on the multi information display in the combination meter (models with multi information display). On models without a multi information display, the VSC warning light will come on when the skid control ECU stores a DTC.

WIRING DIAGRAM

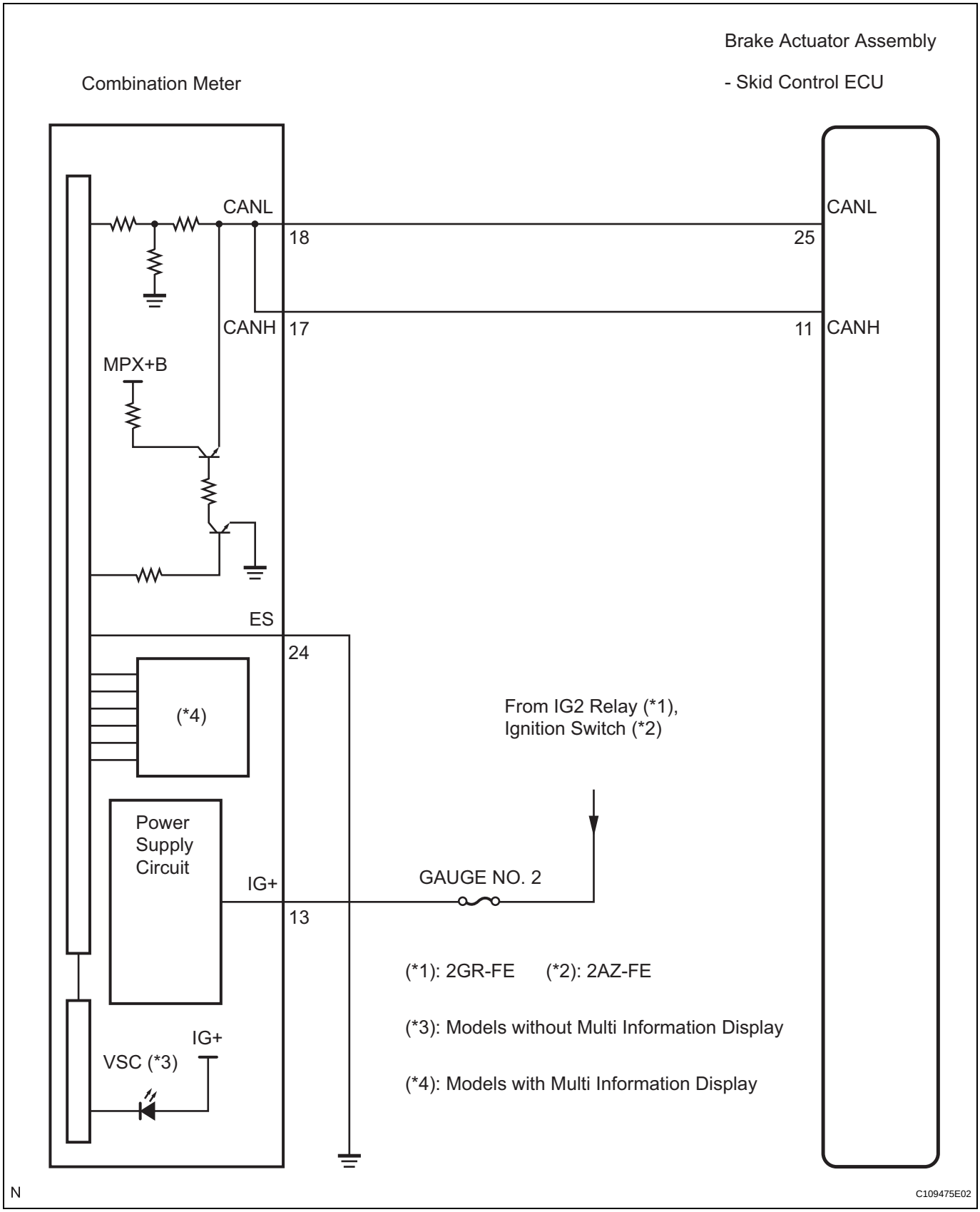

INSPECTION PROCEDURE

NOTICE:

When replacing the brake actuator assembly, perform zero point calibration (See page BC-119).

1 CHECK CAN COMMUNICATION SYSTEM

(a) Check if the CAN communication system DTC is output (See page CA-25).

Result

Condition	Proceed to
DTC is not output	A
DTC is output	B

B → **INSPECT CAN COMMUNICATION SYSTEM**

A

2 CHECK VSC WARNING LIGHT

(a) Connect the intelligent tester to the DLC3.
(b) Start the engine.
(c) Select "VSC WARN LAMP" in the Active Test and operate the VSC warning light (models without multi information display) or multi information display (models with multi information display) using the intelligent tester.

ABS / VSC:

Item (Display)	Vehicle Condition / Test Details	Diagnostic Note
VSC WARN LAMP	Turn VSC warning light (*1) or multi information display (*2) ON / OFF	Observe combination meter

(*1): Models without multi information display
(*2): Models with multi information display

(d) Check that "ON" and "OFF" of the VSC warning light (models without multi information display) or multi information display (models with multi information display) are indicated on the combination meter when using the intelligent tester.

OK:

The VSC warning light (models without multi information display) or multi information display (models with multi information display) turns on or off in accordance with the intelligent tester.

HINT:
If troubleshooting has been carried out according to the Problem Symptoms Table, refer back to the table and proceed to the next step before replacing the part (See page BC-134).

OK → **REPLACE BRAKE ACTUATOR ASSEMBLY**

NG

3 INSPECT COMBINATION METER ASSEMBLY

(a) Turn the ignition switch off.

BC

(b) Perform Active Test of the combination meter (meter CPU) using the intelligent tester (See page ME-32).

OK:

The VSC warning light (models without multi information display) or multi information display (models with multi information display) turns on or off in accordance with the intelligent tester.

HINT:

If troubleshooting has been carried out according to the Problem Symptoms Table, refer back to the table and proceed to the next step (See page BC-134).

NG → **REPLACE COMBINATION METER ASSEMBLY**

OK

REPLACE BRAKE ACTUATOR ASSEMBLY

Brake Warning Light Remains ON

DESCRIPTION

The skid control ECU is connected to the combination meter via CAN communication.
If any of the following is detected, the BRAKE warning light remains on:

- The skid control ECU connector is disconnected from the skid control ECU.
- The brake fluid level is insufficient.
- The parking brake is applied.
- EBD operation is not possible.

WIRING DIAGRAM

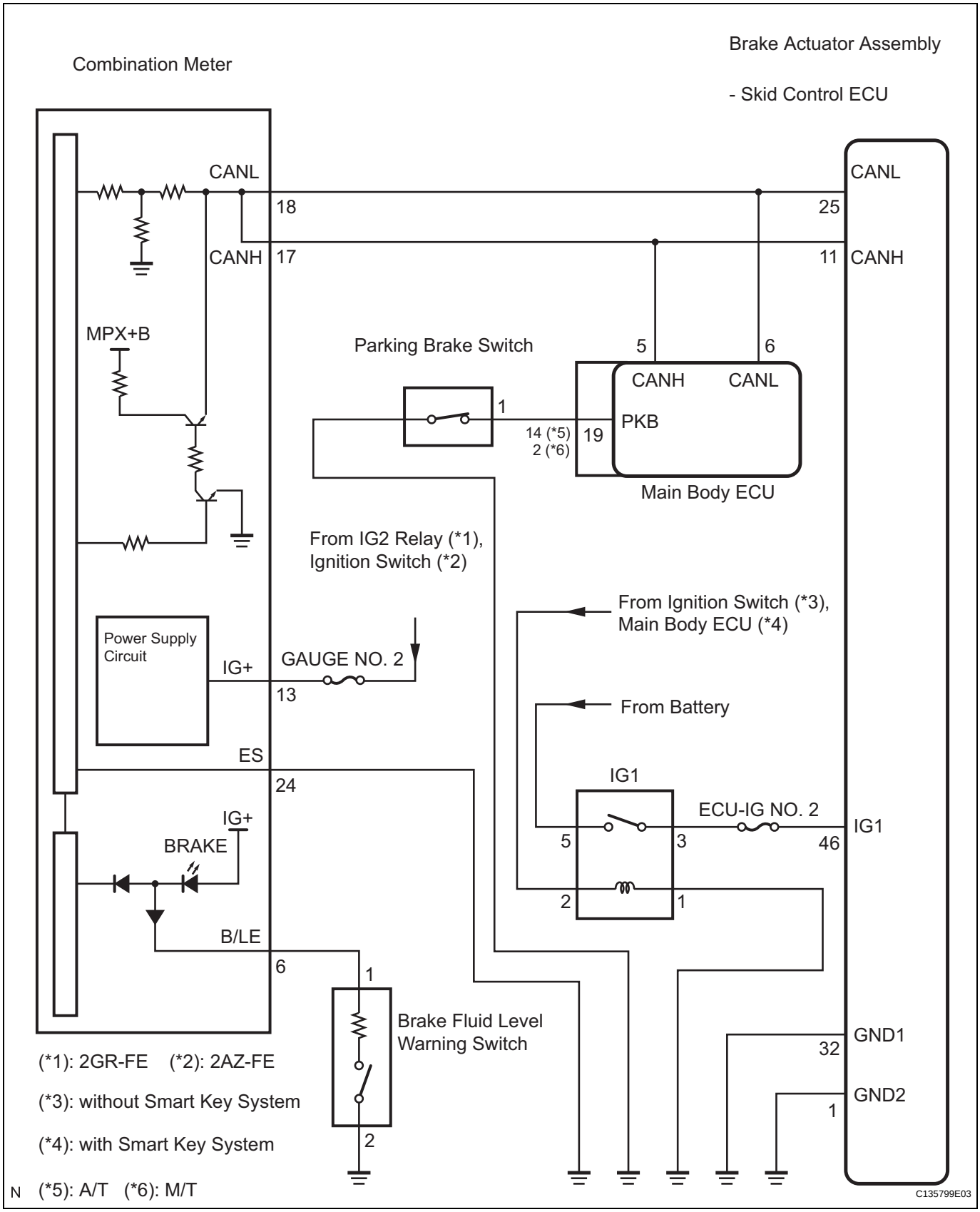

INSPECTION PROCEDURE

NOTICE:

When replacing the brake actuator assembly, perform zero point calibration (See page BC-119).

1 CHECK CAN COMMUNICATION SYSTEM

(a) Check if the CAN communication system DTC is output (See page CA-25).

Result

Condition	Proceed to
DTC is not output	A
DTC is output	B

B → **INSPECT CAN COMMUNICATION SYSTEM**

A

2 CHECK IF SKID CONTROL ECU CONNECTOR IS SECURELY CONNECTED

(a) Check if the skid control ECU connector is securely connected.
OK:
The connector should be securely connected.

NG → **CONNECT CONNECTOR TO ECU CORRECTLY**

OK

3 CHECK BATTERY

(a) Check the battery voltage.
Standard voltage:
11 to 14 V

NG → **CHECK AND REPLACE CHARGING SYSTEM OR BATTERY**

OK

4 INSPECT SKID CONTROL ECU (IG1 TERMINAL)

Skid Control ECU Harness Side Connector Front View:

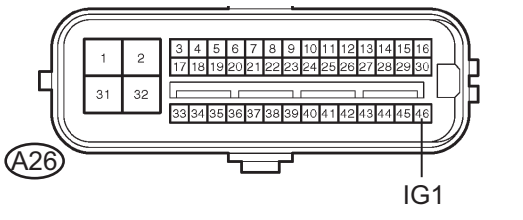

(a) Disconnect the skid control ECU connector.
(b) Turn the ignition switch on (IG).
(c) Measure the voltage according to the value(s) in the table below.
Standard voltage

Tester Connection	Condition	Specified Condition
A26-46 (IG1) - Body ground	Ignition switch on (IG)	10 to 14 V

NG → **REPAIR OR REPLACE HARNESS OR CONNECTOR (IG1 CIRCUIT)**

BC

OK

5 INSPECT SKID CONTROL ECU (GND TERMINAL)

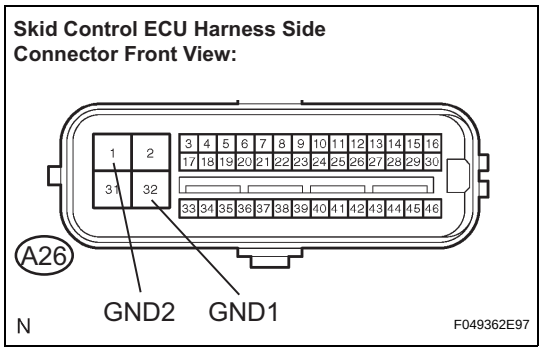

(a) Turn the ignition switch off.
(b) Measure the resistance according to the value(s) in the table below.

Standard resistance

Tester Connection	Condition	Specified Condition
A26-32 (GND1) - Body ground	Always	Below 1 Ω
A26-1 (GND2) - Body ground	Always	Below 1 Ω

NG → **REPAIR OR REPLACE HARNESS OR CONNECTOR (GND CIRCUIT)**

OK

BC

6 INSPECT PARKING BRAKE SWITCH

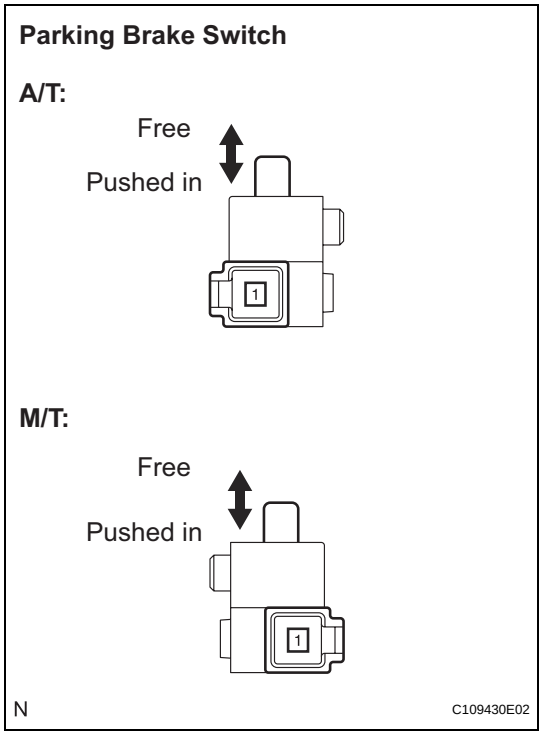

(a) Disconnect the parking brake switch connector.
(b) Measure the resistance according to the value(s) in the table below.

Standard resistance

Tester Connection	Condition	Specified Condition
1 - Body ground	Parking brake switch ON (Switch pin free)	Below 1 Ω
1 - Body ground	Parking brake switch OFF (Switch pin pushed in)	10 kΩ or higher

NG → **REPLACE PARKING BRAKE SWITCH**

OK

7 CHECK HARNESS AND CONNECTOR (MAIN BODY ECU - PARKING BRAKE SWITCH)

Main Body ECU Harness Side Connector Front View

A/T:

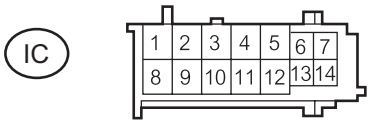

M/T:

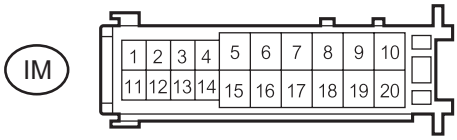

Parking Brake Switch Harness Side Connector Front View:

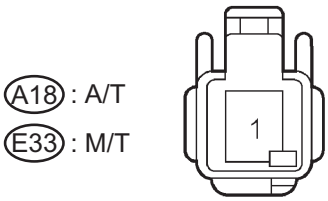

C136418E01

(a) Disconnect the main body ECU connector.
(b) Measure the resistance according to the value(s) in the table below.

Standard resistance:

A/T

Tester Connection	Condition	Specified Condition
IC-14 (PKB) - A18-1	Always	Below 1 Ω
IC-14 (PKB) - Body ground	Always	10 kΩ or higher

M/T

Tester Connection	Condition	Specified Condition
IM-2 (PKB) - E33-1	Always	Below 1 Ω
IM-2 (PKB) - Body ground	Always	10 kΩ or higher

NG → **REPAIR OR REPLACE HARNESS OR CONNECTOR**

OK

BC

8	INSPECT BRAKE FLUID LEVEL WARNING SWITCH

Brake Fluid Level Warning Switch:

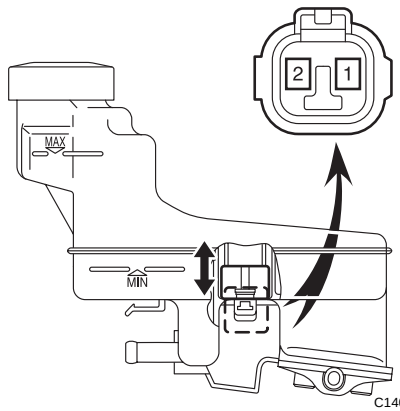

(a) Remove the reservoir tank cap and strainer.
(b) Disconnect the brake fluid level warning switch connector.
(c) Measure the resistance according to the value(s) in the table below.
HINT:
A float is located inside the reservoir. Its position can be changed by increasing or decreasing the level of brake fluid.

Standard resistance

Tester Connection	Condition	Specified Condition
1 - 2	Float up (Switch OFF)	1.9 to 2.1 kΩ
1 - 2	Float down (Switch ON)	Below 1 Ω

HINT:
If there is no problem after finishing the above check, adjust the brake fluid level to the MAX level.

NG → **REPLACE BRAKE MASTER CYLINDER RESERVOIR SUB-ASSEMBLY (BRAKE FLUID LEVEL WARNING SWITCH)**

OK

BC

9	CHECK HARNESS AND CONNECTOR (COMBINATION METER - BRAKE FLUID LEVEL WARNING SWITCH)

Combination Meter Wire Harness View:

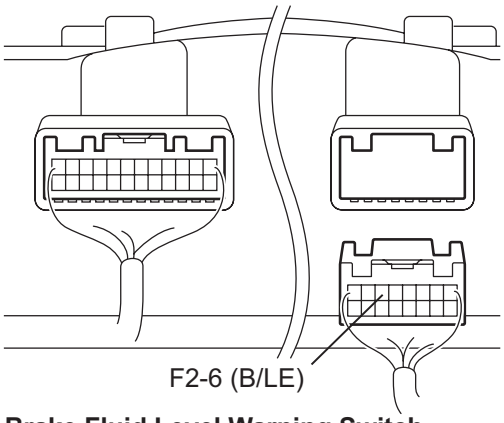

Brake Fluid Level Warning Switch Harness Side Connector Front View:

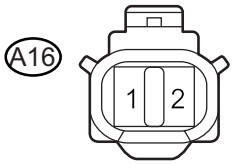

C136033E01

(a) Disconnect the combination meter connector.
(b) Measure the resistance according to the value(s) in the table below.

Standard resistance

Tester Connection	Condition	Specified Condition
F2-6 (B/LE) - A16-1	Always	Below 1 Ω
F2-6 (B/LE) - Body ground	Always	10 kΩ or higher
A16-2 - Body ground	Always	Below 1 Ω

NG → **REPAIR OR REPLACE HARNESS OR CONNECTOR**

OK

10	INSPECT COMBINATION METER ASSEMBLY

(a) Perform Active Test of the combination meter (meter CPU) using the intelligent tester (See page ME-32).

OK:

The BRAKE warning light turns on or off in accordance with the intelligent tester.

HINT:

- Reinstall the connectors and restore the vehicle to its prior condition before checking the combination meter.
- If troubleshooting has been carried out according to the Problem Symptoms Table, refer back to the table and proceed to the next step before replacing the part (See page BC-134).

NG → **REPLACE COMBINATION METER ASSEMBLY**

BC

OK

REPLACE BRAKE ACTUATOR ASSEMBLY

Brake Warning Light does not Come ON

DESCRIPTION

The skid control ECU is connected to the combination meter via CAN communication.

WIRING DIAGRAM

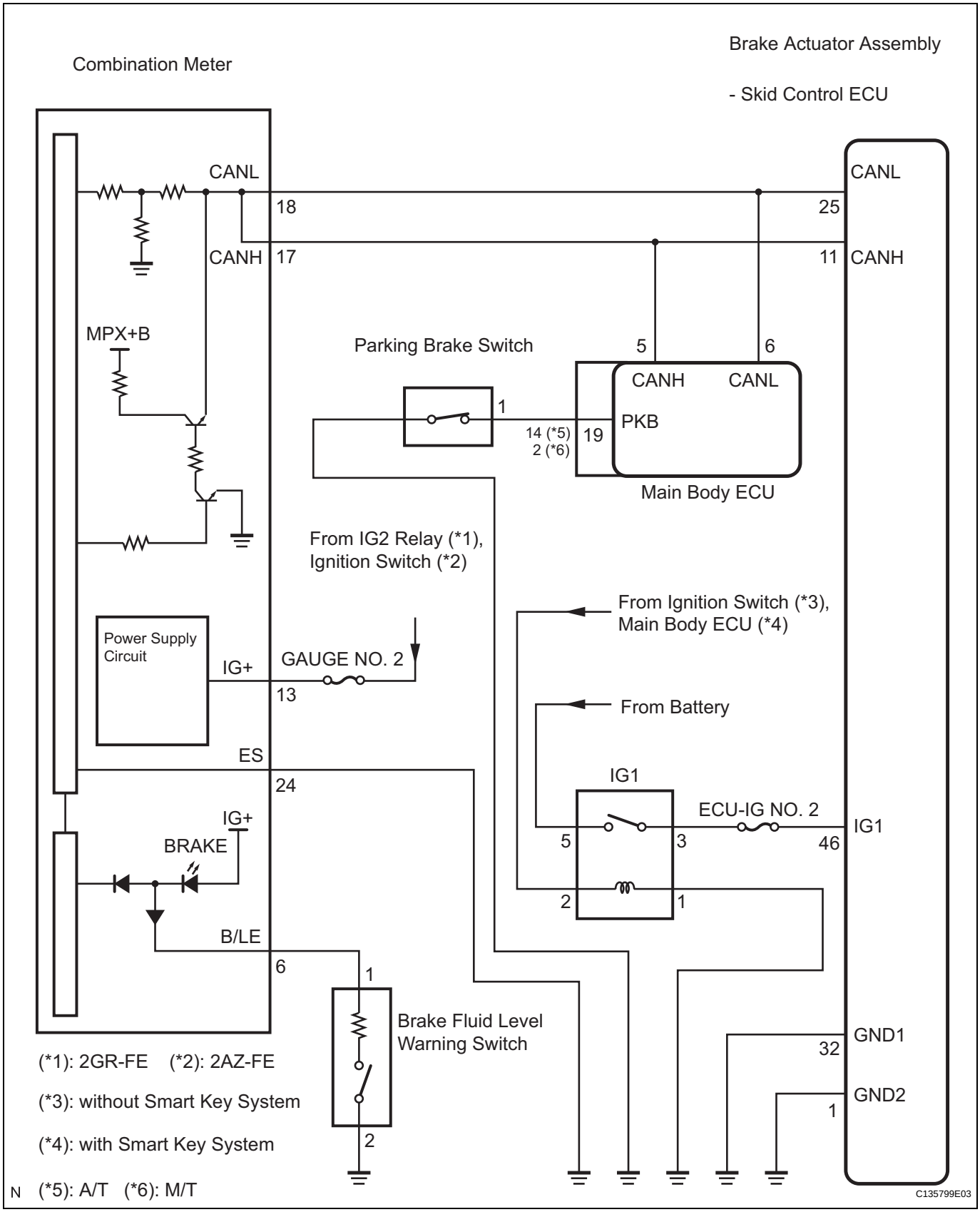

INSPECTION PROCEDURE

NOTICE:

When replacing the brake actuator assembly, perform zero point calibration (See page BC-119).

1	CHECK CAN COMMUNICATION SYSTEM

(a) Check if the CAN communication system DTC is output (See page CA-25).

Result

Condition	Proceed to
DTC is not output	A
DTC is output	B

B → **INSPECT CAN COMMUNICATION SYSTEM**

A

2	CHECK BRAKE WARNING LIGHT

(a) Disconnect the skid control ECU connector.
(b) Turn the ignition switch on (IG).
(c) Check that the BRAKE warning light comes on.
OK:
The BRAKE warning light comes on.
HINT:
If troubleshooting has been carried out according to the Problem Symptoms Table, refer back to the table and proceed to the next step before replacing the part (See page BC-134).

OK → **REPLACE BRAKE ACTUATOR ASSEMBLY**

NG

3	INSPECT COMBINATION METER ASSEMBLY

(a) Turn the ignition switch off.
(b) Reconnect the skid control ECU connector.
(c) Perform Active Test of the combination meter (meter CPU) using the intelligent tester (See page ME-32).
OK:
The BRAKE warning light turns on or off in accordance with the intelligent tester.
HINT:
If troubleshooting has been carried out according to the Problem Symptoms Table, refer back to the table and proceed to the next step (See page BC-134).

NG → **REPLACE COMBINATION METER ASSEMBLY**

OK

REPLACE BRAKE ACTUATOR ASSEMBLY

BC

Slip Indicator Light Remains ON

DESCRIPTION

The skid control ECU is connected to the combination meter via CAN communication.
The SLIP indicator light blinks during VSC and/or TRAC operation.
When the system fails, the SLIP indicator light comes on to warn the driver (See page BC-138).

WIRING DIAGRAM

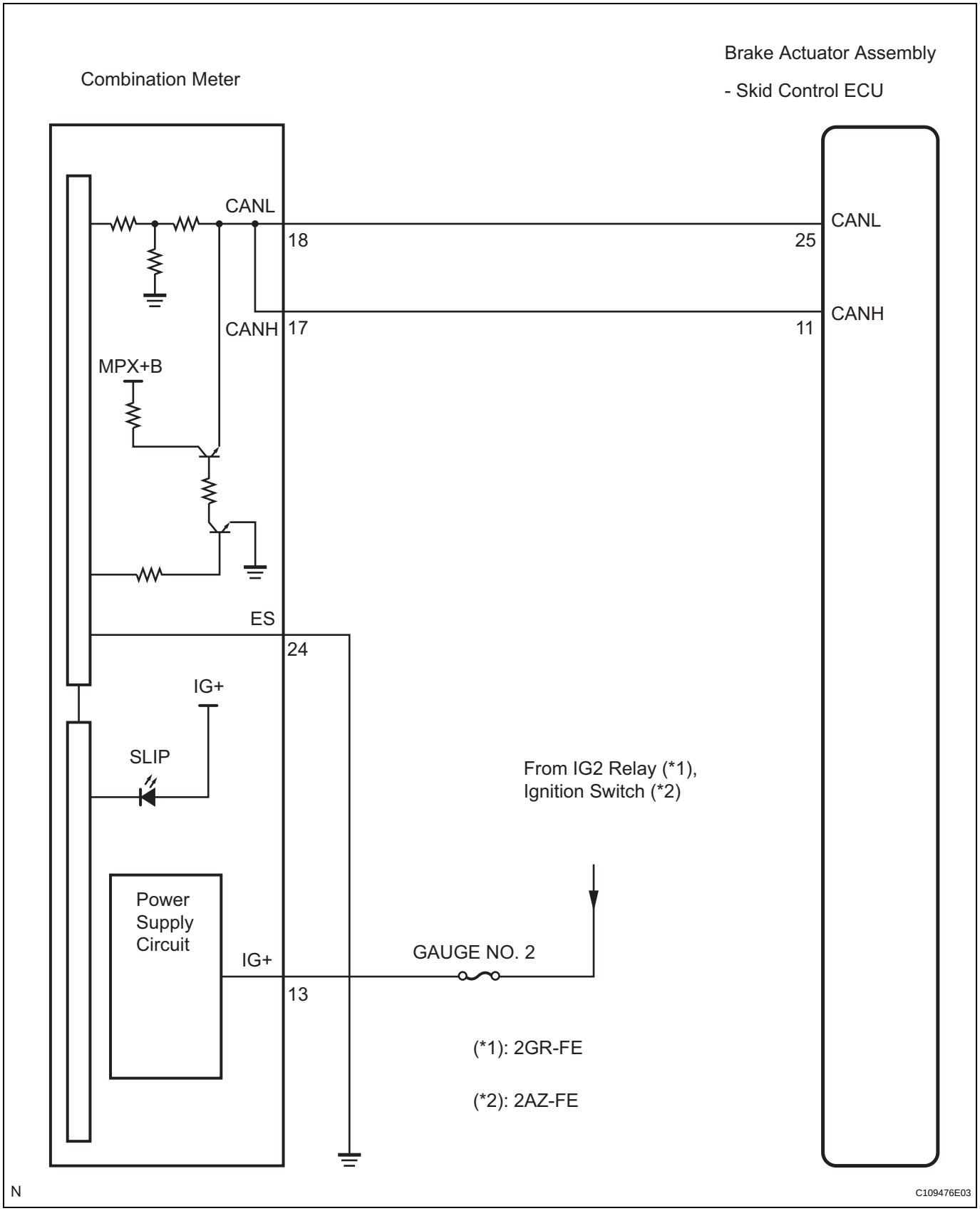

INSPECTION PROCEDURE

NOTICE:

When replacing the brake actuator assembly, perform zero point calibration (See page BC-119).

BC

1	CHECK CAN COMMUNICATION SYSTEM

(a) Check if the CAN communication system DTC is output (See page CA-25).

Result

Condition	Proceed to
DTC is not output	A
DTC is output	B

B → **INSPECT CAN COMMUNICATION SYSTEM**

A

2	CHECK IF SKID CONTROL ECU CONNECTOR IS SECURELY CONNECTED

BC

(a) Check if the skid control ECU connector is securely connected.
OK:
The connector should be securely connected.

NG → **CONNECT CONNECTOR TO ECU CORRECTLY**

OK

3	CHECK BATTERY

(a) Check the battery voltage.
Standard voltage:
11 to 14 V

NG → **CHECK AND REPLACE CHARGING SYSTEM OR BATTERY**

OK

4	INSPECT COMBINATION METER ASSEMBLY

(a) Perform Active Test of the combination meter (meter CPU) using the intelligent tester (See page ME-32).
OK:
The SLIP indicator light turns on or off in accordance with the intelligent tester.
HINT:
If troubleshooting has been carried out according to the Problem Symptoms Table, refer back to the table and proceed to the next step before replacing the part (See page BC-134).

NG → **REPLACE COMBINATION METER ASSEMBLY**

OK

REPLACE BRAKE ACTUATOR ASSEMBLY

Slip Indicator Light does not Come ON

DESCRIPTION

The skid control ECU is connected to the combination meter via CAN communication.
The SLIP indicator light blinks during VSC and/or TRAC operation.
When the system fails, the SLIP indicator light comes on to warn the driver (See page BC-138).

WIRING DIAGRAM

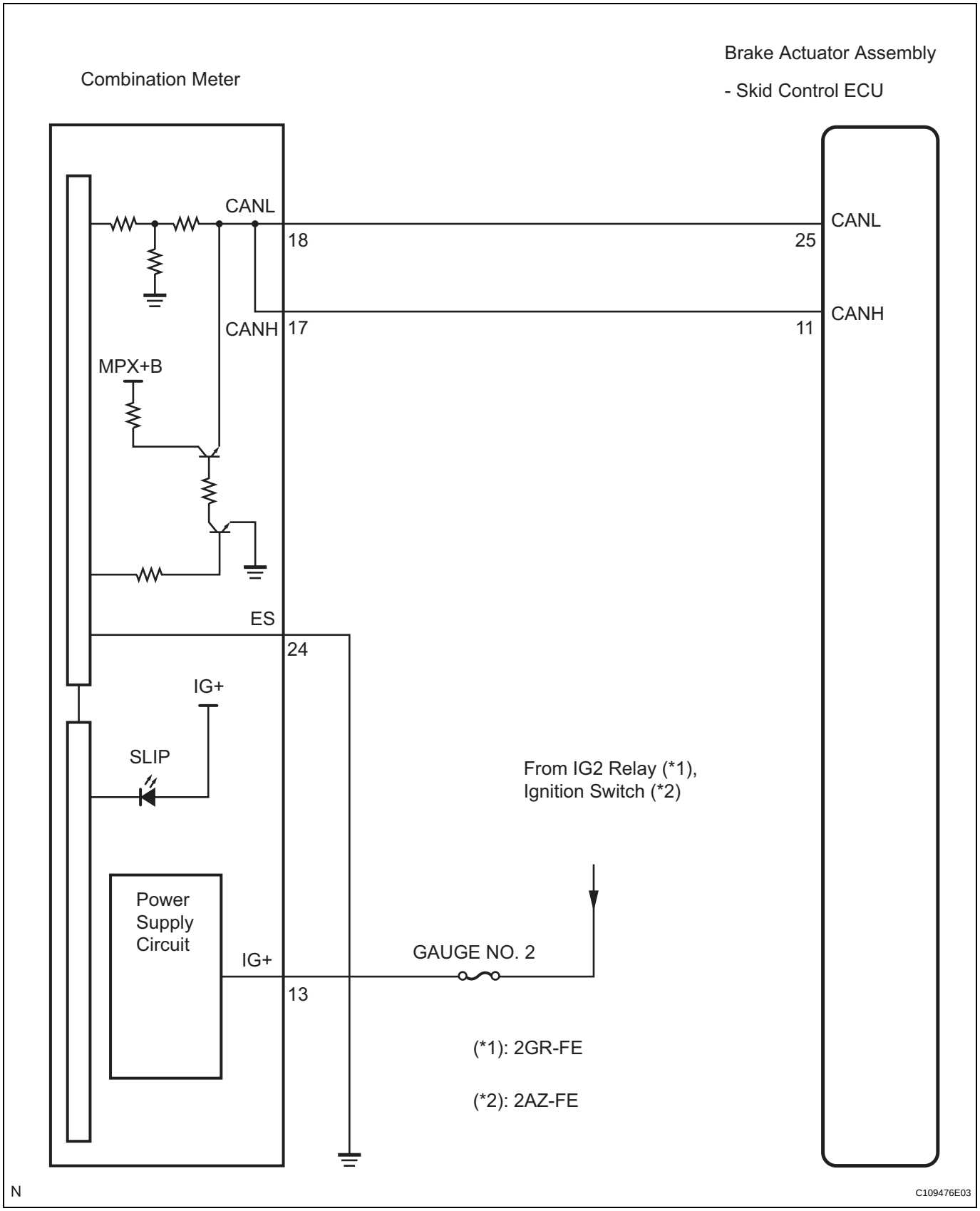

INSPECTION PROCEDURE

NOTICE:

When replacing the brake actuator assembly, perform zero point calibration (See page BC-119).

BC

1	CHECK CAN COMMUNICATION SYSTEM

(a) Check if the CAN communication system DTC is output (See page CA-25).

Result

Condition	Proceed to
DTC is not output	A
DTC is output	B

B → **INSPECT CAN COMMUNICATION SYSTEM**

A

2	CHECK SLIP INDICATOR LIGHT

BC

(a) Connect the intelligent tester to the DLC3.
(b) Start the engine.
(c) Select "SLIP INDI LAMP" in the Active Test and operate the SLIP indicator light using the intelligent tester.

ABS / VSC:

Item (Display)	Vehicle Condition / Test Details	Diagnostic Note
SLIP INDI LAMP	Turn SLIP indicator light ON / OFF	Observe combination meter

(d) Check that "ON" and "OFF" of the SLIP indicator light are indicated on the combination meter when using the intelligent tester.
OK:
The SLIP indicator light turns on or off in accordance with the intelligent tester.
HINT:
If troubleshooting has been carried out according to the Problem Symptoms Table, refer back to the table and proceed to the next step before replacing the part (See page BC-134).

OK → **REPLACE BRAKE ACTUATOR ASSEMBLY**

NG

3	INSPECT COMBINATION METER ASSEMBLY

(a) Turn the ignition switch off.
(b) Perform Active Test of the combination meter (meter CPU) using the intelligent tester (See page ME-32).
OK:
The SLIP indicator light turns on or off in accordance with the intelligent tester.
HINT:
If troubleshooting has been carried out according to the Problem Symptoms Table, refer back to the table and proceed to the next step (See page BC-134).

NG → **REPLACE COMBINATION METER ASSEMBLY**

OK

REPLACE BRAKE ACTUATOR ASSEMBLY

Skid Control Buzzer Circuit

DESCRIPTION

The skid control buzzer sounds while the accumulator pressure is abnormally low or when an abnormality causing low fluid pressure occurs, and then the VSC is activated.

WIRING DIAGRAM

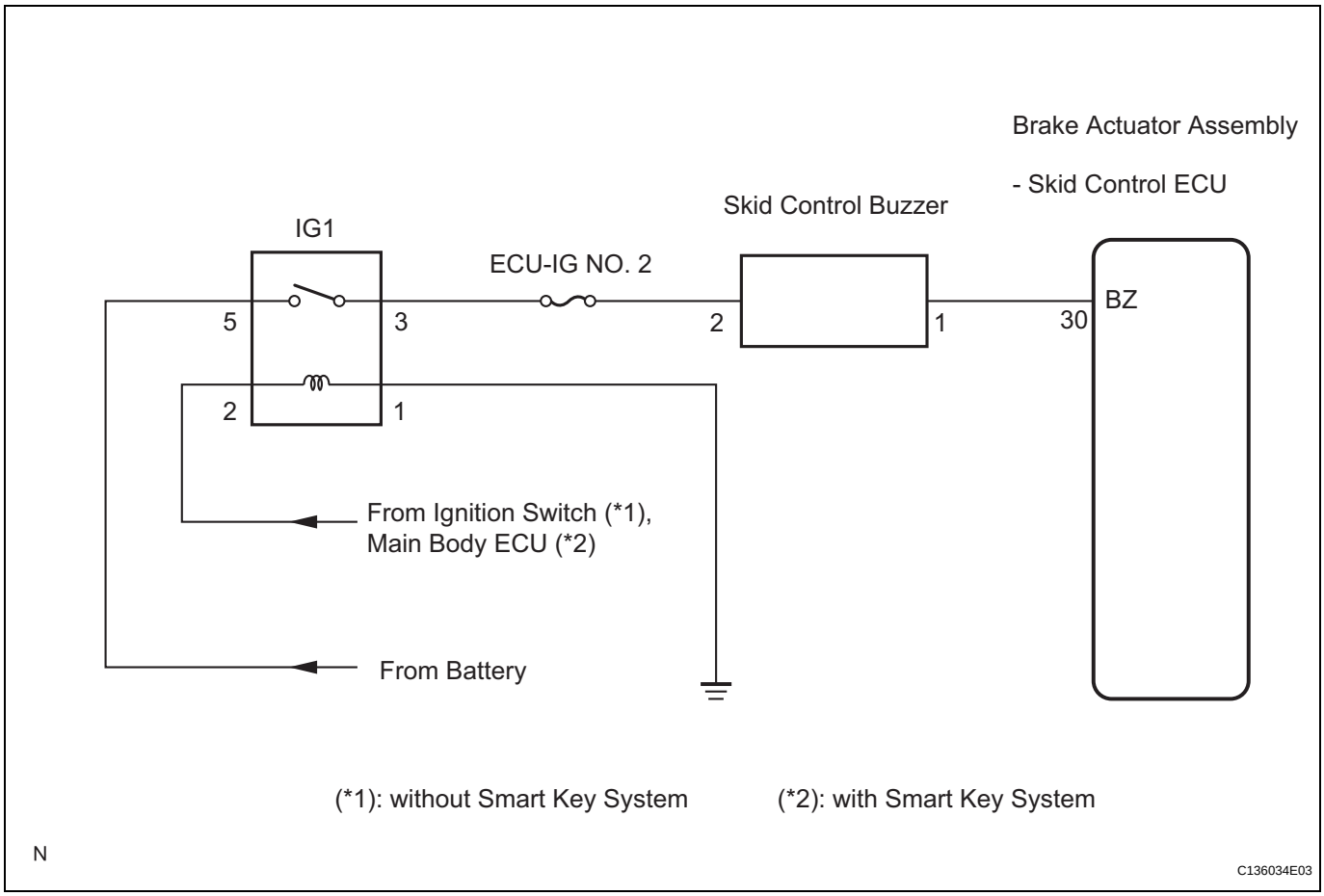

INSPECTION PROCEDURE

NOTICE:

When replacing the brake actuator assembly, perform zero point calibration (See page BC-119).

1	PERFORM ACTIVE TEST BY INTELLIGENT TESTER (SKID CONTROL BUZZER)

(a) Connect the intelligent tester to the DLC3.
(b) Start the engine.
(c) Select the Active Test mode on the intelligent tester.

ABS / VSC:

Item (Display)	Vehicle Condition / Test Details	Diagnostic Note
BUZZER	Turns skid control buzzer ON / OFF	Buzzer can be heard

(d) Check that the buzzer sounds/stops when turning the skid control buzzer on/off by using the intelligent tester.

Result

Condition	Proceed to
Buzzer does not sound or sounds constantly	A
Buzzer sounds/stops	B

HINT:
If troubleshooting has been carried out according to the Problem Symptoms Table, refer back to the table and proceed to the next step (See page BC-134).

B → **END**

A

2 INSPECT SKID CONTROL BUZZER (POWER SOURCE TERMINAL)

Skid Control Buzzer Harness Side Connector Front View:

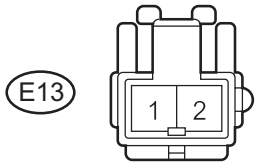

H

C107604E17

(a) Turn the ignition switch off.
(b) Disconnect the skid control buzzer connector.
(c) Turn the ignition switch on (IG).
(d) Measure the voltage according to the value(s) in the table below.

Standard voltage

Tester Connection	Condition	Specified Condition
E13-2 - Body ground	Ignition switch on (IG)	10 to 14 V

NG → **REPAIR OR REPLACE HARNESS OR CONNECTOR (POWER SOURCE CIRCUIT)**

OK

3 INSPECT SKID CONTROL BUZZER

Skid Control Buzzer:

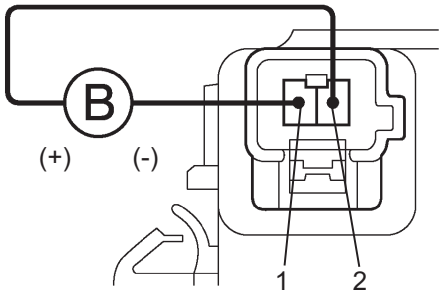

C125130E01

(a) Apply battery negative voltage to terminal 1, and battery positive voltage to terminal 2 of the skid control buzzer, and then check that the buzzer sounds.

OK:

The skid control buzzer sounds.

NG → **REPLACE SKID CONTROL BUZZER**

OK

BC

4	CHECK HARNESS AND CONNECTOR (SKID CONTROL ECU - SKID CONTROL BUZZER)

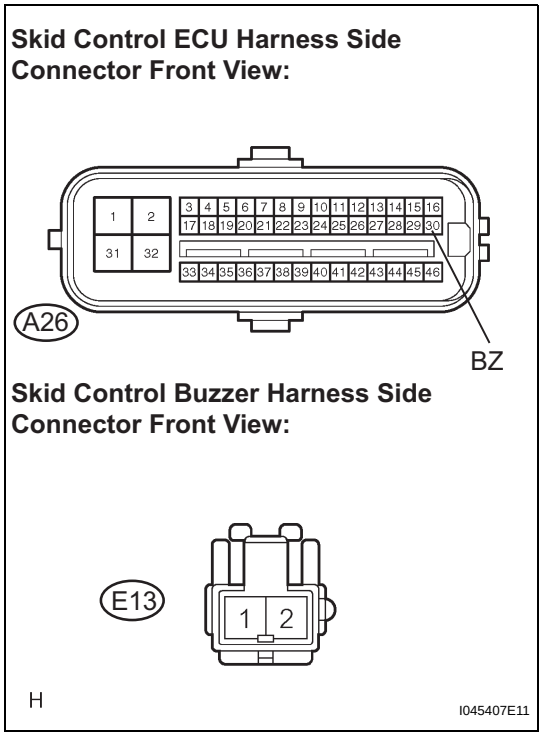

(a) Turn the ignition switch off.
(b) Disconnect the skid control ECU connector.
(c) Measure the resistance according to the value(s) in the table below.

Standard resistance

Tester Connection	Condition	Specified Condition
A26-30 (BZ) - E13-1	Always	Below 1 Ω
A26-30 (BZ) - Body ground	Always	10 kΩ or higher

HINT:
If troubleshooting has been carried out according to the Problem Symptoms Table, refer back to the table and proceed to the next step before replacing the part (See page BC-134).

NG → **REPAIR OR REPLACE HARNESS OR CONNECTOR**

OK

REPLACE BRAKE ACTUATOR ASSEMBLY

BC

TC and CG Terminal Circuit

DESCRIPTION

Connecting terminals TC and CG of the DLC3 causes the ECU to display the DTC by blinking the ABS warning light.

WIRING DIAGRAM

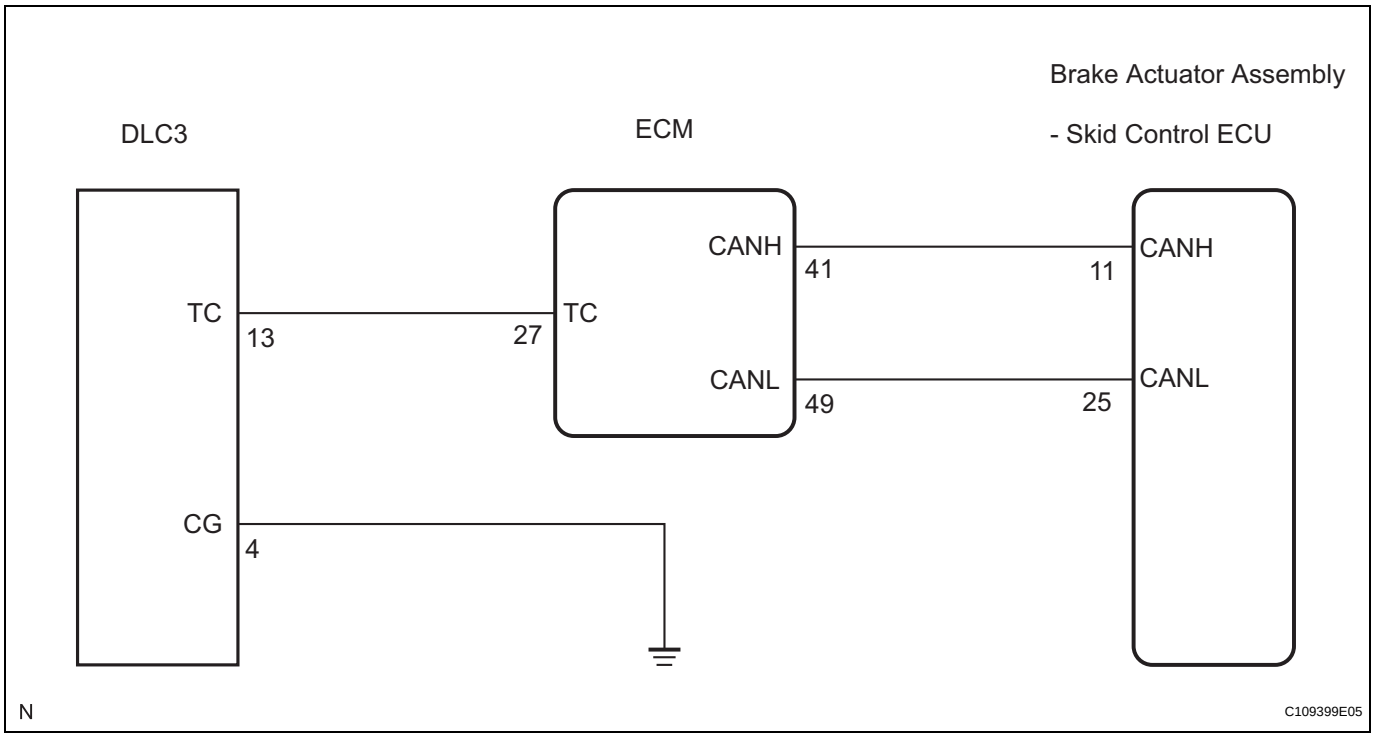

INSPECTION PROCEDURE

NOTICE:

When replacing the brake actuator assembly, perform zero point calibration (See page BC-119).

1	CHECK CAN COMMUNICATION SYSTEM

(a) Check if the CAN communication system DTC is output (See page CA-25).

Result

Condition	Proceed to
DTC is not output	A
DTC is output	B

B → INSPECT CAN COMMUNICATION SYSTEM

A

2 INSPECT DLC3

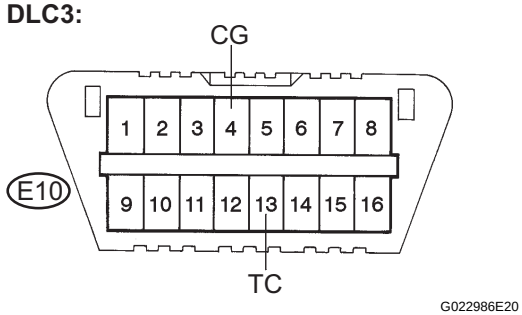

(a) Turn the ignition switch on (IG).
(b) Measure the voltage according to the value(s) in the table below.

Standard voltage

Tester Connection	Condition	Specified Condition
E10-13 (TC) - E10-4 (CG)	Ignition switch on (IG)	10 to 14 V

OK → **Go to step 5**

NG

3 CHECK HARNESS AND CONNECTOR (TC of DLC3 - ECM)

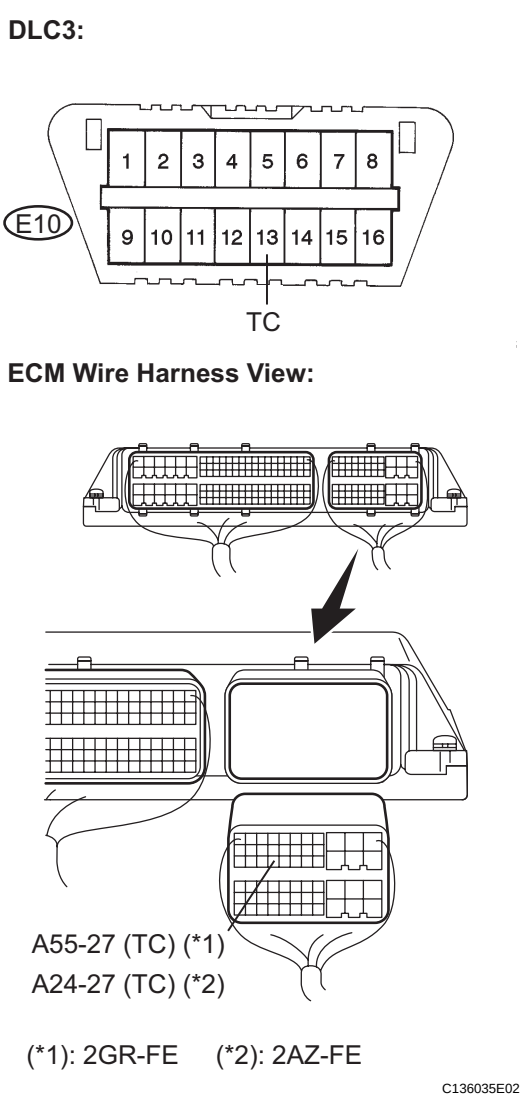

(a) Turn the ignition switch off.
(b) Disconnect the ECM connector.
(c) Measure the resistance according to the value(s) in the table below.

Standard resistance:

2GR-FE

Tester Connection	Condition	Specified Condition
E10-13 (TC) - A55-27 (TC)	Always	Below 1 Ω
E10-13 (TC) - Body ground	Always	10 kΩ or higher

2AZ-FE

Tester Connection	Condition	Specified Condition
E10-13 (TC) - A24-27 (TC)	Always	Below 1 Ω
E10-13 (TC) - Body ground	Always	10 kΩ or higher

NG → **REPAIR OR REPLACE HARNESS OR CONNECTOR**

OK

BC

4 CHECK HARNESS AND CONNECTOR (CG of DLC3 - BODY GROUND)

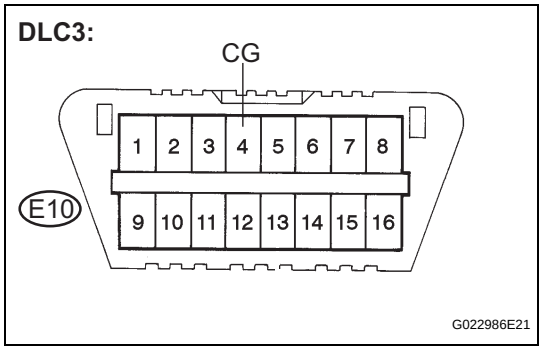

(a) Measure the resistance according to the value(s) in the table below.

Standard resistance

Tester Connection	Condition	Specified Condition
E10-4 (CG) - Body ground	Always	Below 1 Ω

NG → **REPAIR OR REPLACE HARNESS OR CONNECTOR**

OK

5 CHECK ECM (TC of DLC3 INPUT)

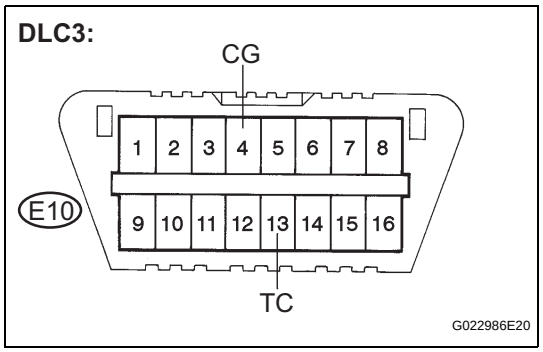

(a) Turn the ignition switch off.
(b) Reconnect the ECM connector.
(c) Using SST, connect terminals TC and CG of the DLC3.
(d) Turn the ignition switch on (IG).
(e) Check that the check engine warning light is blinking.

Result

Condition	Proceed to
Check engine warning light is blinking	A
Check engine warning light is not blinking	B

HINT:
If troubleshooting has been carried out according to the Problem Symptoms Table, refer back to the table and proceed to the next step before replacing the part (See page BC-134).

B → **REPAIR OR REPLACE WIRE HARNESS OR ECM (TC of ECM CIRCUIT)**

A

REPLACE BRAKE ACTUATOR ASSEMBLY

BC

TS and CG Terminal Circuit

DESCRIPTION

In the Test Mode (signal check), a malfunction of the speed sensor that cannot be detected when the vehicle is stopped can be detected while driving.
Transition to the sensor check mode can be performed by connecting terminals TS and CG of the DLC3 and turning the ignition switch from off to on (IG).

WIRING DIAGRAM

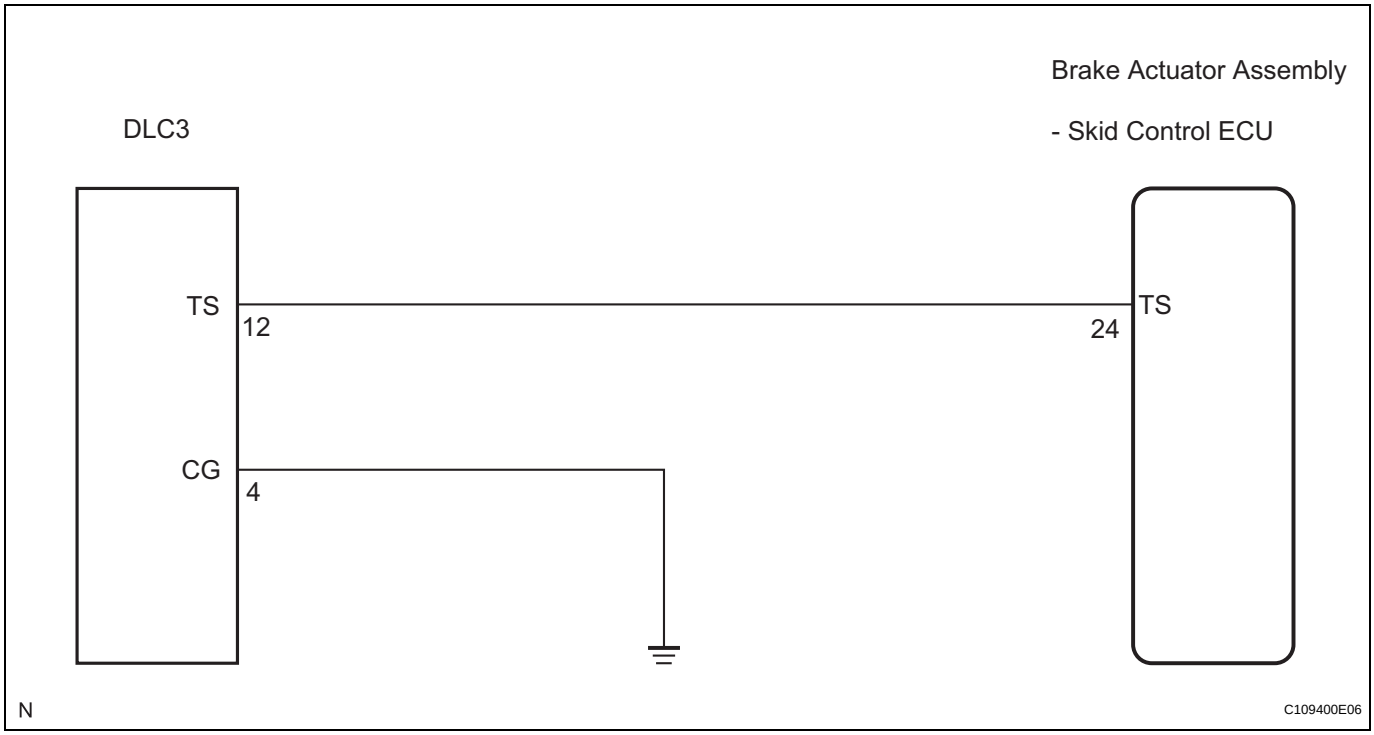

INSPECTION PROCEDURE

NOTICE:
When replacing the brake actuator assembly, perform zero point calibration (See page BC-119).

1 CHECK HARNESS AND CONNECTOR (SKID CONTROL ECU - TS of DLC3)

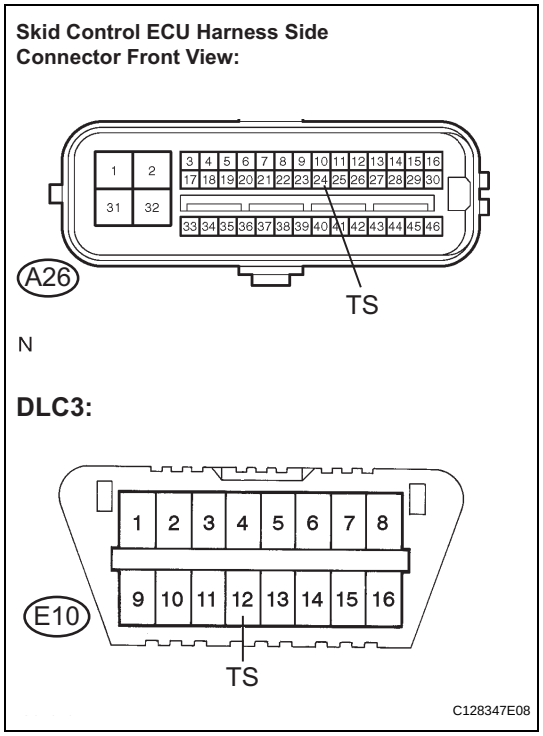

(a) Disconnect the skid control ECU connector.
(b) Measure the resistance according to the value(s) in the table below.

Standard resistance

Tester Connection	Condition	Specified Condition
A26-24 (TS) - E10-12 (TS)	Always	Below 1 Ω

NG → **REPAIR OR REPLACE HARNESS OR CONNECTOR**

OK

2 CHECK HARNESS AND CONNECTOR (CG of DLC3 - BODY GROUND)

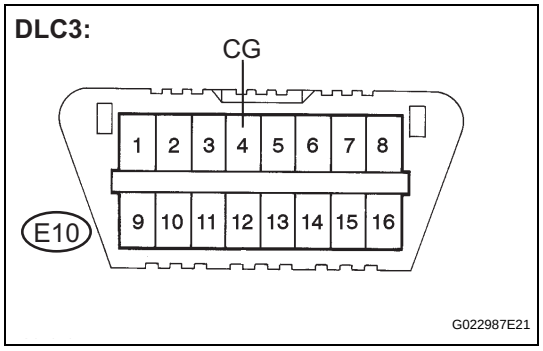

(a) Measure the resistance according to the value(s) in the table below.

Standard resistance

Tester Connection	Condition	Specified Condition
E10-4 (CG) - Body ground	Always	Below 1 Ω

NG → **REPAIR OR REPLACE HARNESS OR CONNECTOR**

OK

BC

3	CHECK HARNESS AND CONNECTOR (TS of DLC3 - BODY GROUND)

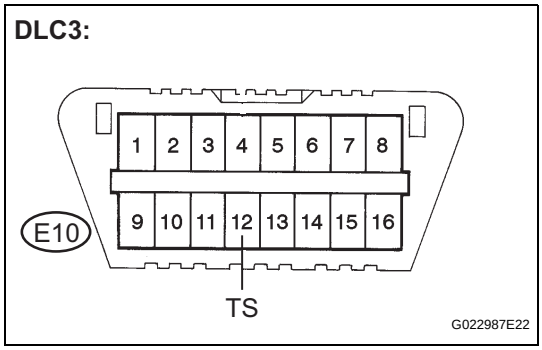

(a) Measure the resistance according to the value(s) in the table below.

Standard resistance

Tester Connection	Condition	Specified Condition
E10-12 (TS) - Body ground	Always	10 kΩ or higher

HINT:
If troubleshooting has been carried out according to the Problem Symptoms Table, refer back to the table and proceed to the next step before replacing the part (See page BC-134).

NG → **REPAIR OR REPLACE HARNESS OR CONNECTOR**

BC

OK

REPLACE BRAKE ACTUATOR ASSEMBLY

VEHICLE STABILITY CONTROL SYSTEM (for BOSCH Made)

PRECAUTION

1. EXPRESSIONS OF IGNITION SWITCH

The type of ignition switch used on this model differs according to the specifications of the vehicle.
The expressions listed in the table below are used in this section.

Expression	Switch Type	
	Ignition Switch (Position)	Engine Switch (Condition)
Ignition switch off	LOCK	off
Ignition switch on (IG)	ON	on (IG)
Ignition switch on (ACC)	ACC	on (ACC)
Engine start	START	start

BC

2. TROUBLESHOOTING PRECAUTION

(a) When there is a malfunction in the contact point of the terminals or installation problems with parts, the removal and installation of the suspected problem parts may return the system to the normal condition either completely or temporarily.

(b) In order to determine the malfunctioning area, be sure to check the conditions at the time the malfunction occurred, such as by DTC output and freeze frame data output, and record it before disconnecting each connector or removing and installing parts.

(c) Since the vehicle stability control system may be influenced by a malfunction in the other systems, be sure to check for DTCs in the other systems.

(d) Be sure to remove and install the brake actuator assembly and each sensor with the ignition switch off unless specified in the inspection procedure.

(e) If the brake actuator or a sensor has been removed and installed, it is necessary to check the system for problems after the parts have been reassembled. Check for DTCs using the intelligent tester, also check that system functions and signals received by the ECU are normal using test mode.

3. CAN COMMUNICATION SYSTEM PRECAUTION

(a) The CAN communication system is used for data communication between the skid control ECU, the steering angle sensor, and the yaw rate and acceleration sensor. If there is trouble in the CAN communication line, a DTC of the communication line is output.

(b) If a DTC of the CAN communication line is output, repair the malfunction in the communication line and troubleshoot the vehicle stability control system under the condition that data communication is normal.

(c) In order to enable CAN communication, a specific type of wiring is used for the CAN communication lines. The wiring used for each communication line is a twisted pair of wires that have an equal length. A bypass wire should not be used, because the data being transmitted will be corrupted.

4. DTC PRECAUTION

(a) Warnings for some DTCs cannot be cleared by only repairing the malfunctioning parts. If the warning is displayed after repair work, the DTC should be cleared after turning the ignition switch off.

NOTICE:

If a DTC for a malfunctioning part reappears after it was cleared, then it has been stored again.

5. CHASSIS DYNAMOMETER PRECAUTION

(a) Enter Test Mode to disable TRAC and VSC control when using a chassis dynamometer.

HINT:

The vehicle may move unexpectedly out of the dynamometer because of TRAC and VSC operations.

NOTICE:

- **Make sure that the VSC warning (multi information display and master caution indicator light) light is blinking (TEST Mode is achieved).**
- **Secure the vehicle with the lock chain for safety.**

PARTS LOCATION

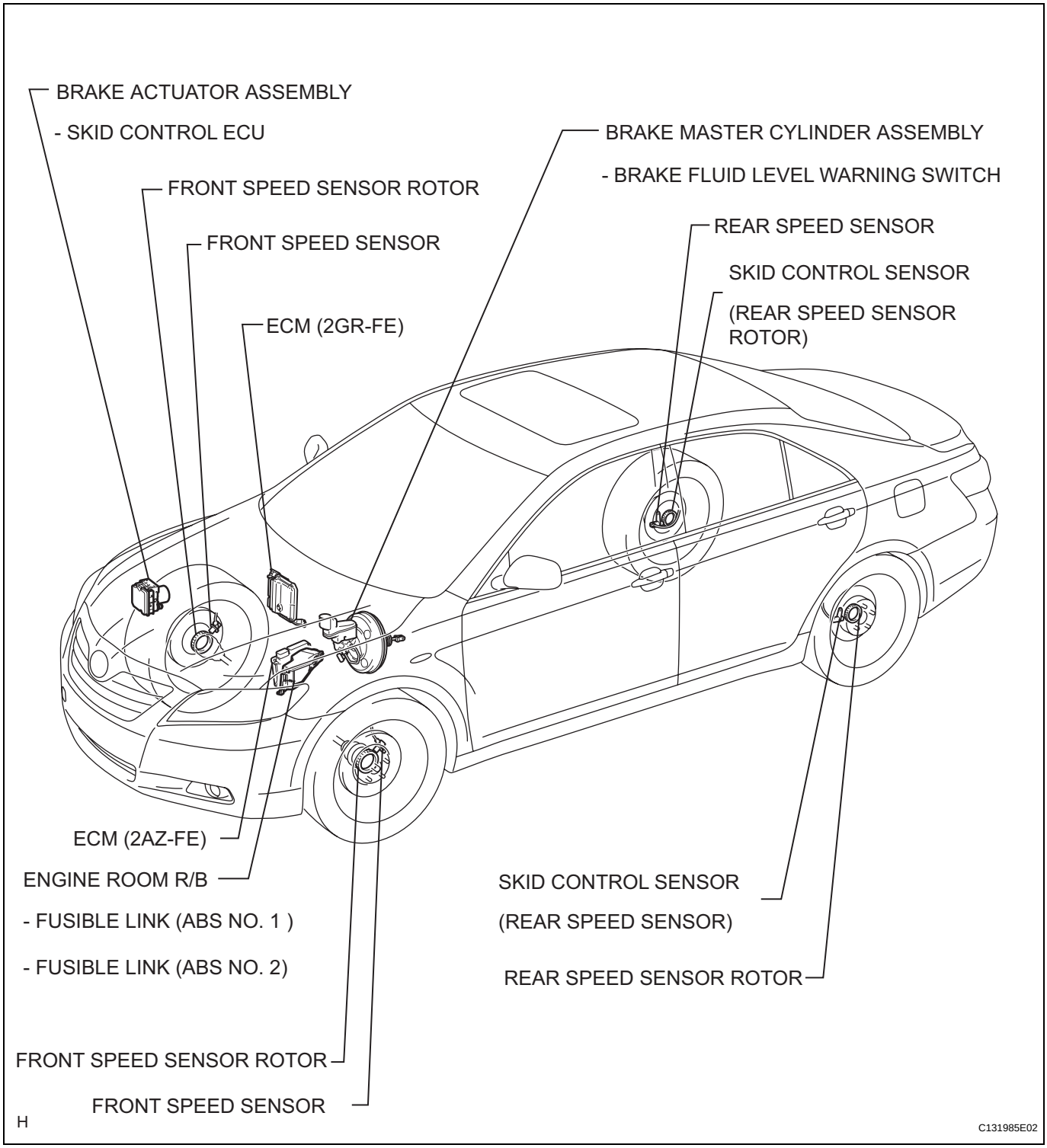

BC

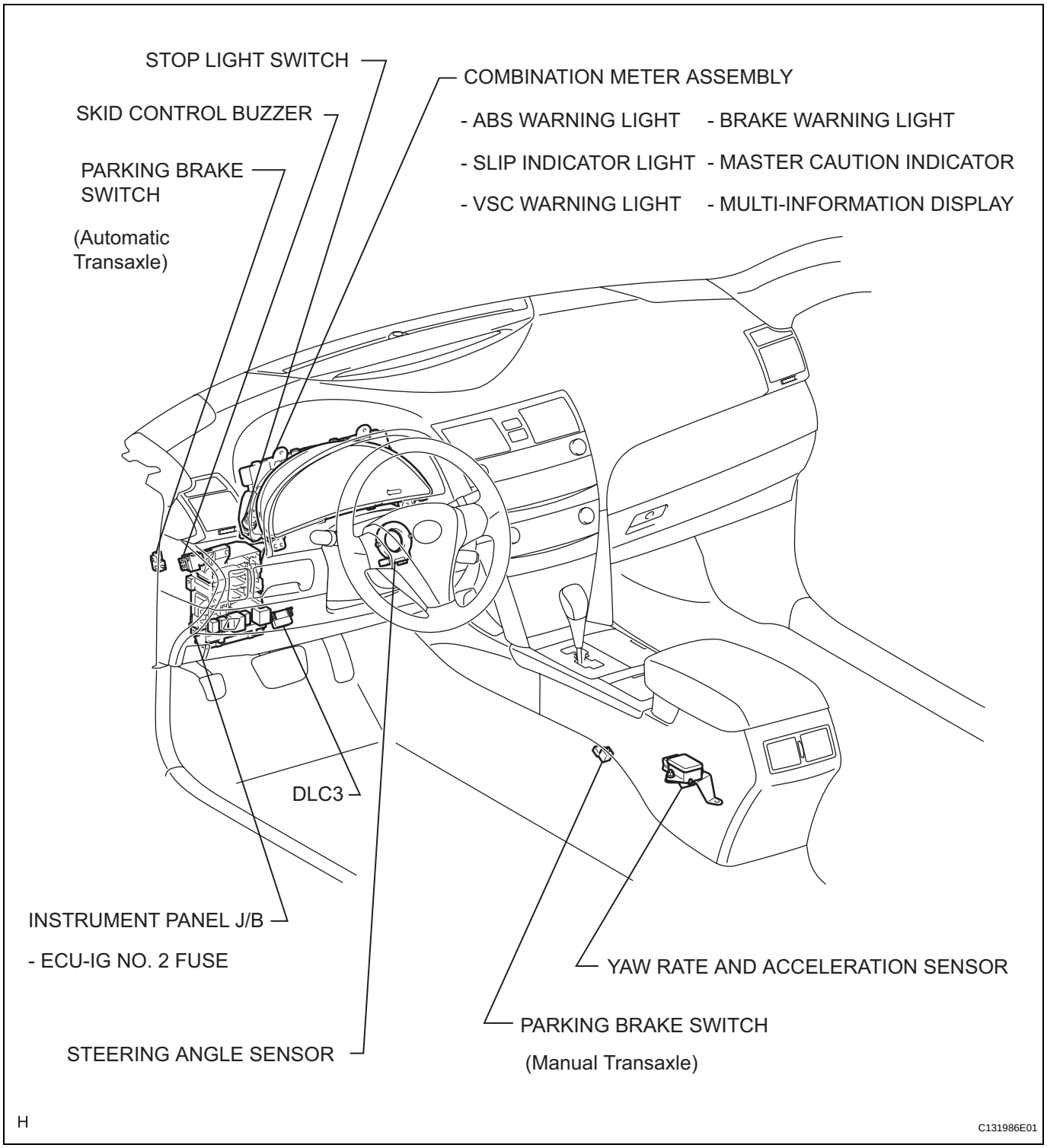
STOP LIGHT SWITCH
SKID CONTROL BUZZER
PARKING BRAKE SWITCH
(Automatic Transaxle)
COMBINATION METER ASSEMBLY
- ABS WARNING LIGHT
- BRAKE WARNING LIGHT
- SLIP INDICATOR LIGHT
- MASTER CAUTION INDICATOR
- VSC WARNING LIGHT
- MULTI-INFORMATION DISPLAY
DLC3
INSTRUMENT PANEL J/B
- ECU-IG NO. 2 FUSE
YAW RATE AND ACCELERATION SENSOR
PARKING BRAKE SWITCH
(Manual Transaxle)
STEERING ANGLE SENSOR
H
C131986E01

BC

SYSTEM DIAGRAM

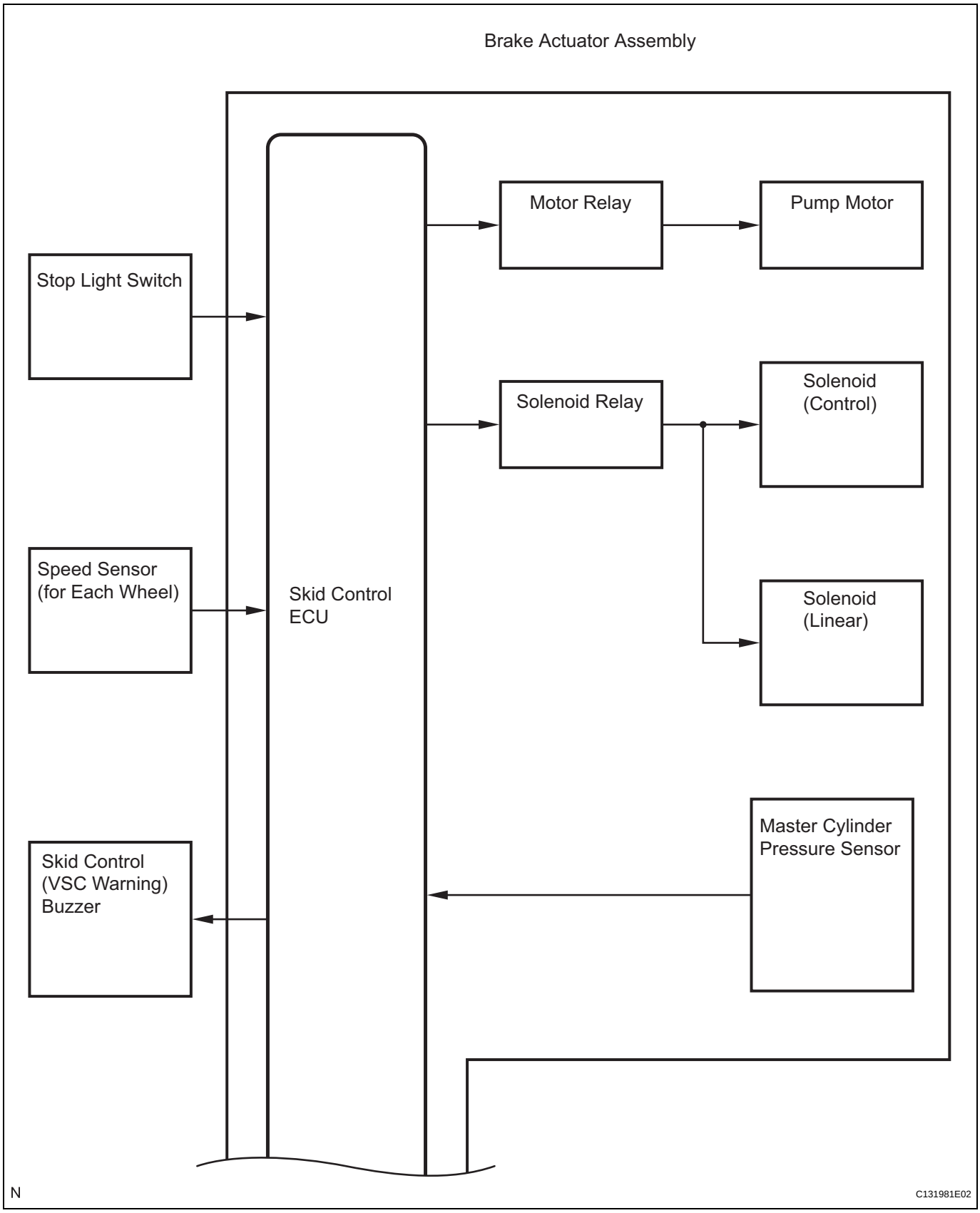

BC

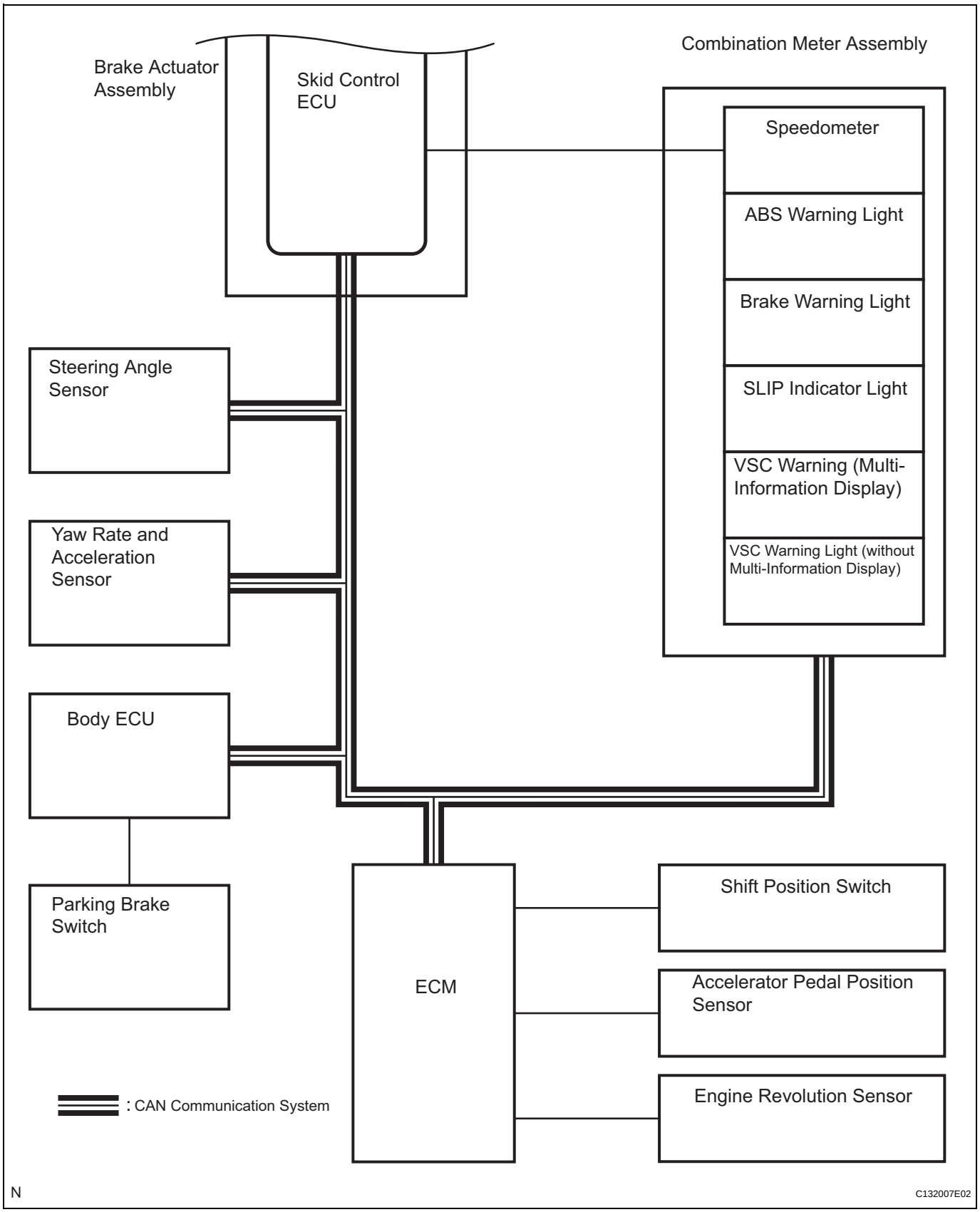
Brake Actuator Assembly
Skid Control ECU
Combination Meter Assembly
Speedometer
ABS Warning Light
Brake Warning Light
SLIP Indicator Light
VSC Warning (Multi-Information Display)
VSC Warning Light (without Multi-Information Display)
Steering Angle Sensor
Yaw Rate and Acceleration Sensor
Body ECU
Parking Brake Switch
ECM
Shift Position Switch
Accelerator Pedal Position Sensor
Engine Revolution Sensor
: CAN Communication System
N
C132007E02

BC

Transmitting ECU (transmitter)	Receiving ECU	Signals	Communication method
ECM	Skid control ECU	• Shift position signal • Throttle position signal • Engine revolution signal • Intake air temperature signal • Engine torque request signal • Accelerator pedal position signal	CAN communication system
Skid control ECU	Yaw rate and acceleration sensor	Yaw rate and acceleration request signal	CAN communication system
Skid control ECU	Steering angle sensor	Steering angle sensor request signal	CAN communication system
Skid control ECU	ECM	• Wheel speed signal • VSC data signal	CAN communication system
Skid control ECU	Combination meter	• Wheel speed signal • ABS warning light ON signal • BRAKE warning light ON signal • VSC warning light ON signal (*1) • Multi information display ON signal (*2) • SLIP indicator light ON signal • Master caution indicator light ON signal	CAN communication system
Main body ECU	Skid control ECU	Parking brake switch signal	CAN communication system

(*1): without multi-information display (Combination meter)
(*2): with multi-information display (Combination meter)

SYSTEM DESCRIPTION

1. SYSTEM DESCRIPTION

HINT:

- The skid control ECU is located within the brake actuator assembly.
- The yaw rate sensor and acceleration sensor are combined in a single unit. This unit communicates with the skid control ECU through the CAN communication system.

(a) ABS operation

(1) Based on the signals received from the 4 wheel speed sensors, the skid control ECU calculates the deceleration and speed of each wheel, while monitoring for wheel lock. If wheel lock is occurring, the ECU controls the solenoid valves in the brake actuator in order to adjust the hydraulic pressure applied to the brakes at each wheel.

2. FUNCTION DESCRIPTION

(a) ABS (Anti-lock Brake System)

The ABS helps prevent the wheels from locking when the brakes are applied firmly or when braking on a slippery surface.

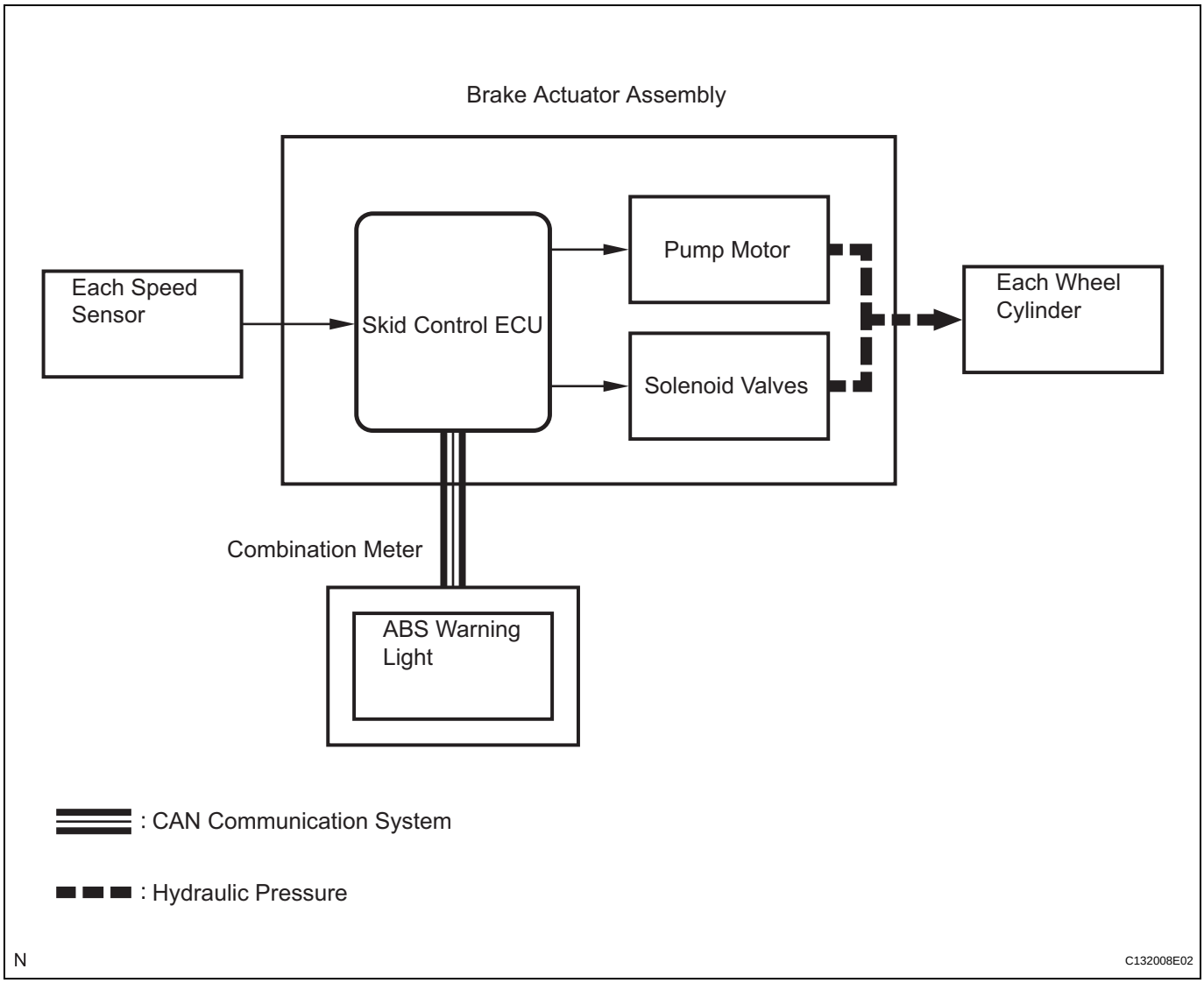

(1) Operation description

The skid control ECU detects wheel lock condition by receiving vehicle speed signals from each speed sensor, and sends control signals to the pump motor and solenoid valves. The pump motor and solenoid valves avoid wheel lock by controlling the hydraulic pressure of each wheel cylinder.

The ABS warning light comes on when the ABS system is malfunctioning.

(b) EBD (Electronic Brake force Distribution)
The EBD control utilizes ABS, which ensures proper brake force distribution between the front and rear wheels in accordance with driving conditions. In addition, when braking while cornering, it also controls the brake forces of the right and left wheels, helping to maintain vehicle behavior.

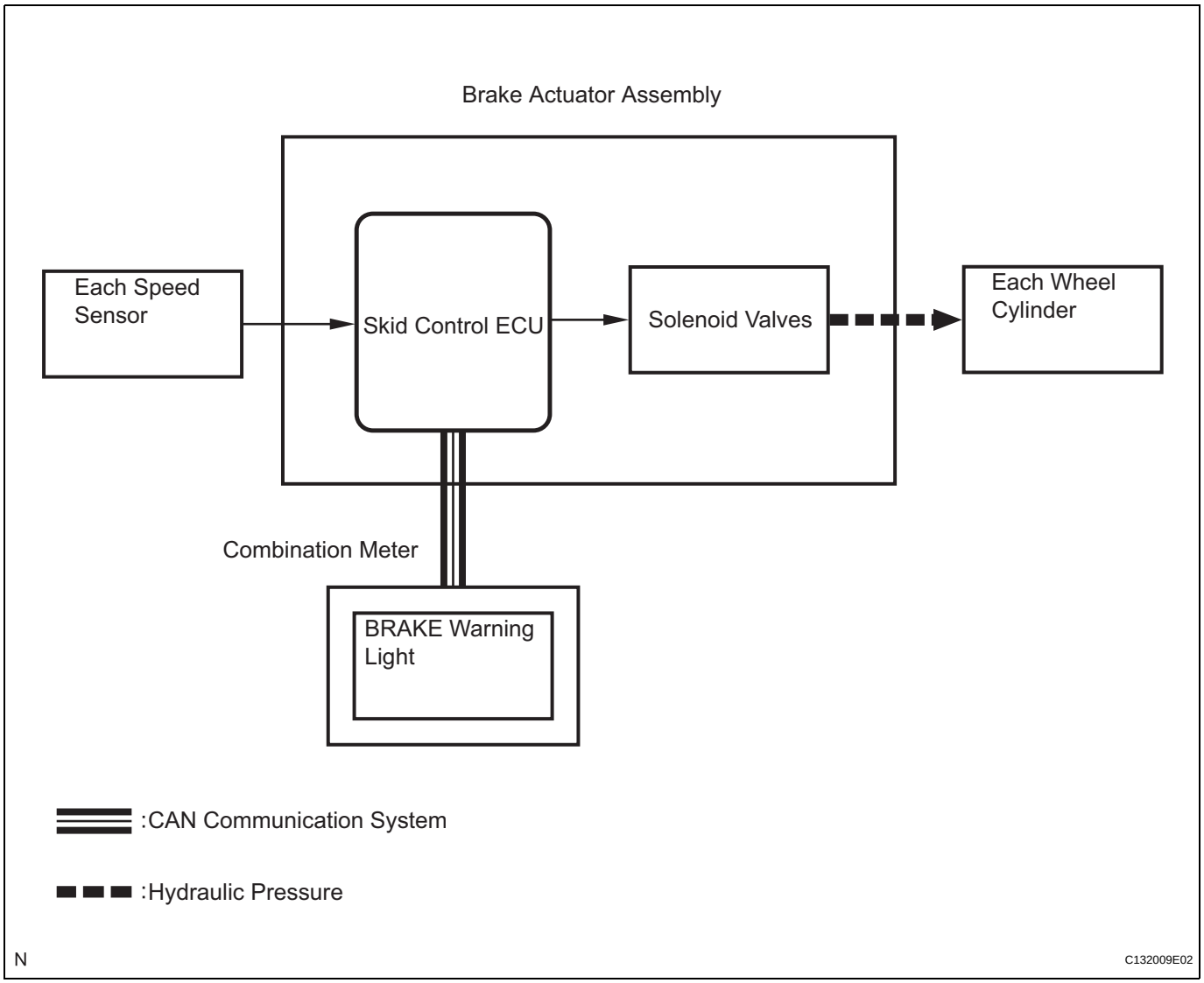

(1) Operation description
The skid control ECU receives a speed signal from each speed sensor, and uses these signals to detect locking of the wheels. The ECU uses this information in order to determine appropriate control of the solenoid valves.
The solenoid valves control the hydraulic pressure applied to the brake cylinder at each wheel. In this way, the solenoid valves are used to control the brake power split between the front and rear, and left and right wheels. The BRAKE warning light comes on if there is a malfunction in the EBD system.

(c) BA (Brake Assist)
The primary purpose of the brake assist system is to provide auxiliary brake force to assist a driver who cannot generate a large enough brake force during emergency braking. This system helps to maximize the brake performance of the vehicle.

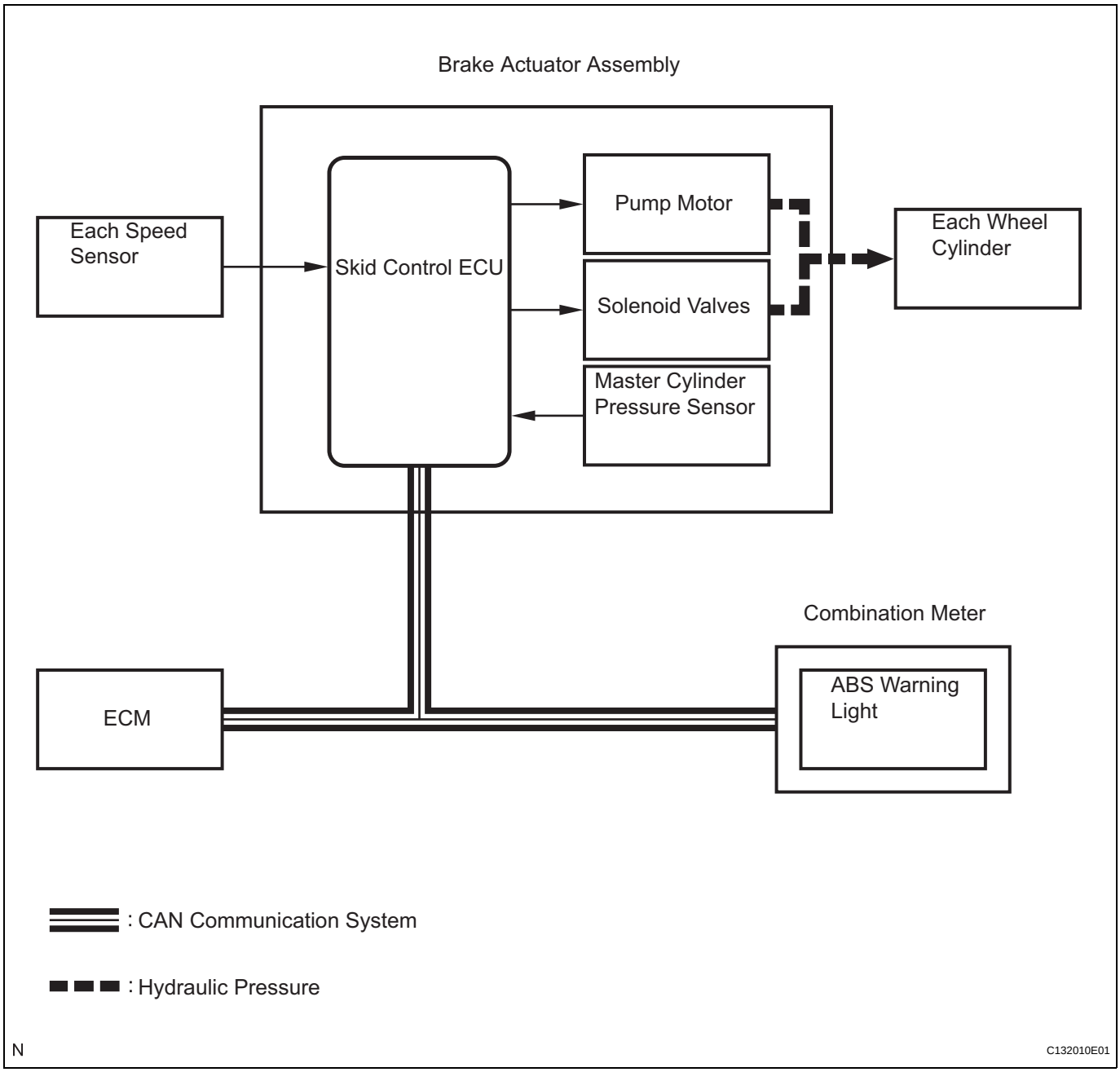

(1) Operation description

The skid control ECU receives the speed signal from each speed sensor and the hydraulic pressure signal from the master cylinder pressure sensor to determine whether brake assist is necessary. If brake assist is considered to be necessary, the skid control ECU sends control signals to the pump motor and solenoid valve.

The pump and solenoid valve then control the pressure applied to each wheel cylinder.

The ABS warning light comes on to indicate a malfunction in the BA (brake assist) system.

(d) TRAC (Traction Control)
The TRAC system helps prevent the drive wheel from slipping if the driver depresses the accelerator pedal excessively when starting off or accelerating on a slippery surface.

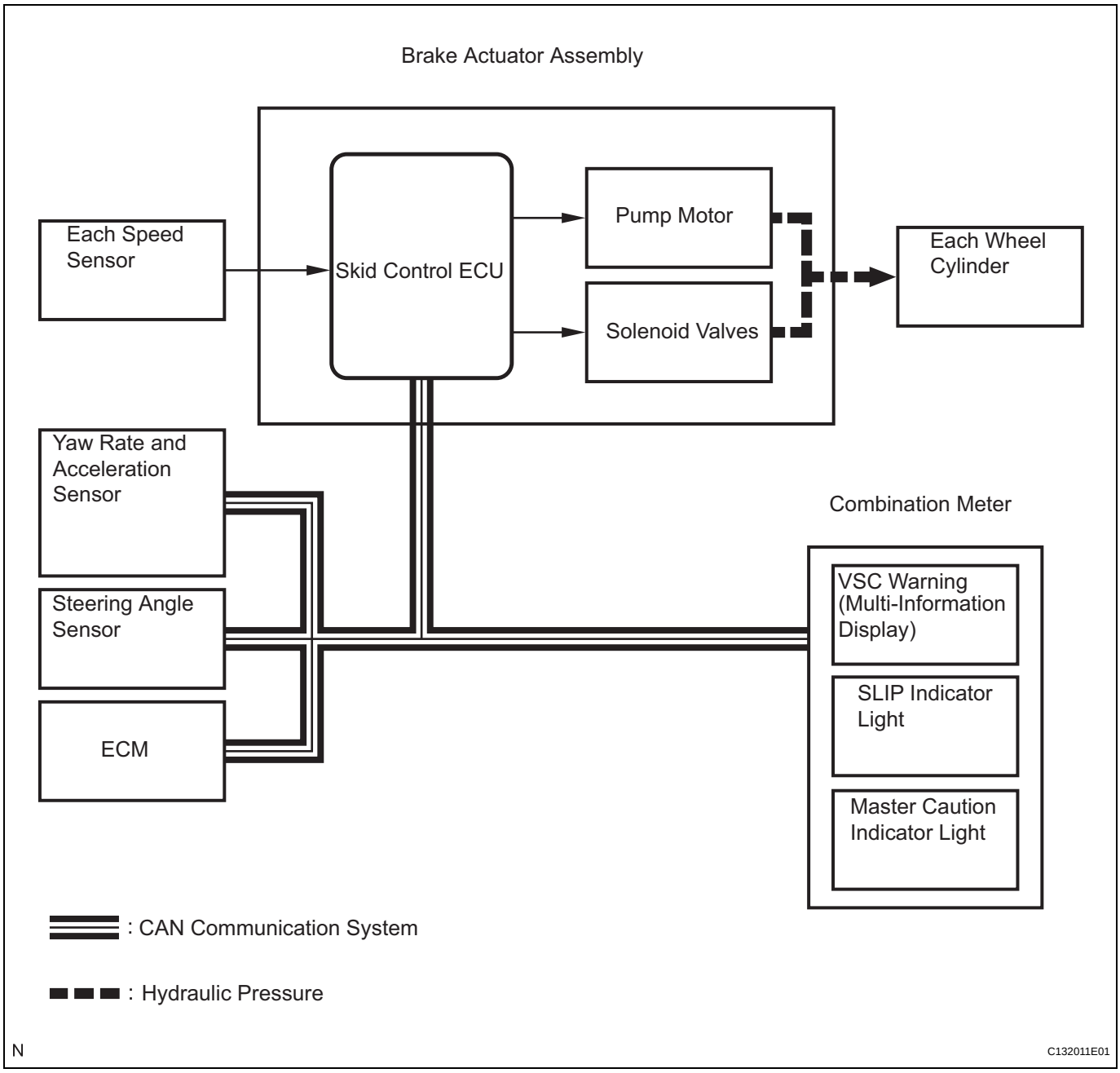

(1) Operation description

The skid control ECU detects wheelspin condition by receiving signals from each speed sensor and the ECM via CAN communication. The skid control ECU controls engine torque with the ECM via CAN communication and brake hydraulic pressure through the pump and solenoid valve.

The SLIP indicator light blinks when the system is operating. If a malfunction occurs in the TRAC system, both master caution and SLIP indicator lights will come on and the DTC will be displayed on the multi-information display.

(e) VSC (Vehicle Stability Control)
The VSC system helps prevent the vehicle from slipping sideways as a result of a strong front or rear wheel skid during cornering.

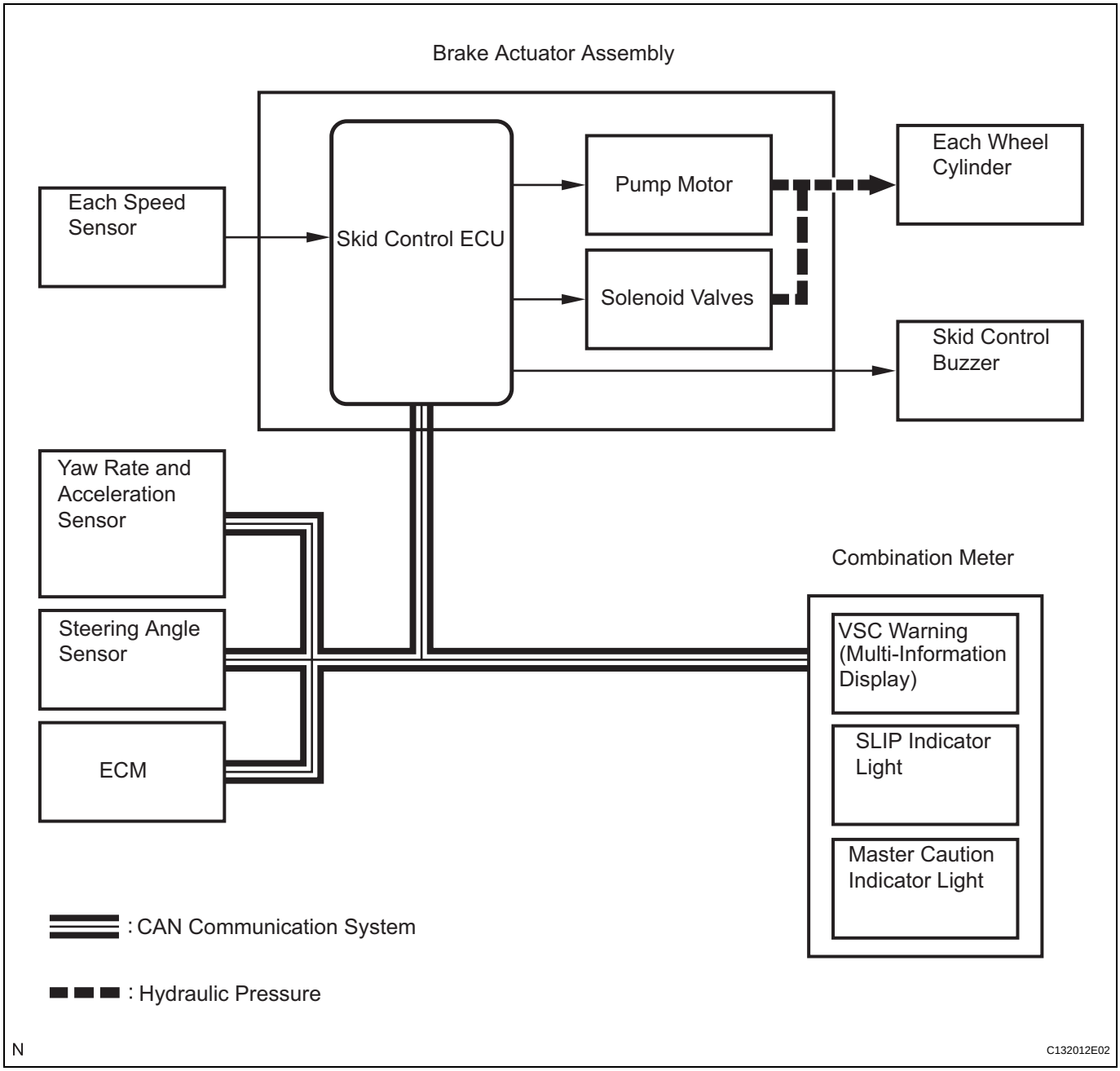

(1) Operation description
The skid control ECU determines the vehicle operating conditions based on signals received from the wheel speed sensors, yaw rate and acceleration sensor, and steering angle sensor. The skid control ECU sends signals via CAN communication to the ECM in order to control engine torque. The skid control ECU controls brake hydraulic pressure using the pump and solenoid valves.
The SLIP indicator light will blink, and the skid control system buzzer will sound when the system is operating. If a malfunction occurs in the VSC system, both the master caution indicator light and the SLIP indicator light will come on. In addition to this, the DTC will appear on the multi-information display. Vehicles without a multi-information display will illuminate the VSC warning light and SLIP indicator light if a malfunction occurs.

3. ABS with EBD, BA, TRAC and VSC OPERATION

(a) The skid control ECU calculates vehicle stability tendency based on the signals from the speed sensor, yaw rate and acceleration sensor, and steering angle sensor. In addition, it evaluates the results of the calculations to determine whether any control actions (control of the engine output torque by electronic throttle control and of the wheel brake pressure by the brake actuator assembly) should be implemented.

(b) The SLIP indicator blinks and the skid control buzzer sounds to inform the driver that the VSC system is operating. The SLIP indicator also blinks when traction control is operating, and the operation being performed is displayed.

4. FAIL SAFE

(a) When a failure occurs in the ABS with BA, TRAC and VSC systems, the ABS and VSC warning (with multi-information display) lights, and SLIP indicator light come on and ABS with BA, TRAC and VSC operations are prohibited. In addition, when there is a failure that disables the EBD operation, the BRAKE warning light also comes on and the EBD operation is prohibited.

(b) If control is prohibited due to a malfunction during operation, control will be disabled gradually. This is to avoid sudden vehicle instability.

5. INITIAL CHECK

(a) When the vehicle speed first becomes approximately 4 mph (6 km/h) or more after the ignition switch is turned on (IG), each solenoid valve and motor of the brake actuator assembly is sequentially activated to perform an electrical check. During the initial check, the operating sound of solenoid valve and motor can be heard from the engine compartment, but this is not a malfunction.

6. FUNCTION OF COMPONENTS

Components	Function
Brake actuator assembly	• Changes the fluid path based on the signals from the skid control ECU during the operation of the ABS with EBD & Brake Assist & TRAC & VSC system, in order to control the fluid pressure that is applied to the wheel cylinders. • Houses the skid control ECU.
Skid control ECU (housed in brake actuator assembly)	• Judges the vehicle driving condition based on the signals from each sensor, and controls the brake actuator assembly. • Sends and receives the control signals to or from the ECM, yaw rate and acceleration sensor, and steering angle sensor via CAN communication.
Master cylinder pressure sensor	• Detects the fluid pressure in the master cylinder. • Housed in the brake actuator assembly.
Speed sensor	Detects speed of each wheel and inputs the data into the skid control ECU.
Stop light switch	Illuminates the brake light when the brake pedal is depressed. (Sends a brake on signal to the skid control ECU)
Motor relay	• Supplies power to the pump motor. • Housed in the skid control ECU.
Solenoid relay	• Supplies power to each solenoid. • Housed in the skid control ECU.
ECM	• Controls the engine output based on the signals received from the skid control ECU. • Sends the accelerator pedal position signal and the engine speed signal to the skid control ECU.
ABS warning light	• Comes on to inform the driver that a malfunction in the ABS, EBD or BA (Brake Assist) has occurred. • Blinks to output DTC.
BRAKE warning light	• Comes on to inform the driver that the parking brake is ON when the system is normal. • Comes on to inform the driver that a malfunction in the EBD has occurred.
VSC warning light	Comes on to inform the driver that a malfunction in the VSC system has occurred.
SLIP indicator light	Blinks to inform the driver that TRC and VSC are operating.
Brake fluid level warning switch	Detects the brake fluid level.
Skid control buzzer	Intermittently sounds to inform the driver that the VSC is operating.
Yaw rate and acceleration sensor	• Acceleration sensor measures the capacity of the condenser that changes the distance between the electrodes depending on G force, which occurs when the vehicle is accelerated, and converts the measured value into electrical signals. • Yaw rate sensor detects the vehicle's angular velocity (yaw rate) in the vertical direction based on the amount and direction of the piezoelectric ceramics deflection. • Sends signals to the skid control ECU via CAN communication.
Steering angle sensor	• Installed in the steering column. • Detects the steering amount and direction and sends the signals to the skid control ECU via CAN communication. • Has the magnetic resistance element, which detects the rotation of the magnet housed in the detection gear in order to detect the changes in magnetic resistance and the steering amount and direction.

HOW TO PROCEED WITH TROUBLESHOOTING

1 VEHICLE BROUGHT TO WORKSHOP

NEXT

2 CUSTOMER PROBLEM ANALYSIS

(a) Interview the customer to confirm the trouble.

NEXT

3 CHECK CAN COMMUNICATION SYSTEM

(a) Check for DTCs (See page BC-302).
HINT:
The skid control ECU is connected to the CAN communication system.
Therefore, before starting troubleshooting, make sure to check that there is no trouble in the CAN communication system.

Result

Result	Proceed to
DTC is not output	A
DTC is output	B

B → CHECK CAN COMMUNICATION CIRCUIT

A

4 CHECK DTC AND FREEZE FRAME DATA

(a) Check for DTCs and Freeze Frame Data (See page BC-302 for DTC Check / Clear, BC-305 for Freeze Frame Data).
  (1) Record the DTCs and Freeze Frame Data.
(b) Clear the DTCs.
(c) Recheck for DTCs.
  (1) Reproduce the malfunction and check if the DTCs are output again.

Result

Result	Proceed to
DTC is output	A
DTC is not output (Problem symptom does not occur)	B
DTC is not output (Problem symptom occurs)	C

B → GO TO STEP 9

BC

C → GO TO STEP 10

A

5	DIAGNOSTIC TROUBLE CODE CHART

(a) Go to "DIAGNOSTIC TROUBLE CODE CHART" (See page BC-311).

NEXT

6	CIRCUIT INSPECTION

NEXT

BC

7	REPAIR OR REPLACE

NEXT

8	CONFIRMATION TEST

NEXT

END

9	SYMPTOM SIMULATION

NEXT

10	PROBLEM SYMPTOMS TABLE

(a) Go to "PROBLEM SYMPTOMS TABLE" (See page BC-295).

NEXT

11	CIRCUIT INSPECTION

NEXT

12	REPAIR OR REPLACE

NEXT

13	CONFIRMATION TEST

NEXT

END

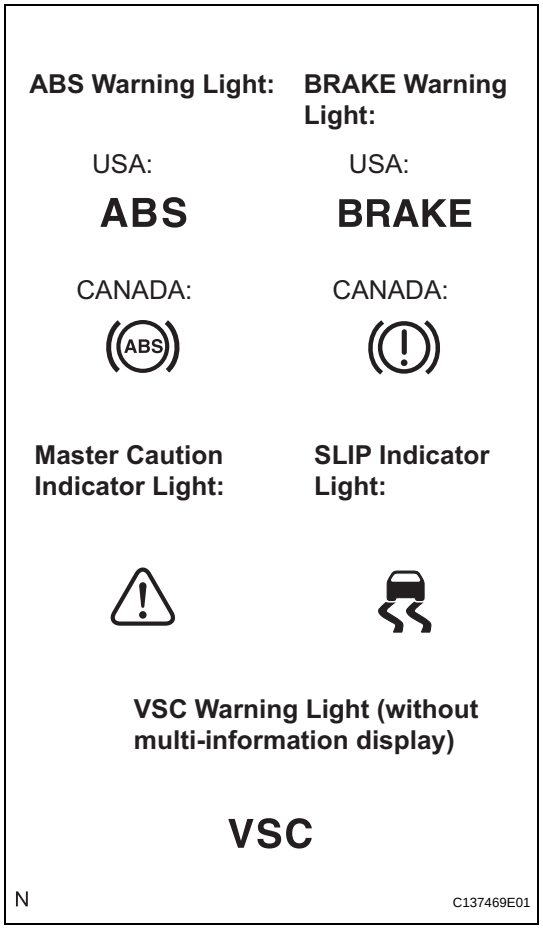

TEST MODE PROCEDURE

1. WARNING LIGHT AND INDICATOR LIGHT INITIAL CHECK

(a) Release the parking brake.

NOTICE:

Before releasing the parking brake, move the shift lever to the P position for safety (Automatic Transaxle model) or set the chocks to hold the vehicle for safety (Manual Transaxle model).

HINT:

When the parking brake is applied or the level of the brake fluid is low, the BRAKE warning light comes on.

(b) When the ignition switch is turned on (IG), check that the ABS, VSC (without multi-information display), BRAKE warning lights, and master caution, SLIP indicator lights come on for approximately 3 seconds.

HINT:

If the ECU stores any DTCs, the ABS, BRAKE, VSC warning (without multi-information display and master caution indicator light) lights, and SLIP indicator light come on.

If the indicator remains on or does not come on, proceed to troubleshooting for the light circuits listed below.

Trouble Area	See procedure
ABS warning light (Remains on)	BC-380
ABS warning light (Does not come on)	BC-385
BRAKE warning light (Remains on)	BC-395
BRAKE warning light (Does not come on)	BC-404
VSC warning light (Remains on)	BC-388
VSC warning light (Does not come on)	BC-392
SLIP indicator light (Remains on)	BC-408
SLIP indicator light (Does not come on)	BC-412

2. SENSOR SIGNAL CHECK BY TEST MODE (SIGNAL CHECK) (INTELLIGENT TESTER)

HINT:
If the ignition switch is turned from on (IG) to on (ACC) or off during Test Mode (signal check), DTCs recorded during the signal check function will be erased.

(a) Procedure to enter Test Mode.
(1) Turn the ignition switch off.
(2) Connect the intelligent tester to the DLC3.
(3) Check that the steering wheel is centered and move the shift lever to the P position (Automatic Transaxle) or apply the parking brake (Manual Transaxle).
(4) Turn the ignition switch on (IG).

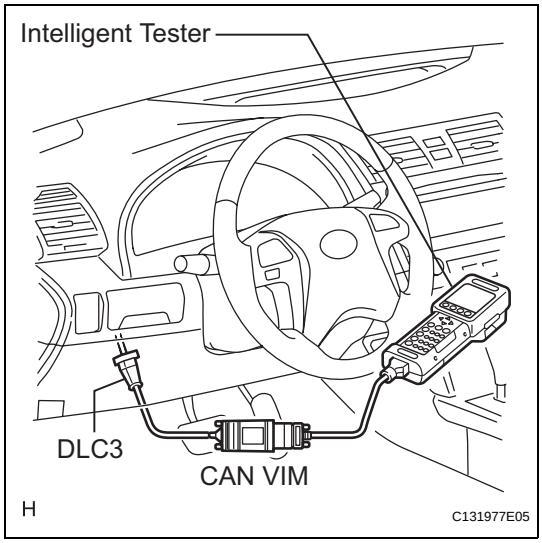

(5) Set the intelligent tester to Test Mode (select "SIGNAL CHECK").
HINT:
Refer to the intelligent tester operator's manual for further details.

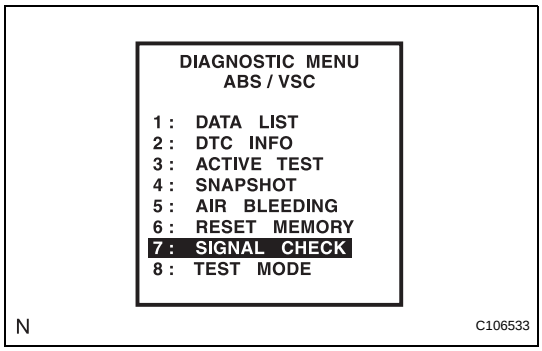

BC

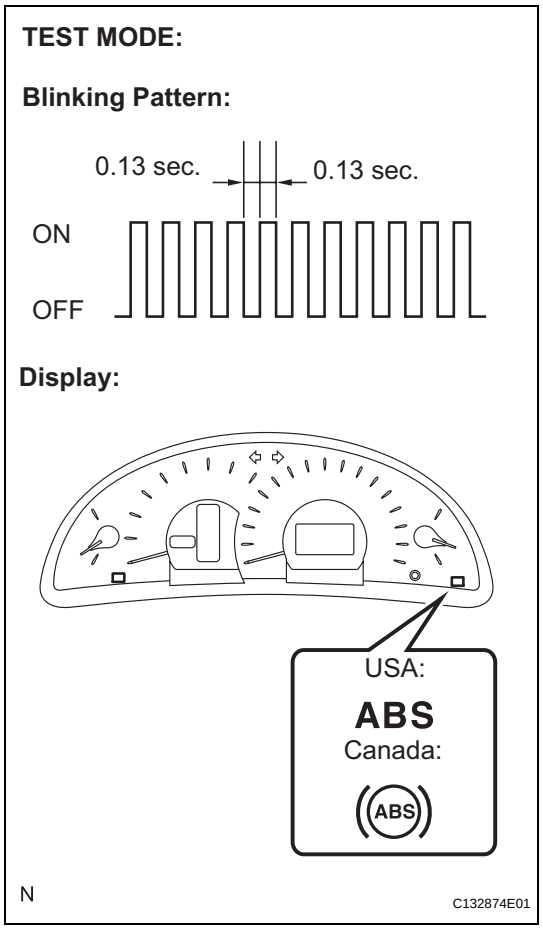

(6) Check that the ABS warning light comes on for several seconds and then blinks in Test Mode.
HINT:
If the ABS warning light does not blink, inspect the ABS warning light circuit.

Trouble Area	See procedure
ABS warning light (Does not come on)	BC-404

(b) Check the sensor signal.
(1) Drive the vehicle straight ahead.
Accelerate the vehicle to a speed of 28 mph (45 km/h) or more for several seconds and check that the ABS warning light goes off when the brake pedal is depressed.
HINT:
- The sensor check may not be completed if wheelspin occurs, or if the steering wheel is turned during this check.
- The ABS warning light goes off when the sensor signal check has been completed and the brake pedal is depressed.
- The ABS warning light comes on immediately after a malfunction has been detected during the speed sensor signal check.

(c) Stop the vehicle.
NOTICE:
- **The speed sensor check may not be completed if the speed sensor check is started while turning the steering wheel or spinning the wheels.**
- **If the signal check has not been completed, the ABS warning light will blink while driving and the ABS system will not operate.**

(d) Read the DTC(s) by following the tester screen.
NOTICE:
- **If only the DTCs are displayed, repair the malfunction area and clear the DTCs.**
- **If the DTCs or Test Mode codes (DTC of signal check function) are displayed, repair the malfunction area, clear the DTCs and perform the Test Mode inspection.**

HINT:
See the list of DTCs (See procedure "A").

3. SENSOR SIGNAL CHECK BY TEST MODE (SIGNAL CHECK) (SST CHECK WIRE)
HINT:
If the ignition switch is turned from on (IG) to on (ACC) or off during Test Mode (signal check), DTCs recorded during the signal check will be erased.
(a) Procedure to enter Test Mode.
(1) Turn the ignition switch off.

BC

(2) Check that the steering wheel is centered and move the shift lever to the P position (Automatic Transaxle) or apply the parking brake (Manual Transaxle).

(3) Using SST, connect terminals TS and CG of the DLC3.
SST 09843-18040

(4) Turn the ignition switch on (IG).

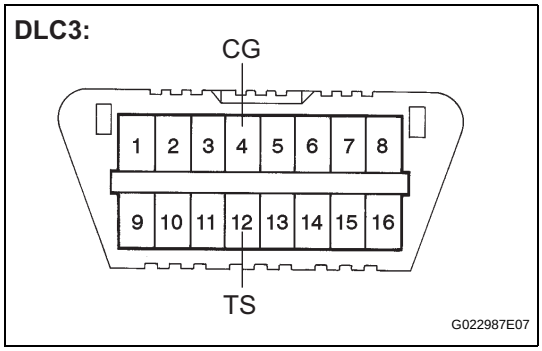

(5) Check that the ABS warning light comes on for several seconds and then blinks in Test Mode.
HINT:
If the ABS warning light does not blink, inspect the TS and CG terminal circuit, and ABS warning light circuit.

Trouble Area	See procedure
TS and CG terminal circuit	BC-421
ABS warning light circuit (Does not come on)	BC-385

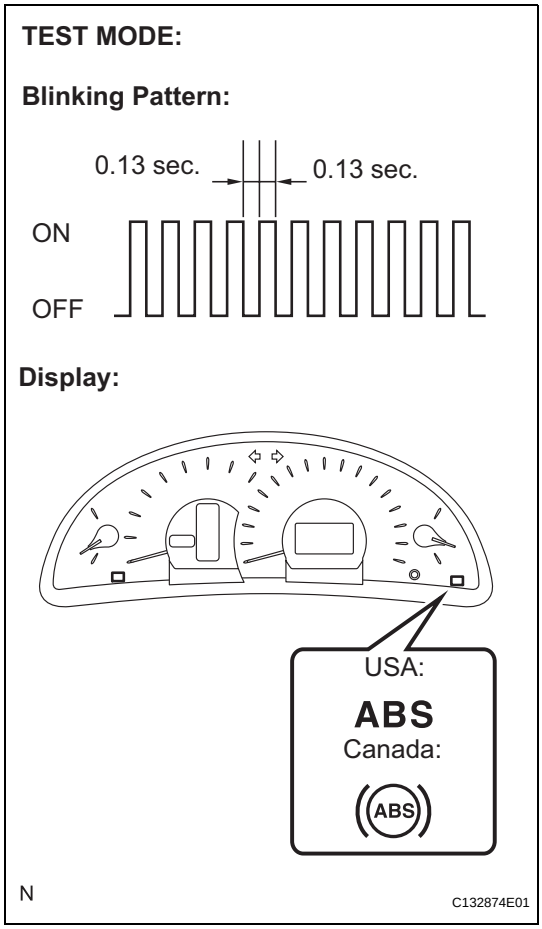

(b) Check the sensor signal.

(1) Drive the vehicle straight ahead.
Accelerate the vehicle to a speed of 28 mph (45 km/h) or more for several seconds and check that the ABS warning light goes off when the brake pedal is depressed.
HINT:
- The sensor check may not be completed if wheelspin occurs, or if the steering wheel is turned during this check.
- The ABS warning light goes off when the sensor signal check has been completed and the brake pedal is depressed.
- The ABS warning light comes on immediately after a malfunction has been detected during the speed sensor signal check.

(c) Stop the vehicle.
NOTICE:
- **The speed sensor check may not be completed if the speed sensor check is started while turning the steering wheel or spinning the wheels.**
- **If the signal check has not been completed, the ABS warning light will blink while driving and the ABS system will not operate.**

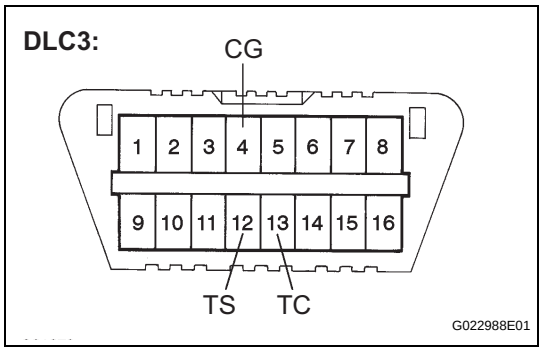

(d) Using SST, connect terminals TC and CG of the DLC3.
SST 09843-18040

(e) Count the number of blinks of the ABS warning light.

Blinking Pattern of Normal System Code:

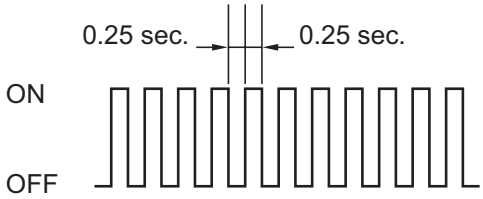

Blinking Pattern of Trouble Code (Example Codes 71 and 72):

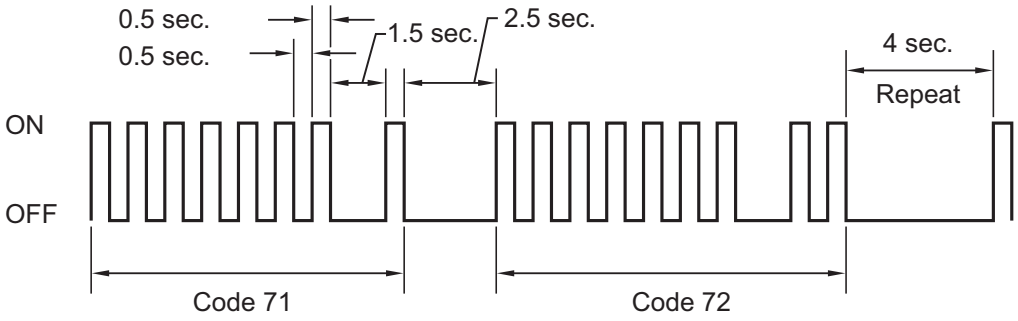

N

C132876E01

NOTICE:

- **If only the DTCs are displayed, repair the malfunction area and clear the DTCs.**
- **If the DTCs or Test Mode codes (DTC of signal check function) are displayed, repair the malfunction area, clear the DTCs and perform the Test Mode inspection.**

HINT:

- If more than 1 malfunction is detected at the same time, the lowest numbered code will be displayed first.
- See the list of DTCs (See procedure "A").

(f) After performing the check, disconnect the SST from terminals TS and CG, and TC and CG of the DLC3, and turn the ignition switch off.

BC

(g) Turn the engine switch on (IG) to cancel the Test Mode.
HINT:
- If the ignition switch is not turned on (IG) after the SST is removed from the DLC3, the previous Test Mode will continue.
- If the ignition switch is turned on (IG) with terminals TS and CG shorted, the previous Test Mode will continue.

4. DTC OF TEST MODE (SIGNAL CHECK) FUNCTION (Procedure "A")

DTC of Test Mode (Signal Check):

Code No.	Diagnosis	Trouble Area
C1271/71	Low output signal of front speed sensor RH	• Front speed sensor RH • Sensor installation • Speed sensor rotor
C1272/72	Low output signal of front speed sensor LH	• Front speed sensor LH • Sensor installation • Speed sensor rotor
C1273/73	Low output signal of rear speed sensor RH	• Rear speed sensor RH • Sensor installation • Speed sensor rotor
C1274/74	Low output signal of rear speed sensor LH	• Rear speed sensor LH • Sensor installation • Speed sensor rotor
C1275/75	Abnormal change in output signal of front speed sensor RH	• Front speed sensor RH • Sensor installation • Sensor rotor
C1276/76	Abnormal change in output signal of front speed sensor LH	• Front speed sensor LH • Sensor installation • Sensor rotor
C1277/77	Abnormal change in output signal of rear speed sensor RH	• Rear speed sensor RH • Sensor installation • Sensor rotor
C1278/78	Abnormal change in output signal of rear speed sensor LH	• Rear speed sensor LH • Sensor installation • Sensor rotor

HINT:
The codes in this table are output only in Test Mode (signal check).

5. ENGINE VARIANT LEARNING
- Engine variant learning is automatically performed immediately after the Test Mode is entered.
- The ABS, VSC, BRAKE, and SLIP indicators come on for 3 seconds after learning.

PROBLEM SYMPTOMS TABLE

If there are no DTCs output but the problem still occurs, check the circuits for each problem symptom in the order given in the table below, and proceed to the relevant troubleshooting page.

NOTICE:

Before replacing the brake actuator assembly, sensor, or other related parts, turn the ignition switch off.

Vehicle stability control system:

Symptom	Suspected area	See page
ABS, BA and/or EBD does not operate	1. Check for the DTC again and make sure that the normal system code is output.	BC-302
	2. IG power source circuit	BC-361
	3. Front speed sensor circuit	BC-316
	4. Rear speed sensor circuit	BC-324
	5. Check the brake actuator assembly with the intelligent tester (Check brake actuator assembly operation using the active test function). If abnormal, check the hydraulic circuit for leakage.	BC-431
	6. If the symptoms still occur even after the above circuits in suspected areas have been inspected and proved to be normal, replace the brake actuator assembly (skid control ECU).	BC-432
ABS, BA and/or EBD does not operate efficiently	1. Check for the DTC again and make sure that the normal system code is output.	BC-302
	2. Front speed sensor circuit	BC-316
	3. Rear speed sensor circuit	BC-324
	4. Stop light switch circuit	BC-368
	5. Check the brake actuator assembly with the intelligent tester (Check brake actuator assembly operation using the active test function). If abnormal, check the hydraulic circuit for leakage.	BC-431
	6. If the symptoms still occur even after the above circuits in suspected areas have been inspected and proved to be normal, replace the brake actuator assembly (skid control ECU).	BC-432
VSC and/or TRACTION does not operate	1. Check for the DTC again and make sure that the normal system code is output.	BC-302
	2. IG power source circuit	BC-361
	3. Check the hydraulic circuit for leakage.	-
	4. Front speed sensor circuit	BC-316
	5. Rear speed sensor circuit	BC-324
	6. Yaw rate and deceleration sensor circuit	BC-343
	7. Steering angle sensor circuit	BC-350
	8. If the symptoms still occur even after the above circuits in suspected areas have been inspected and proved to be normal, replace the brake actuator assembly (skid control ECU).	BC-432
ABS sensor DTC check cannot be done	1. Check for the DTC again and make sure that the normal system code is output.	BC-302
	2. TC and CG terminal circuit	BC-418
	3. If the symptoms still occur even after the above circuits in suspected areas have been inspected and proved to be normal, replace the brake actuator assembly (skid control ECU).	BC-432

Symptom	Suspected area	See page
VSC sensor DTC check cannot be done	1. Check for the DTC again and make sure that the normal system code is output.	BC-302
	2. TC and CG terminal circuit	BC-418
	3. If the symptoms still occur even after the above circuits in suspected areas have been inspected and proved to be normal, replace the brake actuator assembly (skid control ECU).	BC-432
Sensor signal check cannot be done	1. TS and CG terminal circuit	BC-421
	2. Brake actuator assembly (skid control ECU)	BC-432
ABS warning light abnormal (Remains on)	ABS warning light circuit	BC-380
ABS warning light abnormal (Does not come on)	ABS warning light circuit	BC-385
VSC warning light abnormal (Remains on)	VSC warning light circuit	BC-388
VSC warning light abnormal (Does not come on)	VSC warning light circuit	BC-392
Brake warning light abnormal (Remains on)	Brake warning light circuit	BC-395
Brake warning light abnormal (Does not come on)	Brake warning light circuit	BC-404
SLIP indicator light abnormal (Remains on)	SLIP indicator light circuit	BC-408
SLIP indicator light abnormal (Does not come on)	SLIP indicator light circuit	BC-412
Skid control buzzer abnormal	Skid control buzzer circuit	BC-415

TERMINALS OF ECU

1. TERMINALS OF ECU

Skid Control ECU:

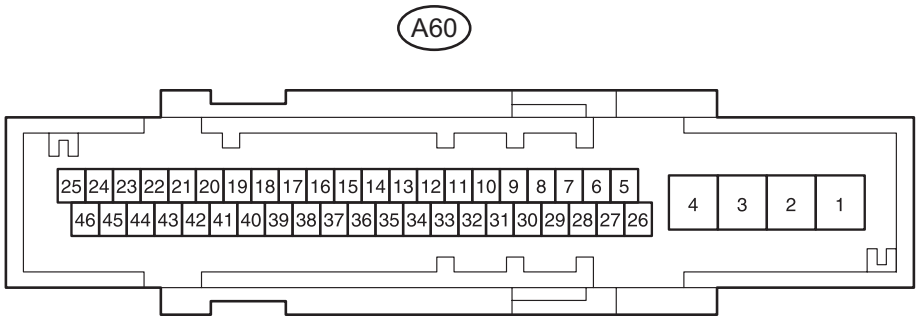

N

C113404E05

BC

Symbols (Terminal No.)	Terminal Description
GND2 (1)	Skid control ECU ground
+BM (2)	Power supply for motor
+BS (3)	Power supply for solenoid
GND1 (4)	Skid control ECU ground
FL+ (5)	Front left wheel speed sensor input
FL- (6)	Front left wheel speed sensor ground
RL+ (7)	Rear left wheel speed sensor input
RR- (8)	Rear right wheel speed sensor ground
FR- (9)	Front right wheel speed sensor ground
FR+ (10)	Front right wheel speed sensor input
D/G (11)	Diagnosis tester communication line
CANL (14)	CAN communication line L
BZ (23)	Buzzer output
RL- (27)	Rear left wheel speed sensor ground
IG1 (28)	ECU power supply
RR+ (29)	Rear right wheel speed sensor input
STP1 (30)	Stop light switch input
SP1 (33)	Speed signal output
CANH (35)	CAN communication line H
TS (39)	Sensor check switch input

2. TERMINAL INSPECTION

(a) Disconnect the connector and measure the voltage and resistance according to the value(s) in the table below.

Skid Control ECU (Harness Side Connector Front View):

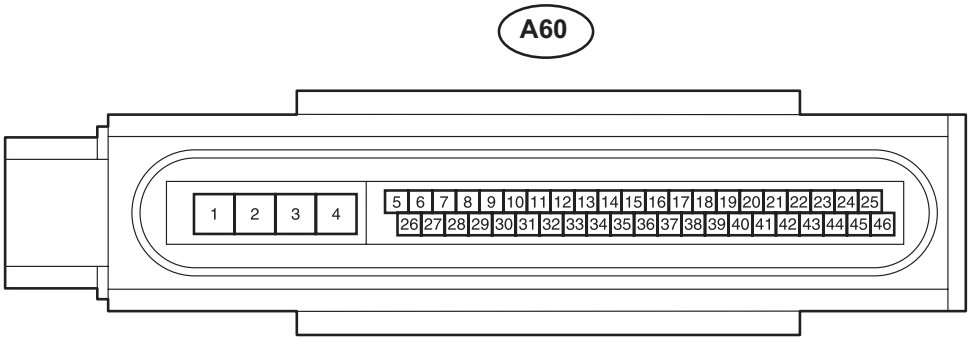

N

C137467E01

HINT:
Voltage cannot be measured with the connector connected to the skid control ECU, as the connector is watertight.

Symbols (Terminal No.)	Wiring Color	Terminal Description	Condition	Specified Condition
GND2 (A60-1) - Body ground	W-B - Body ground	Actuator pump motor ground	Always	Below 1 Ω
+BM (A60-2) - Body ground	B - Body ground	Power supply for motor	Always	10 to 14 V
+BS (A60-3) - Body ground	L - Body ground	Power supply for solenoid	Always	10 to 14 V
GND1 (A60-4) - Body ground	W-B - Body ground	Skid control ECU ground	Always	Below 1 Ω
BZ (A60-23) - Body ground	R - Body ground	Buzzer warning light output	Ignition switch on (IG), Buzzer does not sound	6 to 10 V
IG1 (A60-28) - Body ground	P - Body ground	IG1 power supply	Ignition switch on (IG)	10 to 14 V
STP1 (A60-30) - Body ground	P - Body ground	Stop light switch input	Stop light switch ON →OFF (Brake pedal depressed → released)	5 to 14 V → Below 3 V

DIAGNOSIS SYSTEM

1. DIAGNOSIS SYSTEM

(a) Inspect the battery voltage.

Standard voltage:

11 to 14 V

If the voltage is below 11 V, recharge the battery before proceeding.

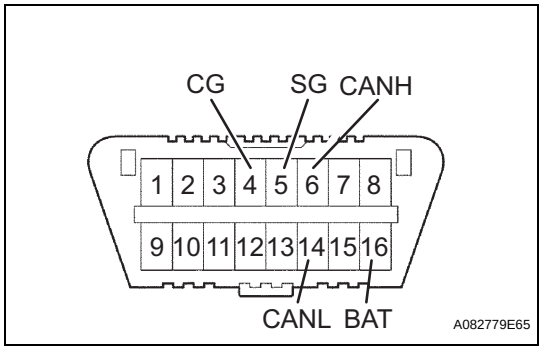

(b) The vehicle's ECU uses the ISO 15765-4 for communication protocol. The terminal arrangement of the DLC3 complies with SAE J1962 and matches the ISO 15765-4 format.

HINT:

Connect the cable of the intelligent tester to the DLC3, turn the ignition switch on (IG) and attempt to use the intelligent tester. If the screen displays a communication error message, a problem exists on either the vehicle side or the tester side.

If the communication is normal when the tester is connected to another vehicle, inspect the DLC3 on the original vehicle.

If the communication is still impossible when the tester is connected to another vehicle, the problem is probably in the tester itself. Consult the Service Department listed in the tester's instruction manual.

Symbols (Terminal No.)	Terminal Description	Condition	Specified Condition
CG (4) - Body ground	Chassis ground	Always	Below 1 Ω
SG (5) - Body ground	Signal ground	Always	Below 1 Ω
BAT (16) - Body ground	Battery positive	Always	9 to 14 V
CANH (6) - CANL (14)	HIGH-level CAN bus line	Ignition switch OFF*	54 to 69 Ω
CANH (6) - Battery positive	HIGH-level CAN bus line	Ignition switch OFF*	6 kΩ or higher
CANH (6) - CG (4)	HIGH-level CAN bus line	Ignition switch OFF*	200 Ω or higher
CANL (14) - Battery positive	LOW-level CAN bus line	Ignition switch OFF*	6 kΩ or higher
CANL (14) - CG (4)	LOW-level CAN bus line	Ignition switch OFF*	200 Ω or higher

NOTICE:

***: Before measuring the resistance, leave the vehicle as is for at least 1 minute and do not operate the ignition switch, any other switches or the doors.**

2. DESCRIPTION

NOTICE:

When releasing the parking brake, set chocks to hold the vehicle for safety.

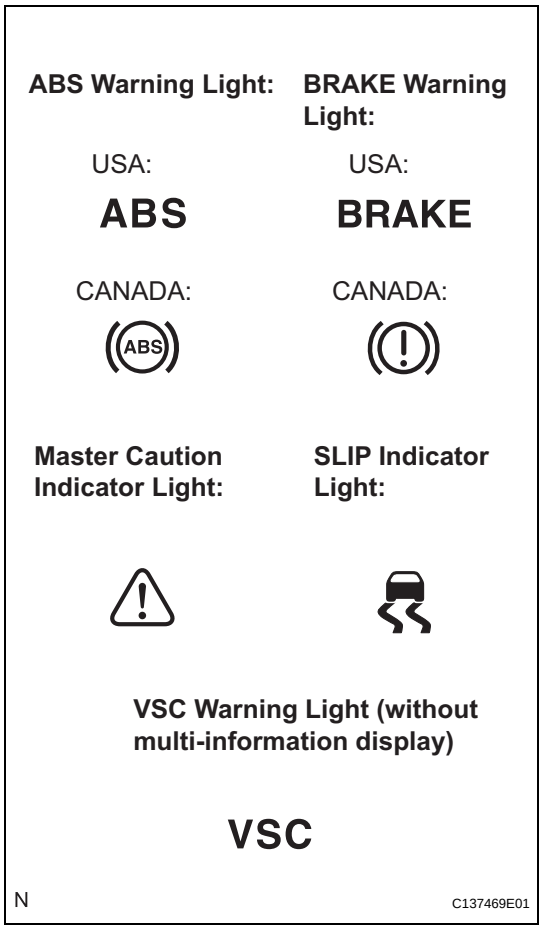

(a) If the skid control ECU detects a malfunction, the ABS, VSC (without multi-information display), and BRAKE warning lights, and master caution and SLIP indicator lights will come on and the multi-information display shows a warning message in order to warn the driver.
The table below indicates which lights will come on when there is a malfunction in a particular function.

Item/Trouble Area	ABS	EBD	BA	TRAC	VSC
ABS Warning Light	○	○	○	-	-
BRAKE Warning Light	-	○	-	-	-
VSC Warning Light (without multi-information display)	○	○	○	○	○
SLIP Indicator Light	○	○	○	○	○

○: Light ON
-: Light OFF

- The DTCs are simultaneously stored in the memory. The DTCs can be read by connecting the SST between terminals TC and CG of the DLC3 and observing the blinking pattern of the ABS warning light by connecting the intelligent tester (See page BC-302).
- This system has a signal check function (TEST MODE) (See page BC-290).
  The DTC can be read by connecting the intelligent tester and observing the blinking pattern of the ABS warning.

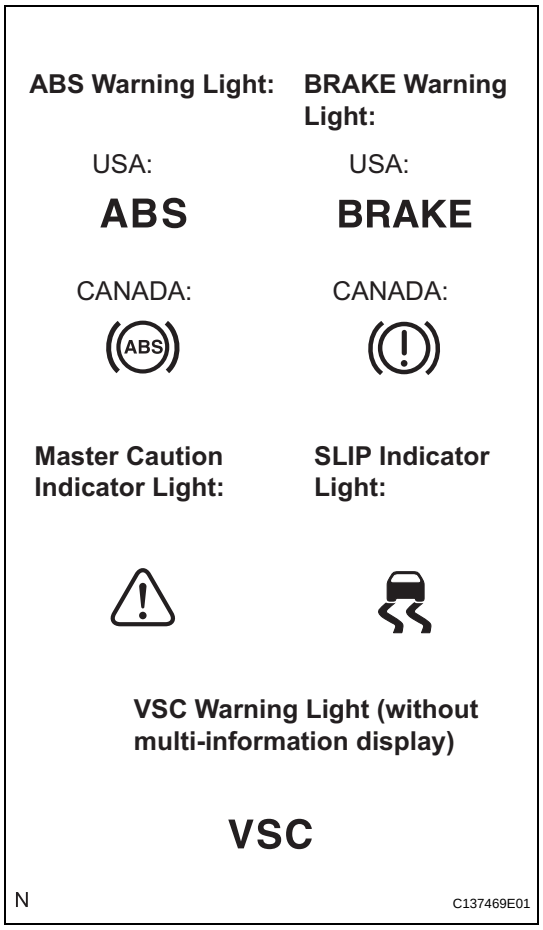

3. WARNING LIGHT AND INDICATOR LIGHT INITIAL CHECK

(a) Release the parking brake.

NOTICE:

Before releasing the parking brake, move the shift lever to the P position for safety (Automatic Transaxle model) or set the chocks to hold the vehicle for safety (Manual Transaxle model).

HINT:

When the parking brake is applied or the level of the brake fluid is low, the BRAKE warning light comes on.

(b) When the ignition switch is turned on (IG), check that the ABS, VSC (without multi-information display), and BRAKE warning lights, and master caution and SLIP indicator lights come on for approximately 3 seconds.

HINT:

If the ECU stores any DTCs, the ABS, BRAKE, and VSC warning (multi-information display and master caution indicator light) lights, and SLIP indicator light come on.

If the indicator remains on or does not come on, proceed to troubleshooting for the light circuits listed below.

Trouble Area	See procedure
ABS warning light (Remains on)	BC-380
ABS warning light (Does not come on)	BC-385
BRAKE warning light (Remains on)	BC-395
BRAKE warning light (Does not come on)	BC-404
VSC warning light (Remains on)	BC-388
VSC warning light (Does not come on)	BC-392
SLIP indicator light (Remains on)	BC-408
SLIP indicator light (Does not come on)	BC-412

4. SYMPTOM SIMULATION

HINT:

The most difficult case in troubleshooting is when no symptoms occur. In such cases, a thorough customer problem analysis must be carried out. Then the same or similar conditions and environment in which the problem occurred in the customer's vehicle should be reproduced. No matter how experienced or skilled a technician may be, if he proceeds to troubleshoot without confirming the problem symptoms, he will likely overlook something important and make a wrong guess at some points in the repair operation. This leads to a standstill in troubleshooting.

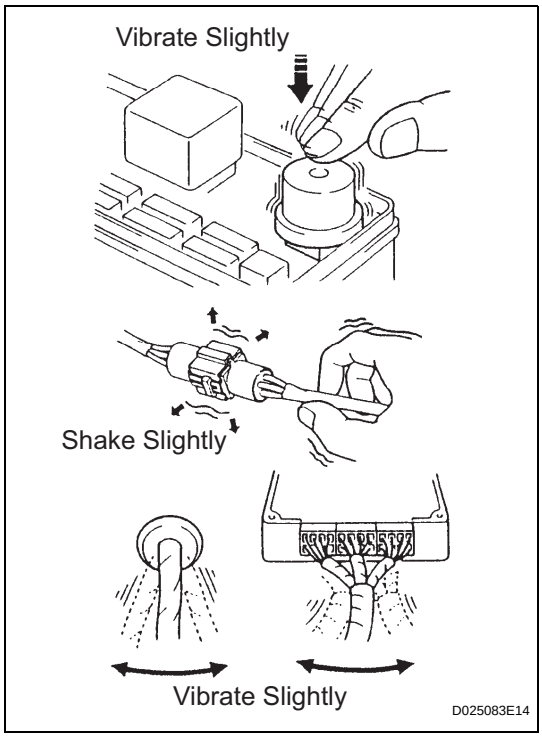

(a) Vibration method: When vibration seems to be the major cause.
HINT:
Perform the simulation method only during the primary check period (for approximately 6 seconds after the ignition switch is turned on (IG)).
(1) Slightly vibrate the part of the sensor considered to be the problem cause with your fingers and check whether the malfunction occurs.
(2) Slightly shake the connector vertically and horizontally.
HINT:
Shaking the relays too strongly may result in open relays.
(3) Slightly shake the wire harness vertically and horizontally. The connector joint and fulcrum of the vibration are the major areas to be checked thoroughly.

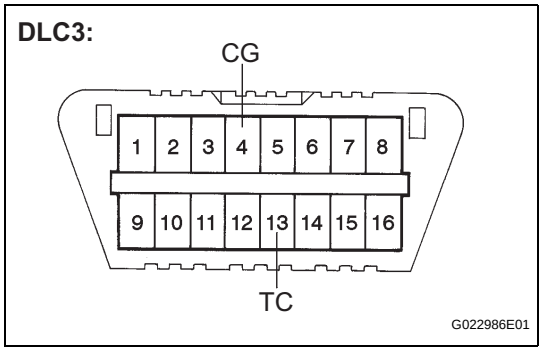

DTC CHECK / CLEAR

1. DTC CHECK/CLEAR (WHEN USING SST CHECK WIRE:)

(a) DTC check
(1) Using SST, connect terminals TC and CG of the DLC3.
SST 09843-18040
(2) Turn the ignition switch on (IG).

(3) Observe the blinking pattern of the ABS and VSC (without multi-information display) warning lights or read the multi information display (with multi-information display) in order to identify the DTC.

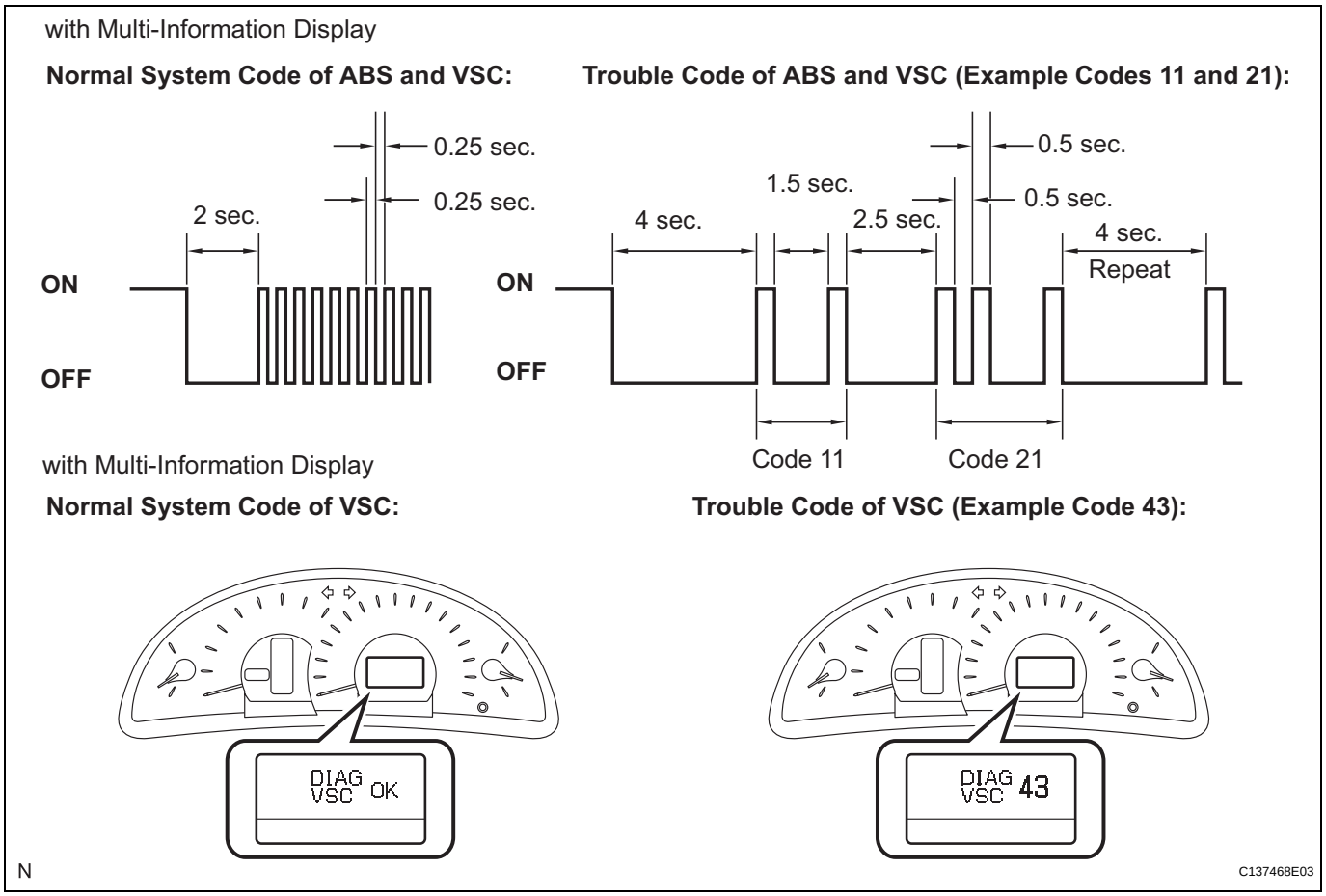

HINT:
If no code appears, inspect the TC and CG terminal circuit, the ABS warning light circuit, and the VSC warning light circuit.

Trouble Area	See procedure
ABS warning light (Remains on)	BC-380
ABS warning light (Does not come on)	BC-385
VSC warning light (Remains on)	BC-388
VSC warning light (Does not come on)	BC-392
TC and CG Terminal Circuit	BC-418

- As an example, the blinking patterns for a normal system code and trouble codes 11 and 21 are shown in the illustration.

(4) Codes are explained in the code table (See page BC-311).

(5) After completing the check, disconnect terminals TC and CG of the DLC3, and turn off the display. If 2 or more DTCs are detected at the same time, the DTCs will be displayed in ascending order.

BC

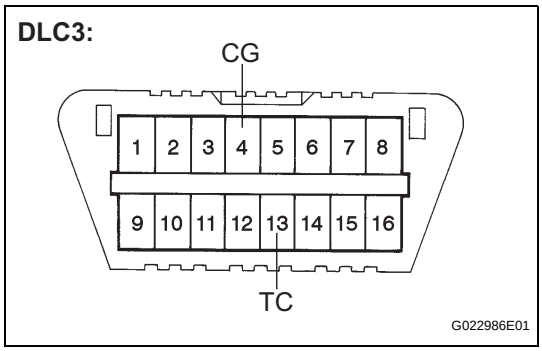

(b) DTC clear
(1) Using SST, connect terminals TC and CG of the DLC3.
SST 09843-18040
(2) Turn the ignition switch on (IG).

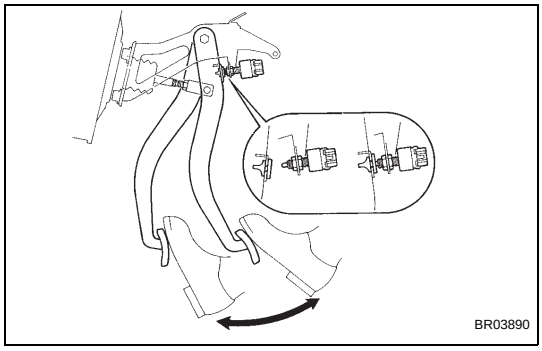

(3) Clear the DTCs stored in the ECU by depressing the brake pedal 8 times or more within 5 seconds.
(4) Check that the warning light indicates a normal system code.
(5) Remove the SST.
HINT:
Clearing the DTCs cannot be performed by disconnecting the battery terminal or the ECU-IG fuse.

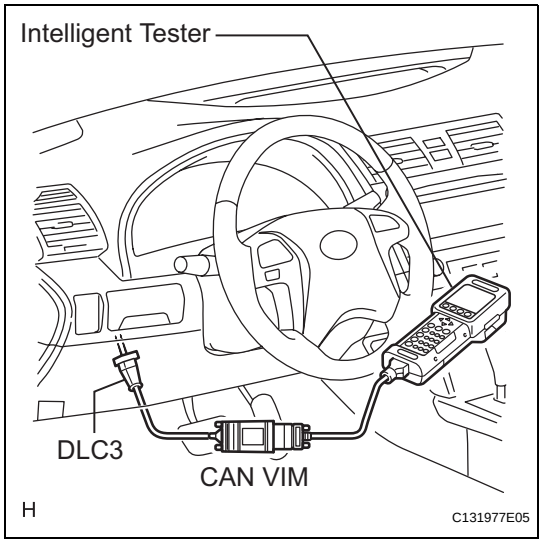

2. DTC CHECK/CLEAR (WHEN USING INTELLIGENT TESTER:)
(a) DTC check
(1) Connect the intelligent tester to the DLC3.
(2) Turn the ignition switch on (IG).
(3) Read the DTCs by following the prompts on the tester screen.
(b) DTC clear
(1) Connect the intelligent tester to the DLC3.
(2) Turn the ignition switch on (IG).
(3) Operate the intelligent tester to clear the codes.
HINT:
Refer to the intelligent tester operator's manual for further details.

3. END OF DTC CHECK/CLEAR
(a) Turn the ignition switch on (IG).
(b) Check that the ABS warning light goes off within approximately 3 seconds.

BC

FREEZE FRAME DATA

1. FREEZE FRAME DATA

(a) Whenever an ABS DTC is detected, the skid control ECU stores the current vehicle (sensor) state as Freeze Frame Data.
The skid control ECU stores the number of times (maximum: 31) the ignition switch has been turned from off to on (IG) since the last time the ABS was activated.
HINT:
- However, if the vehicle is stopped or at a low speed (4.3 mph (7 km/h) or less), or if a DTC is detected, the skid control ECU will stop counting the number.
- Freeze Frame Data at the time the ABS operates:
  The skid control ECU stores and updates data whenever the ABS system operates.
  When the ECU stores data at the time a DTC is detected, the data stored during ABS operation is erased.
- Freeze Frame Data at the time a DTC is detected:
  When the skid control ECU stores data at the time a DTC is detected, no updates will be performed until the data is cleared.

(b) Connect the intelligent tester to the DLC3.
(c) Turn the ignition switch on (IG).
(d) Select the "DTC INFO" on the tester display.
(e) On the DTC data display screen, select the DTC data display with "*".

Item (Display)	Measurement Item	Reference Value
VEHICLE SPD	Vehicle speed reading	Min.: 0 mph (0 km/h), Max.: 202 mph (326.4 km/h)
STOP LAMP SW	Stop light switch signal	Stop light switch ON: ON, OFF: OFF
#IG ON	Number of operations of engine switch on (IG) after storing freeze frame data	0 to 31
MAS CYL PRESS 1	Master cylinder pressure sensor reading	Brake pedal released: 0.3 to 0.5 V
M/C PRESS GRADE	Master cylinder pressure sensor change	Min.: -30 MPa/s, Max.: 225 MPa/s
YAW RATE	Yaw rate sensor reading	Min.: -128 deg/s, Max.: 127 deg/s
STEERING SEN	Steering angle sensor reading	Left turn: Increase Right turn: Decrease
SPD GRADE	Vehicle speed grade	Min.: -25.11 m/s^2, Max.: 24.91 m/s^2
BUZZER	Skid control buzzer signal	Skid control buzzer ON: ON, OFF: OFF
PARKING BRAKE SW	Parking brake switch signal	Parking brake switch ON: ON, OFF: OFF
ENGINE TORQUE	Real engine torque	Min.: -1024 Nm, Max.: 1023 Nm
FR WHEEL SPD	FR wheel speed	Min.: 0 mph (0 km/h), Max.: 202 mph (326.4 km/h)
FL WHEEL SPD	FL wheel speed	Min.: 0 mph (0 km/h), Max.: 202 mph (326.4 km/h)
RR WHEEL SPD	RR wheel speed	Min.: 0 mph (0 km/h), Max.: 202 mph (326.4 km/h)
RL WHEEL SPD	RL wheel speed	Min.: 0 mph (0 km/h), Max.: 202 mph (326.4 km/h)

Item (Display)	Measurement Item	Reference Value
LATERAL G	Lateral G	Min.: -25.11 m/s^2, Max.: 24.91 m/s^2
GEAR POSITION *	Gear position information	FAIL 1st 2nd 3rd 4th 5th 6th P, N R NOT R
LEVER POSITION *	Shift lever position information	FAIL 1st 2nd 3rd 4th 5th 6th/B D/M P, N R
OPERATED SYSTEM	Operated system status	ABS activated: ABS VSC activated: VSC TRAC activated: TRAC BA activated: BA PB activated: PB Fail safe mode activated: FAIL No system activated: NON System prohibited: SYS
FREEZE TIME	Elapsed time after freeze trigger	Min.: 0 ms, Max.: 500 ms
TROUBLE CODE	Freeze frame DTC	Displays to output DTC
INSPECTION MODE	Inspection mode	OTHER: Normal, INSPECT: Service

*: Automatic Transaxle

FAIL-SAFE CHART

1. FAIL SAFE OPERATION

(a) If there is a problem with sensor signals or actuator systems, the skid control ECU prohibits power supply to the brake actuator assembly and informs the ECM of the VSC system failure.

(b) The brake actuator assembly turns off each solenoid and the ECM shuts off the VSC control (traction control signal) from the skid control ECU accordingly, which turns out to be as if the vehicle stability control system was not installed.

(c) ABS, VSC, and TRAC control will be prohibited, but EBD control continues as much as possible. If EBD control is impossible, the brake warning light comes on to warn the driver (See page BC-298).

Malfunction	Symptom
ABS system	Prohibits the ABS, BA, TRAC, and VSC control
BA system	Prohibits the ABS, BA, TRAC, and VSC control
EBD system	Prohibits the ABS, EBD, BA, TRAC, and VSC control
TRAC system	Prohibits the TRAC and VSC control
VSC system	Prohibits the TRAC and VSC control

HINT:

- A malfunction in either the ABS or BA system results in an identical operation, with ABS, BA, TRAC, and VSC system control prohibited.
- If control is prohibited due to a malfunction during operation, control will be disabled gradually to prevent the vehicle from becoming unstable suddenly.

DATA LIST / ACTIVE TEST

1. DATA LIST

HINT:
With the intelligent tester connected to the DLC3 and the ignition switch on (IG), the ABS, TRAC and VSC Data List can be displayed. Follow the prompts on the tester screen to access the Data List.

Item (Display)	Measurement Item / Range (Display)	Normal Condition	Diagnostic Note
MTR RELAY	ABS motor relay / ON or OFF	ON: Motor relay ON OFF: Motor relay OFF	-
SOL RELAY	Solenoid relay / ON or OFF	ON: Solenoid relay ON OFF: Solenoid relay OFF	-
IDLE SW	Main idle switch / ON or OFF	ON: Accelerator pedal released OFF: Accelerator pedal depressed	-
STOP LAMP SW	Stop light switch / ON or OFF	ON: Brake pedal depressed OFF: Brake pedal released	-
PARKING BRAKE SW	Parking brake switch / ON or OFF	ON: Parking brake applied OFF: Parking brake released	-
ENG REVOLUTIONS	Engine revolutions / min.: 0 r/min, max.: 65,535 r/min	-	-
GEAR POSITION *	Gear position information / P/N, R, 1st-6th, FAIL, NOT R	-	-
LEVER POSITION *	Shift lever position information / P/N, R, D/M, 1st-6th/B, FAIL	-	-
SHIFT INFO	Shift information / ON or OFF	ON: During gear change	-
FR WHEEL SPD	FR wheel speed sensor reading / min.: 0 mph (0 km/h), max.: 202 mph (326 km/h)	Actual wheel speed	Similar speed as indicated on speedometer
FL WHEEL SPD	FL wheel speed sensor reading / min.: 0 mph (0 km/h), max.: 202 mph (326 km/h)	Actual wheel speed	Similar speed as indicated on speedometer
RR WHEEL SPD	RR wheel speed sensor reading / min.: 0 mph (0 km/h), max.: 202 mph (326 km/h)	Actual wheel speed	Similar speed as indicated on speedometer
RL WHEEL SPD	RL wheel speed sensor reading / min.: 0 mph (0 km/h), max.: 202 mph (326 km/h)	Actual wheel speed	Similar speed as indicated on speedometer
DECELERAT SEN	Acceleration sensor 1 reading / min.: -18.52 m/s^2, max.: 18.39 m/s^2	Approximately 0+-0.13 G while stationary	Reading changes when vehicle is bounced
SFRR	ABS solenoid (SFRR) / ON or OFF	ON: Operates	-
SFRH	ABS solenoid (SFRH) / ON or OFF	ON: Operates	-
SFLR	ABS solenoid (SFLR) / ON or OFF	ON: Operates	-
SFLH	ABS solenoid (SFLH) / ON or OFF	ON: Operates	-
SRRR	ABS solenoid (SRRR) / ON or OFF	ON: Operates	-
SRRH	ABS solenoid (SRRH) / ON or OFF	ON: Operates	-
SRLR	ABS solenoid (SRLR) / ON or OFF	ON: Operates	-
SRLH	ABS solenoid (SRLH) / ON or OFF	ON: Operates	-

Item (Display)	Measurement Item / Range (Display)	Normal Condition	Diagnostic Note
SRM2	Master cut solenoid (SRM2) / ON or OFF	ON: Operates	-
SRM1	Master cut solenoid (SRM1) / ON or OFF	ON: Operated	-
SRC2	Master cut solenoid (SMC2) / ON or OFF	ON: Operates	-
SRC1	Master cut solenoid (SRC1) / ON or OFF	ON: Operates	-
VEHICLE SPD	Maximum wheel speed sensor reading / min.: 0 mph (0 km/h), max.: 202 mph (326 km/h)	Actual vehicle speed	Speed indicated on speedometer
YAW RATE SENS 1	Yaw rate sensor 1 / min.: -128 deg/s, max.: 127 deg/s	Min.: -128 deg/s Max.: 127 deg/s	-
ZERO YAW RATE	Memorized zero value / min.: -128 deg/s, max.: 127 deg/s	Min.: -128 deg/s Max.: 127 deg/s	-
STEERING SEN	Steering angle sensor / min.: -3,276.8 deg, max.: 3,276.7 deg	Left turn: Increase Right turn: Decrease	-
MAS CYL PRESS 1	Master cylinder pressure sensor 1 reading / min.: 0 V, max.: 5 V	When brake pedal is released: 0.3 to 0.5 V	Reading increases when brake pedal is depressed
ENGINE TORQUE	Real engine torque / min.: -1024 N*m, max.: 1023 N*m	-	-
FR SPD OPN	FR speed sensor open detection / ERROR or NORMAL	ERROR: Momentary interruption NORMAL: Normal	-
FL SPD OPN	FL speed sensor open detection / ERROR or NORMAL	ERROR: Momentary interruption NORMAL: Normal	-
RR SPD OPN	RR speed sensor open detection / ERROR or NORMAL	ERROR: Momentary interruption NORMAL: Normal	-
RL SPD OPN	RL speed sensor open detection / ERROR or NORMAL	ERROR: Momentary interruption NORMAL: Normal	-
YAW RATE OPN	Yaw rate sensor open detection / ERROR or NORMAL	ERROR: Momentary interruption NORMAL: Normal	-
DECELERAT OPN	Acceleration sensor open detection / ERROR or NORMAL	ERROR: Momentary interruption NORMAL: Normal	-
STEERING OPN	Steering angle sensor open detection / ERROR or NORMAL	ERROR: Momentary interruption NORMAL: Normal	-
EFI COM OPN	EFI communication open detection / ERROR or NORMAL	ERROR: Momentary interruption NORMAL: Normal	-
#DTC	Number of DTC / min.: 0, max.: 255	-	-
ABS WARN LAMP	ABS warning light / ON or OFF	ON: Warning light ON OFF: Warning light OFF	-
BRAKE WARN LAMP	BRAKE warning light / ON or OFF	ON: Warning light ON OFF: Warning light OFF	-
SLIP INDI LAMP	SLIP indicator light / ON or OFF	ON: Indicator light ON OFF: Indicator light OFF	-
BUZZER	Skid control buzzer / ON or OFF	ON: Buzzer ON OFF: Buzzer OFF	-
VSC WARN LAMP	VSC warning (multi-information display and master caution indicator light) light / ON or OFF	ON: Indicator ON OFF: Indicator OFF	-
FR WHEEL ACCEL	FR wheel acceleration / min.: -200.84 m/s^2, max.: 199.27 m/s^2	Min.: -200.84 m/s^2 Max.: 199.27 m/s^2	-
FL WHEEL ACCEL	FL wheel acceleration / min.: -200.84 m/s^2, max.: 199.27 m/s^2	Min.: -200.84 m/s^2 Max.: 199.27 m/s^2	-
RR WHEEL ACCEL	RR wheel acceleration / min.: -200.84 m/s^2, max.: 199.27 m/s^2	Min.: -200.84 m/s^2 Max.: 199.27 m/s^2	-

Item (Display)	Measurement Item / Range (Display)	Normal Condition	Diagnostic Note
RL WHEEL ACCEL	RL wheel acceleration / min.: -200.84 m/s^2, max.: 199.27 m/s^2	Min.: -200.84 m/s^2 Max.: 199.27 m/s^2	-
ZERO DECELERAT	Memorized zero value / min.: -25.11 m/s^2, max.: 24.91 m/s^2	Min.: -25.11 m/s^2 Max.: 24.91 m/s^2	-
ZERO STEERING	Memorized zero value / min.: -3,276.8 deg, max.: 3,276.7 deg	Min.: -3,276.8 deg Max.: 3,276.7 deg	-
LATERAL G	Lateral G / min.: -25.11 m/s^2, max.: 24.91 m/s^2	Min.: -25.11 m/s^2 Max.: 24.91 m/s^2	-
FORWARD&REA G	Forward and rearward G / min.: -25.11 m/s^2, max.: 24.91 m/s^2	Min.: -25.11 m/s^2 Max.: 24.91 m/s^2	-
YAW RATE VALUE	Yaw rate value / min.: -128 deg/s, max.: 127 deg/s	Min.: -128 deg/s Max.: 127 deg/s	-
STEERING ANGLE	Steering angle value / min.: -3,276.8 deg, max.: 3,276.7 deg	Min.: -3,276.8 deg Max.: 3,276.7 deg	-
TRAC STATUS	TRAC control status / ON or OFF	ON: During the control	-
TRAC ENG STATUS	TRAC engine control status / ON or OFF	ON: During the control	-
TRAC BRK STATUS	TRAC brake control status / ON or OFF	ON: During the control	-
FR VSC STATUS	FR wheel VSC control status / ON or OFF	ON: During the control	-
FL VSC STATUS	FL wheel VSC control status / ON or OFF	ON: During the control	-
RR VSC STATUS	RR wheel VSC control status / ON or OFF	ON: During the control	-
RL VSC STATUS	RL wheel VSC control status / ON or OFF	ON: During the control	-
FR ABS STATUS	FR wheel ABS control status / ON or OFF	ON: During the control	-
FL ABS STATUS	FL wheel ABS control status / ON or OFF	ON: During the control	-
RR ABS STATUS	RR wheel ABS control status / ON or OFF	ON: During the control	-
RL ABS STATUS	RL wheel ABS control status / ON or OFF	ON: During the control	-
FR EBD STATUS	FR wheel EBD control status / ON or OFF	ON: During the control	-
FL EBD STATUS	FL wheel EBD control status / ON or OFF	ON: During the control	-
RR EBD STATUS	RR wheel EBD control status / ON or OFF	ON: During the control	-
RL EBD STATUS	RL wheel EBD control status / ON or OFF	ON: During the control	-
BA STATUS	BA control status / ON or OFF	ON: During the control	-
INSPECTION MODE	Inspection mode / OTHER or INSPECT	-	-
#IG ON2	Number of ignition switch on (IG) after entering the inspection mode / min.: 0, max.: 255	-	-
TROUBLE CODE	Freeze frame DTC / min.: 0, max.: 65,535	-	-

*: Automatic Transaxle

2. ACTIVE TEST

HINT:
Performing the Active Test using the intelligent tester allows the relay, actuator, and other items to operate without removing any parts. Performing the Active Test as the first step in troubleshooting is one of the methods to save labor time.
It is possible to display the Data List during the Active Test.

(a) Connect the intelligent tester to the DLC3.
(b) Turn the ignition switch on (IG).
(c) From the display on the tester, select the Active Test.
HINT:
The ignition switch must be turned on (IG) to proceed to the Active Test using the intelligent tester.

Item (Display)	Vehicle Condition / Test Details	Diagnostic Note
SFRR	Turns ABS solenoid (SFRR) ON / OFF	Operating sound of solenoid (clicking sound) can be heard
SFRH	Turns ABS solenoid (SFRH) ON / OFF	Operating sound of solenoid (clicking sound) can be heard
SFLR	Turns ABS solenoid (SFLR) ON / OFF	Operating sound of solenoid (clicking sound) can be heard
SFLH	Turns ABS solenoid (SFLH) ON / OFF	Operating sound of solenoid (clicking sound) can be heard
SRRR	Turns ABS solenoid (SRRR) ON / OFF	Operating sound of solenoid (clicking sound) can be heard
SRRH	Turns ABS solenoid (SRRH) ON / OFF	Operating sound of solenoid (clicking sound) can be heard
SRLR	Turns ABS solenoid (SRLR) ON / OFF	Operating sound of solenoid (clicking sound) can be heard
SRLH	Turns ABS solenoid (SRLH) ON / OFF	Operating sound of solenoid (clicking sound) can be heard
SRM2	Turns master cut solenoid (SRM2) ON / OFF	Operating sound of solenoid (clicking sound) can be heard
SRM1	Turns master cut solenoid (SRM1) ON / OFF	Operating sound of solenoid (clicking sound) can be heard
SRC2	Turns master cut solenoid (SRC2) ON / OFF	Operating sound of solenoid (clicking sound) can be heard
SRC1	Turns master cut solenoid (SRC1) ON / OFF	Operating sound of solenoid (clicking sound) can be heard
MOTOR RELAY	Turns ABS motor relay ON / OFF	Operating sound of relay (clicking sound) and motor can be heard
ABS WARN LAMP	Turns ABS warning light ON / OFF	Observe combination meter
VSC WARN LAMP	Turns VSC warning (master caution indicator) light ON / OFF	Observe combination meter
SLIP INDI LAMP	Turns SLIP indicator light ON / OFF	Observe combination meter
BRAKE WARN LAMP	Turns BRAKE warning light ON / OFF	Observe combination meter
BUZZER	Turns skid control buzzer ON / OFF	Buzzer can be heard

DIAGNOSTIC TROUBLE CODE CHART

- If a trouble code is displayed during the DTC check, check the circuit indicated by the DTC. For details of each code, refer to the page for the respective "DTC No." in the DTC chart.
- Inspect the fuse and relay before investigating the trouble areas as shown in the table below.

DTC chart of ABS:

DTC No.	Detection Item	Trouble Area	See page
C0200/31	Right Front Wheel Speed Sensor Signal Malfunction	1. Front speed sensor RH 2. Front speed sensor circuit RH 3. Front speed sensor rotor RH 4. Sensor installation 5. Brake actuator assembly (skid control ECU)	BC-316
C0205/32	Left Front Wheel Speed Sensor Signal Malfunction	1. Front speed sensor LH 2. Front speed sensor circuit LH 3. Front speed sensor rotor LH 4. Sensor installation 5. Brake actuator assembly (skid control ECU)	BC-316
C0210/33	Right Rear Wheel Speed Sensor Signal Malfunction	1. Rear speed sensor RH 2. Rear speed sensor circuit RH 3. Rear speed sensor rotor RH 4. Sensor installation 5. Brake actuator assembly (skid control ECU)	BC-324
C0215/34	Left Rear Wheel Speed Sensor Signal Malfunction	1. Rear speed sensor LH 2. Rear speed sensor circuit LH 3. Rear speed sensor rotor LH 4. Sensor installation 5. Brake actuator assembly (skid control ECU)	BC-324
C0226/21	SFR Solenoid Circuit	1. Each solenoid circuit 2. Brake actuator assembly	BC-333
C0236/22	SFL Solenoid Circuit	1. Each solenoid circuit 2. Brake actuator assembly	BC-333
C0246/23	SRR Solenoid Circuit	1. Each solenoid circuit 2. Brake actuator assembly	BC-333
C0256/24	SRL Solenoid Circuit	1. Each solenoid circuit 2. Brake actuator assembly	BC-333
C0273/13	Open or Short Circuit in ABS Motor Relay Circuit	1. ABS No. 1 fuse (Fusible link) 2. Brake actuator assembly (skid control ECU) 3. Motor relay circuit	BC-335
C0278/11	Open or Short Circuit in ABS Solenoid Relay Circuit	1. ABS No. 2 fuse (Fusible link) 2. Brake actuator assembly (skid control ECU) 3. Solenoid relay circuit	BC-339
C1225/25	SMC Solenoid Circuit	1. Brake actuator assembly (skid control ECU) 2. SMC1 solenoid circuit	BC-348
C1226/26	SMC Solenoid Circuit	1. Brake actuator assembly (skid control ECU) 2. SMC2 circuit	BC-348
C1227/27	SRC Solenoid Circuit	1. Brake actuator assembly (skid control ECU) 2. SRC1 circuit	BC-348
C1228/28	SRC Solenoid Circuit	1. Brake actuator assembly (skid control ECU) 2. SRC2 circuit	BC-348

DTC No.	Detection Item	Trouble Area	See page
C1237/37	Tires of Different Size	1. Brake actuator assembly (skid control ECU) 2. Speed sensor 3. Speed sensor rotor (front) 4. Rear axle hub and bearing assembly 5. Speed sensor circuit 6. Tire and wheel circuit 7. Tire deformation	BC-354
C1241/41	Low Battery Positive Voltage or Abnormally High Battery Positive Voltage	1. Battery 2. ECU-IG No. 2 fuse 3. Charging system 4. Power source circuit 5. Brake actuator assembly (internal power source circuit)	BC-361
C1246/46	Master Cylinder Pressure Sensor Malfunction	1. Master cylinder pressure sensor 2. Master cylinder pressure sensor circuit 3. Stop light switch circuit 4. Brake actuator assembly (skid control ECU)	BC-365
C1249/49	Open in Stop Light Switch Circuit	1. Stop light switch 2. Stop light switch circuit 3. Brake actuator assembly (skid control ECU)	BC-368
C1271/71	Low Output Signal of Front Speed Sensor RH (Test Mode DTC)	1. Front speed sensor RH 2. Sensor installation 3. Speed sensor rotor	BC-316
C1272/72	Low Output Signal of Front Speed Sensor LH (Test Mode DTC)	1. Front speed sensor LH 2. Sensor installation 3. Speed sensor rotor	BC-316
C1273/73	Low Output Signal of Rear Speed Sensor RH (Test Mode DTC)	1. Rear speed sensor RH 2. Sensor installation 3. Speed sensor rotor	BC-324
C1274/74	Low Output Signal of Rear Speed Sensor LH (Test Mode DTC)	1. Rear speed sensor LH 2. Sensor installation 3. Speed sensor rotor	BC-324
C1275/75	Abnormal Change in Output Signal of Front Speed Sensor RH (Test Mode DTC)	1. Front speed sensosr RH 2. Sensor installation 3. Sensor rotor	BC-316
C1276/76	Abnormal Change in Output Signal of Front Speed Sensor LH (Test Mode DTC)	1. Front speed sensosr LH 2. Sensor installation 3. Sensor rotor	BC-316
C1277/77	Abnormal Change in Output Signal of Rear Speed Sensor RH (Test Mode DTC)	1. Rear speed sensosr RH 2. Sensor installation 3. Sensor rotor	BC-324
C1278/78	Abnormal Change in Output Signal of Rear Speed Sensor LH (Test Mode DTC)	1. Rear speed sensosr LH 2. Sensor installation 3. Sensor rotor	BC-324
C1288/88	ECU Version Miss Match	ECM	BC-374
C1300/62	Skid Control ECU Malfunction	Brake actuator assembly (skid control ECU)	BC-375
C1330/35	Right Front Speed Sensor Circuit	1. Front speed sensor RH 2. Front speed sensor circuit RH 3. Sensor installation	BC-316
C1331/36	Left Front Speed Sensor Circuit	1. Front speed sensor LH 2. Front speed sensor circuit LH 3. Sensor installation	BC-316
C1332/38	Right Rear Speed Sensor Circuit	1. Rear speed sensor RH 2. Rear speed sensor circuit RH 3. Sensor installation	BC-324

DTC No.	Detection Item	Trouble Area	See page
C1333/39	Left Rear Speed Sensor Circuit	1. Rear speed sensor LH 2. Rear speed sensor circuit LH 3. Sensor installation	BC-324
U0073/94	Control Module Communication Bus OFF	CAN communication system	BC-377

(*1, *2):
Even after the trouble areas are repaired, the ABS warning light will not go off unless the following operations are performed:

- (*1):
  (a) Drive the vehicle at 12 mph (20 km/h) for 30 seconds or more and check that the ABS warning light goes off.
  (b) Clear the DTC.
- (*2):
  (a) Keep the vehicle stationary for 5 seconds or more and depress the brake pedal lightly 2 or 3 times.
  (b) Drive the vehicle at the vehicle speed of 31 mph (50 km/h) and keep depressing the brake pedal strongly for approximately 3 seconds.
  (c) Repeat the above operation 3 times or more and check that the ABS warning light goes off.
  (d) Clear the DTC.

HINT:
In some cases, the intelligent tester cannot be used when the ABS warning light remains on.

DTC chart of VSC:

DTC No.	Detection Item	Trouble Area	See page
43	ABS Control System Malfunction	ABS control system	BC-315
C0365/28	Malfunction in Deceleration Sensor	1. Yaw rate and acceleration sensor 2. Yaw rate and acceleration sensor circuit 3. Sensor installation 4. Brake actuator assembly (skid control ECU)	BC-343
C1201/51	Engine Control System Malfunction	Engine control system	BC-347
C1231/31	Steering Angle Sensor Circuit Malfunction	1. Steering angle sensor 2. Steering angle sensor circuit 3. Steering angle sensor power supply	BC-350
C1234/34	Yaw Rate Sensor Malfunction	1. Yaw rate and acceleration sensor 2. Yaw rate and acceleration sensor circuit	BC-343
U0100/65	Lost Communication with ECM / PCM	CAN communication system (skid control ECU to ECM)	BC-377
U0123/62	Lost Communication with Yaw Rate Sensor Module	CAN communication system (skid control ECU to yaw rate and acceleration sensor)	BC-377
U0126/63	Lost Communication with Steering Angle Sensor Module	CAN communication system (skid control ECU to steering angle sensor)	BC-377

DTC	43	ABS Control System Malfunction

DESCRIPTION

This DTC is output when the VSC system detects a malfunction in the ABS control system.

DTC No.	DTC Detection Condition	Trouble Area
43	Malfunction in the ABS control system	ABS control system

INSPECTION PROCEDURE

1 CHECK ABS CONTROL SYSTEM

(a) Clear the DTC (See page BC-302).
(b) Turn the ignition switch on (IG).
(c) Check if the same DTC is recorded (See page BC-302).

Result

Condition	Proceed to
DTC (ABS control system DTC) is not output	A
DTC (ABS control system DTC) is output	B

B → **REPAIR CIRCUITS INDICATED BY OUTPUT DTCS (BRAKE CONTROL SYSTEM) (See page BC-311)**

A

2 CONFIRM DTC

(a) Clear the DTC (See page BC-302).
(b) Turn the ignition switch on (IG).
(c) Check if the same DTC is recorded (See page BC-302).

Result

Condition	Proceed to
DTC (43) is not output	A
DTC (43) is output	B

B → **REPLACE BRAKE ACTUATOR ASSEMBLY (See page BC-432)**

A

END

BC

DTC	**C0200/31**	**Right Front Wheel Speed Sensor Signal Malfunction**
DTC	**C0205/32**	**Left Front Wheel Speed Sensor Signal Malfunction**
DTC	**C1271/71**	**Low Output Signal of Front Speed Sensor RH (Test Mode DTC)**
DTC	**C1272/72**	**Low Output Signal of Front Speed Sensor LH (Test Mode DTC)**
DTC	**C1275/75**	**Abnormal Change in Output Signal of Front Speed Sensor RH (Test Mode DTC)**
DTC	**C1276/76**	**Abnormal Change in Output Signal of Front Speed Sensor LH (Test Mode DTC)**
DTC	**C1330/35**	**Right Front Speed Sensor Circuit**
DTC	**C1331/36**	**Left Front Speed Sensor Circuit**

DESCRIPTION

The speed sensors detects wheel speed and transmit the signals to the skid control ECU. These signals are used for control of the ABS control system. Each of the front and rear rotors has 48 serrations. When the rotors rotate, the magnetic field generated by the permanent magnet in the speed sensor induces AC voltage. Since the frequency of this AC voltage changes in direct proportion to the speed of the rotor, the frequency is used by the ECU to detect the speed of each wheel.
DTCs C1271/71 to C1276/76 can be deleted when the speed sensor sends a wheel speed signal or the test mode ends. DTCs C1271/71 to C1276/76 are output only in the test mode.

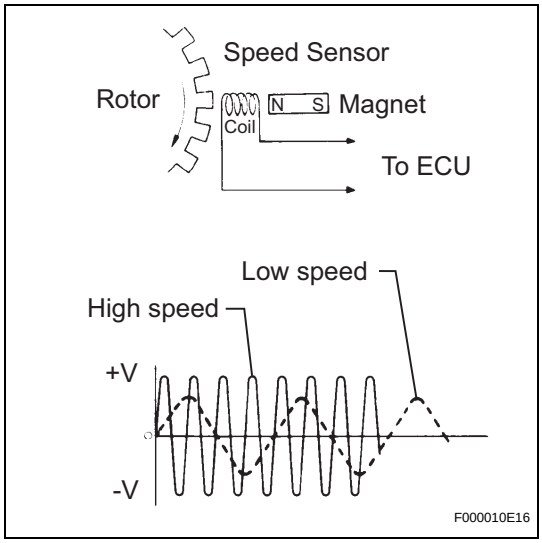

DTC No.	DTC Detecting Condition	Trouble Area
C0200/31 C0205/32	When either of the following is detected: • Vehicle speed is more than 25 mph (40 km/h), and pulses are not input for 0.03 sec. • When the vehicle speed has reached 8 mph (12 km/h) after the initial start or restart, a wheel speed of 0 mph (0 km/h) is detected.	• Front speed sensor RH and/or LH • Front speed sensor circuit RH and/or LH • Front speed sensor rotor RH and/or LH • Sensor installation • Brake actuator assembly (skid control ECU)
C1330/35 C1331/36	Abnormality in the resistance value of each speed sensor is detected.	• Front speed sensor RH and/or LH • Front speed sensor circuit RH and/or LH • Sensor installation
C1271/71 C1272/72	Detected only during test mode.	• Front speed sensor • Sensor installation • Sensor rotor
C1275/75 C1276/76	Detected only during test mode.	• Front speed sensor • Sensor installation • Sensor rotor

HINT:
DTC No. C0200/31 and C1330/35 are for the front speed sensor RH.
DTC No. C0205/32 and C1331/36 are for the front speed sensor LH.

BC

WIRING DIAGRAM

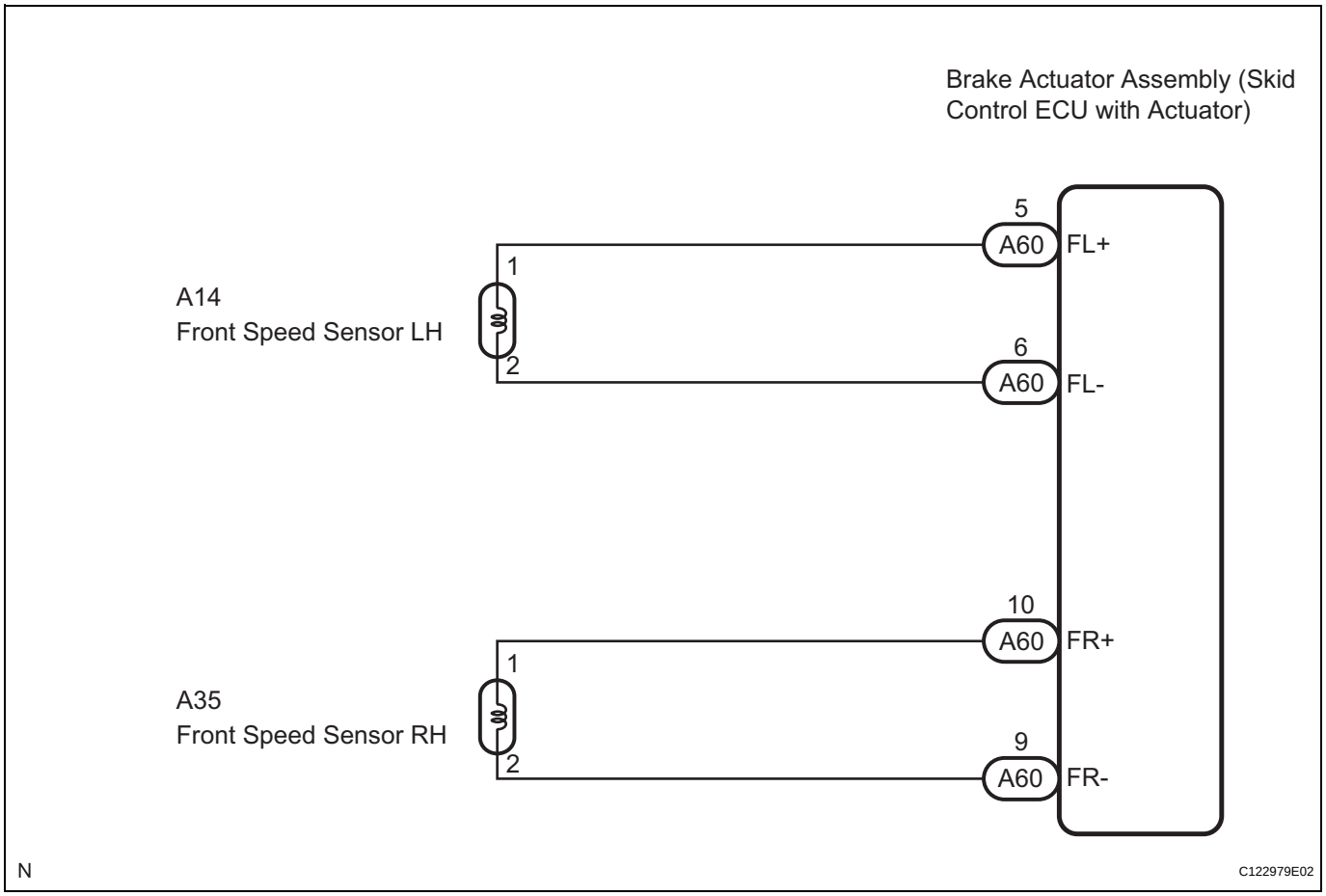

INSPECTION PROCEDURE

HINT:
Check the condition of each related circuit connector before troubleshooting (See page IN-40).

1 READ VALUE OF INTELLIGENT TESTER (FRONT SPEED SENSOR)

(a) Connect the intelligent tester to the DLC3.
(b) Start the engine.
(c) Select "DATA LIST" and read the value displayed on the intelligent tester (See page BC-307).

DATA LIST: ABS/TRAC/VSC

Item	Measurement Item / Range (Display)	Normal Condition
FR WHEEL SPD	Wheel speed sensor (FR) reading / min.: 0 MPH (0 km/h), max.: 202 MPH (326 km/h)	Actual wheel speed
FL WHEEL SPD	Wheel speed sensor (FL) reading / min.: 0 MPH (0 km/h), max.: 202 MPH (326 km/h)	Actual wheel speed

(d) Check that there is no difference between the speed value output from the speed sensor displayed on the intelligent tester and the speed value displayed on the speedometer when driving the vehicle.
OK:
The speed value output from the speed sensor displayed on the intelligent tester is the same as the actual vehicle speed.

NG → **Go to step 5**

OK

2 PERFORM TEST MODE INSPECTION (SIGNAL CHECK)

(a) Check if test mode (signal check) DTCs are detected (See page BC-290).

Result

Condition	Proceed to
Test mode (signal check) DTC is not output	**A**
Test mode (signal check) DTC is output	**B**

B → **Go to step 5**

A

BC

3	INSPECT SPEED SENSOR SIGNAL WAVEFORM

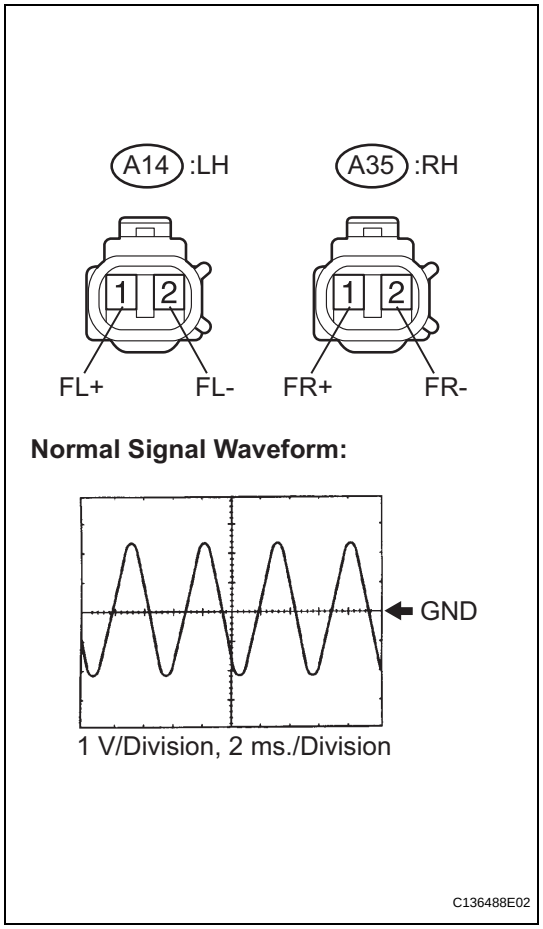

(a) Lift up the vehicle.
(b) Perform the inspection using an oscilloscope.
  (1) Disconnect the front speed sensor connector.
  (2) Connect the oscilloscope to terminals 1 and 2 of the front speed sensor.
  (3) Check that a waveform is output when the tires are rotated.
  OK:
  The same waveform is output from front wheels and there is no noise or interference in the waveform.
  HINT:
  - As vehicle speed (wheel rotation speed) increases, the width of the waveform narrows and the output voltage becomes greater.
  - When noise is identified in the waveform on the oscilloscope, the erratic signals are generated due to rotor scratches, looseness or foreign matter attached to the speed sensor.
  (4) Connect the connector.

NG → **Go to step 11**

OK

4	RECONFIRM DTC

(a) Clear the DTCs (See page BC-302).
(b) Drive the vehicle at a speed of approximately 25 mph (40 km/h) or more for 60 seconds or more.
(c) Check if the same DTCs are recorded (See page BC-302).
HINT:
Reinstall the sensors, connectors, etc. and restore the vehicle to its prior condition before rechecking for DTCs.

Result

Condition	Proceed to
DTCs (C0200/31, C0205/32, C1330/35 and C1331/36) are output	A
DTCs (C0200/31, C0205/32, C1330/35 and C1331/36) are output (When troubleshooting in accordance with the PROBLEM SYMPTOMS TABLE)	B
DTCs (C0200/31, C0205/32, C1330/35 and C1331/36) are not output (When troubleshooting in accordance with the DTC CHART)	C

BC

B → **PROCEED TO NEXT CIRCUIT INSPECTION SHOWN IN PROBLEM SYMPTOMS TABLE (See page BC-295)**

C → **END**

A

5 INSPECT FRONT SPEED SENSOR INSTALLATION

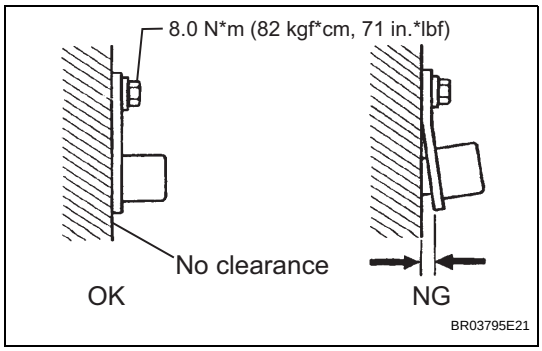

(a) Check the front speed sensor installation.
OK:
The installation bolt is tightened properly.
There is no clearance between the sensor and front steering knuckle.

Torque: 8.0 N*m (82 kgf*cm, 71 in.*lbf)

NOTICE:
Check the speed sensor signal after replacement (See page BC-290).

NG → **INSTALL FRONT SPEED SENSOR CORRECTLY (See page BC-440)**

OK

6 INSPECT FRONT SPEED SENSOR

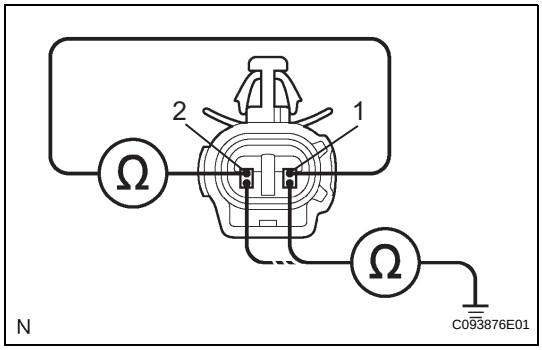

(a) Make sure that there is no looseness at the locking part and the connecting part of the connectors.
(b) Disconnect the front speed sensor connectors.
(c) Measure the resistance according to the value(s) in the table below.
Standard resistance:
LH

Tester Connection	Specified Condition
A14-1 (FL+) - A14-2 (FL-)	0.92 to 1.22 kΩ at 20°C
A14-1 (FL+) - Body ground	10 kΩ or higher
A14-2 (FL-) - Body ground	10 kΩ or higher

RH

Tester Connection	Specified Condition
A35-1 (FR+) - A35-2 (FR-)	0.92 to 1.22 kΩ at 20°C
A35-1 (FR+) - Body ground	10 kΩ or higher
A35-2 (FR-) - Body ground	10 kΩ or higher

NOTICE:
Check the speed sensor signal after replacement (See page BC-290).

NG → **REPLACE FRONT SPEED SENSOR (See page BC-438)**

BC

OK

7 CHECK HARNESS AND CONNECTOR (FRONT SPEED SENSOR TO SKID CONTROL ECU)

Skid Control ECU (Harness Side Connector Front View):

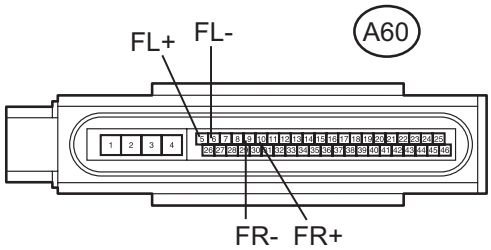

Front Speed Sensor (Harness Side Connecotor Front View):

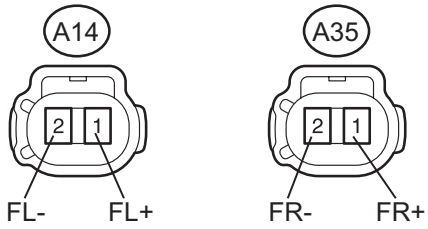

N C139143E01

(a) Disconnect the skid control ECU connector.

(b) Measure the resistance according to the value(s) in the table below.

Standard resistance:

LH

Tester Connection	Specified Condition
A60-5 (FL+) - A14-1 (FL+)	Below 1 Ω
A60-6 (FL-) - A14-2 (FL-)	Below 1 Ω
A60-5 (FL+) - Body ground	10 kΩ or higher
A60-6 (FL-) - Body ground	10 kΩ or higher

RH

Tester Connection	Specified Condition
A60-10 (FR+) - A35-1 (FR+)	Below 1 Ω
A60-9 (FR-) - A35-2 (FR-)	Below 1 Ω
A60-10 (FR+) - Body ground	10 kΩ or higher
A60-9 (FR-) - Body ground	10 kΩ or higher

(c) Connect the connectors.

NG → **REPAIR OR REPLACE HARNESS OR CONNECTOR (FRONT SPEED SENSOR TO SKID CONTROL ECU)**

OK

BC

8	INSPECT SPEED SENSOR SIGNAL WAVEFORM

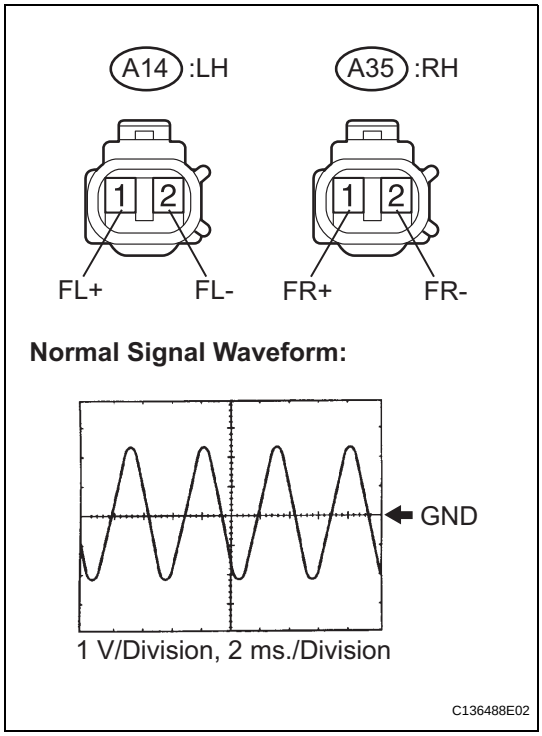

(a) Lift up the vehicle.
(b) Perform the inspection using an oscilloscope.
  (1) Disconnect the front speed sensor connector.
  (2) Connect the oscilloscope to terminals 1 and 2 of the front speed sensor.
  (3) Check that a waveform is output when the tires are rotated.
  OK:
  The same waveform is output from all the 4 wheels and there is no noise or interference in the waveform.
  HINT:
  - As vehicle speed (wheel rotation speed) increases, the width of the waveform narrows and the output voltage becomes greater.
  - When noise is identified in the waveform on the oscilloscope, the erratic signals are generated due to rotor scratches, looseness or foreign matter attached to the speed sensor.
  (4) Connect the connector.

NG → **Go to step 11**

OK

9	READ VALUE OF INTELLIGENT TESTER (FRONT SPEED SENSOR)

(a) Connect the intelligent tester to the DLC3.
(b) Start the engine.
(c) Select "DATA LIST" and read the value displayed on the intelligent tester (See page BC-307).

DATA LIST: ABS/TRAC/VSC

Item	Measurement Item / Range (Display)	Normal Condition
FR WHEEL SPD	Wheel speed sensor (FR) reading / min.: 0 MPH (0 km/h), max.: 202 MPH (326 km/h)	Actual wheel speed
FL WHEEL SPD	Wheel speed sensor (FL) reading / min.: 0 MPH (0 km/h), max.: 202 MPH (326 km/h)	Actual wheel speed

(d) Check that there is no difference between the speed value output from the speed sensor displayed on the intelligent tester and the speed value displayed on the speedometer when driving the vehicle.
OK:
The speed value output from the speed sensor displayed on the intelligent tester is the same as the actual vehicle speed.
HINT:
If troubleshooting has been carried out according to the "PROBLEM SYMPTOMS TABLE", refer back to the table and proceed to the next step before replacing the part (See page BC-295).

BC

NG → **REPLACE BRAKE ACTUATOR ASSEMBLY (See page BC-432)**

OK

10 RECONFIRM DTC

(a) Clear the DTCs (See page BC-302).
(b) Drive the vehicle at a speed of approximately 25 mph (40 km/h) or more for 60 seconds or more.
(c) Check if the same DTCs are recorded (See page BC-302).
HINT:
Reinstall the sensors, connectors, etc. and restore the vehicle to its prior condition before rechecking for DTCs.

Result

Condition	Proceed to
DTCs (C0200/31, C0205/32, C1330/35 and C1331/36) are output	A
DTCs (C0200/31, C0205/32, C1330/35 and C1331/36) are output (When troubleshooting in accordance with the PROBLEM SYMPTOMS TABLE)	B
DTCs (C0200/31, C0205/32, C1330/35 and C1331/36) are not output (When troubleshooting in accordance with the DTC CHART)	C

BC

B → **PROCEED TO NEXT CIRCUIT INSPECTION SHOWN IN PROBLEM SYMPTOMS TABLE (See page BC-295)**

C → **END**

A

11 INSPECT SPEED SENSOR TIP

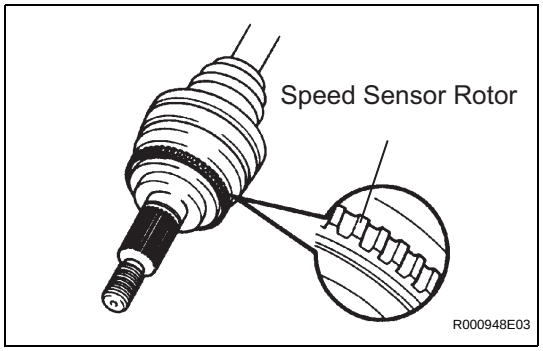

(a) Remove the front speed sensor.
(b) Check the sensor tip.
OK:
No scratches or foreign matter on the sensor tip.
NOTICE:
Check the speed sensor signal after cleaning or replacement (See page BC-290).
(c) Install the speed sensor.

NG → **CLEAN OR REPLACE SPEED SENSOR**

OK

CLEAN OR REPLACE SPEED SENSOR ROTOR

DTC	**C0210/33**	**Right Rear Wheel Speed Sensor Signal Malfunction**

DTC	**C0215/34**	**Left Rear Wheel Speed Sensor Signal Malfunction**

DTC	**C1273/73**	**Low Output Signal of Rear Speed Sensor RH (Test Mode DTC)**

DTC	**C1274/74**	**Low Output Signal of Rear Speed Sensor LH (Test Mode DTC)**

BC

DTC	**C1277/77**	**Abnormal Change in Output Signal of Rear Speed Sensor RH (Test Mode DTC)**

DTC	**C1278/78**	**Abnormal Change in Output Signal of Rear Speed Sensor LH (Test Mode DTC)**

DTC	**C1332/38**	**Right Rear Speed Sensor Circuit**

DTC	**C1333/39**	**Left Rear Speed Sensor Circuit**

DESCRIPTION

Refer to DTCs C0200/31, C0205/32, C1330/35, and C1331/36 (See page BC-316).
DTCs from C1273/73 to C1278/78 can be deleted when the speed sensor sends a vehicle speed signal or the test mode ends. DTCs from C1273/73 to C1278/78 are output only in the test mode.

DTC No.	DTC Detecting Condition	Trouble Area
C0210/33 C0215/34	When either of the following is detected: • Vehicle speed is more than 25 mph (40 km/h) and pulses are not input for 0.03 sec. • When the vehicle speed has reached 8 mph (12 km/h), after the initial start or restart, a wheel speed of 0 mph (0 km/h) is detected.	• Rear speed sensor RH and/or LH • Rear speed sensor circuit RH and/or LH • Rear speed sensor rotor RH and/or LH • Sensor installation • Brake actuator assembly (skid control ECU)
C1332/38 C1333/39	Abnormality in the resistance value of each speed sensor is detected.	• Rear speed sensor RH and/or LH • Rear speed sensor circuit RH and/or LH • Sensor installation
C1273/73 C1274/74	Detected only during test mode.	• Rear speed sensor • Sensor installation • Sensor rotor
C1277/77 C1278/78	Detected only during test mode.	• Rear speed sensor • Sensor installation • Sensor rotor

HINT:
DTC No. C0210/33 and C1332/38 are for the rear speed sensor RH.
DTC No. C0215/34 and C1333/39 are for the rear speed sensor LH.

WIRING DIAGRAM

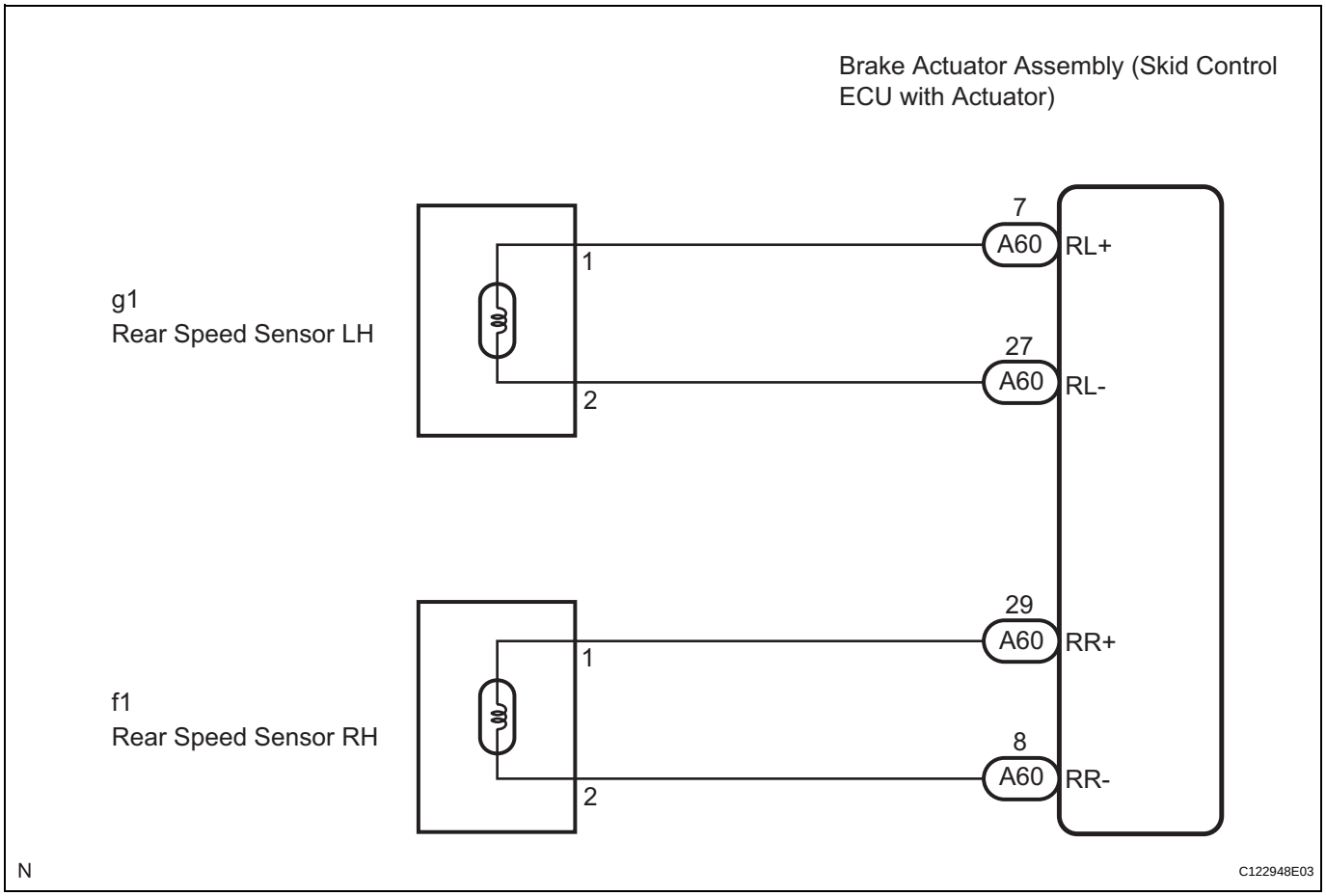

INSPECTION PROCEDURE

HINT:
Check the condition of each related circuit connector before troubleshooting (See page IN-40).

1	READ VALUE OF INTELLIGENT TESTER (REAR SPEED SENSOR)

(a) Connect the intelligent tester to the DLC3.
(b) Start the engine.
(c) Select "DATA LIST" and read the value displayed on the intelligent tester (See page BC-307).

DATA LIST: ABS/TRAC/VSC

Item	Measurement Item / Range (Display)	Normal Condition
RR WHEEL SPD	Wheel speed sensor (RR) reading / min.: 0 MPH (0 km/h), max.: 202 MPH (326 km/h)	Actual wheel speed
RL WHEEL SPD	Wheel speed sensor (RL) reading / min.: 0 MPH (0 km/h), max.: 202 MPH (326 km/h)	Actual wheel speed

(d) Check that there is no difference between the speed value output from the speed sensor displayed on the intelligent tester and the speed value displayed on the speedometer when driving the vehicle.

BC

OK:

The speed value output from the speed sensor displayed on the intelligent tester is the same as the actual vehicle speed.

NG → **Go to step 5**

OK

2 PERFORM TEST MODE INSPECTION (SIGNAL CHECK)

(a) Check if test mode (signal check) DTCs are detected (See page BC-290).

Result

Condition	Proceed to
Test mode (signal check) DTC is not output	A
Test mode (signal check) DTC is output	B

BC

B → **Go to step 5**

A

3 INSPECT SPEED SENSOR SIGNAL WAVEFORM

Skid Control ECU (Harness Side Connector Front View):

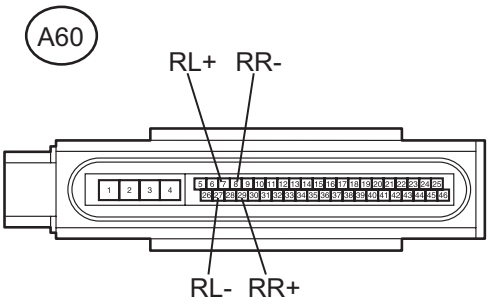

Normal Signal Waveform:

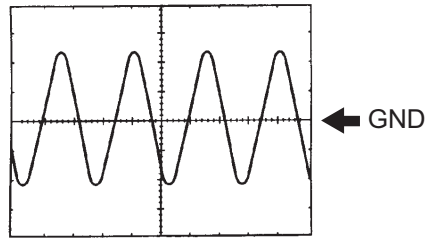

1 V/Division, 2 ms./Division

C139144E01

(a) Lift up the vehicle.

(b) Perform the inspection using an oscilloscope.

(1) Disconnect the skid control ECU connector.

(2) Connect the oscilloscope to the rear speed sensor terminals of the skid control ECU.

(3) Check that a waveform is output when the tires are rotated.

OK:

The same waveform is output from all the 4 wheels and there is no noise or interference in the waveform.

HINT:

- As vehicle speed (wheel rotation speed) increases, the width of the waveform narrows and the output voltage becomes greater.
- When noise is identified in the waveform on the oscilloscope, the erratic signals are generated due to rotor scratches, looseness or foreign matter attached to the speed sensor.

(4) Connect the connector.

NG → **REPAIR OR REPLACE SPEED SENSOR AND SENSOR ROTOR**

OK

4 RECONFIRM DTC

(a) Clear the DTCs (See page BC-302).
(b) Drive the vehicle at a speed of approximately 25 mph (40 km/h) or more for 60 seconds or more.
(c) Check if the same DTCs are recorded (See page BC-302).
HINT:
Reinstall the sensors, connectors, etc. and restore the vehicle to its prior condition before rechecking for DTCs.

Result

Condition	Proceed to
DTCs (C0210/33, C0215/34, C1332/38 and C1333/39) are output	A
DTCs (C0210/33, C0215/34, C1332/38 and C1333/39) are output (When troubleshooting in accordance with the PROBLEM SYMPTOMS TABLE)	B
DTCs (C0210/33, C0215/34, C1332/38 and C1333/39) are not output (When troubleshooting in accordance with the DTC CHART)	C

BC

B → **PROCEED TO NEXT CIRCUIT INSPECTION SHOWN IN PROBLEM SYMPTOMS TABLE (See page BC-295)**

C → **END**

A

5 INSPECT SPEED SENSOR INSTALLATION

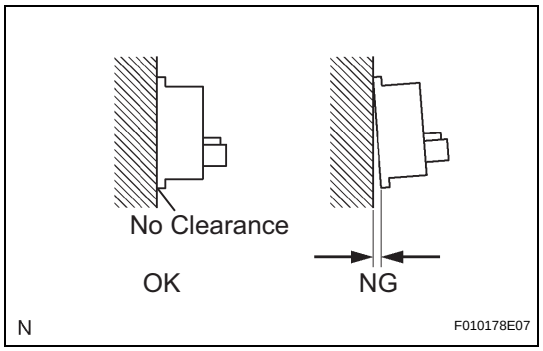

(a) Check the rear speed sensor installation.
OK:
There is no clearance between the sensor and rear axle carrier.
NOTICE:
Check the speed sensor signal after replacement (See page BC-290).

NG → **INSTALL REAR SPEED SENSOR CORRECTLY**

OK

6	INSPECT REAR SPEED SENSOR

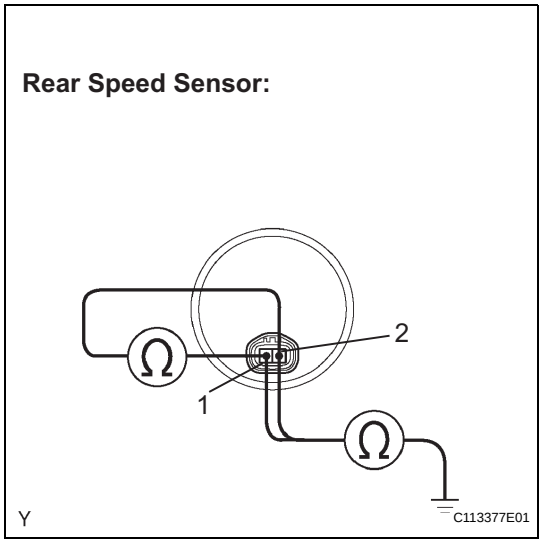

(a) Disconnect the rear speed sensor connector.

(b) Measure the resistance according to the value(s) in the table below.

Standard resistance:

LH

Tester Connection	Specified Condition
g1-1 (RR+) - g1-2 (RR-)	Below 2.2 kΩ
g1-1 (RR+) - Body ground	10 kΩ or higher
g1-2 (RR-) - Body ground	10 kΩ or higher

RH

Tester Connection	Specified Condition
f1-1 (RL+) - f1-2 (RL-)	Below 2.2 kΩ
f1-1 (RL+) - Body ground	10 kΩ or higher
f1-2 (RL-) - Body ground	10 kΩ or higher

NOTICE:
Check the speed sensor signal after replacement (See page BC-290).

NG → **REPLACE REAR SPEED SENSOR (See page BC-443)**

OK

BC

7 CHECK HARNESS AND CONNECTOR (SKID CONTROL ECU TO SKID CONTROL SENSOR WIRE)

Skid Control ECU (Harness Side Connector Front View):

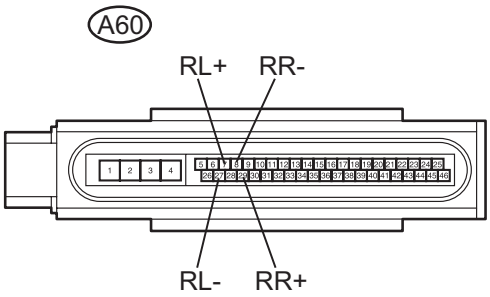

Rear Speed Sensor (Harness Side Connector Front View):

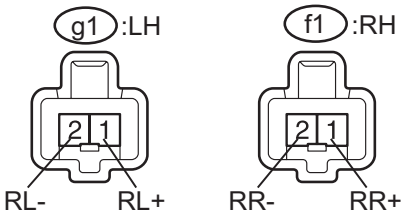

N C139145E02

(a) Check the harness and connector.
  (1) Disconnect the skid control ECU connector and the rear speed sensor connector.
  (2) Disconnect the skid control sensor wire.
  (3) Measure the resistance according to the value(s) in the table below.
  Standard resistance:
  LH

Tester Connection	Specified Condition
A60-7 (RL+) - g1-1 (RL+)	Below 1 Ω
A60-27 (RL-) - g1-2 (RL-)	Below 1 Ω
A60-7 (RL+) - Body ground	10 kΩ or higher
A60-27 (RL-) - Body ground	10 kΩ or higher

RH

Tester Connection	Specified Condition
A60-29 (RR+) - f1-1 (RR+)	Below 1 Ω
A60-8 (RR-) - f1-2 (RR-)	Below 1 Ω
A60-29 (RR+) - Body ground	10 kΩ or higher
A60-8 (RR-) - Body ground	10 kΩ or higher

NG → **REPAIR OR REPLACE HARNESS OR CONNECTOR (SKID CONTROL ECU TO SKID CONTROL SENSOR WIRE)**

OK

8 CHECK HARNESS AND CONNECTOR (SKID CONTROL SENSOR WIRE TO REAR SPEED SENSOR)

Skid Control Sensor Wire:

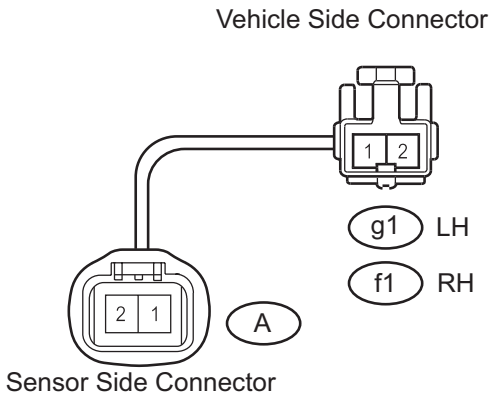

C113396E05

(a) Check harness and connector (skid control sensor wire).
  (1) Measure the resistance according to the value(s) in the table below.
  Standard resistance:
  LH

Tester Connection	Specified Condition
g1-1 - A-1	Below 1 Ω
g1-1 - A-2	10 kΩ or higher
g1-1 - Body ground	10 kΩ or higher
g1-2 - A-2	Below 1 Ω
g1-2 - A-1	10 kΩ or higher
g1-2 - Body ground	10 kΩ or higher

RH

Tester Connection	Specified Condition
f1-1 - A-1	Below 1 Ω

BC

Tester Connection	Specified Condition
f1-1 - A-2	10 kΩ or higher
f1-1 - Body ground	10 kΩ or higher
f1-2 - A-2	Below 1 Ω
f1-2 - A-1	10 kΩ or higher
f1-2 - Body ground	10 kΩ or higher

(2) Connect the connector.

NG → **REPAIR OR REPLACE SKID CONTROL SENSOR WIRE**

OK

9 INSPECT SPEED SENSOR SIGNAL WAVEFORM

BC

Skid Control ECU (Harness Side Connector Front View):

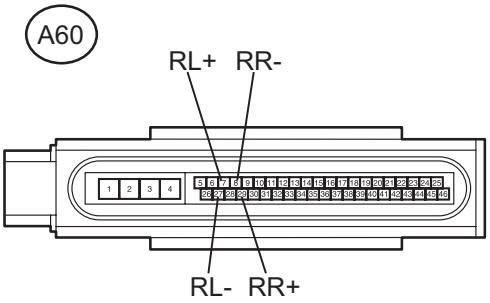

Normal Signal Waveform:

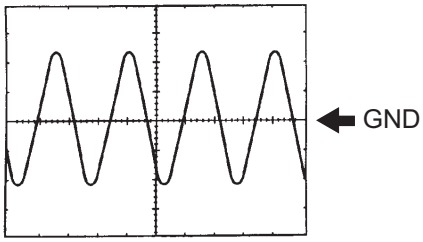

1 V/Division, 2 ms./Division

C139144E01

(a) Lift up the vehicle.
(b) Perform the inspection using an oscilloscope.
  (1) Disconnect the skid control ECU connector.
  (2) Connect the oscilloscope to the rear speed sensor terminals of the skid control ECU.
  (3) Check that a waveform is output when the tires are rotated.
  OK:
  The same waveforms is output from rear wheels and there is no noise or interference in the waveform.
  HINT:
  - As vehicle speed (wheel rotation speed) increases, the width of the waveform narrows and the output voltage becomes greater.
  - When noise is identified in the waveform on the oscilloscope, the erratic signals are generated due to rotor scratches, looseness or foreign matter attached to the speed sensor.
  (4) Connect the connector.

NG → **CLEAN OR REPLACE SPEED SENSOR AND SENSOR ROTOR**

OK

10 READ VALUE OF INTELLIGENT TESTER (REAR SPEED SENSOR)

(a) Connect the intelligent tester to the DLC3.
(b) Start the engine.

(c) Select "DATA LIST" and read the value displayed on the intelligent tester (See page BC-307).

DATA LIST: ABS/TRAC/VSC

Item	Measurement Item / Range (Display)	Normal Condition
RR WHEEL SPD	Wheel speed sensor (RR) reading / min.: 0 MPH (0 km/h), max.: 202 MPH (326 km/h)	Actual wheel speed
RL WHEEL SPD	Wheel speed sensor (RL) reading / min.: 0 MPH (0 km/h), max.: 202 MPH (326 km/h)	Actual wheel speed

(d) Check that there is no difference between the speed value output from the speed sensor displayed on the intelligent tester and the speed value displayed on the speedometer when driving the vehicle.

OK:

The speed value output from the speed sensor displayed on the intelligent tester is the same as the actual vehicle speed.

HINT:

- It is suspected that the DTCs were output due to a bad connection of the connector terminal.
- If troubleshooting has been carried out according to the "PROBLEM SYMPTOMS TABLE", refer back to the table and proceed to the next step (See page BC-295).

NG → **REPLACE BRAKE ACTUATOR ASSEMBLY (See page BC-432)**

OK

11	RECONFIRM DTC

(a) Clear the DTCs (See page BC-302).

(b) Drive the vehicle at a speed of approximately 25 mph (40 km/h) or more for 60 seconds or more.

(c) Check if the same DTCs are recorded (See page BC-302).

HINT:

Reinstall the sensors, connectors, etc. and restore the vehicle to its prior condition before rechecking for DTCs.

Result

Condition	Proceed to
DTCs (C0210/33, C0215/34, C1332/38 and C1333/39) are output	A
DTCs (C0210/33, C0215/34, C1332/38 and C1333/39) are output (When troubleshooting in accordance with the PROBLEM SYMPTOMS TABLE)	B
DTCs (C0210/33, C0215/34, C1332/38 and C1333/39) are not output (When troubleshooting in accordance with the DTC CHART)	C

B → **PROCEED TO NEXT CIRCUIT INSPECTION SHOWN IN PROBLEM SYMPTOMS TABLE (See page BC-295)**

C → **END**

BC

A

12	INSPECT SPEED SENSOR ROTOR

(a) Turn the ignition switch off.
(b) Remove the rear axle.
(c) Check the rotor.
OK:
No scratches, cracks, oil, or foreign matter on the rotors.
NOTICE:
Check the speed sensor signal after cleaning or replacement (See page BC-290).
(d) Install the rear axle.

NG → **CLEAN OR REPLACE SPEED SENSOR ROTOR**

BC

OK

REPLACE BRAKE ACTUATOR ASSEMBLY (See page BC-432)

DTC	C0226/21	SFR Solenoid Circuit

DTC	C0236/22	SFL Solenoid Circuit

DTC	C0246/23	SRR Solenoid Circuit

DTC	C0256/24	SRL Solenoid Circuit

DESCRIPTION

These solenoids turn on when signals are received from the skid control ECU and they control the pressure acting on the wheel cylinders to control the braking force.

DTC No.	DTC Detection Condition	Trouble Area
C0226/21 C0236/22 C0246/23 C0256/24	Solenoid valve signal does not match the check result.	• Each solenoid circuit • Brake actuator assembly

BC

WIRING DIAGRAM

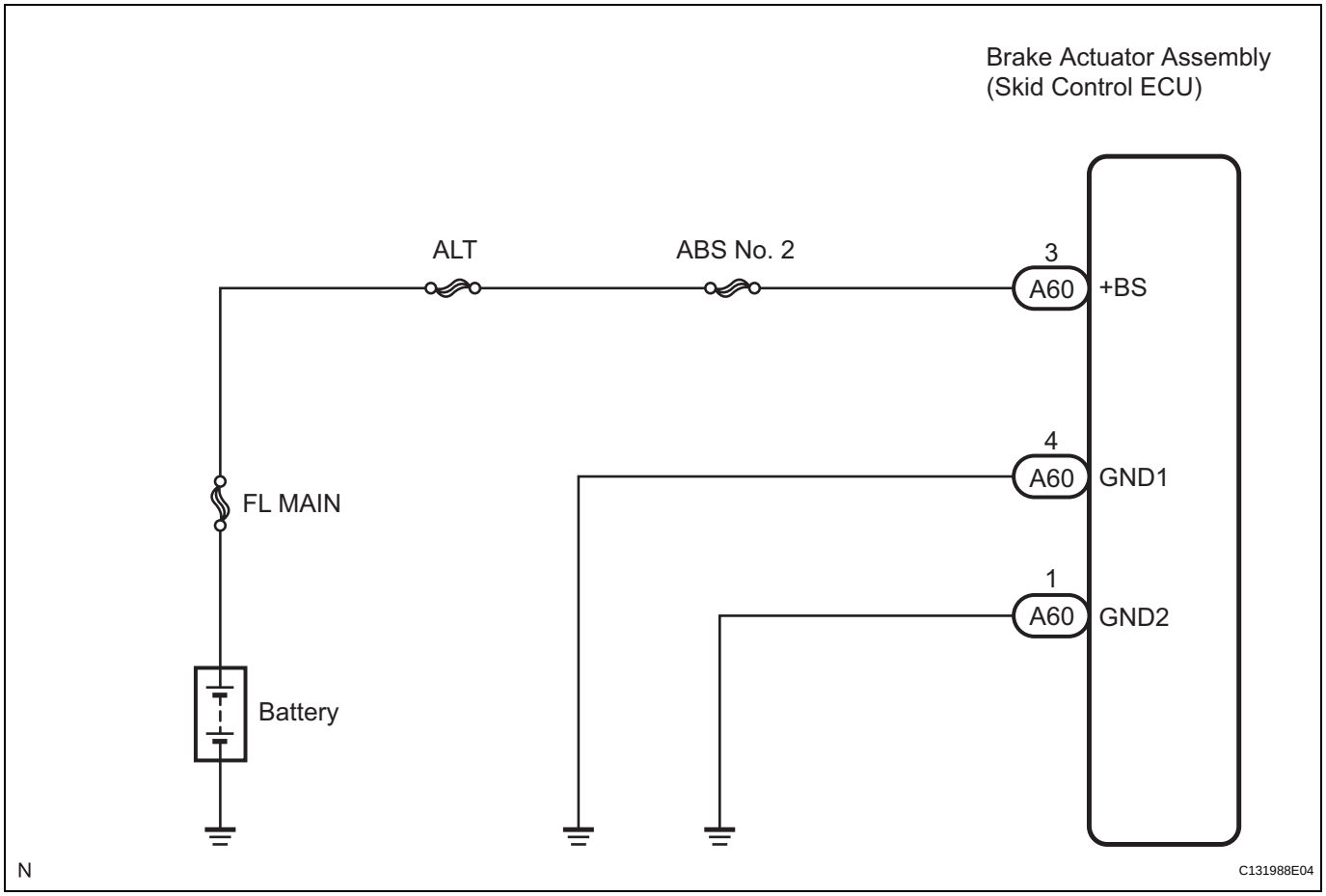

INSPECTION PROCEDURE

1	RECONFIRM DTC

HINT:
These codes are detected when a problem is identified in the brake actuator assembly.
The solenoid circuits are located in the brake actuator assembly.
Therefore, solenoid circuit inspection and solenoid unit inspection cannot be performed. Be sure to check if the DTC is output before replacing the brake actuator assembly.

(a) Clear the DTC (See page BC-302).
(b) Start the engine.
(c) Drive the vehicle at a speed of 12 mph (20 km/h) or more for 30 seconds or more.
(d) Check if the same DTC is recorded (See page BC-302).

BC

Result

Condition	Proceed to
DTC is not output	A
DTC is output	B

HINT:
- If the normal system code is output (the trouble code is not output), slightly jiggle the connectors, wire harness, and fuses of the brake actuator assembly (skid control ECU). Make sure that no DTCs are output.
- If any DTCs are output while jiggling a connector or wire harness of the brake actuator (skid control ECU), inspect and repair the connector or wire harness.
- It is suspected that the DTCs were output due to a bad connection of the connector terminal.

B → **REPLACE BRAKE ACTUATOR ASSEMBLY (See page BC-432)**

A

END

DTC	C0273/13	Open or Short Circuit in ABS Motor Relay Circuit

DESCRIPTION

The ABS motor relay supplies power to the ABS pump motor. While the ABS is activated, the ECU switches the motor relay on and operates the ABS pump motor.
If the voltage supplied to the motor relay (+BM) is below the DTCs detection threshold due to low voltage from the battery or alternator, the DTC may be stored.

DTC No.	DTC Detection Condition	Trouble Area
C0273/13	When any of the following is detected: • When the motor relay is actuated, voltage is not supplied to the pump motor within 0.1 seconds. • For 30 to 125 ms after the motor relay is turned from ON to OFF, the remaining high voltage is out of range. The motor relay is turned from ON to OFF 3 times. If the voltage is still out of range in the 3rd operation, this failure is detected. • When the motor relay is changed from ON to OFF, the remaining high voltage is more than 2 V for 1 second.	• ABS No. 1 fuse (Fusible link) • Brake actuator assembly (skid control ECU) • Motor relay circuit

BC

WIRING DIAGRAM

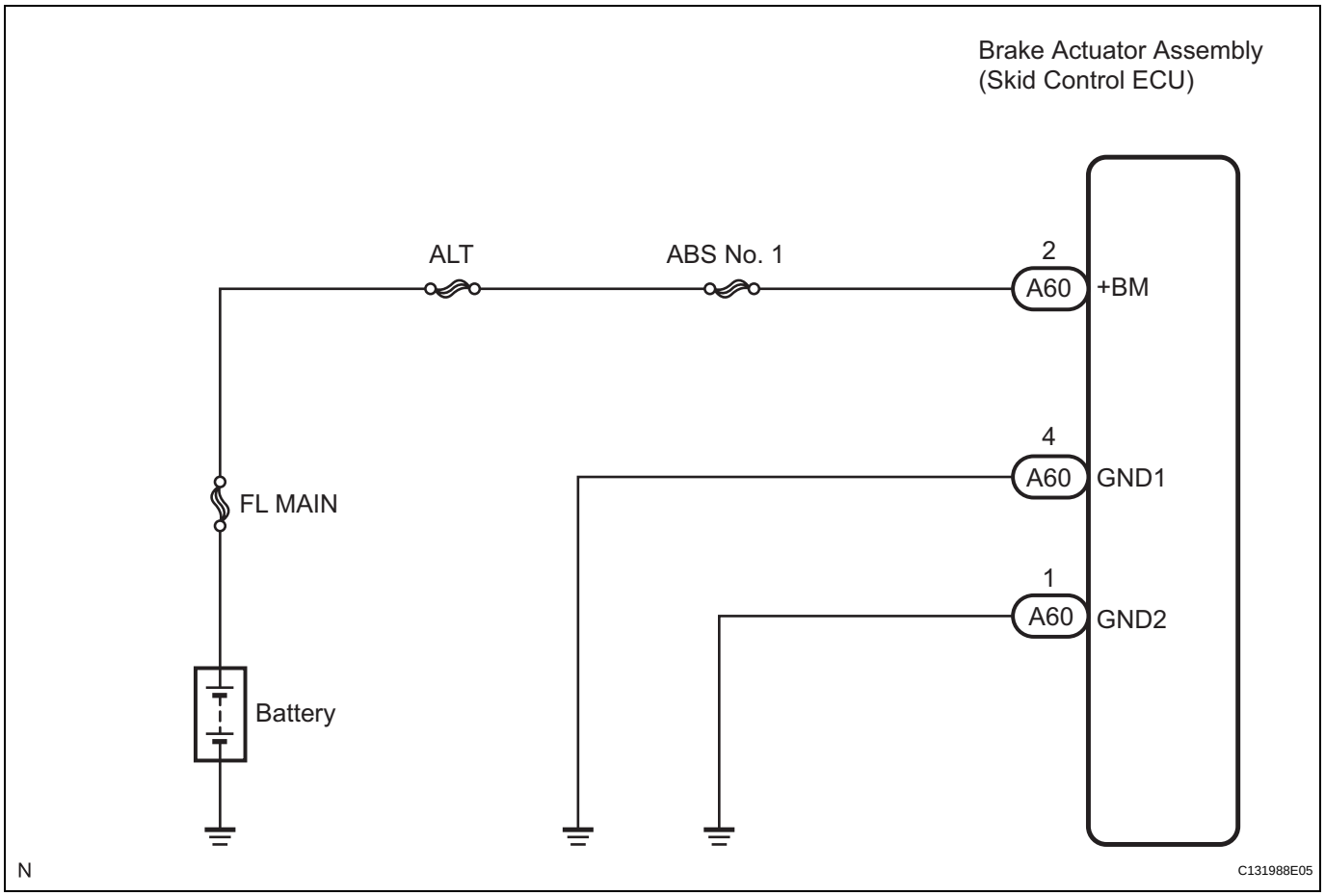

INSPECTION PROCEDURE

HINT:

- When C1241/41 is output together with C0273/13, inspect and repair the trouble areas indicated by C1241/41 (See page BC-361).

- Check the condition of each related circuit connector before troubleshooting (See page IN-40).

1 INSPECT FUSIBLE LINK (ABS NO. 1 FUSE)

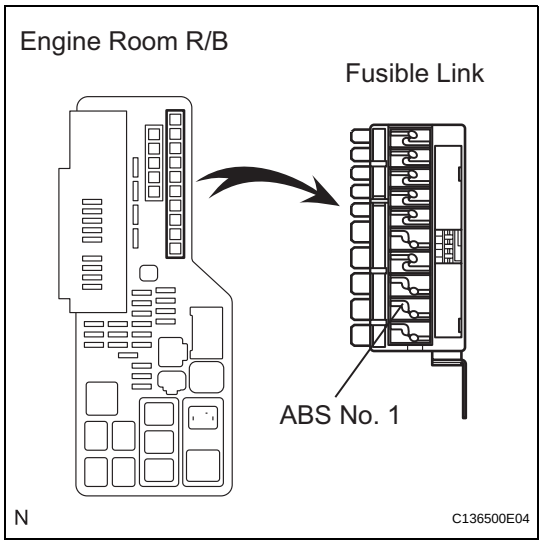

(a) Remove the fusible link from the engine room R/B.
(b) Check if the fusible link is malted.
OK:
The fusible link is not melted.
(c) Install the fusible link to the engine room R/B with the nut.
Torque: 5.4 N*m (55 kgf*cm, 48 in.*lbf)

NG → **REPLACE FUSIBLE LINK**

OK

2 INSPECT SKID CONTROL ECU (+BM TERMINAL VOLTAGE)

Skid Control ECU (Harness Side Connector Front View):

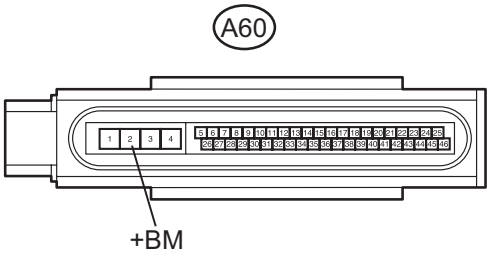

(a) Disconnect the skid control ECU connector.
(b) Measure the voltage according to the value(s) in the table below.
Standard voltage

Tester Connection	Condition	Specified Condition
A60-2 (+BM) - Body ground	Always	10 to 14 V

NG → **REPAIR OR REPLACE HARNESS OR CONNECTOR (+BM CIRCUIT)**

OK

BC

3 INSPECT SKID CONTROL ECU (GND TERMINAL CONTINUITY)

Skid Control ECU (Harness Side Connector Front View):

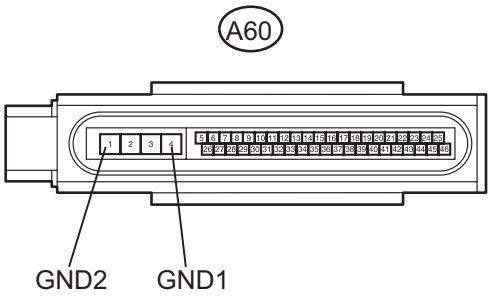

N C136493E02

(a) Measure the resistance according to the value(s) in the table below.

Standard resistance

Tester Connection	Specified Condition
A60-4 (GND1) - Body ground	Below 1 Ω
A60-1 (GND2) - Body ground	Below 1 Ω

(b) Connect the connector.

NG → **REPAIR OR REPLACE HARNESS OR CONNECTOR (GND CIRCUIT)**

OK

4 PERFORM ACTIVE TEST BY INTELLIGENT TESTER (ABS MOTOR RELAY)

(a) Connect the intelligent tester to the DLC3.
(b) Turn the ignition switch on (IG).
(c) Select "ACTIVE TEST" on the intelligent tester (See page BC-307).

ACTIVE TEST: ABS/TRAC/VSC

Item	Measurement Item/Range (Display)	Normal Condition
ABS MTR RELAY	Turns ABS motor relay ON/OFF	Operating sound of motor is heard.

(d) Check the operating sound of the ABS motor relay when operating it with the intelligent tester.

OK:

The operating sound of the ABS motor relay is heard.

NG → **REPLACE BRAKE ACTUATOR ASSEMBLY (See page BC-432)**

OK

5 RECONFIRM DTC

HINT:
This code is detected when a problem is identified in the brake actuator assembly.
The ABS motor relay is located in the brake actuator assembly.
Therefore, ABS motor relay inspection and motor relay unit inspection cannot be performed. Be sure to check if the DTC is output before replacing the brake actuator assembly.

(a) Clear the DTC (See page BC-302).

BC

(b) Start the engine.
(c) Drive the vehicle at a speed of 12 mph (20 km/h) or more for 30 seconds or more.
(d) Check if the same DTC is recorded (See page BC-302).
HINT:
Reinstall the sensors, connectors, etc. and restore the vehicle to its prior condition before rechecking for DTCs.

Result

Condition	Proceed to
DTC is not output	A
DTC is output	B

HINT:
- If the normal system code is output (the trouble code is not output), slightly jiggle the connectors, wire harness, and fuses of the brake actuator assembly (skid control ECU). Make sure that no DTCs are output.
- If any DTCs are output while jiggling a connector or wire harness of the brake actuator assembly (skid control ECU), inspect and repair the connector or wire harness.
- It is suspected that the DTCs were output due to a bad connection of the connector terminal.

B → **REPLACE BRAKE ACTUATOR ASSEMBLY (See page BC-432)**

A

CHECK FOR INTERMITTENT PROBLEMS (SYMPTOM SIMULATION) (See page BC-298)

DTC	C0278/11	Open or Short Circuit in ABS Solenoid Relay Circuit

DESCRIPTION

The ABS solenoid relay supplies power to the ABS solenoid.
The solenoid relay is turned on 1.5 seconds after the ignition switch is turned on (IG), and is turned off if an open or short in the solenoid is detected by self diagnosis performed when the vehicle starts running.
The ABS solenoid relay is housed in the skid control ECU in the brake actuator assembly.
HINT:
If a speed signal of 4 mph (6 km/h) or more is input to the skid control ECU, with the ignition switch on (IG) and the stop light switch off, the skid control ECU performs self diagnosis of the motor and solenoid circuits.

DTC No.	DTC Detection Condition	Trouble Area
C0278/11	When any of the following is detected: • When the relay is ON, the voltage is less than IG terminal voltage x 0.8 V for 0.5 seconds. • When the relay is OFF, the voltage is out of range (IG terminal voltage x 0.1 to IG terminal voltage x 0.8).	• ABS No. 2 fuse (Fusible link) • Brake actuator assembly (skid control ECU) • Solenoid relay circuit

BC

WIRING DIAGRAM

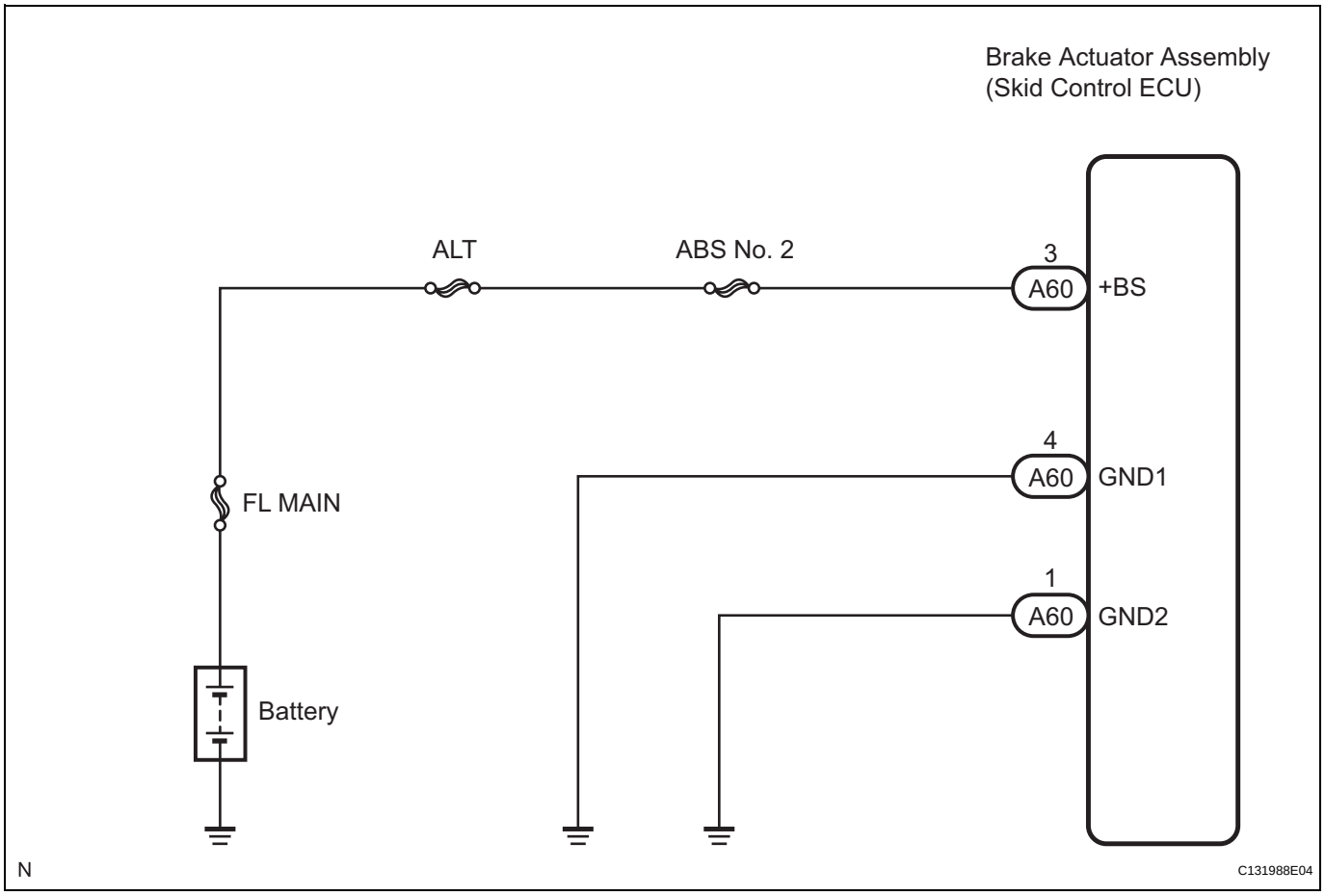

INSPECTION PROCEDURE

HINT:

- When C1241/41 is output together with C0278/11, inspect and repair the trouble areas indicated by C1241/41 (See page BC-361).
- Check the condition of each related circuit connector before troubleshooting (See page IN-40).

1 INSPECT FUSIBLE LINK (ABS NO. 2 FUSE)

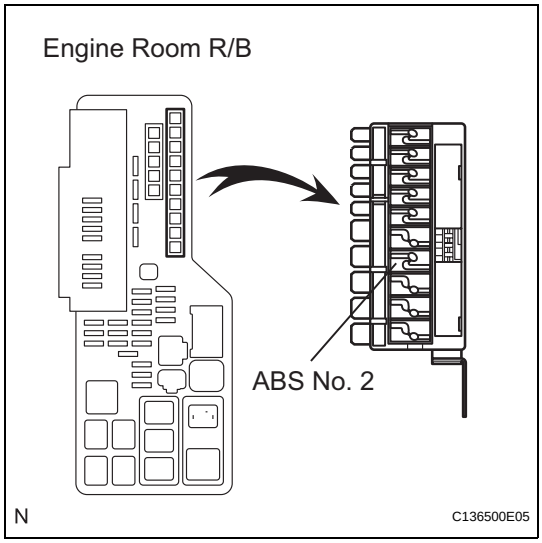

(a) Remove the fusible link from the engine room R/B.
(b) Check if the fusible link is melted.
OK:
The fusible link is not melted.
(c) Install the fusible link to the engine room R/B with the nut.

Torque: 5.4 N*m (55 kgf*cm, 48 in.*lbf)

NG → **REPLACE FUSIBLE LINK**

OK

2 INSPECT SKID CONTROL ECU (+BS TERMINAL VOLTAGE)

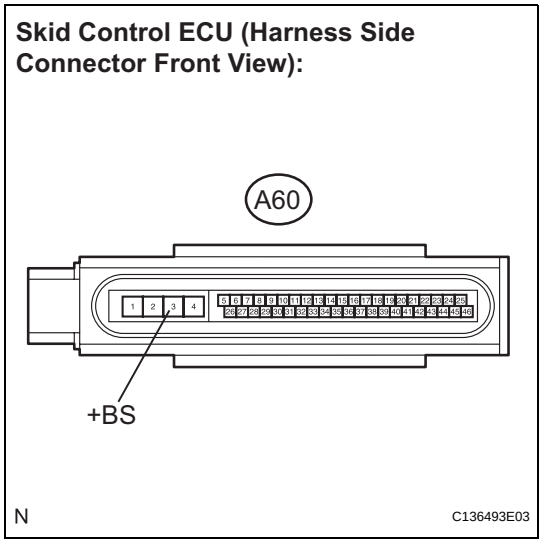

(a) Disconnect the skid control ECU connector.
(b) Measure the voltage according to the value(s) in the table below.
Standard voltage

Tester Connection	Condition	Specified Condition
A60-3 (+BS) - Body ground	Always	10 to 14 V

NG → **REPAIR OR REPLACE HARNESS OR CONNECTOR (+BS CIRCUIT)**

OK

3 INSPECT SKID CONTROL ECU (GND TERMINAL CONTINUITY)

Skid Control ECU (Harness Side Connector Front View):

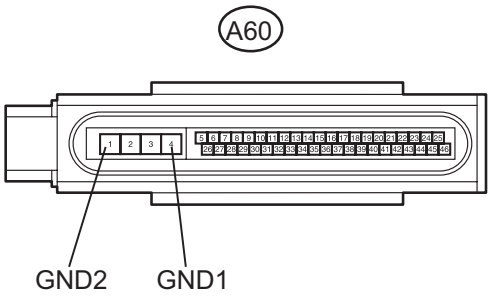

N C136493E02

(a) Measure the resistance according to the value(s) in the table below.

Standard resistance

Tester Connection	Specified Condition
A60-4 (GND1) - Body ground	Below 1 Ω
A60-1 (GND2) - Body ground	Below 1 Ω

(b) Connect the connector.

NG → **REPAIR OR REPLACE HARNESS OR CONNECTOR (GND CIRCUIT)**

OK

4 RECONFIRM DTC

HINT:
This code is detected when a problem is identified in the brake actuator assembly.
The solenoid circuit is located in the brake actuator assembly. Therefore, solenoid circuit inspection and solenoid unit inspection cannot be performed. Be sure to check if the DTC code is output before replacing the brake actuator assembly.

(a) Clear the DTC (See page BC-302).
(b) Start the engine.
(c) Drive the vehicle at a speed of 12 mph (20 km/h) or more for 30 seconds or more.
(d) Check if the same DTC is recorded (See page BC-302).
HINT:
Reinstall the sensors, connectors, etc. and restore the vehicle to its prior condition before rechecking for DTCs.

Result

Condition	Proceed to
DTC is not output	A
DTC is output	B

HINT:
- If the normal system code is output (the trouble code is not output), slightly jiggle the connectors, wire harnesses, and fuses of the brake actuator assembly. Make sure that no DTCs are output.
- If any DTCs are output while jiggling a connector or wire harness of the brake actuator (skid control ECU), inspect and repair the connector or wire harness.
- It is suspected that the DTCs were output due to a bad connection of the connector terminal.

BC

B

REPLACE BRAKE ACTUATOR ASSEMBLY (See page BC-432)

A

CHECK FOR INTERMITTENT PROBLEMS (SYMPTOM SIMULATION) (See page BC-298)

DTC	C0365/28	Malfunction in Deceleration Sensor

DTC	C1234/34	Yaw Rate Sensor Malfunction

DESCRIPTION

The deceleration sensor is combined with the yaw rate and acceleration sensor.
The brake actuator receives signals from the yaw rate and acceleration sensor via the CAN communication system.
If there is trouble in the CAN communication system, DTCs U0073/94 and U0123/62 are output.

DTC No.	DTC Detection Condition	Trouble Area
C0365/28	When any of the following is detected: • Lateral acceleration difference between sensor signal and reference value is large. • Offset value of sensor signal is higher than the standard value. • Sensor signal is out of range (2.25 m/s^2).	• Yaw rate and acceleration sensor • Yaw rate and acceleration sensor circuit • Sensor installation • Brake actuator assembly (skid control ECU)
C1234/34	Sensor malfunction signal is received from the yaw rate sensor.	• Yaw rate and acceleration sensor • Yaw rate and acceleration sensor circuit

WIRING DIAGRAM

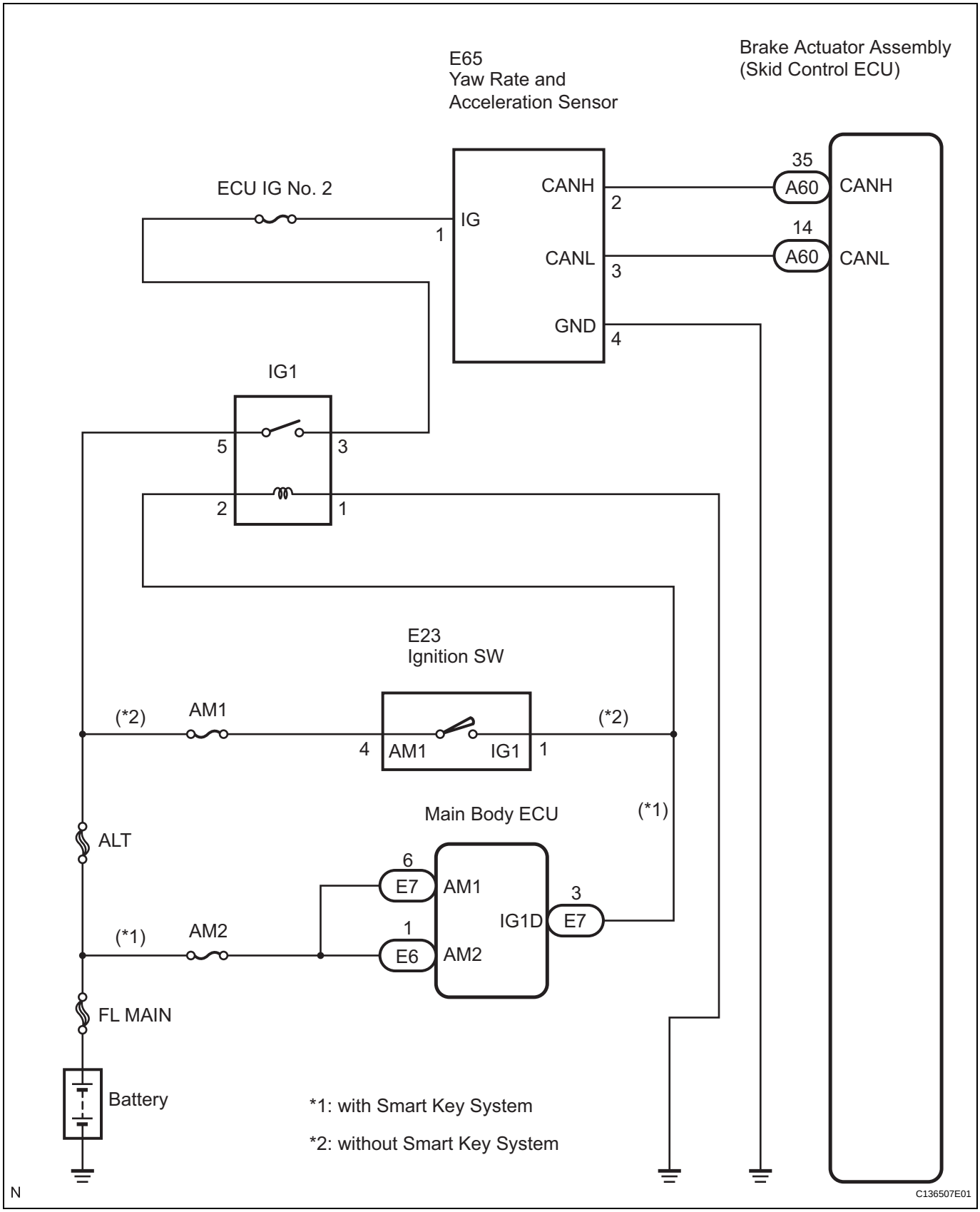

INSPECTION PROCEDURE

HINT:

- Check the condition of each related circuit connector before troubleshooting (See page IN-40).

- When U0073/94, U0100/65, U0123/62 and/or U0126/63 is output together with C0365/28, inspect and repair the trouble areas indicated by U0073/94, U0100/65, U0123/62 and/or U0126/63 first.

1 CHECK DTC

(a) Clear the DTCs (See page BC-302).
(b) Start the engine.
(c) At a speed of 18 mph (30 km/h) or more, drive the vehicle, turn the steering wheel, and decelerate (depress the brake pedal) the vehicle.
(d) Turn the ignition switch on (IG) again and check that no CAN communication system DTC is output (See page BC-302).

Result

Condition	Proceed to
CAN communication system DTC is not output	A
CAN communication system DTC is output	B

BC

B → **INSPECT CAN COMMUNICATION SYSTEM (See page CA-8)**

A

2 INSPECT YAW RATE AND ACCELERATION SENSOR INSTALLATION

(a) Check that the yaw rate and acceleration sensor has been installed properly (See page BC-448).
OK:
The sensor should be tightened to the specified torque.
The sensor should not be titled.

NG → **INSTALL YAW RATE AND ACCELERATION SENSOR CORRECTLY**

OK

3 INSPECT YAW RATE AND ACCELERATION SENSOR (IG TERMINAL)

Yaw Rate and Acceleration Sensor (Harness Side Connector Front View):

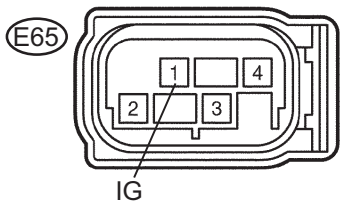

F048983E13

(a) Disconnect the yaw rate and acceleration sensor connector.
(b) Turn the ignition switch on (IG).
(c) Measure the voltage according to the value(s) in the table below.
Standard voltage

Tester Connection	Condition	Specified Condition
E65-1 (IG) - Body ground	Ignition switch on (IG)	10 to 14 V

NG → **REPAIR OR REPLACE HARNESS OR CONNECTOR (IG CIRCUIT)**

OK

4 INSPECT YAW RATE AND ACCELERATION SENSOR (GND TERMINAL)

Yaw Rate and Acceleration Sensor
(Harness Side Connector Front View):

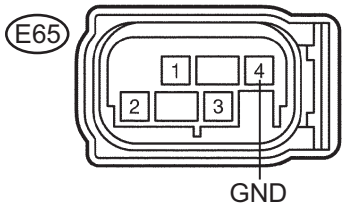

(a) Turn the ignition switch off.
(b) Measure the resistance according to the value(s) in the table below.

Standard resistance

Tester Connection	Condition	Specified Condition
E65-4 (GND) - Body ground	Always	Below 1 Ω

NG → **REPAIR OR REPLACE HARNESS OR CONNECTOR (GND CIRCUIT)**

OK

BC

5 RECONFIRM DTC

(a) Clear the DTCs (See page BC-302).
(b) Start the engine.
(c) At a speed of 18 mph (30 km/h) or more, drive the vehicle, turn the steering wheel, and decelerate (depress the brake pedal) the vehicle.
(d) Turn the ignition switch on (IG) again and check that no CAN communication system DTC is output (See page BC-302).
HINT:
Reinstall the sensors, connectors, etc. and restore the vehicle to its prior condition before rechecking for DTCs.

Result

Condition	Proceed to
DTC is output	A
DTC is output (When troubleshooting in accordance with the PROBLEM SYMPTOMS TABLE)	B
DTC is not output (When troubleshooting in accordance with the DTC CHART)	C

B → **PROCEED TO NEXT CIRCUIT INSPECTION SHOWN IN PROBLEM SYMPTOMS TABLE (See page BC-295)**

C → **CHECK FOR INTERMITTENT PROBLEMS (SYMPTOM SIMULATION) (See page BC-298)**

A

REPLACE YAW RATE AND ACCELERATION SENSOR (See page BC-447)

DTC	C1201/51	Engine Control System Malfunction

DESCRIPTION

If a malfunction in the engine control system is detected, the operations of VSC and TRAC are prohibited by the fail safe function (See page BC-306).
When the signals from the engine are input normally, the fail safe is cancelled and the DTC is not stored.

DTC No.	DTC Detecting Condition	Trouble Area
C1201/51	A trouble signal in the engine control system is input.	Engine control system

INSPECTION PROCEDURE

1	CHECK DTC (ENGINE CONTROL SYSTEM)

(a) Clear the DTC (engine control system) (See page ES-38 for 2AZ-FE, ES-45 for 2GR-FE).
(b) Perform a road test.
(c) Check for the DTC (engine control system).

BC

Result

Display (DTC Output)	Proceed to
DTC (engine control system) is not output	A
DTC (engine control system) is output	B

B → **REPAIR CIRCUITS INDICATED BY OUTPUT DTCS (ENGINE CONTROL SYSTEM)**

A

REPLACE ECM

DTC	C1225/25	SMC Solenoid Circuit

DTC	C1226/26	SMC Solenoid Circuit

DTC	C1227/27	SRC Solenoid Circuit

DTC	C1228/28	SRC Solenoid Circuit

DESCRIPTION

These solenoids turn on when signals are received from the skid control ECU and they control the pressure acting on the wheel cylinders to control the braking force.

DTC No.	DTC Detecting Condition	Trouble Area
C1225/25	Solenoid valve signal does not match the check result	• Brake actuator assembly (skid control ECU) • SMC1 circuit
C1226/26	Solenoid valve signal does not match the check result	• Brake actuator assembly (skid control ECU) • SMC2 circuit
C1227/27	Solenoid valve signal does not match the check result	• Brake actuator assembly (skid control ECU) • SRC1 circuit
C1228/28	Solenoid valve signal does not match the check result	• Brake actuator assembly (skid control ECU) • SRC2 circuit

BC

WIRING DIAGRAM

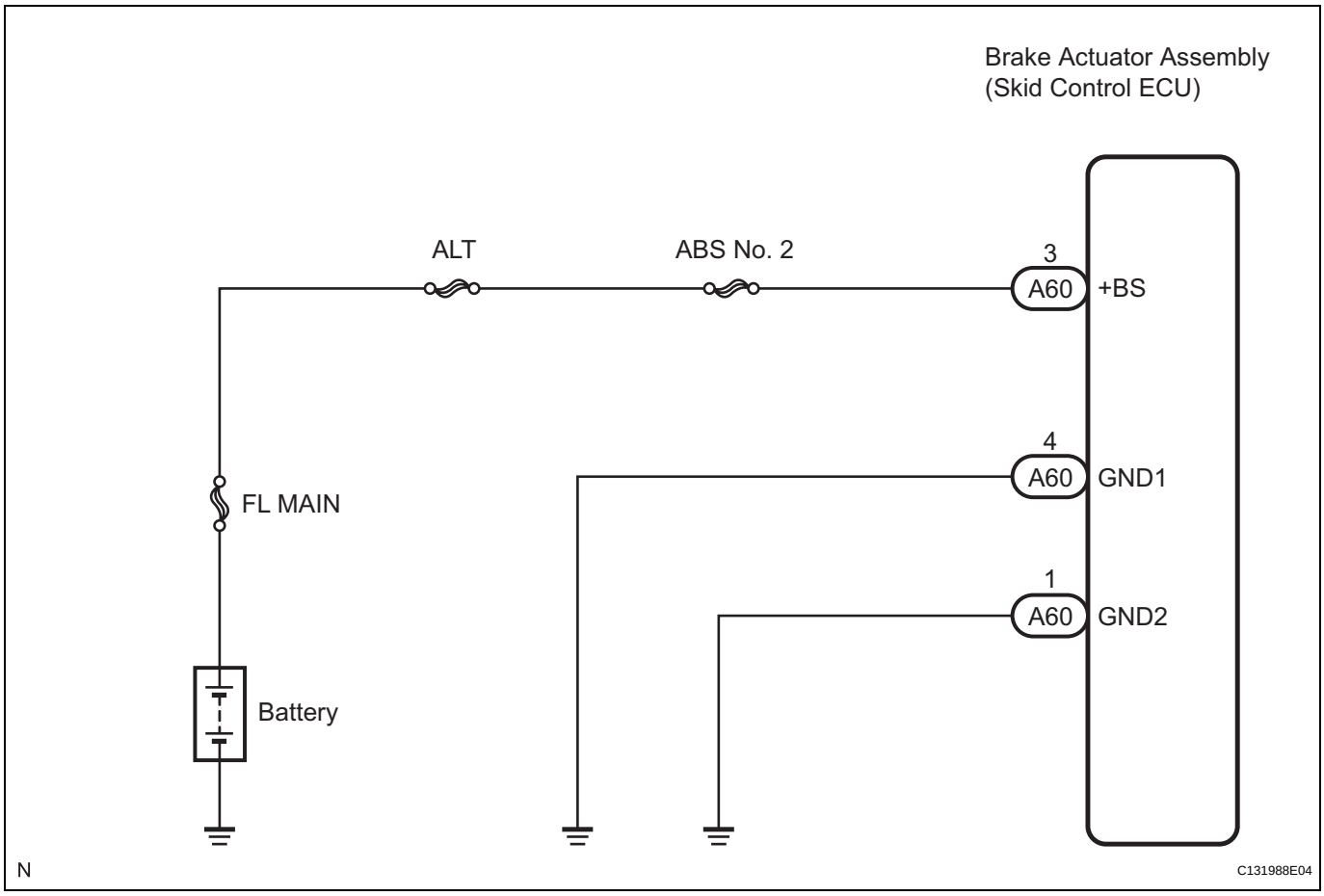

INSPECTION PROCEDURE

1	RECONFIRM DTC

HINT:
These codes are detected when a problem is identified in the brake actuator assembly.
The solenoid circuits are located in the brake actuator assembly.
Therefore, solenoid circuit inspection and solenoid unit inspection cannot be performed. Be sure to check if the DTC is output before replacing the brake actuator assembly.

(a) Clear the DTC (See page BC-302).
(b) Start the engine.
(c) Drive the vehicle at a speed of 12 mph (20 km/h) or more for 30 seconds or more.
(d) Check if the same DTC is recorded (See page BC-302).

Result

Condition	Proceed to
DTC is not output	A
DTC is output	B

HINT:
- If the normal system code is output (the trouble code is not output), slightly jiggle the connectors, wire harness, and fuses of the brake actuator assembly (skid control ECU). Make sure that no DTCs are output.
- If any DTCs are output while jiggling a connector or wire harness of the brake actuator (skid control ECU), inspect and repair the connector or wire harness.
- It is suspected that the DTCs were output due to a bad connection of the connector terminal.

B → **REPLACE BRAKE ACTUATOR ASSEMBLY (See page BC-432)**

A

END

BC

DTC	C1231/31	Steering Angle Sensor Circuit Malfunction

DESCRIPTION

The steering angle sensor signal is sent to the skid control ECU via the CAN communication system. When there is a malfunction in the CAN communication system, it will be detected by the steering angle sensor zero point malfunction diagnostic function.

DTC No.	DTC Detection Condition	Trouble Area
C1231/31	When any of the following is detected: • With ECU terminal IG1 voltage 9.8 V or more, the condition that the ECU does not receive data from the steering angle sensor continues. • Internal sensor failure • The offset value is out of range. • Sensor signal changes too rapidly. • Steering angle value difference between measured and reference is out of range. • Steering angle sensor signal is out of range.	• Steering angle sensor • Steering angle sensor circuit • Steering angle sensor power supply

WIRING DIAGRAM

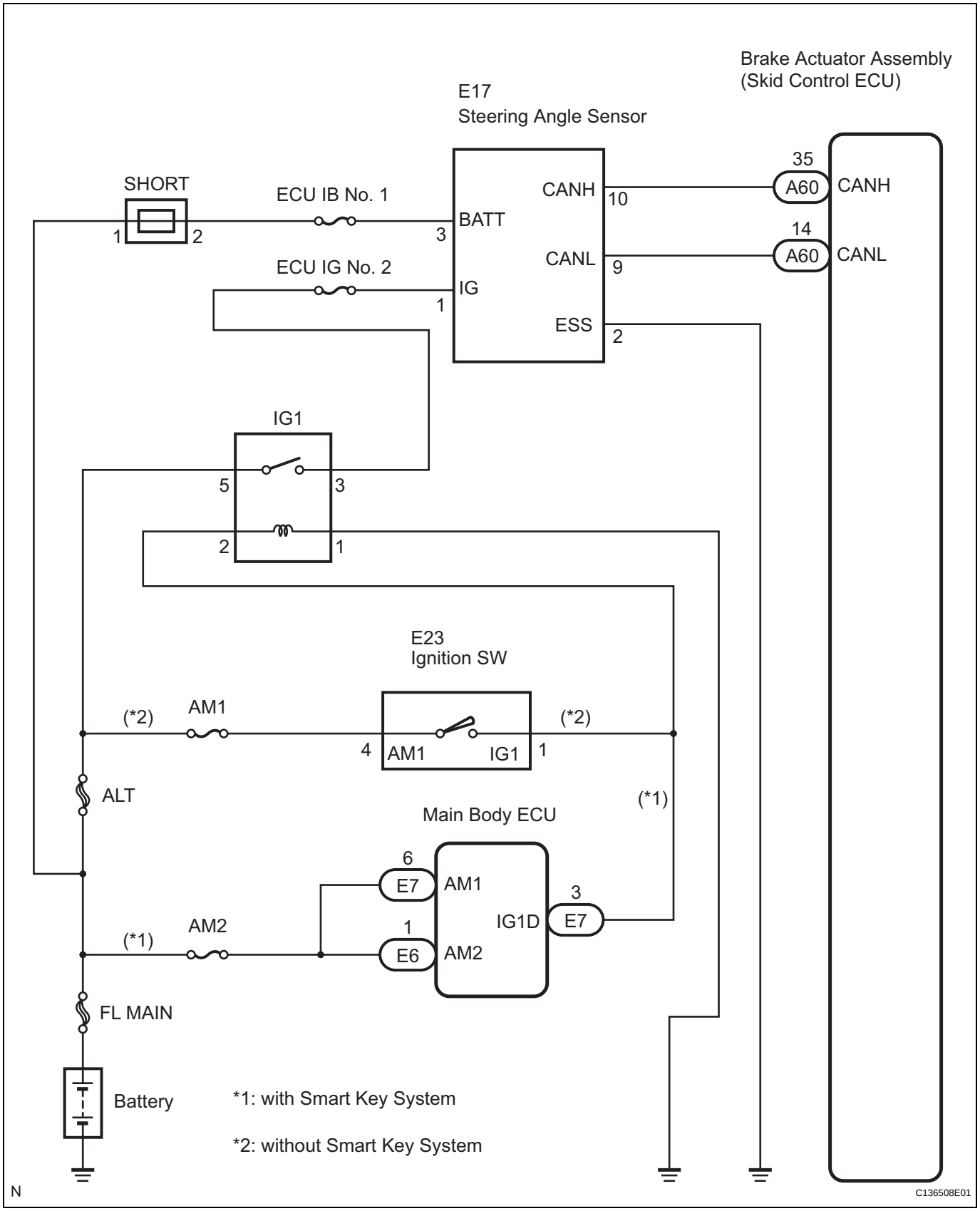

BC

INSPECTION PROCEDURE

HINT:

- When U0073/94, U0100/63, U0123/62 and/or U0126/63 is output together with C1231/31, inspect and repair the trouble areas indicated by U0073/94, U0100/65, U0123/62 and/or U0126/63 first.
- When the speed sensor or the yaw rate and acceleration sensor has trouble, DTCs for the steering angle sensor may be output even when the steering angle sensor is normal. When DTCs for the speed sensor or yaw rate and acceleration sensor are output together with other DTCs for the steering angle sensor, inspect and repair the speed sensor and yaw rate and acceleration sensor first, and then inspect and repair the steering angle sensor.
- Check the condition of each related circuit connector before troubleshooting (See page IN-40).

1	CHECK DTC

(a) Clear the DTC (See page BC-302).
(b) Turn the ignition switch off.
(c) Turn the ignition switch on (IG) again and check that no CAN communication system DTC is output.
(d) Drive the vehicle and turn the steering wheel to the right and left at the speed of 22 mph (35 km/h) and check that no speed sensor and yaw rate and acceleration sensor DTCs are output (See page BC-302).

BC

Result

Condition	Proceed to
No CAN communication system DTC and the speed sensor or yaw rate and acceleration sensor DTC are output	A
CAN communication system DTC is output	B
Speed sensor or yaw rate and acceleration sensor DTC is output	C

HINT:

- If there is a malfunction in the speed sensor or the yaw rate and acceleration sensor, an abnormal value may be output although the steering angle sensor is normal.
- If the speed sensor and the yaw rate and acceleration sensor DTCs are output simultaneously, repair the sensors and inspect the steering angle sensor.

B → **INSPECT CAN COMMUNICATION SYSTEM (See page CA-8)**

C → **REPAIR CIRCUITS INDICATED BY OUTPUT DTCS (See page BC-311)**

A

2 INSPECT STEERING ANGLE SENSOR (POWER SOURCE TERMINAL)

Steering Angle Sensor Wire Harness View:

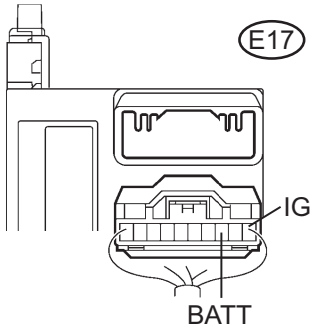

G030156E17

(a) Remove the column cover lower.
(b) Disconnect the steering angle sensor connector.
(c) Measure the voltage according to the value(s) in the table below.

Standard voltage

Tester Connection	Condition	Specified Condition
E17-1 (IG) - Body ground	Ignition switch on (IG)	10 to 14 V
E17-3 (BAT) - Body ground	Always	10 to 14 V

NG → **REPAIR OR REPLACE HARNESS OR CONNECTOR (POWER SOURCE CIRCUIT)**

OK

3 INSPECT STEERING ANGLE SENSOR (GROUND TERMINAL)

Steering Angle Sensor Wire Harness View:

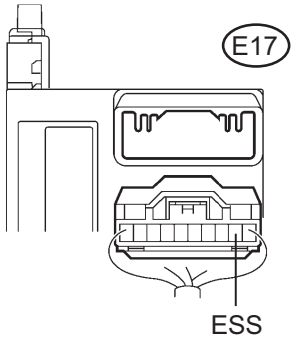

G030156E18

(a) Measure the resistance according to the value(s) in the table below.

Standard resistance

Tester Connection	Condition	Specified Condition
E17-2 (ESS) - Body ground	Always	Below 1 Ω

(b) Connect the connector.
(c) Install the column cover lower.

NG → **REPAIR OR REPLACE HARNESS OR CONNECTOR (GROUND CIRCUIT)**

OK

REPLACE STEERING ANGLE SENSOR (See page BC-450)

BC

DTC	C1237/37	Tires of Different Size

DESCRIPTION

The skid control ECU measures the speed of each wheel by receiving signals from the speed sensor. These signals are used for recognizing that all 4 wheels are operating properly.
Therefore, all wheel signals must be equal.

DTC No.	DTC Detecting Condition	Trouble Area
C1237/37	When any of the following is detected: • Wheel speed difference between the wheels. • Wheel sensor signal failure. • ABS control continues for 60 sec. or more.	• Brake actuator assembly (skid control ECU) • Speed sensor rotor (Front) • Rear axle hub and bearing assembly • Speed sensor • Speed sensor circuit • Tire and wheel size • Tire deformation

WIRING DIAGRAM

BC

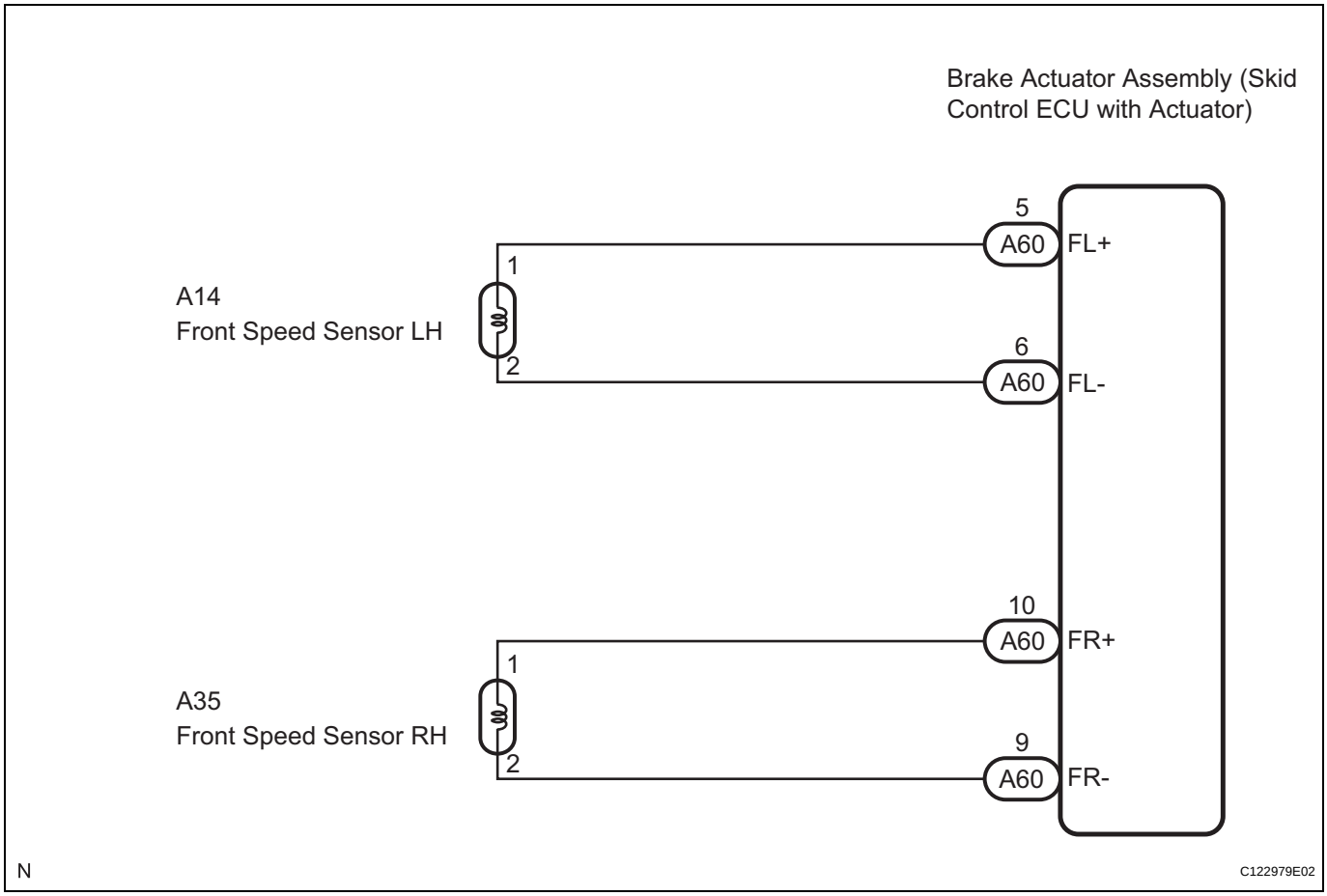

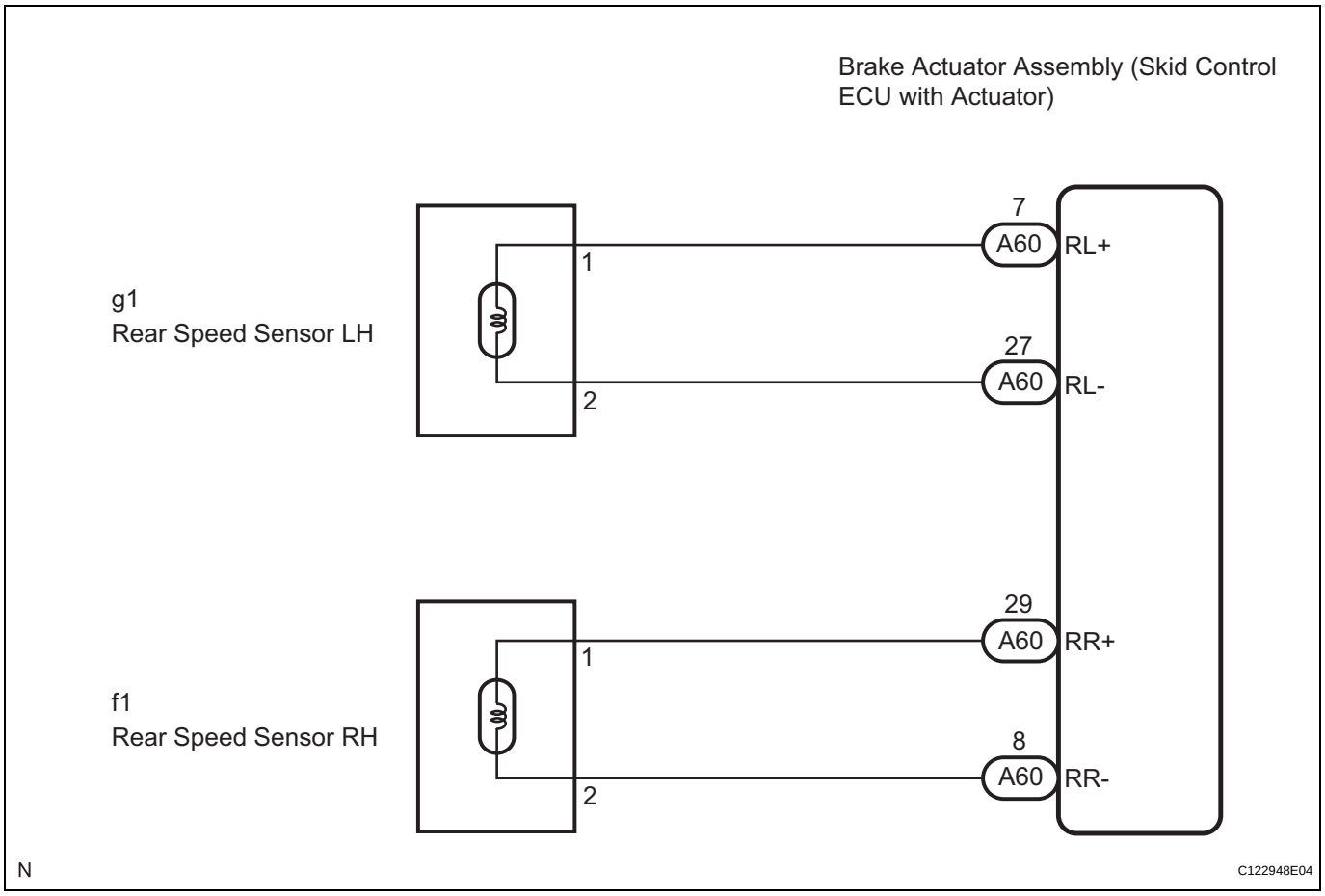

INSPECTION PROCEDURE

HINT:
Check the condition of each related circuit connector before troubleshooting (See page IN-40).

1	CHECK TIRES

(a) Check the size and condition of all 4 wheels (See page TW-3).
HINT:
The DTC is output when tire deformation or a difference in tire size is detected.
OK:
The diameter of all 4 tires and air pressure are the same.

NG → **REPLACE TIRES SO THAT ALL 4 TIRES ARE THE SAME SIZE**

OK

2 INSPECT SPEED SENSOR AND SENSOR ROTOR SERRATIONS

Skid Control ECU (Harness Side Connector Front View):

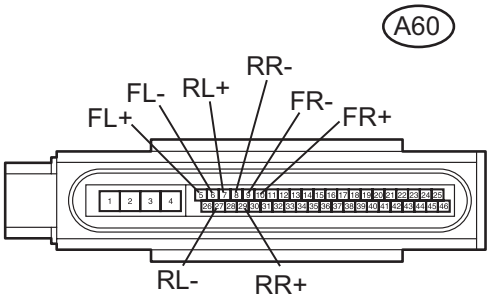

N C136493E04

(a) Lift up the vehicle.
(b) Disconnect the skid control ECU connector.
(c) Connect the oscilloscope to each speed sensor terminal of the skid control ECU connector.

Terminals

Connector	Circuit
A60-5 (FL+) - A60-6 (FL-)	Front left speed sensor
A60-10 (FR+) - A60-9 (FR-)	Front right speed sensor
A60-7 (RL+) - A60-27 (RL-)	Rear left speed sensor
A60-29 (RR+) - A60-8 (RR-)	Rear right speed sensor

BC

Normal Signal Waveform:

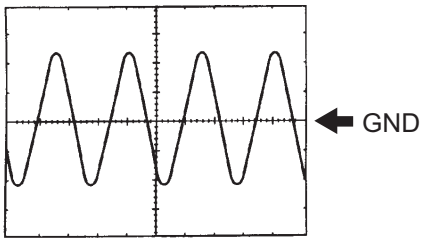

1 V/Division, 2 ms./Division

C140980E03

(d) Check that a waveform is output when the tires are rotated (by the sensor circuit).

OK:

A waveform as shown in the figure is output.

HINT:

- Each sensor circuit outputs the same waveform without noise.
- As vehicle speed (wheel rotation speed) increases, the width of the waveform narrows and the fluctuation in the output voltage becomes greater.
- When noise is identified in the waveform on the oscilloscope, the erratic signals are generated due to rotor scratches, looseness or foreign matter attached to the speed sensor.

(e) Make sure that the waveform does not change while jiggling a connector or a wire harness.

OK:

The waveform does not change.

HINT:

If the waveform changes while jiggling a connector or a wire harness, there may be a malfunction in the connector or the wire harness.

(f) Connect the connector.

NG → **Go to step 4**

OK

3 RECONFIRM DTC

(a) Clear the DTC (See page BC-302).
(b) Start the engine.
(c) Drive the vehicle at a speed of 20 mph (32 km/h) or more for 60 seconds or more.

(d) Check if the same DTC is recorded (See page BC-302).
HINT:
Reinstall the sensors, connectors, etc. and restore the vehicle to its prior condition before rechecking for DTCs.

Result

Condition	Proceed to
DTC is not output	A
DTC is output	B

B → **REPLACE BRAKE ACTUATOR ASSEMBLY (See page BC-432)**

A

CHECK FOR INTERMITTENT PROBLEMS (SYMPTOM SIMULATION) (See page BC-298)

BC

4 CHECK SPEED SENSOR ROTOR

(a) Check the speed sensor rotor.
Front Speed Sensor Rotor (Front drive outboard joint shaft assembly): (See page DS-23)
Rear Speed Sensor Rotor (Rear axle hub and bearing assembly): (See page AH-14)
OK:
No scratches or foreign matter on the rotors.
NOTICE:
Check the speed sensor signal after the cleaning/ replacement (See page BC-290).

NG → **CLEAN OR REPLACE SPEED SENSOR ROTOR**

OK

5 CHECK SPEED SENSOR TIP

(a) Remove each speed sensor (See page BC-438 for front, BC-443 for rear).
(b) Check the speed sensor tip.
OK:
No scratches or foreign matter on the sensor tip.
NOTICE:
Check the speed sensor signal after the cleaning/ replacement (See page BC-290).
(c) Install the speed sensor.

NG → **CLEAN OR REPLACE SPEED SENSOR**

OK

6 INSPECT SPEED SENSOR

Front Speed Sensor:

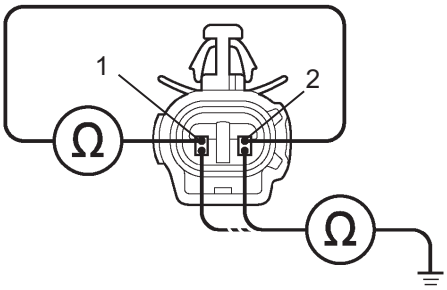

Rear Speed Sensor:

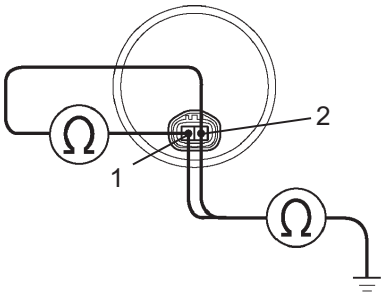

C136027E02

(a) Disconnect each speed sensor connector.

(b) Measure the resistance according to the value(s) in the table below.

Standard resistance:

FRONT

Tester Connection	Condition	Specified Condition
A14-1 (FL+) - A14-2 (FL-)	Always	0.92 to 1.22 kΩ at 20°C
A14-1 (FL+) - Body ground	Always	10 kΩ or higher
A14-2 (FL-) - Body ground	Always	10 kΩ or higher
A35-1 (FR+) - A35-2 (FR-)	Always	0.92 to 1.22 kΩ at 20°C
A35-1 (FR+) - Body ground	Always	10 kΩ or higher
A35-2 (FR-) - Body ground	Always	10 kΩ or higher

REAR

Tester Connection	Condition	Specified Condition
g1-1 (RL+) - g1-2 (RL-)	Always	Below 2.2 kΩ
g1-1 (RL+) - Body ground	Always	10 kΩ or higher
g1-2 (RL-) - Body ground	Always	10 kΩ or higher
f1-1 (RR+) - f1-2 (RR-)	Always	Below 2.2 kΩ
f1-1 (RR+) - Body ground	Always	10 kΩ or higher
f1-2 (RR-) - Body ground	Always	10 kΩ or higher

NOTICE:

Check the speed sensor signal after replacement (See page BC-290).

NG → **REPLACE EACH SPEED SENSOR**

OK

BC

7 CHECK HARNESS AND CONNECTOR (SKID CONTROL ECU TO EACH SPEED SENSOR)

Skid Control ECU (Harness Side Connector Front View):

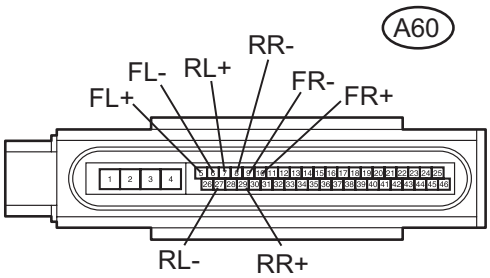

Front Speed Sensor Harness Side Connector Front View:

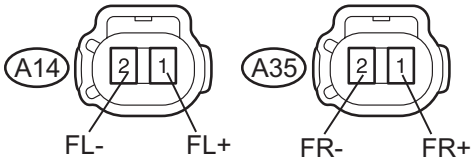

Rear Speed Sensor Harness Side Connector Front View:

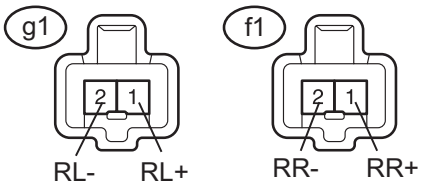

C139146E02

(a) Disconnect the skid control ECU connector.
(b) Measure the resistance according to the value(s) in the table below.

Standard resistance:

FRONT

Tester Connection	Condition	Specified Condition
A60-5 (FL+) - A14-1 (FL+)	Always	Below 1 Ω
A60-5 (FL+) - Body ground	Always	10 kΩ or higher
A60-6 (FL-) - A14-2 (FL-)	Always	Below 1 Ω
A60-6 (FL-) - Body ground	Always	10 kΩ or higher
A60-10 (FR+) - A35-1 (FR+)	Always	Below 1 Ω
A60-10 (FR+) - Body ground	Always	10 kΩ or higher
A60-9 (FR-) - A35-2 (FR-)	Always	Below 1 Ω
A60-9 (FR-) - Body ground	Always	10 kΩ or higher

REAR

Tester Connection	Condition	Specified Condition
A60-7 (RL+) - g1-1 (RL+)	Always	Below 1 Ω
A60-7 (RL+) - Body ground	Always	10 kΩ or higher
A60-27 (RL-) - g1-2 (RL-)	Always	Below 1 Ω
A60-27 (RL-) - Body ground	Always	10 kΩ or higher
A60-29 (RR+) - f1-1 (RR+)	Always	Below 1 Ω
A60-29 (RR+) - Body ground	Always	10 kΩ or higher
A60-8 (RR-) - f1-2 (RR-)	Always	Below 1 Ω
A60-8 (RR-) - Body ground	Always	10 kΩ or higher

(c) Connect the connector.

NG → **REPAIR OR REPLACE HARNESS OR CONNECTOR (SKID CONTROL ECU TO EACH SPEED SENSOR)**

OK

8 RECONFIRM DTC

(a) Clear the DTC (See page BC-302).
(b) Start the engine.

BC

(c) Drive the vehicle at a speed of 20 mph (32 km/h) or more for at least 60 seconds.

(d) Check if the same DTC is recorded (See page BC-302).
HINT:
Reinstall the sensors, connectors, etc. and restore the vehicle to its prior condition before rechecking for DTCs.

Result

Condition	Proceed to
DTC (C1237/37) is not output	A
DTC (C1237/37) is output	B

B → **REPLACE BRAKE ACTUATOR ASSEMBLY (See page BC-432)**

A

CHECK FOR INTERMITTENT PROBLEMS (SYMPTOM SIMULATION) (See page BC-298)

DTC	C1241/41	Low Battery Positive Voltage or Abnormally High Battery Positive Voltage

DESCRIPTION

If a malfunction is detected in the power supply circuit of the brake actuator assembly (skid control ECU), the skid control ECU (housed in the actuator assembly) stores this DTC and the fail-safe function prohibits ABS operation.
This DTC is output when the IG1 terminal voltage deviates from the normal condition due to a malfunction in the power supply or charging circuit such as the battery or alternator circuit.
This DTC is cancelled when the IG1 terminal voltage returns to normal (only when the voltage returns to normal from a voltage lower than the specified value).

DTC No.	DTC Detection Condition	Trouble Area
C1241/41	When either of the following is detected: • Battery voltage is 16.8 V or more. • Battery voltage is 9.2 V or less.	• Battery • ECU-IG No. 2 fuse • Charging system • Power source circuit • Brake actuator assembly (internal power source circuit)

WIRING DIAGRAM

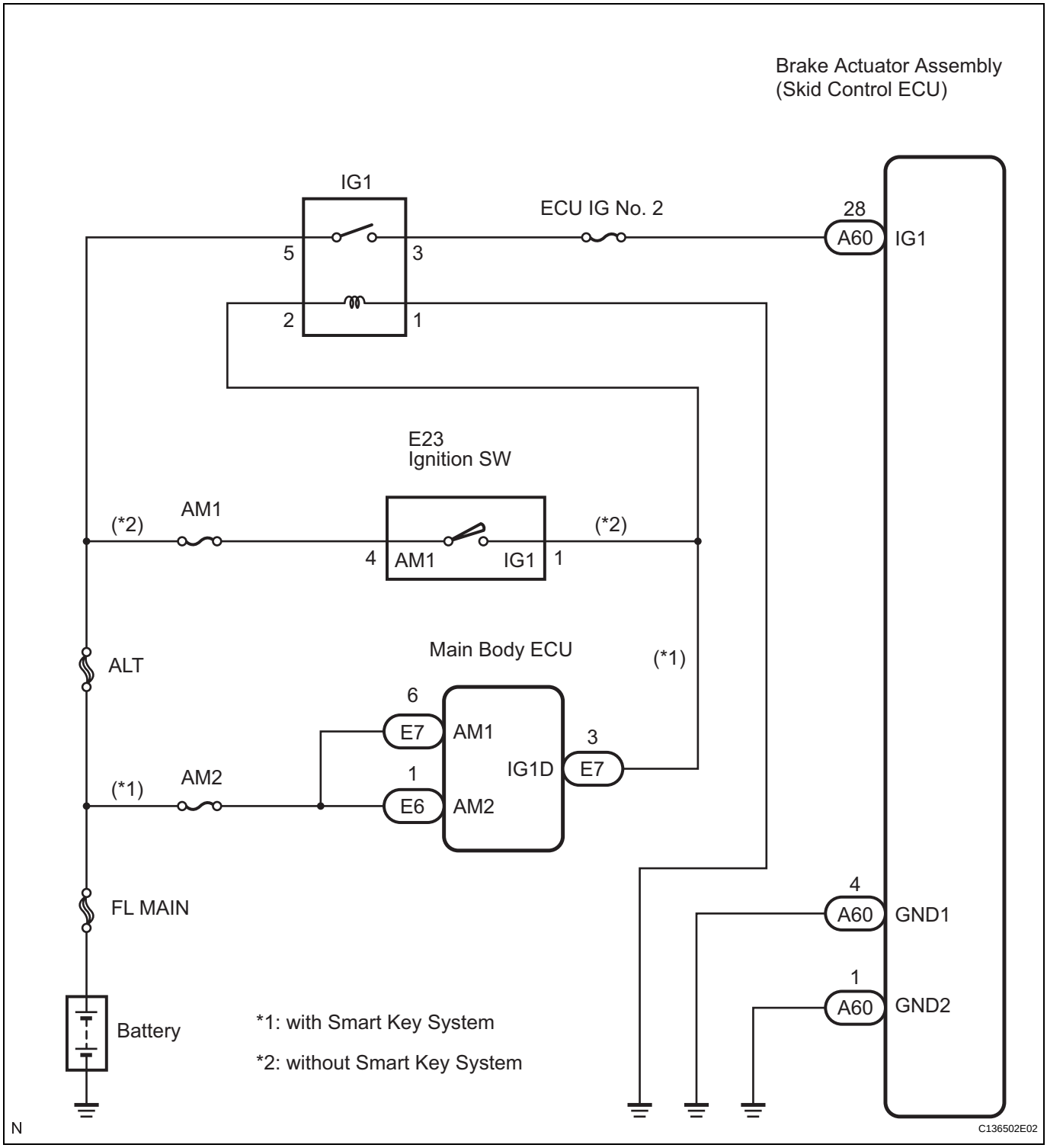

BC

INSPECTION PROCEDURE

1 INSPECT FUSE (ECU-IG NO. 2 FUSE)

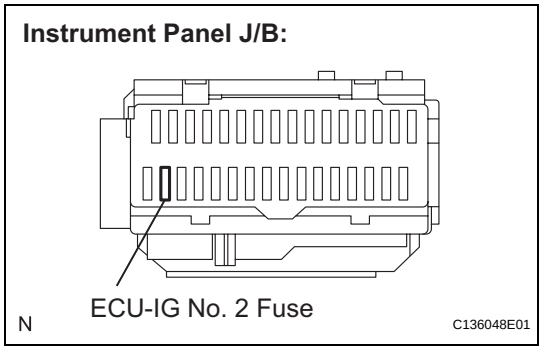

(a) Remove the ECU-IG No. 2 fuse from the instrument panel J/B.
(b) Measure the resistance according to the value(s) in the table below.
Standard resistance

Tester Connection	Specified Condition
ECU-IG No. 2 fuse	Below 1 Ω (Continuity)

(c) Install the fuse.

NG → **REPLACE FUSE**

OK

2 INSPECT BATTERY

(a) Check the battery voltage.
Standard voltage:
11 to 14 V

NG → **INSPECT CHARGING SYSTEM**

OK

3 INSPECT SKID CONTROL ECU (IG1 TERMINAL VOLTAGE)

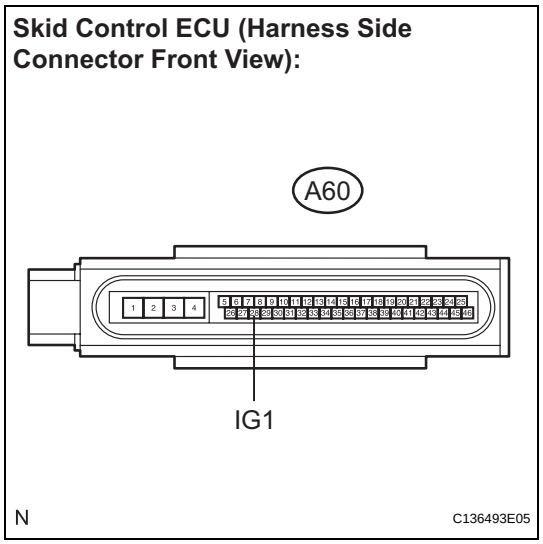

(a) Disconnect the skid control ECU connector.
(b) Turn the ignition switch on (IG).
(c) Measure the voltage according to the value(s) in the table below.
Standard voltage

Tester Connection	Condition	Specified Condition
A60-28 (IG1) - Body ground	Ignition switch on (IG)	10 to 14 V

NG → **REPAIR OR REPLACE HARNESS OR CONNECTOR (IG1 CIRCUIT)**

OK

BC

4 INSPECT SKID CONTROL ECU (GND TERMINAL CONTINUITY)

Skid Control ECU (Harness Side Connector Front View):

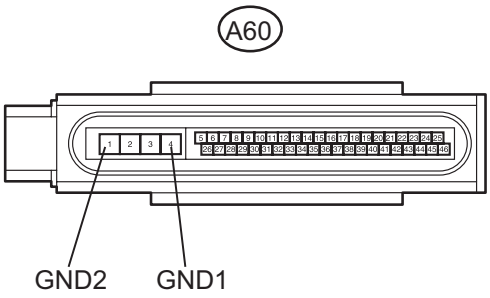

N C136493E02

(a) Measure the resistance according to the value(s) in the table below.

Standard resistance

Tester Connection	Specified Condition
A60-4 (GND1) - Body ground	Below 1 Ω
A60-1 (GND2) - Body ground	Below 1 Ω

(b) Connect the connector.

NG → **REPAIR OR REPLACE HARNESS OR CONNECTOR (GND CIRCUIT)**

OK

5 RECONFIRM DTC

(a) Clear the DTC (See page BC-302).
(b) Start the engine.
(c) Check if the same DTC is recorded (See page BC-302).
HINT:
Reinstall the sensors, connectors, etc. and restore the vehicle to its prior condition before rechecking for DTCs.

Result

Condition	Proceed to
DTC is not output	A
DTC is output (When troubleshooting in accordance with the PROBLEM SYMPTOMS TABLE)	B
DTC is output (When troubleshooting in accordance with the DTC CHART)	C

B → **PROCEED TO NEXT CIRCUIT INSPECTION SHOWN IN PROBLEM SYMPTOMS TABLE (See page BC-295)**

C → **REPLACE BRAKE ACTUATOR ASSEMBLY (See page BC-432)**

A

CHECK FOR INTERMITTENT PROBLEMS (SYMPTOM SIMULATION) (See page BC-298)

DTC	C1246/46	Master Cylinder Pressure Sensor Malfunction

DESCRIPTION

The master cylinder pressure sensor is connected to the skid control ECU in the brake actuator assembly.

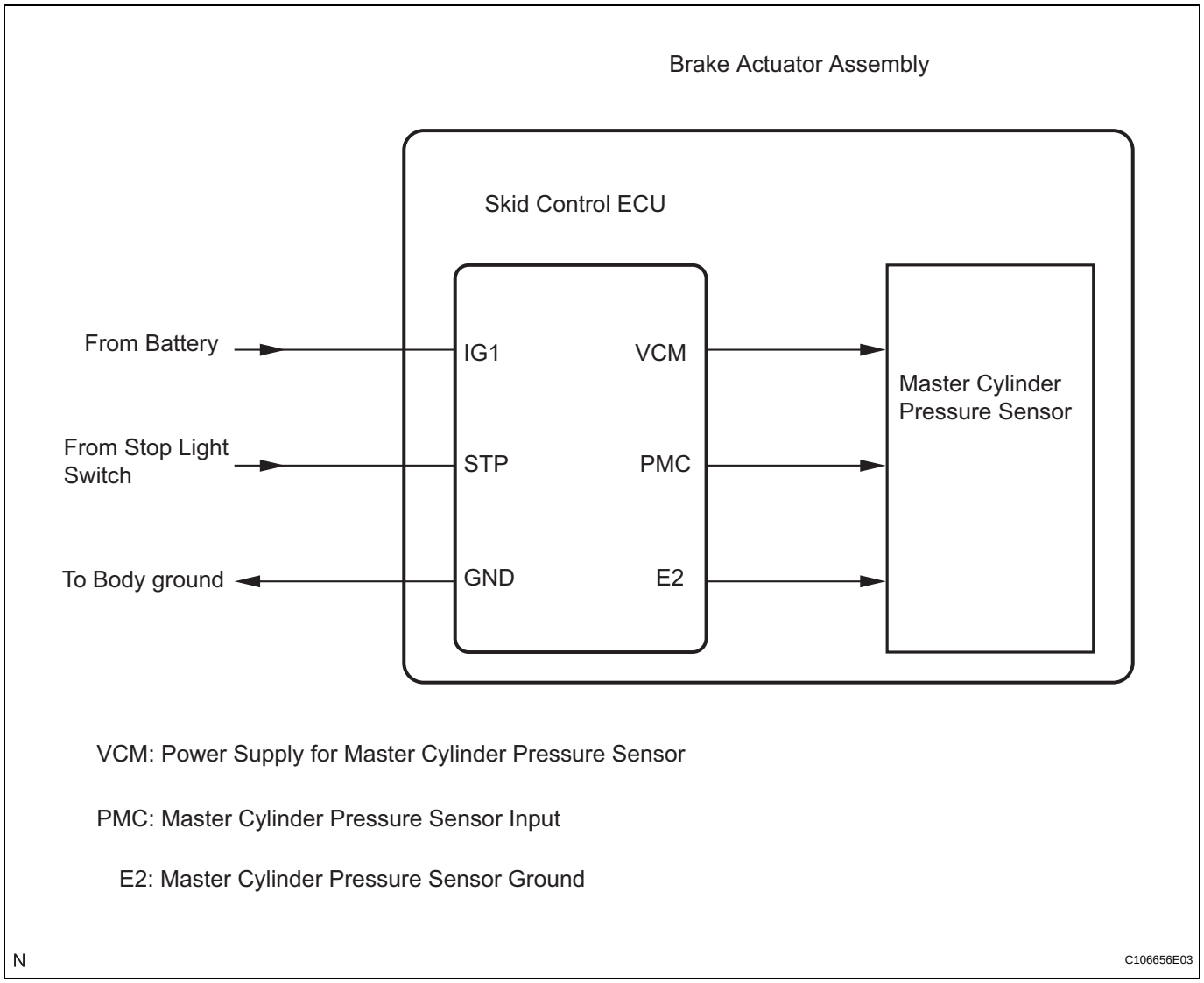

DTC No.	DTC Detection Condition	Trouble Area
C1246/46	When any of the following is detected: • The voltage of the sensor signal is out of range (less than 0.3 V, more than 4.86 V). • The sensor supply voltage is out of range (above 5.3 V, below 4.7 V). • The sensor signal offset value is out of range. • The sum of signal 1 and signal 2 is out of range (above 5.5 V, below 4.5 V).	• Master cylinder pressure sensor • Master cylinder pressure sensor circuit • Stop light switch circuit • Brake actuator assembly (skid control ECU)

INSPECTION PROCEDURE

HINT:

Check the condition of each related circuit connector before troubleshooting (See page IN-40).

BC

1 CHECK STOP LIGHT OPERATION

(a) Check that the stop light comes on when the brake pedal is depressed, and goes off when the brake pedal is released.

OK

Condition	Illumination Condition
Brake pedal depressed	**ON**
Brake pedal released	**OFF**

NG → **INSPECT STOP LIGHT CIRCUIT**

OK

2 READ VALUE OF INTELLIGENT TESTER (MASTER CYLINDER PRESSURE SENSOR)

BC

(a) Connect the intelligent tester to the DLC3.
(b) Start the engine.
(c) Select the "DATA LIST" mode on the intelligent tester (See page BC-307).

DATA LIST: ABS/TRAC/VSC

Item (Display)	Measurement Item / Range (Display)	Normal Condition
MAS CYL PRESS 1	Master cylinder pressure sensor 1 reading / min.: 0 V, max.: 5 V	When brake pedal is released: 0.3 to 0.5 V

(d) Check that the hydraulic pressure value of the master cylinder pressure sensor observed on the intelligent tester changes when the brake pedal is depressed.
OK:
When the pedal is depressed, voltage displayed on the intelligent tester increases.

NG → **REPLACE BRAKE ACTUATOR ASSEMBLY (See page BC-432)**

OK

3 READ VALUE OF INTELLIGENT TESTER (STOP LIGHT SWITCH)

(a) Select the "DATA LIST" mode on the intelligent tester (See page BC-307).

DATA LIST: ABS/TRAC/VSC

Item (Display)	Measurement Item / Range (Display)	Normal Condition
STOP LAMP SW	Stop light switch / ON or OFF	ON: Brake pedal depressed OFF: Brake pedal released

(b) Check that the stop light condition observed on the intelligent tester changes when the brake pedal is depressed.
OK:
When the brake pedal is depressed, the intelligent tester displays "ON".

NG → **REPLACE BRAKE ACTUATOR ASSEMBLY (See page BC-432)**

OK

4	RECONFIRM DTC

(a) Clear the DTC (See page BC-302).
(b) Start the engine.
(c) At a speed of 18 mph (30 km/h) or more, drive the vehicle and perform braking test (decelerate the vehicle by depressing the brake pedal).
(d) Check if the same DTC is recorded (See page BC-302).
HINT:
Reinstall the sensors, connectors, etc. and restore the vehicle to its prior condition before rechecking for DTCs.

Result

Condition	Proceed to
DTC (C1246/46) is not output	A
DTC (C1246/46) is output	B

B → **REPLACE BRAKE ACTUATOR ASSEMBLY (See page BC-432)**

A

CHECK FOR INTERMITTENT PROBLEMS (SYMPTOM SIMULATION) (See page BC-298)

DTC	C1249/49	Open in Stop Light Switch Circuit

DESCRIPTION

This circuit recognizes brake operation by sending a stop light signal to the skid control ECU.
The skid control ECU has an open detection circuit, which outputs this DTC when detecting an open in the stop light signal input line (STP terminal) or the ground line of the stop light circuit with the stop light switch off (brake pedal not depressed).

DTC No.	DTC Detection Condition	Trouble Area
C1249/49	When either of the following is detected: • After the ignition switch is turned on (IG), the STP terminal voltage of the ECU is 40% to 67% of its supplied voltage for 0.5 seconds. • When STP signal is OFF (release the brake pedal), the pressure sensor value exceeds 725 bar for 1 second.	• Stop light switch • Stop light switch circuit • Brake actuator assembly (skid control ECU)

WIRING DIAGRAM

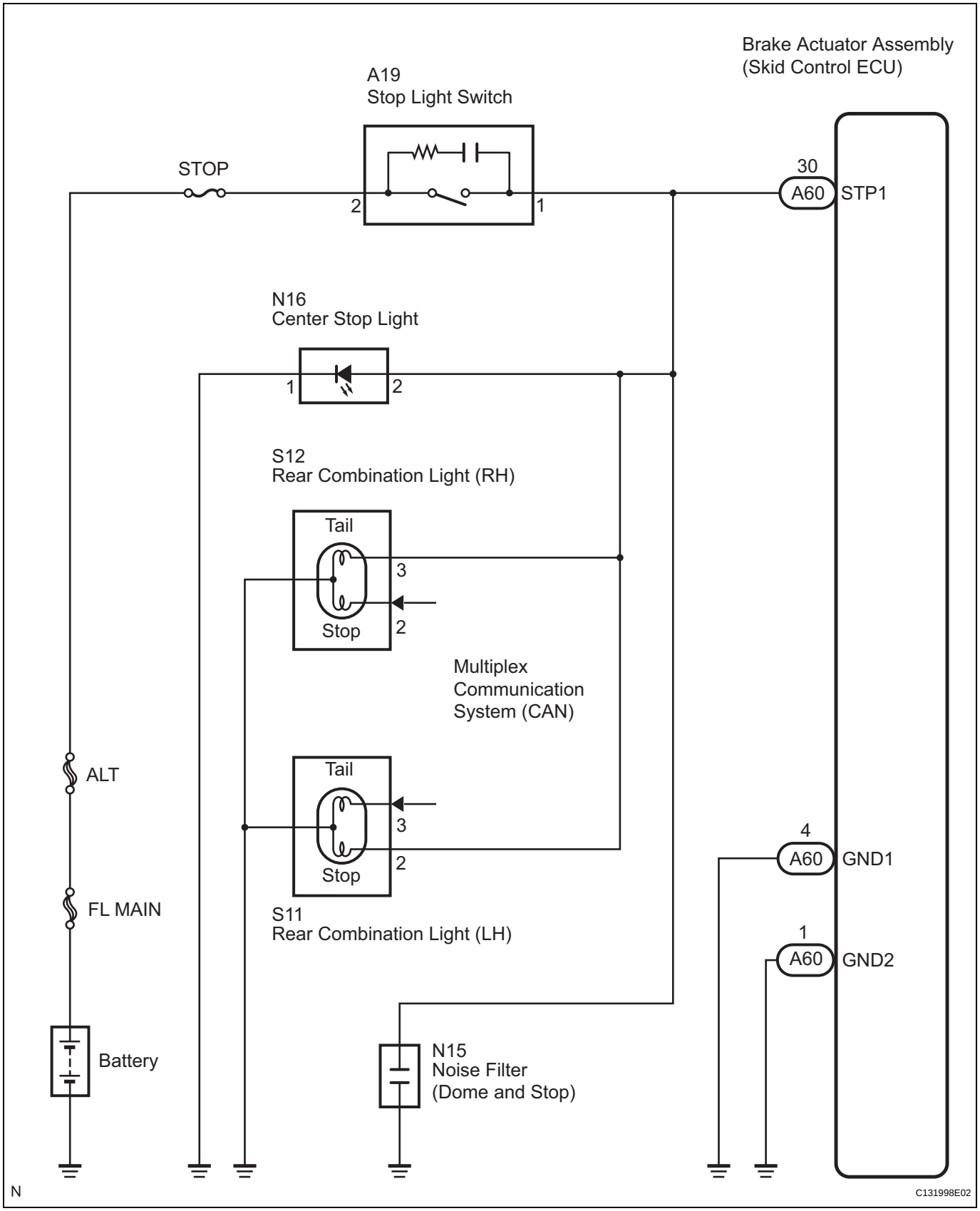

BC

INSPECTION PROCEDURE

HINT:

Check the condition of each related circuit connector before troubleshooting (See page IN-40).

1 CHECK STOP LIGHT SWITCH OPERATION (STOP LIGHT SWITCH CIRCUIT)

(a) Check that the stop lights come on when the brake pedal is depressed and go off when the brake pedal is released.

OK

Pedal Condition	Illumination Condition
Brake pedal depressed	ON
Brake pedal released	OFF

NG → **Go to step 5**

OK

2 INSPECT SKID CONTROL ECU (STP TERMINAL)

BC

Skid Control ECU (Harness Side Connector Front View):

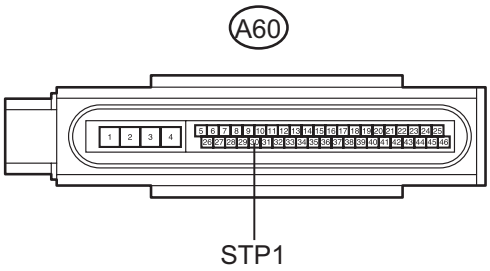

N C136493E06

(a) Disconnect the skid control ECU connector.
(b) Measure the voltage according to the value(s) in the table below.

Standard voltage

Tester Connection	Switch Condition	Specified Condition
A60-30 (STP1) - Body ground	Brake pedal depressed	8 to 14 V
A60-30 (STP1) - Body ground	Brake pedal released	Below 4.0 V

NG → **Go to step 7**

OK

3 INSPECT SKID CONTROL ECU (GND TERMINAL CONTINUITY)

Skid Control ECU (Harness Side Connector Front View):

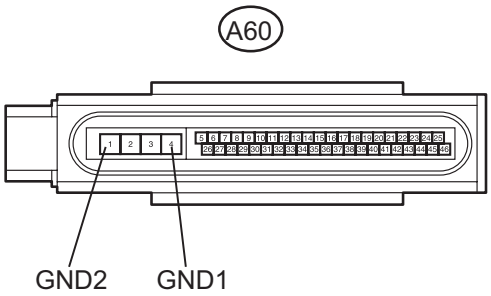

N C136493E02

(a) Measure the resistance according to the value(s) in the table below.

Standard resistance

Tester Connection	Specified Condition
A60-4 (GND1) - Body ground	Below 1 Ω
A60-1 (GND2) - Body ground	Below 1 Ω

(b) Connect the connector.

NG → **REPAIR OR REPLACE HARNESS OR CONNECTOR (GND CIRCUIT)**

OK

4 RECONFIRM DTC

(a) Clear the DTC (See page BC-302).
(b) Start the engine.
(c) Depress the brake pedal several times to test the stop light circuit.
(d) Check if the same DTC is recorded (See page BC-302).
HINT:
Reinstall the sensors, connectors, etc. and restore the vehicle to its prior condition before rechecking for DTCs.

Result

Condition	Proceed to
DTC is not output	A
DTC is output	B

HINT:
It is suspected that the DTCs were output due to a bad connection of the connector terminal.

B → **REPLACE BRAKE ACTUATOR ASSEMBLY (See page BC-432)**

A

CHECK FOR INTERMITTENT PROBLEMS (SYMPTOM SIMULATION) (See page BC-298)

BC

5 CHECK HARNESS AND CONNECTOR (STOP LIGHT SWITCH POWER SOURCE TERMINAL VOLTAGE)

Stop Light Switch (Harness Side Connector Front View):

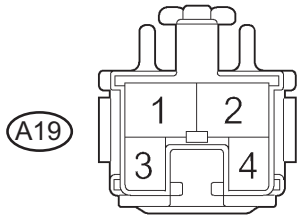

I042363E18

(a) Disconnect the stop light switch connector.
(b) Measure the voltage according to the value(s) in the table below.

Standard voltage

Tester Connection	Condition	Specified Condition
A19-2 - Body ground	Always	10 to 14 V

NG → **REPAIR OR REPLACE HARNESS OR CONNECTOR (STOP LIGHT SWITCH POWER SOURCE CIRCUIT)**

OK

BC

6 INSPECT STOP LIGHT SWITCH ASSEMBLY

Stop Light Switch Assembly:

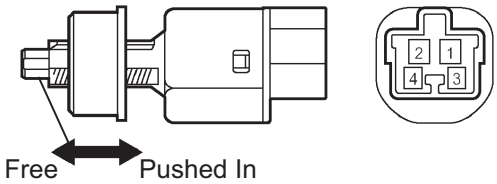

H F047752E04

(a) Measure the resistance according to the value(s) in the table below.

Standard resistance

Tester Connection	Switch Condition	Specified Condition
1 - 2	Switch pin free	Below 1 Ω
1 - 2	Switch pin pushed in	10 kΩ or higher

(b) Connect the connector.

NG → **REPLACE STOP LIGHT SWITCH ASSEMBLY**

OK

7	CHECK HARNESS AND CONNECTOR (STOP LIGHT SWITCH TO SKID CONTROL ECU)

Skid Control ECU (Harness Side Connector Front View):

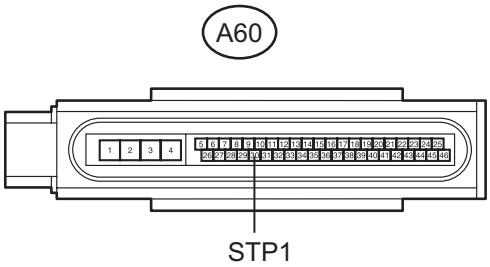

Stop Lignt Switch (Harness Side Connector Front View):

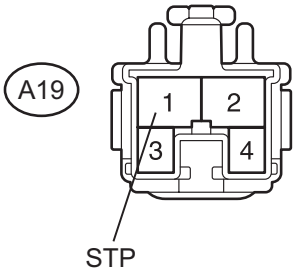

N C139147E01

(a) Disconnect the stop light switch connector and skid control ECU connector.

(b) Measure the resistance according to the value(s) in the table below.

Standard resistance

Tester Connection	Specified Condition
A60-30 (STP1) - A19-1 (STP1)	Below 1 Ω

(c) Connect the connectors.

NG → **REPAIR OR REPLACE HARNESS OR CONNECTOR (STOP LIGHT SWITCH TO SKID CONTROL ECU)**

OK

REPAIR OR REPLACE HARNESS OR CONNECTOR (STOP LIGHT CIRCUIT)

BC

DTC	C1288/88	ECU Version Miss Match

DESCRIPTION

DTC No.	DTC Detection Condition	Trouble Area
C1288/88	ECM does not match	ECM

INSPECTION PROCEDURE

1 CHECK CAN COMMUNICATION SYSTEM

(a) Check if a CAN communication system DTC is output (See page BC-302).

Result

Condition	Proceed to
CAN communication system DTC is not output	A
CAN communication system DTC is output	B

B → **INSPECT CAN COMMUNICATION SYSTEM (See page CA-8)**

A

2 PERFORM ENGINE VARIANT LEARNING

(a) Perform engine variant learning (See page BC-290).

NEXT

3 CONFIRM RECONFIRM DTC

(a) Clear the DTC (See page BC-302).
(b) Start the engine.
(c) Check if the same DTC is recorded (See page BC-302).

Result

Condition	Proceed to
DTC is not output	A
DTC is output	B

B → **REPLACE ECM**

A

END

DTC	C1300/62	Skid Control ECU Malfunction

DESCRIPTION

The skid control ECU is housed in the brake actuator assembly.
The skid control ECU judges the vehicle driving condition based on the signals from each sensor, and controls the brake actuator assembly.

DTC No.	DTC Detection Condition	Trouble Area
C1300/62	Internal failure of the skid control ECU control unit	Brake actuator assembly (skid control ECU)

INSPECTION PROCEDURE

HINT:
Check the condition of each related circuit connector before troubleshooting (See page IN-40).

1 CHECK DTC

(a) Check the DTC (See page BC-302).

BC

Result

Condition	Proceed to
DTC C1300/62 is output (only C1300/62)	**A**
Other DTCs are output	**B**

B → **REPAIR CIRCUITS INDICATED BY OUTPUT DTCS (See page BC-302)**

A

2 INSPECT SKID CONTROL ECU (IG1 TERMINAL VOLTAGE)

Skid Control ECU (Harness Side Connector Front View):

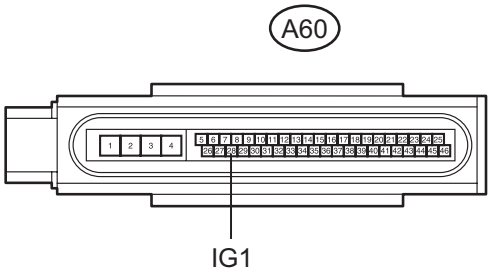

N C136493E05

(a) Disconnect the skid control ECU connector.
(b) Turn the ignition switch on (IG).
(c) Measure the voltage according to the value(s) in the table below.

Standard voltage

Tester Connection	Condition	Specified Condition
A60-28 (IG1) - Body ground	**Ignition switch on (IG)**	**10 to 14 V**

NG → **REPAIR OR REPLACE HARNESS OR CONNECTOR (IG1 CIRCUIT)**

OK

3	INSPECT SKID CONTROL ECU (GND TERMINAL CONTINUITY)

Skid Control ECU (Harness Side Connector Front View):

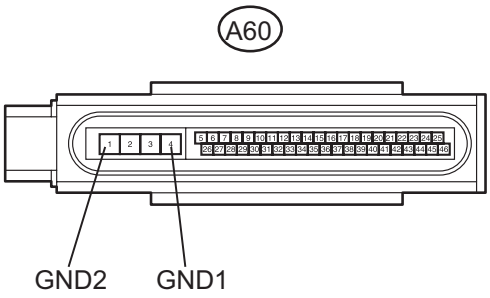

N C136493E02

(a) Measure the resistance according to the value(s) in the table below.

Standard resistance

Tester Connection	Specified Condition
A60-4 (GND1) - Body ground	Below 1 Ω
A60-1 (GND2) - Body ground	Below 1 Ω

(b) Connect the connector.

NG → **REPAIR OR REPLACE HARNESS OR CONNECTOR (GND CIRCUIT)**

OK

REPLACE BRAKE ACTUATOR ASSEMBLY (See page BC-432)

BC

DTC	U0073/94	Control Module Communication Bus OFF

DTC	U0100/65	Lost Communication with ECM / PCM

DTC	U0123/62	Lost Communication with Yaw Rate Sensor Module

DTC	U0126/63	Lost Communication with Steering Angle Sensor Module

DESCRIPTION

The skid control ECU receives the signals from the ECM, steering angle sensor, and yaw rate and acceleration sensor via the CAN communication system.

DTC No.	DTC Detection Condition	Trouble Area
U0073/94	When either of the following is detected: 1. Bus OFF state continues for 300 msec. 2. The ECU detects that it cannot send a signal.	CAN communication system
U0100/65	When either of the following is detected: 1. At a vehicle speed of 4 mph (6 km/h) or more, the skid control ECU receives data that is out of range from the engine. 2. At a vehicle speed of 4 mph (6 km/h) or more, the skid control ECU receives abnormal data from the engine (5 cycles).	CAN communication system (Skid control ECU to ECM)
U0123/62	When any r of the following is detected: 1. The skid control ECU receives an abnormal signal from the yaw rate sensor (5 cycles). 2. The skid control ECU receives a signal that has a shorter message than normal. 3. The skid control ECU cannot receive a signal from the yaw rate sensor.	CAN communication system (Skid control ECU to yaw rate and acceleration sensor)
U0126/63	When any of the following is detected: 1. The skid control ECU receives an abnormal signal from the steering angle sensor (5 cycles). 2. The skid control ECU receives a signal that has a shorter message than normal. 3. The skid control ECU cannot receive a signal from the steering angle sensor.	CAN communication system (Skid control ECU to steering angle sensor)

WIRING DIAGRAM

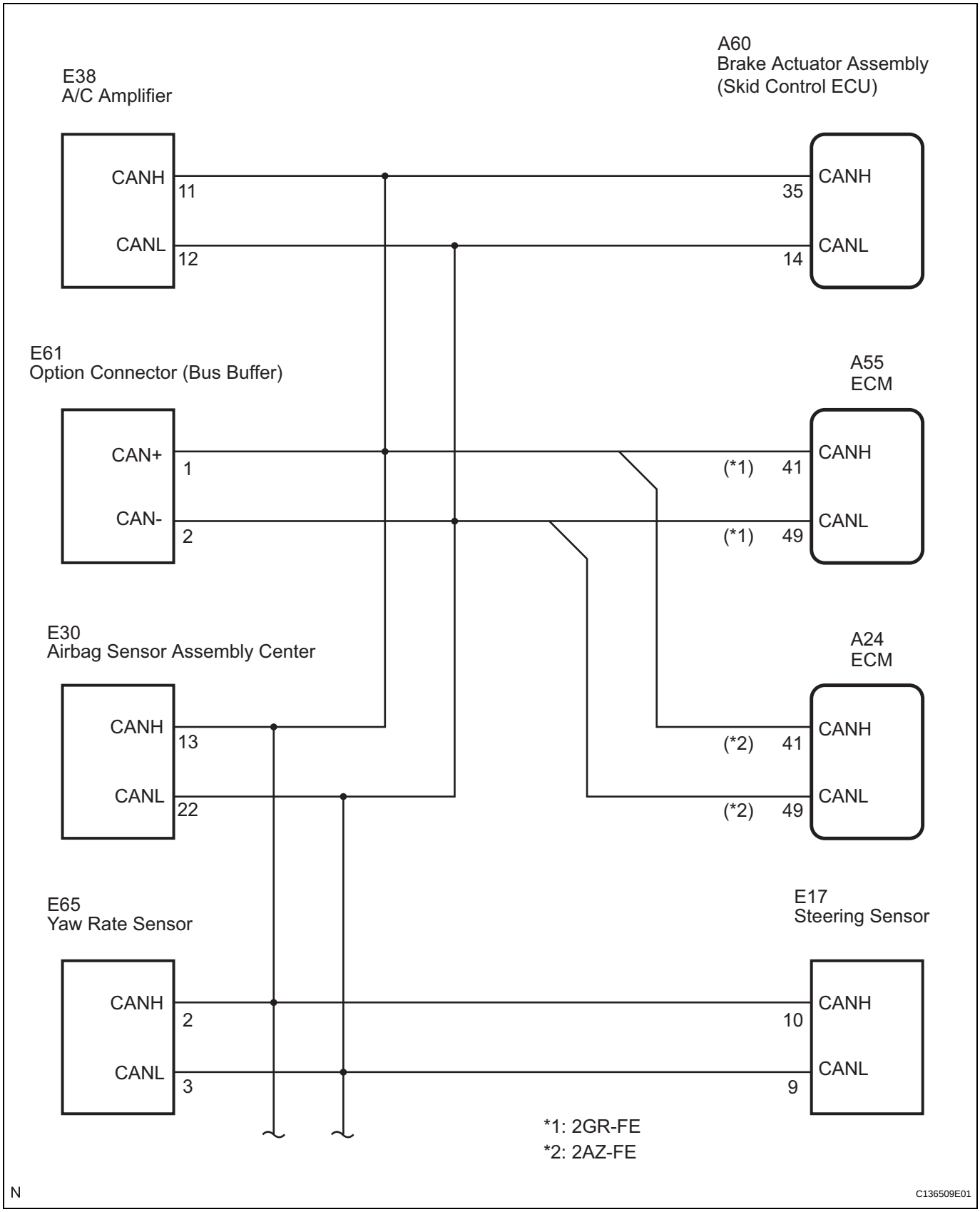

BC

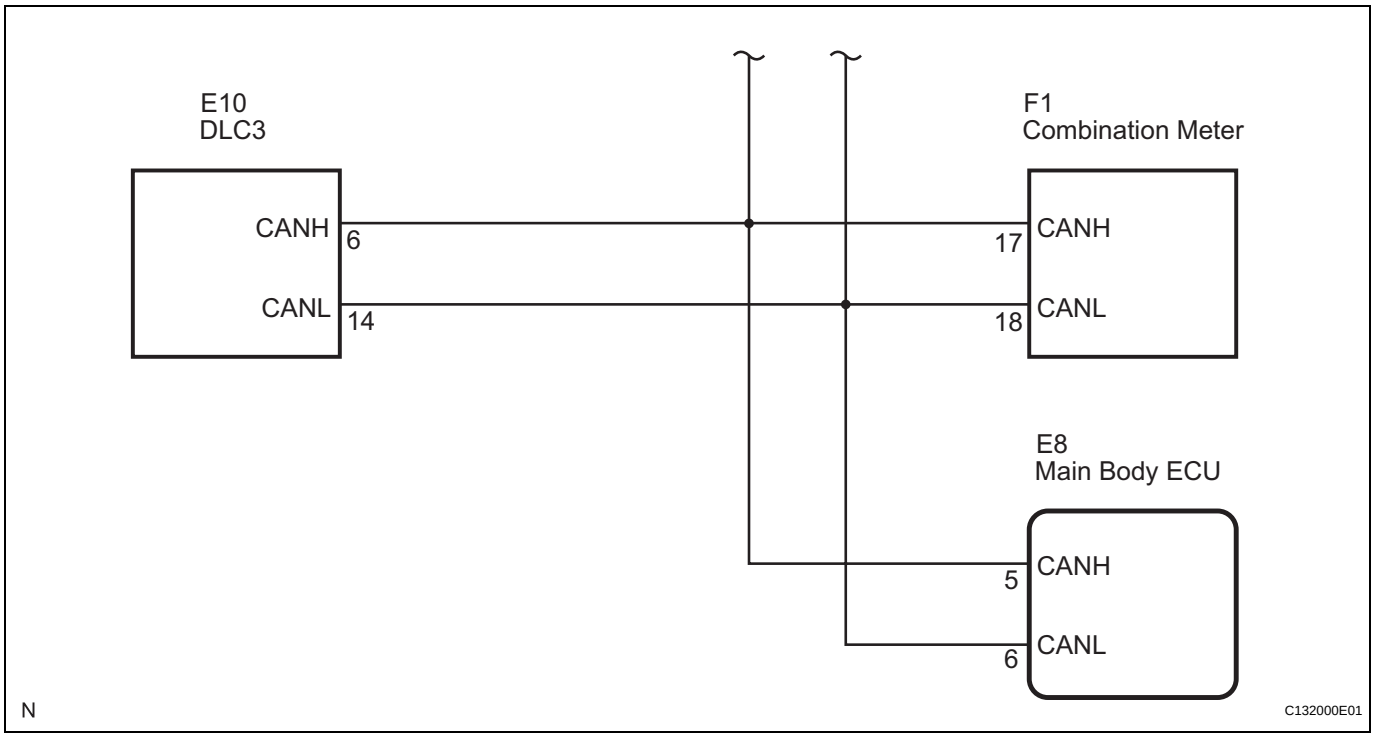

INSPECTION PROCEDURE

Proceed to CAN communication system troubleshooting (See page CA-8).

HINT:

When a DTC indicating a CAN communication system malfunction is output, repair the CAN communication system before repairing each corresponding sensor.

ABS Warning Light Remains ON

DESCRIPTION

The skid control ECU is connected to the combination meter assembly via CAN communication.
If any of the following is detected, the ABS warning light remains on.

- The skid control ECU connectors are disconnected from the skid control ECU.
- There is a malfunction in the skid control ECU internal circuit.
- There is an open in the wire harness between the combination meter assembly and the skid control ECU.

HINT:
In some cases, the intelligent tester cannot be used when the skid control ECU is abnormal.

WIRING DIAGRAM

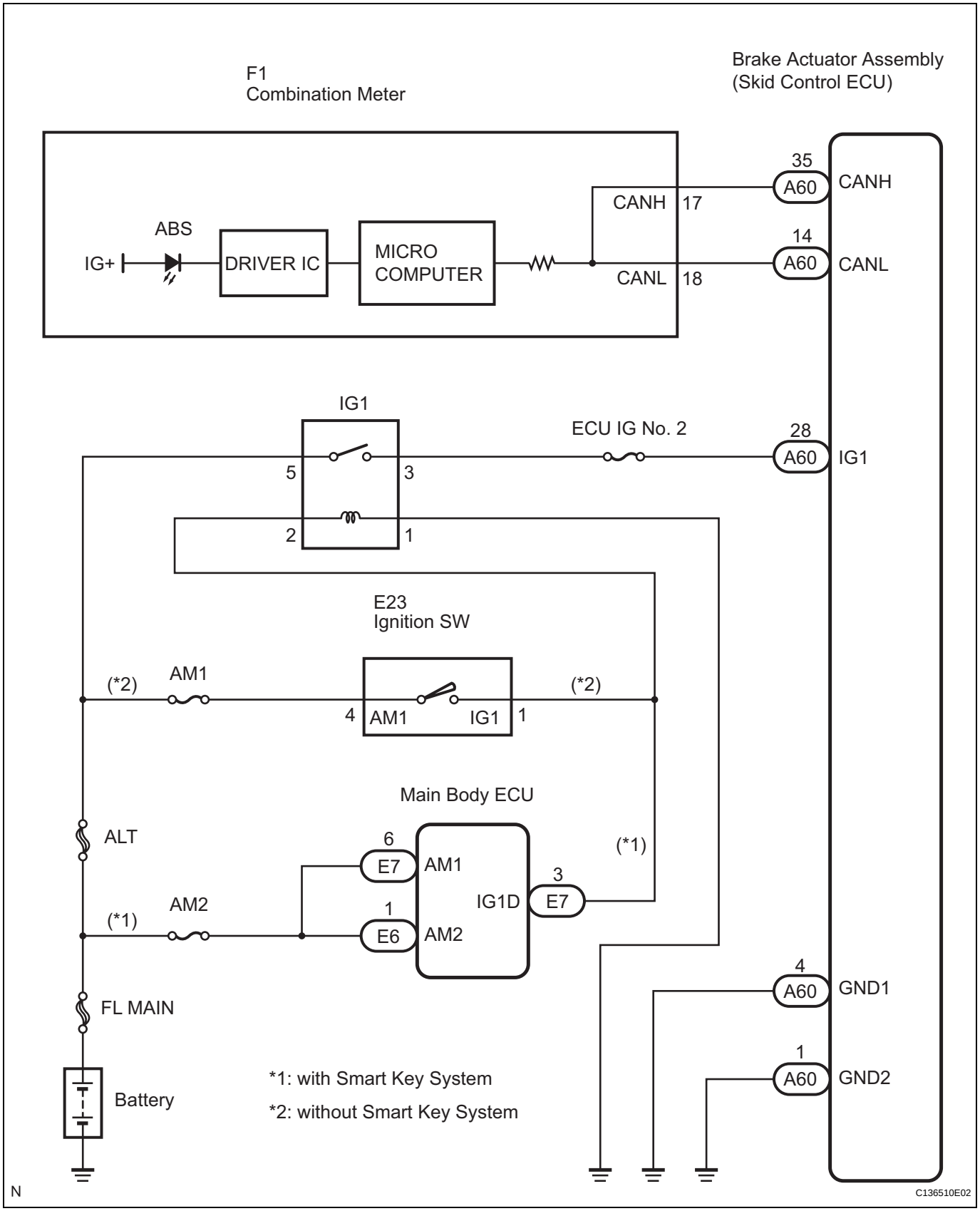

INSPECTION PROCEDURE

HINT:

Check the condition of each related circuit connector before troubleshooting (See page IN-40).

1	CHECK CAN COMMUNICATION SYSTEM

(a) Check if a CAN communication system DTC is output (See page BC-302).

Result

Condition	Proceed to
CAN communication system DTC is not output	A
CAN communication system DTC is output	B

B → **INSPECT CAN COMMUNICATION SYSTEM (See page CA-8)**

A

2	CHECK IF SKID CONTROL ECU CONNECTOR IS SECURELY CONNECTED

BC

(a) Check if the skid control ECU connector is securely connected.
OK:
The connector is securely connected.

NG → **CONNECT CONNECTOR TO ECU CORRECTLY**

OK

3	CHECK BATTERY

(a) Check the battery voltage.
Standard voltage:
11 to 14 V

NG → **CHECK AND REPLACE CHARGING SYSTEM OR BATTERY**

OK

4 INSPECT SKID CONTROL ECU (IG1 TERMINAL)

Skid Control ECU (Harness Side Connector Front View):

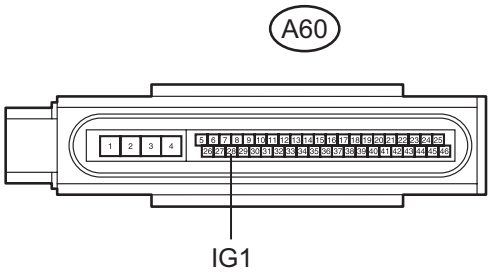

N C136493E05

(a) Disconnect the skid control ECU connector.
(b) Turn the ignition switch on (IG).
(c) Measure the voltage according to the value(s) in the table below.

Standard voltage

Tester Connection	Condition	Specified Condition
A60-28 (IG1) - Body ground	Ignition switch on (IG)	10 to 14 V

NG → **REPAIR OR REPLACE HARNESS OR CONNECTOR (IG1 CIRCUIT)**

OK

5 INSPECT SKID CONTROL ECU (GND TERMINAL)

Skid Control ECU (Harness Side Connector Front View):

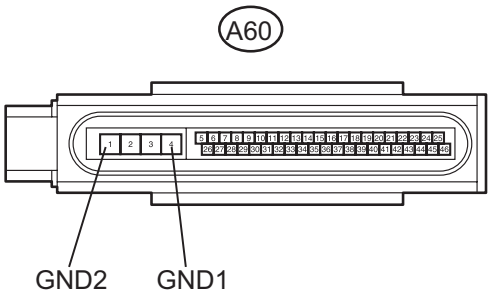

N C136493E02

(a) Turn the ignition switch off.
(b) Measure the resistance according to the value(s) in the table below.

Standard resistance

Tester Connection	Condition	Specified Condition
A60-4 (GND1) - Body ground	Always	Below 1 Ω
A60-1 (GND2) - Body ground	Always	Below 1 Ω

(c) Connect the connector.

NG → **REPAIR OR REPLACE HARNESS OR CONNECTOR (GND CIRCUIT)**

OK

6 INSPECT COMBINATION METER ASSEMBLY

(a) Connect the intelligent tester to the DLC3.
(b) Perform "ACTIVE TEST" of the combination meter assembly using the intelligent tester (See page ME-32).
(c) Check the ABS warning light operation.

OK:

The ABS warning light turns on or off in accordance with the intelligent tester.

BC

NG → **REPLACE COMBINATION METER ASSEMBLY (See page ME-63)**

OK

REPLACE BRAKE ACTUATOR ASSEMBLY (See page BC-432)

ABS Warning Light does not Come ON

DESCRIPTION

The skid control ECU is connected to the combination meter assembly via CAN communication.

WIRING DIAGRAM

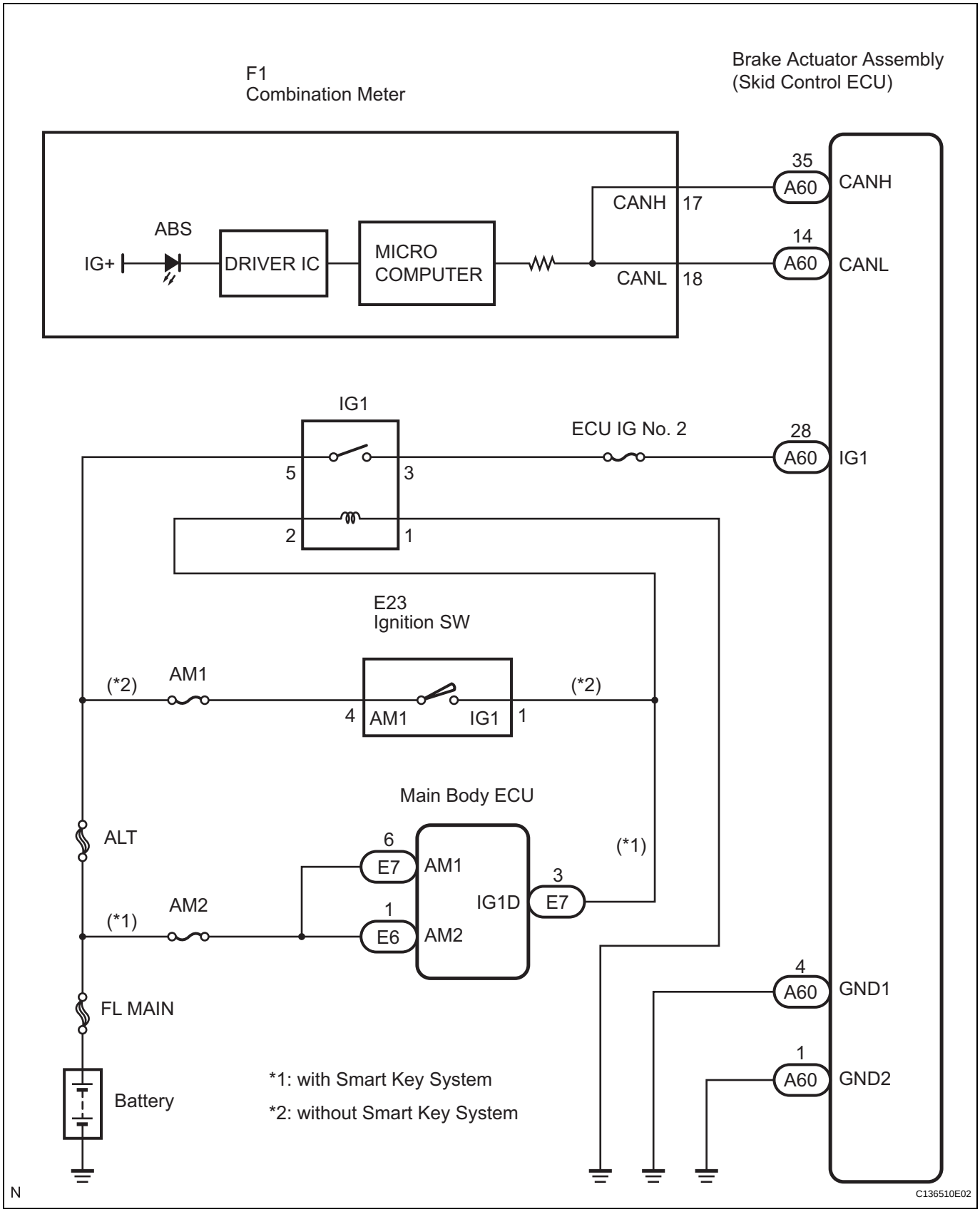

INSPECTION PROCEDURE

HINT:

Check the condition of each related circuit connector before troubleshooting (See page IN-40).

1	CHECK CAN COMMUNICATION SYSTEM

(a) Check if a CAN communication system DTC is output (See page BC-302).

Result

Condition	Proceed to
CAN communication system DTC is not output	A
CAN communication system DTC is output	B

B → **INSPECT CAN COMMUNICATION SYSTEM (See page CA-8)**

A

2	CHECK ABS WARNING LIGHT

(a) Disconnect the skid control ECU connector.
(b) Turn the ignition switch on (IG).
(c) Check that the ABS warning light comes on.
OK:
The ABS warning light comes on.
(d) Connect the connector.

OK → **REPLACE BRAKE ACTUATOR ASSEMBLY (See page BC-432)**

NG

3	INSPECT COMBINATION METER ASSEMBLY

(a) Connect the intelligent tester to the DLC3.
(b) Perform "ACTIVE TEST" of the combination meter assembly using the intelligent tester (See page ME-32).
(c) Check ABS warning light operation.
OK:
The ABS warning light turns on or off in accordance with the intelligent tester.

NG → **REPLACE COMBINATION METER ASSEMBLY (See page ME-63)**

OK

REPLACE BRAKE ACTUATOR ASSEMBLY (See page BC-432)

BC

VSC Warning Light Remains ON

DESCRIPTION

The skid control ECU communicates with the combination meter assembly via CAN communication. If the ECU stores a DTC, the master caution indicator light will illuminate, and the DTC will be displayed on the multi-information display in the combination meter (models with multi-information display). On models without a multi-information display, the VSC warning light will come on when the skid control ECU stores a DTC.

WIRING DIAGRAM

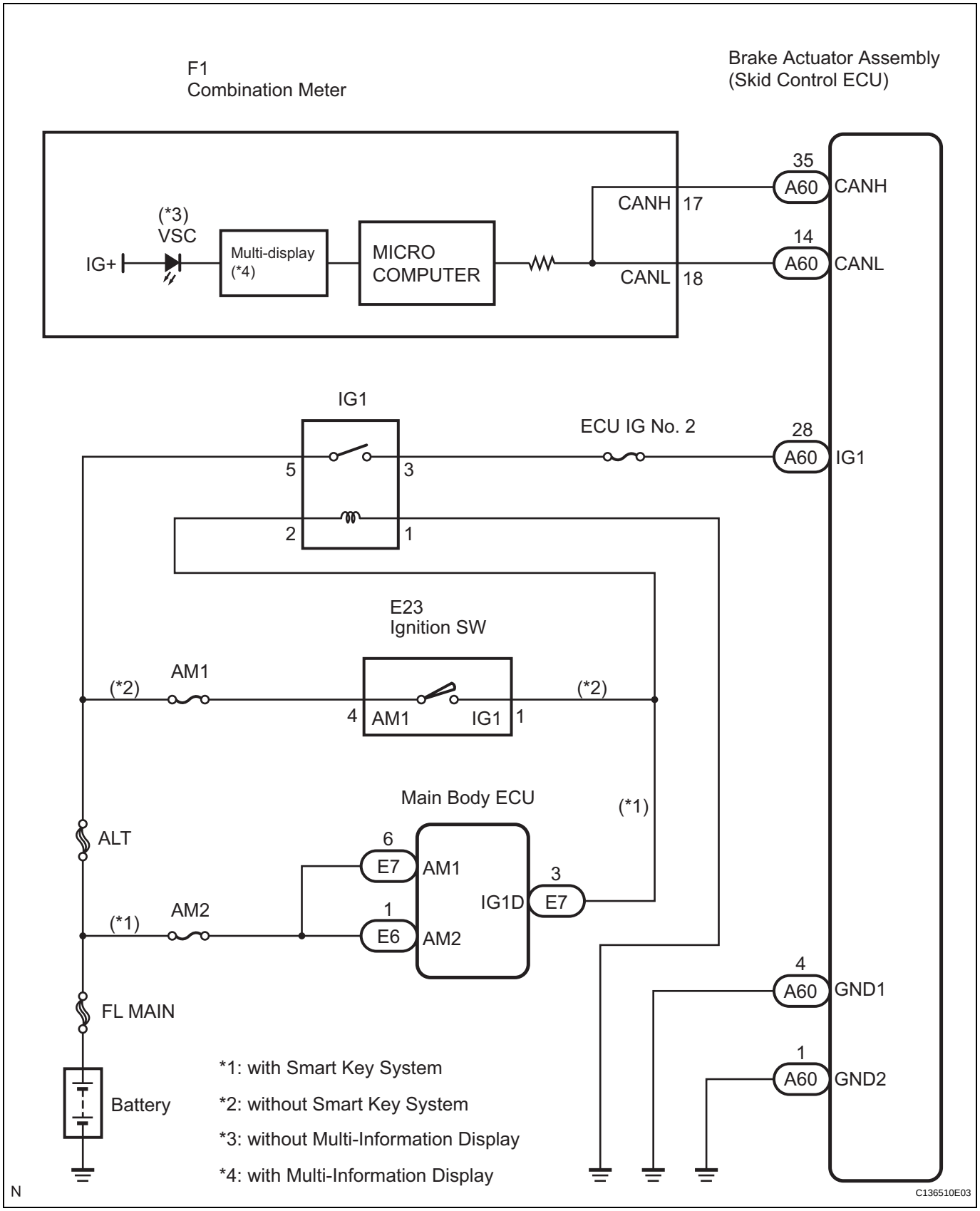

INSPECTION PROCEDURE

HINT:

Check the condition of each related circuit connector before troubleshooting (See page IN-40).

1	CHECK CAN COMMUNICATION SYSTEM

(a) Check if a CAN communication system DTC is output (See page BC-302).

Result

Condition	Proceed to
CAN communication system DTC is not output	A
CAN communication system DTC is output	B

B → **INSPECT CAN COMMUNICATION SYSTEM (See page CA-8)**

A

2	CHECK IF SKID CONTROL ECU CONNECTOR IS SECURELY CONNECTED

BC

(a) Check if the skid control ECU connector is securely connected.
OK:
The connector is securely connected.

NG → **CONNECT CONNECTOR TO ECU CORRECTLY**

OK

3	CHECK BATTERY

(a) Check the battery voltage.
Standard voltage:
11 to 14 V

NG → **CHECK AND REPLACE CHARGING SYSTEM OR BATTERY**

OK

4	INSPECT COMBINATION METER ASSEMBLY

(a) Connect the intelligent tester to the DLC3.
(b) Perform "ACTIVE TEST" of the combination meter assembly using the intelligent tester (See page ME-32).
(c) Check VSC warning (multi-information display)/VSC warning light (without multi-information display) operation.
OK:
The VSC warning (multi-information display) or VSC warning light turns on or off in accordance with the intelligent tester.

NG → **REPLACE COMBINATION METER ASSEMBLY (See page ME-63)**

OK

REPLACE BRAKE ACTUATOR ASSEMBLY (See page BC-432)

VSC Warning Light does not Come ON

DESCRIPTION

The skid control ECU communicates with the combination meter assembly via CAN communication. If the ECU stores a DTC, the master caution indicator light will illuminate, and the DTC will be displayed on the multi-information display in the combination meter (models with multi-information display). On models without a multi-information display, the VSC warning light will come on when the skid control ECU stores a DTC.

WIRING DIAGRAM

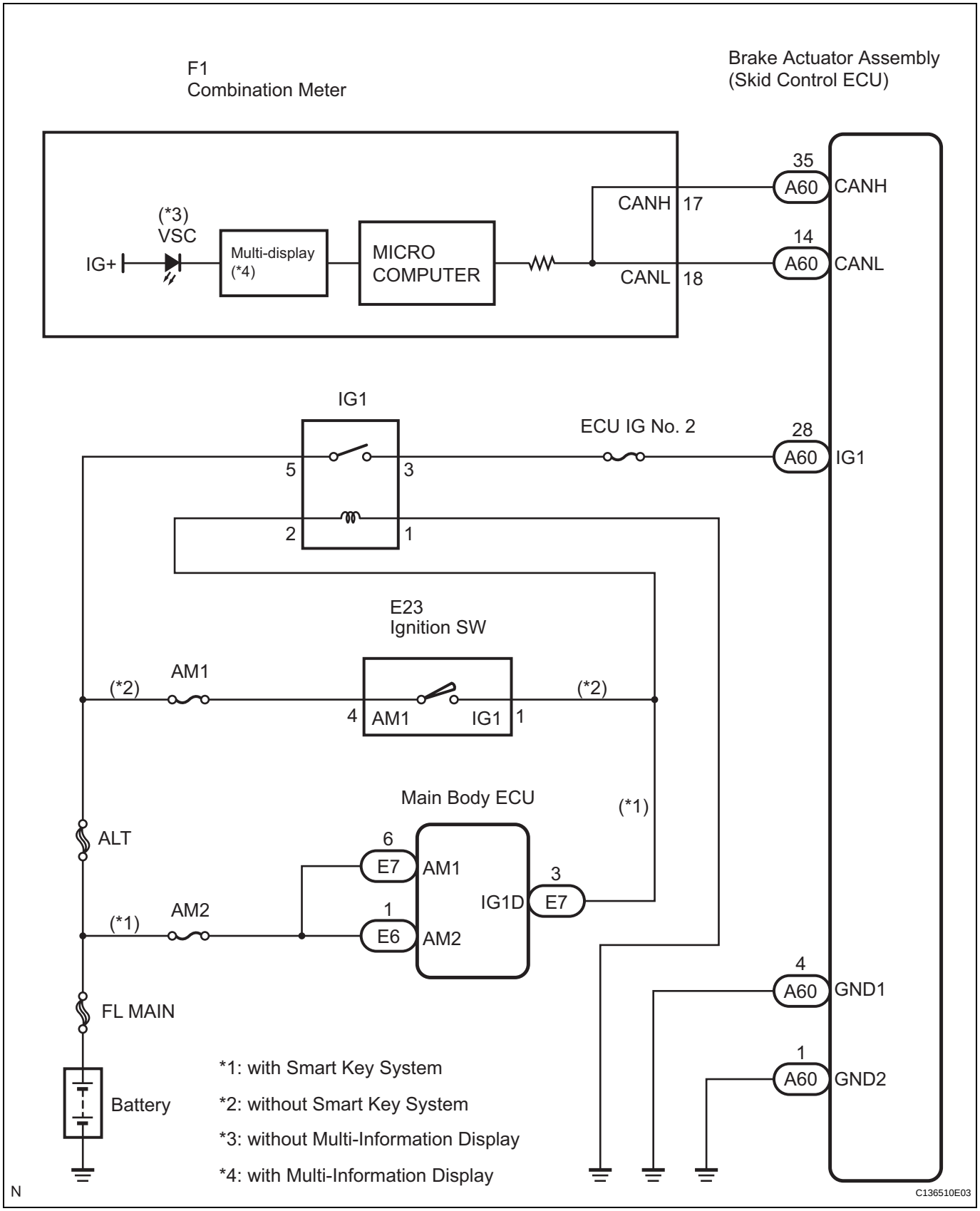

INSPECTION PROCEDURE

HINT:

Check the condition of each related circuit connector before troubleshooting (See page IN-40).

1	CHECK CAN COMMUNICATION SYSTEM

(a) Check if a CAN communication system DTC is output (See page BC-302).

Result

Condition	Proceed to
CAN communication system DTC is not output	A
CAN communication system DTC is output	B

B → **INSPECT CAN COMMUNICATION SYSTEM (See page CA-8)**

A

2	INSPECT COMBINATION METER ASSEMBLY

(a) Connect the intelligent tester to the DLC3.
(b) Perform "ACTIVE TEST" of the combination meter assembly using the intelligent tester (See page ME-32).
(c) Check that "ON" and "OFF" of the VSC warning (multi-information display) or VSC warning light are indicated on the combination meter assembly when using the intelligent tester.

OK:

The VSC warning (multi-information display) turns on or off in accordance with the intelligent tester.

NG → **REPLACE COMBINATION METER ASSEMBLY (See page ME-63)**

OK

REPLACE BRAKE ACTUATOR ASSEMBLY (See page BC-432)

Brake Warning Light Remains ON

DESCRIPTION

The skid control ECU is connected to the combination meter assembly via CAN communication.
If any of the following is detected, the BRAKE warning light remains on:

- The skid control ECU connector is disconnected from the skid control ECU.
- The brake fluid level is insufficient.
- The parking brake is applied.
- EBD operation is not possible.

WIRING DIAGRAM

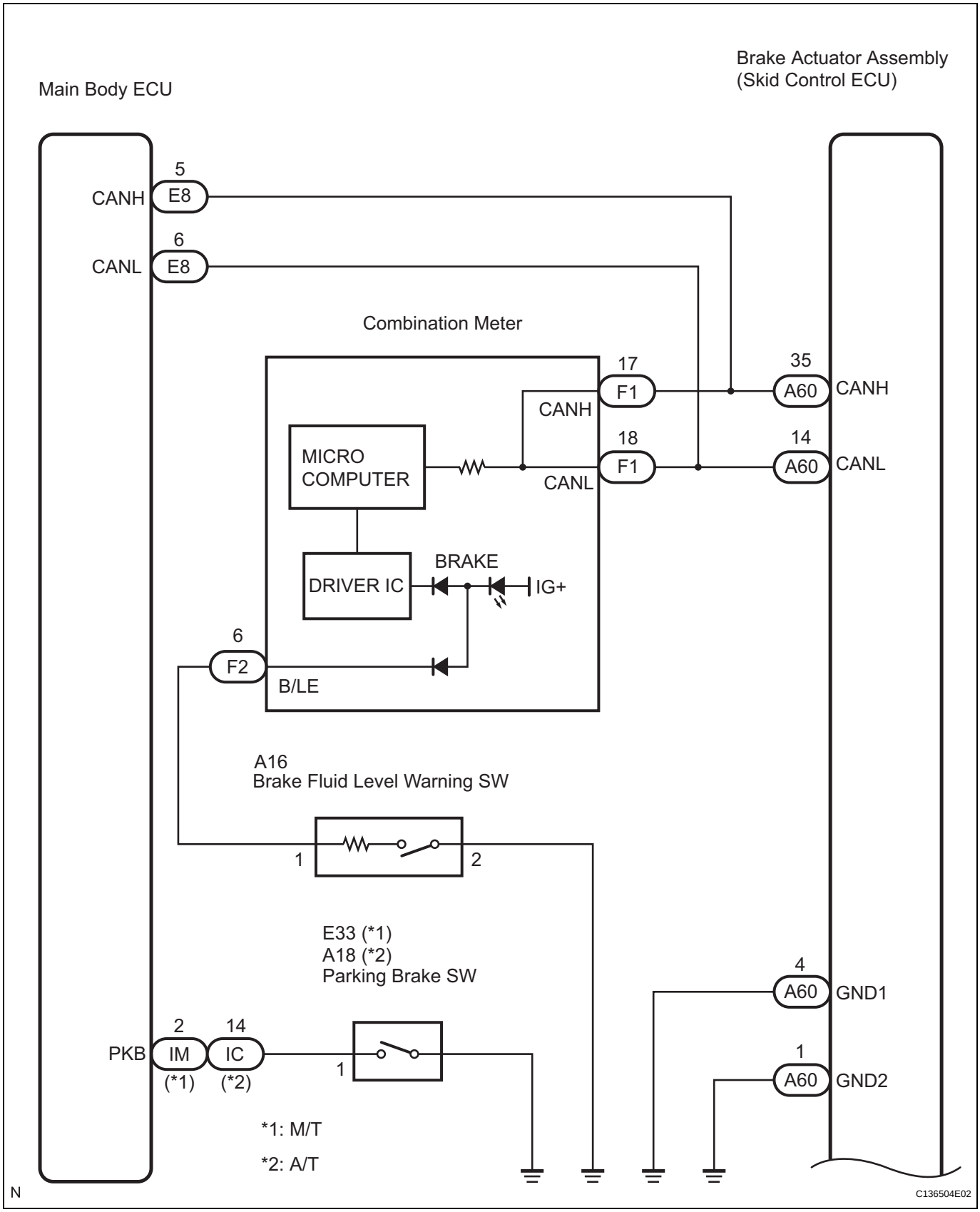

BC

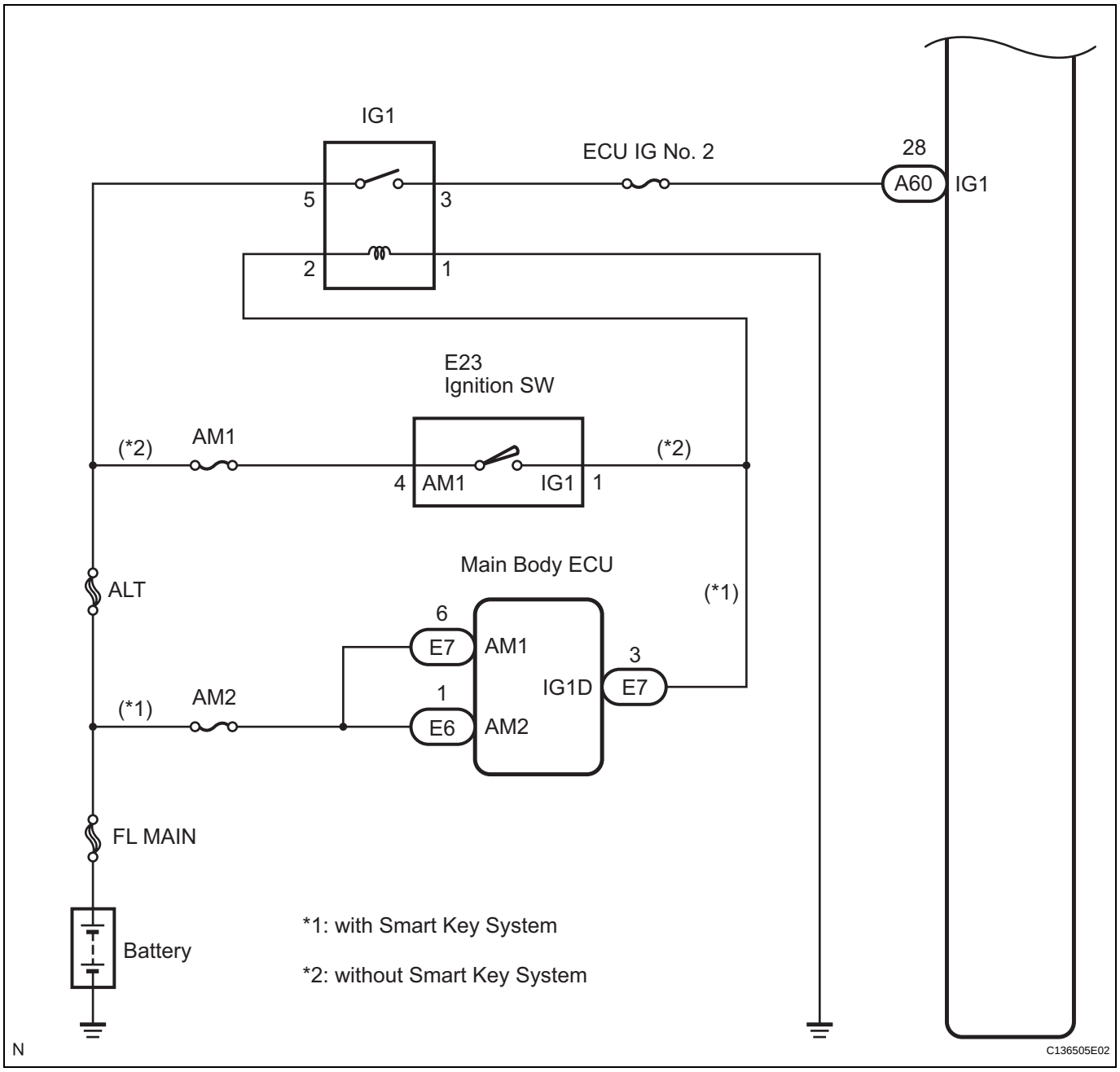

BC

INSPECTION PROCEDURE

HINT:

Check the condition of each related circuit connector before troubleshooting (See page IN-40).

1	CHECK CAN COMMUNICATION SYSTEM

(a) Check if a CAN communication system DTC is output (See page BC-302).

Result

Condition	Proceed to
CAN communication system DTC is not output	A
CAN communication system DTC is output	B

B → **INSPECT CAN COMMUNICATION SYSTEM (See page CA-8)**

A

2 CHECK IF SKID CONTROL ECU CONNECTOR IS SECURELY CONNECTED

(a) Check if the skid control ECU connector is securely connected.
OK:
The connector is securely connected.

NG → **CONNECT CONNECTOR TO ECU CORRECTLY**

OK

BC

3 CHECK BATTERY

(a) Check the battery voltage.
Standard voltage:
11 to 14 V

NG → **CHECK AND REPLACE CHARGING SYSTEM OR BATTERY**

OK

4 INSPECT SKID CONTROL ECU (IG1 TERMINAL)

Skid Control ECU (Harness Side Connector Front View):

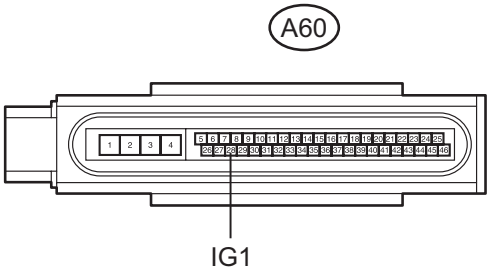

N C136493E05

(a) Disconnect the skid control ECU connector.
(b) Turn the ignition switch on (IG).
(c) Measure the voltage according to the value(s) in the table below.
Standard voltage

Tester Connection	Condition	Specified Condition
A60-28 (IG1) - Body ground	Ignition switch on (IG)	10 to 14 V

NG → **REPAIR OR REPLACE HARNESS OR CONNECTOR (IG1 CIRCUIT)**

OK

5 INSPECT SKID CONTROL ECU (GND TERMINAL)

Skid Control ECU (Harness Side Connector Front View):

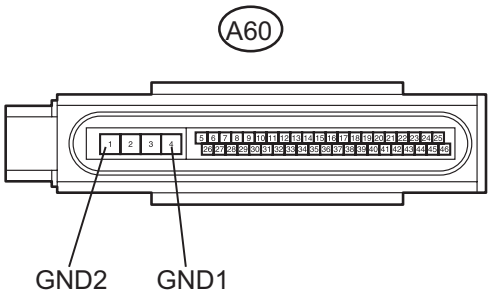

N C136493E02

(a) Turn the ignition switch off.
(b) Measure the resistance according to the value(s) in the table below.
Standard resistance

Tester Connection	Condition	Specified Condition
A60-4 (GND1) - Body ground	Always	Below 1 Ω
A60-1 (GND2) - Body ground	Always	Below 1 Ω

(c) Connect the connector.

NG → **REPAIR OR REPLACE HARNESS OR CONNECTOR (GND CIRCUIT)**

OK

6 INSPECT PARKING BRAKE SWITCH

Parking Brake Switch:

Automatic Transaxle:

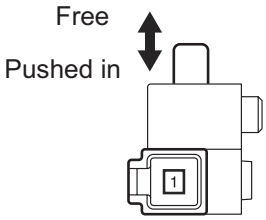

Manual Transaxle:

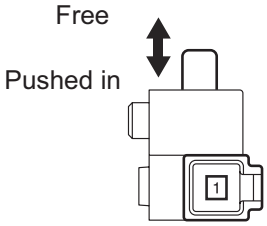

N C109430E03

(a) Disconnect the parking brake switch connector.
(b) Measure the resistance according to the value(s) in the table below.
Standard resistance

Tester Connection	Condition	Specified Condition
1 - Body ground	Parking brake switch ON (Switch pin free)	Below 1 Ω
1 - Body ground	Parking brake switch OFF (Switch pin pushed in)	10 kΩ or higher

NG → **REPLACE PARKING BRAKE SWITCH**

OK

BC

7	CHECK HARNESS AND CONNECTOR (MAIN BODY ECU TO PARKING BRAKE SWITCH)

Main Body ECU Wire Harness View:

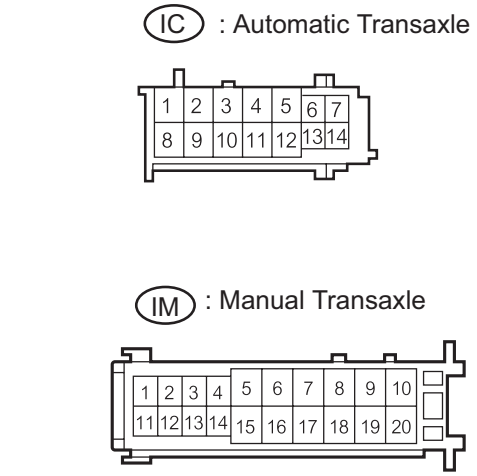

Parking Brake Switch Harness Side Connector Front View:

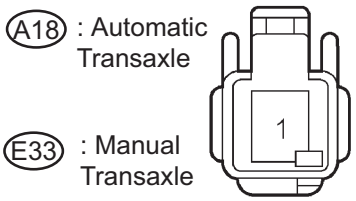

C136418E03

(a) Measure the resistance according to the value(s) in the table below.

Standard resistance:

Automatic Transaxle

Tester Connection	Condition	Specified Condition
IC-14 (PKB) - A18-1	Always	Below 1 Ω
IC-14 (PKB) - Body ground	Always	10 kΩ or higher

Manual Transaxle

Tester Connection	Condition	Specified Condition
IM-2 (PKB) - E33-1	Always	Below 1 Ω
IM-2 (PKB) - Body ground	Always	10 kΩ or higher

(b) Connect the connector.

NG → **REPAIR OR REPLACE HARNESS OR CONNECTOR (MAIN BODY ECU TO PARKING BRAKE SWITCH)**

OK

BC

8	INSPECT BRAKE FLUID LEVEL WARNING SWITCH

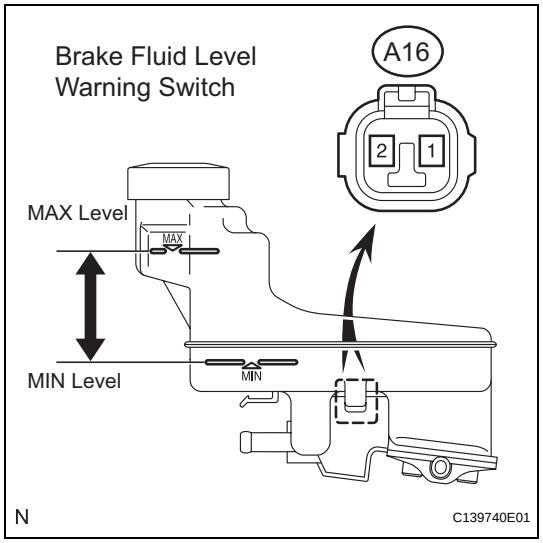

(a) Remove the reservoir tank cap and strainer.
(b) Disconnect the brake fluid level warning switch connector.
(c) Measure the resistance according to the value(s) in the table below.
HINT:
A float is located inside the reservoir. Its position can be changed by increasing or decreasing the level of brake fluid.

Standard resistance

Tester Connection	Condition	Specified Condition
1 - 2	Float up (Switch OFF)	1.9 to 2.1 kΩ
1 - 2	Float down (Switch ON)	Below 1 Ω

HINT:
If there is no problem after finishing the above check, adjust the brake fluid level to the MAX level.

NG → **REPLACE BRAKE MASTER CYLINDER RESERVOIR SUB-ASSEMBLY (BRAKE FLUID LEVEL WARNING SWITCH)**

OK

BC

9	CHECK HARNESS AND CONNECTOR (COMBINATION METER TO BRAKE FLUID LEVEL WARNING SWITCH)

Combination Meter Wire Harness View:

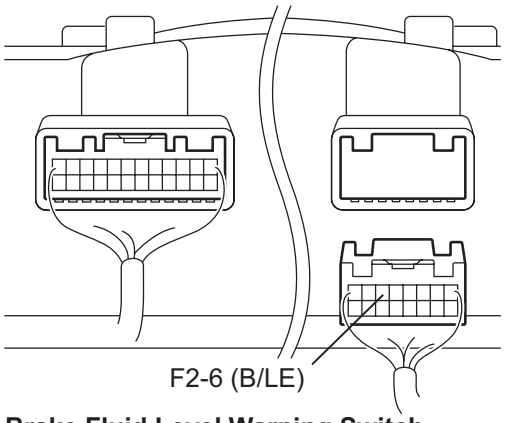

Brake Fluid Level Warning Switch Harness Side Connector Front View:

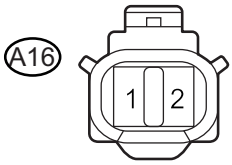

C136033E01

(a) Disconnect the combination meter connector.
(b) Measure the resistance according to the value(s) in the table below.
Standard resistance

Tester Connection	Condition	Specified Condition
F2-6 (B/LE) - A16-1	Always	Below 1 Ω
F2-6 (B/LE) - Body ground	Always	10 kΩ or higher
A16-2 - Body ground	Always	Below 1 Ω

NG → **REPAIR OR REPLACE HARNESS OR CONNECTOR (COMBINATION METER TO BRAKE FLUID LEVEL WARNING SWITCH)**

OK

10	INSPECT COMBINATION METER ASSEMBLY

(a) Connect the intelligent tester to the DLC3.
(b) Select the "ACTIVE TEST" on the tester (See page BC-307).

ACTIVE TEST: ABS/TRAC/VSC

Item	Vehicle Condition/Test Details	Diagnostic Note
BRAKE WRN LIGHT	Turns brake warning light on / off	Observe combination meter

(c) Check BRAKE warning light operation.
OK:
The BRAKE warning light turns on or off in accordance with the intelligent tester.

NG → **REPLACE COMBINATION METER ASSEMBLY (See page ME-63)**

OK

REPLACE BRAKE ACTUATOR ASSEMBLY (See page BC-432)

Brake Warning Light does not Come ON

DESCRIPTION

The skid control ECU is connected to the combination meter assembly via CAN communication.

WIRING DIAGRAM

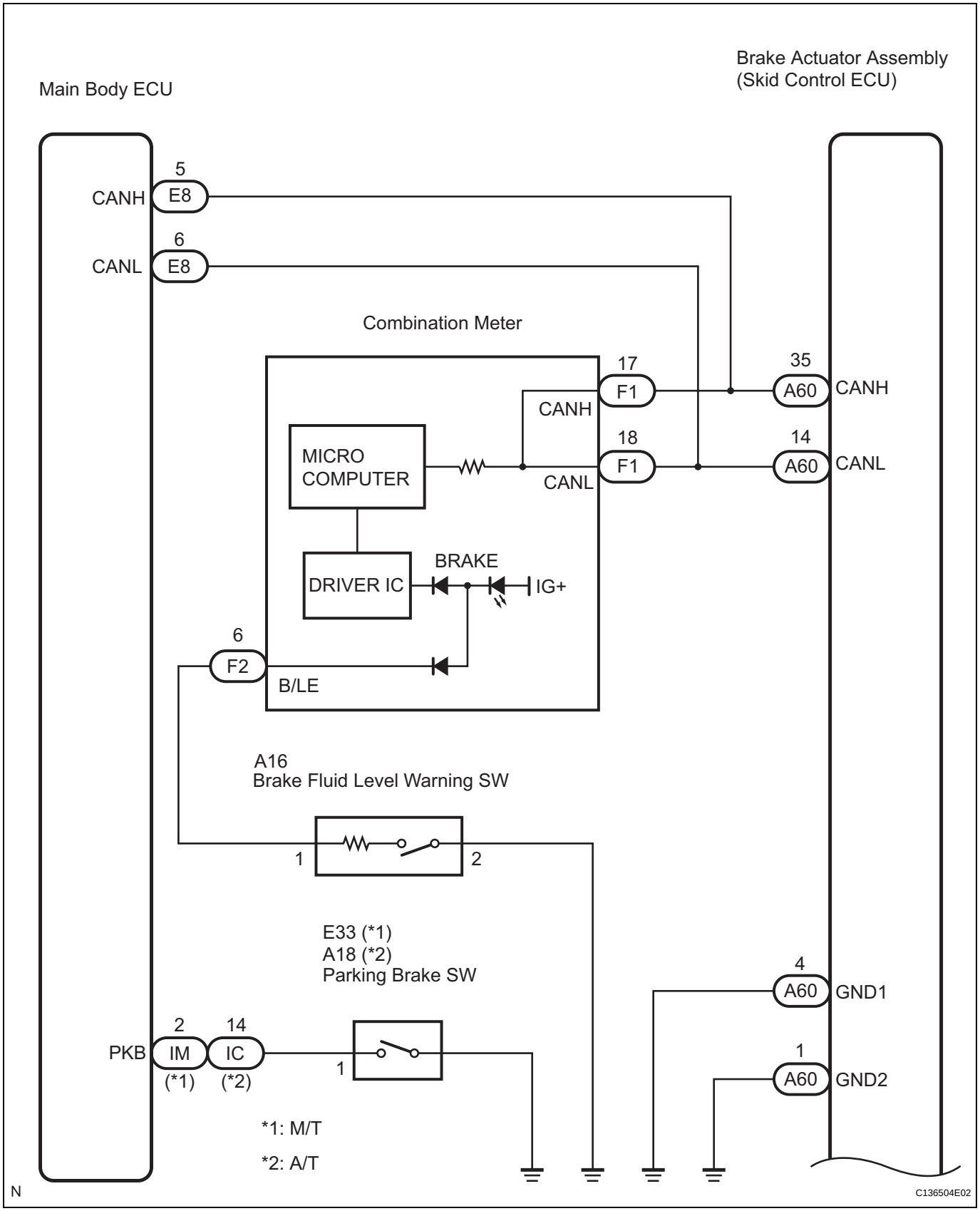

BC

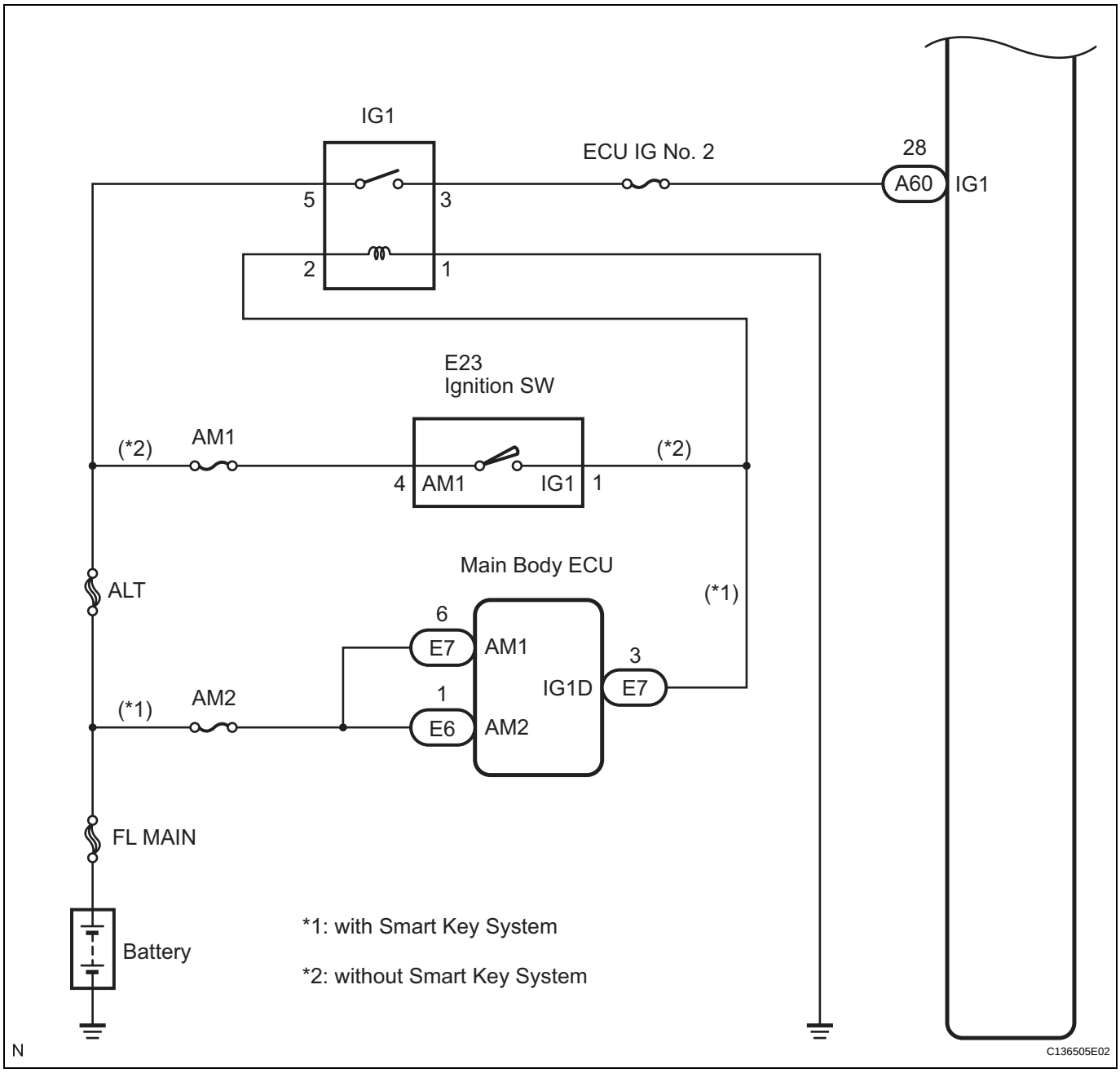

INSPECTION PROCEDURE

HINT:

Check the condition of each related circuit connector before troubleshooting (See page IN-40).

1	CHECK CAN COMMUNICATION SYSTEM

(a) Check if a CAN communication system DTC is output (See page BC-302).

Result

Condition	Proceed to
CAN communication system DTC is not output	A
CAN communication system DTC is output	B

B → **INSPECT CAN COMMUNICATION SYSTEM (See page CA-8)**

A

2	CHECK BRAKE WARNING LIGHT

(a) Disconnect the skid control ECU connector.
(b) Turn the ignition switch on (IG).
(c) Check that the BRAKE warning light comes on.
OK:
The BRAKE warning light comes on.
(d) Connect the connector.

OK → **REPLACE BRAKE ACTUATOR ASSEMBLY (See page BC-432)**

NG

BC

3	INSPECT COMBINATION METER ASSEMBLY

(a) Connect the intelligent tester to the DLC3.
(b) Perform "ACTIVE TEST" of the combination meter assembly using the intelligent tester (See page ME-32).
(c) Check BRAKE warning light operation.
OK:
The BRAKE warning light turns on or off in accordance with the intelligent tester.

NG → **REPLACE COMBINATION METER ASSEMBLY (See page ME-63)**

OK

REPLACE BRAKE ACTUATOR ASSEMBLY (See page BC-432)

Slip Indicator Light Remains ON

DESCRIPTION

The skid control ECU is connected to the combination meter assembly via CAN communication.
The SLIP indicator light blinks during VSC and/or TRAC operation.
When the system fails, the SLIP indicator light comes on to warn the driver (See page BC-278).

WIRING DIAGRAM

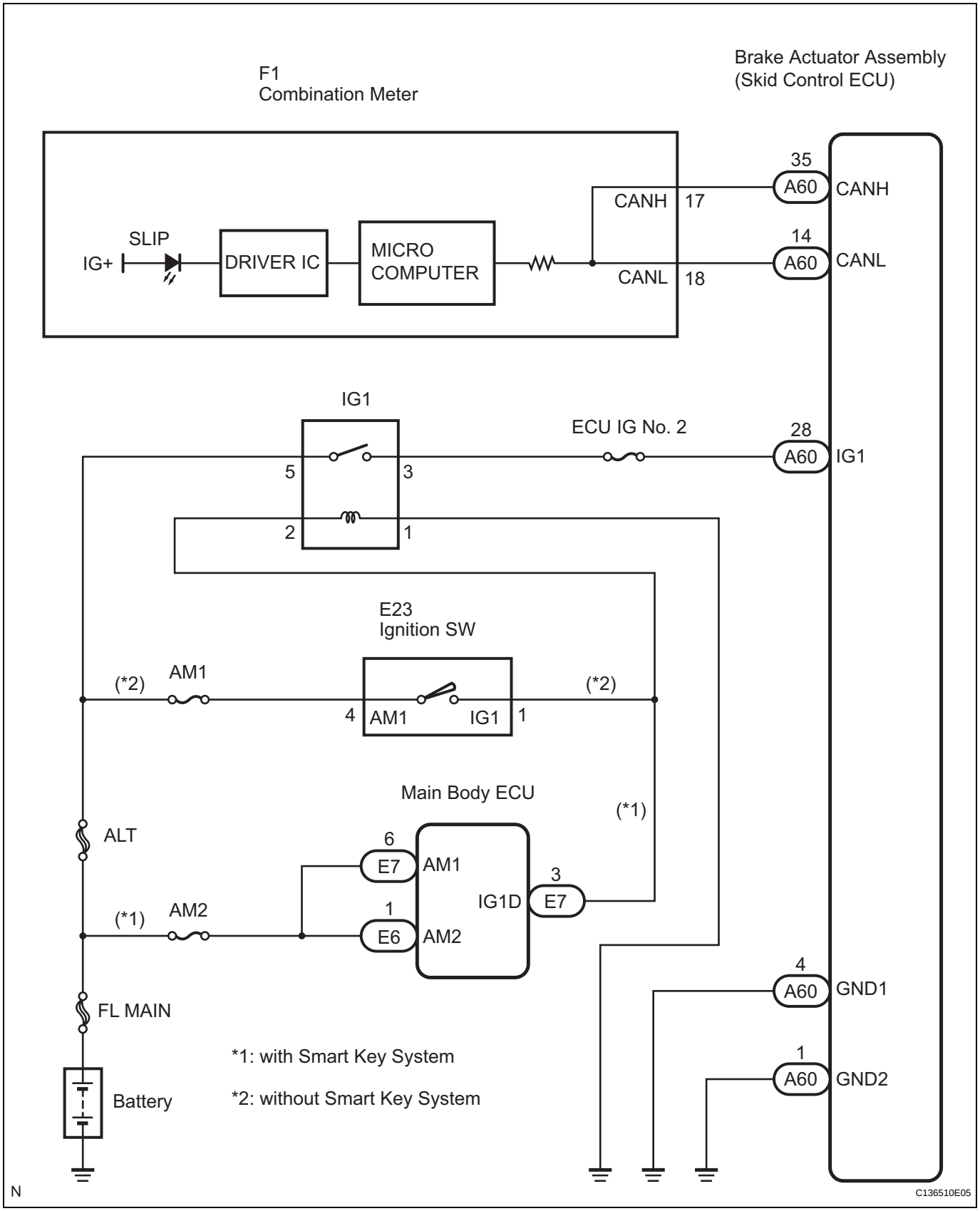

INSPECTION PROCEDURE

HINT:

Check the condition of each related circuit connector before troubleshooting (See page IN-40).

1	CHECK CAN COMMUNICATION SYSTEM

(a) Check if a CAN communication system DTC is output (See page BC-302).

Result

Condition	Proceed to
CAN communication system DTC is not output	A
CAN communication system DTC is output	B

B → **INSPECT CAN COMMUNICATION SYSTEM (See page CA-8)**

A

2	CHECK IF SKID CONTROL ECU CONNECTOR IS SECURELY CONNECTED

BC

(a) Check if the skid control ECU connector is securely connected.
OK:
The connector is securely connected.

NG → **CONNECT CONNECTOR TO ECU CORRECTLY**

OK

3	CHECK BATTERY

(a) Check the battery voltage.
Standard voltage:
11 to 14 V

NG → **CHECK AND REPLACE CHARGING SYSTEM OR BATTERY**

OK

4	INSPECT COMBINATION METER ASSEMBLY

(a) Connect the intelligent tester to the DLC3.
(b) Perform "ACTIVE TEST" of the combination meter assembly using the intelligent tester (See page ME-32).
(c) Check SLIP indicator light operation.
OK:
The SLIP indicator light turns on or off in accordance with the intelligent tester.

NG → **REPLACE COMBINATION METER ASSEMBLY (See page ME-63)**

OK

REPLACE BRAKE ACTUATOR ASSEMBLY (See page BC-432)

Slip Indicator Light does not Come ON

DESCRIPTION

The skid control ECU is connected to the combination meter assembly via CAN communication.
The SLIP indicator light blinks during VSC and/or TRAC operation.
When the system fails, the SLIP indicator light comes on to warn the driver (See page BC-278).

WIRING DIAGRAM

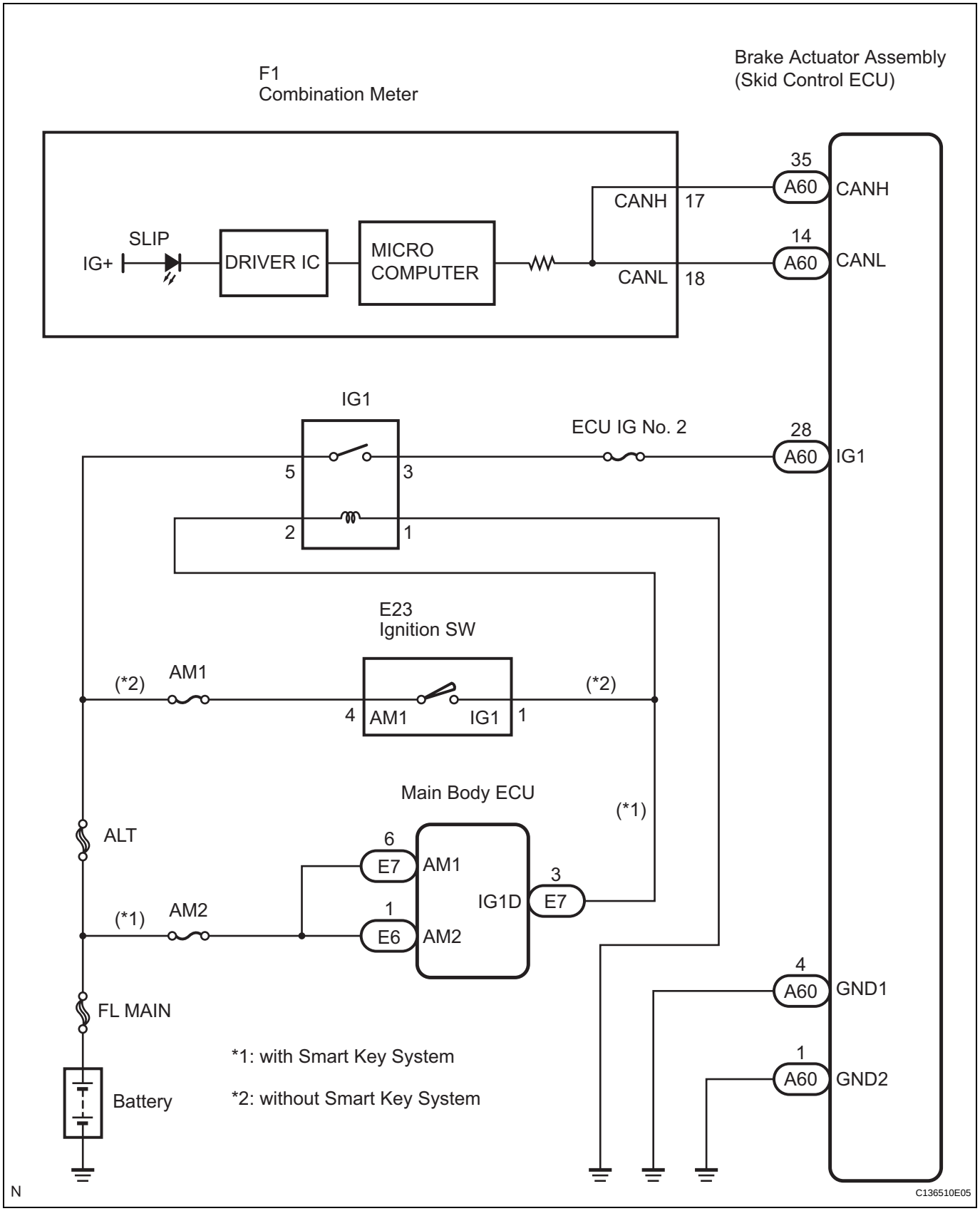

INSPECTION PROCEDURE

HINT:

Check the condition of each related circuit connector before troubleshooting (See page IN-40).

1	CHECK CAN COMMUNICATION SYSTEM

(a) Check if a CAN communication system DTC is output (See page BC-302).

Result

Condition	Proceed to
CAN communication system DTC is not output	A
CAN communication system DTC is output	B

B → **INSPECT CAN COMMUNICATION SYSTEM (See page CA-8)**

A

2	INSPECT COMBINATION METER ASSEMBLY

BC

(a) Connect the intelligent tester to the DLC3.
(b) Perform "ACTIVE TEST" of the combination meter assembly using the intelligent tester (See page ME-32).
(c) Check the SLIP indicator light operation.
OK:
The SLIP indicator light turns on or off in accordance with the intelligent tester.

NG → **REPLACE COMBINATION METER ASSEMBLY (See page ME-63)**

OK

REPLACE BRAKE ACTUATOR ASSEMBLY (See page BC-432)

Skid Control Buzzer Circuit

DESCRIPTION

The skid control buzzer sounds and the SLIP indicator light blinks during VSC operation.

WIRING DIAGRAM

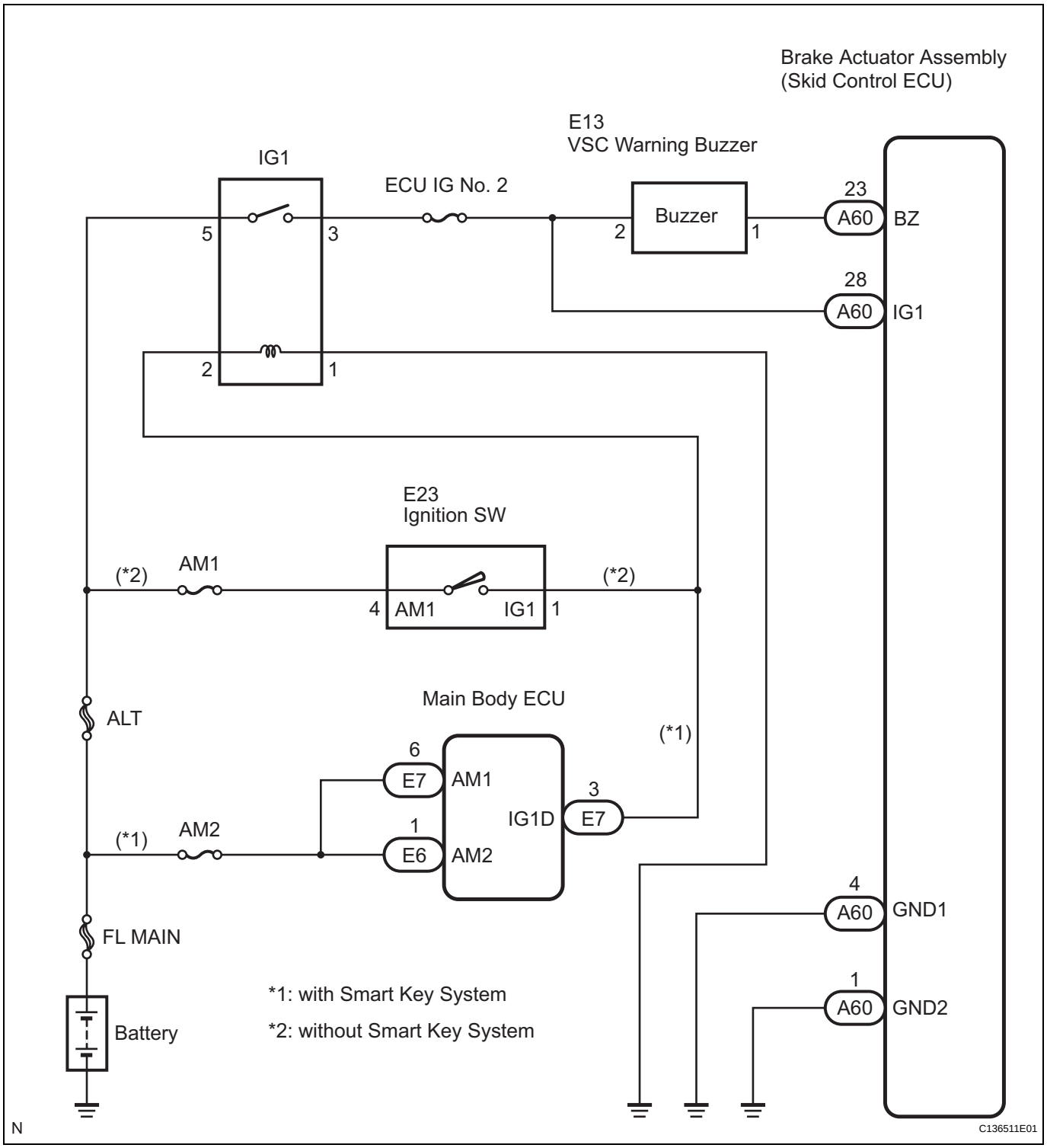

BC

INSPECTION PROCEDURE

HINT:
Check the condition of each related circuit connector before troubleshooting (See page IN-40).

1 PERFORM ACTIVE TEST BY INTELLIGENT TESTER (SKID CONTROL BUZZER)

(a) Connect the intelligent tester to the DLC3.
(b) Select the "ACTIVE TEST" on the intelligent tester (See page BC-307).

ACTIVE TEST: ABS/TRAC/VSC

Item (Display)	Vehicle Condition / Test Details	Diagnostic Note
BUZZER	Turns skid control buzzer ON / OFF	Buzzer can be heard

(c) Check that the buzzer sounds/stops when turning the skid control buzzer on/off by using the intelligent tester.

Result

Condition	Proceed to
Buzzer does not sound or sounds constantly	**A**
Buzzer sounds/stops	**B**

BC

B → **CHECK FOR INTERMITTENT PROBLEMS (SYMPTOM SIMULATION) (See page BC-298)**

A

2 INSPECT SKID CONTROL BUZZER (POWER SOURCE TERMINAL)

Skid Control Buzzer (Harness Side Connector Front View):

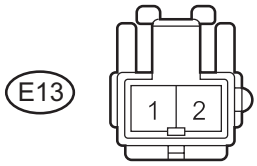

H C107604E18

(a) Disconnect the skid control buzzer connector.
(b) Turn the ignition switch on (IG).
(c) Measure the voltage according to the value(s) in the table below.

Standard voltage

Tester Connection	Condition	Specified Condition
E13-2 - Body ground	**Ignition switch on (IG)**	**10 to 14 V**

NG → **REPAIR OR REPLACE HARNESS OR CONNECTOR (POWER SOURCE CIRCUIT)**

OK

3 INSPECT SKID CONTROL BUZZER

Skid Control Buzzer:

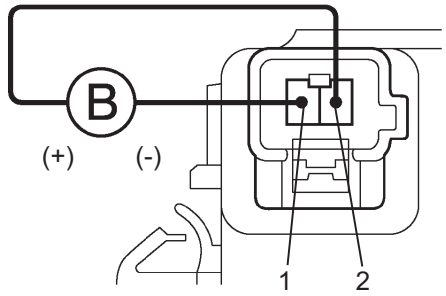

C125130E01

(a) Apply battery negative voltage to terminal 1, and battery positive voltage to terminal 2 of the skid control buzzer, and then check that the buzzer sounds.

OK:

The skid control buzzer sounds.

NG → **REPLACE SKID CONTROL BUZZER (See page BC-453)**

OK

4 CHECK HARNESS AND CONNECTOR (SKID CONTROL ECU TO SKID CONTROL BUZZER)

Skid Control ECU (Harness Side Connector Front View):

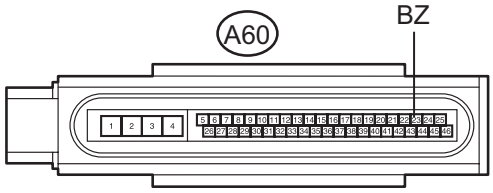

Skid Control Buzzer (Harness Side Connector Front View):

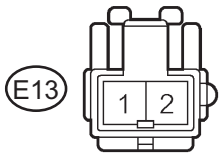

C139149E01

(a) Disconnect the skid control ECU connector.

(b) Measure the resistance according to the value(s) in the table below.

Standard resistance

Tester Connection	Condition	Specified Condition
A60-23 (BZ) - E13-1	Always	Below 1 Ω
A60-23 (BZ) - Body ground	Always	10 kΩ or higher

(c) Connect the connectors.

NG → **REPAIR OR REPLACE HARNESS OR CONNECTOR (SKID CONTROL ECU TO SKID CONTROL BUZZER)**

OK

REPLACE BRAKE ACTUATOR ASSEMBLY (See page BC-432)

BC

TC and CG Terminal Circuit

DESCRIPTION

DTC output mode is set by connecting terminals TC and CG of the DLC3.
DTCs are indicated by the blinking pattern of the ABS warning light.

WIRING DIAGRAM

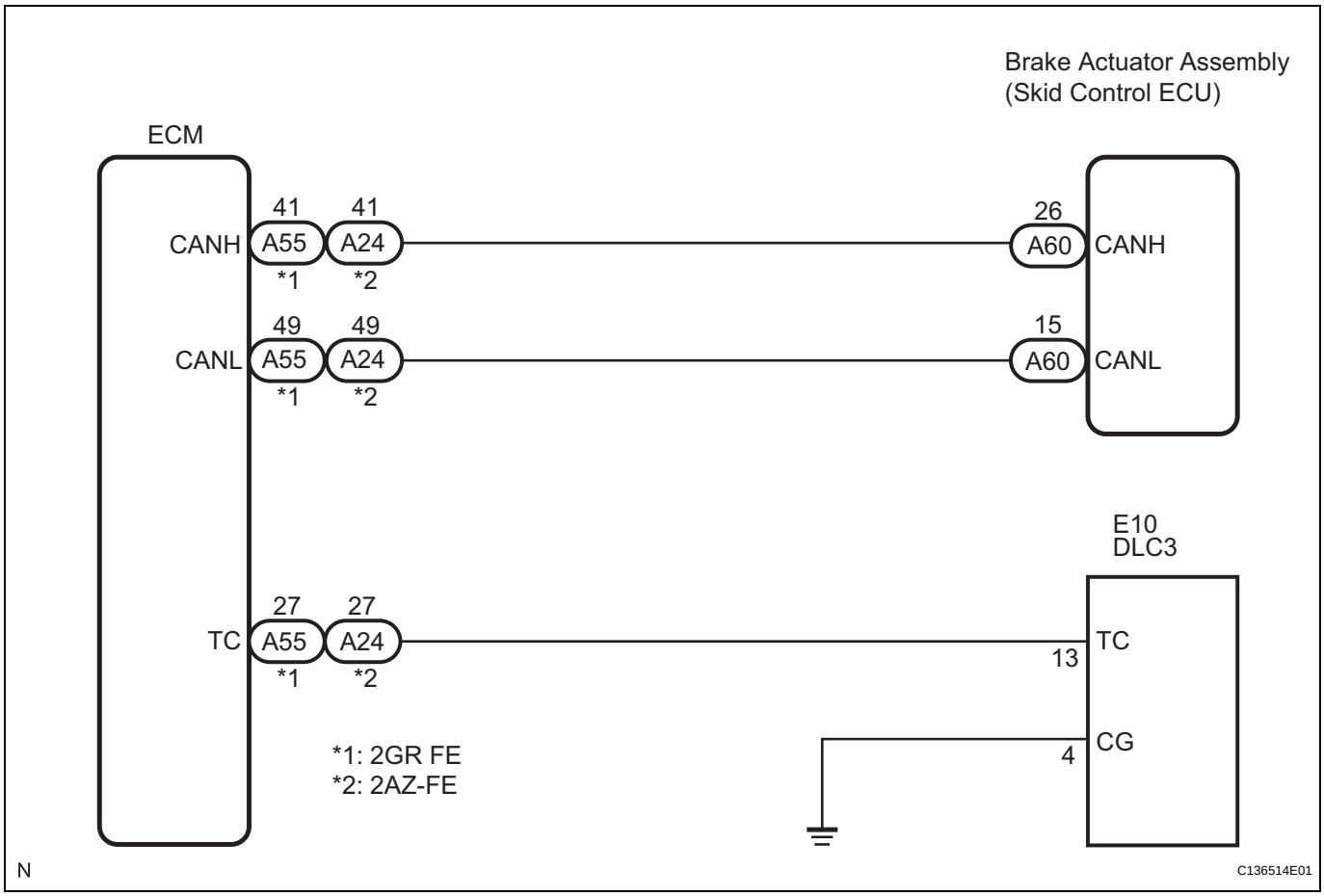

HINT:
When warning lights continue to blink, a ground short in the wiring of terminal TC of the DLC3 or an internal ground short in one or more ECUs is suspected.

INSPECTION PROCEDURE

HINT:
Check the condition of each related circuit connector before troubleshooting (See page IN-40).

1	CHECK CAN COMMUNICATION SYSTEM

(a) Check if a CAN communication DTC is output (See page BC-302).

Result

Result	Proceed to
CAN communication system DTC is output	A
CAN communication system DTC is not output	B

B → **Go to step 2**

A

GO TO CAN COMMUNICATION SYSTEM (See page CA-8)

2 CHECK HARNESS AND CONNECTOR (ECM TO DLC3)

DLC3:

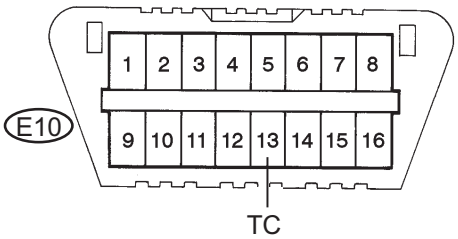

ECM Wire Harness View:

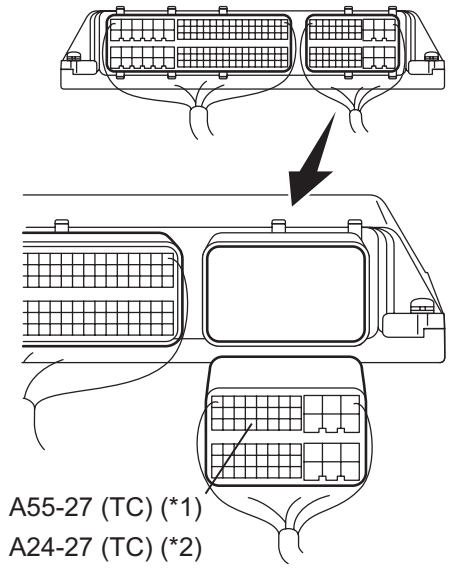

(*1): 2GR-FE (*2): 2AZ-FE

C136035E02

(a) Disconnect the ECM connector.
(b) Measure the resistance according to the value(s) in the table below.

Standard resistance:

2GR-FE

Tester Connection	Specified Condition
E10-13 (TC) - A55-27 (TC)	Below 1 Ω
E10-13 (TC) - Body ground	10 kΩ or higher

2AZ-FE

Tester Connection	Specified Condition
E10-13 (TC) - A24-27 (TC)	Below 1 Ω
E10-13 (TC) - Body ground	10 kΩ or higher

(c) Connect the connector.

NG → **REPAIR OR REPLACE HARNESS OR CONNECTOR (TC TERMINAL CIRCUIT)**

OK

BC

3 CHECK HARNESS AND CONNECTOR (DLC3 TO CG CIRCUIT)

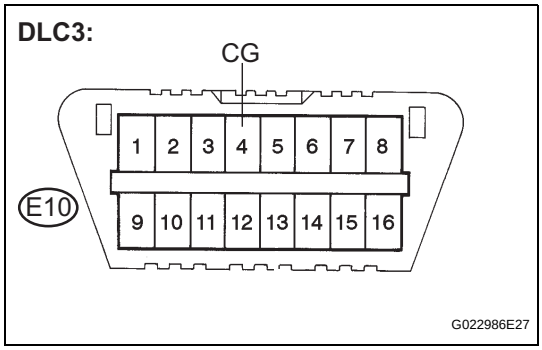

(a) Measure the resistance according to the value(s) in the table below.

Standard resistance

Tester Connection	Specified Condition
E10-4 (CG) - Body ground	Below 1 Ω

NG → **REPAIR OR REPLACE HARNESS OR CONNECTOR (CG TERMINAL CIRCUIT)**

OK

BC

4 CHECK HARNESS AND CONNECTOR (TC TERMINAL CIRCUIT)

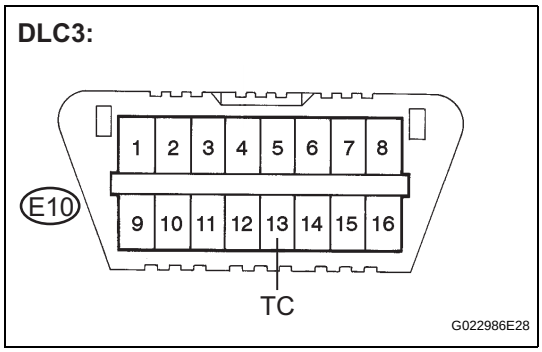

(a) Measure the resistance according to the value(s) in the table below.

Standard resistance

Tester Connection	Specified Condition
E10-13 (TC) - Body ground	10 kΩ or higher

NG → **REPAIR OR REPLACE HARNESS OR CONNECTOR (TC TERMINAL CIRCUIT)**

OK

REPLACE BRAKE ACTUATOR ASSEMBLY (See page BC-432)

TS and CG Terminal Circuit

DESCRIPTION

In the Test Mode (signal check), a malfunction of the speed sensor that cannot be detected when the vehicle is stopped can be detected while driving.
Transition to the sensor check mode can be performed by connecting terminals TS and CG of the DLC3 and turning the ignition switch from off to on (IG).

WIRING DIAGRAM

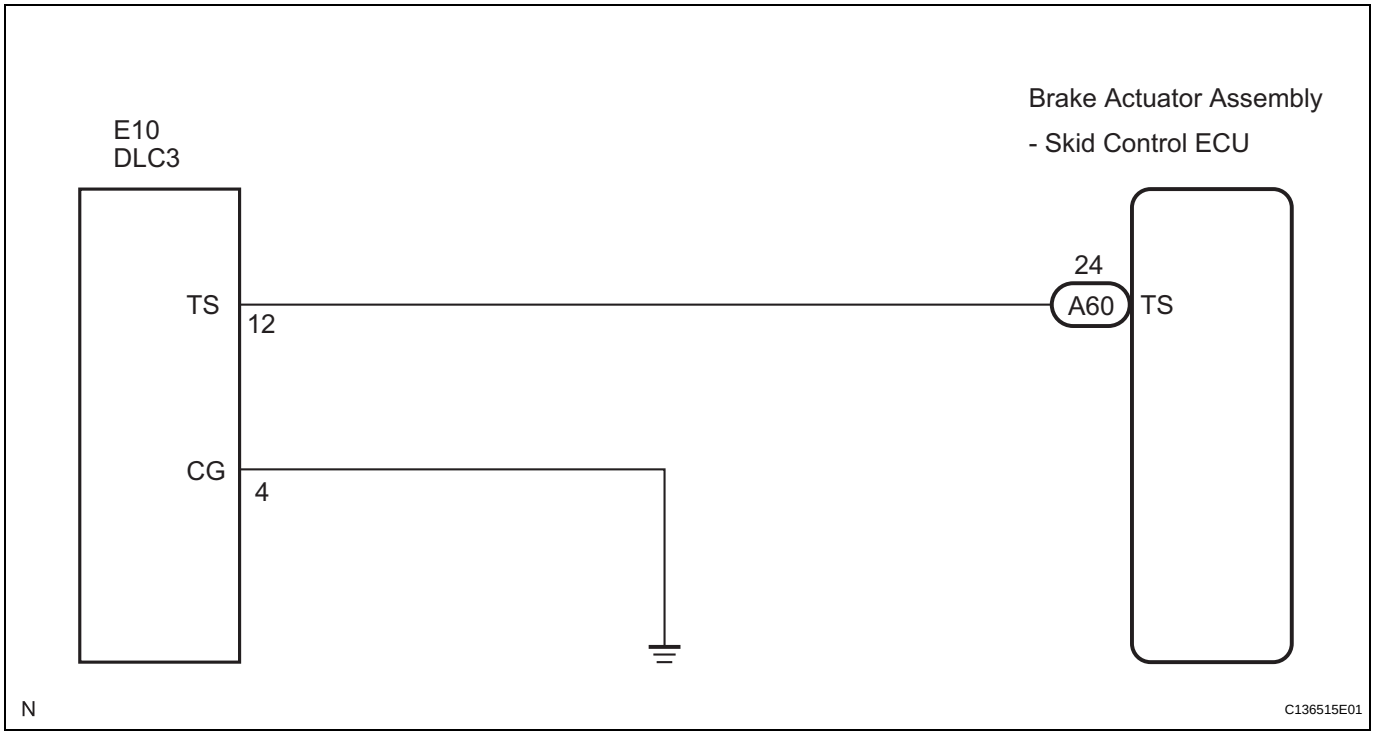

INSPECTION PROCEDURE

HINT:
Check the condition of each related circuit connector before troubleshooting (See page IN-40).

1 CHECK HARNESS AND CONNECTOR (SKID CONTROL ECU TO DLC3)

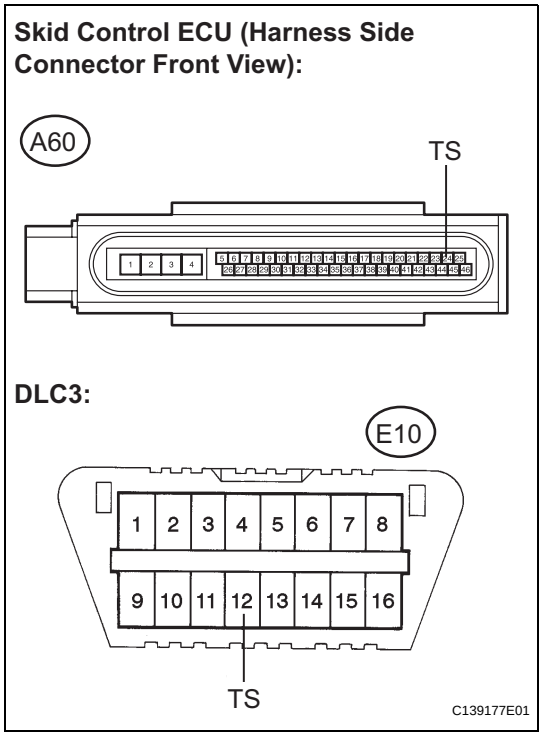

(a) Disconnect the skid control ECU connector.

(b) Measure the resistance according to the value(s) in the table below.

Standard resistance

Tester Connection	Condition	Specified Condition
A60-24 (TS) - E10-12 (TS)	Always	Below 1 Ω

(c) Connect the connector.

NG → **REPAIR OR REPLACE HARNESS OR CONNECTOR (SKID CONTROL ECU TO DLC3)**

OK

2 CHECK HARNESS AND CONNECTOR (DLC3 TO BODY GROUND)

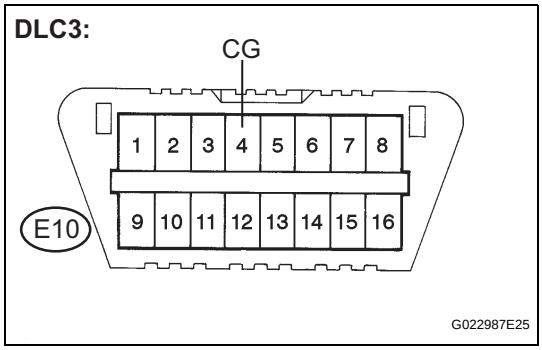

(a) Measure the resistance according to the value(s) in the table below.

Standard resistance

Tester Connection	Condition	Specified Condition
E10-4 (CG) - Body ground	Always	Below 1 Ω

NG → **REPAIR OR REPLACE HARNESS OR CONNECTOR (DLC3 TO BODY GROUND)**

OK

BC

3	CHECK HARNESS AND CONNECTOR (TS TERMINAL CIRCUIT)

DLC3:

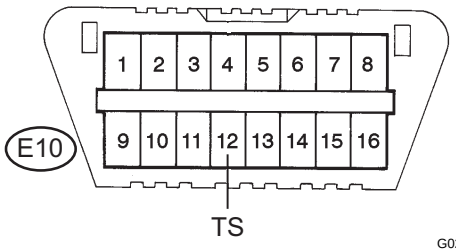

(a) Measure the resistance according to the value(s) in the table below.

Standard resistance

Tester Connection	Condition	Specified Condition
E10-12 (TS) - Body ground	Always	10 kΩ or higher

NG → **REPAIR OR REPLACE HARNESS OR CONNECTOR (TS TERMINAL CIRCUIT)**

OK

REPLACE BRAKE ACTUATOR ASSEMBLY (See page BC-432)

BRAKE ACTUATOR (for ADVICS Made)

COMPONENTS

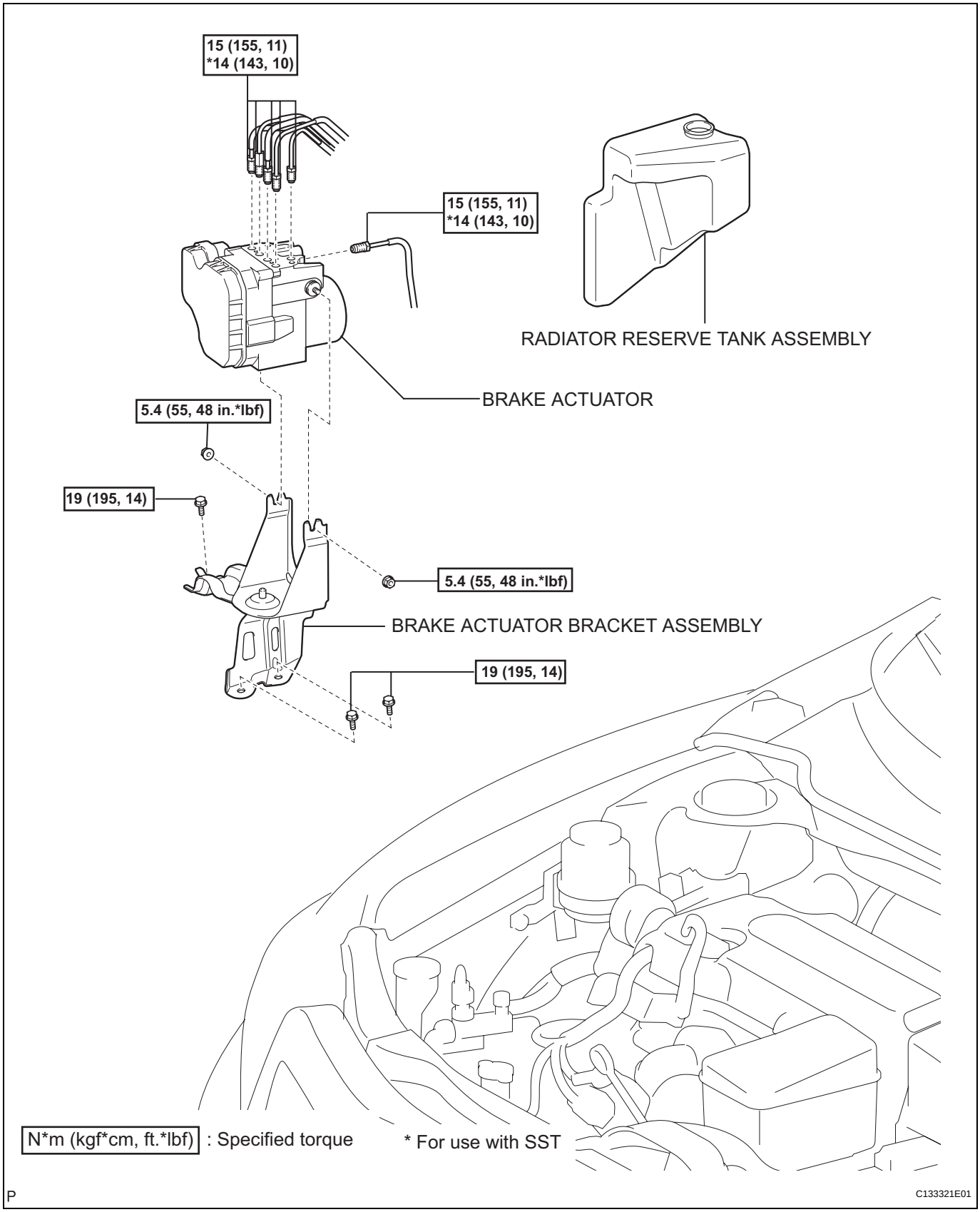

BC

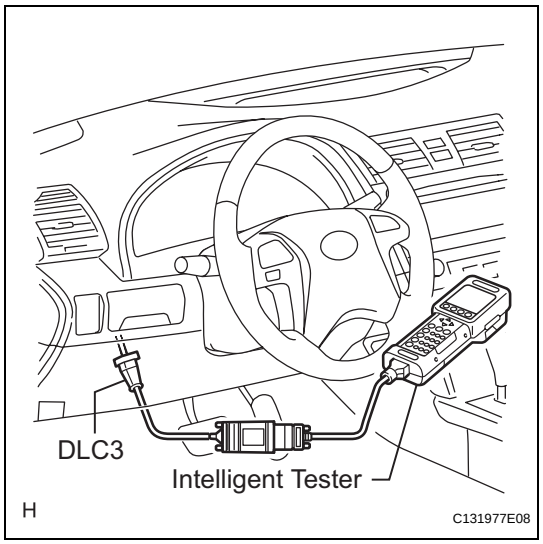

ON-VEHICLE INSPECTION

1. CONNECT INTELLIGENT TESTER

(a) Connect the intelligent tester to the DLC3.
(b) Start the engine and run it at idle .
(c) Select the Active Test mode on the intelligent tester.
HINT:
Refer to the intelligent tester operator's manual for further details.

2. INSPECT ACTUATOR MOTOR OPERATION

NOTICE:
Do not keep a motor relay on continuously for more than 5 seconds. When operating it continuously, set an interval of more than 20 seconds.

(a) With the motor relay on, check the actuator motor operation sounds.
(b) Turn the motor relay off.
(c) Depress the brake pedal and hold it for approximately 15 seconds. Check that the brake pedal cannot be depressed farther.
(d) With the motor relay on, check that the pedal does not pulsate.
(e) Turn the motor relay off and release the brake pedal.

3. INSPECT RIGHT FRONT WHEEL OPERATION

NOTICE:
Do not turn on a solenoid in a manner different than described below.

(a) Depress the brake pedal and hold it.
(b) Turn the SFRH and SFRR solenoids on simultaneously, and check that the pedal cannot be depressed.
(c) Turn the SFRH and SFRR solenoids off simultaneously, and check that the pedal can be depressed.
NOTICE:
Do not keep the motor relay on continuously for more than 5 seconds. When operating them continuously, set an interval of more than 20 seconds.
(d) Turn the motor relay on and check that the pedal returns.
NOTICE:
Do not keep the motor relay on continuously for more than 5 seconds. When operating it continuously, set an interval of more than 20 seconds.
(e) Turn the motor relay off and release the brake pedal.

4. INSPECT OTHER WHEEL OPERATION

(a) Using the same procedure, check the solenoids of the other wheels.

HINT:

- Left front wheel: SFLH, SFLR
- Right rear wheel: SRRH, SRRR
- Left rear wheel: SRLH, SRLR

REMOVAL

1. DISCONNECT CABLE FROM NEGATIVE BATTERY TERMINAL

2. REMOVE RADIATOR RESERVE TANK ASSEMBLY

(a) Separate the radiator reserve tank hose.

(b) Remove the radiator reserve tank assembly.

3. DRAIN BRAKE FLUID

NOTICE:

If brake fluid leaks onto any painted surface, immediately clean it off completely.

4. REMOVE BRAKE ACTUATOR

(a) Release the lock lever and disconnect the actuator connector.

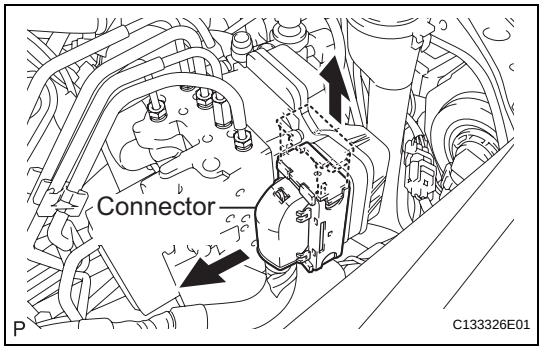

(b) Using SST, disconnect the 6 brake lines from the actuator assembly with bracket.

SST 09023-00101

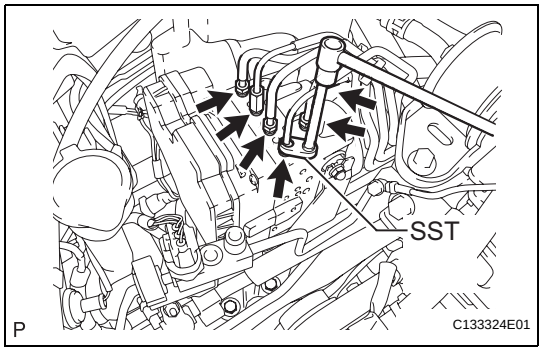

(c) Use tags or make a memo to identify the places to reconnect.

HINT:

- *1: To Front Wheel Cylinder RH
- *2: To Front Wheel Cylinder LH
- *3: To Rear Wheel Cylinder RH
- *4: To Rear Wheel Cylinder LH
- *5: From 1st Master Cylinder
- *6: From 2nd Master Cylinder

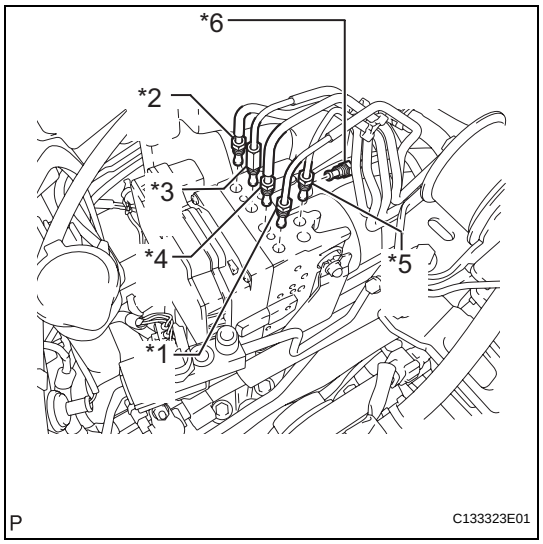

BC

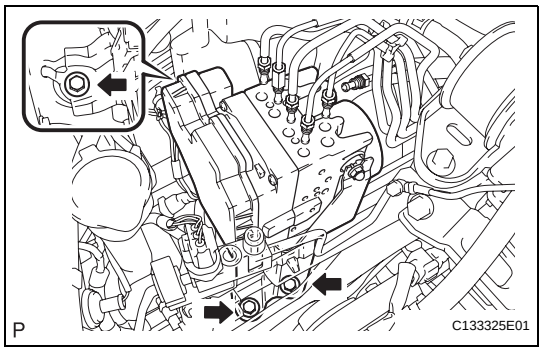

(d) Remove the 3 bolts and brake actuator assembly with bracket from the body.
NOTICE:
Do not damage the brake tubes and wire harness.

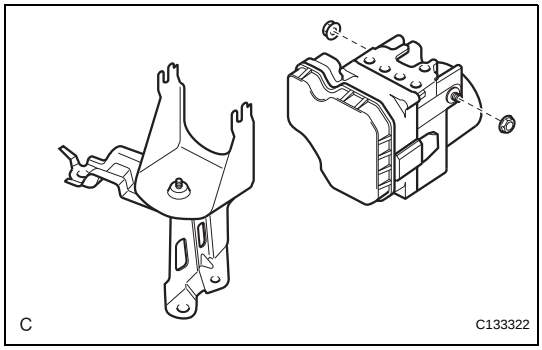

DISASSEMBLY

1. REMOVE BRAKE ACTUATOR BRACKET ASSEMBLY

(a) Remove the 2 nuts and the brake actuator assembly from the actuator bracket assembly.

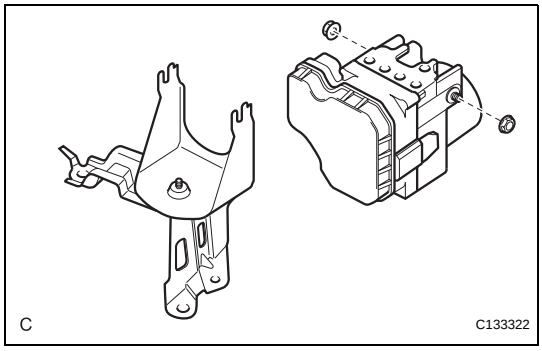

REASSEMBLY

1. INSTALL BRAKE ACTUATOR BRACKET ASSEMBLY

(a) Install the actuator assembly to the brake actuator bracket assembly with the 2 nuts.
Torque: 5.4 N*m (55 kgf*cm, 48 in.*lbf)
NOTICE:
Do not remove the hole plug before installing a new brake actuator because the brake actuator assembly is filled with brake fluid.

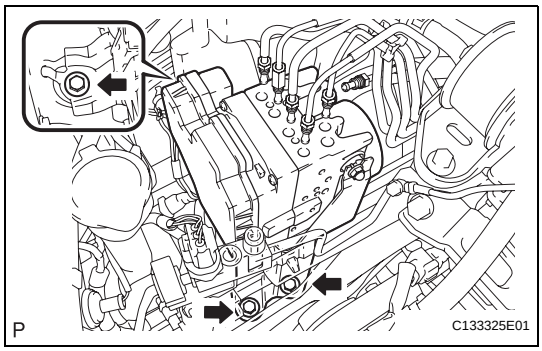

INSTALLATION

1. INSTALL BRAKE ACTUATOR

(a) Install the brake actuator assembly with bracket to the body with the 3 bolts.
Torque: 19 N*m (195 kgf*cm, 14 ft.*lbf)
NOTICE:
Do not damage the brake tubes and wire harness.

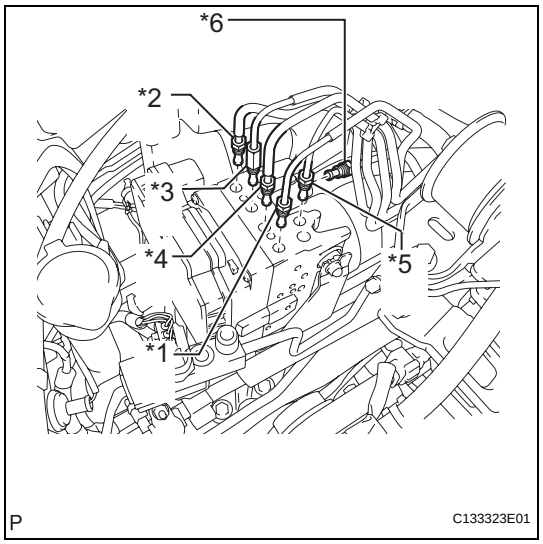

(b) Temporarily tighten each brake tube to the correct positions of the brake actuator assembly with bracket as shown in the illustration.
HINT:
- *1: To Front Wheel Cylinder RH
- *2: To Front Wheel Cylinder LH
- *3: To Rear Wheel Cylinder RH
- *4: To Rear Wheel Cylinder LH
- *5: From 1st Master Cylinder
- *6: From 2nd Master Cylinder

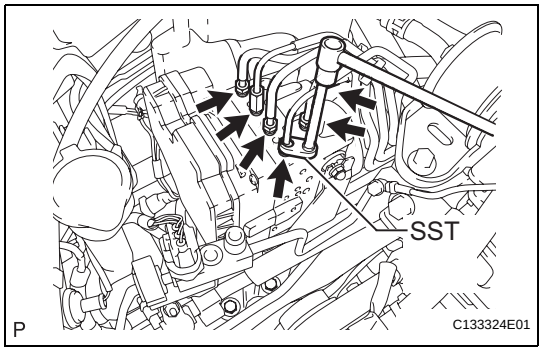

(c) Using SST, fully tighten each brake tube.
SST 09023-00101
Torque: without SST
15 N*m (155 kgf*cm, 11 ft.*lbf)
with SST
14 N*m (143 kgf*cm, 10 ft.*lbf)
NOTICE:
- **Use a torque wrench with a fulcrum length of 300 mm (11.81 in.).**
- **This torque value is effective when SST is parallel to a torque wrench.**

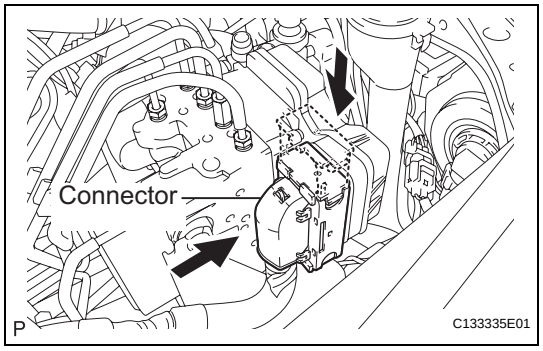

(d) Connect the actuator connector.
NOTICE:
Make sure that the connector is locked securely.

2. INSTALL RADIATOR RESERVE TANK ASSEMBLY
(a) Install the radiator reserve tank assembly.
(b) Connect the radiator reservoir tank hose.

3. FILL RESERVOIR WITH BRAKE FLUID (See page BR-6)

4. BLEED BRAKE LINE (See page BR-7)

5. CONNECT CABLE TO NEGATIVE BATTERY TERMINAL

6. BLEED BRAKE ACTUATOR (See page BR-8)

7. INSPECT BRAKE FLUID LEVEL (See page BR-10)

8. INSPECT FOR BRAKE FLUID LEAKAGE

9. PERFORM YAW RATE SENSOR ZERO POINT CALIBRATION
HINT:
(See page BC-119)

10. INSPECT ACTUATOR WITH INTELLIGENT TESTER
HINT:
(See page BC-425)

BC

BRAKE ACTUATOR (for BOSCH Made)

COMPONENTS

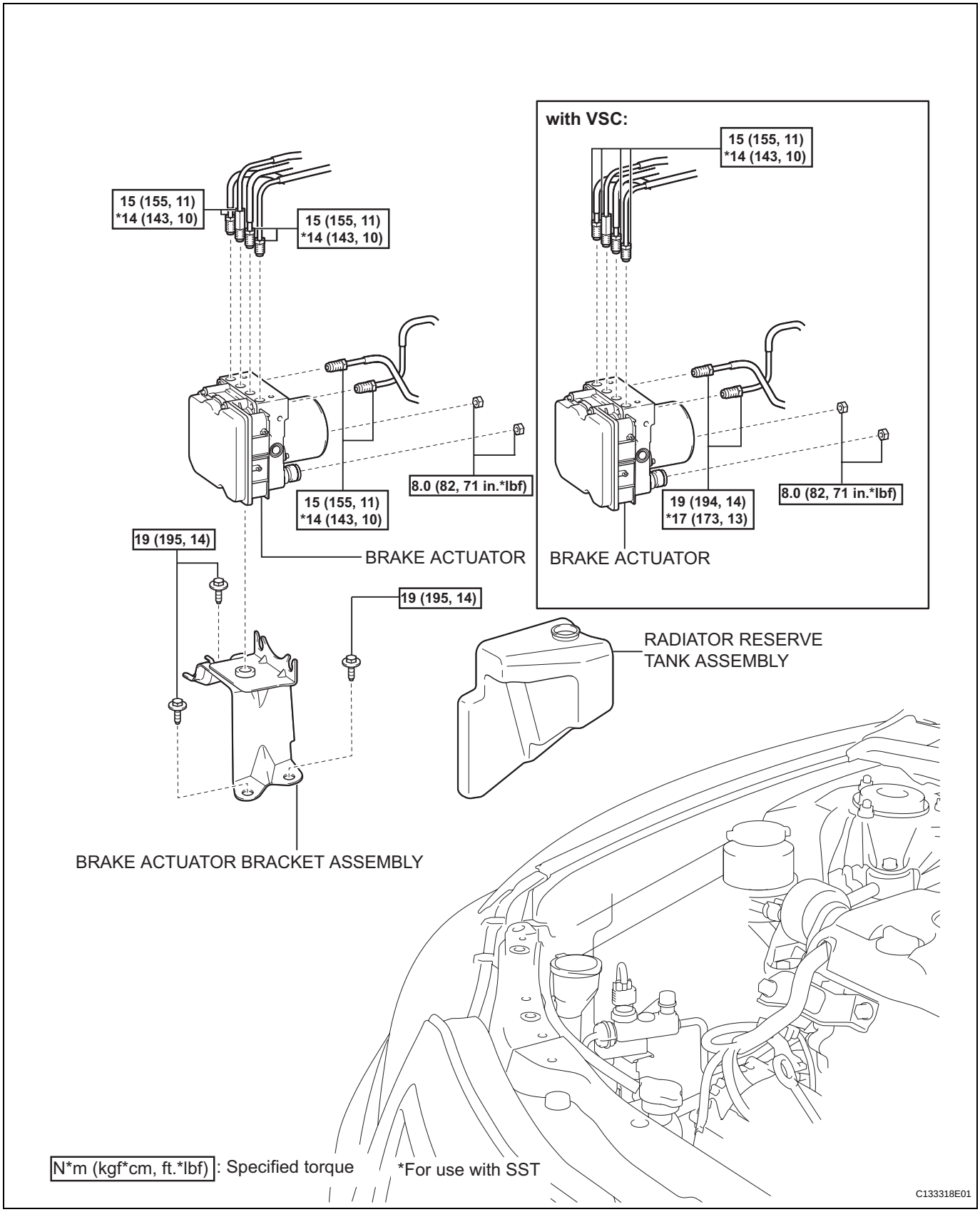

BC

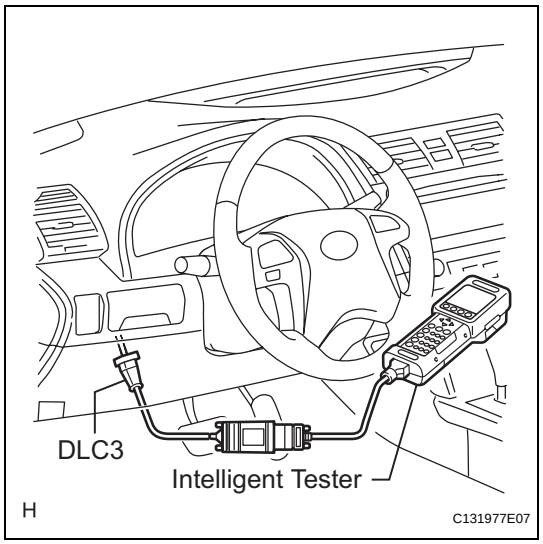

ON-VEHICLE INSPECTION

1. CONNECT INTELLIGENT TESTER

(a) Connect the intelligent tester to the DLC3.
(b) Start the engine and run it at idle.
(c) Select the Active Test mode on the intelligent tester.
HINT:
Refer to the intelligent tester operator's manual for further details.

2. INSPECT ACTUATOR MOTOR OPERATION

NOTICE:
Do not keep a motor relay on continuously for more than 5 seconds. When operating it continuously, set an interval of more than 20 seconds.

(a) With the motor relay on, check the actuator motor operation sounds.
(b) Turn the motor relay off.
(c) Depress the brake pedal and hold it for approximately 15 seconds. Check that the brake pedal cannot be depressed farther.
(d) With the motor relay on, check that the pedal does not pulsate.
(e) Turn the motor relay off and release the brake pedal.

3. INSPECT RIGHT FRONT WHEEL OPERATION

NOTICE:
Do not turn on a solenoid in a manner different than described below.

(a) Depress the brake pedal and hold it.
(b) Turn the SFRH and SFRR solenoids on simultaneously, and check that the pedal cannot be depressed.
(c) Turn the SFRH and SFRR solenoids off simultaneously, and check that the pedal can be depressed.
NOTICE:
Do not keep the motor relay on continuously for more than 5 seconds. When operating them continuously, set an interval of more than 20 seconds.
(d) Turn the motor relay on and check that the pedal returns.
NOTICE:
Do not keep the motor relay on continuously for more than 5 seconds. When operating it continuously, set an interval of more than 20 seconds.
(e) Turn the motor relay off and release the brake pedal.

4. INSPECT OTHER WHEEL OPERATION

(a) Using the same procedure, check the solenoids of the other wheels.

HINT:

- Left front wheel: SFLH, SFLR
- Right rear wheel: SRRH, SRRR
- Left rear wheel: SRLH, SRLR

REMOVAL

1. DISCONNECT CABLE FROM NEGATIVE BATTERY TERMINAL

2. REMOVE RADIATOR RESERVE TANK ASSEMBLY

(a) Separate the radiator reserve tank hose.

(b) Remove the radiator reserve tank assembly.

3. DRAIN BRAKE FLUID

NOTICE:

If brake fluid leaks onto any painted surface, immediately clean it off completely.

4. REMOVE BRAKE ACTUATOR

(a) Release the lock lever and disconnect the actuator connector.

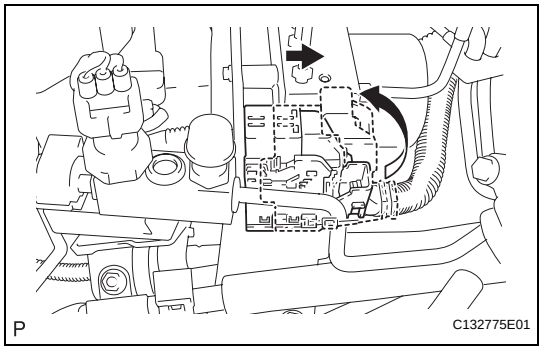

(b) Using SST, disconnect the 6 brake lines from the actuator assembly with bracket.

SST 09023-00101

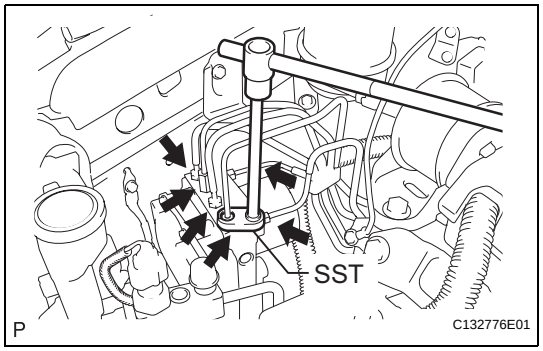

(c) Use tags or make a memo to identify the places to reconnect.

HINT:

- *1: To Front Wheel Cylinder RH
- *2: To Front Wheel Cylinder LH
- *3: To Rear Wheel Cylinder RH
- *4: To Rear Wheel Cylinder LH
- *5: From 2nd Master Cylinder
- *6: From 1st Master Cylinder

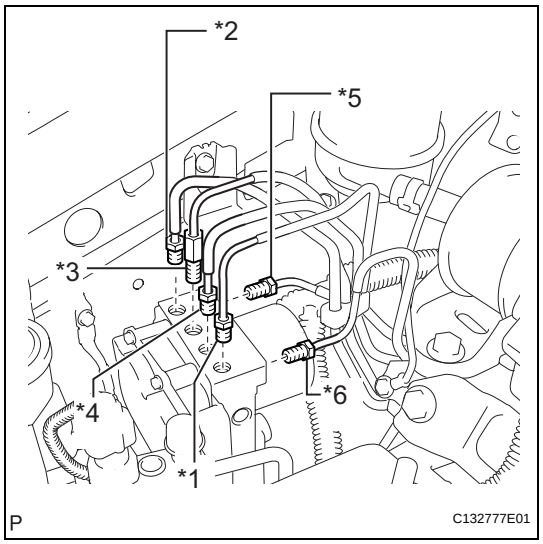

BC

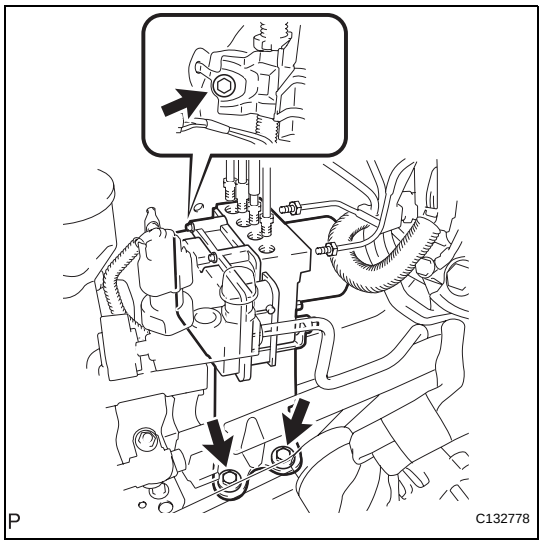

(d) Remove the 3 bolts and actuator assembly from the body with bracket.
NOTICE:
Do not damage the brake tubes and wire harness.

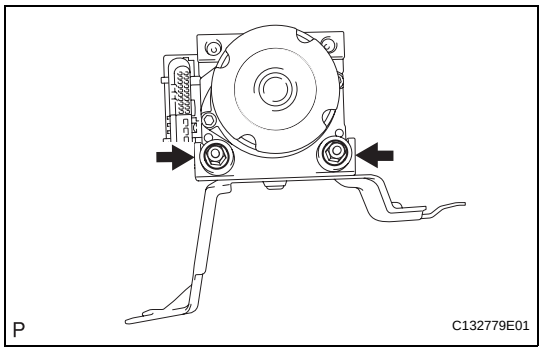

DISASSEMBLY

1. REMOVE BRAKE ACTUATOR BRACKET ASSEMBLY

(a) Remove the 2 nuts and the brake actuator assembly from the actuator bracket assembly.

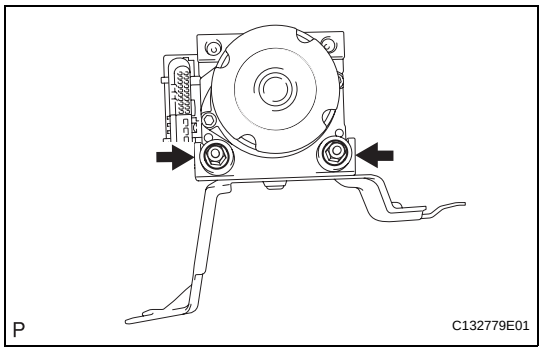

REASSEMBLY

1. INSTALL BRAKE ACTUATOR BRACKET ASSEMBLY

(a) Install the actuator assembly to the actuator bracket assembly with the 2 nuts.
Torque: 8.0 N*m (82 kgf*cm, 71 in.*lbf)
NOTICE:
Do not remove the hole plug before installing a new brake actuator because the brake actuator assembly is filled with brake fluid.

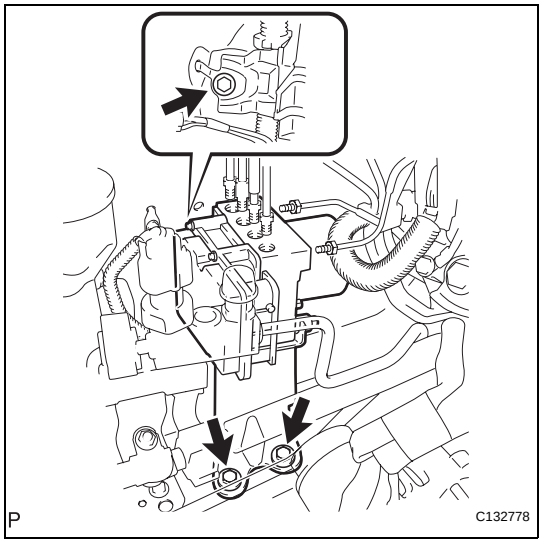

INSTALLATION

1. INSTALL BRAKE ACTUATOR (w/o VSC)

(a) Install the actuator assembly with bracket to the body with the 3 bolts.
Torque: 19 N*m (195 kgf*cm, 14 ft.*lbf)
NOTICE:
Do not damage the brake tubes and wire harness.

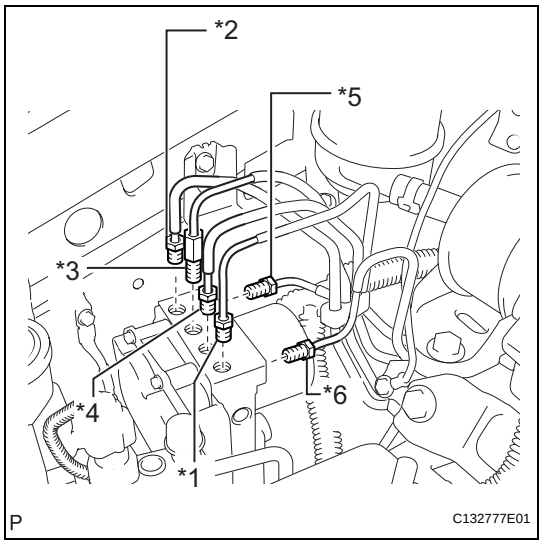

(b) Temporarily tighten each brake tube to the correct positions of the actuator assembly with bracket as shown in the illustration.
HINT:
- *1: To Front Wheel Cylinder RH
- *2: To Front Wheel Cylinder LH
- *3: To Rear Wheel Cylinder RH
- *4: To Rear Wheel Cylinder LH
- *5: From 2nd Master Cylinder
- *6: From 1st Master Cylinder

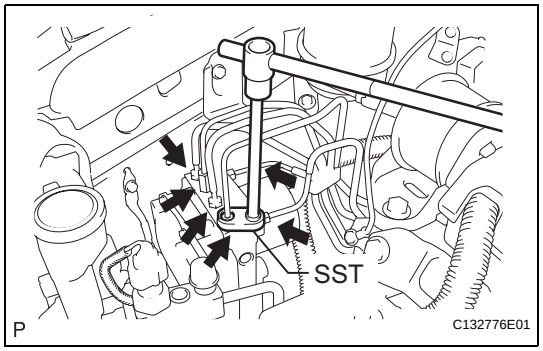

(c) Using SST, fully tighten each brake tube.
SST 09023-00101
Torque: without SST
15 N*m (155 kgf*cm, 11 ft.*lbf)
with SST
14 N*m (143 kgf*cm, 10 ft.*lbf)
NOTICE:
- **Use a torque wrench with a fulcrum length of 300 mm (11.81 in.).**
- **This torque value is effective when SST is parallel to a torque wrench.**

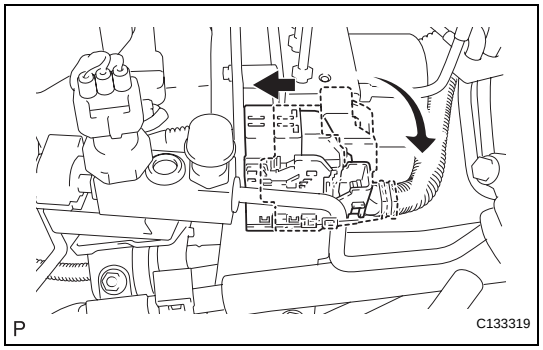

(d) Connect the actuator connector.
NOTICE:
Make sure that the connector is locked securely.

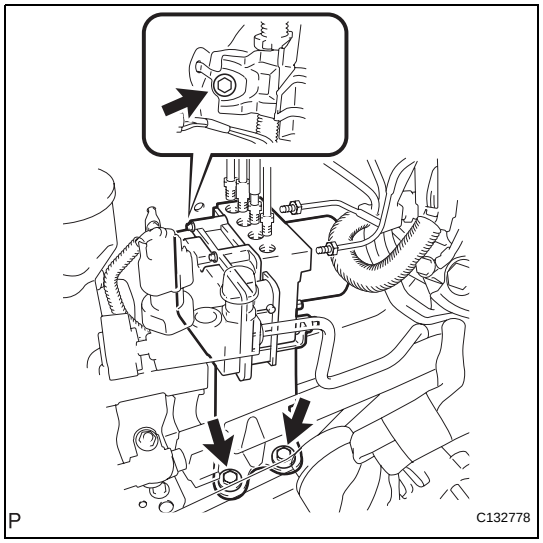

2. INSTALL BRAKE ACTUATOR (w/ VSC)

(a) Install the actuator assembly with bracket to the body with the 3 bolts.
Torque: 19 N*m (195 kgf*cm, 14 ft.*lbf)
NOTICE:
Do not damage the brake tubes.

BC

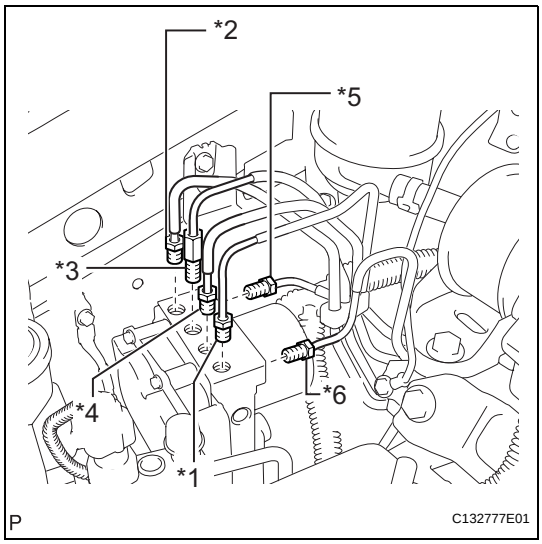

(b) Temporarily tighten each brake tube to the correct positions of the actuator assembly with bracket as shown in the illustration.
HINT:
- *1: To Front Wheel Cylinder RH
- *2: To Front Wheel Cylinder LH
- *3: To Rear Wheel Cylinder RH
- *4: To Rear Wheel Cylinder LH
- *5: From 2nd Master Cylinder
- *6: From 1st Master Cylinder

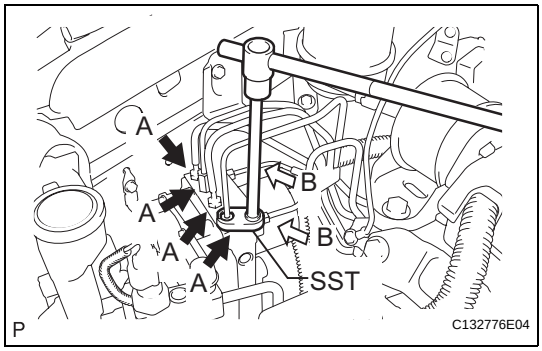

(c) Using SST, fully tighten each brake tube.
SST 09023-00101, 09023-38200
Torque: bolt A M10 without SST
15 N*m (155 kgf*cm, 11 ft.*lbf)
bolt A M10 with SST
14 N*m (143 kgf*cm, 10 ft.*lbf)
bolt B M12 without SST
19 N*m (194 kgf*cm, 14 ft.*lbf)
bolt B M12 with SST
17 N*m (173 kgf*cm, 13 ft.*lbf)
NOTICE:
- **Use a torque wrench with a fulcrum length of 30 cm (11.81 in.).**
- **This torque value is effective when SST is parallel to a torque wrench.**

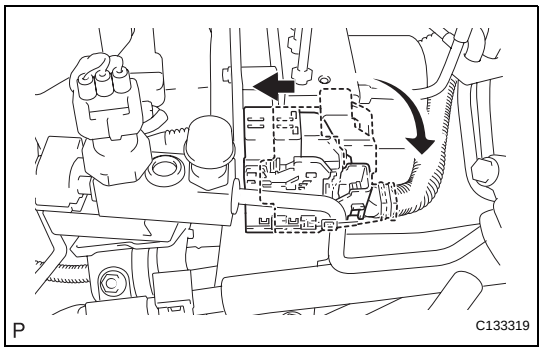

(d) Connect the actuator connector.
NOTICE:
Make sure that the connector is locked securely.

3. INSTALL RADIATOR RESERVE TANK ASSEMBLY
(a) Install the radiator reserve tank assembly.
(b) Connect the radiator reservoir tank hose.

4. FILL RESERVOIR WITH BRAKE FLUID (See page BR-6)

5. BLEED BRAKE LINE (See page BR-7)

6. CONNECT CABLE TO NEGATIVE BATTERY TERMINAL

7. BLEED BRAKE ACTUATOR ASSEMBLY (w/ VSC) (See page BR-8)

8. INSPECT BRAKE FLUID LEVEL (See page BR-10)

9. INSPECT FOR BRAKE FLUID LEAKAGE

10. INSPECT ACTUATOR WITH INTELLIGENT TESTER
HINT:
(See page BC-431)

11. PERFORM YAW RATE SENSOR ZERO POINT CALIBRATION (w/ VSC)

HINT:

(See page BC-278)

12. INSPECT SENSOR SIGNAL

HINT:

- without VSC (see page BC-11)
- with VSC (see page BC-290)

13. INSPECT DTC AND CLEAR

HINT:

- without VSC (See page BC-21)
- with VSC (See page BC-302)

FRONT SPEED SENSOR

COMPONENTS

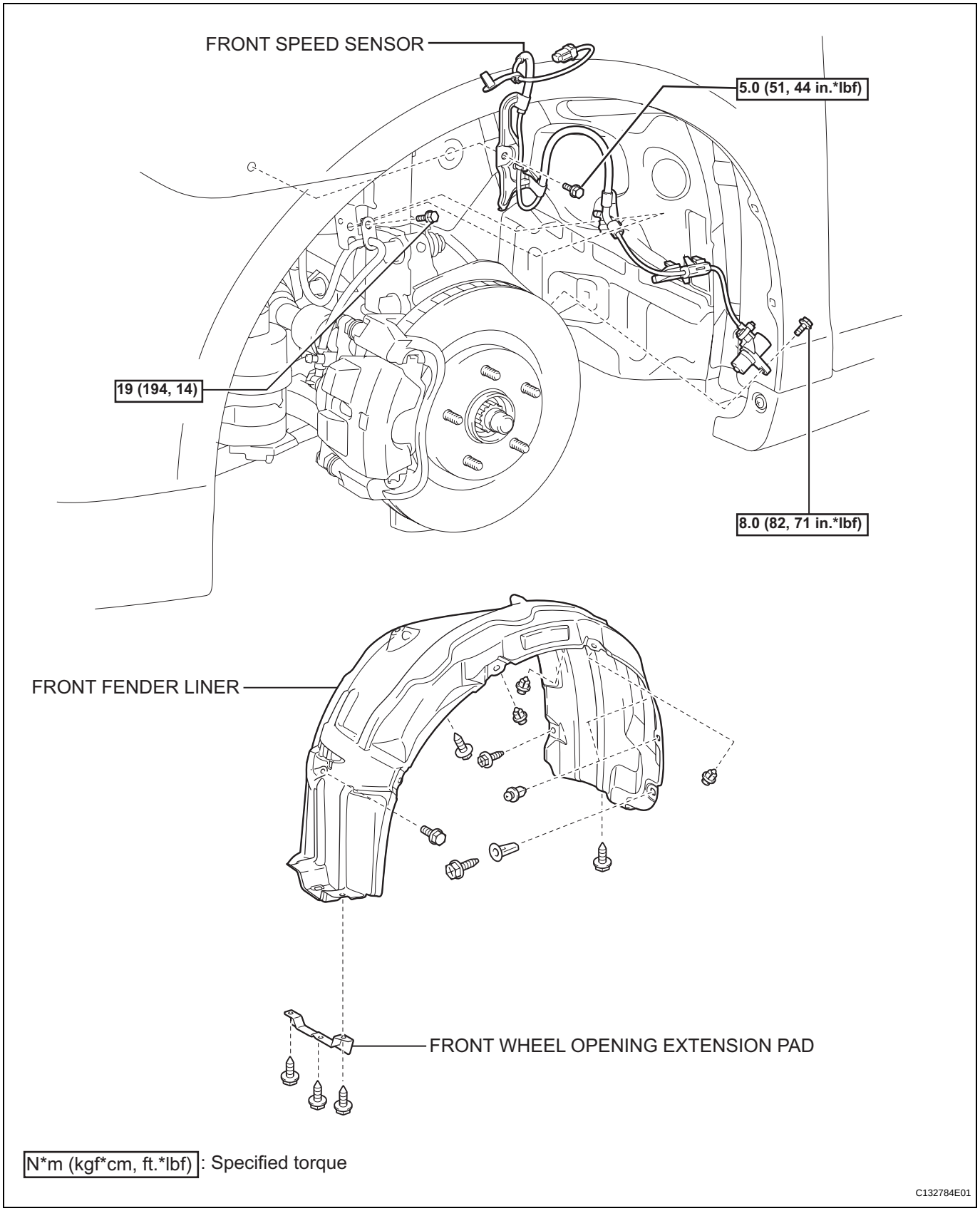

REMOVAL

1. **REMOVE FRONT WHEEL**
2. **REMOVE FRONT WHEEL OPENING EXTENSION PAD LH (See page ED-6)**
3. **REMOVE FRONT FENDER LINER (See page ED-6)**
4. **REMOVE FRONT SPEED SENSOR**
   (a) Disconnect the front speed sensor connector and clamp.

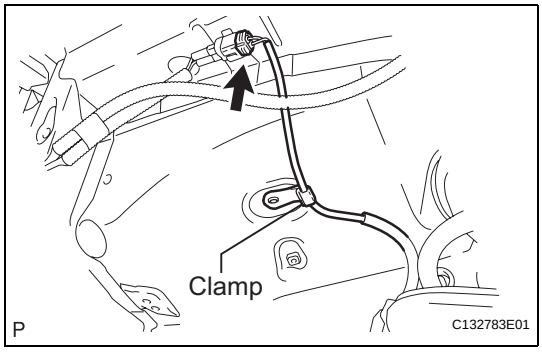

BC

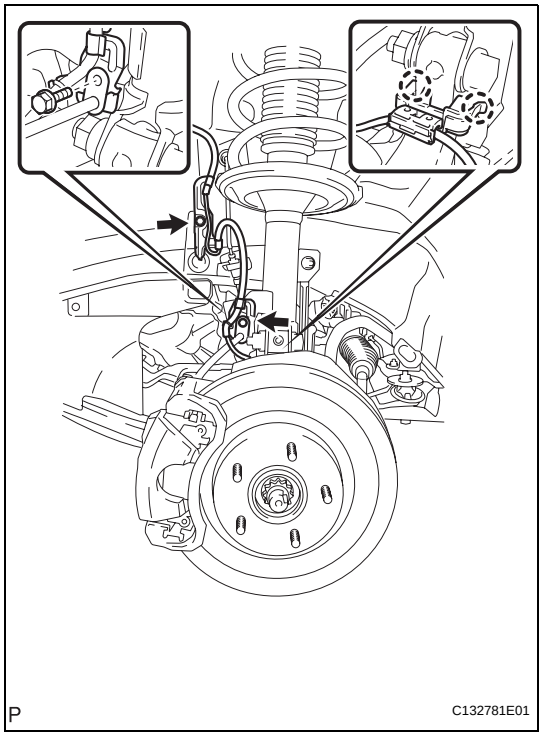

   (b) Remove the 2 bolts from the body and the shock absorber assembly.
   (c) Disengage the 2 claws from the steering knuckle and body.

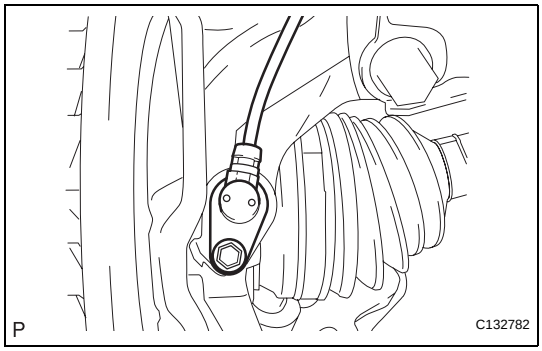

   (d) Remove the bolt and the front speed sensor.
   NOTICE:
   - **Prevent foreign matter from attaching to the sensor tip.**
   - **Clean the installation hole and the surface for the speed sensor every time the speed sensor is removed.**

INSPECTION

1. INSPECT FRONT SPEED SENSOR (for BOSCH Made)

(a) Inspect the front speed sensor. If any of the following occurs, replace the front speed sensor with a new one:
- The surface of the front speed sensor is cracked, dented, or chipped off.
- The connector or wire harness is scratched, cracked, or damaged.
- The front speed sensor has been dropped.

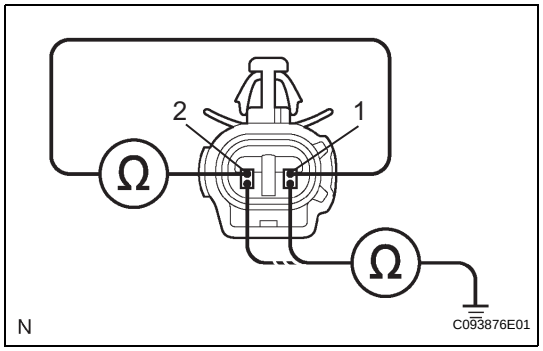

(b) Measure the resistance according to the value(s) in the table below.
Standard resistance:
LH

Tester Connection	Specified Condition
1 (FL+) - 2 (FL-)	0.92 to 1.22 kΩ at 20 °C (68°F)
1 (FL+) - Body ground	10 kΩ or higher
2 (FL-) - Body ground	10 kΩ or higher

RH

Tester Connection	Specified Condition
1 (FR+) - 2 (FR-)	0.92 to 1.22 kΩ at 20 °C(68°F)
1 (FR+) - Body ground	10 kΩ or higher
2 (FR-) - Body ground	10 kΩ or higher

If the value is not as specified, replace the front speed sensor.

2. INSPECT FRONT SPEED SENSOR (for ADVICS Made)

(a) Inspect the front speed sensor. If any of the following occurs, replace the front speed sensor with a new one:
- The surface of the front speed sensor is cracked, dented, or chipped off.
- The connector or wire harness is scratched, cracked, or damaged.
- The front speed sensor has been dropped.

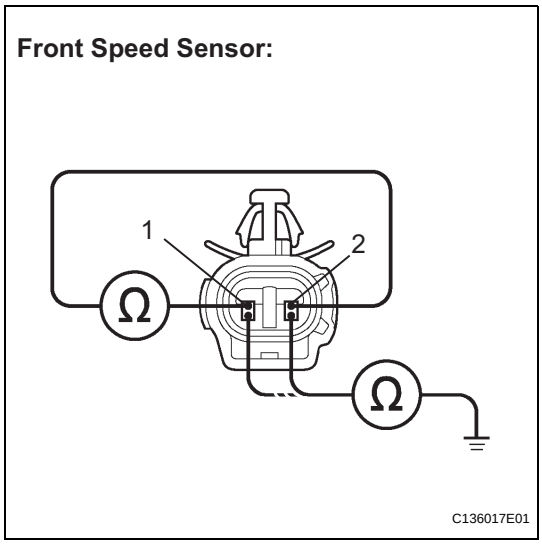

(b) Measure the resistance according to the value(s) in the table below.
Standard resistance:
RH

Tester Connection	Condition	Specified Condition
1 (FR+) - 2 (FR-)	Always	1.4 to 1.8 kΩ at 20°C (68 °F)
1 (FR+) - Body ground	Always	10 kΩ or higher
2 (FR-) - Body ground	Always	10 kΩ or higher

LH

Tester Connection	Condition	Specified Condition
1 (FL+) - 2 (FL-)	Always	1.4 to 1.8 kΩ at 20°C (68 °F)
1 (FL+) - Body ground	Always	10 kΩ or higher
2 (FL-) - Body ground	Always	10 kΩ or higher

If the value is not as specified, replace the front speed sensor.

BC

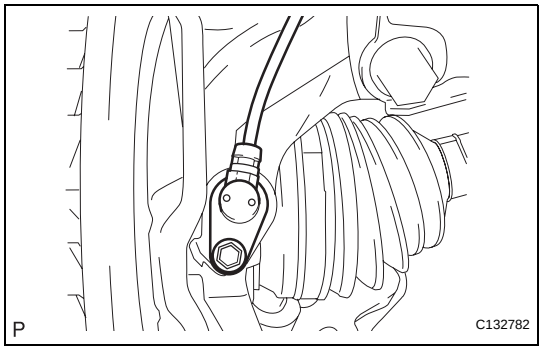

INSTALLATION

1. INSTALL FRONT SPEED SENSOR

(a) Install the front speed sensor with the bolt.
Torque: 8.0 N*m (82 kgf*cm, 71 in.*lbf)
NOTICE:
Prevent foreign matter from attaching to the sensor tip.

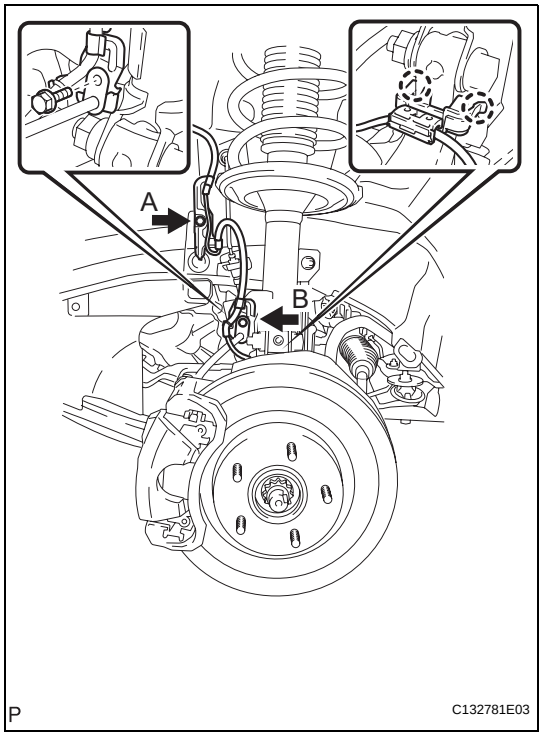

(b) Install the front speed sensor with the 2 bolts and engage the 2 claws.
Torque: Bolt A
5.0 N*m (51 kgf*cm, 44 in.*lbf)
Bolt B
19 N*m (194 kgf*cm, 14 ft.*lbf)
NOTICE:
Do not twist the wire harness for the front speed sensor when installing the speed sensor.

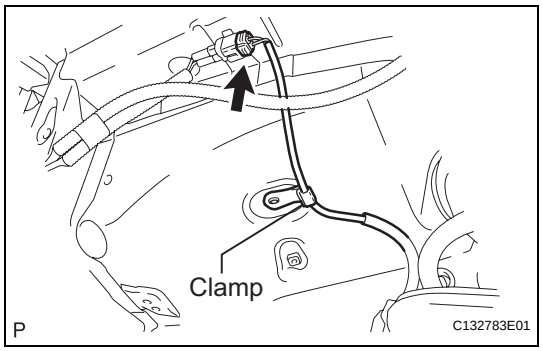

(c) Connect the front speed sensor connector and clamp.

2. INSTALL FRONT FENDER LINER (See page ED-10)

3. INSTALL FRONT WHEEL OPENING EXTENSION PAD LH (See page ED-10)

4. INSTALL FRONT WHEEL
Torque: 103 N*m (1,050 kgf*cm, 76 ft.*lbf)

5. CHECK SPEED SENSOR SIGNAL
HINT:
- for BOSCH without VSC (See page BC-11)
- for BOSCH with VSC (See page BC-290)
- for ADVICS (See page BC-123)

SKID CONTROL SENSOR

COMPONENTS

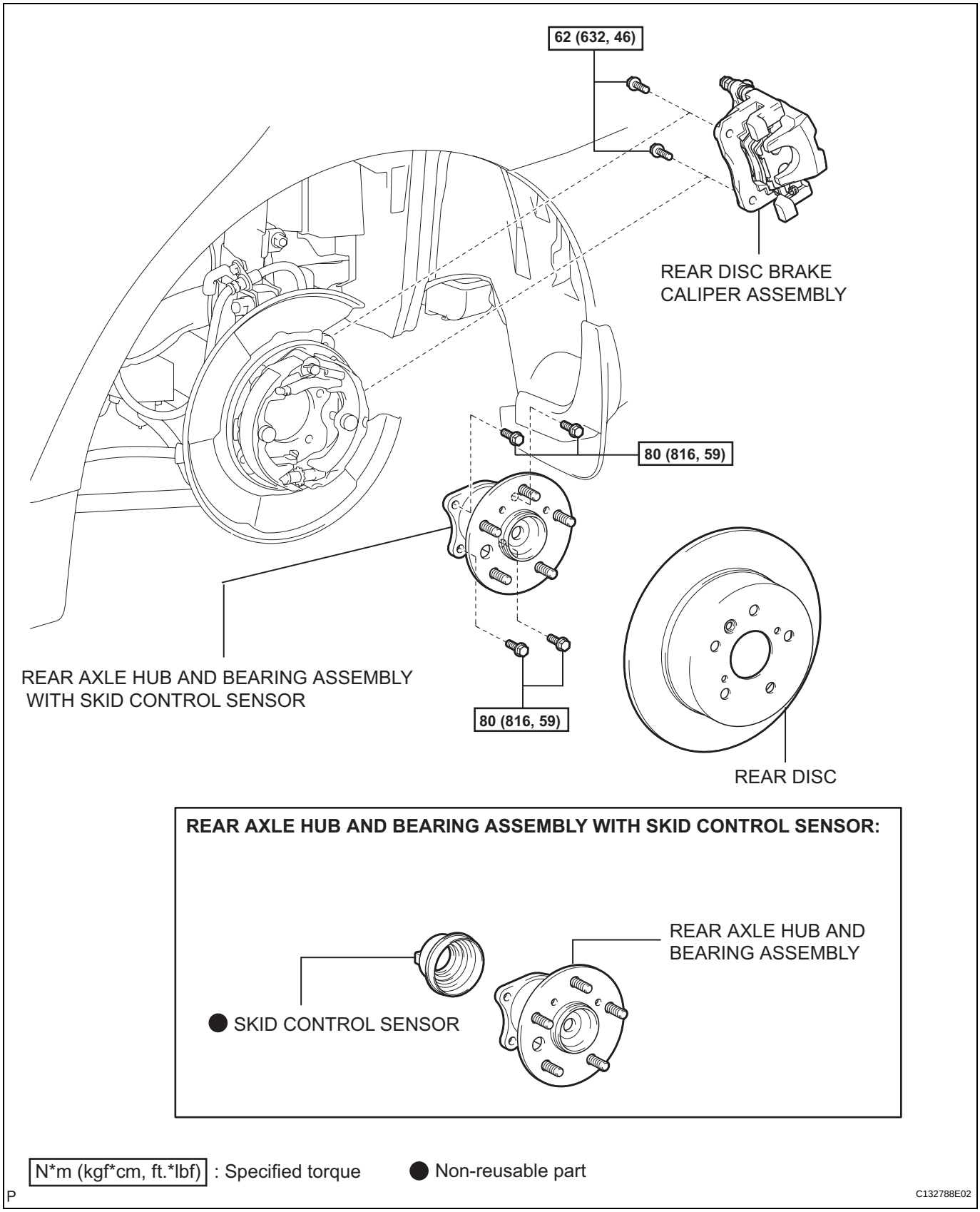

REMOVAL

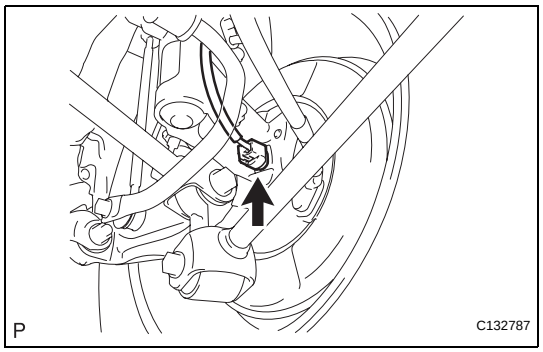

1. REMOVE REAR WHEEL

2. DISCONNECT SKID CONTROL SENSOR WIRE

(a) Disconnect the connector from the skid control sensor.

NOTICE:

Be careful not to damage the speed sensor.

3. REMOVE REAR DISC BRAKE CALIPER ASSEMBLY (See page AH-18)

4. REMOVE REAR DISC (See page BR-62)

5. REMOVE REAR AXLE HUB AND BEARING ASSEMBLY WITH SKID CONTROL SENSOR (See page AH-15)

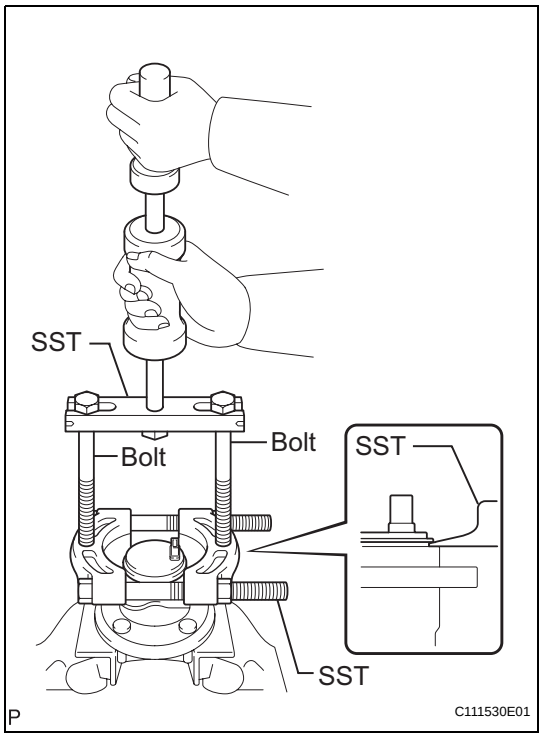

6. REMOVE SKID CONTROL SENSOR

(a) Mount the rear axle hub in a vise using aluminum plates.

NOTICE:

Replace the hub and bearing assembly if it is dropped or receives a strong shock.

(b) Using a pin punch and hammer, drive out the 2 pins and remove the 2 attachments from SST.

SST 09520-00031 (09521-00010, 09520-00040), 09521-00020

(c) Using SST and 2 bolts (Diameter: 12 mm, pitch: 1.5 mm), remove the skid control sensor from the hub and bearing assembly.

SST 09520-00031 (09521-00010, 09520-00040), 09521-00020, 09950-00020

NOTICE:

- **Keep the sensor away from magnets.**
- **Pull the skid control sensor off straight, taking care not to make contact with the skid control sensor rotor.**
- **If the speed sensor rotor is damaged or deformed, replace the hub and bearing assembly.**
- **Do not scratch the contact surface between the axle hub and the skid control sensor.**
- **Do not attach foreign matter to the speed sensor rotor and tip.**

INSPECTION

1. INSPECT SKID CONTROL SENSOR (for BOSCH Made)

(a) Inspect the skid control sensor. If any of the following occurs, replace the skid control sensor with a new one:
- The surface of the skid control sensor is cracked, dented, or chipped off.
- The connector is scratched, cracked, or damaged.
- The skid control sensor has been dropped.

(b) Measure the resistance according to the value(s) in the table below.

Standard resistance:

LH

Tester Connection	Specified Condition
1 (RR+) - 2 (RR-)	Below 2.2 kΩ
1 (RR+) - Body ground	10 kΩ or higher
2 (RR-) - Body ground	10 kΩ or higher

RH

Tester Connection	Specified Condition
1 (RL+) - 2 (RL-)	Below 2.2 kΩ
1 (RL+) - Body ground	10 kΩ or higher
2 (RL-) - Body ground	10 kΩ or higher

If the value is not as specified, replace the skid control sensor.

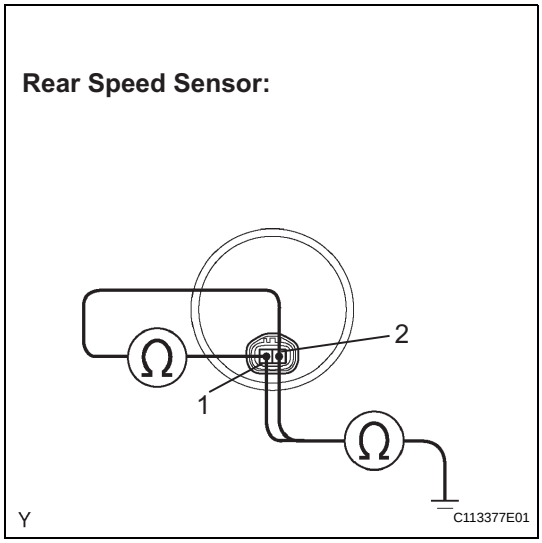

2. INSPECT SKID CONTROL SENSOR (for ADVICS Made)

(a) Inspect the skid control sensor. If any of the following occurs, replace the skid control sensor with a new one:
- The surface of the skid control sensor is cracked, dented, or chipped off.
- The connector is scratched, cracked, or damaged.
- The skid control sensor has been dropped.

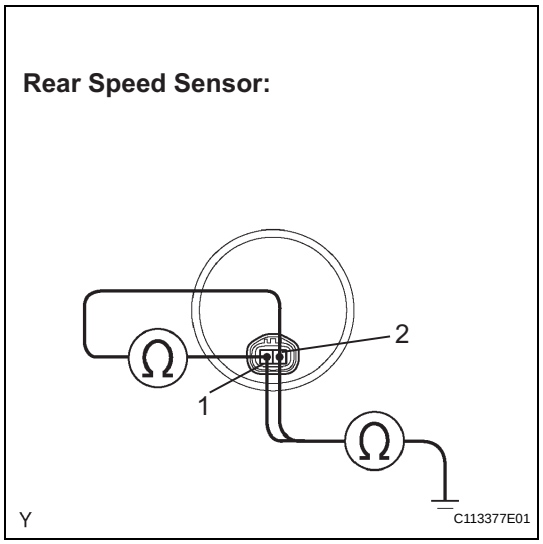

(b) Measure the resistance according to the value(s) in the table below.
Standard resistance:
RH

Tester Connection	Condition	Specified Condition
2 (RR+) - 1 (RR-)	Always	0.9 to 2.1 kΩ
2 (RR+) - Body ground	Always	10 kΩ or higher
1 (RR-) - Body ground	Always	10 kΩ or higher

LH

Tester Connection	Condition	Specified Condition
2 (RL+) - 1 (RL-)	Always	0.9 to 2.1 kΩ
2 (RL+) - Body ground	Always	10 kΩ or higher
1 (RL-) - Body ground	Always	10 kΩ or higher

If the value is not as specified, replace the skid control sensor.

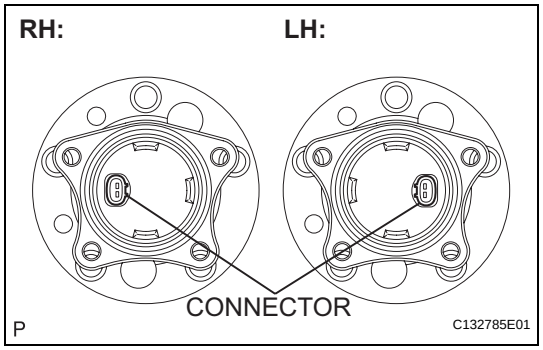

INSTALLATION

1. **INSTALL SKID CONTROL SENSOR**
   (a) Clean the contact surface between the axle hub and a new skid control sensor.
   NOTICE:
   Prevent foreign matter from attaching to the sensor rotor.
   (b) Place the skid control sensor on the axle hub so that the connector is positioned as shown in the illustration.

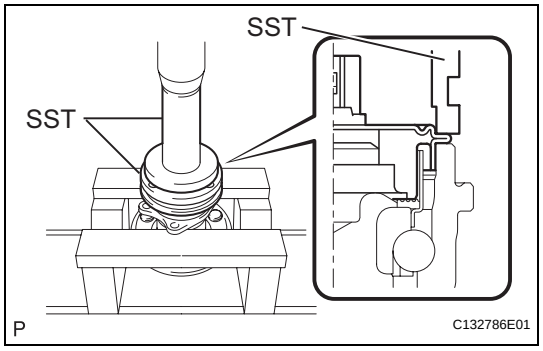

   (c) Using SST, a press, 2 V-blocks, and 2 steel plates, install the skid control sensor to the axle hub.
   SST 09309-36010, 09213-58013
   NOTICE:
   - **Keep the sensor away from magnets.**
   - **Do not use a hammer on the skid control sensor.**
   - **Check that there is no foreign matter such as iron chips on the detecting portion of the skid control sensor.**
   - **Slowly press the skid control sensor straight.**
2. **INSTALL REAR AXLE HUB AND BEARING ASSEMBLY WITH SKID CONTROL SENSOR (See page AH-16)**
3. **INSPECT REAR AXLE HUB BEARING LOOSENESS (See page AH-15)**
4. **INSPECT REAR AXLE HUB RUNOUT (See page AH-15)**
5. **INSTALL REAR DISC (See page BR-63)**
6. **INSTALL REAR DISC BRAKE CALIPER ASSEMBLY (See page AH-20)**

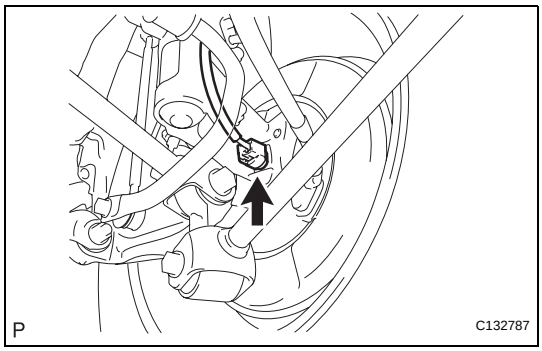

7. CONNECT SKID CONTROL SENSOR WIRE

(a) Connect the connector to the skid control sensor.

8. INSTALL REAR WHEEL

Torque: 103 N*m (1,050 kgf*cm, 76 ft.*lbf)

9. INSPECT AND ADJUST REAR WHEEL ALIGNMENT

HINT:

(See page SP-13)

10. CHECK SPEED SENSOR SIGNAL

HINT:

- for BOSCH without VSC (See page BC-11)
- for BOSCH with VSC (See page BC-290)
- for ADVICS (See page BC-123)

YAW RATE AND ACCELERATION SENSOR (w/ VSC)

COMPONENTS

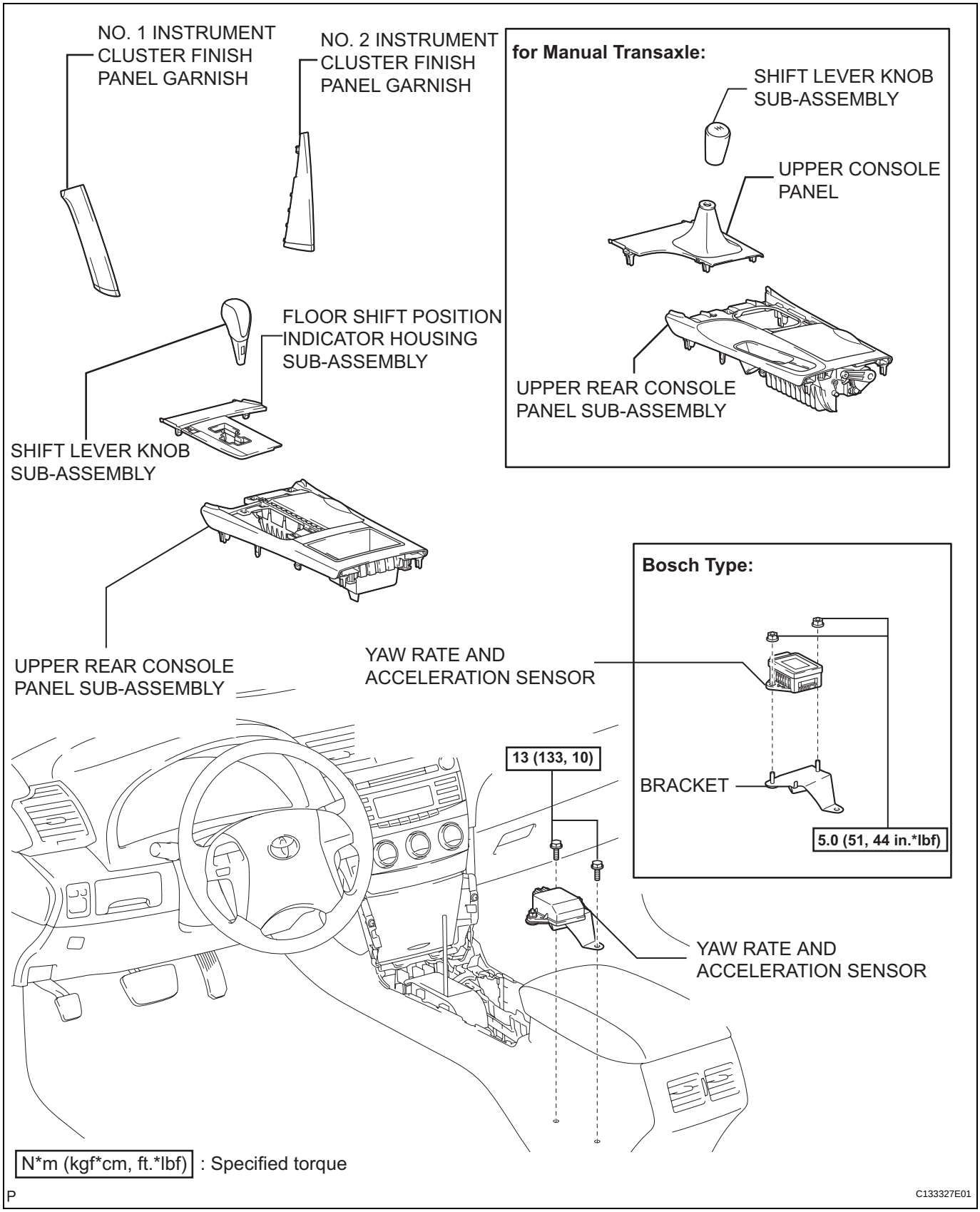

BC

REMOVAL

1. **REMOVE SHIFT LEVER KNOB SUB-ASSEMBLY (for Automatic Transaxle) (See page IP-24)**
2. **REMOVE SHIFT LEVER KNOB SUB-ASSEMBLY (for Manual Transaxle) (See page IP-24)**
3. **REMOVE NO. 1 INSTRUMENT CLUSTER FINISH PANEL GARNISH (See page IP-24)**
4. **REMOVE NO. 2 INSTRUMENT CLUSTER FINISH PANEL GARNISH (See page IP-25)**
5. **REMOVE FLOOR SHIFT POSITION INDICATOR HOUSING SUB-ASSEMBLY (for Automatic Transaxle) (See page IP-25)**
6. **REMOVE UPPER CONSOLE PANEL (for Manual Transaxle) (See page IP-25)**
7. **REMOVE UPPER REAR CONSOLE PANEL SUB-ASSEMBLY (for Manual Transaxle) (See page IP-26)**
8. **REMOVE UPPER REAR CONSOLE PANEL SUB-ASSEMBLY (for Automatic Transaxle) (See page IP-26)**
9. **REMOVE YAW RATE AND ACCELERATION SENSOR**
   (a) Disconnect the yaw rate sensor connector.
   (b) Remove the 2 bolts and yaw rate sensor.
   NOTICE:
   Do not remove the sensor from the bracket.

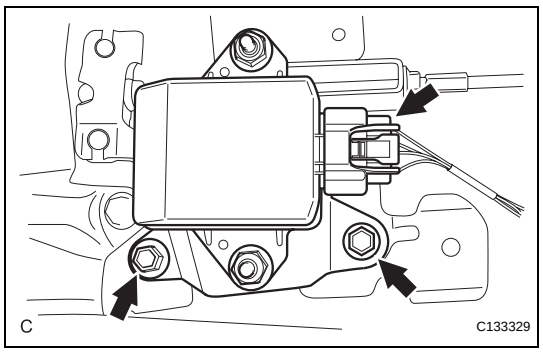

10. **REMOVE YAW RATE AND ACCELERATION SENSOR (for BOSCH Made)**
    (a) Remove the 2 nuts and yaw rate sensor from the bracket.

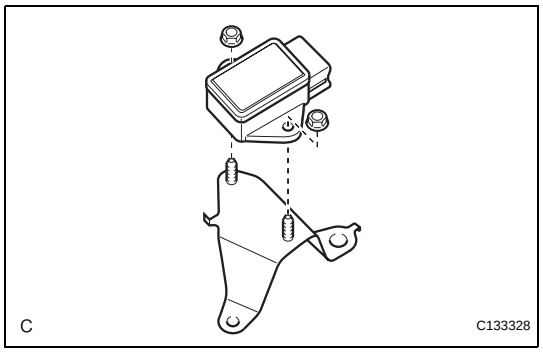

BC

INSPECTION

1. INSPECT YAW RATE AND ACCELERATION SENSOR

(a) Inspect the yaw rate sensor. If any of the following occurs, replace the yaw rate sensor with a new one:
- The surface of the yaw rate sensor is cracked, dented, or chipped off.
- The connector is scratched, cracked, or damaged.
- The yaw rate sensor has been dropped.

INSTALLATION

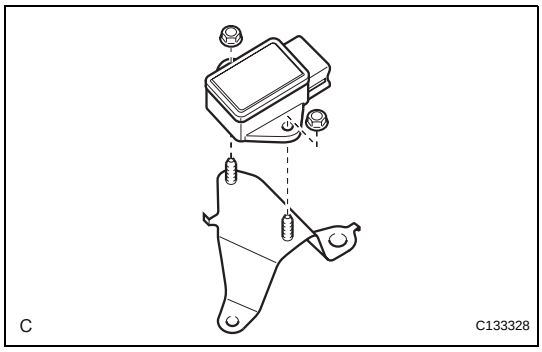

1. INSTALL YAW RATE AND ACCELERATION SENSOR (for BOSCH Made)

(a) Install the yaw rate and acceleration sensor to the bracket with the 2 nuts.
Torque: 5.0 N*m (51 kgf*cm, 44 in.*lbf)

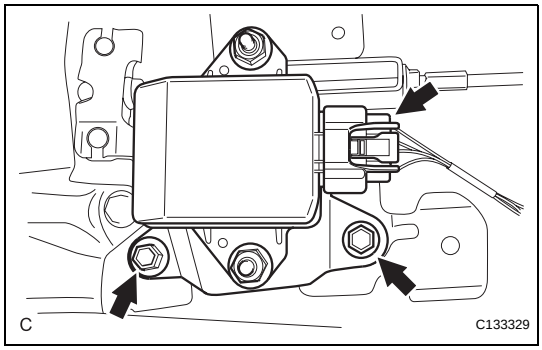

2. INSTALL YAW RATE AND ACCELERATION SENSOR

(a) Install the yaw rate sensor and acceleration with the 2 bolts.
NOTICE:
- **Do not damage the yaw rate and acceleration sensor.**
- **Make sure that the yaw rate and acceleration sensor is installed securely.**

Torque: 13 N*m (133 kgf*cm, 10 ft.*lbf)

(b) Connect the yaw rate and acceleration sensor connector.

3. INSTALL UPPER REAR CONSOLE PANEL SUB-ASSEMBLY (for Automatic Transaxle) (See page IP-53)

4. INSTALL UPPER REAR CONSOLE PANEL SUB-ASSEMBLY (for Manual Transaxle) (See page IP-53)

5. INSTALL UPPER CONSOLE PANEL (for Manual Transaxle) (See page IP-54)

6. INSTALL FLOOR SHIFT POSITION INDICATOR HOUSING SUB-ASSEMBLY (See page IP-53)

7. INSTALL NO. 2 INSTRUMENT CLUSTER FINISH PANEL GARNISH (See page IP-54)

8. INSTALL NO. 1 INSTRUMENT CLUSTER FINISH PANEL GARNISH (See page IP-55)

9. INSTALL SHIFT LEVER KNOB SUB-ASSEMBLY (for Manual Transaxle) (See page IP-55)

10. INSTALL SHIFT LEVER KNOB SUB-ASSEMBLY (for Automatic Transaxle) (See page IP-55)

11. PERFORM YAW RATE SENSOR ZERO POINT CALIBRATION

HINT:

- for BOSCH (See page BC-278)
- for ADVICS (See page BC-119)

12. INSPECT SENSOR SIGNAL

HINT:

- for BOSCH (See page BC-290)
- for ADVICS (See page BC-123)

STEERING ANGLE SENSOR (w/ VSC)

COMPONENTS

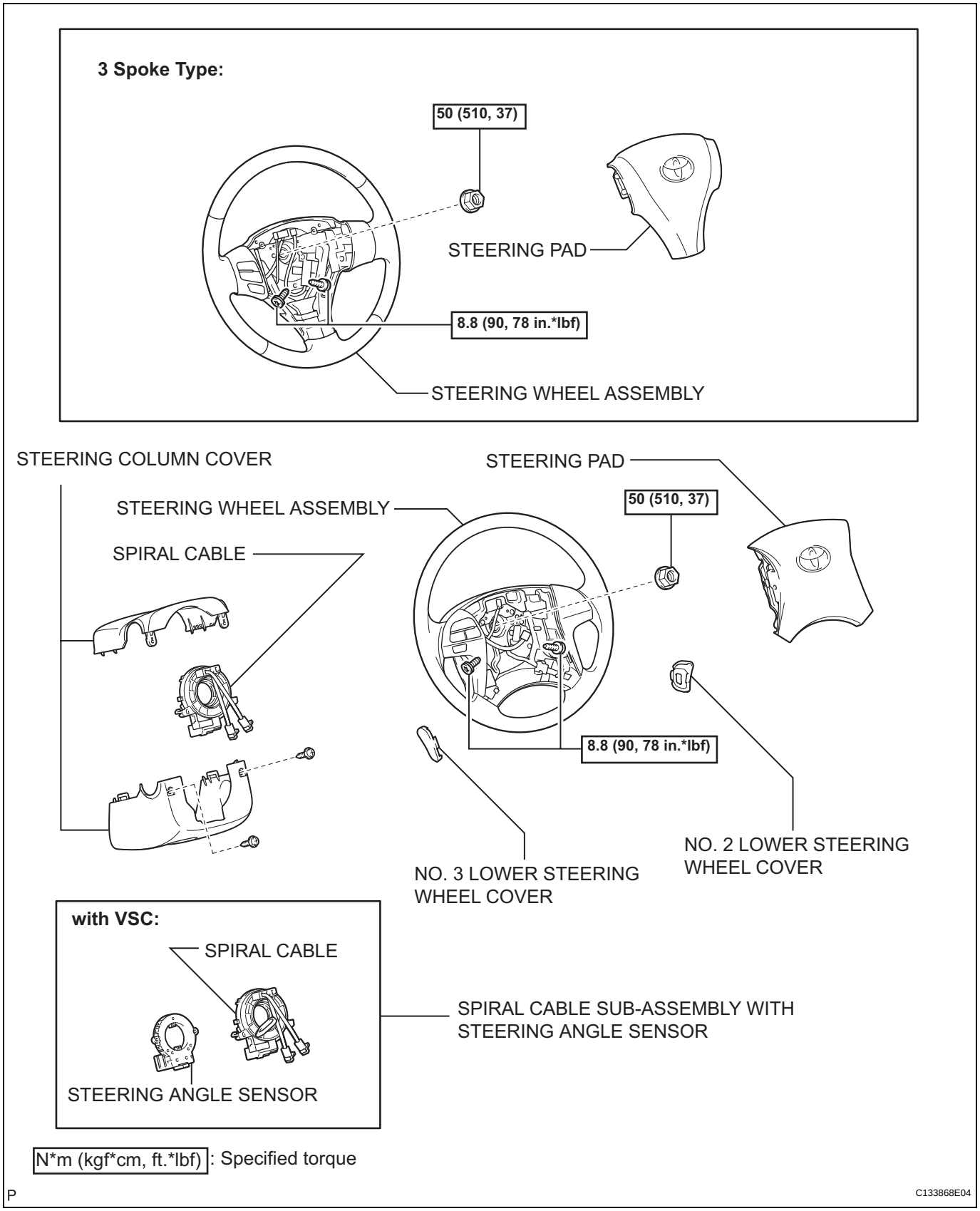

BC

BC

REMOVAL

1. **PRECAUTION**
   CAUTION:
   Be sure to read "PRECAUTION" thoroughly before servicing (See page RS-1).
2. **DISCONNECT CABLE FROM NEGATIVE BATTERY TERMINAL**
   CAUTION:
   Wait for 90 seconds after disconnecting the cable to prevent airbag deployment.
3. **PLACE FRONT WHEELS FACING STRAIGHT AHEAD**
   NOTICE:
   When reconnecting the cable to the negative battery terminal after installing the steering sensor, check that the front tires and steering wheel are kept aligned straight ahead before and after connecting the cable to the negative battery terminal.
4. **REMOVE NO. 2 STEERING WHEEL COVER LOWER (See page RS-349)**
5. **REMOVE NO. 3 STEERING WHEEL COVER LOWER (See page RS-349)**
6. **REMOVE STEERING PAD (See page RS-350)**
7. **REMOVE STEERING WHEEL ASSEMBLY (See page SR-38)**
8. **REMOVE STEERING COLUMN COVER (See page SR-39)**
9. **REMOVE SPIRAL CABLE SUB-ASSEMBLY WITH STEERING ANGLE SENSOR (See page RS-364)**
10. **REMOVE STEERING ANGLE SENSOR**
    (a) Disengage the claws and remove the steering angle sensor from the spiral cable.

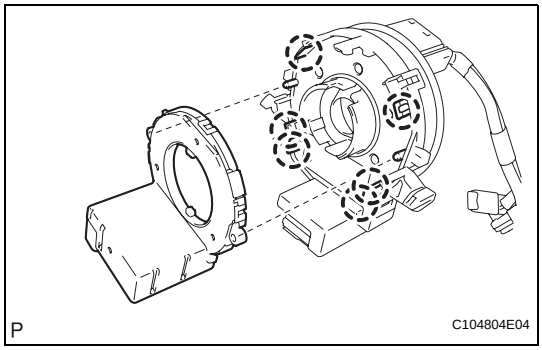

INSPECTION

1. INSPECT STEERING ANGLE SENSOR

(a) Inspect the steering angle sensor. If any of the following occurs, replace the steering angle sensor with a new one:
- The surface of the steering angle sensor is cracked, dented, or chipped off.
- The connector is scratched, cracked, or damaged.
- The steering angle sensor has been dropped.

INSTALLATION

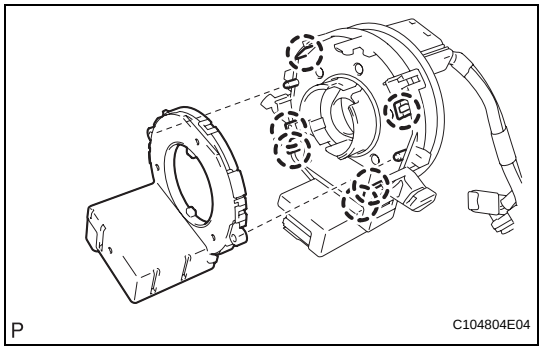

1. INSTALL STEERING ANGLE SENSOR

(a) Align the locating pins, engage the claws, and install the steering angle sensor to the spiral cable sub-assembly.

2. INSTALL SPIRAL CABLE SUB-ASSEMBLY WITH STEERING ANGLE SENSOR (See page RS-366)

3. INSTALL STEERING COLUMN COVER (See page SR-50)

4. ADJUST SPIRAL CABLE (See page RS-367)

5. INSTALL STEERING WHEEL ASSEMBLY (See page SR-51)

6. INSPECT STEERING WHEEL CENTER POINT (See page SR-47)

7. INSTALL STEERING PAD (See page RS-350)

8. INSTALL NO. 2 STEERING WHEEL COVER LOWER (See page RS-352)

9. INSTALL NO. 3 STEERING WHEEL COVER LOWER (See page RS-351)

10. CONNECT CABLE TO NEGATIVE BATTERY TERMINAL

11. INSPECT STEERING PAD (See page RS-347)

12. INSPECT SRS WARNING LIGHT

HINT:
(See page RS-32)

BC

SKID CONTROL BUZZER (w/ VSC)

COMPONENTS

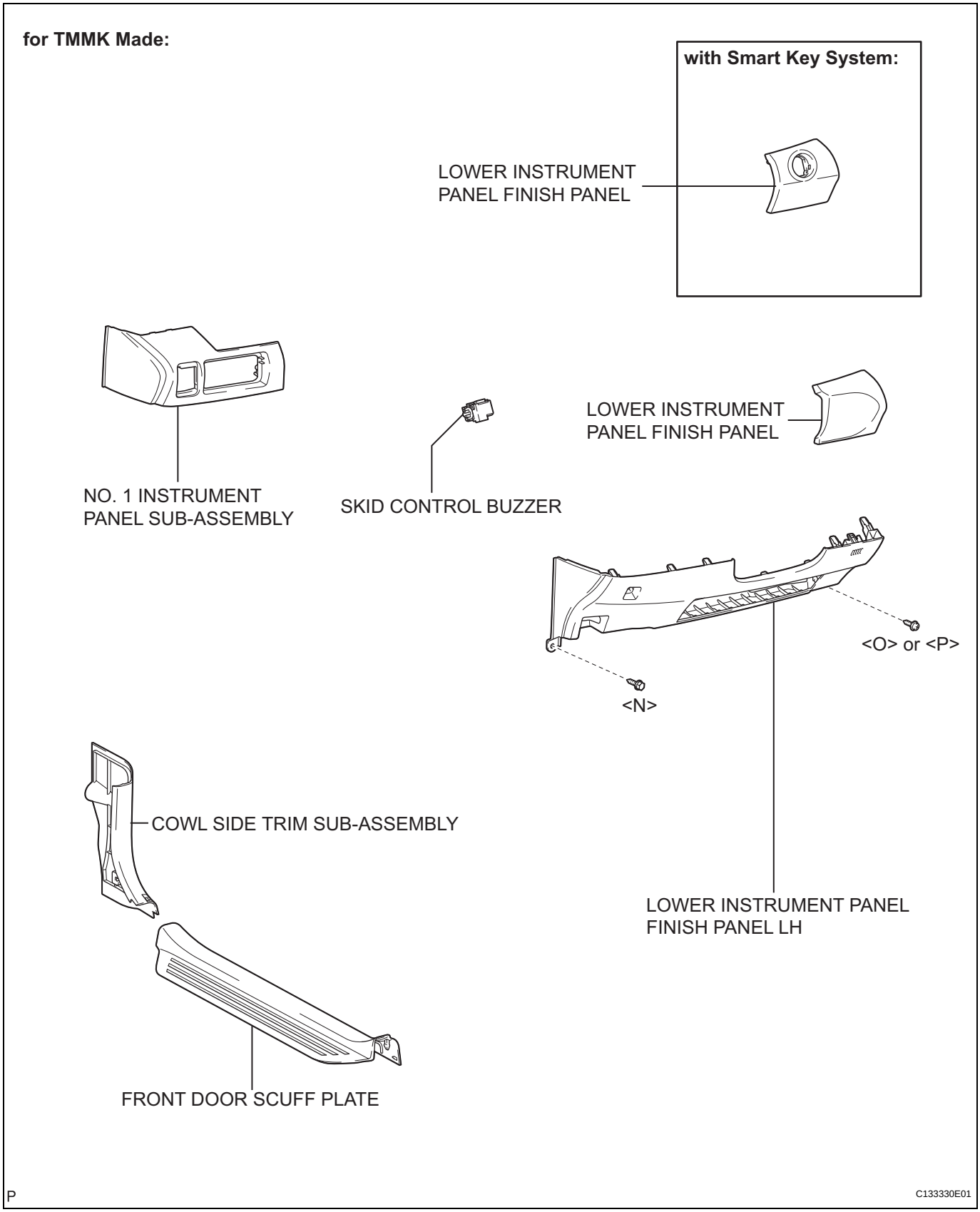

BC

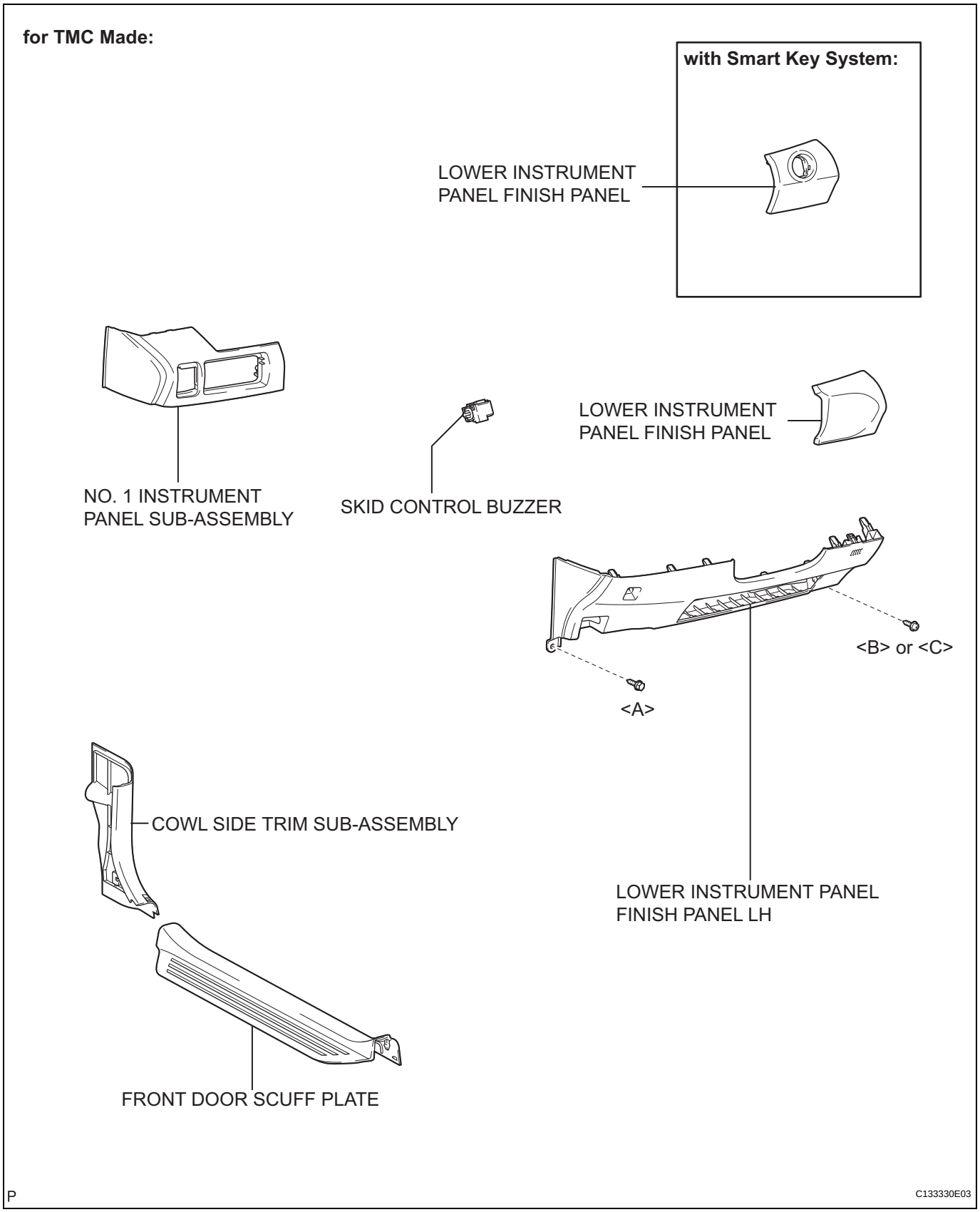
for TMC Made:
with Smart Key System:
LOWER INSTRUMENT PANEL FINISH PANEL
NO. 1 INSTRUMENT PANEL SUB-ASSEMBLY
SKID CONTROL BUZZER
LOWER INSTRUMENT PANEL FINISH PANEL
<B> or <C>
<A>
COWL SIDE TRIM SUB-ASSEMBLY
LOWER INSTRUMENT PANEL FINISH PANEL LH
FRONT DOOR SCUFF PLATE
P
C133330E03

BC

REMOVAL

1. **PRECAUTION (See page IP-20)**
2. **REMOVE FRONT DOOR SCUFF PLATE (See page IR-24)**
3. **REMOVE COWL SIDE TRIM SUB-ASSEMBLY (See page IR-25)**
4. **REMOVE LOWER INSTRUMENT PANEL FINISH PANEL LH (for TMC Made) (See page IP-20)**
5. **REMOVE LOWER INSTRUMENT PANEL FINISH PANEL LH (for TMMK Made) (See page IP-21)**
6. **REMOVE NO. 1 INSTRUMENT PANEL SUB-ASSEMBLY (See page IP-22)**
7. **REMOVE LOWER INSTRUMENT PANEL FINISH PANEL (w/o Smart Key System) (See page IP-22)**
8. **REMOVE LOWER INSTRUMENT PANEL FINISH PANEL (w/ Smart Key System) (See page IP-22)**
9. **REMOVE SKID CONTROL BUZZER**
   (a) Disconnect the skid control buzzer connector.
   (b) Remove the clip and skid control buzzer assembly.

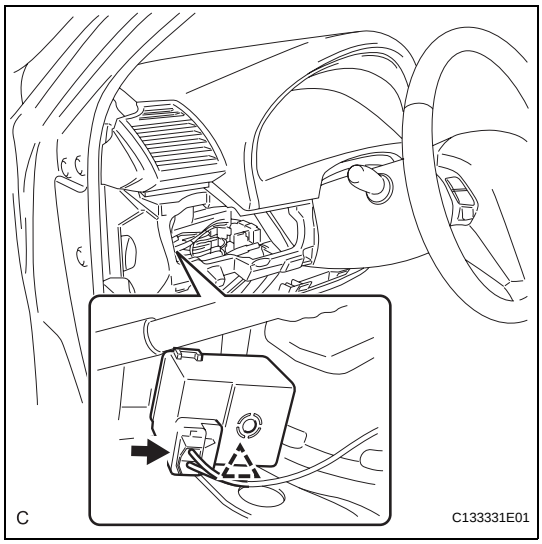

INSPECTION

1. **INSPECT SKID CONTROL BUZZER**
   (a) Apply battery negative voltage to terminal 1, and battery positive voltage to terminal 2 of the skid control buzzer, and then check that the buzzer sounds.
   OK:
   The skid control buzzer sounds.
   If the skid control buzzer does not sound, replace the skid control buzzer.

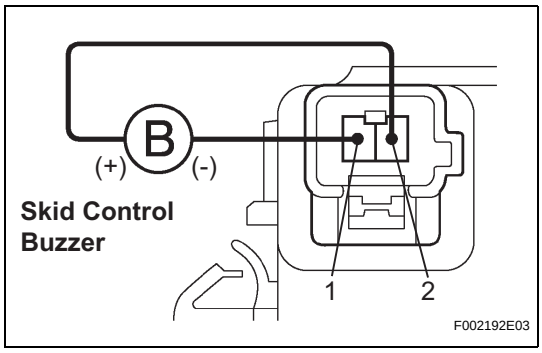

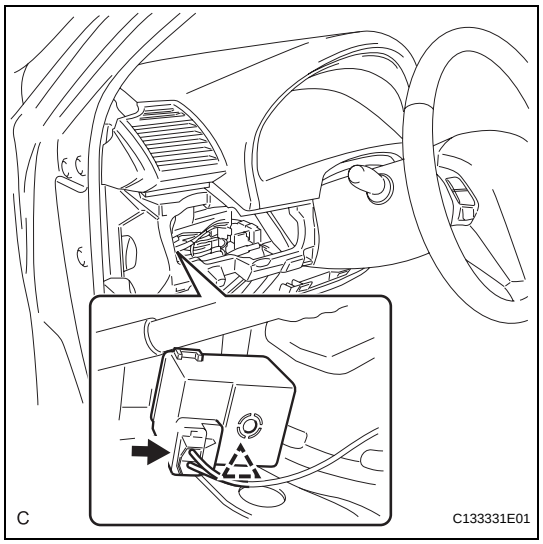

INSTALLATION

1. **INSTALL SKID CONTROL BUZZER**
   (a) Attach the claw and install the skid control buzzer.
   (b) Connect the skid control buzzer assembly connector.
2. **INSTALL NO. 1 INSTRUMENT PANEL SUB-ASSEMBLY (See page IP-57)**
3. **INSTALL LOWER INSTRUMENT PANEL FINISH PANEL (w/ Smart Key System) (See page IP-57)**
4. **INSTALL LOWER INSTRUMENT PANEL FINISH PANEL (w/o Smart Key System) (See page IP-57)**
5. **INSTALL LOWER INSTRUMENT PANEL FINISH PANEL LH (for TMC Made) (See page IP-58)**
6. **INSTALL LOWER INSTRUMENT PANEL FINISH PANEL LH (for TMMK Made) (See page IP-59)**
7. **INSTALL COWL SIDE TRIM SUB-ASSEMBLY (See page IR-54)**
8. **INSTALL FRONT DOOR SCUFF PLATE (See page IR-54)**

ABS MOTOR RELAY (w/ VSC)

ON-VEHICLE INSPECTION

1. INSPECT VSC NO. 1 (FAIL SAFE) RELAY

(a) Remove the VSC NO. 1 (fail safe) relay.

(b) Measure the resistance according to the value(s) in the table below.

Standard resistance

Tester Connection	Condition	Specified Condition
3 - 5	Always	10 kΩ or higher
3 - 5	Apply B+ between terminals 1 and 2	Below 1 Ω

If the value is not as specified, replace the VSC NO. 1 (fail safe) relay.

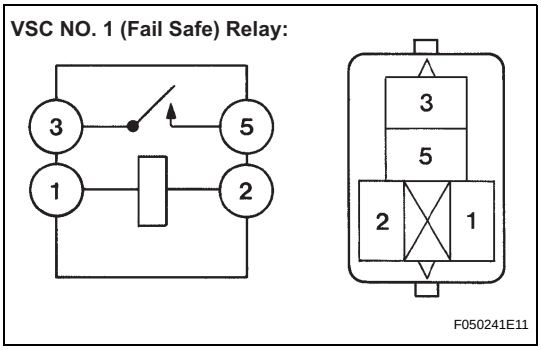

2. INSPECT VSC NO. 2 RELAY

(a) Remove the VSC NO. 2 relay.

(b) Measure the resistance according to the value(s) in the table below.

Standard resistance

Tester Connection	Condition	Specified Condition
3 - 5	Always	10 kΩ or higher
3 - 5	Apply B+ between terminals 1 and 2	Below 1 Ω

If the value is not as specified, replace the VSC NO. 2 relay.

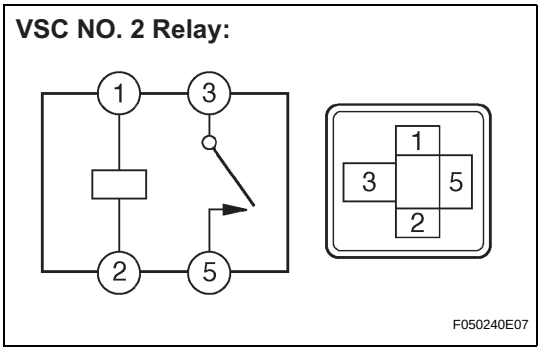

BC