2004 ACCESSORIES & EQUIPMENT

Power Heated Seats - TSX

SEATS

COMPONENT LOCATION INDEX

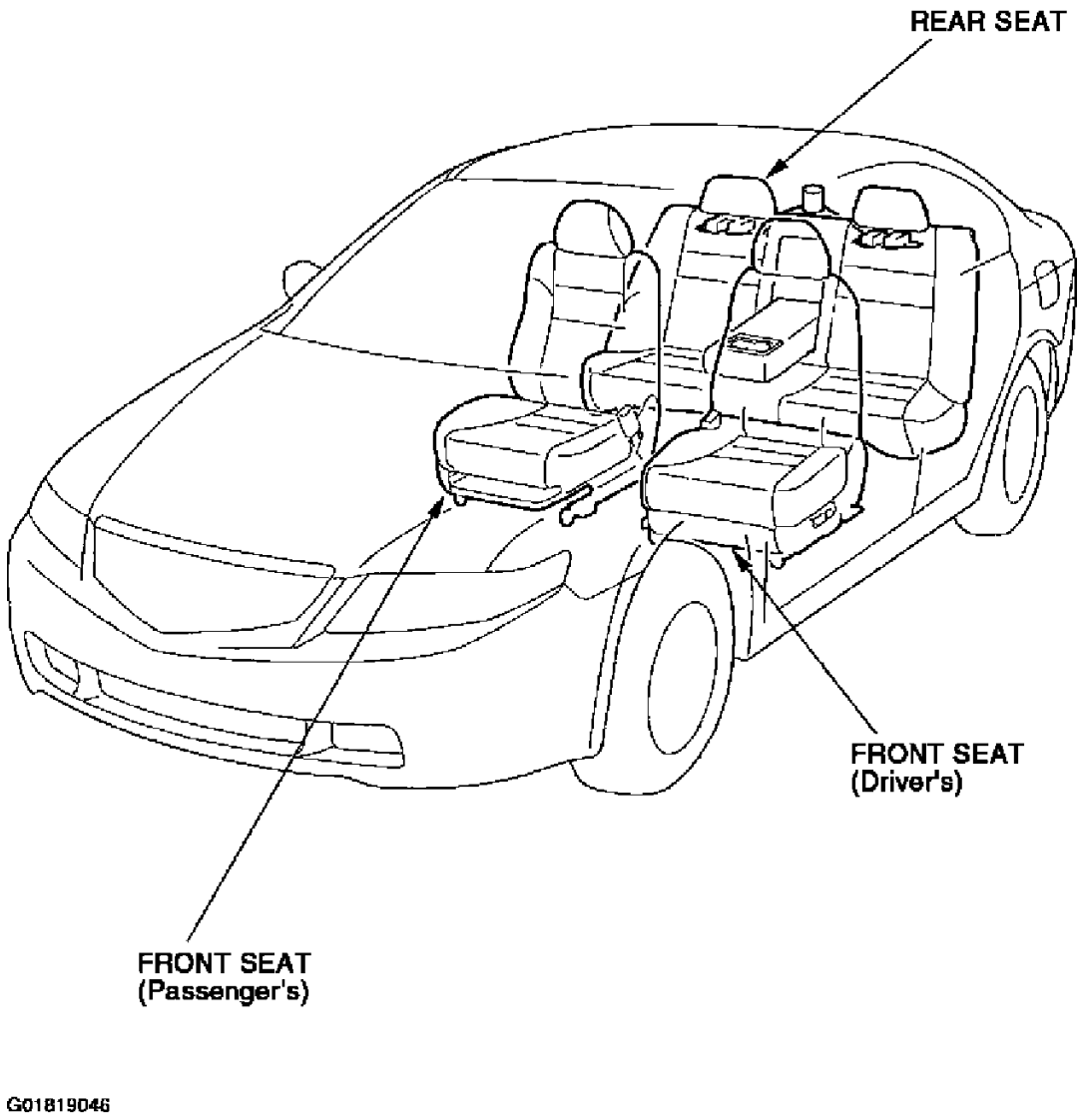

Fig. 1: Locating Seat Components

FRONT SEAT REMOVAL/INSTALLATION

SRS components are located in this area. Review the SRS component locations, and the precautions and

cardiagn.com

procedures in the SRS section before performing repairs or service. See **AIR BAG RESTRAINT SYSTEMS** .

NOTE:

- **When prying with a flat-tip screwdriver, wrap it with protective tape to prevent damage.**
- **Take care not to scratch the body or tear the seat covers.**
- **Put on gloves to protect your hands.**

1. Make sure you have the anti-theft codes for the radio and the navigation system, then write down the frequencies for the preset buttons.
2. Adjust the steering column to the full till up, and the full telescopic in position.
3. Slide the seat all the way forward, then remove the seat track end covers (A) from the back of both seat tracks.

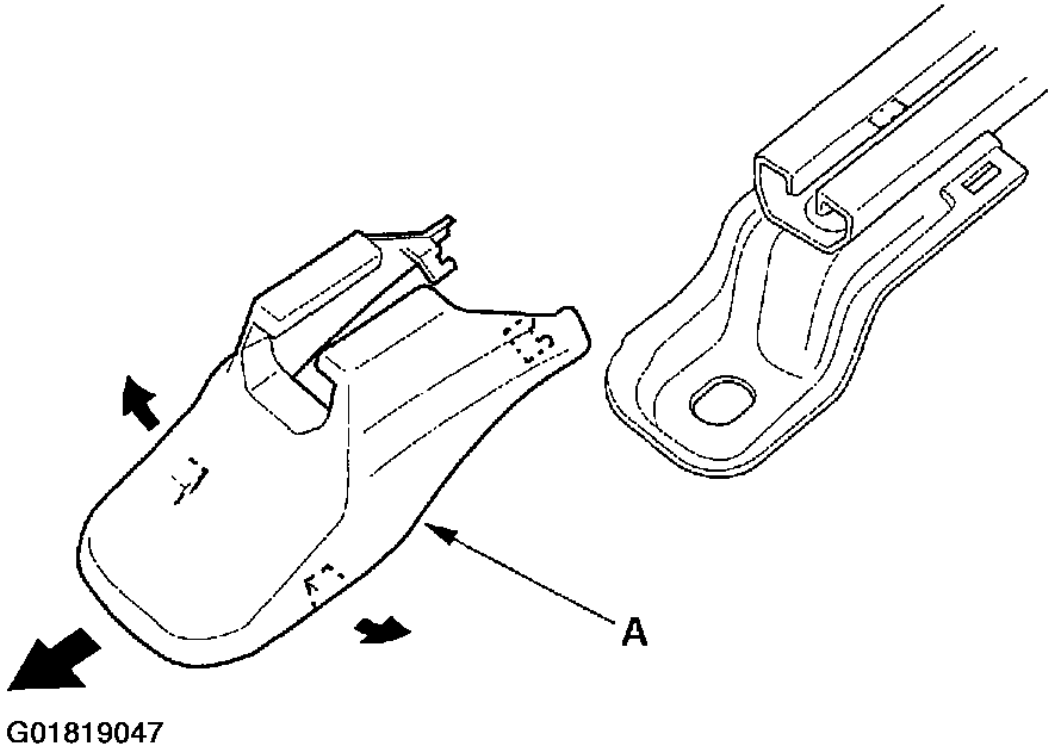

Fig. 2: Removing The Seat Track End Covers (Manual Seat)

cardiagn.com

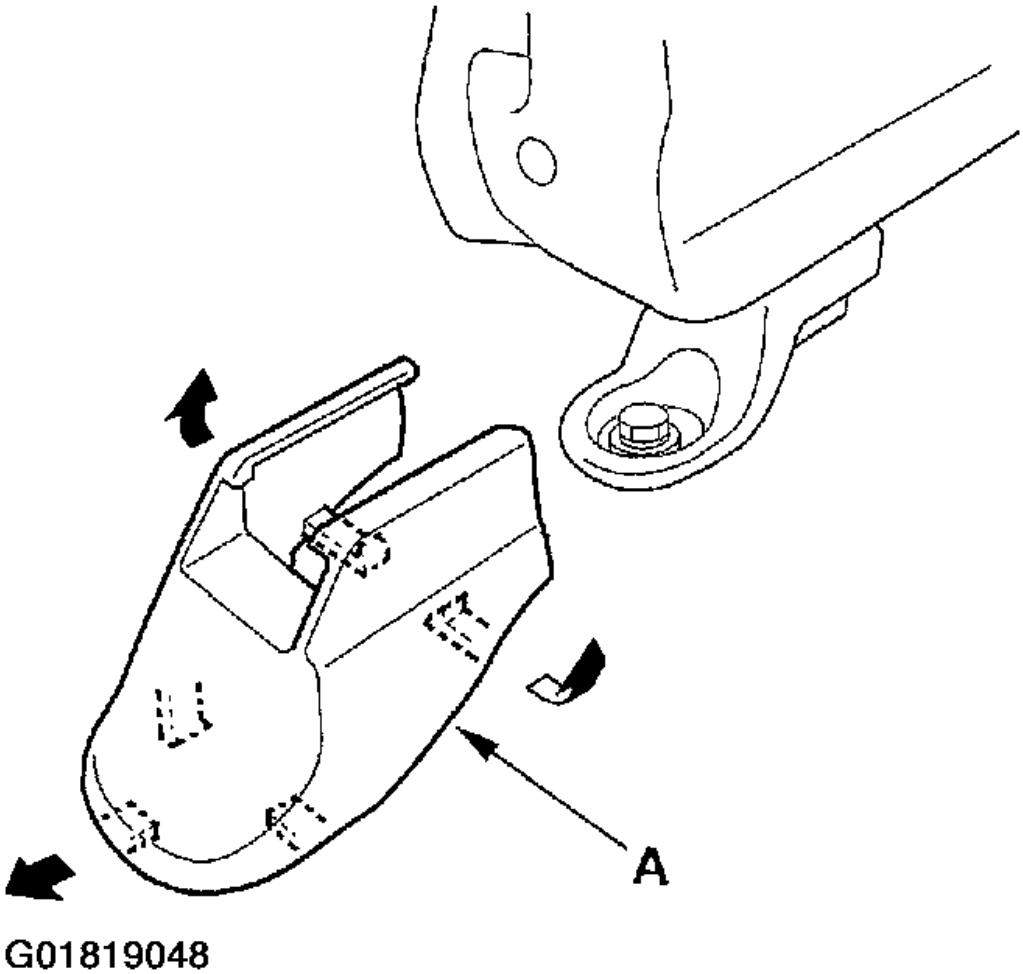

Fig. 3: Removing The Seat Track End Covers (8-Way Power Seat)

4. Slide the seat to the rear, about half way so you can access the seat mounting bolts. On the 8-way power seat, fully raise the seat.
5. Disconnect the negative battery cable, and wait at least 3 minutes before removing the seat.
6. Remove the bolts securing the front seat (A).

cardiagn.com

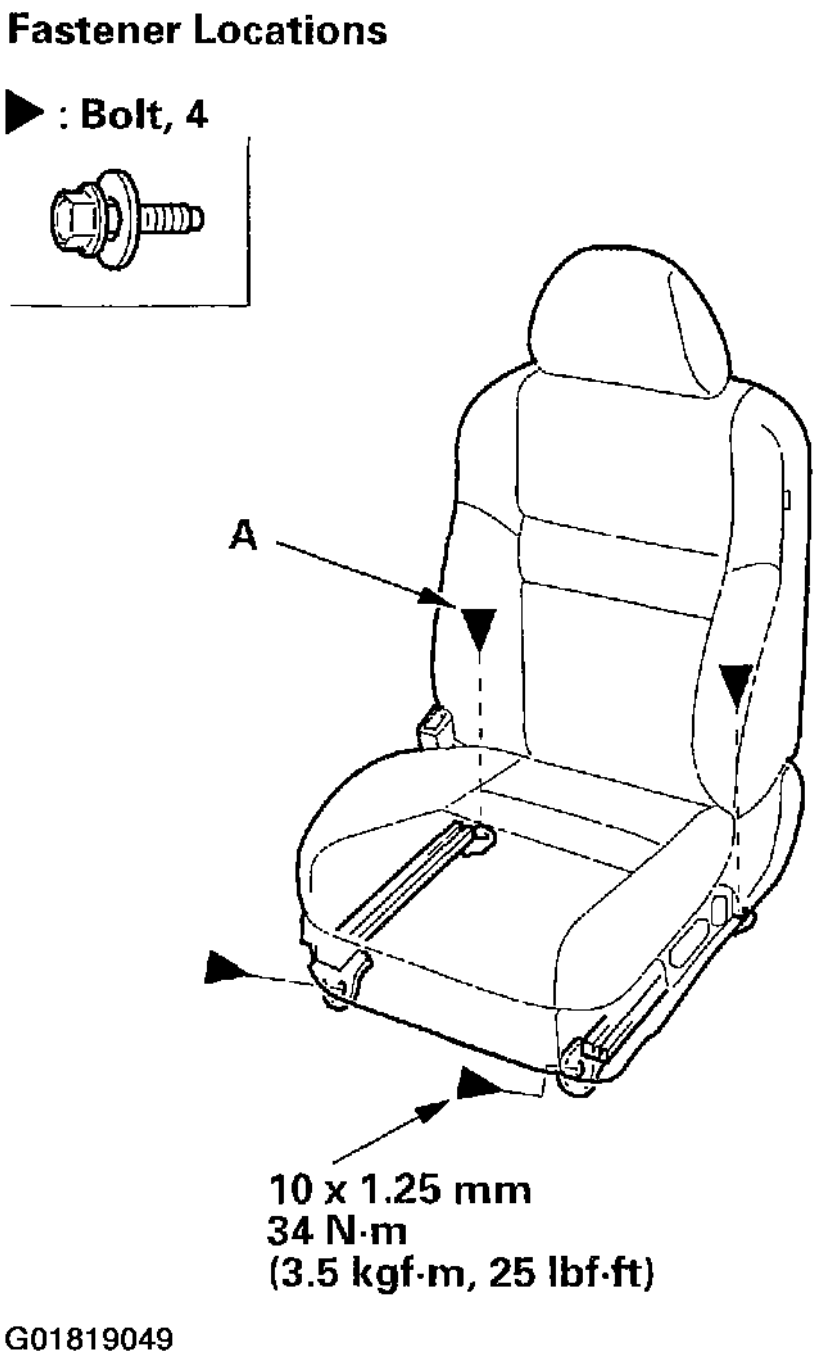

Fig. 4: Removing The Bolts Securing The Front Seat

7. Lift up the front seat, then detach the harness clip (A), and disconnect the seat belt switch connector (B) on the manual seat, the power seat harness connector (C) on the 8-way power seat, the seat heater connector (D) on the manual seat, the side airbag connector (E) on the 8-way power and manual seat, and

cardiagn.com

the OPDS unit connector (F) on the manual seat.

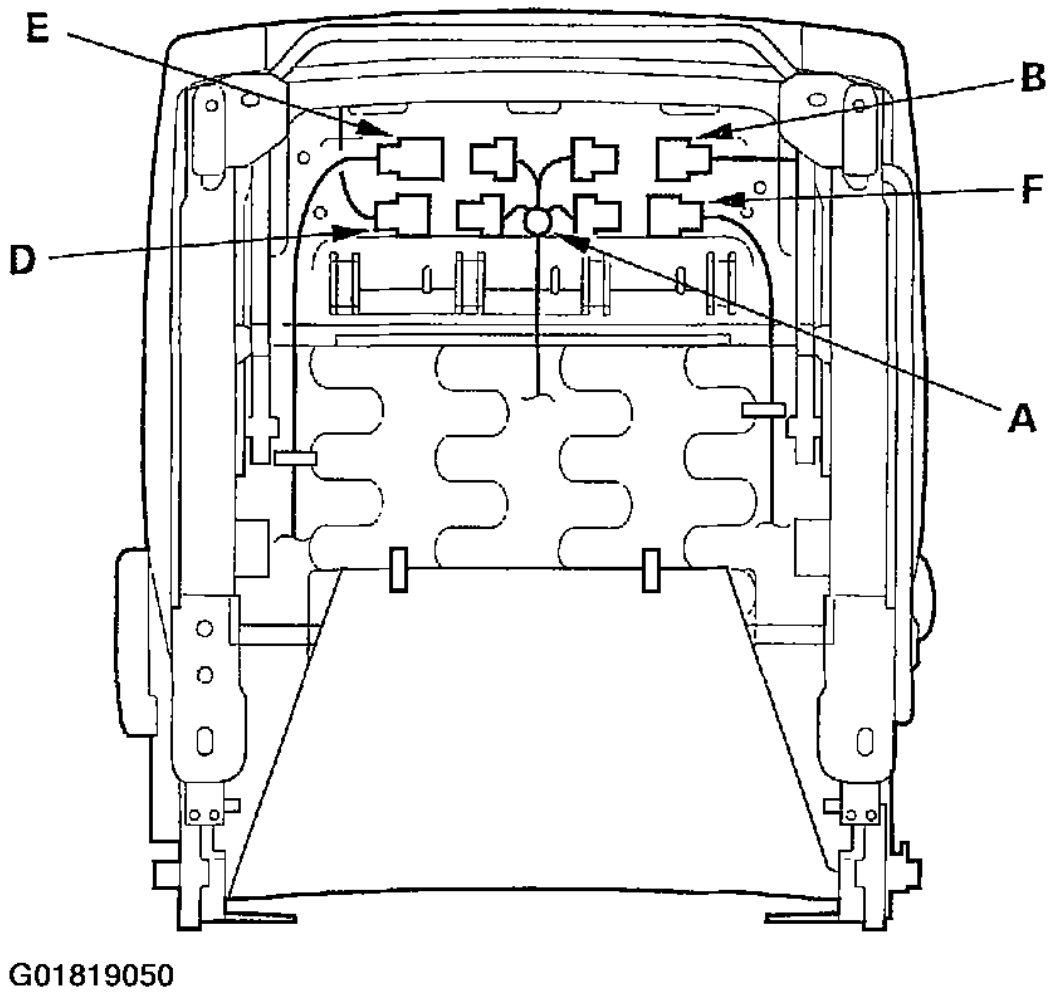

Fig. 5: Detaching The Harness Clip & Disconnecting The Seat Connectors (Manual Seat)

cardiagn.com

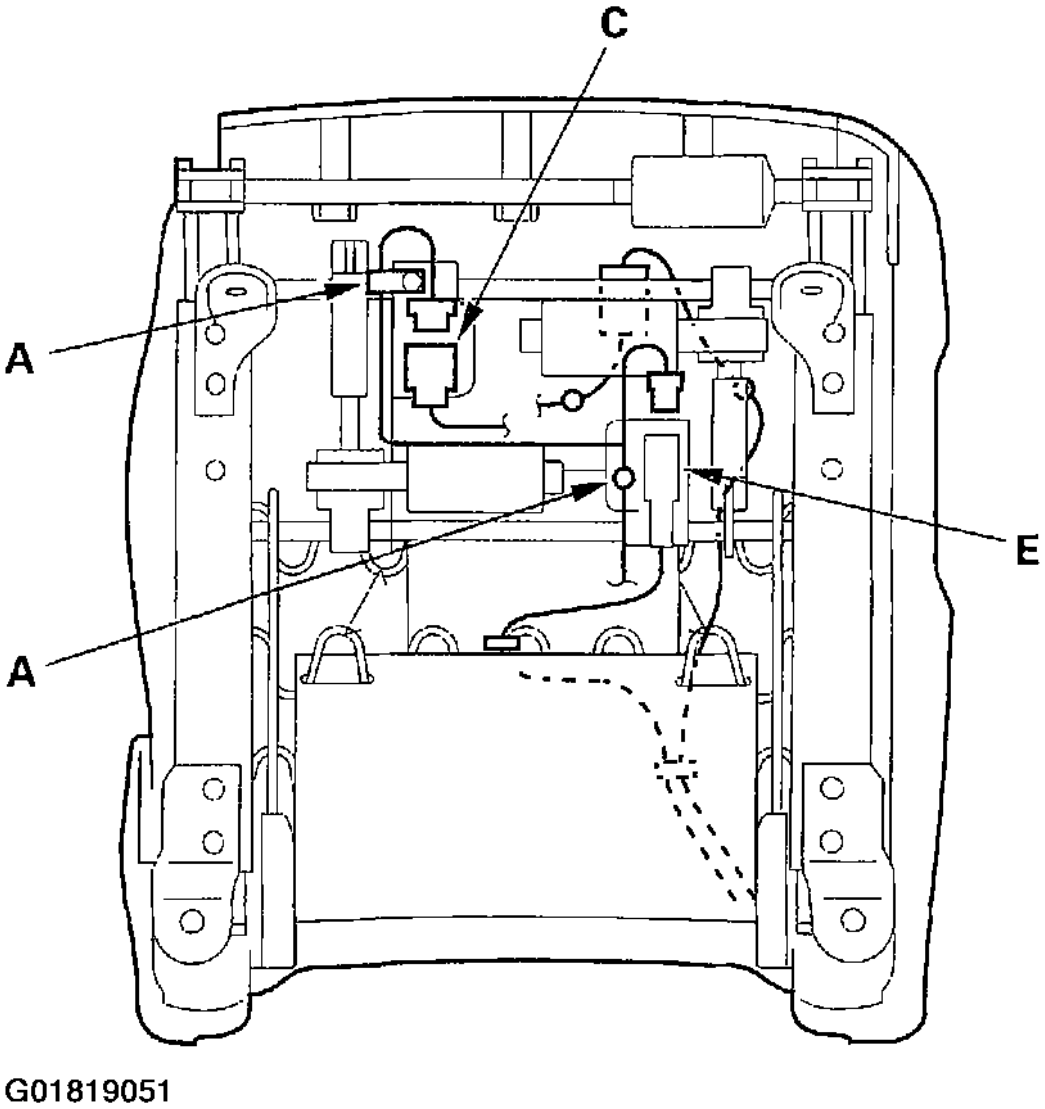

Fig. 6: Detaching The Harness Clip & Disconnecting The Seat Connectors (8-Way Power Seat)

8. With the help of an assistant, carefully remove the front seat through the front door opening.
9. Install the seat in the reverse order of removal, and note these items:
   - Apply liquid thread lock to the front seat mounting bolts before reinstallation.
   - Make sure each connector is plugged in properly.
   - Reconnect the negative cable to the battery.
   - Enter the anti-theft codes for the radio and navigation system, then enter the customer's radio station presets.
   - Reset the clock.

cardiagn.com

- Perform the power window control unit reset procedure (see **RESETTING THE POWER WINDOW**).

FRONT SEAT DISASSEMBLY/REASSEMBLY - MANUAL

SRS components are located in this area. Review the SRS component locations, and the precautions and procedures in the SRS section before performing repairs or service. See **AIR BAG RESTRAINT SYSTEMS** .

NOTE:

- **Take care not to tear the seams or damage the seat covers.**
- **Put on gloves to protect your hands.**
- **When prying with a flat-tip screwdriver, wrap it with protective tape to prevent damage.**
- **Apply multipurpose grease to the moving portion of the seat track.**
- **To prevent wrinkles in the seat cushion cover, stretch the material evenly over the pad.**

cardiagn.com

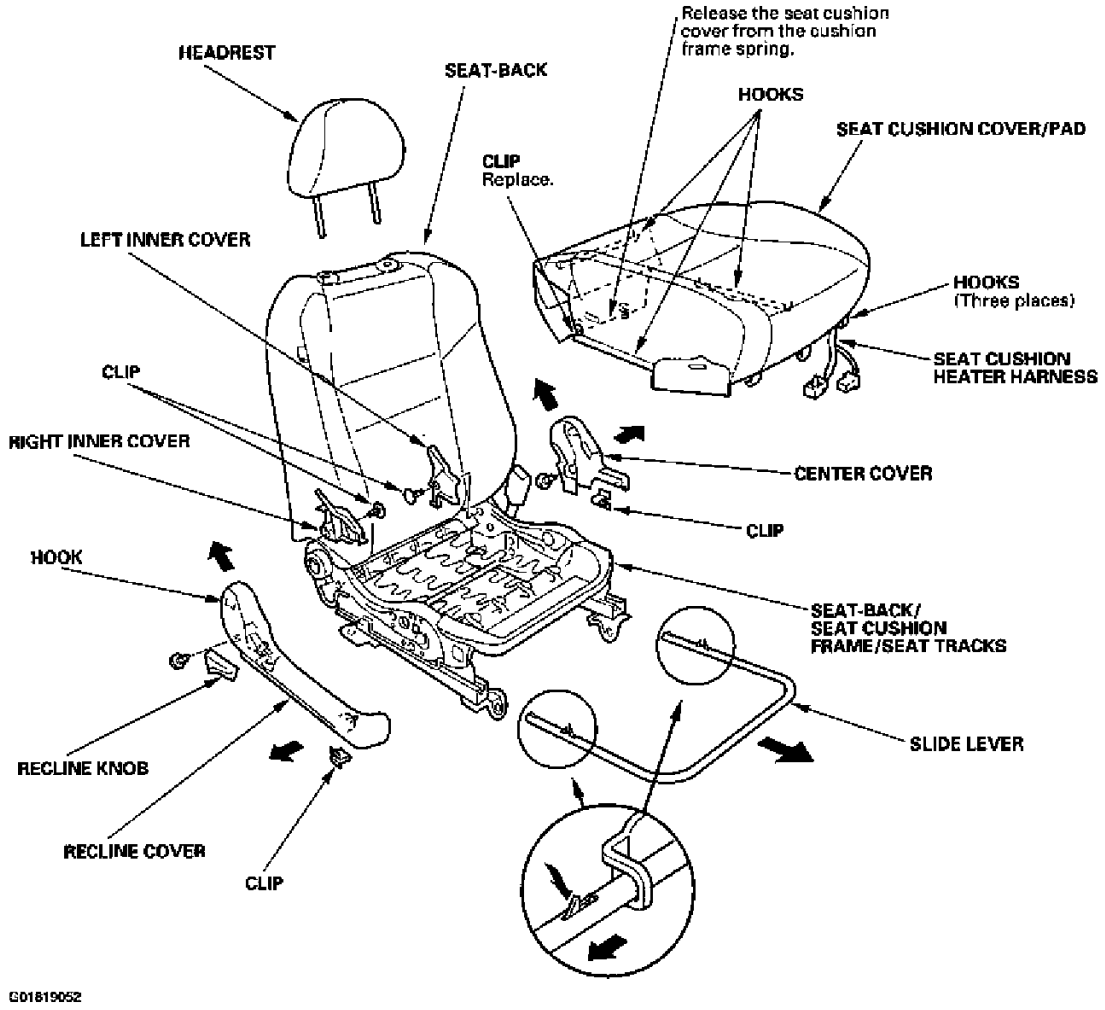

Fig. 7: Exploded View Of Front Seat (Manual)

FRONT SEAT DISASSEMBLY/REASSEMBLY - 8-WAY POWER

SRS components are located in this area. Review the SRS component locations, and the precautions and procedures in the SRS section before performing repairs or service. See **AIR BAG RESTRAINT SYSTEMS** .

NOTE:

- **Take care not to tear the seams or damage the seat covers.**
- **Put on gloves to protect your hands.**
- **When prying with a flat-tip screwdriver, wrap it with protective tape to prevent damage.**
- **Apply multipurpose grease to the moving portion of the seat track.**
- **To prevent wrinkles in the seat cushion cover, stretch the material evenly over the pad.**

cardiagn.com

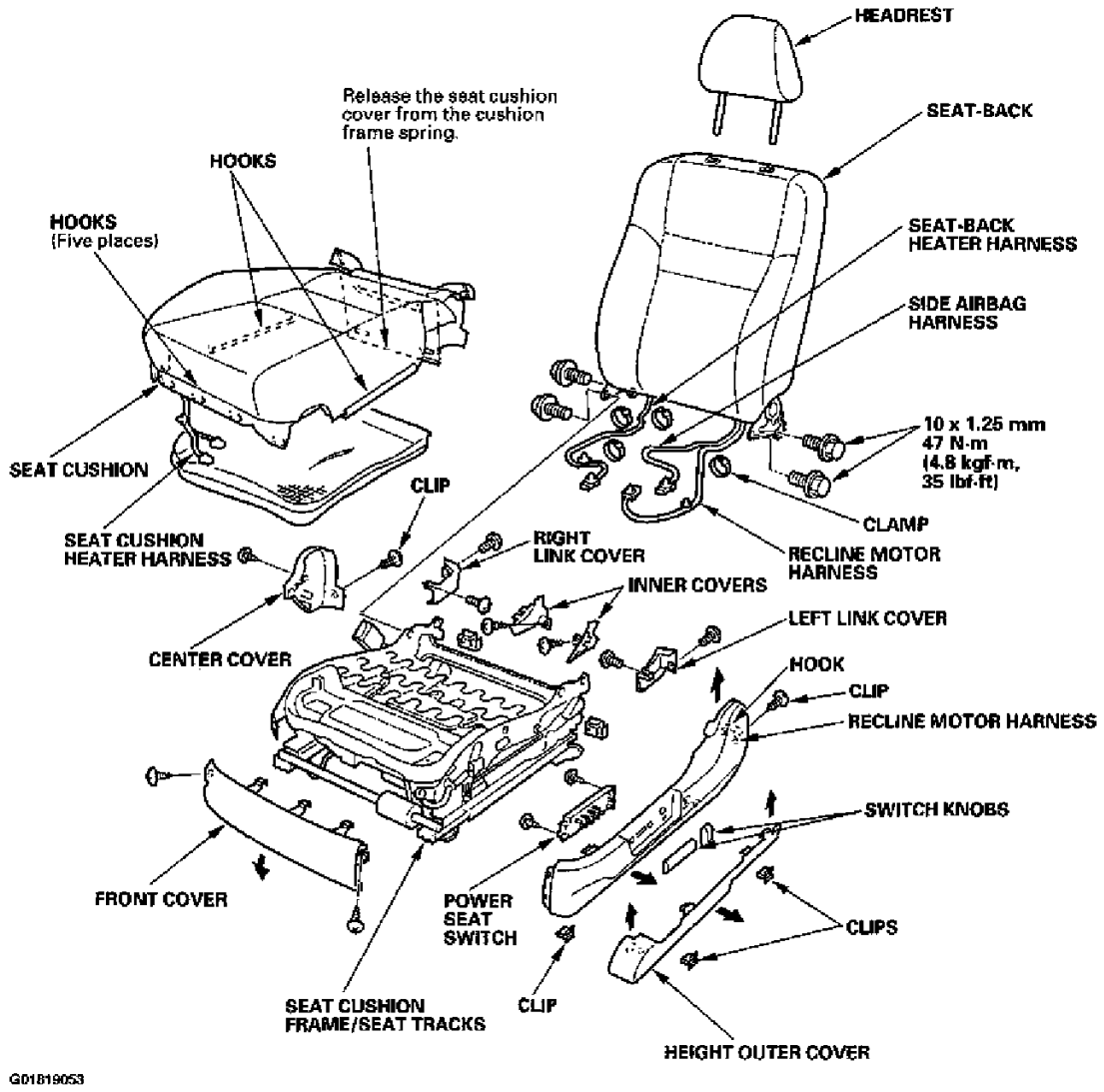

Fig. 8: Exploded View Of Front Seat (8-Way Power)

FRONT SEAT RECLINE MOTOR REPLACEMENT

8-Way Power Seat

SRS components are located in this area. Review the SRS component locations, and the precautions and procedures in the SRS section before performing repairs or service. See **AIR BAG RESTRAINT SYSTEMS** .

NOTE: Put on gloves to protect your hands.

1. Remove the front seat (see **FRONT SEAT REMOVAL/INSTALLATION**).
2. Remove the seat-back cover/pad from the seat-back frame (see **FRONT SEAT COVER REPLACEMENT**).

cardiagn.com

3. Remove the recline motor (A):
   a. Release the push nut (B) from the motor side end of the connecting rod (C).
   b. Gently tap on the motor side of the connecting rod to remove it from the recline motor and both recline adjusters (D).
   c. Remove the rod cover (E).
   d. Remove the bolt and clamp (F), then remove the recline motor.

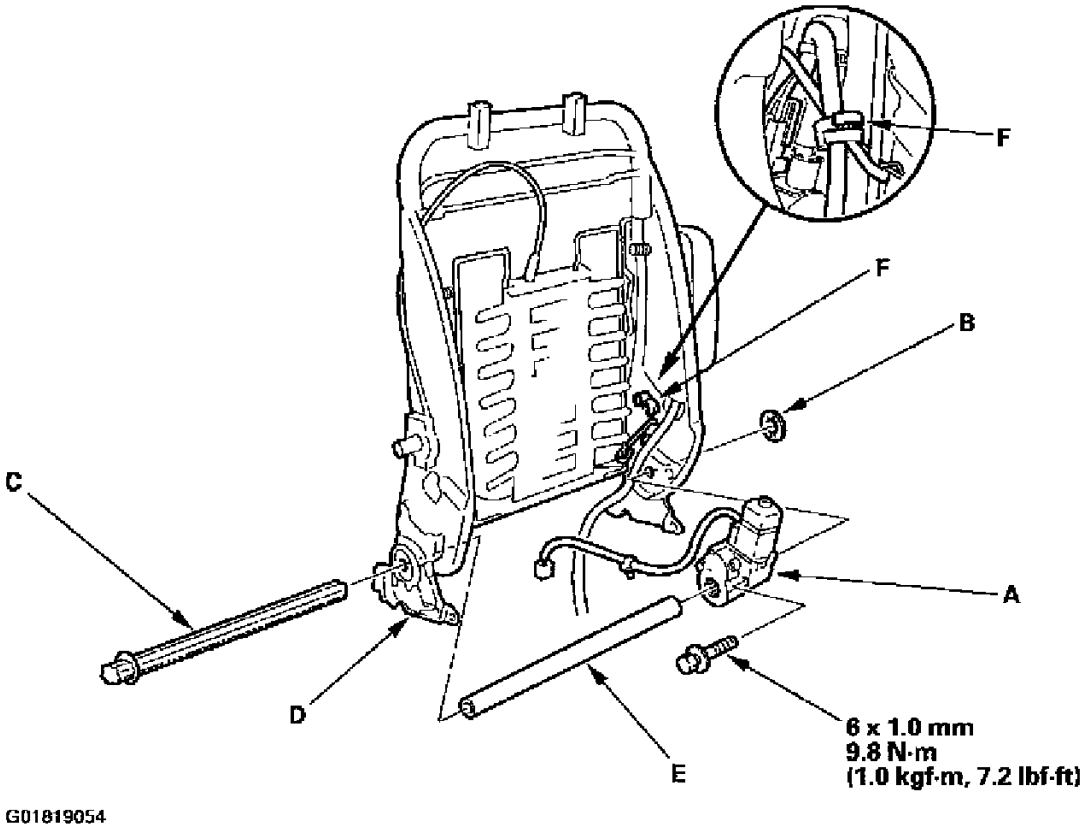

Fig. 9: Removing The Recline Motor

4. Install the motor in the reverse order of removal, and note these items:
   - Replace the push nut with a new one. Make sure the push nut is installed correctly.
   - Apply liquid thread lock to the motor mounting bolt before reinstallation.

FRONT SEAT LUMBER SUPPORT REPLACEMENT

8-Way Power Seat

SRS components are located in this area. Review the SRS component locations, and the precautions and procedures in the SRS section before performing repairs or service. See **AIR BAG RESTRAINT SYSTEMS** .

cardiagn.com

NOTE:

- **When prying with a flat-tip screwdriver, wrap it with protective tape to prevent damage.**
- **Take care not to bend the cable.**
- **Take care not to tear the seams or damage the seat covers.**
- **Put on gloves to protect your hands.**

1. Remove these items:
   a. Lumbar support knob (see step 5 of **FRONT SEAT COVER REPLACEMENT**)
   b. Back panel (see step 6 of **FRONT SEAT COVER REPLACEMENT**)
2. Release the hook strips on the inside of the seat-back (see step 8 of **FRONT SEAT COVER REPLACEMENT**)
3. Remove the screws securing the lumbar support actuator (A).

cardiagn.com

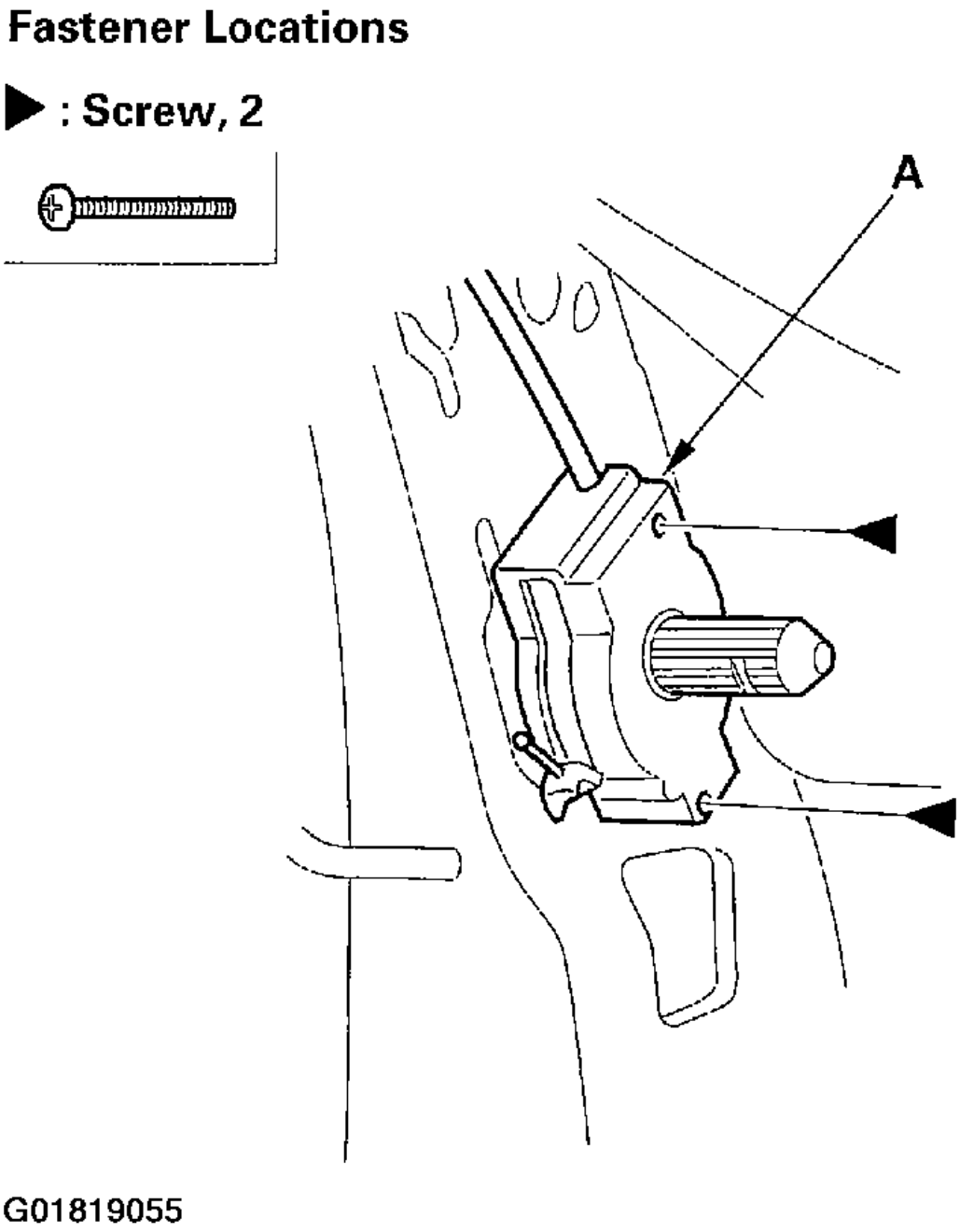

Fig. 10: Removing The Screws Securing The Lumbar Support Actuator

4. Release the hook of the yoke wire (A) from top of the basket (B) to loosen the lumbar support cable (C), then disconnect it.

cardiagn.com

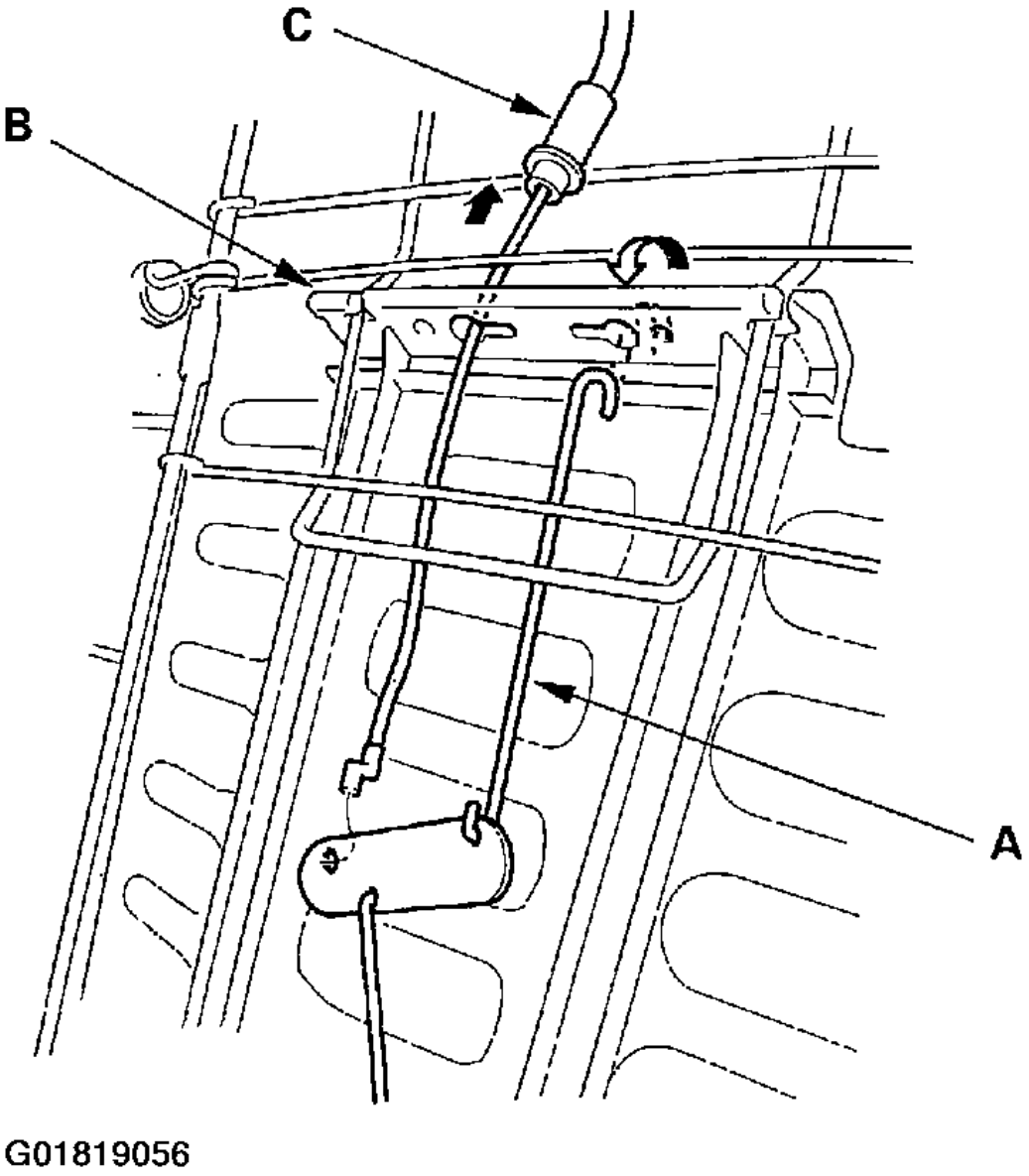

Fig. 11: Releasing The Hook Of The Yoke Wire From Top Of The Basket To Loosen The Lumbar Support Cable

5. Release the wire tie (A), then remove the lumbar support cable (B) and actuator (C) as an assembly.

cardiagn.com

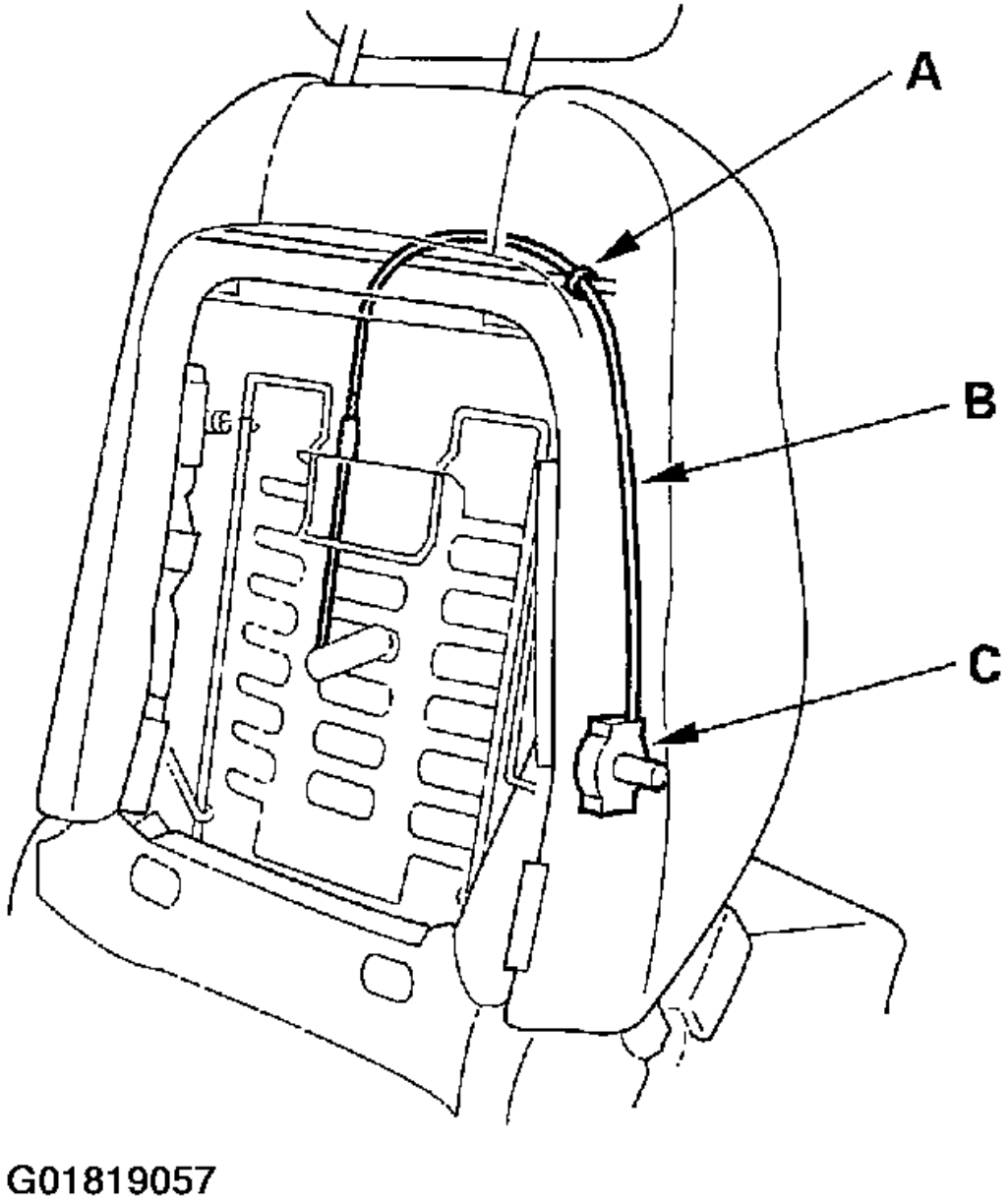

Fig. 12: Removing The Lumbar Support Cable & Actuator As An Assembly

6. Disconnect the lumbar support cable (A) from the lumbar support actuator (B).

cardiagn.com

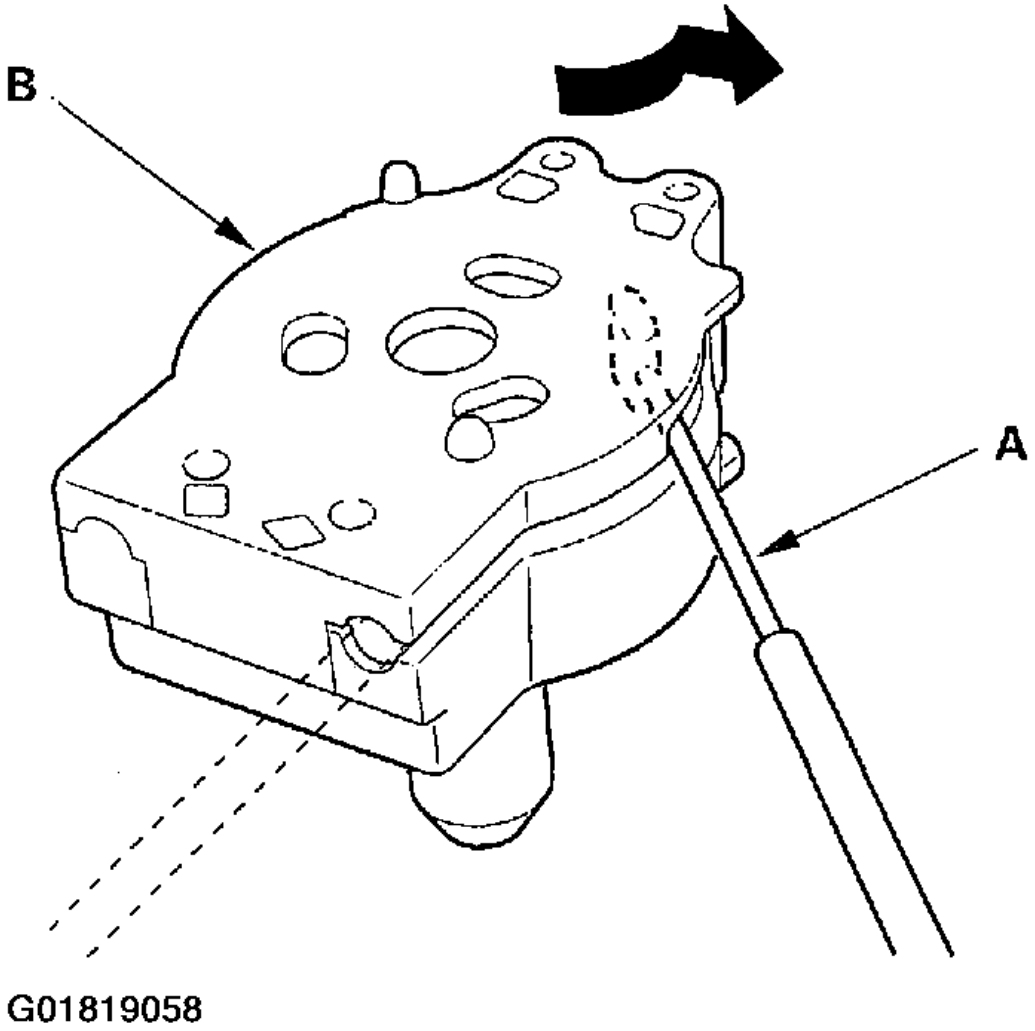

Fig. 13: Disconnecting The Lumbar Support Cable From The Lumbar Support Actuator

7. Remove the lumbar support (A).
   a. Release the clamp (B) fastening the recline motor harness with the lower spring (C).
   b. Release both lower springs (C) from inside the seat-back.
   c. Release the lumbar support from both upper springs (D)

cardiagn.com

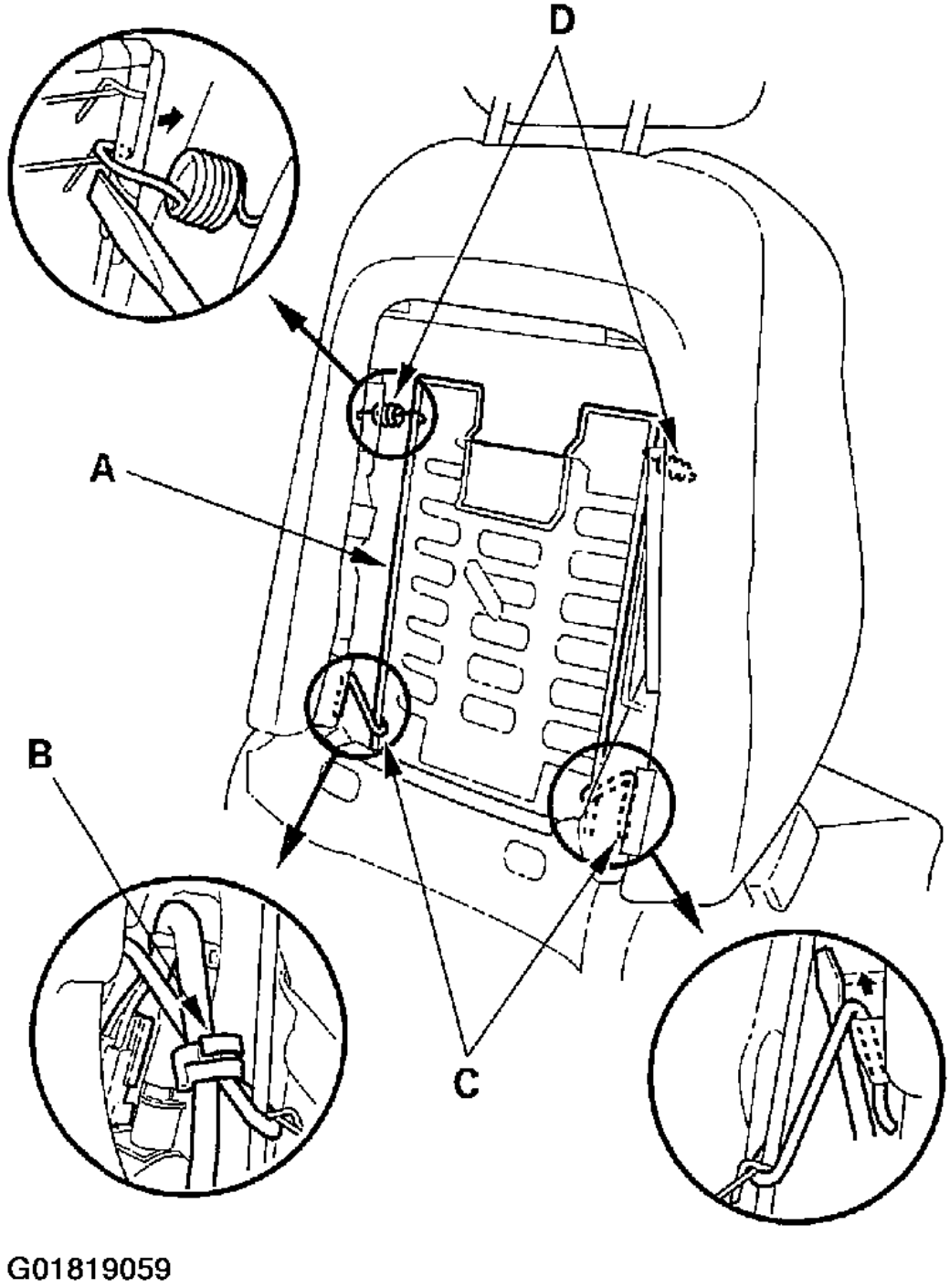

Fig. 14: Removing The Lumbar Support

8. Install the lumbar support in the reverse order of removal, and note these items:

cardiagn.com

- Make sure the cable is connected securely.
- To prevent wrinkles when installing a seat-back cover, make sure the material is stretched evenly over the pad before securing the hook strips.
- Replace the back panel clips as new ones.

FRONT SEAT COVER REPLACEMENT

SRS components are located in this area. Review the SRS component locations, and the precautions and procedures in the SRS section before performing repairs or service. See **AIR BAG RESTRAINT SYSTEMS** .

NOTE:

- **Take care not to tear the seams or damage the seat covers.**
- **Put on gloves to protect your hands.**

Seat-back Cover

1. Remove the front seat (see **FRONT SEAT REMOVAL/INSTALLATION**).
2. Remove the headrest.
3. From under the seat cushion, disconnect the recline motor connector (A), and the seat-back heater connector (B) on the 8-way power seat. Detach the side airbag connector clip (C), OPDS unit connector clip (D) on the manual seat, and harness clips (E). Release the clips (F) (manual seat) and seat cushion cover (G) from the seat cushion frame spring (H), then pull the cover back, and remove the clamps (I).

cardiagn.com

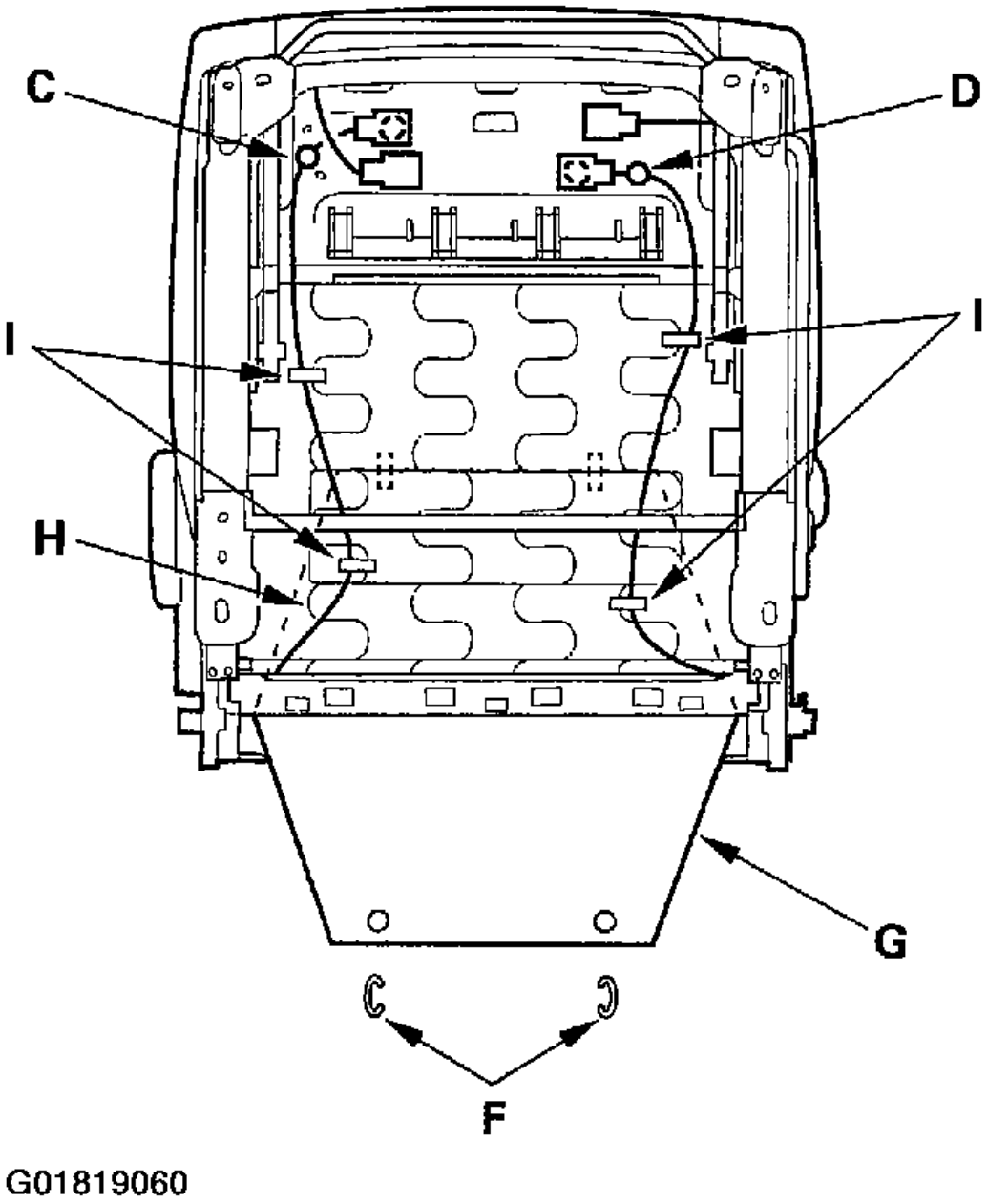

Fig. 15: Detaching The Harness Clip & Disconnecting The Seat Connectors (Manual Seat)

cardiagn.com

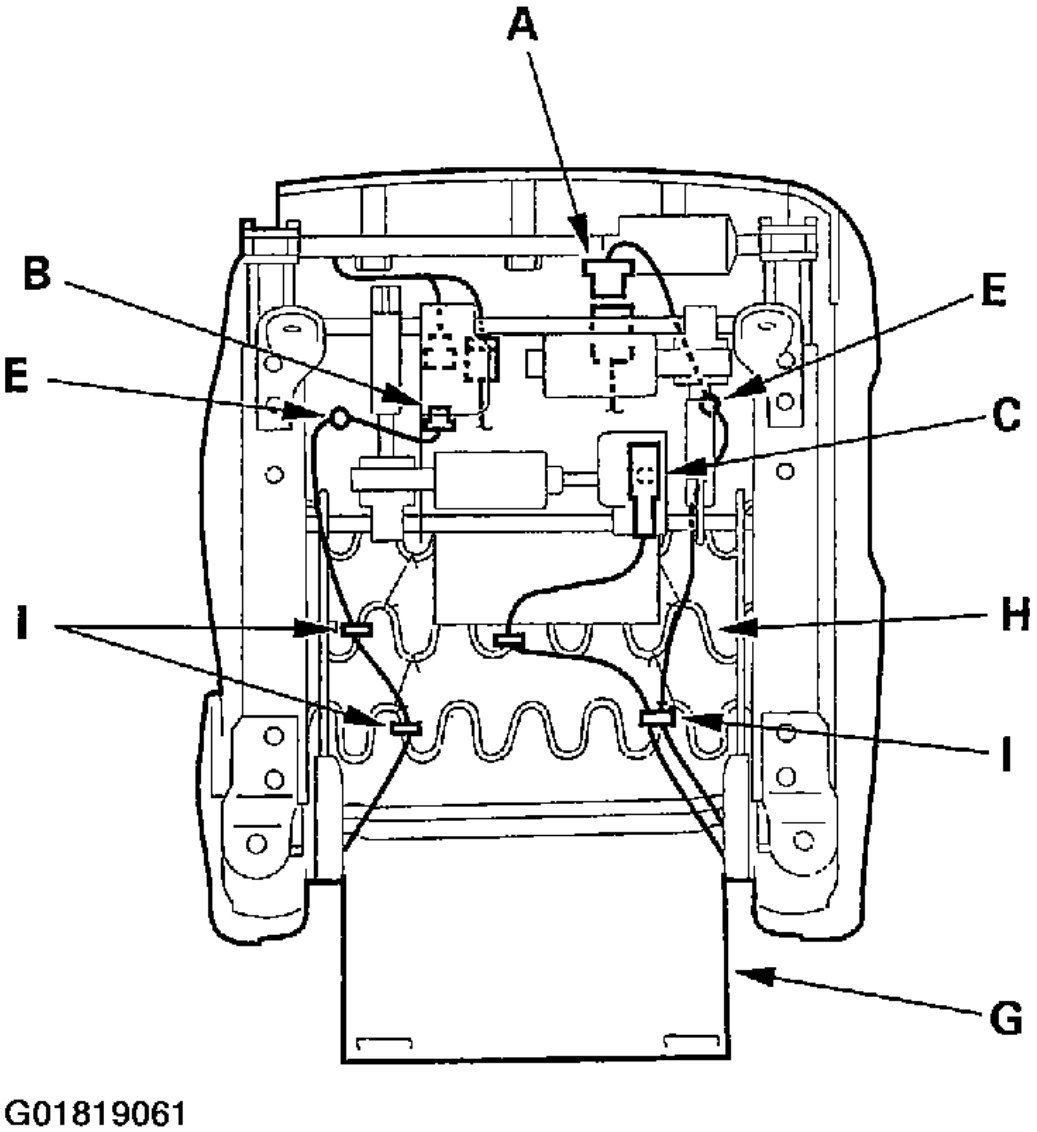

Fig. 16: Detaching The Harness Clip & Disconnecting The Seat Connectors (8-Way Power Seat)

4. Remove these items from the front seat, then remove the seat cushion, manual seat (see **FRONT SEAT DISASSEMBLY/REASSEMBLY - MANUAL**), 8-way power seat (see **FRONT SEAT DISASSEMBLY/REASSEMBLY - 8-WAY POWER**):
   a. Recline cover
   b. Center cover
   c. Front cover
5. 8-way power seat: Remove the clip (A), then remove the lumbar support handle (B).

cardiagn.com

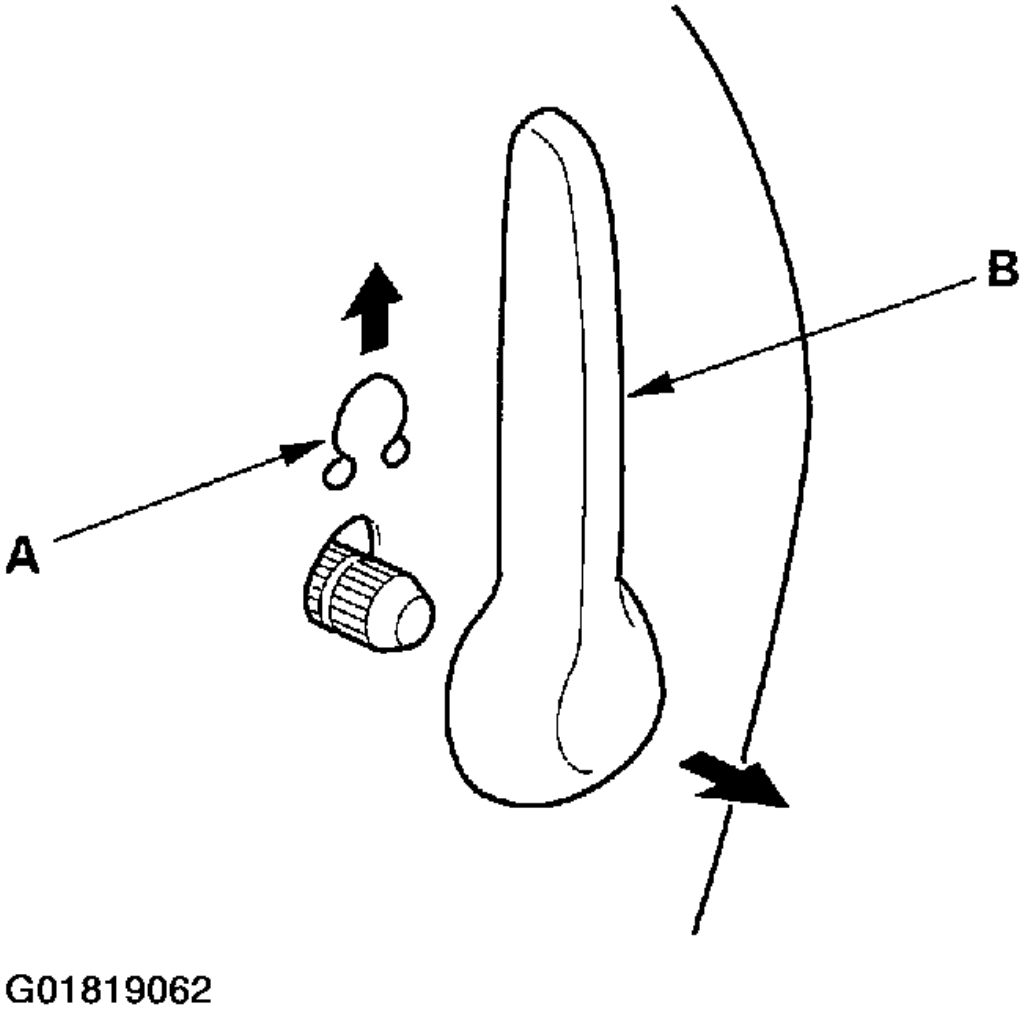

Fig. 17: Removing The Clip & The Lumbar Support Handle (8-Way Power Seat)

6. Detach the clips and hooks (A) by pulling the bottom of the back panel (B) back, then pull the panel downward to release the hooks (C) from the seat back frame, and remove the panel. 8-way power seat is shown; Manual seat is similar.

cardiagn.com

Fastener Locations

▷ : Clip, 2

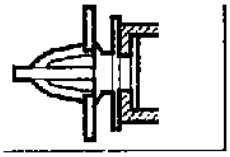

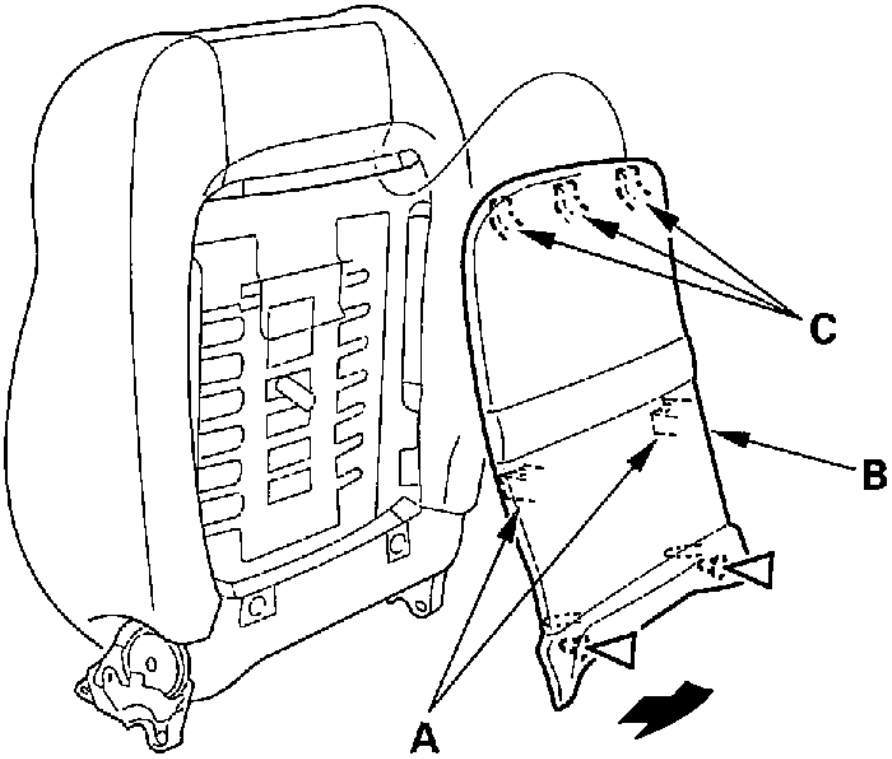

G01819063

Fig. 18: Removing The Back Panel (8-Way Power Seat Is Shown; Manual Seat Is Similar)

7. Release the hook strips (A), and fasteners (B) on the manual seat, then loosen the seat-back cover (C). Release the clips (D) and/or detach the clips (E).

cardiagn.com

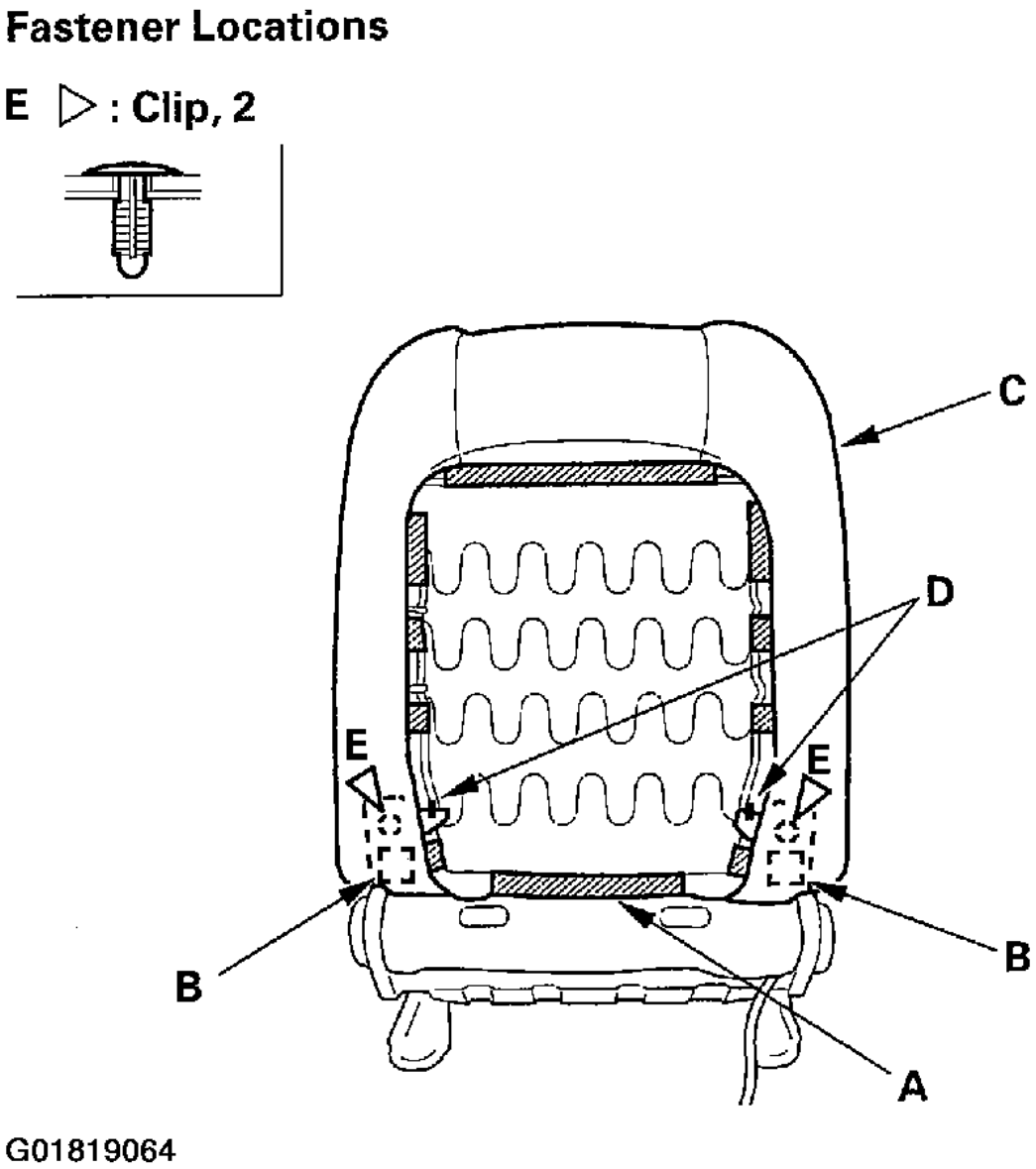

Fig. 19: Loosening The Seat-Back Cover (Manual Seat)

cardiagn.com

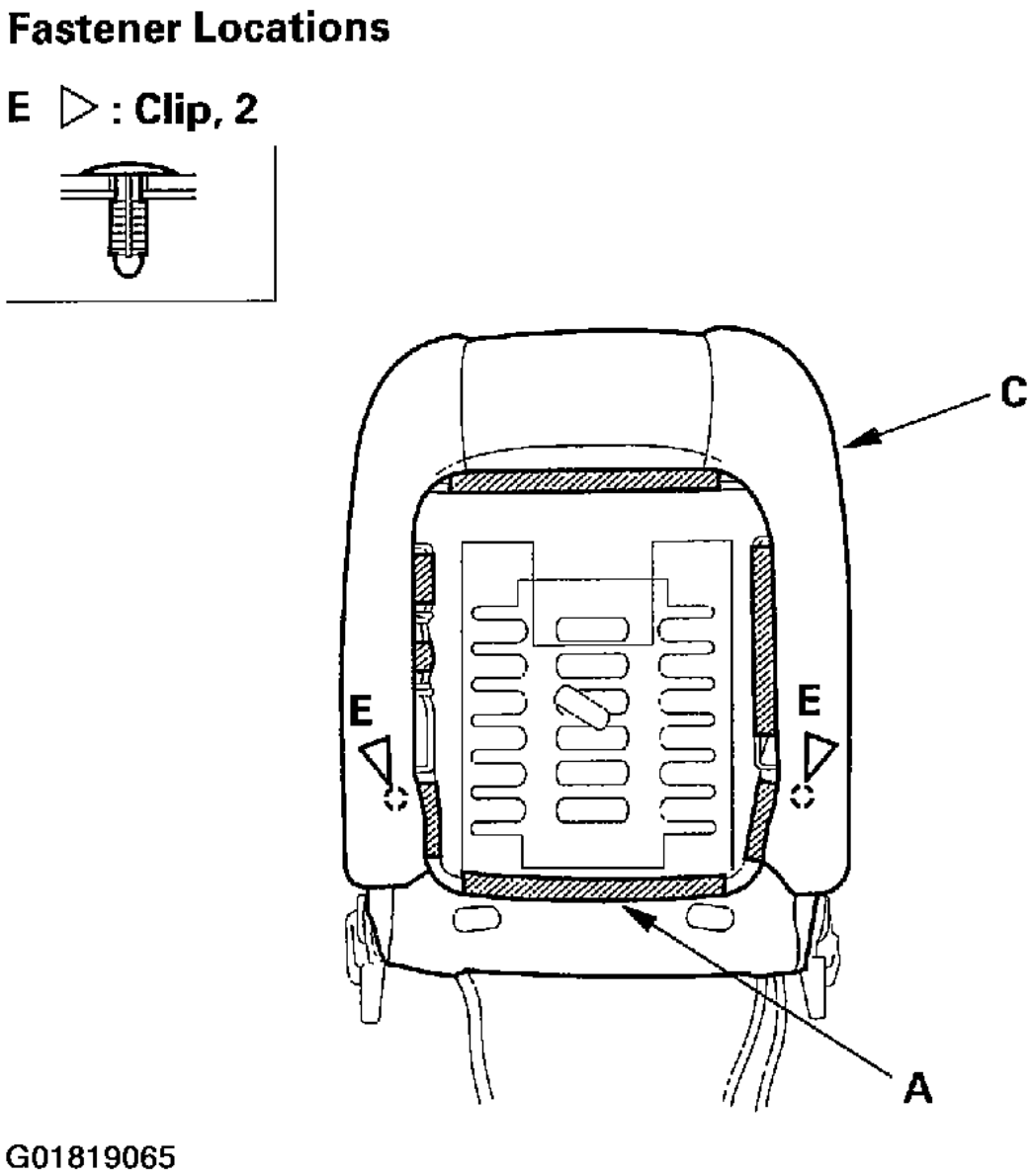

Fig. 20: Loosening The Seat-Back Cover (8-Way Power Seat)

8. Pull the recline motor harness (A) and seat-back heater harness (B) (8-way power seat), side airbag harness (C), and OPDS unit harness (manual seat) out through the hole (E) in the seat-back cover. 8-way power seat is shown; manual seat is similar.

cardiagn.com

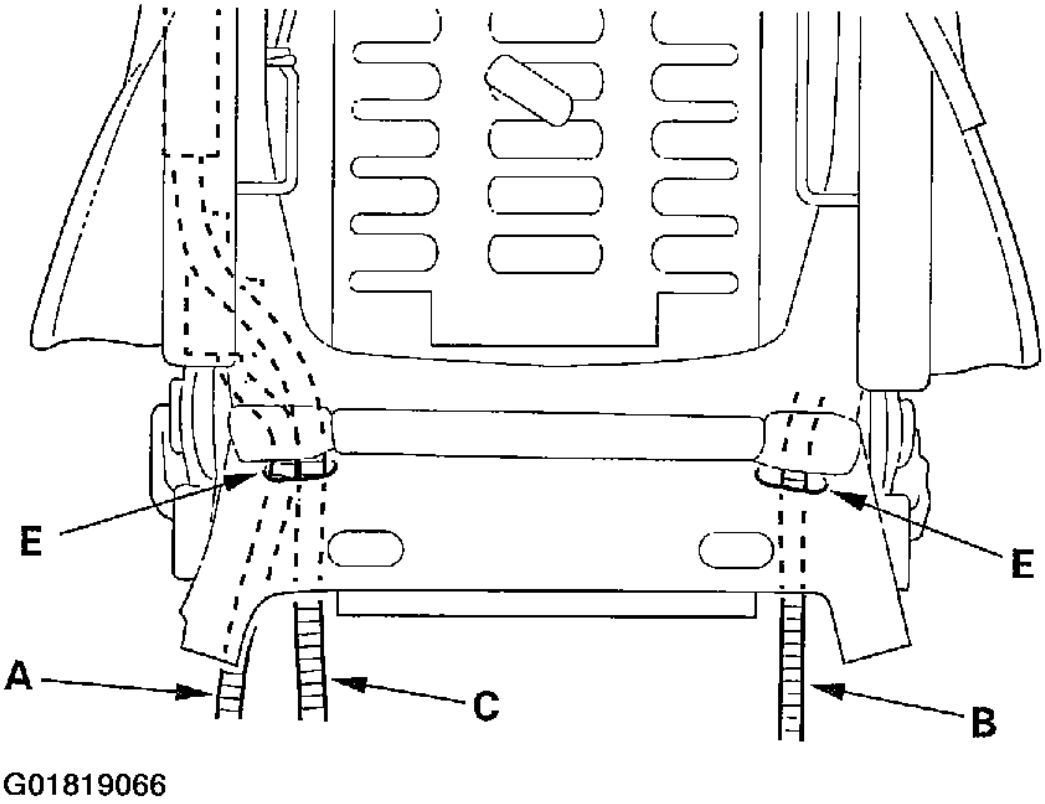

Fig. 21: Removing The Harnesses (8-Way Power Seat Is Shown; Manual Seat Is Similar)

9. Release the front hook (A) and rear hook (B) of the reinforcing cloth (C) from seat-back frame (D).

cardiagn.com

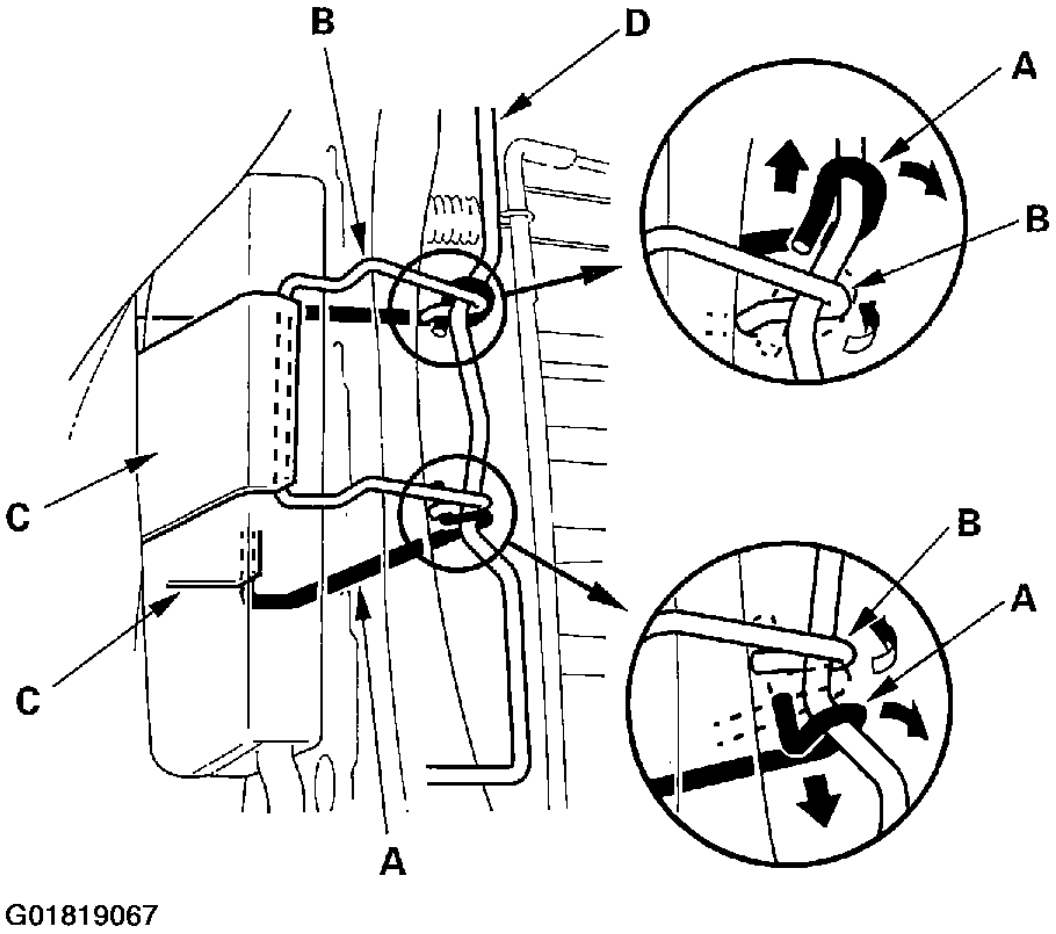

Fig. 22: Releasing The Front Hook & Rear Hook Of The Reinforcing Cloth From Seat-Back Frame

10. Pull out the headrest guides (A) while pinching the end of the guides, and remove them.

cardiagn.com

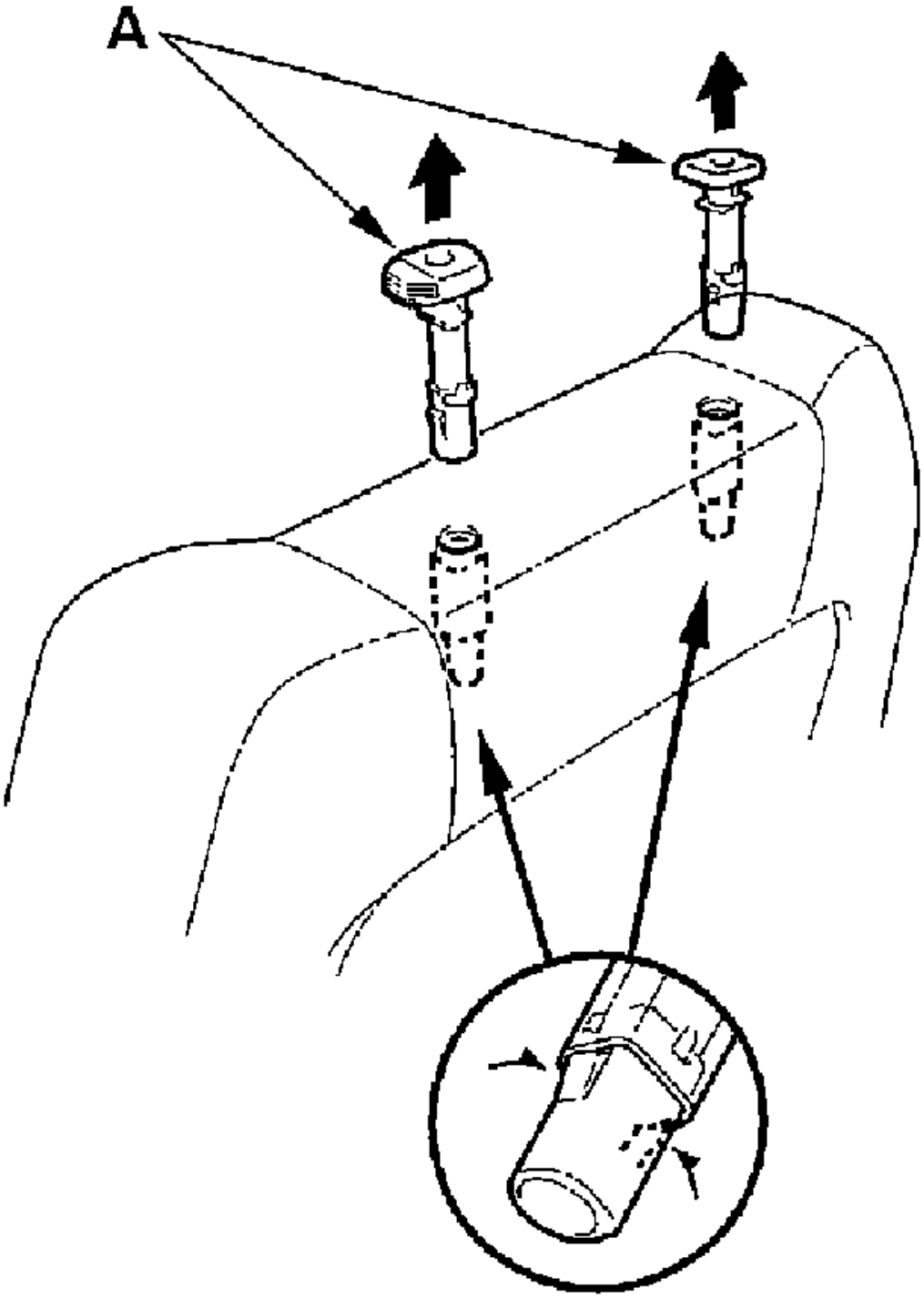

G01819068

cardiagn.com

Fig. 23: Pulling Out The Headrest Guides

11. From the back of the seat-back, release the clips (A).

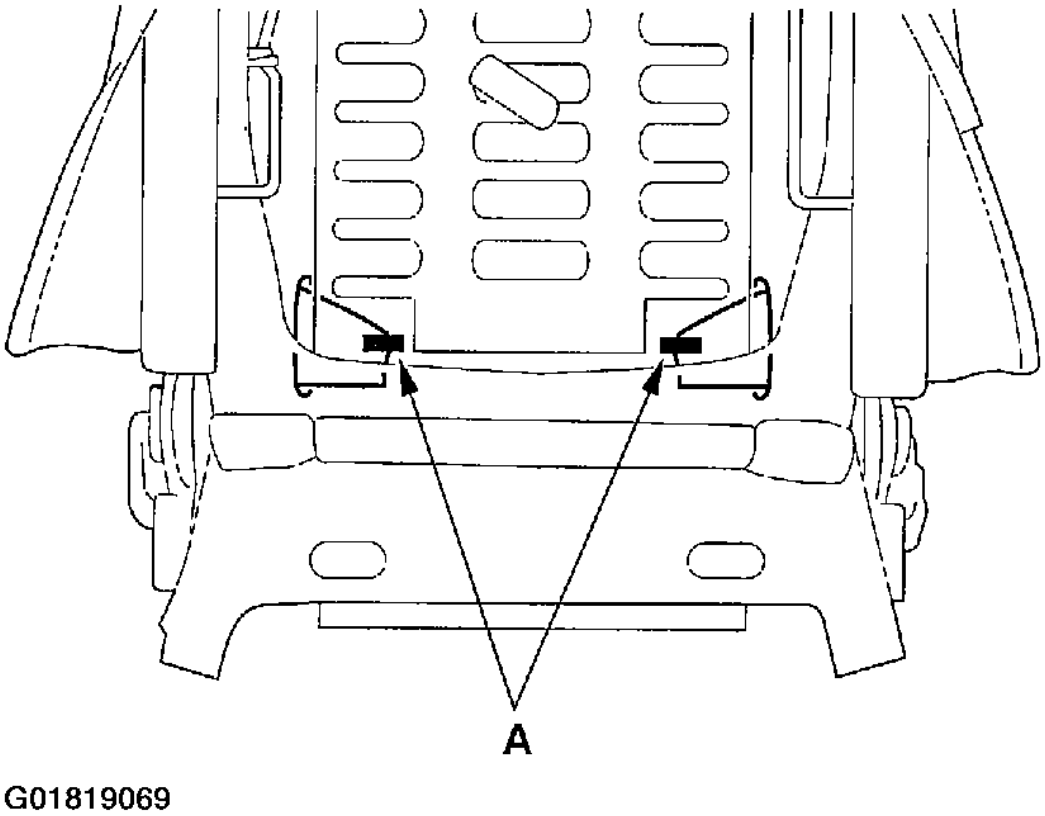

Fig. 24: Releasing The Clips

12. Pull back the edge of the seat-back cover all the way around, and release the clips (A), then remove the seat-back cover.

cardiagn.com

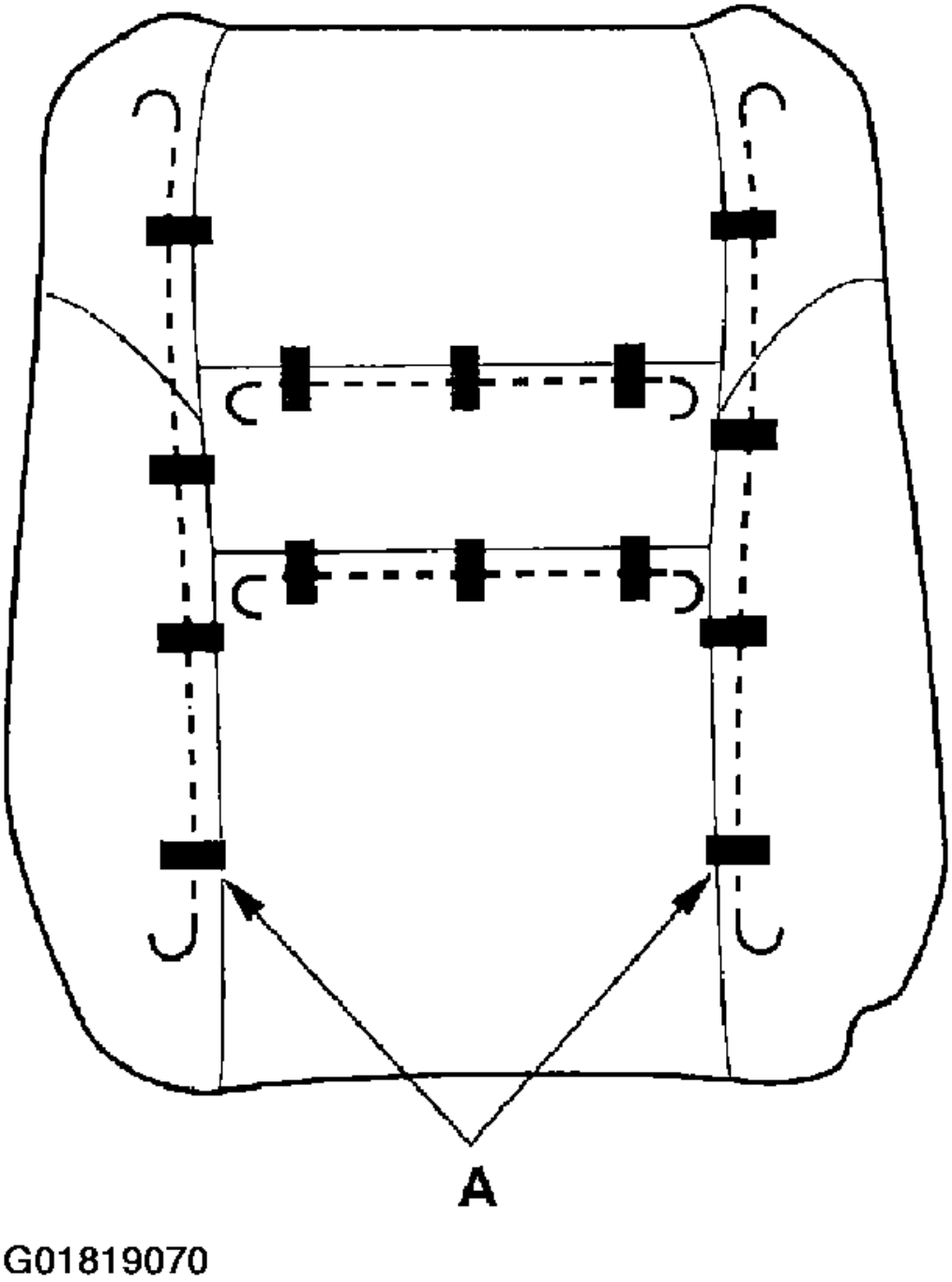

Fig. 25: Removing The Seat-Back Cover

13. Install the cover in the reverse order of removal, and note these items:

cardiagn.com

- Reinitialize the OPDS control unit (see **AIR BAG RESTRAINT SYSTEMS**).
- To prevent wrinkles when installing a seat-back cover, make sure the material is stretched evenly over the pad before securing the clips, hooks, and hook strips.
- Replace any clips you removed with new ones (A). Install them with commercially available upholstery ring pliers (B).
- Reinstall the front hook (C) and rear hook (D) of the reinforcing cloth (E) securely.
- Use only original Acura replacement seat-back covers.
- Make sure the recline motor harness, side airbag harness, seat-back heater harness (8-way power seat), and OPDS unit harness (manual seat) are routed properly.

cardiagn.com

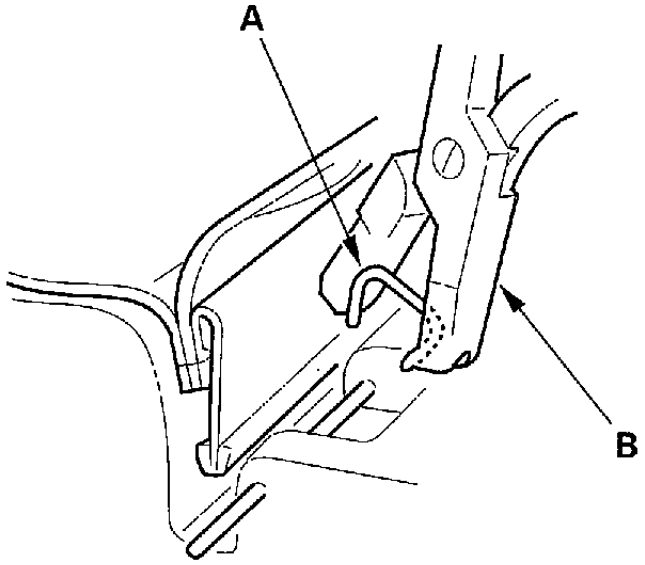

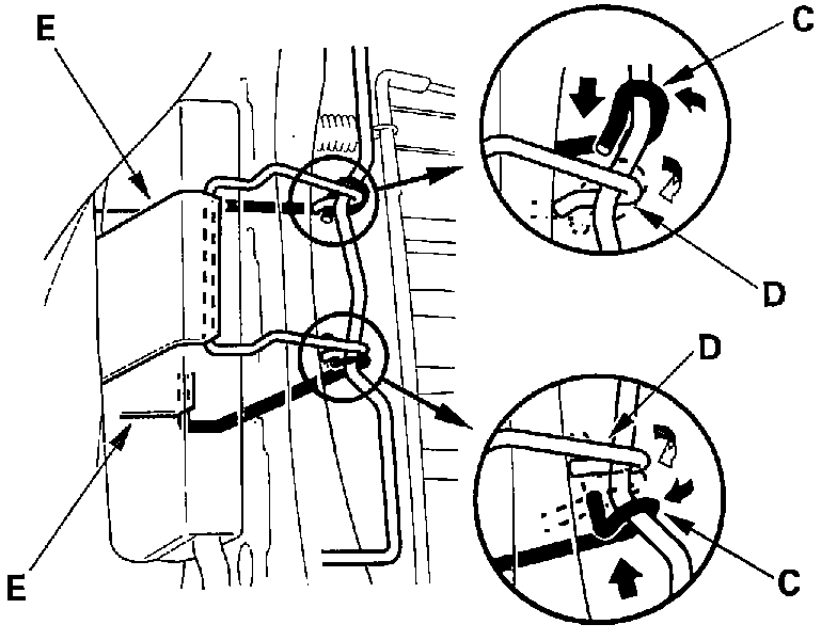

Fig. 26: Cover Installation Points

Seat Cushion Cover

1. Remove the front seat (see **FRONT SEAT REMOVAL/INSTALLATION**).

cardiagn.com

2. 8-way power seat: From under the seat cushion, detach the recline motor connector clip, if equipped, the side airbag connector clip and the seat heater connector clip. Release the seat cushion cover from the seat cushion frame spring, then pull the cover back, and remove the clamps.
3. Remove these items from the front seat, then remove the seat-back, manual seat (see **FRONT SEAT DISASSEMBLY/REASSEMBLY - MANUAL**), 8-way power seat (see **FRONT SEAT DISASSEMBLY/REASSEMBLY - 8-WAY POWER**):
   a. Recline cover
   b. Center cover
   c. Front cover (8-way power seat)
4. 8-way power seat:

   Remove the seat-back (see **FRONT SEAT DISASSEMBLY/REASSEMBLY - 8-WAY POWER**).

5. Release the hook strips (A) from both sides the seat cushion.

NOTE: 8-way power seat is shown; manual seat is similar, but its seat-back remains on.

cardiagn.com

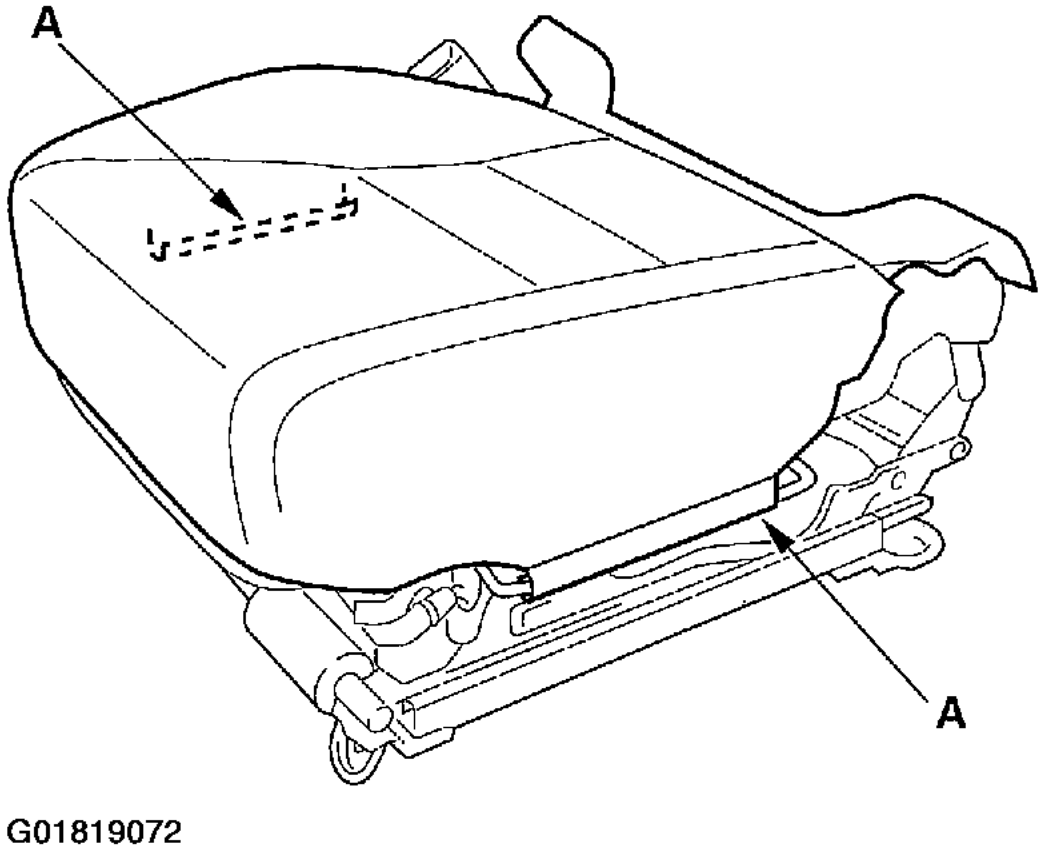

Fig. 27: Releasing The Hook Strips From Both Sides The Seat Cushion (8-Way Power Seat Is Shown)

6. Release the clips (A) (manual seat/manual height adjustable seat), then pull back the seat cushion cover (B), and release the hooks (C) from under the seat cushion.

cardiagn.com

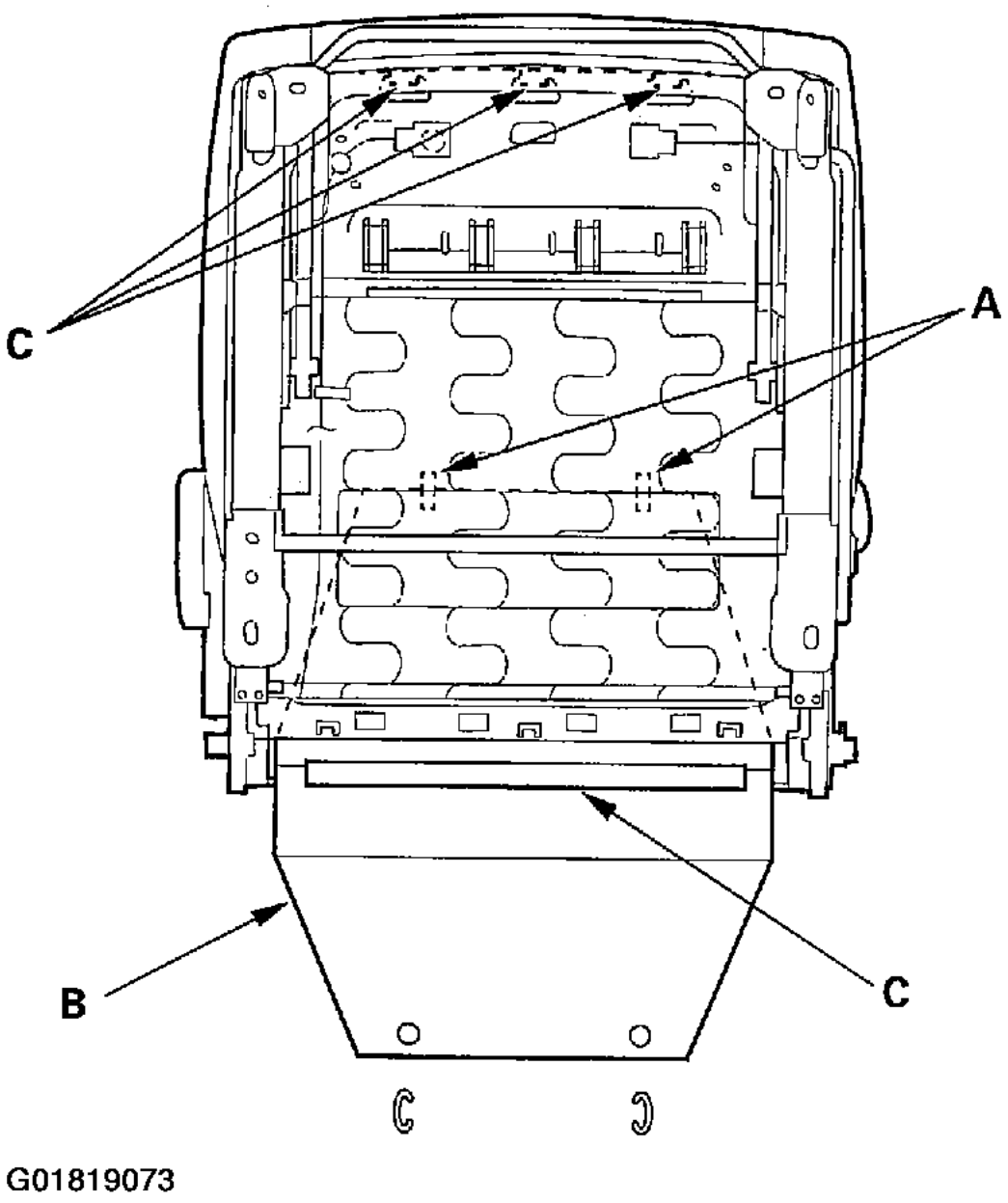

Fig. 28: Releasing The Clips, Then Pulling Back The Seat Cushion Cover & Releasing The Hooks From Under The Seat Cushion (Manual Seat)

cardiagn.com

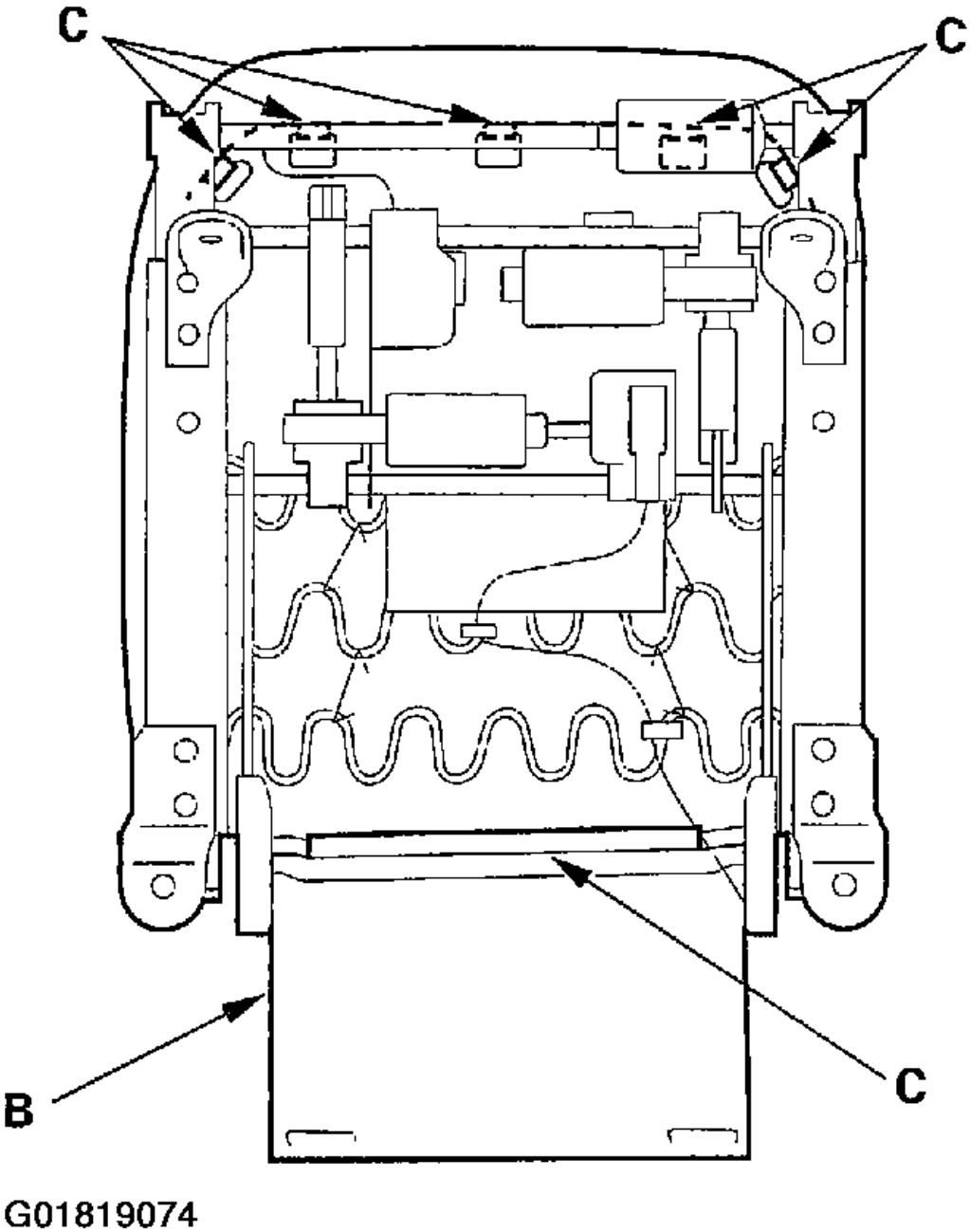

Fig. 29: Releasing The Clips, Then Pulling Back The Seat Cushion Cover & Releasing The Hooks From Under The Seat Cushion (8-Way Power Seat)

7. Remove the cushion cover/pad from the seat cushion frame.
8. Release the clips (A) from under the seat cushion (B).

cardiagn.com

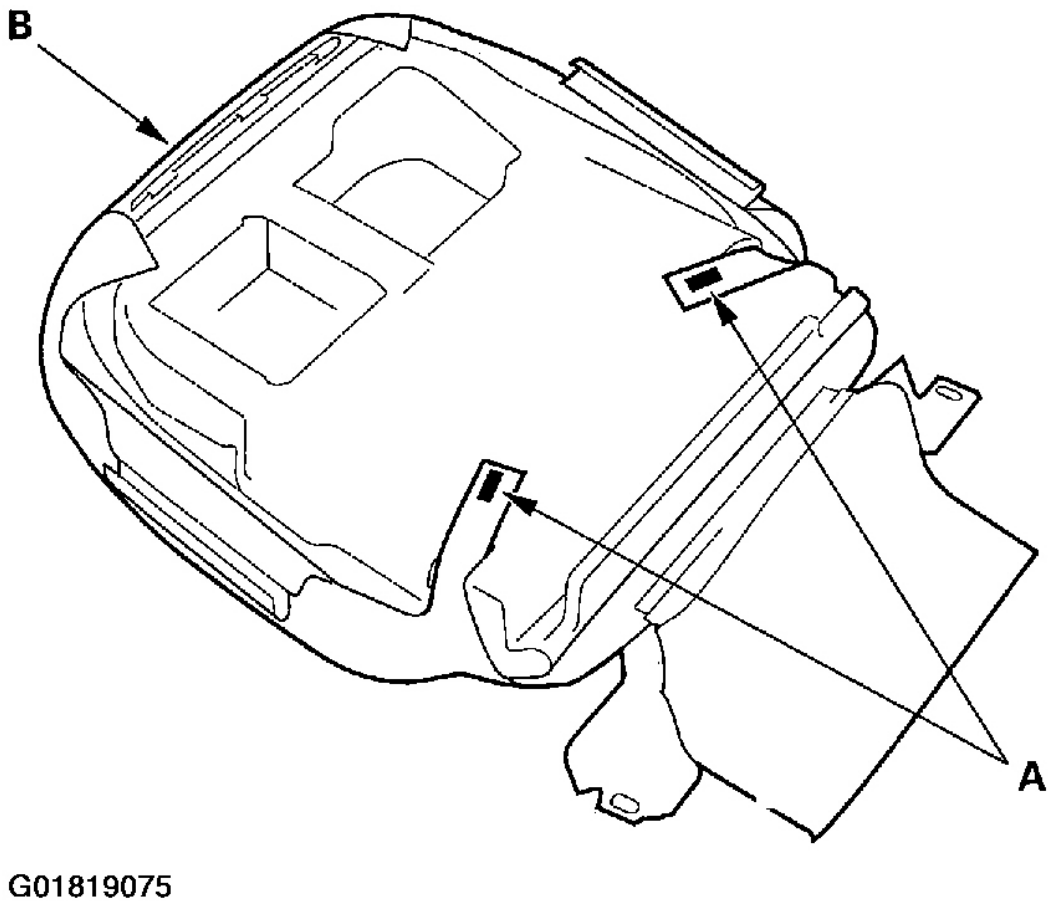

Fig. 30: Releasing The Clips From Under The Seat Cushion

9. Pull back the edge of the seat cushion cover all the way around, and release the clips (A), then remove the seat cushion cover.

cardiagn.com

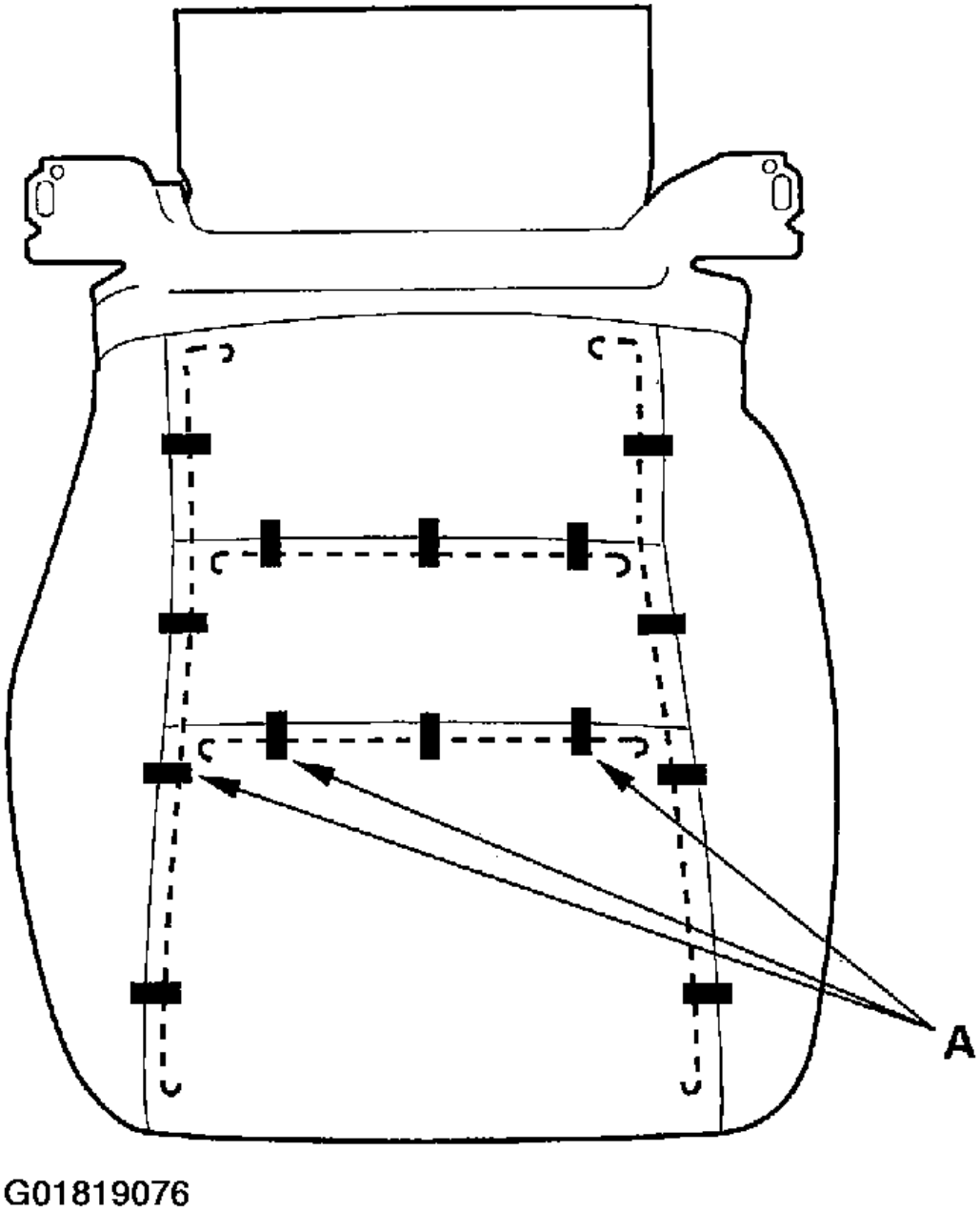

Fig. 31: Removing The Seat Cushion Cover

10. Install the cover in the reverse order of removal, and note these items:
    - To prevent wrinkles when installing a seat cushion cover, make sure the material is stretched evenly over the paid before securing the clips and hook strips.
    - Replace any clips you removed with new ones (A). Install them with commercially available

cardiagn.com

upholstery ring pliers (B).

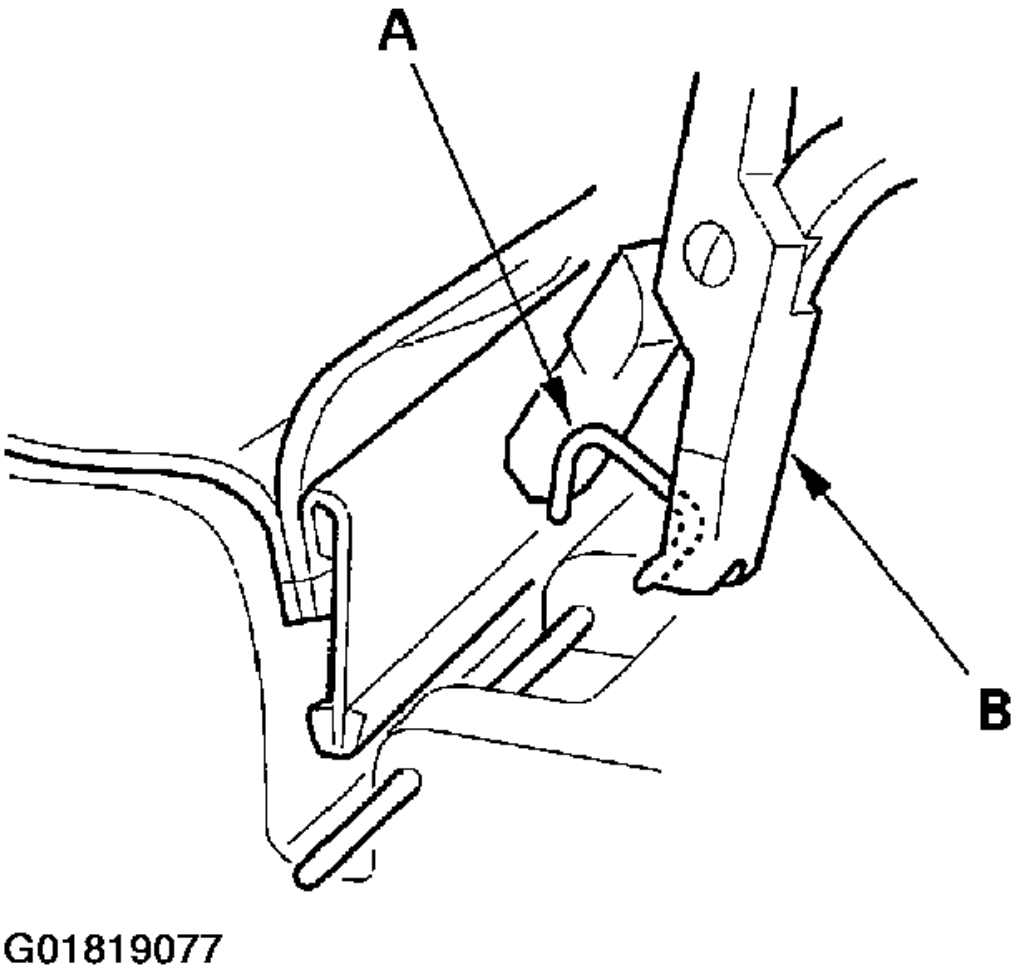

Fig. 32: Seat Cushion Cover Installation Points

REAR SEAT REMOVAL/INSTALLATION

NOTE: Take care not to scratch the body or tear the seat covers.

1. Remove the rear seat as shown.
2. Install the seat in the reverse order of removal, and note these items:
   - Before attaching the rear seat-back and cushion, make sure there are no twists or kinks in the rear seat belts and center seat belt.
   - When installing the seat cushion, slip the seat belt buckles through the slits in the seat cushion.

cardiagn.com

- Make sure the seat-back locks securely.

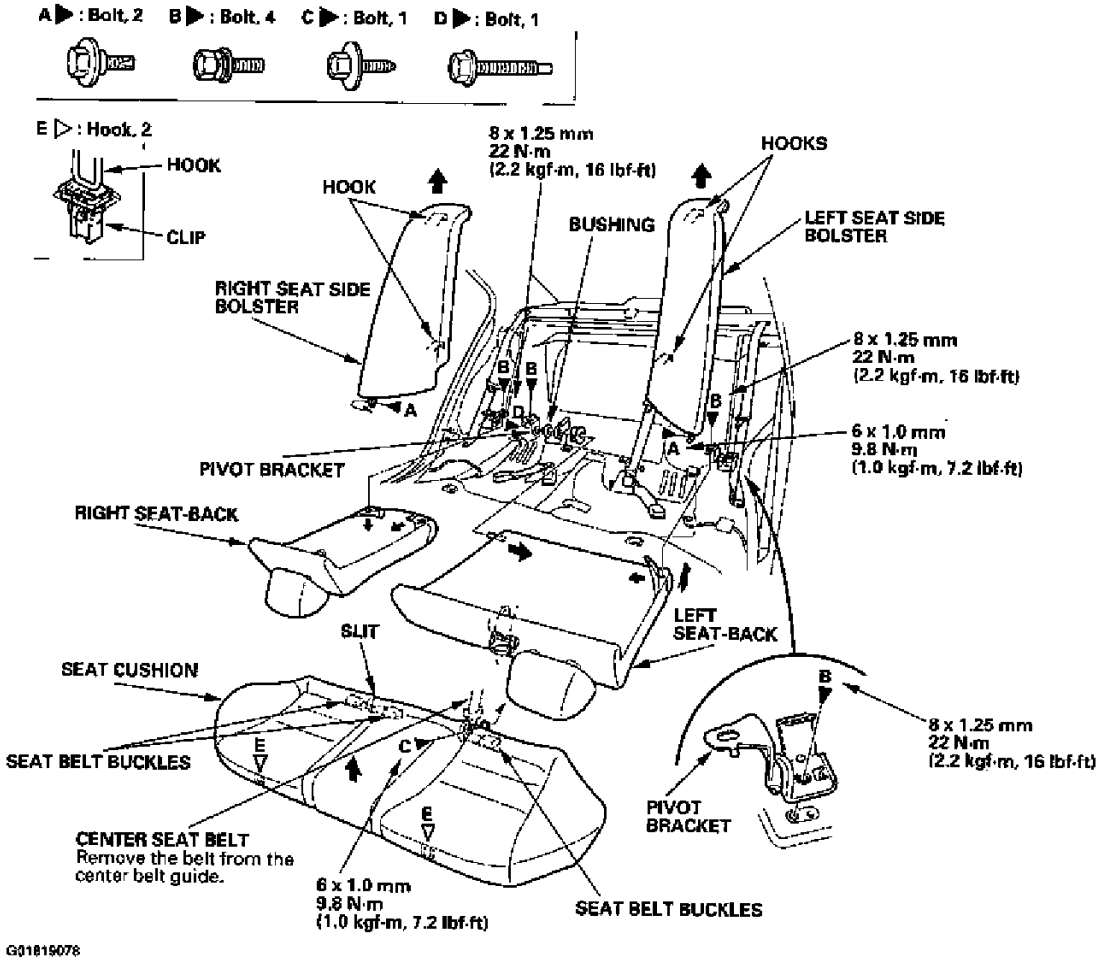

Fig. 33: Removing The Rear Seat

REAR SEAT-BACK LATCH REPLACEMENT

NOTE:

- **When prying with a flat-tip screwdriver, wrap it with protective tape to prevent damage.**
- **Take care not to bend or scratch the interior trim.**

1. Remove these items:
   a. Seat side bolster, both sides (see **REAR SEAT REMOVAL/INSTALLATION**)
   b. Rear shelf (see **TRIM REMOVAL/INSTALLATION - REAR SHELF AREA**)
2. Disconnect the cylinder rod (A), remove the bolts, then remove the seat-back latch (B).

cardiagn.com

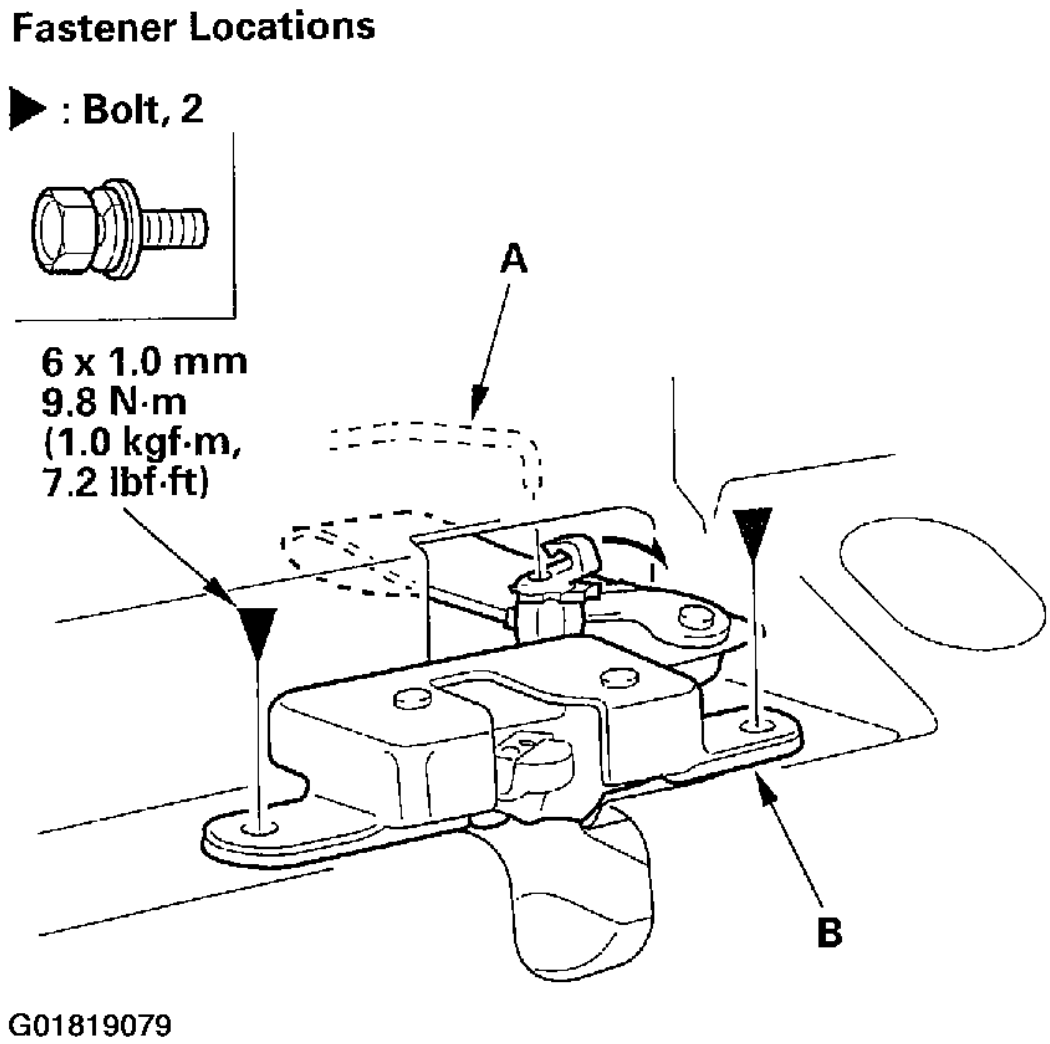

Fig. 34: Removing The Seat-Back Latch

3. Install the latch in the reverse order of removal, and note these items:
   - Make sure the cylinder rod is connected securely.
   - Make sure the seat-back locks securely and unlocks properly.

REAR SEAT-BACK LOCK CYLINDER REPLACEMENT

NOTE: Take care not to scratch the interior trim.

1. Remove the rear shelf (see **TRIM REMOVAL/INSTALLATION - REAR SHELF AREA**).
2. Disconnect the cylinder rods from both seat-back latches (see **REAR SEAT-BACK LATCH**

cardiagn.com

REPLACEMENT).

3. Remove the self-tapping ET screws, then remove the seat-back lock cylinder (A) and cylinder rods (B).

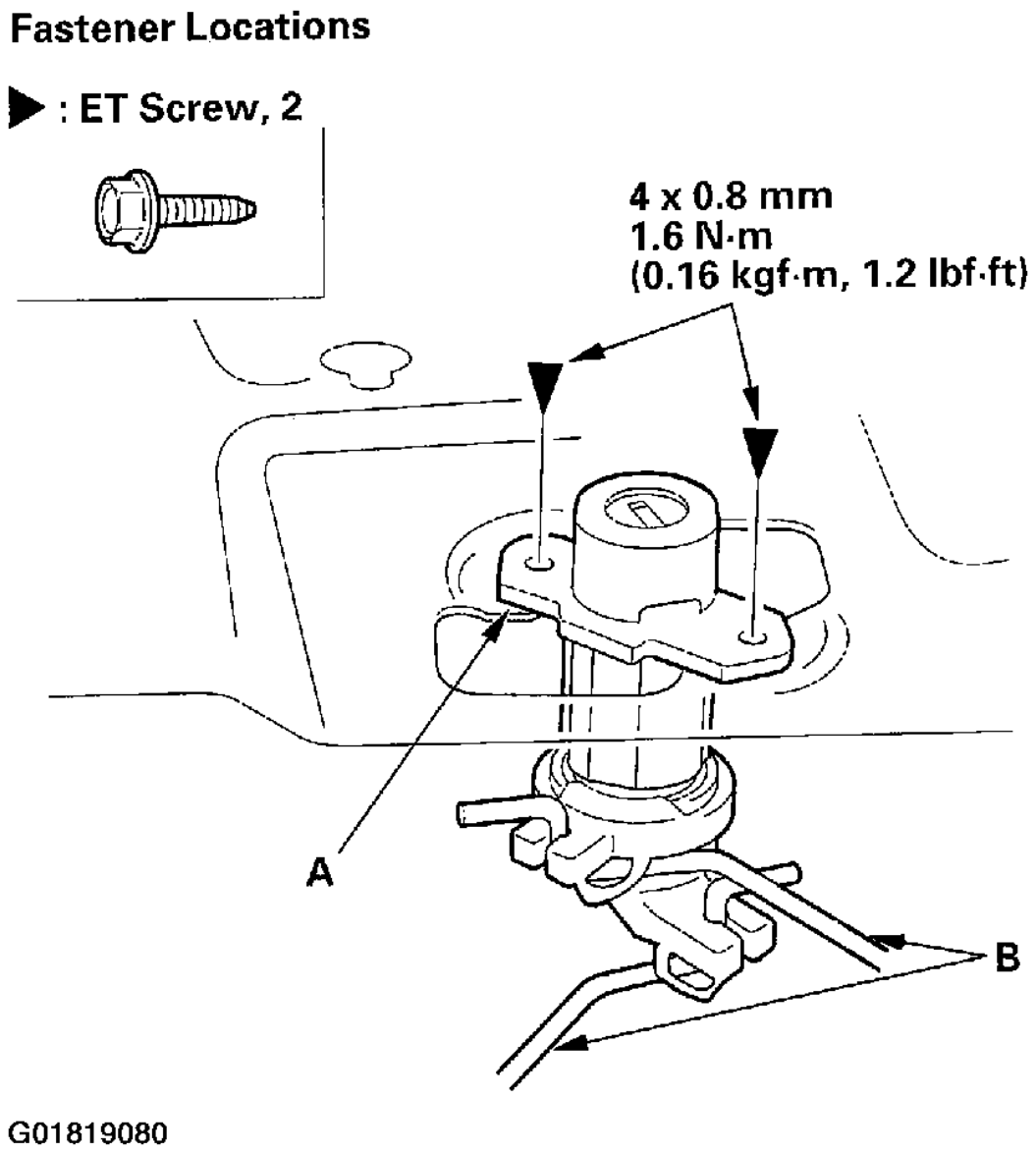

Fig. 35: Removing The Seat-Back Lock Cylinder & Cylinder Rods

4. Install the lock cylinder in the reverse order of removal, and note these items:
   - Make sure the cylinder rod is connected securely.
   - Make sure the seat-back unlocks properly.

cardiagn.com

REAR SEAT ARMREST REPLACEMENT

NOTE: Take care not to tear the seams or damage the seat covers.

1. Remove the clip (A) from the left portion of the armrest pivot.

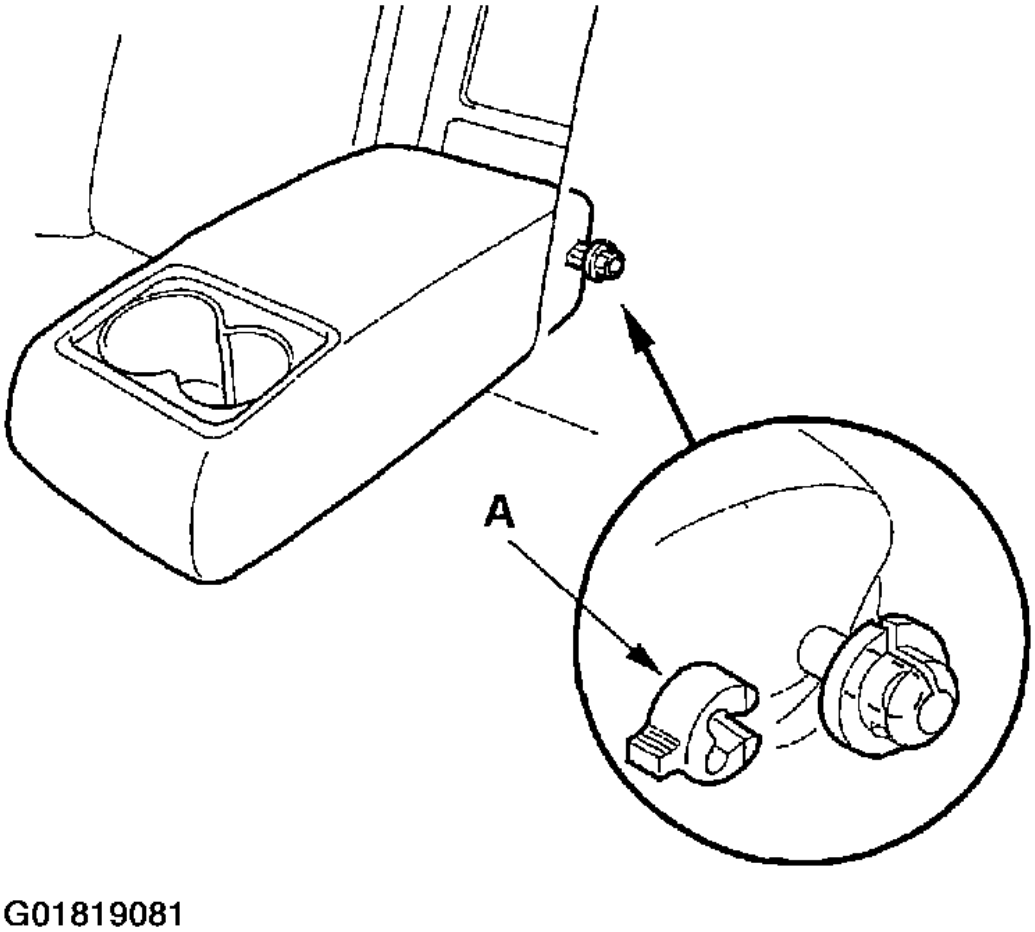

Fig. 36: Removing The Clip From The Left Portion Of The Armrest Pivot

2. Remove the armrest.
   a. Slide the armrest (A) toward the driver's side of the vehicle.
   b. Remove the pivot shaft (B) from the collar (C) on the passenger's side of the vehicle by pulling up on the armrest, and remove the pivot shaft (B) from the collar (D) by pulling up on the armrest.

cardiagn.com

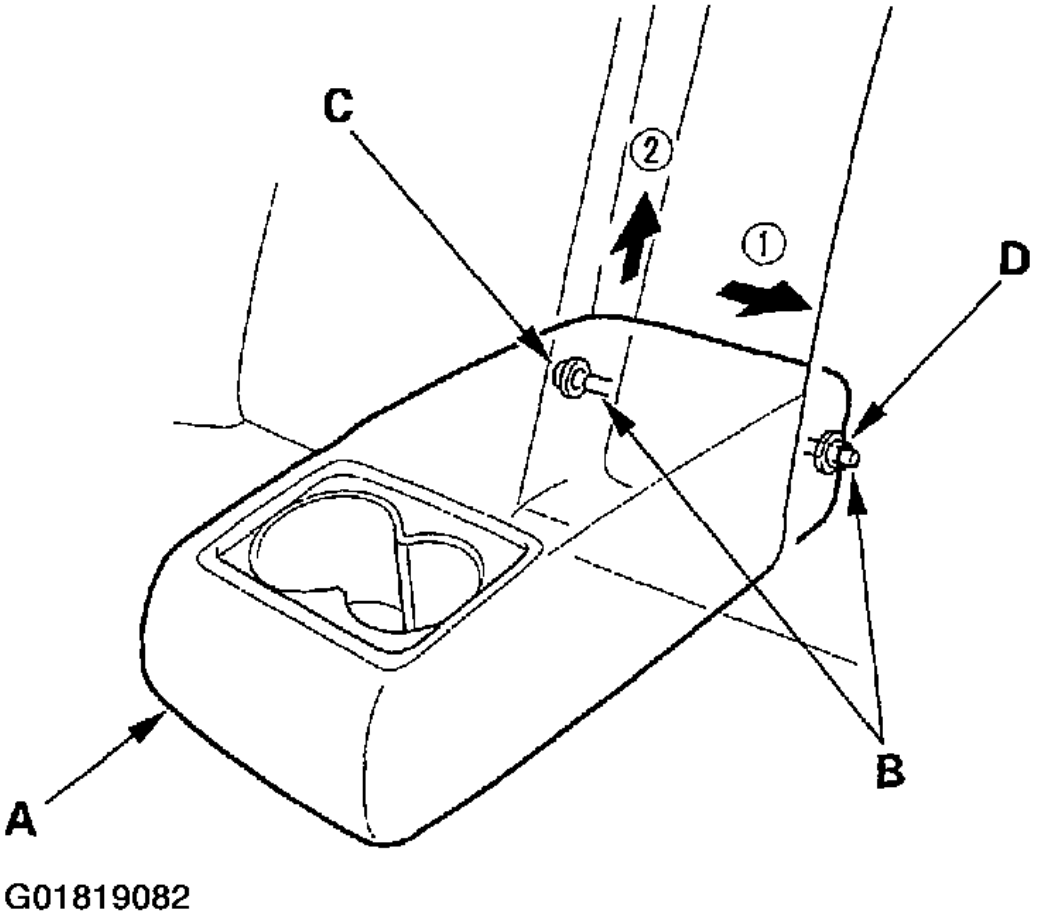

Fig. 37: Removing The Armrest

3. Remove the beverage holder.

cardiagn.com

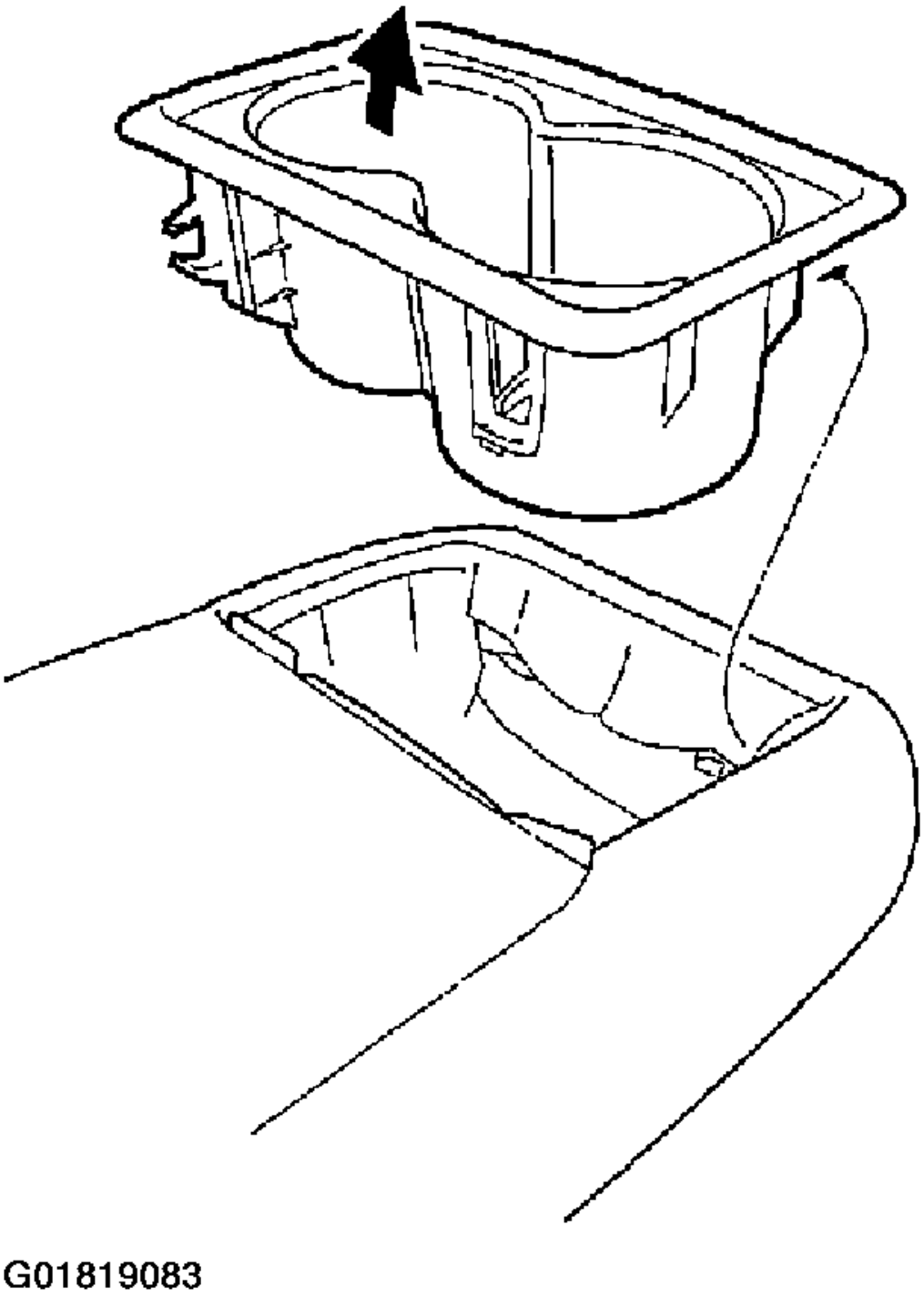

Fig. 38: Removing The Beverage Holder

cardiagn.com

4. Install the armrest in the reverse order of removal.

REAR SEAT-BACK COVER REPLACEMENT

NOTE:

- **Take care not to tear the seams or damage the seat covers.**
- **Put on gloves to protect your hands.**

1. Remove the seat-back (see **REAR SEAT REMOVAL/INSTALLATION**).
2. Remove these items:
   a. Armrest (see **REAR SEAT ARMREST REPLACEMENT**)
   b. Headrest
3. Left seat-back: Remove the screws, then remove the center belt guide.

cardiagn.com

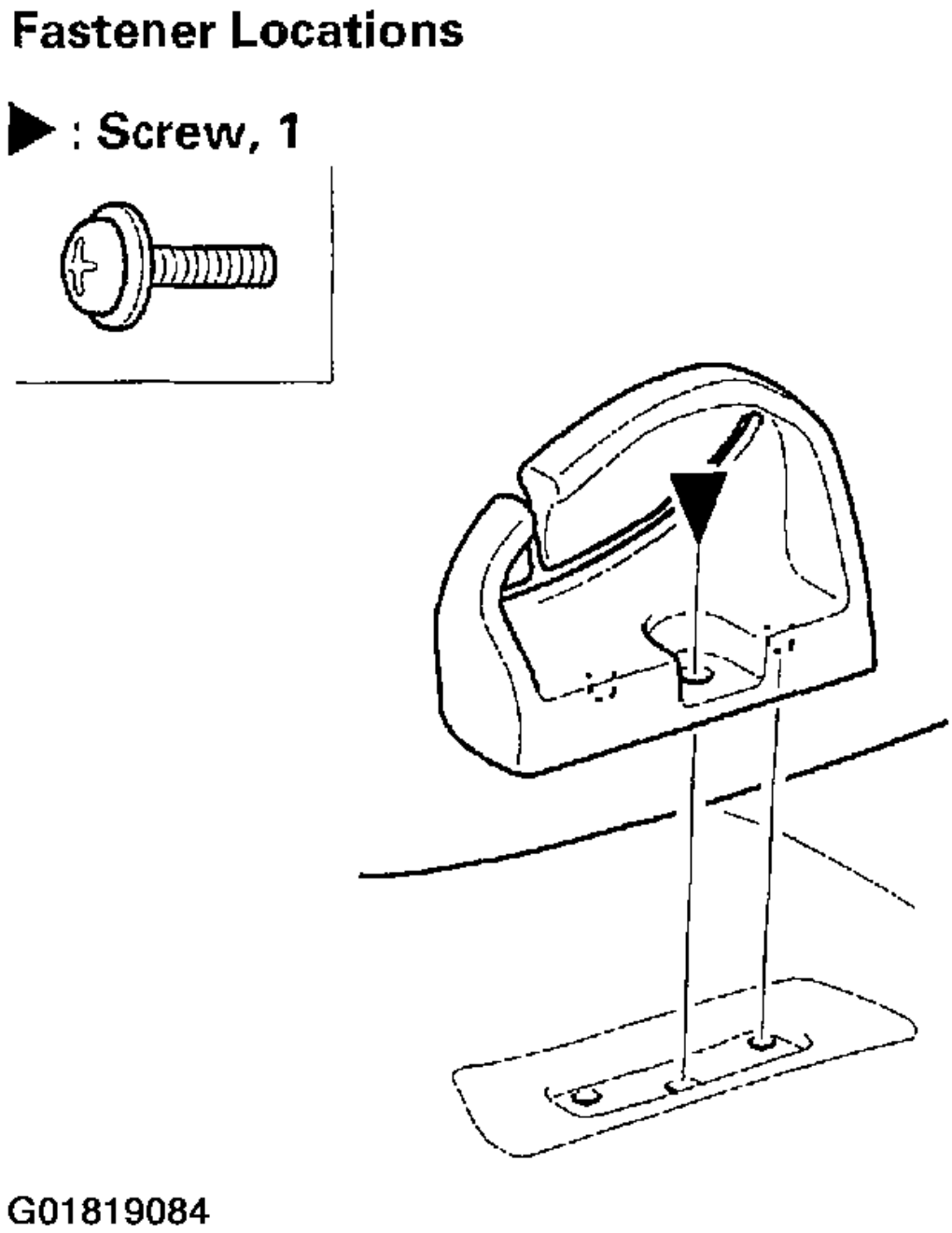

Fig. 39: Removing The Center Belt Guide

4. Left seat-back: From the front of the seat-back, detach the clips to remove the armrest back panel (A).

cardiagn.com

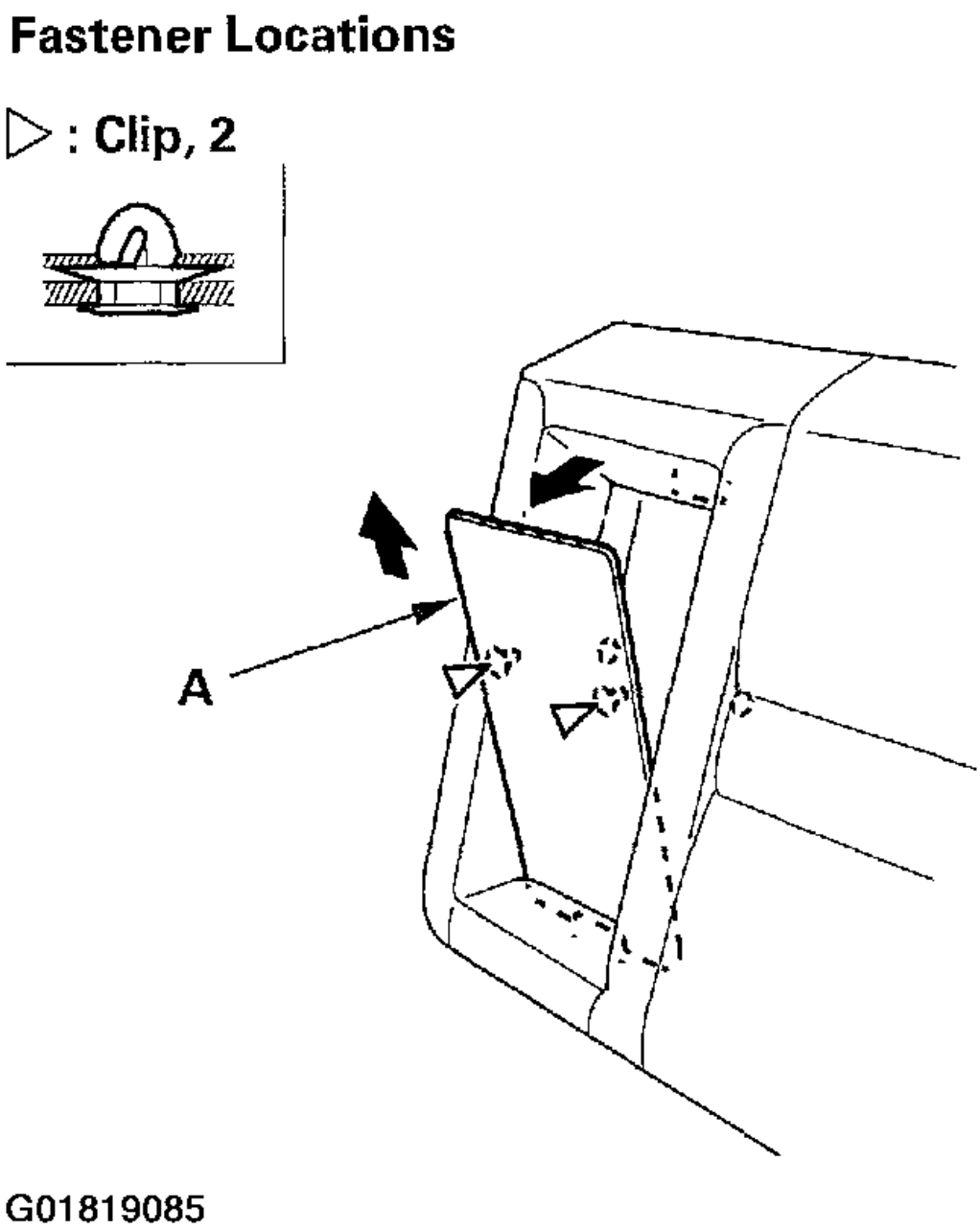

Fig. 40: Removing The Armrest Back Panel

5. Left seat-back: Release the hooks (A, B) from the seat-back frame (C).

cardiagn.com

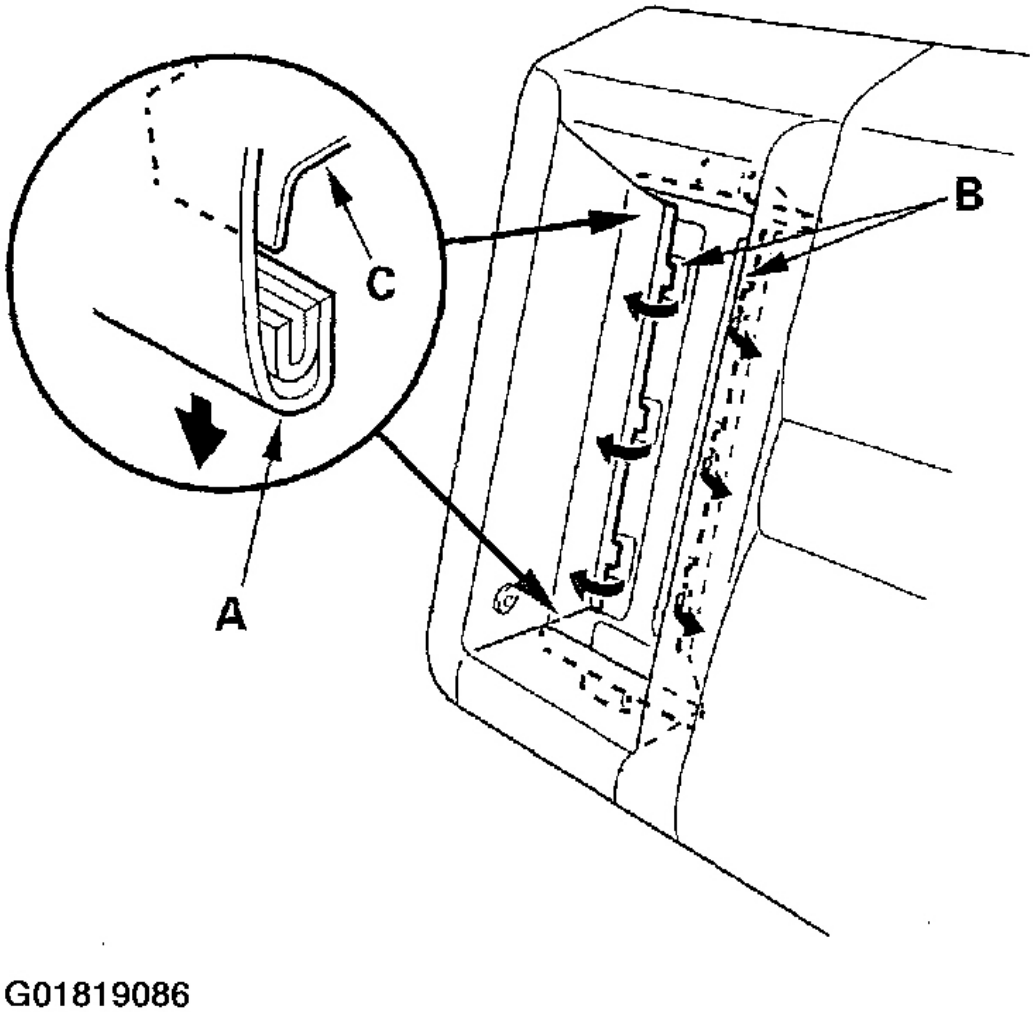

Fig. 41: Releasing The Hooks From The Seat-Back Frame

6. Release the hook (A) and fastener (B), and unzip the seat-back cover (C). The left seat-back is shown; the right seat-back is similar.

cardiagn.com

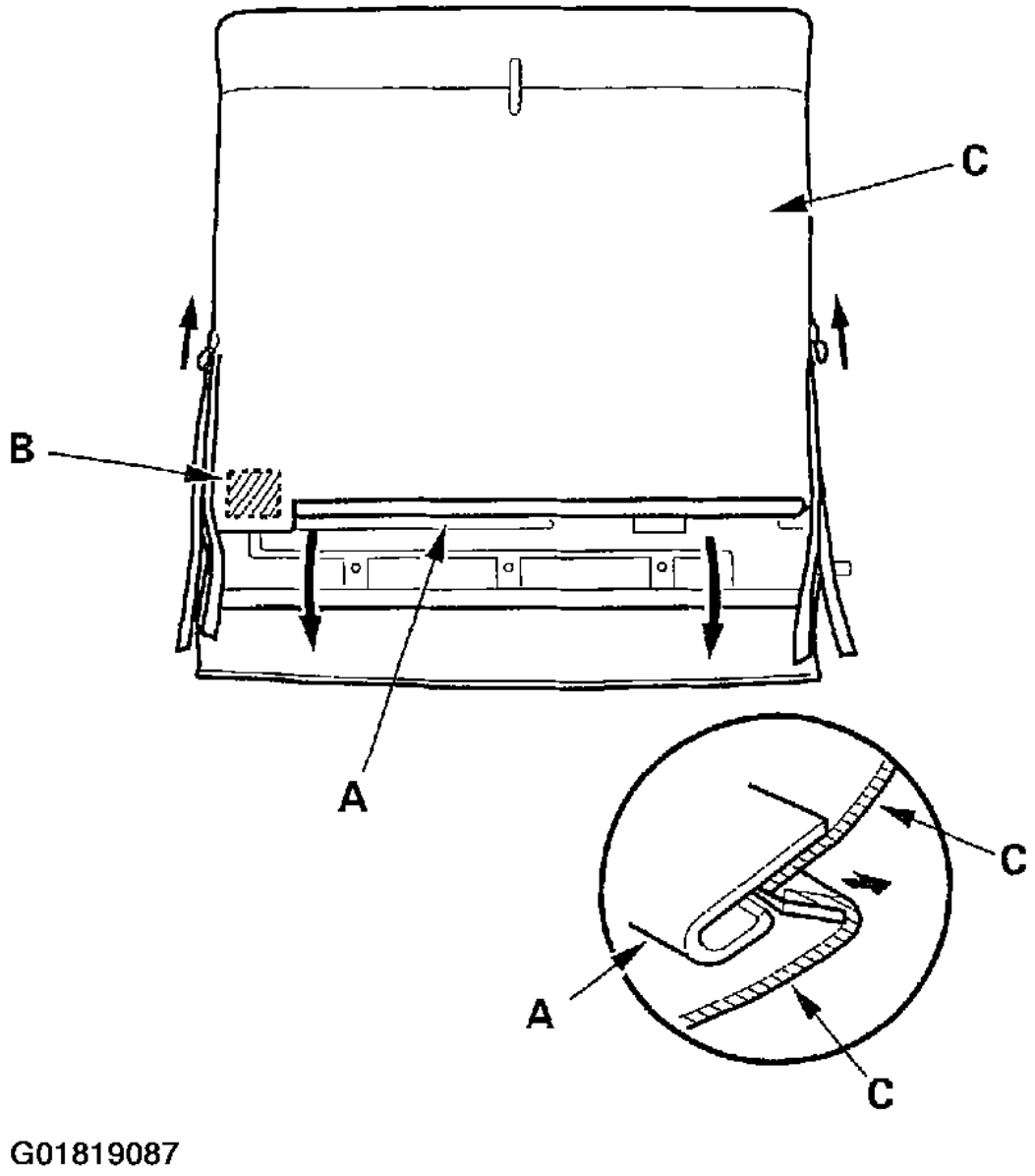

Fig. 42: Releasing The Hook & Fastener & Unzipping The Seat-Back Cover

7. Release all the clips (A), and fold back the seat-back cover (B).

cardiagn.com

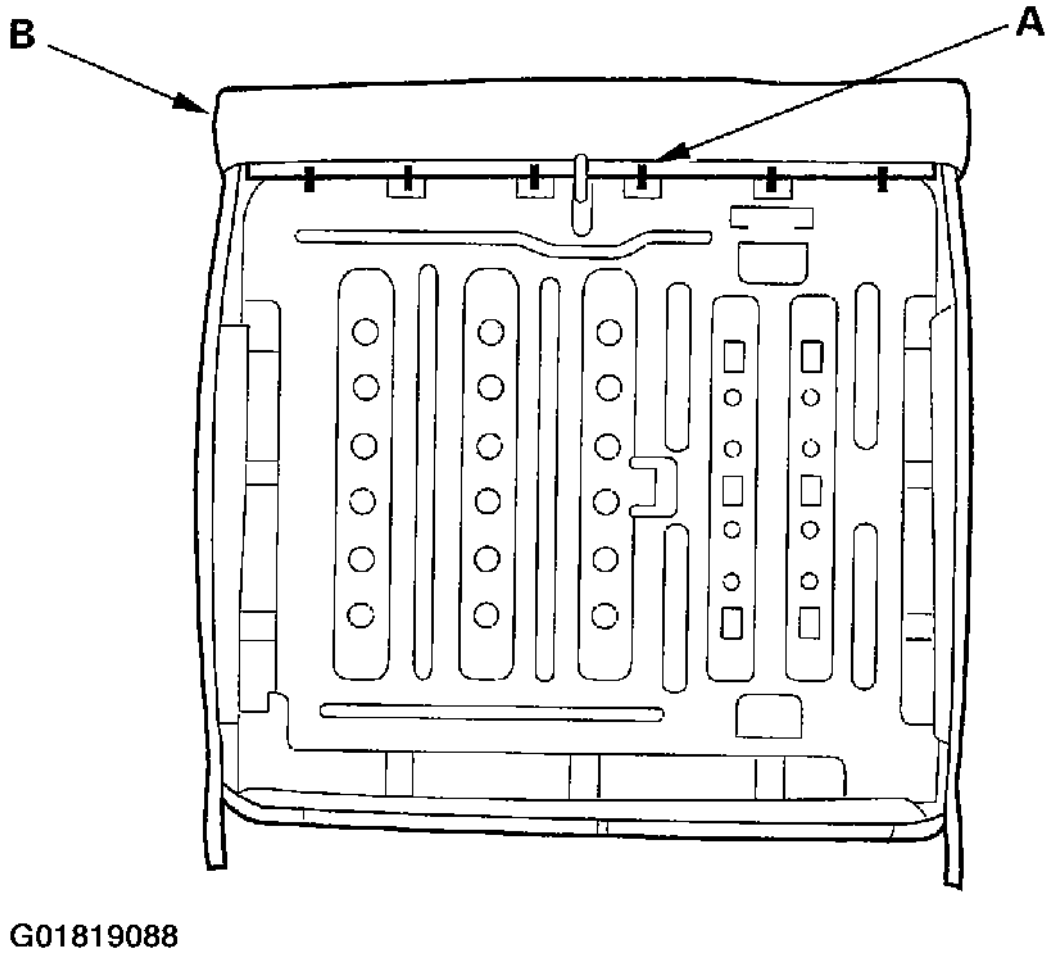

Fig. 43: Releasing All The Clips & Folding Back The Left Seat-Back Cover

cardiagn.com

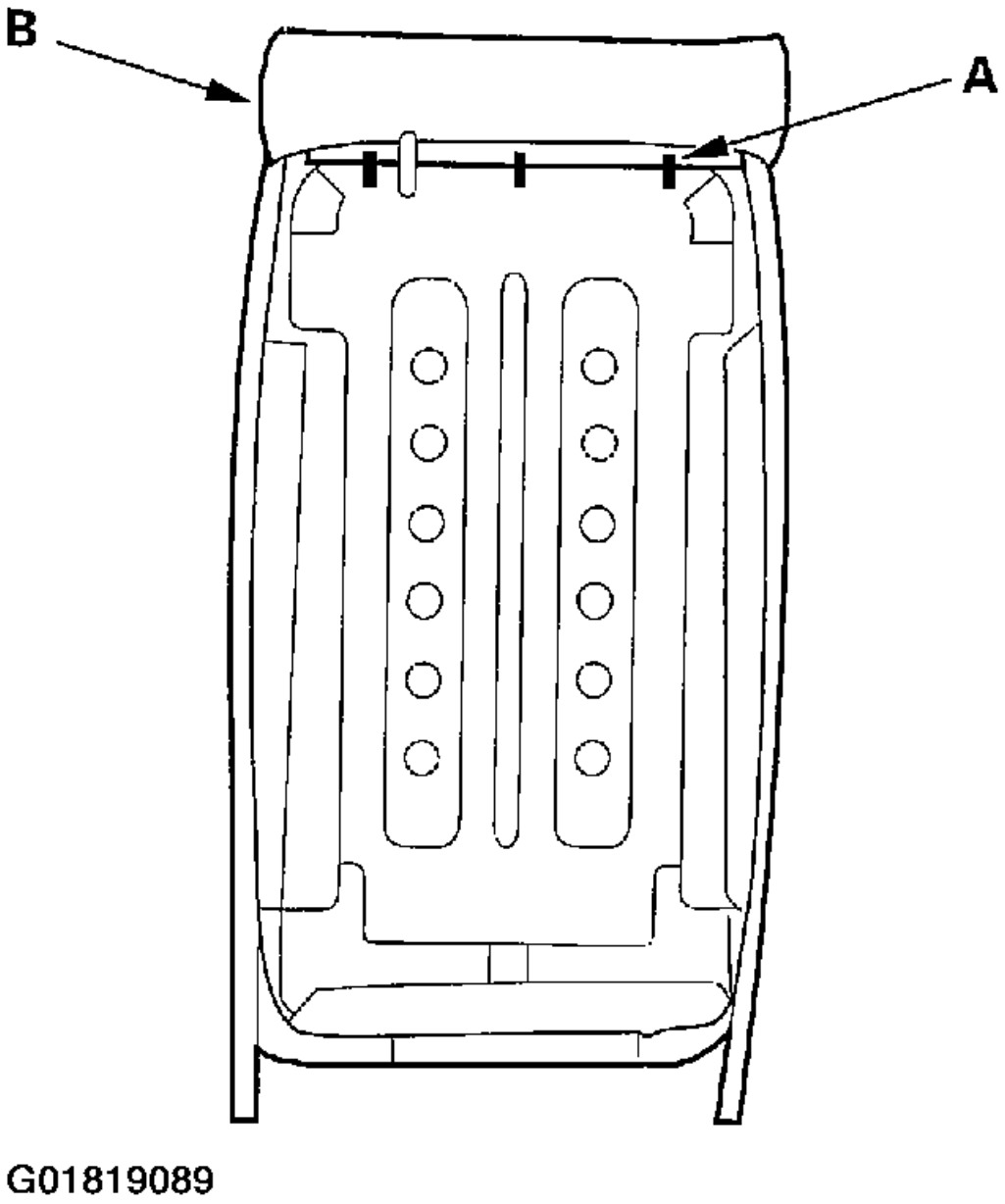

Fig. 44: Releasing All The Clips & Folding Back The Right Seat-Back Cover

8. Pull out the seat-back pad (A) from the frame (B), then pull out the headrest guides (C) while pinching the end of the guides, and remove them.

cardiagn.com

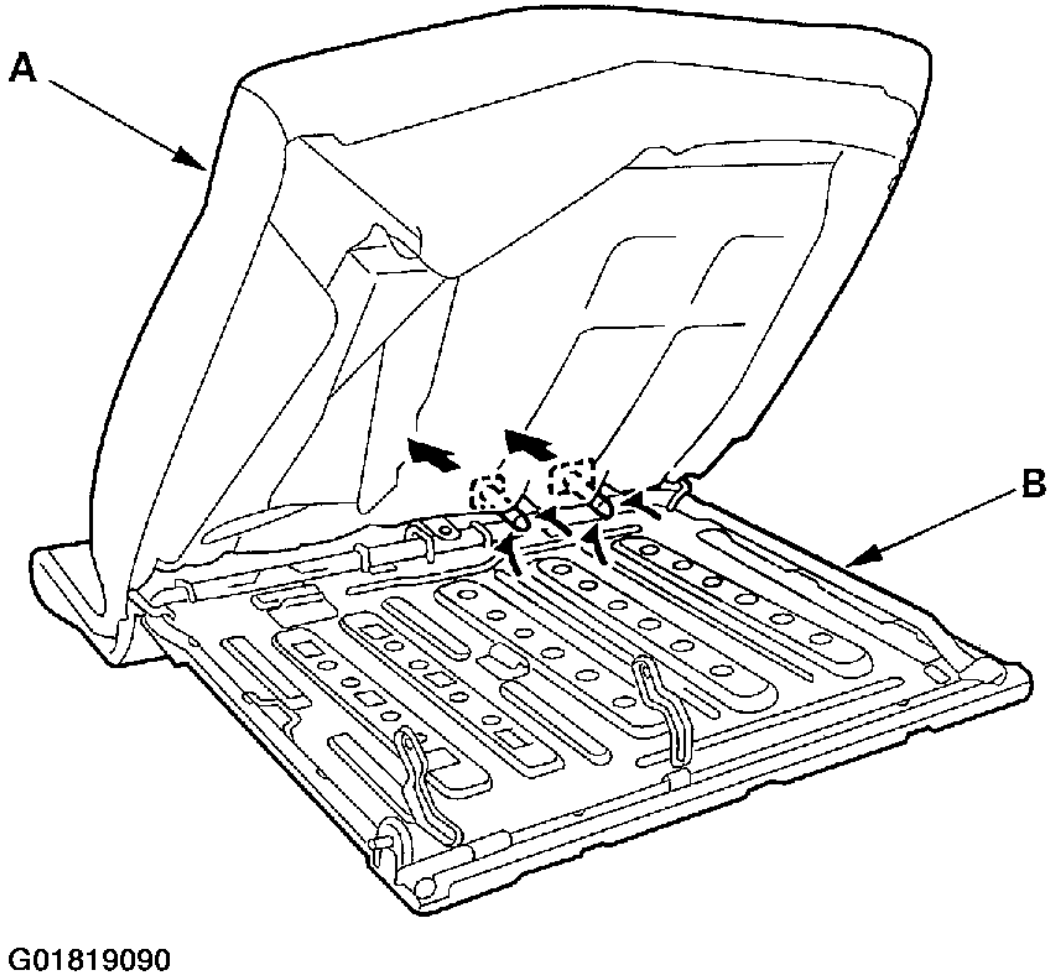

Fig. 45: Removing The Seat-Back Pad & The Headrest Guides

9. Remove the seat-back cover and pad from the seat-back frame.
10. Pull back the edge of the seat-back cover (A) all the way around, and release the clips (B), then remove the seat-back cover.

cardiagn.com

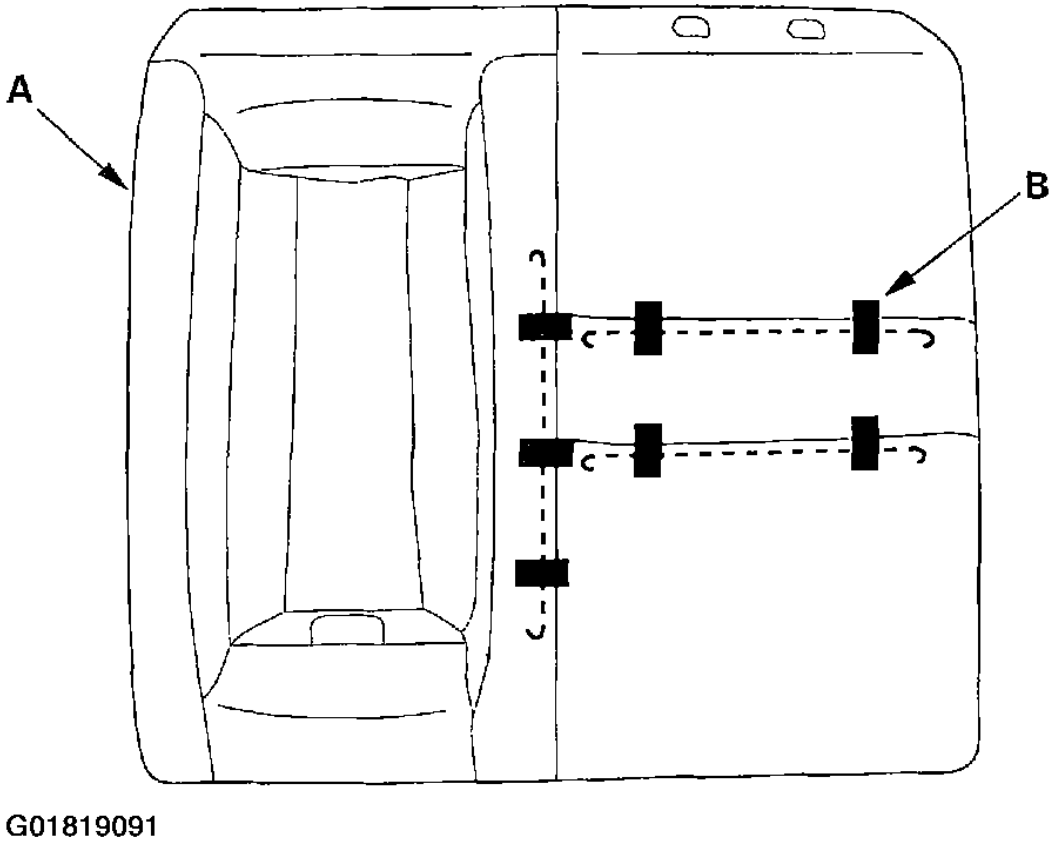

Fig. 46: Removing The Left Seat-Back Cover

cardiagn.com

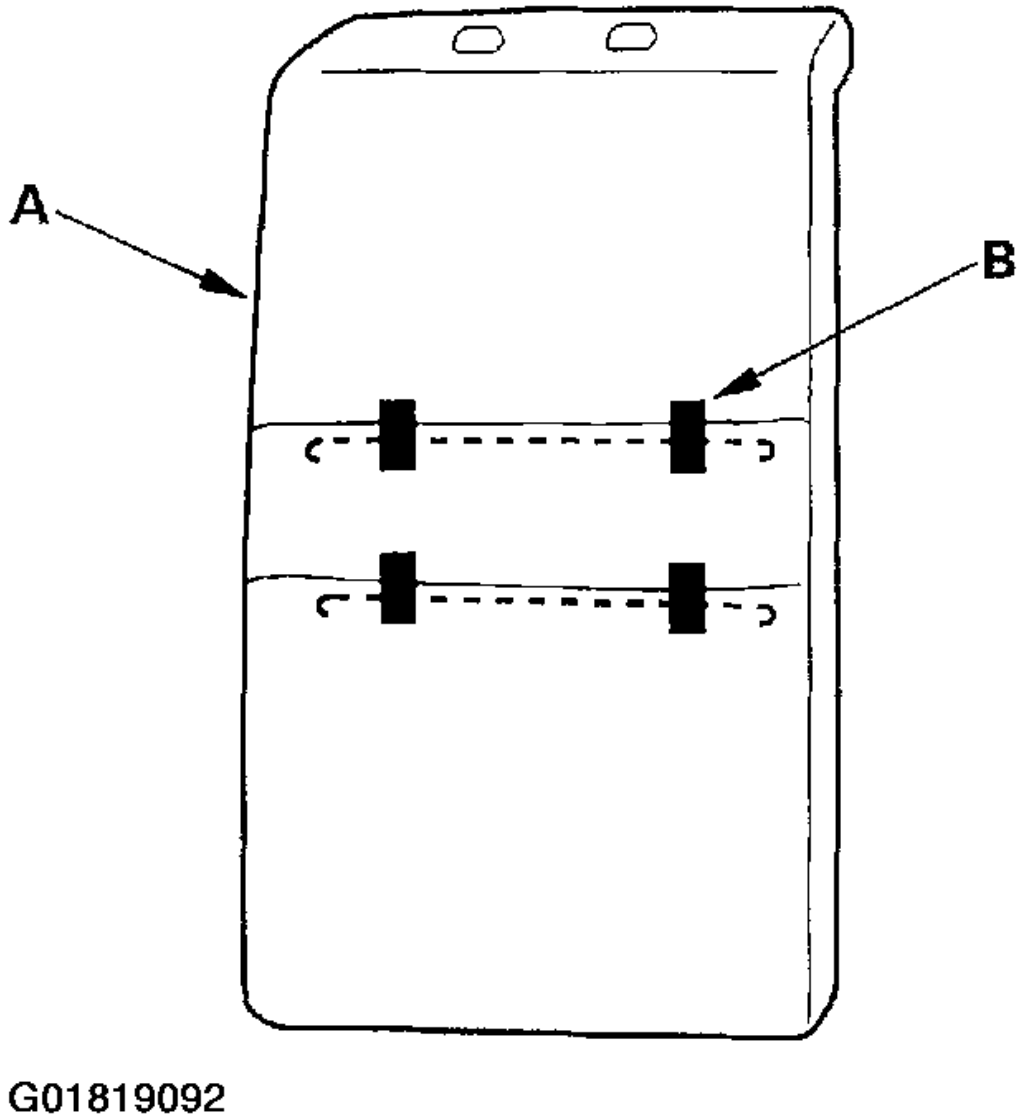

Fig. 47: Removing The Right Seat-Back Cover

11. Install the cover the in the reverse order of removal, and note these items:
    - To prevent wrinkles, make sure the material is stretched evenly over the pad before securing the clips.
    - Replace any clips you removed with new ones. Install them with commercially available upholstery ring pliers.

REAR SEAT SIDE BOLSTER COVER REPLACEMENT

cardiagn.com

1. Remove the seat side bolster (see **REAR SEAT REMOVAL/INSTALLATION**).
2. Release all the hook strips (A), and fold back the seat side bolster cover (B), and release the cover from the hook (C), and release the staples (D) fastening the cover, to remove it.

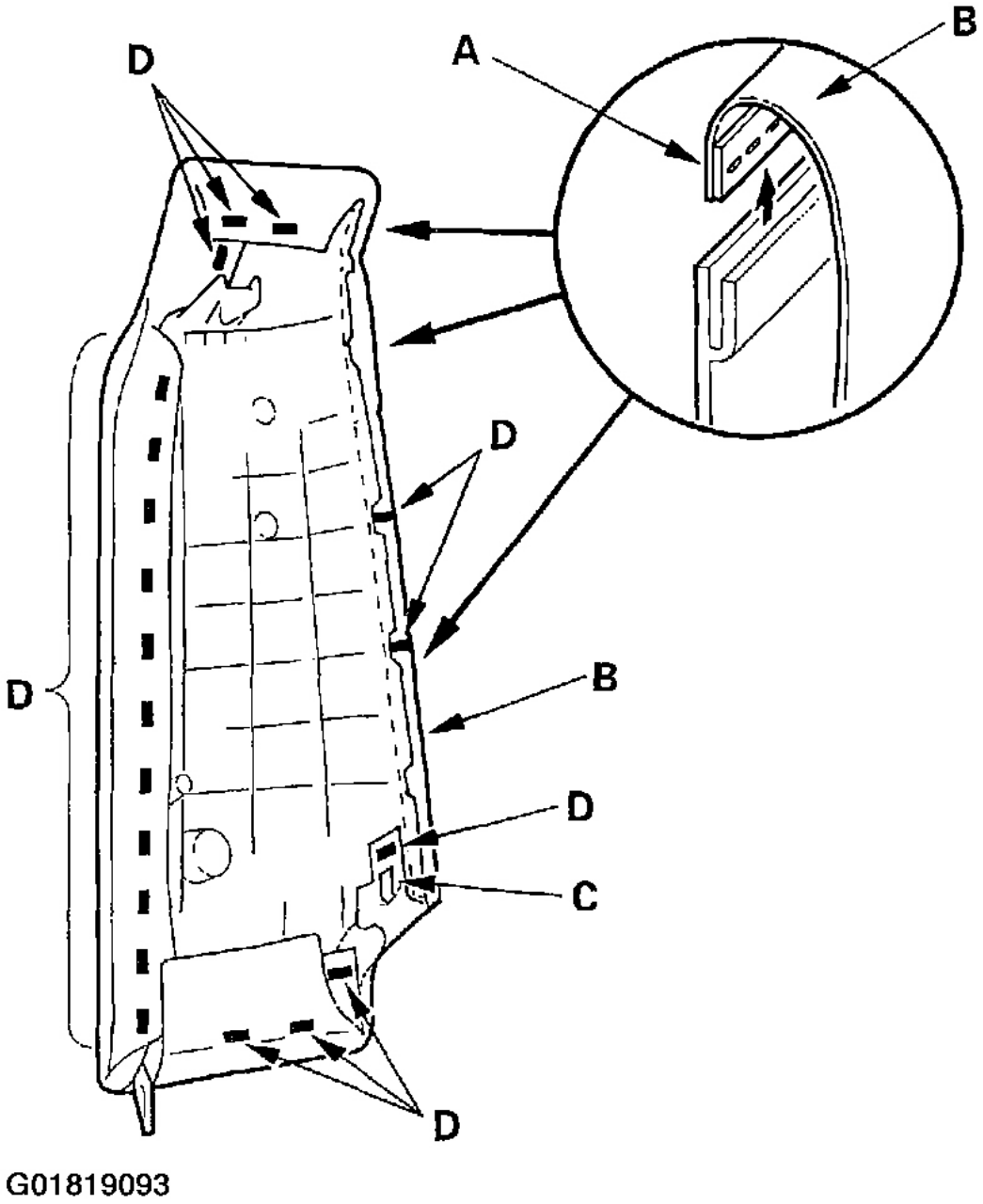

Fig. 48: Releasing All The Hook Strips & Folding Back The Seat Side Bolster Cover

cardiagn.com

3. Install the cover in the reverse order of removal, and note these items:
   - To prevent wrinkles, make sure the material is stretched evenly over the pad before securing the hook strips and staples.
   - Fasten the cover with new staples (MAX 1005F) securely.

REAR SEAT CUSHION COVER REPLACEMENT

1. Remove the seat-backs and seat cushion (see **REAR SEAT REMOVAL/INSTALLATION**).
2. Release all the clips (A) from under the seat cushion, and fold back the seat cushion cover.

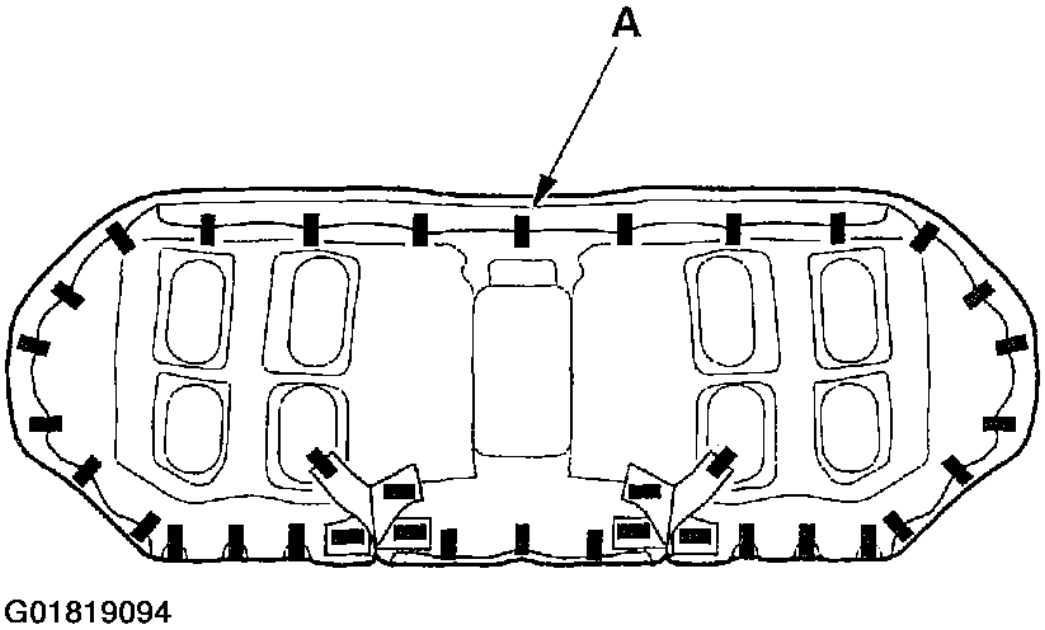

Fig. 49: Releasing All The Clips From Under The Seat Cushion & Folding Back The Seat Cushion Cover

3. Pull back the edge of the seat cushion cover all the way around, and release the clips (A), then remove the seat cushion cover.

cardiagn.com

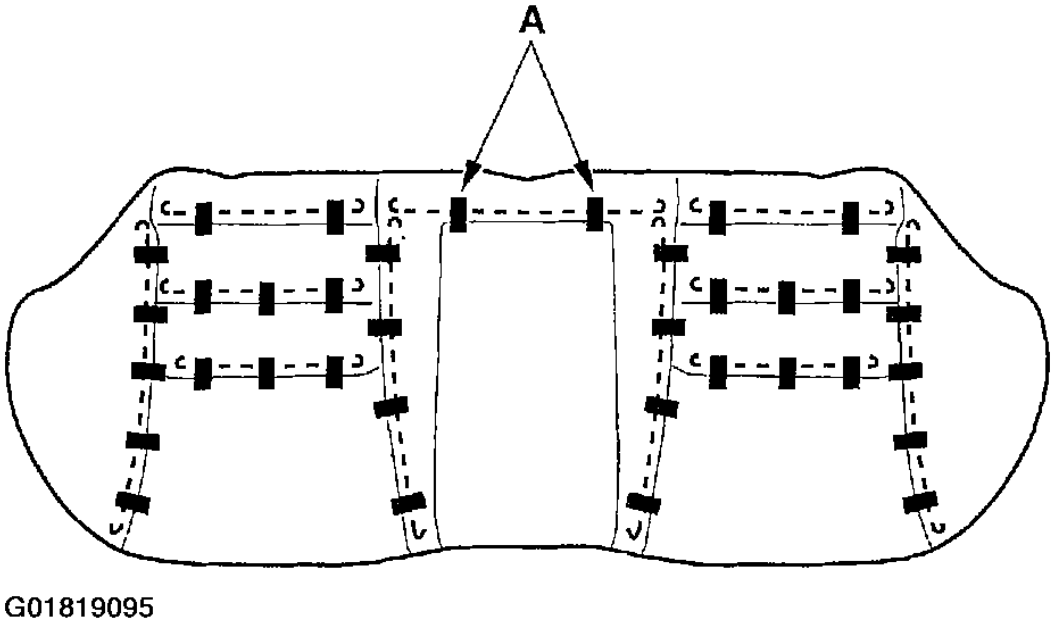

Fig. 50: Removing The Seat Cushion Cover

4. Install the cover in the reverse order of removal, and note these items:
   - To prevent wrinkles, make sure the material is stretched evenly over the pad before securing the clips.
   - Replace any clips you removed with new ones. Install them with commercially available upholstery ring pliers.
5. Install the cover in the reverse order of removal, and note these items:
   - To prevent wrinkles, make sure the material is stretched evenly over the pad before securing the clips.
   - Replace any clips (A) you removed with new ones. Install them with commercially available upholstery ring pliers (B).

cardiagn.com

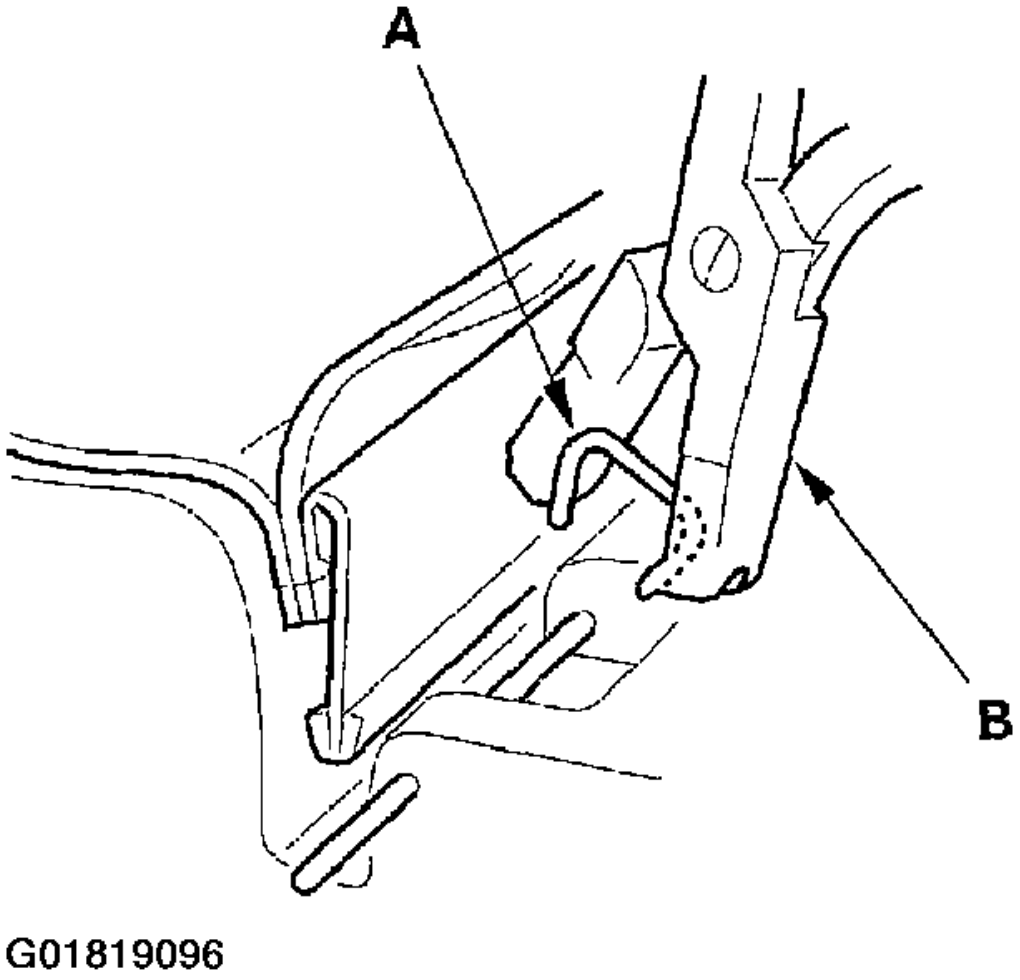

Fig. 51: Installing Clips

POWER SEATS

COMPONENT LOCATION INDEX

cardiagn.com

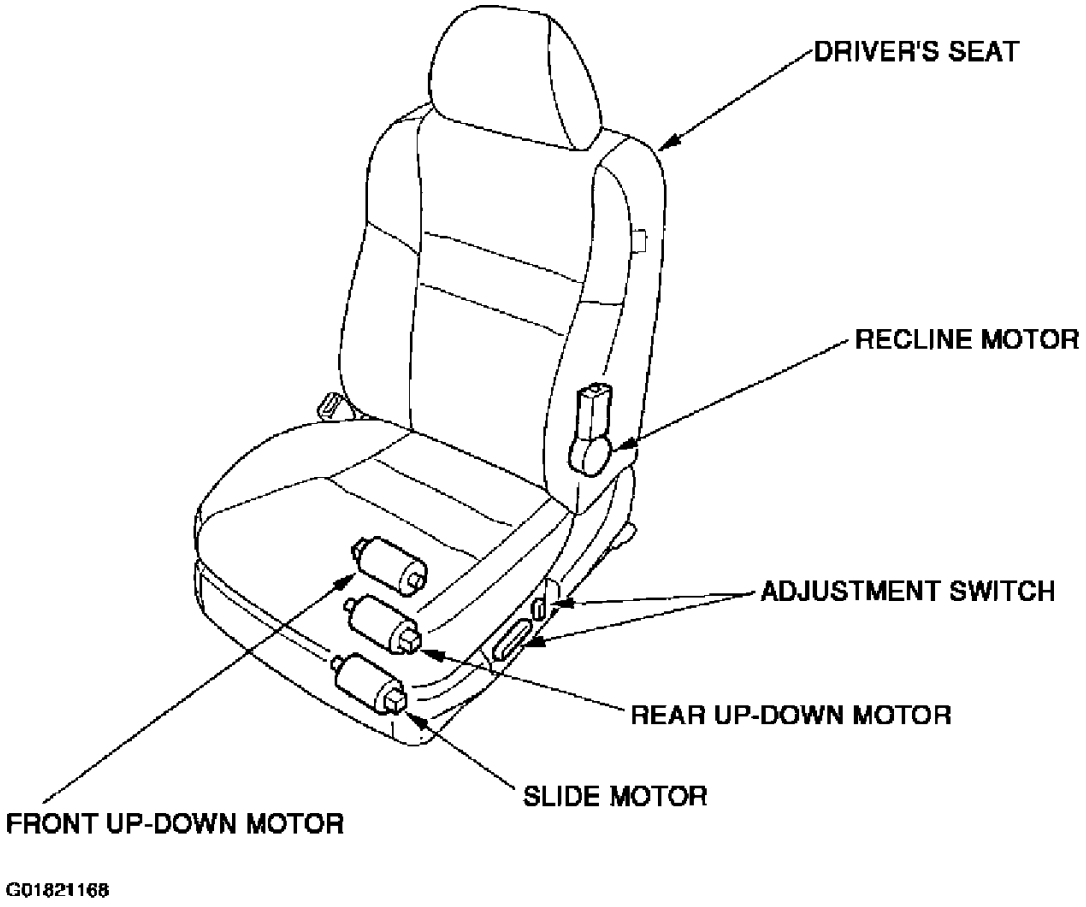

Fig. 52: Locating Power Seat Components

CIRCUIT DIAGRAM

cardiagn.com

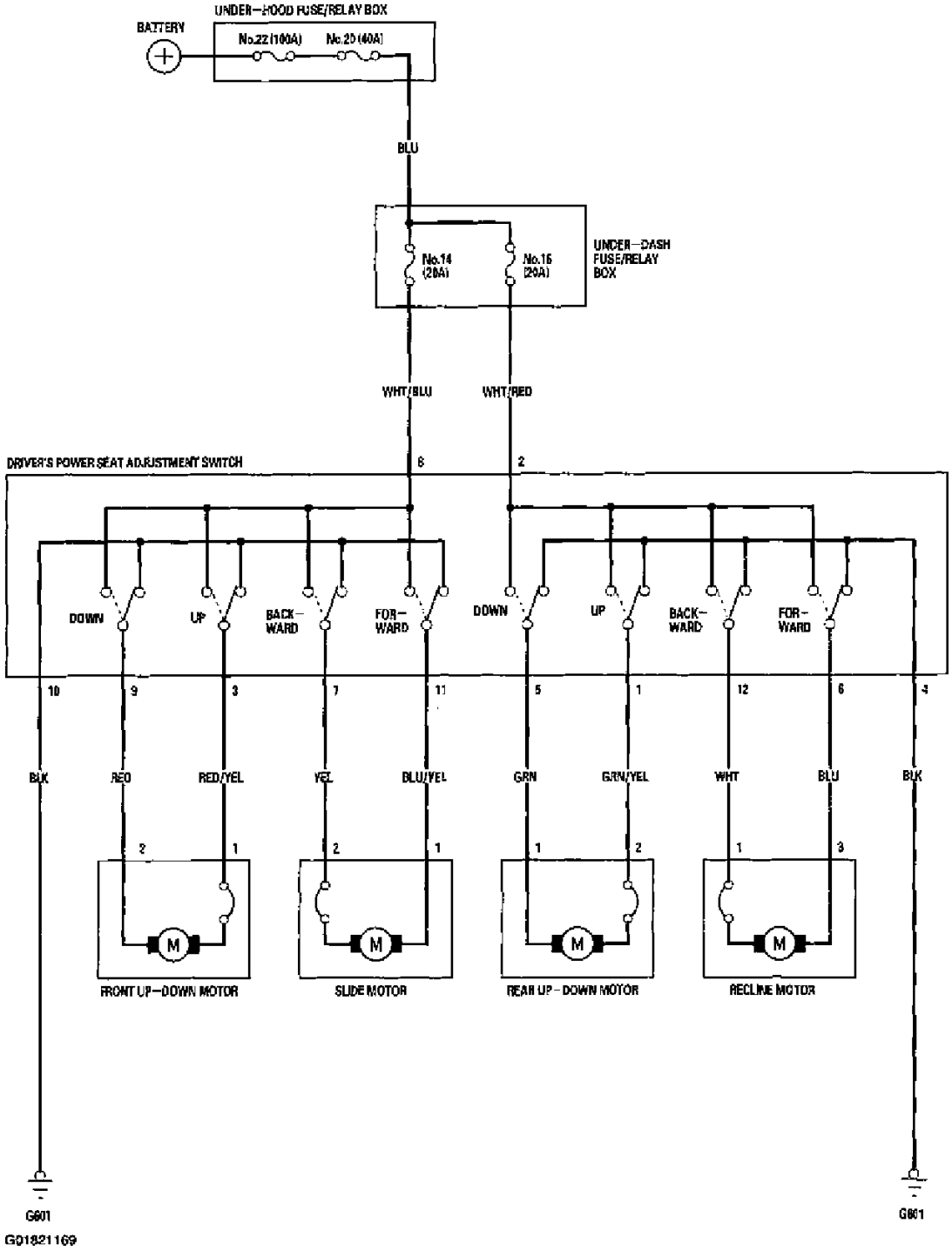

Fig. 53: Power Seat System Wiring Diagram

SWITCH TEST/REPLACEMENT

1. Remove the power seat adjustment switch knobs (A) and recline cover from the driver's power seat (see

cardiagn.com

FRONT SEAT REMOVAL/INSTALLATION), then remove the two screws and the power seat switch.

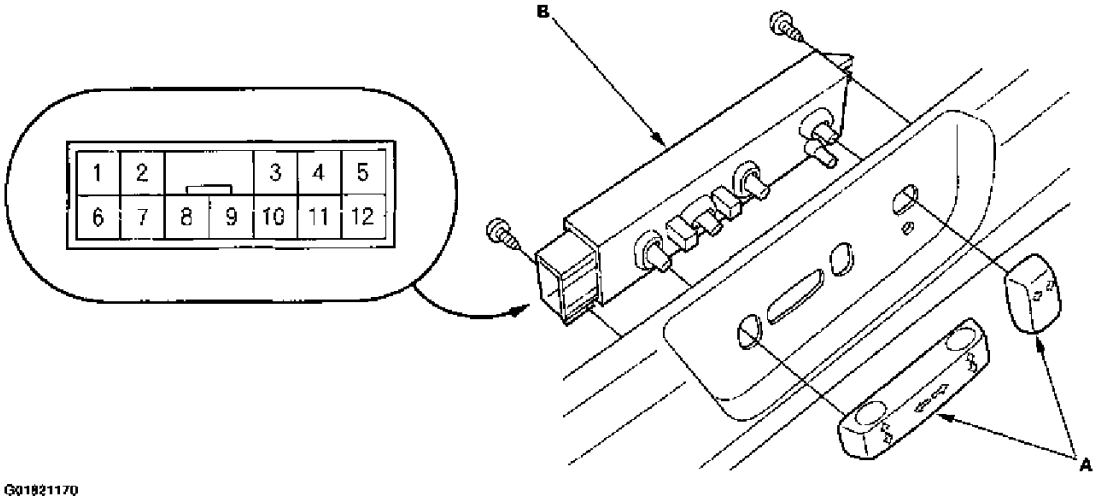

Fig. 54: Removing Power Seat Switch

2. Disconnect the 12P connector from the power seat adjustment switch (B).
3. Reinstall the adjustment switch knobs to the switch.
4. Check for continuity between the terminals in each switch position according to the table. See **Fig. 55** .

Position \ Terminal		1	2	3	4	5	6	7	8	9	10	11	12
SLIDE SWITCH	Forward							○	○		○	○	
	Backward							○	○		○	○	
RECLINE SWITCH	Forward		○		○		○						○
	Backward		○		○		○						○
FRONT UP-DOWN SWITCH	UP			○					○	○	○		
	DOWN			○					○	○	○		
REAR UP-DOWN SWITCH	UP	○	○		○	○							
	DOWN	○	○		○	○							

G01821171

Fig. 55: Power Seat Switch Test Table

5. If the continuity is not as specified, replace the switch.

MOTOR TEST

1. Remove the driver's seat (see **FRONT SEAT REMOVAL/INSTALLATION**).

cardiagn.com

2. Disconnect the 12P connector (A) from the power seat adjustment switch (B).

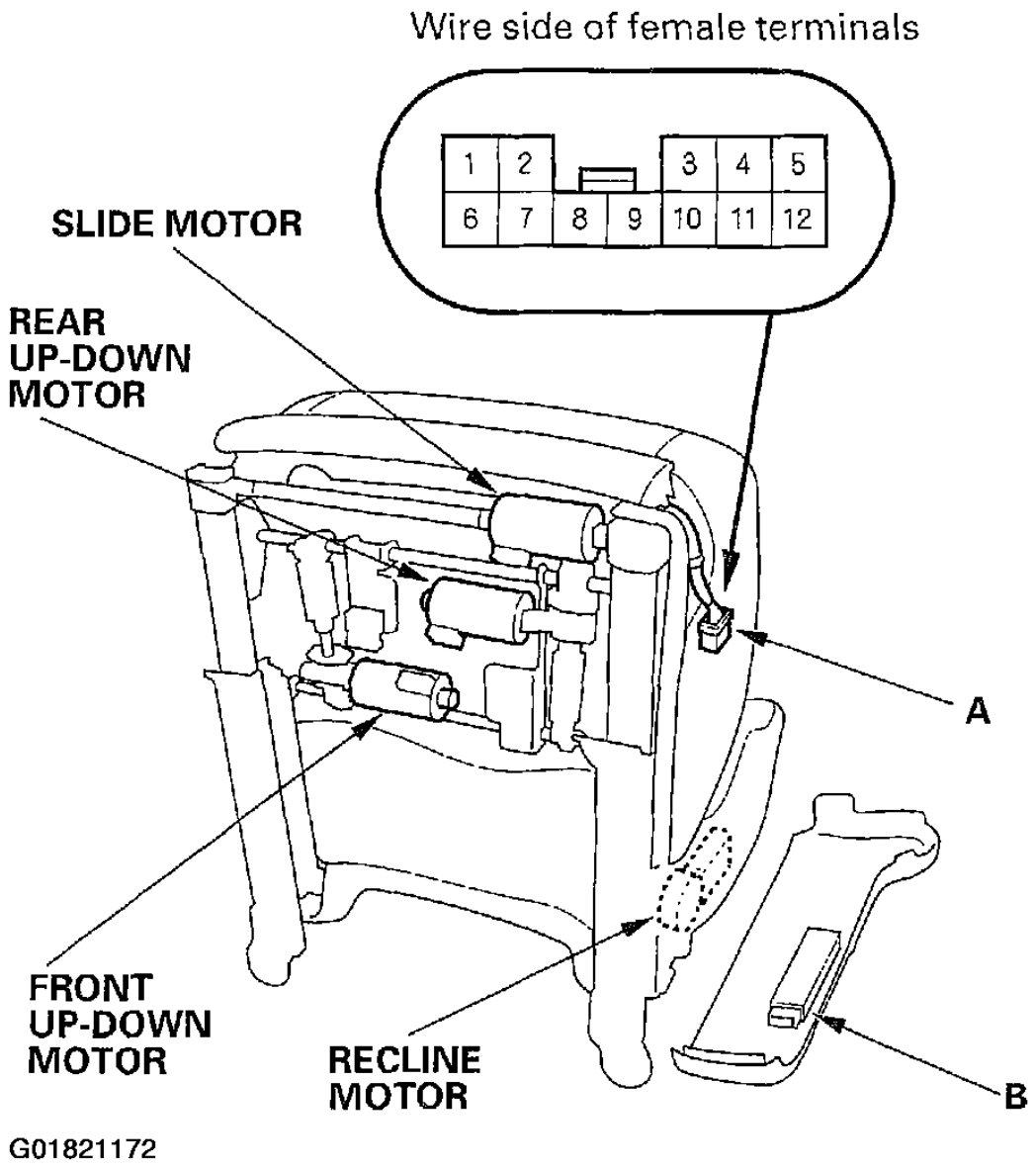

Fig. 56: Disconnecting The 12P Connector From The Power Seat Adjustment Switch

3. Test each motor by applying battery voltage and body ground to the terminals.

cardiagn.com

Terminal / Position	7	11
Forward	⊖	⊕
Backward	⊕	⊖

G01821173

Fig. 57: Slide Motor Test

Terminal / Position	6	12
Forward	⊖	⊕
Backward	⊕	⊖

G01821174

Fig. 58: Recline Motor Test

cardiagn.com

Terminal / Position	3	9
UP	⊕	⊖
DOWN	⊖	⊕

G01821175

Fig. 59: Front Up-Down Motor Test

Terminal / Position	1	5
UP	⊕	⊖
DOWN	⊖	⊕

G01821176

Fig. 60: Rear Up-Down Motor Test

4. If the motor does not run or fails to run smoothly, check for an open in the driver's seat wire harness between the 12P connector and each motor connector. If the harness is OK, replace the motor (see **FRONT SEAT RECLINE MOTOR REPLACEMENT**).

SEAT HEATERS

COMPONENT LOCATION INDEX

cardiagn.com

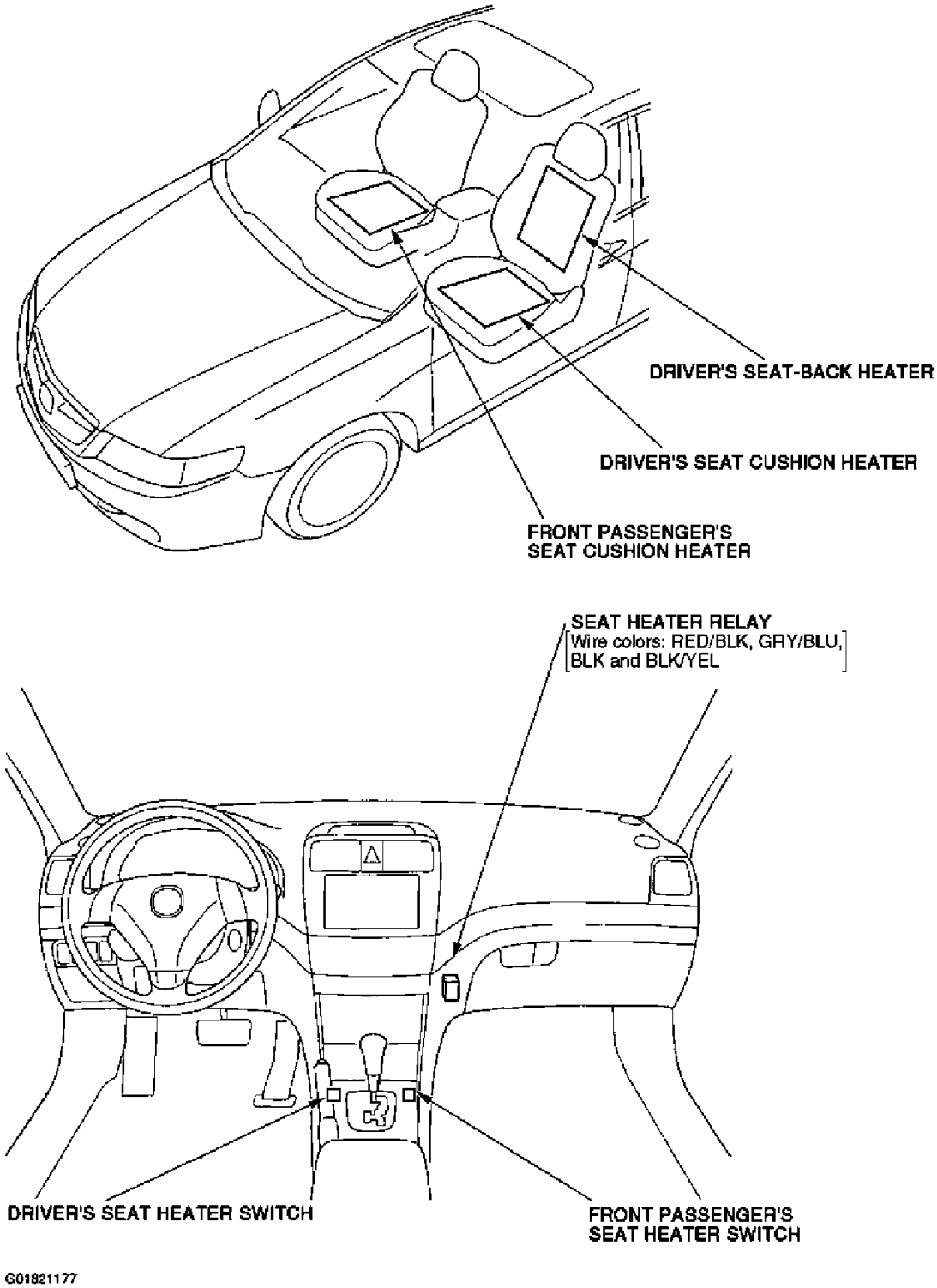

Fig. 61: Locating Seat Heater Components

CIRCUIT DIAGRAM

cardiagn.com

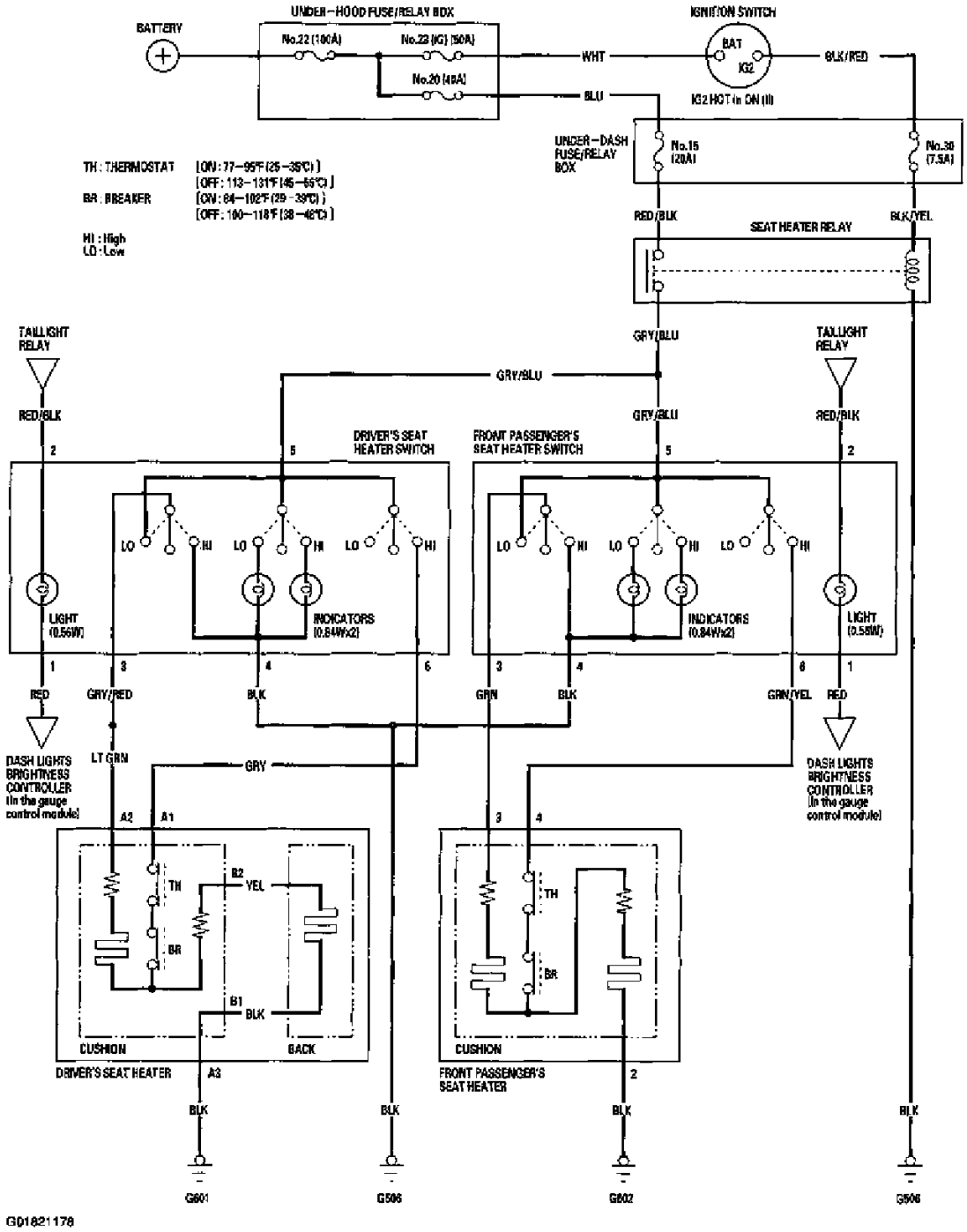

Fig. 62: Seat Heater System Wiring Diagram

SEAT HEATER TEST

Driver's Seat

cardiagn.com

1. Remove the driver's seat (see **FRONT SEAT REMOVAL/INSTALLATION**).
2. Disconnect the 4P connector (A) and 2P connector (B) from the seat heater.

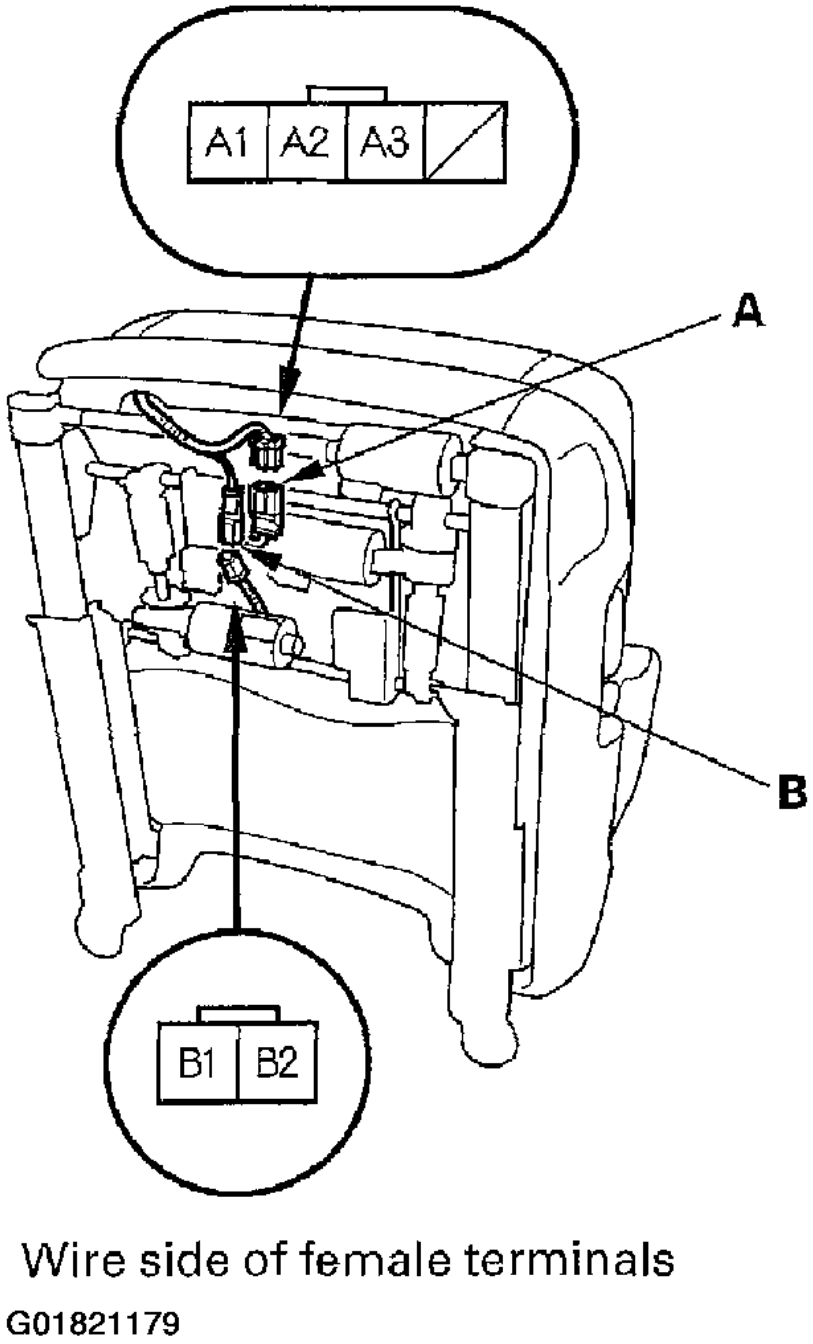

Fig. 63: Disconnecting The 4P Connector & 2P Connector From The Seat Heater

cardiagn.com

3. Check for continuity between the B1 and B2 terminals of the seat-back heater 2P connector. There should be continuity.
4. Check for continuity between the A1 and A2 terminals, and the A1 and B2 terminals. There should be continuity.
5. If the continuity check is not as specified, replace the seat heater.

Front Passenger's Seat

1. Remove the passenger's seat (see **FRONT SEAT REMOVAL/INSTALLATION**).
2. Disconnect the 4P connector (A) from the seat heater.

cardiagn.com

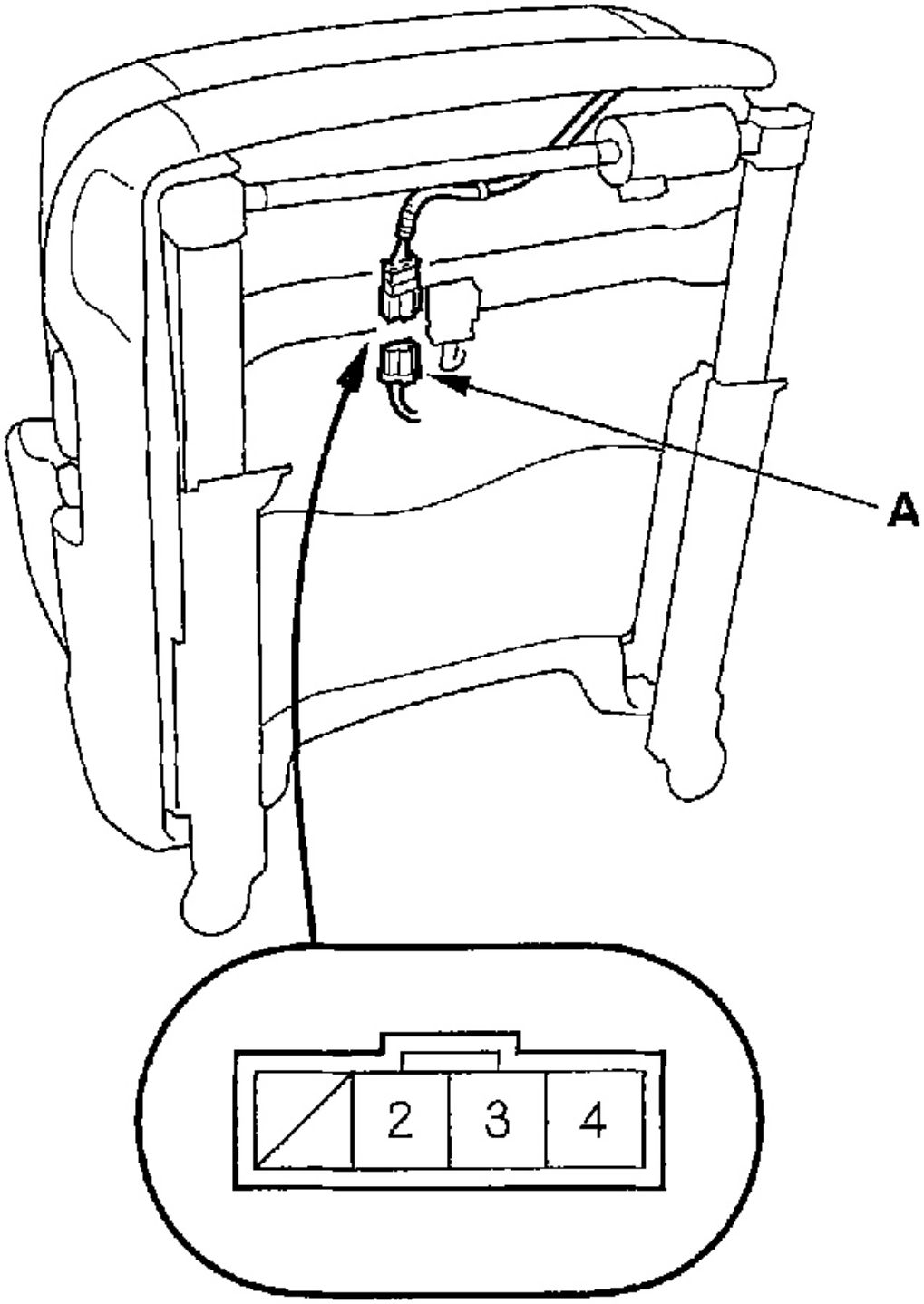

Terminal side of male terminals

G01821180

cardiagn.com

Fig. 64: Disconnecting The 4P Connector From The Seat Heater

3. Check for continuity between the No. 2 and No. 3 terminals, and No. 3 and No. 4 terminals of the 4P connector. There should be continuity.
4. If the continuity is not as specified, replace the seat heater.

SWITCH TEST

1. Remove the center console front panel (see **CENTER CONSOLE REMOVAL/INSTALLATION**).
2. Disconnect the 6P connector from the seat heater switch (A), then remove the switch.

cardiagn.com

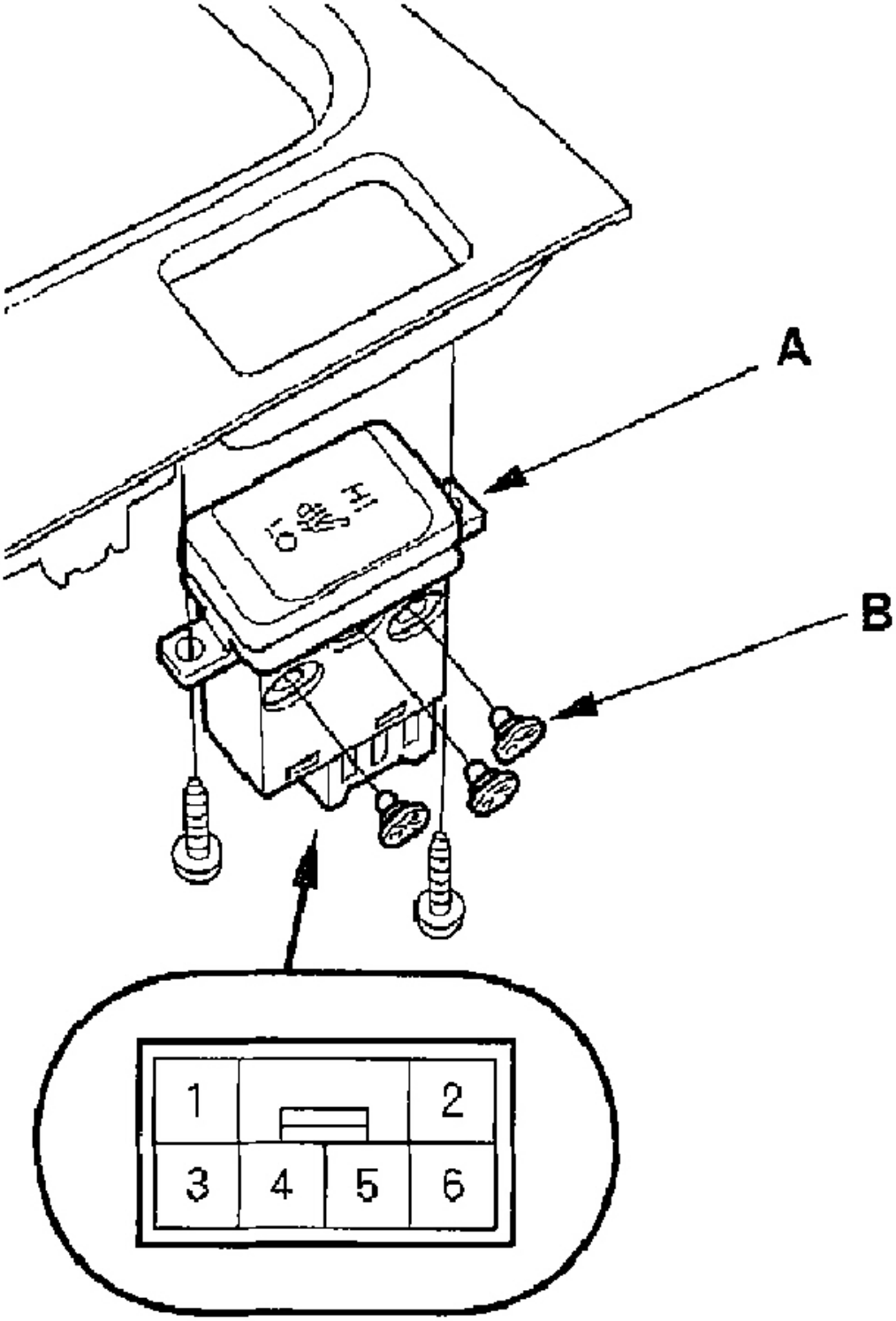

G01821181

cardiagn.com

Fig. 65: Removing The Seat Heater Switch

3. Check for continuity between the terminals in each switch position according to the table. See **Fig. 66** .

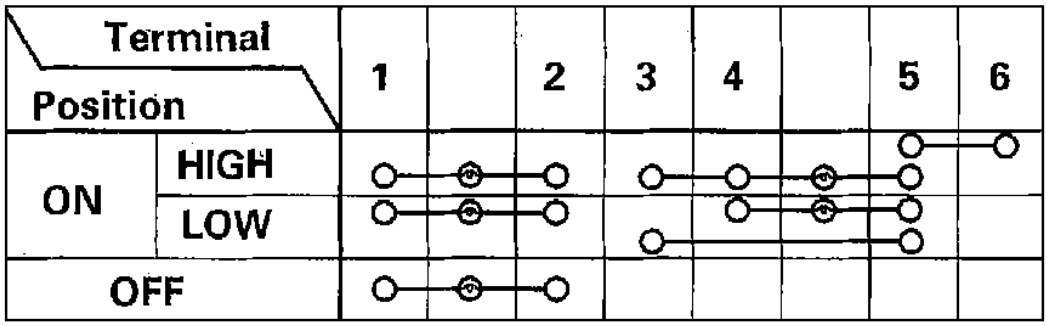

G01821182

Fig. 66: Seat Heater Switch Test Table

4. If the continuity check is not as specified, replace the illumination bulbs (B) or the switch.

cardiagn.com