Workshop Manual

Audi A1 2011 ➤ ,
Audi A1 Sportback 2018 ➤ ,
Audi A2 2001 ➤ , Audi A3 2004 ➤ ,
Audi A3 2013 ➤ ,
Audi A3 Limousine China 2014 ➤ ,
Audi A3 Sportback China 2014 ➤ ,
Audi A4 2001 ➤ , Audi A4 2008 ➤ ,
Audi A4 2015 ➤ ,
Audi A4 Cabriolet 2003 ➤ ,
Audi A5 2016 ➤ ,
Audi A5 Cabriolet 2009 ➤ ,
Audi A5 Coupé 2008 ➤ , Audi A6 1998 ➤ ,
Audi A6 2005 ➤ , Audi A6 2011 ➤ ,
Audi A6 2019 ➤ , Audi A6 China 2012 ➤ ,
Audi A7 Sportback 2011 ➤ ,
Audi A7 Sportback 2018 ➤ ,
Audi A8 2003 ➤ , Audi A8 2010 ➤ ,
Audi A8 2018 ➤ , Audi Q2 2016 ➤ ,
Audi Q3 2012 ➤ , Audi Q3 2019 ➤ ,
Audi Q3 China 2013 ➤ ,
Audi Q3 China 2019 ➤ , Audi Q5 2008 ➤ ,
Audi Q5 2017 ➤ , Audi Q5 China 2010 ➤ ,
Audi Q7 2007 ➤ , Audi Q7 2016 ➤ ,
Audi Q8 2018 ➤ , Audi R8 2007 ➤ ,
Audi R8 2015 ➤ , Audi TT 1999 ➤ ,
Audi TT 2007 ➤ , Audi TT 2015 ➤ ,
Audi e-tron 2019 ➤

Electrical system; General information

Edition 08.2019

Protected by copyright. Copying for private or commercial purposes, in part or in whole, is not permitted unless authorized by AUDI AG. AUDI AG does not guarantee or accept any liability with respect to the correctness of information in this document. Copyright by AUDI AG.

List of Workshop Manual Repair Groups

Repair Group

27 - Starter, current supply, CCS
92 - Windscreen wash/wipe system
94 - Lights, bulbs, switches - exterior
96 - Lights, bulbs, switches - interior
97 - Wiring

Protected by copyright. Copying for private or commercial purposes, in part or in whole, is not permitted unless authorised by AUDI AG. AUDI AG does not guarantee or accept any liability with respect to the correctness of information in this document. Copyright by AUDI AG.

Technical information should always be available to the foremen and mechanics, because their careful and constant adherence to the instructions is essential to ensure vehicle road-worthiness and safety. In addition, the normal basic safety precautions for working on motor vehicles must, as a matter of course, be observed.

All rights reserved.
No reproduction without prior agreement from publisher.

Copyright © 2019 Audi AG, Ingolstadt

A005AA00420

Contents

27 - Starter, current supply, CCS . . . 1

1 Battery . . . 1
1.1 Basic information on the battery . . . 1
1.2 Battery types . . . 1
1.3 Warnings and safety precautions . . . 3
1.4 Battery terminal screw connection . . . 5

2 Checking battery . . . 6
2.1 Test sequence . . . 6
2.2 Visual inspection . . . 8
2.3 Checking colour indicator of magic eye . . . 9
2.4 Checking battery using vehicle diagnostic tester . . . 10
2.5 Battery tester with printer VAS 6161 . . . 12
2.6 Battery tester with printer VAS 5097 A . . . 17
2.7 Current draw test . . . 22
2.8 Checking no-load voltage of battery, stock vehicles . . . 23

3 Charging battery . . . 25
3.1 Battery charger VAS 5095 A . . . 25
3.2 Battery charger VAS 5900 . . . 30
3.3 Battery charger VAS 5903 . . . 42
3.4 Battery charger VAS 5906 . . . 54
3.5 Solar panel VAS 6102 A . . . 57
3.6 Totally discharged batteries . . . 58

4 Alternator . . . 60
4.1 Checking alternator . . . 60
4.2 Bosch alternator up to 2000 - exploded view . . . 61
4.3 Bosch alternator from 2001 onwards - exploded view . . . 62
4.4 Removing and installing voltage regulator - Bosch alternator from 2001 onwards . . . 63
4.5 Bosch alternator from 2007 onwards - exploded view . . . 63
4.6 Removing and installing voltage regulator - Bosch alternator from 2007 onwards . . . 64
4.7 Checking carbon brushes - all types of Bosch alternators from 2001 onwards . . . 65
4.8 Valeo alternator up to 2000 - exploded view . . . 65
4.9 Valeo alternator from 2001 onwards - exploded view . . . 67
4.10 Removing and installing voltage regulator - Valeo alternator from 2001 onwards . . . 68
4.11 Checking carbon brushes - Valeo alternator from 2001 onwards . . . 68
4.12 Removing and installing voltage regulator - Valeo alternator from 2007 onwards . . . 69
4.13 Checking carbon brushes - Valeo alternator from 2007 onwards . . . 69
4.14 Hitachi alternator - exploded view . . . 70
4.15 Removing and installing voltage regulator - Hitachi alternator . . . 71
4.16 Checking carbon brushes - Hitachi alternator . . . 72
4.17 Removing and installing poly V-belt pulley without free-wheel . . . 73
4.18 Removing and installing poly V-belt pulley with free-wheel . . . 73
4.19 Checking poly V-belt pulley with free-wheel . . . 76

92 - Windscreen wash/wipe system . . . 77

1 Washer fluid hoses . . . 77
1.1 Disconnecting and connecting washer fluid hose connectors . . . 77
1.2 Servicing a smooth washer fluid pipe . . . 78
1.3 Servicing a washer fluid hose with corrugated tube . . . 79

94 - Lights, bulbs, switches - exterior . . . 82

1 Safety precautions when handling gas discharge bulbs . . . 82

96 - Lights, bulbs, switches - interior . . . 84

Protected by copyright. Copying for private or commercial purposes, in part or in whole, is not permitted unless authorised by AUDI AG. AUDI AG does not guarantee or accept any liability with respect to the correctness and completeness of this document. Copyright by AUDI AG.

1 Immobiliser . . . 84
1.1 General notes . . . 84
1.2 Defective transponder or loss of key . . . 84
1.3 Renewing reader coil . . . 84
1.4 Procedure for renewing lock set . . . 85
2 Towing bracket . . . 86
2.1 Removing and installing socket for towing bracket - version 1 . . . 86
2.2 Removing and installing socket for towing bracket - version 2 . . . 87
2.3 Removing and installing socket for towing bracket - version 3 . . . 89
2.4 Removing and installing socket for towing bracket - version 4 . . . 90

97 - Wiring . . . 93
1 Vehicle diagnostic, testing and information systems . . . 93
1.1 Connecting vehicle diagnostic tester . . . 93
2 Repairing wiring harnesses and connectors . . . 95
2.1 General information on repairs to the vehicle electrical system . . . 95
2.2 Wiring harness repair set . . . 98
2.3 Description of tools . . . 100
2.4 Repairing wiring harnesses . . . 104
2.5 Repairing fibre optic cables . . . 131
2.6 Repairing aerial wires . . . 142
2.7 Repairing connector housings and electrical connectors . . . 154
2.8 Releasing and dismantling connector housings . . . 157
3 Contact surface cleaning set VAS 6410 . . . 163
3.1 Using contact surface cleaning set VAS 6410 . . . 163
4 ESD (electrostatic discharge) workplace VAS 6613 . . . 170
4.1 Using ESD workplace VAS 6613 . . . 170

Protected by copyright. Copying for private or commercial purposes, in part or in whole, is not permitted unless authorised by AUDI AG. AUDI AG does not guarantee or accept any liability with respect to the correctness of information in this document. Copyright by AUDI AG.

27 – Starter, current supply, CCS

1 Battery

(ARL006579; Edition 08.2019)

⇒ “1.1 Basic information on the battery”, page 1

⇒ “1.2 Battery types”, page 1

⇒ “1.3 Warnings and safety precautions”, page 3

⇒ “1.4 Battery terminal screw connection”, page 5

1.1 Basic information on the battery

To ensure a long service life, the battery - A- must be checked, serviced and maintained according to the specifications in this Manual.

The battery - A- supplies the power needed to start the engine. Furthermore, the battery - A- acts as an electrical buffer and supplies power to all parts of the vehicle's electrical system.

Note

Observe ⇒ Self-study programme No. 234 ; Vehicle batteries .

Protected by copyright. Copying for private or commercial purposes, in part or in whole, is not permitted unless authorised by AUDI AG. AUDI AG does not guarantee or accept any liability with respect to the correctness of information in this document. Copyright by AUDI AG.

Caution

To avoid damaging the battery - A- or the vehicle, observe notes on the types of batteries ⇒ page 1 .

WARNING

Risk of injury. Comply with the warning notices and safety regulations! ⇒ page 3

1.2 Battery types

General notes

Caution

The batteries - A- described below are maintenance-free batteries - A- . Do not remove any labels and do not top up with distilled water. Perform only a visual check. Note the chapter on checking the battery ⇒ page 6 .

⇒ “1.2.1 Battery A with magic eye”, page 2

⇒ “1.2.2 EFB battery”, page 2

⇒ “1.2.3 AGM battery”, page 3

1.2.1 Battery - A- with magic eye

Maintenance-free battery - A- with liquid electrolyte (wet battery)

> ⚠ **Caution**
>
> *Do not remove any labels and do not top up with distilled water. Perform only a visual check. Note the chapter on checking the battery ⇒ page 6 .*

> ⚠ **WARNING**
>
> *If the magic eye is colourless or light yellow, the battery - A- must not be checked or charged. Do not attempt to jump-start the vehicle!*
>
> *There is a risk of explosion when checking or charging the battery or jump starting the vehicle.*
>
> *If this is the case, battery - A- must be renewed.*

This battery - A- is equipped with a magic eye. The magic eye shows different colours to provide information concerning the level of electrolyte and the charge level of the battery - A- .

Checking the colour indicator of the magic eye ⇒ page 9

1.2.2 EFB battery

Protected by copyright. Copying for private or commercial purposes, in part or in whole, is not permitted unless authorised by AUDI AG. AUDI AG does not guarantee or accept any liability with respect to the correctness of information in this document. Copyright by AUDI AG.

Maintenance-free battery - A- with liquid electrolyte (wet battery)

> ⚠ **Caution**
>
> *Do not remove any labels and do not top up with distilled water. Perform only a visual check. Note the chapter on checking the battery.*

> ⚠ **WARNING**
>
> *If the magic eye is colourless or light yellow, the battery - A- must not be checked or charged. Do not attempt to jump-start the vehicle!*
>
> *There is a risk of explosion when checking or charging the battery or jump starting the vehicle.*
>
> *If this is the case, battery - A- must be renewed.*

This battery - A- is used for the special requirements that some vehicles with start/stop system have. This type of battery is marked with the letters “EFB” on the battery cover.

“EFB” stands for »enhanced flooded battery«.

An EFB battery may only be replaced by another EFB battery.

This battery - A- is equipped with a magic eye. The magic eye shows different colours to provide information concerning the level of electrolyte and the charge level of the battery - A- .

Checking the colour indicator of the magic eye ⇒ page 9

Note

"EFB" batteries have been installed in e.g. certain Audi A1 and A3 vehicles since 08.2011.

1.2.3 AGM battery

Maintenance-free battery - A- with solidified electrolyte (valve-regulated lead acid)

Lead-acid battery with electrolyte solidified in an absorbent glass mat (AGM). The battery - A- is sealed and equipped with valves.

"AGM" stands for »absorbent glass mat«.

As the electrolyte is absorbed in the mat, these battery - A- cannot have a magic eye. Absorbent glass mat battery - A- are marked with the abbreviation AGM.

An AGM battery must always be replaced by another AGM battery.

1.3 Warnings and safety precautions

⇒ "1.3.1 Dangers associated with handling batteries", page 3

⇒ "1.3.2 Safety markings on battery", page 5

1.3.1 Dangers associated with handling batteries

Knowing and avoiding dangers

Handling battery - A- is dangerous. However, such dangers can be avoided by paying attention to the warnings on the battery - A- , in the ⇒ Owner's Manual and in ELSA.

Protected by copyright. Copying for private or commercial purposes, in part or in whole, is not permitted unless authorised by AUDI AG. AUDI AG does not guarantee or accept any liability with respect to the correctness of information in this document. Copyright by AUDI AG.

WARNING

- *Non-qualified personnel such as trainees and junior staff must only be allowed to perform work on batteries - A- under the supervision of skilled workers such as qualified vehicle mechanics or electricians.*
- *Acid is highly corrosive. If batteries - A- are handled improperly, there is a danger of exposure to electrolyte, which can be harmful to persons involved. Therefore suitable measures must be taken to ensure that equipment/ solutions etc. are available to neutralise acid burns. Soap solution is a suitable neutralising agent.*
- *Electrolyte escaping from the battery - A- can cause skin burns, acid degradation and corrosion on the vehicle. This may damage safety-relevant components on the vehicle.*
- *The gas given off during charging and emitted by the battery at rest after charging is explosive. In the worst case, improper handling of the battery - A- can lead to explosion caused by escaping gas.*
- *Renew the battery - A- if the magic eye is colourless or light yellow. It must not be checked or charged; do not jump start the vehicle. There is a risk of explosion when checking or charging the battery or jump starting the vehicle.*
- *Sparks (caused by grinding, welding or cutting) and naked flames (e.g. smoking in the vicinity of the battery) are prohibited. It is likewise important to avoid sparks resulting from electrostatic discharge. Always touch the vehicle body before handling the battery - A- .*
- *Only work on batteries - A- in suitable, well ventilated areas.*

WARNING

Observe environmental requirements.

- *Old batteries are hazardous waste. They contain toxic lead (Pb) and sulphuric acid.*
- *Observe disposal regulations. Old batteries should only be disposed of in appropriate containers at an official collection point.*

Protected by copyright. Copying for private or commercial purposes, in part or in whole, is not permitted unless authorised by AUDI AG. AUDI AG does not guarantee or accept any liability with respect to the correctness of information in this document. Copyright by AUDI AG.

1.3.2 Safety markings on battery

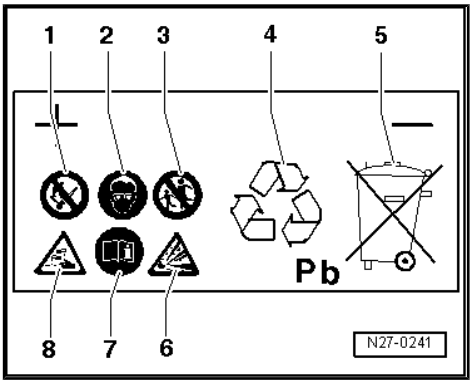

Safety markings on battery - A-

1 - Fires, sparks, naked flames and smoking are prohibited when handling batteries - A- . Avoid sparks and static discharge when handling wires and electrical equipment. To avoid short circuits, never place tools on the battery - A- .

2 - Wear eye protection when working on the battery - A- .

3 - Keep children away from acid and batteries - A- .

4 - Disposal: Old batteries are hazardous waste. They must always be disposed of at an official collection point; all legal requirements must be observed.

5 - Do not dispose of old batteries with household waste.

6 - There is a risk of explosion when handling batteries - A- . A highly explosive gas mixture is given off when batteries - A- are under charge.

7 - Always observe the notices on the battery - A- , in the ⇒ Electronic parts catalogue “ETKA” and in the ⇒ Owner's Manual .

8 - Danger of acid burns: Electrolyte is highly corrosive; protective gloves and eye protection should therefore always be worn when working on the battery - A- . Do NOT tilt the battery - A- as electrolyte can leak out of the gas vents.

1.4 Battery terminal screw connection

Caution

Observe the following to avoid damaging the battery clamps and battery terminals:

- *Only connect battery clamps by hand without exerting force.*
- *Battery terminals must not be greased.*
- *Fit battery terminal clamps in such a way that the battery terminal post is flush with the terminal clamp or protrudes from it.*
- *Never re-tighten screw connections after tightening battery clamps to specified torque.*

Specified torque for battery clamps ⇒ Electrical system; Rep. gr. 27 ; Battery .

Protected by copyright. Copying for private or commercial purposes, in part or in whole, is not permitted unless authorised by AUDI AG. AUDI AG does not guarantee or accept any liability with respect to the correctness of information in this document. Copyright by AUDI AG.

2 Checking battery

⇒ “2.1 Test sequence”, page 6

⇒ “2.2 Visual inspection”, page 8

⇒ “2.3 Checking colour indicator of magic eye”, page 9

⇒ “2.4 Checking battery using vehicle diagnostic tester”, page 10

⇒ “2.5 Battery tester with printer VAS 6161 ”, page 12

⇒ “2.6 Battery tester with printer VAS 5097 A ”, page 17

⇒ “2.7 Current draw test”, page 22

⇒ “2.8 Checking no-load voltage of battery, stock vehicles”, page 23

2.1 Test sequence

⇒ “2.1.1 Checking battery - vehicles with battery monitor control unit J367 or energy management control unit J644 and data bus diagnostic interface J533 ”, page 6

⇒ “2.1.2 Checking battery - vehicles without battery monitor control unit J367 or energy management control unit J644 ”, page 7

2.1.1 Checking battery - vehicles with battery monitor control unit - J367- or energy management control unit - J644- and data bus diagnostic interface - J533-

- On some models, the electrical system is monitored by the energy management control unit - J644- or the battery monitor control unit - J367- in connection with the data bus diagnostic interface - J533- (allocation ⇒ Current flow diagrams, Electrical fault finding and Fitting locations). The battery test for these vehicles is performed via “Guided Fault Finding”.
- If is not possible to check the battery in the “Guided Fault Finding” because of a partially or totally discharged battery, the charge status of the battery can be assessed quickly via “Checking battery by measuring current draw”.
- Do not open maintenance-free batteries; this would invalidate the warranty.

Caution

On the following models up to model year 2010, checking the battery in “Guided Fault Finding” is not possible even if, depending on the version, the battery monitor control unit - J367- is installed:

- *A3 2004 ▸ (8P)*
- *TT 2007 ▸ (8J)*
- *R8 2007 ▸ (42)*

Checking battery
⇒ “2.1.2 Checking battery - vehicles without battery monitor control unit J367 or energy management control unit J644 ”, page 7

Protected by copyright. Copying for private or commercial purposes, in part or in whole, is not permitted unless authorised by AUDI AG. AUDI AG does not guarantee or accept any liability with respect to the correctness of information in this document. Copyright by AUDI AG.

WARNING

Risk of injury. Observe warnings and safety precautions. *⇒ page 3*

Perform checks in the following sequence:

1. Visual check ⇒ page 8 .
2. Check colour indicator of magic eye (where applicable) ⇒ page 9 .

WARNING

If the magic eye is colourless or light yellow, the battery - A- must not be checked or charged. Do not attempt to jump-start the vehicle!

There is a risk of explosion when checking or charging the battery or jump starting the vehicle.

If this is the case, battery - A- must be renewed.

3. Check battery using vehicle diagnostic tester ⇒ page 10 .

2.1.2 Checking battery - vehicles without battery monitor control unit - J367- or energy management control unit - J644-

Protected by copyright. Copying for private or commercial purposes, in part or in whole, is not permitted unless authorised by AUDI AG. AUDI AG does not guarantee or accept any liability with respect to the correctness of information in this document. Copyright by AUDI AG.

Caution

On the following models up to model year 2010, checking the battery in "Guided Fault Finding" is not possible even if, depending on the version, the battery monitor control unit - J367- is installed:

- *A3 2004 ▸ (8P)*
- *TT 2007 ▸ (8J)*
- *R8 2007 ▸ (42)*

WARNING

Risk of injury. Observe warnings and safety precautions *⇒ page 3* *.*

Perform checks in the following sequence:

1. Visual inspection ⇒ page 8
2. Check colour indicator of magic eye (where applicable) ⇒ page 9 .

WARNING

If the magic eye is colourless or light yellow, the battery - A- must not be checked or charged. Do not attempt to jump-start the vehicle!

There is a risk of explosion when checking or charging the battery or jump starting the vehicle.

If this is the case, battery - A- must be renewed.

Note

In the near future, battery tester with printer - VAS 5097 A- will no longer be used for testing the battery. Only battery tester with printer - VAS 6161- will be used.

3. Checking battery with:

- Battery tester with printer - VAS 6161- ⇒ page 12
- Battery tester with printer - VAS 5097 A- ⇒ page 17

4. Depending on result of battery load test, perform current draw test ⇒ page 22 .

2.2 Visual inspection

WARNING

Risk of injury. Observe warnings and safety precautions *⇒ page 3* *.*

Before carrying out any extensive measurements, perform a visual check of the outside of the battery - A- and its connections, and ensure that it is securely seated.

Caution

- *Battery - A- may be damaged if it is not properly secured.*
- *Vibrations shorten the life of the battery. There is a danger of explosion; the plates in the battery may be damaged and the retainer plate may damage the battery housing.*
- *Check that battery - A- is securely seated (tighten securing bolt to specified torque if necessary).*

Copyright by AUDI AG. Reproduction of this document or its contents for other purposes, in part or in whole, is not permitted unless authorised by AUDI AG. AUDI AG does not guarantee or accept any liability with respect to the correctness of information in this document. Copyright by AUDI AG.

Perform visual check for the following:

- Damage to battery housing. Electrolyte can leak out if the housing is damaged and cause severe damage to the vehicle. Treat any components contaminated by battery acid immediately with acid neutraliser or soap solution.
- Damage to battery terminals. The necessary contact on the battery clamps cannot be guaranteed if the battery terminals are damaged. When connecting the battery clamps, always observe the specified torque indicated in the Workshop Manual for relevant vehicle ⇒ Electrical system; Rep. gr. 27 ; Battery . If the battery clamps are not correctly seated and tightened, there is a risk of a cable fire. This would cause se-

vere malfunctions in the electrical system, and safe operation of the vehicle would no longer be guaranteed.

2.3 Checking colour indicator of magic eye

⇒ "2.3.1 Checking 3-colour indicator, up to 03/2008", page 9

⇒ "2.3.2 Checking 2-colour indicator, from 04/2008 onwards", page 10

2.3.1 Checking 3-colour indicator, up to 03/2008

WARNING

Risk of injury. Observe warnings and safety precautions ⇒ page 3 .

General information on magic eye:

The magic eye indicates the electrolyte level and charge level of the battery - A- .

Prior to visual inspection, use a screwdriver handle to tap gently and carefully on the magic eye. Any air bubbles that could cause distortion will be dispersed, and the colour indicator of the magic eye will be more accurate.

Note

- *In particular when charging the battery - A- (or when it is charged when the vehicle is driven), air bubbles may form under the magic eye. They distort the colour displayed by the magic eye.*
- *As the magic eye is only located in one battery cell, the indicator only shows the level for this battery cell. The battery condition can be determined exactly only by a battery load test ⇒ page 18 .*
- *The magic eye can be located at different positions on the battery - A- .*

Three different colours are used as indicators:

- Green: Battery - A- is charged sufficiently.
- Black: Battery - A- is partly discharged, charged less than 65 % or completely discharged.
- Colourless/light yellow: Battery - A- must be renewed.

WARNING

If the magic eye is colourless or light yellow, the battery - A- must not be checked or charged. Do not attempt to jump-start the vehicle!

There is a danger of explosion if you test or charge the battery or jump-start the vehicle!

If this is the case, battery - A- must be renewed.

Protected by copyright. Copying for private or commercial purposes, in part or in whole, is not permitted unless authorised by AUDI AG. AUDI AG does not guarantee or accept any liability with respect to the correctness of information in this document. Copyright by AUDI AG.

2.3.2 Checking 2-colour indicator, from 04/2008 onwards

Protected by copyright. Copying for private or commercial purposes, in part or in whole, is not permitted unless authorised by AUDI AG. AUDI AG does not guarantee or accept any liability with respect to the correctness of information in this document. Copyright by AUDI AG.

WARNING

Risk of injury. Observe warnings and safety precautions *⇒ page 3* *.*

General information on magic eye:

These batteries - A- do not have a green colour indicator for the charge level display. The only colours are black or colourless/light yellow.

The colour indicator shows the electrolyte level of the battery - A- .

The charge level of the battery - A- cannot be determined using the magic eye; a battery load test is required ⇒ page 18 .

Prior to visual inspection, use a screwdriver handle to tap gently and carefully on the magic eye. Any air bubbles that could cause distortion will be dispersed, and the colour indicator of the magic eye will be more accurate.

Note

- *In particular when charging the battery - A- (or when it is charged when the vehicle is driven), air bubbles may form under the magic eye. They distort the colour displayed by the magic eye.*
- *As the magic eye is only located in one battery cell, the indicator only shows the level for this battery cell. The battery condition can be determined exactly only by a battery load test* *⇒ page 18* *.*
- *The magic eye can be located at different positions on the battery - A- .*

Two different colours are used as indicators:

- Black: Electrolyte level is OK.
- Colourless/light yellow: Electrolyte level is too low. Battery - A- must be renewed.

WARNING

If the magic eye is colourless or light yellow, the battery - A- must not be checked or charged. Do not attempt to jump-start the vehicle!

There is a danger of explosion if you test or charge the battery or jump-start the vehicle!

If this is the case, battery - A- must be renewed.

2.4 Checking battery using vehicle diagnostic tester

Battery - A- can also be checked with the ⇒ Vehicle diagnostic tester while installed in the vehicle and without a battery charger connected. This applies to vehicles with battery monitor control

unit - J367- or energy management control unit - J644- and data bus diagnostic interface - J533- .

Special tools and workshop equipment required

- ⇒ Vehicle diagnostic tester

Test requirements

- No battery charger connected.
- Battery - A- connected.
- Battery temperature at least +10 °C.

Procedure

⇒ Vehicle diagnostic tester must be connected.

– Select `Diagnosis` mode and begin diagnosis.

– Select `Test plan` tab.

– Choose `Select own test` and select following options one after the other:

- Body
- Electrical system
- 27 - Starter, current supply
- Electrical components
- A - Battery, Testing

The ⇒ Vehicle diagnostic tester will guide you through the battery check from here on.

Protected by copyright. Copying for private or commercial purposes, in part or in whole, is not permitted unless authorised by AUDI AG. AUDI AG does not guarantee or accept any liability with respect to the correctness of information in this document. Copyright by AUDI AG.

2.5 Battery tester with printer - VAS 6161-

General description:

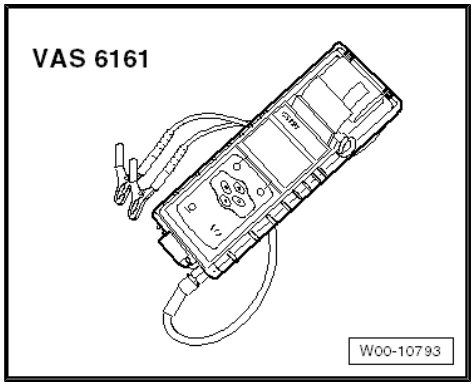

> **WARNING**
>
> *Risk of injury. Observe warnings and safety precautions* *⇒ page 3* *.*

It is not necessary to remove or disconnect battery - A- when using battery tester with printer - VAS 6161- .

Battery tester with printer - VAS 6161- does not put battery - A- under load, but works by measuring dynamic conductivity.

All battery types are stored in battery tester with printer - VAS 6161- .

The data can be stored on an SD card.

Battery tester with printer - VAS 6161- can be updated via an interface or an SD card, so that battery data from VW are always up to date.

An integrated infrared sensor (for measuring battery temperature) improves measurement quality.

An optional scanner is available for reading data directly from bar code of battery - A- .

Note

Refer to ⇒ instruction manual for battery tester with printer - VAS 6161- .

2.5.1 Description of battery tester with printer - VAS 6161-

Battery tester with printer - VAS 6161-

1 - Internal printer

2 - Operating lever for paper compartment

3 - Paper slot

4 - Display with main menu

5 - Control panel with ON/OFF button

6 - Connection for battery test cable

7 - SD card slot

8 - Infrared temperature sensor

9 - Data transmitter for PC

Protected by copyright. Copying for private or commercial purposes, in part or in whole, is not permitted unless authorised by AUDI AG. AUDI AG does not guarantee or assume any liability with respect to the correctness of information in this document. Copyright by AUDI AG.

2.5.2 Performing battery test using battery tester with printer - VAS 6161-

WARNING

Risk of injury. Observe warnings and safety regulations *⇒ page 3* *.*

Special tools and workshop equipment required

- Battery tester with printer - VAS 6161-

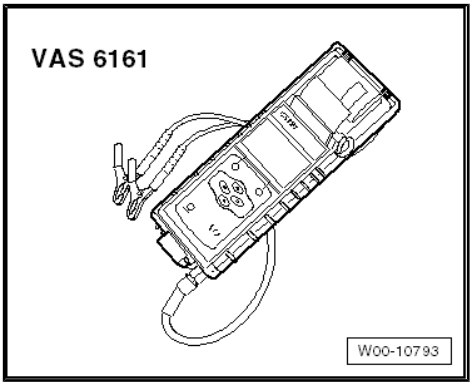

Performing battery test:

WARNING

If the colour indicator is light yellow, the battery must not be checked or charged. Do not attempt to jump-start the vehicle!

There is a danger of explosion if you test or charge the battery or jump-start the vehicle!

Such batteries must be renewed.

Protected by copyright. Copying for private or commercial purposes, in part or in whole, is not permitted unless authorised by AUDI AG. AUDI AG does not guarantee or accept any liability with respect to the correctness of information in this document. Copyright by AUDI AG.

- Switch off ignition and all electrical equipment.
- Check colour indicator on batteries with battery window ⇒ page 6 .
- Switch the device on.
- Connect red clamp “+” of tester to positive terminal.
- Connect black clamp “-” of tester to negative terminal.

Note

Make sure the test clamps make proper contact.

- Select one of the following tests:

Note

- *Genuine VW battery test: This is used to test all genuine VW batteries, both during and after the warranty period.*
- *Non-VW battery test: This is used to test all batteries from other manufacturers.*
- *Stock maintenance: For batteries in stock care programmes.*

- Genuine VW battery
  ⇒ “2.5.3 Genuine VW battery test”, page 14
- Non-VW battery ⇒ “2.5.4 Non-VW battery test”, page 14
- Stock maintenance
  ⇒ “2.5.5 Performing stock maintenance”, page 15

Note

- *The test is completed after about 10 seconds.*
- *The result of the test will be printed out.*
- *It is not necessary to let the tester cool down before the next measurement.*

2.5.3 Genuine VW battery test

WARNING

If the colour indicator is light yellow, the battery must not be checked or charged. Do not attempt to jump-start the vehicle!

There is a danger of explosion if you test or charge the battery or jump-start the vehicle!

Such batteries must be renewed.

– Select “Genuine VW battery test” in the menu.
– Select “In vehicle” or “Out of vehicle”.
– Select “On battery terminal” or “On jump-start point”.
– Scan 2D code of battery or select battery type and current rating manually.
– Determine temperature. Hold temperature sensor approx. 5 cm above a battery terminal until the temperature is stable.
– Start test.
– Print test report if necessary.

Protected by copyright. Copying for private or commercial purposes, in part or in whole, is not permitted unless authorised by AUDI AG. AUDI AG does not guarantee or accept any liability with respect to the correctness of information in this document. Copyright by AUDI AG.

2.5.4 Non-VW battery test

Note

- *The test printout may vary depending on the software version.*
- *Refer to ⇒ instruction manual for battery tester with printer - VAS 6161- .*

WARNING

If the colour indicator is light yellow, the battery must not be checked or charged. Do not attempt to jump-start the vehicle!

There is a danger of explosion if you test or charge the battery or jump-start the vehicle!

Such batteries must be renewed.

- Select “Non-VW battery test” in the menu.
- Select “On battery terminal” or “On jump-start point”.
- Select type of battery: “regular”, “AGM”, “2*6V” or “Gel”.
- Select standard: “CCA”, “JIS”, “DIN”, “SAE”, “IEC” or “EN”.
- Select battery value.
- Determine temperature. Hold temperature sensor approx. 5 cm above a battery terminal until the temperature is stable.
- Start test.
- Print test report if necessary.

2.5.5 Performing stock maintenance

WARNING

If the colour indicator is light yellow, the battery must not be checked or charged. Do not attempt to jump-start the vehicle!

There is a danger of explosion if you test or charge the battery or jump-start the vehicle!

Such batteries must be renewed.

- Select “Stock maintenance” from the menu.
- Connect scanner.

Note

If no scanner is available, write the vehicle identification number on the test printout.

- Scan in vehicle identification number.
- Select “On battery terminal” or “On jump-start point”.
- Scan 2D code of battery or select battery type and manufacturer in the menu manually.
- Determine temperature. Hold temperature sensor approx. 5 cm above terminal connection until temperature is stable.
- Start test.
- Print test report if necessary.

Protected by copyright. Copying for private or commercial purposes, in part or in whole, is not permitted unless authorised by AUDI AG. AUDI AG does not guarantee or accept any liability with respect to the correctness of information in this document. Copyright by AUDI AG.

2.5.6 Explanation of test printout

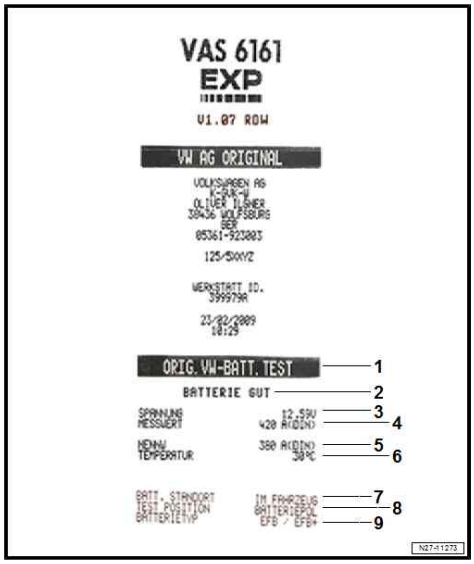

Note

- *The layout of the test printout may vary depending on the software version.*
- *The test printout is required for warranty processing.*

1 - Test type

2 - Battery test result

3 - Measured voltage

4 - Measured cold start value of battery

5 - Nominal cold start value of battery set on tester

6 - Measured battery temperature

7 - Fitting location of battery

8 - Position of battery clamp set on tester

9 - Selected battery technology

2.5.7 Evaluating test results

Evaluating battery test results for warranty test and service test

Battery test results	Measure
Battery good	No measure necessary for battery.
Good battery - recharge	Charge battery ⇒ page 25 . Trace cause of fault responsible for discharging, if necessary
Perform current draw test	Perform current draw test ⇒ page 22 . Charge battery completely ⇒ page 25 and repeat test.
Renewing battery	Disconnect battery and repeat test. Poor contact of the cables can be responsible for the result “Replace battery”.
Bad cell - replace	Renewing battery
Check connection	Connect cable directly to battery and not to jump-start terminal.
Battery is flat	Renewing battery

Evaluating battery test results for maintenance test

Battery test results	Measure
Battery good	No measure necessary.
Charge battery immediately	Charge battery fully ⇒ page 25 .
Mark as defect	Mark as defective.
Check tester connection	Disconnect battery and repeat test. Poor contact of the cables can be responsible for the result “Check tester connection”.

Protected by copyright. Copying for private or commercial purposes, in part or in whole, is not permitted unless authorised by AUDI AG. AUDI AG does not guarantee or accept any liability with respect to the correctness of information in this document. Copyright by AUDI AG.

Battery test results	Measure
Check connection	Connect cable directly to battery and not to jump-start terminal.
Noises	Wait until measured value appears on display.
Battery is flat	Renewing battery

2.6 Battery tester with printer - VAS 5097 A-

Protected by copyright. Copying for private or commercial purposes, in part or in whole, is not permitted unless authorised by AUDI AG. AUDI AG does not guarantee or accept any liability with respect to the correctness of information in this document. Copyright by AUDI AG.

WARNING

Risk of injury. Observe warnings and safety precautions ⇒ page 3 .

It is not necessary to remove or disconnect battery - A- when using battery tester with printer - VAS 5097 A- .

Battery tester with printer - VAS 5097 A- can be used to test/check the following batteries - A- :

- 80 to 499 A: Low temperature test current according to DIN (German Industrial Standard) [1)]
- 95 to 574 A: Low temperature test current according to IEC (International Engineering Consortium)
- 136 to 855 A: Low temperature test current according to EN/SAE (European Norm/Standard of Automotive Engineers)

1) Batteries - A- with a low temperature test current greater than 499 A according to DIN can be tested using setting for 499 A.

For testing, the battery - A- is placed under a load equivalent to the starting current of a passenger car; the battery - A- is then evaluated and the measurement is printed out.

Note

Observe ⇒ Instruction manual for battery tester with printer - VAS 5097 A- , ⇒ Brief instructions for battery tester with printer - VAS 5097 A- sticker on battery tester with printer - VAS 5097 A- and temperature test current table ⇒ page 20 .

- Description of battery tester with printer - VAS 5097 A- ⇒ page 18
- Battery load test ⇒ page 18
- Table: low temperature test current ⇒ page 20
- Results of battery load test ⇒ page 21
- Explanation of test printout ⇒ page 21
- Evaluating test results ⇒ page 21

2.6.1 Description of battery tester with printer - VAS 5097 A-

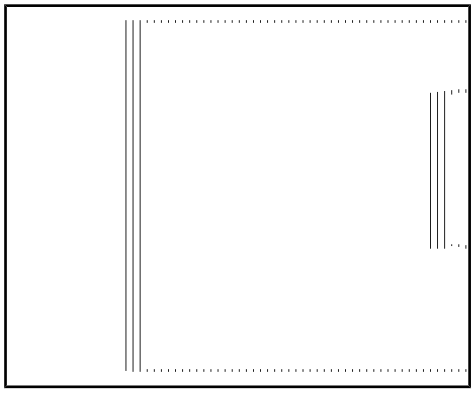

Battery tester with printer - VAS 5097 A-

1 - Green LED: device in use

2 - Red LED: device connected with reverse polarity

3 - Red LED: battery cannot be tested; battery - A- must be renewed

4 - Start button

5 - Low temperature test current selection switch

6 - ON/OFF switch

7 - Sliding switch (terminal on battery - A- /on jump-start terminal)

8 - Paper feed button

9 - Printer

2.6.2 Battery load test

WARNING

Risk of injury. Observe warnings and safety precautions *⇒ page 3* .

Protected by copyright. Copying for private or commercial purposes, in part or in whole, is not permitted unless authorised by AUDI AG. AUDI AG does not guarantee or accept any liability with respect to the correctness of information in this document. Copyright by AUDI AG.

Special tools and workshop equipment required

- Battery tester with printer - VAS 5097 A-

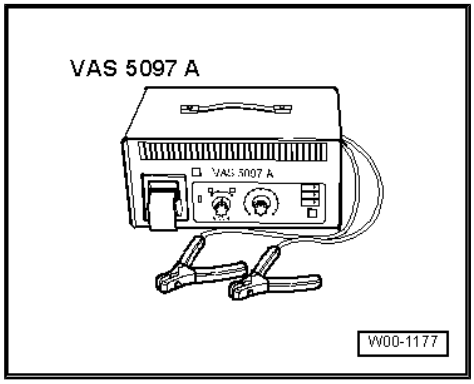

Observe ⇒ TPL 2012182 .

Procedure

WARNING

If the magic eye is colourless or light yellow, the battery - A- must not be checked or charged. Do not attempt to jump-start the vehicle!

There is a danger of explosion if you test or charge the battery or jump-start the vehicle!

If this is the case, battery - A- must be renewed.

Note

The temperature of the battery - A- must be at least 10 °C.

Caution

- *Switch off ignition and all electrical equipment.*
- *Take out ignition key.*

– Check colour indicator on battery - A- with magic eye ⇒ page 6 .

Protected by copyright. Copying for private or commercial purposes, in part or in whole, is not permitted unless authorised by AUDI AG. AUDI AG does not guarantee or accept any liability with respect to the correctness of information in this document. Copyright by AUDI AG.

– Switch on battery tester with printer - VAS 5097 A- ⇒ page 18 .

– Determine low temperature test current in amps (A) according to DIN from data on battery - A- and use table ⇒ page 20 to read off setting range for battery tester with printer - VAS 5097 A- .

Note

If battery - A- values are shown in IEC or EN/SAE units instead of DIN units, convert figures using table ⇒ page 20 or using table on battery tester with printer - VAS 5097 A- .

– Set low temperature test current with low temperature test current selection switch ⇒ page 18 .

– Set measuring range (80 to 379 A or 380 to 499 A) using ON/OFF switch ⇒ page 18 .

Note

Batteries - A- with a low temperature test current greater than 499 A according to DIN can be tested using setting for 499 A.

– Connect red clamp (+) to positive terminal of battery - A- .

– Connect black clamp (-) to negative terminal of battery - A- .

Note

- *Make sure the test clamps make proper contact.*
- *For information on the battery tester with printer - VAS 5097 A- , refer to ⇒ TPL 2012182 .*

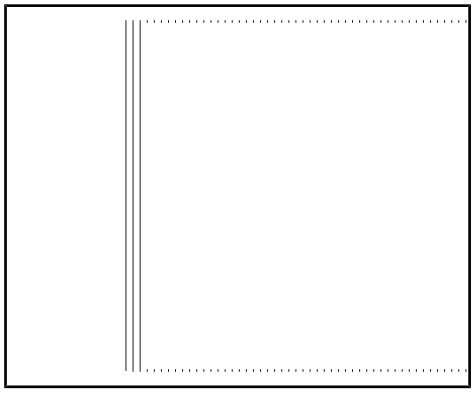

– Use the sliding switch to select the connection point for the test clamps ⇒ page 18 .

1 - Direct connection to battery - A-

2 - Connection to jump start terminal

– Check whether low temperature test current indicated on battery - A- matches value set on battery tester with printer - VAS 5097 A- .

– Press Start button ⇒ page 18 .

The green LED will light up ⇒ page 18 . The test program runs through automatically. The test result will be printed out ⇒ page 21 . If battery tester with printer - VAS 5097 A- does not start up (no LED lights, no printout), battery - A- must be charged ⇒ page 25 .

– Switch off battery tester with printer - VAS 5097 A- ⇒ page 18 .

– Remove test clamps.

Note

- *The test is completed after about 20 seconds.*
- *The result of the test will be printed out.*
- *Only perform the test once. Repeating the test would falsify the result.*
- *Battery tester with printer - VAS 5097 A- needs approximately 30 minutes (to cool down) before it is ready for the next measurement.*

Protected by copyright. Copying for private or commercial purposes, in part or in whole, is not permitted unless authorised by AUDI AG. AUDI AG does not guarantee or accept any liability with respect to the correctness of information in this document. Copyright by AUDI AG.

2.6.3 Table: low temperature test current

Low temperature test current in A (Ampere)		
EN/SAE	IEC	DIN
136 – 177	95 – 124	80 – 104
178 – 219	125 – 154	105 – 129
220 – 261	155 – 184	130 – 154
262 – 303	185 – 214	155 – 179
304 – 345	215 – 244	180 – 204
346 – 387	245 – 274	204 – 229
388 – 429	275 – 304	230 – 254
430 – 471	305 – 334	255 – 279
472 – 513	335 – 364	280 – 304
514 – 555	365 – 394	305 –329
556 – 597	395 – 424	330 – 354
598 – 639	425 – 454	355 – 379
640 – 657	455 – 464	380 – 389
658 – 675	465 – 474	390 – 399
676 – 693	475 – 484	400 – 409
694 – 711	485 – 494	410 – 419
712 – 729	495 – 504	420 – 429
730 – 747	505 – 514	430 – 439
748 – 765	515 – 524	440 – 449
766 – 783	525 – 534	450 – 459

Low temperature test current in A (Ampere)		
EN/SAE	IEC	DIN
784 – 801	535 – 544	460 – 469
802 – 819	545 – 554	470 – 479
820 – 837	555 – 564	480 – 489
838 – 855	565 – 574	490 – 499[2)]

2) Batteries - A- with a low temperature test current greater than 499 A according to DIN can be tested using setting for 499 A.

2.6.4 Results of battery load test

Protected by copyright. Copying for private or commercial purposes, in part or in whole, is not permitted unless authorised by AUDI AG. AUDI AG does not guarantee or accept any liability with respect to the correctness of information in this document. Copyright by AUDI AG.

The battery - A- voltage will decrease during the test due to the high load.

- If batter - A- is OK, voltage only drops to minimum voltage.
- If battery - A- is defective or only weakly charged, battery voltage will drop very quickly to below specified minimum voltage level.
- After test, voltage will remain at a low level for a long time, rising only slowly.
- Only perform the test once. Repeating the test would falsify the result.
- To ensure a correct measurement, battery tester with printer - VAS 5097 A- must be allowed to cool down for approximately 30 minutes before checking another battery - A- .

2.6.5 Explanation of test printout

1 - Measuring range set on battery tester with printer - VAS 5097 A-

2 - Diagram (-arrow- indicates battery - A- status)

3 - Test result

4 - Battery - A- voltage during load test

5 - Vehicle data and date (to be entered by mechanic)

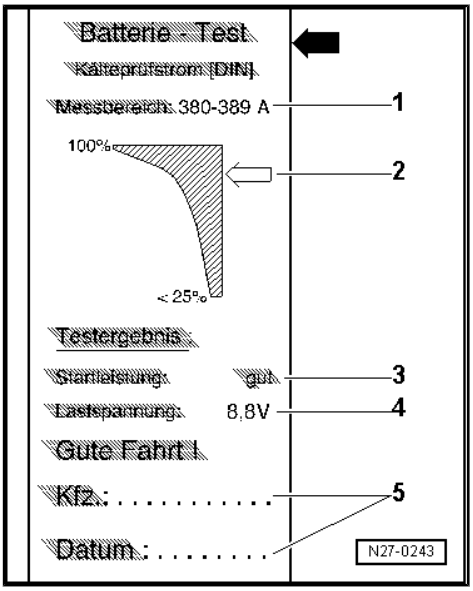

Note

- *The test printout is required for warranty processing.*
- *Only perform the test once. Repeating the test would falsify the result.*

2.6.6 Evaluating test results

Printout	Measures
Battery Very Good	Battery - A- OK.
Battery Good	Battery - A- OK.
Battery Sufficient	Evaluation by current draw test ⇒ page 22 .
Battery Not Good	Evaluation by current draw test ⇒ page 22 .
Battery Faulty	Evaluation by current draw test ⇒ page 22 .

Printout	Measures
Cannot be tested	– Charge battery - A- ⇒ page 25 and repeat test.

2.7 Current draw test

WARNING

If the magic eye is colourless or light yellow, the battery - A- must not be checked or charged. Do not attempt to jump-start the vehicle!

There is a danger of explosion if you test or charge the battery or jump-start the vehicle!

If this is the case, battery - A- must be renewed.

Protected by copyright. Copying for private or commercial purposes, in part or in whole, is not permitted unless authorised by AUDI AG. AUDI AG does not guarantee or accept any liability with respect to the correctness of information in this document. Copyright by AUDI AG.

Check that the correct charging mode is set on the battery charger to ensure that the results of the current draw test are accurate.

- Battery charger - VAS 5095 A- ⇒ page 26
- Battery charger - VAS 5900- ⇒ page 30
- Battery charger - VAS 5903- ⇒ page 42

By checking the current draw of the battery - A- during charging, it is possible to quickly determine the condition of a discharged battery - A- (whether it must be renewed or fully charged).

Note

When using the battery tester with printer - VAS 6161- , always perform a current draw test when the test result "Perform current draw test" appears on the display.

When using battery tester with printer - VAS 5097 A- , always perform current draw test for following test results:

1 - Battery Sufficient

2 - Battery Not Good

3 - Battery Faulty

4 - Cannot be tested - Charge battery - A- and repeat test

5 - Battery tester with printer - VAS 5097 A- does not switch on (no LED, no printout)

Depending on test result ⇒ page 21 using battery tester with printer - VAS 5097 A- , further tests or procedures may be required before condition of battery can be determined for certain.

Checking the current draw capacity of a battery - A- during charging allows you to assess quickly whether a partially or totally discharged battery - A- ⇒ page 58 can be made serviceable again by re-charging.

Test requirements

- Battery temperature must be at least 10 °C during charging.
- Battery charger must be capable of supplying a charging current of at least 30 A; examples: battery charger - VAS 5095 A- / battery charger - VAS 5900- / battery charger - VAS 5903- .

- When charging using battery charger - VAS 5095 A- , draw of battery - A- must be measured using a trigger clamp (trigger clamp, 100 A - VAS 5051B/7-).
- Battery charger - VAS 5900- and battery charger - VAS 5903- indicate current draw on unit.

Procedure

– Connect battery - A- to battery charger and start charging procedure.

– Measure battery - A- charging current after a charging period of 5 minutes.

Test result

Charging current must be greater than 10% of nominal capacity after charging for 5 minutes.

Example:

For a 60 Ah battery, charging current must be greater than 6 A after charging for 5 minutes.

– Fully charge battery - A- if charge current is greater than 10% of nominal capacity.

– After allowing battery - A- to stand for 2 hours, perform battery load test ⇒ page 18 .

If charging current is below 10% of nominal capacity after charging for 5 minutes (for a 60 Ah battery with less than 6 A), renew battery - A- ⇒ Electrical system; Rep. gr. 27 ; Battery; Removing and installing battery .

– For warranty claims and goodwill service/repairs: fill out battery test sheet and keep it together with battery - A- .

2.8 Checking no-load voltage of battery, stock vehicles

WARNING

Risk of injury. Observe warnings and safety precautions *⇒ page 3* *.*

Note

- *The no-load voltage must only be checked as part of the specified care and maintenance work for vehicles in storage or not in use to determine the condition of the battery - A- .*
- *Measuring no-load voltage, it is possible to determine whether it is necessary to re-charge the battery - A- of a vehicle in storage or not in use ⇒ Maintenance tables "Service for stock vehicles" .*

Special tools and workshop equipment required

Protected by copyright. Copying for private or commercial purposes, in part or in whole, is not permitted unless authorised by AUDI AG. AUDI AG does not guarantee or accept any liability with respect to the correctness of information in this document. Copyright by AUDI AG.

♦ Hand-held multimeter - V.A.G 1526 B-

Test conditions

Battery - A- must not have been charged or discharged within last 2 days.

Procedure

– Measure no-load current of battery - A- using hand-held multimeter - V.A.G 1526 B- .

Test result

No-load voltage	Charge state	Condition of battery - A-
11.60 V	0 %	Discharged, the entire capacity has been used. Totally discharged batteries ⇒ page 58 .

Measured value	Required measures
No-load voltage greater than or equal to 12.5 V	No-load voltage OK.
No-load voltage less than 12.5 V	– Charge battery - A- ⇒ page 25 .

Protected by copyright. Copying for private or commercial purposes, in part or in whole, is not permitted unless authorised by AUDI AG. AUDI AG does not guarantee or accept any liability with respect to the correctness of information in this document. Copyright by AUDI AG.

3 Charging battery

⇒ "3.1 Battery charger VAS 5095 A ", page 25
⇒ "3.2 Battery charger VAS 5900 ", page 30
⇒ "3.3 Battery charger VAS 5903 ", page 42
⇒ "3.4 Battery charger VAS 5906 ", page 54
⇒ "3.5 Solar panel VAS 6102 A ", page 57
⇒ "3.6 Totally discharged batteries", page 58

3.1 Battery charger - VAS 5095 A-

WARNING

Risk of injury. Observe warnings and safety precautions ⇒ page 3 .

To avoid damaging the battery - A- or the vehicle, observe notes on the types of batteries ⇒ page 1 .

WARNING

If the magic eye is colourless or light yellow, the battery - A- must not be checked or charged. Do not attempt to jump-start the vehicle!

There is a danger of explosion if you test or charge the battery or jump-start the vehicle!

If this is the case, battery - A- must be renewed.

Note

- *The current draw cannot be determined using battery charger - VAS 5095 A- . The current draw must be measured externally using a trigger clamp (trigger clamp, 100 A - VAS 5051B/7-).*
- *Refer to ⇒ Operating manual for battery charger - VAS 5095 A- .*

Protected by copyright. Copying for private or commercial purposes, in part or in whole, is not permitted unless authorised by AUDI AG. AUDI AG does not guarantee or accept any liability with respect to the correctness of information in this document. Copyright by AUDI AG.

- Description of battery charger - VAS 5095 A- ⇒ page 25
- Charge battery - A- ⇒ page 26 .
- Charging totally discharged battery - A- ⇒ page 27
- Backup power supply ⇒ page 28 .
- Buffer mode/maintenance charging ⇒ page 30 .

3.1.1 Description of battery charger - VAS 5095 A-

Battery charger - VAS 5095A- is suitable for charging all 12V batteries - A- supplied by Volkswagen.

The battery is charged without current and voltage peaks; the vehicle electronics are not affected by the charging process. The battery - A- can remain in the vehicle during charging and does not need to be disconnected from the vehicle electrical system.

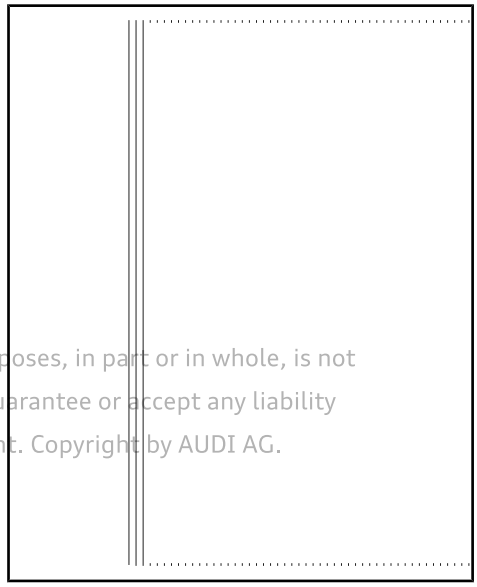

Battery charger - VAS 5095 A-

1 - `ON/OFF` switch (0 = OFF)

2 - Charging current indicator (I greater than 12 A)

3 - Charging current indicator: battery - A- partially charged (greater than 90 %)

4 - Maintenance charging; lights up green when battery - A- is fully charged

5 - Malfunction indicator

6 - Backup power supply indicator (Stützbetrieb Standby)

7 - `Stützbetrieb Standby/Normal` selector switch

8 - Charging cable: red charger clamp (+), black charger clamp (-)

9 - `Battery type` selector switch (on bottom of charger)

Copyright by AUDI AG. Copying for private or commercial purposes, in part or in whole, is not permitted unless authorised by AUDI AG. AUDI AG does not guarantee or accept any liability with respect to the correctness of information in this document. Copyright by AUDI AG.

3.1.2 Charging battery with battery charger - VAS 5095 A-

WARNING

Risk of injury. Observe warnings and safety precautions *⇒ page 3* *.*

Special tools and workshop equipment required

♦ Battery charger - VAS 5095 A-

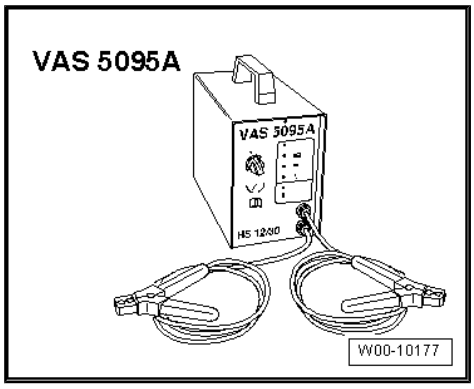

Caution

Always select 2.4 V/C (volts/cell) as the battery type when charging; this applies to all batteries - A- .

Note

The temperature of the battery - A- must be at least 10 °C.

WARNING

If the magic eye is colourless or light yellow, the battery - A- must not be checked or charged. Do not attempt to jump-start the vehicle!

There is a danger of explosion if you test or charge the battery or jump-start the vehicle!

If this is the case, battery - A- must be renewed.

Procedure

– Switch off ignition and all electrical equipment, and remove ignition key.
– Check battery type set on `Battery type` selector switch ⇒ page 25 . `Battery type` switch must be set to 2.4 V/C (volts/cell).
– Connect red charger clamp (+) to positive terminal of battery - A- .

Note

For vehicles with start/stop function and battery monitor control unit - J367- , the black charger clamp (-) must be connected to the vehicle body earth. Connecting it to the negative terminal of the battery - A- will cause the start/stop system to malfunction.

– Connect black charger clamp (-) to negative terminal of battery - A- /negative connection point.
– Switch on battery charger - VAS 5095 A- ⇒ page 25 .

Charging current indicators -2- and -3- ⇒ page 26 will light up yellow. If only the yellow LED -3- lights up, battery - A- is partially charged (approx. 90 %).

If green LED -4- ⇒ page 26 lights up as well, battery charger - VAS 5095 A- has switched to maintenance charging mode. Battery - A- is fully charged.

– Switch off battery charger - VAS 5095 A- ⇒ page 25 .
– Remove charger clamps from battery clamps.

3.1.3 Charging totally discharged battery with battery charger - VAS 5095 A-

WARNING

Risk of injury. Observe warnings and safety precautions *⇒ page 3* *.*

Protected by copyright. Copying for private or commercial purposes, in part or in whole, is not permitted unless authorised by AUDI AG. AUDI AG does not guarantee or accept any liability with respect to the correctness of information in this document. Copyright by AUDI AG.

Battery charger - VAS 5095 A- detects totally discharged batteries - A- automatically and starts charging process gently at a low charging current. Charging current is adapted automatically to battery charge.

Note

- *See notes in chapter ⇒ page 58 .*
- *Battery voltage must be at least 0.6 V.*
- *Totally discharged batteries - A- in vehicles that have not yet been registered must be renewed prior to delivery as the possibility of damage cannot be excluded.*

WARNING

If the magic eye is colourless or light yellow, the battery - A- must not be checked or charged. Do not attempt to jump-start the vehicle!

There is a danger of explosion if you test or charge the battery or jump-start the vehicle!

If this is the case, battery - A- must be renewed.

Procedure

– Charge battery - A- ⇒ page 26 .

3.1.4 Backup power supply with battery charger - VAS 5095 A-

General notes

Backup power supply mode provides the electrical system with power when the battery - A- is removed or disconnected.

For additional information, refer to ⇒ Operating manual for battery charger - VAS 5095 A- .

Backup power supply mode is suitable in the following situations:

- Backup power supply for electrical system with battery - A-
- Maintaining power when renewing battery
- Testing ancillaries without battery - A-

WARNING

Risk of injury. Observe warnings and safety precautions ⇒ page 3 .

WARNING

If the magic eye is colourless or light yellow, the battery - A- must not be checked or charged. Do not attempt to jump-start the vehicle!

There is a danger of explosion if you test or charge the battery or jump-start the vehicle!

If this is the case, battery - A- must be renewed.

Protected by copyright. Copying for private or commercial purposes, in part or in whole, is not permitted unless authorised by AUDI AG. AUDI AG does not guarantee or accept any liability with respect to the correctness of information in this document. Copyright by AUDI AG.

Special tools and workshop equipment required

- Battery charger - VAS 5095 A-

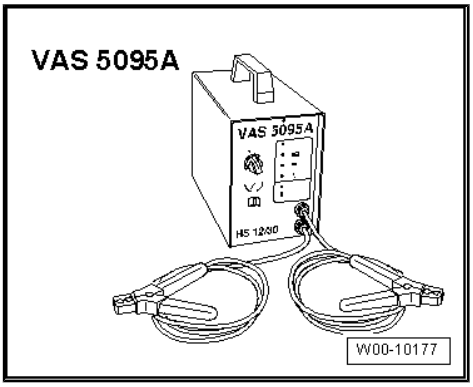

Procedure

Caution

- *The terminal polarity protection is not active in the operating mode "Charging totally discharged batteries/Stützbetrieb Standby". Ensure that you connect battery charger clamps to the correct battery terminal clamps!*
- *A short-circuit can cause sparks.*
- *Danger of explosion.*
- *Ensure that charger clamps are fitted securely.*

– Remove battery - A- ⇒ Electrical system; Rep. gr. 27 ; Battery; Removing and installing battery .

Caution

When the battery - A- is removed, it is very important to ensure that the charger clamp on the positive battery terminal does not come into contact with the vehicle body earth. Also ensure that there is no contact between the battery terminal clamps.

– Connect red charger clamp (+) to positive battery terminal of vehicle.

Note

For vehicles with start/stop function and battery monitor control unit - J367- the black charger clamp (-) must be connected to the vehicle body earth. Connecting it to the negative terminal of the battery - A- will cause the start/stop system to malfunction.

Protected by copyright. Copying for private or commercial purposes, in part or in whole, is not permitted unless authorised by AUDI AG. AUDI AG does not guarantee or accept any liability with respect to the correctness of information in this document. Copyright by AUDI AG.

– Connect black charger clamp (-) to negative battery terminal of vehicle.

– Check setting of `Stützbetrieb Standby/Normal` selector switch ⇒ page 25 ; it must be set to "Stützbetrieb Standby".

– Check that charger clamps are connected correctly (correct polarity).

– Switch on battery charger - VAS 5095 A- ⇒ page 25 .

Battery charger - VAS 5095 A- will start backup power supply.

Ending backup power supply mode

– Switch off battery charger - VAS 5095 A- ⇒ page 25 .
– Remove charger clamps from battery clamps.
– Disconnect battery charger - VAS 5095 A- from electrical system.

3.1.5 Maintenance charging with battery charger - VAS 5095 A-

WARNING

Risk of injury. Observe warnings and safety precautions *⇒ page 3* *.*

WARNING

If the magic eye is colourless or light yellow, the battery - A- must not be checked or charged. Do not attempt to jump-start the vehicle!

There is a danger of explosion if you test or charge the battery or jump-start the vehicle!

If this is the case, battery - A- must be renewed.

In maintenance charging mode battery charger - VAS 5095 A- ensures that the battery - A- is charged correctly and that it maintains its charge.

Procedure

– Proceed in the same way as when charging the battery - A- ⇒ page 26 .

If battery - A- is under electrical load during charging in maintenance charging mode, battery charger - VAS 5095 A- automatically compensates for the current drawn from the battery.

Maintenance charging can be continued for an unlimited period. The battery - A- is ready for use at any time.

3.2 Battery charger - VAS 5900-

Protected by copyright. Copying for private or commercial purposes, in part or in whole, is not permitted unless authorised by AUDI AG. AUDI AG does not guarantee or accept any liability with respect to the correctness of the information in this document. Copyright by AUDI AG.

WARNING

Risk of injury. Observe warnings and safety precautions *⇒ page 3* *.*

WARNING

If the magic eye is colourless or light yellow, the battery - A- must not be checked or charged. Do not attempt to jump-start the vehicle!

There is a danger of explosion if you test or charge the battery or jump-start the vehicle!

If this is the case, battery - A- must be renewed.

The charging current can be read directly on battery charger - VAS 5900- .

Note

Refer to ⇒ Operating manual for battery charger - VAS 5900- .

- Description of battery charger - VAS 5900- ⇒ page 31
- Charge battery - A- ⇒ page 31 .
- Service charging ⇒ page 33
- Charging totally discharged battery - A- ⇒ page 36
- Backup power supply ⇒ page 38 .
- Maintenance charging ⇒ page 41

3.2.1 Description of battery charger - VAS 5900-

Battery charger - VAS 5900- is suitable for charging all 12V batteries - A- supplied by Volkswagen.

Battery charger - VAS 5900-

Protected by copyright. Copying for private or commercial purposes, in part or in whole, is not permitted unless authorised by AUDI AG. AUDI AG does not guarantee or accept liability with respect to the correctness of information in this document. Copyright by AUDI AG.

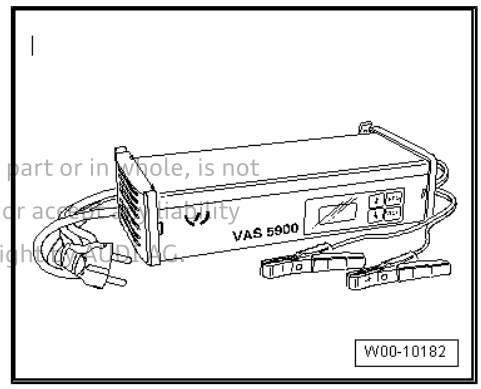

Overview - controls

1 - Display

2 - ↑ button: up

3 - ↓ button: down

4 - START/STOP button

5 - INFO button

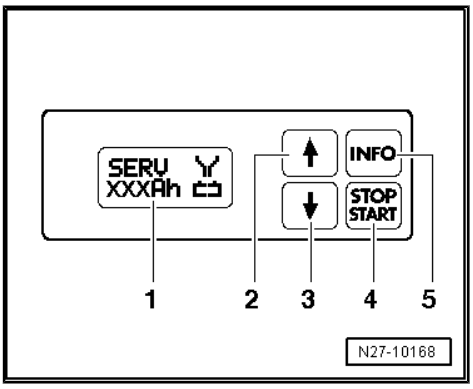

3.2.2 Charging battery with battery charger - VAS 5900-

WARNING

Risk of injury. Observe warnings and safety precautions *⇒ page 3* *.*

WARNING

If the magic eye is colourless or light yellow, the battery - A- must not be checked or charged. Do not attempt to jump-start the vehicle!

There is a danger of explosion if you test or charge the battery or jump-start the vehicle!

If this is the case, battery - A- must be renewed.

Special tools and workshop equipment required

- Battery charger - VAS 5900-

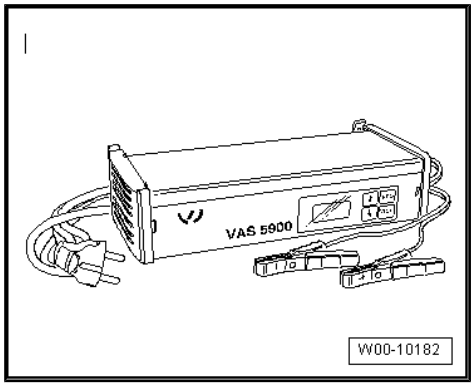

Note

The temperature of the battery - A- must be at least 10 °C.

Procedure

– Switch off ignition and all electrical equipment, and remove ignition key.

– Connect battery charger - VAS 5900- to electrical system. The last mode selected will be shown on display ⇒ page 31 .

– Set battery type with INFO button.

Symbol -1- for “Standard charging of wet batteries” or symbol -2- for “Standard charging of gel/absorbent glass mat batteries” will be shown on display.

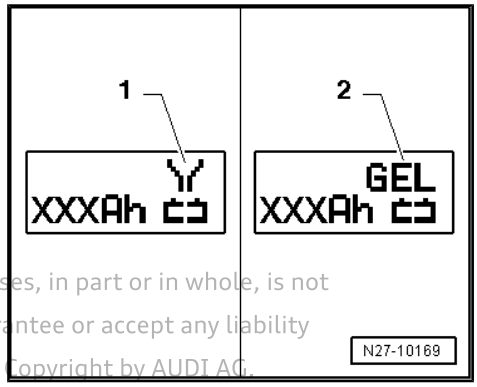

– Use ↑ button or ↓ button to set battery capacity (Ah) of battery - A- being charged.

– Connect red charger clamp (+) to positive terminal of battery - A- .

Protected by copyright. Copying for private or commercial purposes, in part or in whole, is not permitted unless authorised by AUDI AG. AUDI AG does not guarantee or accept any liability with respect to the correctness of information in this document. Copyright by AUDI AG.

Note

For vehicles with start/stop function and battery monitor control unit - J367- , the black charger clamp (-) must be connected to the vehicle body earth. Connecting it to the negative terminal of the battery - A- will cause the start/stop system to malfunction.

– Connect black charger clamp (-) to negative terminal of battery - A- /negative connection point.

Battery charger - VAS 5900- detects the nominal voltage of the connected battery - A- (6 V/12 V/24 V) and starts the charging process automatically.

When the charge reaches about 80 - 85% the battery charger - VAS 5900- starts “final charging”. The fourth bar will appear on the display -1-. The battery - A- is now ready for operation.

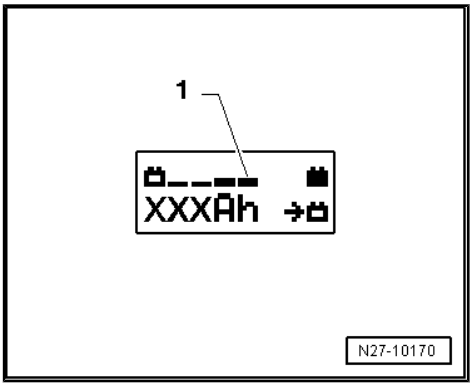

When the charge is 100 % all the bars appear on the display -1-.

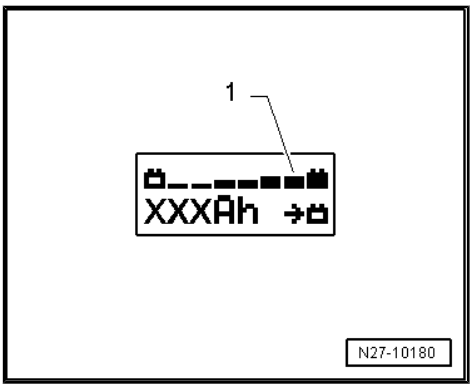

Note

- *It is possible to operate electrical equipment in the vehicle while standard charging of the battery is in progress; this will increase the time needed to charge the battery.*
- *Depending on the type of battery, battery charger - VAS 5900- switches to maintenance charging mode after about 1 to 7 hours. To fully charge the battery - A- it should remain connected to battery charger - VAS 5900- for this length of time.*

Possible faults and fault rectification

1 - Battery voltage displayed does not correspond to nominal voltage:

– Press and hold ↑ or ↓ button until charging process starts.

2 - Battery voltage displayed does not correspond to nominal voltage; charging is already in progress:

– Press START/STOP button twice.

– Press and hold ↑ or ↓ button until charging process starts again.

3 - Battery charger - VAS 5900- does not detect a battery - A- , when battery voltage is less than 2 V:

Display remains unchanged.

Battery type and ampere hours (Ah) that were set are displayed.

Stopping battery - A- charging process

– Press START/STOP button.

– Remove charger clamps from battery clamps.

– Disconnect battery charger - VAS 5900- from electrical system.

3.2.3 Service charging with battery charger - VAS 5900-

Protected by copyright. Copying for private or commercial purposes, in part or in whole, is not permitted unless authorised by AUDI AG. AUDI AG does not guarantee or accept any liability with respect to the correctness of information in this document. Copyright by AUDI AG.

WARNING

Risk of injury. Observe warnings and safety precautions *⇒ page 3* *.*

Caution

The operating mode "service charging" is not permitted on Group vehicles as the voltage peaks could damage the vehicle electronics.

If "service charging" mode is used, the battery - A- must be disconnected from the electrical system.

Protected by copyright. Copying for private or commercial purposes, in part or in whole, is not permitted unless authorised by AUDI AG. AUDI AG does not guarantee or accept any liability with respect to the correctness of information in this document. Copyright by AUDI AG.

WARNING

If the magic eye is colourless or light yellow, the battery - A- must not be checked or charged. Do not attempt to jump-start the vehicle!

There is a danger of explosion if you test or charge the battery or jump-start the vehicle!

If this is the case, battery - A- must be renewed.

Caution

When charging, always set the battery charger to the correct type of battery - A- ⇒ Operating instructions for battery charger - VAS 5900- .

"Service charging" is suitable for:

- *Wet batteries where magic eye is black or green, indicating that battery may be charged.*

The "service charging (SERV)" mode is only used for sulphated batteries - A- . The battery - A- is charged at voltages higher than 14.4 V. This can result in a partial reduction of the sulphated layer. After charging, always check the colour of the magic eye before using the battery - A- ⇒ page 9 .

Special tools and workshop equipment required

- Battery charger - VAS 5900-

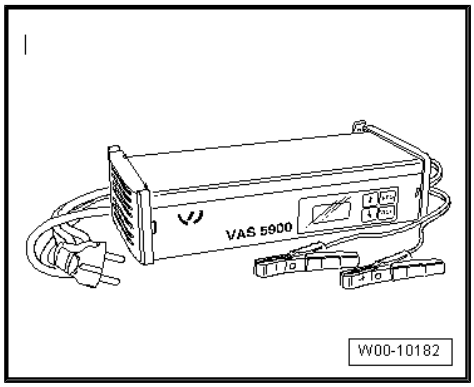

Note

The temperature of the battery - A- must be at least 10 °C.

Procedure

– Switch off ignition and all electrical equipment, and remove ignition key.

– Connect battery charger - VAS 5900- to electrical system. The last mode selected will be shown on display ⇒ page 31 .

– Set battery type with INFO button.

Symbol -1- for “Service charging of wet batteries” or symbol -2- for “Service charging of gel/absorbent glass mat batteries” will be shown on display.

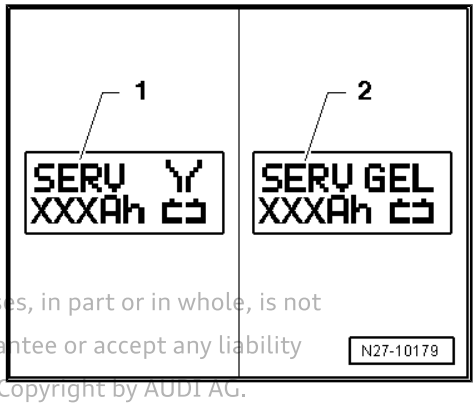

– Use ↑ button or ↓ button to set battery capacity (Ah) of battery - A- being charged.

– Connect red charger clamp (+) to positive terminal of battery - A- .

Protected by copyright. Copying for private or commercial purposes, in part or in whole, is not permitted unless authorised by AUDI AG. AUDI AG does not guarantee or accept any liability with respect to the correctness of information in this document. Copyright by AUDI AG.

Note

For vehicles with start/stop function and battery monitor control unit - J367- , the black charger clamp (-) must be connected to the vehicle body earth. Connecting it to the negative terminal of the battery - A- will cause the start/stop system to malfunction.

– Connect black charger clamp (-) to negative terminal of battery - A- /negative connection point.

Battery charger - VAS 5900- detects the nominal voltage of the connected battery - A- (6 V/12 V/24 V) and starts the charging process automatically.

When the charge reaches about 80 - 85% of the battery voltage, the battery charger - VAS 5900- starts “final charging”. The fourth bar will appear on the display -1-. The battery - A- is now ready for operation.

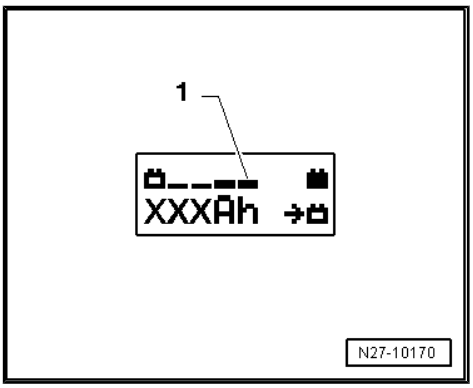

Note

Whether “service charging” is successful or not depends on the degree of sulphation in the battery - A- .

Possible faults and fault rectification

1 - Battery voltage displayed does not correspond to nominal voltage:

– Press and hold ↑ or ↓ button until charging process starts.

2 - Battery voltage displayed does not correspond to nominal voltage; charging is already in progress:

– Press START/STOP button twice.

– Press and hold ↑ or ↓ button until charging process starts.

3 - Battery charger does not detect a battery - A- when battery voltage is less than 2 V:

Display remains unchanged.

Operating mode and ampere hours (Ah) that were set are displayed.

Stopping battery - A- charging process

– Press START/STOP button.

– Remove charger clamps from battery clamps.

– Disconnect battery charger - VAS 5900- from electrical system.

3.2.4 Charging totally discharged battery with battery charger - VAS 5900-

WARNING

Risk of injury. Observe warnings and safety precautions *⇒ page 3* *.*

WARNING

If the magic eye is colourless or light yellow, the battery - A- must not be checked or charged. Do not attempt to jump-start the vehicle!

There is a danger of explosion if you test or charge the battery or jump-start the vehicle!

If this is the case, battery - A- must be renewed.

Protected by copyright. Copying for private or commercial purposes, in part or in whole, is not permitted unless authorised by AUDI AG. AUDI AG does not guarantee or accept any liability with respect to the correctness of information in this document. Copyright by AUDI AG.

Caution

- *The terminal polarity protection is not active in the operating mode "Charging totally discharged batteries/Stützbetrieb Standby". Ensure that you connect battery charger clamps to the correct battery terminal clamps!*
- *When charging, always set the battery charger to the correct type of battery - A- ⇒ Operating instructions for battery charger - VAS 5900- .*
- *If a totally discharged battery - A- is not recognised by battery charger - VAS 5900- , refer to* *⇒ page 58* *.*
- *Do not press the* START/STOP *button if the charger clamps are connected incorrectly. This could damage the battery charger - VAS 5900- .*

Batteries - A- with a voltage of less than 2 V will not be recognised automatically by battery charger - VAS 5900- .

Special tools and workshop equipment required

- Battery charger - VAS 5900-

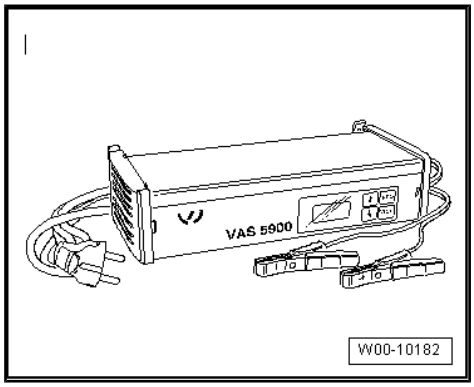

Note

- *See notes in chapter ⇒ page 58 .*
- *The temperature of the battery - A- must be at least 10 °C.*
- *Totally discharged batteries in vehicles that have not yet been registered must be renewed prior to delivery as the possibility of damage cannot be excluded.*

Procedure

– Switch off ignition and all electrical equipment, and remove ignition key.

– Connect battery charger - VAS 5900- to electrical system. The last mode selected will be shown on display ⇒ page 31 .

Protected by copyright. Copying for private or commercial purposes, in part or in whole, is not permitted unless authorised by AUDI AG. AUDI AG does not guarantee or accept any liability with respect to the correctness of information in this document. Copyright by AUDI AG.

– Set battery type with INFO button.

Symbol -1- for “Service charging of wet batteries” or symbol -2- for “Service charging of gel/absorbent glass mat batteries” will be shown on display.

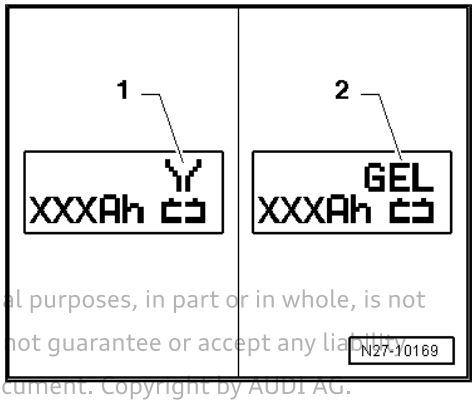

– Use ↑ button or ↓ button to set battery capacity (Ah) of battery - A- being charged.

– Connect red charger clamp (+) to positive terminal of battery - A- .

Protected by copyright. Copying for private or commercial purposes, in part or in whole, is not permitted unless authorised by AUDI AG. AUDI AG does not guarantee or accept any liability with respect to the correctness of information in this document. Copyright by AUDI AG.

Note

For vehicles with start/stop function and battery monitor control unit - J367- , the black charger clamp (-) must be connected to the vehicle body earth. Connecting it to the negative terminal of the battery - A- will cause the start/stop system to malfunction.

– Connect black charger clamp (-) to negative terminal of battery - A- /negative connection point.

– Press START/STOP button for approx. 5 seconds. Menu option “Charging totally discharged batteries/Stützbetrieb Standby” is activated.

– Press ↑ or ↓ button to set corresponding battery voltage (6 V/ 12 V/24 V).

Note

The battery charger - VAS 5900- returns to the main menu (operating mode selection) if no button is pressed within 5 seconds.

– Confirm selected battery voltage with START/STOP button.

Battery charger will then check correct polarity of charger clamps.

– Check that charger clamps are connected correctly (correct polarity).

– Confirm that charger clamps are connected with correct polarity by pressing START/STOP button.

Battery charger - VAS 5900- will start charging for totally discharged battery - A- .

Stopping battery - A- charging process

– Press START/STOP button.

– Remove charger clamps from battery clamps.

– Disconnect battery charger - VAS 5900- from electrical system.

3.2.5 Backup power supply with battery charger - VAS 5900-

General notes

Backup power supply mode provides the electrical system with power when the battery - A- is removed or disconnected.

For additional information, refer to ⇒ Operating manual for battery charger - VAS 5900- .

Backup power supply mode is suitable in the following situations:

- Backup power supply for electrical system with battery - A-
- Maintaining power when renewing battery
- Testing ancillaries without battery - A-

Protected by copyright. Copying for private or commercial purposes, in part or in whole, is not permitted unless authorised by AUDI AG. AUDI AG does not guarantee or accept any liability with respect to the correctness of information in this document. Copyright by AUDI AG.

WARNING

Risk of injury. Observe warnings and safety precautions *⇒ page 3* *.*

WARNING

If the magic eye is colourless or light yellow, the battery - A- must not be checked or charged. Do not attempt to jump-start the vehicle!

There is a danger of explosion if you test or charge the battery or jump-start the vehicle!

If this is the case, battery - A- must be renewed.

Special tools and workshop equipment required

- Battery charger - VAS 5900-

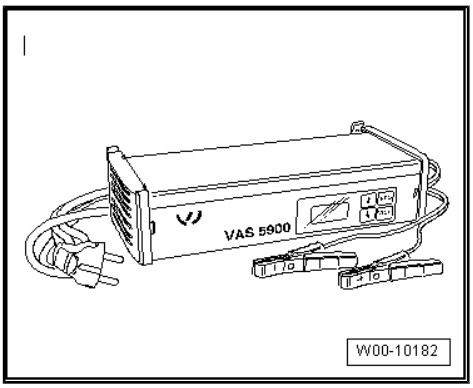

Procedure

Caution

- *The terminal polarity protection is not active in the operating mode "Charging totally discharged batteries/Stützbetrieb Standby". Ensure that you connect battery charger clamps to the correct battery terminal clamps!*
- *A short-circuit can cause sparks.*
- *Danger of explosion.*
- *Do not press the* START/STOP *button if the charger clamps are connected incorrectly. This could damage the battery charger - VAS 5900- .*

– Remove battery - A- ⇒ Electrical system; Rep. gr. 27 ; Battery; Removing and installing battery .

– Connect battery charger - VAS 5900- to electrical system. The last mode selected will be shown on display ⇒ page 31 .

Caution

When the battery - A- is removed, it is very important to ensure that the charger clamp on the positive battery terminal does not come into contact with the vehicle body earth. Also ensure that there is no contact between the battery terminal clamps.

– Connect red charger clamp (+) to positive terminal of battery - A- .

ected by copyright. Copying for private or commercial purposes, in part or in whole, is not permitted unless authorised by AUDI AG. AUDI AG does not guarantee or accept any liability with respect to the correctness of information. Copyright by AUDI AG.

Note

For vehicles with start/stop function and battery monitor control unit - J367- , the black charger clamp (-) must be connected to the vehicle body earth. Connecting it to the negative terminal of the battery - A- will cause the start/stop system to malfunction.

– Connect black charger clamp (-) to negative terminal of battery - A- /negative connection point.

– Press START/STOP button for approx. 5 seconds. Menu option “Charging totally discharged batteries/Stützbetrieb Standby” is activated.

– Press ↑ or ↓ button to set corresponding battery voltage (6 V/ 12 V/24 V).

Note

The battery charger - VAS 5900- returns to the main menu (operating mode selection) if no button is pressed within 5 seconds.

– Confirm selected battery voltage with START/STOP button.

Battery charger will then check correct polarity of charger clamps.

– Check that charger clamps are connected correctly (correct polarity).

– Confirm that charger clamps are connected with correct polarity by pressing START/STOP button.

Battery charger - VAS 5900- will start backup power supply mode for battery - A- .

Ending backup power supply mode

– Press START/STOP button.

– Remove charger clamps from battery clamps.

– Disconnect battery charger - VAS 5900- from electrical system.

3.2.6 Maintenance charging with battery charger - VAS 5900-

Note

- *If battery - A- is under electrical load during charging in maintenance charging mode, battery charger - VAS 5900- automatically compensates for the current drawn from the battery.*
- *Maintenance charging can be continued for an unlimited period.*
- *The battery - A- is ready for use at any time.*
- *Observe battery manufacturer's maintenance instructions.*

WARNING

Risk of injury. Observe warnings and safety precautions ***⇒ page 3*** ***.***

Protected by copyright. Copying for private or commercial purposes, in part or in whole, is not permitted unless authorised by AUDI AG. AUDI AG does not guarantee or accept any liability with respect to the correctness of information in this document. Copyright by AUDI AG.

WARNING

If the magic eye is colourless or light yellow, the battery - A- must not be checked or charged. Do not attempt to jump-start the vehicle!

There is a danger of explosion if you test or charge the battery or jump-start the vehicle!

If this is the case, battery - A- must be renewed.

When the battery - A- is fully charged, battery charger - VAS 5900- switches to maintenance charging.

Special tools and workshop equipment required

- Battery charger - VAS 5900-

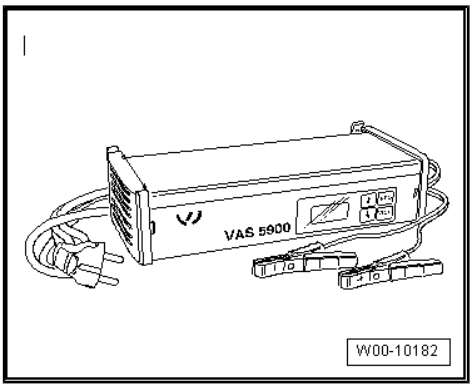

Procedure

– Proceed in the same way as when charging the battery - A- ⇒ page 31 .

When the charge is 100 % all the bars appear on the display -1-.

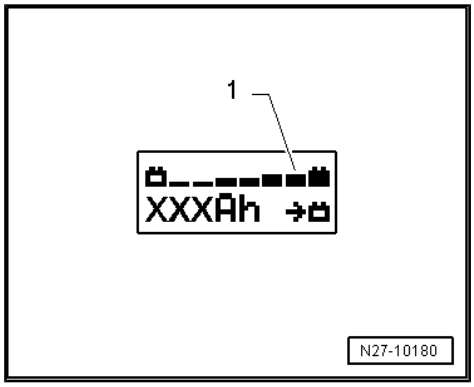

3.3 Battery charger - VAS 5903-

WARNING

Risk of injury. Observe warnings and safety precautions ⇒ page 3 .

WARNING

If the magic eye is colourless or light yellow, the battery - A- must not be checked or charged. Do not attempt to jump-start the vehicle!

There is a danger of explosion if you test or charge the battery or jump-start the vehicle!

If this is the case, battery - A- must be renewed.

Note

Protected by copyright. Copying for private or commercial purposes, in part or in whole, is not permitted unless authorised by AUDI AG. AUDI AG does not guarantee or accept any liability with respect to the correctness of information in this document. Copyright by AUDI AG.

Refer to ⇒ Operating manual for battery charger - VAS 5903- .

- Description of battery charger - VAS 5903- ⇒ page 43
- Charge battery - A- ⇒ page 43 .
- Refresh charging ⇒ page 45
- Charging totally discharged battery - A- ⇒ page 48
- Backup power supply ⇒ page 50 .
- Maintenance charging ⇒ page 53

3.3.1 Description of battery charger - VAS 5903-

Battery charger - VAS 5903- is suitable for charging all 12V batteries - A- supplied by Volkswagen.

Battery charger - VAS 5903-

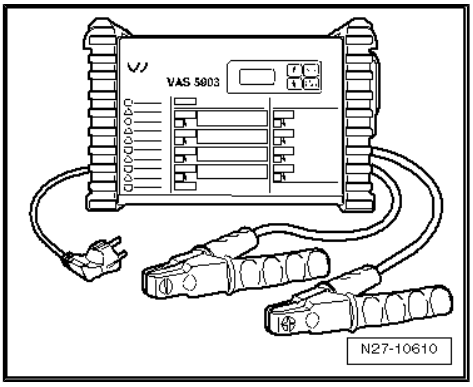

Overview - controls

1 - Display

2 - ↑ button: up

3 - ↓ button: down

4 - START/STOP button

5 - INFO button

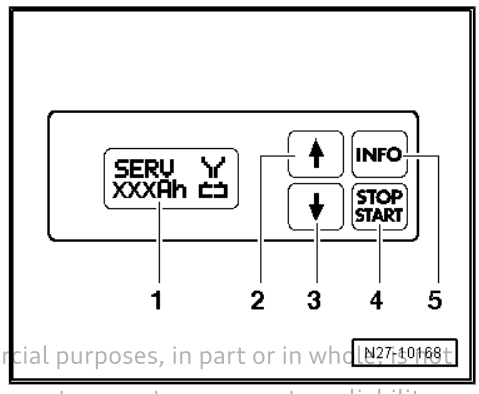

Protected by copyright. Copying for private or commercial purposes, in part or in whole, is not permitted unless authorised by AUDI AG. AUDI AG does not guarantee or accept any liability with respect to the correctness of information in this document. Copyright by AUDI AG.

3.3.2 Charging battery with battery charger - VAS 5903-

> ⚠ **WARNING**
>
> *Risk of injury. Observe warnings and safety precautions* *⇒ page 3* *.*

> ⚠ **WARNING**
>
> *If the magic eye is colourless or light yellow, the battery - A- must not be checked or charged. Do not attempt to jump-start the vehicle!*
>
> *There is a danger of explosion if you test or charge the battery or jump-start the vehicle!*
>
> *If this is the case, battery - A- must be renewed.*

Special tools and workshop equipment required

♦ Battery charger - VAS 5903-

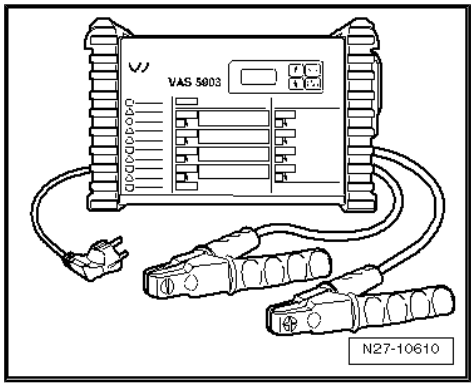

Note

The temperature of the battery - A- must be at least 10 °C.

Procedure

– Switch off ignition and all electrical equipment, and remove ignition key.

Protected by copyright. Copying for private or commercial purposes, in part or in whole, is not permitted unless authorised by AUDI AG. AUDI AG does not guarantee or accept any liability with respect to the correctness of information in this document. Copyright by AUDI AG.

– Connect battery charger - VAS 5903- to electrical system. The display shows the last mode selected ⇒ page 43 .

– Set battery type with INFO button.

Symbol -1- for “Standard charging of wet batteries” or symbol -2- for “Standard charging of gel/absorbent glass mat batteries” will be shown on display.

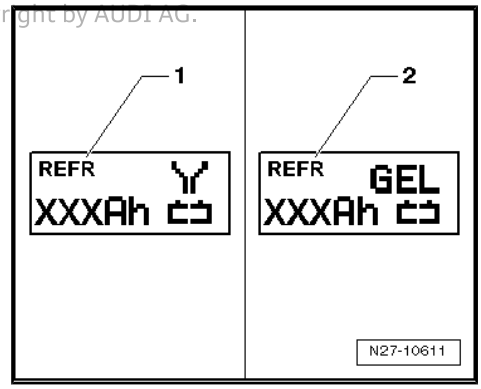

– Use ↑ button or ↓ button to set battery capacity (Ah) of battery - A- being charged.

– Connect red charger clamp (+) to positive terminal of battery - A- .

Note

For vehicles with start/stop function and battery monitor control unit - J367- , the black charger clamp (-) must be connected to the vehicle body earth. Connecting it to the negative terminal of the battery - A- will cause the start/stop system to malfunction.

– Connect black charger clamp (-) to negative terminal of battery - A- /negative connection point.

Battery charger - VAS 5903- detects the nominal voltage of the connected battery - A- (6 V/12 V/24 V) and starts the charging process automatically.

When the charge reaches about 80 - 85% the battery charger - VAS 5903- starts “final charging”. The fourth bar will appear on the display -1-. The battery - A- is now ready for operation.

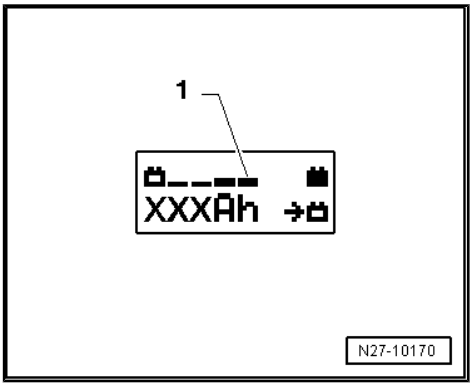

When the charge is 100 % all the bars appear on the display -1-.

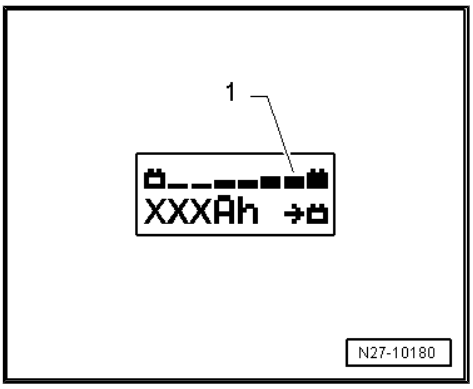

Note

- *It is possible to operate electrical equipment in the vehicle while standard charging of the battery is in progress; this will increase the time needed to charge the battery.*
- *Depending on the type of battery, battery charger - VAS 5903- switches to maintenance charging mode after about 1 to 7 hours. To fully charge the battery - A- it should remain connected to battery charger - VAS 5903- for this length of time.*

Possible faults and fault rectification

1 - Battery voltage displayed does not correspond to nominal voltage:

– Press and hold ↑ or ↓ button until charging process starts.

2 - Battery voltage displayed does not correspond to nominal voltage; charging is already in progress:

– Press START/STOP button twice.

– Press and hold ↑ or ↓ button until charging process starts again.

3 - Battery charger does not detect a battery - A- when battery voltage is less than 2 V:

Display remains unchanged.

Battery type and ampere hours (Ah) that were set are displayed.

Protected by copyright. Copying for private or commercial purposes, in part or in whole, is not permitted unless authorised by AUDI AG. AUDI AG does not guarantee or accept any liability with respect to the correctness of information in this document. Copyright by AUDI AG.

Stopping battery - A- charging process

– Press START/STOP button.

– Remove charger clamps from battery clamps.

– Disconnect battery charger - VAS 5903- from electrical system.

3.3.3 Charging battery in refresh charge mode with battery charger - VAS 5903-

WARNING

Risk of injury. Observe warnings and safety precautions *⇒ page 3* *.*

WARNING

If the magic eye is colourless or light yellow, the battery - A- must not be checked or charged. Do not attempt to jump-start the vehicle!

There is a danger of explosion if you test or charge the battery or jump-start the vehicle!

If this is the case, battery - A- must be renewed.

Caution

The operating mode "refresh charging" is not permitted on VW Group vehicles as the voltage peaks could damage the vehicle electronics.

If "refresh charging" mode is used, the battery - A- must be disconnected from the electrical system.

Caution

When charging, always set the battery charger to the correct type of battery - A- ⇒ Operating instructions for battery charger - VAS 5903- .

"Refresh charging" is suitable for wet batteries which can be topped up with distilled water.

Do not use "refresh charging" mode for maintenance-free wet batteries.

Protected by copyright. Copying for private or commercial purposes, in part or in whole, is not permitted unless authorised by AUDI AG. AUDI AG does not guarantee or accept any liability with respect to the correctness of information in this document. Copyright by AUDI AG.

"Refresh charging (Refr)" mode is only used for batteries - A- that are presumed defective (e.g. due to sulphation). The battery - A- is charged up to the maximum electrolyte density to reactivate the plates by breaking down the sulphate layer.

Special tools and workshop equipment required

♦ Battery charger - VAS 5900-

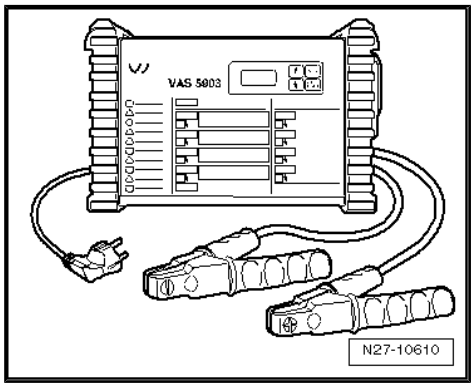

Note

The temperature of the battery - A- must be at least 10 °C.

Procedure

– Switch off ignition and all electrical equipment, and remove ignition key.

– Connect battery charger - VAS 5903- to electrical system. The display shows the last mode selected ⇒ page 43 .

– Set battery type with INFO button.

Symbol -1- for “Refresh charging of wet batteries” or symbol -2- for “Refresh charging of gel/absorbent glass mat batteries” will be shown on display.

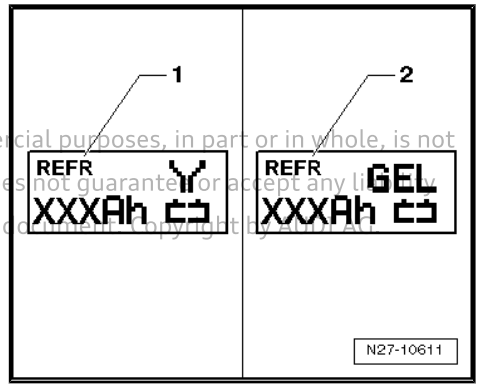

Protected by copyright. Copying for private or commercial purposes, in part or in whole, is not permitted unless authorised by AUDI AG. AUDI AG does not guarantee or accept any liability with respect to the correctness of information in this document. Copyright by AUDI AG.

– Use ↑ button or ↓ button to set battery capacity (Ah) of battery - A- being charged.

– Connect red charger clamp (+) to positive terminal of battery - A- .

Note

For vehicles with start/stop function and battery monitor control unit - J367- , the black charger clamp (-) must be connected to the vehicle body earth. Connecting it to the negative terminal of the battery - A- will cause the start/stop system to malfunction.

– Connect black charger clamp (-) to negative terminal of battery - A- /negative connection point.

Battery charger - VAS 5900- detects the nominal voltage of the connected battery - A- (6 V/12 V/24 V) and starts the charging process automatically.

When the charge reaches about 80 - 85% of the battery voltage, the battery charger - VAS 5900- starts “final charging”. The fourth bar will appear on the display -1-. The battery - A- is now ready for operation.

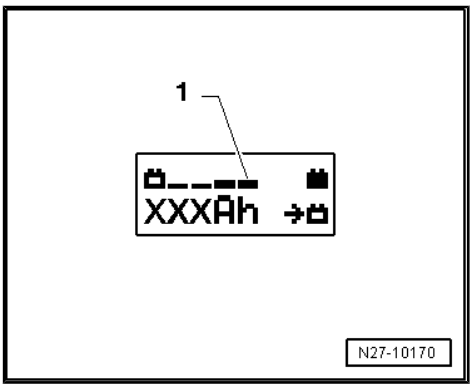

Note

Whether “refresh charging” is successful or not depends on the degree of sulphation in the battery - A- .

Possible faults and fault rectification

1 - Battery voltage displayed does not correspond to nominal voltage:

– Press and hold ↑ or ↓ button until charging process starts.

2 - Battery voltage displayed does not correspond to nominal voltage; charging is already in progress:

– Press START/STOP button twice.

– Press and hold ↑ or ↓ button until charging process starts.

3 - Battery charger does not detect a battery - A- when battery voltage is less than 2 V:

Display remains unchanged.

Operating mode and ampere hours (Ah) that were set are displayed.

Stopping battery - A- charging process

– Press START/STOP button.

– Remove charger clamps from battery clamps.

– Disconnect battery charger - VAS 5903- from electrical system.

3.3.4 Charging totally discharged battery with battery charger - VAS 5903-

Protected by copyright. Copying for private or commercial purposes, in part or in whole, is not permitted unless authorised by AUDI AG. AUDI AG does not guarantee or accept any liability with respect to the correctness of information in this document. Copyright by AUDI AG.

WARNING

Risk of injury. Observe warnings and safety precautions *⇒ page 3* *.*

WARNING

If the magic eye is colourless or light yellow, the battery - A- must not be checked or charged. Do not attempt to jump-start the vehicle!

There is a danger of explosion if you test or charge the battery or jump-start the vehicle!

If this is the case, battery - A- must be renewed.

Caution

- *The terminal polarity protection is not active in the operating mode "Charging totally discharged batteries/Stützbetrieb Standby". Ensure that you connect battery charger clamps to the correct battery terminal clamps!*
- *When charging, always set the battery charger to the correct type of battery - A- ⇒ Operating instructions for battery charger - VAS 5903- .*
- *If a totally discharged battery - A- is not recognised by battery charger - VAS 5903- , refer to* *⇒ page 58* *.*
- *Do not press the* START/STOP *button if the charger clamps are connected incorrectly. This could damage the battery charger - VAS 5903- .*

Batteries - A- with a voltage of less than 2 V will not be recognised automatically by battery charger - VAS 5903- .

Special tools and workshop equipment required

- Battery charger - VAS 5903-

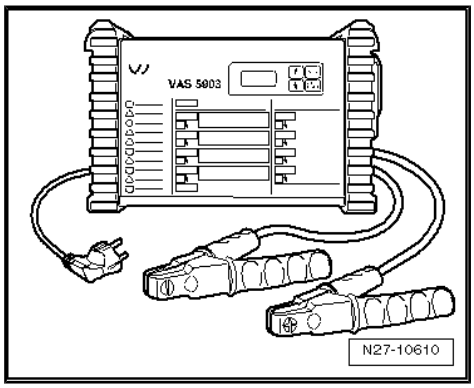

Protected by copyright. Copying for private or commercial purposes, in part or in whole, is not permitted unless authorised by AUDI AG. AUDI AG does not guarantee or accept any liability with respect to the correctness of information in this document. Copyright by AUDI AG.

Note

- *See notes in chapter ⇒ page 58 .*
- *The temperature of the battery - A- must be at least 10 °C.*
- *Totally discharged batteries in vehicles that have not yet been registered must be renewed prior to delivery as the possibility of damage cannot be excluded.*

Procedure

– Switch off ignition and all electrical equipment, and remove ignition key.

– Connect battery charger - VAS 5903- to electrical system. The display shows the last mode selected ⇒ page 43 .

– Set battery type with INFO button.

Symbol -1- for “Service charging of wet batteries” or symbol -2- for “Service charging of gel/absorbent glass mat batteries” will be shown on display.

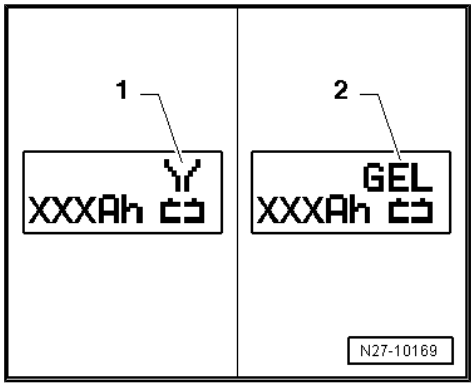

– Use ↑ button or ↓ button to set battery capacity (Ah) of battery - A- being charged.

– Connect red charger clamp (+) to positive terminal of battery - A- .

Note

For vehicles with start/stop function and battery monitor control unit - J367- , the black charger clamp (-) must be connected to the vehicle body earth. Connecting it to the negative terminal of the battery - A- will cause the start/stop system to malfunction.

– Connect black charger clamp (-) to negative terminal of battery - A- /negative connection point.

– Press START/STOP button for approx. 5 seconds. Menu option “Charging totally discharged batteries/Stützbetrieb Standby” is activated.

– Press ↑ or ↓ button to set corresponding battery voltage (6 V/ 12 V/24 V).

Note

The battery charger - VAS 5903- returns to the main menu (operating mode selection) if no button is pressed within 5 seconds.

– Confirm selected battery voltage with START/STOP button.

Battery charger will then check correct polarity of charger clamps.

– Check that charger clamps are connected correctly (correct polarity).

– Confirm that charger clamps are connected with correct polarity by pressing START/STOP button.

Battery charger - VAS 5903- will start charging for totally discharged battery - A- .

Stopping battery - A- charging process

– Press START/STOP button.

– Remove charger clamps from battery clamps.

– Disconnect battery charger - VAS 5903- from electrical system.

3.3.5 Backup power supply with battery charger - VAS 5903-

General notes

Backup power supply mode provides the electrical system with power when the battery - A- is removed or disconnected.

For additional information, refer to ⇒ Operating manual for battery charger - VAS 5903- .

Backup power supply mode is suitable in the following situations:

Protected by copyright. Copying for private or commercial purposes, in part or in whole, is not permitted unless authorised by AUDI AG. AUDI AG does not guarantee or accept any liability with respect to the correctness of information in this document. Copyright by AUDI AG.

- Backup power supply for electrical system with battery - A-
- Maintaining power when renewing battery
- Testing ancillaries without battery - A-

WARNING

Risk of injury. Observe warnings and safety precautions *⇒ page 3* *.*

WARNING

If the magic eye is colourless or light yellow, the battery - A- must not be checked or charged. Do not attempt to jump-start the vehicle!

There is a danger of explosion if you test or charge the battery or jump-start the vehicle!

If this is the case, battery - A- must be renewed.

Special tools and workshop equipment required

- Battery charger - VAS 5903-

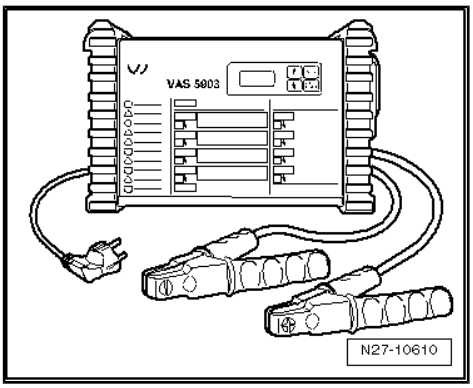

Procedure

Caution

- *The terminal polarity protection is not active in the operating mode "Charging totally discharged batteries/Stützbetrieb Standby". Ensure that you connect battery charger clamps to the correct battery terminal clamps!*
- *A short-circuit can cause sparks.*
- *Danger of explosion.*
- *Ensure that charger clamps are fitted securely.*
- *Do not press the* START/STOP *button if the charger clamps are connected incorrectly. This could damage the battery charger - VAS 5903- .*

Protected by copyright. Copying for private or commercial purposes, in part or in whole, is not permitted unless authorised by AUDI AG. AUDI AG does not guarantee or accept any liability with respect to the correctness of information in this document. Copyright by AUDI AG.

– Remove battery - A- ⇒ Electrical system; Rep. gr. 27 ; Battery; Removing and installing battery .

– Connect battery charger - VAS 5903- to electrical system. The display shows the last mode selected ⇒ page 43 .

Caution

When the battery - A- is removed, it is very important to ensure that the charger clamp on the positive battery terminal does not come into contact with the vehicle body earth. Also ensure that there is no contact between the battery terminal clamps.

– Connect red charger clamp (+) to positive terminal of battery - A- .

Note

For vehicles with start/stop function and battery monitor control unit - J367- , the black charger clamp (-) must be connected to the vehicle body earth. Connecting it to the negative terminal of the battery - A- will cause the start/stop system to malfunction.

– Connect black charger clamp (-) to negative terminal of battery - A- /negative connection point.

– Press START/STOP button for approx. 5 seconds. Menu option “Charging totally discharged batteries/Stützbetrieb Standby” is activated.

– Press ↑ or ↓ button to set corresponding battery voltage (6 V/ 12 V/24 V).

Note

The battery charger - VAS 5903- returns to the main menu (operating mode selection) if no button is pressed within 5 seconds.

– Confirm selected battery voltage with START/STOP button.

Battery charger will then check correct polarity of charger clamps.

– Check that charger clamps are connected correctly (correct polarity).

– Confirm that charger clamps are connected with correct polarity by pressing START/STOP button.

Battery charger - VAS 5903- will start backup power supply mode for battery - A- .

Protected by copyright. Copying for private or commercial purposes, in part or in whole, is not permitted unless authorised by AUDI AG. AUDI AG does not guarantee or accept any liability with respect to the correctness of information in this document. Copyright by AUDI AG.

Ending backup power supply mode

– Press START/STOP button.

– Remove charger clamps from battery clamps.

– Disconnect battery charger - VAS 5903- from electrical system.

3.3.6 Maintenance charging with battery charger - VAS 5903-

Note

- *If battery - A- is under electrical load during charging in maintenance charging mode, battery charger - VAS 5903- automatically compensates for the current drawn from the battery.*
- *Maintenance charging can be continued for an unlimited period.*
- *The battery - A- is ready for use at any time.*
- *Observe battery manufacturer's maintenance instructions.*

WARNING

Risk of injury. Observe warnings and safety precautions ***⇒ page 3*** ***.***

WARNING

If the magic eye is colourless or light yellow, the battery - A- must not be checked or charged. Do not attempt to jump-start the vehicle!

There is a danger of explosion if you test or charge the battery or jump-start the vehicle!

If this is the case, battery - A- must be renewed.

Protected by copyright. Copying for private or commercial purposes, in part or in whole, is not permitted unless authorised by AUDI AG. AUDI AG does not guarantee or accept any liability with respect to the correctness of information in this document. Copyright by AUDI AG.

Special tools and workshop equipment required

- Battery charger - VAS 5903-

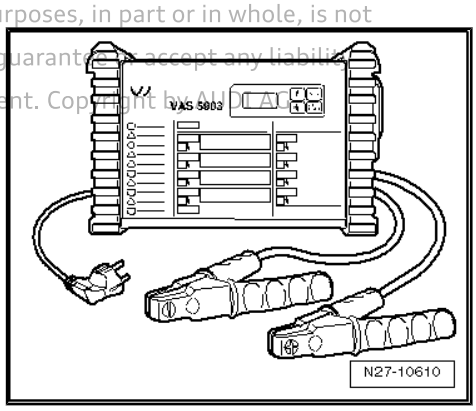

When the battery - A- is fully charged, battery charger - VAS 5903- switches to maintenance charging.

Procedure

– Proceed in the same way as when charging the battery - A- ⇒ page 43 .

When the charge is 100 % all the bars appear on the display -1-.

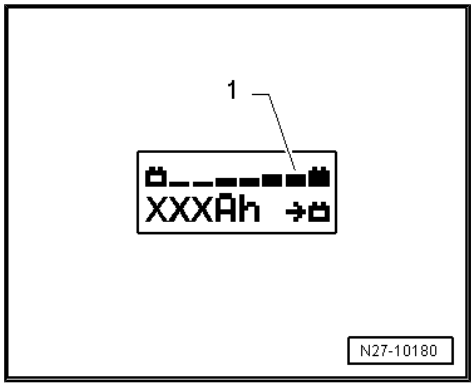

3.4 Battery charger - VAS 5906-

WARNING

Risk of injury. Observe warnings and safety precautions ⇒ page 3 .

WARNING

If the magic eye is colourless or light yellow, the battery - A- must not be checked or charged. Do not attempt to jump-start the vehicle!

There is a danger of explosion if you test or charge the battery or jump-start the vehicle!

If this is the case, battery - A- must be renewed.

Note

Refer to ⇒ Operating manual for battery charger - VAS 5906- .

- Description of battery charger - VAS 5906- ⇒ page 55
- Charge battery - A- ⇒ page 55 .

Protected by copyright. Copying for private or commercial purposes, in part or in whole, is not permitted unless authorised by AUDI AG. AUDI AG does not guarantee or accept any liability with respect to the correctness of information in this document. Copyright by AUDI AG.

3.4.1 Description of battery charger - VAS 5906-

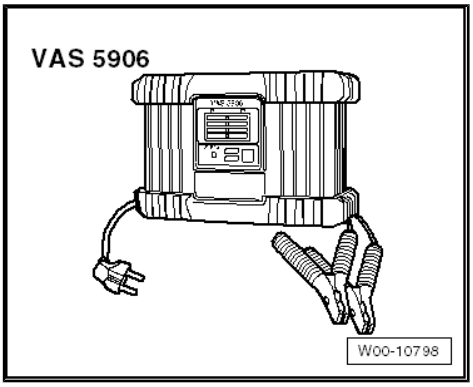

Battery charger - VAS 5906-

Battery charger - VAS 5906- has been specially developed for providing power to the electrical system when a vehicle is on display.

It has an automatic charging characteristic for starter batteries with 3 to 300 Ah.

The charging voltage does not exceed 14.4 V. Maintenance charging provides all the electrical equipment in the vehicle with up to 30 A.

For sustained operation, battery charger - VAS 5906- changes to maintenance charging once the battery - A- is fully charged.

Battery charger - VAS 5906- starts fully automatically and does not require the adjustment of any settings; simply connect the charging clamps and power cable.

For additional information, refer to ⇒ Operating manual for battery charger - VAS 5906- .

Overview - controls

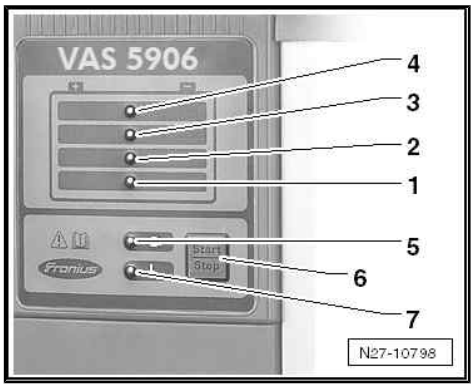

1 - Charge level display 25 %

2 - Charge level display 50 %

3 - Charge level display 75 %

4 - Charge level display 100 %

5 - "Ready" indicator

6 - START/STOP button and Setup button for interrupting and resuming charging process. Press for 10 seconds to access setup menu and select characteristic curve type.

7 - Malfunction indicator

3.4.2 Charging battery with battery charger - VAS 5906-

WARNING

Risk of injury. Observe warnings and safety precautions ⇒ page 3 .

WARNING

If the magic eye is colourless or light yellow, the battery - A- must not be checked or charged. Do not attempt to jump-start the vehicle!

There is a danger of explosion if you test or charge the battery or jump-start the vehicle!

If this is the case, battery - A- must be renewed.

Protected by copyright. Copying for private or commercial purposes, in part or in whole, is not permitted unless AUDI AG. AUDI AG does not guarantee or accept any liability with respect to the correctness of information in this document. Copyright by AUDI AG.

Special tools and workshop equipment required

- Battery charger - VAS 5906-

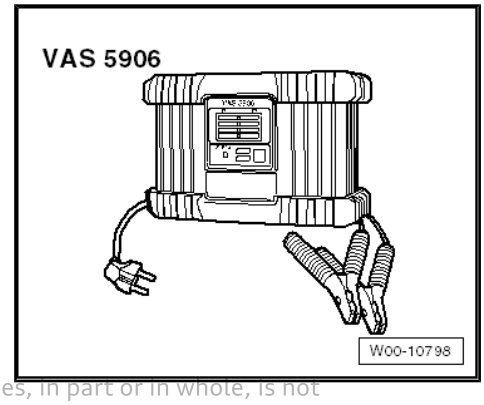

Protected by copyright. Copying for private or commercial purposes, in part or in whole, is not permitted unless authorised by AUDI AG. AUDI AG does not guarantee or accept any liability with respect to the accuracy of information in this document. Copyright by AUDI AG.

Procedure

– Place charger - VAS 5906- in engine compartment or under vehicle.

– Connect battery charger - VAS 5906- to electrical system.

Battery charger - VAS 5906- is in no-load operation; “ready” indicator will light up.

WARNING

Risk of injury. Observe warnings and safety precautions *⇒ page 3* *.*

Caution

- *Switch off ignition and all electrical equipment.*
- *Take out ignition key.*

– Connect red charger clamp (+) to positive terminal of battery - A- .

Note

For vehicles with start/stop function and battery monitor control unit - J367- , the black charger clamp (-) must be connected to the vehicle body earth. Connecting it to the negative terminal of the battery - A- will cause the start/stop system to malfunction.

– Connect black charger clamp (-) to negative terminal of battery - A- /negative connection point.

Charging starts after approximately 2 seconds.

The number of LEDs lit indicates charge level of battery - A- . When all the LEDs light up, the battery - A- is fully charged.

When the battery - A- is fully charged, battery charger - VAS 5906- automatically switches to maintenance charging.

Caution

Danger of sparks if charging clamps are removed too soon. Terminate charging by pressing START/STOP *button.*

Stopping battery - A- charging process

– Press START/STOP button.

– Remove charger clamps from battery clamps.

– Disconnect battery charger - VAS 5906- from electrical system.

3.5 Solar panel - VAS 6102 A-

⇒ "3.5.1 Description of solar panel VAS 6102 A ", page 57

⇒ "3.5.2 Maintenance charging using solar panel VAS 6102 A ", page 57

3.5.1 Description of solar panel - VAS 6102 A-

Solar panel - VAS 6102 A-

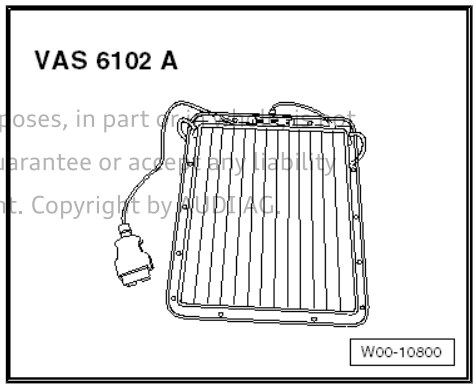

The solar panel - VAS 6102 A- supports the vehicle's electrical system and prevents self-discharge of the battery - A-.

Protected by copyright. Copies for private or commercial purposes, in part or in whole, are not permitted unless authorised by AUDI AG. AUDI AG does not guarantee or accept any liability with respect to the correctness of information in this document. Copyright by AUDI AG.

The solar panel - VAS 6102 A- achieves maximum voltage of 14.3 V and a maximum charging current of 255 mA.

The solar panel - VAS 6102 A- may be used to charge all rechargeable lead batteries or lead-gel batteries.

The solar panel - VAS 6102 A- is plugged into the diagnostic connection in the vehicle.

A green LED is integrated in the frame of the solar panel - VAS 6102 A- to indicate that the panel is in operation. The brighter the LED, the higher the charging current.

The integrated electronics prevent the battery - A- from overcharging.

The solar panel - VAS 6102 A- is attached to the interior mirror -1- with the underside on the dash panel -2-.

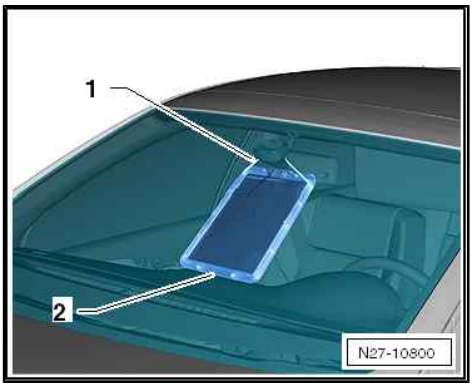

Note

Do not allow the complete solar panel - VAS 6102 A- to make contact with the dash panel; only place down the lower edge to provide support. Placing it down fully can result in discolouration of the dash panel.

3.5.2 Maintenance charging using solar panel - VAS 6102 A-

Special tools and workshop equipment required

♦ Solar panel - VAS 6102 A-

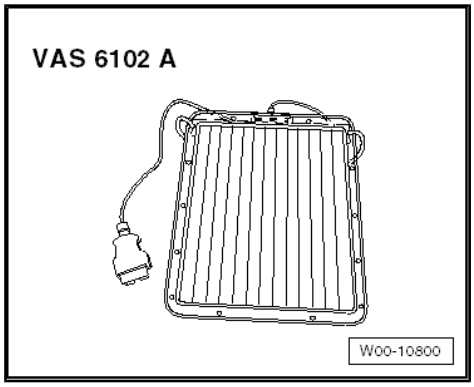

Procedure

– Secure solar panel - VAS 6102 A- to interior mirror -1-.

– Place underside on dash panel -2-.

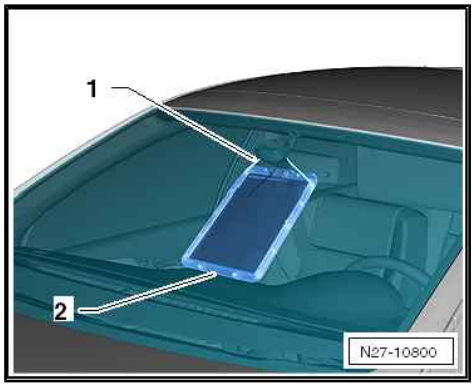

Note

Do not allow the complete solar panel - VAS 6102 A- to make contact with the dash panel; only place down the lower edge to provide support. Placing it down fully can result in discolouration of the dash panel.

– Pull securing cable together until solar panel - VAS 6102 A- is close to windscreen.

– Connect solar panel - VAS 6102 A- to diagnostic connection of vehicle. Connect in same way as ⇒ Vehicle diagnostic tester.

– Check that solar panel - VAS 6102 A- is functioning properly. The green LED must light up.

3.6 Totally discharged batteries

WARNING

Risk of injury. Observe warnings and safety precautions *⇒ page 3* *.*

A battery - A- is considered totally discharged if the no-load voltage is less than 11.6 V.

WARNING

If the magic eye is colourless or light yellow, the battery - A- must not be checked or charged. Do not attempt to jump-start the vehicle!

There is a danger of explosion if you test or charge the battery or jump-start the vehicle!

If this is the case, battery - A- must be renewed.

Protected by copyright. Copying for private or commercial purposes, in part or in whole, is not permitted unless authorised by AUDI AG. AUDI AG does not guarantee or accept any liability with respect to the correctness of information in this document. Copyright by AUDI AG.

Caution

- *Totally discharged batteries - A- freeze at higher temperatures.*
- *Never re-use frozen batteries - A- .*

Note

- *Batteries - A- that have not been used for an extended period of time (e.g. in vehicles that have been stored) self-discharge.*
- *In a totally discharged battery - A- the electrolyte is comprised almost entirely of water, as the sulphuric acid content is heavily reduced.*

Protected by copyright. Copying for private or commercial purposes, in part or in whole, is not permitted unless authorised by AUDI AG. AUDI AG does not guarantee or accept any liability with respect to the correctness of information in this document. Copyright by AUDI AG.

- *Totally discharged batteries - A- become sulphated, meaning that the entire battery plate surfaces harden.*
- *If discharged batteries - A- are charged directly after being discharged, the sulphation dissipates.*
- *If this is not done, the plates become even harder and the batteries - A- ability to absorb charge is impaired. This results in reduced power output.*
- *Totally discharged batteries - A- in vehicles that have not yet been registered must be renewed prior to delivery as the possibility of damage cannot be excluded.*

Procedure

– Check no-load voltage of battery - A- ⇒ page 25 .

– Charge battery - A- :

- Battery charger - VAS 5095 A- ⇒ page 27
- Battery charger - VAS 5900- ⇒ page 36
- Battery charger - VAS 5903- ⇒ page 48
- Battery charger - VAS 5906- ⇒ page 55

4 Alternator

4.1 Checking alternator

⇒ “4.1.1 Checking alternator C ”, page 60

⇒ “4.1.2 Checking starter-alternator C29 (0K4 + VH0)”, page 60

⇒ “4.1.3 Checking starter-alternator C29 (0K4 + VH2/VH3)”, page 60

4.1.1 Checking alternator - C-

Procedure

– Connect vehicle diagnostic tester .

– Select `Diagnosis` mode and begin diagnosis.

– Select `Test plan` tab.

– Choose `Select own test` and select following options one after the other:

♦ 12V vehicle electrical system

♦ C - Alternator, check

– Start selected program and follow instructions on display of vehicle diagnostic tester.

4.1.2 Checking starter-alternator - C29- (0K4 + VH0)

Procedure

– Connect vehicle diagnostic tester .

– Select `Diagnosis` mode and begin diagnosis.

– Select `Test plan` tab.

– Choose `Select own test` and select following options one after the other:

♦ 12V vehicle electrical system

♦ C29 - Starter alternator - test

– Start selected program and follow instructions on display of vehicle diagnostic tester.

4.1.3 Checking starter-alternator - C29- (0K4 + VH2/VH3)

Procedure

– Connect vehicle diagnostic tester .

– Select `Diagnosis` mode and begin diagnosis.

– Select `Test plan` tab.

– Choose `Select own test` and select following options one after the other:

♦ Systems with diagnostic capability

♦ 00CC - Starter alternator -C29

♦ 00CC - Subsystems, background conditions

Protected by copyright. Copying for private or commercial purposes, in part or in whole, is not permitted unless authorised by AUDI AG. AUDI AG does not guarantee or accept any liability with respect to the correctness of information in this document. Copyright by AUDI AG.

- ♦ C29 - Starter alternator - test
  - Start selected program and follow instructions on display of vehicle diagnostic tester.

Protected by copyright. Copying for private or commercial purposes, in part or in whole, is not permitted unless authorized by AUDI AG. AUDI AG does not guarantee or accept any liability with respect to the correctness of information in this document. Copyright by AUDI AG.

4.2 Bosch alternator up to 2000 - exploded view

1 - Bolts

- ❑ 1 Nm

2 - Cover

- ❑ With three retaining tabs

3 - Bolts

- ❑ 2 Nm

4 - Voltage converter

- ❑ Removing:
  - Unscrew bolts -item 1- and detach protective cap -item 2-
  - Unscrew bolts -item 3- and detach voltage regulator
- ❑ Carbon brush wear limit: 5 mm

5 - Alternator

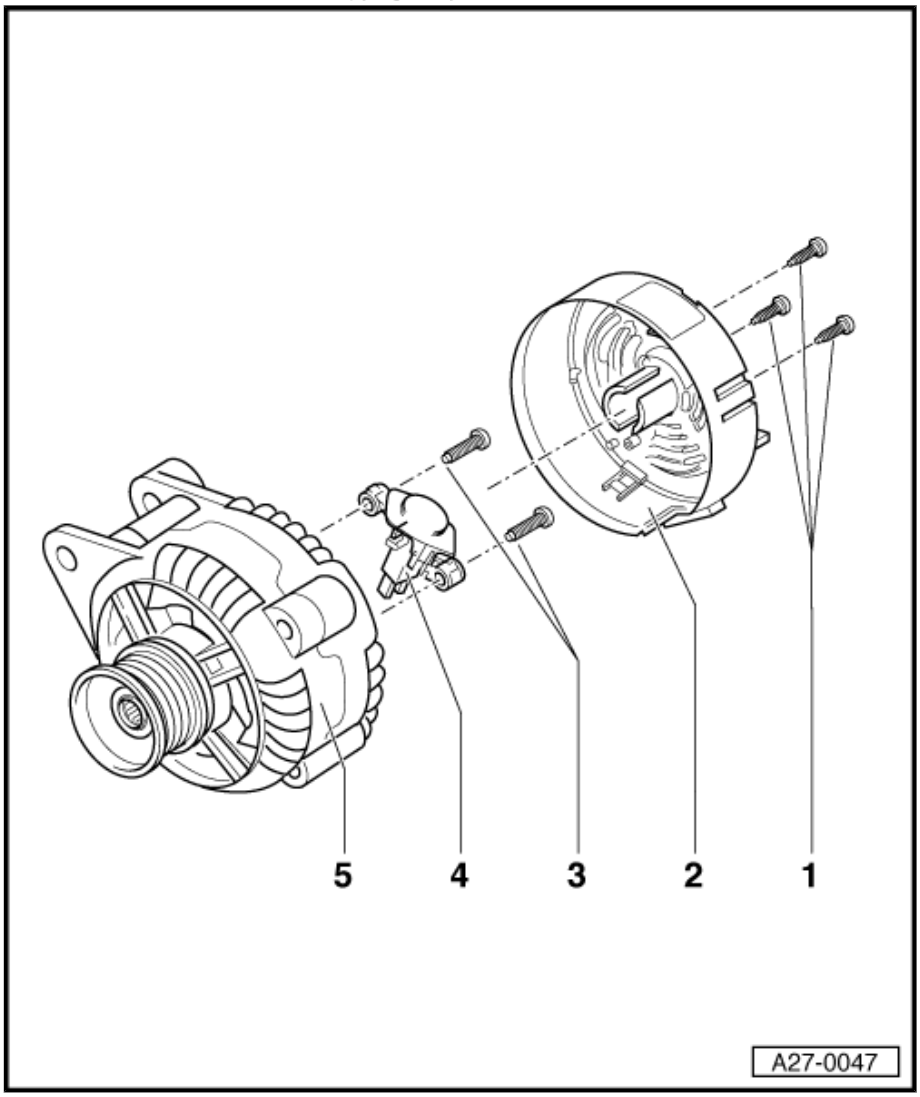

4.3 Bosch alternator from 2001 onwards - exploded view

Protected by copyright. Copying for private or commercial purposes, in part or in whole, is not permitted unless authorised by AUDI AG. AUDI AG does not guarantee or accept any liability with respect to the correctness of information in this document. Copyright by AUDI AG.

Note

The alternators were introduced gradually.

1 - Alternator

2 - Voltage converter
- ❑ Removing and installing ⇒ page 63
- ❑ Checking carbon brushes ⇒ page 65

3 - Bolt
- ❑ 2.5 Nm

4 - Cover

5 - Nut
- ❑ 12 Nm

6 - Nut
- ❑ 30 Nm

7 - Bolt
- ❑ 3 Nm

8 - Bolt
- ❑ 1.5 Nm

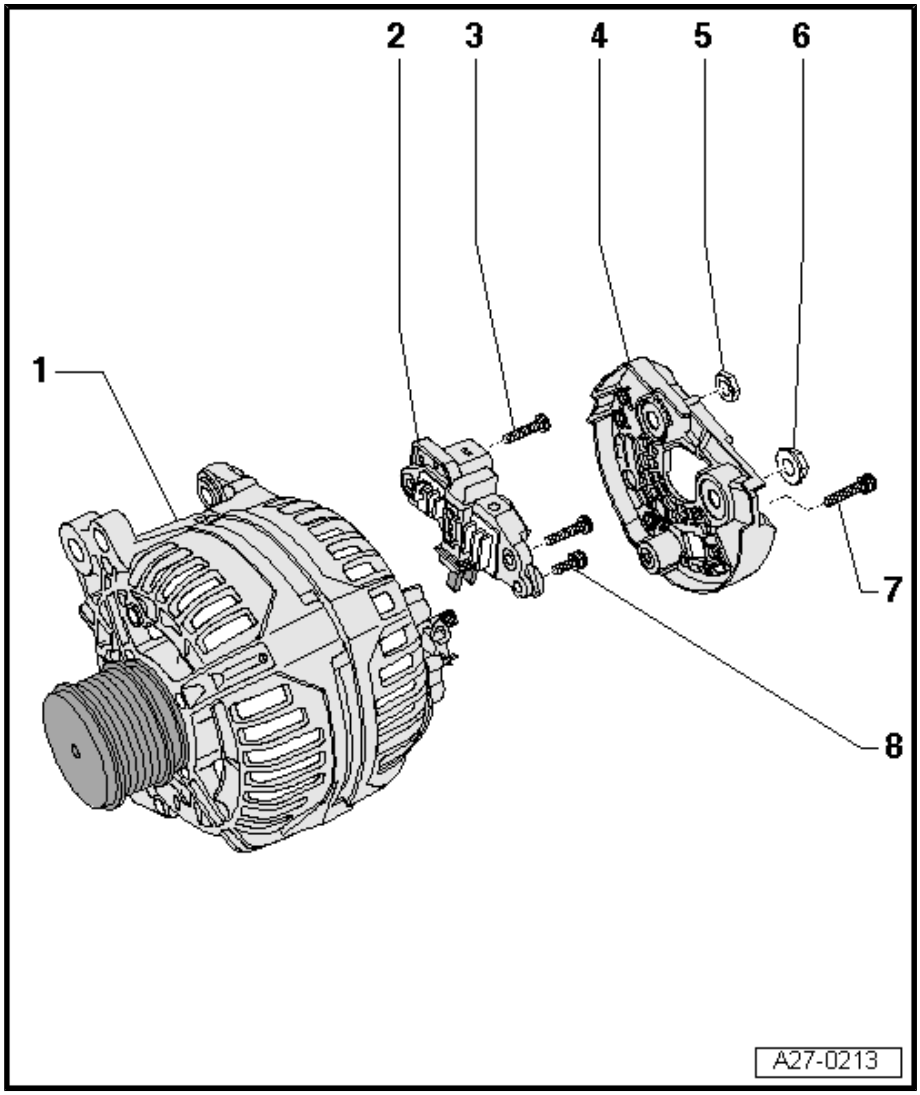

4.4 Removing and installing voltage regulator - Bosch alternator from 2001 onwards

Removing

– Remove alternator ⇒ Electrical system; Rep. gr. 27 ; Alternator; Removing and installing alternator .

– Unscrew bolt -1- and nuts -3- and -4-.

– Detach cover -2- from rear of alternator.

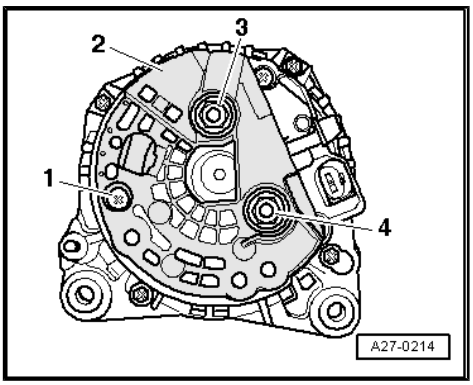

– Remove bolts -arrows-.

– Remove voltage regulator.

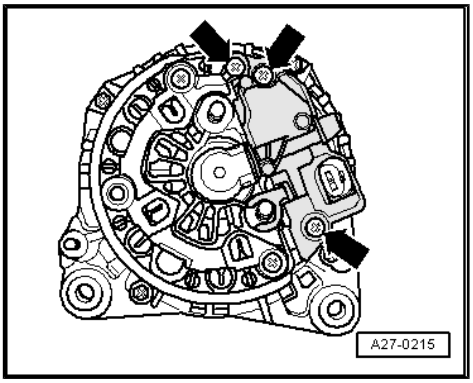

Installing

– When positioning voltage regulator, ensure carbon brushes are positioned correctly on contact surfaces.

Remaining installation steps are carried out in reverse sequence; note the following:

– Install alternator ⇒ Electrical system; Rep. gr. 27 ; Alternator; Removing and installing alternator .

• Tightening torque ⇒ page 62

4.5 Bosch alternator from 2007 onwards - exploded view

Protected by copyright. Copying for private or commercial purposes, in part or in whole, is not permitted without the prior written consent of AUDI AG. AUDI AG does not guarantee or accept any liability with respect to the correctness of information in this document. Copyright by AUDI AG.

Note

The new alternators were introduced gradually.

1 - Nut
- ❑ 65 Nm

2 - Poly V-belt pulley

3 - Alternator

4 - Voltage converter
- ❑ Removing and installing ⇒ page 64
- ❑ Checking carbon brushes ⇒ page 65

5 - Bolt
- ❑ 1.5 Nm

6 - Cover

7 - Bolt
- ❑ 3 Nm

8 - Bolt
- ❑ 2.5 Nm

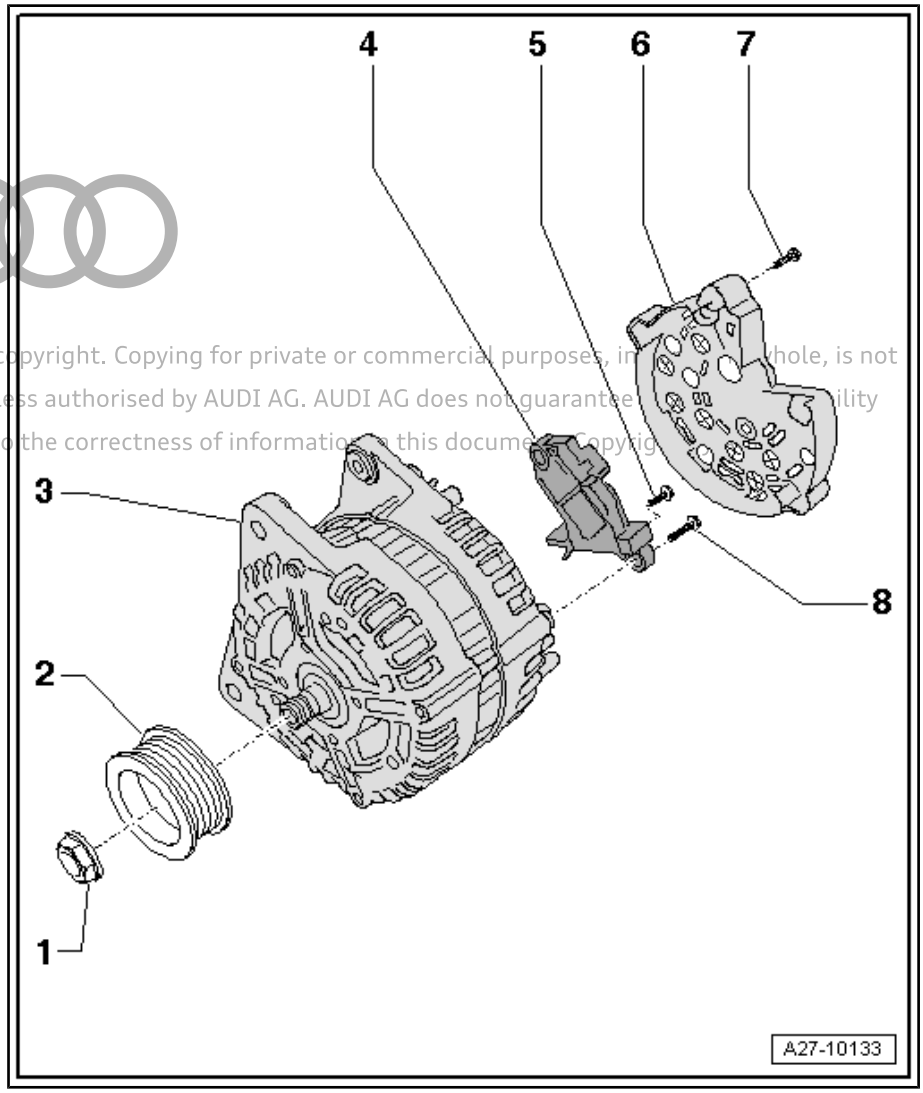

Protected by copyright. Copying for private or commercial purposes, in whole, is not permitted unless authorised by AUDI AG. AUDI AG does not guarantee ility with respect to the correctness of information in this document. Copyright

4.6 Removing and installing voltage regulator - Bosch alternator from 2007 onwards

Removing

– Remove alternator ⇒ Electrical system; Rep. gr. 27 ; Alternator; Removing and installing alternator .

– Remove bolts -arrows-.

– Detach cover -1- from rear of alternator.

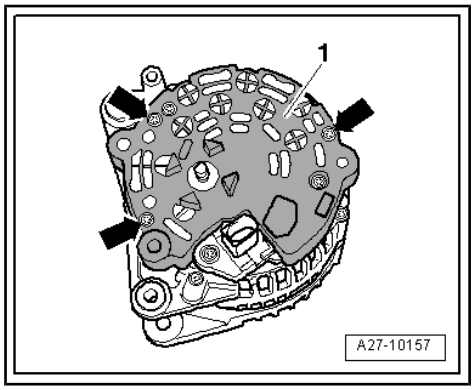

– Remove bolts -arrows-.

– Detach voltage regulator -1-.

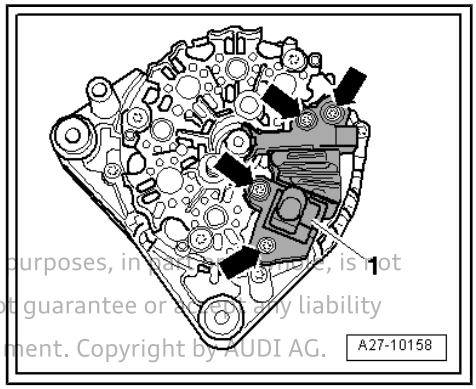

Installing

– When positioning voltage regulator, ensure carbon brushes are positioned correctly on contact surfaces.

Remaining installation steps are carried out in reverse sequence; note the following:

– Install alternator ⇒ Electrical system; Rep. gr. 27 ; Alternator; Removing and installing alternator .

• Tightening torque ⇒ page 62

Protected by copyright. Copying for private or commercial purposes, in part or in whole, is not permitted unless authorised by AUDI AG. AUDI AG does not guarantee or assume any liability with respect to the correctness of information in this document. Copyright by AUDI AG.

4.7 Checking carbon brushes - all types of Bosch alternators from 2001 onwards

Procedure

– Remove voltage regulator: Up to 2007 ⇒ page 63 ; from 2007 onwards ⇒ page 64 .

– Check length -a- of carbon brushes.

• Wear limit: -a- = 5 mm.

– Install voltage regulator: Up to 2007 ⇒ page 63 ; from 2007 onwards ⇒ page 64 .

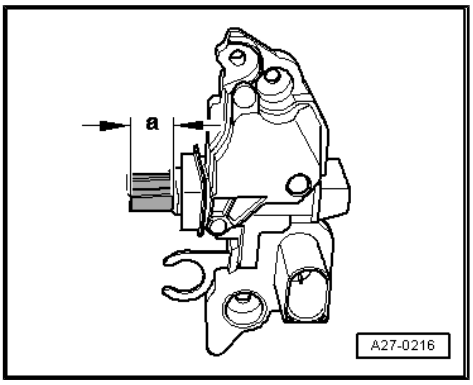

4.8 Valeo alternator up to 2000 - exploded view

1 - Alternator

2 - Voltage converter

- ❑ Removing:
- – Remove nuts -item 5- and detach cover -item 4-
- – Unscrew bolt -item 6- and nuts -item 7- and detach voltage regulator
- ❑ Carbon brush wear limit: 5 mm

3 - Protective cap

4 - Cover

5 - Nut

- ❑ 2 Nm

6 - Bolt

- ❑ 2 Nm

7 - Nut

- ❑ 2x
- ❑ 3.5 Nm

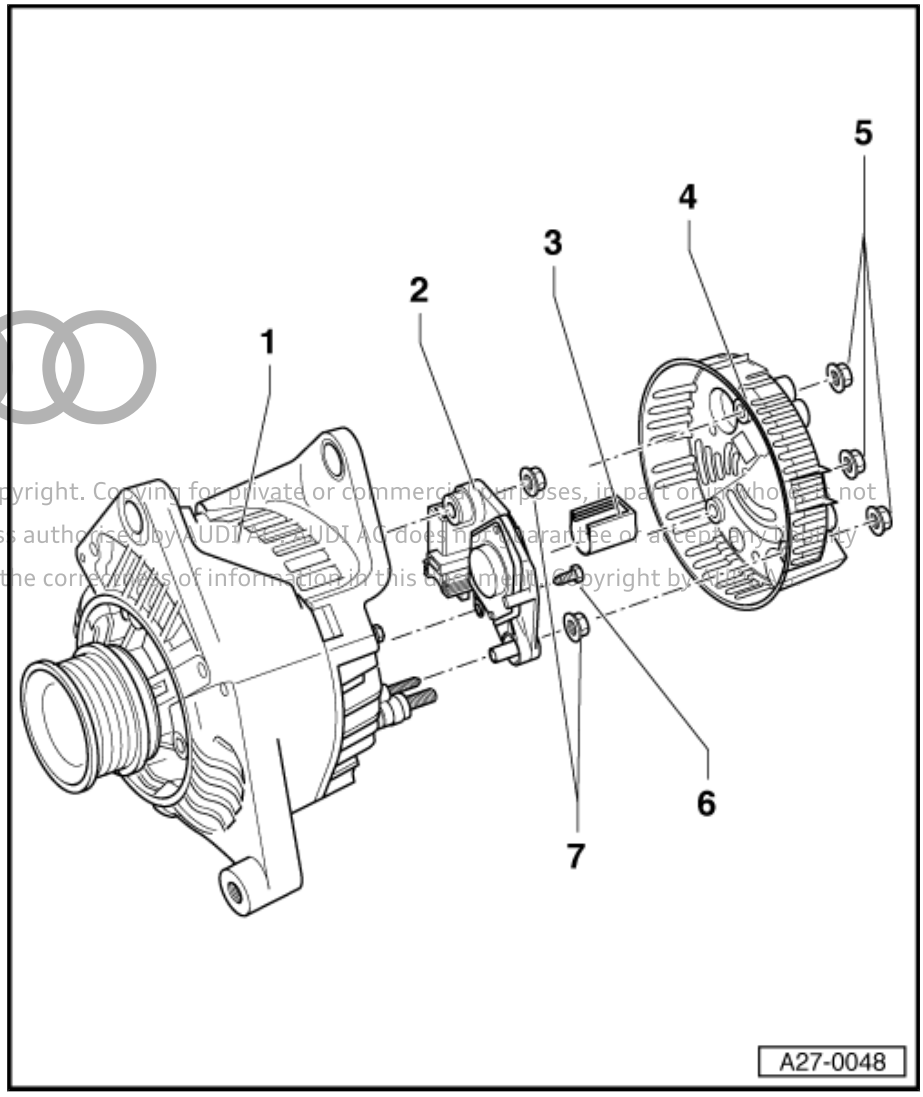

Protected by copyright. Copying for private or commercial purposes, in part or in whole, is not permitted unless authorised by AUDI AG. AUDI AG does not guarantee or accept any liability with respect to the correctness of information in this document. Copyright by AUDI AG.

4.9 Valeo alternator from 2001 onwards - exploded view

Note

The alternators were introduced gradually.

1 - Alternator

2 - Voltage converter

- ❑ Removing and installing: Up to 2007 ⇒ page 68 ; from 2007 onwards ⇒ page 69
- ❑ Checking carbon brushes: Up to 2007 ⇒ page 68 ; from 2007 onwards ⇒ page 69

3 - Bolt

- ❑ 2 Nm

4 - Cover

5 - Protective cap

6 - Bolt

- ❑ 2 Nm

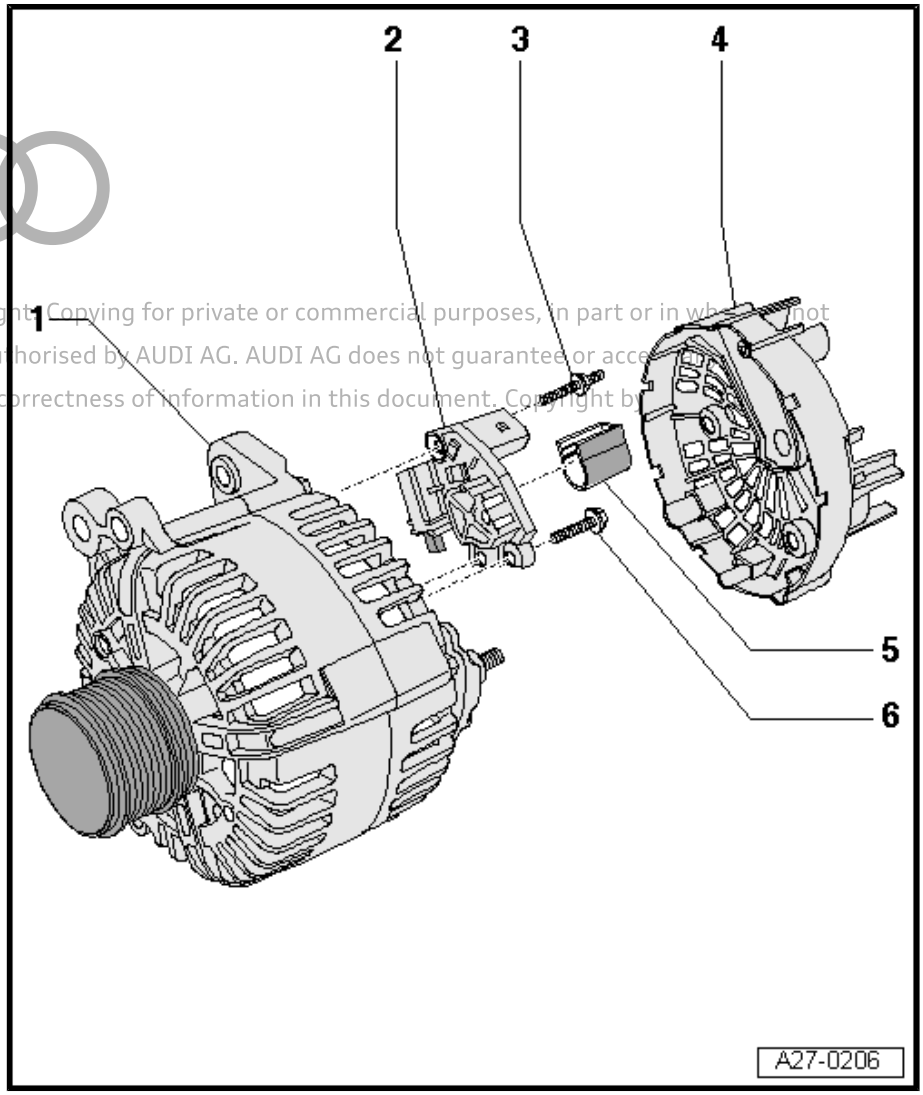

Protected by copyright. Copying for private or commercial purposes, in part or in whole, is not permitted unless authorised by AUDI AG. AUDI AG does not guarantee or accept any liability with respect to the correctness of information in this document. Copyright by AUDI AG.

4.10 Removing and installing voltage regulator - Valeo alternator from 2001 onwards

Removing

– Remove alternator ⇒ Electrical system; Rep. gr. 27 ; Alternator; Removing and installing alternator .

– Press cover on rear of alternator off studs -arrows-.

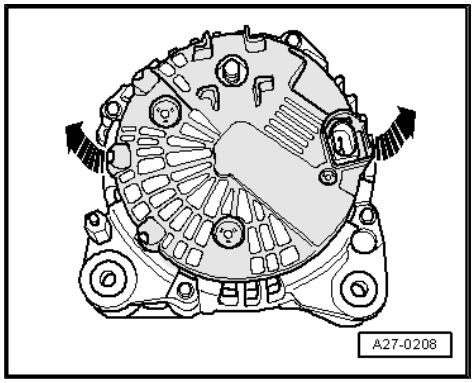

– Unscrew bolts -1- and centre hex stud -2-.

– Remove voltage regulator.

Protected by copyright. Copying for private or commercial purposes, in part or in whole, is not permitted unless authorised by AUDI AG. AUDI AG does not guarantee or accept any liability with respect to the correctness of information in this document. Copyright by AUDI AG.

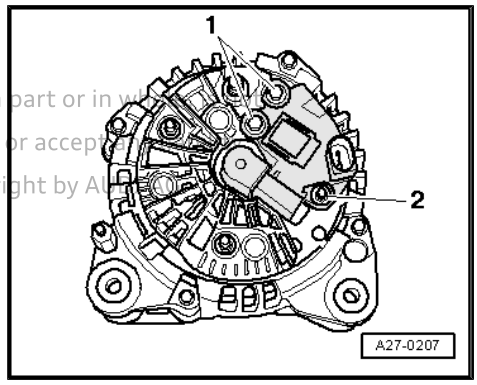

Installing

– Press protective cap -2- off voltage regulator -1- in direction of -arrow-.

– When positioning voltage regulator, ensure carbon brushes are positioned correctly on contact surfaces.

– Refit protective cap when voltage regulator has been installed.

Remaining installation steps are carried out in reverse sequence; note the following:

– Install alternator ⇒ Electrical system; Rep. gr. 27 ; Alternator; Removing and installing alternator .

• Tightening torque ⇒ page 67

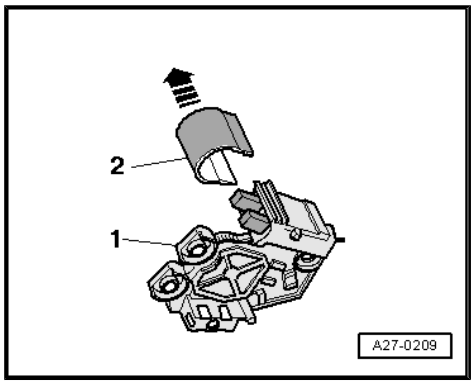

4.11 Checking carbon brushes - Valeo alternator from 2001 onwards

Procedure

– Remove voltage regulator ⇒ page 68 .

– Check length -a- of carbon brushes.

• Wear limit: -a- = 5 mm.

– Install voltage regulator ⇒ page 68 .

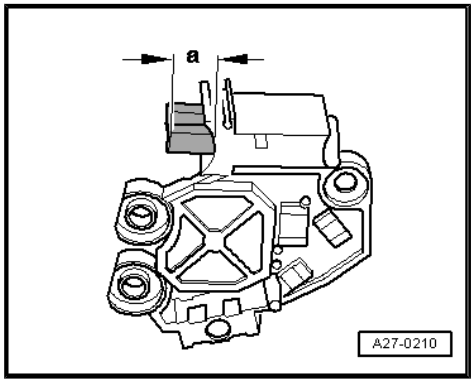

4.12 Removing and installing voltage regulator - Valeo alternator from 2007 onwards

Special tools and workshop equipment required

♦ Feeler gauge, 0.3 mm

Removing

– Remove alternator ⇒ Electrical system; Rep. gr. 27 ; Alternator; Removing and installing alternator .

– Press cover on rear of alternator off studs -arrows-.

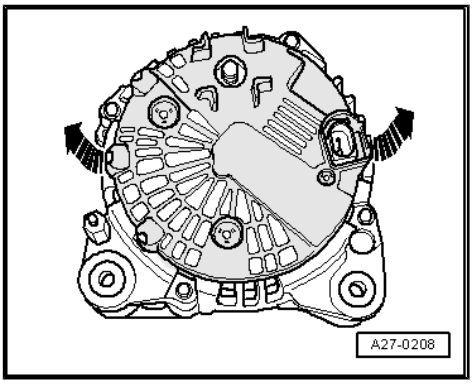

– Unscrew bolts -1- and centre hex stud -2-.

– Remove voltage regulator.

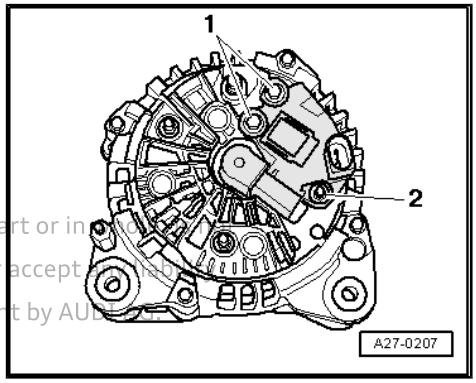

Protected by copyright. Copying for private or commercial purposes, in part or in [illegible] permitted unless authorised by AUDI AG. AUDI AG does not guarantee or accept [illegible] with respect to the correctness of information in this document. Copyright by AUDI [illegible]

Installing

– Insert 0.3 mm feeler gauge -item 4- between protective cap -2- and carbon brushes -3-.

– Pull protective cap off only as far as point where projection on protective cap keeps carbon brushes pressed down.

– After installing voltage regulator, press protective cap on as far as stop.

Remaining installation steps are carried out in reverse sequence; note the following:

– Install alternator ⇒ Electrical system; Rep. gr. 27 ; Alternator; Removing and installing alternator .

• Tightening torque ⇒ page 67

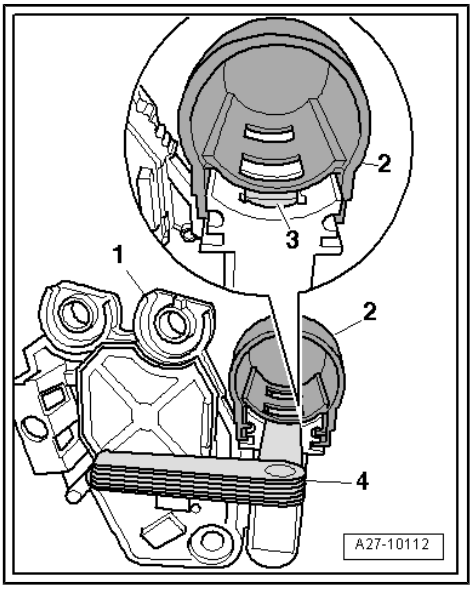

4.13 Checking carbon brushes - Valeo alternator from 2007 onwards

Special tools and workshop equipment required

♦ Feeler gauge, 0.3 mm

Procedure

– Remove voltage regulator ⇒ page 69 .

– Insert 0.3 mm feeler gauge -item 3- between protective cap -2- and carbon brushes.

– Pull protective cover off voltage regulator -1- -arrow-.

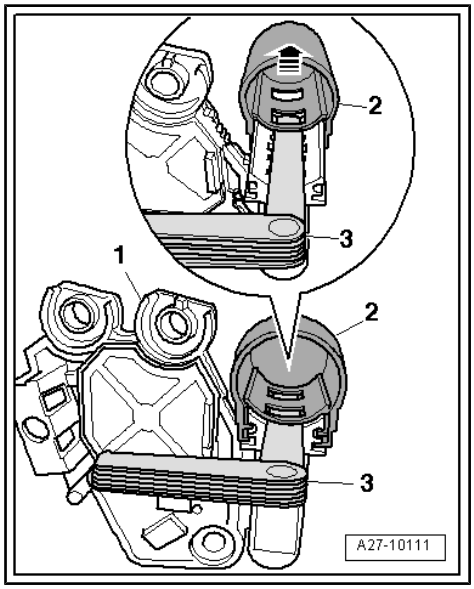

– Check length -a- of carbon brushes.

• Wear limit: -a- = 5 mm.

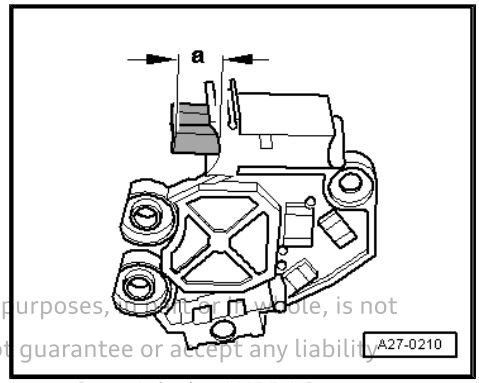

Protected by copyright. Copying for private or commercial purposes, in part or in whole, is not permitted unless authorised by AUDI AG. AUDI AG does not guarantee or accept any liability with respect to the correctness of information in this document. Copyright by AUDI AG.

– With protective cap -2- in position, press down carbon brushes -3- with feeler gauge -4-.

– Slide protective cap on in direction of -arrow- until projection on protective cap keeps carbon brushes pressed down.

– Install voltage regulator ⇒ page 69 .

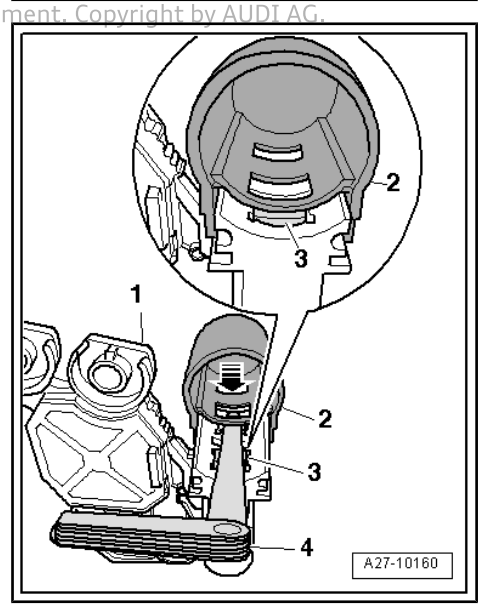

4.14 Hitachi alternator - exploded view

1 - Alternator

2 - Bolt
- ❑ 4x
- ❑ 2 Nm

3 - Voltage converter
- ❑ Removing and installing ⇒ page 71
- ❑ Checking carbon brushes ⇒ page 72

4 - Nut
- ❑ 2x
- ❑ 4 Nm

5 - Cover

6 - Bolt
- ❑ 6x
- ❑ 4 Nm

7 - Protective cap

8 - Nut
- ❑ 11 Nm

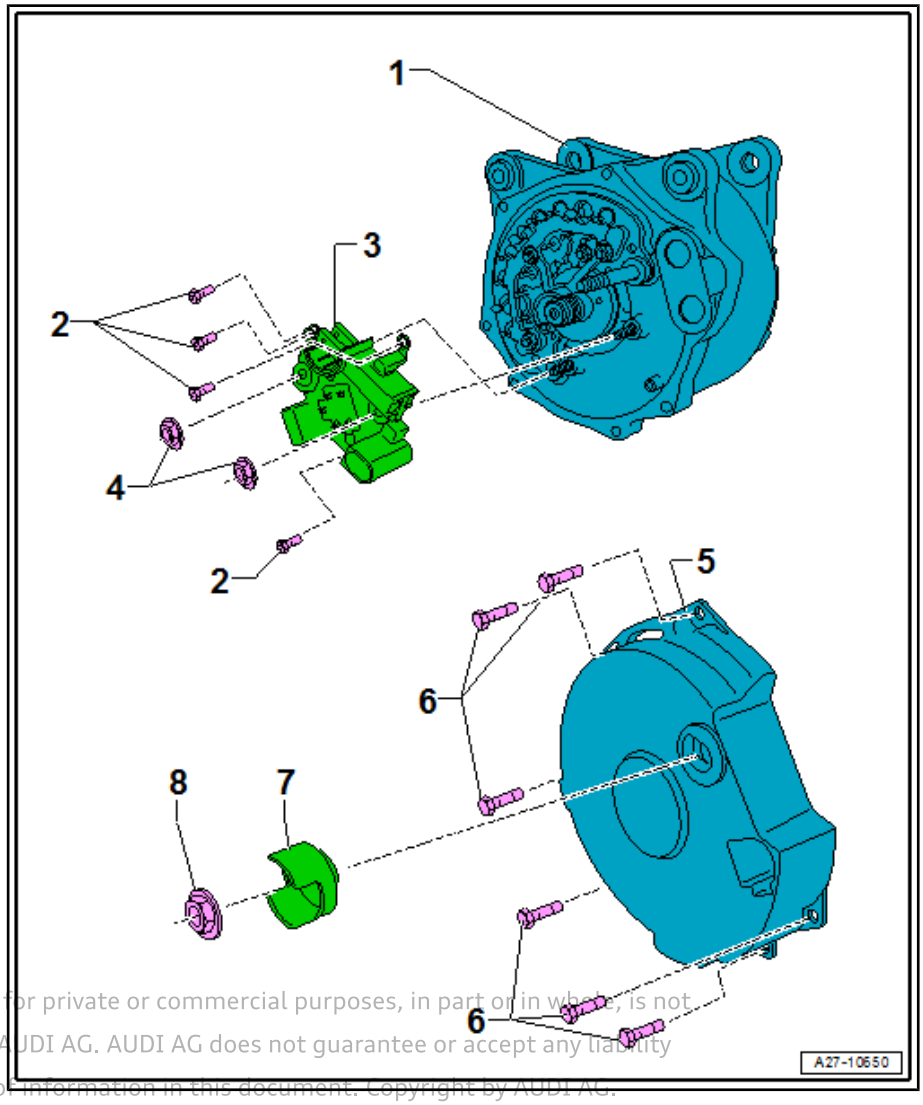

Protected by copyright. Copying for private or commercial purposes, in part or in whole, is not permitted unless authorised by AUDI AG. AUDI AG does not guarantee or accept any liability with respect to the correctness of information in this document. Copyright by AUDI AG.

4.15 Removing and installing voltage regulator - Hitachi alternator

Special tools and workshop equipment required

- ♦ Torque wrench - V.A.G 1410-

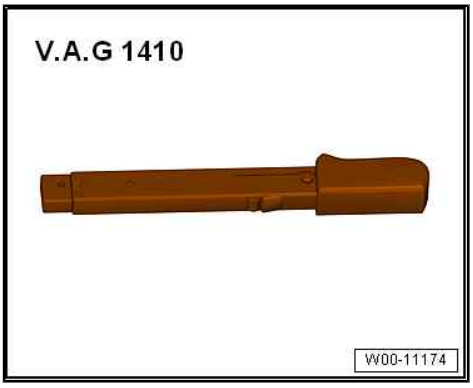

- Torque screwdriver - V.A.G 1624-

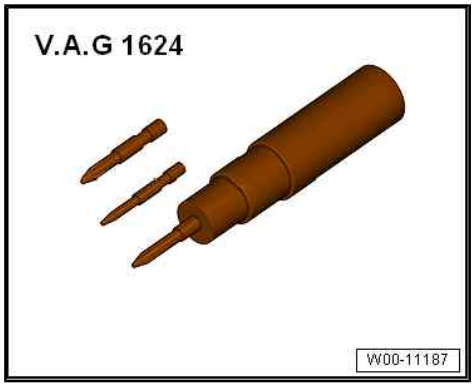

Protected by copyright. Copying for private or commercial purposes, in part or in whole, is not permitted unless authorised by AUDI AG. AUDI AG does not guarantee or accept any liability with respect to the correctness of information in this document. Copyright by AUDI AG.

Removing

– Remove alternator ⇒ Electrical system; Rep. gr. 27 ; Alternator; Removing and installing alternator .
– Remove nut -2-.
– Detach protective cap -3-.
– Remove bolts -4-.

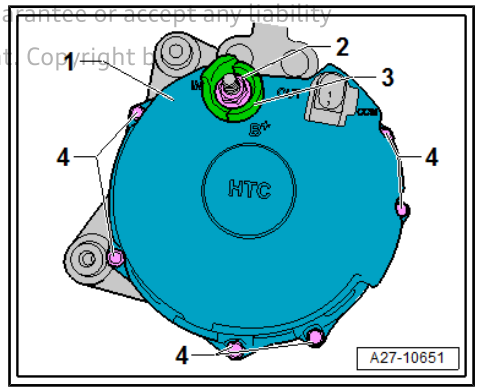

– Detach cover -1-.
– Remove bolts -3-.
– Remove nuts -2-.
– Remove voltage regulator -1-.

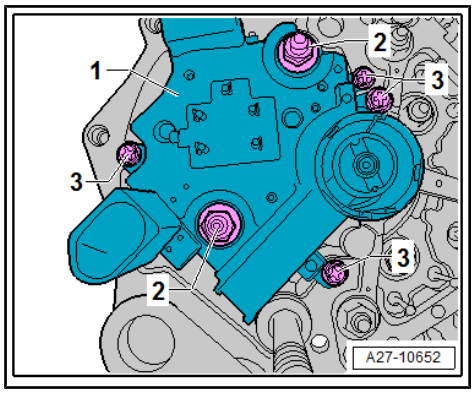

Installing

Installation is carried out in reverse order; note the following:

– When positioning voltage regulator, ensure carbon brushes are positioned correctly on contact surfaces.
– Install alternator ⇒ Electrical system; Rep. gr. 27 ; Alternator; Removing and installing alternator .

4.16 Checking carbon brushes - Hitachi alternator

Procedure

– Remove voltage regulator ⇒ page 71 .
– Check length -a- of carbon brushes -1-.
• Wear limit: -a- = 6.5 mm.
– Install voltage regulator ⇒ page 71 .

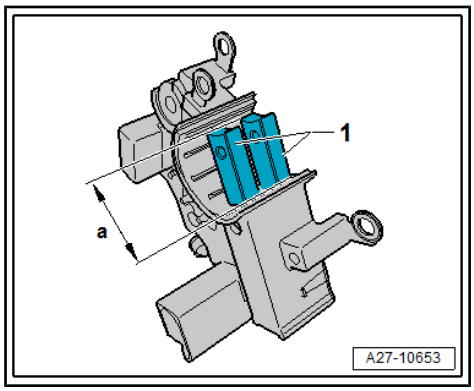

4.17 Removing and installing poly V-belt pulley without free-wheel

Protected by copyright. Copying for private or commercial purposes, in part or in whole, is not permitted unless authorised by AUDI AG. AUDI AG does not guarantee or accept any liability with respect to the correctness of information in this document. Copyright by AUDI AG.

Special tools and workshop equipment required

- Socket - 3310-

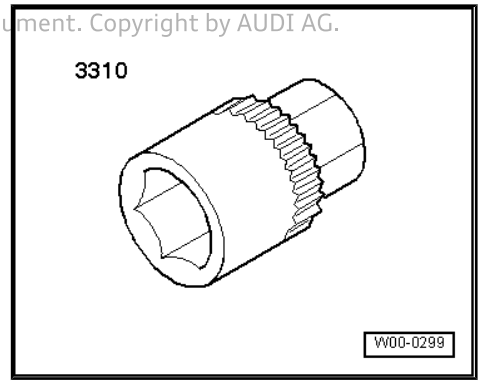

- 8 mm hexagon socket or TORX T50 socket

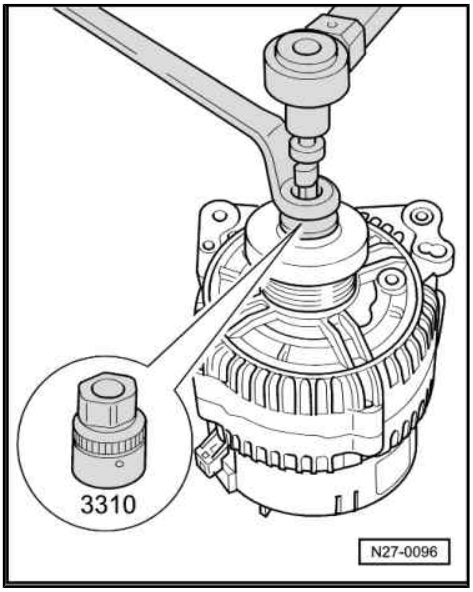

Removing

– If necessary, remove alternator ⇒ Electrical system; Rep. gr. 27 ; Alternator; Removing and installing alternator .

– On some engines, removal is possible with alternator installed; to do so, slacken and remove poly V-belt.

– If fitted, press off protective cap on alternator pulley.

– Counterhold on securing nut using socket - 3310- and turn alternator shaft clockwise to loosen.

– Detach poly V-belt pulley.

Installing

Installation is carried out in reverse order; note the following:

– Turn alternator shaft anti-clockwise to tighten.

– Clip protective cap onto alternator pulley.

Tightening torque

Component	Nm
Poly V-belt pulley to alternator	65

4.18 Removing and installing poly V-belt pulley with free-wheel

General description

There are different versions of the poly V-belt pulley with free-wheel.

Before removing the poly V-belt pulley with free-wheel, determine which special tools are required for the pulley in question.

Protected by copyright. Copying for private or commercial purposes, in part or in whole, is not permitted unless authorised by AUDI AG. AUDI AG does not guarantee or accept any liability with respect to the correctness of information in this document. Copyright by AUDI AG.

Caution

The length of the poly V-belt varies depending on the type of pulley fitted.

Check which type of poly V-belt pulley with free-wheel is fitted and ensure that the correct poly V-belt is installed. For the correct allocation of the poly V-belt, refer to ETKA.

Different versions of poly V-belt pulley with free-wheel:

-A- Small poly V-belt pulley with free-wheel; special tool to use: adapter - T10474- or adapter - 3400-

-B- Large poly V-belt pulley with free-wheel; special tool to use: adapter - 3400-

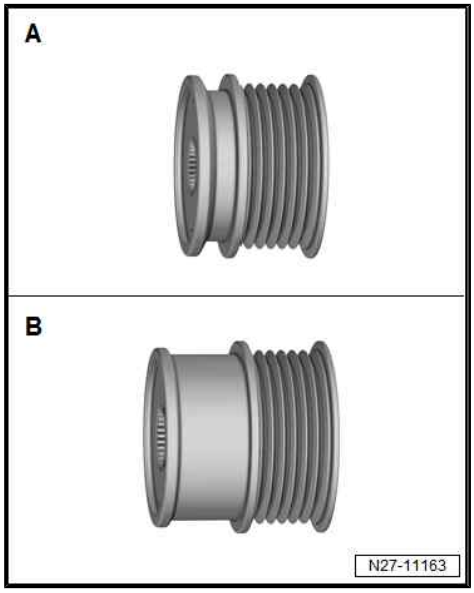

Note

The poly V-belt for the large pulley with free-wheel must be longer to accommodate the larger diameter.

Special tools and workshop equipment required

- Adapter - T10474-

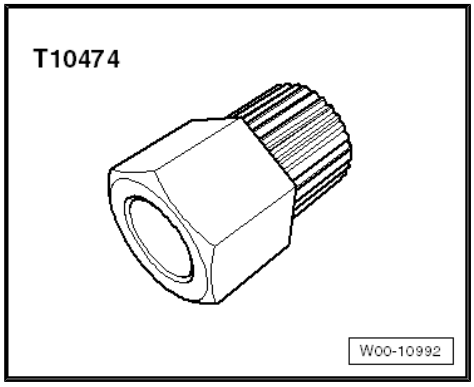

♦ Adapter - 3400-

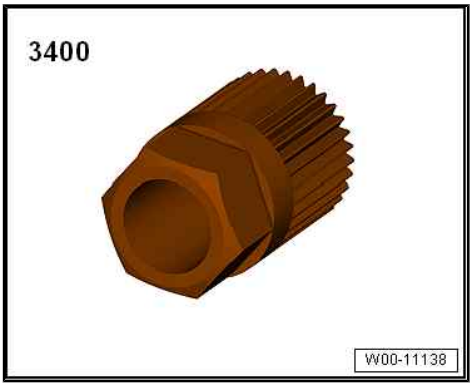

♦ Torque wrench - V.A.G 1332-

♦ 8 mm hexagon socket or TORX T50 socket

Removing:

– If necessary, remove alternator ⇒ Electrical system; Rep. gr. 27 ; Alternator; Removing and installing alternator .

– On some engines, removal is possible with alternator installed; to do so, slacken and remove poly V-belt.

– Clamp alternator in a vice at securing points.

– If fitted, remove protective cap from poly V-belt pulley with free-wheel.

– Insert adapter - T10474- or adapter - 3400- -1- into pulley and attach a ring spanner.

– Insert suitable tool -2- into shaft of alternator.

– Loosen shaft of alternator by turning it clockwise (counterhold with ring spanner).

– Hold poly V-belt pulley with free-wheel in place with your hand and turn shaft of alternator until pulley can be removed.

Installing:

Installation is carried out in reverse sequence; note the following:

Modify torque wrench - V.A.G 1332- as follows to fit poly V-belt pulley with free-wheel:

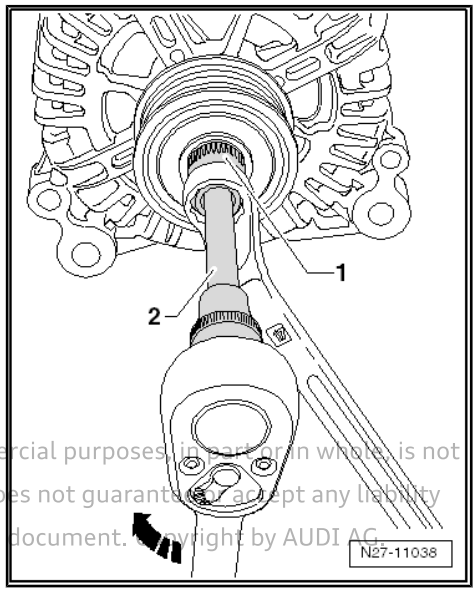

Protected by copyright. Copying for private or commercial purposes, in part or in whole, is not permitted unless authorised by AUDI AG. AUDI AG does not guarantee or accept any liability with respect to the correctness of information in this document. Copyright by AUDI AG.

Protected by copyright. Copying for private or commercial purposes, in part or in whole, is not permitted unless authorised by AUDI AG. AUDI AG does not guarantee or accept any liability with respect to the correctness of information in this document. Copyright by AUDI AG.

– Release socket -1- and detach from grip -2-.

– Turn torque wrench grip -2- 180° and insert socket again.

– Set torque wrench to turn anti-clockwise at socket.

– First screw poly V-belt pulley with free-wheel onto shaft of alternator by hand as far as stop.

– Insert adapter - T10474- -1- into poly V-belt pulley with free-wheel and attach a ring spanner.

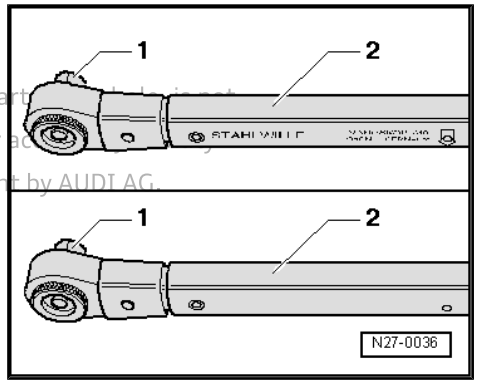

– Insert suitable tool -2- into shaft of alternator.

– Turn alternator shaft anti-clockwise using torque wrench - V.A.G 1332- -3- to tighten poly V-belt pulley with free-wheel.

– Clip protective cap onto alternator pulley.

Tightening torque

Component	Nm
Poly V-belt pulley with free-wheel to alternator	80

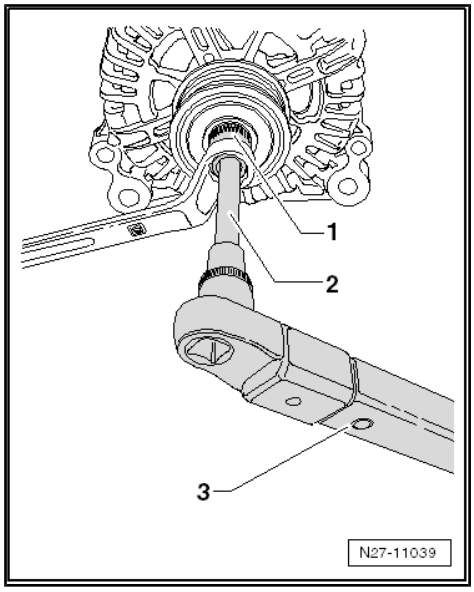

4.19 Checking poly V-belt pulley with free-wheel

Procedure

- Poly V-belt pulley with free-wheel removed ⇒ page 73 .

– Hold inner ring -2- of poly V-belt pulley securely with thumb and forefinger of one hand and grasp outer ring -1- with thumb and forefinger on other hand.

– Hold inner ring tightly and turn outer ring in direction of alternator rotation.

- If free-wheel is intact, you should not be able to turn outer ring.

– Hold inner ring tightly and turn outer ring in opposite direction to alternator rotation.

- If free-wheel is intact, you should be able to turn outer ring (it should resist slightly).

If the free-wheel does not function as described, renew poly V-belt pulley.

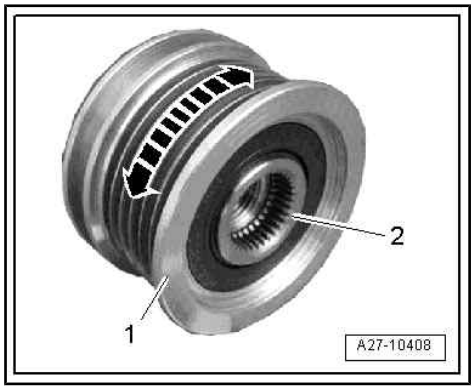

92 – Windscreen wash/wipe system

1 Washer fluid hoses

1.1 Disconnecting and connecting washer fluid hose connectors

Different types of hose connectors are used to connect hoses to washer fluid pumps and washer jets or as connection points.

Non-secured hose connector

– Pull the two coupling elements apart to separate connection.

– To connect, press the two coupling elements firmly together until they engage audibly and palpably.

Protected by copyright. Copying for private or commercial purposes, in part or in whole, is not permitted unless authorised by AUDI AG. AUDI AG does not guarantee or accept any liability with respect to the correctness of information in this document. Copyright by AUDI AG.

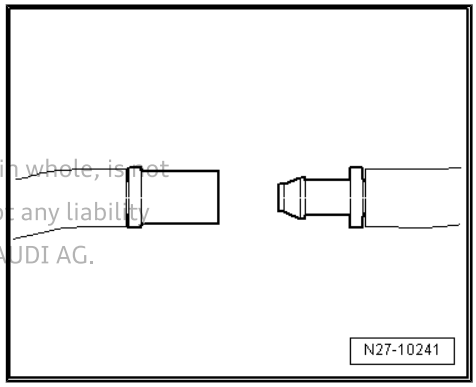

Secured hose connector with retaining ring

– To separate connection, turn retaining ring -1- 90° -arrow- and detach hose connection.

– To connect, push on hose connection and turn retaining ring -1- -arrow- until it engages.

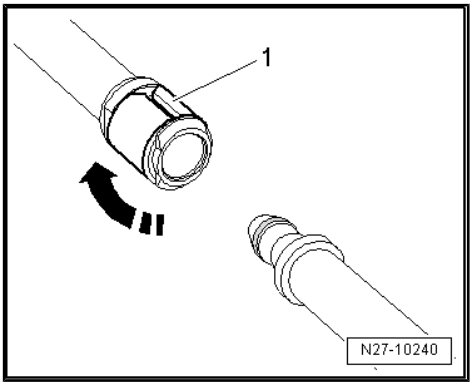

Secured hose connector with retaining clip version 1

– To separate connection, lift retaining clip -1- by approx. 1 mm -arrow- and detach hose connection.

– To connect, push on hose connection and press in retaining clip until it engages.

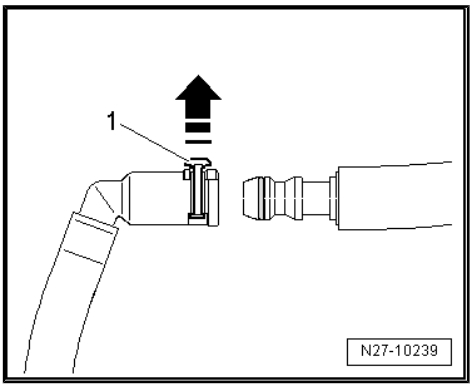

Secured hose connector with retaining clip version 2

– To separate connection, lift retaining clip -1- -arrow- and detach hose connection.

– To connect, push on hose connection and press in retaining clip until it engages.

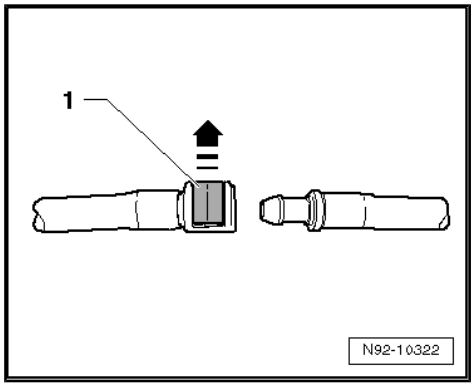

Hose connector for headlight washer system with retaining clip

– To separate connection, press retaining clip -1- -arrow- and detach hose connection.

– To connect, press and hold retaining clip -arrow- and push on hose connection.

– Check whether connection is properly engaged by pulling on hose without pressing retaining clip.

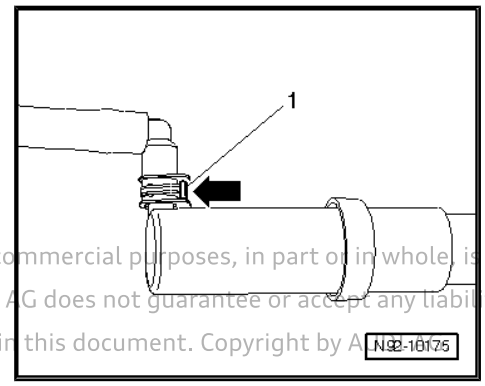

Protected by copyright. Copying for private or commercial purposes, in part or in whole, is not permitted unless authorised by AUDI AG. AUDI AG does not guarantee or accept any liability with respect to the correctness of information in this document. Copyright by AUDI AG.

Hose connector for headlight washer system with O-type clip

– To separate connection, use side-cutting pliers to sever O-type clip -1- and detach hose connection.

– To connect, slip a new O-type clip onto hose, attach hose connection and secure O-type clip using hose clip pliers - V.A.G 1275- .

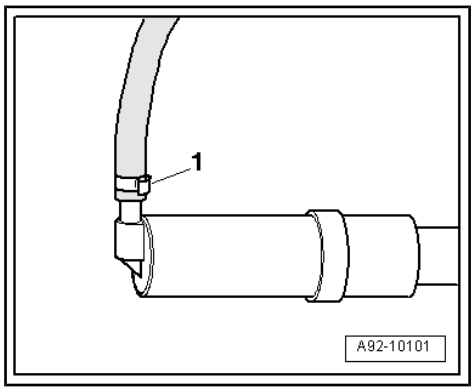

Hose connector for headlight washer system with spring-type clip

– To separate connection, open spring-type clip -1- using hose clip pliers - V.A.G 1921- and detach hose connection.

– To connect, open spring-type clip using hose clip pliers - V.A.G 1921- and attach hose connection.

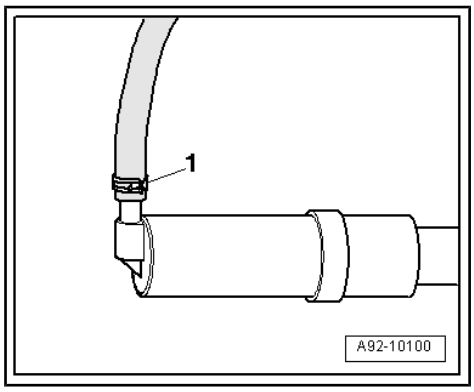

1.2 Servicing a smooth washer fluid pipe

Note

Smooth pipes with a diameter of 5x1 mm or 6x1 mm can be serviced using an EPDM hose (Ethylene Propylene Diene Monomer)
⇒ Electronic parts catalogue .

– Cut the damaged section out of the smooth pipe to be repaired, making the cuts at right-angles to the pipe.
– Choose an appropriate EPDM hose -2- and cable tie ⇒ Electronic parts catalogue .
– Cut the EPDM hose -2- to length such that the ends of the smooth pipe -1- and -3- can both be slipped roughly 10 mm into the EPDM hose -2-.

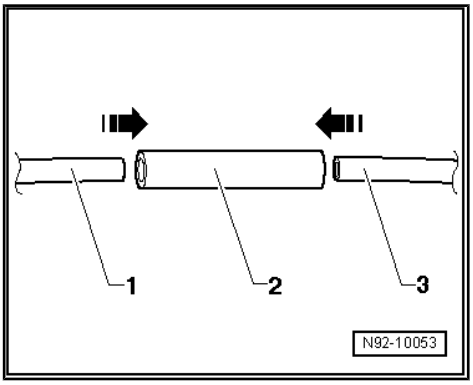

– Secure the repair joint with cable ties -1-.
– Check operation and test for leaks.

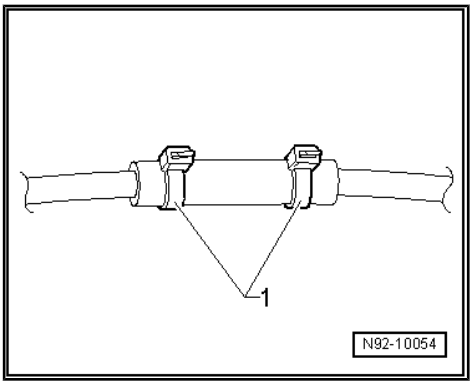

1.3 Servicing a washer fluid hose with corrugated tube

Note

Corrugated tubes can be repaired using a heat-shrink hose ⇒ Electronic parts catalogue .

Special tools and workshop equipment required

♦ Hot air blower - VAS 5179- or

Protected by copyright. Copying for private or commercial purpose
permitted unless authorised by AUDI AG. AUDI AG does not guara
with respect to the correctness of information in this document. C

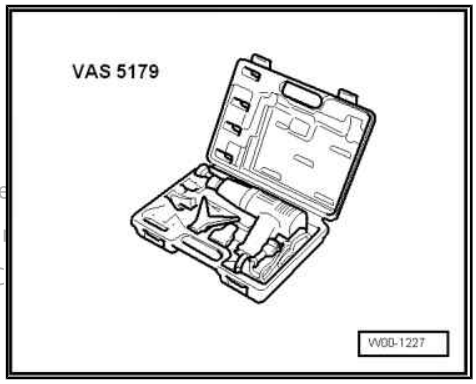

- Hot air blower - VAS 1978/14A- from wiring harness repair set - VAS 1978 B-

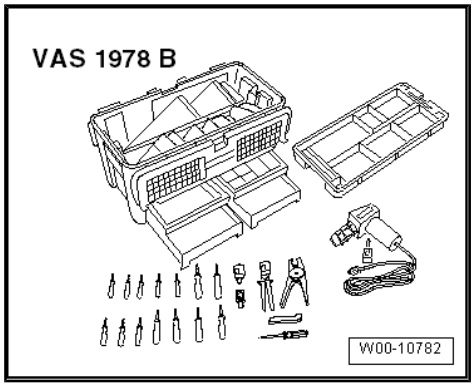

- Cutting pliers - VAS 6228-

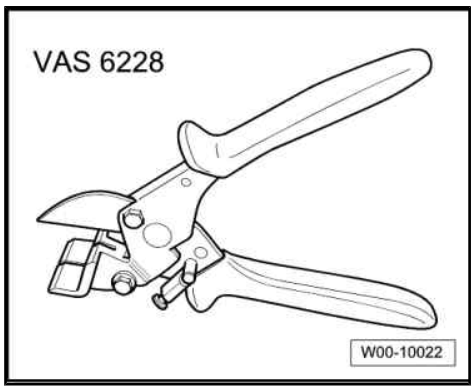

Note

- *The repair location must not be tensioned or bent.*
- *If the damaged section is longer than 20 mm, a new piece of corrugated pipe must be used and the procedure described below must be performed twice.*

Procedure

– Cut washer fluid hose at point of damage using cutting pliers - VAS 6228- .

– Select appropriate connecting pieces -2- and -3- and appropriate heat-shrink hose (refer to ⇒ Electronic parts catalogue (ETKA)).

– Heat end of corrugated pipe -1- with hot air blower - VAS 5179- .

– Push connecting piece -2- into corrugated pipe -1- -arrow A-.

– Heat end of corrugated pipe -4- with hot air blower - VAS 5179- .

– Push connecting piece -3- into corrugated pipe -4- -arrow B-.

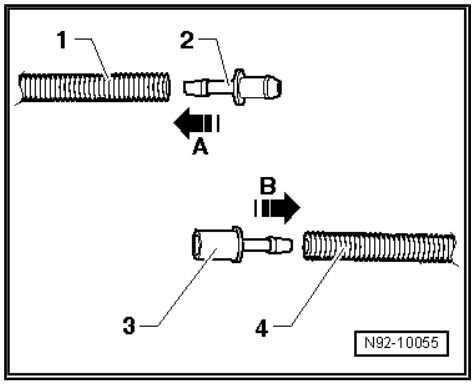

Protected by copyright. Copying for private or commercial purposes, in part or in whole, is not permitted unless authorised by AUDI AG. AUDI AG does not guarantee or accept any liability with respect to the correctness of information in this document. Copyright by AUDI AG.

– Cut heat-shrink hose so it covers at least 20 mm -dimension x- of corrugated pipe on both sides.

– Push heat-shrink hose over corrugated pipe, connect connecting pieces and secure repair location with heat-shrink hose.

• The heat-shrink hose must be heated starting from the centre and working outwards until it is sealed tight.

• Set hot air blower to appropriate temperature as indicated in operating instructions.

• When shrink-fitting, ensure no other wires, plastic components or insulating materials are damaged by the hot nozzle.

– Check operation and test for leaks.

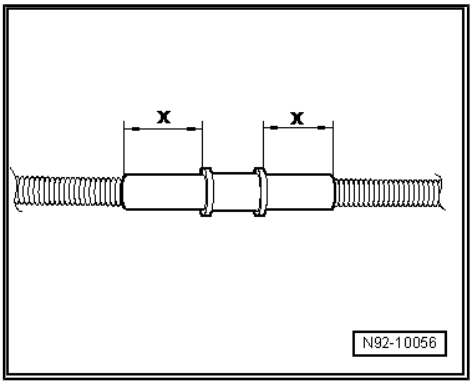

Protected by copyright. Copying for private or commercial purposes, in part or in whole, is not permitted unless authorised by AUDI AG. AUDI AG does not guarantee or accept any liability with respect to the correctness of information in this document. Copyright by AUDI AG.

94 – Lights, bulbs, switches - exterior

1 Safety precautions when handling gas discharge bulbs

Never renew bulbs if you are not familiar with the necessary procedure, safety precautions and tools required.

WARNING

High voltage can cause fatal injury.

- *Ensure that any part of the gas discharge headlights marked with yellow high-voltage warning symbols are de-energised when you are working on them.*
- *Switch off ignition and all electrical equipment, and remove ignition key.*
- *Do not flash the headlights.*
- *Never operate the gas discharge bulb control unit without a gas discharge bulb.*
- *The gas discharge bulb may only be operated in the headlight housing because of the high voltages (above 28,000 V when the gas discharge bulb is ignited).*

WARNING

Risk of injury from burns, UV radiation, glare and explosion.

- *The gas discharge bulb may only be operated in the headlight housing because of the high temperatures, the absorption of UV radiation and to avoid dazzling.*
- *Never look into the light beam as this could disturb the eye sight for an extended period of time.*
- *Gas discharge bulbs are pressurised and can burst when they are renewed.*
- *Always wear safety goggles and gloves when removing and installing gas discharge bulbs.*

otected by copyright. Copying for private or commercial purposes, in part or in whole, is not permitted unless authorised by AUDI AG. AUDI AG does not guarantee or accept any liability with respect to the correctness of information in this document. Copyright by AUDI AG.

WARNING

Observe environmental requirements.

- *Gas discharge bulbs are hazardous waste. They contain metallic mercury (Hg) and traces of thallium.*
- *Never break off gas discharge bulbs and do not touch broken glass part of bulb.*
- *Observe disposal regulations. Gas discharge bulbs should only be disposed of in the appropriate containers at an official collection point.*

Protected by copyright. Copying for private or commercial purposes, in part or in whole, is not permitted unless authorised by AUDI AG. AUDI AG does not guarantee or assume any liability with respect to the correctness of information in this document. Copyright by AUDI AG.

Caution

- *Do not touch the glass part of the gas discharge bulb with bare hands. The remaining fingerprint would be evaporated by the heat of the bulb when it is switched on, become deposited on the reflector and thus impair the brightness of the headlight. Wear clean fabric gloves when fitting the gas discharge bulb.*
- *Only replace defective gas discharge bulbs with gas discharge bulbs of the same type. The type can be found on the base of the bulb or on the glass part of the bulb.*
- *When installing, make sure connectors engage properly and are securely attached.*

96 – Lights, bulbs, switches - interior

1 Immobiliser

1.1 General notes

Depending on the vehicle, the immobiliser control unit may be integrated in the following systems:

- Control unit in dash panel insert - J285-
- Convenience system central control unit - J393-
- Entry and start authorisation control unit - J518-
- Onboard supply control unit - J519-

In addition, the following control units are used for the immobiliser depending on the vehicle:

- Engine/motor control unit - J623- / engine control unit 2 - J624-
- Automatic gearbox control unit - J217-
- Electric drive control unit - J841-
- Control unit for electronic steering column lock - J764-
- Data bus diagnostic interface - J533-
- Emergency call module control unit and communication unit - J949-

Protected by copyright. Copying for private or commercial purposes, in part or in whole, is not permitted unless authorised by AUDI AG. AUDI AG does not guarantee or accept any liability with respect to the correctness of information in this document. Copyright by AUDI AG.

– To renew control unit, select “Replace control unit” function for appropriate control unit in “Offboard Diagnostic Information System Service” ⇒ Vehicle diagnostic tester.

1.2 Defective transponder or loss of key

- The transponder is integrated into the ignition key and cannot be renewed separately.
- The complete ignition key must be replaced if the transponder or sender unit is defective.

– Order a new replacement key or sender unit from your importer (or distribution centre), quoting vehicle identification number.

Immobiliser, generation 1, 2, 3 and 4:

– Carry out “Match vehicle keys” or “Vehicle key, adaption, immobiliser” function in “Offboard Diagnostic Information System Service” ⇒ Vehicle diagnostic tester.

– All vehicle keys must be adapted.

Immobiliser, generation 5 onwards:

– Carry out “Service immobiliser” function in “Offboard Diagnostic Information System Service” and use this program to adapt vehicle keys ⇒ Vehicle diagnostic tester.

– All vehicle keys must be adapted.

1.3 Renewing reader coil

Vehicles with mechanical ignition lock:

- The reader coil is integrated into the lock cylinder and cannot be renewed separately.

- ♦ The complete lock cylinder must be replaced if the reader coil is defective.
- – Order a new lock cylinder from your importer (or distribution centre), quoting vehicle identification number.

Vehicles with entry and start authorisation switch - E415- :

- ♦ Reader coil is integrated in entry and start authorisation switch - E415- and cannot be renewed separately.
- ♦ The entry and start authorisation switch - E415- must be renewed if reading coil is defective.

Vehicles without mechanical ignition lock:

- ♦ Reader coil is a separate component and can be renewed separately.

1.4 Procedure for renewing lock set

Immobiliser, generation 1, 2 and 3:

- – Carry out “Match vehicle keys” or “Vehicle key, adaption, immobiliser” function in “Offboard Diagnostic Information System Service” ⇒ Vehicle diagnostic tester.
- – All vehicle keys must be adapted.
- • If immobiliser, generation 3 is fitted, engine/motor control unit - J623- and combi-processor in dash panel insert - J218- or control unit in dash panel insert - J285- must be renewed if lock set is changed.

Protected by copyright. Copying for private or commercial purposes, in part or in whole, is not permitted unless authorised by AUDI AG. AUDI AG does not guarantee or accept any liability with respect to the correctness of information in this document. Copyright by AUDI AG.

Immobiliser, generation 4:

- – Carry out “Enable immobiliser/new identity” or “New identity” function in “Offboard Diagnostic Information System Service” ⇒ Vehicle diagnostic tester.
- – All vehicle keys must be adapted.

Immobiliser, generation 5 onwards:

- – Carry out “Service immobiliser” function in “Offboard Diagnostic Information System Service” and use this program to adapt vehicle keys ⇒ Vehicle diagnostic tester.
- – All vehicle keys must be adapted.

2 Towing bracket

2.1 Removing and installing socket for towing bracket - version 1

Removing

– Switch off ignition and remove ignition key.

– Remove bolts -arrows-.

– Detach socket from retaining plate.

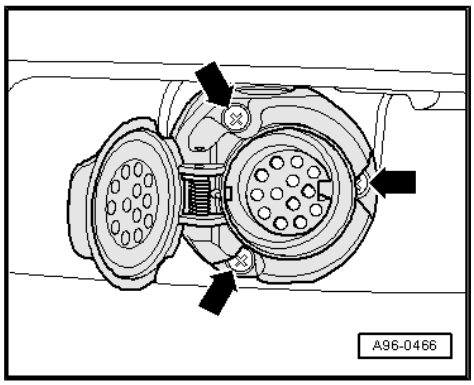

Socket with rear fog light cut-out contact switch - F216- :

– Unplug connector -2- for rear fog light cut-out contact switch - F216- and press connector -1- out of trailer socket - U10- .

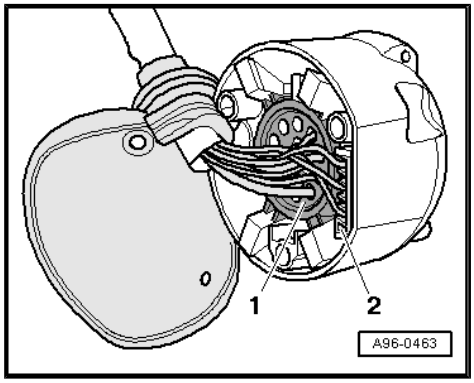

Socket without rear fog light cut-out contact switch - F216- :

– Press multi-pin connector -1- out of socket -2- in direction of -arrow-.

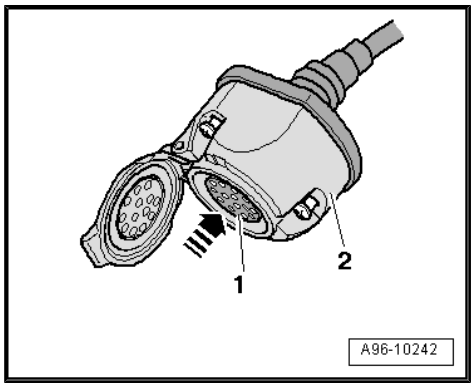

Version 1:

– Release retaining tabs -arrows- and then release the clips -1- and -3 ... 5-.

– Remove frame from connectors -2-.

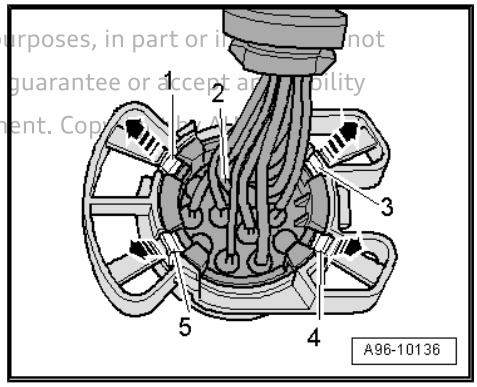

Protected by copyright. Copying for private or commercial purposes, in part or in whole, is not permitted unless authorised by AUDI AG. AUDI AG does not guarantee or accept any liability with respect to the correctness of information in this document. Copyright by AUDI AG.

Version 2:

– Release retaining tabs -arrows- and then release clips -1, 2, 3, 4, 6, 7-.
– Remove frame from multi-pin connector -5-.

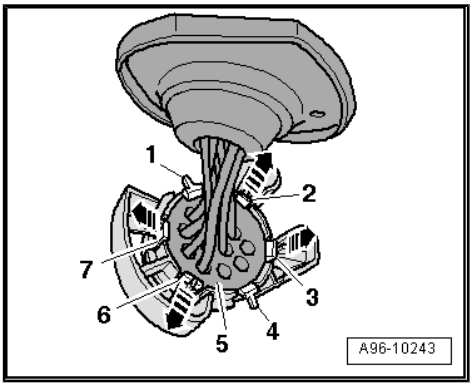

Installing

Installation is carried out in reverse order; note the following:

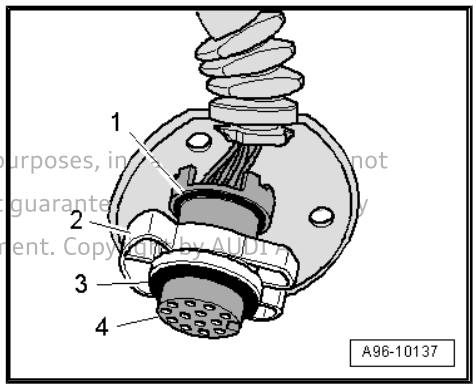

Note

Make sure that seals -1- and -3- are not damaged.

Protected by copyright. Copying for private or commercial purposes, in part or in whole, is not permitted unless authorised by AUDI AG. AUDI AG does not guarantee or assume any liability with respect to the correctness of information in this document. Copyright by AUDI AG.

– Insert connectors -4- into frame -2- until they audibly engage.

2.2 Removing and installing socket for towing bracket - version 2

Removing

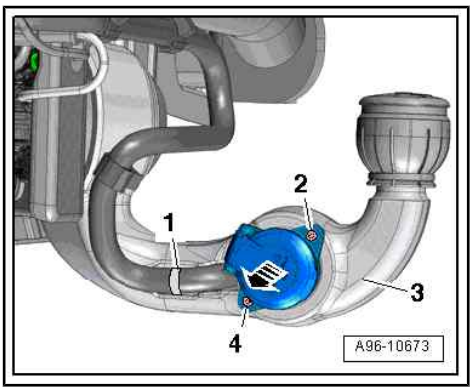

Note

Refit cable ties at the same locations when reinstalling.

– Switch off ignition and remove ignition key.
– Open out towing bracket and engage.
– Cut open cable tie -1- and remove bolts -2- and -4-.
– Press socket out of towing bracket -3- in direction of -arrow-.

– Turn cover cap -1- anti-clockwise -arrow- and detach from socket -3-.
– Detach rubber cover -2-.

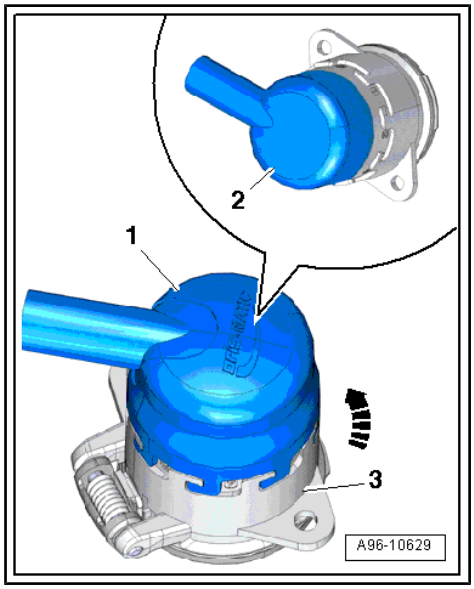

– Release retaining clips -arrows- and press multi-pin connector -2- out of socket -1-.

Protected by copyright. Copying for private or commercial purpose
permitted unless authorised by AUDI AG. AUDI AG does not guara
with respect to the correctness of information in this document. C

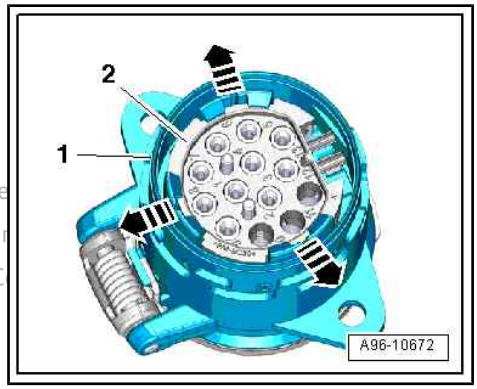

– Release clips -arrows- and detach frame -1- from multi-pin connector -3-.

Note

Pull frame off carefully so that contacts -2- of multi-pin connector are not separated from wiring harness.

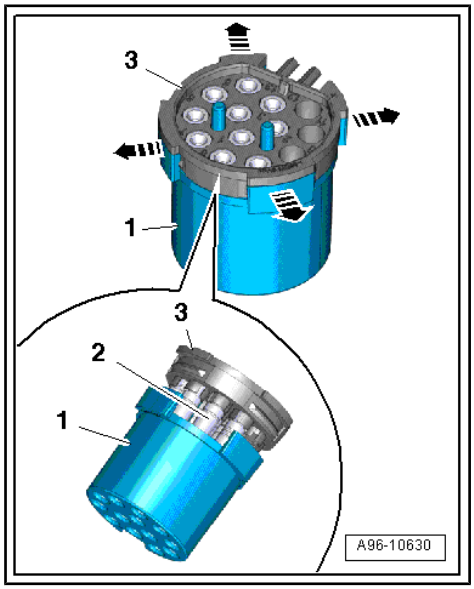

Installing

Installation is carried out in reverse order; note the following:

– Frame -1- can only be fitted onto multi-pin connector -3- in one position.

• Guide pins -4- can be inserted in frame in one position only (the contacts -2- must be in the frame).

– Slide frame into multi-pin connector until it engages audibly.

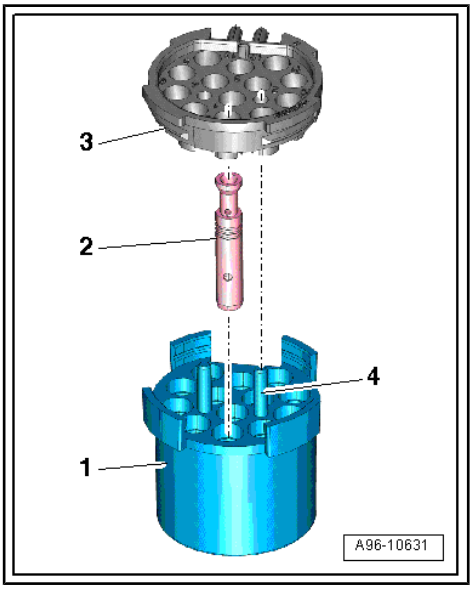

2.3 Removing and installing socket for towing bracket - version 3

Removing

– Open out towing bracket with electric control and engage in position ⇒ Owner's Manual for the specific vehicle.

– Switch off ignition and remove ignition key.

– Remove bolts -arrows-.

– Detach socket from retaining plate.

– Detach rubber cover from socket.

Protected by copyright. Copying for private or commercial purposes, in part or entirety, is not permitted unless authorised by AUDI AG. AUDI AG does not guarantee or accept any liability with respect to the correctness of information in this document. Copyright by AUDI AG.

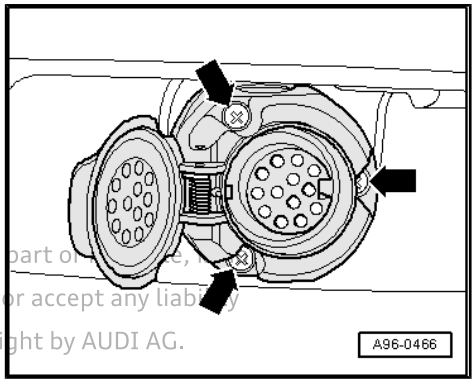

– Release retaining clips -arrows- and press multi-pin connector -1- out of socket -1-.

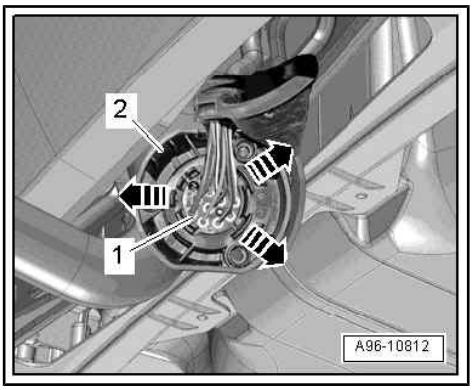

– Release clips -arrows- and detach frame -2- from multi-pin connector -3-.

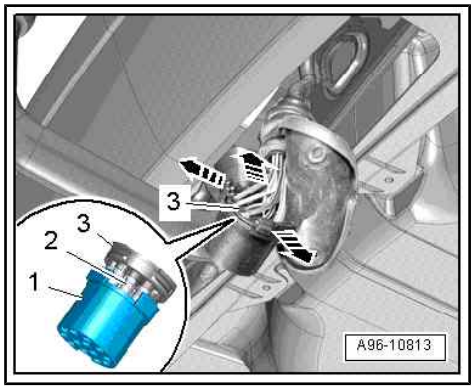

Note

Pull frame off carefully so that contacts -2- of multi-pin connector are not separated from wiring harness.

Installing

Installation is carried out in reverse order; note the following:

– Frame -1- can only be fitted onto multi-pin connector -3- in one position.

• Guide pins -4- can be inserted in frame in one position only (the contacts -2- must be in the frame).

– Slide frame into multi-pin connector until it engages audibly.

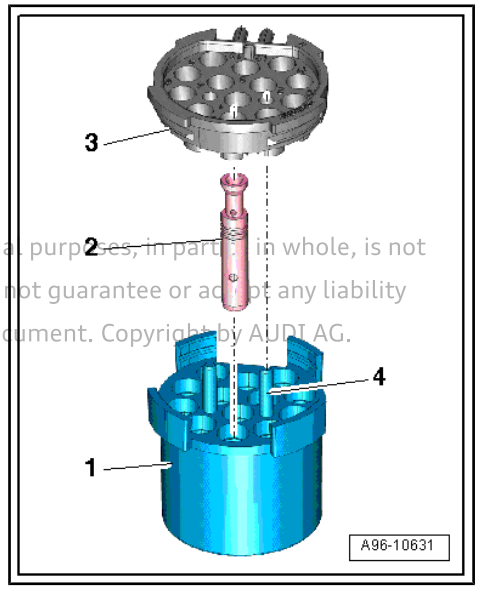

Protected by copyright. Copying for private or commercial purposes, in part or in whole, is not permitted unless authorised by AUDI AG. AUDI AG does not guarantee or accept any liability with respect to the correctness of information in this document. Copyright by AUDI AG.

2.4 Removing and installing socket for towing bracket - version 4

Removing

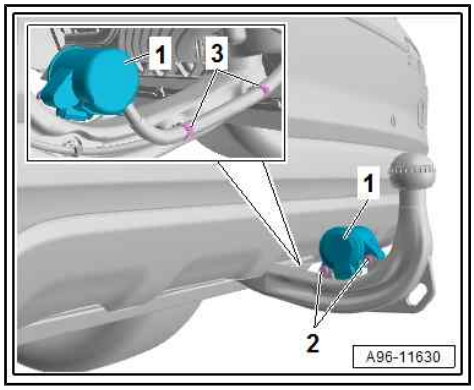

Note

Refit cable ties at the same locations when reinstalling.

– Switch off ignition and all electrical equipment.

– Extend towing bracket.

– Cut through cable tie -3-.

– Remove bolts -2-.

– Detach socket from towing bracket -1-.

– Release fasteners -arrows-.
– At the same time, remove cap -1- from socket.
– Detach rubber cover -2-.

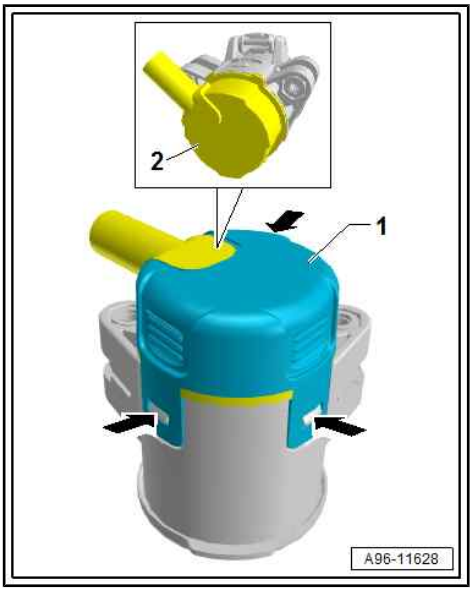

– Release retaining clips -arrows- and press multi-pin connector -2- out of socket -1-.

Protected by copyright. Copying for private or commercial purposes, in p
permitted unless authorised by AUDI AG. AUDI AG does not guarantee o
with respect to the correctness of information in this document. Copyrig

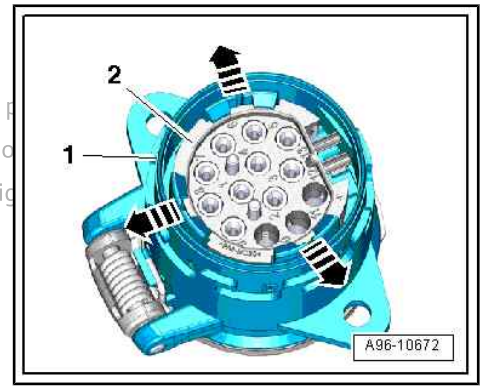

– Release clips -arrows- and detach frame -1- from multi-pin connector -3-.

Note

Pull frame off carefully so that contacts -2- of multi-pin connector are not separated from wiring harness.

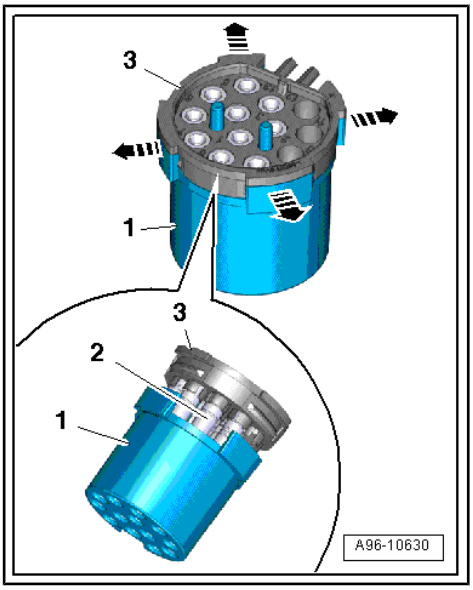

Installing

Installation is carried out in reverse order; note the following:

– Frame -1- can only be fitted onto multi-pin connector -3- in one position.

• Guide pins -4- can be inserted in frame -1- in one position only (the contacts -2- must be in the frame).

– Slide frame into multi-pin connector until it engages audibly.

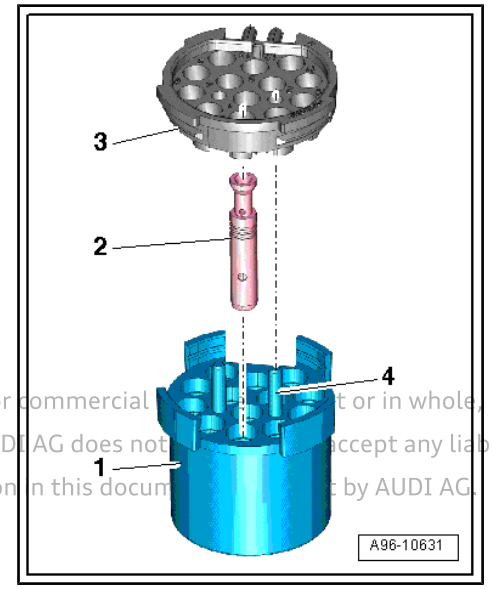

Protected by copyright. Copying for private or commercial purposes, in part or in whole, is not permitted unless authorised by AUDI AG. AUDI AG does not guarantee or accept any liability with respect to the correctness of information in this document copyrighted by AUDI AG.

97 – Wiring

1 Vehicle diagnostic, testing and information systems

WARNING

- *Risk of serious injury or death when performing tests or measurements using a vehicle diagnostic information system.*
- *Risk of serious injury or death if the airbag is triggered during a test drive while the vehicle diagnostic information system is within range of one of the airbags.*
- *When using test equipment while road-testing the vehicle, have a second person operate the vehicle diagnostic information system from the rear seat.*

Audi TT and Audi R8

WARNING

- *Risk of serious injury or death when performing tests or measurements using a vehicle diagnostic information system.*
- *Risk of serious injury or death if the airbag is triggered during a test drive while the vehicle diagnostic information system is within range of one of the airbags.*
- *When using test equipment while road-testing the vehicle, have a second person operate the vehicle diagnostic information system from the front passenger's seat with the seat in the rearmost position.*
- *The vehicle diagnostic information system -1- must be placed flat on the front passenger's lap as shown and operated by this person.*

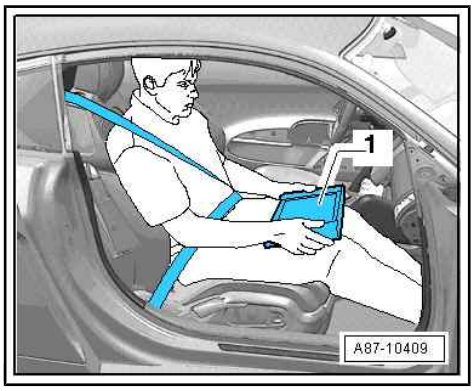

Protected by copyright. Copying for private or commercial purposes, in part or in whole, is not permitted unless authorised by AUDI AG. AUDI AG does not guarantee or accept any liability with respect to the correctness of information in this document. Copyright by AUDI AG.

– Connect vehicle diagnostic tester ⇒ page 93 .

1.1 Connecting vehicle diagnostic tester

Special tools and workshop equipment required

- Vehicle diagnostic tester with corresponding diagnostic cable

Procedure

– Apply parking brake or operate electromechanical parking brake.

– Shift gear lever to neutral position or selector lever to position “P”.

– Connect vehicle diagnostic tester to diagnostic connection -arrow- with diagnostic cable (ignition switched off).
– When using remote diagnosis head - VAS 5054 A- or diagnosis interface - VAS 5055- refer to ⇒ User handbook (installing and operating) .
– Switch on ignition.
– Switch off all electrical equipment.

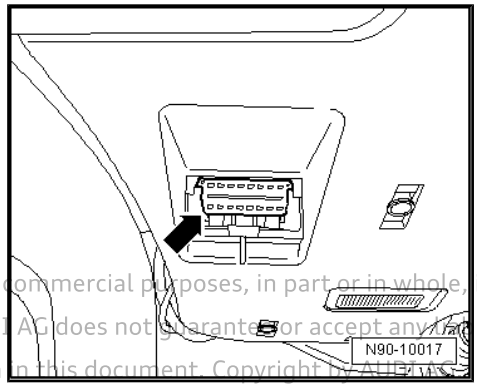

Protected by copyright. Copying for private or commercial purposes, in part or in whole, is not permitted unless authorised by AUDI AG. AUDI AG does not guarantee or accept any liability with respect to the correctness of information in this document. Copyright by AUDI AG.

Note

If a fault message appears on the screen of the vehicle diagnostic tester, refer to ⇒ Operating instructions for the appropriate vehicle diagnostic tester.

2 Repairing wiring harnesses and connectors

2.1 General information on repairs to the vehicle electrical system

Caution

It is very important that the battery be connected and disconnected according to the instructions in the Workshop Manual.

WARNING

Certain tools are equipped with a guard. This is placed over the end of the tool after use to prevent injury to employees and to protect the tip of the tool against damage.

Protected by copyright. Copying for private or commercial purposes, in part or in whole, is not permitted unless authorised by AUDI AG. AUDI AG does not guarantee or accept any liability with respect to the correctness of information in this document. Copyright by AUDI AG.

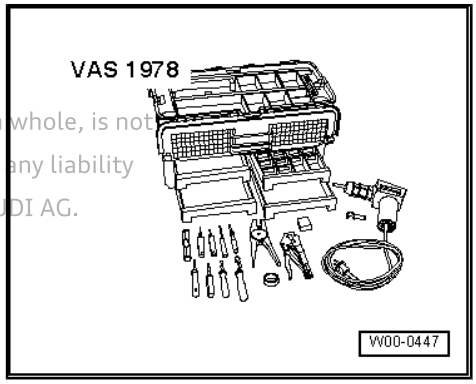

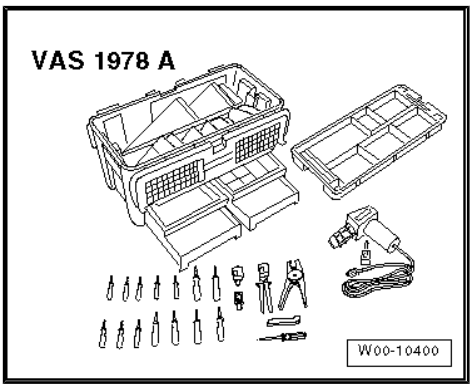

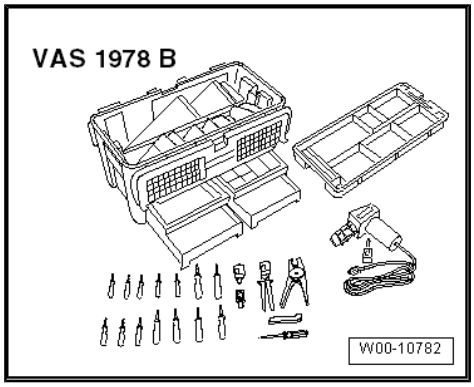

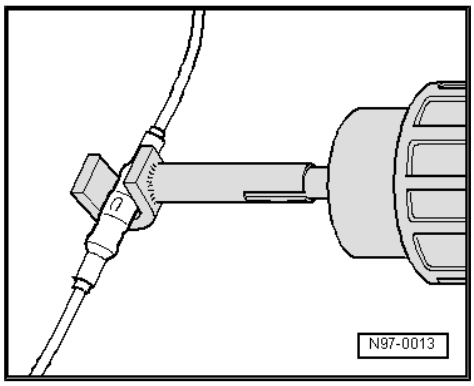

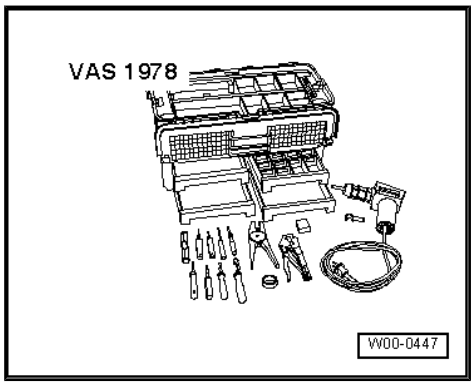

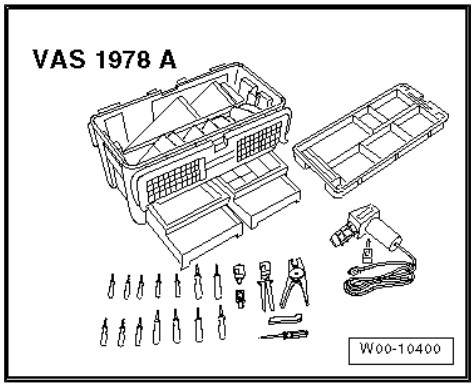

Protected by copyright. Copying for private or commercial purposes, in part or in whole, is not permitted unless authorised by AUDI AG. AUDI AG does not guarantee or accept any liability with respect to the correctness of information in this document. Copyright by AUDI AG.

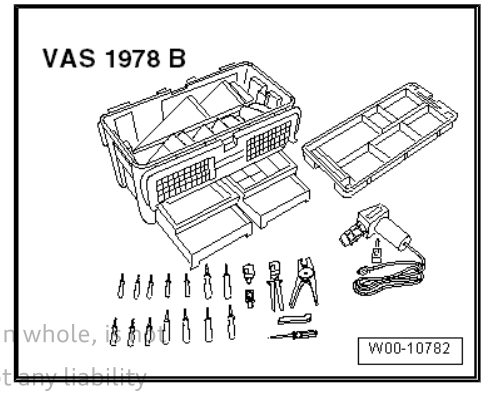

- For all repairs, observe current notes in relevant Workshop Manual.
- Observe country-specific regulations.
- Disconnect battery earth strap before working on electrical system. Disconnecting the battery earth strap (open circuit) prevents accidents when working on the electrical system. It is only necessary to disconnect the battery positive wire when removing the battery.
- Before commencing repair work, always eliminate cause of damage, e.g. sharp body edges, defective electrical components, corrosion etc.
- Where possible, higher quality replacement parts are provided when wiring harnesses are ordered. This means that there may be additional connector housings (which you will not require) on the replacement part.
- If possible, tie back any additional connector housings which are not required in a dry area of the vehicle. Route them so that they cannot make noises.
- Additional connector housings which are not required and which are located in a non-dry area of the vehicle should be removed to avoid capillary attraction. Seal individual wires with waterproof heat-shrink hoses. The parts required to seal the individual wires can be found in the ⇒ Electronic parts catalogue (ETKA) .
- Further information, for example about installation and removal of individual components, can be found in the appropriate Workshop Manual.
- Soldering is not permitted for repairs to vehicle wiring.
- Only use wiring harness repair set - VAS 1978 B- (and older versions) or wiring harness repair set - VAS 631 001- and wiring harness repair set - VAS 631 003- for wiring harness and connector repairs on the electrical system. Only use the yellow wires from the wiring harness repair sets.
- Repaired wiring harnesses must not be re-incorporated into the wrapping of the original vehicle wiring harness and must be marked with yellow tape to indicate that they have been repaired.
- Never repair crimp or butt connectors. Route a new wire along the defective wire if necessary. After crimping, a hot air blower must be used to shrink-fit crimp connector to prevent moisture from entering connection. Butt connectors must be protected from moisture ingress with the corresponding heat-shrink hoses.
- It is very important to observe the additional information on repairing wiring harnesses on the airbag and belt tensioner systems, fibre optic cables, CAN bus wiring, FlexRay wiring and aerial wiring.
- Always check operation after completing repair work. It may be necessary to interrogate and erase the event memories and/or reset the systems to basic setting.
- Do not loosen earth straps on body if this can be avoided (danger of corrosion).
- Not all wiring cross sections found in the vehicle are contained in the wiring harness repair set - VAS 1978 B- (and previous versions). If the wiring cross section required is not contained, use the next largest cross section.

Protected by copyright. Copying for private or commercial purposes, in part or in whole, is not permitted unless authorised by AUDI AG. AUDI AG does not guarantee or accept any liability with respect to the correctness and completeness of this document. Copyright by AUDI AG.

- Heat-resistant wiring is fitted in various places in the vehicle, primarily in the engine compartment. Heat-resistant wiring can be identified by its slightly matt and softer insulation. Only repair these wires using heat-resistant wiring.

2.2 Wiring harness repair set

⇒ “2.2.1 Wiring harness repair set VAS 1978 ”, page 98
⇒ “2.2.2 Upgrade kit VAS 1978/50 ”, page 98
⇒ “2.2.3 Wiring harness repair set VAS 1978A ”, page 99
⇒ “2.2.4 Release tool set VAS 1978/35 ”, page 99
⇒ “2.2.5 Wiring harness repair set VAS 631 001 ”, page 99
⇒ “2.2.6 Wiring harness repair set VAS 631 003 ”, page 100

2.2.1 Wiring harness repair set - VAS 1978-

Using wiring harness repair set - VAS 1978- makes it possible to maintain optimum repair standards for repairs to the electrical system. The tools can be used to repair the electrical connectors and any open circuits in the wiring. This is done using complete repair wires with crimped-on contacts which are joined to the wiring harness of the vehicle with crimp connectors. Crimping pliers with three different crimp recesses and a hot air blower for shrinking the crimp connectors ensure a perfect electrical connection.

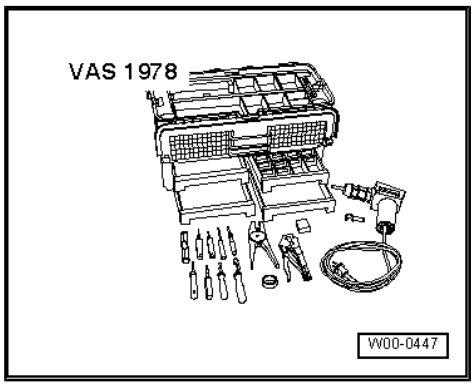

Note

Additional information:

⇒ Operating instructions for wiring harness repair set - VAS 1978-

2.2.2 Upgrade kit - VAS 1978/50-

The upgrade kit - VAS 1978/50- is required to upgrade the old wiring harness repair set - VAS 1978- to the same standard as the wiring harness repair set - VAS 1978A- . The upgrade kit contains 4 assembly tools and 10 release tools, as well as the new crimping pliers for crimp connectors with head adapters for 0.35 - 2.5 mm^2 -VAS 1978/1-1- , 4.0 - 6.0 mm^2 -VAS 1978/2 A- and head adapter for JPT contacts - VAS 1978/9-1- . Also included are new stickers, a new set of operating instructions, crimp connectors for wires with 0.35 mm^2 cross section and a roll of black felt adhesive tape.

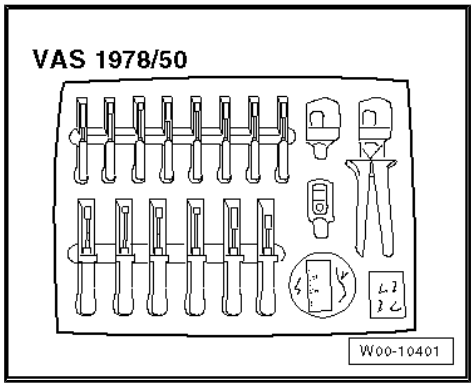

Protected by copyright. Copying for private or commercial purposes, in part or in whole, is not permitted unless authorised by AUDI AG. AUDI AG does not guarantee or accept any liability with respect to the correctness of information in this document. Copyright by AUDI AG.

2.2.3 Wiring harness repair set - VAS 1978A-

Using the new wiring harness repair set - VAS 1978A- makes it possible to maintain optimum repair standards for repairs to the electrical system. The new pliers can be used to repair the electrical connectors and any open circuits in the wiring. This is done using complete repair wires with crimped-on contacts which are joined to the wiring harness of the vehicle with four different types of crimp connectors. New crimping pliers with exchangeable head adapters and a hot air blower for shrinking the crimp connectors ensure a perfect electrical connection.

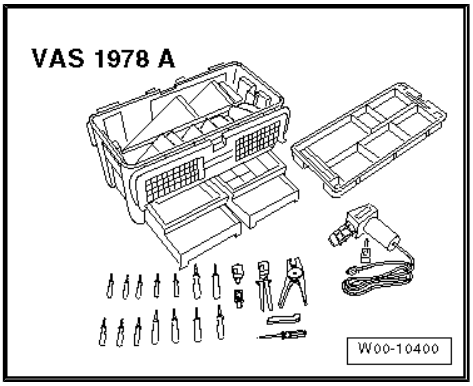

Note

Additional information:

⇒ Operating instructions for wiring harness repair set - VAS 1978A-

2.2.4 Release tool set - VAS 1978/35-

Protected by copyright. Copying for private or commercial purposes, in part or in whole, is not permitted unless authorised by AUDI AG. AUDI AG does not guarantee or accept any liability with respect to the correctness and completeness of this document. ©Copyright by AUDI AG.

Release tool set - VAS 1978/35- is used to release various primary and secondary locking devices on Group vehicles. The set contains 26 different tools which can be used to properly release or fit e.g. round connector systems, flat contacts with one or two fasteners and seals for individual wires.

For correct release tools for corresponding locking devices, refer to table in ⇒ Operating instructions for -VAS 1978/35- .

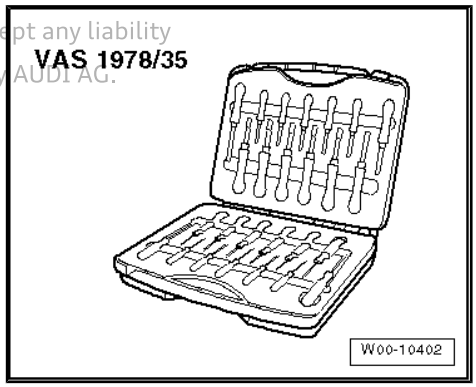

2.2.5 Wiring harness repair set - VAS 631 001-

Using wiring harness repair set - VAS 631 001- makes it possible to maintain optimum repair standards for repairs to the electrical system. This wiring harness repair set can be used to repair aluminium wires in the area of the electrical connectors and any open circuits in the wiring. Both copper repair wires (supplied by the metre) and complete copper repair wires with pre-crimped contacts are used to do this. The connection to the vehicle's own wiring harness is made by three butt connectors corresponding to the wire cross section.

The wiring harness repair set - VAS 631 001- for aluminium wires consists of the following items:

- Hand pliers without crimping insert and positioner -VAS 631 001/1-
- Crimping insert for 2.5 mm^2 aluminium wires -VAS 631 001/2-
- Crimping insert for 4 mm^2 aluminium wires -VAS 631 001/3-
- Crimping insert for 6 mm^2 aluminium wires -VAS 631 001/4-
- Wire strippers for aluminium wires -VAS 631 001/5-

Caution

Only use the corresponding butt connectors with heat-shrink hose when repairing aluminium wires ⇒ Electronic parts catalogue (ETKA) .

Note

Additional information:

⇒ Operating instructions for wiring harness repair set - VAS 631 001-

2.2.6 Wiring harness repair set - VAS 631 003-

Broadcast, copyright, copying for private or commercial purposes, in part or in whole, is not permitted unless authorised by AUDI AG. AUDI AG does not guarantee or accept any liability with respect to the correctness of information published in this document. Copyright by AUDI AG.

Using wiring harness repair set - VAS 631 003- makes it possible to maintain optimum repair standards for repairs to the electrical system. This wiring harness repair set can be used to repair 10 mm^2 and 16 mm^2 wires in the area of the electrical connectors and any open circuits in the wiring. Both repair wires (supplied by the metre) and complete repair wires with pre-crimped contacts are used to do this. The connection to the vehicle's own wiring harness is made by two butt connectors corresponding to the wire cross section.

The wiring harness repair set - VAS 631 003- for 10 mm^2 and 16 mm^2 wires consists of the following items:

- Case with inserts -VAS 631 003/1-
- Crimping pliers -VAS 631 003/2-
- Wire strippers -VAS 631 003/3-
- Cable cutters -VAS 631 003/4-
- Crimping insert for 10 mm^2 wires -VAS 631 003/5-
- Crimping insert for 16 mm^2 wires -VAS 631 003/6-

Note

Additional information:

⇒ Operating instructions for wiring harness repair set - VAS 631 003-

2.3 Description of tools

2.3.1 Crimping pliers with insert

Wiring harness repair set - VAS 1978 B- comprises crimping pliers (base tool) - VAS 1978/1-2- with head adapter 0.35 mm^2 - 2.5 mm^2 - VAS 1978/1-1- and head adapter 4.0 - 6.0 mm^2 - VAS 1978/2 A- . Head adapter 0.13 - 0.5 mm^2 - VAS 1978/1-3- is also included. These adapter heads are used in conjunction with the crimping pliers (base tool) to crimp the crimp connectors as part of wiring harness repairs.

Colour of crimp connector	Colour of crimp recess	Wire cross section	Adapter head
Transparent	None	0.13 mm^2/0.35 mm^2/0.5 mm^2	-VAS 1978/1-3-
Transparent	Yellow	0.35 mm^2 - 0.5 mm^2	-VAS 1978/1-1-
Red	Red	0.5 mm^2 - 1.0 mm^2	-VAS 1978/1-1-
Blue	Blue	1.5 mm^2 - 2.5 mm^2	-VAS 1978/1-1-
Yellow	Yellow	4.0 mm^2 - 6.0 mm^2	-VAS 1978/2A-

Note

- *It is very important to ensure that the correct crimp recess is selected for the crimp connector being used.*
- *Take care not to crimp insulation of wire.*

2.3.2 Release tools for contacts

The different release tools can be used to detach different contacts from connector housings without damaging them irreparably.

A selection of release tools is included in wiring harness repair set - VAS 1978- and wiring harness repair set - VAS 1978A- . The complete set of release tools is included in release tool set - VAS 1978/35- ⇒ page 99 .

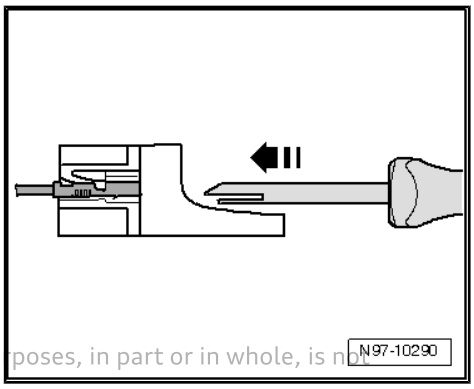

WARNING

Certain tools are equipped with a guard. This is placed over the end of the tool after use to prevent injury to employees and to protect the tip of the tool against damage.

Copyright by AUDI AG. All rights reserved. Sharing of this document or its contents in any form or by any means, in part or in whole, is not permitted unless authorised by AUDI AG. AUDI AG does not guarantee or accept any liability with respect to the correctness of information in this document. Copyright by AUDI AG.

Releasing and dismantling connector housings ⇒ page 157

2.3.3 Assembly tools for seals for individual wires

The assembly tools are used to insert seals for individual wires all the way into the connector housing without damaging them; this ensures a complete seal between the individual wire and the connector housing.

Four assembly tools for seals for individual wires are included in each wiring harness repair set - VAS 1978 B- and previous versions.

Fitting seals for individual wires ⇒ page 156

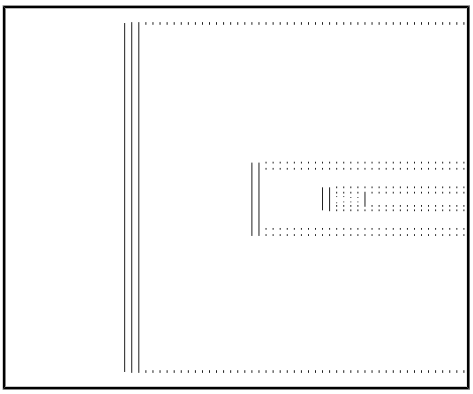

2.3.4 Wire strippers - VAS 1978/3-

Wire strippers - VAS 1978/3- are used to strip wires of their insulation and cut them properly.

Wire strippers - VAS 1978/3- are included in wiring harness repair set - VAS 1978 B- and previous versions.

There is an adjustable stop in the jaws of the wire strippers with which the desired length of insulation to be removed can be set.

Protected by copyright. Copying for private or commercial purposes, permitted unless authorised by AUDI AG. AUDI AG does not guarantee or accept any liability with respect to the correctness of information in this document. Copyright by AUDI AG.

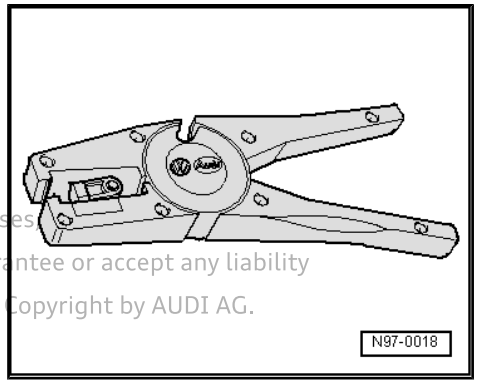

Stripping:

– Set adjustable stop in jaws of wire stripper to desired length to be stripped.

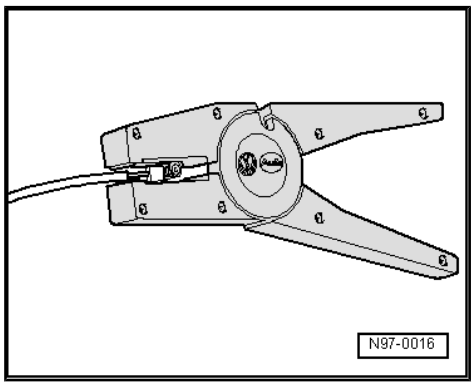

– Working from the front, insert end of wire into jaws of wire stripper as far as it will go and press stripper together completely.

– Open wire stripper again and take out stripped end of wire.

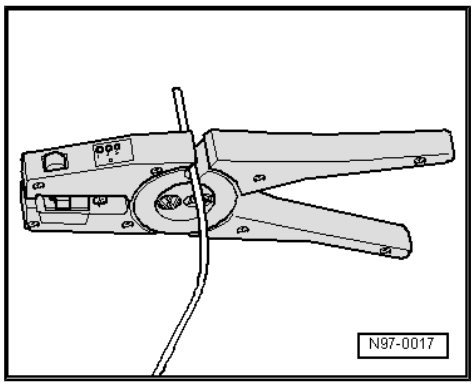

– If necessary, cut wire using side-cutting function on upper side of wire strippers.

2.3.5 Hot air blower, 220 V / 50 Hz - VAS 1978/14-

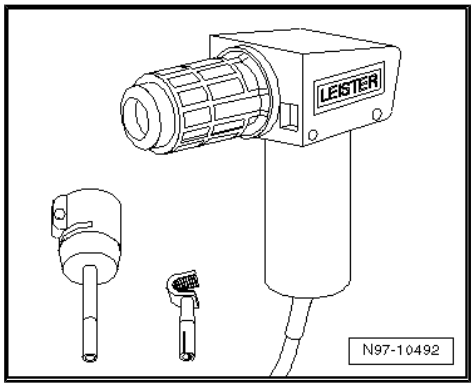

> ⚠ **Caution**
>
> ***When shrink-fitting crimp connectors, take care not to damage any other pipes/wires, plastic parts or insulating material with hot nozzle of hot air blower.***
>
> ***Always observe operating instructions for hot air blower.***

Hot air blower, 220 V / 50 Hz - VAS 1978/14- is used in conjunction with shrink element for hot air blower - VAS 1978/15- to shrink-fit the crimp connectors. After crimping, a hot air blower must be used to shrink-fit crimp connector to prevent moisture from entering connection.

Hot air blower, 220 V/50 Hz - VAS 1978/14- is included in wiring harness repair set - VAS 1978 B- and previous versions.

– Attach shrink element for hot air blower - VAS 1978/15A- to hot air blower, 220 V/ 50 Hz - VAS 1978/14A- .

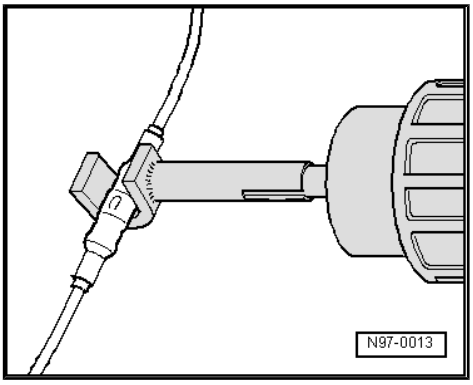

Caution

Risk of damage to surrounding components.

- *When shrink-fitting crimp connectors, take care not to damage any other pipes/wires, plastic parts or insulating material with hot nozzle of hot air blower.*
- *Always observe operating instructions for hot air blower.*

– Working from centre outwards, use hot air blower to heat crimp connector in longitudinal direction until it is completely sealed and adhesive emerges at ends.

• A wire repaired using a single crimp connector must look as shown in illustration.

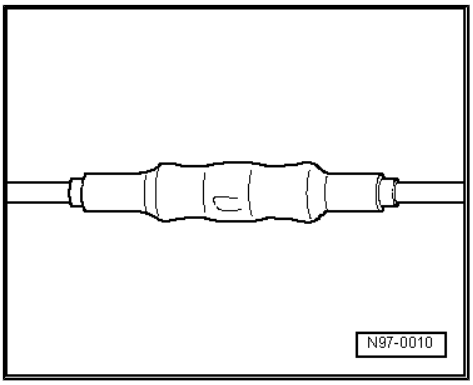

2.3.6 Crimping pliers - VAS 1978/1A-

Crimping pliers - VAS 1978/1A- or crimping pliers (base tool) - VAS 1978/1-2- together with head adapter 0.35 - 2.5 mm² - VAS 1978/1-1- , adapter head 0.13 - 0.5 mm² - VAS 1978/1-3- or head adapter 4.0 - 6.0 mm² - VAS 1978/2A- are used to compress the crimp connectors from the wiring harness repair sets.

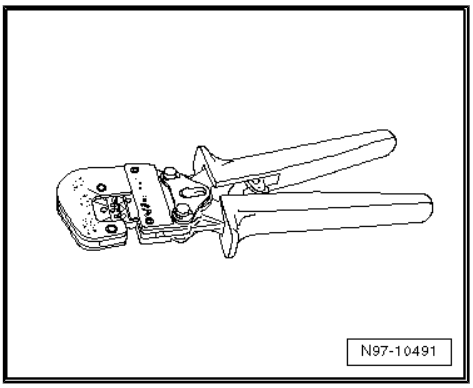

Crimping connectors using crimping pliers - VAS 1978/1A-

The following head adapters are available for the crimping pliers (base tool) - VAS 1978/1-2- :

- Head adapter 0.13 - 0.5 mm² - VAS 1978/1-3-
- Head adapter 0.35 mm² - 2.5 mm² - VAS 1978/1-1-
- Head adapter 4.0 - 6.0 mm² - VAS 1978/2 A-
- Head adapter for JPT contacts - VAS 1978/9-1-

The crimping pliers are used in conjunction with head adapter for JPT contacts - VAS 1978/9-1- to crimp contacts to individual wires during repairs to wiring with cross sections up to 0.35 mm^2.

Changing head adapter:

– Open crimping pliers all the way.

Protected by copyright. Copying for private or commercial purposes, in part or in whole, is not permitted unless authorised by AUDI AG. AUDI AG does not guarantee or accept any liability with respect to the correctness of information in this document. Copyright by AUDI AG.

– Unclip both locking pins -arrows- from body of crimping pliers.

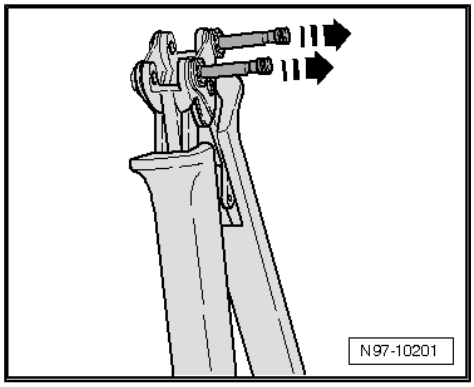

– Insert required head adapter from above -arrow- into body of crimping pliers.

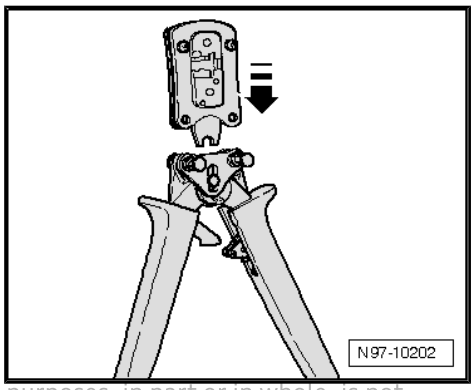

Protected by copyright. Copying for private or commercial purposes, in part or in whole, is not permitted unless authorised by AUDI AG. AUDI AG does not guarantee or accept any liability with respect to the correctness of information in this document. Copyright © AUDI AG.

– Lock head adapter in place by pressing pins -arrows- into body of crimping pliers.

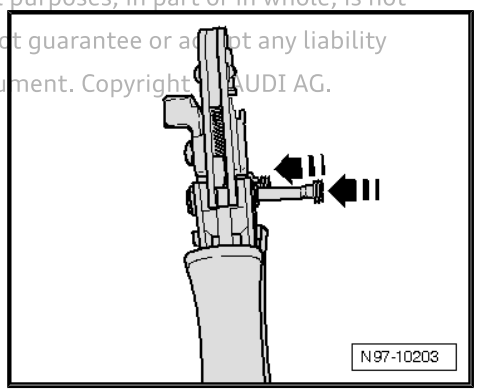

2.4 Repairing wiring harnesses

Note

Observe general information on repairs to the vehicle electrical system
⇒ “2.1 General information on repairs to the vehicle electrical system”, page 95 .

⇒ “2.4.1 Repairing airbag and belt tensioner wiring”, page 105

⇒ “2.4.2 Repairing CAN bus wiring”, page 107

⇒ “2.4.3 Repairing FlexRay wiring - with sheath”, page 107

⇒ “2.4.4 Repairing FlexRay wiring - without sheath”, page 108

⇒ “2.4.5 Repairing a wire of 0.22 mm2 section with a single crimp connector”, page 109

⇒ “2.4.6 Repairing a wire of 0.35 mm2 section or thicker with a single crimp connector”, page 111

⇒ “2.4.7 Repairing a wire of 0.22 mm2 section by connecting in an additional wire”, page 113

⇒ “2.4.8 Repairing a wire of 0.35 mm2 section or thicker by connecting in an additional wire”, page 116

⇒ “2.4.9 Repairing 0.13 mm2/0.35 mm2/0.5 mm2 wiring with crimp connector”, page 118

⇒ “2.4.10 Repairing 10 mm2 or 16 mm2 wiring with single butt connector”, page 121

⇒ “2.4.11 Repairing 2.5 mm2, 4 mm2 or 6 mm2 aluminium wiring with single butt connector”, page 126

2.4.1 Repairing airbag and belt tensioner wiring

In addition to the general notes on repairing wiring harnesses, observe the following instructions for repairing wiring in the airbag and belt tensioner system:

WARNING

- *Airbag and belt tensioner system can fail.*
- *Carrying out repair work incorrectly on wiring harnesses for airbags and belt tensioners can cause a malfunction in passenger protection systems.*
- *For repairs to airbag and belt tensioner wiring harnesses, only use contacts, connectors and wiring designed specifically for this purpose ⇒ Electronic parts catalogue (ETKA) .*

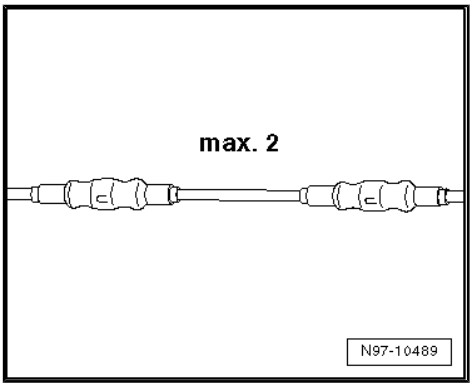

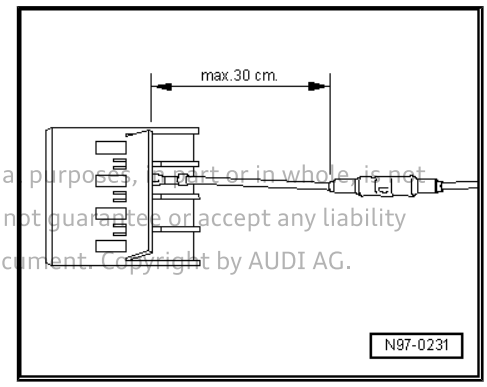

Protected by copyright. Copying for private or commercial purposes, in part or in whole, is not permitted unless authorised by AUDI AG. AUDI AG does not guarantee or accept any liability with respect to the correctness of information in this document. Copyright by AUDI AG.

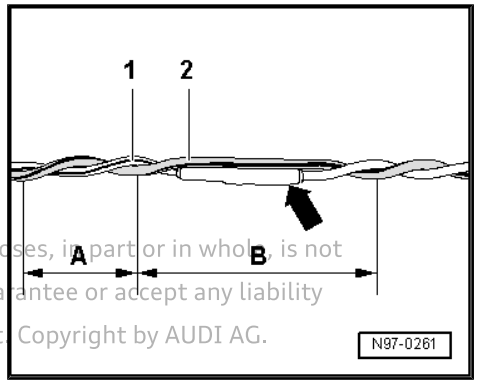

Note

- *Wiring for airbag and belt tensioner wiring harness may only be repaired using wiring harness repair set - VAS 1978 B- and previous versions.*
- *Observe general information on repairs to the vehicle electrical system* *⇒ page 95*.
- *Do not repair wiring for the airbag and belt tensioner system at more than two repair locations. Repair locations increase the resistance in wiring and can be the cause of faults in the system's self-diagnosis.*
- *To avoid corrosion, the crimp connectors must always be shrink-fitted when repairing the airbag wiring harness or belt tensioner wiring harness.*
- *Do not incorporate the repaired wiring back in the wiring harness in the vehicle, and mark the repair location clearly with yellow insulating tape.*
- *Repairs in the area around airbags or belt tensioners should not be performed more than 30 cm from the nearest connector housing. Following this method and marking the repair with yellow insulating tape ensures that previous repairs can be easily identified.*
- *The original wires going to the airbag igniters have a twist length specification of 20 ± 5 mm. The wiring pairs have standard part numbers that ensure this twist length in series production, and it must always be observed when repairing twisted wires.*
- *When performing repairs both wires to the airbag igniters must be of the same length. When twisting wires -1- and -2-, it is very important to ensure that twist length A = 20 ±5 mm.*
- *There must be no untwisted section of wire which is longer than B = 100 mm, e.g. in the vicinity of crimp connectors -arrow-.*
- *Repair operations must be recorded in the Audi Service Schedule under “Workshop entries” with a brief outline of the repair work completed, company stamp and signature.*
- *Any warranty claims made under the AUDI AG factory warranty are invalid if airbag wiring harness repairs have not been performed using genuine replacement parts and wiring harness repair set - VAS 1978 B- .*

This document is subject to copyright. Copying for private or commercial purposes, in part or in whole, is not permitted unless authorised by AUDI AG. AUDI AG does not guarantee or accept any liability with respect to the correctness and completeness of this document. Copyright by AUDI AG.

2.4.2 Repairing CAN bus wiring

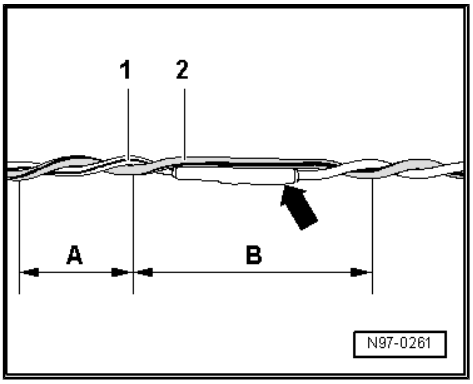

- Use an unscreened, twisted two-wire line -1- and -2- (cross-section 0.35 mm^2 or 0.5 mm^2) as CAN bus wire.
- CAN bus wiring can be repaired either using sections of repair wiring with the correct cross section or with “green/yellow” or “white/yellow” twisted wires from the Electronic parts catalogue ⇒ Electronic parts catalogue (ETKA) .
- Both CAN bus wires must be of the same length when repairing. When twisting wires -1- and -2-, ensure a twist length of A = 20 mm.
- There must be no untwisted section of wire which is longer than B = 50 mm, e.g. in the vicinity of crimp connectors -arrow-.
- Apply yellow insulating tape to the repair location to indicate a previous repair.

Protected by copyright. Copying for private or commercial purposes, in part or in whole, is not permitted unless authorised by AUDI AG. AUDI AG does not guarantee or accept any liability with respect to the correctness of information in this document. Copyright by AUDI AG.

2.4.3 Repairing FlexRay wiring - with sheath

Note

- *FlexRay wiring with sheath must only be repaired using FlexRay wiring with sheath from the electronic parts catalogue ⇒ Electronic parts catalogue (ETKA) .*
- *Observe general information on repairs to the vehicle electrical system*
  ⇒ “2.1 General information on repairs to the vehicle electrical system”, page 95 .

FlexRay wiring consists of a sheathed pair of wires -1 and 2- with a cross-section of 0.35 mm^2.

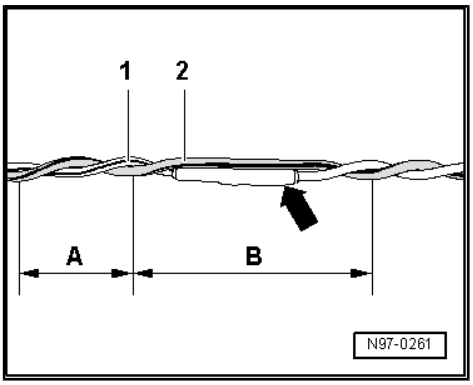

- Both wires must be of exactly the same length when repairing.
- When twisting the wires -1 and 2-, the twist length specification -A- = 30 mm must be met.
- When making repairs, there must be no untwisted section of wire which is longer than -B- = 50 mm, e.g. in the vicinity of crimp connectors -arrow-.
- Maximum stripped length of wire -C- = 100 mm.
- Take suitable steps to protect the repair location from environmental effects. This requires a crimp connector with heat-shrink hose, internal bonding material over untwisted repair joint and water-tight insulating tape around stripped wire.
- The repair location must be marked with appropriate tape e.g. yellow insulating tape.
- Follow the same procedure as you do when repairing one wire if you are repairing both wires.
- The two repair locations -arrows- should be located one twist length -A- = 30 mm away from each other.
- Crimping cable ends with connectors should be performed in the same way.

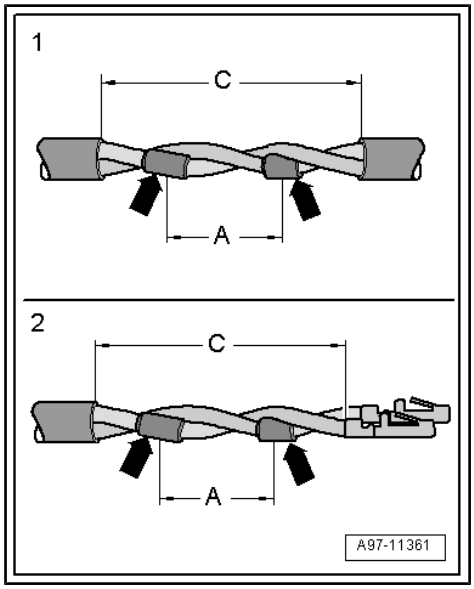

1 - Repair location in stripped area

2 - Repair location with cable ends with connectors

C - Maximum stripped length = 100 mm

2.4.4 Repairing FlexRay wiring - without sheath

Note

- *FlexRay wiring without sheath must only be repaired using FlexRay wiring without sheath from the electronic parts catalogue ⇒ Electronic parts catalogue (ETKA) .*
- *Observe general information on repairs to the vehicle electrical system*
  ⇒ "2.1 General information on repairs to the vehicle electrical system", page 95 .

Copyright by AUDI AG. Reproduction and distribution, even of extracts, for commercial purposes, in part or in whole, is not permitted unless authorised by AUDI AG. AUDI AG does not guarantee or accept any liability with respect to the correctness of information in this document. Copyright by AUDI AG.

Use an unscreened, twisted two-wire line -1- and -2- (cross-section 0.35 mm^2) as a FlexRay wire.

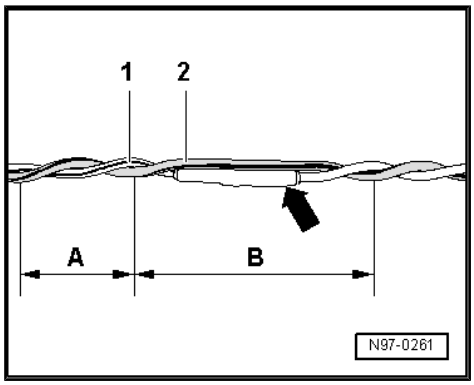

- Both FlexRay wires must be of exactly the same length when repairing.
- When twisting the wires -1 and 2-, the twist length specification -A- = 20 mm must be met.
- When making repairs, there must be no untwisted section of wire which is longer than -B- = 40 mm, e.g. in the vicinity of crimp connectors -arrow-.
- The repair location must be marked with appropriate tape e.g. yellow insulating tape.
- When repairing both FlexRay wires, the same specifications must be followed as when one FlexRay wire is being repaired.
- The two repair locations should also be located one twist length -A- = 20 mm away from each other.
- Crimping cable ends with connectors should be performed in the same way.

1 - Repair location in wiring harness

2 - Repair location with cable ends with connectors

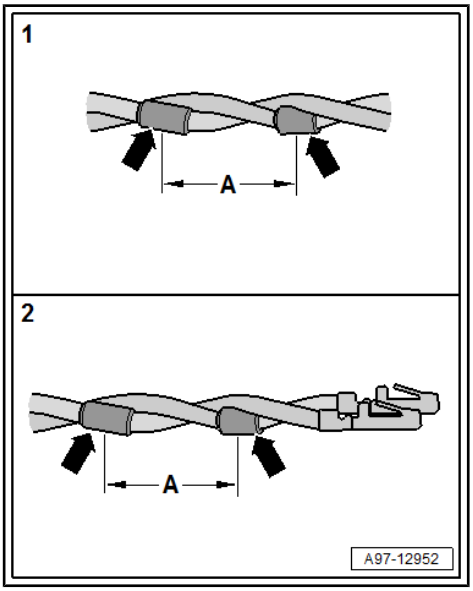

2.4.5 Repairing a wire of 0.22 mm² section with a single crimp connector

Procedure

– Release a length of approx. 20 cm of the defective wire on both sides of the repair joint.

> **Caution**
>
> *Risk of damage to electrical wiring.*
>
> - *Take care when releasing wiring from wrapped wiring harnesses.*

– If necessary, remove wrapping of wiring harness.

– Use wire stripper - VAS 1978/3- to cut out damaged section of wiring.

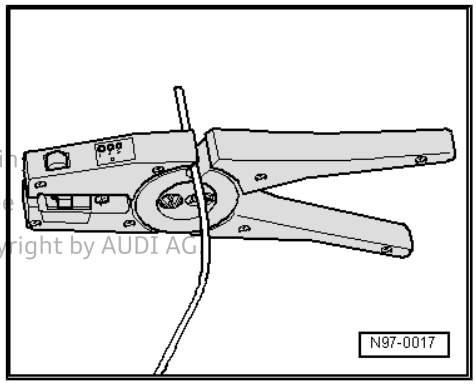

> **Note**
>
> *If cutting out the damaged section of wiring makes the two ends of the original vehicle wire too short for repair with a single crimp connector, insert a corresponding length of repair wire with two crimp connectors* ⇒ page 113 *.*

Protected by copyright. Copying for private or commercial purposes, in part or in whole, is not permitted unless authorised by AUDI AG. AUDI AG does not guarantee or assume any liability with respect to the correctness of information in this document. Copyright by AUDI AG.

– Set adjustable stop in jaws of wire stripper - VAS 1978/3- to 12 ... 14 mm (length to be stripped).
– Working from the front, insert end of wire into jaws of wire stripper as far as it will go and press stripper together completely.
– Open wire stripper again and take out stripped end of wire.
– Fold back half of the stripped wire ends.
– To repair a 0.22 mm^2 wire, take a small transparent crimp connector out of the wiring harness repair set - VAS 1978 B- .

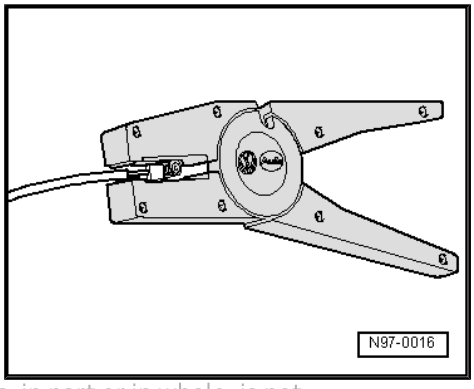

Protected by copyright. Copying for private or commercial purposes, in part or in whole, is not
permitted unless authorised by AUDI AG. AUDI AG does not guarantee or accept any liability
with respect to the correctness of information in this document. Copyright by AUDI AG.

– To fit crimp connector, use crimping pliers (base tool) - VAS 1978/1-2- with head adapter 0.35 mm^2 - 2.5 mm^2 - VAS 1978/1-1- .

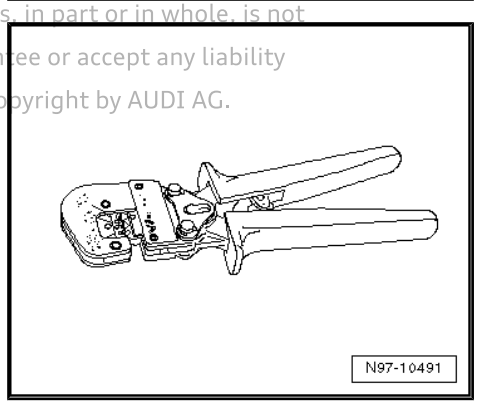

– Slide small transparent crimp connector over both stripped and folded back ends of original vehicle wire and fasten with crimping pliers.

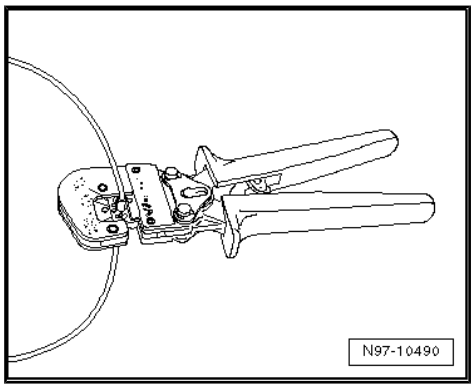

Note

Take care not to crimp insulation of wire.

After crimping, a hot air blower must be used to shrink-fit crimp connector to prevent moisture from entering connection.

– Attach shrink element for hot air blower - VAS 1978/15A- to hot air blower, 220 V/ 50 Hz - VAS 1978/14A- .

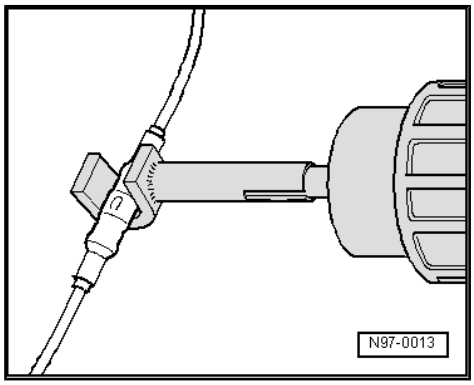

Caution

Risk of damage to surrounding components.

- ***When shrink-fitting crimp connectors, take care not to damage any other pipes/wires, plastic parts or insulating material with hot nozzle of hot air blower.***
- ***Always observe operating instructions for hot air blower.***

– Working from centre outwards, use hot air blower to heat crimp connector in longitudinal direction until it is completely sealed and adhesive emerges at ends.

• A wire repaired using a single crimp connector must look as shown in illustration.

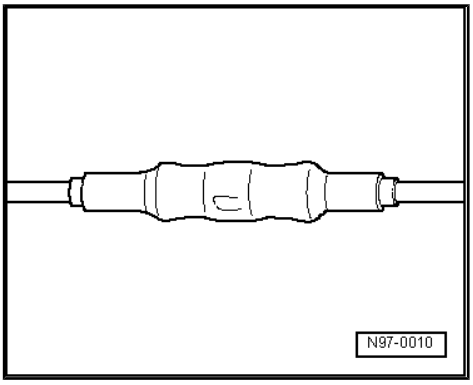

Note

♦ *If several wires have to be repaired, make sure crimp connectors are not directly adjacent to one another. Offset the crimp connectors slightly to restrict the size of the wiring harness.*

♦ *If the repair location was previously wrapped, yellow adhesive tape must be wrapped around this location again on completion of repair.*

♦ *If necessary, secure the repaired wiring harness with a cable tie to prevent rattling noises when the vehicle is driven.*

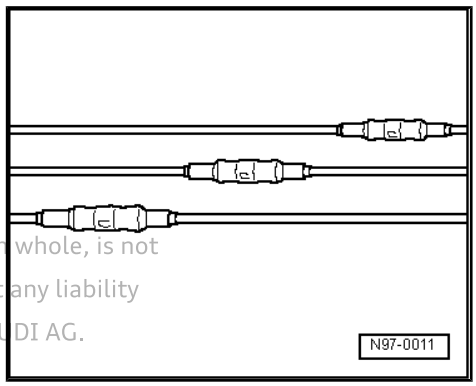

Protected by copyright. Copying for private or commercial purposes, in part or in whole, is not permitted unless authorised by AUDI AG. AUDI AG does not guarantee or accept any liability with respect to the correctness of information in this document. Copyright by AUDI AG.

2.4.6 Repairing a wire of 0.35 mm² section or thicker with a single crimp connector

Procedure

– Release a length of approx. 20 cm of the defective wire on both sides of the repair joint.

Caution

Risk of damage to electrical wiring.

♦ ***Take care when releasing wiring from wrapped wiring harnesses.***

– If necessary, remove wrapping of wiring harness.

– Use wire stripper - VAS 1978/3- to cut out damaged section of wiring.

Note

If cutting out the damaged section of wiring makes the two ends of the original vehicle wire too short for repair with a single crimp connector, insert a corresponding length of repair wire with two crimp connectors ⇒ page 116 .

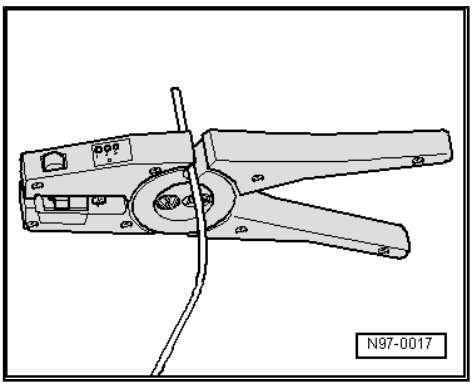

– Set adjustable stop in jaws of wire stripper - VAS 1978/3- to 6 ... 7 mm (length to be stripped).
– Working from the front, insert end of wire into jaws of wire stripper as far as it will go and press stripper together completely.
– Open wire stripper again and take out stripped end of wire.
– For repair, take a suitable crimp connector out of the wiring harness repair set - VAS 1978 B- .

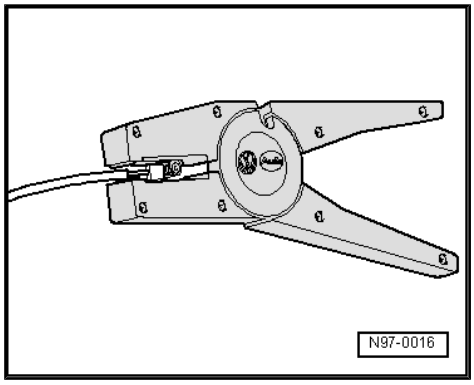

Note

- *It is very important to select the correct crimp connector and appropriate corresponding crimp recess* *⇒ page 100* *.*
- *Take care not to crimp insulation of wire.*

– Use crimping pliers (base tool) - VAS 1978/1-2- for fitting crimp connectors.

The following head adapters are available for the crimping pliers (base tool) - VAS 1978/1-2- :

- Head adapter 0.35 mm² - 2.5 mm² - VAS 1978/1-1-
- Head adapter 4.0 - 6.0 mm² - VAS 1978/2 A-

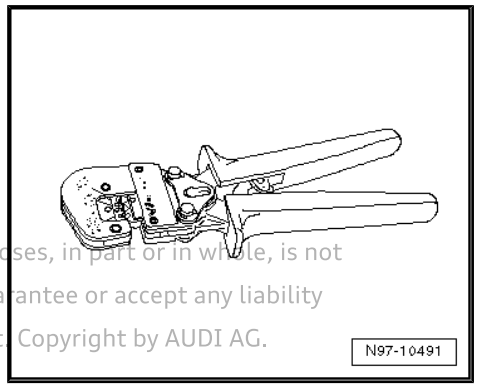

Protected by copyright. Copying for private or commercial purposes, in part or in whole, is not permitted unless authorised by AUDI AG. AUDI AG does not guarantee or accept any liability with respect to the correctness of information in this document. Copyright by AUDI AG.

– Slide crimp connector over two stripped ends of original vehicle wire and fasten with crimping pliers.

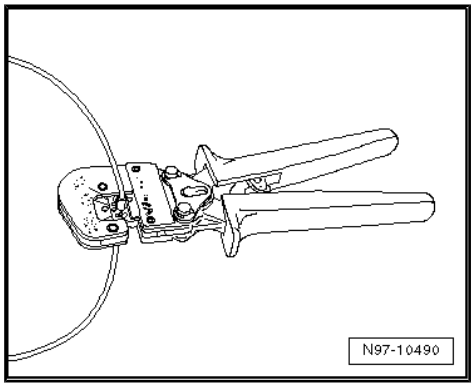

Note

Take care not to crimp insulation of wire.

After crimping, a hot air blower must be used to shrink-fit crimp connector to prevent moisture from entering connection.

– Attach shrink element for hot air blower - VAS 1978/15A- to hot air blower, 220 V/ 50 Hz - VAS 1978/14A- .

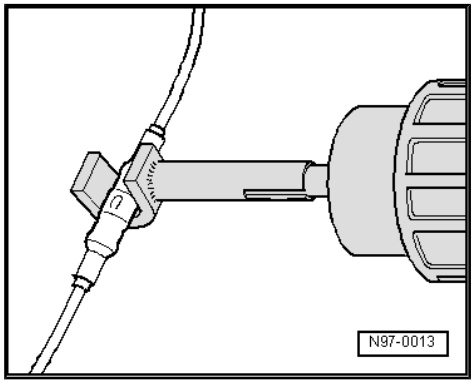

Caution

Risk of damage to surrounding components.

- ***When shrink-fitting crimp connectors, take care not to damage any other pipes/wires, plastic parts or insulating material with hot nozzle of hot air blower.***
- ***Always observe operating instructions for hot air blower.***

– Working from centre outwards, use hot air blower to heat crimp connector in longitudinal direction until it is completely sealed and adhesive emerges at ends.

• A wire repaired using a single crimp connector must look as shown in illustration.

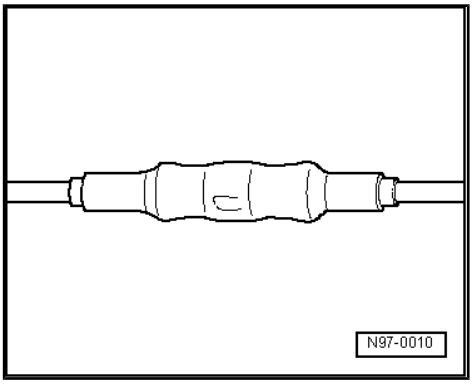

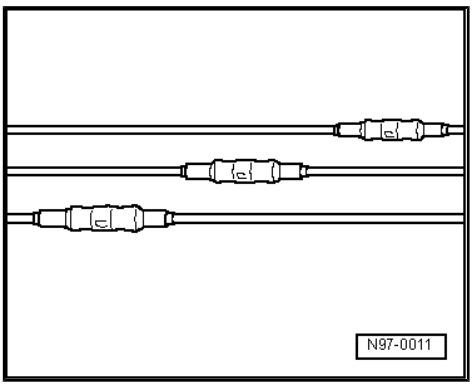

Note

♦ *If several wires have to be repaired, make sure crimp connectors are not directly adjacent to one another. Offset the crimp connectors slightly to restrict the size of the wiring harness.*

♦ *If the repair location was previously wrapped, yellow adhesive tape must be wrapped around this location again on completion of repair.*

♦ *If necessary, secure the repaired wiring harness with a cable tie to prevent rattling noises when the vehicle is driven.*

2.4.7 Repairing a wire of 0.22 mm² section by connecting in an additional wire

Note

To repair a 0.22 mm² wire, a repair wire with a 0.35 mm² or 0.5 mm² cross section can be used as the additional wire.

Procedure

– Release a length of approx. 20 cm of the defective wire at two points on both sides of the repair joint.

Caution

Risk of damage to electrical wiring.

♦ ***Take care when releasing wiring from wrapped wiring harnesses.***

Protected by copyright. Copying for private or commercial purposes, in part or in whole, is not permitted unless authorised by AUDI AG. AUDI AG does not guarantee or accept any liability with respect to the correctness of information in this document. Copyright by AUDI AG.

– If necessary, remove wrapping of wiring harness.

Protected by copyright. Copying for private or commercial purposes, in part or in whole, is not permitted unless authorised by AUDI AG. AUDI AG does not guarantee or accept any liability with respect to the correctness of information in this document.

– Lay yellow repair wire next to damaged wiring harness and use wire stripper - VAS 1978/3- to cut repair wire to required length.
– Cut damaged section out of original vehicle wire.

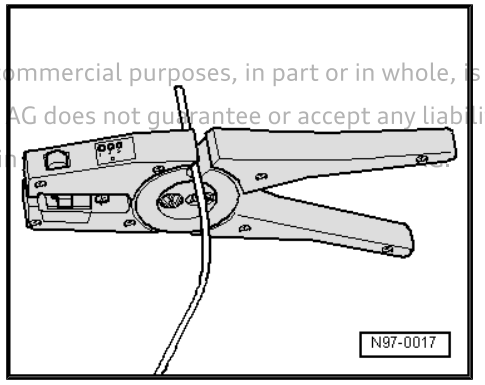

– Set adjustable stop in jaws of wire stripper - VAS 1978/3- to 12 ... 14 mm (length to be stripped).
– Working from the front, insert end of original vehicle wire into jaws of wire stripper as far as it will go and press wire stripper together completely.
– Open wire stripper again and take out stripped end of wire.
– Fold back half of the stripped wire ends.
– Repeat procedure at other end of original vehicle wire.

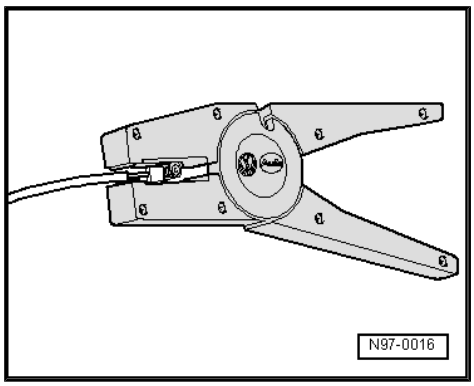

– Set adjustable stop in jaws of wire stripper - VAS 1978/3- to 6 ... 7 mm (length to be stripped).
– Working from the front, insert end of the yellow repair wire into jaws of wire stripper as far as it will go and press wire stripper together completely.
– Open wire stripper again and take out stripped end of wire.
– Repeat procedure at other end of repair wire.
– To repair a 0.22 mm^2 wire, take a small transparent crimp connector out of the wiring harness repair set - VAS 1978 B- .

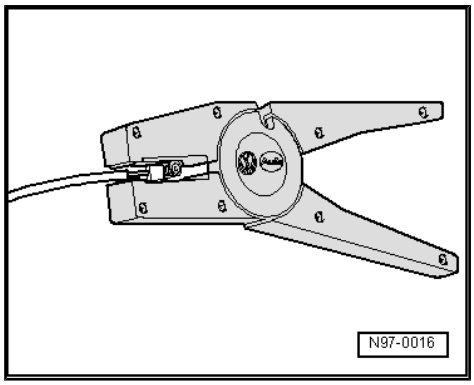

– To fit crimp connectors from wiring harness repair set - VAS 1978 B- , use crimping pliers (base tool) - VAS 1978/1-2- with head adapter 0.35 mm^2 - 2.5 mm^2 - VAS 1978/1-1- .
– Slide small transparent crimp connector over end of original vehicle wire (stripped and folded back) on one side and over stripped end of repair wire on the other.

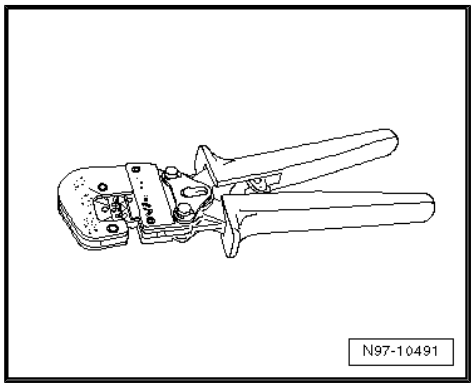

– Use crimping pliers to fasten crimp connector to both wire ends.
– Repeat procedure at other end of repair wire.

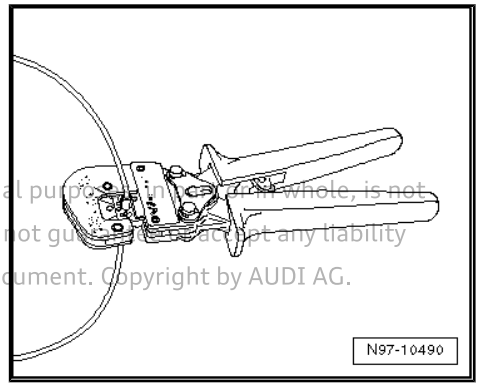

Note

Take care not to crimp insulation of wire.

Protected by copyright. Copying for private or commercial purposes, in part or in whole, is not permitted unless authorised by AUDI AG. AUDI AG does not guarantee or accept any liability with respect to the correctness of information in this document. Copyright by AUDI AG.

After crimping, a hot air blower must be used to shrink-fit crimp connector to prevent moisture from entering connection.

– Attach shrink element for hot air blower - VAS 1978/15A- to hot air blower, 220 V/ 50 Hz - VAS 1978/14A- .

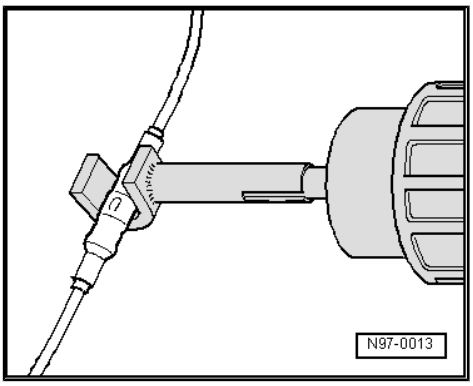

Caution

Risk of damage to surrounding components.

- *When shrink-fitting crimp connectors, take care not to damage any other pipes/wires, plastic parts or insulating material with hot nozzle of hot air blower.*
- *Always observe operating instructions for hot air blower.*

– Working from centre outwards, use hot air blower to heat crimp connector in longitudinal direction until it is completely sealed and adhesive emerges at ends.

• A wire repaired using inserted repair wire and two crimp connectors must look as shown in illustration.

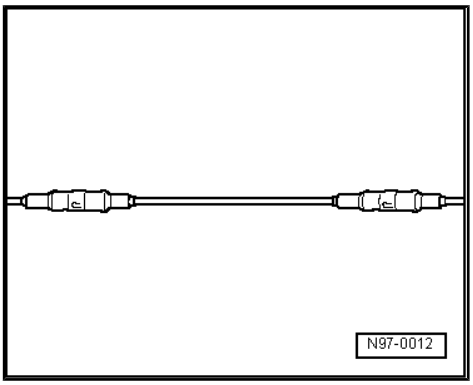

Note

- *If several wires have to be repaired, make sure crimp connectors are not directly adjacent to one another. Offset the crimp connectors slightly to restrict the size of the wiring harness.*
- *If the repair location was previously wrapped, yellow adhesive tape must be wrapped around this location again on completion of repair.*
- *If necessary, secure the repaired wiring harness with a cable tie to prevent rattling noises when the vehicle is driven.*

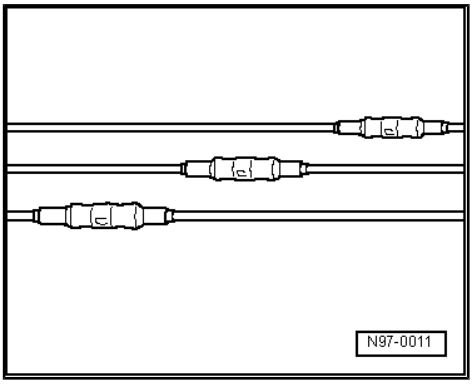

2.4.8 Repairing a wire of 0.35 mm² section or thicker by connecting in an additional wire

Note

Repair wires with a cross section of 0.35 mm² to 6.0 mm² can be used for repairs.

Procedure

– Release a length of approx. 20 cm of the defective wire at two points on both sides of the repair joint.

Caution

Risk of damage to electrical wiring.

- ***Take care when releasing wiring from wrapped wiring harnesses.***

Protected by copyright. Copying for private or commercial purposes, in part or in whole, is not permitted unless authorised by AUDI AG. AUDI AG does not guarantee or accept any liability with respect to the correctness of information in this document. Copyright by AUDI AG.

– If necessary, remove wrapping of wiring harness.

– Lay yellow repair wire next to damaged wiring harness and use wire stripper - VAS 1978/3- to cut repair wire to required length.

– Cut damaged section out of original vehicle wire.

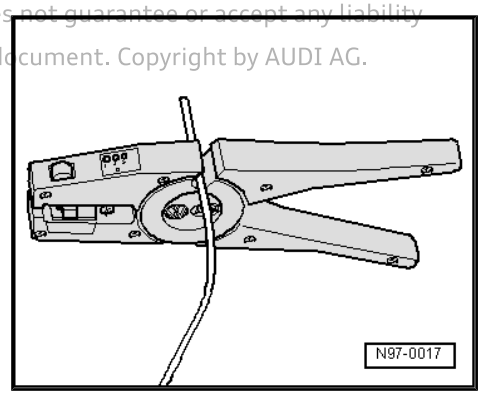

– Set adjustable stop in jaws of wire stripper - VAS 1978/3- to 6 ... 7 mm (length to be stripped).

– Working from the front, insert end of original vehicle wire into jaws of wire stripper as far as it will go and press wire stripper together completely.

– Open wire stripper again and take out stripped end of wire.

– Repeat procedure at other end of original vehicle wire.

– For repair, take two suitable crimp connectors out of wiring harness repair set - VAS 1978 B- .

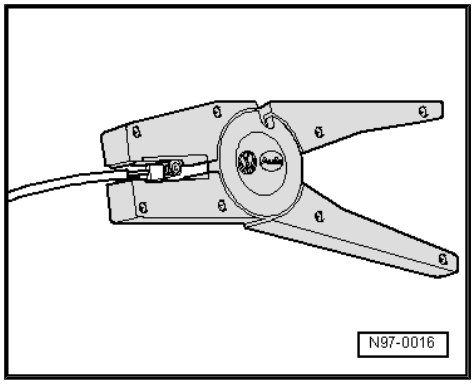

Note

- *It is very important to select the correct crimp connector and appropriate corresponding crimp recess* *⇒ page 100* *.*
- *Take care not to crimp insulation of wire.*

– Use crimping pliers (base tool) - VAS 1978/1-2- for fitting crimp connectors.

The following head adapters are available for the crimping pliers (base tool) - VAS 1978/1-2- :

- Head adapter 0.35 mm² - 2.5 mm² - VAS 1978/1-1-
- Head adapter 4.0 - 6.0 mm² - VAS 1978/2 A-

– Slide crimp connector over original vehicle wire on one side and over repair wire on the other.

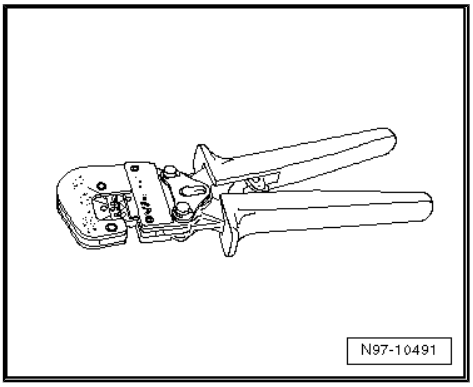

– Use crimping pliers to fasten crimp connector to both wire ends.

– Repeat procedure at other wire ends.

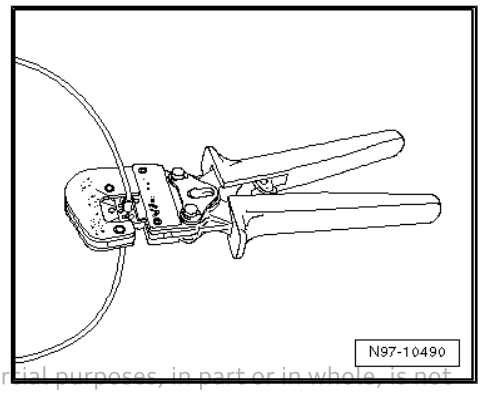

Note

Take care not to crimp insulation of wire.

Protected by copyright. Copying for private or commercial purposes, in part or in whole, is not permitted unless authorised by AUDI AG. AUDI AG does not guarantee or accept any liability with respect to the correctness of information in this document. Copyright by AUDI AG.

After crimping, a hot air blower must be used to shrink-fit crimp connector to prevent moisture from entering connection.

– Attach shrink element for hot air blower - VAS 1978/15A- to hot air blower, 220 V/ 50 Hz - VAS 1978/14A- .

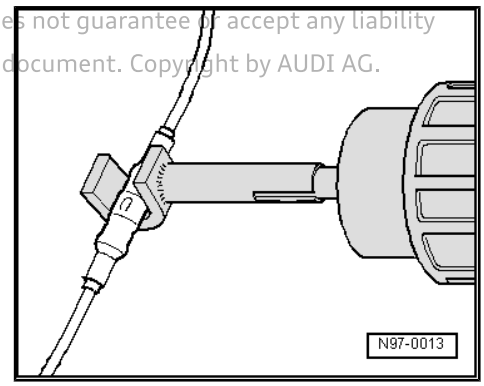

Caution

Risk of damage to surrounding components.

- ***When shrink-fitting crimp connectors, take care not to damage any other pipes/wires, plastic parts or insulating material with hot nozzle of hot air blower.***
- ***Always observe operating instructions for hot air blower.***

– Working from centre outwards, use hot air blower to heat crimp connector in longitudinal direction until it is completely sealed and adhesive emerges at ends.

• A wire repaired using inserted repair wire and two crimp connectors must look as shown in illustration.

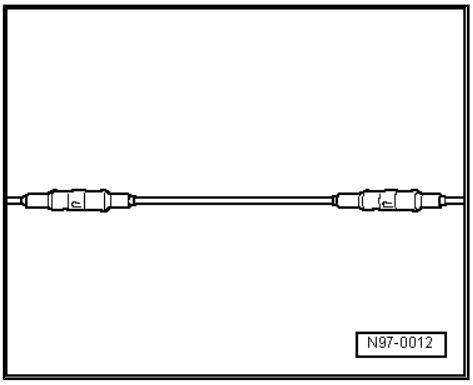

Protected by copyright. Copying for private or commercial purposes, in part or in whole, is not permitted unless authorised by AUDI AG. AUDI AG does not guarantee or accept any liability with respect to the correctness of information in this document. Copyright by AUDI AG.

Note

- *If several wires have to be repaired, make sure crimp connectors are not directly adjacent to one another. Offset the crimp connectors slightly to restrict the size of the wiring harness.*
- *If the repair location was previously wrapped, yellow adhesive tape must be wrapped around this location again on completion of repair.*
- *If necessary, secure the repaired wiring harness with a cable tie to prevent rattling noises when the vehicle is driven.*

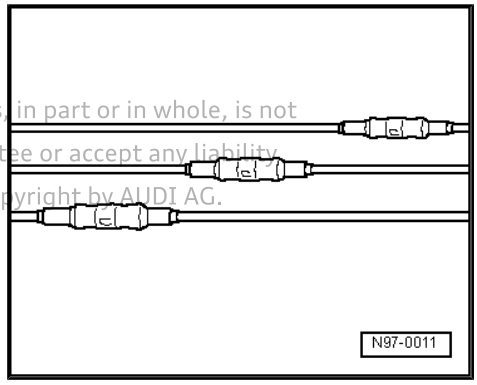

2.4.9 Repairing 0.13 mm²/0.35 mm²/0.5 mm² wiring with crimp connector

Special tools and workshop equipment required

- Hot air blower - VAS 1978/14A- from wiring harness repair set - VAS 1978 B-

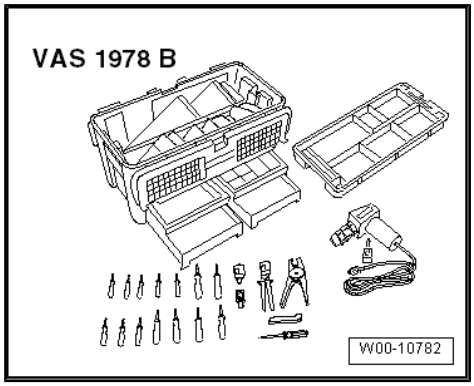

- Crimping pliers (base tool) - VAS 1978/1-2- from wiring harness repair set - VAS 1978 B-
- Head adapter 0.13 – 0.5 mm² - VAS 1978/1-3-

Note

Repair wires with a cross section of 0.35 mm² or 0.5 mm² can be used for repairs.

Procedure

– Attach head adapter, 0.13 - 0.5 mm² - VAS 1978/1-3- -1- to crimping pliers (basic tool) - VAS 1978/1-2- as follows:

– Open crimping pliers -VAS 1978/1-2- .

– Pull locking pins -2- out in direction of -arrow A- as far as stop.

– Insert head adapter -VAS 1978/1-3- -1- into crimping pliers - VAS 1978/1-2- in direction of -arrow B- so that it is centred.

– Push locking pins -2- back in as far as stop.

– Release a length of approx. 20 cm of the defective wire on both sides of the repair joint.

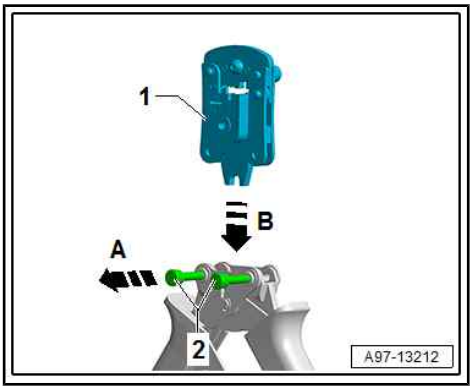

Caution

Risk of damage to electrical wiring.

- *Take care when releasing wiring from wrapped wiring harnesses.*

– If necessary, remove wrapping of wiring harness.

– Use side cutters to cut out/off damaged section of wiring.

Note

- *If cutting out the damaged section of wiring makes the two ends of the original vehicle wire too short for repair with a single crimp connector, insert a corresponding length of yellow repair wire with two crimp connectors.*
- *If you are repairing a single wire with a crimped contact, place the yellow repair wire next to the damaged vehicle wire and cut to the length required.*

Protected by copyright. Copying for private or commercial purposes, in part or in whole, is not permitted unless authorised by AUDI AG. AUDI AG does not guarantee or accept any liability with respect to the correctness of information in this document. Copyright

– Insert end of wire -2- as far as stop -arrow- into opening with appropriate diameter on adapter head -VAS 1978/1-3- -1-.

– Squeeze crimping pliers closed all the way and hold them shut.

– Pull end of wire -2- out of adapter head -VAS 1978/1-3- -1- to strip insulation.

– Open crimping pliers again.

- The insulation must be cut off cleanly and be pulled off the wire.
- There must be no remaining insulation on stripped wires.
- Strands must not be damaged.

– Select a small transparent crimp connector from wiring harness repair set - VAS 1978 B- .

– For 0.13 mm^2 wires, also fit a heat-shrink hose onto one of the wires ⇒ Electronic parts catalogue (ETKA) .

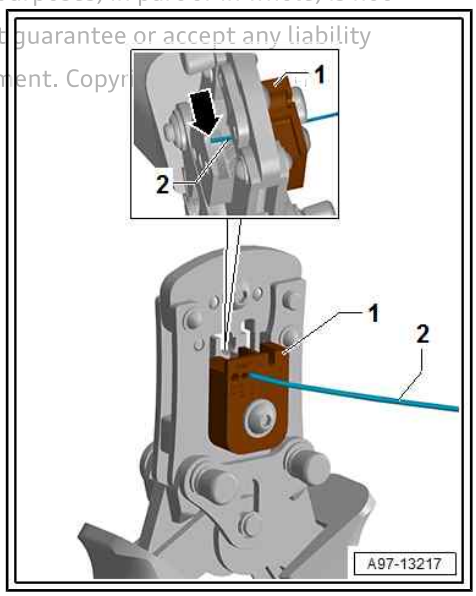

– Push crimp connector -2- in direction of -arrow A- into crimp opening on adapter head -VAS 1978/1-3- as far as stop.
– Push stripped wire -1- into crimp connector -2- in direction of -arrow B-.
• All strands must be inserted in the crimp connector -2-.
• Take care not to crimp insulation of wire -arrow C-.
– Squeeze crimping pliers closed all the way and then open them again.
– Take out wire and crimp connector.
– Repeat crimping of wire as described with crimp connector on other side.

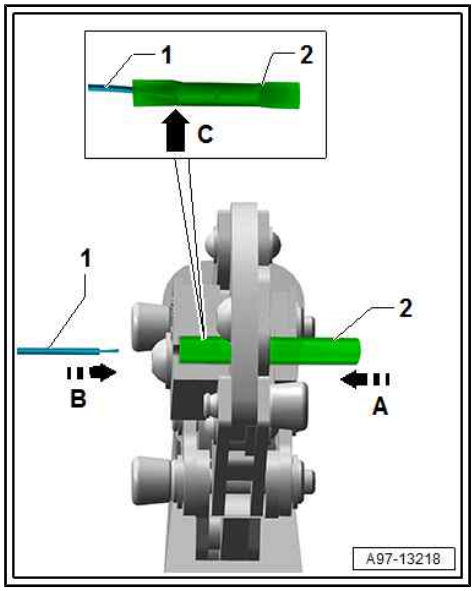

– Pull locking pin -1- out in direction of -arrow A- as far as stop.
– Pivot top piece of adapter head -VAS 1978/1-3- -2- in direction of -arrow B-.
– Remove crimped connector.

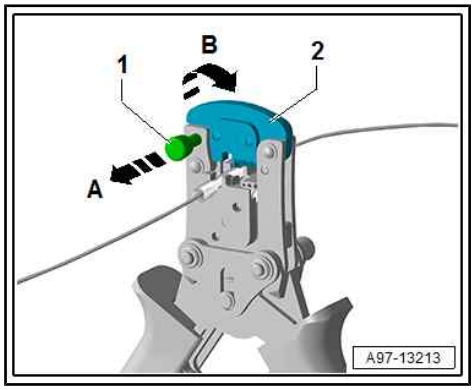

Correct result of crimping procedure

– After crimping, a hot air blower must be used to shrink-fit crimp connector to prevent moisture from entering connection.
• For 0.13 mm^2 wires, the additional heat-shrink hose must be shrink-fitted to ensure that the connection is completely sealed.

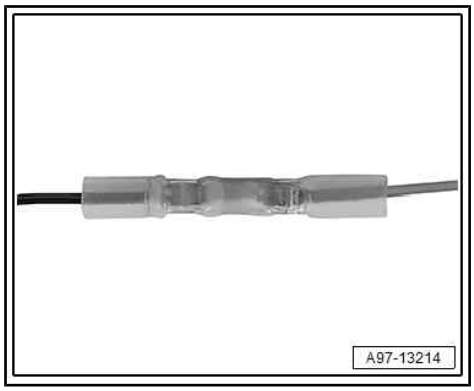

– Attach shrink element for hot air blower - VAS 1978/15A- to hot air blower, 220 V/ 50 Hz - VAS 1978/14A.-

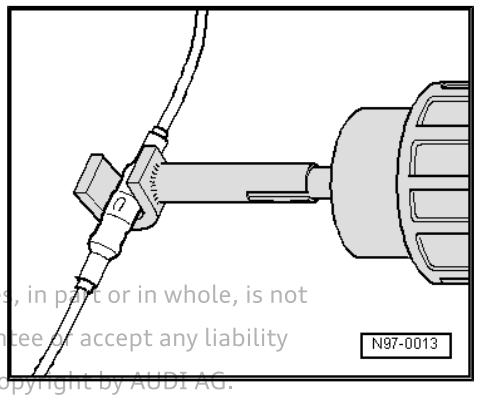

Caution

Risk of damage to electrical wiring.

- *When shrink-fitting butt connectors, take care not to damage any other pipes/wires, plastic parts or insulating material with hot nozzle of hot air blower.*
- *Always observe operating instructions for hot air blower.*

Protected by copyright. Copying for private or commercial purposes, in part or in whole, is not permitted unless authorised by AUDI AG. AUDI AG does not guarantee or accept any liability with respect to the correctness of information in this document. Copyright by AUDI AG.

– For 0.13 mm^2 wires, position heat-shrink hose -1- centrally above crimp connector -2- by feeling for its contours.

• Dimension -a- must be approximately the same on both sides.

– Working from centre outwards, use hot air blower to heat up heat-shrink hose/crimp connector in longitudinal direction until it is completely sealed and adhesive emerges at ends.

• The finished repair -3- should look as shown in the illustration.

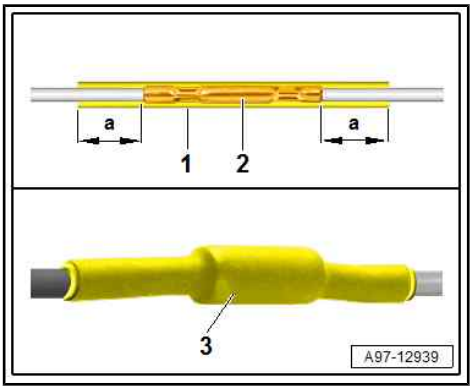

Note

♦ *If several wires have to be repaired, make sure crimp connectors are not directly adjacent to one another. Offset the crimp connectors slightly to restrict the size of the wiring harness.*

♦ *If the repair location was previously wrapped, yellow adhesive tape must be wrapped around this location again on completion of repair.*

♦ *If necessary, secure the repaired wiring harness with a cable tie to prevent rattling noises when the vehicle is driven.*

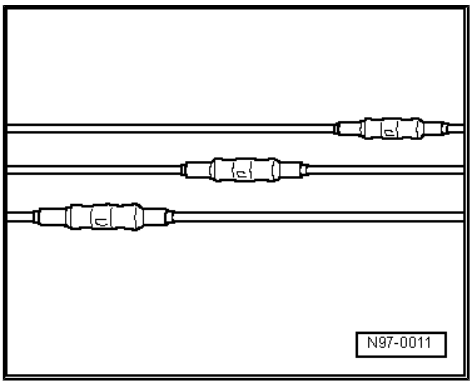

Releasing early

– Push release lever -1- upwards in direction of -arrow A-.

– At the same time, squeeze crimping pliers so that they close slightly and then open them again.

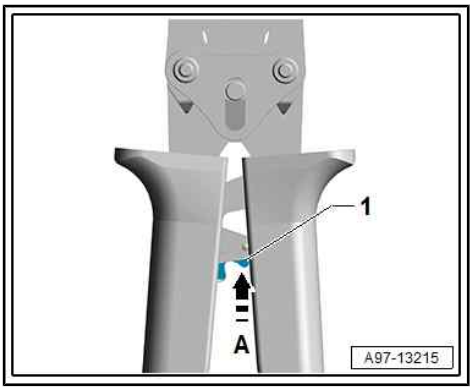

Caution

♦ ***Crimp connectors that are released early must not be used.***

2.4.10 Repairing 10 mm^2 or 16 mm^2 wiring with single butt connector

Special tools and workshop equipment required

♦ Hot air blower - VAS 1978/14A- from wiring harness repair set - VAS 1978 B-

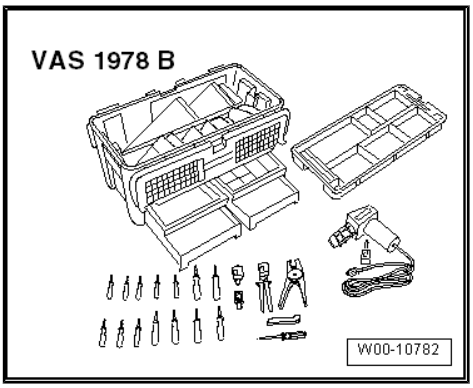

Protected by copyright. Copying for private or commercial purposes, in part or in whole, is not permitted unless authorised by AUDI AG. AUDI AG does not guarantee or accept any liability with respect to the correctness of information in this document. Copyright by AUDI AG.

♦ Shrink element for hot air blower - VAS 1978/15A- from wiring harness repair set - VAS 1978 B-

- Wiring harness repair set - VAS 631 003-

Note

- *Repair wires (supplied by the metre) with a cross section of 10 mm^2 or 16 mm^2 can be used for repairs.*
- *Single repair wires with a pre-crimped contact are also available for repairs.*

Procedure

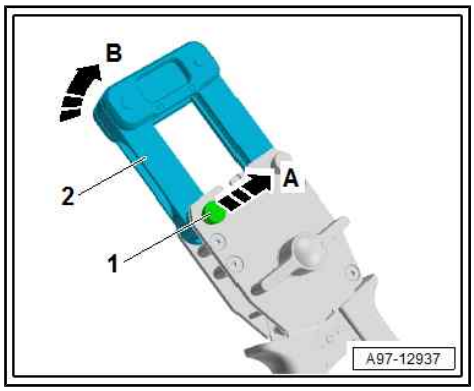

- Fit crimp anvil and crimp indentor to crimping pliers as follows (items must correspond to the wire cross section):
- Open crimping pliers from wiring harness repair set - VAS 631 003- .
- Pull locking pin -1- out in direction of -arrow A- as far as stop.
- Open adapter -2- in direction of -arrow B-.

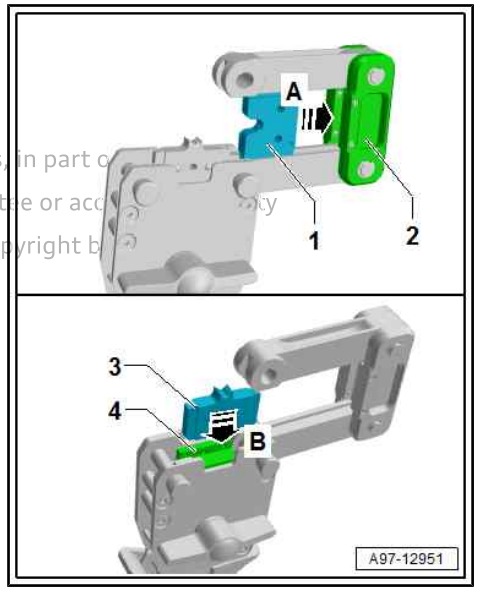

- Slide crimp indentor -1- into mounting -2- on adapter -arrow A- until it engages audibly.
- Slide crimp anvil -3- into mounting -4- on crimping pliers -arrow B- until it engages audibly.

Protected by copyright. Copying for private or commercial purposes, in part or
permitted unless authorised by AUDI AG. AUDI AG does not guarantee or acc
with respect to the correctness of information in this document. Copyright b

– Close adapter -1- in direction of -arrow A-.

– Push locking pin -2- in as far as stop (in direction of -arrow B-).

– Release a length of approx. 20 cm of the defective wire on both sides of the repair joint.

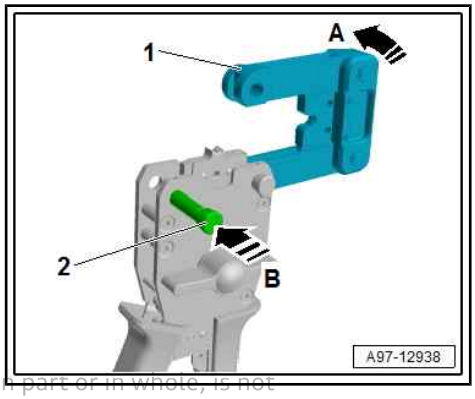

Caution

Risk of damage to electrical wiring.

- *Take care when releasing wiring from wrapped wiring harnesses.*

Protected by copyright. Copying for private or commercial purposes, in part or in whole, is not permitted unless authorised by AUDI AG. AUDI AG does not guarantee or accept any liability with respect to the correctness of information in this document. Copyright by AUDI AG.

– If necessary, remove wrapping of wiring harness.

– Use cable cutters from wiring harness repair set - VAS 631 003- to cut out/off damaged section of wiring.

Note

- *If cutting out the damaged section of wiring makes the two ends of the original vehicle wire too short for repair with a single butt connector, insert a corresponding length of yellow repair wire with two butt connectors.*
- *If you are repairing a single wire with a crimped contact, place the yellow repair wire next to the damaged vehicle wire and cut to the length required.*

– Set adjustable stop in jaws of wire stripper from wiring harness repair set - VAS 631 003- to the length that needs to be stripped.

- 10 mm^2 wires: 14 mm
- 16 mm^2 wires: 16.5 mm

– Working from the front, insert end of wire into jaws of wire stripper as far as it will go and press stripper together completely.

– Open wire stripper again and take out stripped end of wire.

- The insulation must be cut off cleanly and be pulled off the wire.
- There must be no remaining insulation on stripped wires.
- Strands must not be damaged.

– For repair, take a suitable butt connector and a heat-shrink hose from the wiring harness repair set - VAS 631 003- .

– Slide heat-shrink hose onto one of the wires.

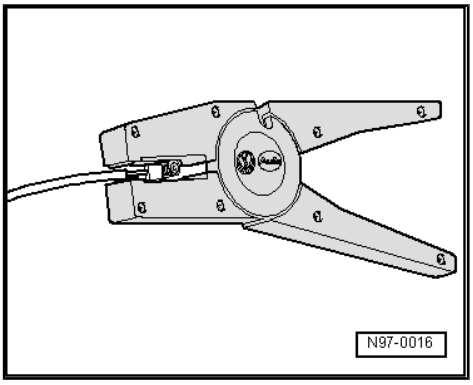

– Position first crimping location of butt connector -1- centrally on the crimp anvil -2-.

• Dimension -a- must be the same on both sides

– Turn handle -3- anti-clockwise -arrow- until butt connector -1- is fixed in place.

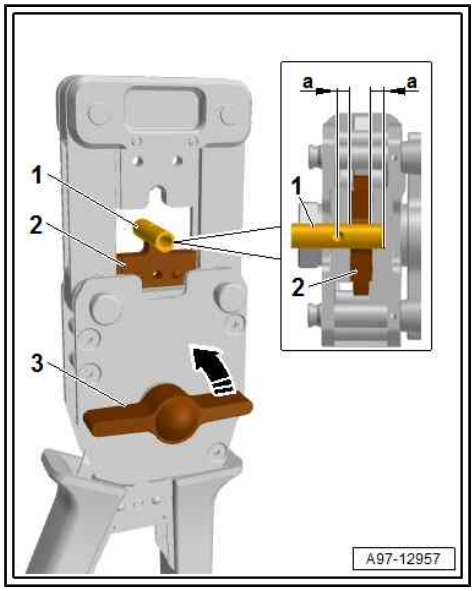

– Slide wire -2- (stripped at end) into butt connector -1- as far as stop -arrow-.

• All strands must be inserted in the butt connector

– Fully open and close crimping pliers several times until the crimp anvil moves into the starting position on its own.

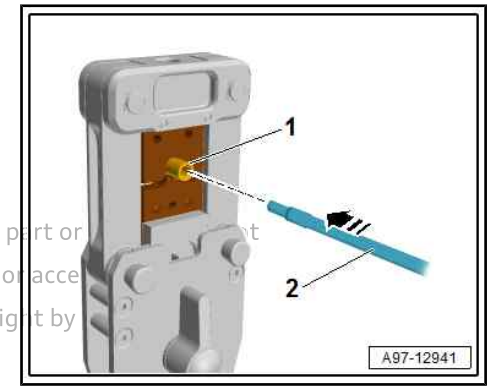

ected by copyright. Copying for private or commercial purposes, in part or t
permitted unless authorised by AUDI AG. AUDI AG does not guarantee or acce
with respect to the correctness of information in this document. Copyright by

Note

Wiring insulation must not also be crimped.

– Repeat crimping of wire with butt connector on other side, as described.

– Pull locking pin out as far as stop in direction of -arrow A-.

– Open adapter in direction of -arrow B-.

– Remove crimped butt connector.

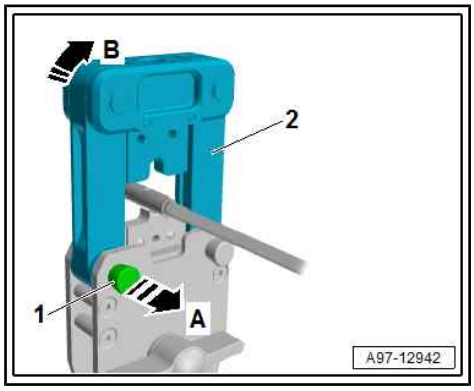

Correct result of crimping procedure

A - 10 mm^2, star crimp

B - 16 mm^2, B crimp

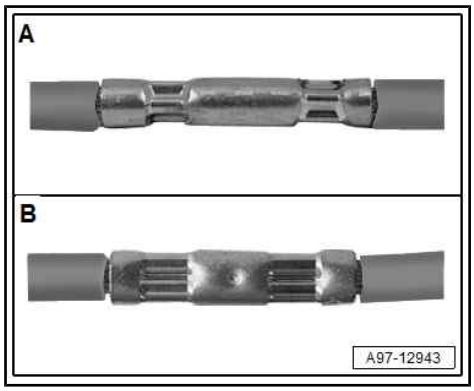

After crimping, hot air blower must be used to shrink-fit butt connector to prevent moisture from ingressing.

– Attach shrink element for hot air blower - VAS 1978/15A- to hot air blower, 220 V/ 50 Hz - VAS 1978/14A- .

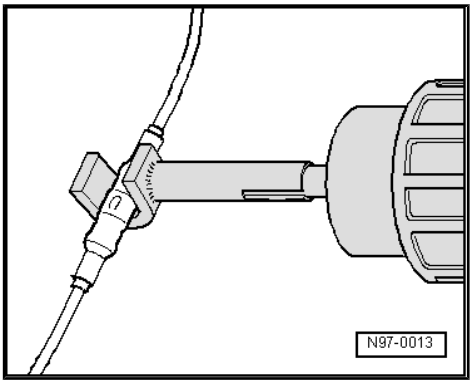

Caution

Risk of damage to surrounding components.

- *When shrink-fitting butt connectors, take care not to damage any other pipes/wires, plastic parts or insulating material with hot nozzle of hot air blower.*
- *Always observe operating instructions for hot air blower.*

– Position heat-shrink hose -1- centrally above butt connector -2- by feeling for its contours.

• Dimension -a- must be approximately the same on both sides

– Working from centre outwards, use hot air blower to heat up heat-shrink hose in longitudinal direction until it is completely sealed and adhesive emerges at ends.

• The finished repair -3- should look as shown in the illustration.

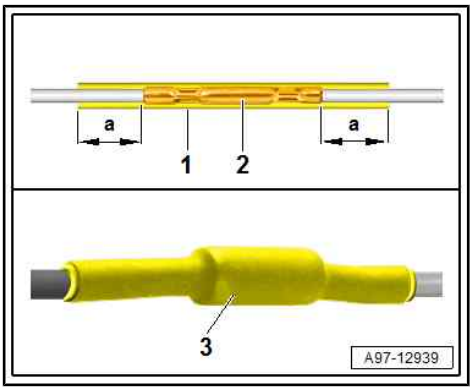

Note

- *If several wires have to be repaired, make sure butt connectors are not directly adjacent to one another. Offset the butt connectors slightly to restrict the size of the wiring harness.*
- *If the repair location was previously wrapped, yellow adhesive tape must be wrapped around this location again on completion of repair.*
- *If necessary, secure the repaired wiring harness with a cable tie to prevent rattling noises when the vehicle is driven.*

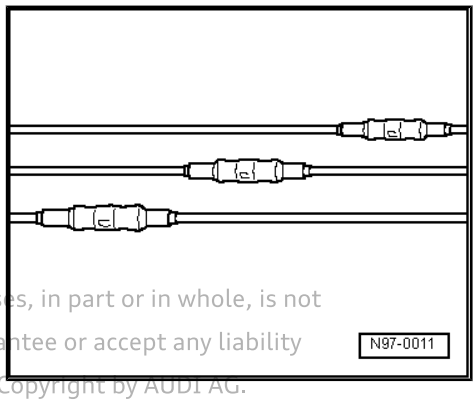

Protected by copyright. Copying for private or commercial purposes, in part or in whole, is not permitted unless authorised by AUDI AG. AUDI AG does not guarantee or accept any liability with respect to the correctness of information in this document. Copyright by AUDI AG.

Releasing early

– Press lever -1- downwards -arrow A-.

– Turn handle -2- clockwise -arrow B- until crimp anvil is in starting position.

If it is not possible to release early by hand, proceed as follows:

– Press lever -1- downwards -arrow A-.

– Fit key from wiring harness repair set - VAS 631 003- on bolt -3- on reverse side.

– Turn key anti-clockwise -arrow C- until crimp anvil is in starting position.

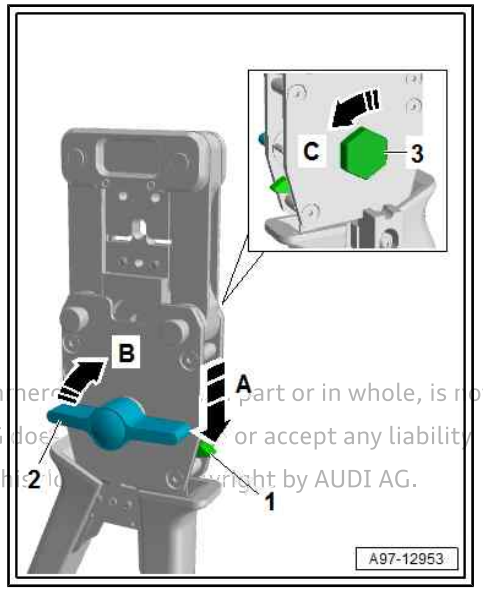

Protected by copyright. Copying for private or commercial purposes, in part or in whole, is not permitted unless authorised by AUDI AG. AUDI AG does not make or accept any liability with respect to the correctness of information in this document. Copyright by AUDI AG.

Caution

Butt connectors that are released early must not be used.

2.4.11 Repairing 2.5 mm², 4 mm² or 6 mm² aluminium wiring with single butt connector

Special tools and workshop equipment required

- Hot air blower - VAS 1978/14A- from wiring harness repair set - VAS 1978 B-

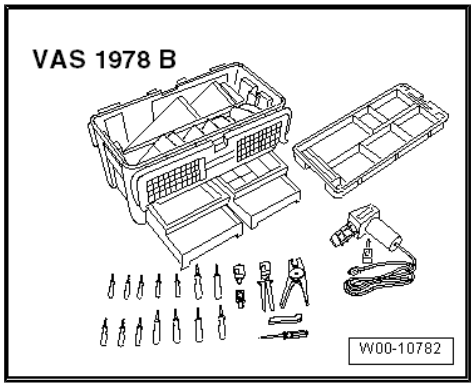

- Shrink element for hot air blower - VAS 1978/15A- from wiring harness repair set - VAS 1978 B-
- Wiring harness repair set - VAS 631 001-

Note

- *Copper repair wires (supplied by the metre) with a cross section of 2.5 mm², 4 mm² or 6 mm² can be used for repairs.*
- *Single copper repair wires with crimped contacts are also available for repairs.*

Procedure

Protected by copyright. Copying for private or commercial purposes, in part or in whole, is not permitted unless authorised by AUDI AG. AUDI AG does not guarantee or accept any liability with respect to the correctness of information in this document. Copyright by AUDI AG.

– Fit crimp anvil, crimp indentor and contact positioner with contact bar (items must correspond to wire cross section) to hand pliers as follows:
– Open hand pliers from wiring harness repair set - VAS 631 001- .
– Pull locking pin -1- out in direction of -arrow A- as far as stop.
– Open mounting -2- in direction of -arrow B-.

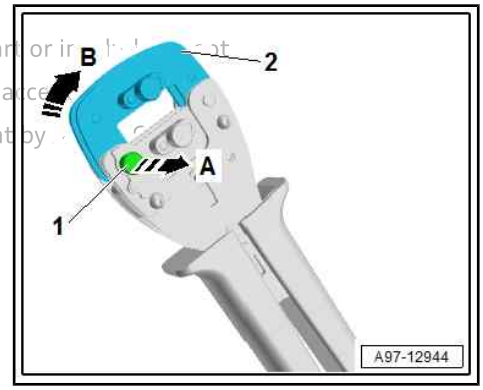

– Fit crimp anvil -1- in hand pliers so that crimp anvil -1- is flush with front of pliers.
– Secure crimp anvil with pins -2- -arrow A- and tighten knurled screw hand-tight.
– Fit crimp indentor -3- (corresponding to crimp anvil) in mounting.
– Secure crimp indentor with pins -4- -arrow B- and tighten knurled screw hand-tight.

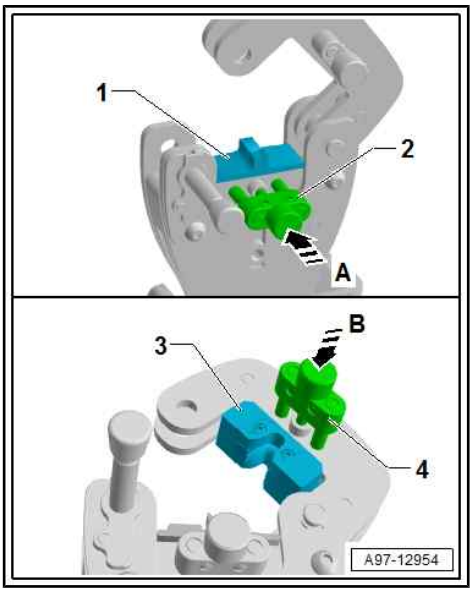

– Close adapter -1- in direction of -arrow A-.
– Push locking pin -2- in as far as stop (in direction of -arrow B-).

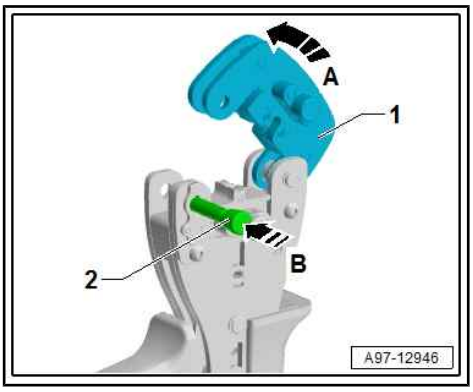

– Insert contact bar -1- in contact positioner -2-.
– Position contact positioner with contact bar in hand pliers -5-. To do so, slide hole in contact positioner -2- over knurled screw -4-.
– Screw in knurled screw -3- hand-tight.
– Release a length of approx. 20 cm of the defective wire on both sides of the repair joint.

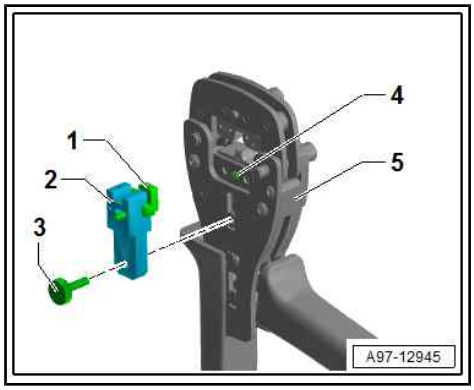

Caution

Risk of damage to electrical wiring.

- *Take care when releasing wiring from wrapped wiring harnesses.*

– If necessary, remove wrapping of wiring harness.

– Use wire strippers from wiring harness repair set - VAS 631 001- to cut out damaged section of wiring.

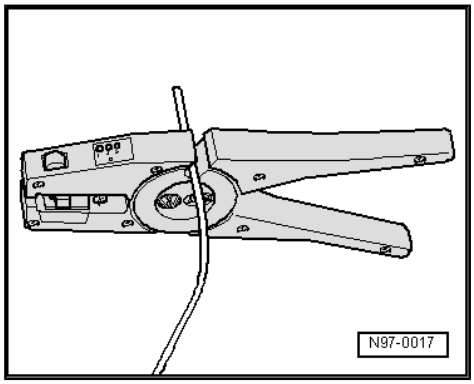

Note

If cutting out the damaged section of wiring makes the two ends of the original vehicle wire too short for repair with a single butt connector, insert a corresponding length of yellow copper repair wire with two butt connectors.

– Working from the front, insert end of wire as far as it will go into mounting in jaws of pliers (mounting must correspond to wire cross section).
– Press pliers fully together.
– Open wire stripper again and take out stripped end of wire.
• The insulation must be cut off cleanly and be pulled off the wire.
• There must be no remaining insulation on stripped wires.
• Strands must not be damaged.
– For repair, take a suitable butt connector and heat-shrink hose from the wiring harness repair set - VAS 631 001- .
– Slide heat-shrink hose onto one of the wires.

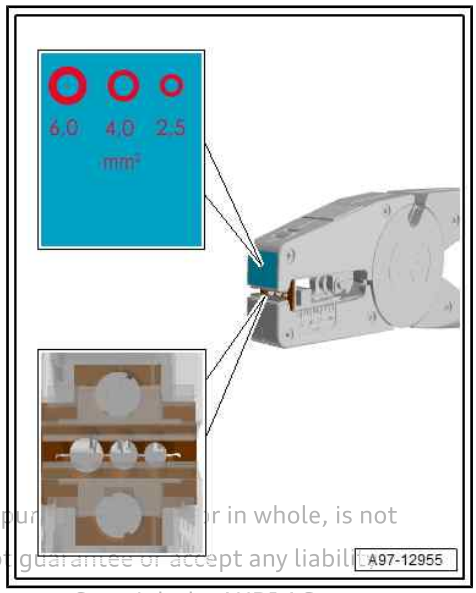

Protected by copyright. Copying for private or commercial pur[illegible]r in whole, is not permitted unless authorised by AUDI AG. AUDI AG does not guarantee or accept any liabil[illegible] with respect to the correctness of information in this document. Copyright by AUDI AG.

– Insert butt connector -1- in contact positioner -2-.

• Butt connector -1- must be flush with contact positioner -2- -arrow A-

– Slide contact bar -3- in direction of -arrow B- as far as stop. This will fix butt connector -1- in place.

• Lugs -4- on butt connector -1- must engage in groove -5- on contact bar -3-.

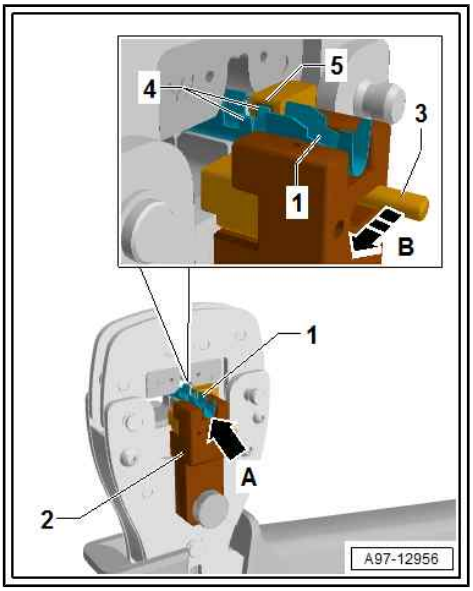

– Slide wire -2- (stripped at end) into butt connector -1- as far as stop -arrow-.

• All strands must be inserted in the butt connector

• End of insulation must extend no further than front edge of insulating crimp

– Fully close hand pliers until they open again on their own.

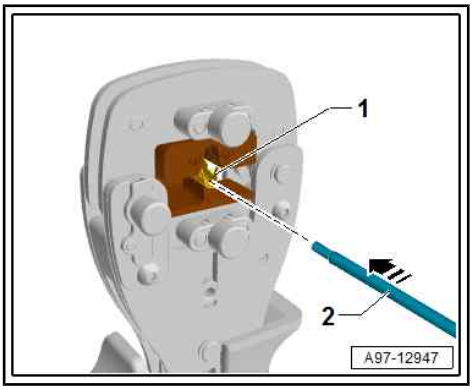

– Move contact bar -2- across as far as stop in direction of -arrow-.

– Remove butt connector -1- from contact positioner -3-.

– Turn hand pliers over for the second crimp.

– Repeat crimping of wire with butt connector on other side, as described.

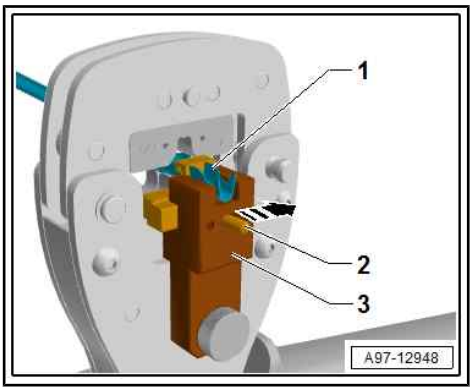

– Pull locking pin -1- out in direction of -arrow A- as far as stop.

– Open mounting -2- in direction of -arrow B-.

– Remove crimped butt connector.

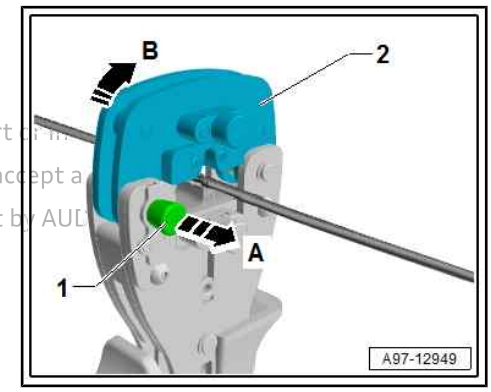

Protected by copyright. Copying for private or commercial purposes, in part is n
permitted unless authorised by AUDI AG. AUDI AG does not guarantee or accept a
with respect to the correctness of information in this document. Copyright by AUD

Correct result of crimping procedure

- End of wire must be 0.1 mm … 1.0 mm in front of crimp, dimension -a-
- End of insulation must not be crimped.
- End of insulation must extend no further than front edge of insulating crimp -arrows-

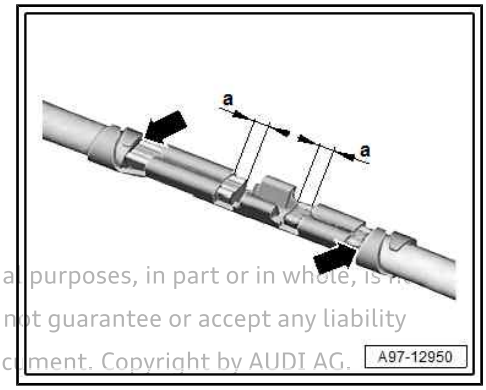

Protected by copyright. Copying for private or commercial purposes, in part or in whole, is not permitted unless authorised by AUDI AG. AUDI AG does not guarantee or accept any liability with respect to the correctness of information in this document. Copyright by AUDI AG.

After crimping, hot air blower must be used to shrink-fit butt connector to prevent moisture from ingressing.

– Attach shrink element for hot air blower - VAS 1978/15A- to hot air blower, 220 V/ 50 Hz - VAS 1978/14A- .

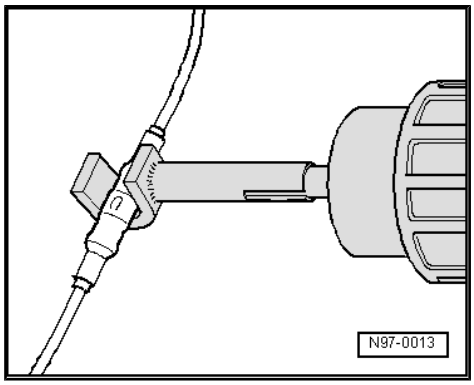

Caution

Risk of damage to surrounding components.

- *When shrink-fitting butt connectors, take care not to damage any other pipes/wires, plastic parts or insulating material with hot nozzle of hot air blower.*
- *Always observe operating instructions for hot air blower.*

– Position heat-shrink hose -1- centrally above butt connector -2-.

- Dimension -a- must be approximately the same on both sides

– Working from centre outwards, use hot air blower to heat up heat-shrink hose in longitudinal direction until it is completely sealed and adhesive emerges at ends.

- The finished repair -3- should look as shown in the illustration.

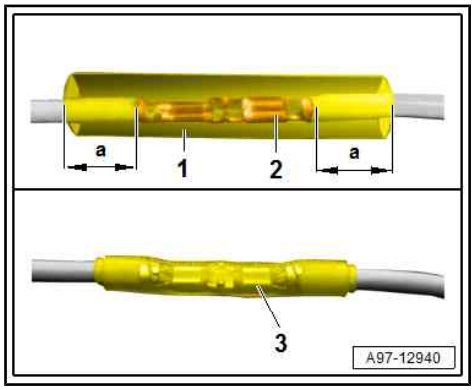

Note

- *If several wires have to be repaired, make sure butt connectors are not directly adjacent to one another. Offset the butt connectors slightly to restrict the size of the wiring harness.*
- *If the repair location was previously wrapped, yellow adhesive tape must be wrapped around this location again on completion of repair.*
- *If necessary, secure the repaired wiring harness with a cable tie to prevent rattling noises when the vehicle is driven.*

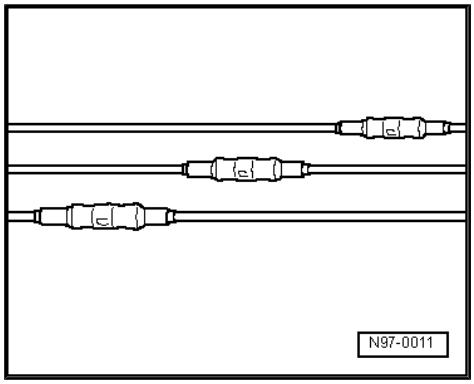

2.5 Repairing fibre optic cables

Caution

The fibre optic cables must not be severely kinked. Bending radius must not be less than 25 mm.

The fibre optic cables must not located over sharp edges.

The ends of the fibre optic cables must not be made dirty or touched with bare hands.

The fibre optic cables must not be heated.

Twisting two fibre optic cables or a fibre optic cable with a copper wire is not permitted.

Protect connector and connecting cable from dust. Use protective caps from set.

⇒ “2.5.1 Determining location of fault”, page 131

⇒ “2.5.2 Preparing fibre optic cables with fibre-optic conductor repair set VAS 6223 ”, page 132

⇒ “2.5.3 Preparing fibre optic cables with fibre-optic conductor repair set VAS 6223A ”, page 136

⇒ “2.5.4 Separating fibre optic cable from wiring harness connector”, page 141

2.5.1 Determining location of fault

Special tools and workshop equipment required

- Vehicle diagnostic tester

Procedure

The precise location of the fault is very difficult to find. A damaged fibre optic cable must be renewed by fitting a new cable parallel to the defective one.

Note

- *You can use the “Guided Fault Finding” to find out where (between which components) the fibre optic cabling is damaged.*
- *A fibre optic cable that has already been repaired is coloured “yellow”.*

Protected by copyright. Copying for private or commercial purposes, in part or in whole, is not permitted unless authorised by AUDI AG. AUDI AG does not guarantee or accept any liability with respect to the correctness of information in this document. Copyright by AUDI AG.

– Carry out “Loop break diagnosis” function in “Offboard Diagnostic Information System Service” ⇒ Vehicle diagnostic tester.

– Remove components concerned.

– Disconnect connectors from components.

– Prepare fibre optic cable:

- ⇒ “2.5.2 Preparing fibre optic cables with fibre-optic conductor repair set VAS 6223 ”, page 132
- ⇒ “2.5.3 Preparing fibre optic cables with fibre-optic conductor repair set VAS 6223A ”, page 136

2.5.2 Preparing fibre optic cables with fibre-optic conductor repair set - VAS 6223-

Special tools and workshop equipment required

- Fibre-optic conductor repair set - VAS 6223-

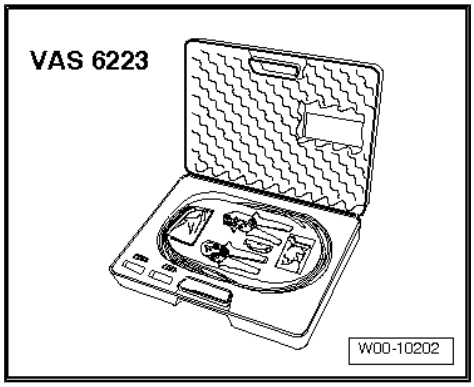

- Cutting pliers - VAS 6228-

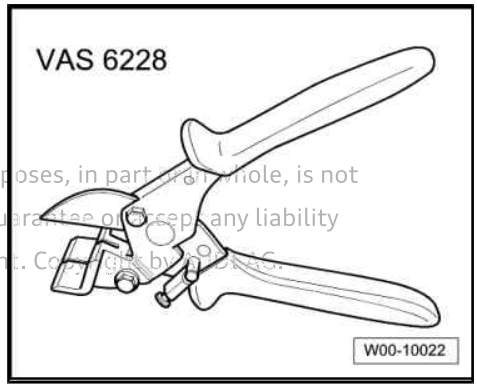

Protected by copyright. Copying for private or commercial purposes, in part or whole, is not permitted unless authorised by AUDI AG. AUDI AG does not guarantee or accept any liability with respect to the correctness of information in this document. Copyright by AUDI AG.

Checking remaining cut indicator

– Start by checking remaining cut indicator:

- Cutting unit of pliers for fibre optic cable - VAS 6223/1- can be used for approx. 1,260 cuts. The cutter is turned for each further cut.
- The remaining cut indicator -arrow- shows the last 150 cuts available.
- Once no further cuts are available the cutting unit is blocked. It must then be renewed ⇒ Operating instructions for pliers for fibre optic cable - VAS 6223/1- .

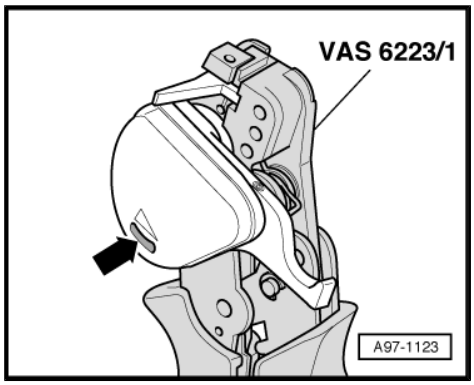

Preparing pliers for fibre optic cable - VAS 6223/1- for use

– Release transport safeguard on cutter by slackening off hexagon socket head bolt -arrow-.

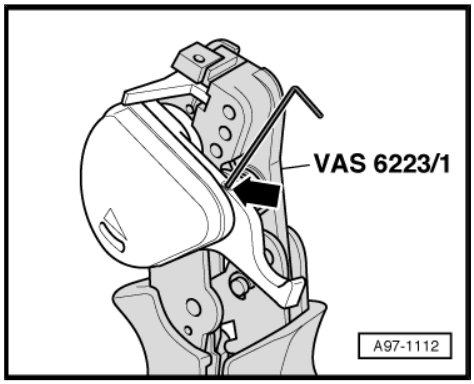

Cutting fibre optic cable to length

– Establish length of fibre optic cable required.

– Open pliers for fibre optic cable - VAS 6223/1- and insert fibre optic cable -1- in cutting point.

– Close cutting pliers to cut fibre optic cable to length.

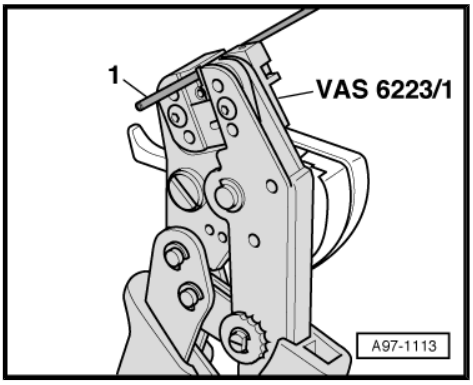

Stripping

– Open pliers for fibre optic cable - VAS 6223/1- .

• Stripping lever must be in lower position -arrow-.

– Insert fibre optic cable -1- in stripper unit.

• Fibre optic cable must be flush with back of cutting pliers.

Protected by copyright. Copying for private or commercial purposes, in part or in whole, is not permitted unless authorised by AUDI AG. AUDI AG does not guarantee or accept any liability with respect to the correctness of information in this document. Copyright by AUDI AG.

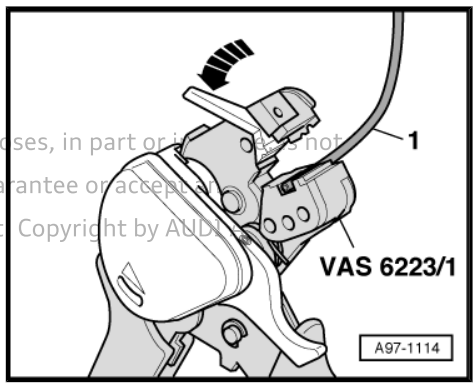

– Close pliers for fibre optic cables - VAS 6223/1- as far as fixed stop and keep closed.

– Swivel up stripping lever -arrow-.

– Open cutting pliers and take out fibre optic cable -1-.

– Detach separated section of insulation from fibre optic cable.

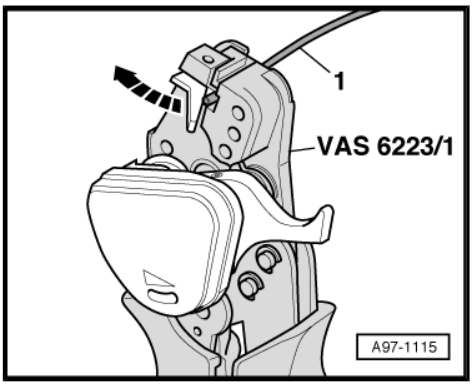

Precision cutting (cutting end face of fibre optic cable)

– Insert fibre optic cable -1- in cutting point.

• Insulation must make contact with cutting point stop -arrow-.

– Close pliers for fibre optic cable - VAS 6223/1- .

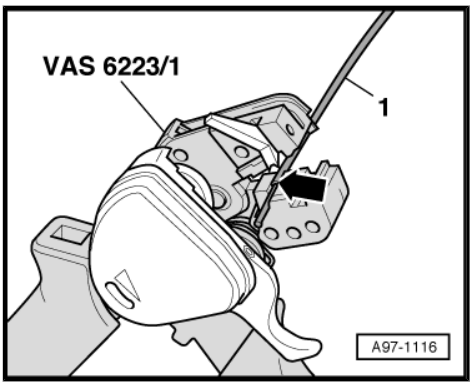

– Press down cutting unit -arrow-.
– Open pliers for fibre optic cable - VAS 6223/1- and take out fibre optic cable -1-.

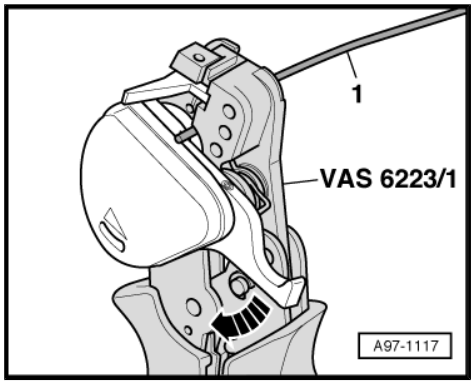

Note

Fibre optic cable should only be placed on an absolutely clean surface.

Activating transport safeguard

– Close pliers for fibre optic cable - VAS 6223/1- .
– Secure hexagon socket head bolt -arrow- for transportation safeguard at cutter.

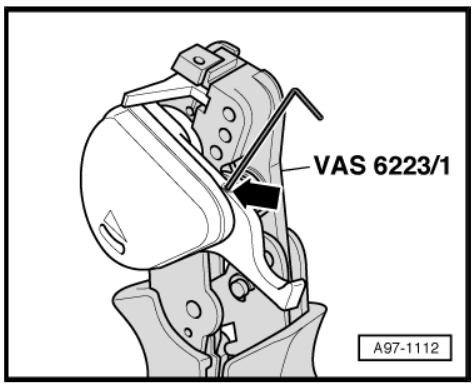

Attaching brass pin contact to fibre optic cable

– Open locking lever on pliers for fibre optic cable - VAS 6223/2- -arrow 1- and -arrow 2-.

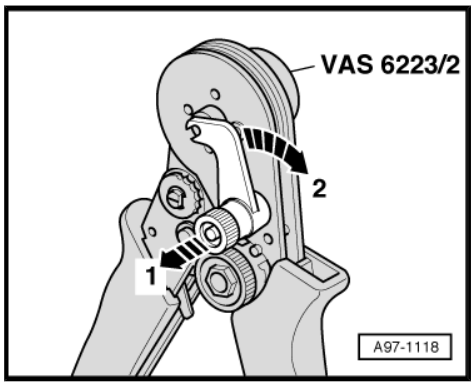

– Insert brass pin contact -1- in mounting.
– Close locking lever on pliers for fibre optic cable - VAS 6223/2- -arrow-.

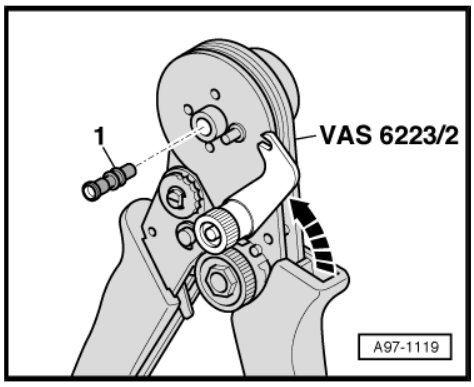

Protected by copyright. Copying for private or commercial purposes, in part or in whole, is not permitted unless authorised by AUDI AG. AUDI AG does not guarantee or accept any liability with respect to the correctness of information in this document. Copyright by AUDI AG.

– Slide fibre optic cable -2- into brass pin contact -1- as far as spring-loaded stop.
– Push in fibre optic cable further as far as fixed stop and close pliers for fibre optic cable - VAS 6223/2- .
– Open pliers for fibre optic cable and take out fibre optic cable with brass pin contact.

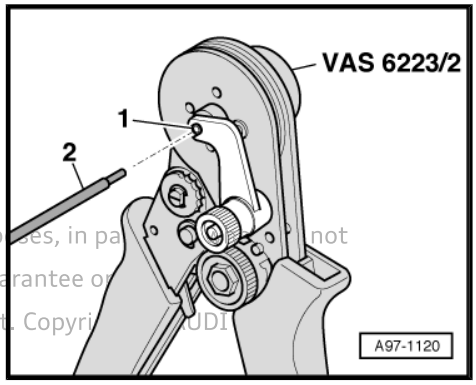

Protected by copyright. Copying for private or commercial purposes, in part or in whole, is not permitted unless authorised by AUDI AG. AUDI AG does not guarantee or assume liability for the accuracy of the information in this document. Copyright by AUDI AG.

Caution

The fibre optic cables must not be severely kinked. Bending radius must not be less than 25 mm.

– Check proper attachment of brass pin contact -2- to fibre optic cable -1-.
• There must be 4 crimping points visible on brass pin.
• It should not be possible to detach brass pin contact from fibre optic cable by hand.
• End face of fibre optic cable is located 0.01 ... 0.1 mm behind brass pin contact (visual inspection).

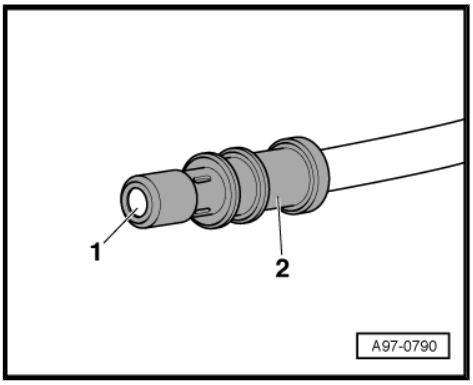

Note

♦ *Plug-in couplings are available for connection of fibre optic cable ⇒ Electronic parts catalogue .*
♦ *For fitting new fibre optic cable in wiring harness connector, refer to* *⇒ page 141* *.*

Fitting corrugated tube onto fibre optic cable

– Cut corrugated tube to appropriate length.
• Use cutting pliers - VAS 6228- or a sharp knife for cutting.
• Do NOT use side-cutters to cut through the corrugated tube.
• The corrugated tube must be cut at the top of the corrugation -arrow- and not at the bottom.

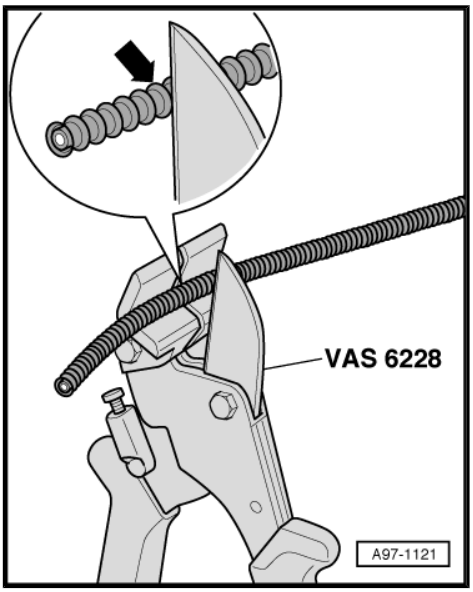

– Insert fibre optic cable in pliers for corrugated tube installation - VAS 6223/10- as shown.
– Apply pliers for corrugated tube installation at slot in corrugated tube.
– Slide pliers for corrugated tube installation along slot on circumference of corrugated tube. This will insert the fibre optic cable into the corrugated tube.

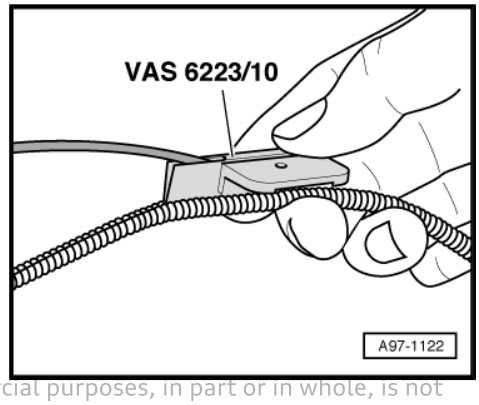

Protected by copyright. Copying for private or commercial purposes, in part or in whole, is not permitted unless authorized by AUDI AG. AUDI AG does not guarantee or accept any liability with respect to the correctness of information in this document. Copyright by AUDI AG.

2.5.3 Preparing fibre optic cables with fibre-optic conductor repair set - VAS 6223A-

Special tools and workshop equipment required

♦ Fibre-optic conductor repair set - VAS 6223A-

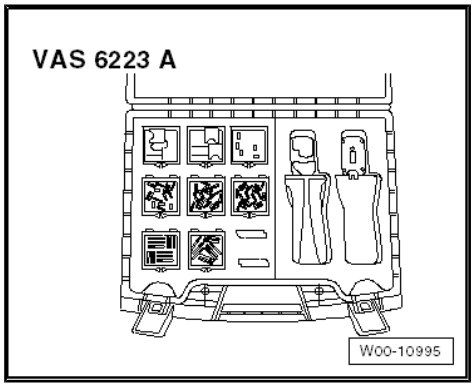

♦ Cutting pliers - VAS 6228-

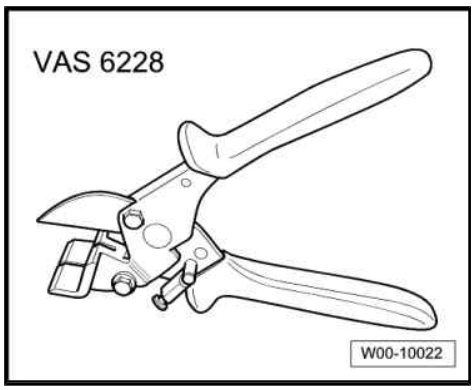

♦ Vehicle diagnostic tester

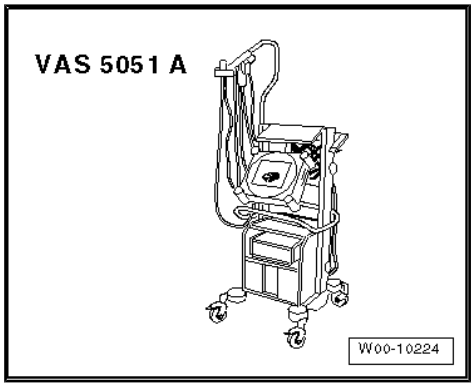

Caution

The fibre optic cables must not be severely kinked. Bending radius must not be less than 25 mm.

The fibre optic cables must not located over sharp edges.

The ends of the fibre optic cables must not be made dirty or touched with bare hands.

The fibre optic cables must not be heated.

Twisting two fibre optic cables or a fibre optic cable with a copper wire is not permitted.

Protect connector and connecting cable from dust. Use protective caps from set.

Protected by copyright. Copying for private or commercial purposes, in part or in whole, is not permitted unless authorised by AUDI AG. AUDI AG does not guarantee or accept any liability with respect to the correctness of information in this document. Copyright by AUDI AG.

Mounting tool head for pliers for fibre optic cable - VAS 6223/1-

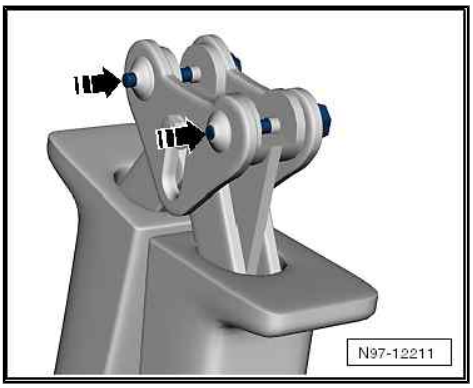

– Press out locking pins -arrows-.
– Fit tool head -arrow- and press locking pins back.

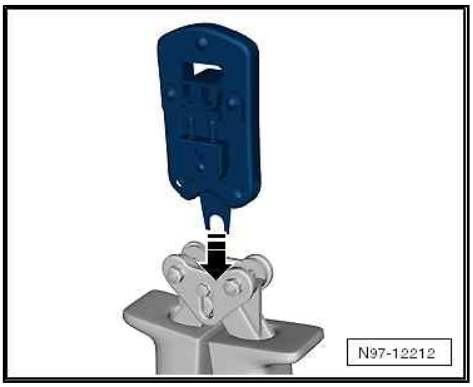

Cutting fibre optic cable to length

– Determine required length of fibre optic cable.
– Open pliers for fibre optic cable and insert fibre optic cable -1- into cutting point.
– Close pliers for fibre optic cable to cut fibre optic cable to length.

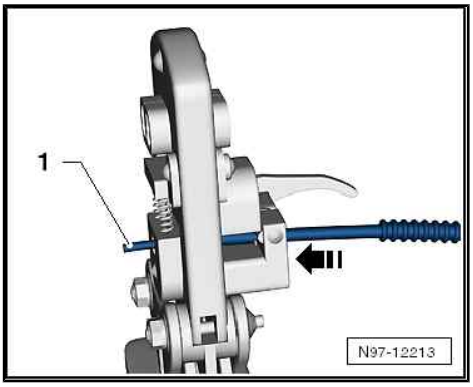

Stripping

– Open pliers for fibre optic cable - VAS 6223/1- .
– Bring stripping lever into lower position -arrow-.
– Insert fibre optic cable into stripping point.
• Fibre optic cable must be flush with back of cutting pliers.

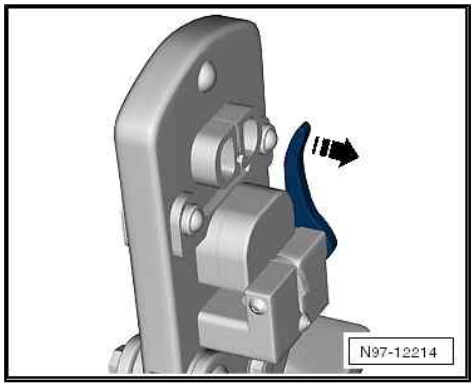

– Close pliers for fibre optic cables as far as fixed stop and keep closed.
– Swivel stripping lever upwards -arrow- and remove fibre optic cable.

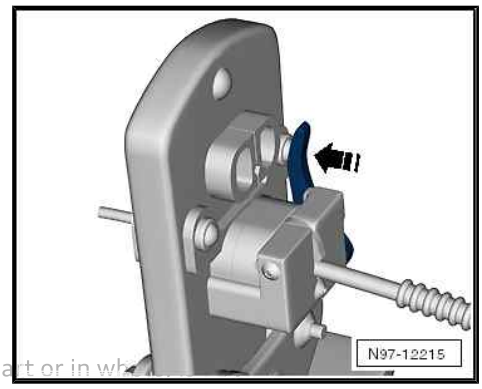

Protected by copyright. Copying for private or commercial purposes, in part or in whole, is not permitted unless authorised by AUDI AG. AUDI AG does not guarantee or accept any liability with respect to the correctness of information in this document. Copyright by AUDI AG.

Precision cutting (cutting end face of fibre optic cable)

– Insert fibre optic cable -1- into cutting point.
• Insulation must make contact with cutting point stop.

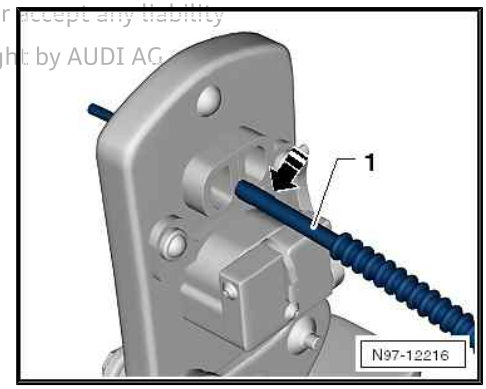

– Close pliers for fibre optic cable - VAS 6223/1- and remove cable.
– Perform a visual check of cable -1- to ensure that it has been cut correctly and that there is no burr on end face.

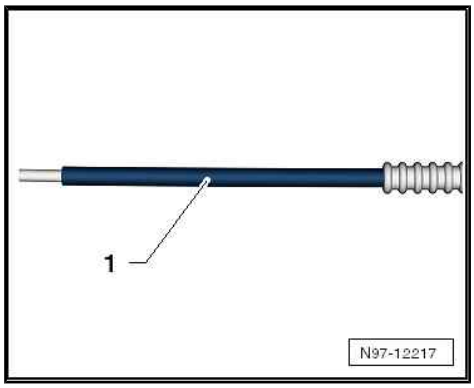

Note

♦ *Fibre optic cable should only be placed on an absolutely clean surface or held by hand.*
♦ *Use protective cap if there is a danger of end face of fibre optic cable becoming dirty.*

Attaching brass pin contact to fibre optic cable

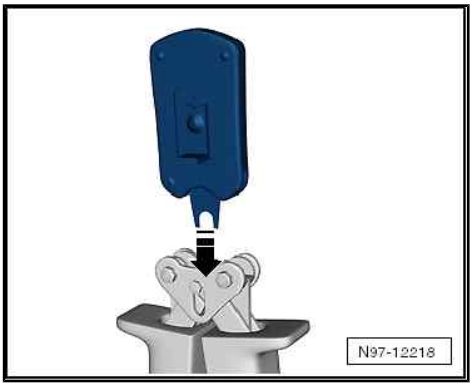

Protected by copyright. Copying for private or commercial purposes, in part or entirety, is not permitted unless authorised by AUDI AG. AUDI AG does not guarantee or accept any liability with respect to the correctness of information in this document. Copyright by AUDI AG.

– Change tool head -arrow-.
– Move securing clip on pliers for fibre optic cable -arrow- so that the word “STIFT” (pin) is visible.

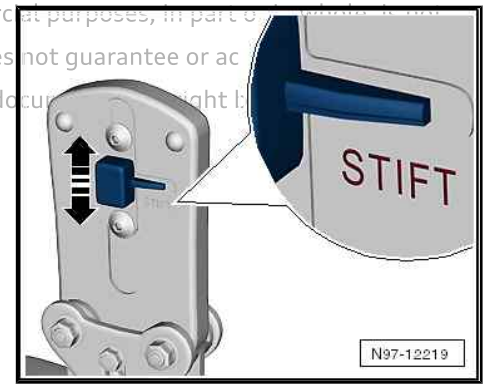

– Insert a brass pin contact -1- in mounting.
– Close locking lever on pliers for fibre optic cable -arrow-.

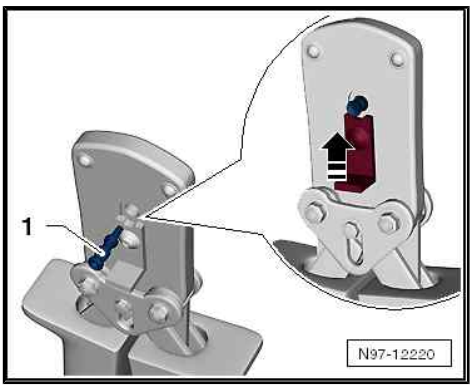

– Slide fibre optic cable into brass pin contact -arrow- as far as spring-loaded stop and close pliers for fibre optic cable .
– Open pliers for fibre optic cable and remove fibre optic cable with brass pin contact.

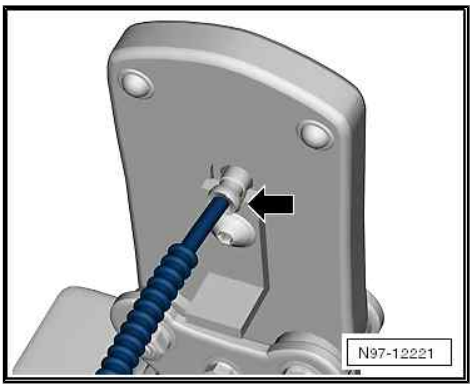

> ⚠ **Caution**
>
> ***Fibre optic cables must not be kinked or excessively bent (minimum bending radius 25 mm).***

– Check that brass pin contact -2- is properly attached to fibre optic cable -1-.

- There must be 4 crimping points visible on brass pin.
- It should not be possible to detach brass pin contact from fibre optic cable by hand.
- End face of fibre optic cable is located 0.01 ... 0.1 mm behind brass pin contact (visual inspection).

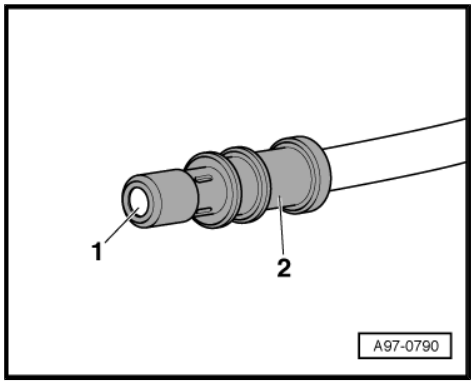

Note

♦ *Plug-in couplings are available for connection of fibre optic cable ⇒ Electronic parts catalogue .*

♦ *For fitting new fibre optic cable in wiring harness connector, refer to* *⇒ page 141* *.*

Fitting corrugated tube onto fibre optic cable

– Cut corrugated tube to appropriate length.

- Use cutting pliers - VAS 6228- or a sharp knife for cutting.
- Do NOT use side-cutters to cut through the corrugated tube.
- The corrugated tube must be cut at the top of the corrugation -arrow- and not at the bottom.
- When being fitted, corrugated tube must engage audibly in fibre optic cable housing.

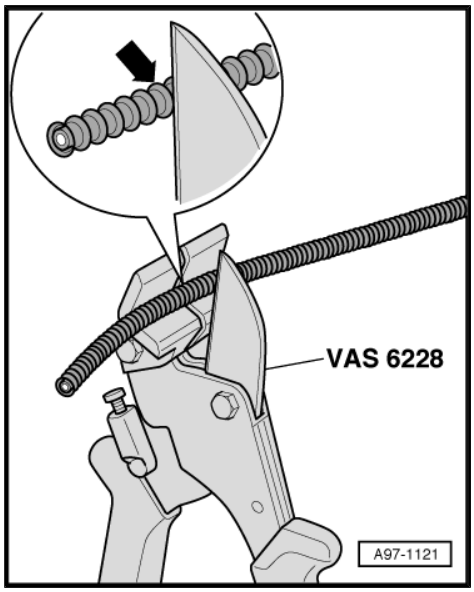

– Insert fibre optic cable into pliers for corrugated tube installation - VAS 6223/10- , as shown in illustration.

– Apply pliers for corrugated tube installation at slot in corrugated tube.

– Slide pliers for corrugated tube installation along slot on circumference of corrugated tube. This will insert the fibre optic cable into the corrugated tube.

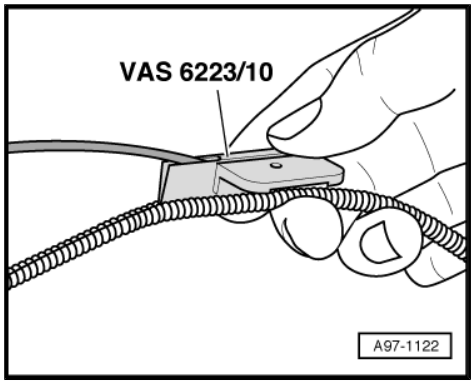

Protected by copyright. Copying for private or commercial purposes, in part or in whole, is not permitted unless authorised by AUDI AG. AUDI AG does not guarantee or accept any liability with respect to the correctness of information in this document. Copyright by AUDI AG.

2.5.4 Separating fibre optic cable from wiring harness connector

Removing

– Unplug connector for fibre optic cable from appropriate control unit.

– Release catch in connector for fibre optic cable -arrow-.

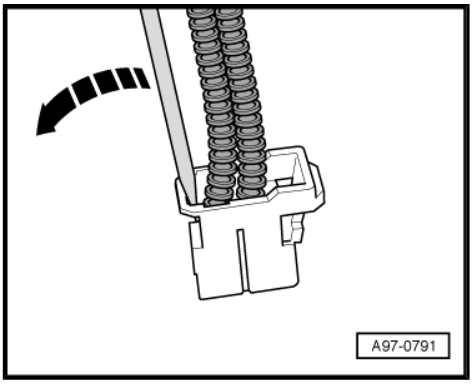

– Pull basic module -2- for fibre optic cable out of connector housing -1-.

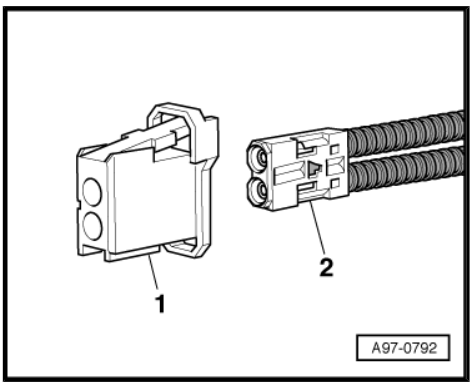

> **Caution**
>
> ♦ *Mark assignment of fibre optic cable -5- to corresponding sockets in module -1- with coloured dots.*
>
> ♦ *Pay attention to arrows -3- on basic module for "IN" and "OUT" assignment.*

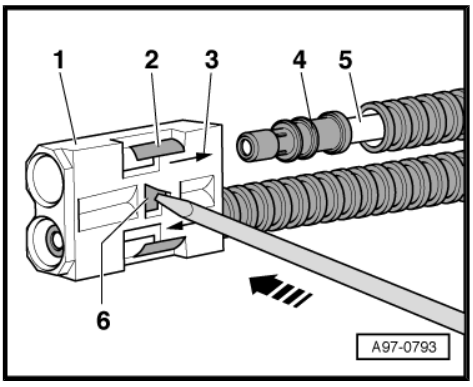

– Release secondary catch -6- (blue pin) using a small screwdriver -arrow-.

– Release retaining tab -2- and pull fibre optic cable -5- with brass pin -4- out of module -1-.

Installing

Installation is carried out in reverse order; note the following:

> **Note**
>
> ♦ *Seal off open connector plug -2- for fibre optic cable with protective cap for cable connector - VAS 6223/9- -item 1-.*
>
> ♦ *Protective cap prevents contamination of or mechanical damage to end face of fibre optic cable which would impair light transmission.*

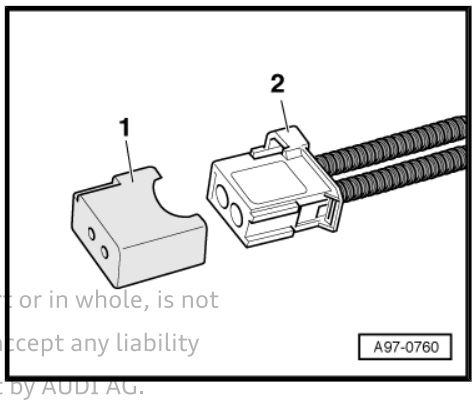

– Fit fibre optic cable in accordance with markings.

Protected by copyright. Copying for private or commercial purposes, in part or in whole, is not permitted unless authorised by AUDI AG. AUDI AG does not guarantee or accept any liability with respect to the correctness of information in this document. Copyright by AUDI AG.

2.6 Repairing aerial wires

⇒ “2.6.1 Repair set, aerial cable VAS 6720”, page 142

⇒ “2.6.2 Renewing an entire aerial wire”, page 152

2.6.1 Repair set, aerial cable VAS 6720

Checking aerial wire ⇒ page 142

Changing tool head ⇒ page 142

Cutting aerial wire ⇒ page 143

Stripping screening ⇒ page 143

Stripping outer sleeve ⇒ page 146

Stripping inner insulation ⇒ page 147

Crimping central wire ⇒ page 148

Crimping outer wire ⇒ page 150

This document is copyright. Copying for private or commercial purposes, in part or in whole, is not permitted unless authorised by AUDI AG. AUDI AG does not guarantee or accept any liability with respect to the correctness of information in this document. Copyright by AUDI AG.

Special tools and workshop equipment required

- Repair set, aerial cable - VAS 6720-

The repair set, aerial cable - VAS 6720- makes it possible to maintain optimum repair standards for repairs to aerial wiring RG 174 (blue) and RKT 031 (black). The set includes the necessary stripping tools and crimping tools for each of the aerial cables. In addition, the case includes all the individual parts needed to connect the original connector in nearly production quality. This requires only the 0-coded connector (green). All other connecting wires for the various infotainment systems can be found in ETKA (EL-electrical connection elements) in chart 035-XX. The different adapter aerial wires are specific to vehicle models and must always be ordered separately. All the individual parts are listed in the chart for re-ordering. The compartments in the case are labelled with the part numbers of the spare materials. The repair set is based on the existing set of adapters and pliers in VAS 1978B.

Note

Additional information ⇒ Operating manual of Repair set, aerial cable - VAS 6720-

Checking aerial wire:

Before beginning repairs, determine which aerial wire is affected using gauge.

- -1- System RG 174 = blue
- -2- System RTK 031 = grey

The positioners of the tool heads of both systems are colour coded accordingly.

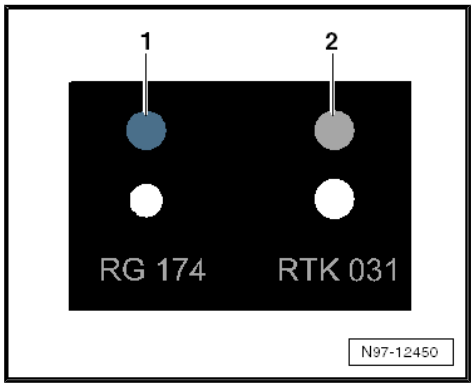

Changing tool head:

– Select appropriate tool head after checking aerial wire ⇒ page 142 .

– Open pliers completely.

– Release both locking pins -arrows- from grips of pliers and pull them out.

Protected by copyright. Copying for private or commercial purposes, in part or in whole, is not permitted unless authorised by AUDI AG. AUDI AG does not guarantee or assume any liability with respect to the correctness of information in this document. Copyright by AUDI AG.

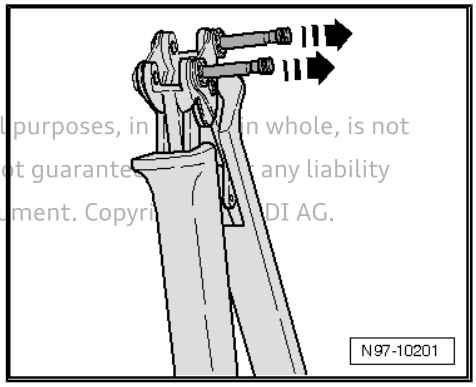

– Insert required tool head from above -arrow- into grips.

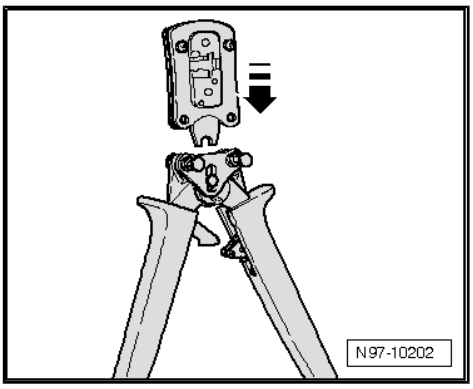

– Press pins -arrows- in to lock tool head into grips.

Cutting aerial wire:

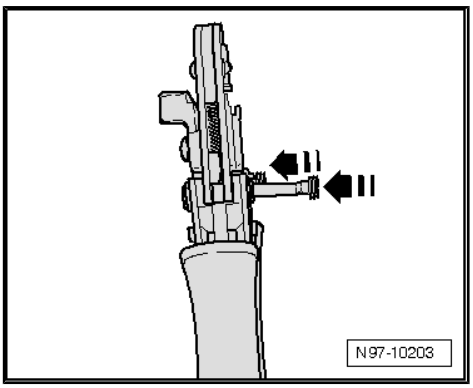

– Insert aerial wire -2- into cutting mechanism -1-.
– Close tool and open it again.
– Pull aerial wire out of cutting mechanism.

Stripping screening:

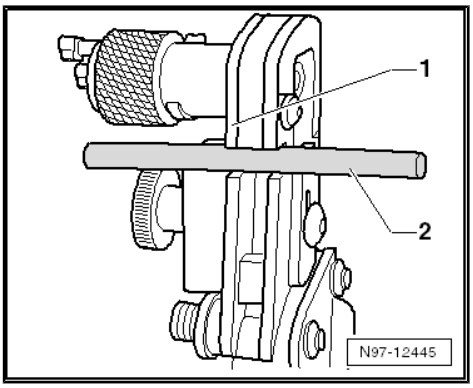

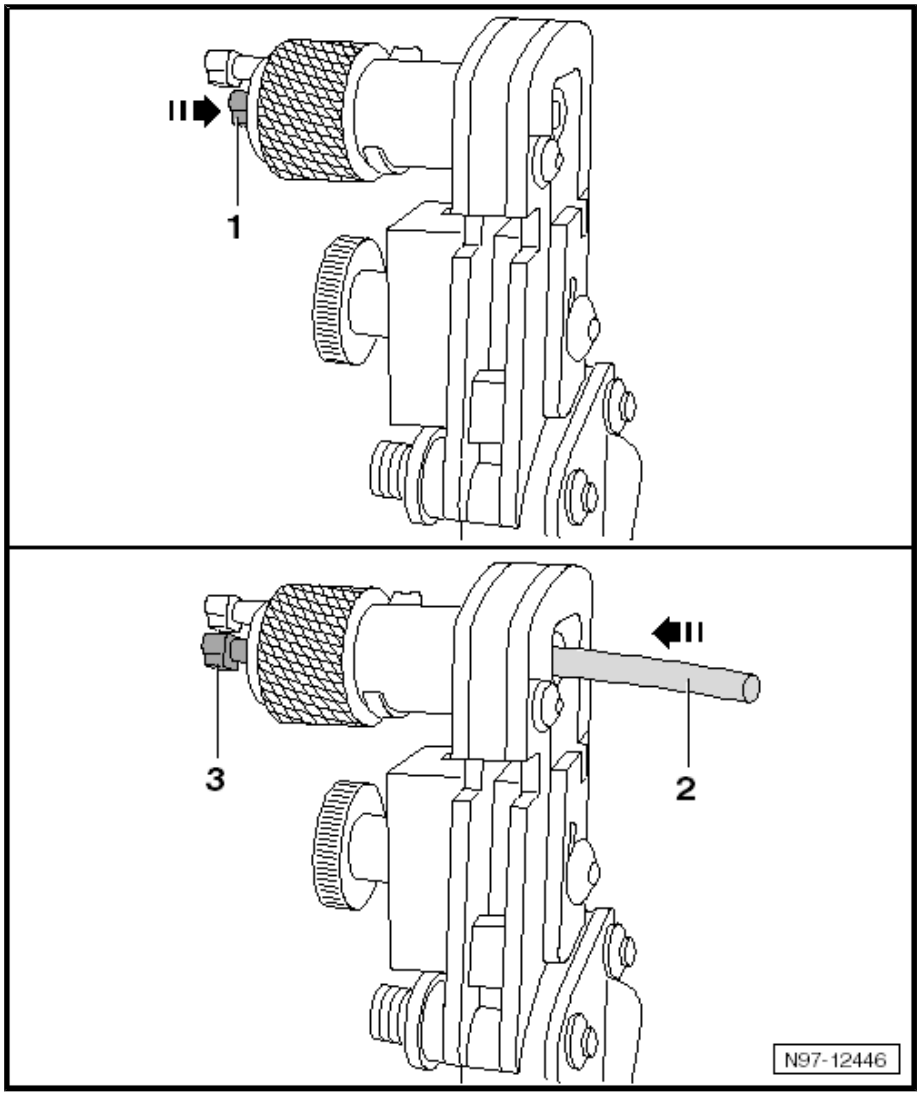

– Push locating pin -1- into rotary cutter as far as stop.
– Push aerial wire -2- into rotary cutter as far as stop. The entire locating pin -3- can now be seen again.

Protected by copyright. Copying for private or commercial purposes, in part or in whole, is not permitted unless authorised by AUDI AG. AUDI AG does not guarantee or accept any liability with respect to the correctness of information in this document. Copyright by AUDI AG.

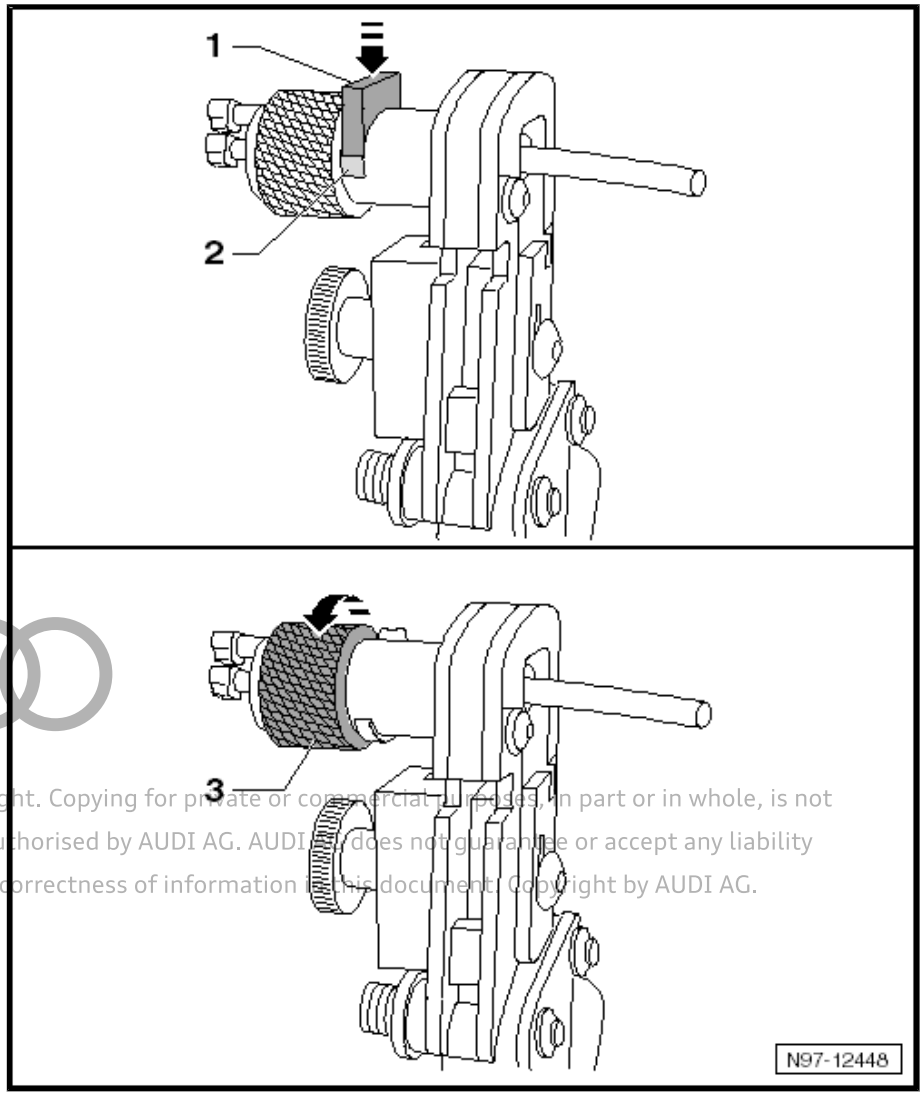

Protected by copyright. Copying for private or commercial purposes, in part or in whole, is not permitted unless authorised by AUDI AG. AUDI AG does not guarantee or accept any liability with respect to the correctness of information in this document. Copyright by AUDI AG.

– Push blade holder -1- against shaft of rotary cutter until it engages. The gap -2- beneath the blade holder is now completely closed.
– Hold aerial wire securely so that it cannot turn.
– Turn rotary cutter -3- approximately 2 times in direction of arrow until it rotates easily.

Protected by copyright. Copying for private or commercial purposes, in part or in whole, is not permitted unless authorised by AUDI AG. AUDI AG does not guarantee or accept any liability with respect to the correctness of information in this document. Copyright by AUDI AG.

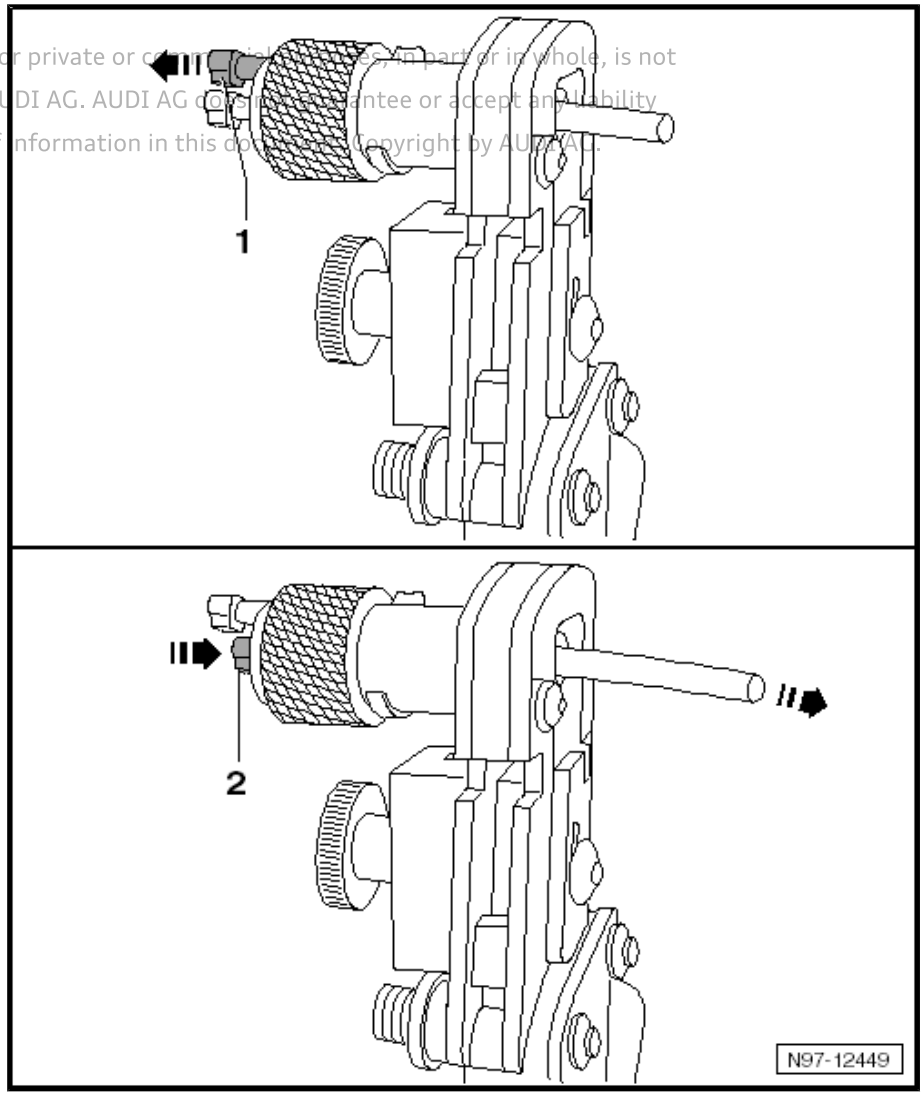

- Pull release pin -1-. The blade holder will be released and will detach from aerial wire.
- Push locating pin -2- into rotary cutter as far as stop. The aerial wire will be pressed out of rotary cutter.
- Remove screening from aerial wire.
- Remove any pieces of insulation remaining in rotary cutter.

Stripping outer sleeve:

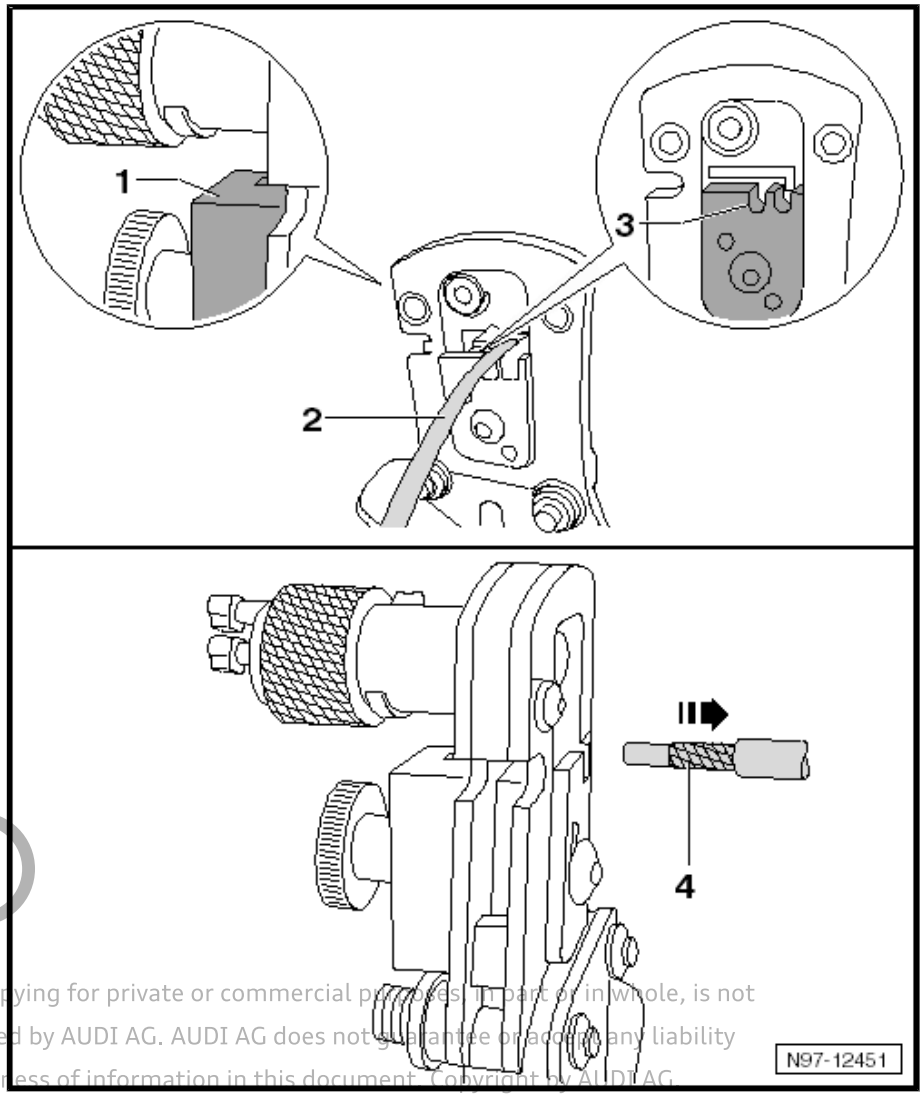

Protected by copyright. Copying for private or commercial purposes, in part or in whole, is not permitted unless authorised by AUDI AG. AUDI AG does not guarantee or accept any liability with respect to the correctness of information in this document. Copyright by AUDI AG.

– Insert aerial wire -2- in retainer -3- into tool head as far as stop -1-.
– Close tool and open it again.
– Pull out aerial wire -4-.

Stripping inner insulation:

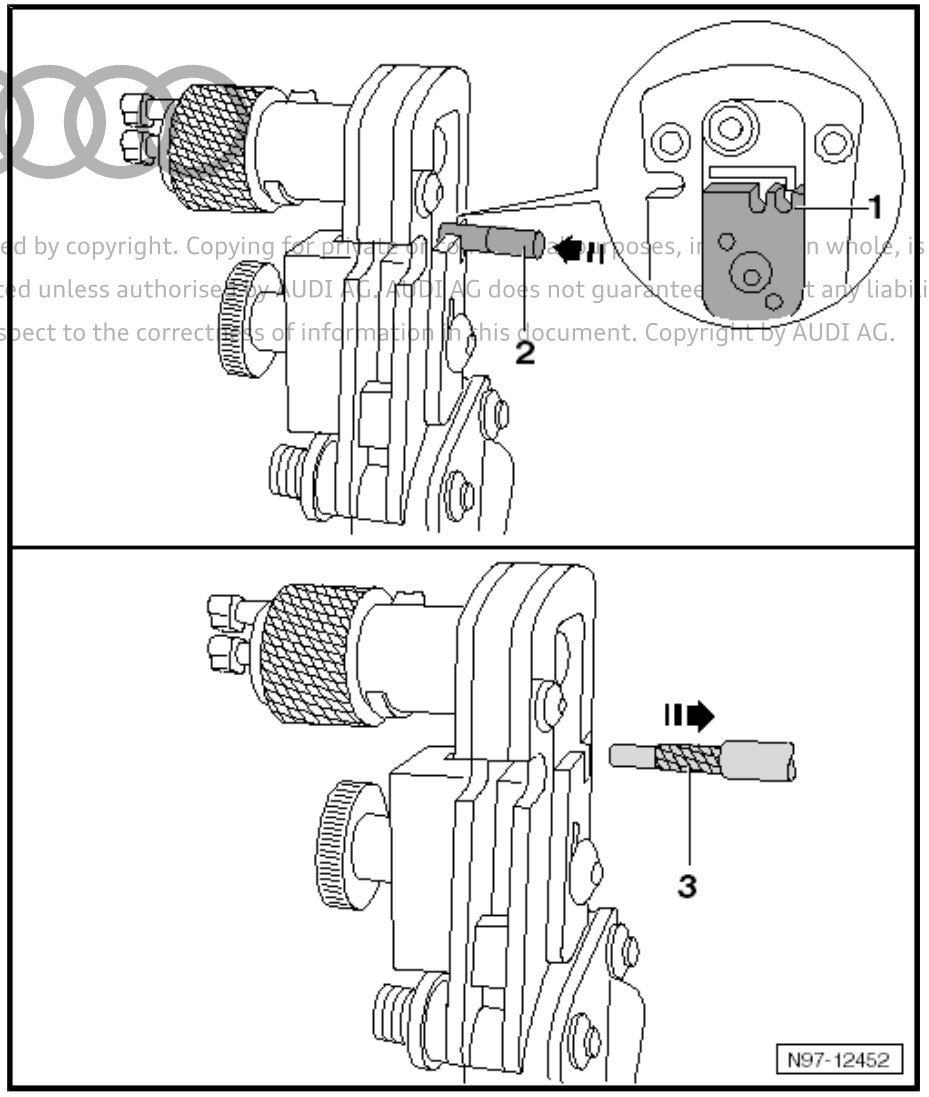

Protected by copyright. Copying for private or commercial purposes, in part or in whole, is not permitted unless authorised by AUDI AG. AUDI AG does not guarantee or assume any liability with respect to the correctness of information in this document. Copyright by AUDI AG.

– Insert aerial wire -2- in retainer -1- into tool head as far as stop.
– Close tool and open it again.
– Pull out aerial wire -3-.

Crimping central wire:

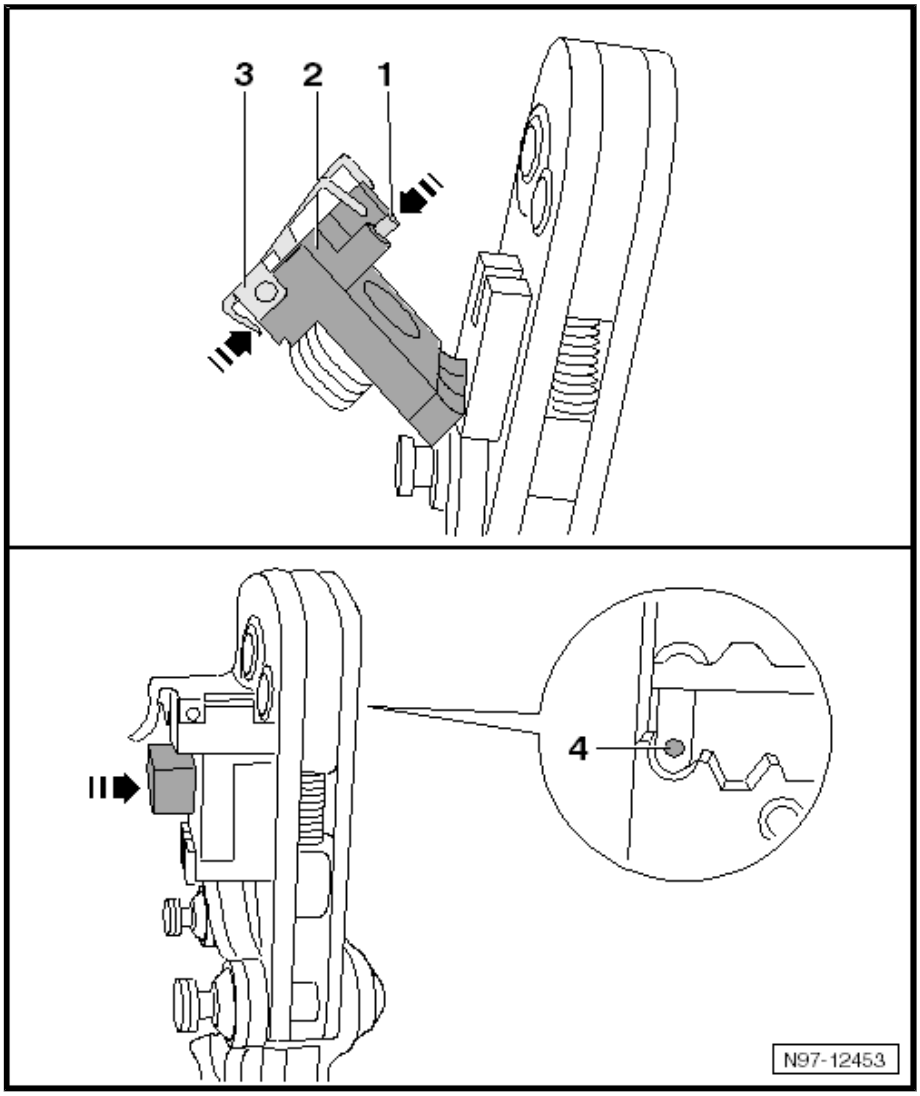

– Select appropriate tool head after checking aerial wire ⇒ page 142 .
– Unfold adjustable positioner -2-.
– Open up positioning piece -3- (it will tilt upward).
– Push inner contact -1- into adjustable positioner as far as stop and detach positioning piece. The inner contact will be fixed in place.
– Fold in adjustable positioner, the inner contact -4- will now be in position in the tool head.

Protected by copyright. Copying for private or commercial purposes, in part or in whole, is not permitted unless authorised by AUDI AG. AUDI AG does not guarantee or accept any liability with respect to the correctness of information in this document. Copyright by AUDI AG.

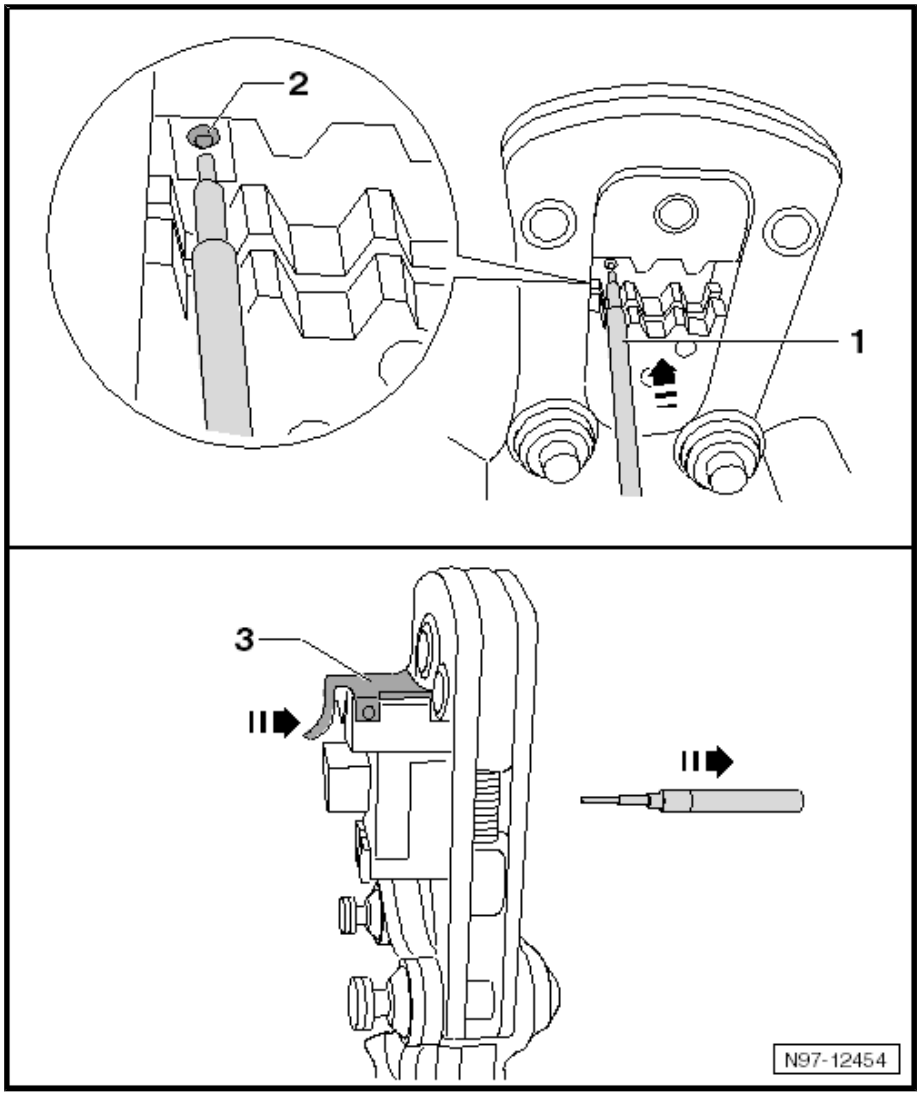

– Insert aerial wire -1- into inner contact -2- in tool head (hold adjustable positioner in place).
– Close tool until it opens by itself.
– Open positioning piece -3- and pull out aerial wire.

Crimping outer wire:

Protected by copyright. Copying for private or commercial purposes, in part or in whole, is not permitted unless authorised by AUDI AG. AUDI AG does not guarantee or accept any liability with respect to the correctness of information in this document. Copyright by AUDI AG.

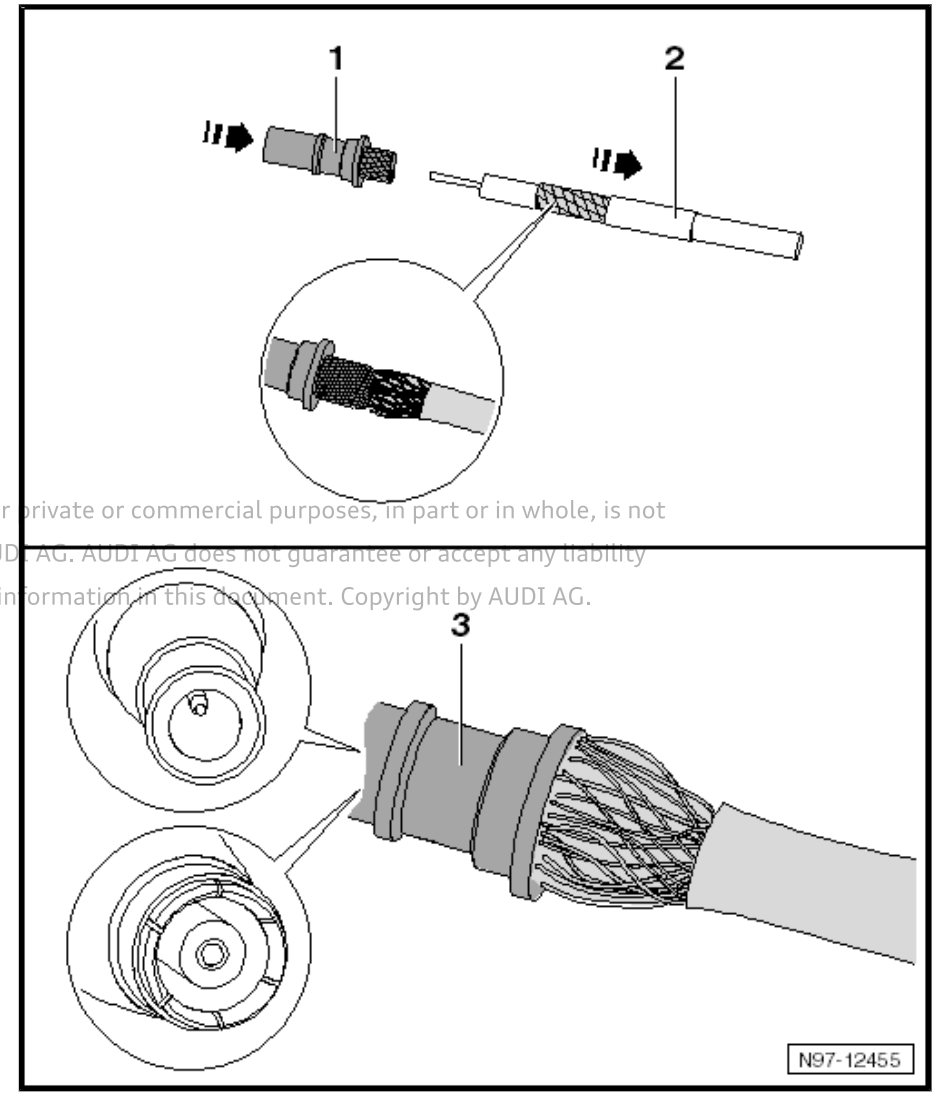

Protected by copyright. Copying for private or commercial purposes, in part or in whole, is not permitted unless authorised by AUDI AG. AUDI AG does not guarantee or accept any liability with respect to the correctness of information in this document. Copyright by AUDI AG.

– Push sleeve -2- and outer contact -1- over central wire. The knurled contact part must be pushed under shielding -3- but over the aluminium foil.
– Push outer contact -4- on all the way, ensuring that socket/pin is seated correctly.

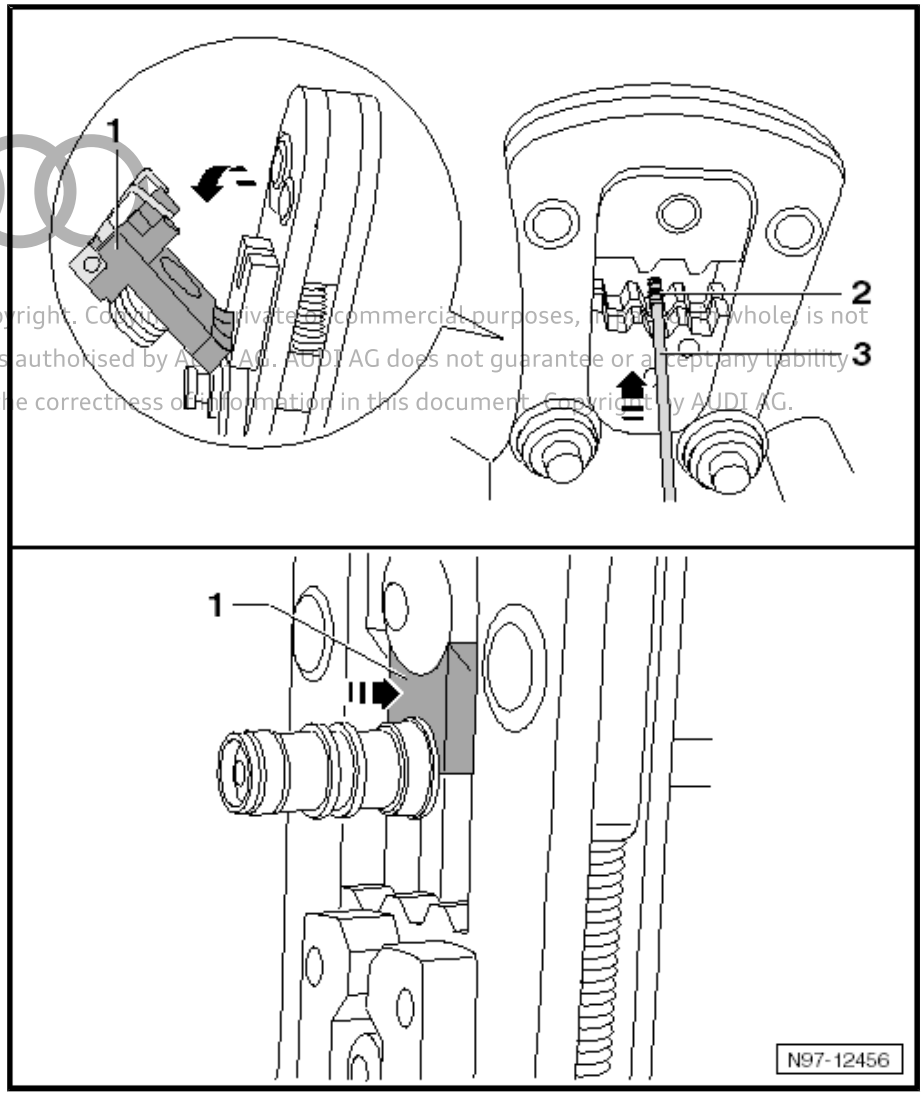

Protected by copyright. Copying for private or commercial purposes, in part or in whole, is not permitted unless authorised by AUDI AG. AUDI AG does not guarantee or accept any liability with respect to the correctness of information in this document. Copyright by AUDI AG.

– Push on sleeve -3- as far as outer contact.
– Open tool and unfold adjustable positioner -1-.
– Position attached outer contact -2- in tool head in middle notch on edge surface -4-.
– Close tool and open it again.
– Pull out aerial wire.

2.6.2 Renewing an entire aerial wire

A repair method has been developed for renewing aerial wires. Instead of a complete aerial wire, connecting wires of different lengths and various adapter wires are now available as replacement parts.

Replacement parts ⇒ Electronic parts catalogue; Special catalogue “Electrical connecting elements”; Accessories; Sub-group 35 from chart 035-20 onwards .

Note

- *Do not repair aerial wires. The wiring must be renewed using connecting wires and adapter wires (available as genuine replacement parts).*
- *These genuine replacement parts are suitable for all wire cross-sections and aerial wires which have to be renewed.*
- *The replacement wires can be used for all previously fitted wiring cross-sections on all Audi models.*
- *All adapter wires and connecting wires are suitable for all transmission and reception signals.*
- *The repair method can also be used for testing and service installation purposes (e.g. retrofitting).*

Protected by copyright. Copying for private or commercial purposes, in part or in whole, is not permitted unless authorised by AUDI AG. AUDI AG does not guarantee or accept any liability with respect to the correctness of information in this document. Copyright by AUDI AG.

Special tools and workshop equipment required

- -1- Adapter wire for connection to radio; length: approx. 30 cm

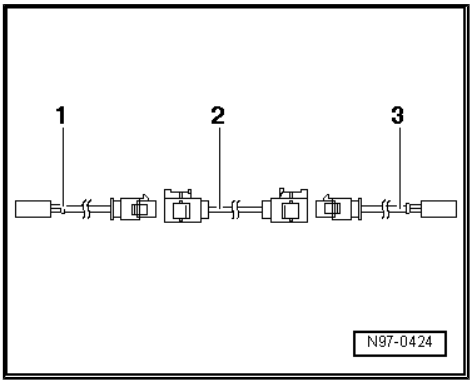

- -2- Connecting wire; various lengths available
- -3- Adapter wire for connection to aerial; length: approx. 30 cm

Procedure

Example: Aerial wire from radio to aerial defective

– Unplug connectors of defective aerial wire from units.
– Determine routing of defective aerial wire in vehicle and measure out overall length of aerial connection to be replaced in vehicle.

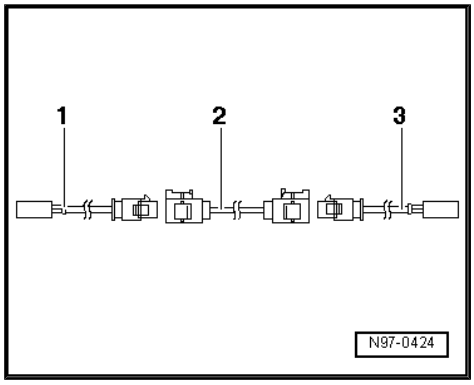

- Total length of aerial connection = length of required adapter wires -1 and 3- plus connecting wire -2-.
- Subtract 60 cm from total length of aerial connection measured to calculate required length of connecting wire needed.
- Obtain necessary adapter wires and connecting wire (with calculated length) as genuine replacement parts ⇒ Electronic parts catalogue .
- Cut connectors off defective aerial wire.
- Leave rest of defective aerial wire in vehicle.
- Connect adapter wires to units in vehicle.
- Fit connectors with a piece of foam sheathing to prevent rattling noise.
- Lay and secure connecting wire parallel to old aerial wire.

Note

Aerial wires must not be kinked or bent excessively. Bending radius must not be less than 50 mm.

- Attach connecting wire to adapter wires.
- To prevent rattling noises, apply a suitable piece of foam sheathing to aerial connectors.
- Check operation.

2.7 Repairing connector housings and electrical connectors

2.7.1 Notes on repairing connector housings and electrical connectors

Note

- *Observe general information on repairs to the vehicle electrical system ⇒ page 95 .*
- *The appropriate crimp contacts are assigned to the connector housings on the basis of the part number stamped on the connector housing. ⇒ Electronic parts catalogue; Special catalogue "Electrical connecting elements"; Electrical equipment; Sub-group 71 from chart 970-00 onwards .*
- *Always renew damaged connector housings.*

Protected by copyright. Copying for private or commercial purposes, in part or in whole, is not permitted unless authorised by AUDI AG. AUDI AG does not guarantee or accept any liability with respect to the correctness of information in this document. Copyright by AUDI AG.

2.7.2 Repairing contacts in connector housings

Procedure

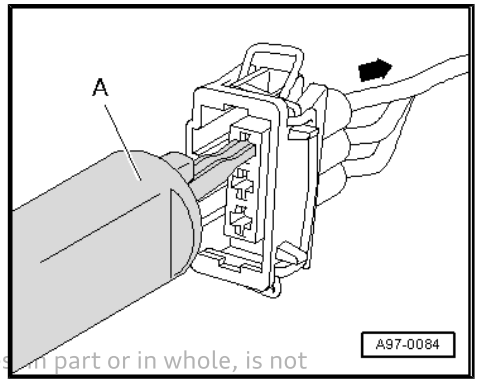

- If applicable, start by opening or releasing secondary locking device on connector housing ⇒ page 157 .
- Use appropriate release tool to release connector (primary locking device) ⇒ page 157 .
- Take hold of wire and pull connector towards rear and out of connector housing (if applicable with wire seal) -arrow-.

Protected by copyright. Copying for private or commercial purposes, in part or in whole, is not permitted unless authorised by AUDI AG. AUDI AG does not guarantee or accept any liability with respect to the correctness of information in this document. Copyright by AUDI AG.

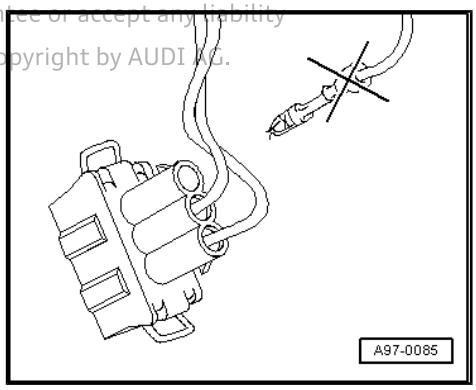

- Cut old connector off original vehicle wiring harness (if applicable with wire seal).
- Take yellow repair wire with correct connector out of wiring harness repair set - VAS 1978 B- .
- Release a length of approx. 20 cm of the defective wire on both sides of the repair joint.

> ⚠ **Caution**
>
> *Risk of damage to electrical wiring.*
>
> ♦ *Take care when releasing wiring from wrapped wiring harnesses.*

- If necessary, remove wrapping of wiring harness.

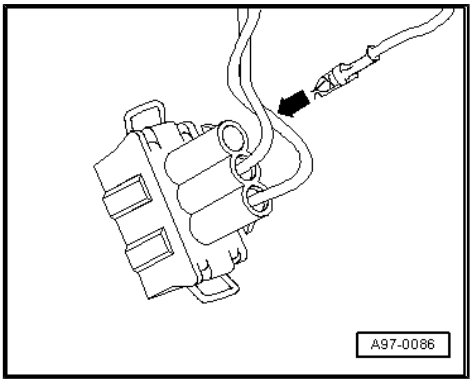

- Slide connector of new repair wire into corresponding connector housing slot until it engages.
- If applicable, attach wire seal to repair wire ⇒ page 156 .

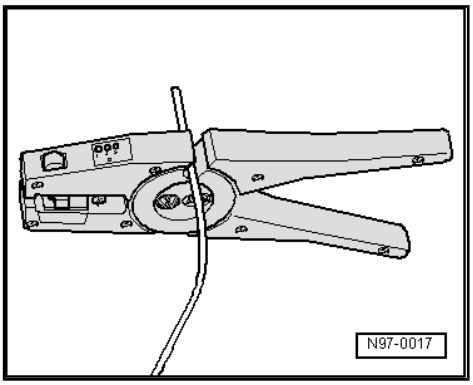

- Use wire stripper - VAS 1978/3- to shorten repair wire and wire of original vehicle wiring harness as required.
- Strip ends of repair wire and original vehicle wire and crimp stripped ends of repair wire and wire of original vehicle wiring harness using crimping pliers and a crimp connector ⇒ “2.4.5 Repairing a wire of 0.22 mm2 section with a single crimp connector”, page 109 or ⇒ “2.4.6 Repairing a wire of 0.35 mm2 section or thicker with a single crimp connector”, page 111 .

2.7.3 Fitting seals for individual wires

Procedure

Note

- *Wire seals prevent water and dirt from ingressing into the connector housing. They are fitted e.g. in the engine compartment and must always be re-installed after completing a repair.*
- *As a standard, wire seal is crimped to wire together with connector. This is not the case with repair wires. Wire seal must be slipped onto wire before crimping repair wire.*
- *Wire seals must always match the wire cross section of the repair wire used. The outer diameter of the wire seal depends on the diameter of the connector housing slot. Always use the appropriate assembly tool when fitting.*

– Attach wire seal -A- to free end of repair wire.

• The small diameter of the wire seal must face the connector housing.

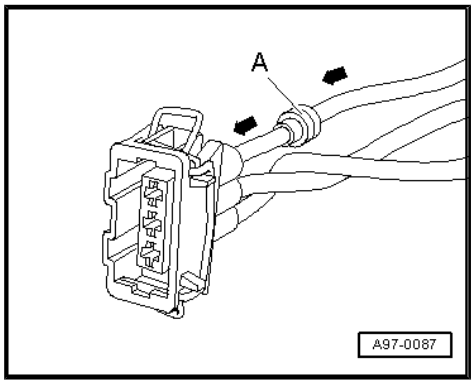

– Slide wire seal -A- over repair wire as far as connector housing and then as far as it will go into connector housing using an appropriate fitting tool -B-.

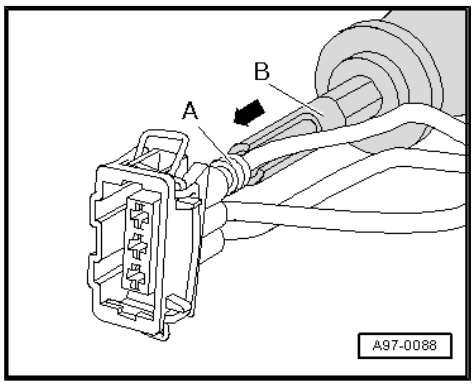

– Use wire stripper - VAS 1978/3- to shorten repair wire and wire of original vehicle wiring harness as required.

– Crimp stripped ends of repair wire and wire of original vehicle wiring harness using crimping pliers and a crimp connector
⇒ “2.4.5 Repairing a wire of 0.22 mm2 section with a single crimp connector”, page 109 , or
⇒ “2.4.6 Repairing a wire of 0.35 mm2 section or thicker with a single crimp connector”, page 111 .

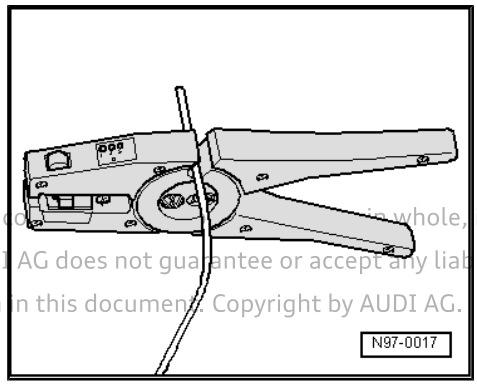

Protected by copyright. Copying for private or commercial purposes, in whole, is not permitted unless authorised by AUDI AG. AUDI AG does not guarantee or accept any liability with respect to the correctness of information in this document. Copyright by AUDI AG.

2.7.4 Repairing connector housings with insulation displacement technology (IDC)

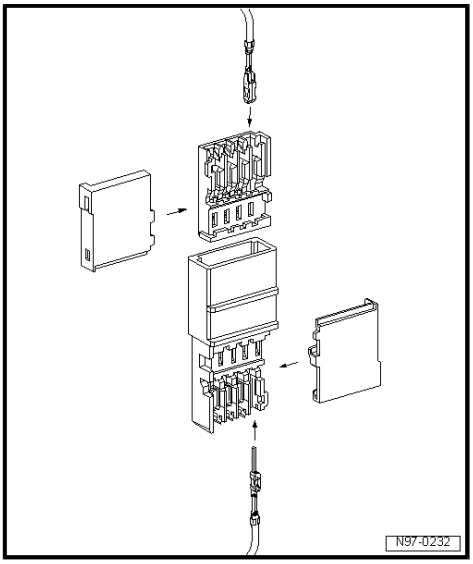

Note

- *For technical reasons, connector housings for insulation displacement technology can only be supplied with the connectors inserted.*
- *If these connectors are not required, they can be removed in the same manner as for any other connector housing.*
- *Repair wires which are already fitted with the corresponding crimped-on connectors are available ⇒ Electronic parts catalogue (ETKA) .*

2.8 Releasing and dismantling connector housings

2.8.1 Notes on releasing and dismantling connector housings

Note

- *Observe general information on repairs to the vehicle electrical system* *⇒ page 95* *.*
- *Always use the release tools intended for this purpose. Never force connectors out of connector housings.*
- *Always renew damaged connector housings. New connector housings can be ordered from OTC Kassel.*
- *Small screwdrivers can be used to help release secondary locking devices.*
- *The contact/pin assignment may be stamped on the secondary locking device or on the back of the connector housing.*
- *For further information on fitting locations of connectors, refer to ⇒ Current flow diagrams, Electrical fault finding and Fitting locations.*

Protected by copyright. Copying for private or commercial purposes, in part or in whole, is not permitted without the consent of AUDI AG. AUDI AG does not guarantee or accept any liability with respect to the correctness of information in this document. Copyright by AUDI AG.

For correct release tools for corresponding locking devices, refer to table in ⇒ Operating instructions for -VAS 1978/35- .

2.8.2 Secondary locking device

The secondary locking device is a securing element designed to secure all the wires in a connector housing. If a connector housing is fitted with a secondary locking device, this must always be opened or removed using the specified tool before releasing and extracting individual crimp connectors.

The secondary locking device is of a different colour to the rest of the connector housing to aid identification and show how it works.

The types of connector housing shown here are only a selection designed to illustrate examples of the various operating principles of the secondary locking devices.

Example 1:

Release housing securing element by removing “comb” -arrow-.

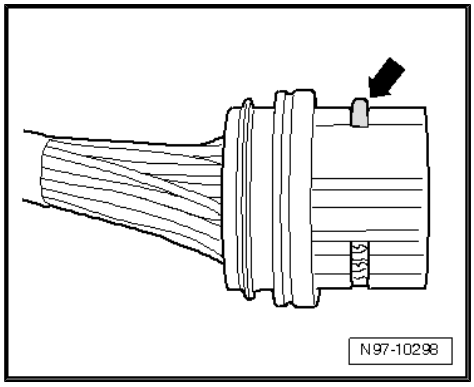

Example 2:

Release housing securing element by opening “flap” -arrow-.

Protected by copyright. Copying for private or commercial purposes, in part or in whole, is not permitted unless authorised by AUDI AG. AUDI AG does not guarantee or accept any liability with respect to the correctness of information in this document. Copyright by AUDI AG.

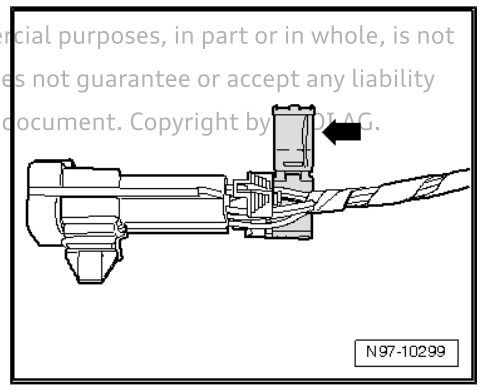

Example 3:

Release housing securing element by disengaging a “slide” -arrow-.

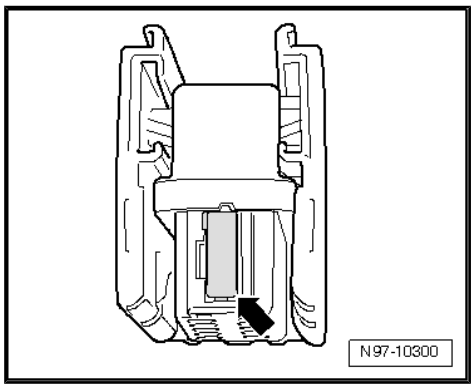

2.8.3 Primary locking device

The primary locking device engages an individual crimp connector in the connector housing.

If housing securing elements (secondary locking devices) are fitted, they must be released or removed using the specified tool before releasing the contacts ⇒ page 157 .

The types of primary locking device shown here are only a selection designed to illustrate examples of the various operating principles of the primary locking devices.

- Round connector systems ⇒ page 159
- Flat connector systems ⇒ page 159
- Special connector systems ⇒ page 161

For correct release tool for corresponding locking device, refer to ⇒ Operating instructions for -VAS 1978/35- .

2.8.4 Round connector systems

Note

If housing securing elements (secondary locking devices) are fitted, they must be released or removed using the specified tool before releasing the contacts *⇒ page 157* *.*

– Insert appropriate release tool for connector housing in release slot at connector housing.

– Take hold of connector at wire and press it slightly into connector housing -arrow-.

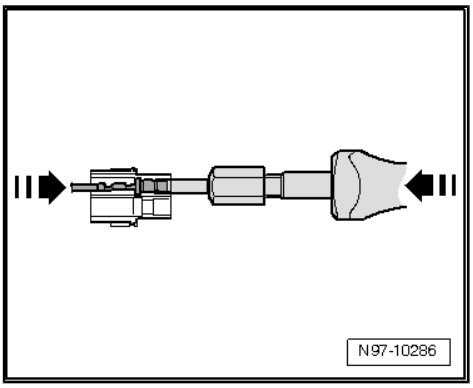

Note

Pressing connector towards connector housing causes retaining tabs of connector to be lifted off housing shoulder, enabling them to be released with release tool.

– At the same time, press release tool towards connector housing -arrow- and pull released connector out of connector housing.

– After removing connector, release tool can be pulled back out of connector housing.

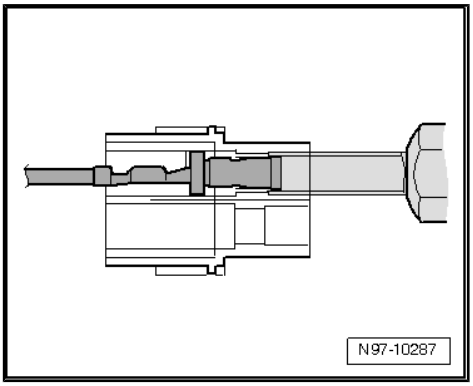

2.8.5 Flat connector systems

Note

If housing securing elements (secondary locking devices) are fitted, they must be released or removed using the specified tool before releasing the contacts *⇒ page 157* *.*

Flat connector system with one retaining tab:

– Insert appropriate release tool for connector housing in release slot at connector housing.

– Take hold of connector at wire and press it slightly into connector housing -arrow-.

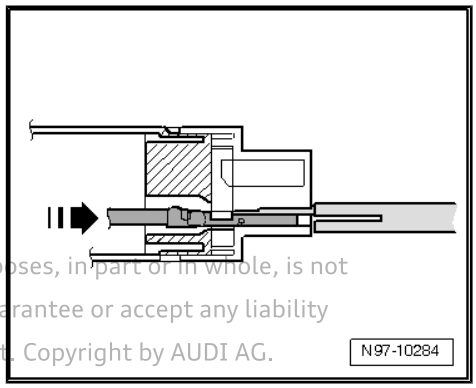

Note

Pressing connector towards connector housing causes retaining tab of connector to be lifted off housing shoulder, enabling it to be released with release tool.

Protected by copyright. Copying for private or commercial purposes, in part or in whole, is not permitted unless authorised by AUDI AG. AUDI AG does not guarantee or accept any liability with respect to the correctness of information in this document. Copyright by AUDI AG.

– At the same time, press release tool towards connector housing and pull released connector out of connector housing -arrow-.
– After removing connector, release tool can be pulled back out of connector housing.

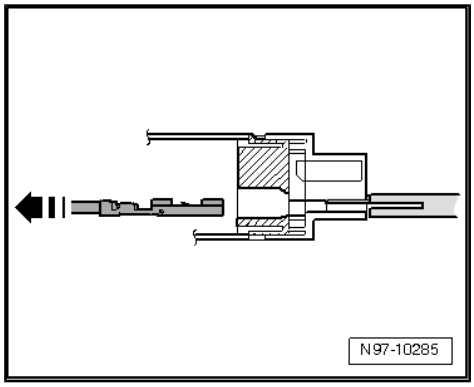

Flat connector system with two retaining tabs:

– Insert appropriate release tool for connector housing in release slot at connector housing.
– Take hold of connector at wire and press it into connector housing -arrow- as far as stop.

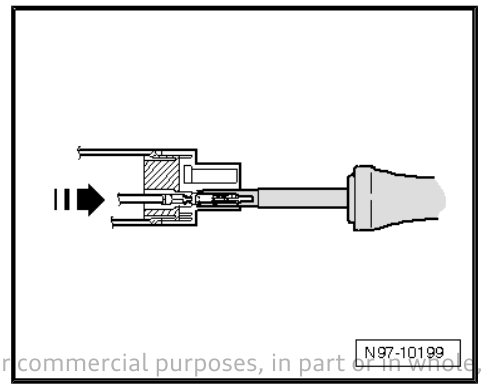

Note

Pressing connector towards connector housing causes retaining tabs of connector to be lifted off housing shoulder, enabling them to be released with release tool.

Protected by copyright. Copying for private or commercial purposes, in part or in whole, is not permitted unless authorised by AUDI AG. AUDI AG does not guarantee or accept any liability with respect to the correctness of information in this document. Copyright by AUDI AG

– At the same time, press release tool towards connector housing and pull released connector out of connector housing -arrow-.
– After removing connector, release tool can be pulled back out of connector housing.

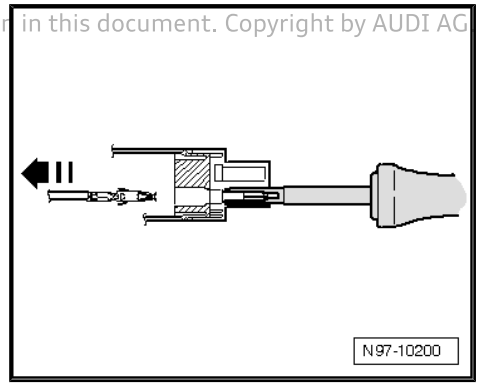

Asymmetrical:

– Insert appropriate release tool for connector housing in release slot at connector housing.
– Take hold of connector at wire and press it slightly into connector housing -arrow-.

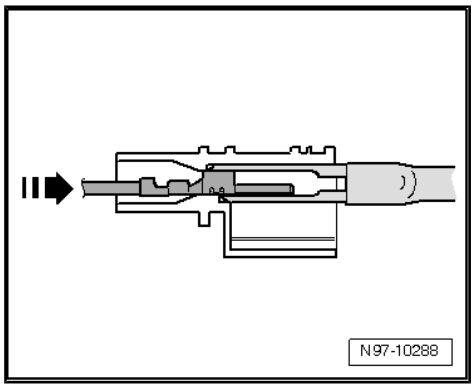

Note

Pressing connector towards connector housing causes retaining tabs of connector to be lifted off housing shoulder, enabling them to be released with release tool.

– At the same time, press release tool towards connector housing and pull released connector out of connector housing -arrow-.
– After removing connector, release tool can be pulled back out of connector housing.

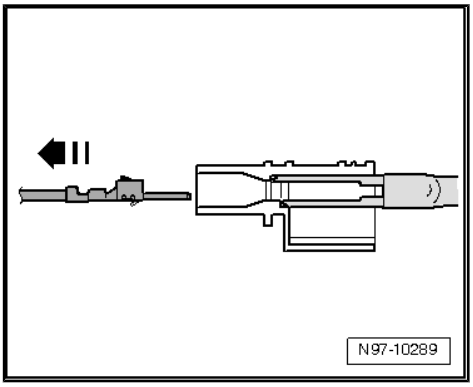

2.8.6 Special connector systems

Note

If housing securing elements (secondary locking devices) are fitted, they must be released or removed using the specified tool before releasing the contacts ⇒ page 157 .

Fast-on contacts:

– Insert appropriate release tool for connector housing in release slot at connector housing.
– Take hold of connector at wire and press it slightly into connector housing.

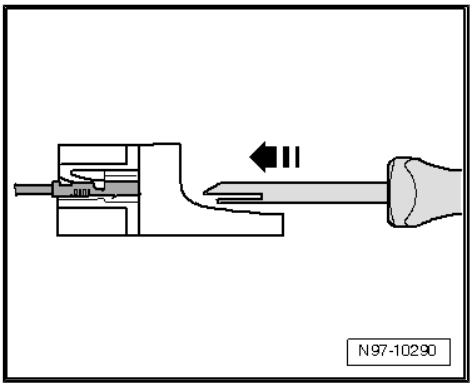

Note

Pressing connector towards connector housing causes retaining tabs of connector to be lifted off housing shoulder, enabling them to be released with release tool.

– At the same time, press release tool towards connector housing and pull released connector out of connector housing -arrow-.
– After removing connector, release tool can be pulled back out of connector housing.

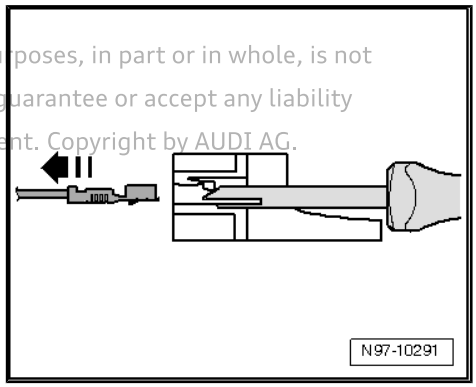

Protected by copyright. Copying for private or commercial purposes, in part or in whole, is not permitted unless authorised by AUDI AG. AUDI AG does not guarantee or accept any liability with respect to the correctness of information in this document. Copyright by AUDI AG.

GT 150/280 connectors:

– Insert appropriate release tool for connector housing beneath retaining tab into connector housing.
– Press tool -arrow- in connector housing as far as it will go.

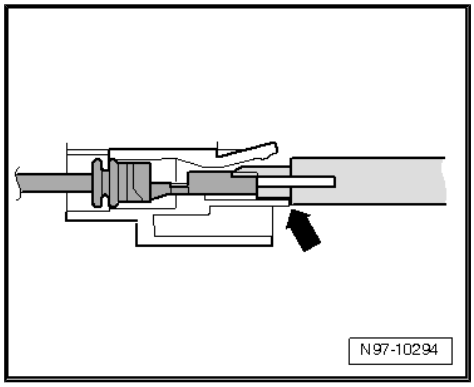

Connector is ejected from connector housing.

– After ejecting connector, release tool can be pulled back out of connector housing.

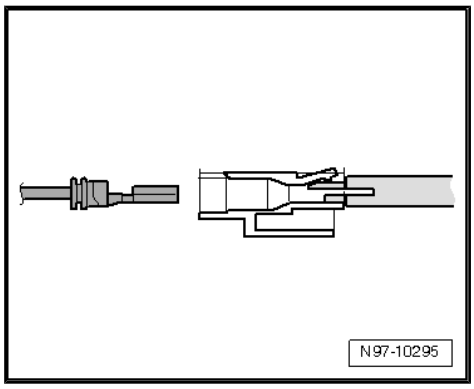

Contacts without retaining tabs:

– Insert release tool beneath retaining tab on connector housing.
– Lifting it slightly -arrow-, press release tool as far as stop.

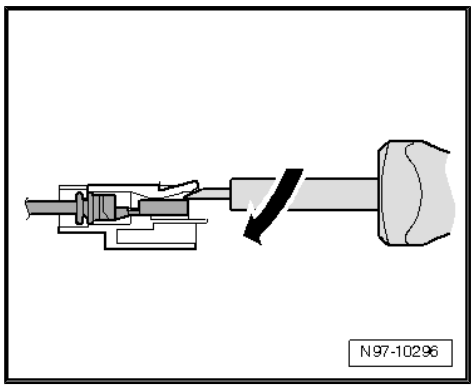

Connector is ejected from connector housing.

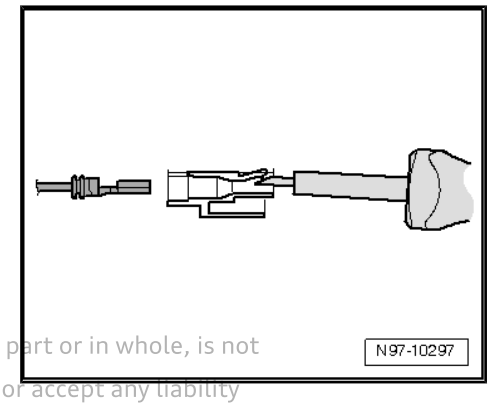

Protected by copyright. Copying for private or commercial purposes, in part or in whole, is not permitted unless authorised by AUDI AG. AUDI AG does not guarantee or accept any liability with respect to the correctness of information in this document. Copyright by AUDI AG.

3 Contact surface cleaning set - VAS 6410-

3.1 Using contact surface cleaning set - VAS 6410-

Protected by copyright. Copying or distribution for commercial purposes, in part or in whole, is not permitted unless authorised by AUDI AG. AUDI AG does not guarantee or accept any liability with respect to the correctness of information in this document. Copyright by AUDI AG.

Using contact surface cleaning set - VAS 6410- makes it possible to maintain optimum repair standards for repairs to the electrical system. The tools can be used to service the areas around the connectors on wiring harnesses for screw-type connections in high current circuits (starting and charging current). Contact surface cleaning set - VAS 6410- has been adapted to the structural design of the vehicle and ensures that repairs are easy to perform and are carried out correctly.

Note

The illustrations show just a few examples of repairs.

Contact surface cleaning set - VAS 6410-

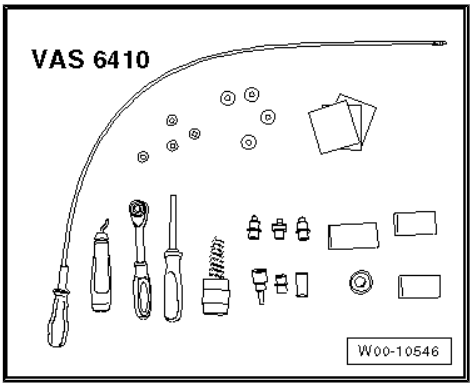

3.1.1 Servicing wiring lugs

Special tools and workshop equipment required

- VAG 1331

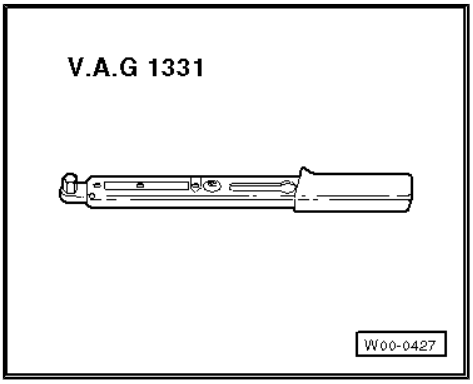

Note

- *To prevent the screw connection from cracking when the tightening torque has been exceeded due to a lack of friction in the thread, do not apply rust remover, contact spray or grease to the screw connection.*
- *The grey sanding pads can be used for slight impurities and "soft surfaces". The red sanding pads can be used for more severe impurities and "hard surfaces".*

WARNING

Risk of injury. Observe warnings and safety regulations. *⇒ page 3*

- Disconnect battery.
- Loosen cap nut and remove wiring lug from screw connection.
- Check wiring lug for corrosion, dirt, etc.
- Select appropriate adapter and corresponding sanding pad.

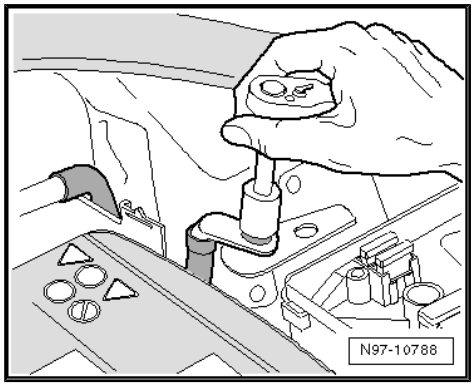

Note

As an alternative you can also use the sanding block.

Caution

Do not sand away the tin plating to such an extent that the copper layer underneath becomes visible. This could produce a galvanic cell which destroys metal and causes faulty repair.

Note

As the thickness of the tin plating varies, it is necessary to clean the wiring lug in several stages and check it in between.

- Apply adapter to wiring lug and sand corrosion and dirt off by rotating adapter.
- Check wiring lug and if necessary re-sand.

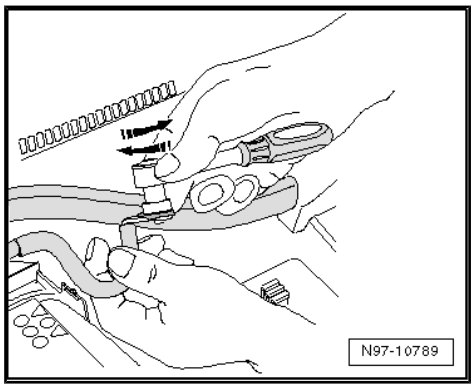

Protected by copyright. Copying for private or commercial purposes, in part or in whole, is not permitted unless authorised by AUDI AG. AUDI AG does not guarantee or accept any liability with respect to the correctness of information in this document. Copyright by AUDI AG.

– If necessary, remove sanding residue at wiring lug using deburrer.

– Screw wiring lug back on to specified torque ⇒ Current flow diagrams, Electrical fault finding and Fitting locations.

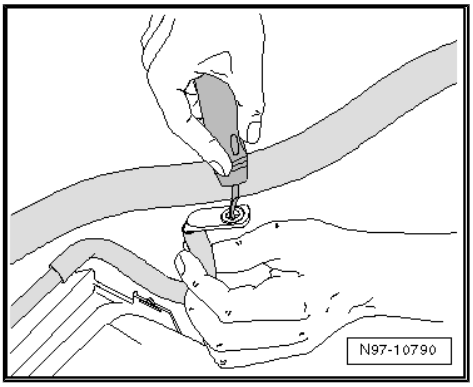

Note

To ensure optimum contact, tighten all screw connections to specified torque after cleaning.

– Protect connection from corrosion by applying corresponding anti-corrosion agent. ⇒ page 168

– Reconnect battery.

WARNING

Risk of injury. Observe warnings and safety regulations. ***⇒ page 3***

Protected by copyright. Copying for private or commercial purposes, in part or in whole, is not permitted unless authorised by AUDI AG. AUDI AG does not guarantee or accept any liability with respect to the correctness of information in this document. Copyright by AUDI AG.

– Re-adapt electric windows, enter radio code, set clock and, if necessary, recode any control units with fault messages.

3.1.2 Servicing screw connections

Special tools and workshop equipment required

♦ VAG 1331

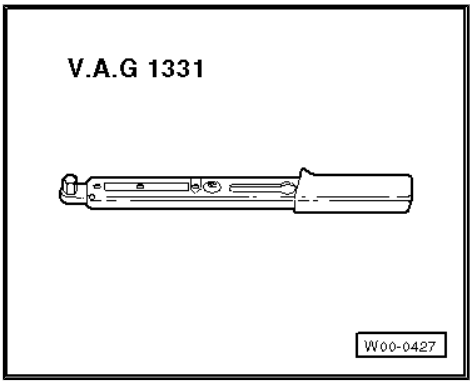

Note

♦ *To prevent the screw connection from cracking when the tightening torque has been exceeded due to a lack of friction in the thread, do not apply rust remover, contact spray or grease to the screw connection.*

♦ *The grey sanding pads can be used for slight impurities and "soft surfaces". The red sanding pads can be used for more severe impurities and "hard surfaces".*

WARNING

Risk of injury. Observe warnings and safety regulations. ***⇒ page 3***

– Disconnect battery.

– Loosen cap nut and remove wiring lug from screw connection.
– Check screw connection for corrosion, dirt, etc.
– Select appropriate adapter and corresponding sanding pad for screw connection.

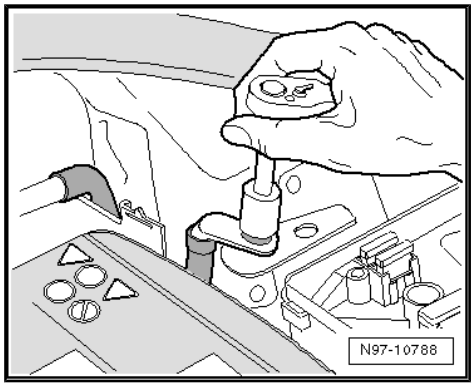

Caution

Do not sand away the tin plating to such an extent that the copper layer underneath becomes visible. This could produce a galvanic cell which destroys metal and causes faulty repair.

Note

As the thickness of the tin plating varies, it is necessary to clean the wiring lug in several stages and check it in between.

– Apply adapter to screw connection and sand corrosion and dirt off by rotating adapter.
– Check screw connection and re-sand if necessary.
– Bolt screw connection together with locating element (if fitted) and tighten to specified torque. ⇒ Current flow diagrams, Electrical fault finding and Fitting locations

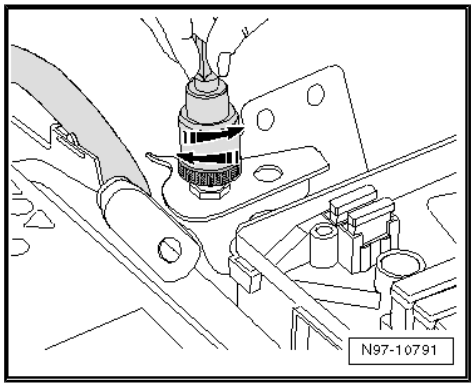

Note

To ensure optimum contact, tighten all screw connections to specified torque after cleaning.

– Protect connection from corrosion by applying corresponding anti-corrosion agent ⇒ page 168 .
– Reconnect battery.

WARNING

Risk of injury. Observe warnings and safety regulations. *⇒ page 3*

– Re-adapt electric windows, enter radio code, set clock and, if necessary, recode any control units with fault messages.

3.1.3 Cleaning battery terminal clamps and battery terminals

Special tools and workshop equipment required

Protected by copyright. Copying for private or commercial purposes, in part or in whole, is not permitted unless authorised by AUDI AG. AUDI AG does not guarantee or accept any liability with respect to the correctness of information in this document. Copyright by AUDI AG.

♦ VAG 1331

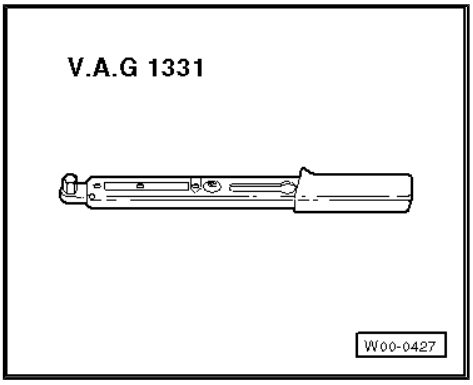

Note

To prevent the screw connection from cracking when the tightening torque has been exceeded due to a lack of friction in the thread, do not apply rust remover, contact spray or grease to the screw connection.

Protected by copyright. Copying for private or commercial purposes, in part or in whole, is not permitted unless authorised by AUDI AG. AUDI AG does not guarantee or accept any liability with respect to the correctness of information in this document. Copyright by AUDI AG.

WARNING

Risk of injury. Observe warnings and safety regulations.
⇒ page 3

– Disconnect battery.
– Check battery terminal clamp and battery terminal for corrosion or dirt.
– Clean battery terminal clamp with wire brush of battery terminal cleaner (rotary motion).

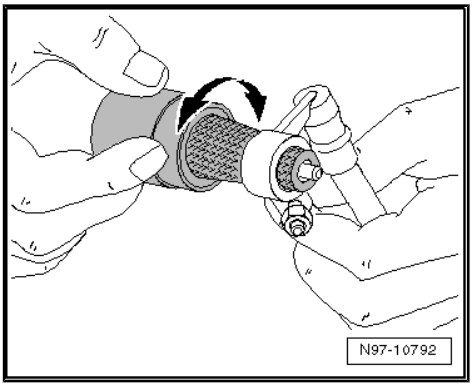

– Clean battery terminal using bottom end of battery terminal cleaner (rotary motion).

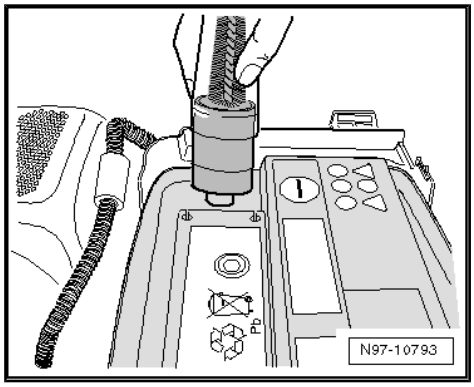

WARNING

Risk of injury. Observe warnings and safety regulations. *⇒ page 3*

– Reconnect battery and tighten battery terminals to specified torque.

Note

To ensure optimum contact, tighten all screw connections to specified torque after cleaning.

3.1.4 Corrosion protection

Caution

A lack of corrosion protection will ultimately cause damage to the vehicle's electrical system.

Protected by copyright. Copying for private or commercial purposes, in part or in whole, is not permitted unless authorised by AUDI AG. AUDI AG does not guarantee or accept any liability with respect to the correctness of information in this document. Copyright by AUDI AG.

Note

- *All screw connections must be tightened to the specified torque.*
- *To protect from corrosion, use hose attached to can of anti-corrosion agent.*
- *Use anti-corrosion wax for cold sections.*
- *Use cavity sealing agent for warm sections.*
- *Capillary attraction causes anti-corrosion agent to be drawn to the affected areas automatically.*

– Hold injector underneath wiring lug and spray all around terminal.

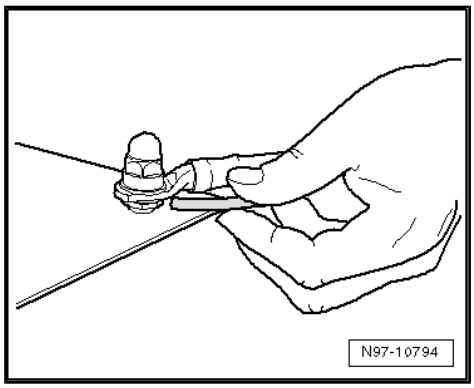

– Hold injector above wiring lug and spray terminal and wiring lug (all around).

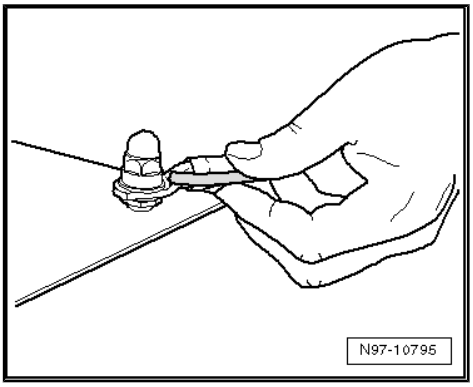

Protected by copyright. Copying for private or commercial purposes, in part or in whole, is not permitted unless authorised by AUDI AG. AUDI AG does not guarantee or accept any liability with respect to the correctness of information in this document. Copyright by AUDI AG.

4 ESD (electrostatic discharge) workplace VAS 6613

4.1 Using ESD workplace - VAS 6613-

- The ESD (electrostatic discharge) workplace -VAS 6613- is designed for preventing damage to electronic components due to static discharge.
- Therefore it is possible to perform repairs on extremely sensitive electronic components and open printed circuit boards.
- Details on repairs which must be performed on the ESD (electrostatic discharge) workplace -VAS 6613- can be found in the relevant chapter of the appropriate Workshop Manual "Electrical system".

– For setting up the ESD (electrostatic discharge) workplace, place the ESD table mat -3- from -VAS 6613- on a dry and clean table.

– Connect earthing module -2- to one of the snap fasteners on ESD table mat.

– Then proceed by plugging in connector adapter -1- of earthing module with adapting connector to an electrical mains socket equipped with earthing contact or attach crocodile clip to building earth strap or water pipe.

– Connect wrist strap -4- to one of the snap fasteners on mat.

– Always wear the wrist strap so that it is in contact with your wrist - it is not sufficient for it to merely be in contact with your jacket or shirt sleeve.

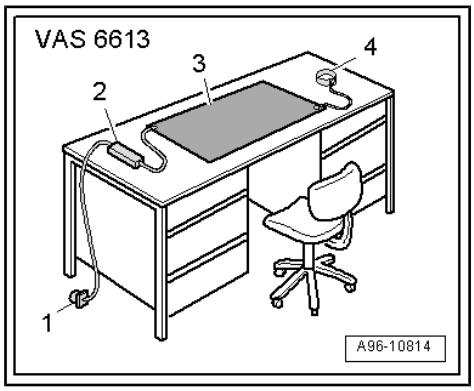

Caution

For repairs on extremely sensitive electronic components and open printed circuit boards always use non-magnetic tools, e.g. socket wrench - T10072- .

Protected by copyright. Copying for private or commercial purposes, in part or in whole, is not permitted unless authorised by AUDI AG. AUDI AG does not guarantee or accept any liability with respect to the correctness of information in this document. Copyright by AUDI AG.