2007 STEERING

Power Steering - Avalanche, Escalade, Suburban, Tahoe & Yukon

SPECIFICATIONS

FASTENER TIGHTENING SPECIFICATIONS

Fastener Tightening Specifications

Application	Specification	
	Metric	English
Brake Booster Inlet Line Hose Fitting	32 N.m	24 lb ft
Engine Protection Shield Bolts	20 N.m	15 lb ft
Inner Tie Rod End to Steering Gear	100 N.m	74 lb ft
Intermediate Shaft Coupling Pinch Bolt	47 N.m	35 lb ft
Lash Adjuster Lock Gear	49 N.m	36 lb ft
Lash Adjuster Lock Nut	49 N.m	36 lb ft
Pitman Arm to Gear Nut	250 N.m	184 lb ft
Pitman Arm to Relay Rod Nut	62 N.m	46 lb ft
Power Steering Cooler Mounting Bolts	9 N.m	80 lb in
Power Steering Flow Control Valve Fitting	75 N.m	55 lb ft
Power Steering Gear End Housing Cover Bolts	62 N.m	46 lb ft
Power Steering Gear Housing Cover Bolts (Pitman Shaft)	62 N.m	46 lb ft
Power Steering Gear Inlet Hose Fitting	32 N.m	24 lb ft
Power Steering Gear Outlet Pipe	32 N.m	24 lb ft
Power Steering Gear to Frame Bolts (Non Rack and Pinion)	150 N.m	110 lb ft
Power Steering Hose Assembly Bolt at Gear (Rack and Pinion)	12 N.m	106 lb in
Power Steering Pump Front Bracket Bolts (LMM)	50 N.m	37 lb ft
Power Steering Pump Front Mounting Bolts	50 N.m	37 lb ft
Power Steering Pump Bracket Bolts (LU3)	41 N.m	30 lb ft
Power Steering Pump Bracket Nut (LU3)	41 N.m	30 lb ft
Power Steering Pump Bracket Stud (LU3)	50 N.m	37 lb ft
Power Steering Pump Mounting Studs to Pump Housing	58 N.m	44 lb ft
Power Steering Pump Rear Bracket Nuts	50 N.m	37 lb ft
Power Steering Pump Rear Bracket Nuts (LU3)	41 N.m	30 lb ft
Power Steering Pump Rear Mounting Bolts	50 N.m	37 lb ft
Power Steering Pump Rear Mounting Bolts (LMM)	50 N.m	37 lb ft
Rack and Pinion Gear Adjuster Lock Nut	68 N.m	50 lb ft
Rack and Pinion Gear Cylinder Line Fitting	19 N.m	14 lb ft
Rack and Pinion Gear Cylinder Line Retaining Plate Screw	12 N.m	106 lb in
Rack and Pinion Gear Inner Tie Rod End Jam Nut	75 N.m	55 lb ft

cardiagn.com

Rack and Pinion Gear Inner Tie Rod End to Steering Gear	100 N.m	74 lb ft
Rack and Pinion Gear Outer Tie Rod End Nut	60 N.m	44 lb ft
Rack and Pinion Gear to Frame Bolts-Left Side	200 N.m	148 lb ft
Rack and Pinion Gear to Frame Bolts-Right Side	100 N.m	74 lb ft

POWER STEERING PUMP SPECIFICATIONS

Power Steering Pump Specifications

Vehicle	Engine Size	High Flow (Liters per Minute)	High Flow (Gallons per Minute)	Pressure Relief (kPa)	Pressure Relief (PSI)
C/K 15/25 Utility	4.8L 5.3L 6.0L 6.2L	13.2/14.7	3.5/3.9	9825/10514	1425/1525

COMPONENT LOCATOR

POWER STEERING GEAR DISASSEMBLED VIEW

cardiagn.com

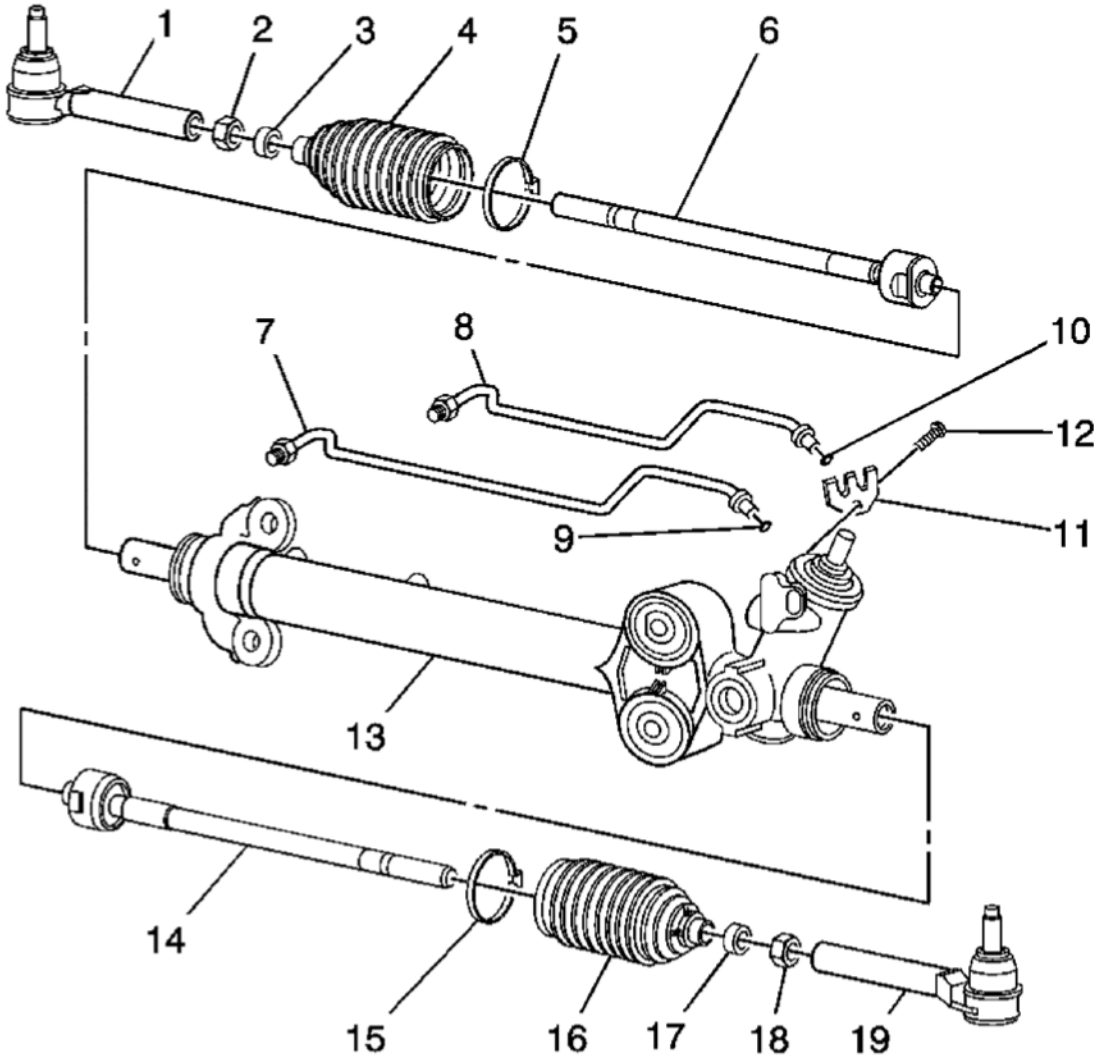

Fig. 1: Power Steering Gear Components
Courtesy of GENERAL MOTORS CORP.

Callouts For Fig. 1

Callout	Component Name
1	Outer Tie Rod
2	Hexagon Jam Nut
3	Tie Rod End Clamp
4	Rack and Pinion Boot
5	Boot Clamp
6	Inner Tie Rod
7	Cylinder Line - LT
8	Cylinder Line - RH
9	O-Ring Seal

cardiagn.com

10	O-Ring Seal
11	Cylinder Line Retaining Plate
12	External TORX® Screw
13	Rack and Pinion Gear Assembly
14	Inner Tie Rod
15	Boot Clamp
16	Rack and Pinion Boot
17	Tie Rod End Clamp
18	Hexagon Jam Nut
19	Outer Tie Rod

POWER STEERING PUMP DISASSEMBLED VIEW (REGULAR)

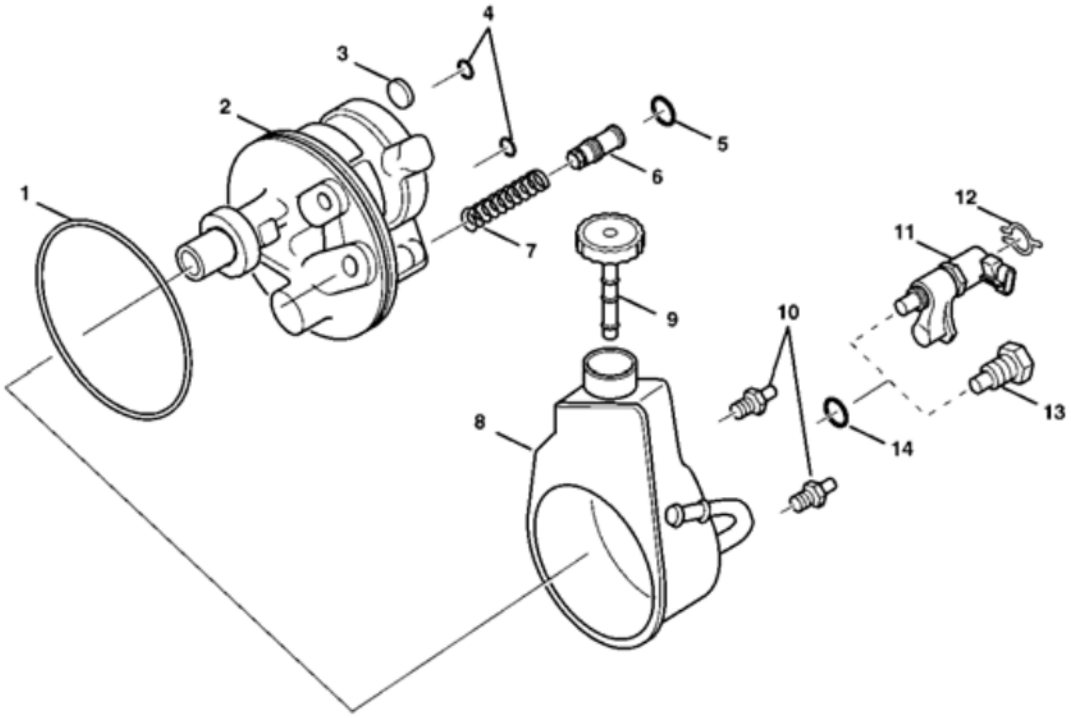

Fig. 2: Steering Pump Components
Courtesy of GENERAL MOTORS CORP.

Callouts For Fig. 2

Callout	Component Name
1	O-ring Seal
2	Hydraulic Pump Housing Assembly
3	Magnet

cardiagn.com

4	O-ring Seals
5	Rectangular Section Seal
6	Control Valve
7	Flow Control Spring
8	Reservoir Assembly
9	Reservoir Capstick
10	Pump Mounting Studs
11	Variable Assist Steering Actuator
12	Retaining Ring
13	Connector and Fitting Assembly
14	O-ring Seal

DIAGNOSTIC INFORMATION AND PROCEDURES

DIAGNOSTIC STARTING POINT - POWER STEERING SYSTEM (W/O ELECTRO-HYDRAULIC STEERING)

Begin the system diagnosis by reviewing the system Description and Operation. Reviewing the Description and Operation information will help you determine the correct symptom diagnostic procedure when a malfunction exists. Reviewing the Description and Operation information will also help you determine if the condition described by the customer is normal operation. Refer to **Symptoms - Power Steering System** in order to identify the correct procedure for diagnosing the system and where the procedure is located.

SYMPTOMS - POWER STEERING SYSTEM

IMPORTANT: Review the system description and operation in order to familiarize yourself with the system functions. Refer to Power Steering System Description and Operation.

Visual/Physical Inspection

- Inspect for aftermarket devices which could affect the operation of the power steering system.
- Inspect the easily accessible or visible system components for obvious damage or conditions which could cause the symptom.
- Inspect the power steering reservoir for the proper power steering fluid level and condition.

Symptoms List

Refer to a symptom diagnostic procedure from the following list in order to diagnose the symptom:

- **Power Steering Fluid Leaks**
- **Rattle, Clunk, or Shudder Noise from the Power Steering System**
- **Whine or Growl Noise from the Power Steering System (With Hydraulic Brake Booster)** or **Whine or Growl Noise from the Power Steering System (Without Hydraulic Brake Booster)**

cardiagn.com

- **Steering Effort Hard in One or Both Directions**
- **Steering Effort Too Easy in One or Both Directions**

POWER STEERING SYSTEM TEST

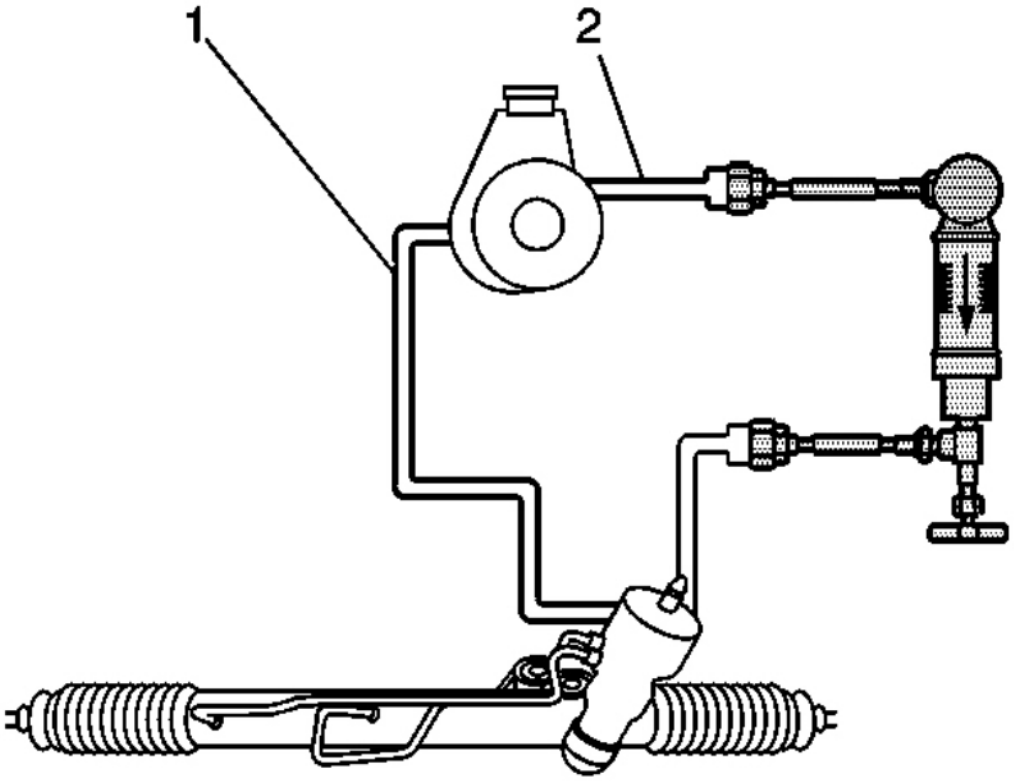

Fig. 3: Testing Rack and Pinion System Pressures
Courtesy of GENERAL MOTORS CORP.

Callouts For Fig. 3

Callout	Component Name
1	Power Steering Return Hose
2	Power Steering Pressure Hose

cardiagn.com

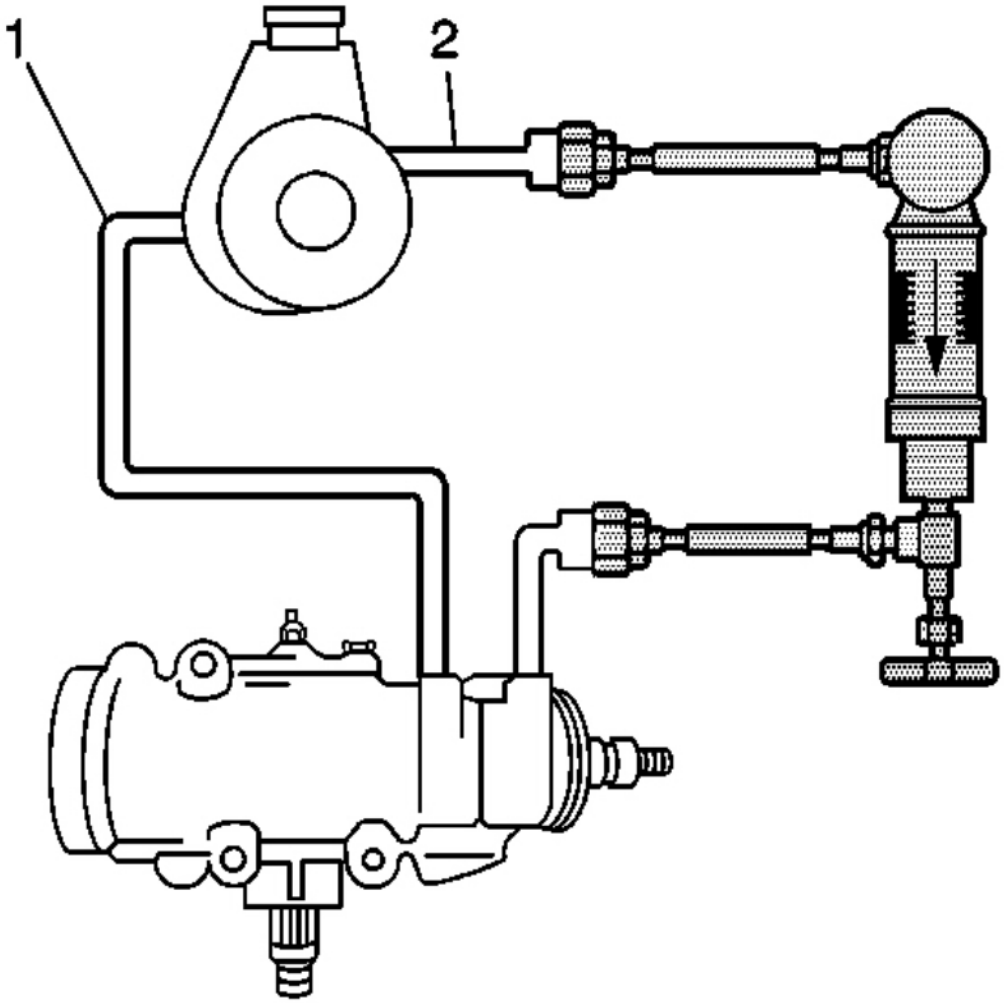

Fig. 4: Testing Recirculating Ball System Pressures
Courtesy of GENERAL MOTORS CORP.

Callouts For Fig. 4

Callout	Component Name
1	Power Steering Return Hose
2	Power Steering Pressure Hose

Test Description

The numbers below refer to the step numbers on the diagnostic table.

cardiagn.com

5: This step tests the system for restrictions.

7: This step tests the following components for the following conditions:

- The pump for internal leaks
- The power steering pipes for kinks

8: This step tests the ability of the pump to regulate flow at maximum pressure.

10: This step tests the ability of the pump to regulate flow under normal operating conditions.

12: This step tests the internal components of the pump and the gear.

Power Steering System Test

Step	Action	Value(s)	Yes	No
DEFINITION: The Power Steering System Test Procedure will perform the following functions: • Test the operation of the hydraulic power steering system. • Test the operation of the power steering pump and power steering gear. • Identify restrictions in the system.				
1	Inspect the power steering fluid for the following indications of contamination: • Milky fluid - water • Brown fluid - burnt • Debris in fluid - plastic or dirt Is the fluid free of contamination?	-	Go to **Step 3**	Go to **Step 2**
2	Flush the power steering system. Refer to **Power Steering System Flushing**. Did you complete the procedure?	-	Go to **Step 3**	-
3	**IMPORTANT:** **In order to accurately diagnose the system, the malfunction must be present during the test procedure.** Attempt to duplicate the condition.Is the condition present?	-	Go to **Step 4**	System OK
4	1. Turn the ignition switch to the OFF position. 2. Place a drain pan under the vehicle in order to catch any power steering fluid. 3. Disconnect the power steering pressure pipe/hose from the power steering pump or the power steering gear as necessary. 4. Install the **J 44721** Power Steering System	-		

cardiagn.com

	Analyzer. See **Special Tools**. 5. Fill the power steering system. Refer to **Checking and Adding Power Steering Fluid (With Hydroboost)** or **Checking and Adding Power Steering Fluid (Without Hydroboost)**. Did you complete the installation?		Go to **Step 5**	-
5	1. Fully open the **J 44721** valve. See **Special Tools**. 2. Start the engine. **NOTE:** **Refer to Steering Wheel in the Full Turn Position Notice .** 3. Turn the steering wheel and BRIEFLY hold the steering wheel against the steering stop in order to release any trapped air from the system. 4. Inspect and ensure that all of the power steering pipe/hose connections are not leaking. 5. Make sure the steering wheel is OFF the steering stop, observe the pressure reading. Is the pressure reading greater than the specified value?	1525 kPa (221 psi)	Go to **Step 6**	Go to **Step 7**
6	**IMPORTANT:** **A restriction may be present in the power steering system. Turn OFF the engine IMMEDIATELY.** Locate and repair the restriction.Did you complete the repair?	-	Go to **Step 18**	-
7	1. Allow the engine to run until the engine reaches full operating temperature. 2. Record the pressure reading and flow reading. 3. Partially close the **J 44721** valve until the system pressure reaches the specified value, then record the FLOW reading. See **Special Tools**. 4. Subtract second flow reading from the first	4827 kPa (700 psi)		

cardiagn.com

	flow reading. Is the flow DECREASE greater than 3.8 L (1 gal) per minute?		Go to **Step 13**	Go to **Step 8**
8	**NOTE:** **Do not leave the valve fully closed for more than 5 seconds, or the pump could be damaged internally.** Fully close then open the **J 44721** valve 3 times. See **Special Tools**. Record all of the high pressure readings. Refer to **Power Steering Pump Specifications** for power steering system pressure relief specifications.Are the 3 high pressure readings within specifications?	-	Go to **Step 9**	Go to **Step 15**
9	Are the three high pressure readings within 245 kPa (50 psi) of each other?	-	Go to **Step 10**	Go to **Step 14**
10	1. Increase the engine speed to approximately 1,500 RPM. 2. Record the flow reading. Refer to **Power Steering Pump Specifications** for power steering system pressure specifications. Is the actual flow reading within specifications?	-	Go to **Step 11**	Go to **Step 13**
11	Is the difference between the actual flow reading and the maximum flow specification more than 3.8 L (1 gal) per minute?	-	Go to **Step 16**	Go to **Step 12**
12	**NOTE:** **Refer to Steering Wheel in the Full Turn Position Notice .** Turn the steering wheel from steering stop to steering stop and record the FLOW readings at each stop.Is the flow LOWER than 3.8 L (1 gal) per minute?	-	Go to **Step 18**	Go to **Step 17**
13	Replace the power steering pump. Refer to **Power Steering Pump Replacement (4.8L, 5.3L, 6.0L, and 6.2L)**. Did you complete the replacement?	-	Go to **Step 18**	-
	1. Remove the power steering pump flow control valve. Refer to **Power Steering Pump Flow Control Valve Replacement - Off Vehicle**. 2. Inspect the flow control valve.			

cardiagn.com

14	If any burrs or scratches are noticed on the flow control valve, replace the flow control valve. Do NOT attempt to clean the flow control valve. Refer to **Power Steering Pump Flow Control Valve Replacement - Off Vehicle**. 3. Inspect the flow control valve bore. If any burrs or scratches are present in the control valve bore, replace the power steering pump. Refer to **Power Steering Pump Replacement (4.8L, 5.3L, 6.0L, and 6.2L)**. Did you complete the repair?	-	Go to **Step 18**	-
15	Replace the power steering pump flow control valve. Refer to **Power Steering Pump Flow Control Valve Replacement - Off Vehicle**. Did you complete the replacement?	-	Go to **Step 18**	-
16	1. Remove the power steering pump flow control valve and inspect for any wear or damage. Do NOT disassemble the flow control valve. 2. If the flow control valve is worn damaged, replace the flow control valve. Refer to **Power Steering Pump Flow Control Valve Replacement - Off Vehicle**. Did you complete the repair?	-	Go to **Step 18**	-
17	The power steering gear is leaking across the piston or bypassing the valve circuit. Replace the power steering gear. Refer to **Power Steering Gear Replacement (Rack and Pinion)** or **Power Steering Gear Replacement (Non Rack and Pinion)**. Did you complete the replacement?	-	Go to **Step 18**	-
18	Test the power steering system for the original condition. Does the original condition still exist?	-	Go to **Step 5**	Go to **Step 19**
19	1. Disconnect and remove the **J 44721** from the vehicle. See **Special Tools**. 2. Connect the vehicle power steering pipes/hoses. 3. Bleed the power steering system and add	-		

cardiagn.com

	fluid as necessary. Refer to **Power Steering System Bleeding**. Did you complete the repair?		System OK	-

POWER STEERING FLUID LEAKS

Power Steering Fluid Leaks

Step	Action	Yes	No
1	Did you review the Power Steering System General Description and perform the necessary inspections?	Go to **Step 2**	Go to **Symptoms - Power Steering System**
2	Verify that power steering fluid leaks are present. Is the power steering system leaking?	Go to **Step 3**	System OK
3	Inspect the power steering system fittings. Are the fittings leaking?	Go to **Step 9**	Go to **Step 4**
4	Inspect the power steering hoses. Are the hoses leaking?	Go to **Step 10**	Go to **Step 5**
5	Inspect the power steering pump and the reservoir for leaks. Is the power steering pump or reservoir leaking?	Go to **Step 11**	Go to **Step 6**
6	Inspect the power steering gear for leaks. Is the power steering gear leaking?	Go to **Step 12**	Go to **Step 7**
7	Inspect the hydraulic brake booster assembly for leaks. Is the hydraulic brake booster assembly leaking?	Go to **Step 13**	Go to **Step 8**
8	Inspect the power steering cooler for leaks. Is the power steering cooler leaking?	Go to **Step 14**	Go to **Step 3**
9	Tighten the fittings. Refer to **Fastener Tightening Specifications**. Did you complete the repair?	Go to **Step 15**	-
10	Replace the power steering hoses. Refer to the appropriate procedure(s): • **Power Steering Cooler Pipe/Hose Replacement (With Hydroboost)** or **Power Steering Cooler Pipe/Hose Replacement (Without Hydroboost)** • **Power Steering Gear Inlet Pipe/Hose Replacement (Without Hydroboost)** or **Power Steering Gear Inlet Pipe/Hose Replacement (With Gas Hydroboost)** • **Power Brake Booster Inlet Hose Replacement** • **Power Brake Booster Outlet Hose Replacement**		

cardiagn.com

	• **Power Steering Gear Outlet Pipe/Hose Replacement (Without Hydroboost)** or **Power Steering Gear Outlet Pipe/Hose Replacement (With Hydroboost)** Did you complete the repair?	Go to **Step 15**	-
11	Replace the power steering pump or reservoir. Refer to **Power Steering Pump Replacement (4.8L, 5.3L, 6.0L, and 6.2L)** or **Power Steering Reservoir Replacement - Off Vehicle**. Did you complete the repair?	Go to **Step 15**	-
12	Replace the power steering gear. Refer to **Power Steering Gear Replacement (Rack and Pinion)** or **Power Steering Gear Replacement (Non Rack and Pinion)**. Did you complete the repair?	Go to **Step 15**	-
13	Replace the hydraulic brake booster assembly. Refer to **Power Brake Booster Replacement** . Did you complete the repair?	Go to **Step 15**	-
14	Replace the power steering cooler. Refer to **Power Steering Cooler Pipe/Hose Replacement (With Hydroboost)** or **Power Steering Cooler Pipe/Hose Replacement (Without Hydroboost)**. Did you complete the repair?	Go to **Step 15**	-
15	Operate the system in order to verify the repair. Did you correct the condition?	System OK	Go to **Step 3**

RATTLE, CLUNK, OR SHUDDER NOISE FROM THE POWER STEERING SYSTEM

Rattle, Clunk, or Shudder Noise from the Power Steering System

Step	Action	Yes	No
1	Did you review the Power Steering System General Description and perform the necessary inspections?	Go to **Step 2**	Go to **Symptoms - Power Steering System**
2	Verify that a rattle, clunk or shudder noise is present. Is a rattle, clunk or shudder noise present?	Go to **Step 3**	System OK
3	Inspect the power steering hoses for proper routing and clearance. Is the routing or clearance of the power steering hoses incorrect?	Go to **Step 11**	Go to **Step 4**
4	Inspect the engine drive belt for cracking or excessive wear. Refer to **Drive Belt Falls Off and Excessive Wear Diagnosis** . Is the drive belt cracked or excessively worn?	Go to **Step 12**	Go to **Step 5**

cardiagn.com

5	Inspect the power steering pump pulley for damage. Is the power steering pump pulley damaged?	Go to **Step 13**	Go to **Step 6**
6	Inspect the power steering pump and the power steering mounting bracket/brace for the proper installation. Refer to **Power Steering Pump Replacement (4.8L, 5.3L, 6.0L, and 6.2L)**. Is the power steering pump installation incorrect?	Go to **Step 14**	Go to **Step 7**
7	Inspect the power steering gear for the proper installation. Refer to **Power Steering Gear Replacement (Rack and Pinion)** or **Power Steering Gear Replacement (Non Rack and Pinion)**. Is the power steering gear installation incorrect?	Go to **Step 15**	Go to **Step 8**
8	Inspect the steering linkage. Refer to **Steering Linkage Inspection** . Is the steering linkage worn?	Go to **Step 17**	Go to **Step 9**
9	Inspect the suspension. Is the suspension worn?	Go to **Step 18**	Go to **Step 10**
10	Inspect the intermediate shaft. Is the intermediate shaft worn?	Go to **Step 19**	Go to **Step 3**
11	Adjust or replace the hoses. Refer to the appropriate procedure(s): • **Power Steering Cooler Pipe/Hose Replacement (With Hydroboost)** or **Power Steering Cooler Pipe/Hose Replacement (Without Hydroboost)** • **Power Steering Gear Inlet Pipe/Hose Replacement (Without Hydroboost)** or **Power Steering Gear Inlet Pipe/Hose Replacement (With Gas Hydroboost)** • **Power Brake Booster Inlet Hose Replacement** • **Power Brake Booster Outlet Hose Replacement** Did you complete the repair?	Go to **Step 19**	-
12	Replace the engine drive belt. Refer to or **Drive Belt Replacement - Accessory** . Did you complete the repair?	Go to **Step 19**	-
13	Replace the power steering pump pulley. Refer to **Power Steering Pulley Replacement**. Did you complete the repair?	Go to **Step 19**	-
14	Install the power steering pump correctly. Refer to **Power Steering Pump Replacement (4.8L, 5.3L, 6.0L, and 6.2L)**.		

cardiagn.com

	Did you complete the repair?	Go to **Step 19**	-
15	Install the power steering gear correctly. Refer to **Power Steering Gear Replacement (Rack and Pinion)** or **Power Steering Gear Replacement (Non Rack and Pinion)**. Did you complete the repair?	Go to **Step 19**	-
16	Replace the worn steering linkage. Refer to **Steering Linkage Inspection** . Did you complete the repair?	Go to **Step 19**	-
17	Replace the worn suspension components. Refer to **Diagnostic Starting Point - Suspension General Diagnosis** . Did you complete the repair?	Go to **Step 19**	-
18	Replace the intermediate shaft. Refer to **Upper Intermediate Steering Shaft Replacement** or **Lower Intermediate Steering Shaft Replacement** . Did you complete the repair?	Go to **Step 19**	-
19	Operate the system in order to verify the repair. Did you correct the condition?	System OK	Go to **Step 3**

WHINE OR GROWL NOISE FROM THE POWER STEERING SYSTEM (WITH HYDRAULIC BRAKE BOOSTER)

Whine or Growl Noise from the Power Steering System (With Hydraulic Brake Booster)

Step	Action	Yes	No
1	Did you review the Power Steering System General Description and perform the necessary inspections?	Go to **Step 2**	Go to **Symptoms - Power Steering System**
2	Verify that a whine or growl noise is present. Is a whine or growl noise present?	Go to **Step 3**	System OK
3	Perform the power steering test procedure in order to diagnose a hydraulic condition and repair or replace a component. Refer to **Power Steering System Test**. Is there a hydraulic problem in the system?	Go to **Step 12**	Go to **Step 4**
4	Inspect the power steering gear for a whine or growl noise using **J 39570** . Is the noise present at the power steering gear?	Go to **Step 8**	Go to **Step 5**
5	Inspect the power steering pump for a whine or growl noise using **J 39570** . Is the noise present at the power steering pump?	Go to **Step 9**	Go to **Step 6**
6	Inspect the power steering hoses for a whine or growl noise using **J 39570** . Is the noise present at the power steering hoses?	Go to **Step 10**	Go to **Step 7**
7	Inspect the hydraulic brake booster for a whine or growl noise using **J 39570** .		

cardiagn.com

	Is the noise present at the hydro boost?	Go to **Step 11**	Go to **Step 3**
8	Replace the power steering gear. Refer to **Power Steering Gear Replacement (Rack and Pinion)** or **Power Steering Gear Replacement (Non Rack and Pinion)**. Did you complete the repair?	Go to **Step 12**	-
9	Replace the power steering pump. Refer to **Power Steering Pump Replacement (4.8L, 5.3L, 6.0L, and 6.2L)**. Did you complete the repair?	Go to **Step 12**	-
10	Adjust the routing of the power steering hoses. Did you complete the repair?	Go to **Step 12**	-
11	Diagnose the hydraulic brake booster. Refer to **Diagnostic Starting Point - Hydraulic Brakes** in Hydraulic Brakes. Did you correct the condition?	Go to **Step 12**	-
12	Operate the system in order to verify the repair. Did you correct the condition?	System OK	Go to **Step 3**

WHINE OR GROWL NOISE FROM THE POWER STEERING SYSTEM (WITHOUT HYDRAULIC BRAKE BOOSTER)

Whine or Growl Noise from the Power Steering System (Without Hydraulic Brake Booster)

Step	Action	Yes	No
1	Did you review the Power Steering System General Description and perform the necessary inspections?	Go to **Step 2**	Go to **Symptoms - Power Steering System**
2	Verify that a whine or growl noise is present. Is a whine or growl noise present?	Go to **Step 3**	System OK
3	Perform the power steering test procedure in order to diagnose a hydraulic condition and repair or replace a component. Refer to **Power Steering System Test**. Is there a hydraulic problem in the system?	Go to **Step 10**	Go to **Step 4**
4	Inspect the power steering gear for a whine or growl noise using **J 39570** . Is the noise present at the power steering gear?	Go to **Step 7**	Go to **Step 5**
5	Inspect the power steering pump for a whine or growl noise using **J 39570** . Is the noise present at the power steering pump?	Go to **Step 8**	Go to **Step 6**
6	Inspect the power steering hoses for a whine or growl noise using **J 39570** . Is the noise present at the power steering hoses?	Go to **Step 9**	Go to **Step 3**
7	Replace the power steering gear. Refer to **Power Steering Gear Replacement (Rack and Pinion)** or **Power Steering Gear Replacement (Non Rack and**		-

cardiagn.com

	Pinion). Did you complete the repair?	Go to **Step 10**	
8	Replace the power steering pump. Refer to **Power Steering Pump Replacement (4.8L, 5.3L, 6.0L, and 6.2L)**. Did you complete the repair?	Go to **Step 10**	-
9	Adjust the routing of the power steering hoses. Did you complete the repair?	Go to **Step 10**	-
10	Operate the system in order to verify the repair. Did you correct the condition?	System OK	Go to **Step 3**

POOR RETURN OF STEERING WHEEL

Poor Return of Steering Wheel

Step	Action	Yes	No
DEFINITION: After completing a turn, extra steering input is required for the steering wheel to return to center.			
1	Did you review the General Description and perform the necessary inspections?	Go to **Step 2**	Go to **Power Steering System Description and Operation**
2	Verify that poor return of the steering wheel is present Does the system operate normally ?	System OK	Go to **Step 3**
3	1. Raise and Support the vehicle. Refer to **Lifting and Jacking the Vehicle** . 2. Lubricate the tie rod ends and ball joints if applicable. 3. Inspect the suspension system for worn or damaged components. 4. Repair as necessary. Did you find and correct the condition?	Go to **Step 12**	Go to **Step 4**
4	1. Rotate the steering wheel ONE revolution in both directions. 2. Rotate the steering wheel back to the original position. Was the steering wheel abnormally difficult to rotate in either direction?	Go to **Step 5**	Go to **Step 10**
	IMPORTANT: **Position the wheels straight ahead. Do NOT rotate the steering wheel more than one complete revolution from center.**		

cardiagn.com

5	1. Disconnect the intermediate shaft from the steering column. 2. Note the position of the steering wheel and rotate the steering wheel ONE revolution in both directions. 3. Rotate the steering wheel back to the original position. Was the steering wheel abnormally difficult to rotate in either direction.	Go to **Step 11**	Go to **Step 6**
6	Inspect the intermediate shaft for stiff or loose joints. Repair or replace as necessary. Did you find and complete the repair?	Go to **Step 12**	Go to **Step 7**
7	1. Remove the front tire and wheel assemblies. Refer to **Tire and Wheel Removal and Installation** 2. Disconnect both outer tie rod ends from the steering knuckles. 3. Use your hands in order to move the tie rod end studs. 4. If abnormally difficult to move, replace the Tie rod end. If equipped with recirculating ball steering, insure that idler and pitman arm joints are not to stiff. Repair as necessary. Did you find and complete the repair?	Go to **Step 12**	Go to **Step 8**
8	1. Use your hands to rotate the steering knuckle inboard and outboard in order to inspect for a binding strut bearings, ball joints or axle. 2. Repair or replace any abnormally stiff or loose components. Did you find and complete the repair?	Go to **Step 12**	Go to **Step 9**
9	Inspect for binding in the steering gear. If a binding is present repair or replace the steering gear. Did you find and complete the repair?	Go to **Step 12**	Go to **Step 10**
10	Inspect the wheel alignment and adjust as necessary. Refer to **Measuring Wheel Alignment** Did you find and complete the repair?	Go to **Step 12**	-
11	Inspect the steering column for a binding. If a binding is present, repair or replace the steering column as necessary. Did you find and complete the repair?	Go to **Step 12**	-
	Operate the system in order to verify the repair.		

cardiagn.com

12	Did you correct the condition?	System OK	-

STEERING EFFORT TOO EASY IN ONE OR BOTH DIRECTIONS

Steering Effort Too Easy in One or Both Directions

Step	Action	Yes	No
1	Did you review the Power Steering System Description and perform the necessary inspections?	Go to **Step 2**	Go to **Symptoms - Power Steering System**
2	Verify that the steering effort is too easy in one or both directions. Does the system operate normally?	System OK	Go to **Step 3**
3	Perform the power steering test procedure. Refer to **Power Steering System Test**. Did you complete the procedure?	Go to **Step 4**	-
4	Operate the system in order to verify the repair. Did you correct the condition?	System OK	Go to **Step 3**

STEERING EFFORT HARD IN ONE OR BOTH DIRECTIONS

Steering Effort Hard in One or Both Directions

Step	Action	Yes	No
1	Did you review the Power Steering System General Description and perform the necessary inspections?	Go to **Step 2**	Go to **Symptoms - Power Steering System**
2	Verify that the steering effort is hard in one or both directions. Does the system operate normally?	System OK	Go to **Step 3**
3	Perform the power steering test procedure. Refer to **Power Steering System Test**. Did you complete the procedure?	Go to **Step 4**	-
4	Operate the system in order to verify the repair. Did you correct the condition?	System OK	Go to **Step 3**

REPAIR INSTRUCTIONS

RACK AND PINION STEERING LINKAGE INSPECTION

Tools Required

- **J 42640** Steering Column Anti-Rotation Pin
- **J 45101** Hub and Wheel Runout Gage

Left Side Steering Linkage

cardiagn.com

1. Elevate the left front of vehicle and install suitable vehicle support, maintaining contact between the right front wheel and shop floor.

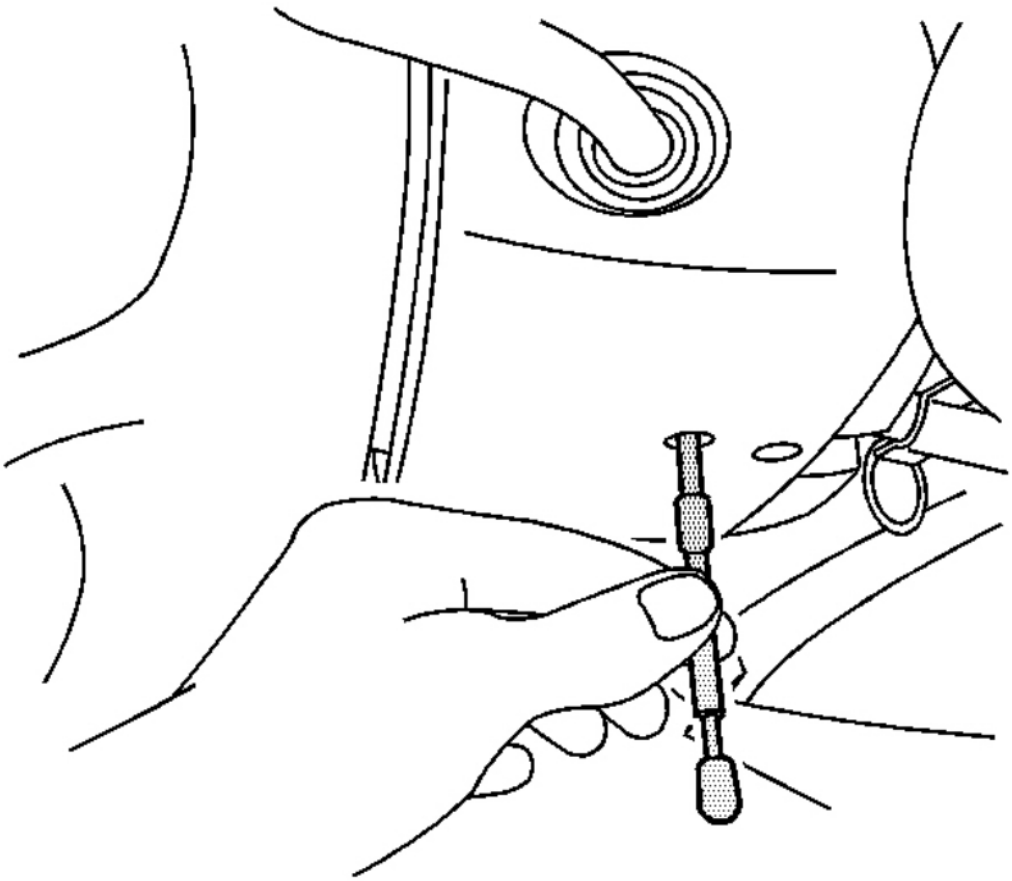

Fig. 5: Identifying J 42640
Courtesy of GENERAL MOTORS CORP.

2. Position the wheels in a straight-ahead position and install the **J 42640** .

cardiagn.com

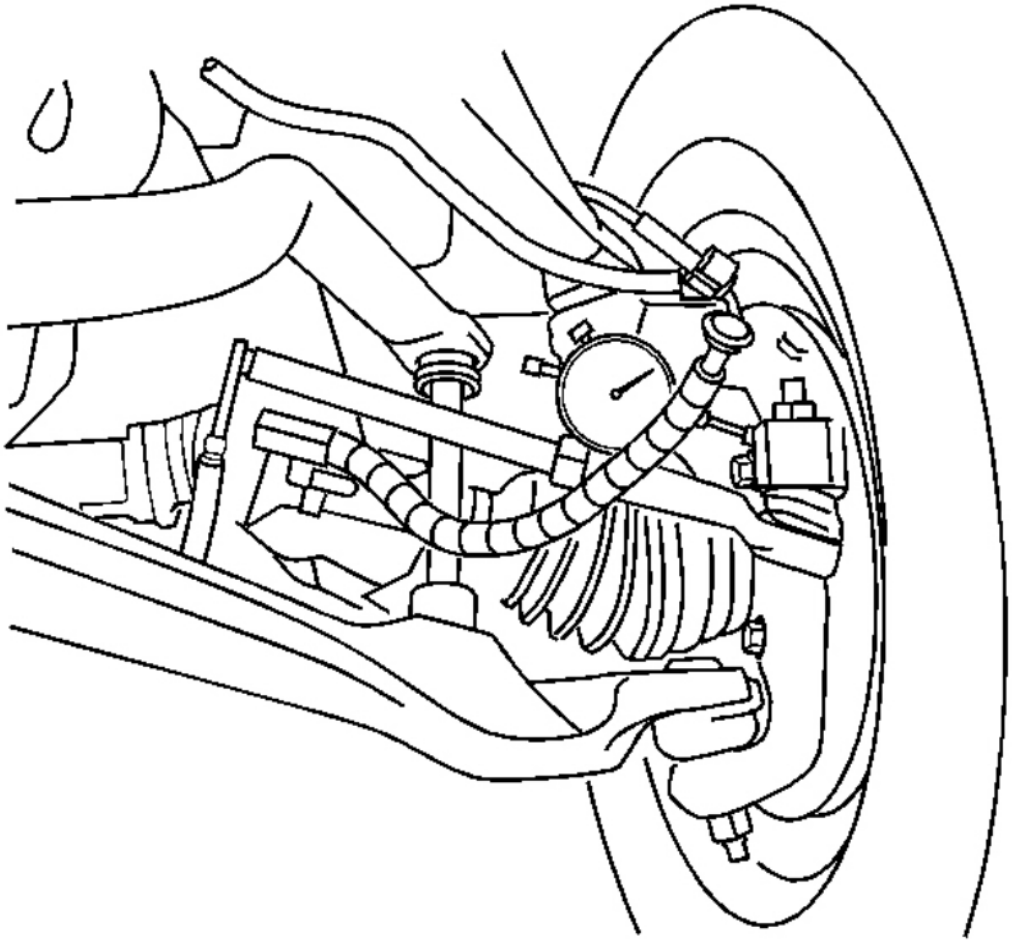

Fig. 6: View Of Dial Indicator Between The Outer Tie Rod And Steering Knuckle
Courtesy of GENERAL MOTORS CORP.

3. Install a dial indicator between the outer tie rod and steering knuckle as shown and push inward to remove the lash slowly with one hand.
4. Place the dial indicator at zero, pull outward on the tire and note amount of movement in joint.

   Movement should not exceed 1.0 mm (0.039 in).

cardiagn.com

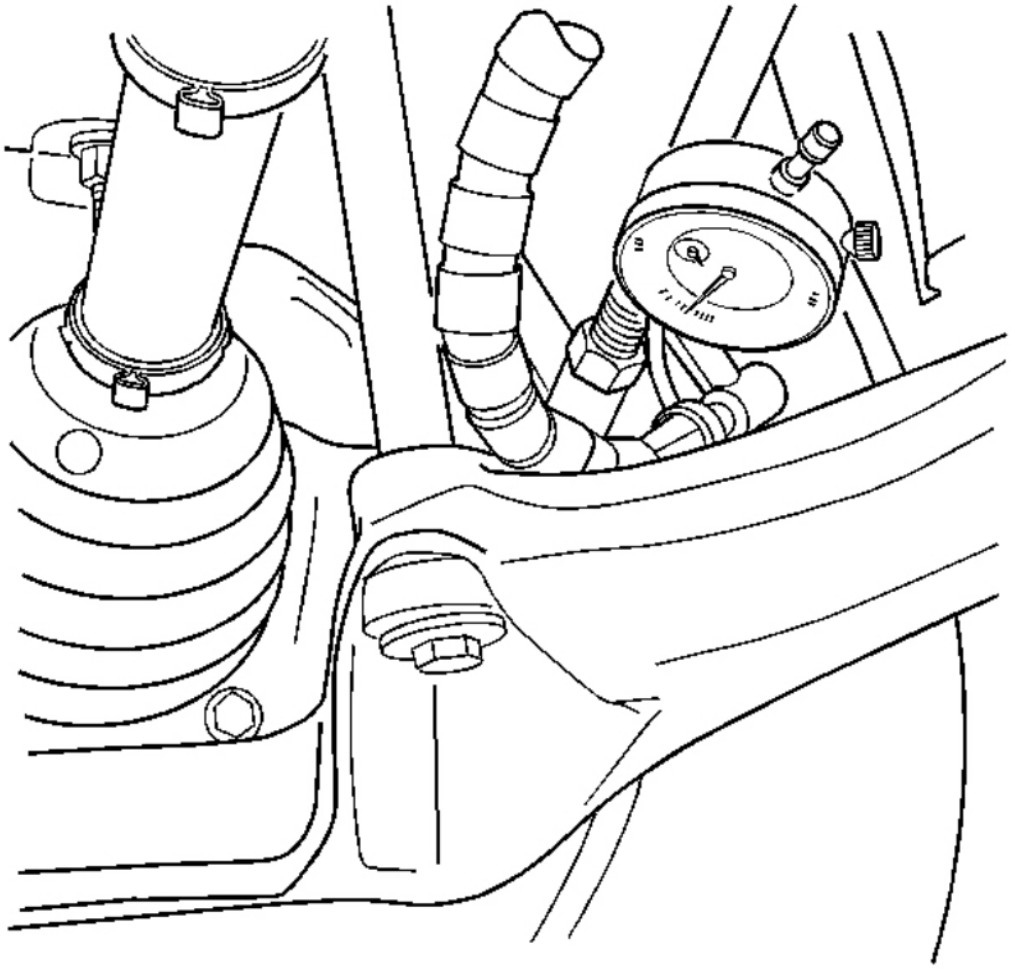

Fig. 7: View Of Dial Indicator Between The Outer Tie Rod End And Jam Nut
Courtesy of GENERAL MOTORS CORP.

5. Install the dial indicator between the outer tie rod end and jam nut and attach the other end to the relay rod as shown and push inward on the tire to remove the lash slowly with one hand.
6. Place the dial indicator at zero, pull outward and note amount of movement in the joint.

   Movement should not exceed 1.0 mm (0.039 in).

cardiagn.com

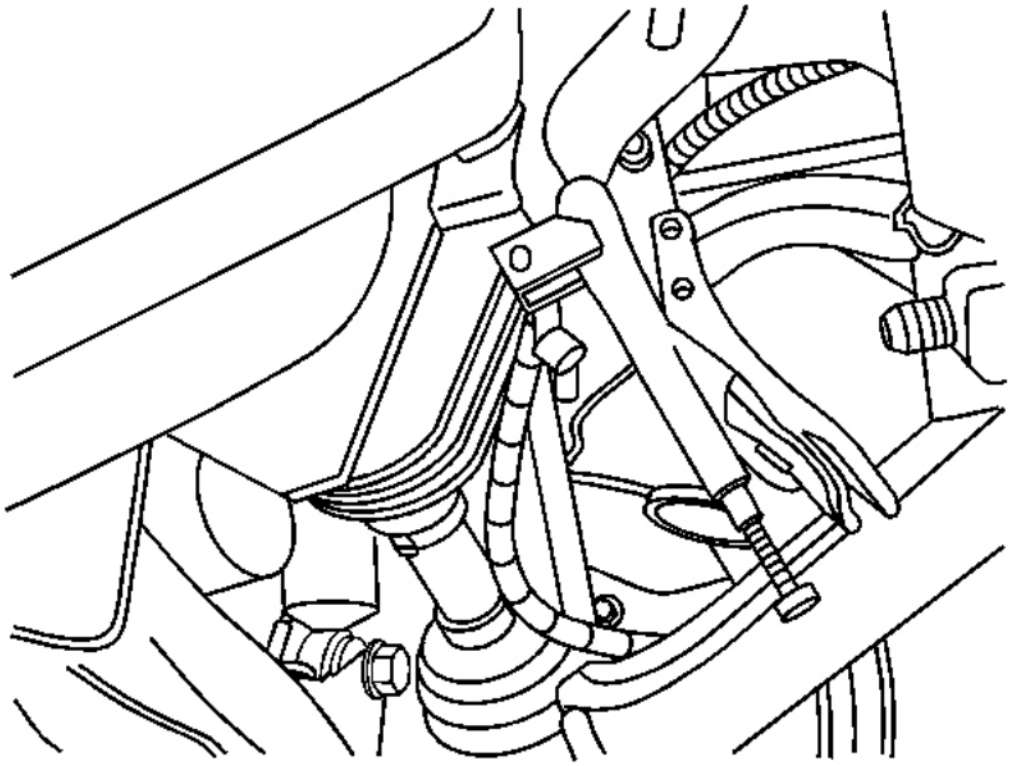

Fig. 8: View Of Dial Indicator Between The Pitman Arm And Relay Rod
Courtesy of GENERAL MOTORS CORP.

7. Install the dial indicator between the pitman arm and relay rod as shown and push inward on the tire to remove the lash slowly with one hand.

cardiagn.com

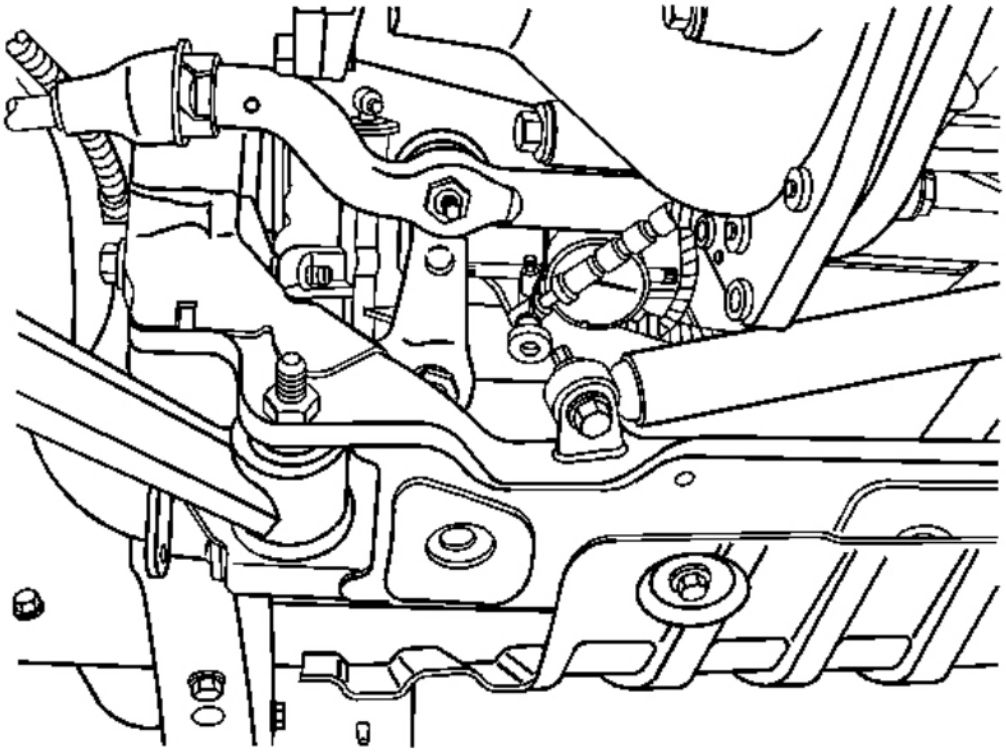

Fig. 9: Measuring Amount Of Movement In The Left Side Joint
Courtesy of GENERAL MOTORS CORP.

8. Place the dial indicator at zero, pull outward and note the amount of movement in the joint.

   Movement should not exceed 1.0 mm (0.039 in).

Right Side Steering Linkage

cardiagn.com

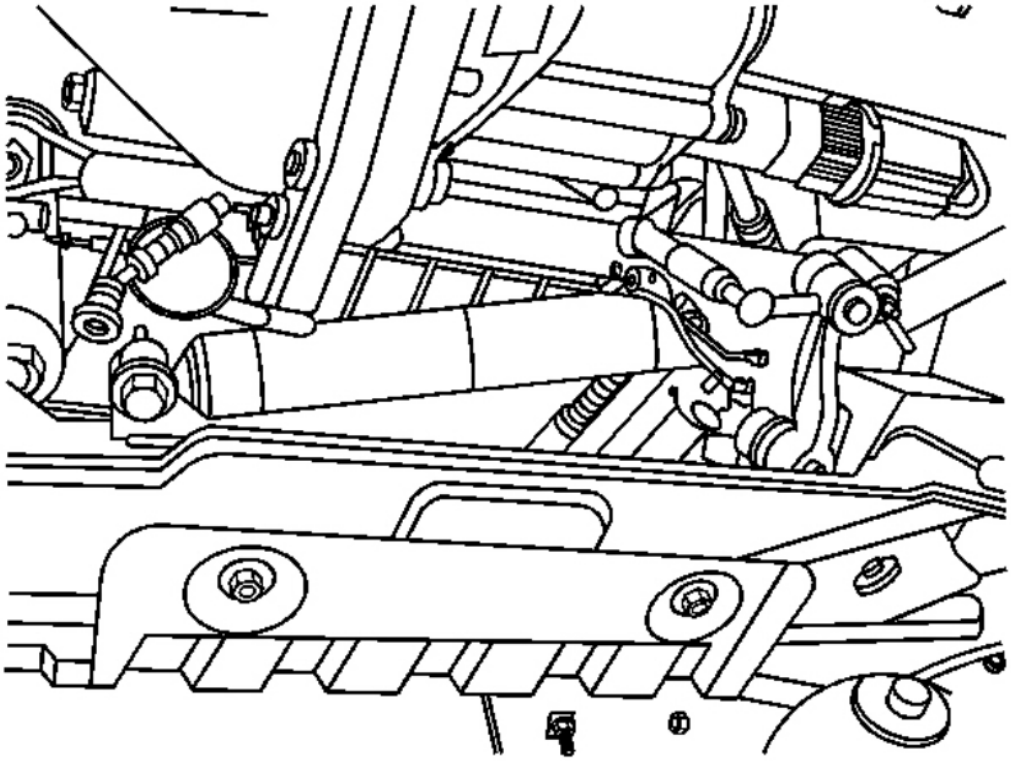

Fig. 10: Elevated Right Front Of Vehicle
Courtesy of GENERAL MOTORS CORP.

1. Elevate the right front of vehicle and install a suitable vehicle support, maintaining contact between the left front wheel shop floor.

cardiagn.com

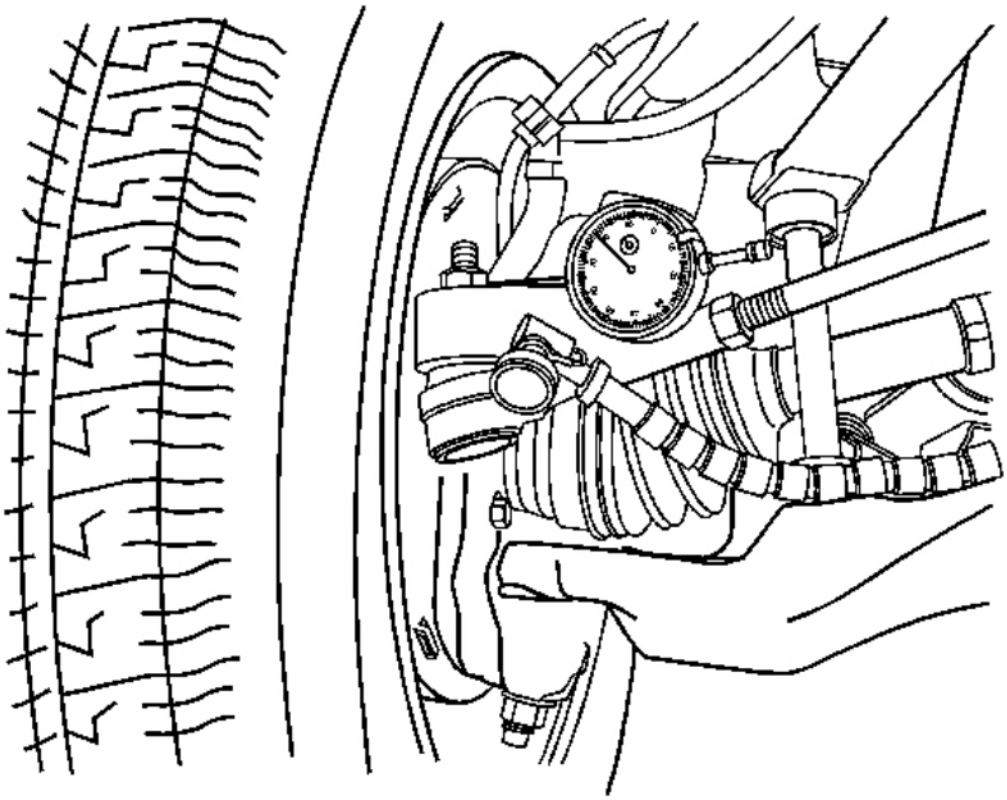

Fig. 11: View Of Dial Indicator Between The Outer Tie Rod And Steering Knuckle
Courtesy of GENERAL MOTORS CORP.

2. Install a dial indicator between the outer tie rod and steering knuckle as shown and push inward to remove the lash slowly with one hand.

cardiagn.com

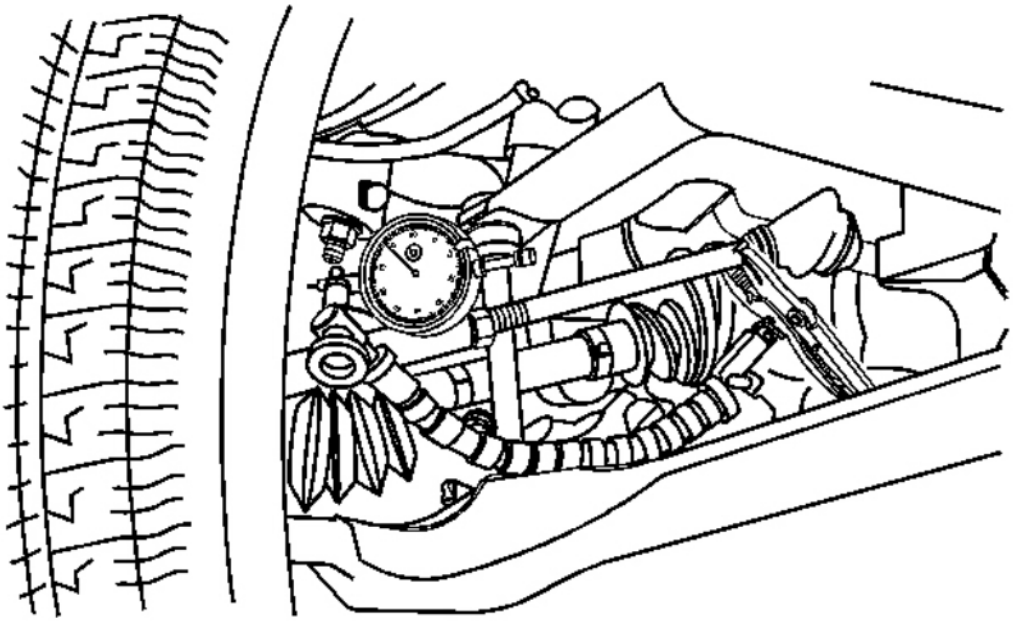

Fig. 12: Noting Amount Of Movement In Right Side Joint
Courtesy of GENERAL MOTORS CORP.

3. Place the dial indicator at zero, pull outward and note amount of movement in joint.

   Movement should not exceed 1.0 mm (0.039 in).

cardiagn.com

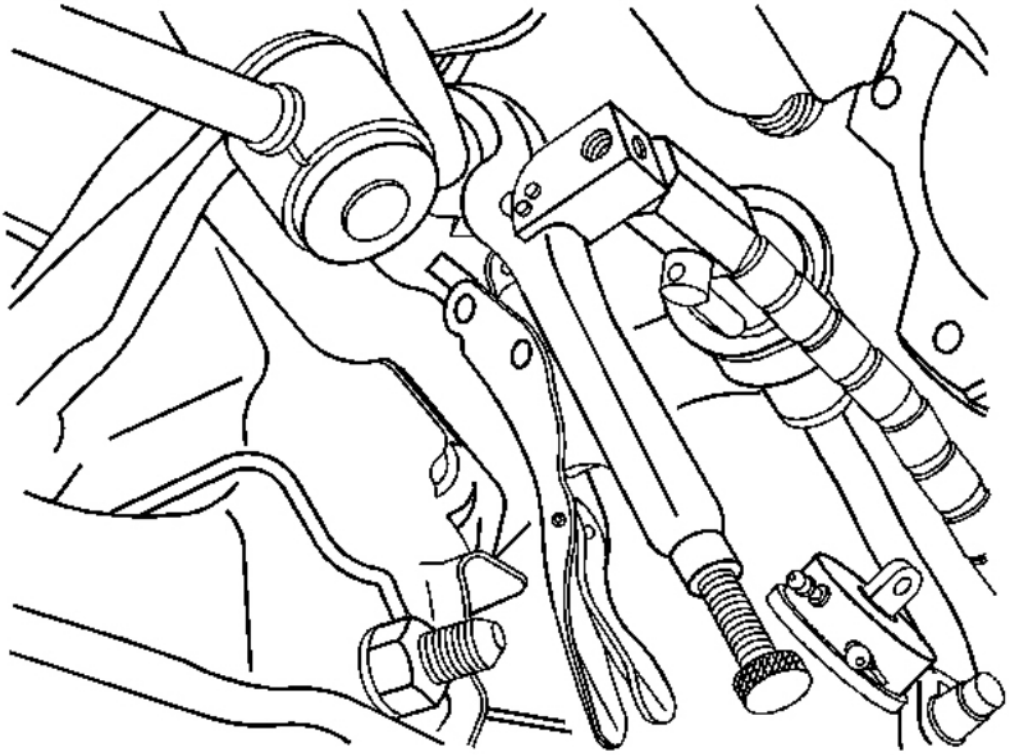

Fig. 13: View Of Dial Indicator Between The Outer Tie Rod End And Relay Rod
Courtesy of GENERAL MOTORS CORP.

4. Install the dial indicator between the outer tie rod end and relay rod as shown and push inward to remove the lash slowly with one hand.

cardiagn.com

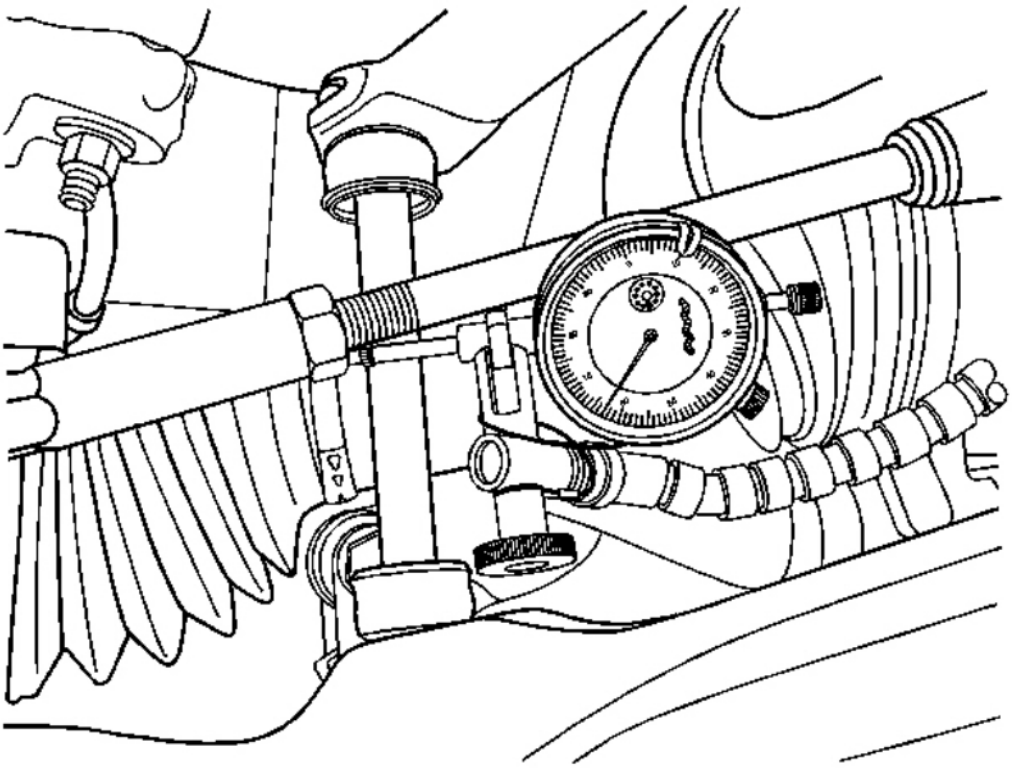

Fig. 14: Noting Amount Of Movement In Right Side Tie Rod End
Courtesy of GENERAL MOTORS CORP.

5. Place the dial indicator at zero, pull outward and note amount of movement in the joint.

   Movement should not exceed 1.0 mm (0.039 in).

POWER STEERING SYSTEM BLEEDING

IMPORTANT:

- **Use clean, new power steering fluid type only. See the Maintenance and Lubrication subsection for fluid specifications. Refer to Fluid and Lubricant Recommendations .**
- **Hoses touching the frame, body or engine may cause system noise. Verify that the hoses do not touch any other part of the vehicle.**
- **Loose connections may not leak, but could allow air into the steering system. Verify that all hose connections are tight.**

cardiagn.com

IMPORTANT: Power steering fluid level must be maintained throughout bleed procedure.

1. Fill pump reservoir with fluid to minimum system level, FULL COLD level, or middle of hash mark on cap stick fluid level indicator.

IMPORTANT: With hydro-boost only, the oil level will appear falsely high if the hydro-boost accumulator is not fully charged. Do not apply the brake pedal with the engine OFF. This will discharge the hydro-boost accumulator.

2. If equipped with hydro-boost, fully charge the hydro-boost accumulator using the following procedure:
   1. Start the engine.
   2. Firmly apply the brake pedal 10-15 times.
   3. Turn the engine OFF.
3. Raise the vehicle until the front wheels are off the ground. Refer to **Lifting and Jacking the Vehicle** .
4. Key on engine OFF, turn the steering wheel from stop to stop 12 times.

   Vehicles equipped with hydro-boost systems or longer length power steering hoses may require turns up to 15 to 20 stop to stops.

5. Verify power steering fluid level per operating specification. Refer to **Checking and Adding Power Steering Fluid (With Hydroboost)** or **Checking and Adding Power Steering Fluid (Without Hydroboost)**.
6. Start the engine. Rotate steering wheel from left to right. Check for sign of cavitation or fluid aeration (pump noise/whining).
7. Verify the fluid level. Repeat the bleed procedure, if necessary.

CHECKING AND ADDING POWER STEERING FLUID (WITH HYDROBOOST)

NOTE: When adding fluid or making a complete fluid change, always use the proper power steering fluid. Failure to use the proper fluid will cause hose and seal damage and fluid leaks.

1. If the power steering system has been serviced, bleed the power steering system to remove any trapped air from the system. Refer to **Power Steering System Bleeding**.

IMPORTANT: The oil level will appear falsely high if the hydro-boost accumulator is not fully charged. Do not apply the brake pedal with the engine off, this will discharge the hydro-boost accumulator.

2. Fully charge the hydro-boost accumulator using the following procedure:
   1. Start the engine.
   2. Firmly apply the brake pedal 2 to 3 times.

cardiagn.com

3. Turn the engine OFF.

IMPORTANT: The Add and Cold Full marks on the capstick are calculated for oil at ambient temperature. If the oil is hot, the oil level may appear slightly high.

3. Clean the area surrounding the reservoir cap.
4. Remove the reservoir cap.

IMPORTANT: The ideal oil level is between the Add and the Full Cold marks. Since overfilling is just as undesirable as underfilling, there is no reason to full all the way up to the Full Cold mark.

5. Inspect the power steering pump fluid level at regular intervals.

   Add fluid when required. Refer to **Fluid and Lubricant Recommendations** .

6. If the fluid level is low, add power steering fluid to the proper level.
7. Install the reservoir cap.
8. When checking the fluid level after servicing the steering system, bleed the air from the system. Refer to **Power Steering System Bleeding**.

CHECKING AND ADDING POWER STEERING FLUID (WITHOUT HYDROBOOST)

NOTE: When adding fluid or making a complete fluid change, always use the proper power steering fluid. Failure to use the proper fluid will cause hose and seal damage and fluid leaks.

1. Clean the area surrounding the reservoir cap.
2. Remove the reservoir cap.
3. Inspect the power steering pump fluid level at regular intervals. Use the appropriate procedure below.

   Add fluid when required. Refer to **Fluid and Lubricant Recommendations** .

   Fluid Is Cold

   1. Remove the reservoir cap.
   2. Inspect the fluid level on the capstick.
   3. Ensure that the fluid level is between the bottom of the COLD/FULL mark and the end of the capstick.

   Fluid Is Hot

   1. Run the engine until the fluid reaches about 80°C (170°F).

cardiagn.com

   2. Turn the engine OFF.
   3. Remove the reservoir cap.
   4. Inspect the fluid level on the capstick.
   5. Ensure that the fluid level is between the HOT/FULL and the COLD/FULL marks on the capstick.
4. If the fluid level is low, add power steering fluid to the proper level.
5. Install the reservoir cap.
6. When checking the fluid level after servicing the steering system, bleed the air from the system. Refer to **Power Steering System Bleeding**.

POWER STEERING SYSTEM FLUSHING

IMPORTANT: Do not reuse any drained power steering fluid regardless of appearance or condition.

1. Turn OFF the engine.
2. Raise the front end of the vehicle off the ground until the tires and wheels turn freely. Refer to **Lifting and Jacking the Vehicle** .
3. Place a large container under the fluid return hose in order to collect the draining fluid.
4. Remove the fluid return hose at the power steering pump reservoir inlet connection.
5. Plug the reservoir return hose inlet connection on the power steering pump.

IMPORTANT:

- **This step may require 4 L (4 qt) of power steering fluid until the draining fluid appears clear.**
- **Do not run the engine without the power steering fluid level at FULL COLD.**

6. Run the engine at idle while an assistant maintains the fluid level at FULL COLD in the reservoir using new approved power steering fluid.
7. Turn OFF the engine.
8. Turn the steering wheel fully to the left and to the right.
9. Remove the plug from the pump reservoir inlet connection.
10. Install the fluid return hose to the pump reservoir.
11. Maintain the fluid level at FULL COLD.
12. Operate the engine at idle for approximately 15 minutes.
13. Repeat steps 3-5.
14. Inspect the power steering fluid for the following indications of contamination:
    - Milky fluid - water
    - Brown fluid - burnt
    - Plastic debris or dirt chunks
15. If the fluid is contaminated, repeat steps 6-12 in order to complete a third flush.

cardiagn.com

16. Remove the plug from the pump reservoir inlet connection.
17. Install the fluid return hose to the pump reservoir.
18. Clean any spilled fluid.
19. Bleed the power steering system. Refer to **Power Steering System Bleeding**.

POWER STEERING PULLEY REPLACEMENT

Tools Required

- **J 25033-C** Power Steering Pump Pulley Installer. See **Special Tools**.
- **J 25034-C** Power Steering Pump Pulley Remover. See **Special Tools**.

Removal Procedure

1. Remove the upper fan shroud, if equipped. Refer to **Fan Shroud Replacement - Upper** .
2. Remove the accessory drive belt. Refer to **Drive Belt Replacement - Accessory** .

cardiagn.com

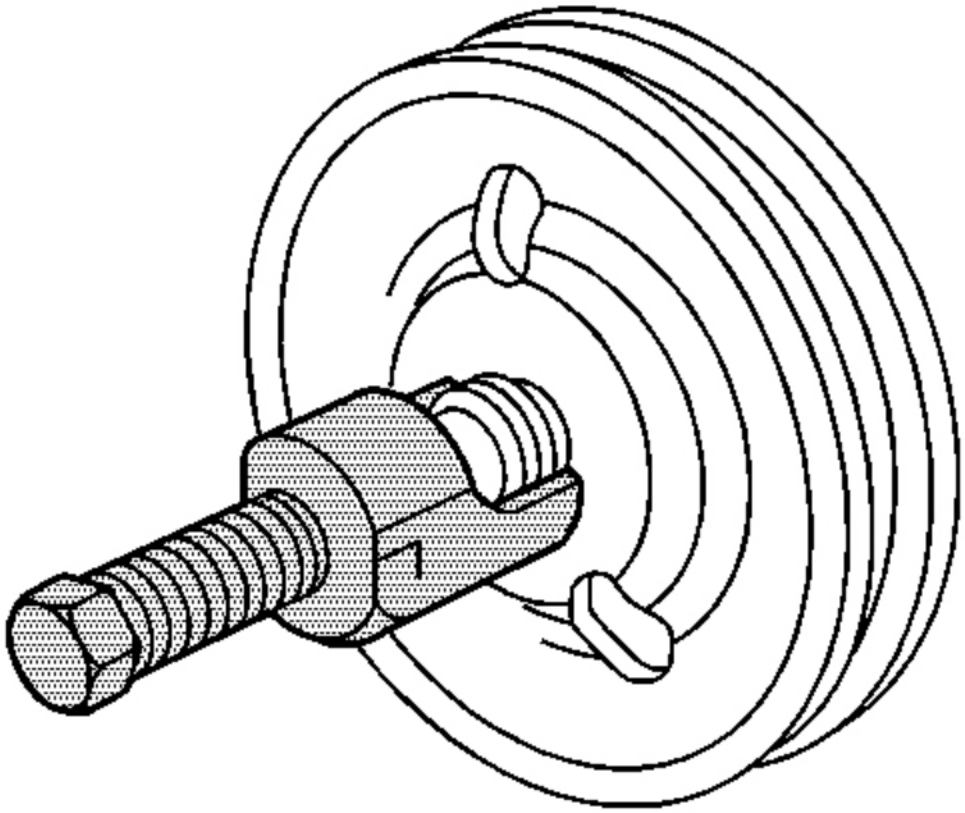

Fig. 15: View Of Power Steering Pump Pulley Remover
Courtesy of GENERAL MOTORS CORP.

3. Remove the power steering pump pulley using the **J 25034-C** . See **Special Tools**.

Installation Procedure

cardiagn.com

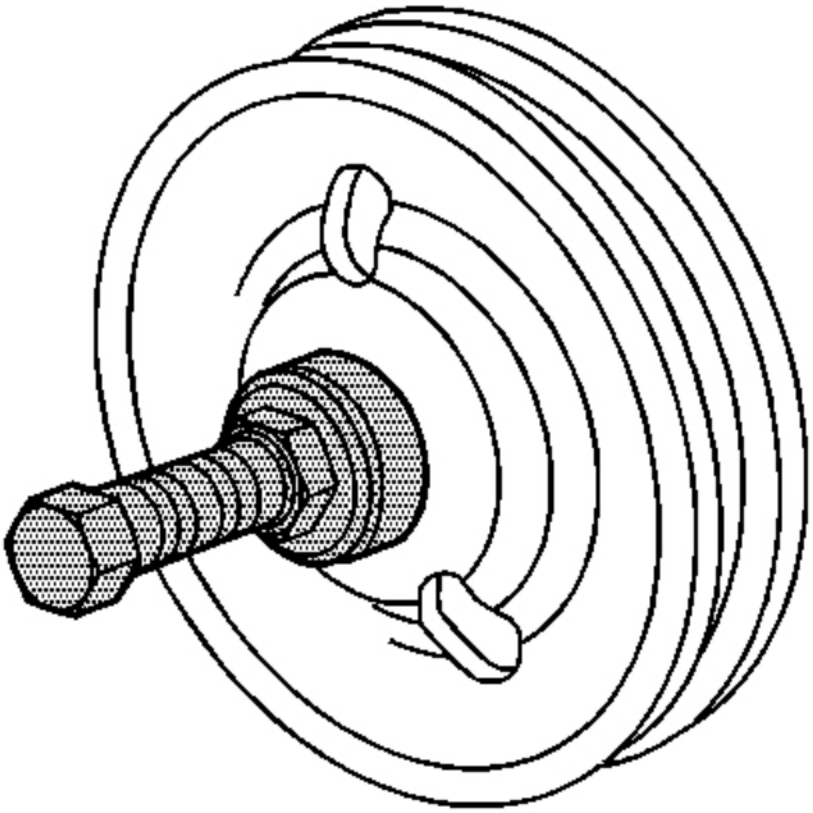

Fig. 16: View Of Power Steering Pump Pulley Installer
Courtesy of GENERAL MOTORS CORP.

1. Place the power steering pump pulley on the end of the power steering pump shaft.
2. Install the power steering pump pulley using **J 25033-C** . See **Special Tools**.

cardiagn.com

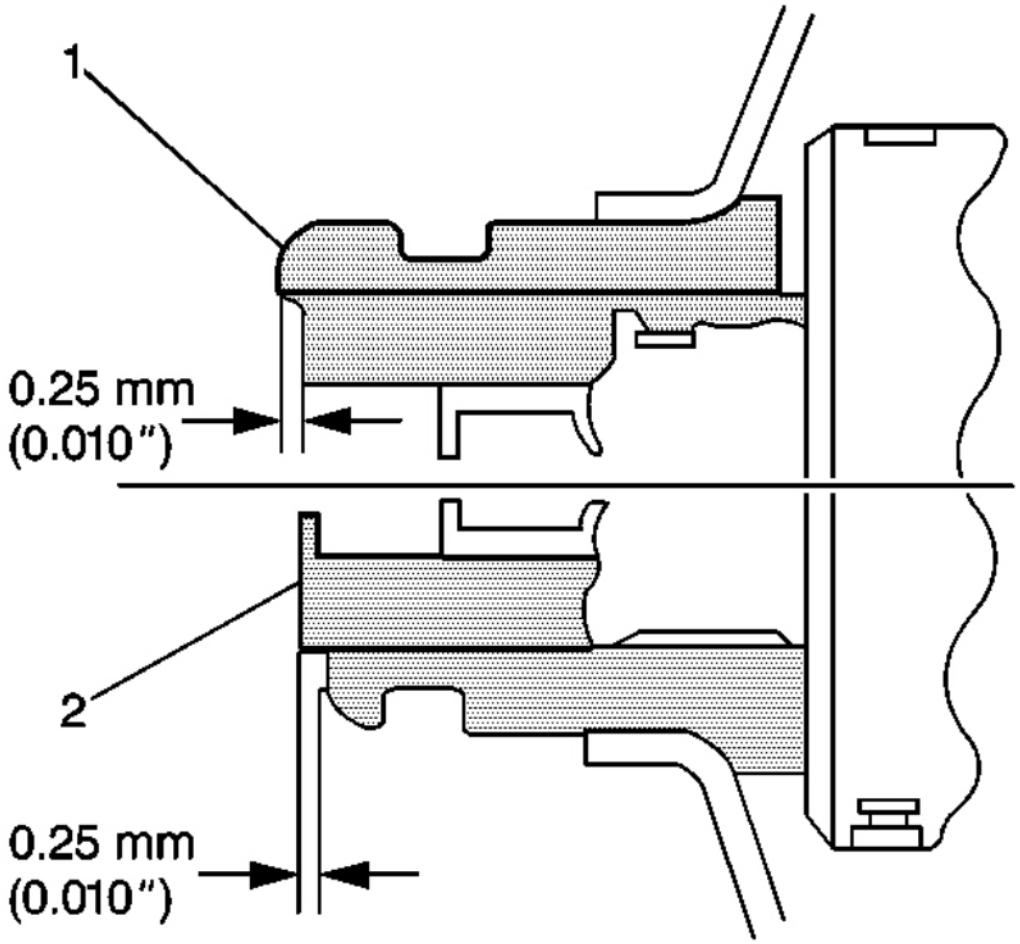

Fig. 17: Checking Power Steering Pump Pulley Installed Depth
Courtesy of GENERAL MOTORS CORP.

3. Ensure that the power steering pump pulley (1) is flush against the power steering pump shaft (2), with an allowable variance of 0.25 mm (0.010 in).
4. Install the accessory drive belt. Refer to **Drive Belt Replacement - Accessory** .
5. Install the upper fan shroud, if equipped. Refer to **Fan Shroud Replacement - Upper** .

POWER STEERING PUMP REPLACEMENT (4.8L, 5.3L, 6.0L, AND 6.2L)

Removal Procedure

1. Remove the power steering pulley. Refer to **Power Steering Pulley Replacement**.

cardiagn.com

2. Raise the vehicle. Refer to **Lifting and Jacking the Vehicle** .

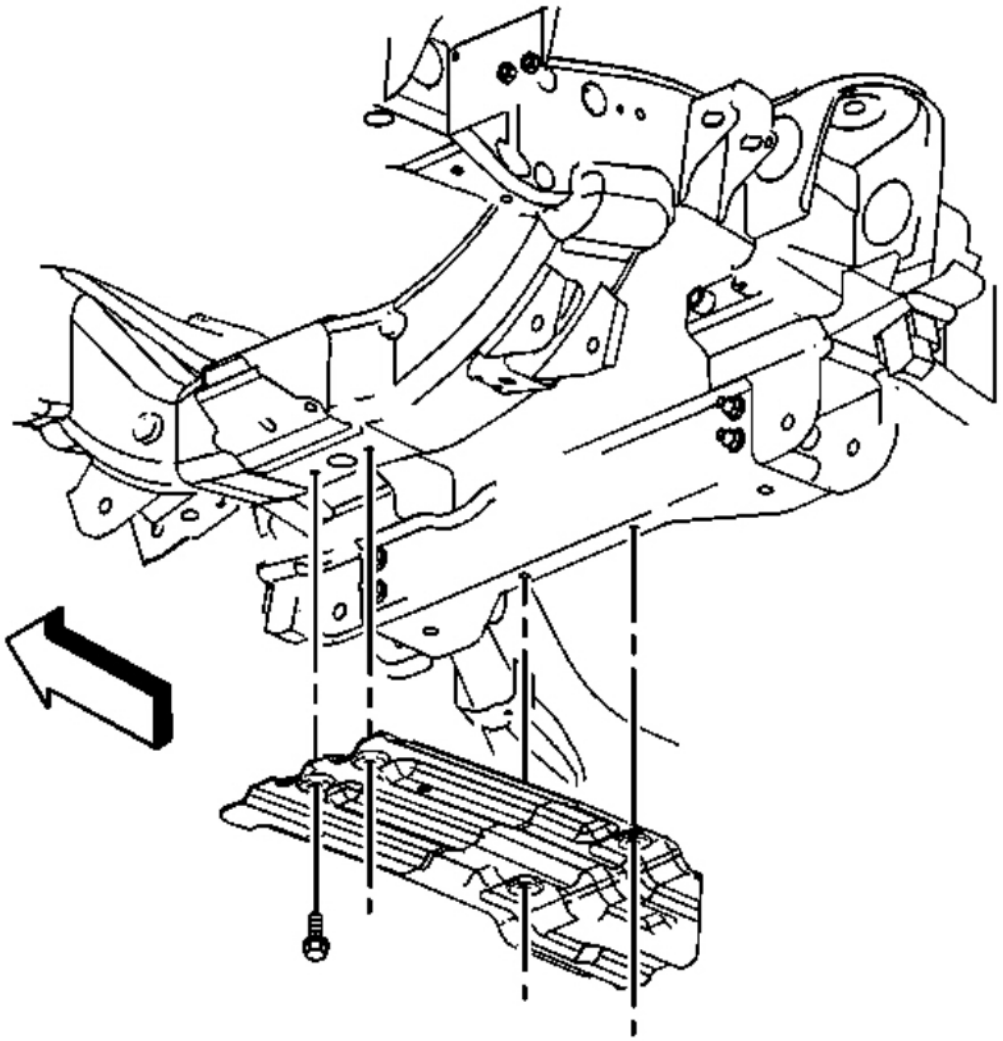

Fig. 18: Identifying Oil Pan Skid Plate
Courtesy of GENERAL MOTORS CORP.

3. Remove the oil pan skid plate bolts.
4. Remove the oil pan skid plate from the vehicle, if equipped.
5. Place a drain pan under the vehicle.

cardiagn.com

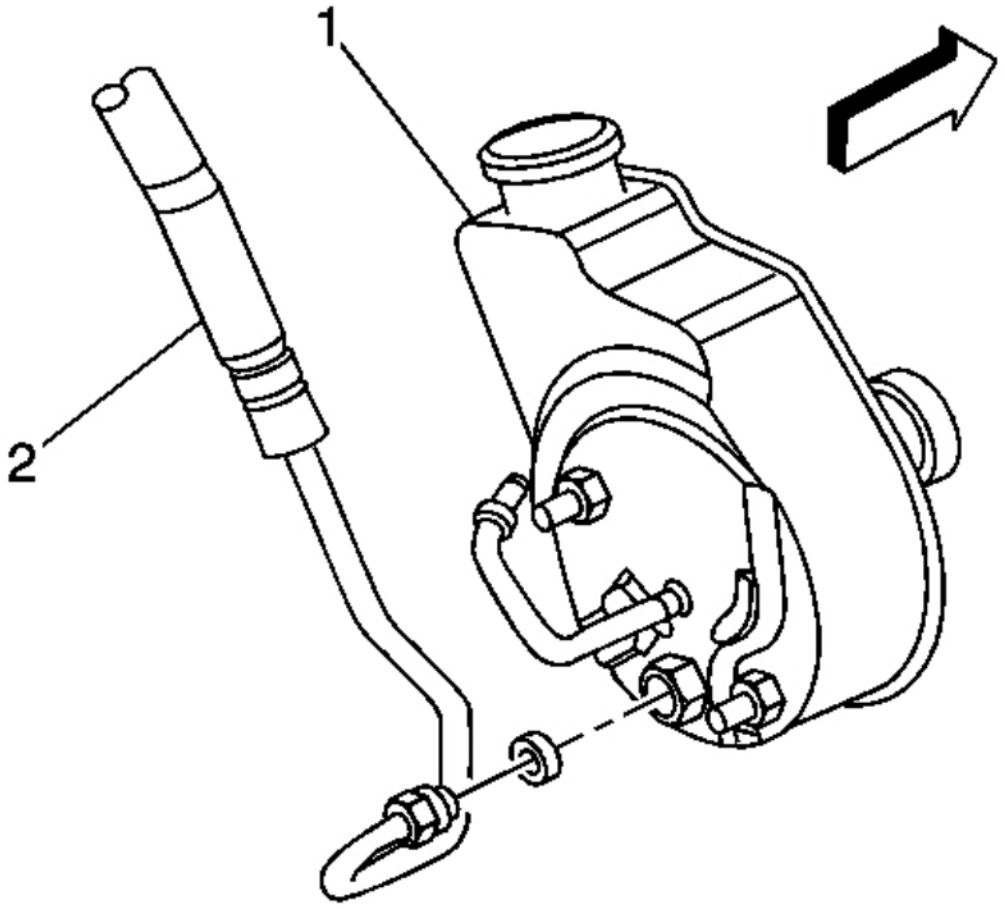

Fig. 19: View Of Power Steering Pressure Hose & Power Steering Pump
Courtesy of GENERAL MOTORS CORP.

6. Remove the power steering pressure hose (2) from the power steering pump from underneath the vehicle.
7. Lower the vehicle.

cardiagn.com

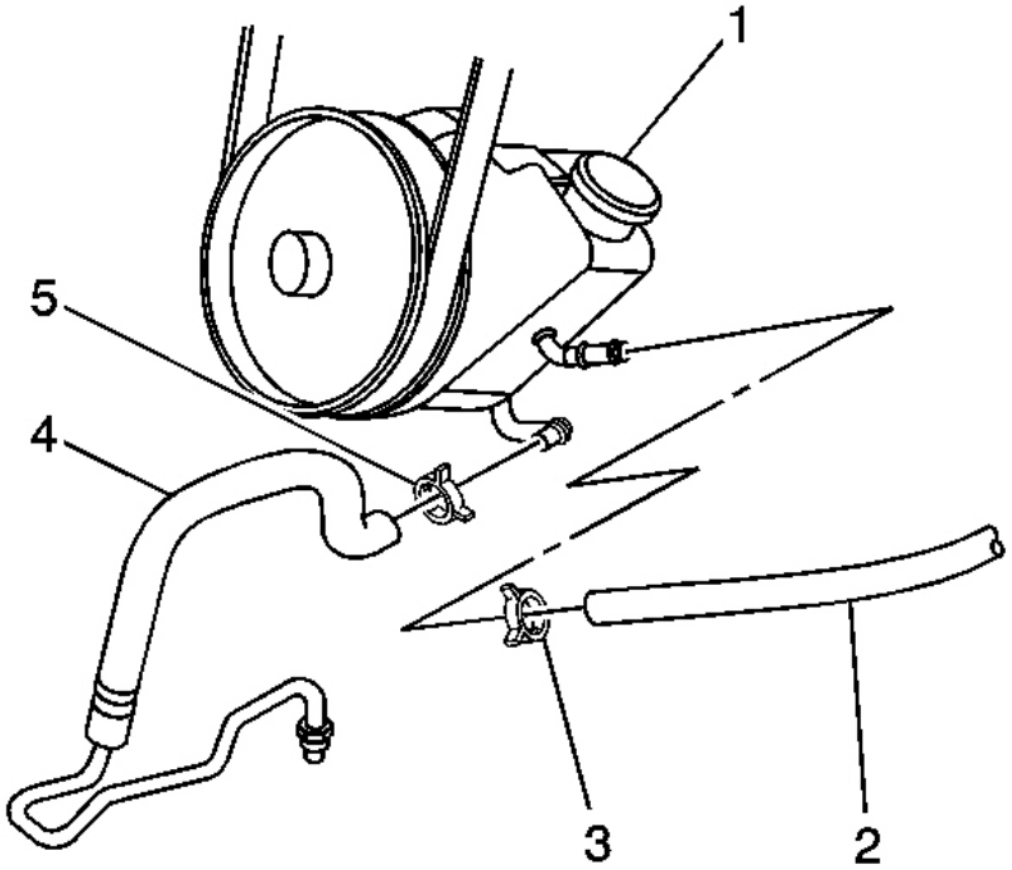

Fig. 20: View Of Power Steering Return Hoses, Clamps & Power Steering Pump
Courtesy of GENERAL MOTORS CORP.

8. Remove the clamp (5) retaining the power steering return hose to the power steering pump and remove the hose (4).
9. If equipped with hydroboost, remove clamp (3) and disconnect hose (2) from pump.
10. Remove the lower intermediate shaft from the steering gear. Refer to **Lower Intermediate Steering Shaft Replacement** .

cardiagn.com

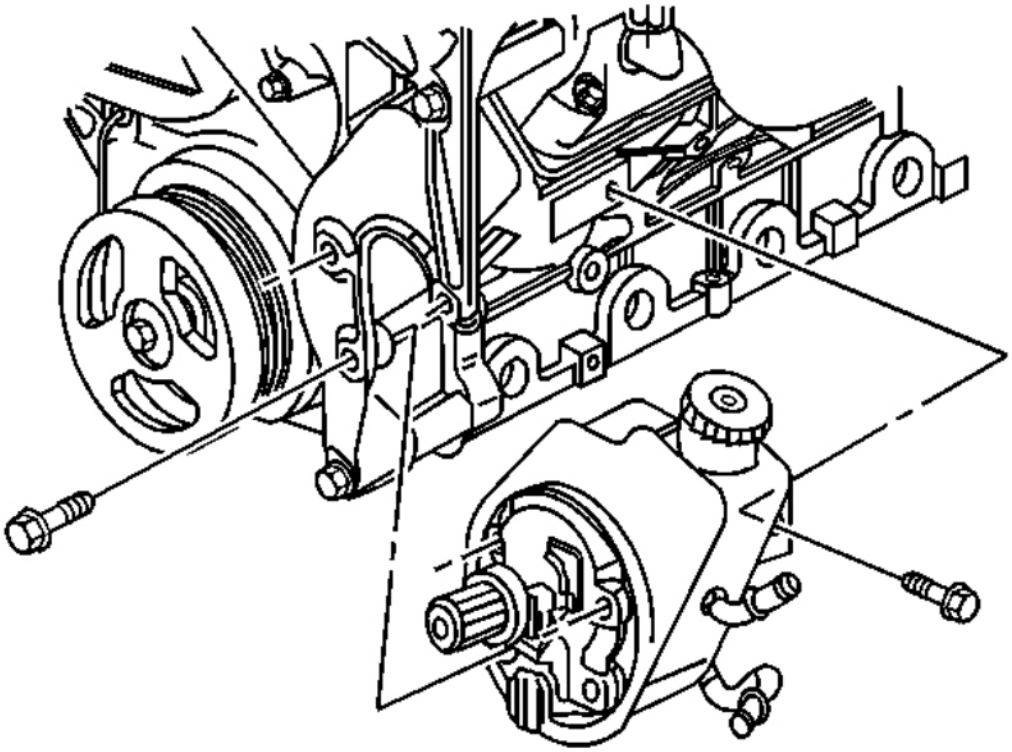

Fig. 21: View Of Power Steering Pump & Bolts (4.8L, 5.3L & 6.0L)
Courtesy of GENERAL MOTORS CORP.

11. Remove the bolt retaining the rear bracket to the engine.
12. Remove the bolts from the front of the pump.
13. Remove the pump from the vehicle.

cardiagn.com

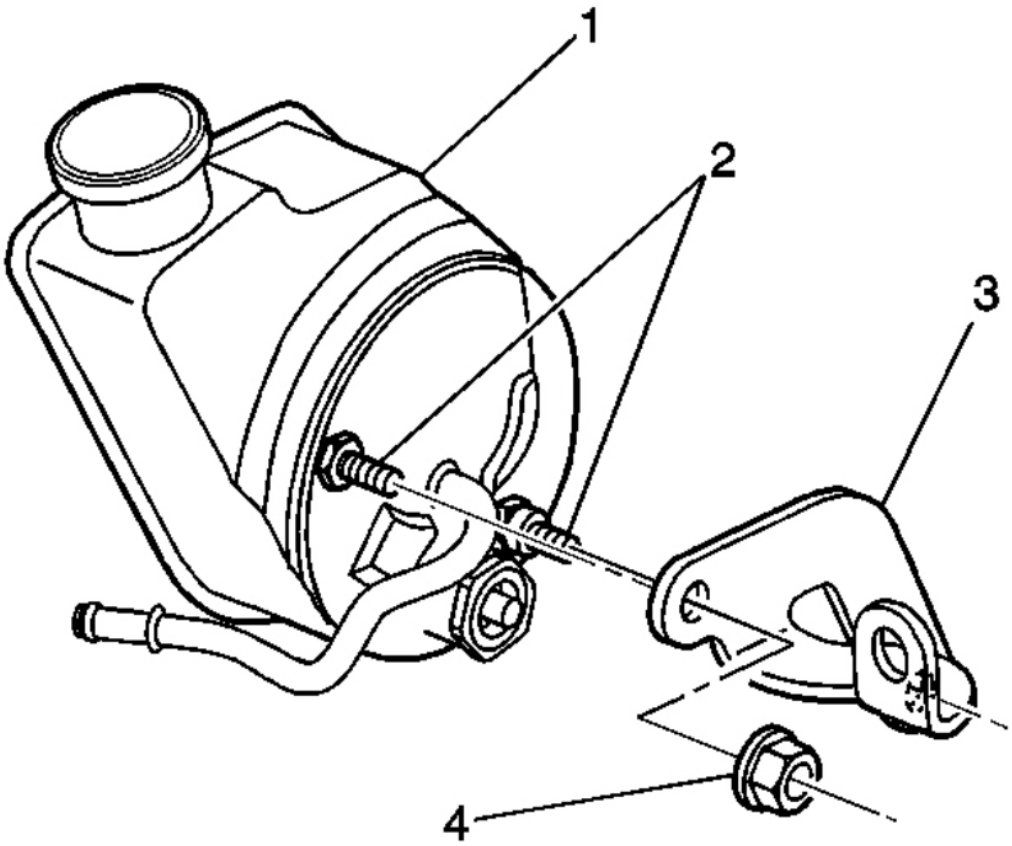

Fig. 22: View Of Power Steering Pump Bracket & Nuts (4.8L, 5.3L & 6.0L)
Courtesy of GENERAL MOTORS CORP.

14. Remove the bracket (3) from the rear of the pump (1).

Installation Procedure

NOTE: **Refer to Fastener Notice .**

cardiagn.com

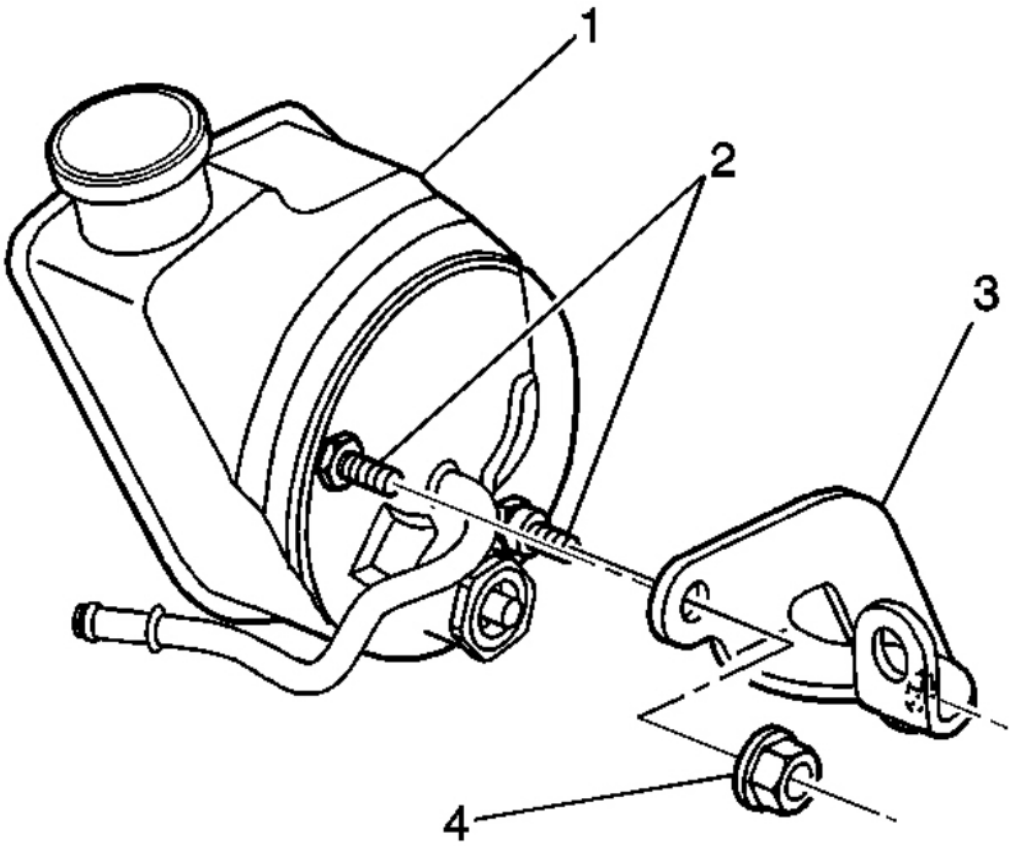

Fig. 23: View Of Power Steering Pump Bracket & Nuts (4.8L, 5.3L & 6.0L)
Courtesy of GENERAL MOTORS CORP.

1. Install the bracket (3) to the rear of the pump (1).

   Tighten: Tighten the rear bracket retaining nuts to 50 N.m (37 lb ft).

cardiagn.com

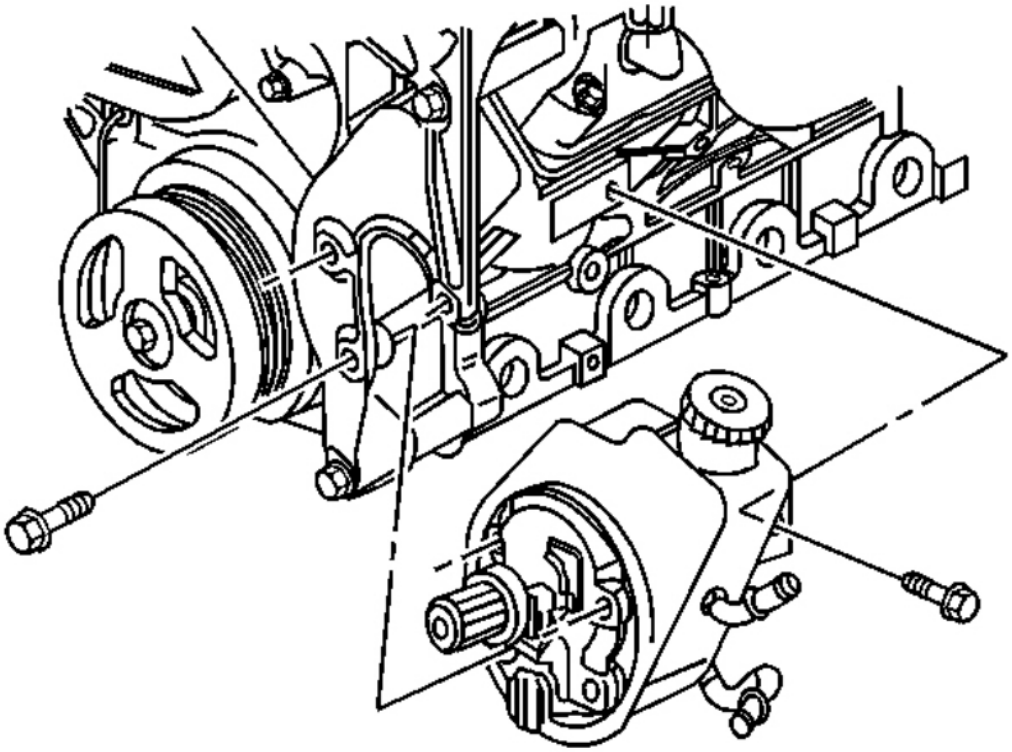

Fig. 24: View Of Power Steering Pump & Bolts (4.8L, 5.3L & 6.0L)
Courtesy of GENERAL MOTORS CORP.

2. Install the power steering pump.
3. Install the bolt retaining the rear bracket to the engine.

   Tighten: Tighten the rear power steering bracket bolt to engine bracket to 50 N.m (37 lb ft).

4. Install the bolts to the front of the pump.

   Tighten: Tighten the bolts to 50 N.m (37 lb ft).

cardiagn.com

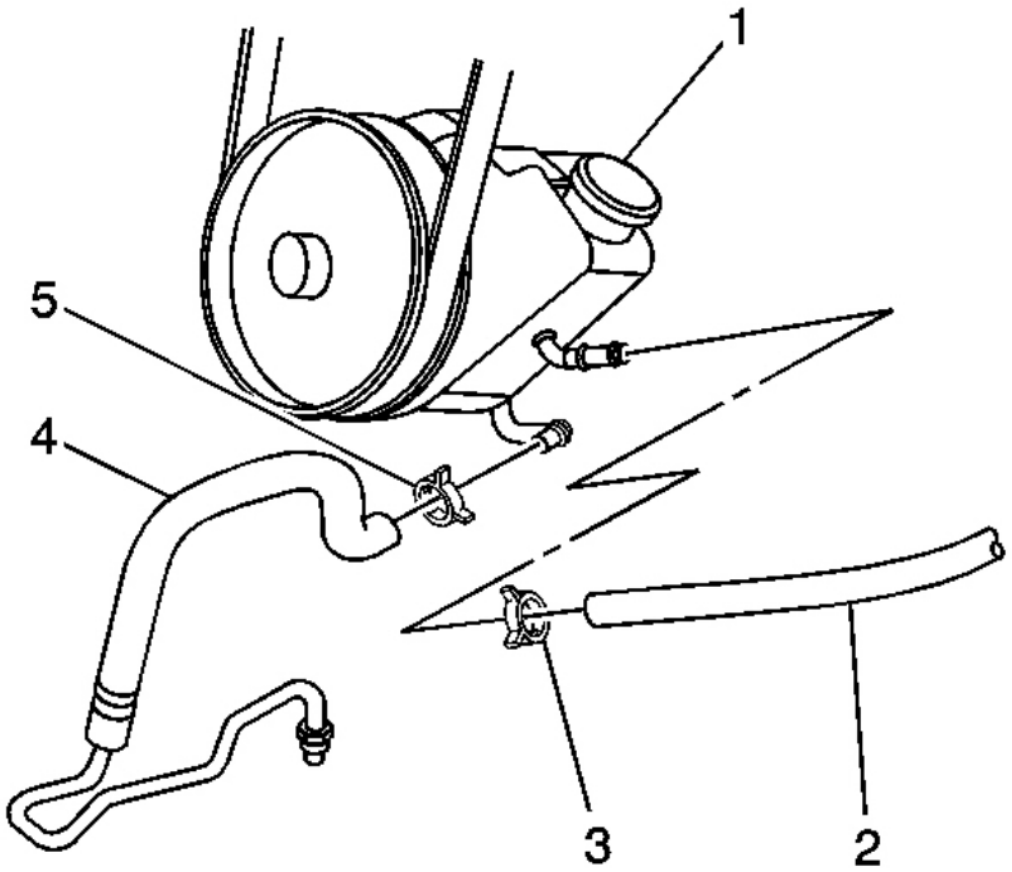

Fig. 25: View Of Power Steering Return Hoses, Clamps & Power Steering Pump
Courtesy of GENERAL MOTORS CORP.

5. Install the power steering pump return hose (4) to the power steering pump and install the retaining clamp (5).
6. If equipped with hydroboost, connect the hose (2) to pump and position the clamp (3)
7. Raise the vehicle. Refer to **Lifting and Jacking the Vehicle** .

cardiagn.com

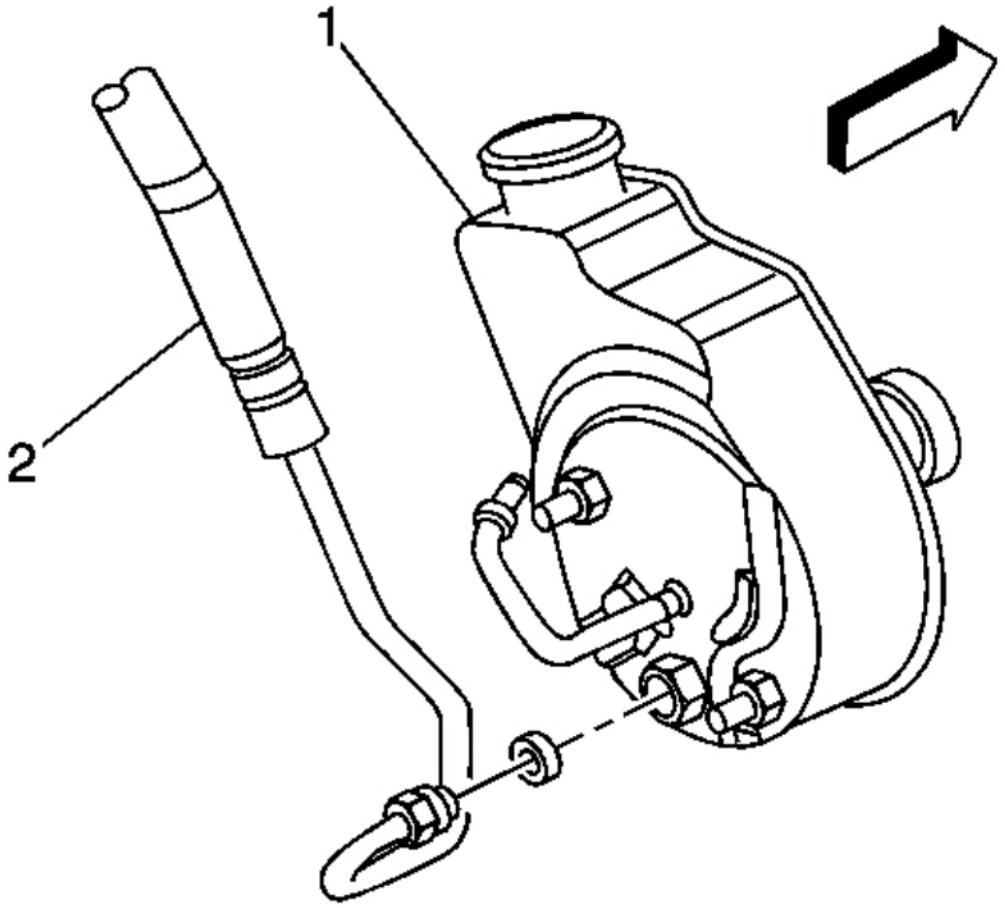

Fig. 26: View Of Power Steering Pressure Hose & Power Steering Pump
Courtesy of GENERAL MOTORS CORP.

8. Install the power steering pressure hose (2) to the power steering pump.

   Tighten: Tighten the fitting to 28 N.m (20 lb ft).

cardiagn.com

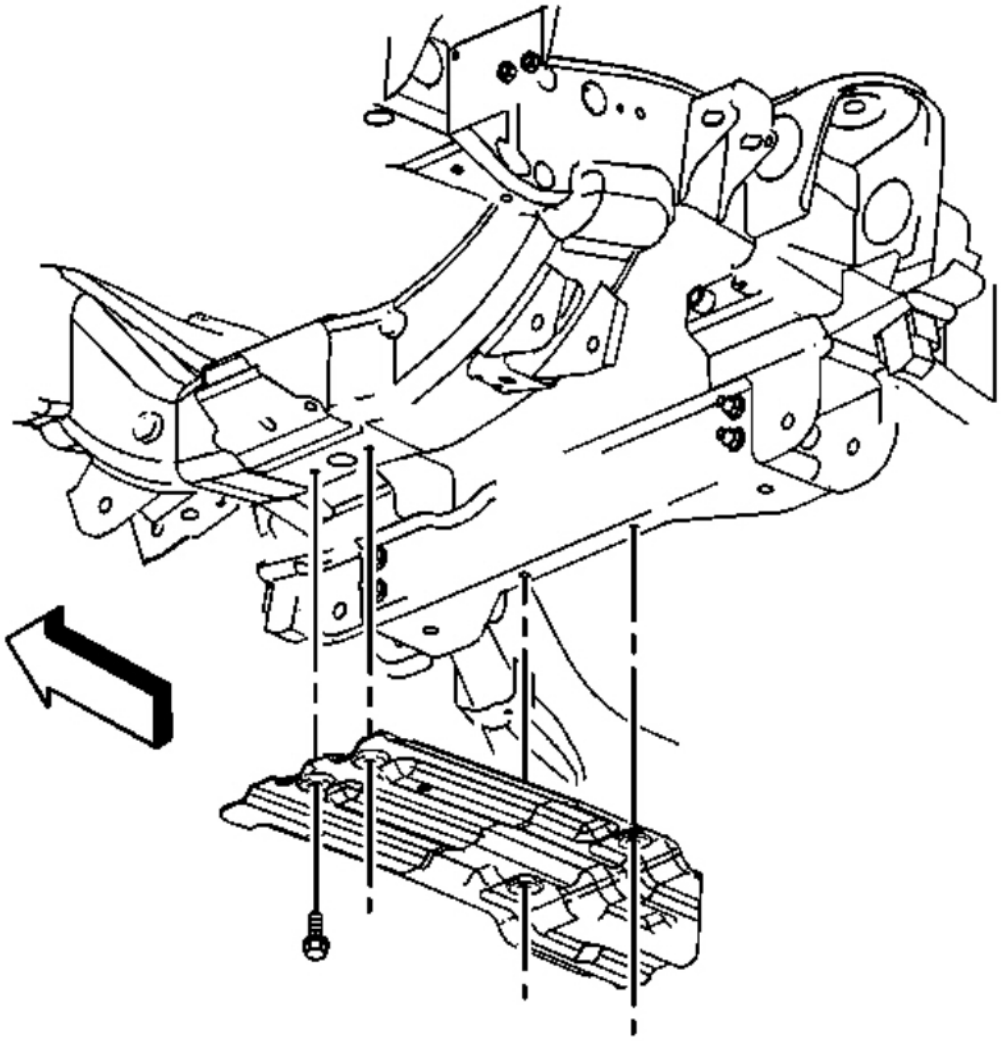

Fig. 27: Identifying Oil Pan Skid Plate
Courtesy of GENERAL MOTORS CORP.

9. Install the oil pan skid plate, if equipped.
10. Install the oil pan skid plate bolts.

    Tighten: Tighten the retaining bolts to 20 N.m (15 lb ft).

11. Lower the vehicle.
12. Install the intermediate shaft. Refer to **Lower Intermediate Steering Shaft Replacement** .

cardiagn.com

13. Install the power steering pulley. Refer to **Power Steering Pulley Replacement**.
14. Fill and bleed the power steering system. Refer to **Power Steering System Bleeding**.
15. Refer to **Control Module References** for programming and setup information.

POWER STEERING RESERVOIR REPLACEMENT - OFF VEHICLE

Disassembly Procedure

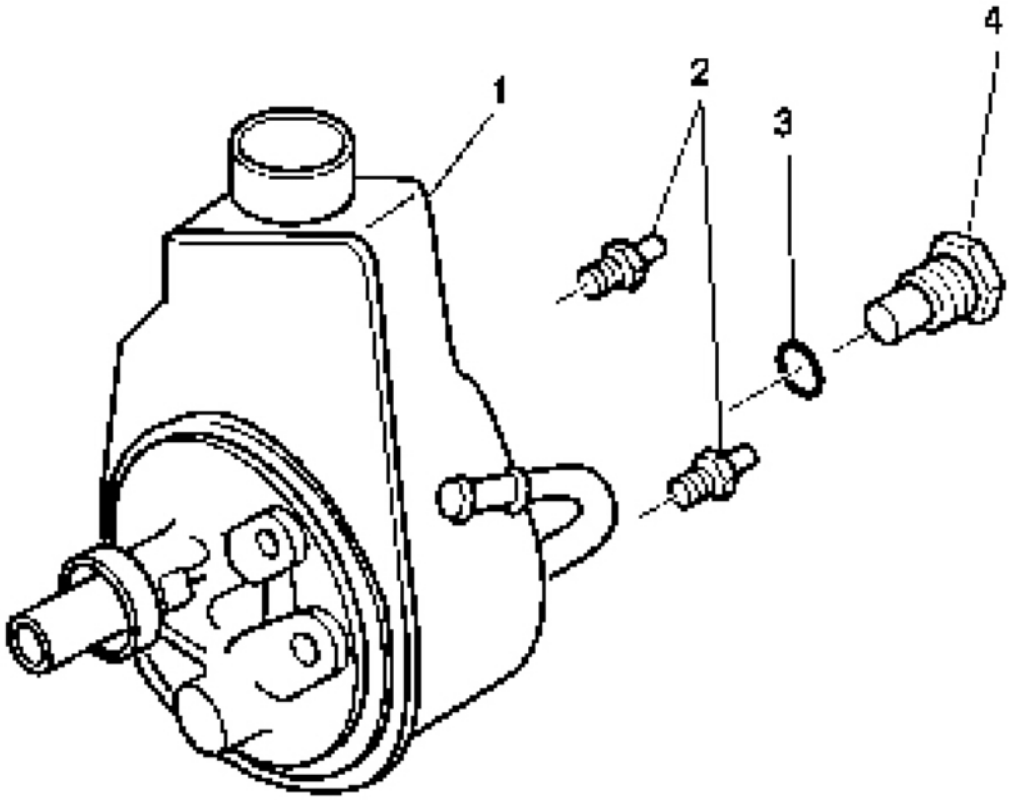

Fig. 28: View Of Pump Housing, Mounting Studs, O-Ring Seal & Connector/Fitting Assembly
Courtesy of GENERAL MOTORS CORP.

1. Drain the power steering fluid from the power steering pump.
2. Remove the pump mounting studs (2).
3. Remove the connector and fitting assembly (4).
4. Remove the O-ring seal (3).

cardiagn.com

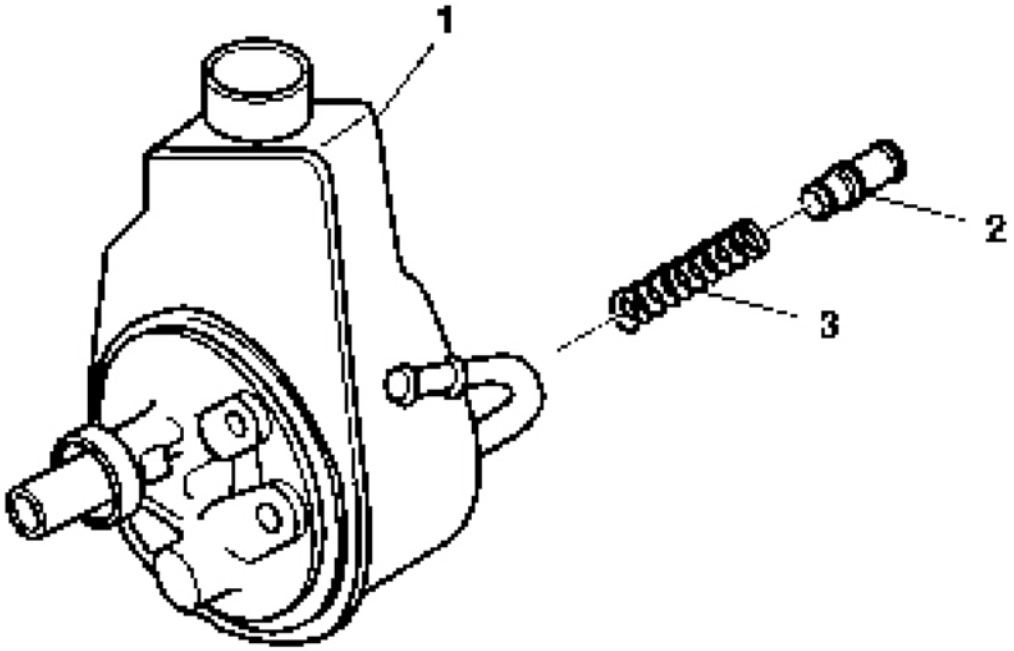

Fig. 29: View Of Pump Housing Assembly, Control Valve Assembly & Flow Control Spring
Courtesy of GENERAL MOTORS CORP.

5. If replacement is required, remove the control valve assembly (2) and the flow control spring (3) from the pump housing assembly (1).

cardiagn.com

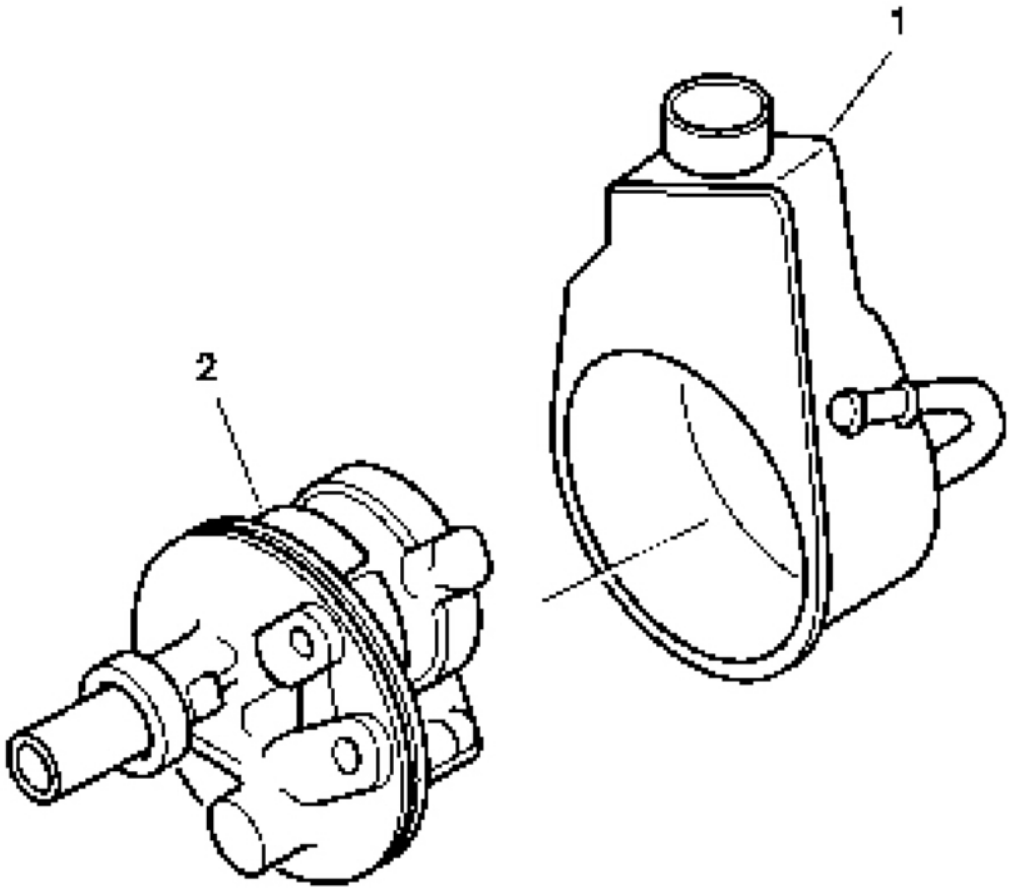

Fig. 30: View Of Reservoir Assembly & Pump Housing Assembly
Courtesy of GENERAL MOTORS CORP.

6. Remove the reservoir assembly (1) from the pump housing assembly (2).

cardiagn.com

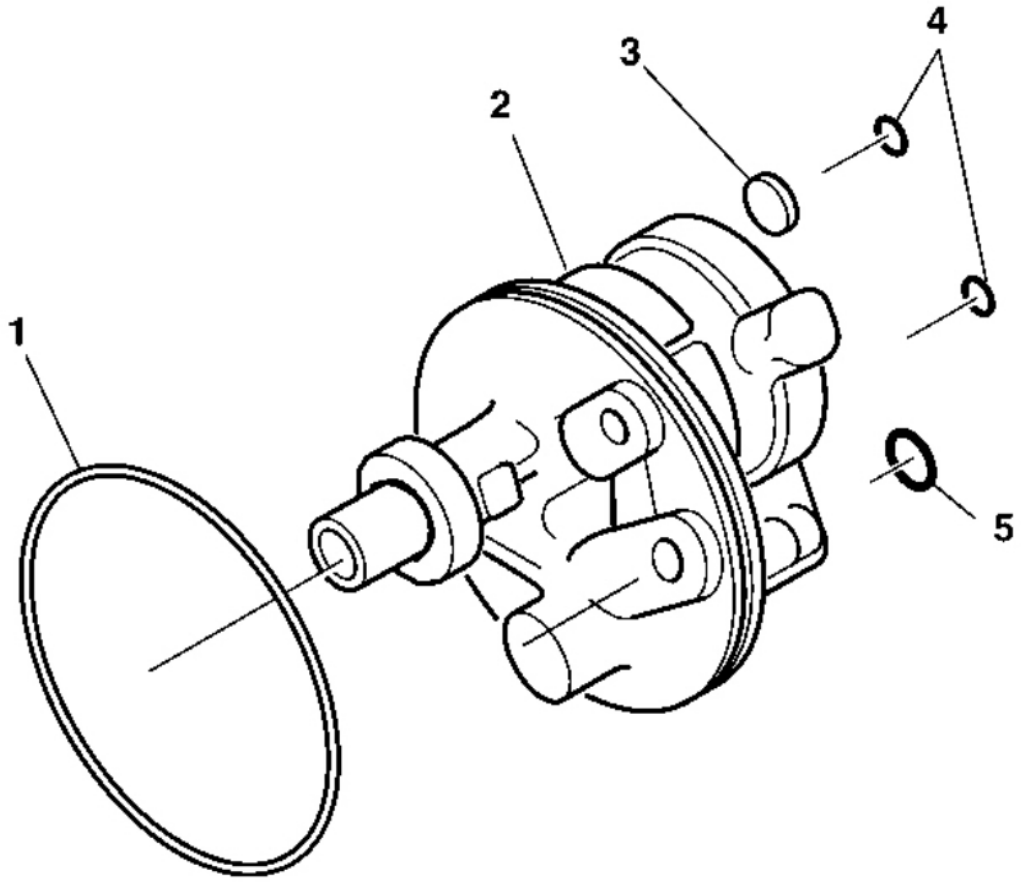

Fig. 31: Reservoir O-ring Seals
Courtesy of GENERAL MOTORS CORP.

7. Remove the O-ring seals (1) (4) (5).
8. Remove the magnet (3).
9. Clean the magnet (3).
10. Inspect the welch plug in the power steering pump housing (2). Do not remove. If the welch plug is deformed or dislodged, replace the power steering pump housing (2).

Assembly Procedure

cardiagn.com

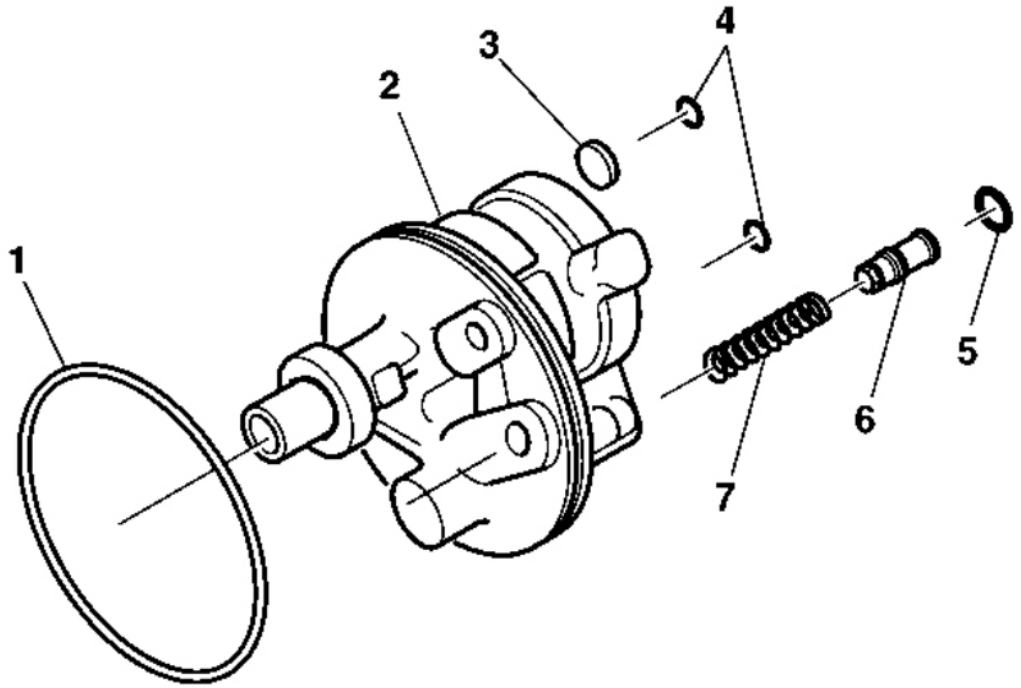

Fig. 32: Disassembled View Of Pump Housing Assembly Components
Courtesy of GENERAL MOTORS CORP.

IMPORTANT: Use new O-ring seals when assembling the power steering pump assembly.

1. Lubricate the O-ring seals (1) (4) (5) with power steering fluid.
2. Install the flow control spring (7) to the pump housing assembly (2).
3. Install the control valve assembly (6) to the flow control spring (7).
4. Install the O-ring seals (1) (4) (5) to the pump housing assembly.
5. Install the magnet (3) to the pump housing assembly (2).

cardiagn.com

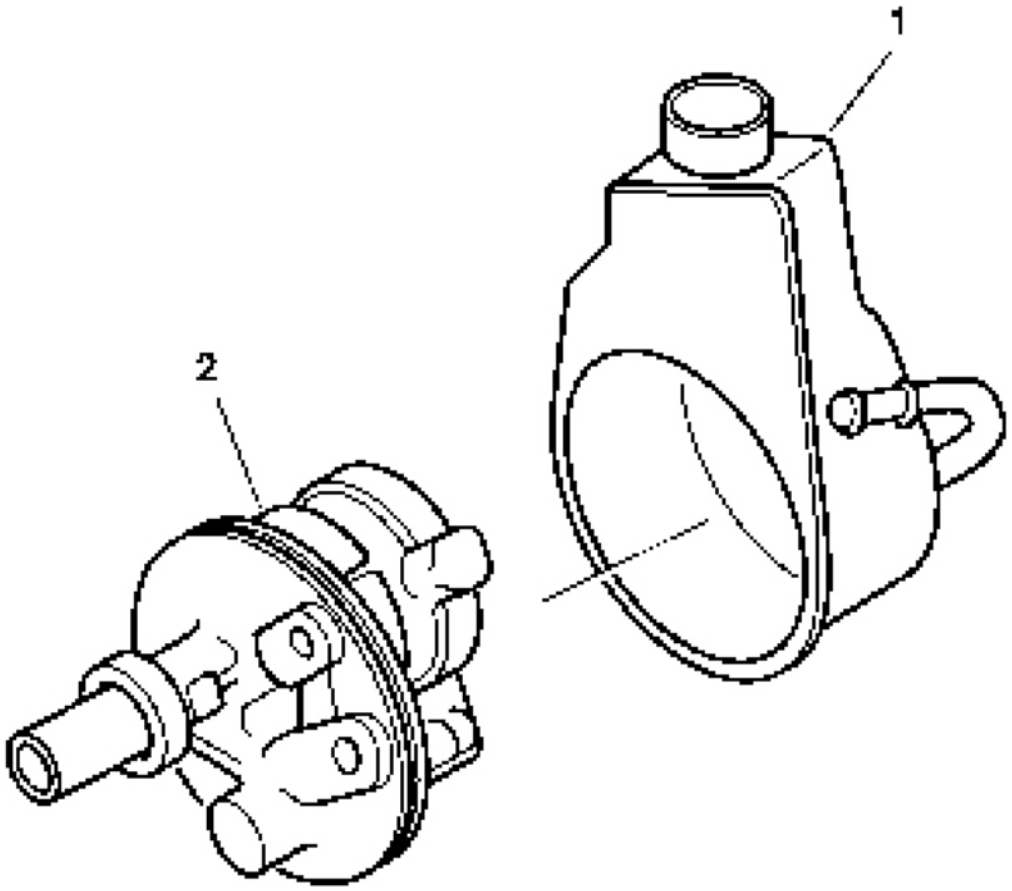

Fig. 33: View Of Reservoir Assembly & Pump Housing Assembly
Courtesy of GENERAL MOTORS CORP.

6. Connect the reservoir assembly (1) to the pump housing assembly (2).
7. Install the O-ring seal.

cardiagn.com

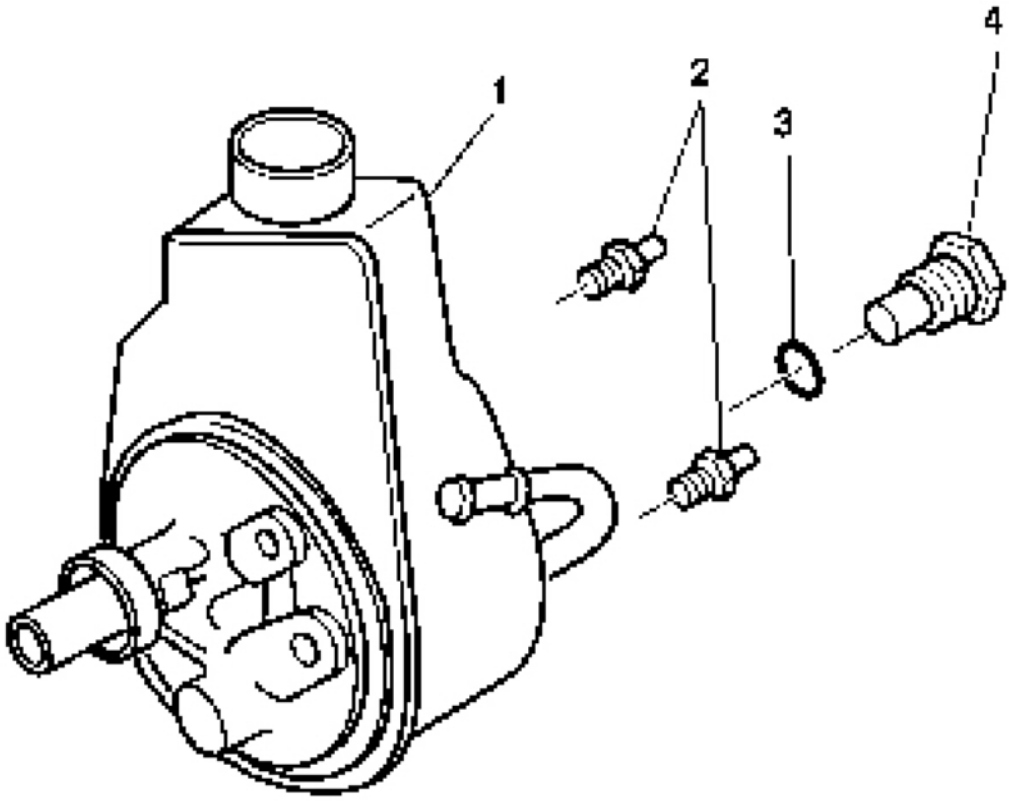

Fig. 34: View Of Pump Housing, Mounting Studs, O-Ring Seal & Connector/Fitting Assembly
Courtesy of GENERAL MOTORS CORP.

NOTE: Refer to Fastener Notice in Cautions and Notices.

8. Install the connector and fitting assembly (4) to the pump housing (1).
9. Install the pump mounting studs (2) to the pump housing (1).

   Tighten: Tighten the pump mounting studs to 58 N.m (44 lb ft).

10. Tighten the connector and fitting assembly.

    Tighten: Tighten the connector and fitting assembly to 75 N.m (55 lb ft).

POWER STEERING PUMP FLOW CONTROL VALVE REPLACEMENT - OFF VEHICLE

cardiagn.com

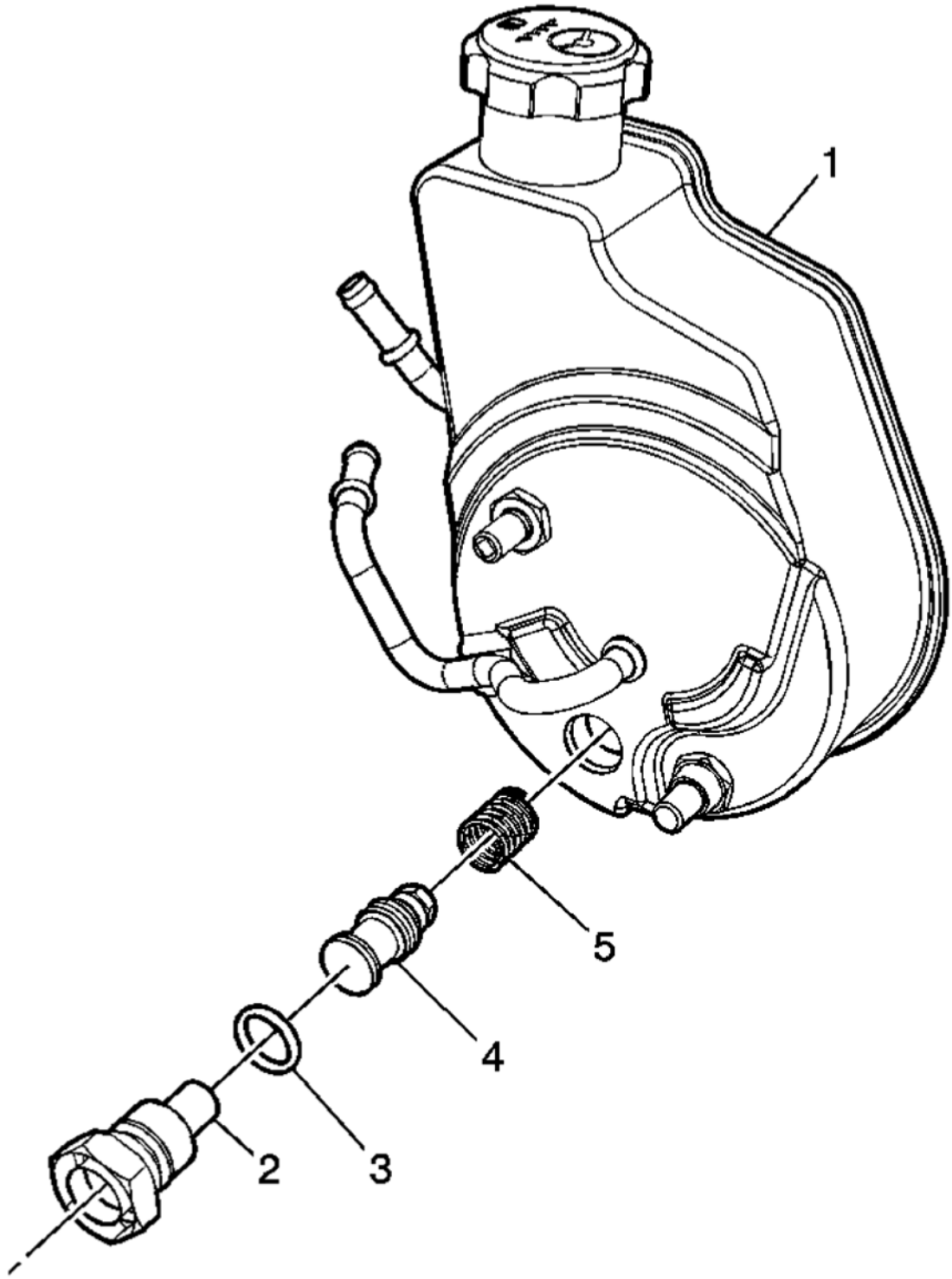

Fig. 35: Power Steering Pump Flow Control Valve Components
Courtesy of GENERAL MOTORS CORP.

Power Steering Pump Flow Control Valve Replacement - Off Vehicle

cardiagn.com

Callout	Component Name
1	Power Steering Pump Reservoir **Tip:** Drain the power steering fluid from the reservoir.
2	Flow Control Valve Fitting **NOTE:** **Refer to Fastener Notice .** **Tighten:** 75 N.m (55 lb ft)
3	Flow Control Valve Fitting Seal **Tip:** Prior to installation, apply power steering fluid to the seal.
4	Flow Control Valve
5	Flow Control Valve Spring

POWER STEERING PUMP SHAFT SEAL REPLACEMENT

Removal Procedure

1. Remove the power steering pump from the vehicle. Refer to **Power Steering Pump Replacement (4.8L, 5.3L, 6.0L, and 6.2L)**.

cardiagn.com

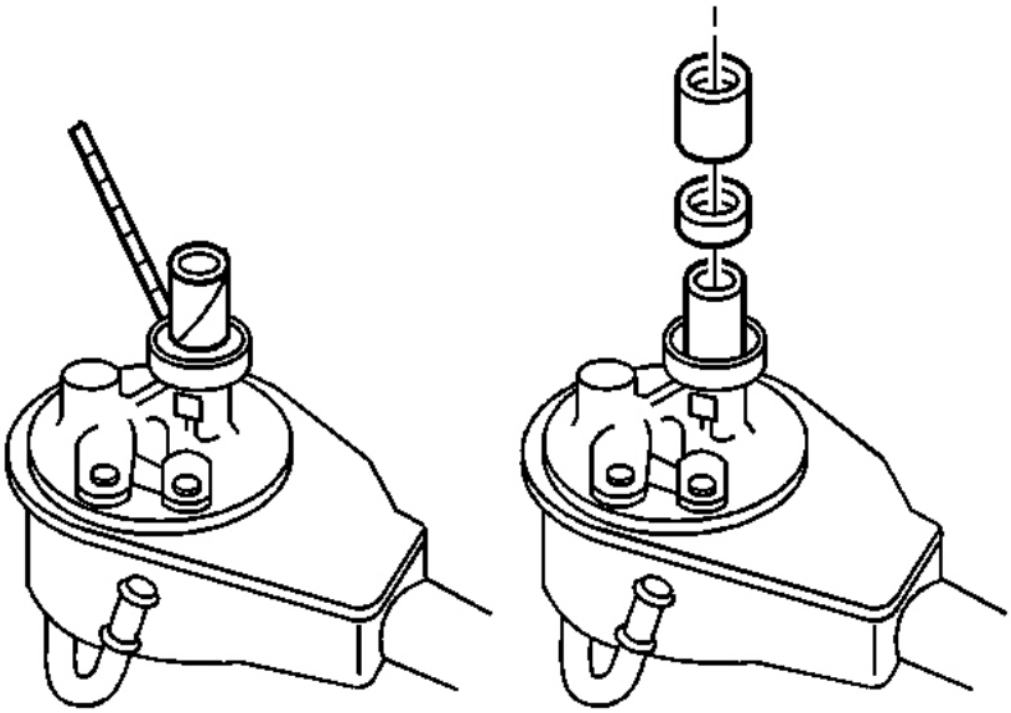

Fig. 36: View Of Power Steering Pump Drive Shaft Seal
Courtesy of GENERAL MOTORS CORP.

IMPORTANT: Use the shim stock in order to protect the drive shaft.

2. Use a chisel in order to cut and remove the seal.

Installation Procedure

cardiagn.com

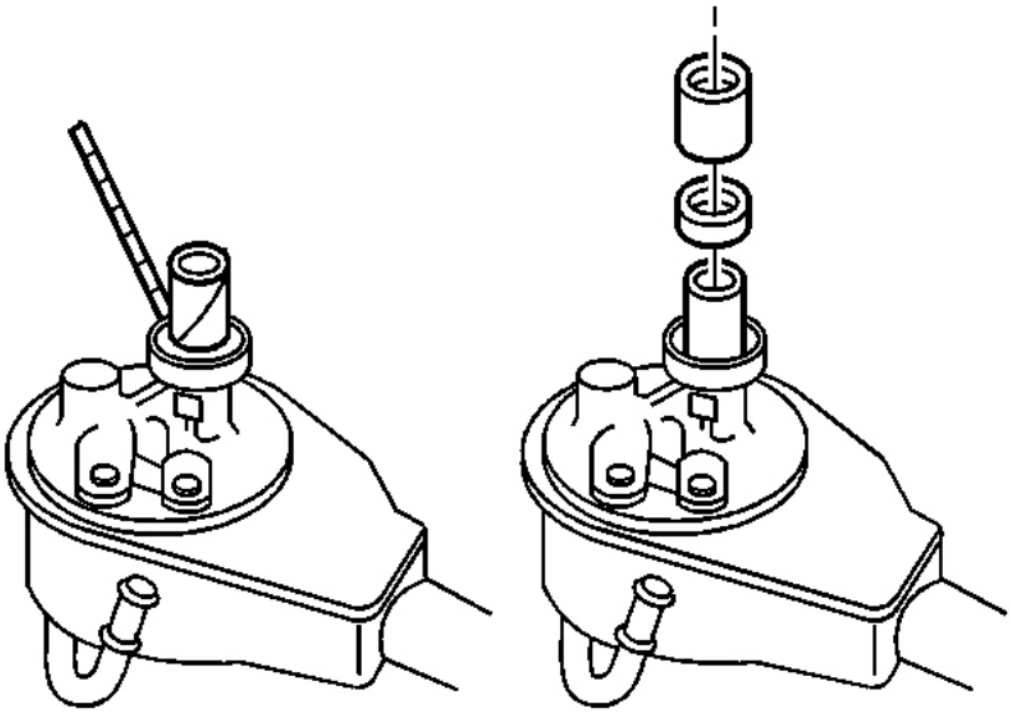

Fig. 37: View Of Power Steering Pump Drive Shaft Seal
Courtesy of GENERAL MOTORS CORP.

1. Lubricate the seal using power steering fluid.
2. Use a deep 1 inch tall socket in order to install the seal.
3. Install the power steering pump. Refer to **Power Steering Pump Replacement (4.8L, 5.3L, 6.0L, and 6.2L)**.

RACK AND PINION OUTER TIE ROD END REPLACEMENT

cardiagn.com

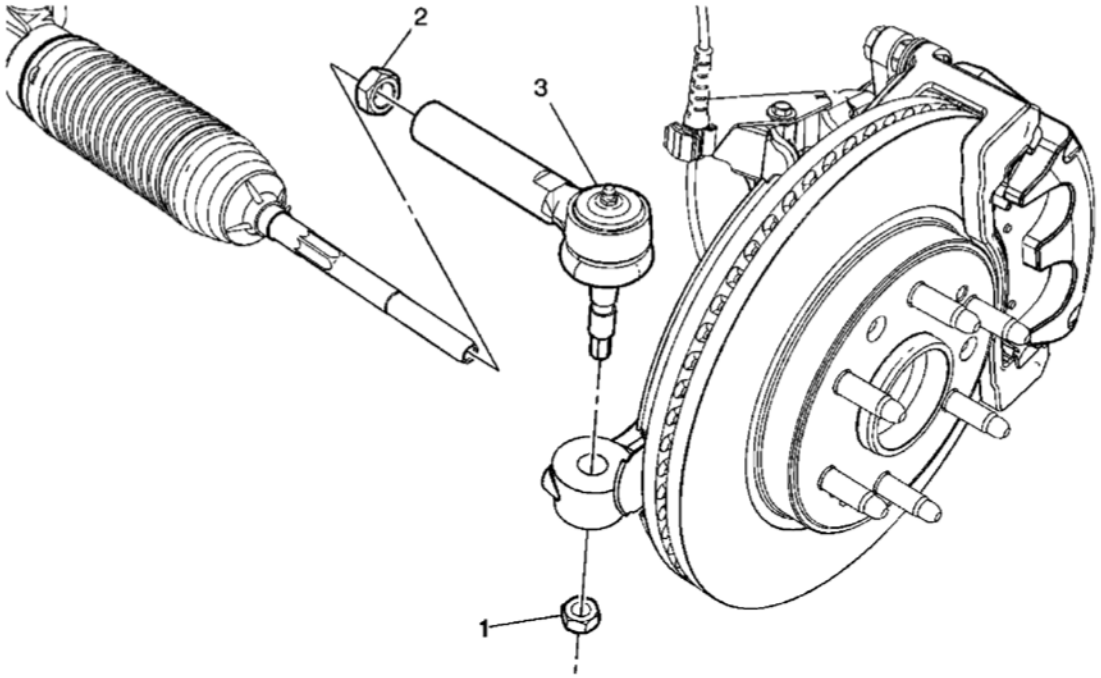

Fig. 38: Rack and Pinion Outer Tie Rod Components
Courtesy of GENERAL MOTORS CORP.

Rack and Pinion Outer Tie Rod End Replacement

Callout	Component Name
Preliminary Procedure: Raise the vehicle. Refer to **Lifting and Jacking the Vehicle** .	
1	Outer Tie Rod Nut **NOTE:** **Refer to Fastener Notice .** **Tighten:** 60 N.m (44 lb ft)
2	Outer Tie Rod Jam Nut **Tighten:** 75 N.m (55 lb ft)
3	Outer Tie Rod **Tip:** • Use the **J 24319-B** , to separate the outer tie rod ball stud from the steering knuckle. See **Special Tools**. • Inspect the inner tie rod for bent or damaged threads. • Clean the tapered surface of the steering knuckle. • Lubricate the tie rod threads with chassis lubricant. Refer to **Fluid and Lubricant**

cardiagn.com

	Recommendations • Adjust the front toe. Refer to **Measuring Wheel Alignment** **Special Tools:** **J 24319-B** Universal Steering Linkage Puller. See **Special Tools**.

RACK AND PINION BOOT REPLACEMENT

Tools Required

J 22610 Keystone Clamp Pliers. See **Special Tools**.

Removal Procedure

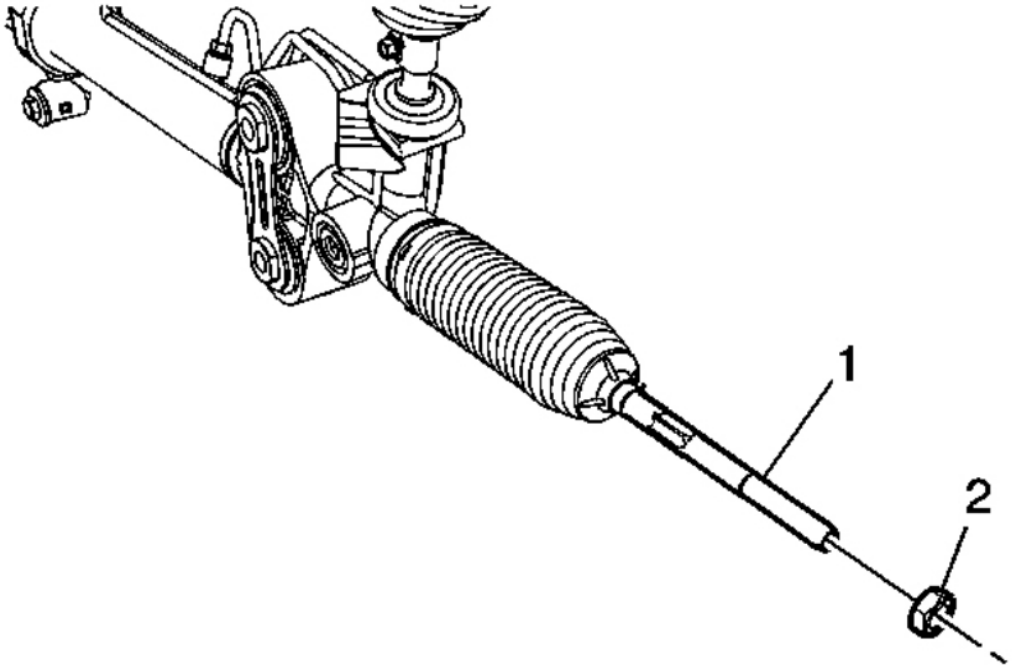

Fig. 39: View Of Inner Tie Rod Assembly & Hex Jam Nut
Courtesy of GENERAL MOTORS CORP.

1. Remove the outer tie rod. Refer to **Rack and Pinion Outer Tie Rod End Replacement**.
2. Remove the hex jam nut (2) from the inner tie rod assembly (1).

cardiagn.com

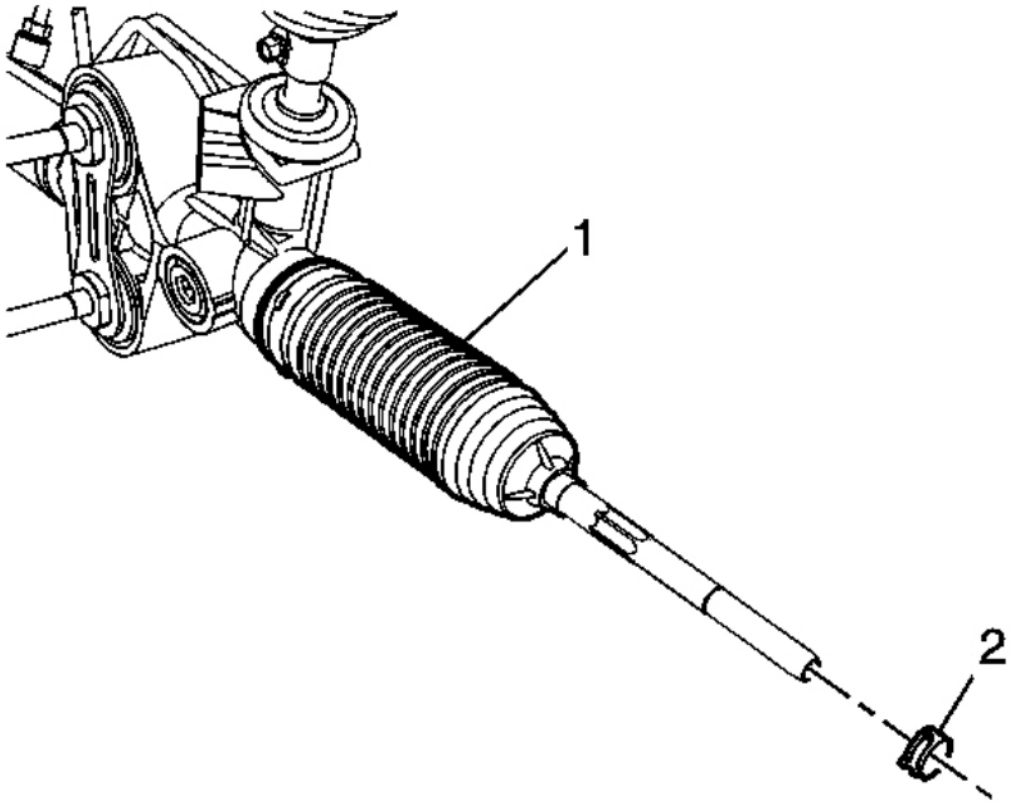

Fig. 40: View Of Rack And Pinion Boot & Tie Rod End Clamp
Courtesy of GENERAL MOTORS CORP.

3. Remove the tie rod end clamp (2) from the rack and pinion boot (1).

cardiagn.com

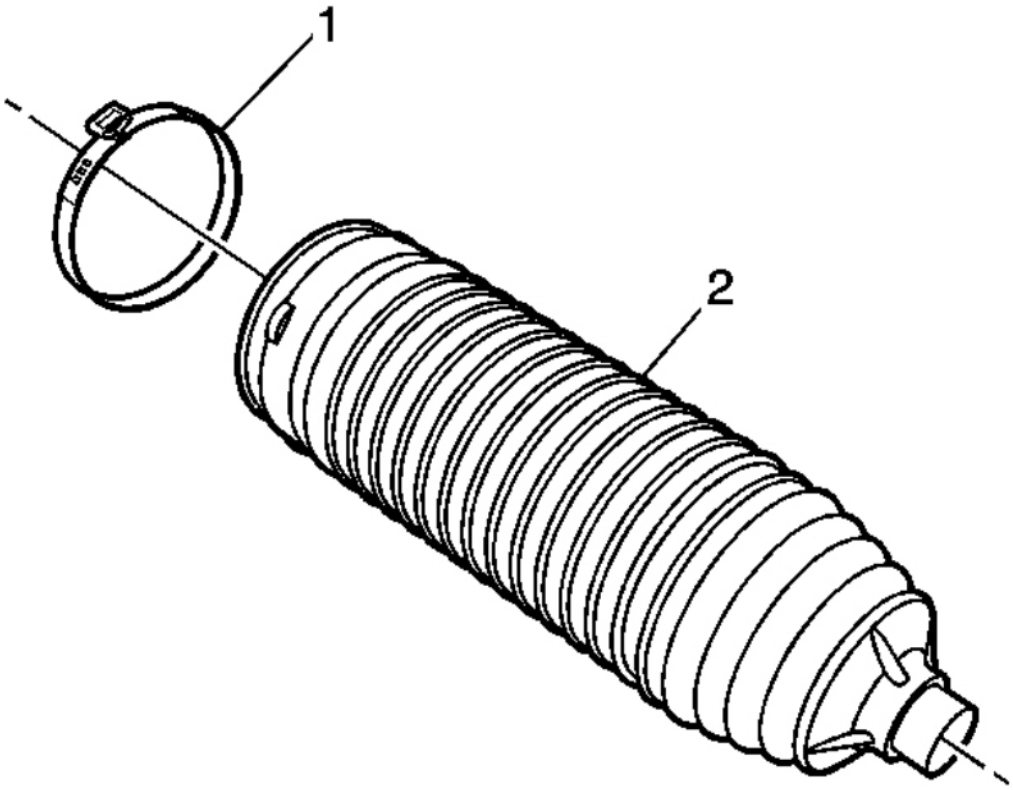

Fig. 41: View Of Rack And Pinion Boot & Boot Clamp
Courtesy of GENERAL MOTORS CORP.

4. Remove the boot clamp (1) from the rack and pinion boot (2) with side cutters.
5. Discard the boot clamp (1).

cardiagn.com

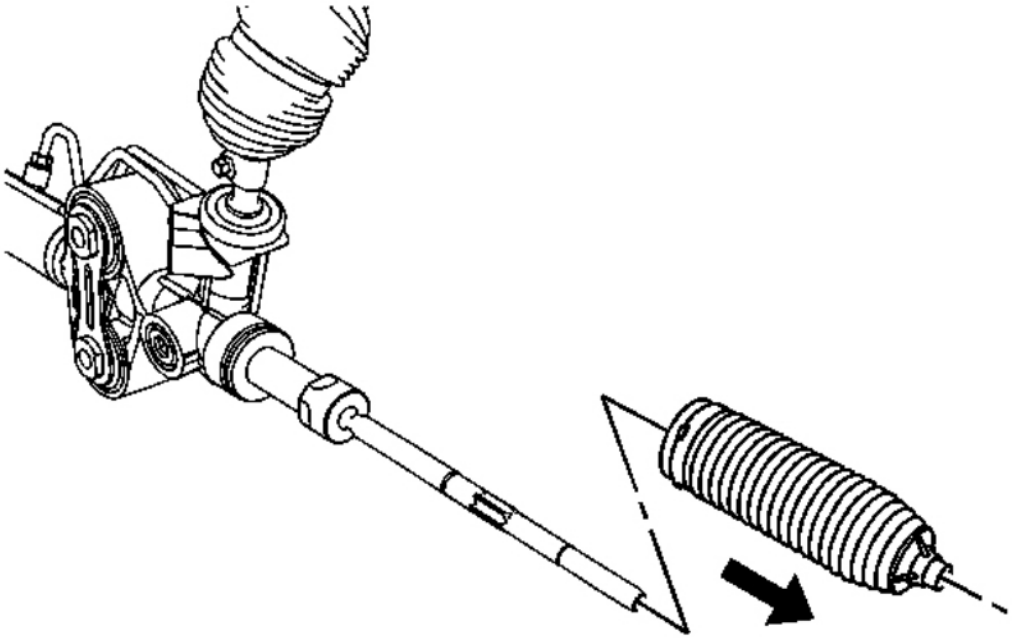

Fig. 42: View Of Rack And Pinion Gear Assembly & Rack And Pinion Boot
Courtesy of GENERAL MOTORS CORP.

6. Remove the rack and pinion boot from the rack and pinion gear assembly.

Installation Procedure

cardiagn.com

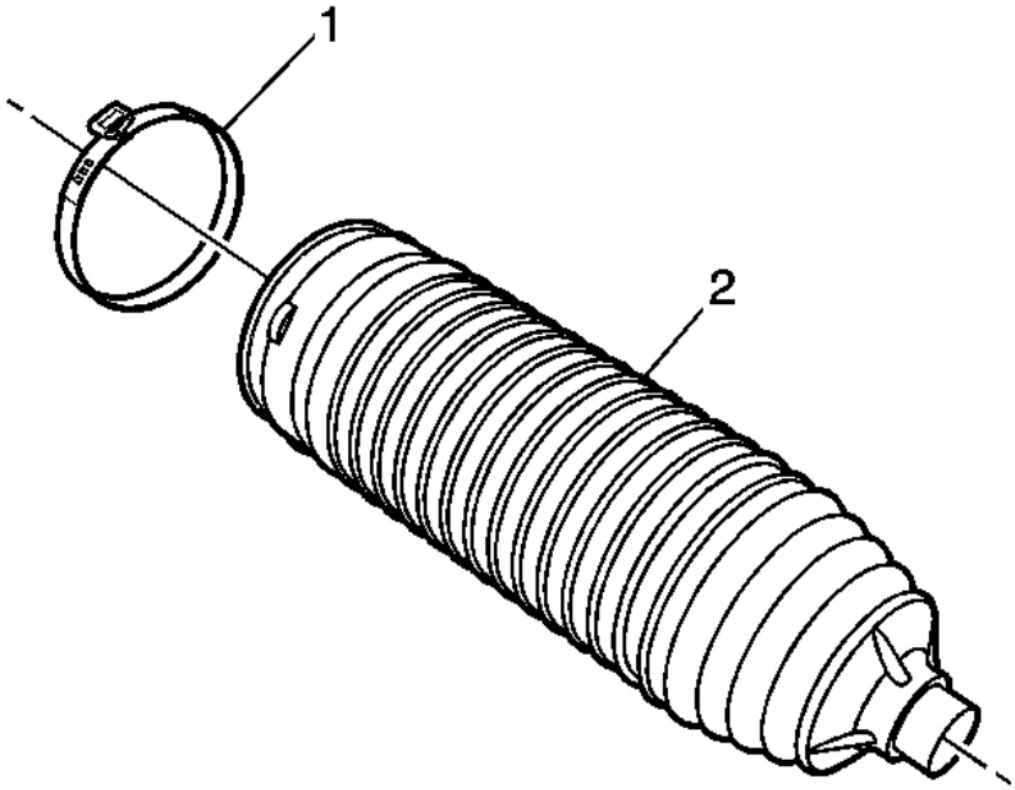

Fig. 43: View Of Rack And Pinion Boot & Boot Clamp
Courtesy of GENERAL MOTORS CORP.

1. Install the new boot clamp (1) onto the rack and pinion boot (2).

cardiagn.com

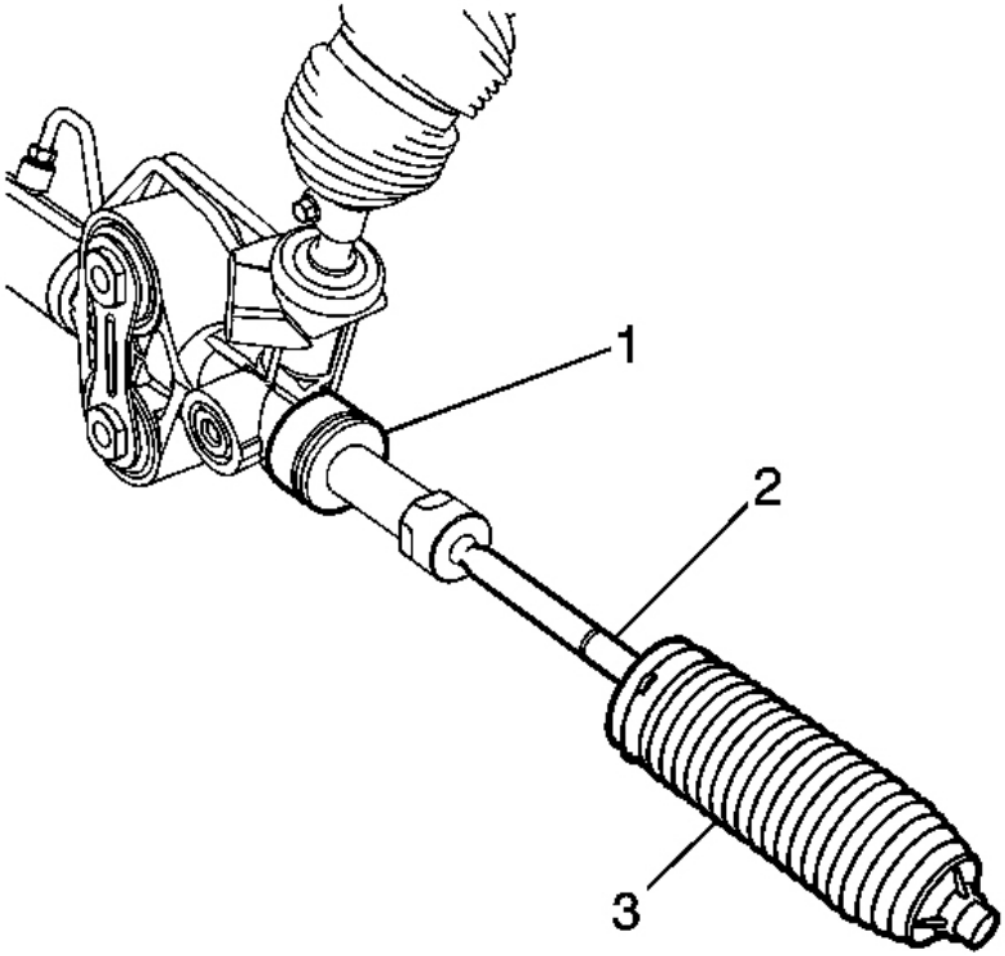

Fig. 44: View Of Rack And Pinion Gear Assembly, Inner Tie Rod Assembly & Rack And Pinion Boot
Courtesy of GENERAL MOTORS CORP.

2. Prior to rack and pinion boot installation, apply grease to the inner tie rod assembly (2) and the rack and pinion gear assembly (1).
3. Install the rack and pinion boot (3) onto the inner tie rod assembly (2).

IMPORTANT: The rack and pinion boot (3) must not be twisted, puckered or out of shape in any way. If the rack and pinion boot (3) is not shaped properly, adjust the rack and pinion boot (3) by hand before installing the boot clamp.

cardiagn.com

4. Install the rack and pinion boot onto the gear assembly (1) until the rack and pinion boot (3) is seated in the gear assembly groove.

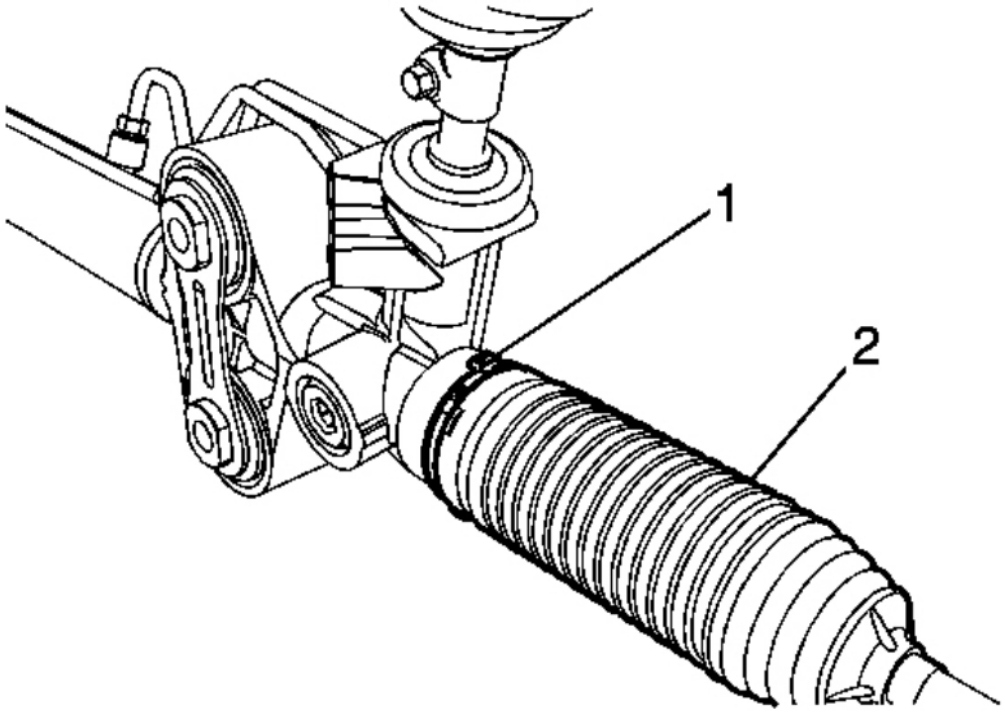

Fig. 45: View Of Rack & Pinion Boot & Boot Clamp
Courtesy of GENERAL MOTORS CORP.

5. Crimp the boot clamp (1) with **J 22610** or equivalent. See **Special Tools**.
6. Pinch the pliers together on the rack and pinion boot (2) in order to install the tie rod end clamp.

cardiagn.com

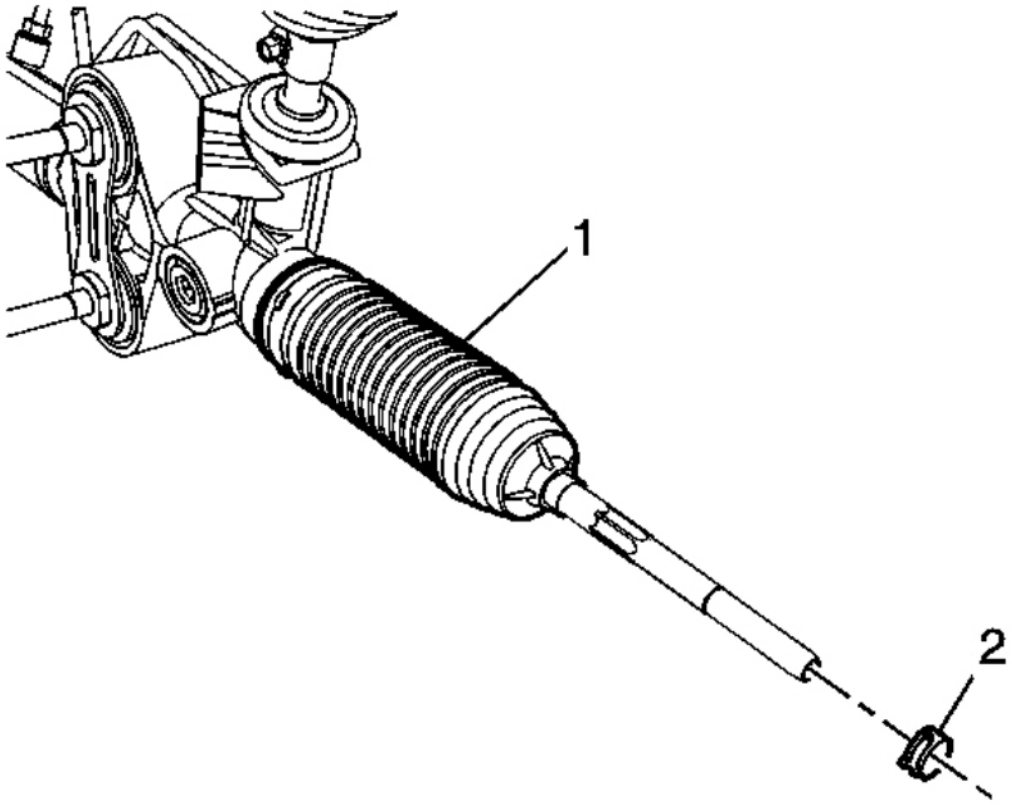

Fig. 46: View Of Rack & Pinion Boot & Clamp
Courtesy of GENERAL MOTORS CORP.

7. Compress the clamp (2) and install it onto the rack and pinion boot (1).

cardiagn.com

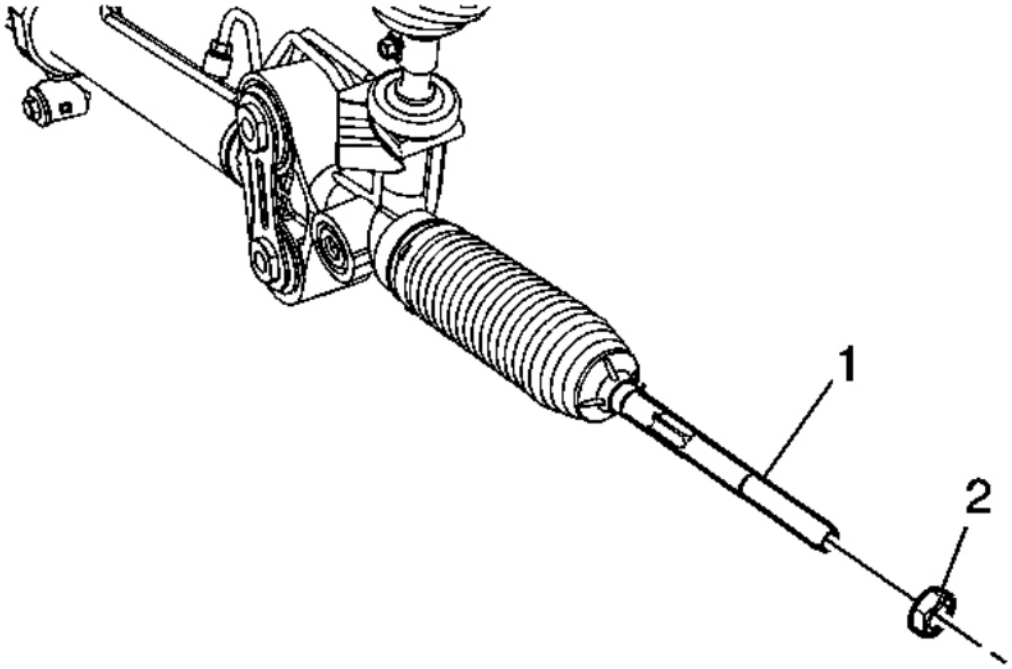

Fig. 47: View Of Inner Tie Rod Assembly & Hex Jam Nut
Courtesy of GENERAL MOTORS CORP.

8. Install the hex jam nut (2) to the inner tie rod assembly (1).
9. Install the outer tie rod assembly. Refer to **Rack and Pinion Outer Tie Rod End Replacement**.

RACK AND PINION INNER TIE ROD REPLACEMENT

Removal Procedure

cardiagn.com

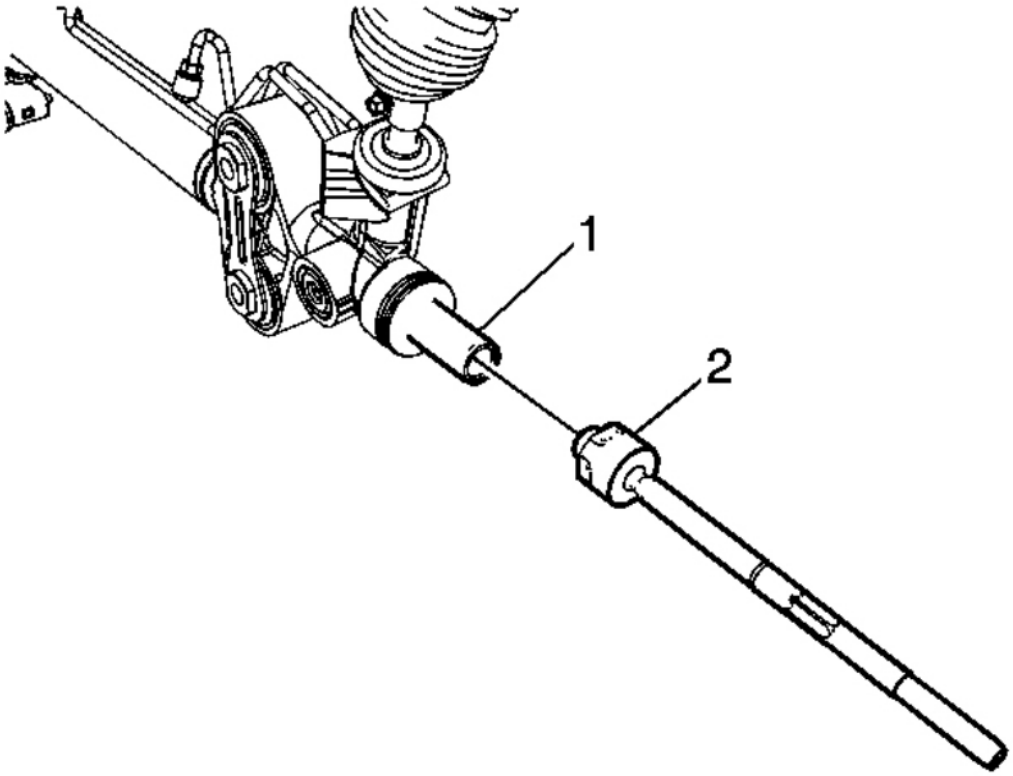

Fig. 48: View Of Inner Tie Rod Housing
Courtesy of GENERAL MOTORS CORP.

1. To remove the rack and pinion boot. Refer to **Rack and Pinion Boot Replacement**.

NOTE: **Do not change the steering gear preload adjustment before moving the inner tie rod from the steering gear. Changing the steering gear preload adjustment before moving the inner tie rod could result in damage to the pinion and the steering gear.**

NOTE: **The pipe wrench must be placed at the valve end of the steering gear and positioned up against the inner tie rod housing. Placing the pipe wrench in any other location will cause damage to the steering gear.**

2. Place a pipe wrench on the rack (1) next to the inner tie rod housing.
3. Place a wrench on the flats of the inner tie rod housing (2).
4. Rotate the inner tie rod housing (2) counterclockwise, while holding the rack stationary, until the inner tie

cardiagn.com

rod separates from the rack (1).

Installation Procedure

IMPORTANT: Threads must be clean prior to LOCTITE® application. Check LOCTITE®, or equivalent, container for expiration date. Use only enough LOCTITE® to evenly coat threads.

1. Apply LOCTITE® 262, or equivalent, to the inner tie rod threads.
2. Attach the inner tie rod onto the rack.

NOTE: Refer to Pipe Wrench Positioning Notice .

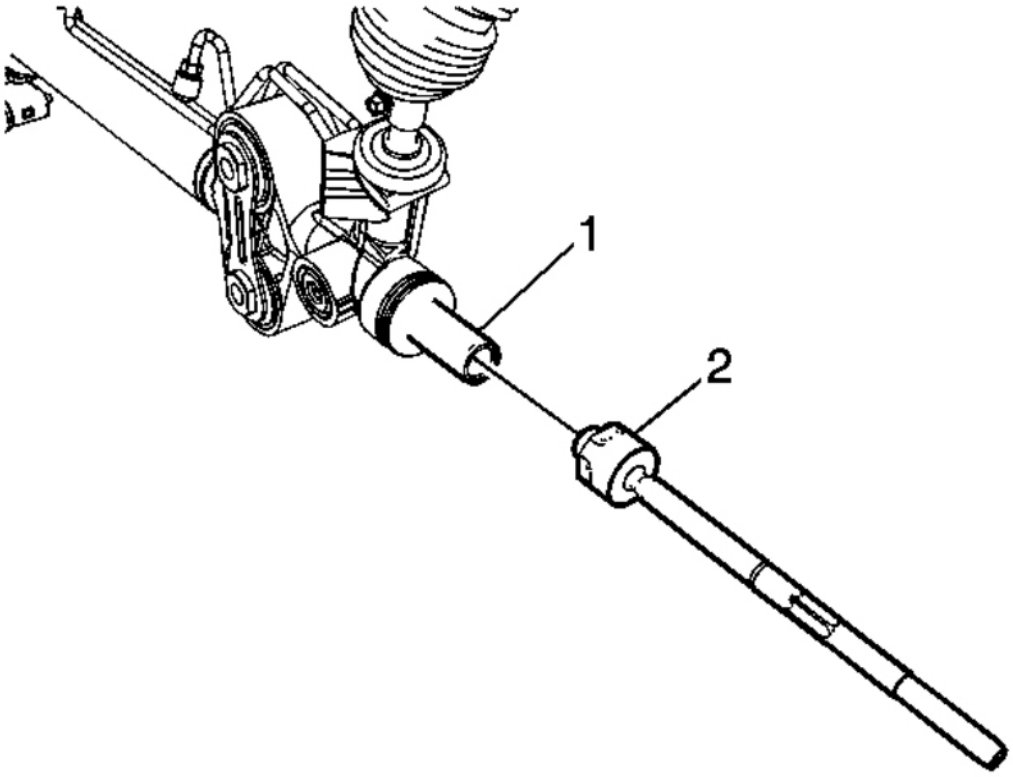

Fig. 49: View Of Inner Tie Rod Housing & Rack
Courtesy of GENERAL MOTORS CORP.

3. Place a pipe wrench on the rack (1) next to the inner tie rod housing (2).

cardiagn.com

NOTE: **Refer to Fastener Notice .**

4. Tighten the inner tie rod housing (2).

   Tighten: Tighten the inner tie rod to 100 N.m (74 lb ft).

5. Install the rack and pinion boot. Refer to **Rack and Pinion Boot Replacement**.

POWER STEERING COOLER PIPE/HOSE REPLACEMENT (WITH HYDROBOOST)

Removal Procedure

1. Remove the front grille. Refer to **Fascia Grille Replacement (Suburban)** or **Fascia Grille Replacement (Yukon)** or **Fascia Grille Replacement (Escalade)** or **Fascia Grille Replacement (Tahoe Z71)** .
2. Remove the radiator air baffle and deflector-upper. Refer to **Radiator Air Upper Baffle and Deflector Replacement (Cadillac)** or **Radiator Air Upper Baffle and Deflector Replacement (Yukon)** .
3. Remove the radiator grille reinforcement support. Refer to **Support Replacement - Radiator Grille Reinforcement** .

cardiagn.com

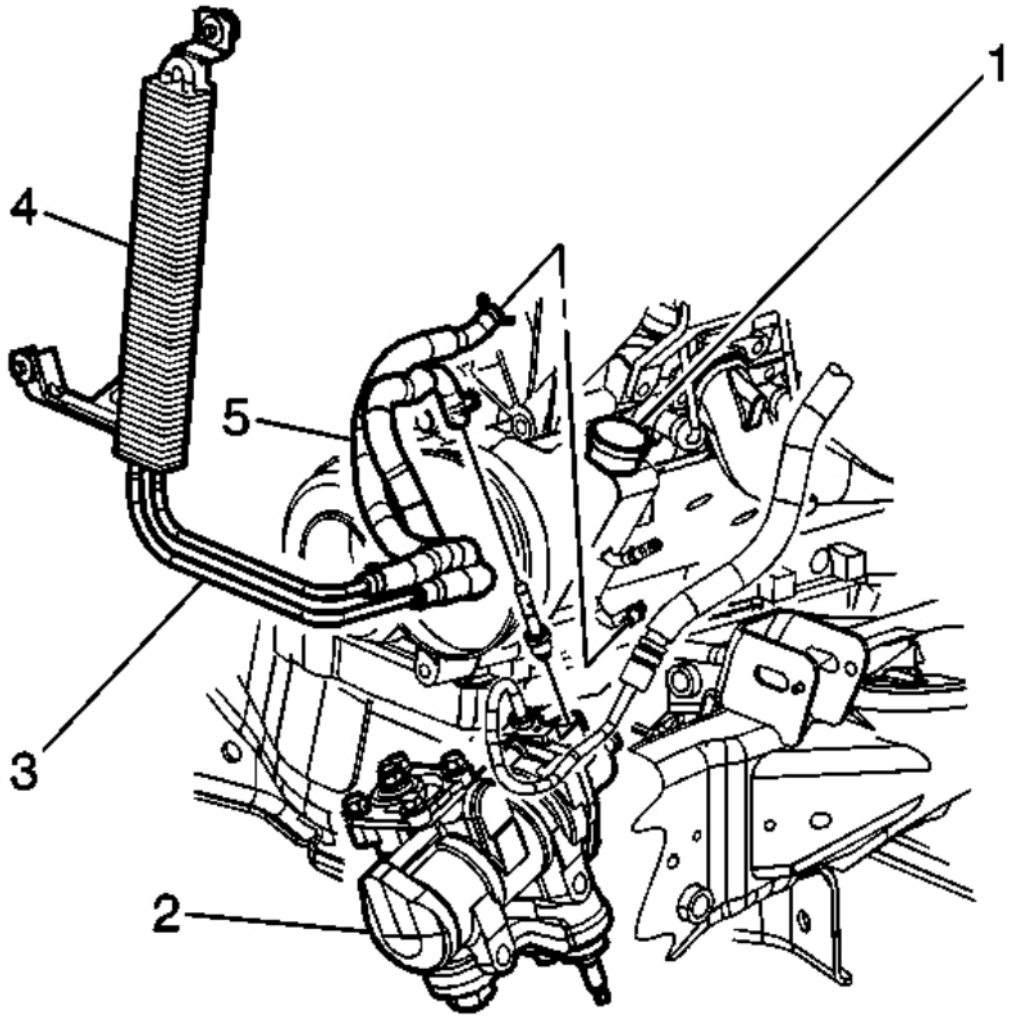

Fig. 50: View Of Power Steering Cooler Hoses, Power Steering Gear & Power Steering Pump (With Hydroboost)
Courtesy of GENERAL MOTORS CORP.

NOTE: **Refer to Power Steering Hose Disconnected Notice .**

4. Place a drain pan under the vehicle.
5. Siphon the fluid from the reservoir to prevent excess spillage.
6. Remove the clamp and disconnect the power steering gear outlet hose (3) to the power steering gear (2).
7. Remove the clamp and disconnect the power steering cooler hose (5) to the power steering pump (1).

cardiagn.com

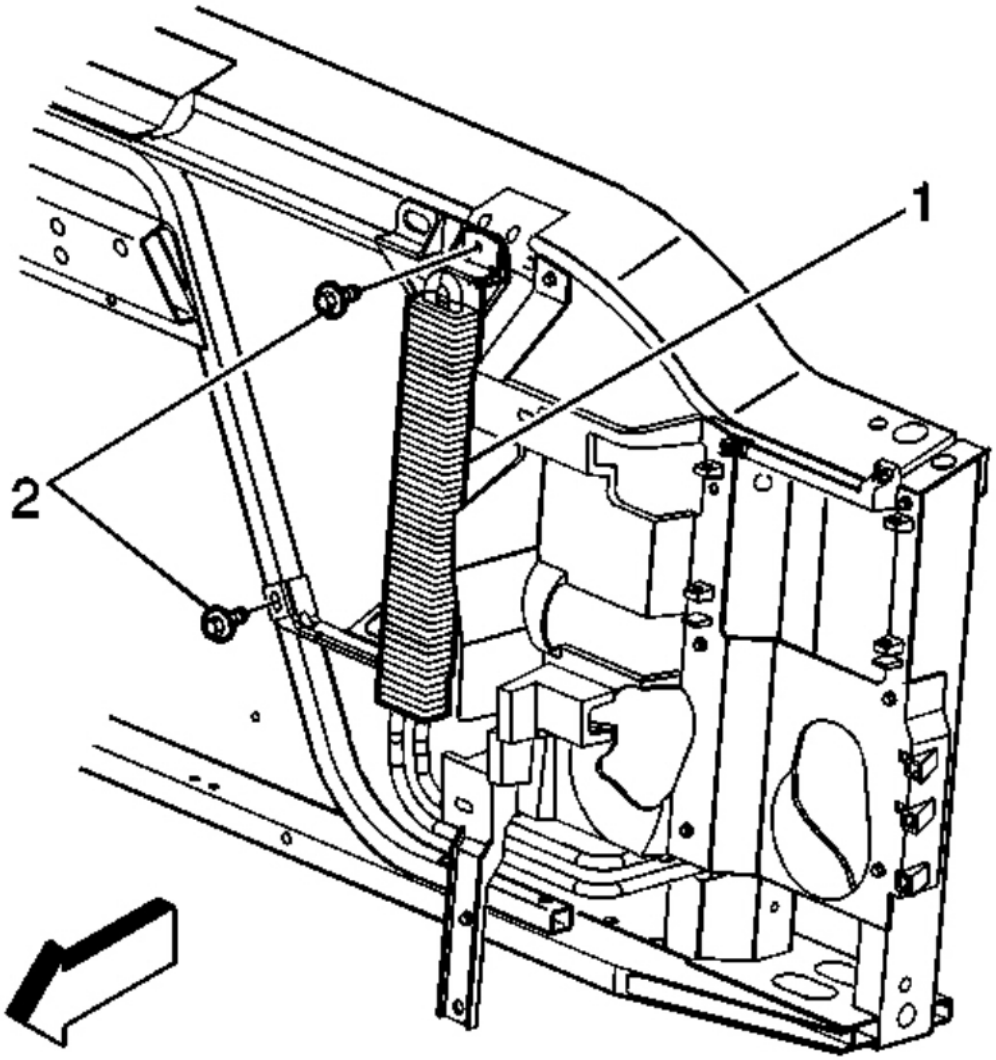

Fig. 51: View Of Power Steering Cooler & Bolts (With Hydroboost)
Courtesy of GENERAL MOTORS CORP.

8. Remove the bolts (2) retaining the power steering cooler from the radiator support.
9. Remove the power steering cooler from the vehicle.

Installation Procedure

cardiagn.com

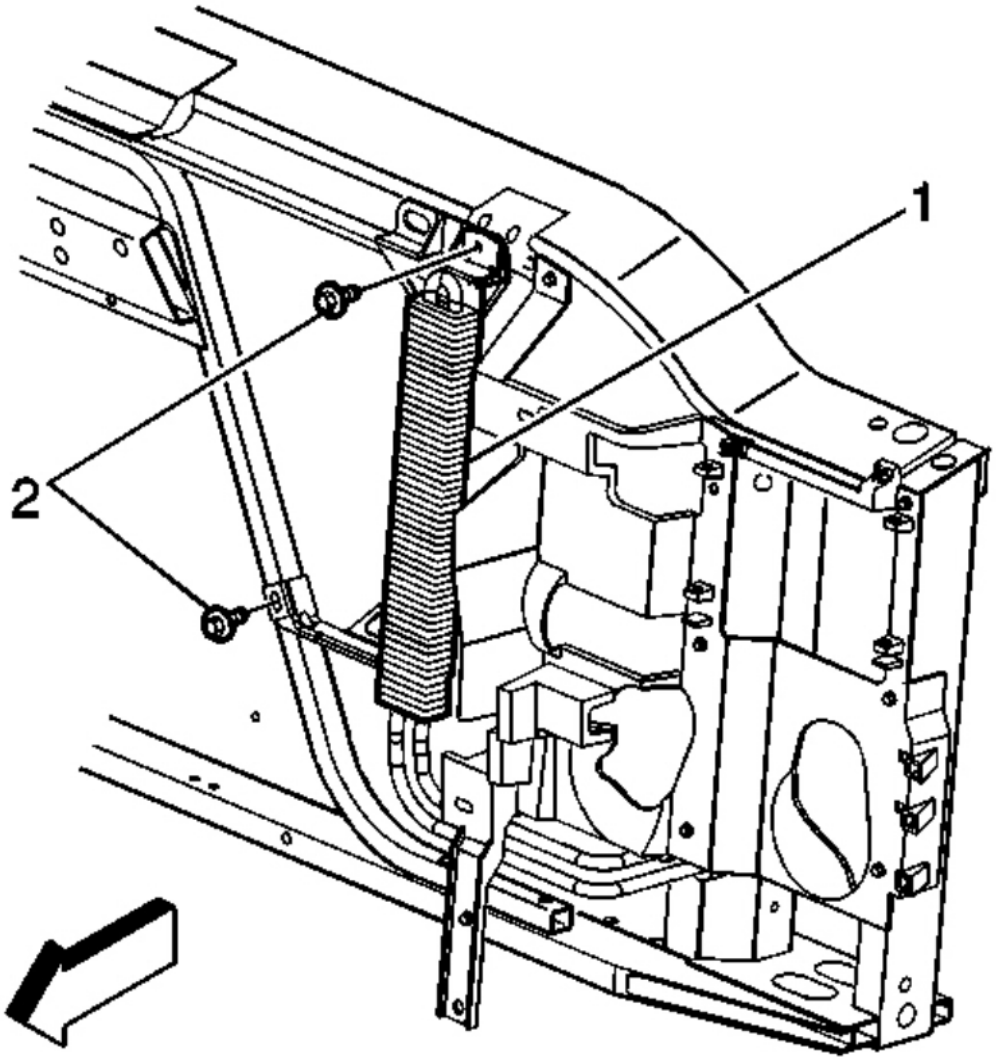

Fig. 52: View Of Power Steering Cooler & Bolts (With Hydroboost)
Courtesy of GENERAL MOTORS CORP.

NOTE: **Refer to Fastener Notice .**

1. Install the power steering cooler (1) to the radiator support.

   Tighten: Tighten the bolts retaining the power steering cooler to 9 N.m (80 lb in).

cardiagn.com

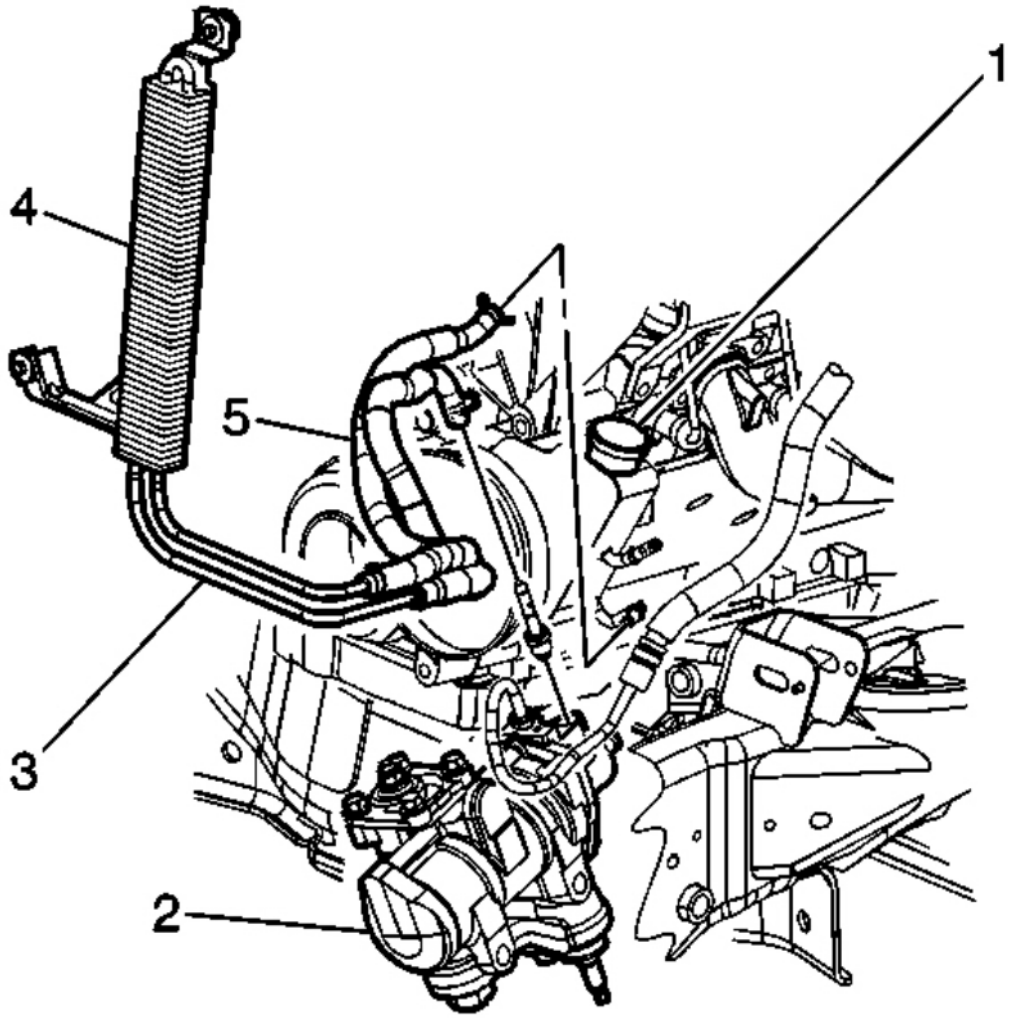

Fig. 53: View Of Power Steering Cooler Hoses, Power Steering Gear & Power Steering Pump (With Hydroboost)
Courtesy of GENERAL MOTORS CORP.

2. Connect the power steering cooler hose (5) to the power steering pump (2) and reposition the clamp.
3. Connect the power steering outlet gear hose (3) to the power steering gear (1) and reposition the clamp.
4. Fill and bleed the power steering system. Refer to **Power Steering System Bleeding**.
5. Inspect all the hose connections for leaks.
6. Install the radiator grille reinforcement. Refer to **Support Replacement - Radiator Grille Reinforcement** .

cardiagn.com

7. Install the radiator air baffle and deflector-upper. Refer to **Radiator Air Upper Baffle and Deflector Replacement (Cadillac)** or **Radiator Air Upper Baffle and Deflector Replacement (Yukon)** .
8. Install the front grille. Refer to **Fascia Grille Replacement (Suburban)** or **Fascia Grille Replacement (Yukon)** or **Fascia Grille Replacement (Escalade)** or **Fascia Grille Replacement (Tahoe Z71)** .

POWER STEERING COOLER PIPE/HOSE REPLACEMENT (WITHOUT HYDROBOOST)

Removal Procedure

1. Remove the front grille. Refer to **Fascia Grille Replacement (Suburban)** or **Fascia Grille Replacement (Yukon)** or **Fascia Grille Replacement (Escalade)** or **Fascia Grille Replacement (Tahoe Z71)** .
2. Remove the radiator air baffle and deflector-upper. Refer to **Radiator Air Upper Baffle and Deflector Replacement (Cadillac)** or **Radiator Air Upper Baffle and Deflector Replacement (Yukon)** .
3. Remove the radiator grille reinforcement support. Refer to **Support Replacement - Radiator Grille Reinforcement** .

cardiagn.com

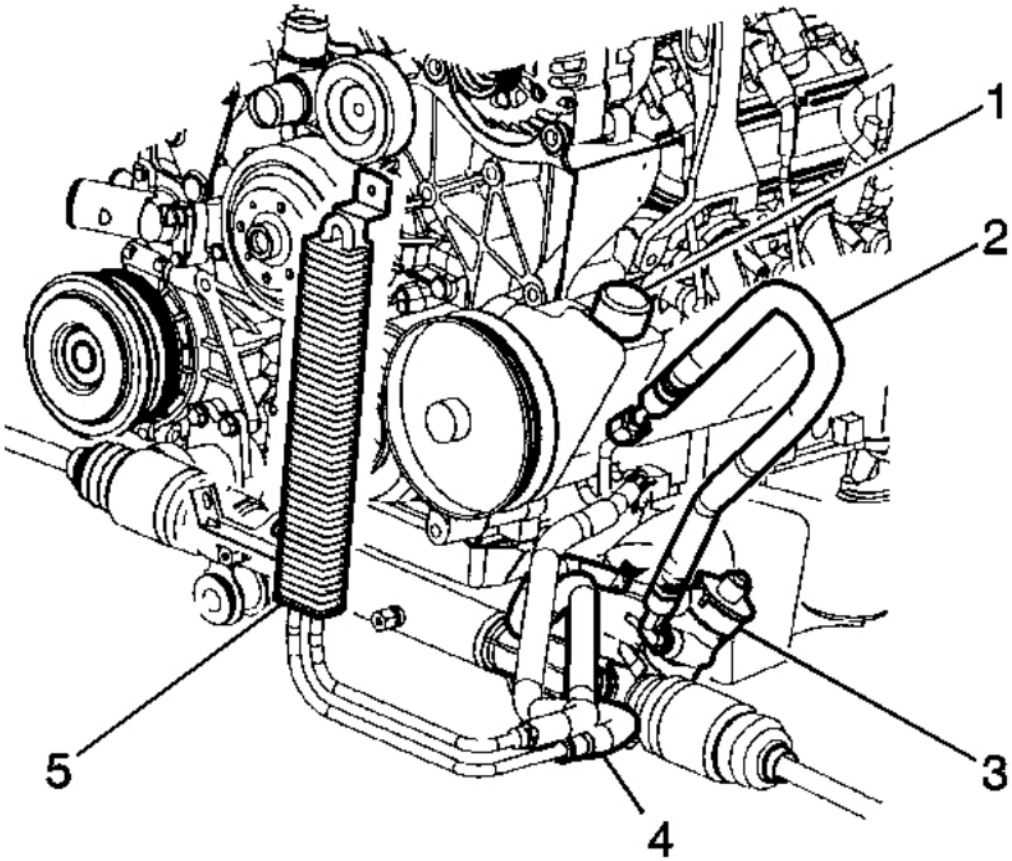

Fig. 54: View Of Power Steering Cooler Hoses & Components (Rack and Pinion)
Courtesy of GENERAL MOTORS CORP.

NOTE: **Refer to Power Steering Hose Disconnected Notice .**

4. Remove the power steering gear outlet hose (4) from the cooler.
5. Remove the power steering cooler hose from the power steering pump (1).

cardiagn.com

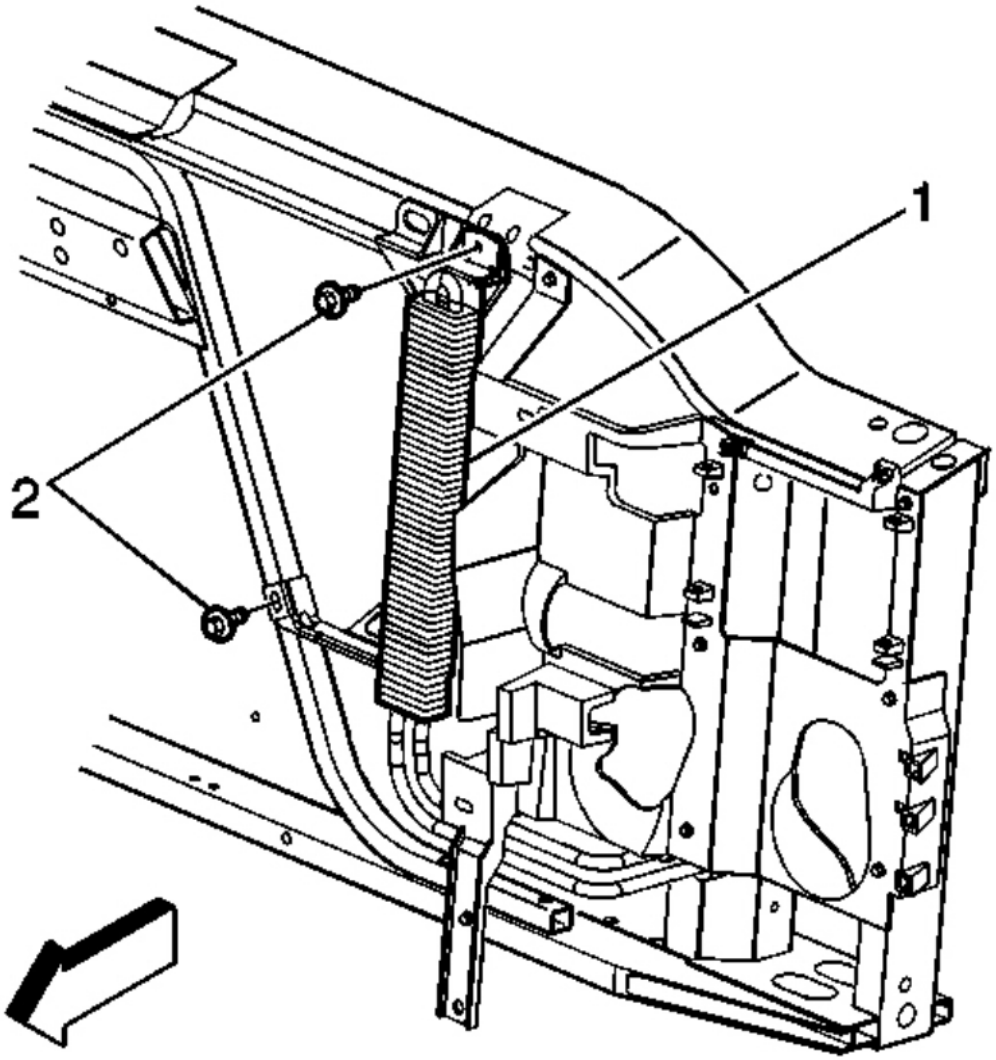

Fig. 55: View Of Power Steering Cooler & Bolts (With Hydroboost)
Courtesy of GENERAL MOTORS CORP.

6. Remove the bolts (2) retaining the cooler to the radiator support.
7. Remove the power steering cooler from the vehicle.

Installation Procedure

cardiagn.com

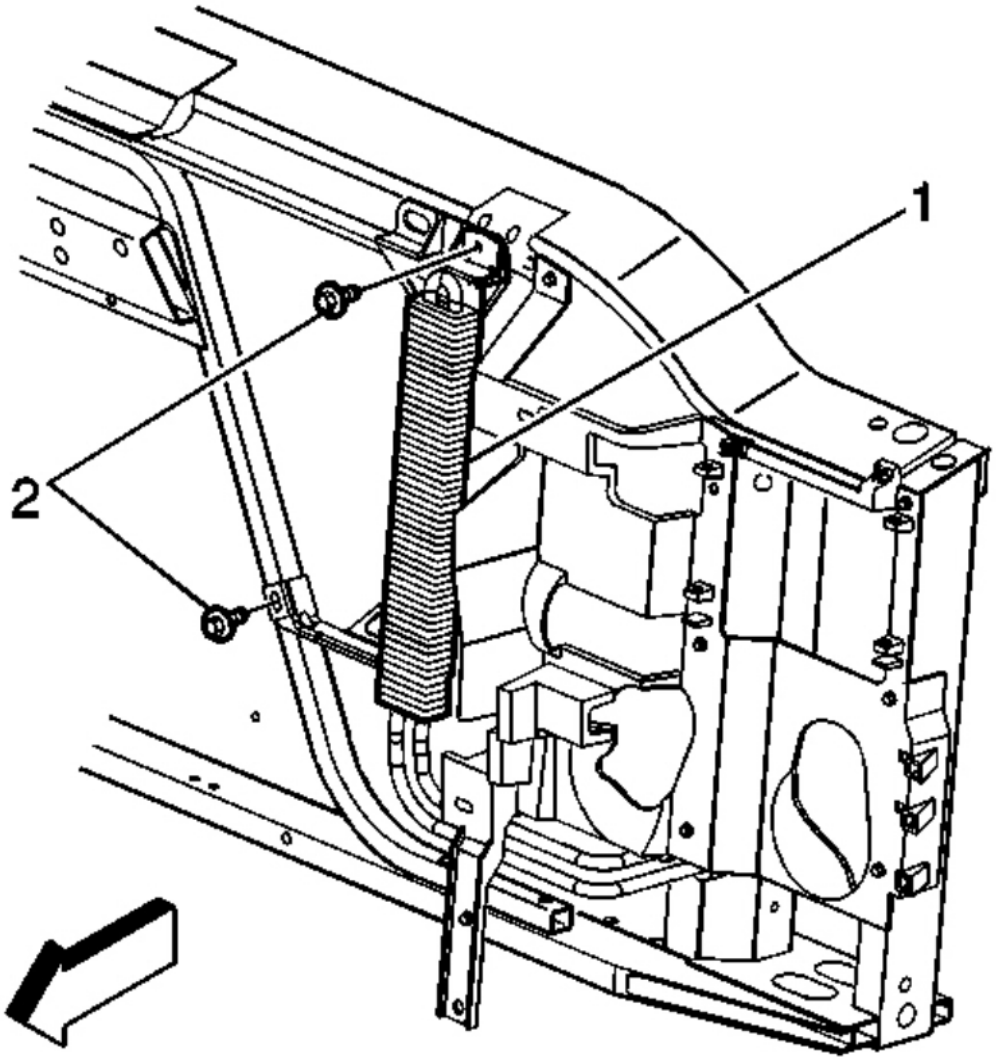

Fig. 56: View Of Power Steering Cooler & Bolts (With Hydroboost)
Courtesy of GENERAL MOTORS CORP.

NOTE: **Refer to Fastener Notice .**

1. Install the power steering cooler (1) to the vehicle.

   Tighten: Tighten the power steering cooler retaining bolts to 9 N.m (80 lb in).

cardiagn.com

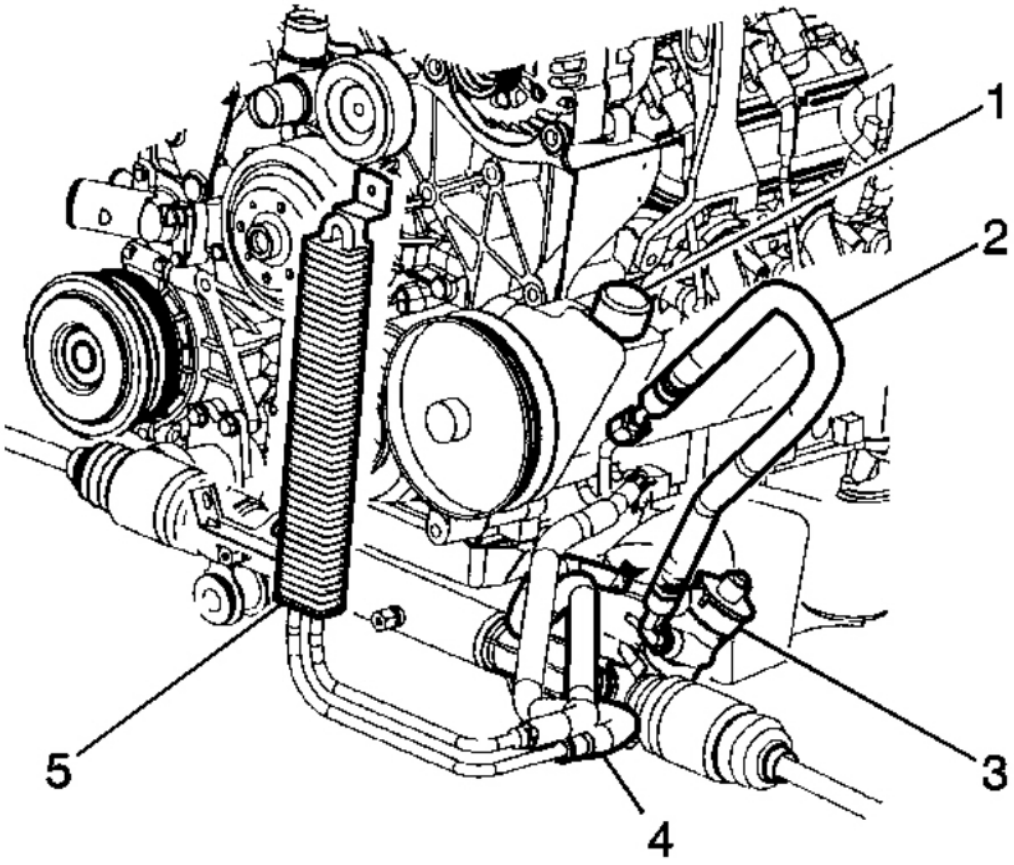

Fig. 57: View Of Power Steering Cooler Hoses & Components (Rack and Pinion)
Courtesy of GENERAL MOTORS CORP.

2. Connect the power steering cooler hose to the power steering pump (1) and reposition the clamp.
3. Connect the power steering gear outlet hose (4) to the cooler.

   Reposition the retaining clamp.

4. Bleed the power steering system. Refer to **Power Steering System Bleeding**.
5. Inspect all the hose connections for leaks.
6. Install the radiator grille reinforcement support. Refer to **Support Replacement - Radiator Grille Reinforcement** .
7. Install the radiator air baffle and deflector-upper. Refer to **Radiator Air Upper Baffle and Deflector Replacement (Cadillac)** or **Radiator Air Upper Baffle and Deflector Replacement (Yukon)** .
8. Install the front grille. Refer to **Fascia Grille Replacement (Suburban)** or **Fascia Grille Replacement**

cardiagn.com

(Yukon) or **Fascia Grille Replacement (Escalade)** or **Fascia Grille Replacement (Tahoe Z71)** .

POWER STEERING GEAR INLET PIPE/HOSE REPLACEMENT (WITHOUT HYDROBOOST)

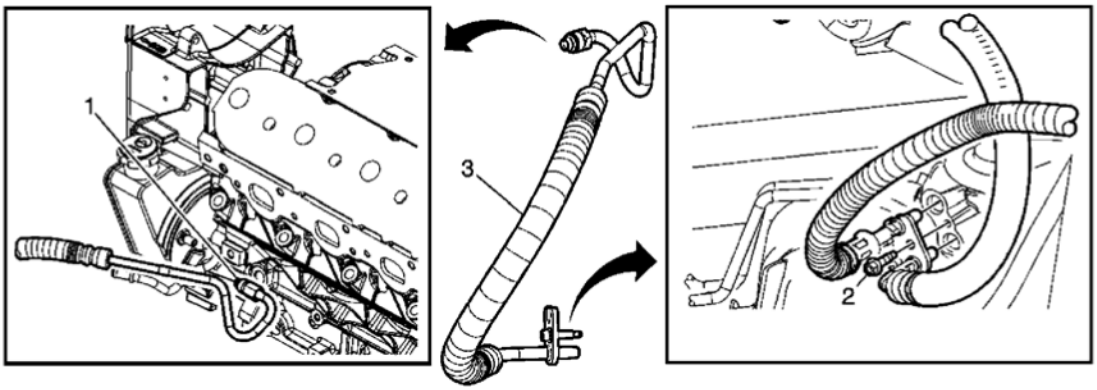

Fig. 58: View Of Power Steering Gear Inlet Pipe/Hose & Components
Courtesy of GENERAL MOTORS CORP.

Power Steering Gear Inlet Pipe/Hose Replacement (Without Hydroboost)

Callout	Component Name
Preliminary Procedures 1. Place a suitable drain pan under the vehicle. 2. Raise and support the vehicle. Refer to **Lifting and Jacking the Vehicle** . 3. Remove the engine protection shield. Refer to **Engine Shield Replacement** .	
1	Power Steering Gear Inlet Hose Fitting **NOTE:** **Refer to Fastener Notice .** **Tighten:** 32 N.m (24 lb ft)
2	Power Steering Hose Assembly Bolt (at rack and pinion) **Tighten:** 12 N.m (106 lb in) **Tip:** Remove the power steering gear outlet hose from the power steering gear inlet hose.
3	Power Steering Gear Inlet Hose Assembly **Tip:** • Note the routing of the power steering gear inlet hose to ensure proper installation. • Keep the area around the power steering hoses and power steering gear openings clean. Refer to **Power Steering Hose Disconnected Notice** .

cardiagn.com

	• Use the **J 44586** to replace the power steering gear oil seals if necessary. See **Special Tools**. • Fill and bleed the power steering system. Refer to **Power Steering System Bleeding**.

Special Tools:

J 44586 Power Steering Gear Oil Seal Remover/Installer. See **Special Tools**.

POWER STEERING GEAR INLET PIPE/HOSE REPLACEMENT (WITH GAS HYDROBOOST)

Removal Procedure

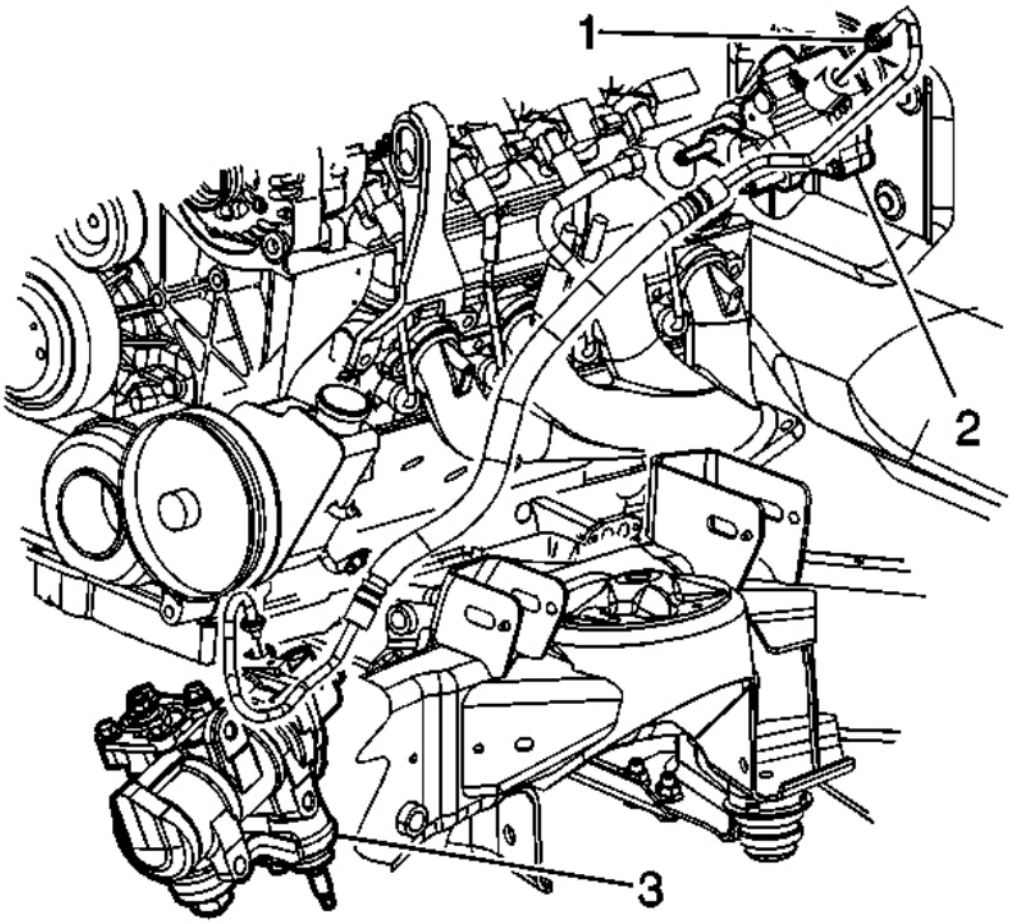

Fig. 59: Power Steering Gear Inlet Pipe/Hose (With Hydroboost)
Courtesy of GENERAL MOTORS CORP.

cardiagn.com

NOTE: **Refer to Power Steering Hose Disconnected Notice .**

1. Install a drain pan under the vehicle.
2. Remove the power steering gear inlet hose (1) from the brake booster.
3. Remove the power steering gear inlet hose from the power steering gear.
4. Remove the power steering gear inlet hose from the vehicle.

Installation Procedure

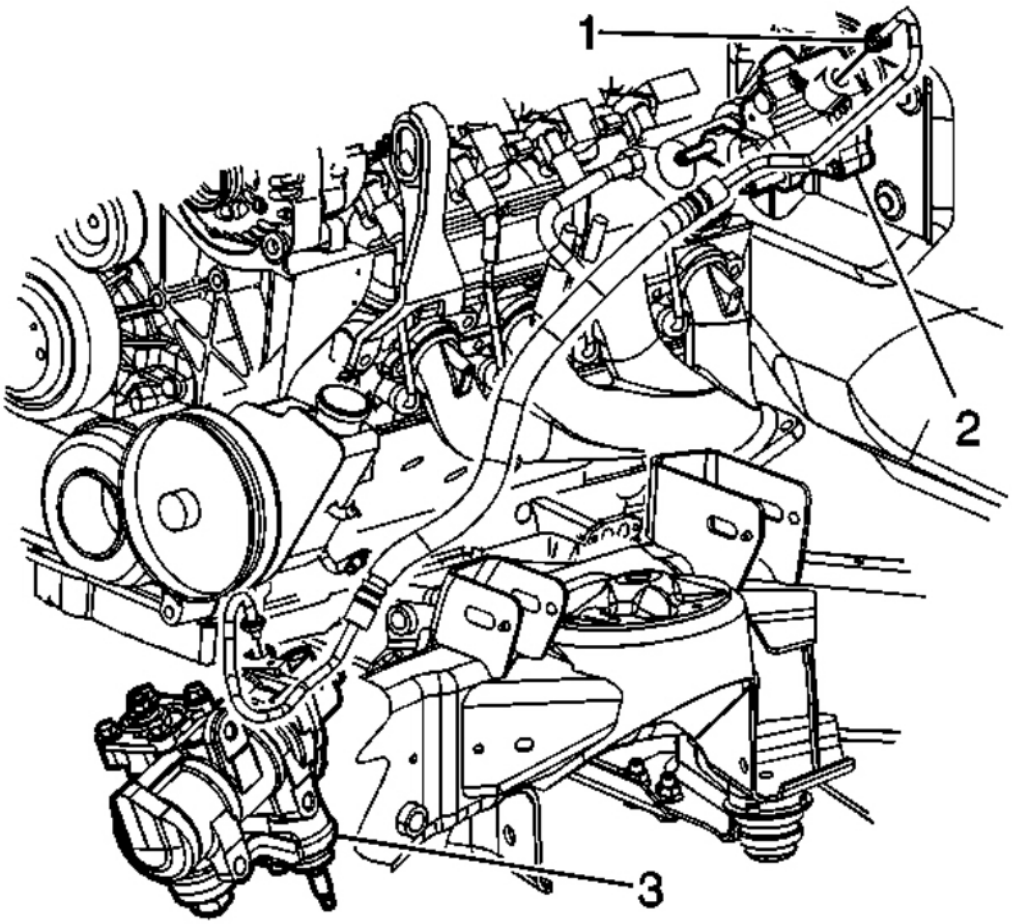

Fig. 60: Power Steering Gear Inlet Pipe/Hose (With Hydroboost)
Courtesy of GENERAL MOTORS CORP.

NOTE: **Refer to Installing Hoses Without Twists or Bends Notice .**

cardiagn.com

1. Route the hose in the same position the hose occupied prior to removal.
2. Install the power steering gear inlet hose (1) to the brake booster (2). Hand tighten only.

NOTE: **Refer to Fastener Notice .**

3. Install the power steering gear inlet hose to the power steering gear.

   Tighten: Tighten both power steering gear inlet hose fittings to 32 N.m (24 lb ft).

4. Remove the drain pan from under the vehicle.
5. Bleed the power steering system. Refer to **Power Steering System Bleeding**.

POWER STEERING GEAR OUTLET PIPE/HOSE REPLACEMENT (WITHOUT HYDROBOOST)

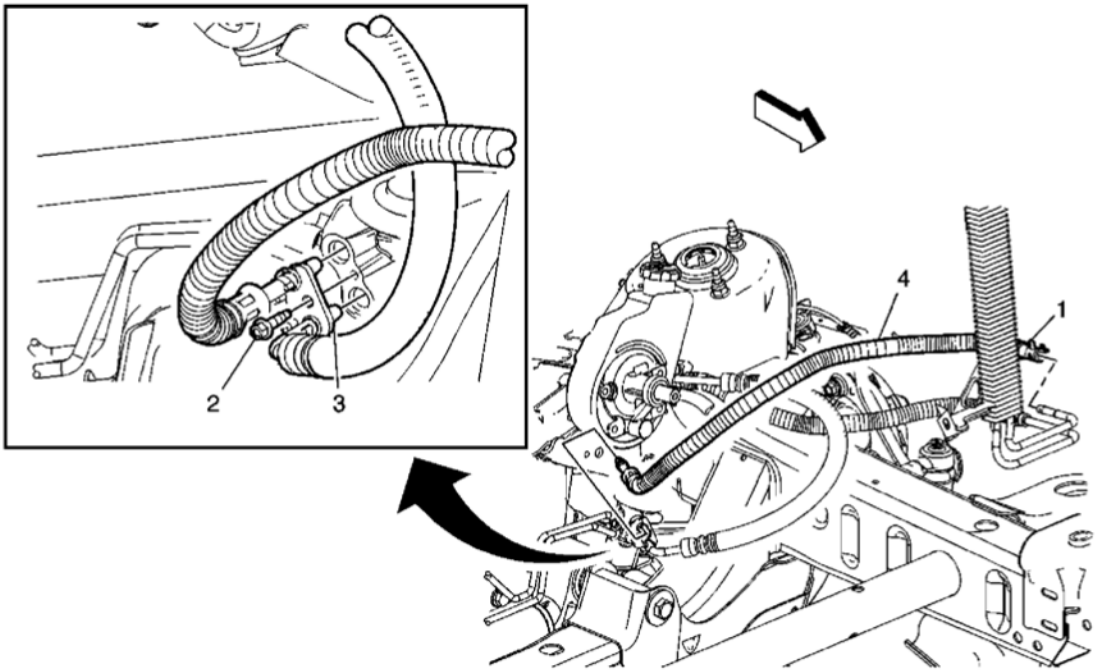

Fig. 61: View Of Power Steering Gear Outlet Pipe/Hose & Components (Without Hydroboost)
Courtesy of GENERAL MOTORS CORP.

Power Steering Gear Outlet Pipe/Hose Replacement (Without Hydroboost)

Callout	Component Name
Tool Required: **J 44586** Power Steering Gear Oil Seal Remover/Installer. See **Special Tools**. **Preliminary Procedures**	

cardiagn.com

1. Place a suitable drain pan under the vehicle.
2. Raise and support the vehicle. Refer to **Lifting and Jacking the Vehicle** .
3. Remove the engine protection shield. Refer to **Engine Shield Replacement** .

1	Power Steering Return Hose Clamp **Tip:** • Release the return hose clamp and position it off of the hose. • Pull the return hose off of the cooler pipe.
2	Power Steering Hose Assembly Bolt (at rack and pinion) **NOTE:** **Refer to Fastener Notice .** **Tighten:** 12 N.m (106 lb in) **Tip:** Remove the bolt from the rack and pinion.
3	Power Steering Hose Assembly **Tip:** • Pull the hose assembly out of the rack and pinion • Keep the area around the power steering hoses and power steering gear openings clean. Refer to **Power Steering Hose Disconnected Notice** .
4	Power Steering Return Hose **Tip:** • Use the **J 44586** to replace the power steering gear oil seals if necessary. See **Special Tools**. • Fill and bleed the power steering system upon completion of the repair. Refer to **Power Steering System Bleeding**.

POWER STEERING GEAR OUTLET PIPE/HOSE REPLACEMENT (WITH HYDROBOOST)

Removal Procedure

cardiagn.com

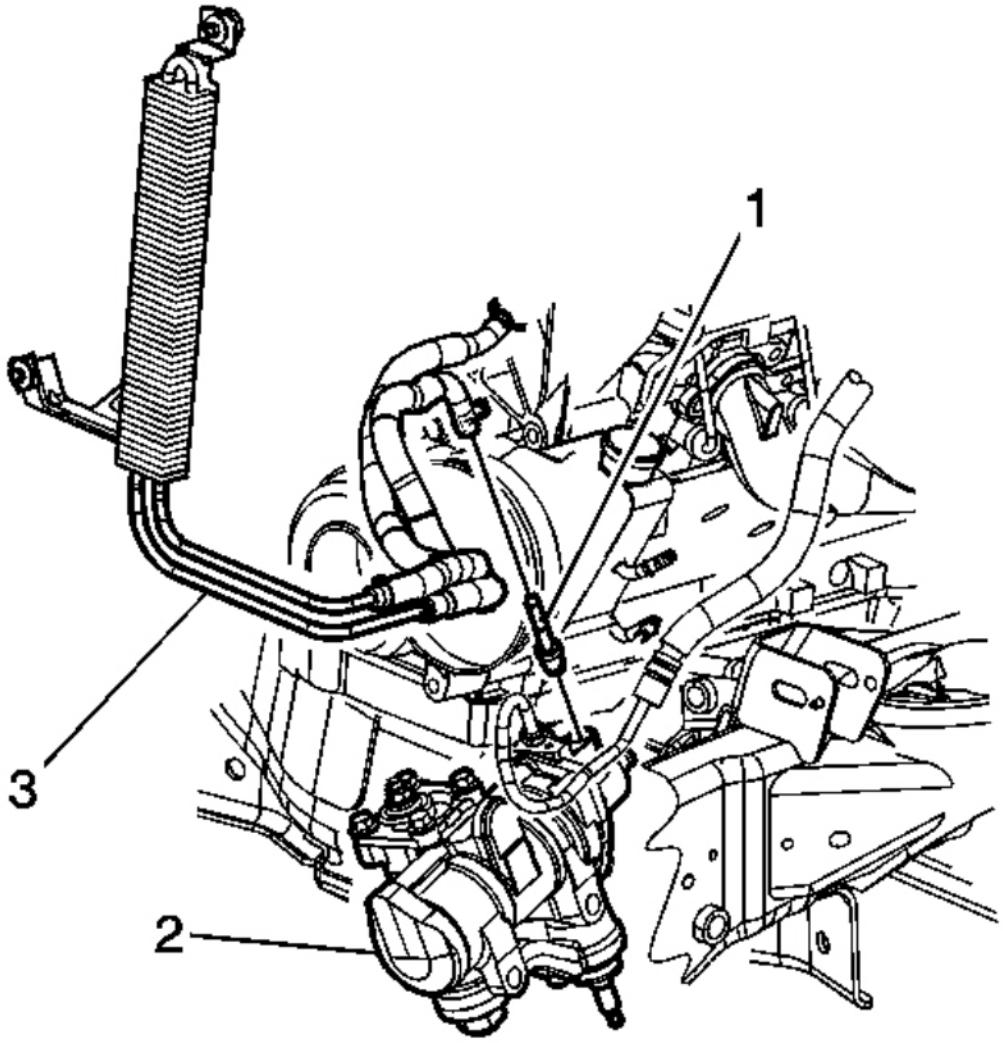

Fig. 62: View Of Power Steering Gear Outlet Pipe/Hose & Components (With Hydroboost)
Courtesy of GENERAL MOTORS CORP.

NOTE: **Refer to Power Steering Hose Disconnected Notice .**

1. Place a drain pan under the vehicle.
2. Siphon the fluid from the reservoir to prevent excess spillage.
3. Remove the clamp retaining the power steering cooler inlet hose (3) to the power steering gear (2).
4. Remove the power steering gear outlet pipe (6) from the power steering gear (2).

cardiagn.com

Installation Procedure

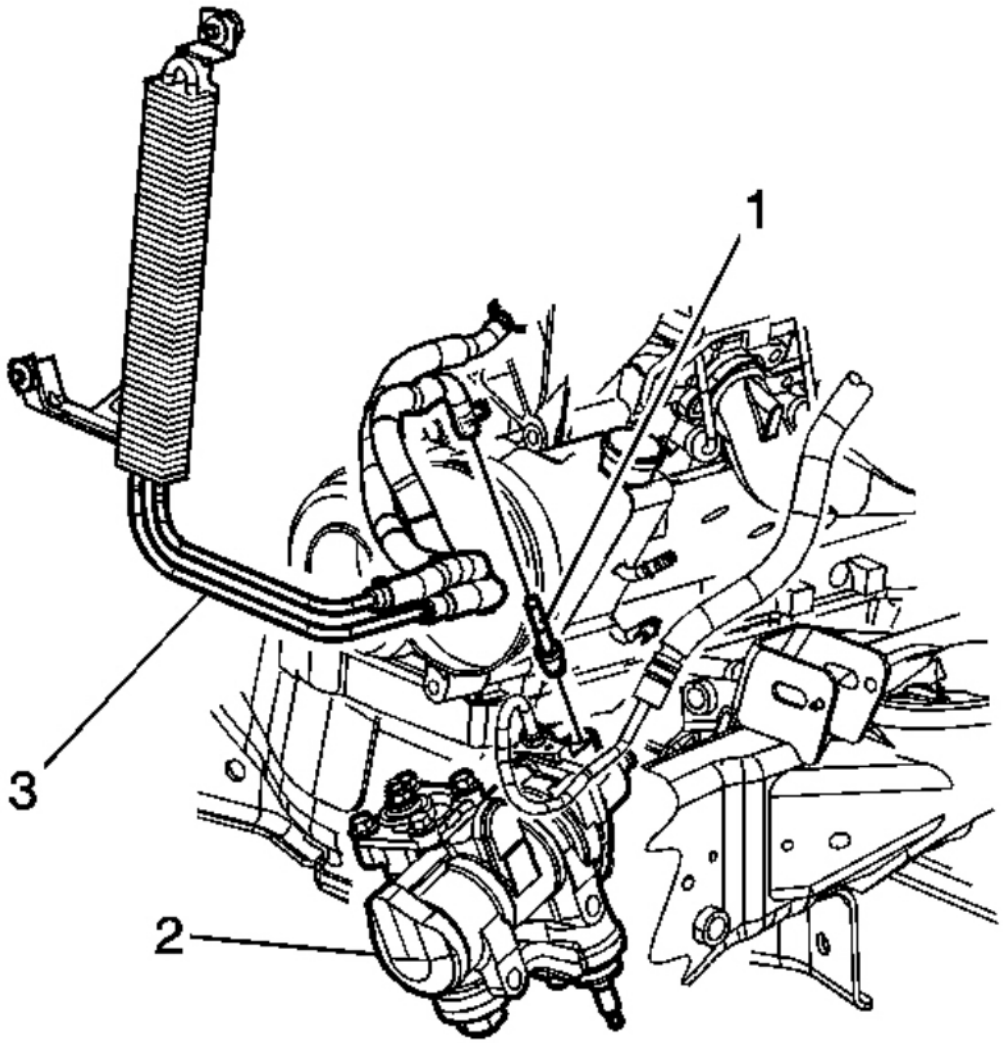

Fig. 63: View Of Power Steering Gear Outlet Pipe/Hose & Components (With Hydroboost)
Courtesy of GENERAL MOTORS CORP.

1. Install the power steering gear outlet pipe (6) to the power steering gear (2).
2. Install the retaining clamp.
3. Fill and bleed the power steering system. Refer to **Power Steering System Bleeding**.
4. Inspect all the hose connections for leaks.

cardiagn.com

POWER STEERING GEAR REPLACEMENT (RACK AND PINION)

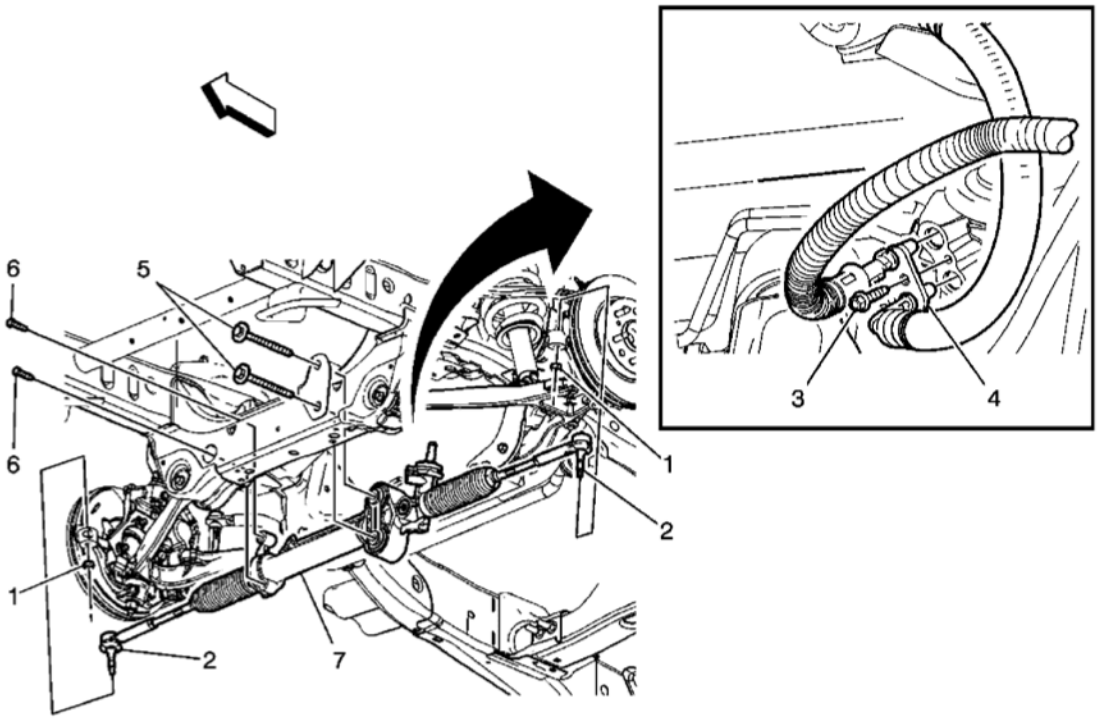

Fig. 64: Power Steering Gear Components (Rack and Pinion)
Courtesy of GENERAL MOTORS CORP.

Power Steering Gear Replacement (Rack and Pinion)

Callout	Component Name
Tools Required • **J 24319-B** Steering Linkage and Tie Rod Puller. See **Special Tools**. • **J 44586** Power Steering Gear Oil Seal Remover/Installer. See **Special Tools**. **Preliminary Procedures** 1. Disconnect the intermediate steering shaft from the rack and pinion. Refer to **Lower Intermediate Steering Shaft Replacement** . 2. Raise and support the vehicle. Refer to **Lifting and Jacking the Vehicle** . 3. Remove the engine protection shield. Refer to **Engine Shield Replacement** . 4. Place a suitable drain pan under the vehicle. 5. Remove the front tire and wheel assemblies. Refer to **Tire and Wheel Removal and Installation** . 6. Check for proper wheel alignment upon completion of the repair. Refer to **Wheel Alignment Specifications** .	
	Outer Tie Rod End Nut (Qty: 2)

cardiagn.com

1	**NOTE:** **Do not attempt to disconnect a steering linkage joint by driving a wedge between the joint and the attached part. Seal damage may result which will cause premature failure of the joint.** **NOTE:** **Refer to Fastener Notice .** **Tighten:** 60 N.m (44 lb ft) **Tip:** Remove the outer tie rod nuts.
2	Outer Tie Rod End (Qty: 2) **Tip:** Use the **J 24319-B** to separate the outer tie rods from the steering knuckles. See **Special Tools**.
3	Power Steering Hose Assembly Bolt (at rack and pinion) **Tighten:** 12 N.m (106 lb in)
4	Power Steering Hose Assembly **Tip:** • Pull the hose assembly out of the rack and pinion • Keep the area around the power steering hoses and power steering gear openings clean. Refer to **Power Steering Hose Disconnected Notice** .
5	Rack and Pinion Bolt (left side) (Qty: 2) **Tighten:** 200 N.m (148 lb ft) **Tip:** Remove the left side bolts from the rack and pinion.
6	Rack and Pinion Bolt (right side) (Qty: 2) **Tighten:** 100 N.m (74 lb ft) **Tip:** Remove the right side bolts from the rack and pinion.
7	Rack and Pinion **Tip:** • Use the **J 44586** to replace the power steering gear oil seals if necessary. See **Special Tools**. • Fill and bleed the power steering system upon completion of the repair. Refer to **Power Steering System Bleeding**.

cardiagn.com

POWER STEERING GEAR REPLACEMENT (NON RACK AND PINION)

Removal Procedure

Tools Required

- **J 6632-01** Pitman Arm Puller. See **Special Tools**.
- **J 24319-B** Universal Steering Linkage Puller. See **Special Tools**.
- **J 29107-A** Pitman Arm Puller. See **Special Tools**.

1. Place a drain pan under the vehicle.
2. Remove the engine protection shield, if equipped. Refer to **Engine Shield Replacement** .

NOTE: **Refer to Power Steering Hose Disconnected Notice .**

3. Remove the power steering hoses from the steering gear.
4. Cap the ends of the hoses and the power steering gear in order to prevent any entrance of dirt.
5. Disconnect the intermediate shaft from the steering gear. Refer to **Lower Intermediate Steering Shaft Replacement** .

cardiagn.com

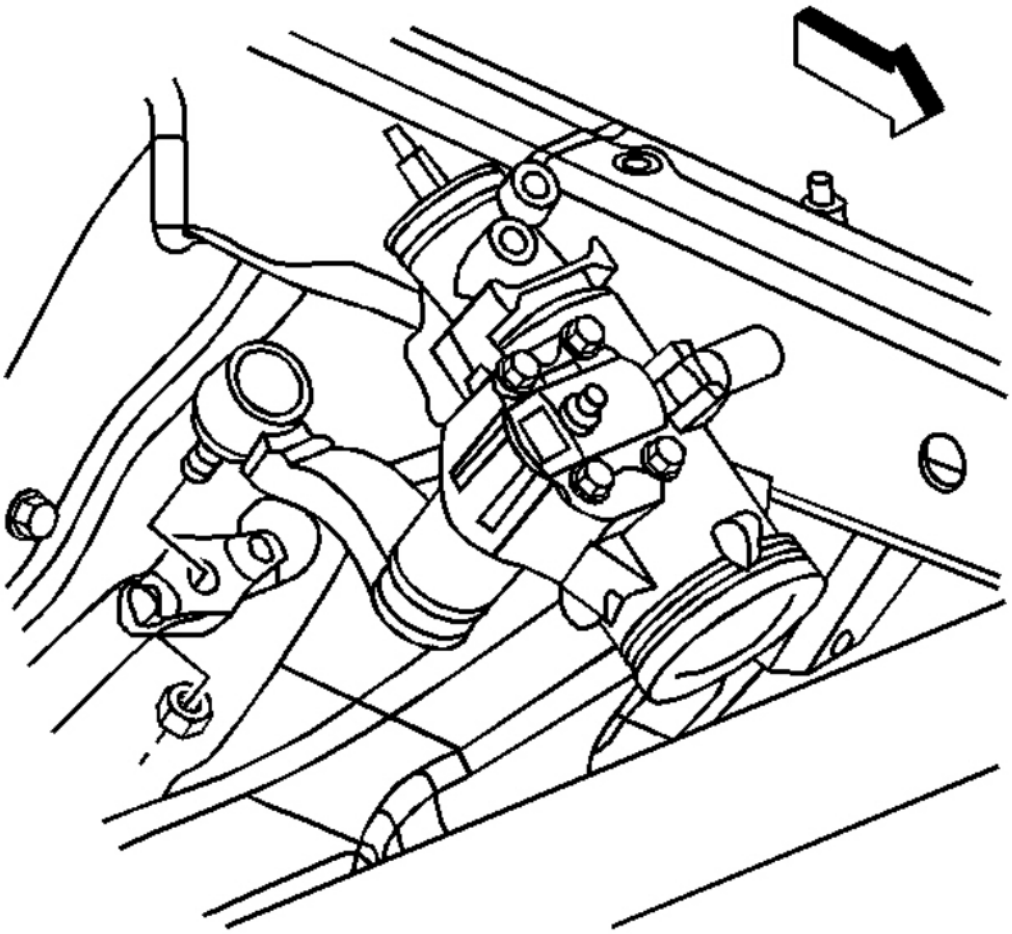

Fig. 65: Pitman Arm To Relay Rod Nut (Non Rack and Pinion)
Courtesy of GENERAL MOTORS CORP.

6. Remove the pitman arm to relay rod nut.

cardiagn.com

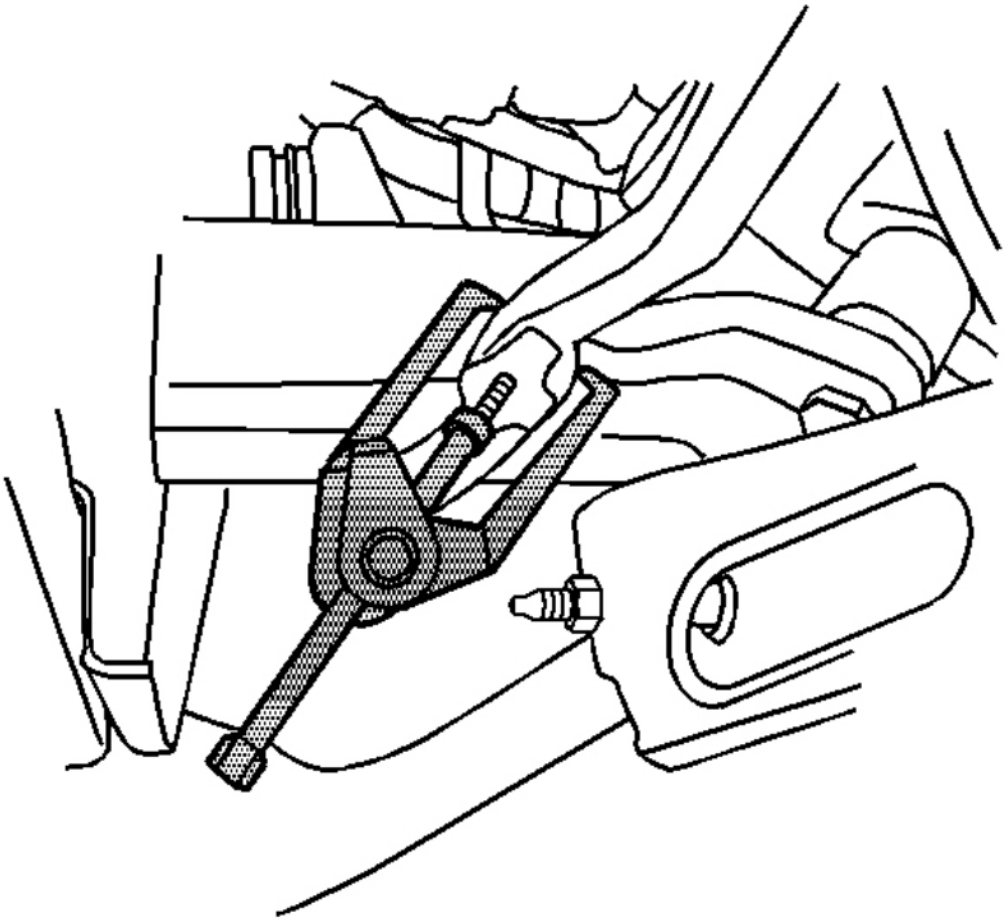

Fig. 66: Disconnecting Pitman Arm From Relay Rod Using J 24319-B
Courtesy of GENERAL MOTORS CORP.

7. Disconnect the pitman arm from the relay rod using **J 24319-B** . See **Special Tools**.

cardiagn.com

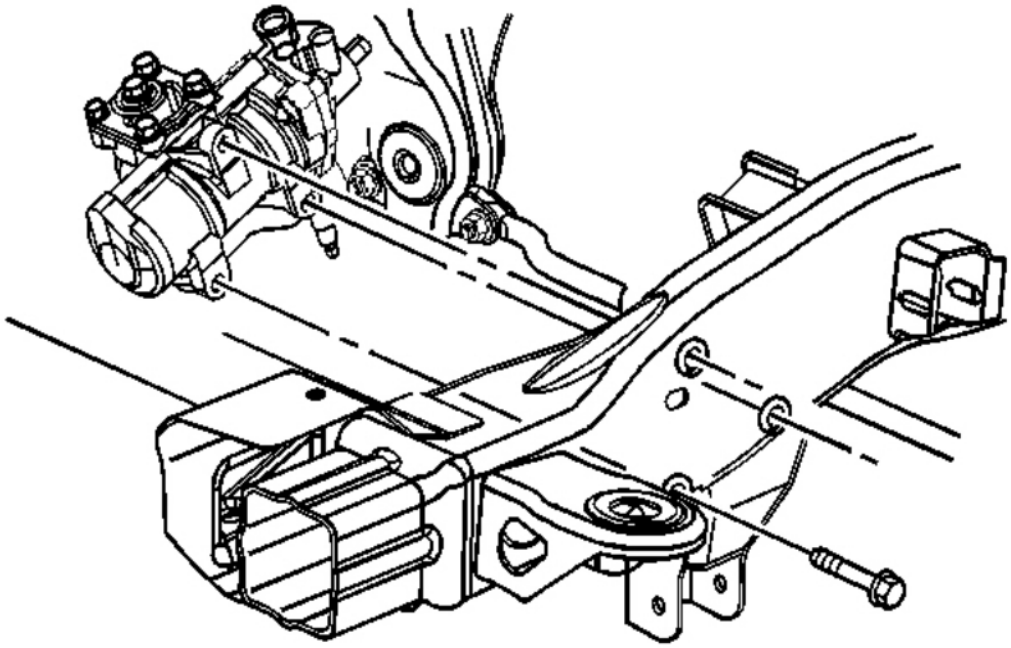

Fig. 67: View Of Power Steering Gear & Bolts
Courtesy of GENERAL MOTORS CORP.

8. Remove the bolts retaining the steering gear to the frame.
9. Remove the steering gear from the vehicle.

cardiagn.com

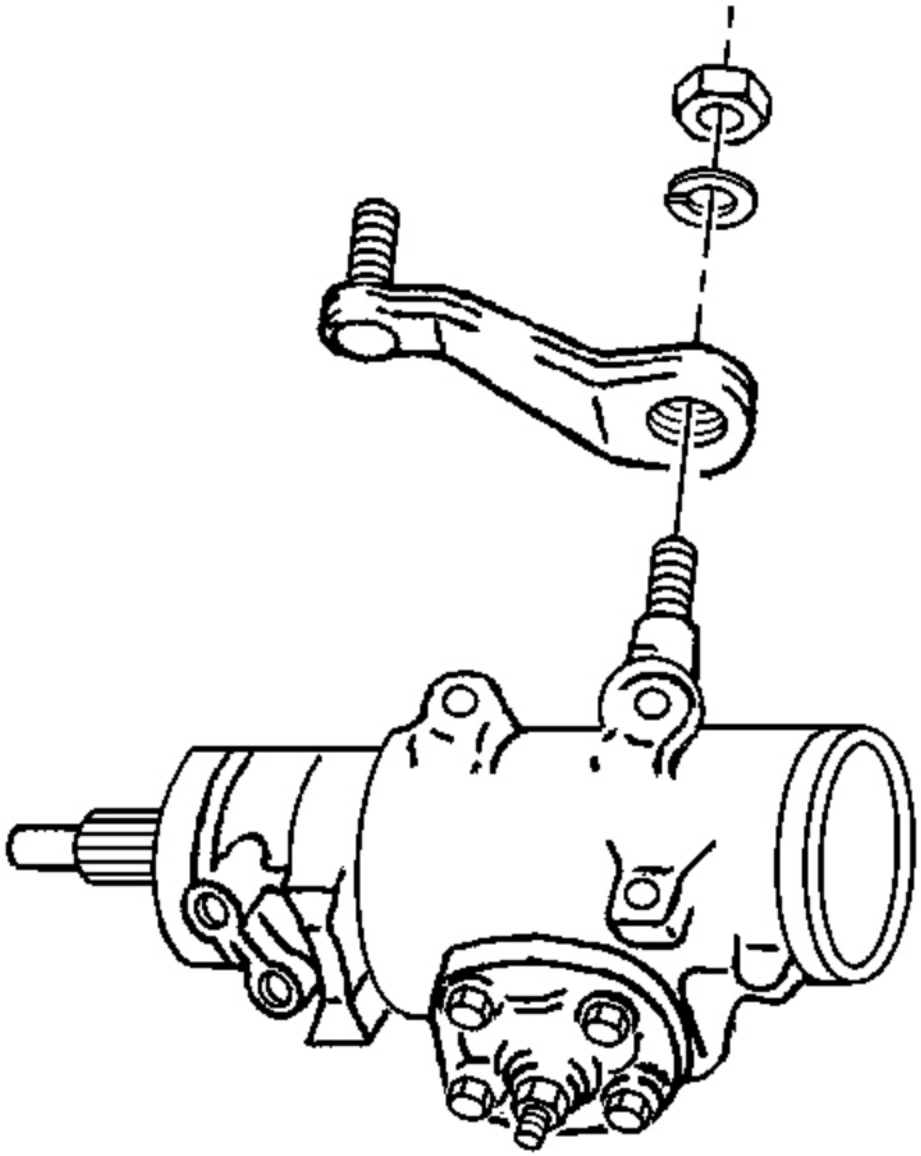

Fig. 68: View Of Pitman Arm, Power Steering Gear, Washer & Nut
Courtesy of GENERAL MOTORS CORP.

10. Remove the pitman arm to the power steering gear retaining nut.

cardiagn.com

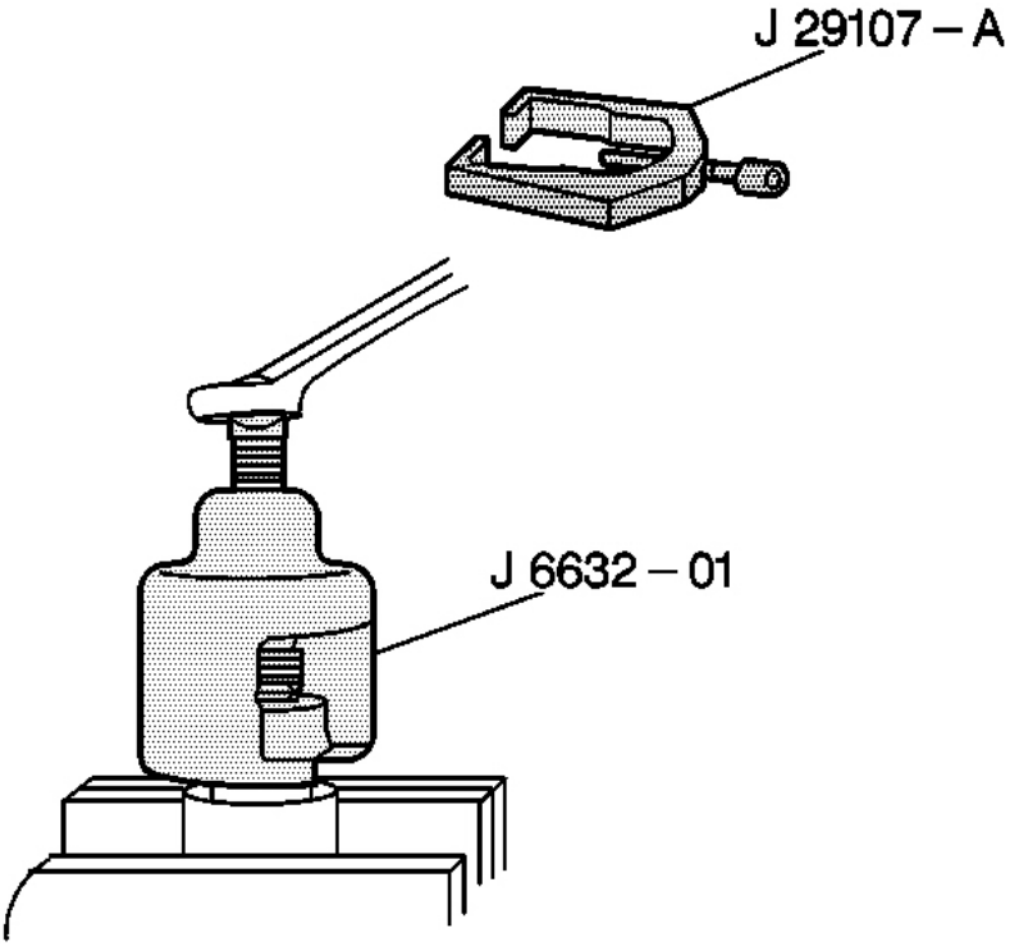

Fig. 69: Removing Pitman Arm From Gear Using J 6632-01 Or J 29107-A
Courtesy of GENERAL MOTORS CORP.

11. Remove the pitman arm from the power steering gear using **J 6632-01** or **J 29107-A** . See **Special Tools**.

Installation Procedure

cardiagn.com

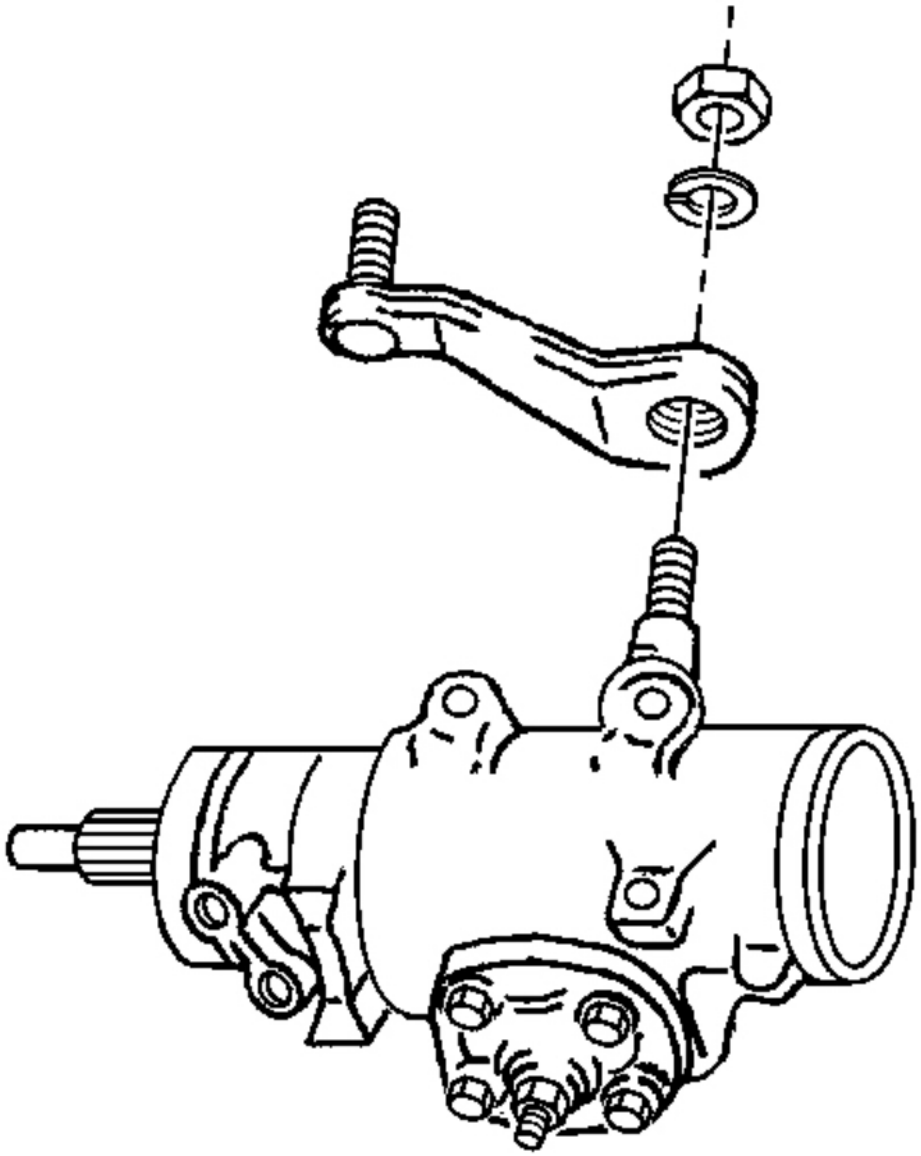

Fig. 70: View Of Pitman Arm, Power Steering Gear, Washer & Nut
Courtesy of GENERAL MOTORS CORP.

1. Install the pitman arm to the power steering gear.

NOTE: **Refer to Fastener Notice .**

cardiagn.com

2. Install the pitman arm to power steering gear retaining nut and washer.

   Tighten: Tighten the nut to 250 N.m (184 lb ft).

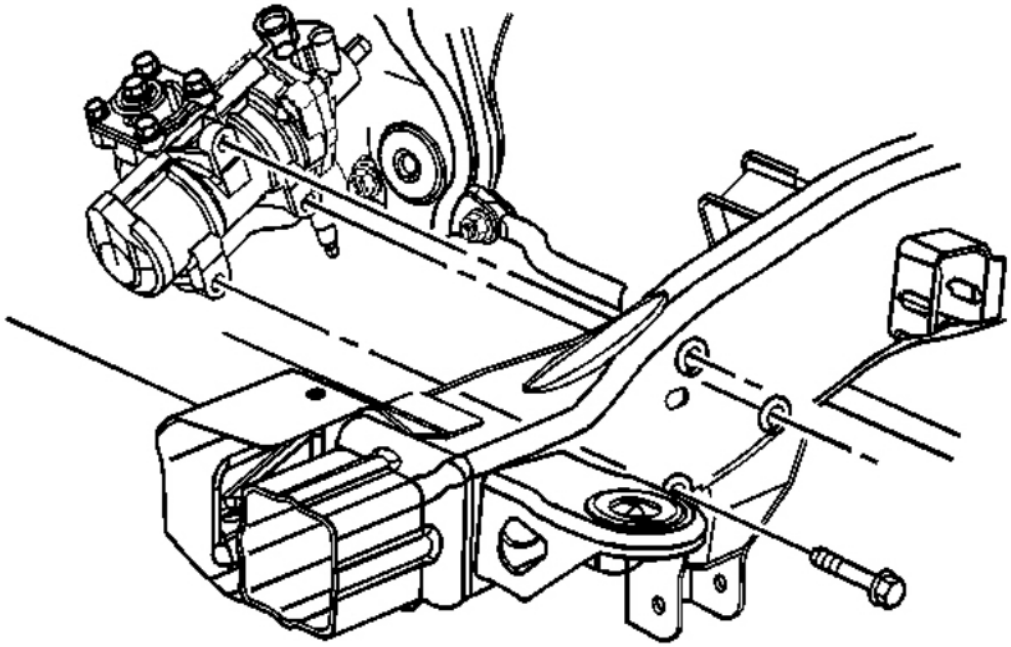

Fig. 71: View Of Power Steering Gear & Bolts
Courtesy of GENERAL MOTORS CORP.

3. Install the steering gear to the frame and install the retaining bolts.

   Tighten: Tighten the bolts to 150 N.m (110 lb ft).

cardiagn.com

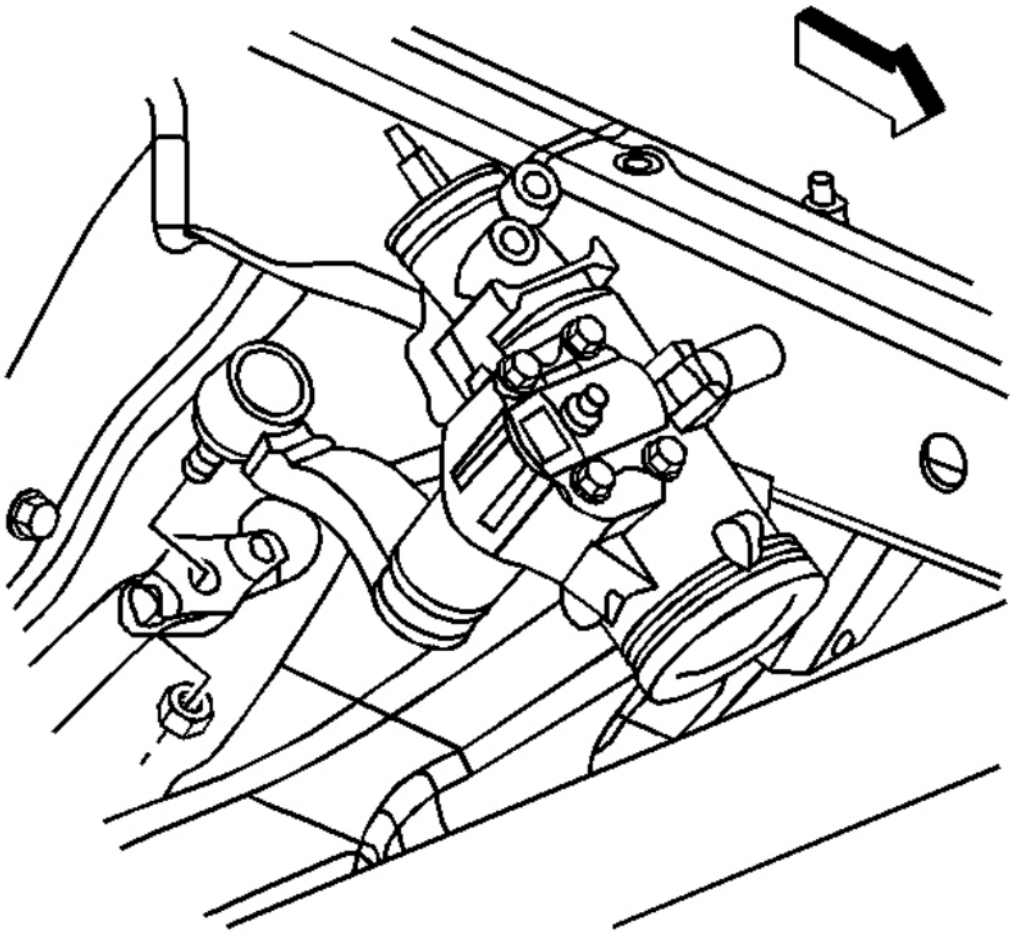

Fig. 72: Pitman Arm To Relay Rod Nut (Non Rack and Pinion)
Courtesy of GENERAL MOTORS CORP.

4. Install the pitman arm to the relay rod.
5. Install the pitman arm to the relay rod nut.

   Tighten: Tighten the nut to 62 N.m (46 lb ft).

6. Install the intermediate shaft to the steering gear. Refer to **Lower Intermediate Steering Shaft Replacement** .
7. Remove the caps or plugs from the steering gear and hoses.
8. Install the hoses to the steering gear.

cardiagn.com

Tighten: Tighten the hoses fittings to 32 N.m (24 lb ft).

9. Install the engine protection shield, if equipped. Refer to **Engine Shield Replacement** .
10. Remove the safety stands.
11. Lower the vehicle.
12. Bleed the power steering system. Refer to **Power Steering System Bleeding**.

RACK AND PINION GEAR RACK BEARING PRELOAD ADJUSTMENT - OFF VEHICLE

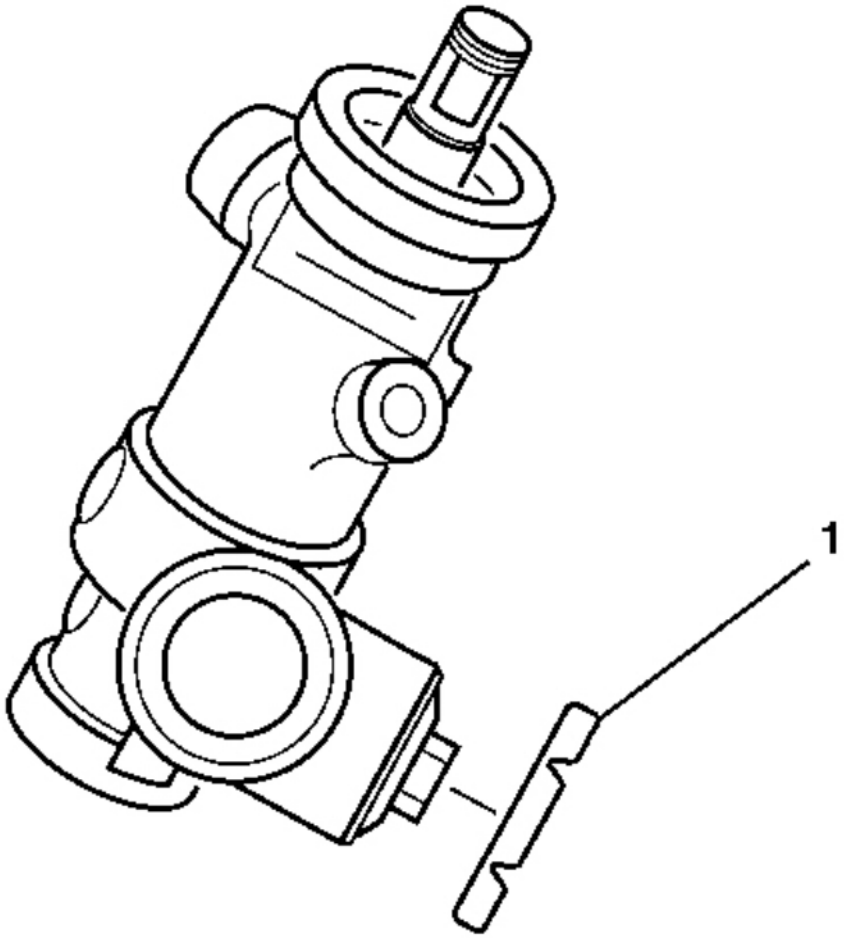

Fig. 73: View Of Adjuster Plug Lock Nut (Rack & Pinion)
Courtesy of GENERAL MOTORS CORP.

cardiagn.com

1. Loosen the adjuster plug lock nut (1).
2. Turn the adjuster plug clockwise until the adjuster plug bottoms in the gear assembly.
3. Turn the adjuster plug back 50 degrees to 70 degrees (approximately one flat).

NOTE: Refer to Fastener Notice in Cautions and Notices.

4. Install the adjuster plug lock nut (1) to the adjuster plug.

   Tighten: Hold the adjuster plug stationary while tightening the adjuster plug lock nut (1) to 68 N.m (50 lb ft).

STEERING GEAR CYLINDER PIPE ASSEMBLIES/O-RING SEALS REPLACEMENT - OFF VEHICLE

Removal Procedure

cardiagn.com

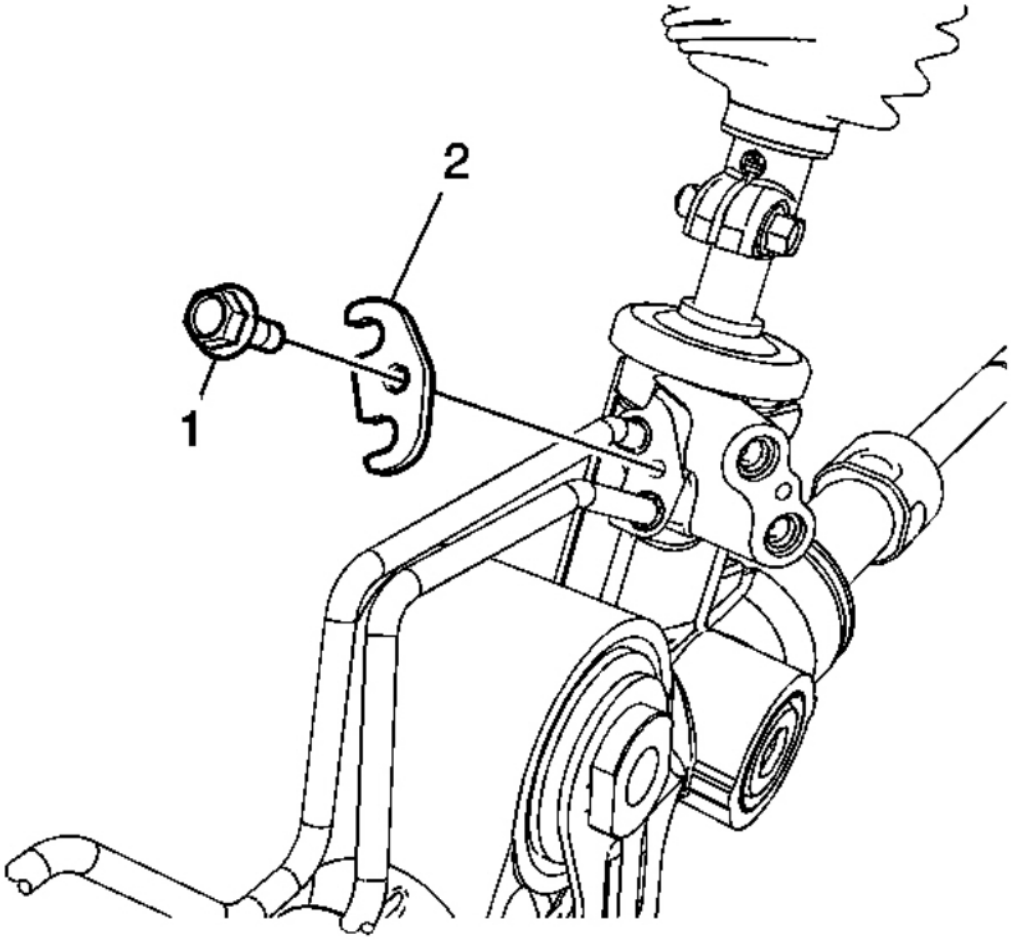

Fig. 74: View Of Cylinder Line Retaining Plate & Bolt
Courtesy of GENERAL MOTORS CORP.

IMPORTANT: Protect the boots from sharp tools and from the sharp edges of surrounding components.

1. Remove the bolt (1) from the cylinder line retaining plate (2) at the valve end.
2. Remove the cylinder line retaining plate (2).

cardiagn.com

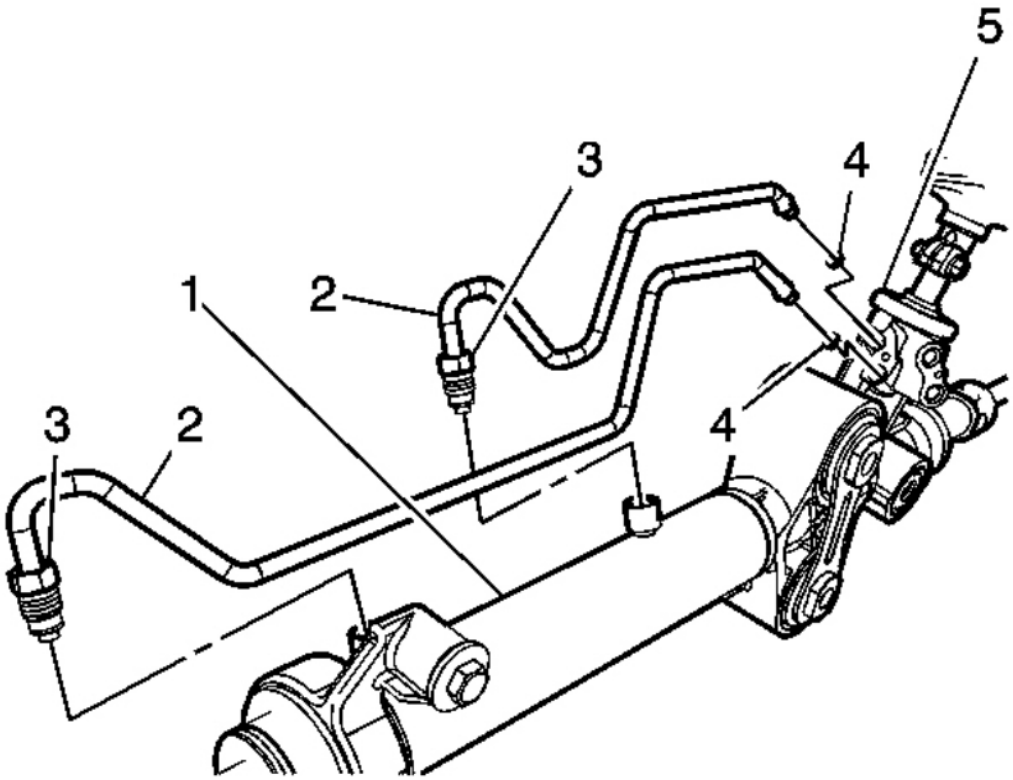

Fig. 75: View Of Rack & Pinion Gear Assembly, Cylinder Line Assemblies, O-Ring Seals & Valve End
Courtesy of GENERAL MOTORS CORP.

3. Loosen both cylinder line nuts (3) on cylinder end of the gear assembly (1).
4. Remove both cylinder line assemblies (2) from the rack and pinion gear assembly (1).
5. Remove and discard the O-rings seals (4) from the valve end (5).

Installation Procedure

1. Inspect the cylinder lines for the following items:
   - Cracks
   - Dents
   - Damage to the threads
2. Replace the parts as needed.
3. Lubricate and install the O-rings seals onto the cylinder lines.

cardiagn.com

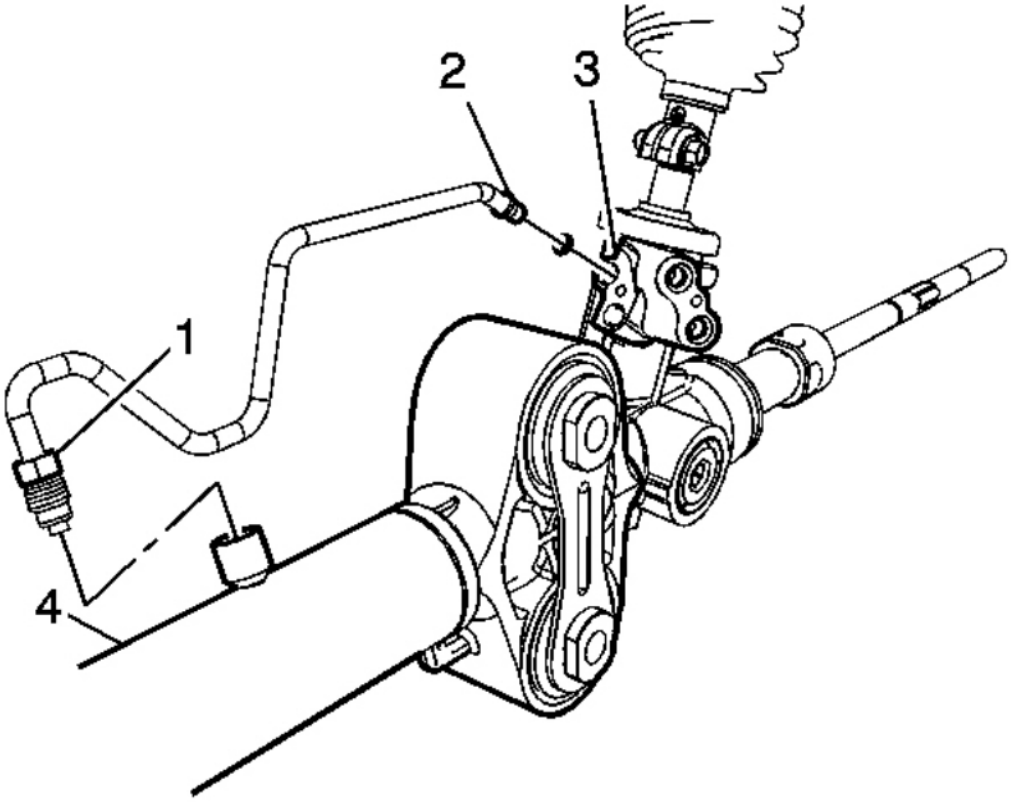

Fig. 76: View Of Cylinder Line Nut, Cylinder Line, Valve Housing & Gear Tube End
Courtesy of GENERAL MOTORS CORP.

IMPORTANT: You must install the smaller cylinder line into the valve housing (3) first.

4. Place the smaller cylinder line (2) into the valve housing (3).

IMPORTANT: Hold the smaller cylinder line (2) in place. Do not torque the cylinder line nut (1).

5. Place the other end of the cylinder line at the gear tube end (4).

   Finger tighten the cylinder line nut (1) on the smaller cylinder line.

cardiagn.com

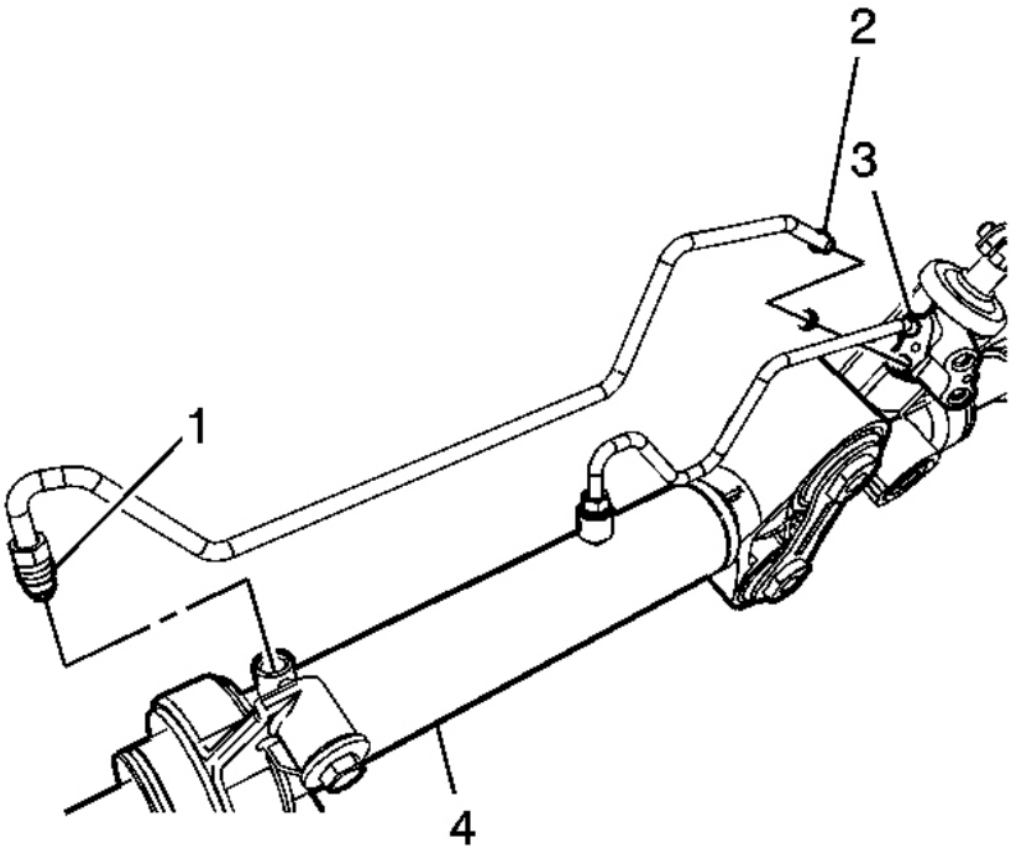

Fig. 77: View Of Cylinder Line Nut, Cylinder Line, Valve Housing, & Gear Tube End
Courtesy of GENERAL MOTORS CORP.

IMPORTANT: You must install the larger cylinder line into the valve housing (3) first.

6. Place the larger cylinder line (2) into the valve housing (3).

IMPORTANT: Hold the larger cylinder line (2) in place. Do not torque the cylinder line nut (1).

7. Place the other end of the cylinder line at the gear tube end (4).

   Finger tighten the cylinder line nut (1) on the larger cylinder line.

cardiagn.com

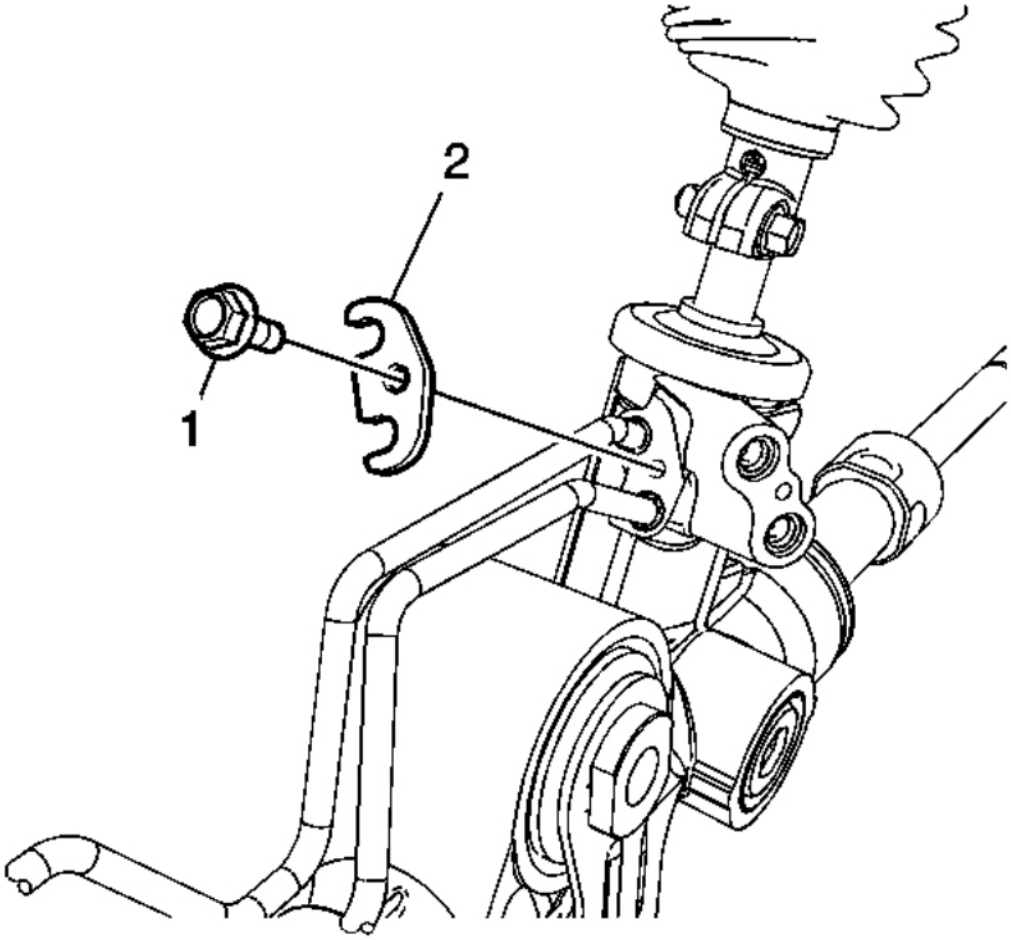

Fig. 78: View Of Cylinder Line Retaining Plate & Bolt
Courtesy of GENERAL MOTORS CORP.

8. Place the cylinder line retaining plate (2) over the cylinder line beads at the valve end.

NOTE: **Refer to Fastener Notice .**

9. Install the bolt (1) into the cylinder line retaining plate (2) and tighten.

Tighten: Tighten the bolt to 12 N.m (106 lb in).

10. Tighten both cylinder line nuts (3) at the cylinder end.

cardiagn.com

Tighten: Tighten the nuts to 19 N.m (14 lb ft).

PITMAN SHAFT OVER-CENTER PRELOAD ADJUSTMENT - OFF VEHICLE

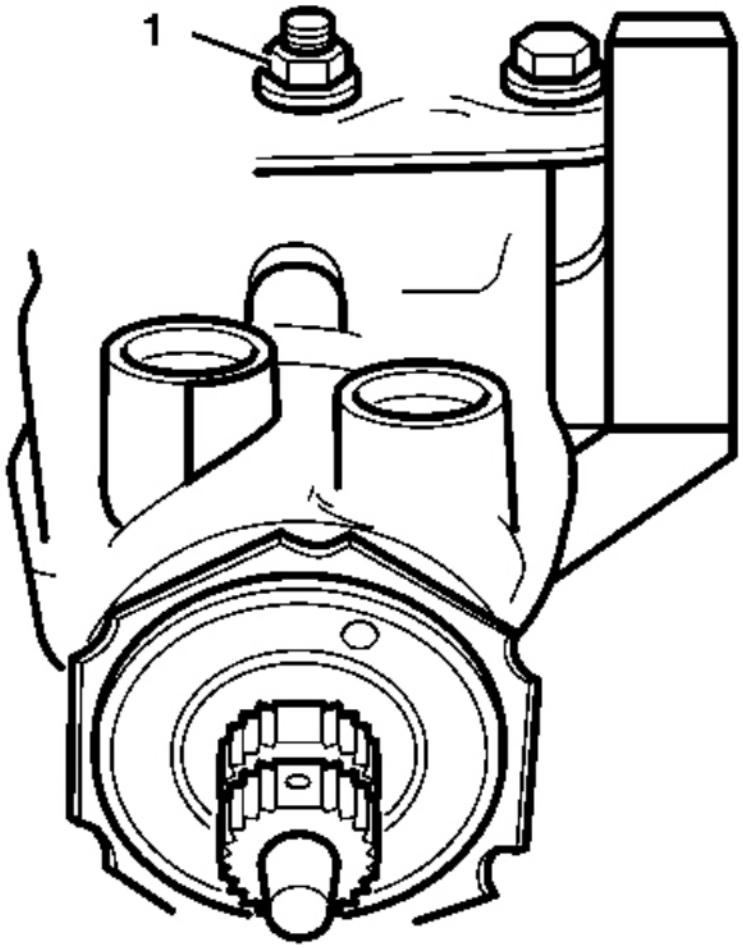

Fig. 79: Identifying Lash Adjuster Lock Nut
Courtesy of GENERAL MOTORS CORP.

1. Loosen the lash adjuster lock nut (1).
2. Turn the pitman shaft adjuster screw counterclockwise until fully extended.
3. Turn the pitman shaft adjuster screw clockwise 1 full turn.
4. Rotate the stub shaft from stop to stop, using 12-point socket while counting the number of turns.

cardiagn.com

5. Starting at either stop, turn the stub shaft back half the total number of turns. This is the CENTER of the gear.

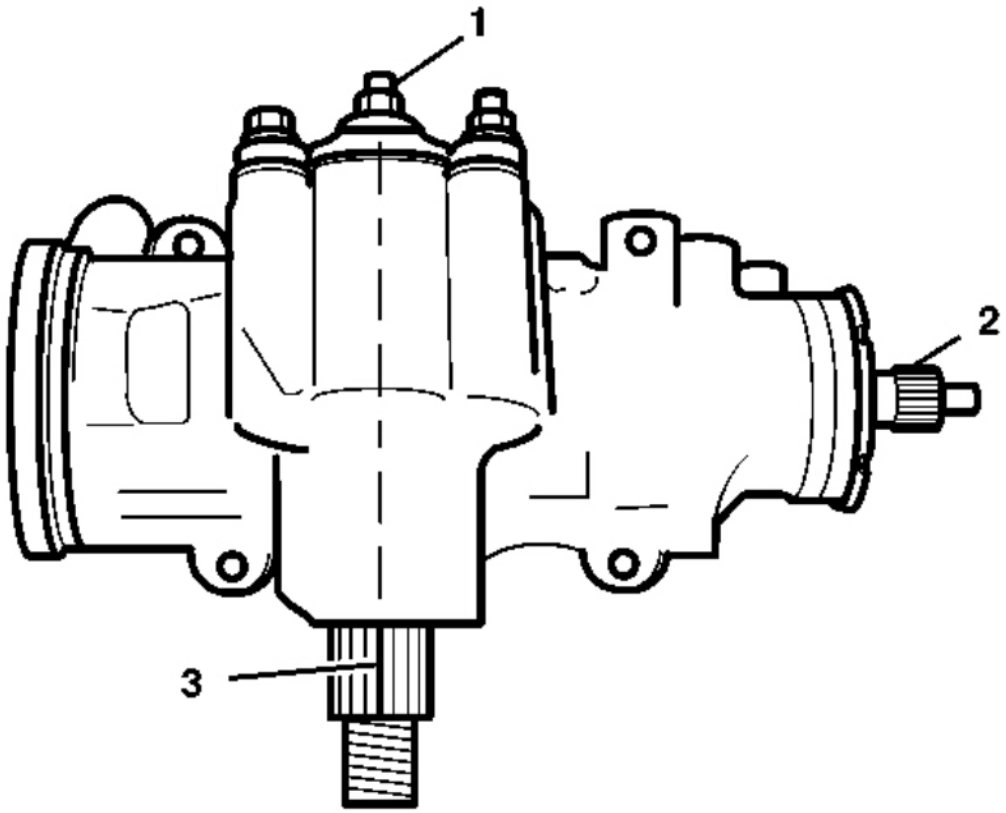

Fig. 80: Identifying Steering Gear Stub Shaft, Pitman Shaft Master Spline & Adjuster Screw
Courtesy of GENERAL MOTORS CORP.

6. Make sure the gear is centered by checking the following items:
   - The flat on the stub shaft (2) faces upward.
   - The flat on the stub shaft is parallel with the side cover.
   - The master spline (3) on the pitman shaft is in line with the adjuster screw (1).

cardiagn.com

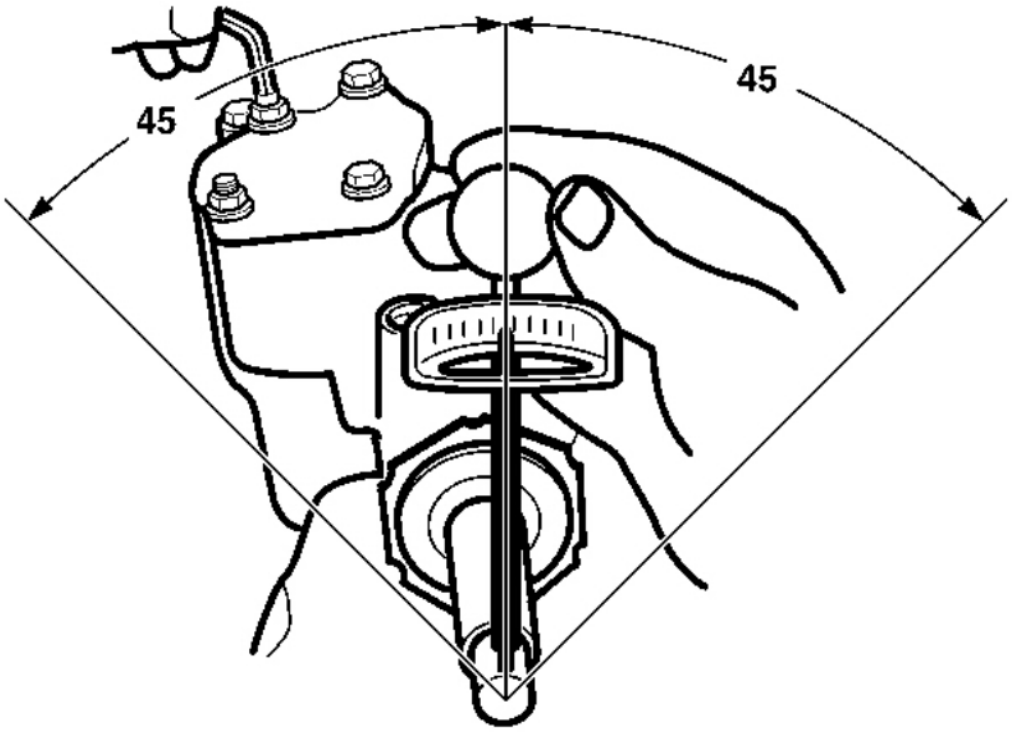

Fig. 81: Rotating The Stub Shaft 45 Degrees From Each Side Of The Center Of The Stub Shaft
Courtesy of GENERAL MOTORS CORP.

7. Place a torque wrench on the stub shaft with the handle in the vertical position.
8. Rotate the stub shaft 45 degrees from each side of the center of the stub shaft. The stub shaft must rotate smoothly and must not stick or bind.
9. Record the worm bearing preload measured on or near the center.
10. Recorded bearing preload must be 0.7-1.7 N.m (6-15 lb in), with the worm and the ball nut installed. If the torque is outside this range, readjust or repair the steering gear assembly as required.
11. To obtain the correct preload torque, adjust the over center torque by turning the pitman shaft adjuster screw clockwise.
12. Add 0.7-1.1 N.m (6-10 lb in) torque to the previously measured worm bearing preload torque.

NOTE: **Refer to Fastener Notice .**

- **Tighten:** Tighten the lash adjuster lock nut to 49 N.m (36 lb ft).
- Prevent the adjuster screw from turning while tightening the lash adjuster lock nut.

cardiagn.com

- Install the steering gear into the vehicle. Refer to **Power Steering Gear Replacement (Rack and Pinion)Power Steering Gear Replacement (Non Rack and Pinion)** .
- Bleed the power steering system. Refer to **Power Steering System Bleeding** .

STEERING GEAR PITMAN SHAFT AND HOUSING COVER REPLACEMENT - OFF VEHICLE

Disassembly Procedure

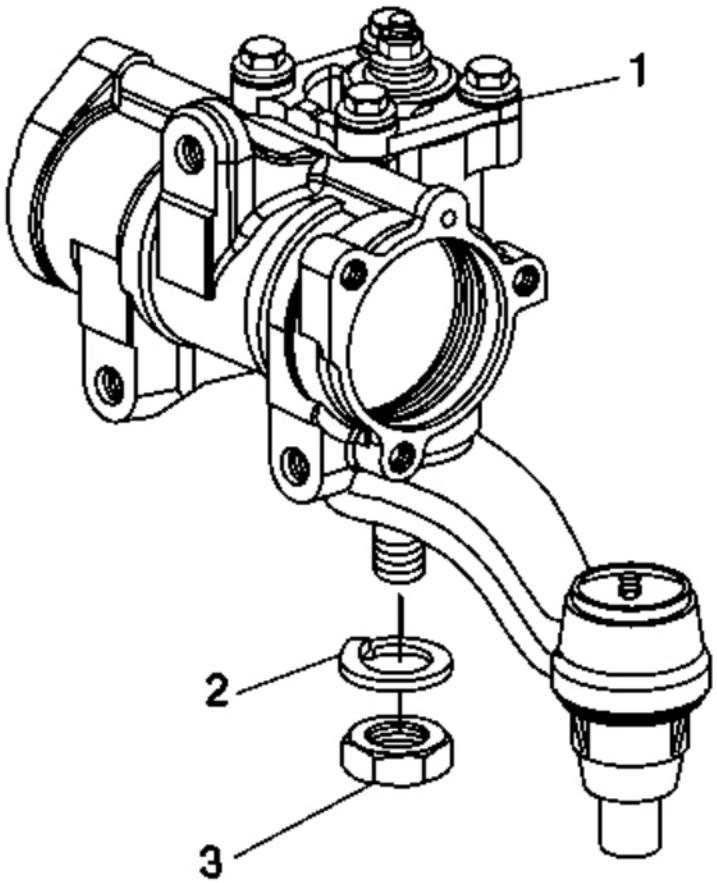

Fig. 82: View Of Steering Gear Housing, Lock Washer & Nut (670 Gear)
Courtesy of GENERAL MOTORS CORP.

1. Remove the nut (3).
2. Remove the lock washer (2).

cardiagn.com

3. Clean the exposed end of the pitman shaft.
4. Clean the steering gear housing (1).
5. Use a wire brush to clean the pitman shaft splines.

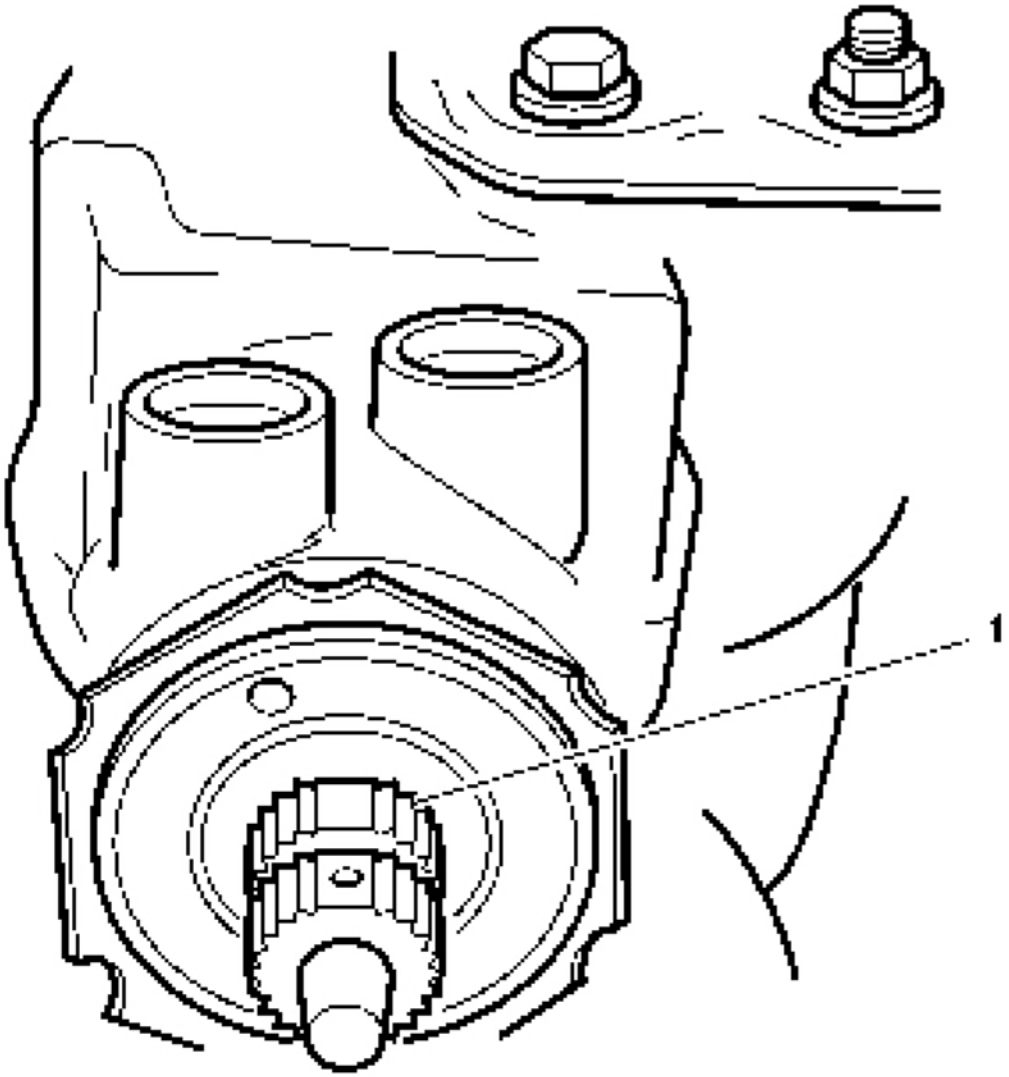

Fig. 83: View Of Stub Shaft
Courtesy of GENERAL MOTORS CORP.

IMPORTANT: The pitman shaft will not clear the housing if it is not centered.

cardiagn.com

6. To center the stub shaft:
    1. Rotate the stub shaft (1) with a wrench from stop to stop.
    2. Count the number of turns.
    3. Rotate the stub shaft back 1/2 of the total amount of turns.

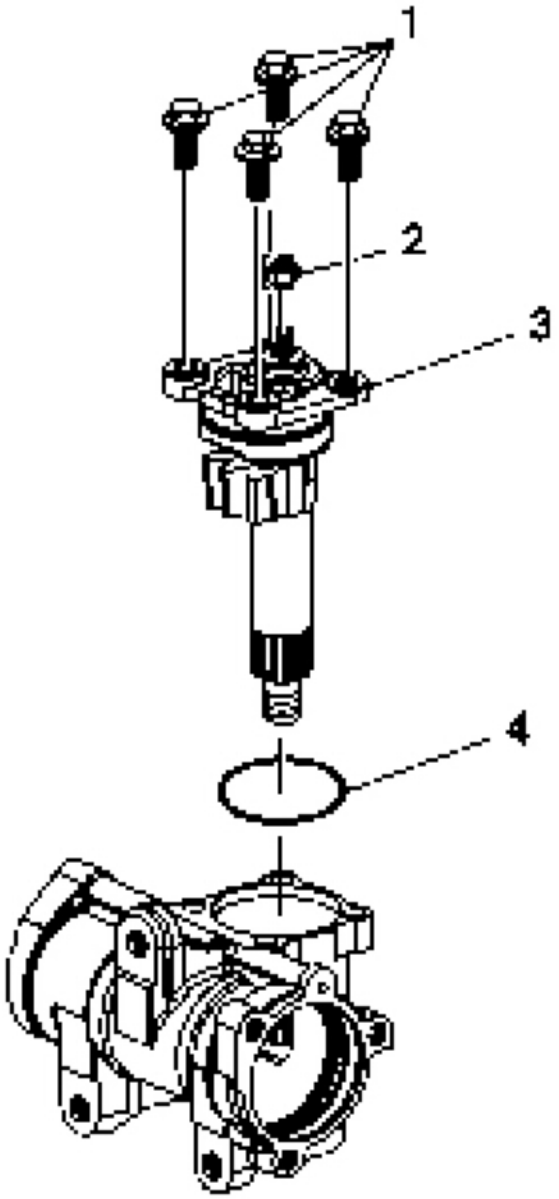

cardiagn.com

Fig. 84: View Of Pitman Shaft & Cover Assembly
Courtesy of GENERAL MOTORS CORP.

IMPORTANT: When removing the pitman shaft assembly, the pitman arm and its components may fall from the steering gear housing. Support the pitman arm and its components while removing the pitman shaft assembly.

7. Remove the pitman shaft cover bolts (1) from the pitman shaft and cover assembly (3).

   Remove the lash adjuster nut (2) from the pitman shaft and cover assembly (3).

8. Remove the pitman shaft and cover assembly (3).
9. Remove the pitman shaft cover O-ring (4) from the steering gear housing assembly.

Assembly Procedure

cardiagn.com

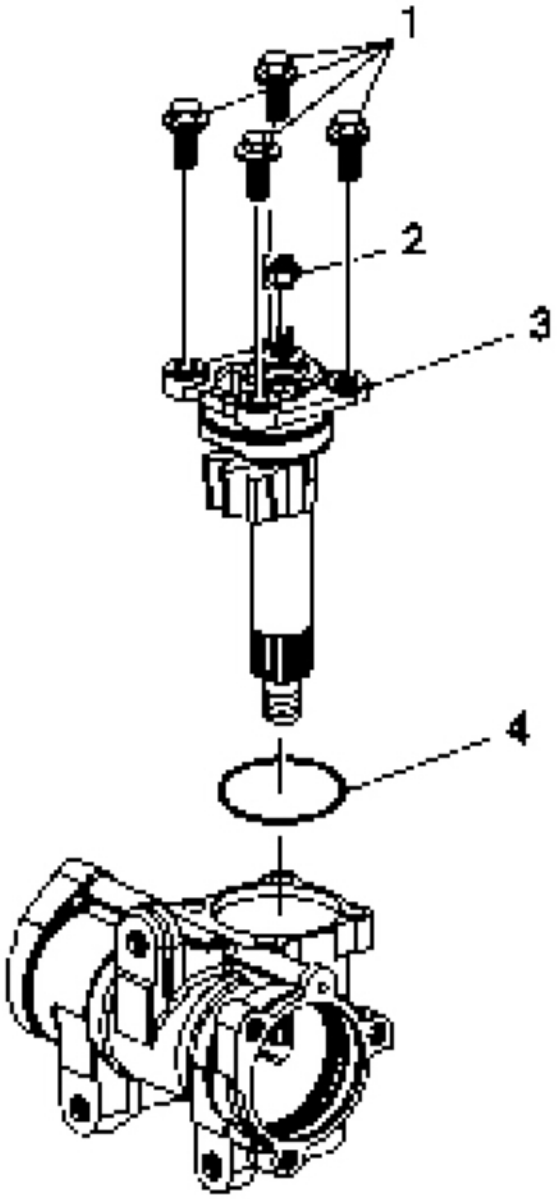

Fig. 85: View Of Pitman Shaft & Cover Assembly
Courtesy of GENERAL MOTORS CORP.

1. Install the new pitman shaft cover O-ring (4).
2. Install the pitman shaft and cover assembly (3) onto the steering gear housing assembly.

cardiagn.com

3. Install the lash adjuster nut (2) onto the pitman shaft and cover assembly (3)

NOTE: **Refer to Fastener Notice .**

4. Install the pitman shaft cover bolts (1) onto the pitman shaft and cover assembly (3).

Tighten: Tighten the pitman shaft cover bolts to 62 N.m (46 lb ft).

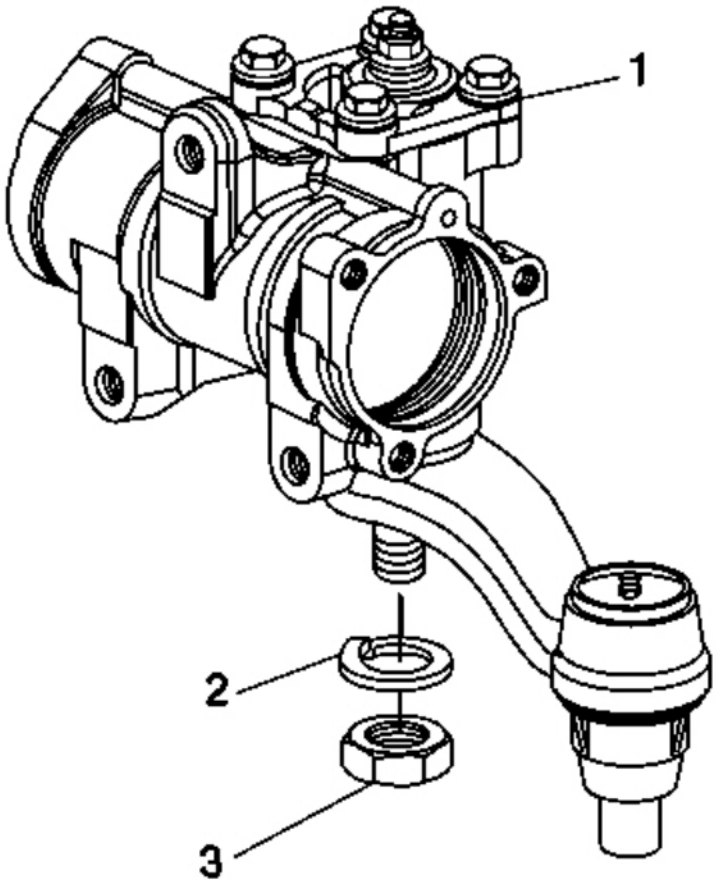

Fig. 86: View Of Steering Gear Housing, Lock Washer & Nut (670 Gear)
Courtesy of GENERAL MOTORS CORP.

5. Install the lock washer (2).
6. Install the nut (3).

cardiagn.com

7. If necessary adjust the pitman shaft. Refer to **Pitman Shaft Over-Center Preload Adjustment - Off Vehicle**.

PITMAN SHAFT SEALS AND BEARING REPLACEMENT - OFF VEHICLE

Tools Required

- **J 6278** Pitman Shaft Bearing Remover and Installer. See **Special Tools**.
- **J 6219** Pitman Shaft Oil Seal Installer. See **Special Tools**.
- **J 4245** Internal Snap Ring Pliers. See **Special Tools**.

Disassembly Procedure

cardiagn.com

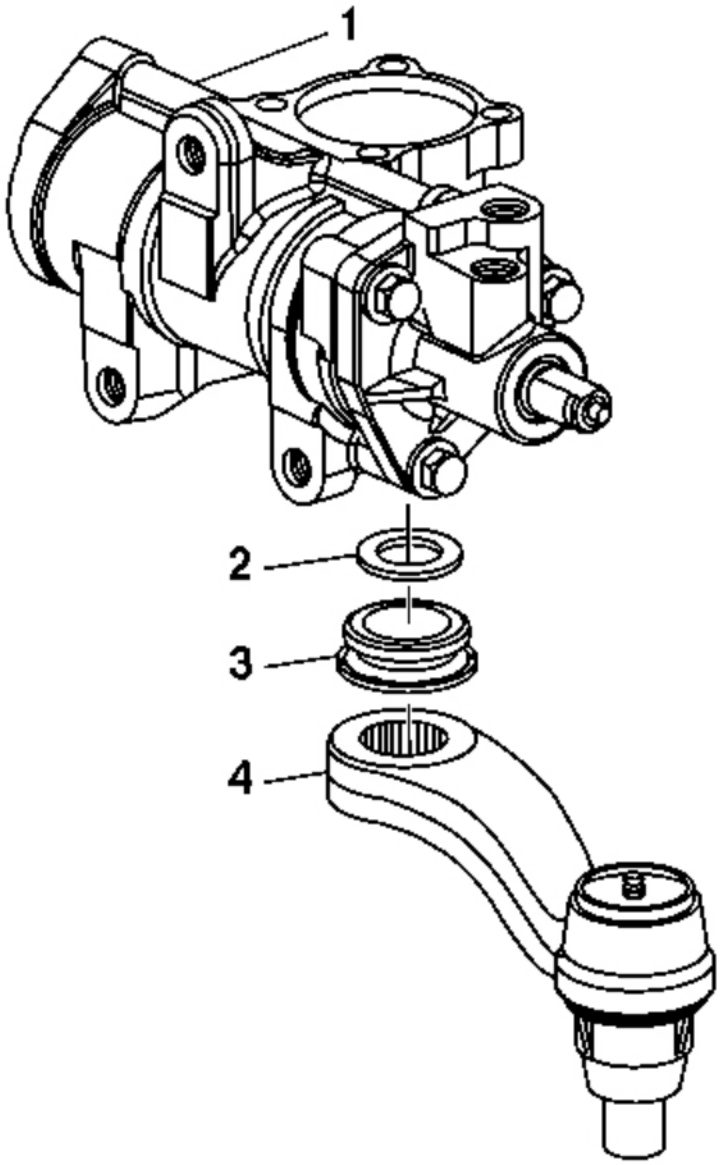

Fig. 87: View Of Pitman Arm, Pitman Shaft Boot, Dust Seal & Steering Gear Housing (670 Gear)
Courtesy of GENERAL MOTORS CORP.

1. Remove the steering gear pitman shaft and housing cover. Refer to **Steering Gear Pitman Shaft and Housing Cover Replacement - Off Vehicle**.
2. Remove the pitman arm (4) from the steering gear.

cardiagn.com

3. Remove the pitman shaft boot (3) from the steering gear housing (1).

IMPORTANT: Do not score the housing bore when prying out seals and washers.

4. Remove the pitman shaft dust seal (2) from the steering gear housing (1).

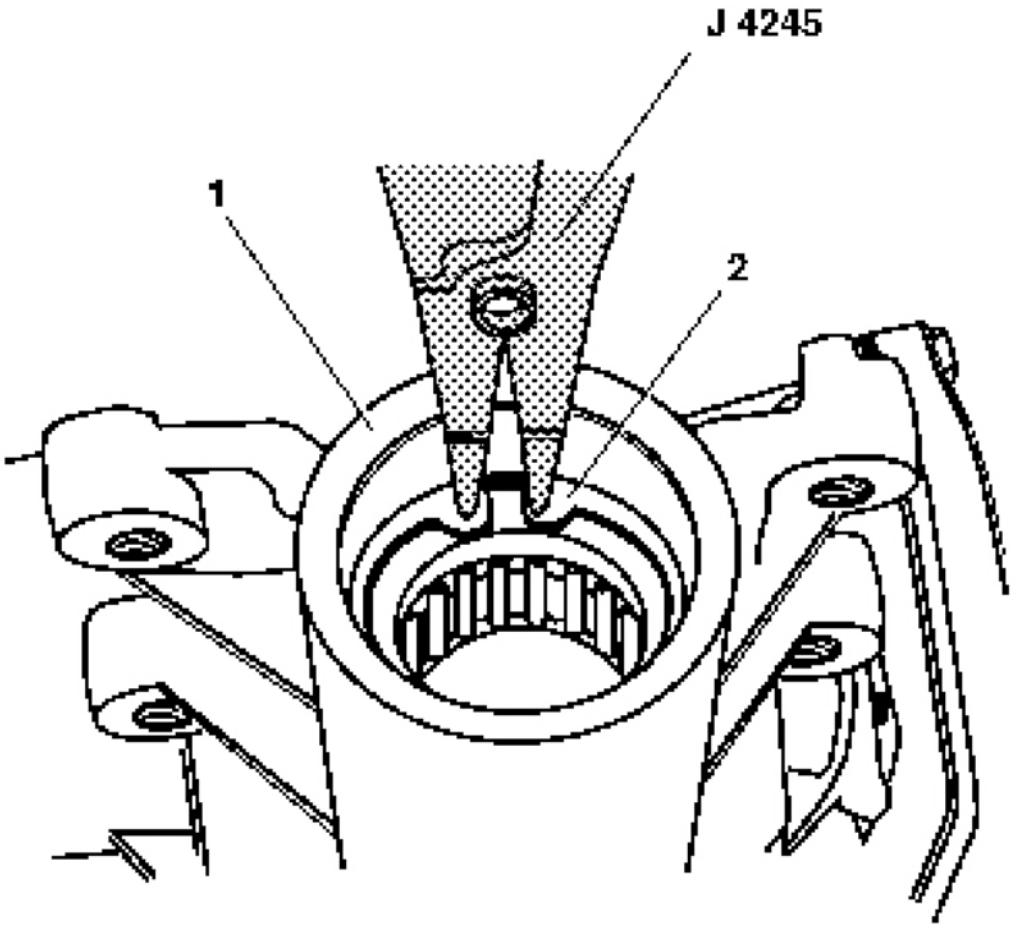

Fig. 88: Pitman Shaft Retaining Ring & Steering Gear Housing (670 Gear)
Courtesy of GENERAL MOTORS CORP.

5. Remove the pitman shaft retaining ring (2) from the steering gear housing (1) using **J 4245** . See **Special Tools**.

cardiagn.com

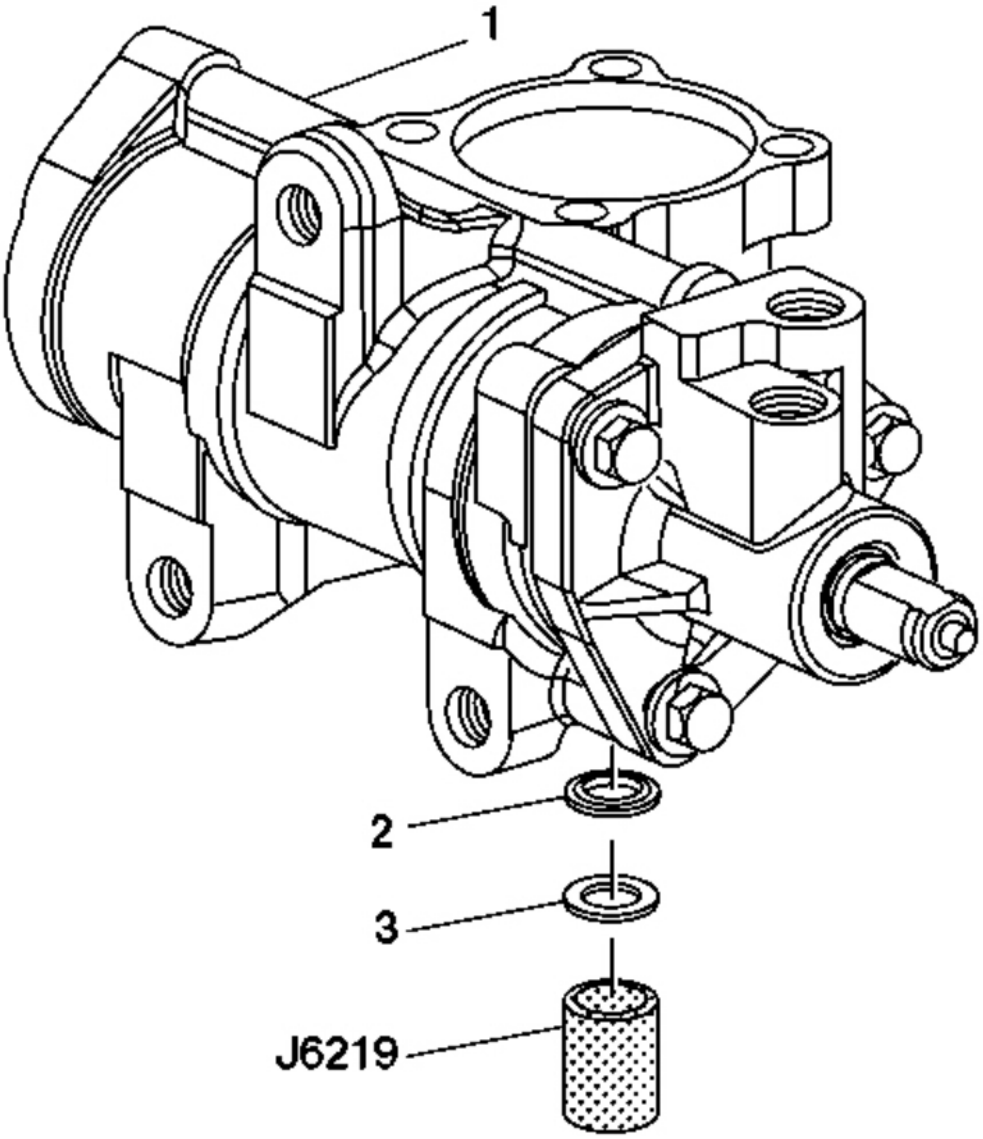

Fig. 89: View Of Backup Washer, Pitman Shaft Seal & J 6219
Courtesy of GENERAL MOTORS CORP.

6. Remove the backup washer (3) from the steering gear housing (1).
7. Pry the pitman shaft seal (2) from the steering gear housing (1) using a screwdriver.
8. Inspect the housing for burrs and replace if necessary.

cardiagn.com

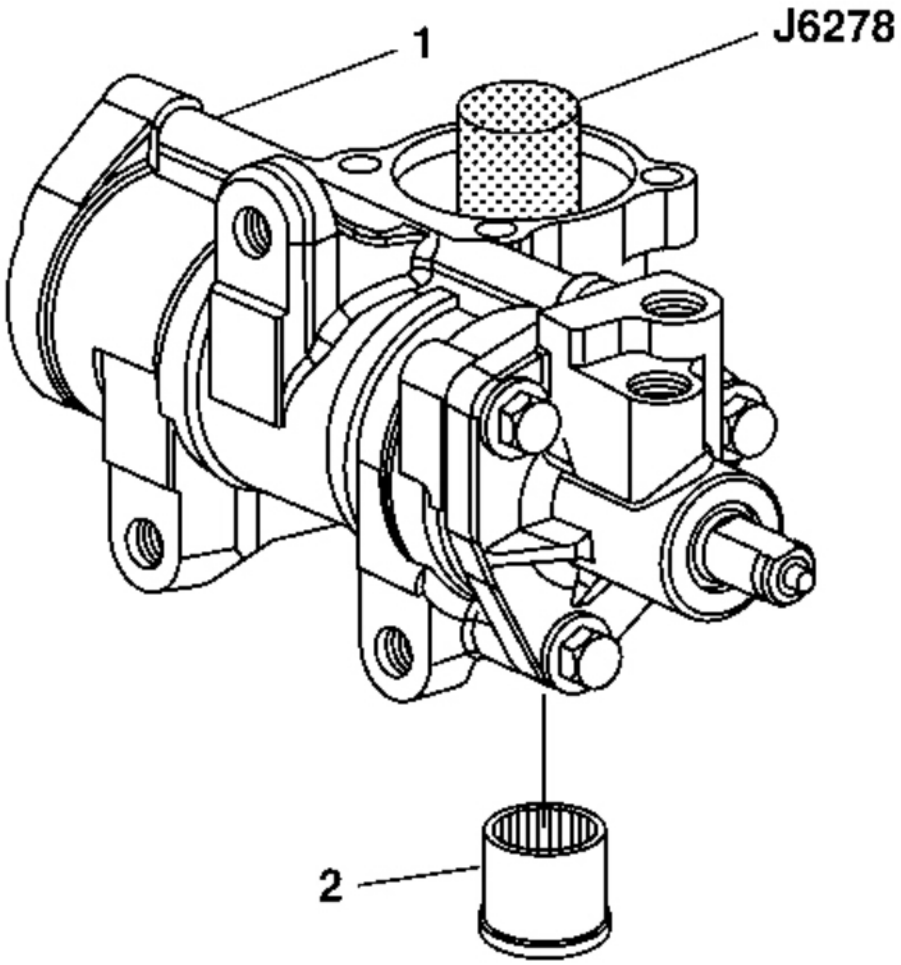

Fig. 90: Driving Out Needle Bearing From Steering Gear Housing (670 Gear)
Courtesy of GENERAL MOTORS CORP.

9. Insert **J 6278** through the hole in the top of the steering gear housing (1). See **Special Tools**.
10. Drive out the needle bearing (2) from the steering gear housing (1).

Assembly Procedure

cardiagn.com

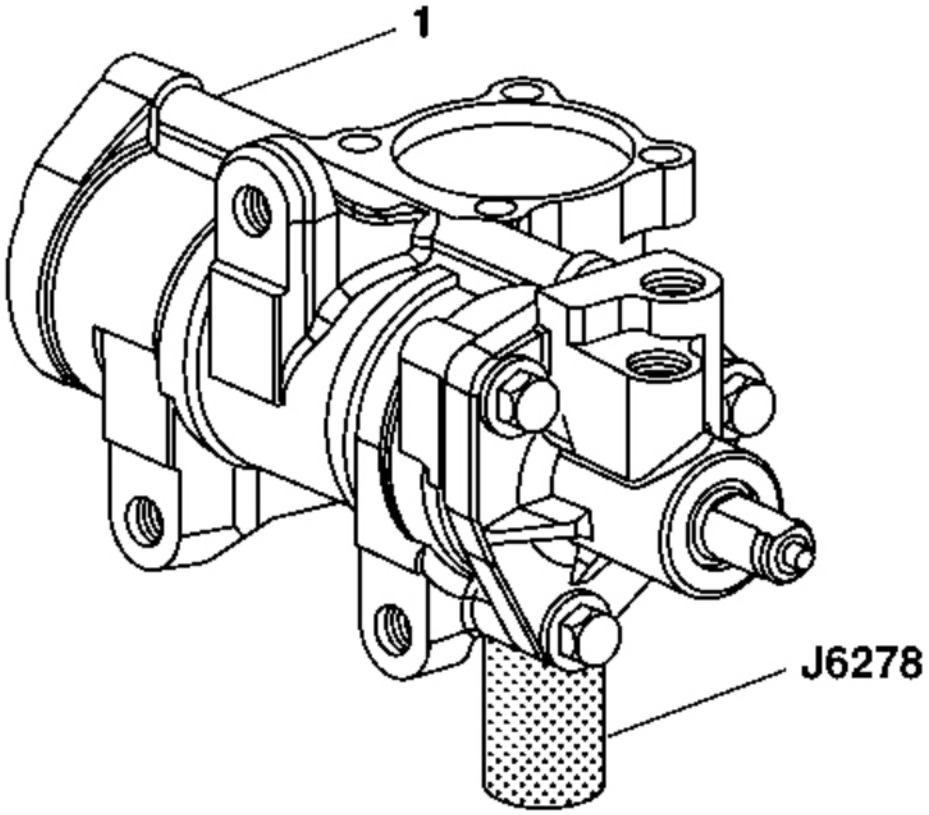

Fig. 91: View Of Needle Bearing & Steering Gear Housing (670 Gear)
Courtesy of GENERAL MOTORS CORP.

1. Install the needle bearing into the steering gear housing (1) using **J 6278** . See **Special Tools**.
2. Drive the bearing into the housing until the needle bearing shoulder seats against the housing.

cardiagn.com

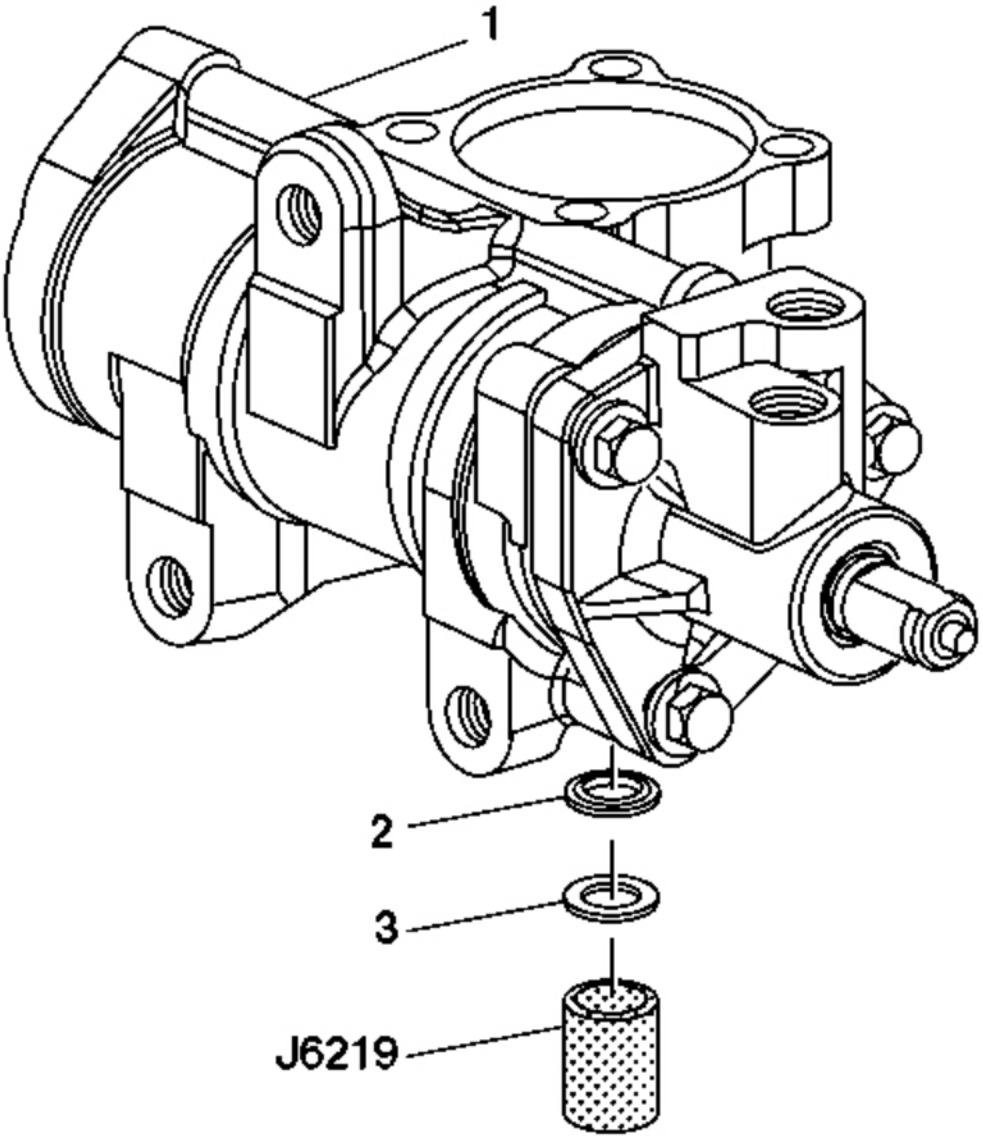

Fig. 92: View Of Backup Washer, Pitman Shaft Seal & J 6219
Courtesy of GENERAL MOTORS CORP.

3. Coat the pitman shaft seal (2) and backup washer (3) with grease.
4. Install the pitman shaft seal (2) onto the steering gear housing (1) using **J 6219** . See **Special Tools**.
5. Install the backup washer (3) onto the steering gear housing (1).

cardiagn.com

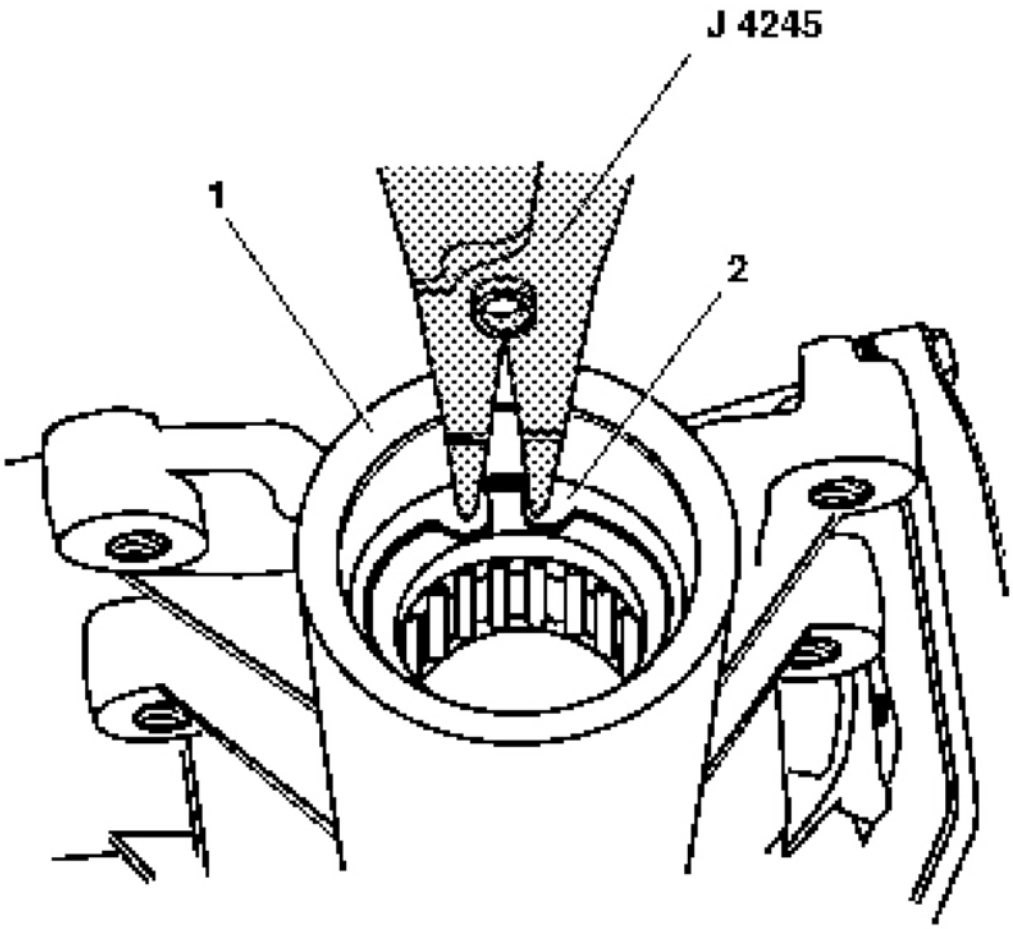

Fig. 93: Pitman Shaft Retaining Ring & Steering Gear Housing (670 Gear)
Courtesy of GENERAL MOTORS CORP.

IMPORTANT: The pitman shaft seal must not contact the bearing.

6. Install the pitman shaft retainer ring (2) onto the steering gearing housing (1) using **J 4245** . See **Special Tools**.

cardiagn.com

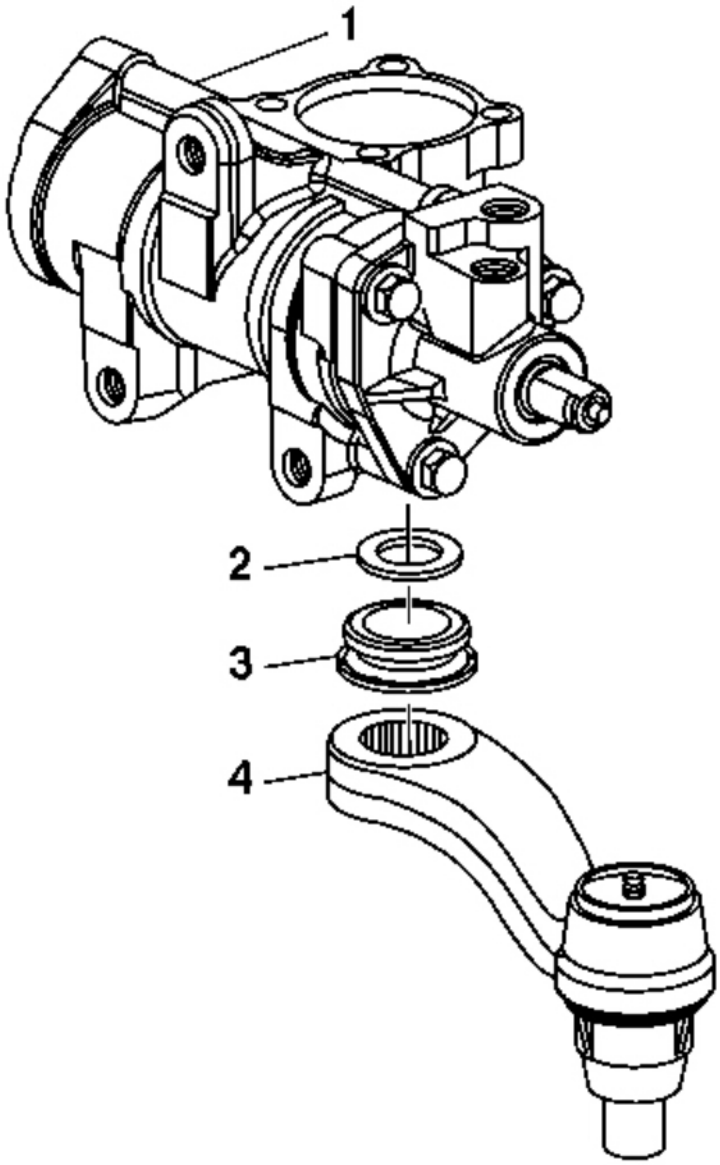

Fig. 94: View Of Pitman Arm, Pitman Shaft Boot, Dust Seal & Steering Gear Housing (670 Gear)
Courtesy of GENERAL MOTORS CORP.

7. Coat the dust seal (2) with grease.
8. Install the dust seal (2) onto the steering gear housing (1).
9. Install the pitman shaft boot (3) onto the steering gear housing (1).

cardiagn.com

IMPORTANT: Do not install the lock washer and nut until all components have been installed onto the steering gear housing.

10. Install the pitman shaft and the side cover. Refer to **Steering Gear Pitman Shaft and Housing Cover Replacement - Off Vehicle**.
11. Install the pitman arm (4) to the steering gear.

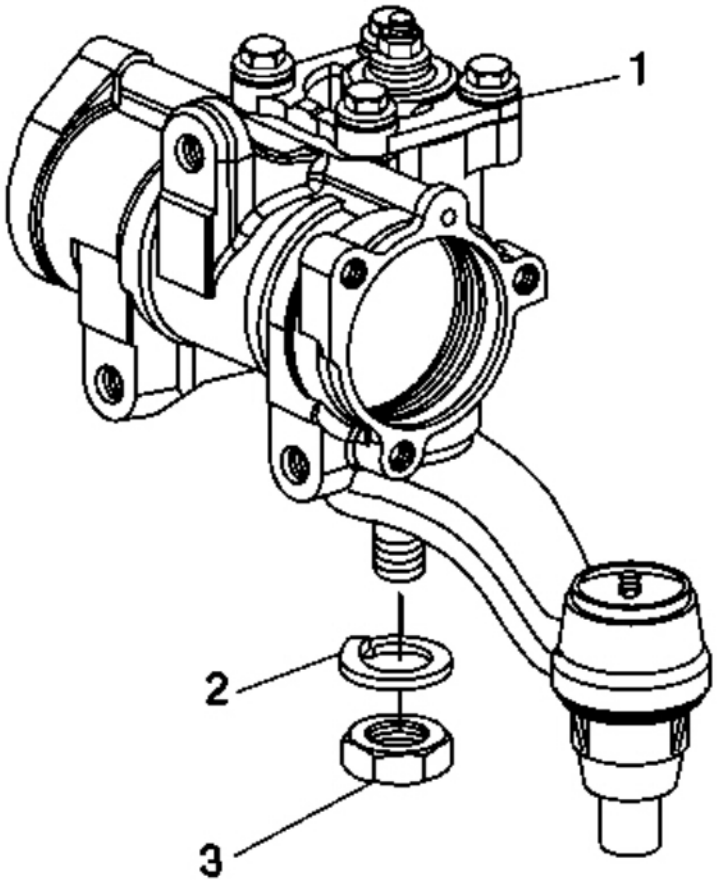

Fig. 95: View Of Steering Gear Housing, Lock Washer & Nut (670 Gear)
Courtesy of GENERAL MOTORS CORP.

12. Install the lock washer (2).
13. Install the nut (3).
14. To adjust the pitman shaft, refer to **Pitman Shaft Over-Center Preload Adjustment - Off Vehicle**.

cardiagn.com

STUB SHAFT HOUSING REPLACEMENT

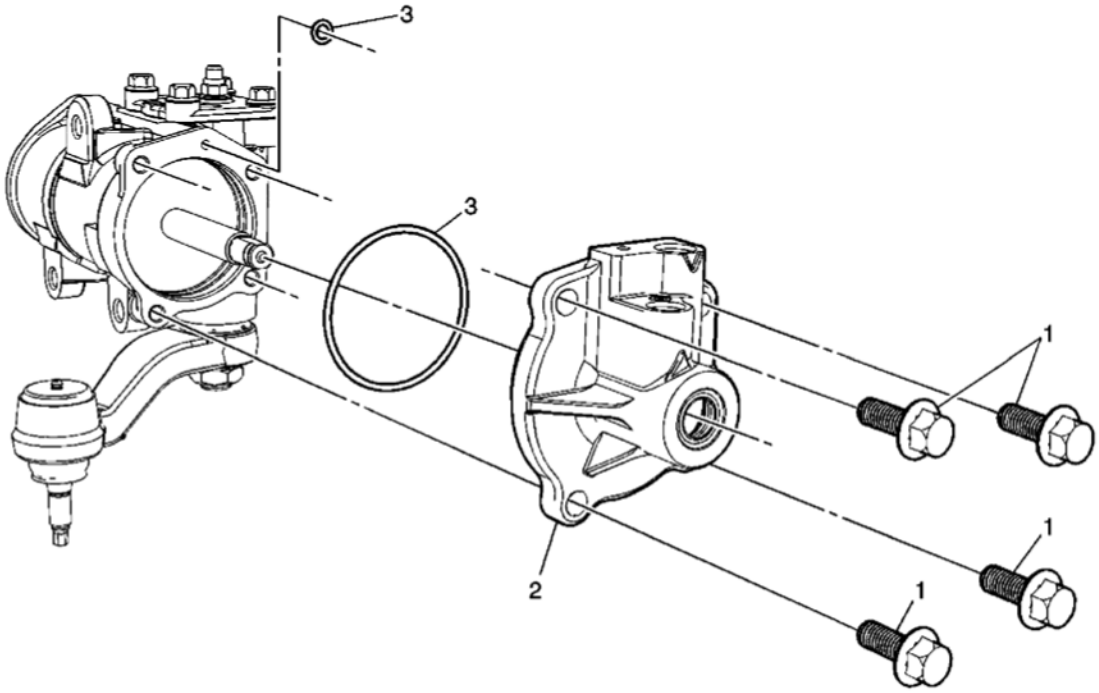

Fig. 96: View Of Stub Shaft Housing, O-Ring & Bolt
Courtesy of GENERAL MOTORS CORP.

Stub Shaft Housing Replacement

Callout	Component Name
Preliminary Procedures: Remove the power steering gear. Refer to **Power Steering Gear Replacement (Rack and Pinion)** or **Power Steering Gear Replacement (Non Rack and Pinion)**.	
1	Stub Shaft Housing Bolt (Qty: 4) **NOTE:** **Refer to Fastener Notice .** **Tighten:** 62 N.m (46 lb ft)
2	Stub Shaft Housing
3	Stub Shaft Housing O-Ring (Qty: 2) **Tip:** Grease the stub shaft seals with the special grease supplied in the service kit.

POWER BRAKE BOOSTER INLET HOSE REPLACEMENT

Removal Procedure

cardiagn.com

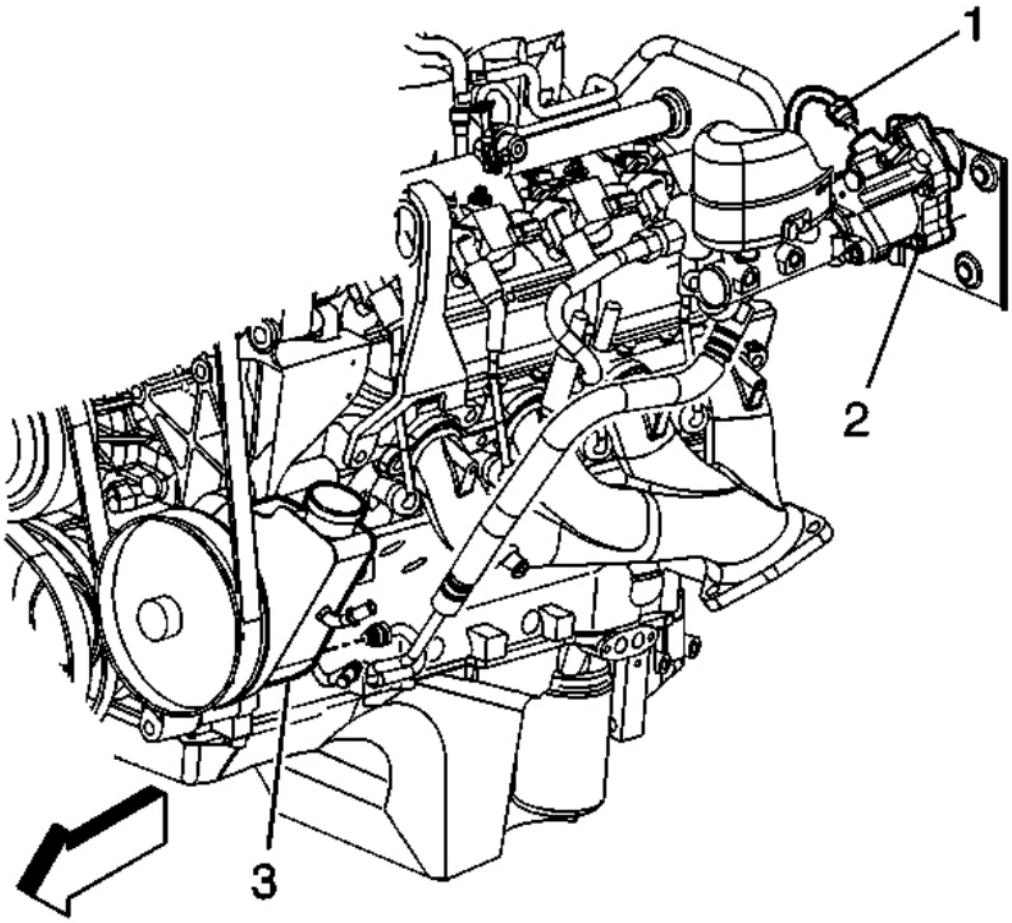

Fig. 97: Power Brake Booster Inlet Hose
Courtesy of GENERAL MOTORS CORP.

NOTE: **Refer to Power Steering Hose Disconnected Notice .**

1. Raise the vehicle. Refer to **Lifting and Jacking the Vehicle** .
2. Remove the engine protection shield. Refer to **Engine Shield Replacement** .
3. Install a drain pan under the vehicle.
4. Remove the brake booster inlet hose from the power steering pump (3).
5. Lower the vehicle.
6. Remove the brake booster inlet hose (1) from the brake booster (2).
7. Remove the brake booster inlet hose from the vehicle.

cardiagn.com

Installation Procedure

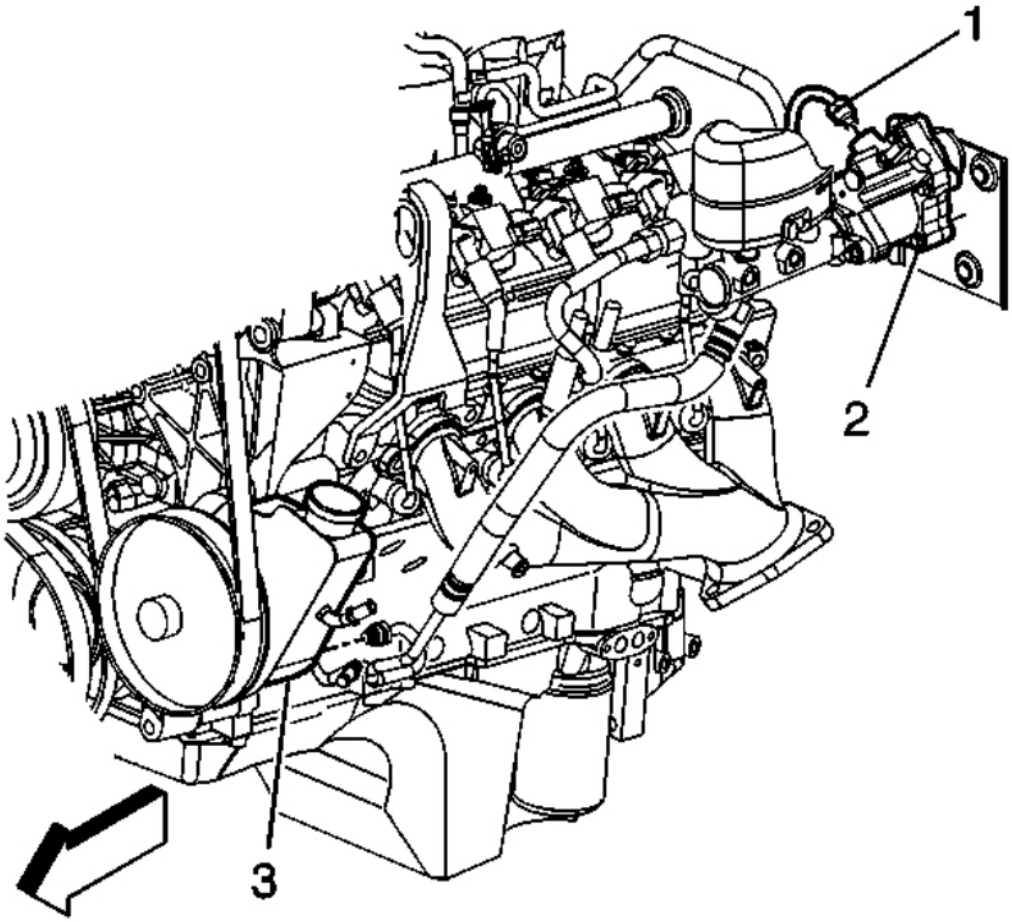

Fig. 98: Power Brake Booster Inlet Hose
Courtesy of GENERAL MOTORS CORP.

NOTE: **Refer to Installing Hoses Without Twists or Bends Notice .**

1. Route the hose in the same position the hose occupied prior to removal.
2. Install the brake booster inlet hose (1) to the brake booster (2). Hand tighten only.
3. Raise the vehicle.

NOTE: **Refer to Fastener Notice .**

cardiagn.com

4. Install the brake booster inlet hose to the power steering pump (3).

   Tighten: Tighten the brake booster inlet hose fitting at the power steering pump to 32 N.m (24 lb ft).

5. Install the engine protection shield. Refer to **Engine Shield Replacement** .
6. Lower the vehicle.
7. Tighten the brake booster inlet hose to brake booster.

   Tighten: Tighten the brake booster inlet hose fitting to 32 N.m (24 lb ft).

8. Remove the drain pan from under the vehicle.
9. Bleed the power steering system. Refer to **Power Steering System Bleeding**.

POWER BRAKE BOOSTER OUTLET HOSE REPLACEMENT

Removal Procedure

NOTE: **Refer to Power Steering Hose Disconnected Notice .**

cardiagn.com

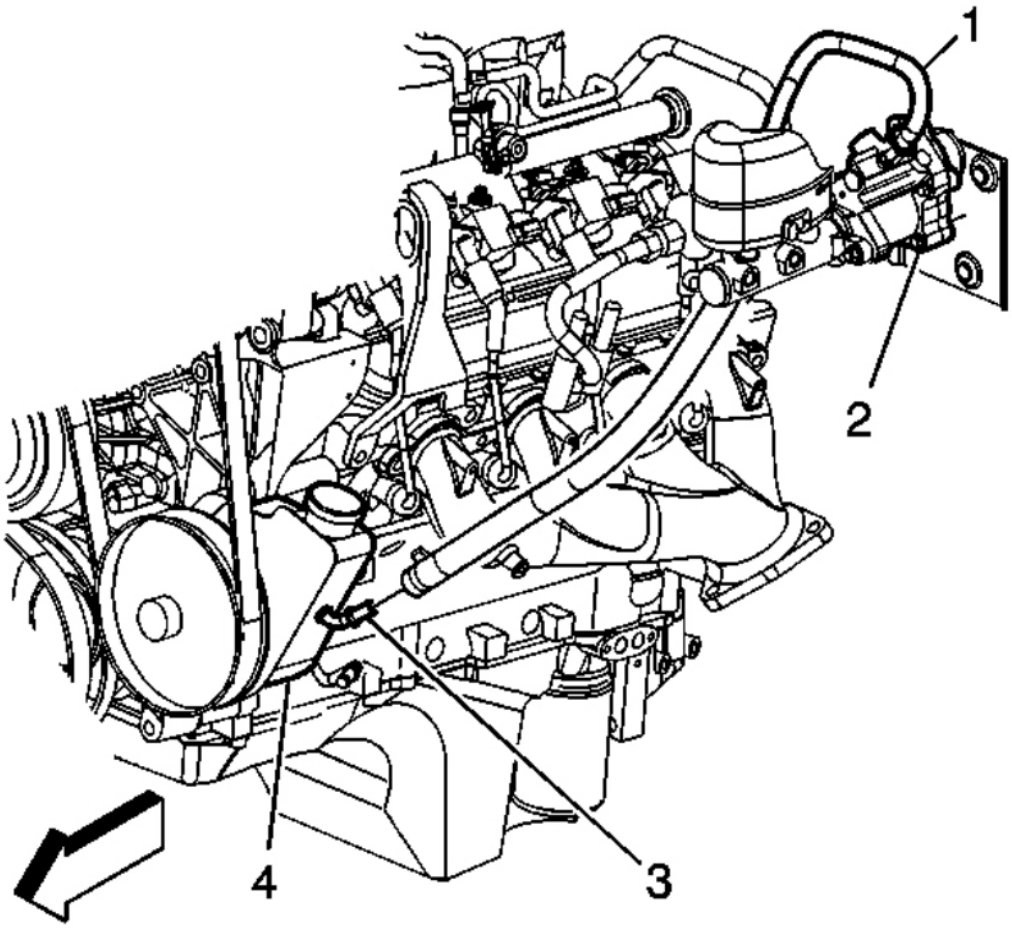

Fig. 99: Power Brake Booster Outlet Hose
Courtesy of GENERAL MOTORS CORP.

1. Install a drain pan under the vehicle.
2. Remove the brake booster outlet hose (1) from the brake booster (2).
3. Remove the clamp retaining the brake booster outlet hose to the power steering pump.
4. Remove the brake booster outlet hose from the vehicle.

Installation Procedure

cardiagn.com

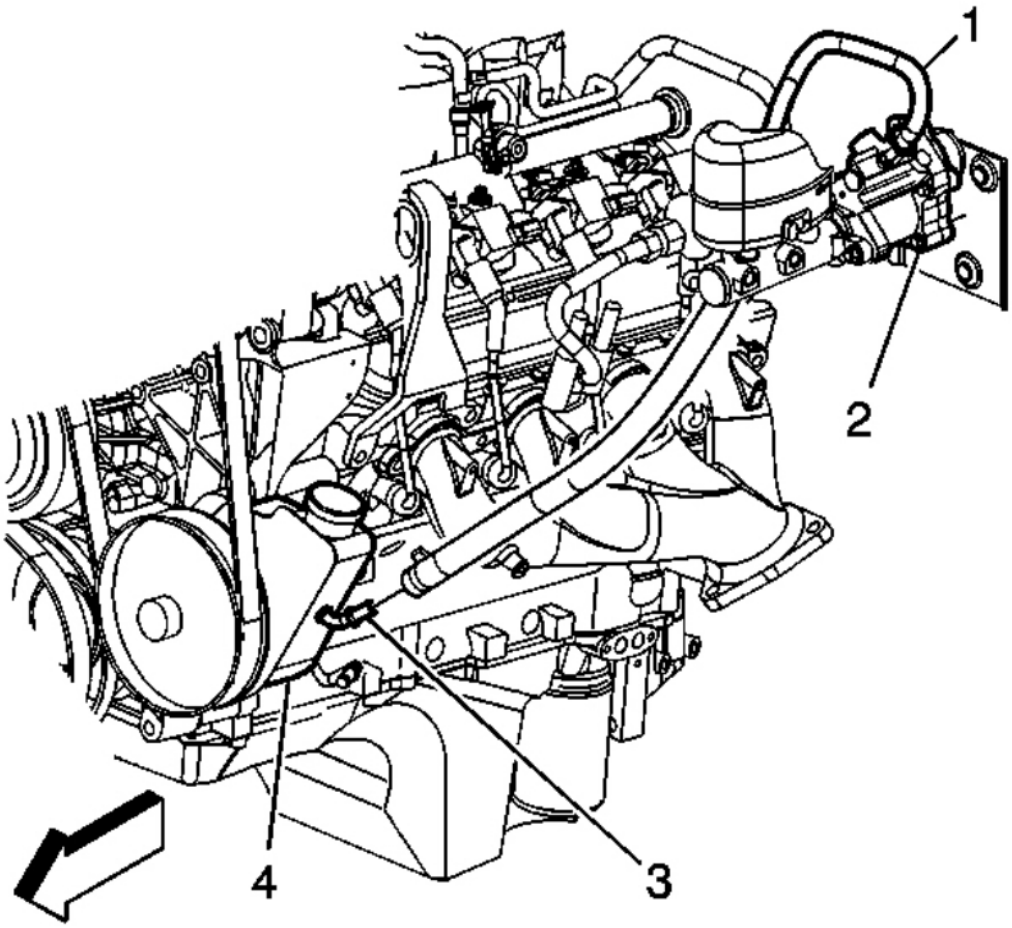

Fig. 100: Power Brake Booster Outlet Hose
Courtesy of GENERAL MOTORS CORP.

NOTE: **The inlet and outlet hoses must not be twisted during installation. Do not bend or distort the inlet or outlet hoses to make installation easier. Failure to follow these procedures could result in component damage.**

1. Route the hose in the same position the hose occupied prior to removal.
2. Install the brake booster outlet hose (1) to the brake booster (2).

   Position the clamp at the end of the hose.

3. Install the brake booster outlet hose to the power steering pump (4).

cardiagn.com

Position the clamp at the end of the hose.

4. Remove the drain pan from under the vehicle.
5. Bleed the power steering system. Refer to **Power Steering System Bleeding**.

DESCRIPTION AND OPERATION

POWER STEERING SYSTEM DESCRIPTION AND OPERATION

The hydraulic power steering pump is a constant displacement vane-type pump that provides hydraulic pressure and flow for the power steering gear. The hydraulic power steering pump is belt-driven.

The power steering fluid reservoir holds the power steering fluid and may be integral with the power steering pump or remotely located. The following locations are typical locations for the remote reservoir:

- Mounted to the front of the dash panel
- Mounted to the inner fender
- Mounted to a bracket on the engine

The 2 basic types of power steering gears are listed below:

- A recirculating ball system
- A rack and pinion system

In the recirculating ball system, a worm gear converts steering wheel movement to movement of a sector shaft. A pitman arm attached to the bottom of the sector shaft actually moves one tie rod and an intermediate rod move the other tie rod.

In the rack and pinion system, the rack and the pinion are the 2 components that convert steering wheel rotation to lateral movement. The steering shaft is attached to the pinion in the steering gear. The pinion rotates with the steering wheel. Gear teeth on the pinion mesh with the gear teeth on the rack. The rotating pinion moves the rack from side to side. The lateral action of the rack pushes and pulls the tie rods in order to change the direction of the vehicle's front wheels.

The power steering pressure hose connects the power steering pump union fitting to the power steering gear and allows pressurized power steering fluid to flow from the pump to the gear.

The power steering return hose returns fluid from the power steering gear back to the power steering fluid reservoir. The power steering return line may contain an integral fin-type or line-type power steering fluid cooler.

In a typical power steering system, a pump generates hydraulic pressure, causing fluid to flow, via the pressure hose, to the steering gear valve assembly. The steering gear valve assembly regulates the incoming fluid to the right and left chambers in order to assist in right and left turns.

Turning the steering wheel activates the valve assembly, which applies greater fluid pressure and flow to 1 side

cardiagn.com

of the steering gear piston, and lower pressure and flow to the other side of the piston. The pressure assists the movement of the gear piston. Tie rods transfer this force to the front wheels, which turn the vehicle right or left.

SPECIAL TOOLS AND EQUIPMENT

SPECIAL TOOLS

Special Tools

Illustration	Tool Number/ Description
	J 4245 Internal Snap Ring Pliers
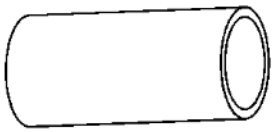	J 6219 Pitman Shaft Oil Seal Installer
	J 6278 Pitman Shaft Bearing Remover and Installer
	J 6632-01 Pitman Arm Puller

cardiagn.com

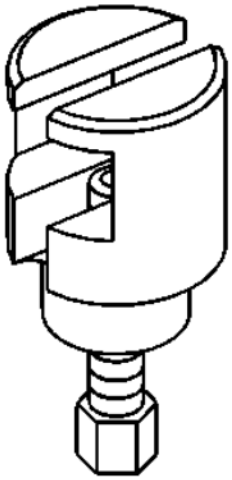	
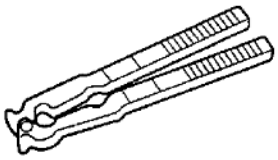	J 22610 Keystone Clamp Pliers
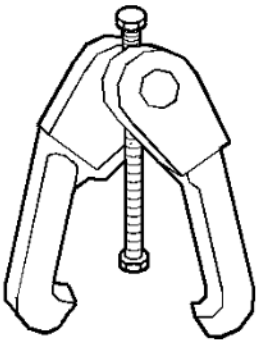	J 24319-B Steering Linkage and Tie Rod Puller
	J 25033-C Pulley Installer

cardiagn.com

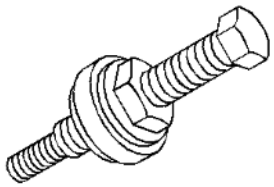	
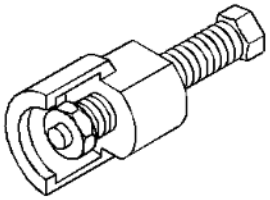	J 25034-C Pulley Remover
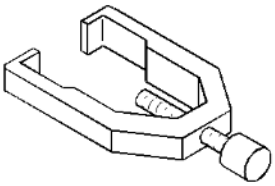	J 29107-A Pitman Arm Puller
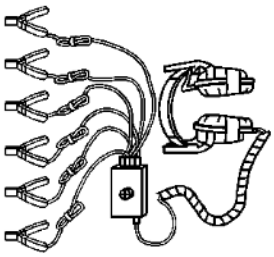	J 39570 Chassis Ear
	J 42640 Steering Column Anti-Rotation Pin

cardiagn.com

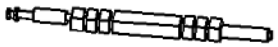	J 44586 Power Steering Gear Oil Seal Remover/Installer
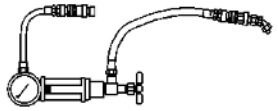	J 44721 Power Steering Analyzer
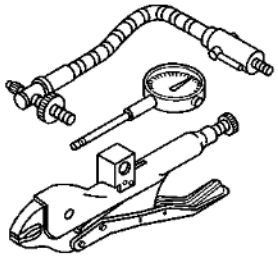	J 45101 Hub and Wheel Runout Gage

cardiagn.com