Workshop Manual

Audi A4 2015 ➤ , Audi A4 Avant 2015 ➤ ,
Audi A4 China 2016 ➤ ,
Audi A4 allroad quattro 2016 ➤ ,
Audi A5 2016 ➤ , Audi A6 2011 ➤ ,
Audi A6 2019 ➤ , Audi A6 Avant 2011 ➤ ,
Audi A6 China 2012 ➤ ,
Audi A7 Sportback 2011 ➤ ,
Audi A7 Sportback 2018 ➤ ,
Audi A7 Sportback USA 2011 ➤ ,
Audi Q5 2008 ➤ , Audi Q5 2017 ➤ ,
Audi Q5 China 2019 ➤

Servicing 7-speed dual clutch gearbox 0CJ, 0CL, 0CK, 0DN, 0DP, 0HL

Protected by copyright. Copying for private or commercial purposes, in part or in whole, is not permitted unless authorised by AUDI AG. AUDI AG does not guarantee or accept any liability with respect to the correctness of information in this document. Copyright by AUDI AG.

Edition 05.2018

List of Workshop Manual Repair Groups

Repair Group

00 - Technical data
30 - Clutch
34 - Controls, housing
35 - Gears, shafts
39 - Final drive - front differential

Protected by copyright. Copying for private or commercial purposes, in part or in whole, is not permitted unless authorised by AUDI AG. AUDI AG does not guarantee or accept any liability with respect to the correctness of information in this document. Copyright by AUDI AG.

Technical information should always be available to the foremen and mechanics, because their careful and constant adherence to the instructions is essential to ensure vehicle road-worthiness and safety. In addition, the normal basic safety precautions for working on motor vehicles must, as a matter of course, be observed.

All rights reserved.
No reproduction without prior agreement from publisher.

Copyright © 2018 Audi AG, Ingolstadt

D4B803D27C9

Contents

00 - Technical data 1
- **1 Repair instructions** 1
- 1.1 General repair instructions 1
- 1.2 Contact corrosion 3
- 1.3 Deactivating ATF pump and discharging hydraulic accumulator 4
- **2 Rules for cleanliness when working on the dual clutch gearbox** 5

30 - Clutch 6
- **1 Clutch** 6
- 1.1 Exploded view - flywheel and dual clutch 6
- 1.2 Removing and installing flywheel 7
- 1.3 Removing and installing dual clutch 10
- 1.4 Renewing input shaft oil seal 16
- 1.5 Renewing input shaft oil seal 17

34 - Controls, housing 20
- **1 Selector mechanism** 20
- **2 Transporting gearbox** 21
- **3 Securing to engine and gearbox support** 24
- **4 Dismantling and assembling gearbox** 27
- 4.1 Exploded view - gearbox 27
- 4.2 Exploded view - gear cluster 31
- 4.3 Dismantling and assembling gearbox 34
- **5 Gear oil circuit** 50
- 5.1 Overview - gear oil circuit 50
- 5.2 Removing and installing gear oil pump 50
- **6 ATF circuit** 51
- **7 Gear oil** 52
- **8 ATF** 53
- **9 Mechatronic unit** 54
- 9.1 Exploded view - mechatronic unit 54
- 9.2 Exploded view - valve body 56
- 9.3 Exploded view - solenoid valves and pressure regulating valves in valve body 58
- 9.4 Exploded view - automatic gearbox control unit J217 59
- 9.5 Removing and installing oil pan 59
- 9.6 Removing and installing mechatronic unit 62
- 9.7 Removing and installing automatic gearbox control unit J217 69
- 9.8 Removing and installing valve body 75
- 9.9 Removing and installing hydraulic pressure sender 1 G545 and hydraulic pressure sender 2 G546 76
- 9.10 Removing and installing gearbox auxiliary hydraulic pump V552 78
- 9.11 Removing and installing solenoid valves and pressure regulating valves in valve body . . 81
- 9.12 Removing and installing filters in valve body 86

35 - Gears, shafts 90
- **1 Dismantling and assembling gears and shafts** 90
- 1.1 Dismantling and assembling gear cluster 90

39 - Final drive - front differential 99
- **1 Gearbox control system** 99
- 1.1 Overview of fitting locations - gearbox control system 99

Protected by copyright. Copying for private or commercial purposes, in part or in whole, is not permitted unless authorised by AUDI AG. AUDI AG does not guarantee or accept any liability with respect to the correctness of information in this document. Copyright by AUDI AG.

2 Oil seals 101
2.1 Overview of fitting locations - oil seals 101
2.2 Renewing oil seal (left-side) 101
2.3 Renewing oil seal (right-side) 105
3 Differential 106
3.1 Exploded view - differential 106
3.2 Removing and installing flange shaft (left-side) 107
3.3 Removing and installing flange shaft (right-side) 109
4 Centre differential 112
4.1 Exploded view - centre differential 112
4.2 Removing and installing centre differential 113
4.3 Renewing oil seal for rear splined shaft 114
4.4 Renewing ball bearing for rear splined shaft 118
4.5 Renewing ball bearing for centre differential 121

Protected by copyright. Copying for private or commercial purposes, in part or in whole, is not permitted unless authorised by AUDI AG. AUDI AG does not guarantee or accept any liability with respect to the correctness of information in this document. Copyright by AUDI AG.

00 – Technical data

1 Repair instructions

(ARL005830; Edition 05.2018)

⇒ "1.1 General repair instructions", page 1

⇒ "1.2 Contact corrosion", page 3

⇒ "1.3 Deactivating ATF pump and discharging hydraulic accumulator", page 4

1.1 General repair instructions

Use of Workshop Manuals

Any special work to be carried out with the gearbox installed in the vehicle is described separately for different models in the corresponding edition of the Workshop Manual "7-speed dual clutch gearbox 0CK". Such repair work is not described in this Servicing Manual; however brief reference may be made to some of the procedures involved. For satisfactory repairs please always refer to both Workshop Manuals.

Proper tools and the maximum possible care and cleanliness are essential for satisfactory repairs to the transmission units. The usual basic safety precautions also naturally apply when carrying out repair work.

To avoid repetition, a number of generally applicable instructions for the various repair procedures are summarised here. They apply to the work described in this Manual.

Environmental and waste disposal regulations for oil

- ATF, gear oil and any other type of oil must be handled with care.
- Dispose of drained oil properly.
- Always adhere to statutory environmental and waste disposal regulations.
- Observe the information shown on the packaging of the oil.

Protected by copyright. Copying for private or commercial purposes, in part or in whole, is not permitted unless authorised by AUDI AG. AUDI AG does not guarantee or accept any liability with respect to the correctness of information in this document. Copyright by AUDI AG.

Special tools

For a complete list of special tools used in this Workshop Manual
⇒ Workshop equipment and special tools

Gearbox

- Observe rules for cleanliness when working on the dual clutch gearbox ⇒ page 5 .
- Do not run the engine or tow the vehicle with the gearbox open or when there is no gear oil in the gearbox.
- Components to be re-used must be cleaned, checked and, if necessary, renewed prior to installation.
- When installing gearbox, ensure that dowel sleeves are fitted correctly.

O-rings, oil seals and gaskets

- Always renew O-rings, oil seals and gaskets.
- After removing gaskets and seals, always inspect the contact surface on the housing or shaft for burrs resulting from removal or for other signs of damage.
- Thoroughly clean housing joint surfaces before assembling.

- Before installing, lightly lubricate outer circumference and sealing lips of oil seals with ATF or gear oil, depending on fitting location.
- Lightly lubricate O-rings with ATF or gear oil (depending on fitting location) before installation to prevent them getting crushed during assembly.
- Use only ATF for parts running in ATF. Other lubricants will cause malfunction of the gearbox hydraulics.
- The open side of the oil seal should face the side containing the fluid.
- After installation, check and correct ATF level or gear oil level (MTF); refer to Workshop Manual “7-speed dual clutch gearbox 0CK” ⇒ Rep. gr. 34 ; ATF; Checking ATF level or Checking gear oil level (MTF) and topping up ⇒ Rep. gr. 34 ; Gear oil . Specifications ⇒ Electronic parts catalogue

© Technical Documentation. Copying for private or commercial purposes, in part or in whole, is not permitted unless authorised by AUDI AG. AUDI AG does not guarantee or accept any liability with respect to the correctness of information in this document. Copyright by AUDI AG.

Nuts, bolts

- Loosen bolts in reverse sequence to specified tightening sequence.
- Bolts and nuts used to secure covers and housings must be tightened in steps according to the specified tightening sequence and method.
- Bolts and nuts which secure covers and housings should be loosened and tightened in diagonal sequence and in stages if no tightening sequence is specified.
- Always renew self-locking bolts and nuts.
- Unless otherwise specified, use a wire brush to clean the threads of bolts which are secured with locking fluid. Then install bolts with locking fluid; for locking fluid refer to ⇒ Electronic parts catalogue .
- Threaded holes which take self-locking bolts or bolts coated with locking fluid must be cleaned using a thread tap or similar. Otherwise there is a danger of the bolts shearing off the next time they are removed.
- The tightening torques stated apply to non-oiled nuts and bolts.

Circlips, snap rings

- Do not over-stretch circlips.
- Renew circlips which have been damaged or over-tensioned.
- Circlips must be properly seated in the base of the groove.

Bearings

- Install needle bearings so the lettering (side with thicker metal) faces towards the installing tool.
- Lightly lubricate bearings with gear oil or ATF, depending on fitting location.
- Do not interchange inner or outer races of bearings of the same size.
- Always renew the tapered roller bearings on one shaft together and use new bearings from a single manufacturer.

Shims

- Use a micrometer to measure the shims at several points. Different shim thicknesses make it possible to obtain the exact shim thickness required; if necessary, fit 2 shims.

- Check for burrs and damage. Install only shims which are in perfect condition.

Mechatronic unit

> Caution
>
> *The gearbox control unit (mechatronic unit) can be damaged by electrostatic discharge.*
>
> - *Before handling the electrical connector or mechatronic unit, the mechanic must discharge static by briefly touching an earthed metal object, such as vehicle earth, lifting platform or heater radiator, etc.*
> - *Do not touch contact pins in gearbox connector with bare hands.*

1.2 Contact corrosion

Contact corrosion can occur if unsuitable fasteners are used (e.g. bolts, nuts, washers, etc.).

For this reason, only fasteners with a special surface coating are fitted.

In addition, rubber components, plastic components and adhesives are made of non-conductive material.

If you are not sure whether used parts can be re-installed, always fit new parts ⇒ Electronic parts catalogue .

Please note:

- We recommend only genuine spare parts: these have been fully tested.
- We recommend the use of accessories approved by Audi.
- Damage caused by contact corrosion is not covered by warranty.

Protected by copyright. Copying for private or commercial purposes, in part or in whole, is not permitted unless authorised by AUDI AG. AUDI AG does not guarantee or accept any liability with respect to the correctness of information in this document. Copyright by AUDI AG.

1.3 Deactivating ATF pump and discharging hydraulic accumulator

WARNING

System is pressurised.

The "7-speed dual clutch gearbox 0CK" is equipped with an electric ATF pump and hydraulic accumulator.

The electric ATF pump may start up at any time.

Because of the hydraulic accumulator, the ATF system is pressurised even when the ignition is off.

- *The electric ATF pump must always be deactivated and the hydraulic accumulator must be discharged before opening the gearbox.*
- *If the current state of the system is unclear (e.g. if the gearbox control unit is defective or if the gearbox is from an unknown source), only loosen the bolts on the mechatronic unit very slightly so that the oil pressure in the accumulator can dissipate slowly.*
- *Unplug electrical connector on automatic gearbox control unit - J217- before removing oil pan.*
- *Put on safety goggles.*

Deactivating ATF pump and discharging hydraulic accumulator

– Connect ⇒ Vehicle diagnostic tester and start `Diagnosis` mode.

- `Select own test`
- `02 - Gearbox electronics, Functions`
- Select `02 - ATF pressure relief / Disable ATF pump` or `02 - ATF level` ⇒ `Drain off ATF`

Protected by copyright. Copying for private or commercial purposes, in part or in whole, is not permitted unless authorised by AUDI AG. AUDI AG does not guarantee or accept any liability with respect to the correctness of information in this document. Copyright by AUDI AG.

2 Rules for cleanliness when working on the dual clutch gearbox

- Thoroughly clean all joints and connections and the surrounding areas before disconnecting.
- Use cleaning fluid - D 009 401 04- to clean the gearbox and its components.
- Use lint-free cloths for cleaning, such as the “WYPALL X70 / WORKHORSE” cloth from Kimberly-Clark Professional.
- Seal off open lines and connections immediately with clean plugs or sealing caps from engine bung set - VAS 6122- .
- After removal, place parts on a clean surface and cover them. Use sheeting or lint-free cloths.
- Carefully cover or seal open components if repairs cannot be carried out immediately.
- Only install clean components; replacement parts should only be unpacked immediately prior to installation.
- Protect unplugged electrical connectors against dirt and moisture and make sure connections are dry when attaching.

Protected by copyright. Copying for private or commercial purposes, in part or in whole, is not permitted unless authorised by AUDI AG. AUDI AG does not guarantee or accept any liability with respect to the correctness of information in this document. Copyright by AUDI AG.

30 – Clutch

1 Clutch

⇒ “1.1 Exploded view - flywheel and dual clutch”, page 6

⇒ “1.2 Removing and installing flywheel”, page 7

⇒ “1.3 Removing and installing dual clutch”, page 10

⇒ “1.4 Renewing input shaft oil seal”, page 16

⇒ “1.5 Renewing input shaft oil seal”, page 17

1.1 Exploded view - flywheel and dual clutch

Copyright by AUDI AG. Copying for private or commercial purposes, in part or in whole, is not permitted unless authorised by AUDI AG. AUDI AG does not guarantee or accept any liability with respect to the correctness of information in this document. Copyright by AUDI AG.

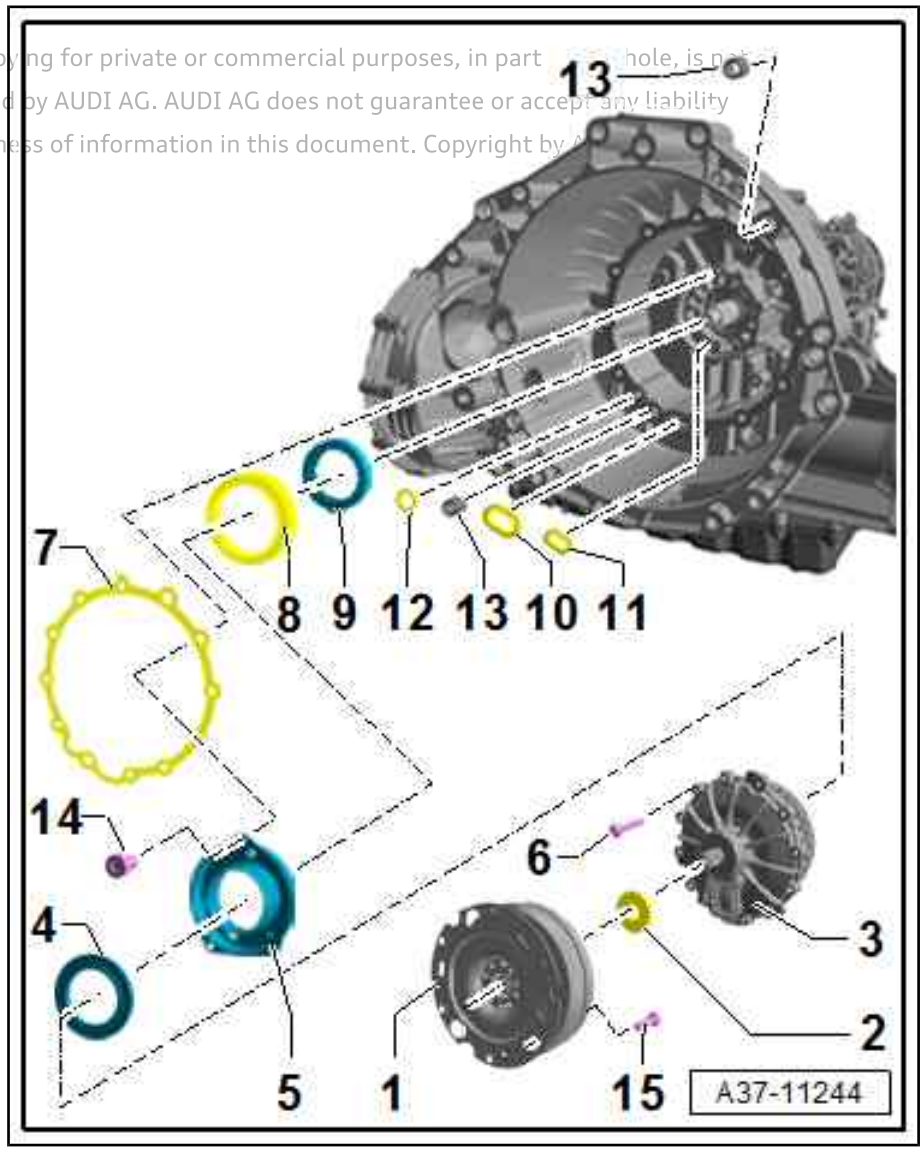

1 - Flywheel

- ❑ Different versions are available; for correct version refer to ⇒ Electronic parts catalogue
- ❑ Removing and installing ⇒ page 7

2 - Oil seal

- ❑ For input shaft
- ❑ Renewing ⇒ “1.5 Renewing input shaft oil seal”, page 17

3 - Dual clutch

- ❑ Different versions are available; for correct version refer to ⇒ Electronic parts catalogue
- ❑ Removing and installing ⇒ “1.3 Removing and installing dual clutch”, page 10

4 - Engagement bearing

- ❑ Note installation position
- ❑ Can only be renewed together with clutch
- ❑ Removing and installing ⇒ “1.3 Removing and installing dual clutch”, page 10

5 - Clutch slave cylinder

- ❑ Can only be renewed together with clutch
- ❑ Removing and installing ⇒ “1.3 Removing and installing dual clutch”, page 10

6 - M8 bolt

- ❑ Renew
- ❑ Tighten evenly in a diagonal sequence
- ❑ Tightening torque: 10 Nm + 90°

7 - Gasket

- ❑ Renew

8 - Twin-lip oil seal

- ❑ Renew
- ❑ Installing and removing ⇒ “1.4 Renewing input shaft oil seal”, page 16

9 - Guide sleeve

- ❑ Note installation position
- ❑ Installing and removing ⇒ “1.4 Renewing input shaft oil seal”, page 16

10 - Seal

- ❑ Renew

11 - Seal

- ❑ Renew

12 - Seal

- ❑ Renew

13 - Dowel sleeve

14 - M6 bolt

- ❑ Not fitted on all versions
- ❑ Tighten evenly
- ❑ Tightening torque: 5 Nm + 30°

15 - Bolt M10 x 15.5

- ❑ Tightening torque: 60 Nm

Protected by copyright. Copying for private or commercial purposes, in part or in whole, is not permitted unless authorised by AUDI AG. AUDI AG does not guarantee or accept any liability with respect to the correctness of information in this document. Copyright by AUDI AG.

1.2 Removing and installing flywheel

Special tools and workshop equipment required

- ♦ Extractor - T40176-

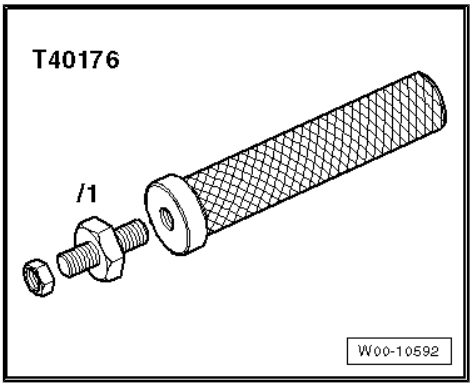

- ♦ Grease for clutch plate splines - G 000 100-
- ♦ Sealing grease ⇒ Electronic parts catalogue

Removing

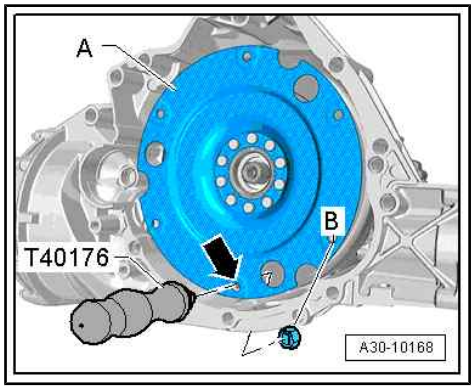

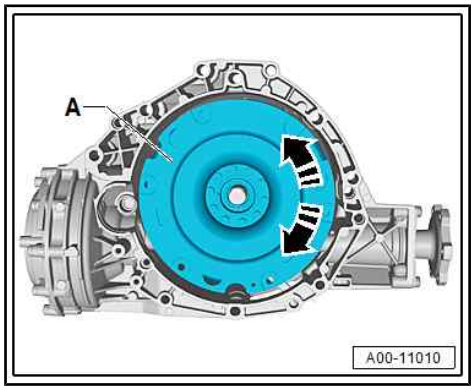

Note

- *You may hear a clacking sound from the LuK version dual-mass flywheel -A- with centrifugal pendulum absorber.*
- *When the clutch module -A- is turned, a clacking sound can be heard at intervals of approx. 90°. This is caused by moving pendulum masses in the dual-mass flywheel and is not a fault.*

- Gearbox is secured to engine and gearbox support - VAS 6095-
  ⇒ “3 Securing to engine and gearbox support”, page 24 .

– Remove flange shaft (left-side)
  ⇒ “3.2 Removing and installing flange shaft (left-side)”, page 107 .

Protected by copyright. Copying for private or commercial purposes, in part or in whole, is not permitted unless authorised by AUDI AG. AUDI AG does not guarantee or accept any liability with respect to the correctness of information in this document. Copyright

– Attach extractor - T40176- to flywheel -A- using nut -B- -arrow-.

– Turn extractor - T40176- upwards.

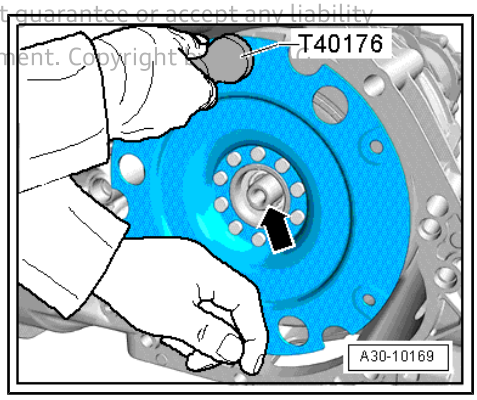

Note

Keep hold of the bottom of the flywheel, as shown in the illustration, to prevent it from tilting over.

– Pull flywheel off input shaft -arrow- keeping flywheel straight.

Installing

Installation is carried out in reverse sequence; note the following:

– Thoroughly clean area of gearbox housing leading to differential -arrow A-, and oil seal -arrow B-.

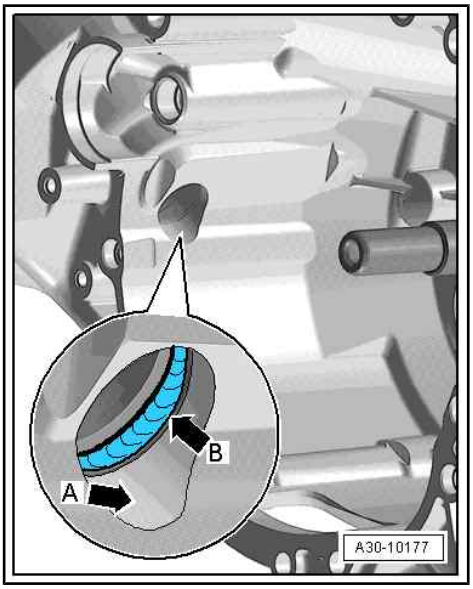

Note

If oil seal between differential and gearbox housing -arrow B- is damaged, it must be renewed.

– Pack space between sealing lip and dust lip half full with sealing grease; for sealing grease refer to ⇒ Electronic parts catalogue .

– Clean input shaft -arrow-.

– Apply a thin coating of grease for clutch plate splines - G 000 100- to splines on input shaft.

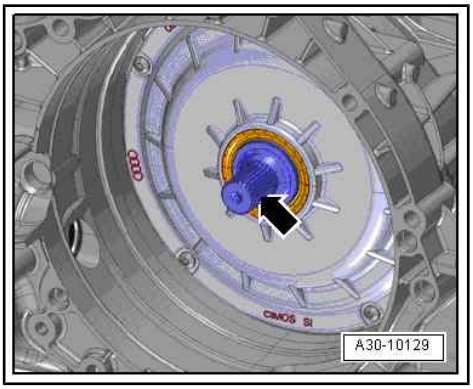

– Carefully slide flywheel onto input shaft -arrow-, taking care to keep flywheel straight.

Protected by copyright. Copying for private or commercial purposes, in part or in
permitted unless authorised by AUDI AG. AUDI AG does not guarantee or ac
with respect to the correctness of information in this document. Copyrig

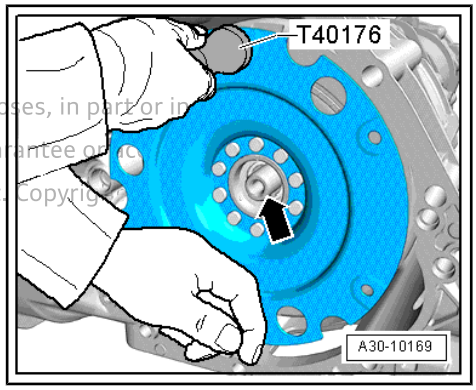

– Detach extractor - T40176- from flywheel -A-.

– Install flange shaft (left-side)
⇒ “3.2 Removing and installing flange shaft (left-side)”, page 107 .

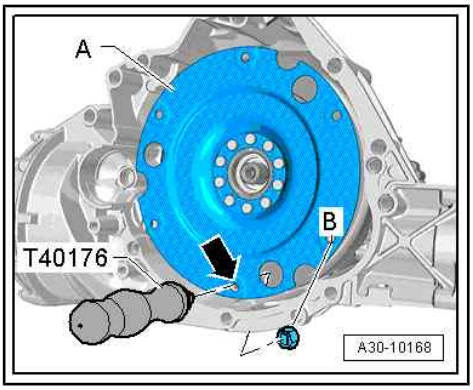

1.3 Removing and installing dual clutch

Special tools and workshop equipment required

- Workshop hoist - VAS 6100-

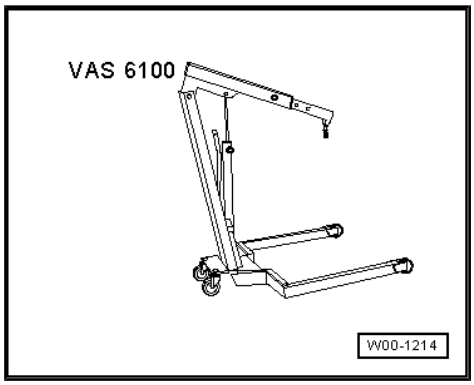

- Puller for ATF supply unit - T40123A- and sleeve - T40123A/2-

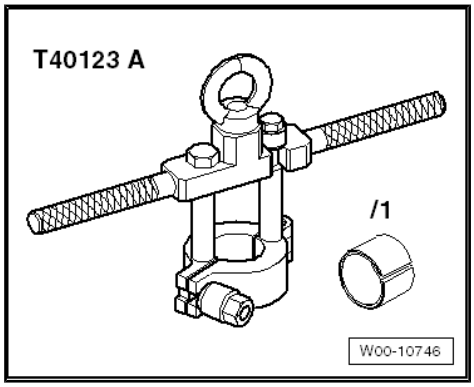

Protected by copyright. Copying for private or commercial purposes, in part or in whole, is not permitted unless authorised by AUDI AG. AUDI AG does not guarantee or accept any liability with respect to the correctness of information in this document. Copyright by AUDI AG.

- Thrust piece - T40099-

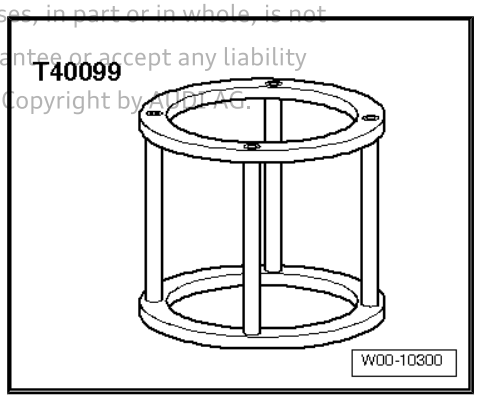

- Guide pin - T40288-

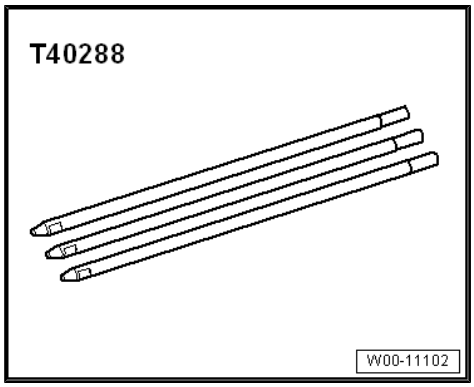

♦ Hook - 10 - 222 A /2-

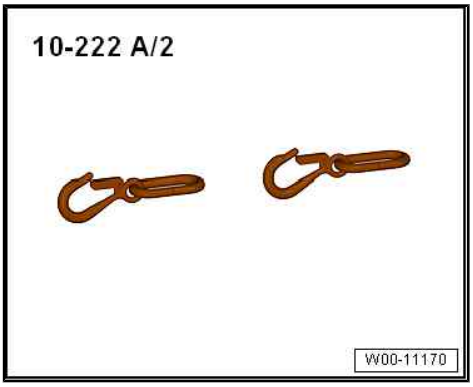

Removing

- Gearbox is secured to engine and gearbox support - VAS 6095-
  ⇒ "3 Securing to engine and gearbox support", page 24 .

Protected by copyright. Copying for private or commercial purposes, in part or in whole, is not permitted unless authorised by AUDI AG. AUDI AG does not guarantee or accept any liability with respect to the correctness of information in this document. Copyright by AUDI AG.

– Remove flywheel ⇒ page 7 .
– Turn gearbox into a vertical position on engine and gearbox support - VAS 6095- .
– Remove bolts -1 … 12-.

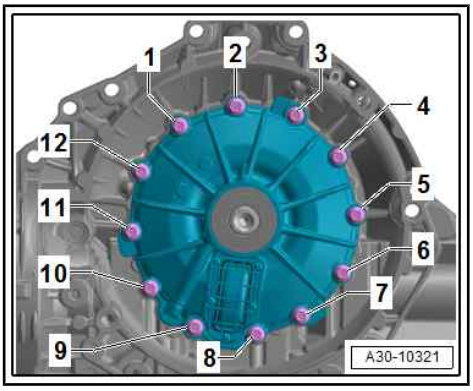

– Secure puller for ATF supply unit - T40123A- and sleeve - T40123-2- to clutch input shaft.
– Check that puller is securely attached to input shaft.

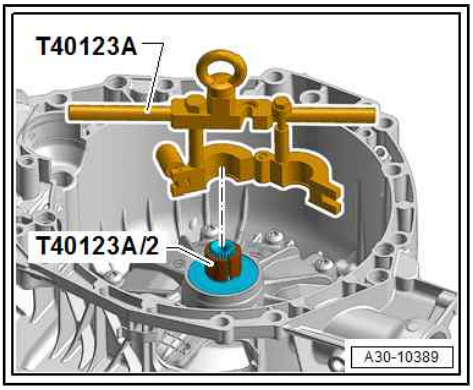

– Connect puller for ATF supply unit - T40123A- to hook - 10 - 222 A /2- and attach to workshop hoist - VAS 6100- .
– Carefully pull dual clutch out of gearbox housing.

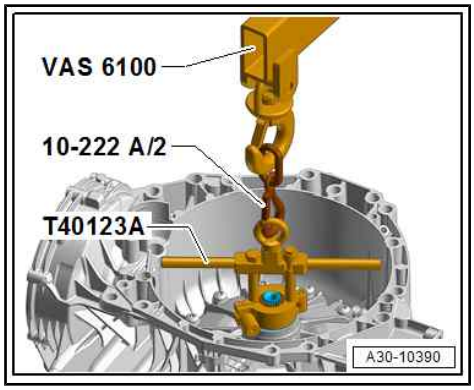

Caution

The engagement bearing and the two dowel sleeves can drop out of the gearbox housing when the clutch is pulled out.

- *The engagement bearing must be renewed if it is damaged or has been dropped.*

Note

- *The dual clutch has been calibrated to the engagement bearing and slave cylinder in a complex procedure during production.*
- *There is currently no provision for calibrating it using workshop tools.*
- *For this reason, the clutch must always be renewed when renewing a damaged engagement bearing or slave cylinder.*
- *A new clutch is always supplied with a calibrated engagement bearing and slave cylinder.*

Caution

Risk of damage to dual clutch due to improper handling.

- *The hub for clutch 2 -arrow- is clipped in place on the inside of the plate carrier and can come loose if the clutch is handled improperly.*
- *Only transport and store the clutch as shown:*

Protected by copyright. Copying for private or commercial purposes, in part or in whole, is not permitted unless authorised by AUDI AG. AUDI AG does not guarantee or accept any liability with respect to the correctness of information in this document. Copyright by AUDI AG.

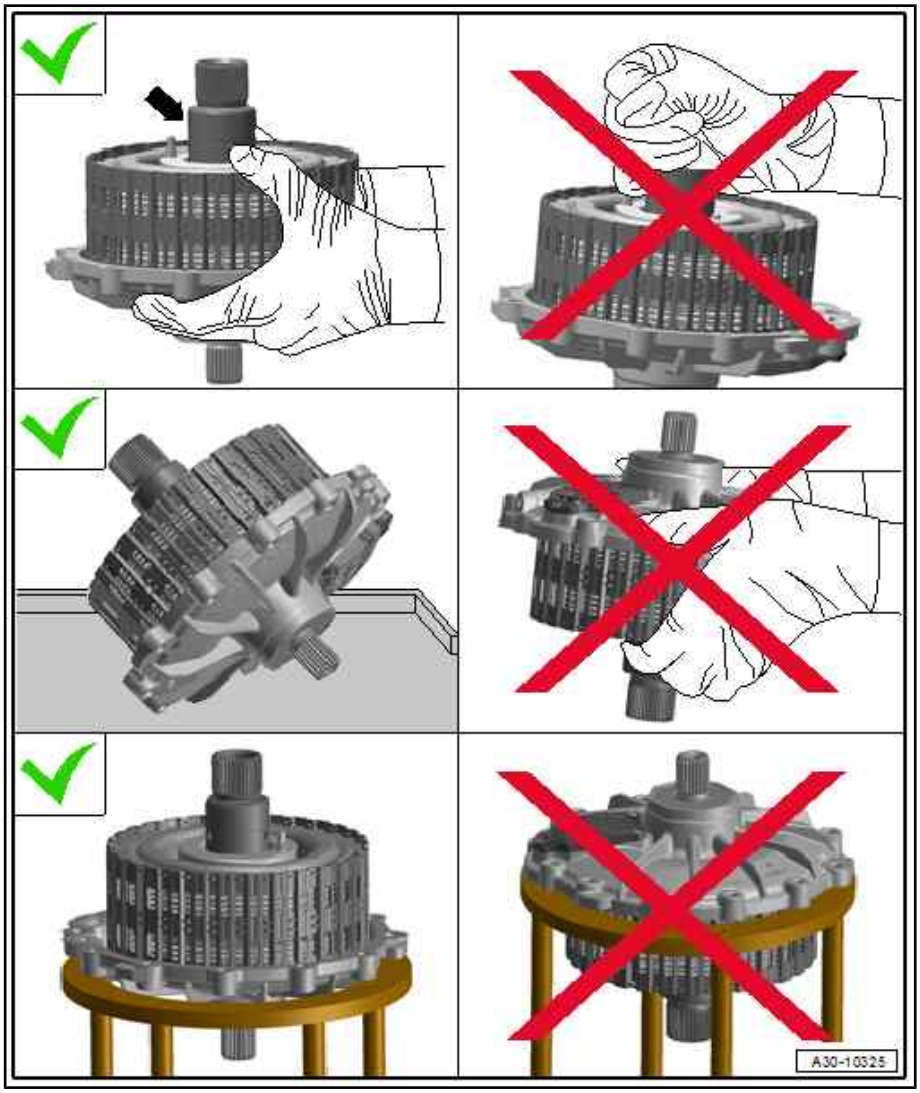

Measure height of clutch to check whether it has been damaged.
⇒ page 14

– Remove the three bolts -arrows- and pull out engagement bearing and slave cylinder.

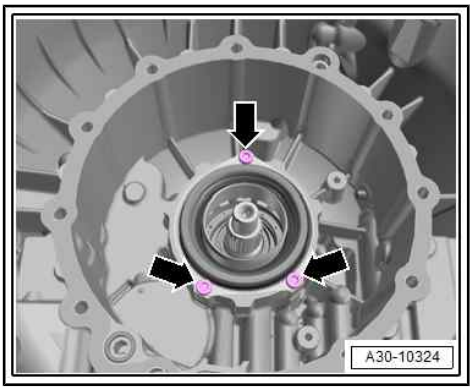

Note

The three bolts -arrows- are not fitted on all versions.

Installing

Note

The twin-lip oil seal for the input shaft must always be renewed
⇒ "1.4 Renewing input shaft oil seal", page 16 .

Protected by copyright. Copying for private or commercial purposes, in part or in whole, is not permitted unless authorised by AUDI AG. AUDI AG does not guarantee or accept any liability with respect to the correctness of information in this document. Copyright by AUDI AG.

– Check that dowel sleeves -1- and -2- are fitted.
– Lightly lubricate new seals -3, 4, 5- with ATF and fit seals.
– Insert new gasket -6-.

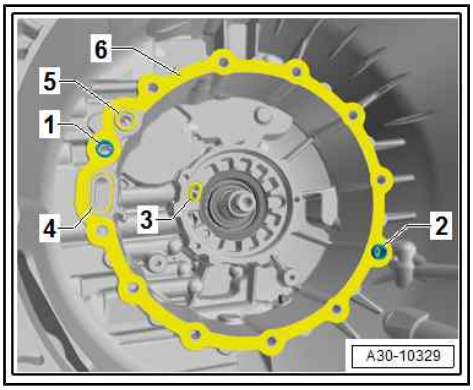

Note

Make sure that no particles of dirt fall into the gearbox when cleaning the housing.

– Install engagement bearing with slave cylinder and tighten the three bolts -arrows- evenly.

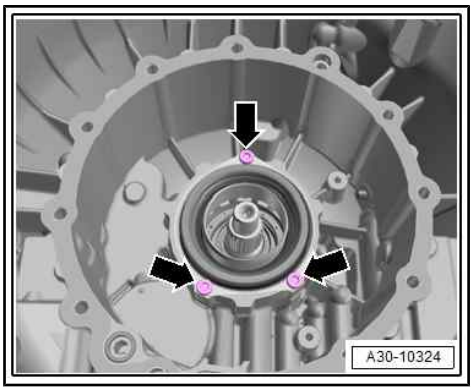

Note

The three bolts -arrows- are not fitted on all versions.

Note

- *Ensure that engagement bearing is fitted to align properly with slave cylinder.*
- *Ball bearings -arrow- should be visible.*

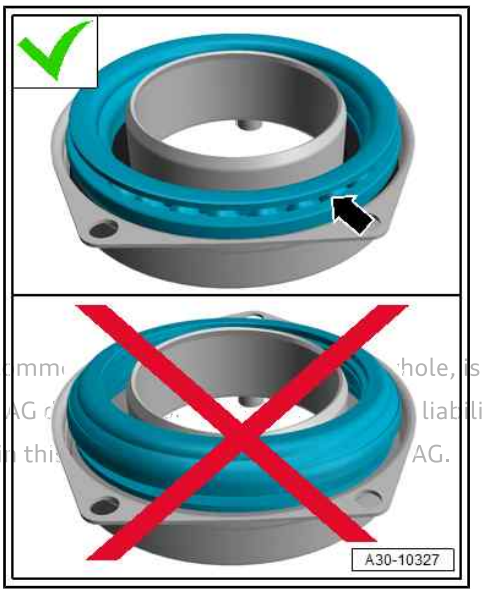

Protected by copyright. Copying for private or comm hole, is not permitted unless authorised by AUDI AG. AUDI AG liability with respect to the correctness of information in this AG.

– Screw in guide pins - T40288- into threaded holes approx. 120° apart.

Checking installation height of clutch

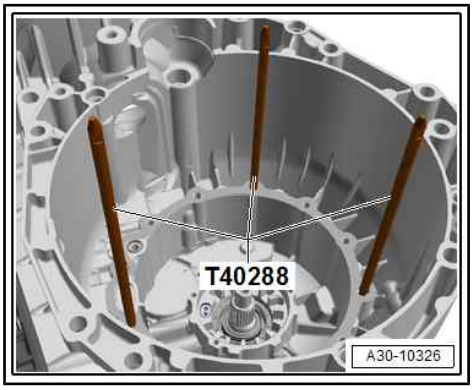

- Determine dimension - × - before installing clutch.
- To do so, use ruler - T40100- and digital depth gauge - VAS 6087- to measure height from clutch cover to shoulder on hub, as shown.

Dimension - × - must be within a range of tolerance of 98.91 mm to 99.61 mm.

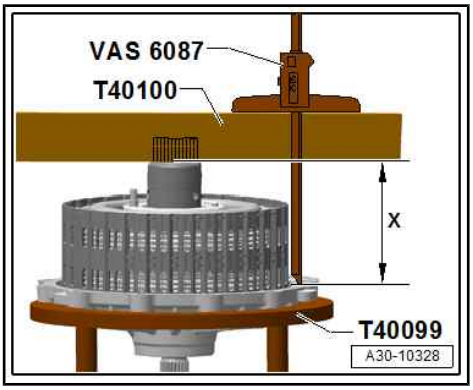

Note

If dimension - × - is outside range of tolerance, clutch is damaged and must be renewed.

– Fit dual clutch into gearbox housing as shown in illustration.

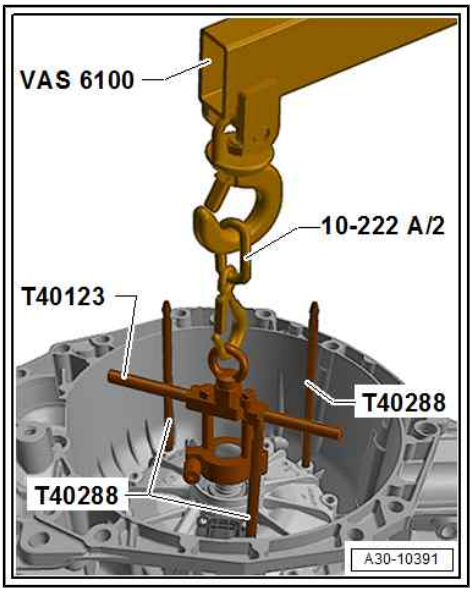

Protected by copyright. Copying for private or commercial purposes, in part or in whole, is not permitted unless authorised by AUDI AG. AUDI AG does not guarantee or accept any liability with respect to the correctness of information in this document. Copyright by AUDI AG.

– Tighten bolts -1 to 12- for clutch cover in stages and in a diagonal sequence. Tightening torque ⇒ page 6

– Install flywheel ⇒ page 7 .

• Fill up with ATF and MTF after installing gearbox ⇒ Rep. gr. 34 ; ATF; Draining and filling ATF , ⇒ Rep. gr. 34 ; Gear oil; Draining and filling gear oil .

• After renewing dual clutch, it must be adapted using ⇒ Vehicle diagnostic tester.

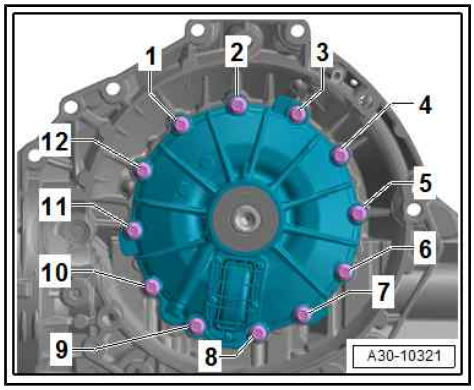

Procedure

– Connect ⇒ Vehicle diagnostic tester.

– Select `Diagnosis` mode and begin diagnosis.

– Select `Test plan` tab.

– Choose `Select own test` and select following options one after the other:

♦ Drive system

♦ 7-speed dual clutch gearbox 0CK/0CL

♦ 01 - Self-diagnosis compatible systems

♦ 02 - Gearbox electronics 0CK

♦ 02 - Gearbox electronics, functions

♦ 02 - Basic setting

♦ ⇒ Clutch valve calibration

1.4 Renewing input shaft oil seal

Special tools and workshop equipment required

♦ Extractor tool - T20143-

Protected by copyright. Copying for private or commercial purposes, in part or in whole, is not permitted unless authorised by AUDI AG. AUDI AG does not guarantee or accept any liability with respect to the correctness of information in this document. Copyright by AUDI

♦ Thrust piece - T40300-

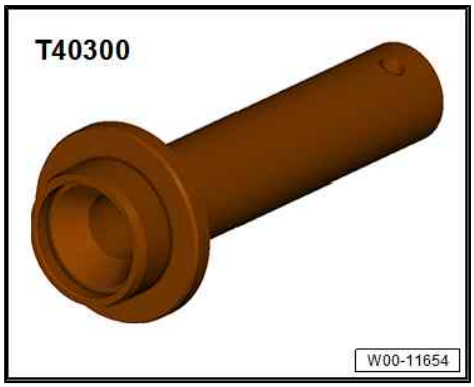

- Clutch, engagement bearing and slave cylinder removed ⇒ page 10

– Using extractor tool - T20143- , pull oil seal -arrow- carefully out of housing.

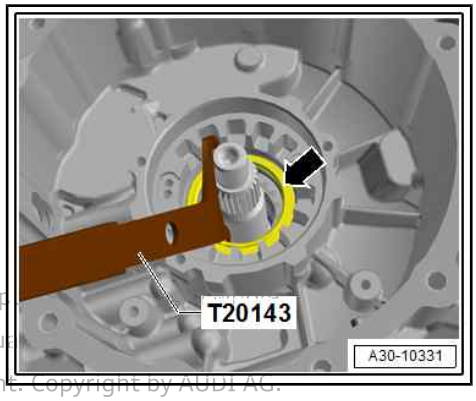

Protected by copyright. Copying for private or commercial purp
permitted unless authorised by AUDI AG. AUDI AG does not gu
with respect to the correctness of information in this document. Copyright by AUDI AG.

– A corrugated spring -arrow- is fitted behind oil seal; corrugated spring does not need to be renewed.

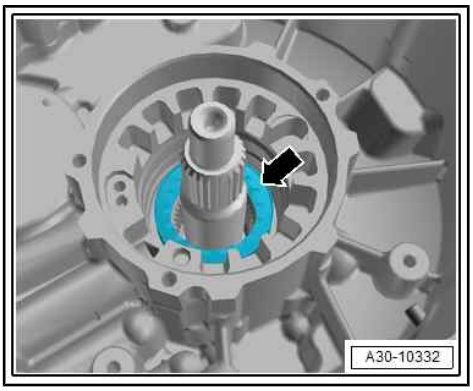

Note

Note installation position.

– Using -T40300- , drive in new oil seal as far as stop.

– Install clutch ⇒ page 10 .

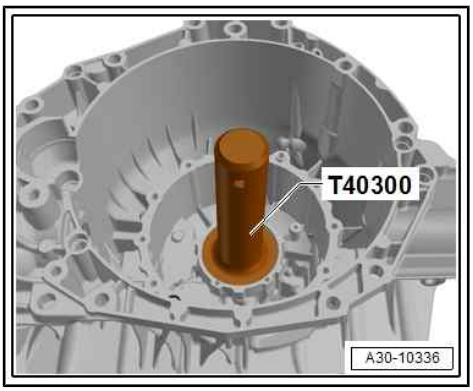

1.5 Renewing input shaft oil seal

Special tools and workshop equipment required

♦ Extractor tool - T20143-

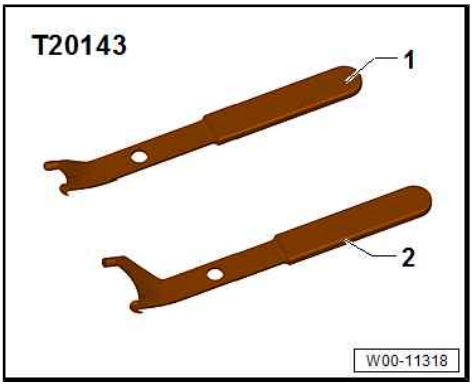

♦ Assembly sleeve - T40308-

Protected by copyright. Copying for private or commerci[illegible] whole, is not permitted unless authorised by AUDI AG. AUDI AG does no[illegible] accept any liability with respect to the correctness of information in this docume[illegible] Copyright by AUDI AG.

♦ Thrust piece - T50038-

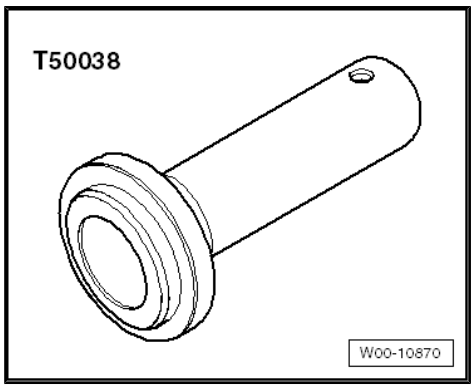

Removing

- Clutch installed

> **Caution**
>
> *Risk of damage to clutch due to improper handling.*
>
> ♦ *The oil seal must only be renewed with the clutch installed.* *⇒ page 13*

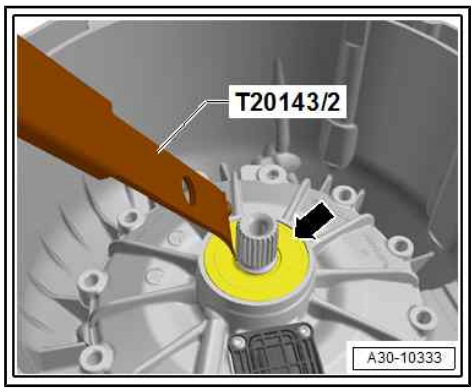

– Pry out oil seal -arrow- carefully using extractor tool - T20143- .

Note

Take care not to damage running surface of shaft!

Installing

– Attach assembly sleeve - T40308- to input shaft.

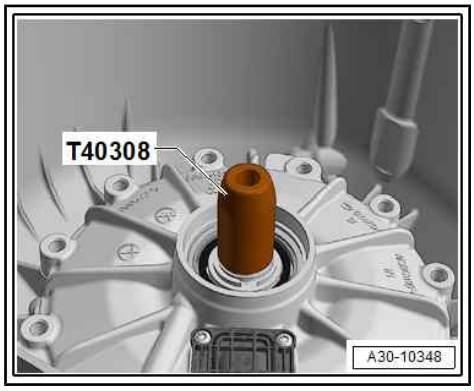

– Drive new oil seal into clutch housing as far as stop using thrust piece - T50038- .
– Remove assembly sleeve - T40308- .

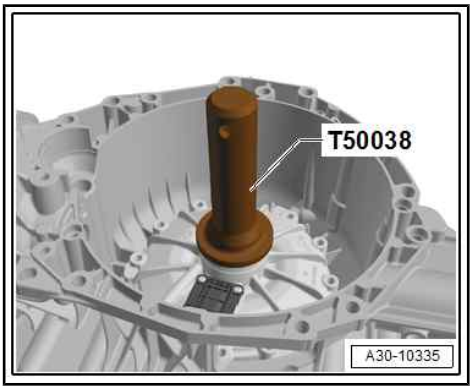

Protected by copyright. Copying for private or commercial purposes, in part or in whole, is not permitted unless authorised by AUDI AG. AUDI AG does not guarantee or accept any liability with respect to the correctness of information in this document. Copyright by AUDI AG.

34 – Controls, housing

1 Selector mechanism

All work on selector mechanism can be found in Workshop Manual »7-speed dual clutch gearbox 0CK«.

⇒ **Rep. gr. 34 ; Selector mechanism**

Protected by copyright. Copying for private or commercial purposes, in part or in whole, is not permitted unless authorised by AUDI AG. AUDI AG does not guarantee or accept any liability with respect to the correctness of information in this document. Copyright by AUDI AG.

2 Transporting gearbox

Special tools and workshop equipment required

- Workshop hoist - VAS 6100-

- Lifting tackle - 3033-

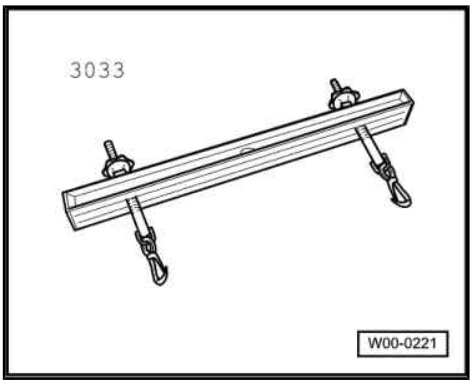

- Hook and support tool - 3311- with bolt -3311/1-

Protected by copyright. Copying for private or commercial purposes, in part or in whole, is not permitted unless authorised by AUDI AG. AUDI AG does not guarantee or accept any liability with respect to the correctness of information in this document. Copyright by AUDI AG.

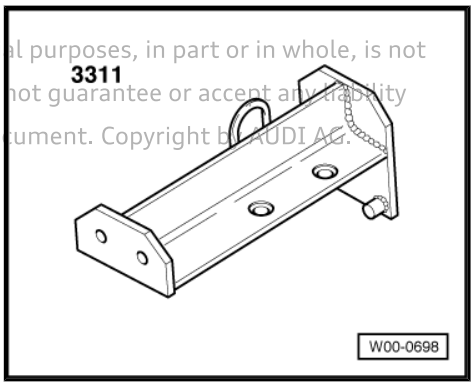

- Retaining strap - T40155-

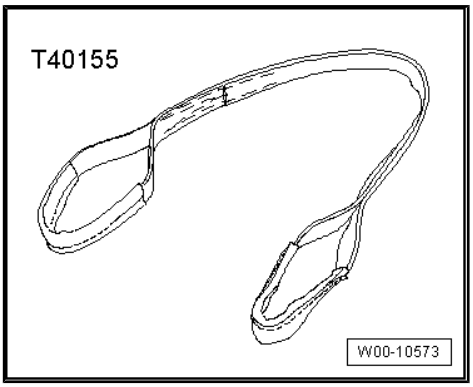

Caution

Risk of damage to gearbox if ATF and gear oil (MTF) mix via shared breather opening.

- *When the gearbox is filled with ATF and gearbox oil (MTF), it must not be tilted further than 15° horizontally or vertically.*
- *If it is necessary to tilt the gearbox further, both the ATF and the gearbox oil (MTF) must be drained.*
- *Draining ATF ⇒ Rep. gr. 34 ; ATF; Draining and filling ATF*
- *Draining MTF ⇒ Rep. gr. 34 ; Gear oil; Draining and filling gear oil .*

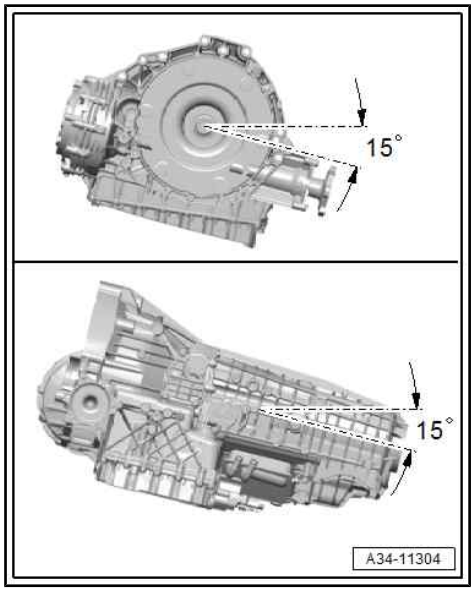

– Secure gearbox to hook and support tool - 3311- (using new, longer bolt -3311/1-).

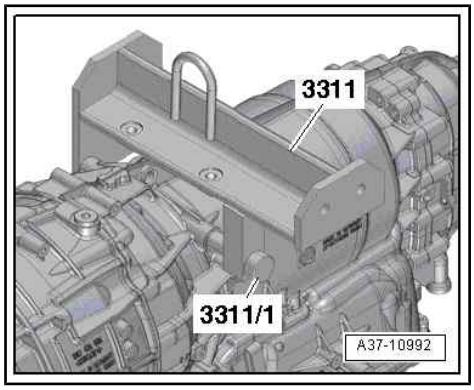

– Guide retaining strap - T40155- around gearbox and secure to -3033- .
– Secure retaining strap - T40155- at gearbox end using a commercially available M10 bolt -arrow-.
– Lifting tackle - 3033- and workshop hoist - VAS 6100- can be used to lift and move the gearbox.

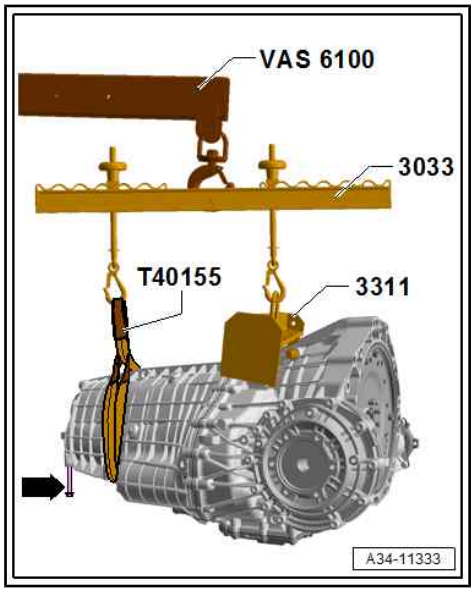

Protected by copyright. Copying for private or commercial purposes, in part or in whole, is not permitted unless authorised by AUDI AG. AUDI AG does not guarantee or accept any liability with respect to the correctness of information in this document. Copyright by AUDI AG.

Note

To ensure that the MTF pump -A- is not damaged when placing the gearbox on the oil pan -C-, an M10 bolt (commercially available, approx. 100 mm long) -B- must be screwed into the gearbox housing at the rear as a support.

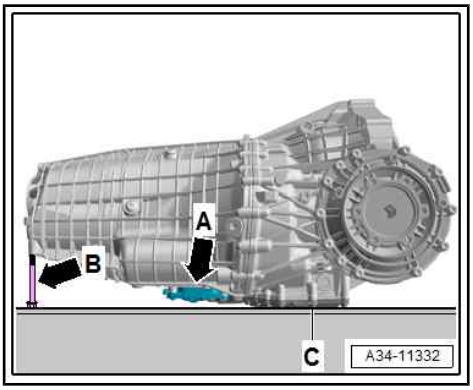

Protected by copyright. Copying for private or commercial purposes, in part or in whole, is not permitted unless authorised by AUDI AG. AUDI AG does not guarantee or accept any liability with respect to the correctness of information in this document. Copyright by AUDI AG.

3 Securing to engine and gearbox support

Special tools and workshop equipment required

- Workshop hoist - VAS 6100-

- Engine and gearbox support - VAS 6095-

Protected by copyright. Copying for private or commercial purposes, in part or in whole, is not permitted unless authorised by AUDI AG. AUDI AG does not guarantee or accept any liability with respect to the correctness of information in this document. Copyright by AUDI AG.

- Shackle - 10 - 222 A /12-

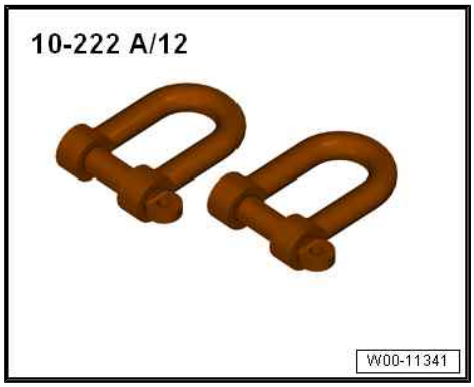

- Gearbox support - T40206- and drilling device - T40206/3-

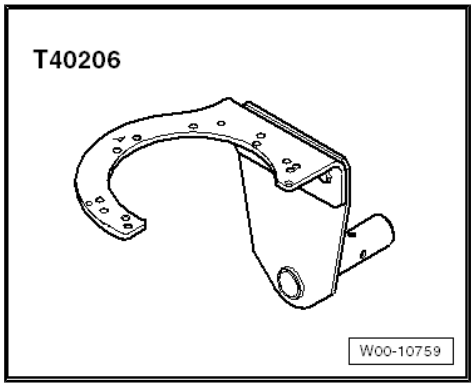

♦ Retaining strap - T40155-

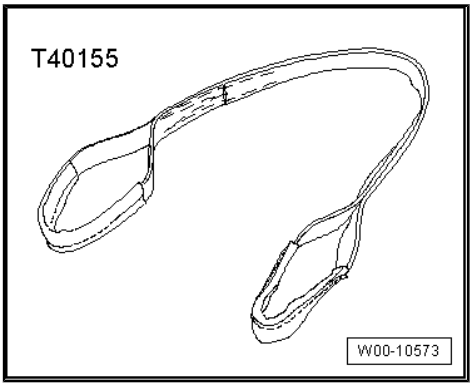

♦ Eye-head bolt - 3368-

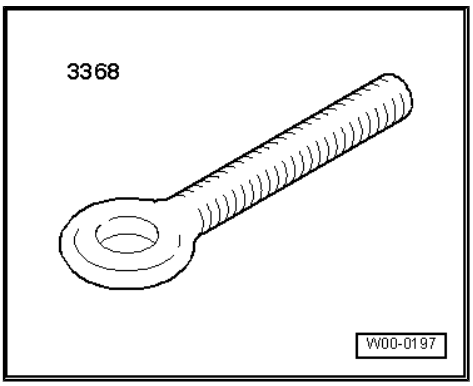

Procedure

– Set up gearbox support - T40206- as follows:

• Mounting flange -arrow A- faces upwards.

• “B” marking faces upwards -arrow B-.

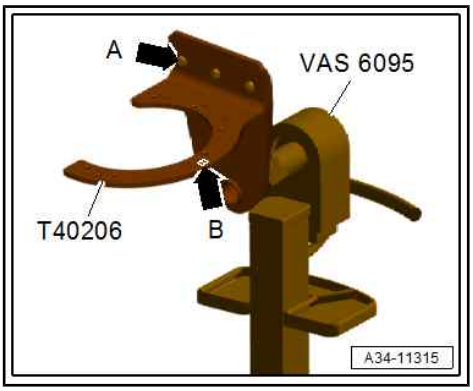

– Place drilling device - T40206/3- on gearbox support - T40206- .

– Make an additional hole ∅ 12 mm -arrow- in gearbox support - T40206- .

– Screw bolts into holes as follows:

♦ M10x80 in hole 15

♦ M10x120 in hole 11

♦ M10x80 in hole 7

♦ M10x50 in new hole 5b

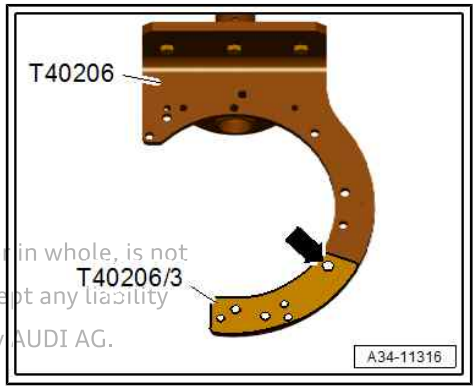

Protected by copyright. Copying for private or commercial purposes, in part or in whole, is not permitted unless authorised by AUDI AG. AUDI AG does not guarantee or accept any liability with respect to the correctness of information in this document. Copyright by AUDI AG.

Caution

Risk of damage to gearbox if ATF and gear oil (MTF) mix via shared breather opening.

- *ATF and gear oil (MTF) must be drained.*

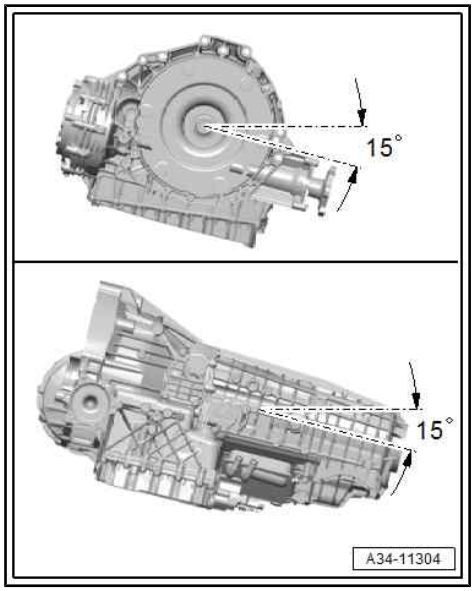

– Drain ATF ⇒ Rep. gr. 34 ; ATF; Draining and filling ATF .

– Drain MTF ⇒ Rep. gr. 34 ; Gear oil; Draining and filling gear oil .

– Secure eye-head bolt - 3368- on gearbox housing with shackle - 10 - 222 A /12- as shown in illustration.

– Secure retaining strap - T40155- to shackle - 10 - 222 A /12- and onto flange shaft (left-side) -arrow-.

– Lift gearbox with workshop hoist - VAS 6100- and secure to gearbox support - T40206- , as shown in illustration.

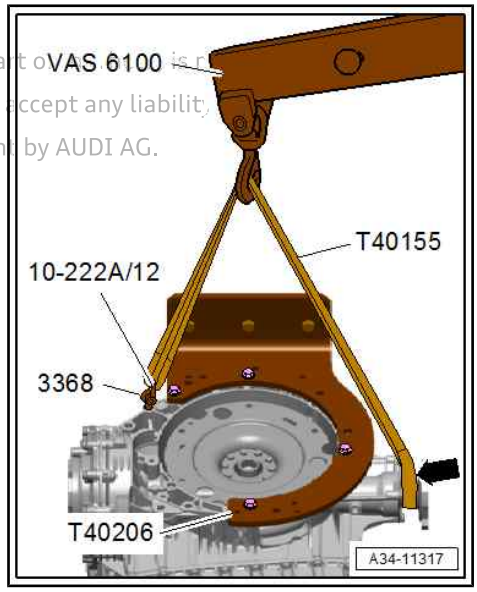

Protected by copyright. Copying for private or commercial purposes, in part or in whole, is not permitted unless authorised by AUDI AG. AUDI AG does not guarantee or accept any liability with respect to the correctness of information in this document. Copyright by AUDI AG.

4 Dismantling and assembling gearbox

⇒ “4.1 Exploded view - gearbox”, page 27

⇒ “4.2 Exploded view - gear cluster”, page 31

⇒ “4.3 Dismantling and assembling gearbox”, page 34

4.1 Exploded view - gearbox

⇒ “4.1.1 Exploded view - gearbox, vehicles with front-wheel drive”, page 27

⇒ “4.1.2 Exploded view - gearbox, vehicles with four-wheel drive”, page 29

Protected by copyright. Copying for private or commercial purposes, in part or in whole, is not permitted unless authorised by AUDI AG. AUDI AG does not guarantee or assume any liability with respect to the correctness of information in this document. Copyright by AUDI AG.

4.1.1 Exploded view - gearbox, vehicles with front-wheel drive

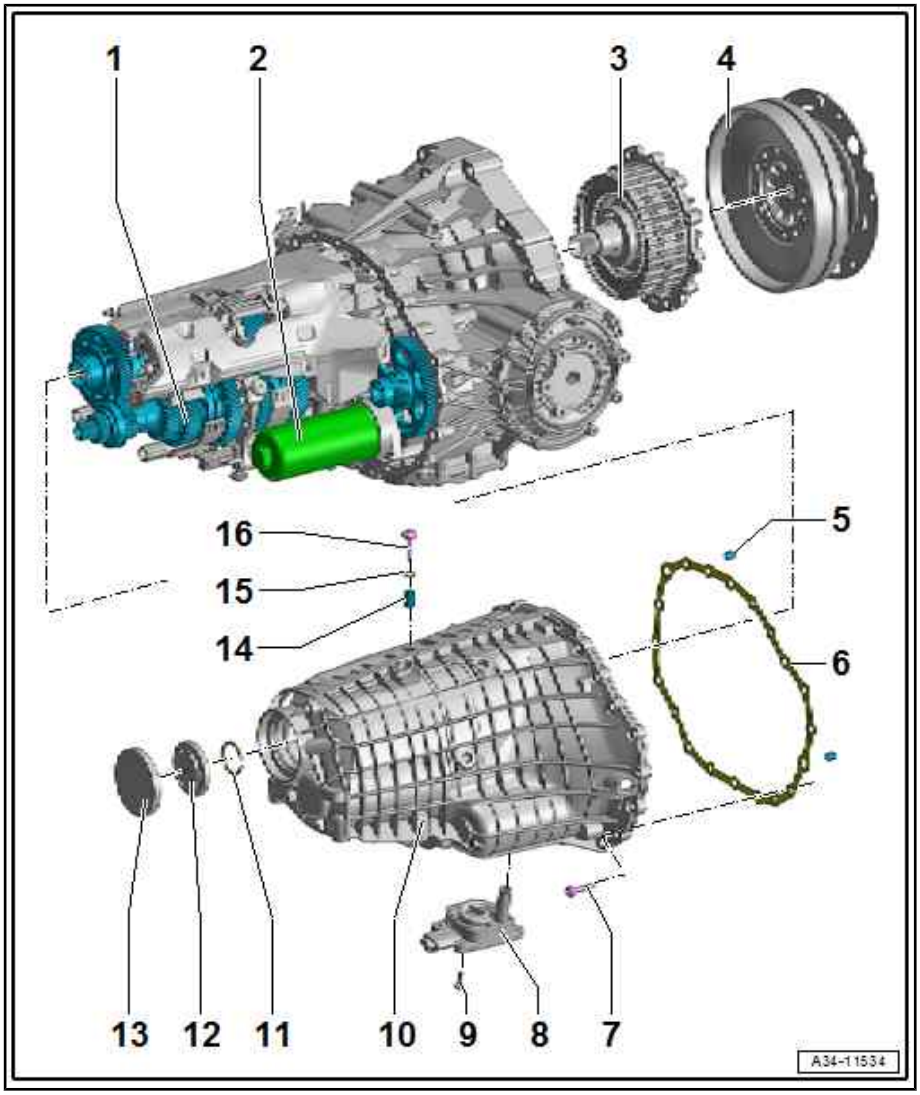

1 - Gear cluster

- ❑ Removing and installing ⇒ “4.2.1 Exploded view - gear cluster, vehicles with front-wheel drive”, page 31

2 - Hydraulic accumulator

- ❑ Observe safety precautions ⇒ “1.3 Deactivating ATF pump and discharging hydraulic accumulator”, page 4
- ❑ Removing and installing ⇒ “4.3.2 Removing and installing gear actuator module and hydraulic accumulator”, page 45
- ❑ Disposal ⇒ “4.3.3 Disposal of hydraulic accumulator”, page 48

3 - Dual clutch

- ❑ Removing and installing ⇒ “1.3 Removing and installing dual clutch”, page 10

4 - Flywheel

- ❑ Removing and installing ⇒ “1.2 Removing and installing flywheel”, page 7

5 - Dowel sleeve

6 - Gasket

- ❑ Renew

7 - Securing bolt for gearbox housing

- ❑ Renew

8 - MTF pump

- ❑ Removing and installing ⇒ 7-speed dual clutch gearbox 0CK; Rep. gr. 34 ; Gear oil circuit; Removing and installing gear oil pump

9 - Bolt

- ❑ Removing and installing ⇒ 7-speed dual clutch gearbox 0CK; Rep. gr. 34 ; Gear oil circuit; Removing and installing gear oil pump

10 - Gearbox housing

- ❑ Removing and installing ⇒ “4.3 Dismantling and assembling gearbox”, page 34

11 - Circlip

- ❑ Renew

12 - Oil guide for input shaft

13 - Sealing cap

- ❑ Renew

14 - Dowel sleeve

- ❑

15 - Seal

- ❑ Renew

16 - Bolt

- ❑ With seal
- ❑ Renew
- ❑ 15 Nm + 90°

Tightening torque and sequence on gearbox housing

– Tighten bolts in 3 stages in the sequence shown:

Stage	Bolts	Tightening torque
1.	-1 ... 9-	Screw in evenly by hand until bolt head makes contact with gearbox housing
2.	-1 ... 9-	Tighten to 10 Nm + 90° one after another
3.	-Arrow-	Working clockwise, tighten remaining bolts to 10 Nm + 90°

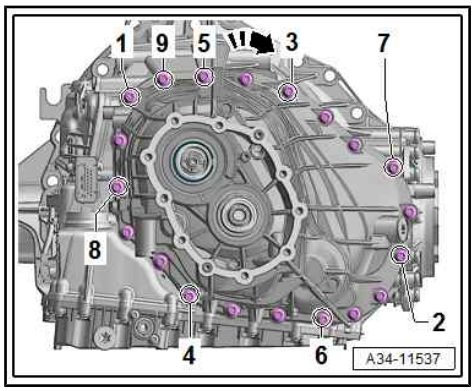

Tightening torque and sequence for gear cluster

– Press in centring sleeve -A- onto stop.

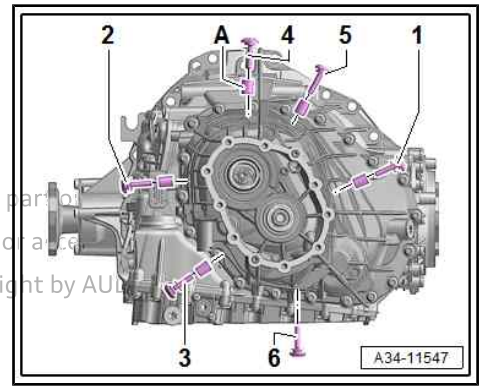

Note

Bolt -6- does not have a centring sleeve.

Protected by copyright. Copying for private or commercial purposes, in part or in whole, is not permitted unless authorised by AUDI AG. AUDI AG does not guarantee or assume any liability with respect to the correctness of information in this document. Copyright by AUDI AG.

– Tighten bolts in 2 stages in the sequence shown:

Stage	Bolts	Tightening torque
1.	-1 ... 6-	Screw in evenly by hand until bolt head makes contact with gearbox housing
2.	-1 ... 6-	Tighten to 15 Nm + 90° one after another

4.1.2 Exploded view - gearbox, vehicles with four-wheel drive

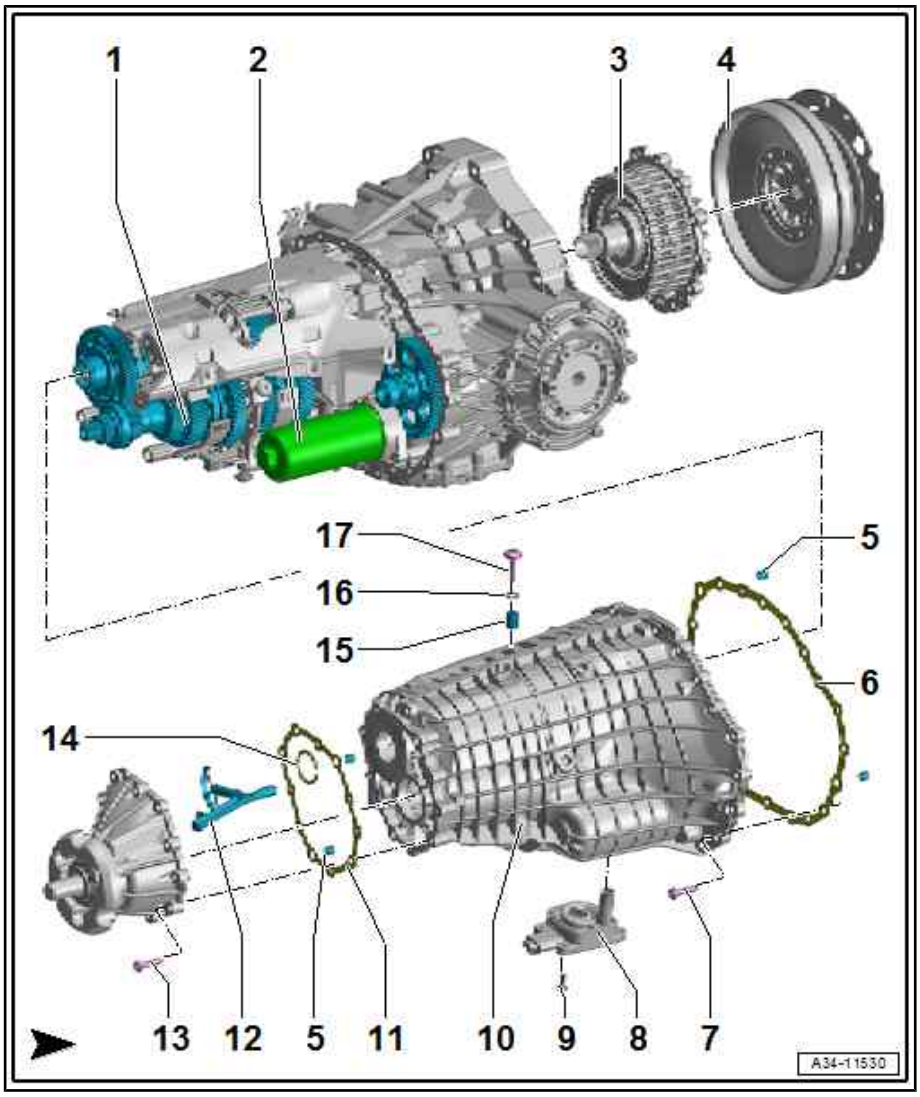

1 - Gear cluster

- ❑ Removing and installing ⇒ "4.2.2 Exploded view - gear cluster, vehicles with four-wheel drive", page 32

2 - Hydraulic accumulator

- ❑ Observe safety precautions ⇒ "1.3 Deactivating ATF pump and discharging hydraulic accumulator", page 4
- ❑ Removing and installing ⇒ "4.3.2 Removing and installing gear actuator module and hydraulic accumulator", page 45
- ❑ Disposal ⇒ "4.3.3 Disposal of hydraulic accumulator", page 48

3 - Dual clutch

- ❑ Removing and installing ⇒ "1.3 Removing and installing dual clutch", page 10

4 - Flywheel

- ❑ Removing and installing ⇒ "1.2 Removing and installing flywheel", page 7

5 - Dowel sleeve

6 - Gasket

- ❑ Renew

7 - Securing bolt for gearbox housing

- ❑ Renew

8 - MTF pump

- ❑ Removing and installing ⇒ 7-speed dual clutch gearbox 0CK; Rep. gr. 34 ; Gear oil circuit; Removing and installing gear oil pump

9 - Bolt

- ❑ Removing and installing ⇒ 7-speed dual clutch gearbox 0CK; Rep. gr. 34 ; Gear oil circuit; Removing and installing gear oil pump

Protected by copyright. Copying for private or commercial purposes, in part or in whole, is not permitted unless authorised by AUDI AG. AUDI AG does not guarantee or accept any liability with respect to the accuracy of the information. Copyright by AUDI AG.

10 - Gearbox housing

- ❑ Removing and installing ⇒ "4.3 Dismantling and assembling gearbox", page 34

11 - Gasket

- ❑ Renew

12 - Oil guide for input shaft

13 - Securing bolt for differential housing

14 - Circlip

- ❑ Renew

15 - Dowel sleeve

16 - Seal

- ❑ Renew

17 - Bolt

- ❑ Renew
- ❑ 15 Nm + 90°

Tightening torque and sequence on gearbox housing

– Tighten bolts in 3 stages in the sequence shown:

Stage	Bolts	Tightening torque
1.	-1 ... 9-	Screw in evenly by hand until bolt head makes contact with gearbox housing
2.	-1 ... 9-	Tighten to 10 Nm + 90° one after another
3.	-Arrow-	Working clockwise, tighten remaining bolts to 10 Nm + 90°

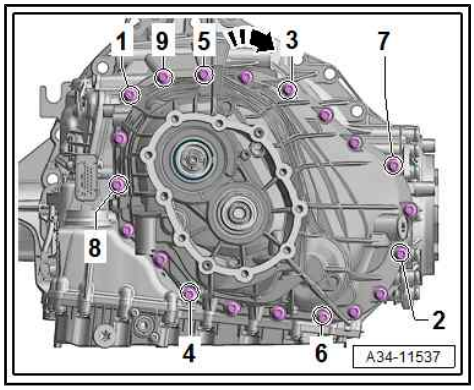

Tightening torque and sequence for gear cluster

– Press in centring sleeve -A- onto stop.

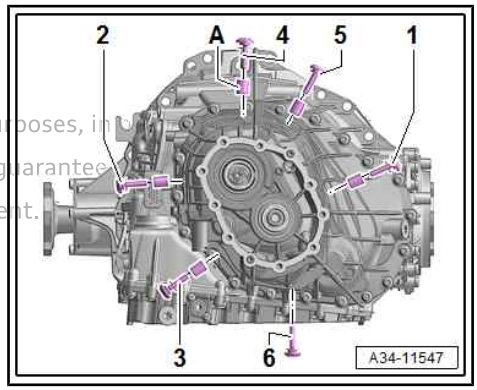

Protected by copyright. Copying for private or commercial purposes, in part or in whole, is not permitted unless authorised by AUDI AG. AUDI AG does not guarantee the correctness of information in this document.

Note

Bolt -6- does not have a centring sleeve.

– Tighten bolts in 2 stages in the sequence shown:

Stage	Bolts	Tightening torque
1.	-1 ... 6-	Screw in evenly by hand until bolt head makes contact with gearbox housing
2.	-1 ... 6-	Tighten to 15 Nm + 90° one after another

4.2 Exploded view - gear cluster

⇒ “4.2.1 Exploded view - gear cluster, vehicles with front-wheel drive”, page 31

⇒ “4.2.2 Exploded view - gear cluster, vehicles with four-wheel drive”, page 32

4.2.1 Exploded view - gear cluster, vehicles with front-wheel drive

Protected by copyright. Copying for private or commercial purposes, in part or in whole, is not permitted unless authorised by AUDI AG. AUDI AG does not guarantee or assume liability with respect to the correctness of information in this document. Copyright by AUDI AG.

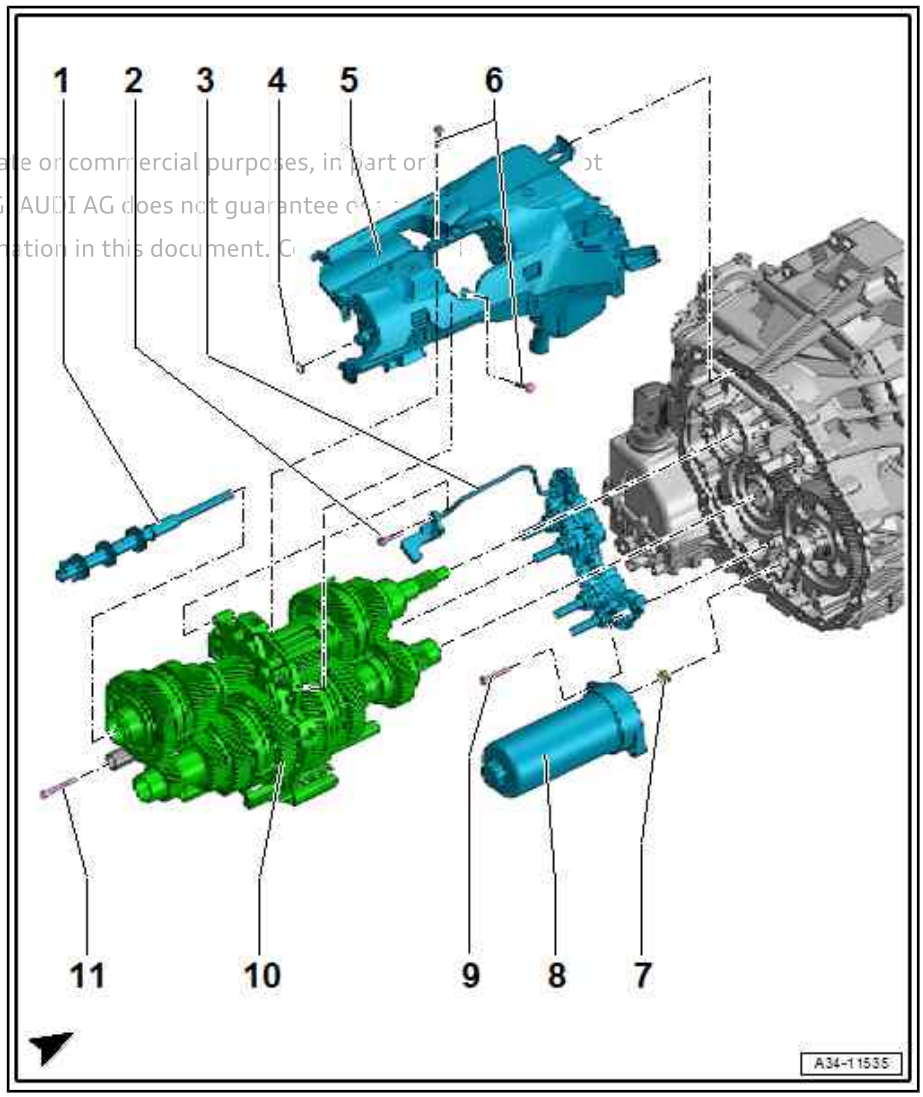

1 - Oil pipe

2 - Bolt
- ❑ Renew
- ❑ M6 × 30
- ❑ 3 Nm + 90°

3 - Gear actuator with:
- ❑ Gearbox input speed sender 1 - G632-
- ❑ Gearbox input speed sender 2 - G612-
- ❑ Gear selector movement sensor 1 - G487-
- ❑ Gear selector movement sensor 2 - G488-
- ❑ Gear selector movement sensor 3 - G489-
- ❑ Gear selector movement sensor 4 - G490-
- ❑ Removing and installing ⇒ “4.3.2 Removing and installing gear actuator module and hydraulic accumulator”, page 45

4 - Seal
- ❑ Renew

5 - Oil pan
- ❑ Renew

6 - Bolt
- ❑ Renew
- ❑ M6 × 30
- ❑ 3 Nm + 90°

7 - Seal
- ❑ Renew

8 - Hydraulic accumulator
- ❑ Observe safety precautions ⇒ “1.3 Deactivating ATF pump and discharging hydraulic accumulator”, page 4
- ❑ Removing and installing ⇒ “4.3.2 Removing and installing gear actuator module and hydraulic accumulator”, page 45
- ❑ Disposal ⇒ “4.3.3 Disposal of hydraulic accumulator”, page 48

9 - Bolts
- ❑ Renew
- ❑ M6 × 30
- ❑ 3 Nm + 90°

10 - Gear cluster

- ❑ Removing and installing ⇒ “4.3 Dismantling and assembling gearbox”, page 34

11 - Bolts

- ❑ Selector plates of gear actuator
- ❑ M6 × 50
- ❑ 6 Nm + 30°

Tightening sequence for gear actuator and accumulator

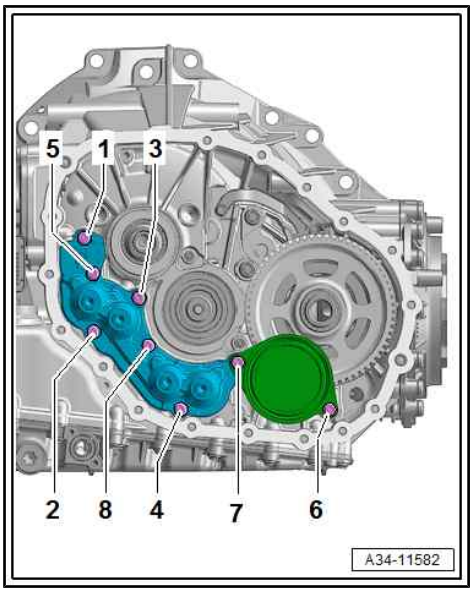

Note

Renew bolts.

– Tighten bolts in 2 stages in the sequence shown:

Stage	Bolts M6 x 30	Tightening torque
1.	-1 ... 8-	3 Nm
2.	-1 ... 8-	90°

4.2.2 Exploded view - gear cluster, vehicles with four-wheel drive

Copyright by AUDI AG. Copying for private or commercial purposes, in part or in whole, is not permitted unless authorized by AUDI AG. AUDI AG does not guarantee or accept any liability with respect to the correctness of information in this document. Copyright by AUDI AG.

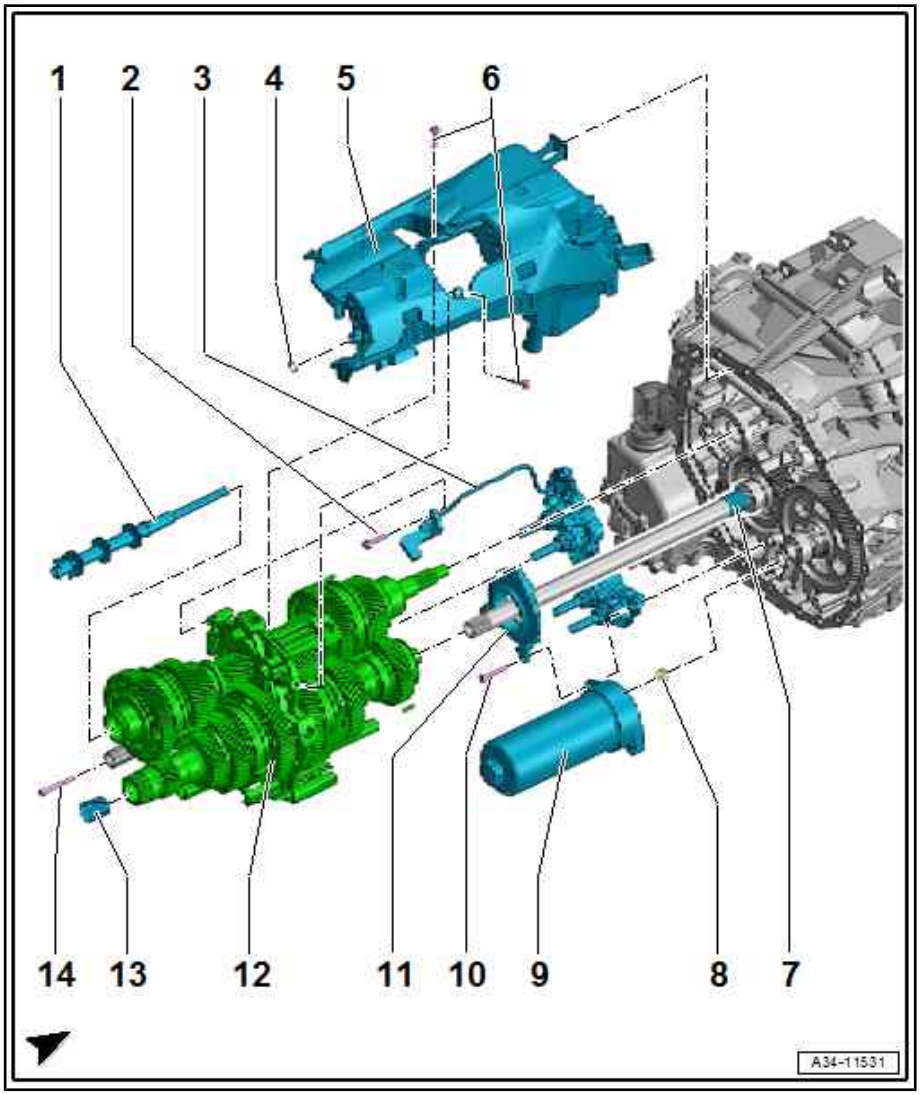

1 - Oil pipe

2 - Bolt

- ❑ Renew
- ❑ M6 × 30
- ❑ 3 Nm + 90°

3 - Gear actuator with:

- ❑ Gearbox input speed sender 1 - G632-
- ❑ Gearbox input speed sender 2 - G612-
- ❑ Gear selector movement sensor 1 - G487-
- ❑ Gear selector movement sensor 2 - G488-
- ❑ Gear selector movement sensor 3 - G489-
- ❑ Gear selector movement sensor 4 - G490-
- ❑ Removing and installing ⇒ “4.3.2 Removing and installing gear actuator module and hydraulic accumulator”, page 45
- ❑ Note tightening sequence ⇒ Fig. ““Tightening sequence for gear actuator, accumulator and intermediate housing”“ , page 34

4 - Seal

- ❑ Renew

5 - Oil pan

- ❑ Renew

6 - Bolts

- ❑ Renew
- ❑ M6 × 30
- ❑ 3 Nm + 90°

7 - Needle bearing

8 - Seal

- ❑ Renew

9 - Hydraulic accumulator

- ❑ Observe safety precautions ⇒ “1.3 Deactivating ATF pump and discharging hydraulic accumulator”, page 4
- ❑ Removing and installing ⇒ “4.3.2 Removing and installing gear actuator module and hydraulic accumulator”, page 45
- ❑ Disposal ⇒ “4.3.3 Disposal of hydraulic accumulator”, page 48
- ❑ Note tightening sequence ⇒ Fig. ““Tightening sequence for gear actuator, accumulator and intermediate housing”“ , page 34

10 - Bolts

- ❑ Renew
- ❑ Note tightening sequence ⇒ Fig. ““Tightening sequence for gear actuator, accumulator and intermediate housing”“ , page 34

Protected by copyright. Copying for private or commercial purposes, in part or in whole, is not permitted unless authorised by AUDI AG. AUDI AG does not guarantee or accept any liability with respect to the correctness of information in this document. Copyright by AUDI AG.

11 - Bearing mounting with roller bearing

- ❑ Note tightening sequence
  ⇒ Fig. ""Tightening sequence for gear actuator, accumulator and intermediate housing"" , page 34

12 - Gear cluster

- ❑ Removing and installing ⇒ "4.3 Dismantling and assembling gearbox", page 34

13 - Needle bearing

14 - Bolts

- ❑ Selector plates of gear actuator
- ❑ M6 × 50
- ❑ 6 Nm + 30°

Tightening sequence for gear actuator, accumulator and intermediate housing

– Tighten bolts in 4 stages in the sequence shown:

Stage	Bolts	Tightening torque
1.	-1 ... 9-	3 Nm
2.	-1 ... 6-	90° (M6 × 30)
3.	-7 ... 9-	5 Nm
4.	-7 ... 9-	120° (M6 × 40)

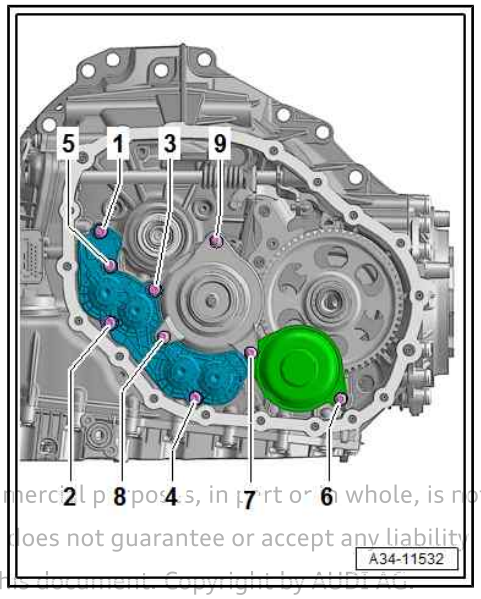

Protected by copyright. Copying for private or commercial purposes, in part or in whole, is not permitted unless authorised by AUDI AG. AUDI AG does not guarantee or accept any liability with respect to the correctness of information in this document. Copyright by AUDI AG.

4.3 Dismantling and assembling gearbox

WARNING

System is pressurised.

- *The electric ATF pump must always be deactivated and the hydraulic accumulator must be discharged before opening the gearbox.*
- *See also*
  ⇒ "1.3 Deactivating ATF pump and discharging hydraulic accumulator", page 4 .

⇒ "4.3.1 Removing and installing gear cluster", page 34

4.3.1 Removing and installing gear cluster

Special tools and workshop equipment required

- Separating tool - T40323-

Protected by copyright. Copying for private or commercial purposes, in part or in whole, is not permitted unless authorised by AUDI AG. AUDI AG does not guarantee or accept any liability with respect to the correctness of information in this document. Copyright by AUDI AG.

- Assembly tool - T40305-

- Multi-purpose tool - VW771-

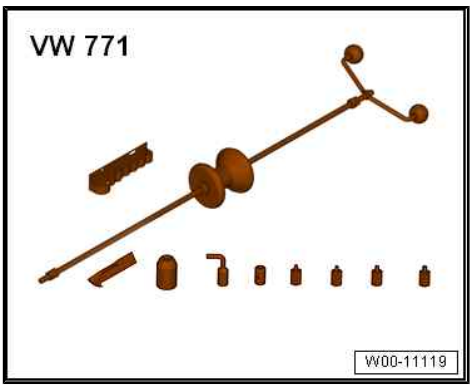

- Assembly tool - T40213/1/2/3-

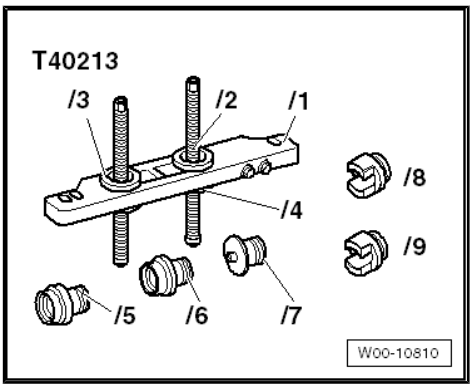

- Retaining strap - T40155-

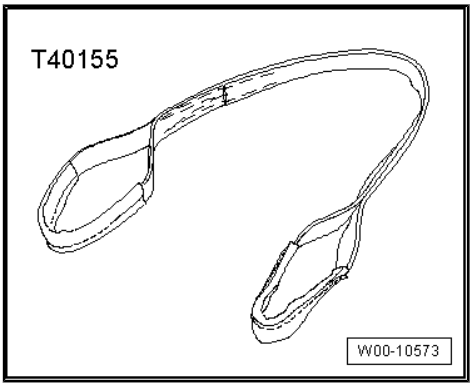

- Shackle - 10-222A/12-

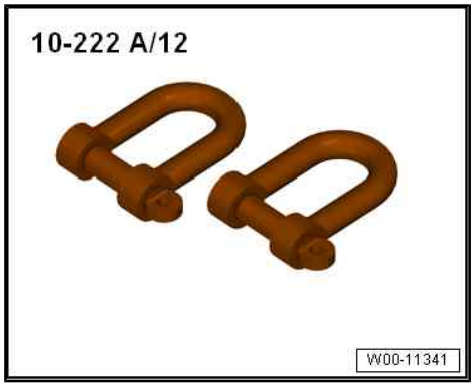

- Workshop hoist - VAS 6100-

- Hub grease cap puller - VW637/2-

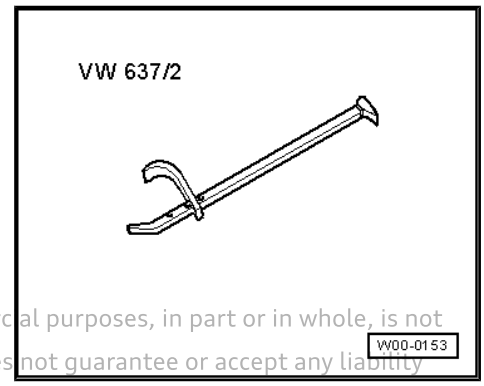

Protected by copyright. Copying for private or commercial purposes, in part or in whole, is not permitted unless authorised by AUDI AG. AUDI AG does not guarantee or accept any liability with respect to the correctness of information in this document. Copyright by AUDI AG.

- Hot air blower - VAS 1978/14A-

> **Caution**
>
> *Risk of damage to gearbox if ATF and gear oil (MTF) mix via shared breather opening.*
>
> - *ATF and gear oil (MTF) must be drained.*

Removing

– Drain ATF ⇒ Rep. gr. 34 ; ATF; Draining and filling ATF .

– Drain MTF ⇒ Rep. gr. 34 ; Gear oil; Draining and filling gear oil .

– Remove clutch
⇒ “1.3 Removing and installing dual clutch”, page 10 .

– Turn gearbox support - T40206- to rotate gearbox by 180°.

Front-wheel drive vehicles

– Remove end cover by chiselling it open in the centre and pulling it out with hub grease cap puller - VW637/2- , as shown.

– Detach oil collector -1-.

Protected by copyright. Copying for private or commercial purposes, in part or in whole, is not permitted unless authorised by AUDI AG. AUDI AG does not guarantee or accept any liability with respect to the correctness of information in this document. Copyright by AUDI AG.

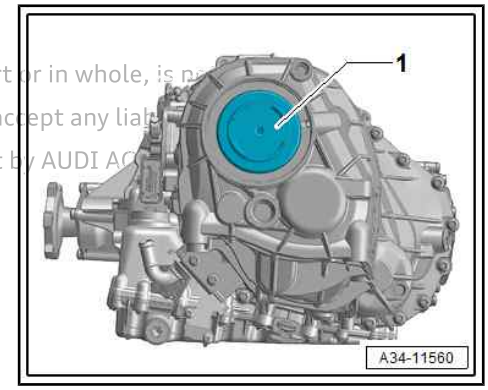

Vehicles with four-wheel drive

– Remove four-wheel drive coupling/centre differential.

⇒ 7-speed dual clutch gearbox 0CJ, 0CK, 0CL, 0DN; Rep. gr. 39 ; Centre differential; Removing and installing centre differential

⇒ 7-speed dual clutch gearbox 0CJ, 0CK, 0CL, 0DN; Rep. gr. 39 ; Four-wheel drive coupling; Removing and installing four-wheel drive coupling

– Detach oil collector -1-.

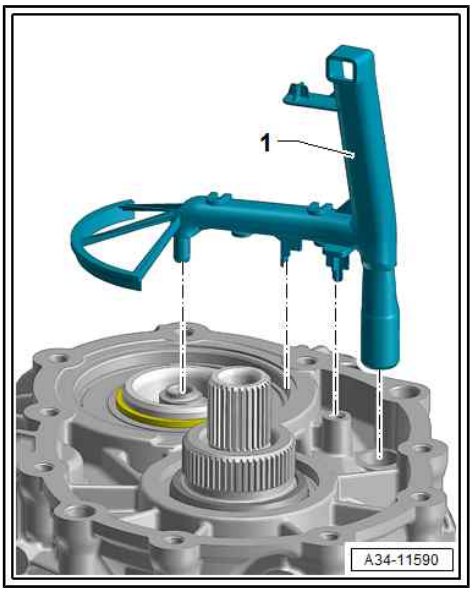

All vehicles

– Remove circlip -1-.

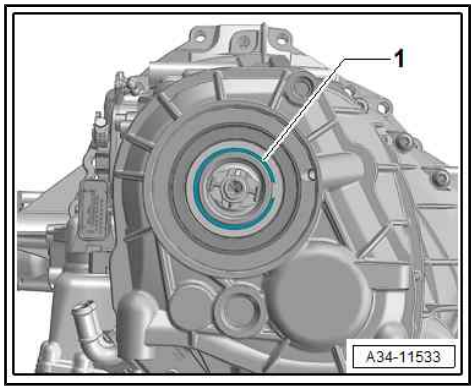

– Remove bolts -1 … 6-.

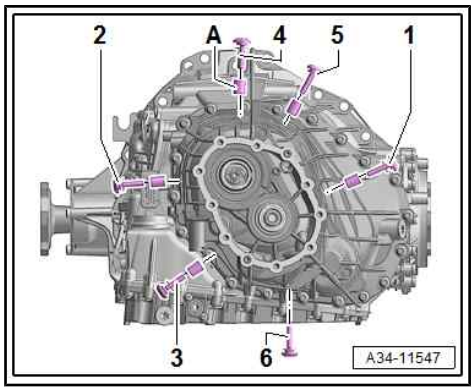

– Pull out all five centring sleeves -arrow- using multi-purpose tool - VW771-.

Protected by copyright. Copying for private or commercial purposes, in part or whole, is not permitted unless authorised by AUDI AG. AUDI AG does not guarantee or assume liability with respect to the correctness of information in this document. Copyright

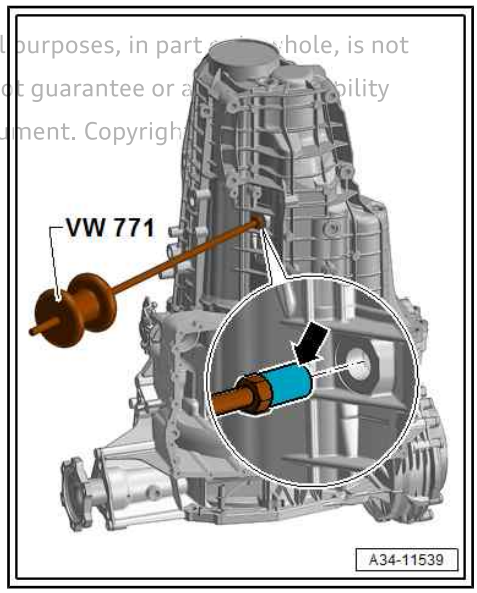

Note

Bolt -6- does not have a centring sleeve.

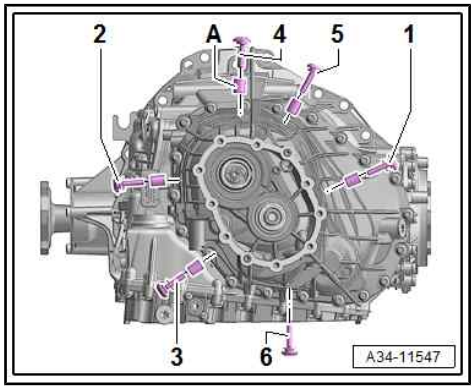

– Remove bolts for gearbox housing.

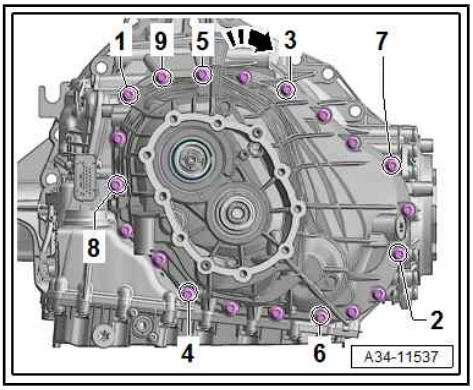

– Detach gearbox housing with separating tool - T40323- .

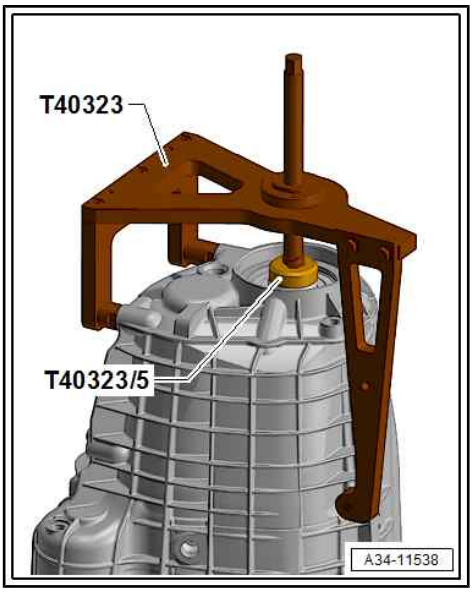

– Assemble a 1/4" tool with Torx T30 and flexible extension as shown in illustration.

Protected by copyright. Copying for private or commercial purposes, in part or in whole, is not permitted unless authorised by AUDI AG. AUDI AG does not guarantee or accept any liability with respect to the correctness of information in this document. Copyright by AUDI AG.

– Remove bolts for gear actuators -arrows-.

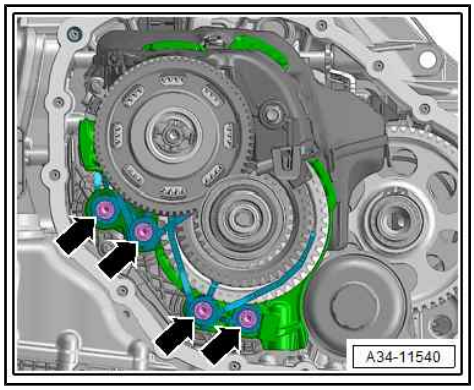

– Unscrew bolt for gearbox input speed sender 1 - G632- -arrow A- and remove electrical wire from oil pan -arrow B-.

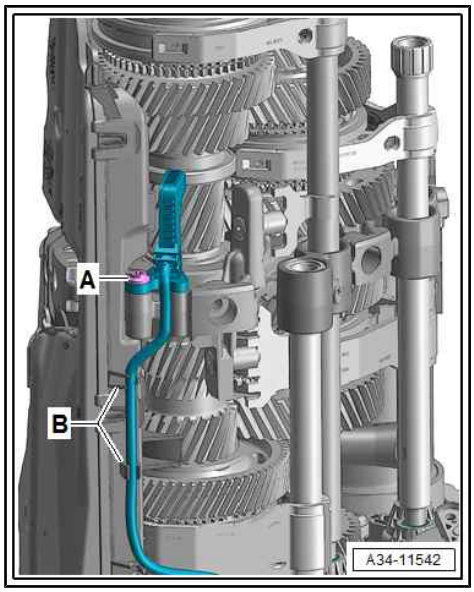

– Secure retaining strap - T40155- and shackle - 10-222A/12- to gear cluster as shown, and pull it slowly and carefully out of gearbox housing using workshop hoist - VAS 6100- .

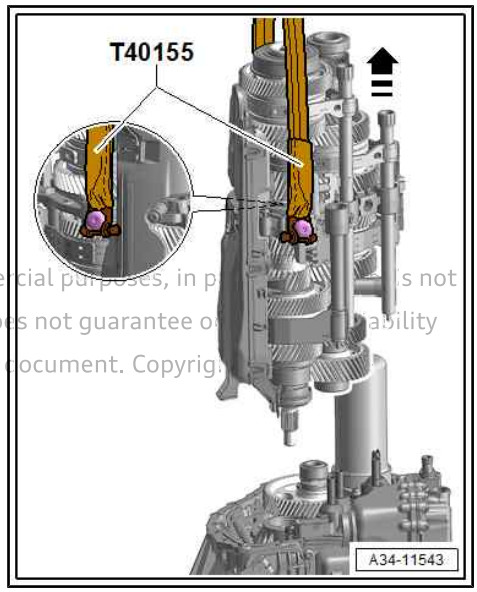

Protected by copyright. Copying for private or commercial purposes, in part or in whole, is not permitted unless authorised by AUDI AG. AUDI AG does not guarantee or assume any liability with respect to the correctness of information in this document. Copyright by AUDI AG.

Note

When pulling the gear cluster out on gearboxes with centre differential, ensure that the two bearings -arrows- do not fall out.

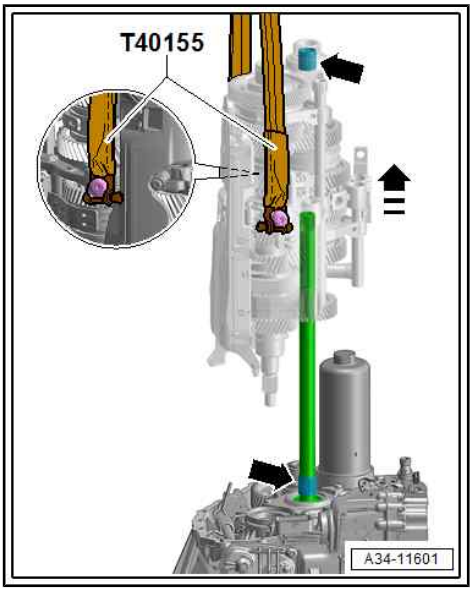

Installing

– Bring gear actuators into basic setting position.
– To do so, simultaneously push and turn gear actuators by hand until they engage, then centre within available backlash.

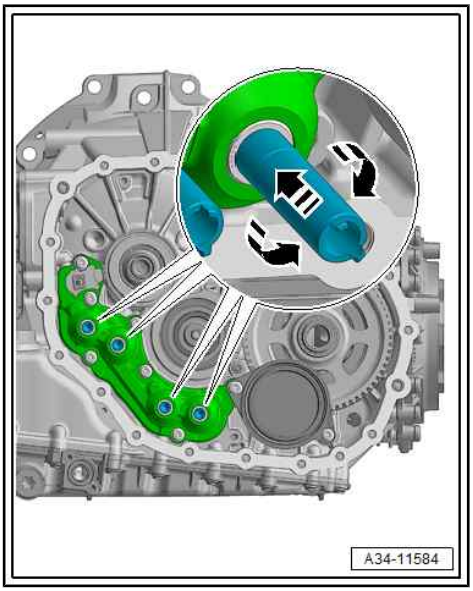

Gearboxes with centre differential:

– Check that needle bearing -arrow- is fitted.

Protected by copyright. Copying for private or commercial purposes, in part or in whole is not permitted unless authorised by AUDI AG. AUDI AG does not guarantee or accept any liability with respect to the correctness of information in this document. Copyright by AUDI AG.

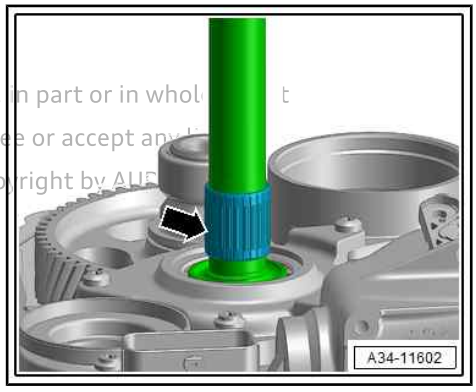

All gearbox versions:

– Carefully insert gear cluster.

– Guide mounting points and gear actuators -arrows- together evenly.

Protected by copyright. Copying for private or commercial purposes, in par
permitted unless authorised by AUDI AG. AUDI AG does not guarante
with respect to the correctness of information in this document.

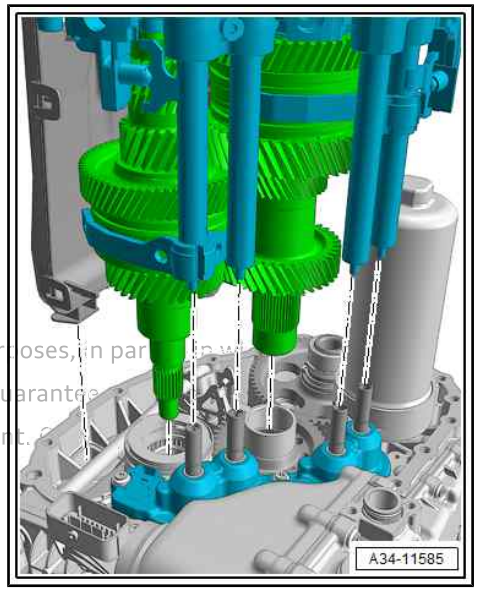

Gearboxes with centre differential:

– Install needle bearing -arrow-.

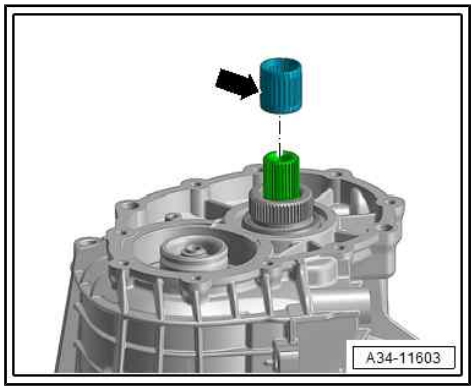

All gearbox versions:

– Tighten gear actuators -arrows- hand-tight.

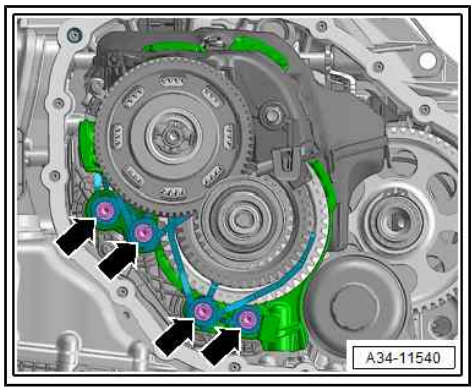

Protected by copyright. Copying for private or commercial purposes, in part or in whole, is not permitted unless authorised by AUDI AG. AUDI AG does not warrant or accept any liability with respect to the correctness of information in this document. Copyright by AUDI AG.

- Gear actuators are fitted correctly if distance -X- is approx. 2 mm.
  - Tighten bolts for gear actuators to specified torque
    ⇒ “4.2.1 Exploded view - gear cluster, vehicles with front-wheel drive”, page 31 .

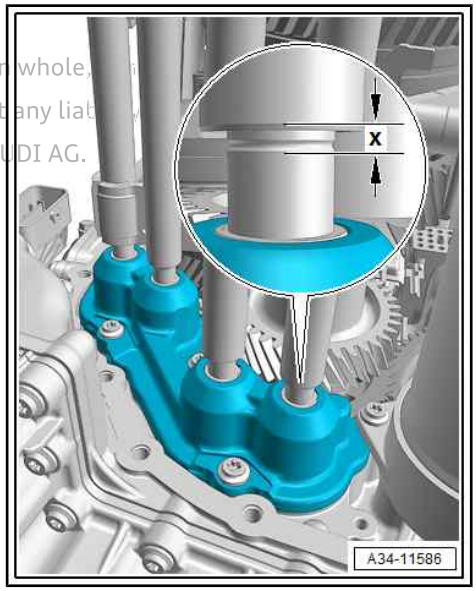

- Install gearbox input speed sender 1 - G632- and tighten bolt -A-
  ⇒ “4.2.1 Exploded view - gear cluster, vehicles with front-wheel drive”, page 31 .
- Fit electrical wire in retainers -B-, ensuring that it is routed correctly.

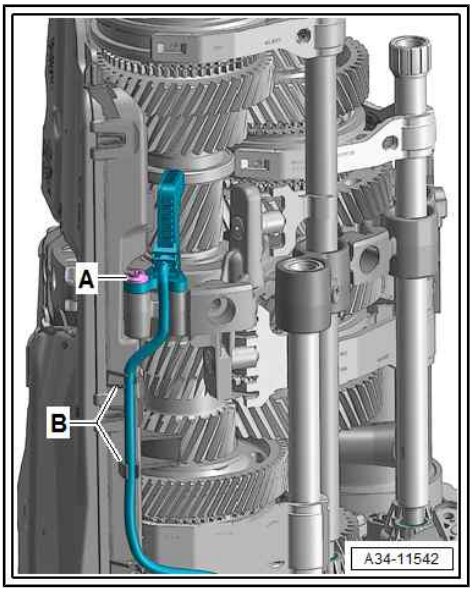

- Fit assembly tool - T40213A- onto gearbox.

Note

This step is necessary to ensure that bearing “E” in gearbox housing can be fitted correctly on shaft.

- Screw in spindle of assembly tool - T40213A- by hand until input shaft is raised by approx. 2 to 3 mm and there is slight resistance when turning spindle.
- Fit new seal and check that both centring pins are fitted.

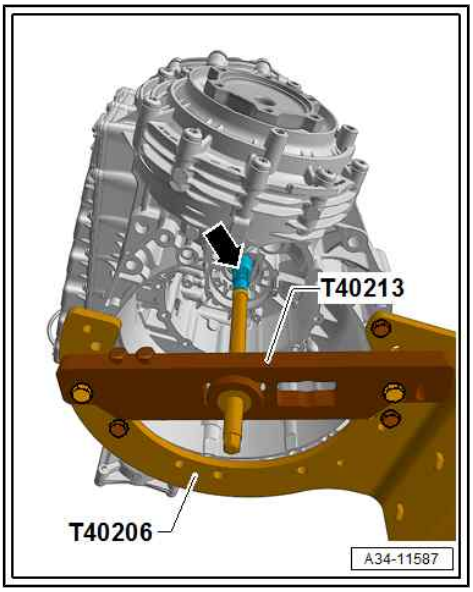

– Heat inner race of bearing “E” -arrow- to max. 100°C using hot air blower - VAS 1978/14A- .

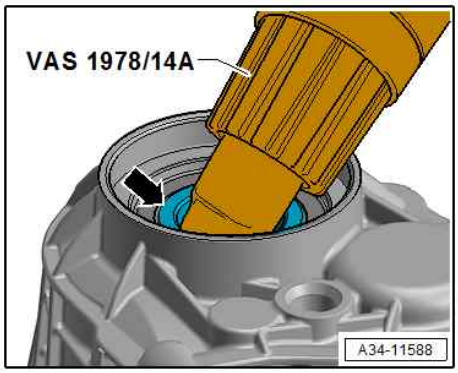

Caution

Risk of damage to bearing seal

- *Only heat the bearing inner race!*

– Fit together gearbox housing and gearbox.

– Fit new circlip -1- for bearing “E”.

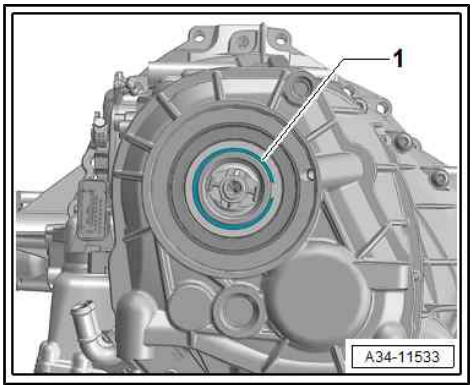

Note

- *There are two installation dimensions for the circlip.*
- *If bearing “E” was not renewed, install a new circlip with the same dimension as the old circlip.*
- *If bearing “E” was renewed, use the largest circlip that can be installed.*

– Remove assembly tool - T40213A- from gearbox.

– Secure gearbox housing with new bolts. Tightening sequence and torque
⇒ “4.1.1 Exploded view - gearbox, vehicles with front-wheel drive”, page 27

– Tighten bolts for gearbox housing in specified sequence
⇒ Fig. ““Tightening torque and sequence on gearbox housing”“ , page 28 .

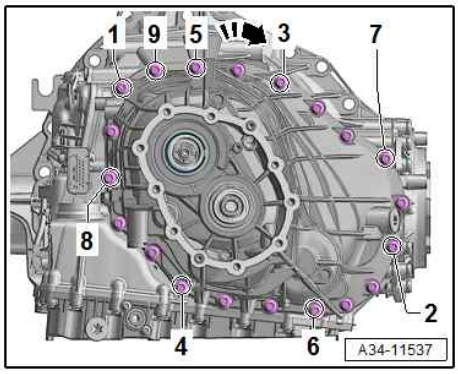

– Press in centring sleeve -A- for gear cluster onto stop.

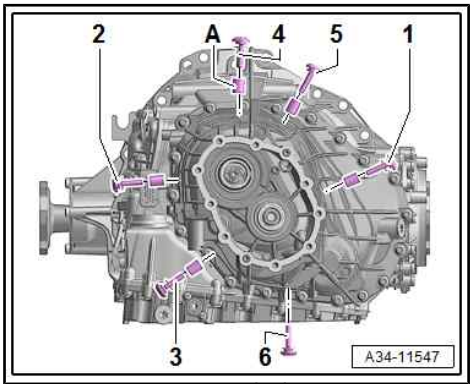

Note

Bolt -6- does not have a centring sleeve.

– Tighten new bolts -1 ... 6- for gear cluster in specified sequence
⇒ Fig. ““Tightening torque and sequence for gear cluster”“ , page 28 .

Protected by copyright. Copying for private or commercial purposes, in part or in whole, is not permitted unless authorised by AUDI AG. AUDI AG does not guarantee or accept any liability with respect to the correctness of information in this document. Copyright by AUDI AG.

Protected by copyright. Copying for private or commercial purposes, in part or whole, is not permitted unless authorised by AUDI AG. AUDI AG does not guarantee or assume any liability with respect to the correctness of information in this document. Copy

Gearbox versions with front-wheel drive or four-wheel drive coupling

– Install oil collector -1-.

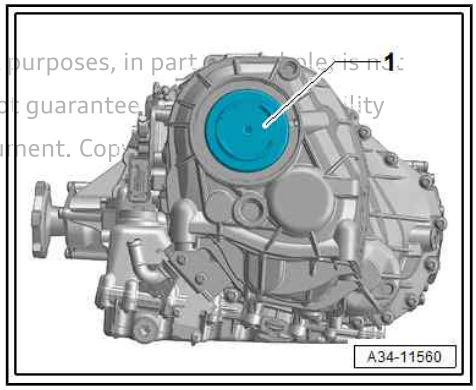

– Press in new end cover with separating tool - T40323- .

> ⚠ **Caution**
>
> *Risk of oil loss due to improper installation.*
>
> - *The end cover must be fitted "dry"; DO NOT use adhesive of any kind.*
> - *Keep end cover in place with separating tool - T40323- for 10 minutes.*

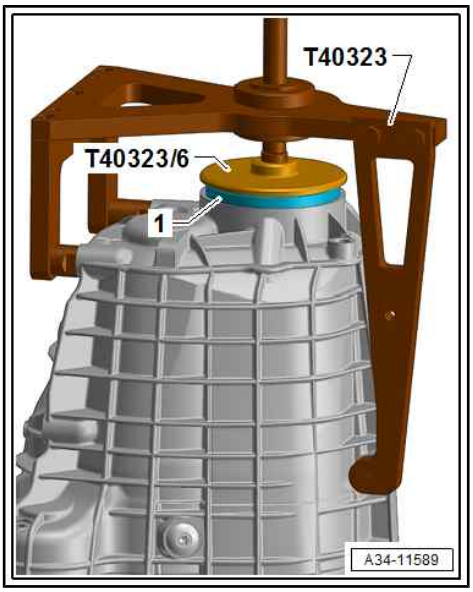

Gearbox versions with centre differential

– Install oil collector -1-.

– Install centre differential/four-wheel drive coupling:

⇒ 7-speed dual clutch gearbox 0CJ, 0CK, 0CL, 0DN; Rep. gr. 39 ; Centre differential; Removing and installing centre differential

⇒ 7-speed dual clutch gearbox 0CJ, 0CK, 0CL, 0DN; Rep. gr. 39 ; Four-wheel drive coupling; Removing and installing four-wheel drive coupling

All vehicles

– Install clutch
⇒ "1.3 Removing and installing dual clutch", page 10 .

– Fill up ATF ⇒ Rep. gr. 34 ; ATF; Draining and filling ATF .

– Fill up MTF ⇒ Rep. gr. 34 ; Gear oil; Draining and filling gear oil .

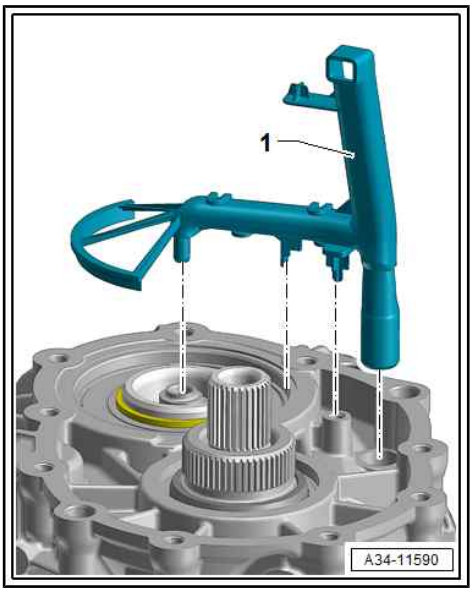

4.3.2 Removing and installing gear actuator module and hydraulic accumulator

– Remove oil pan
⇒ "9.5 Removing and installing oil pan", page 59 .

– Remove gear cluster
⇒ "4.3.1 Removing and installing gear cluster", page 34 .

– Use assembly tool - T40305- to unplug electrical connector -arrow-.

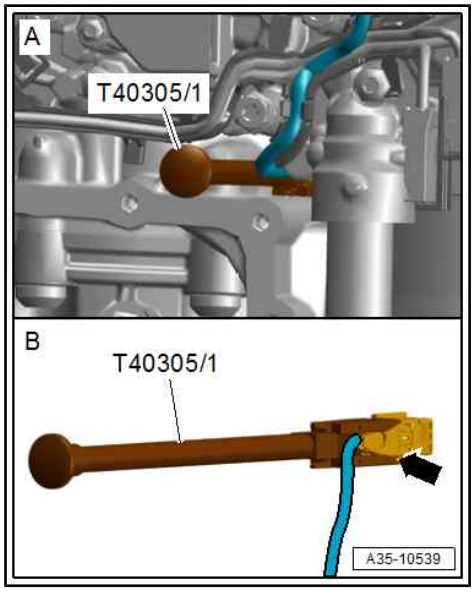

Front-wheel drive vehicles

– Loosen (but do not remove) bolts -arrow- securing hydraulic accumulator.

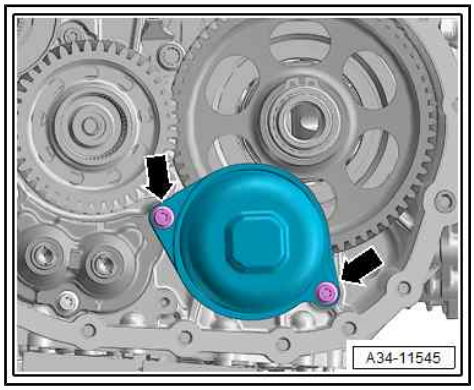

Note

- *If the hydraulic accumulator lifts up when the securing bolts are loosened, the ATF system is still pressurised.*
- *In this case, loosen the bolts of the mechatronic unit very slightly to allow the pressure in the ATF system to dissipate via the sealing surfaces.*
- *See also*
  ⇒ "1.3 Deactivating ATF pump and discharging hydraulic accumulator", page 4 .

Copyright. Copying for private or commercial purposes, in part or in whole, is not permitted unless authorised by AUDI AG. AUDI AG does not guarantee or accept any liability with respect to the correctness of information in this document. Copyright by AUDI AG.

– Remove bolts -arrows- and detach hydraulic accumulator.

Vehicles with four-wheel drive

– Loosen (but do not remove) bolts -arrow- securing hydraulic accumulator and bearing mounting.

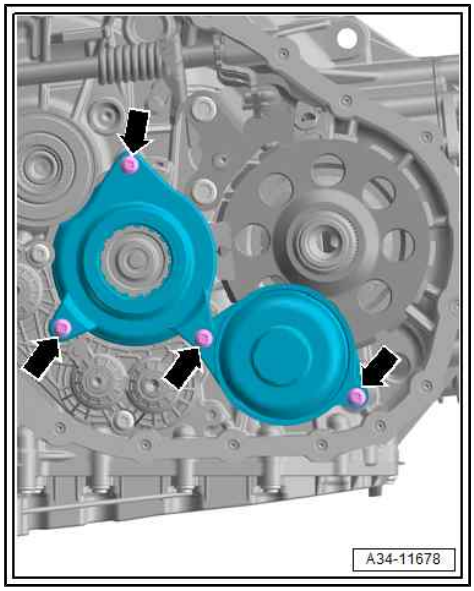

Note

- *If the hydraulic accumulator lifts up when the securing bolts are loosened, the ATF system is still pressurised.*
- *In this case, loosen the bolts of the mechatronic unit very slightly to allow the pressure in the ATF system to dissipate via the sealing surfaces.*
- *See also*
  ⇒ "1.3 Deactivating ATF pump and discharging hydraulic accumulator", page 4 .

– Remove bolts -arrows- and detach bearing mounting and hydraulic accumulator.

All vehicles

– Remove bolts -1 to 6- and detach gear actuator module.

Protected by copyright. Copying for private or commercial purposes, in pa
permitted unless authorised by AUDI AG. AUDI AG does not guarantee or
with respect to the correctness of information in this document. Copyrigh

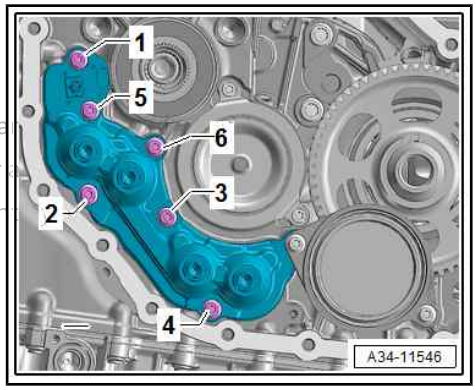

Installing

– Fit gear actuator module and hand-tighten securing bolts in the sequence -1...6-.

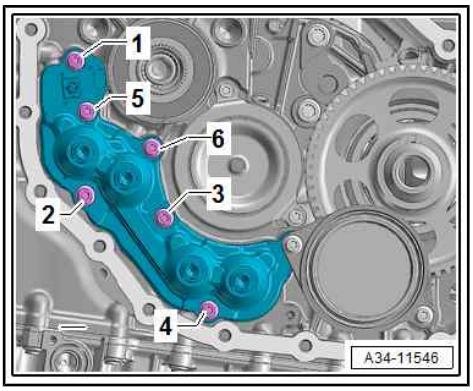

– Before installing hydraulic accumulator, coat seals and oil drilling with ATF.

– Guide hydraulic accumulator carefully and evenly into oil drilling and tighten bolts -arrows- hand-tight.

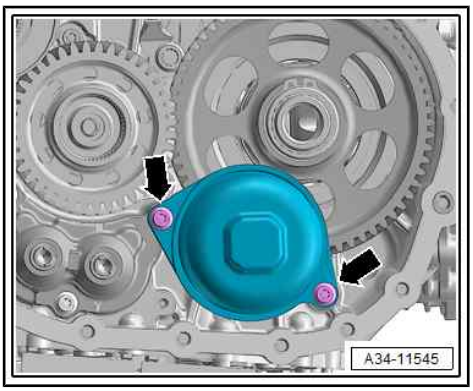

Note

– Tighten bolts for gear actuators and hydraulic accumulator to specified torque; front-wheel drive vehicles
⇒ Fig. ""Tightening sequence for gear actuator and accumulator"" , page 32 .

– Tighten bolts for gear actuators and hydraulic accumulator to specified torque; four-wheel drive vehicles
⇒ Fig. ""Tightening sequence for gear actuator, accumulator and intermediate housing"" , page 34 .

– Bring gear actuators into basic setting position.

– To do so, simultaneously push and turn gear actuators by hand until they engage, then centre within available backlash.

– Install gear cluster
⇒ “4.3.1 Removing and installing gear cluster”, page 34 .

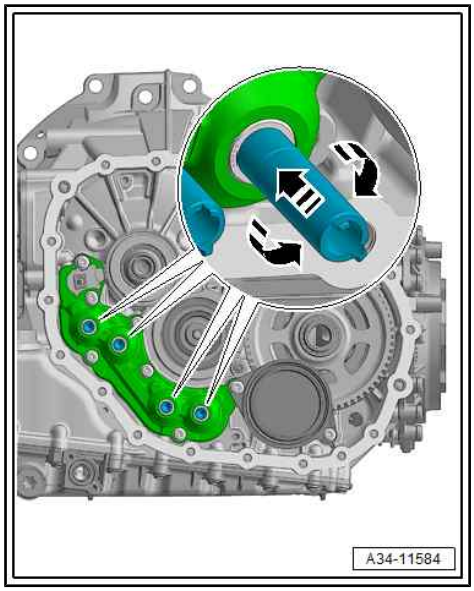

– Plug in electrical connector using assembly tool - T40305- .

– Install oil pan
⇒ “9.5 Removing and installing oil pan”, page 59 .

• After gear actuator has been installed, gear selector movement sensors - G487/G488/G489/G490- must be calibrated using ⇒ Vehicle diagnostic tester.

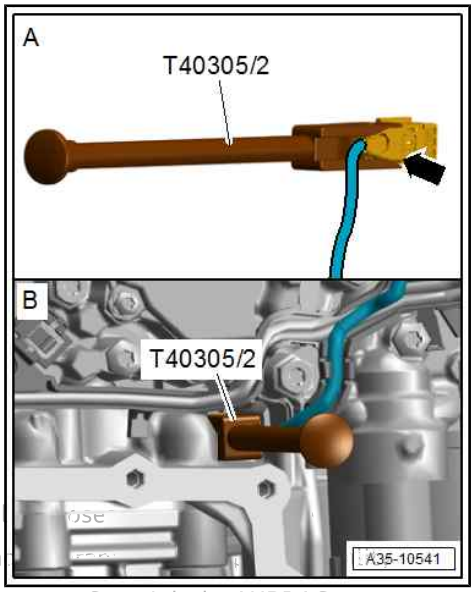

Procedure

– Connect ⇒ Vehicle diagnostic tester.

– Select `Diagnosis` mode and begin diagnosis.

– Select `Test plan` tab.

– Choose `Select own test` and select following options one after the other:

♦ Drive system

♦ 7-speed dual clutch gearbox 0CK/0CL

♦ 01 - Self-diagnosis compatible systems

♦ 02 - Gearbox electronics 0CK

♦ 02 - Gearbox electronics, functions

♦ 02 - Basic setting

♦ ⇒ Calibration of travel sensors

Protected by copyright. Copying for private or commercial purpose
permitted unless authorised by AUDI AG. AUDI AG does not
with respect to the correctness of information in this document. Copyright by AUDI AG.

4.3.3 Disposal of hydraulic accumulator

Note

♦ *The hydraulic accumulator fitted here is a closed hollow container that has been pressurised by filling it with nitrogen gas.*

♦ *As it is not permitted to dispose of containers of this kind in the normal way without having opened them, the hydraulic accumulator must be emptied prior to disposal.*

– Remove hydraulic accumulator
⇒ “4.3 Dismantling and assembling gearbox”, page 34 .

WARNING

System is pressurised.

- *Wear safety goggles and ear protection when dissipating the pressure in the accumulator.*
- *When the drill penetrates the gas-filled chamber, the internal pressure may send metal particles flying.*

Protected by copyright. Copying for private or commercial purposes, in part or in whole, is not permitted unless authorised by AUDI AG. AUDI AG does not guarantee or accept any liability with respect to the correctness of information in this document. Copyright by AUDI AG.

– Secure hydraulic accumulator in a vice.
– Using a ∅ 3 mm drill bit, drill all the way through at a distance of approx. 25 mm -x- from top surface of square protrusion.
– De-pressurised hydraulic accumulator can then be disposed of in the normal way.

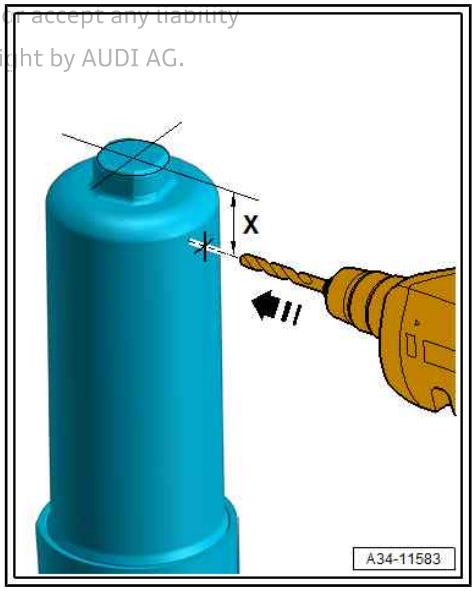

5 Gear oil circuit

⇒ “5.1 Overview - gear oil circuit”, page 50

⇒ “5.2 Removing and installing gear oil pump”, page 50

5.1 Overview - gear oil circuit

1 - Plug

- ❑ For ATF inspection and filler hole
- ❑ Renew after removal
- ❑ 8 Nm +30°

2 - Plug

- ❑ For MTF inspection and filler hole
- ❑ Renew after removal
- ❑ 35 Nm

3 - Gear oil pump (MTF pump)

- ❑ With welded gasket
- ❑ Must be removed to drain gear oil (MTF)
- ❑ Renew gear oil pump if gasket is damaged
- ❑ Removing and installing ⇒ Rep. gr. 34 ; Gear oil circuit; Removing and installing gear oil pump

4 - Bolt

- ❑ Renew after removal
- ❑ 3 Nm +90°

5 - Drain plug

- ❑ For ATF
- ❑ Renew after removal
- ❑ 35 Nm

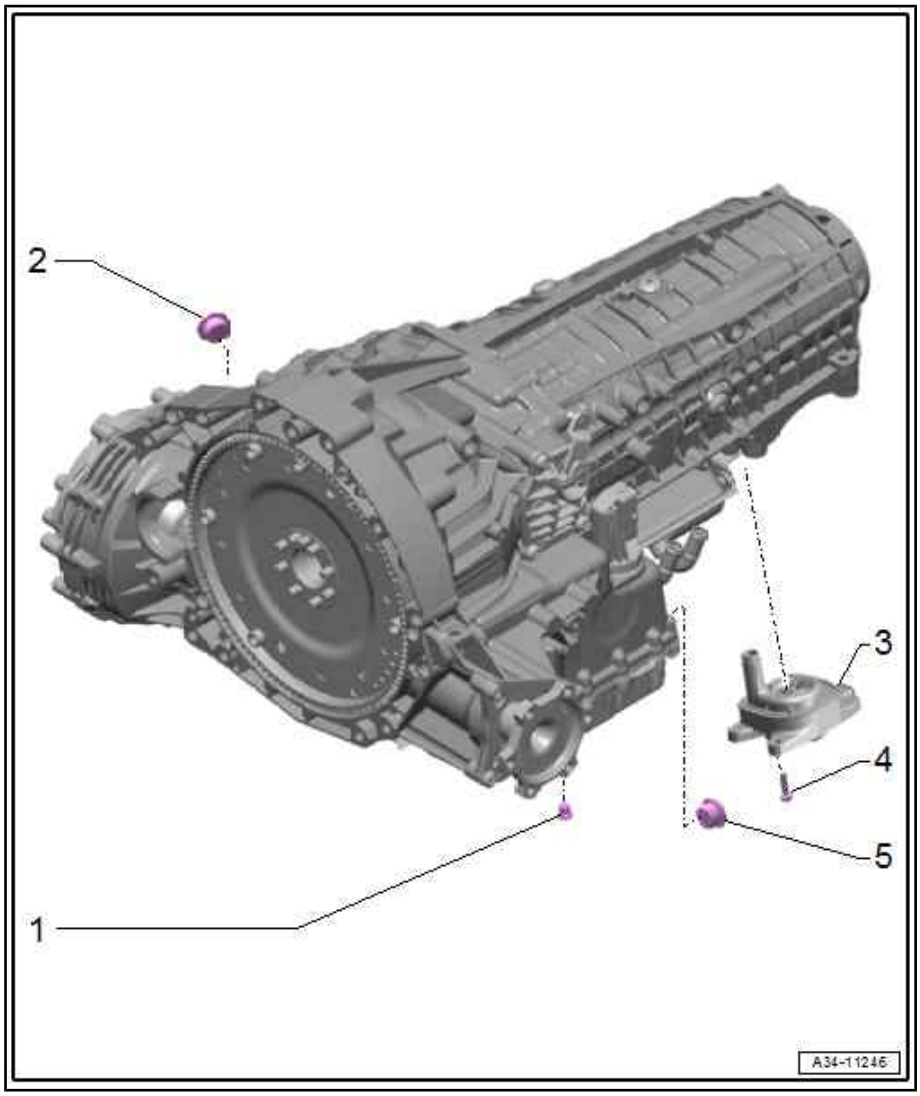

5.2 Removing and installing gear oil pump

The chapter on removing and installing the gear oil pump can be found in Workshop Manual »7-speed dual clutch gearbox 0CK«.

⇒ Rep. gr. 34 ; Gear oil circuit; Removing and installing gear oil pump

Protected by copyright. Copying for private or commercial purposes, in part or in whole, is not permitted unless authorised by AUDI AG. AUDI AG does not guarantee or accept any liability with respect to the correctness of information in this document. Copyright by AUDI AG.

6 ATF circuit

All work on the ATF circuit can be found in Workshop Manual »7-speed dual clutch gearbox 0CK«.

⇒ 7-speed dual clutch gearbox 0CK; Rep. gr. 34 ; ATF circuit

Protected by copyright. Copying for private or commercial purposes, in part or in whole, is not permitted unless authorised by AUDI AG. AUDI AG does not guarantee or accept any liability with respect to the correctness of information in this document. Copyright by AUDI AG.

7 Gear oil

All work relating to gear oil can be found in Workshop Manual »7-speed dual clutch gearbox 0CK«.

⇒ 7-speed dual clutch gearbox 0CK; Rep. gr. 34 ; Gear oil

Protected by copyright. Copying for private or commercial purposes, in part or in whole, is not permitted unless authorised by AUDI AG. AUDI AG does not guarantee or accept any liability with respect to the correctness of information in this document. Copyright by AUDI AG.

8 ATF

All work related to checking ATF level and draining and filling up ATF can be found in Workshop Manual »7-speed dual clutch gearbox 0CK«.

⇒ 7-speed dual clutch gearbox 0CK; Rep. gr. 34 ; ATF; Checking ATF level

⇒ 7-speed dual clutch gearbox 0CK; Rep. gr. 34 ; ATF; Draining and filling ATF

Protected by copyright. Copying for private or commercial purposes, in part or in whole, is not permitted unless authorised by AUDI AG. AUDI AG does not guarantee or accept any liability with respect to the correctness of information in this document. Copyright by AUDI AG.

9 Mechatronic unit

⇒ “9.1 Exploded view - mechatronic unit”, page 54

⇒ “9.2 Exploded view - valve body”, page 56

⇒ “9.4 Exploded view - automatic gearbox control unit J217 ”, page 59

⇒ “9.5 Removing and installing oil pan”, page 59

⇒ “9.6 Removing and installing mechatronic unit”, page 62

⇒ “9.7 Removing and installing automatic gearbox control unit J217 ”, page 69

⇒ “9.9 Removing and installing hydraulic pressure sender 1 G545 and hydraulic pressure sender 2 G546 ”, page 76

⇒ “9.10 Removing and installing gearbox auxiliary hydraulic pump V552 ”, page 78

9.1 Exploded view - mechatronic unit

Protected by copyright. Copying f is not permitted unless authorised by AUDI AG. A any liability with respect to the correctness of information in y AUDI AG.

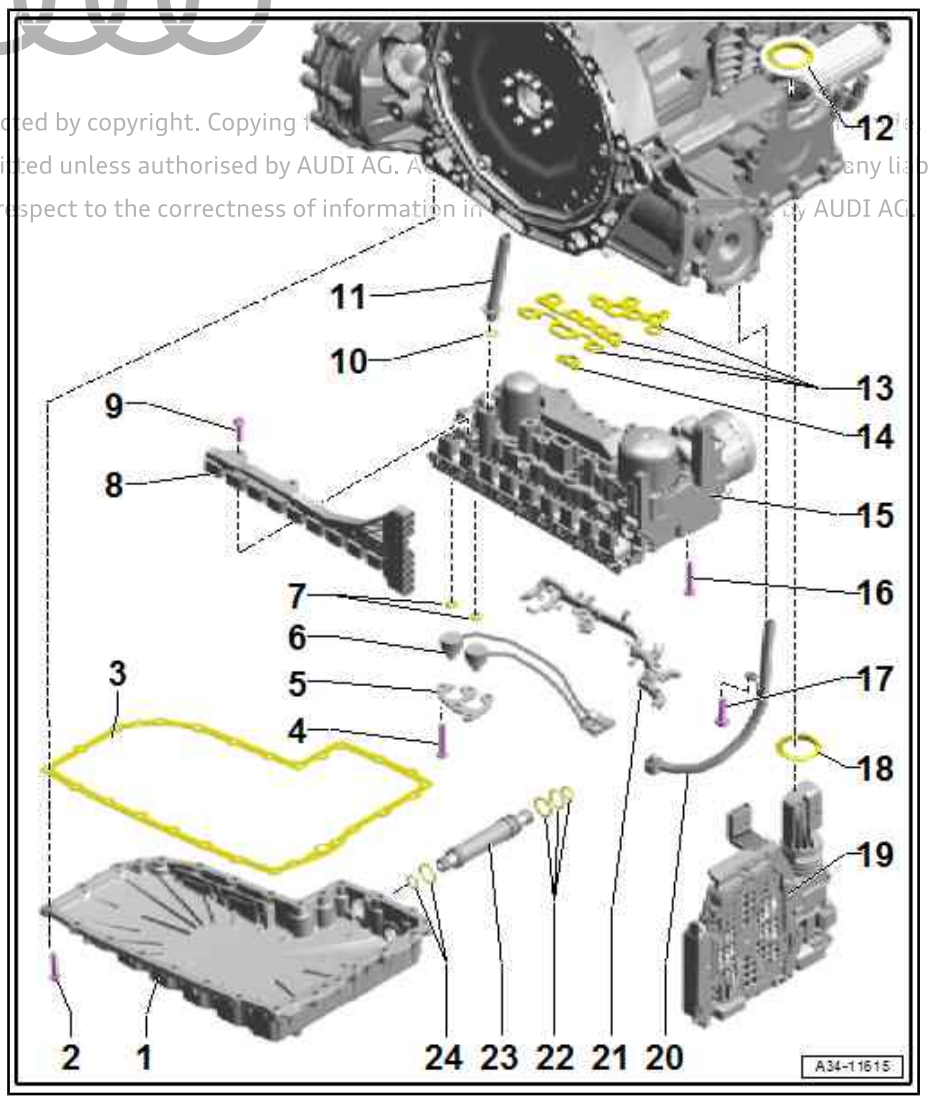

1 - Oil pan

- ❑ Removing and installing ⇒ “9.5 Removing and installing oil pan”, page 59

2 - Bolt

- ❑ M6 × 30
- ❑ Renew after removal
- ❑ Tightening torque and sequence ⇒ Fig. ““Oil pan - tightening torque and sequence”“ , page 56

3 - Gasket

- ❑ Renew after removal

4 - Bolt

- ❑ Renew after removal
- ❑ Tightening torque and sequence ⇒ Fig. ““ Hydraulic pressure sender 1 -G545- and hydraulic pressure sender 2 -G546- - tightening torque and sequence”“ , page 56

5 - Bracket

6 - Hydraulic pressure sender 1 - G545- and hydraulic pressure sender 2 - G546-

- ❑ Removing and installing ⇒ “9.9 Removing and installing hydraulic pressure sender 1 G545 and hydraulic pressure sender 2 G546 ”, page 76

7 - Oil seals

- ❑ Renew after removal

8 - Contact element

9 - Bolt

- ❑ Renew
- ❑ M6 × 25
- ❑ 3 Nm + 90°

10 - O-ring

- ❑ Renew after removal

11 - Breather pipe

12 - Dust ring

13 - Gaskets

- ❑ Renew after removal

14 - Gasket

- ❑ Renew after removal
- ❑ Depends on model
- ❑ For vehicles with parking lock solenoid - N486-

15 - Mechatronic unit

- ❑ Removing and installing ⇒ “9.6 Removing and installing mechatronic unit”, page 62

16 - Bolts for mechatronic unit

- ❑ M6 × 90
- ❑ ⇒ Fig. ““Mechatronic unit - tightening torque and sequence”“ , page 56

17 - Bolt

- ❑ Renew
- ❑ M6 × 22
- ❑ 3 Nm + 90°
- ❑ For vehicles with parking lock solenoid - N486-

18 - Seal

- ❑ Renew after removal

19 - Automatic gearbox control unit - J217-

20 - Oil pipe

- ❑ Depends on model
- ❑ For vehicles with parking lock solenoid - N486-

21 - Wiring

- ❑ Renew after removal

22 - Seals

- ❑ Renew after removal

23 - ATF pipe

- ❑ Renew after removal

24 - Seals

- ❑ Renew after removal

Protected by copyright. Copying for private or commercial purposes, in part or in whole, is not permitted unless authorised by AUDI AG. AUDI AG does not guarantee or accept any liability with respect to the correctness of information in this document. Copyright by AUDI AG.

Oil pan - tightening torque and sequence

Stage	Bolts	Tightening torque/angle specification
1.	-1 … 25-	Screw in by hand until contact is made
2.	-1 … 25-	3 Nm
3.	-1 … 25-	Turn 90° further

Protected by copyright. Copying for private or commercial purposes, in part or in whole, is not permitted unless authorised by AUDI AG. AUDI AG does not make any representation or warranty with respect to the correctness of information in this docu

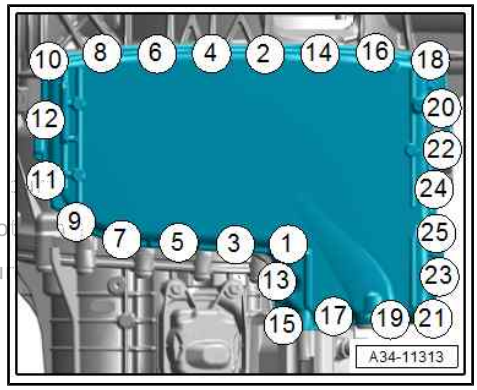

Mechatronic unit - tightening torque and sequence

Stage	Bolts	Tightening torque/angle specification
1.	-1 … 7-	Screw in by hand until contact is made
2.	-1 … 7-	8 Nm
3.	-1 … 7-	Turn 120° further

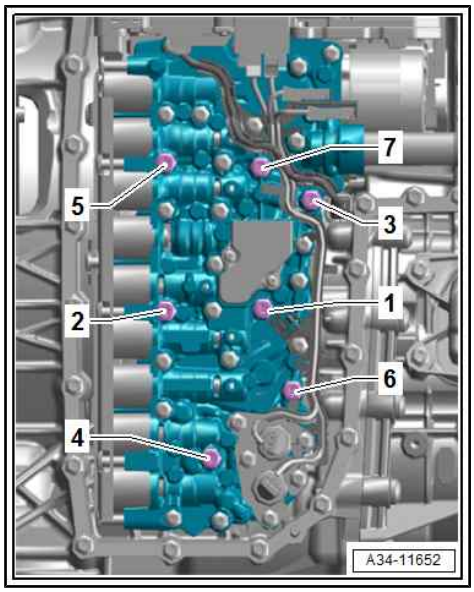

Hydraulic pressure sender 1 - G545- and hydraulic pressure sender 2 - G546- - tightening torque and sequence

Stage	Bolts	Tightening torque/angle specification
1.	-1 … 7-	Screw in by hand until contact is made
2.	-1 … 7-	8 Nm
3.	-1 … 7-	Turn 120° further

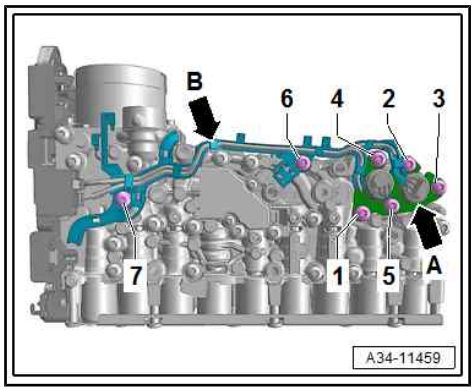

9.2 Exploded view - valve body

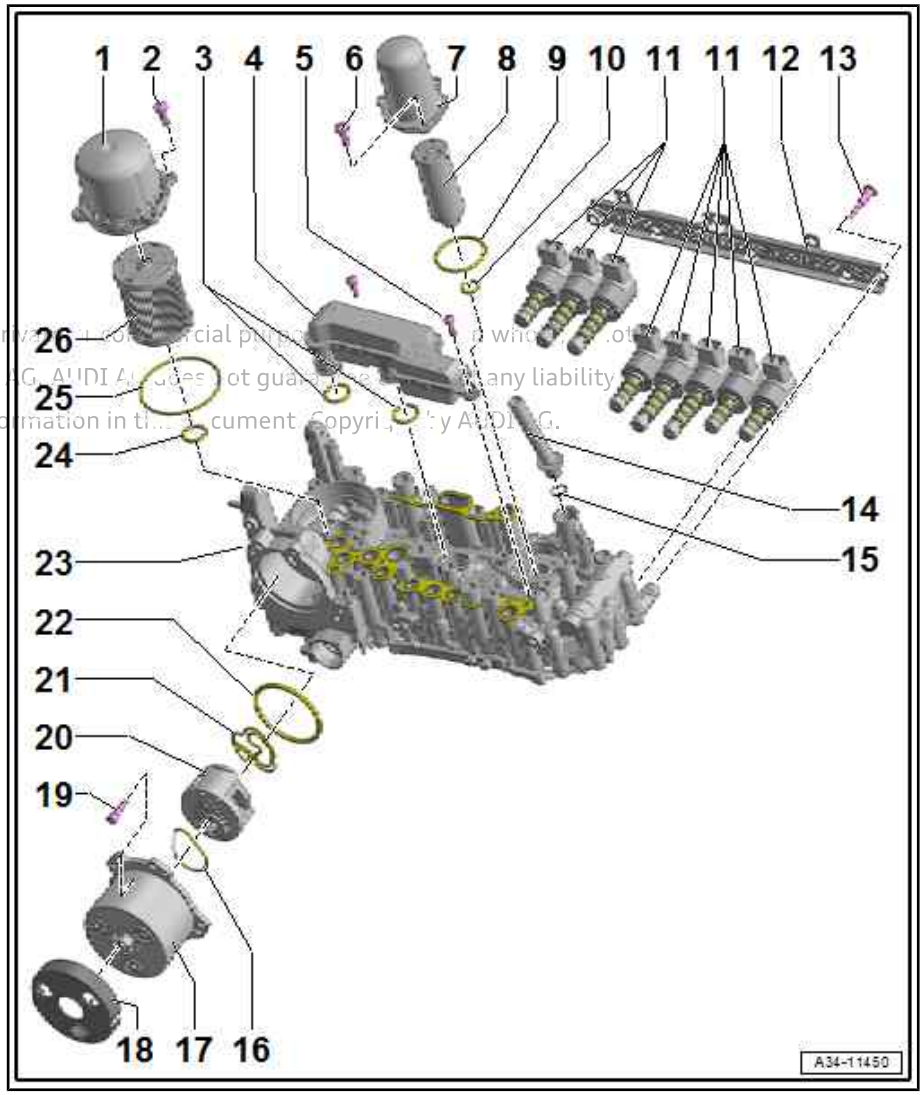

1 - Filter housing cover (low-pressure end)

2 - Bolt
- ❑ 4x
- ❑ M6 × 20

3 - Seal

4 - Intake filter

5 - Bolt
- ❑ 2x
- ❑ M5 × 18

6 - Bolt
- ❑ 3x
- ❑ M6 × 20

7 - Filter housing cover (high-pressure end)

8 - High-pressure filter

9 - Seal

10 - Seal

11 - Valve units
- ❑ Removing and installing ⇒ “9.11 Removing and installing solenoid valves and pressure regulating valves in valve body”, page 81

12 - Attachment for valve units

13 - Bolt
- ❑ 8x
- ❑ M4 × 35

14 - Breather pipe

15 - Seal

16 - Seal

17 - Motor for gearbox auxiliary hydraulic pump - V552-
- ❑ Removing and installing ⇒ “9.10 Removing and installing gearbox auxiliary hydraulic pump V552 ”, page 78

18 - Cover

19 - Bolt
- ❑ 4x
- ❑ M5 × 22
- ❑ 4 Nm + 45°

20 - Pump for gearbox auxiliary hydraulic pump - V552-
- ❑ Removing and installing ⇒ “9.10 Removing and installing gearbox auxiliary hydraulic pump V552 ”, page 78

21 - Gasket

22 - Seal

23 - Valve body
- ❑ Removing and installing: Refer to procedure for removing automatic gearbox control unit - J217- ⇒ “9.7 Removing and installing automatic gearbox control unit J217 ”, page 69 .

Protected by copyright. Copying for private or commercial purposes, in whole or in part, is not permitted unless authorised by AUDI AG. AUDI AG does not guarantee or assume any liability with respect to the correctness of information in this document. Copyright by AUDI AG.

24 - Seal

25 - Seal

26 - Low pressure filter

Protected by copyright. Copying for private or commercial purposes, in part or in whole, is not permitted unless authorised by AUDI AG. AUDI AG does not guarantee or accept any liability with respect to the correctness of information in this document. Copyright by AUDI AG.

9.3 Exploded view - solenoid valves and pressure regulating valves in valve body

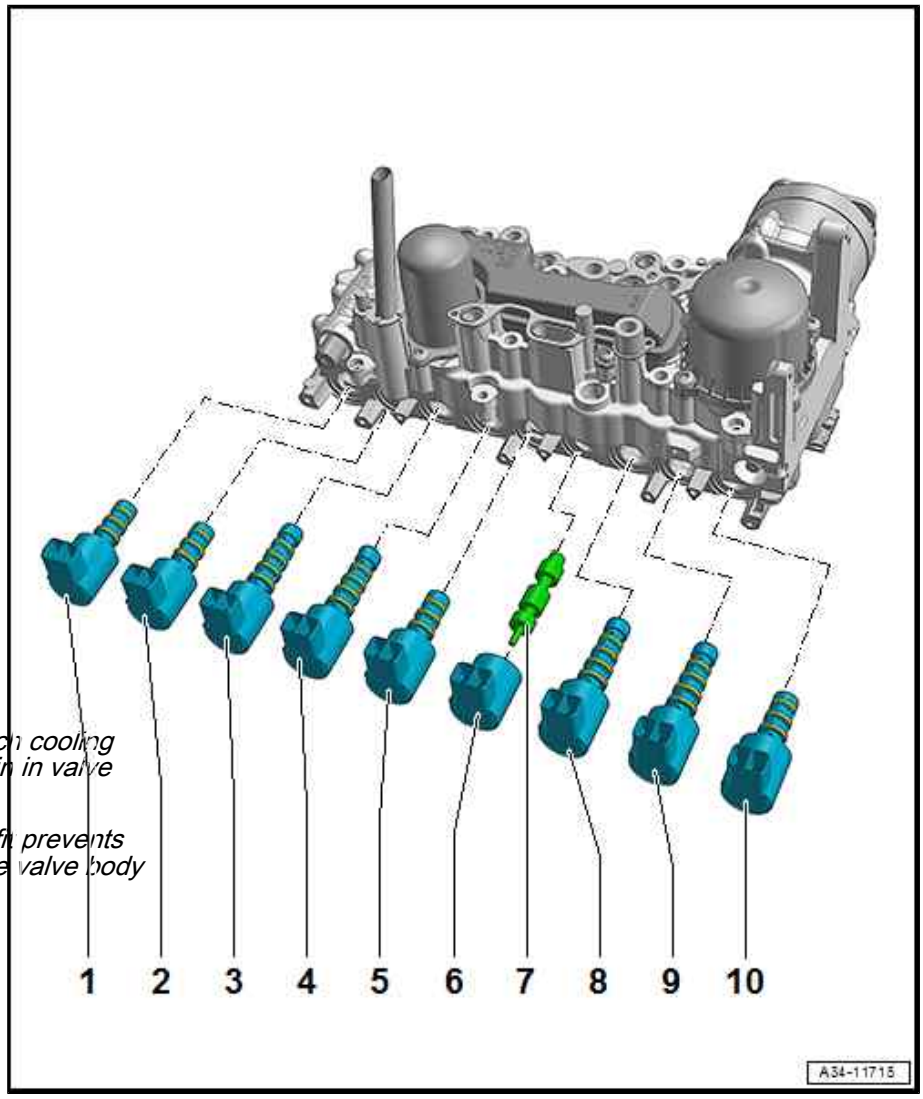

1 - Automatic gearbox pressure regulating valve 1 - N215-

- ❑ Clutch pressure regulating valve 1

2 - Automatic gearbox pressure regulating valve 2 - N216-

- ❑ Clutch pressure regulating valve 2

3 - Solenoid valve 2 - N89-

- ❑ Gear actuator 2-R

4 - Solenoid valve 1 - N88-

- ❑ Gear actuator 1-3

5 - Solenoid valve 6 - N93-

- ❑ Clutch safety valve

6 - Solenoid valve 5 - N92-

- ❑ For clutch cooling valve

7 - Clutch cooling valve

Note

- ♦ *Do not remove clutch cooling valve; it must remain in valve body.*
- ♦ *The highly precise fit prevents re-installation as the valve body would be damaged.*

8 - Solenoid valve 3 - N90-

- ❑ Gear actuator 5-7

9 - Solenoid valve 4 - N91-

- ❑ Gear actuator 4-6

10 - Automatic gearbox pressure regulating valve 3 - N217-

- ❑ Gear actuator pressure regulating valve

Note

Check that required replacement parts are available before performing repairs ⇒ Electronic parts catalogue .

⇒ “9.11 Removing and installing solenoid valves and pressure regulating valves in valve body”, page 81

9.4 Exploded view - automatic gearbox control unit - J217-

1 - Seal

2 - Seal

- ❑ Renew after removal

3 - Valve body

- ❑ ⇒ “9.2 Exploded view - valve body”, page 56

4 - Bolt

- ❑ 3x
- ❑ Renew
- ❑ 5 Nm +20°

5 - Cover

6 - Automatic gearbox control unit - J217-

- ❑ Removing and installing ⇒ “9.7 Removing and installing automatic gearbox control unit J217 ”, page 69

7 - Bolt

- ❑ 4x
- ❑ Renew
- ❑ 3 Nm +90°

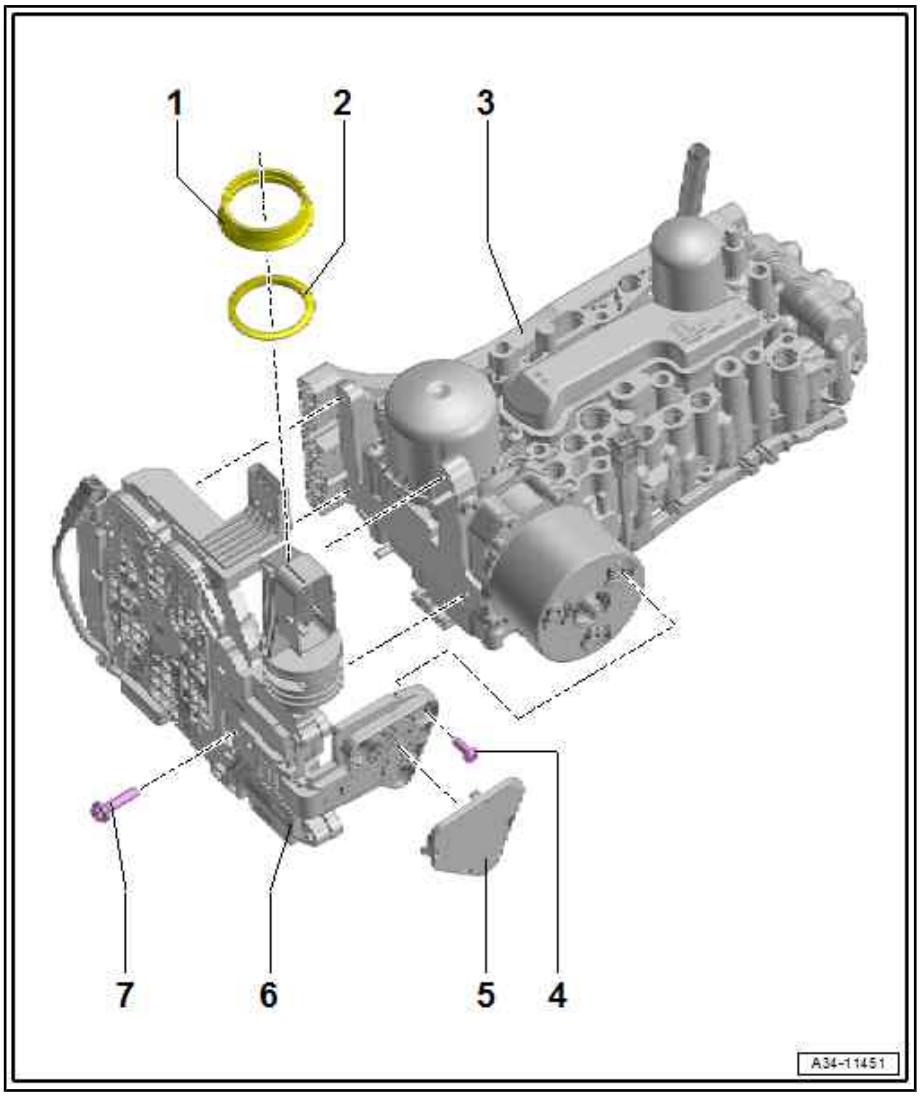

9.5 Removing and installing oil pan

Special tools and workshop equipment required

- Engine bung set - VAS 6122-

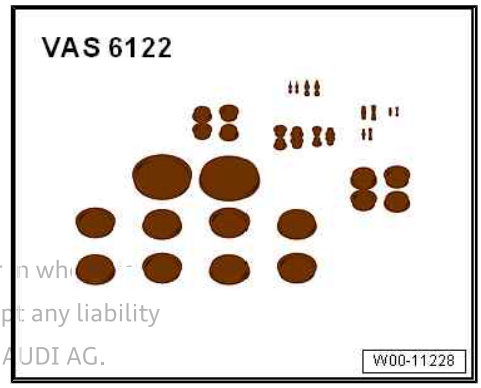

Protected by copyright. Copying for private or commercial purposes, in part or in whole, is not permitted unless authorised by AUDI AG. AUDI AG does not guarantee or accept any liability with respect to the correctness of information in this document. Copyright by AUDI AG.

- Used oil collection and extraction unit - VAS 6622A-

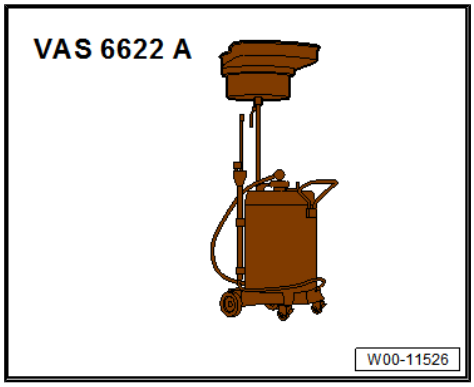

-

Removing

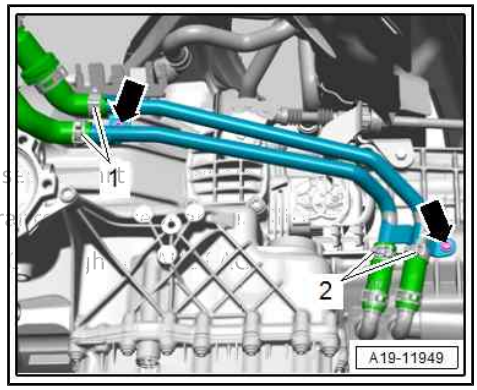

Note

- *General repair instructions ⇒ page 1 .*
- *Rules for cleanliness when working on the dual clutch gearbox ⇒ page 5 .*

Protected by copyright. Copying for private or commercial purposes, in part or in whole, is not permitted unless authorised by AUDI AG. AUDI AG does not guarantee or take any liability with respect to the correctness of information in this document.

WARNING

System is pressurised.

- *Deactivate ATF pump and discharge hydraulic accumulator before removing oil pan.*
- *See also ⇒ "1.3 Deactivating ATF pump and discharging hydraulic accumulator", page 4 .*

Caution

Risk of damage to the gearbox.

- *Do not run the engine or tow the vehicle with the oil pan removed or when there is no gear oil in the gearbox.*

– Remove subframe cross brace ⇒ Running gear, axles, steering; Rep. gr. 40 ; Subframe; Removing and installing subframe cross brace .

– Using ⇒ Vehicle diagnostic tester, discharge ATF accumulator in automatic gearbox control unit - J217- and disable gearbox auxiliary hydraulic pump - V552-
⇒ "1.3 Deactivating ATF pump and discharging hydraulic accumulator", page 4 .

– Drain ATF ⇒ 7-speed dual clutch gearbox 0CK; Rep. gr. 34 ; ATF; Draining and filling ATF .

– Remove bolts -arrows-.

Note

Coolant hoses -2- remain connected to ATF cooler.

– Remove bolts -arrows- and detach guard plate -1-.

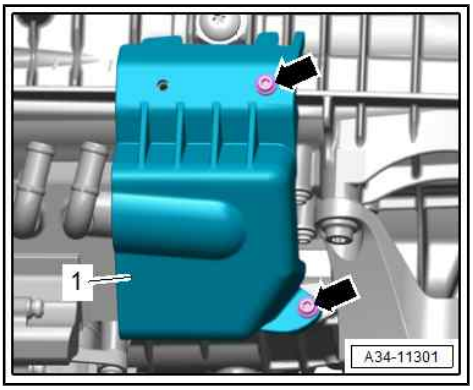

– Place used oil collection and extraction unit - VAS 6622A- underneath.
– Only slacken bolts -2- (but do not remove) and remove bolts -1, 3-.

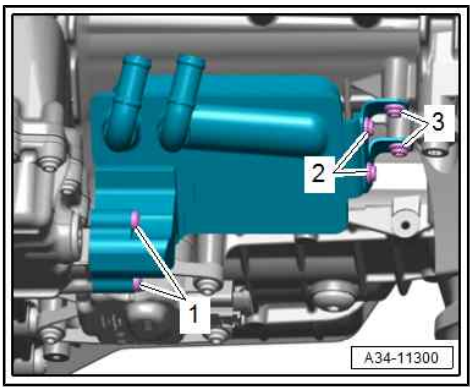

– Pull ATF cooler -2- out of oil pan and hang up at side, ensuring that ATF pipe -1- remains fitted on oil pan.
– Pull ATF pipe -1- out of oil pan.
– Seal off open lines and connections with clean plugs from engine bung set - VAS 6122- .

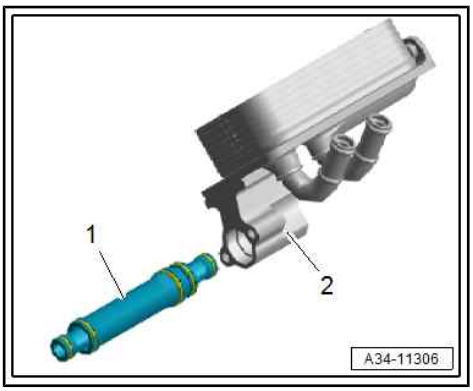

– Remove bolts in the sequence -25 ... 1- and detach oil pan.

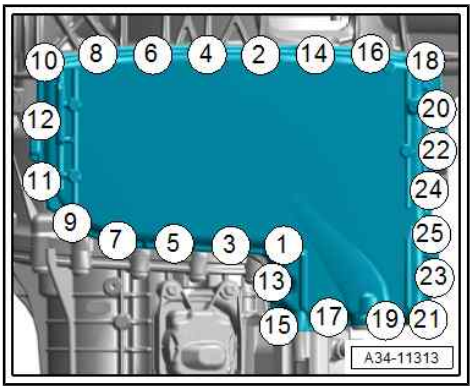

Installing

Installation is carried out in reverse order; note the following:

Note

Renew seal and ATF pipe.

Protected by copyright. Copying for private or commercial purposes, in part or in whole, is not permitted unless authorised by AUDI AG. AUDI AG does not guarantee or accept any liability with respect to the correctness of information in this document. Copyright by AUDI AG.

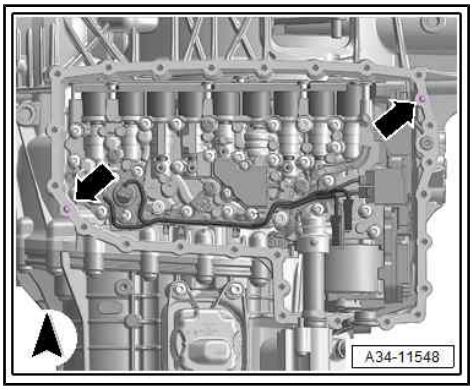

Note

- *For vehicles with an aluminium oil pan, a plastic oil pan is available as a replacement part.*
- *If a different type is installed, the two centring pins -arrow- must be removed from the gearbox housing.*
- *Ensure that the sealing surface is not damaged when doing so.*

– Install ATF cooler ⇒ 7-speed dual clutch gearbox 0CK; Rep. gr. 34 ; ATF circuit; Removing and installing ATF cooler .

– Fill up ATF ⇒ 7-speed dual clutch gearbox 0CK; Rep. gr. 34 ; ATF; Draining and filling ATF .

Protected by copyright. Copying for private or commercial purposes, in part or in whole, is not permitted unless authorised by AUDI AG. AUDI AG does not guarantee or accept any liability with respect to the correctness of information in this document. Copyright by AUDI AG.

Tightening torques

- ⇒ Fig. ""Oil pan - tightening torque and sequence"" , page 56
- Subframe cross brace ⇒ Running gear, axles, steering; Rep. gr. 40 ; Subframe; Removing and installing subframe cross brace

9.6 Removing and installing mechatronic unit

Special tools and workshop equipment required

- Used oil collection and extraction unit - V.A.G 1782-

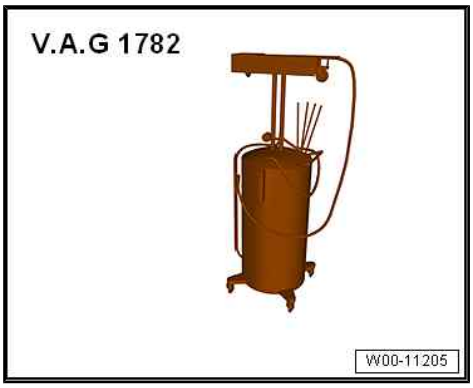

- Assembly tool - T40305-

- Guide pin - T40199-

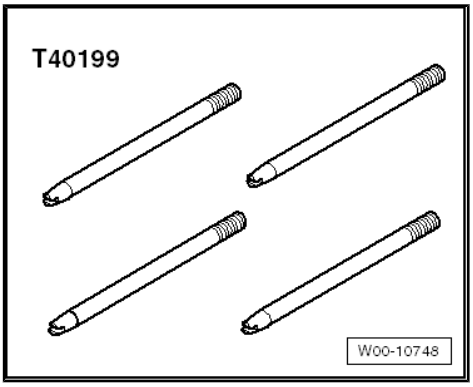

- Torque wrench - VAS 6583-

- Cover - T40322/1-4-

Protected by copyright. Copying for private or commercial purposes, in part or in whole, is not permitted unless authorised by AUDI AG. AUDI AG does not guarantee or assume any liability with respect to the correctness of information in this document. Copyright by AUDI AG.

- Support - T40321-

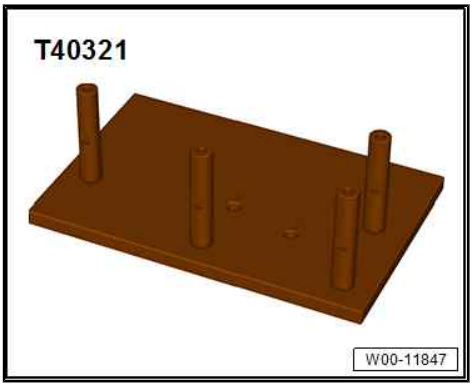

Removing

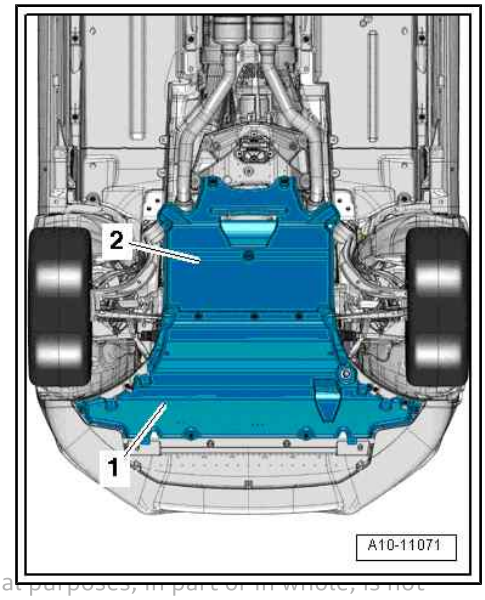

Note

- *General repair instructions ⇒ page 1 .*
- *Rules for cleanliness when working on the dual clutch gearbox ⇒ page 5 .*

WARNING

System is pressurised.

- ***Deactivate ATF pump and discharge hydraulic accumulator before removing mechatronic unit.***
- ***See also ⇒ "1.3 Deactivating ATF pump and discharging hydraulic accumulator", page 4 .***

Protected by copyright. Copying for private or commercial purposes, in part or in whole, is not permitted unless authorised by AUDI AG. AUDI AG does not guarantee or accept any liability with respect to the correctness of information in this document. Copyright by AUDI AG.

Caution

The gearbox control unit (mechatronic unit) can be irreparably damaged by electrostatic discharge.

- ***Before handling electrical connectors, mechanic must discharge static. To do so, touch vehicle earth, heater radiator, or lifting platform, with your hand.***
- ***Do not touch contact pins in gearbox connector with bare hands.***

Gearbox installed

– Remove noise insulation panels -1- and -2- ⇒ General body repairs, exterior; Rep. gr. 66 ; Noise insulation .

– Drain ATF ⇒ 7-speed dual clutch gearbox 0CK; Rep. gr. 34 ; ATF; Draining and filling ATF .

– Switch off ignition and remove ignition key.

– Press catch -arrow B-, pull retaining bracket -2- in direction of arrow -A- and unplug connector -1-.

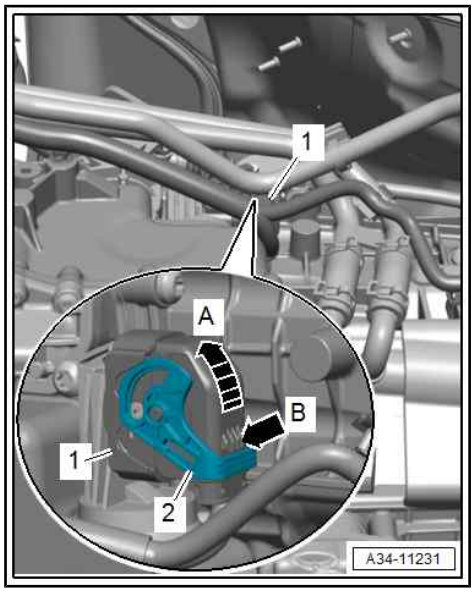

– Remove protective cap -arrow-.
– Remove oil pan ⇒ page 59 .

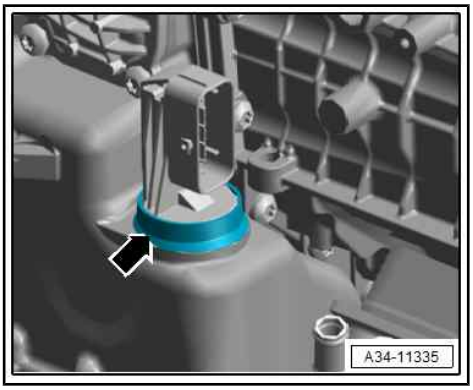

– Use assembly tool - T40305/1- to unplug electrical connector.

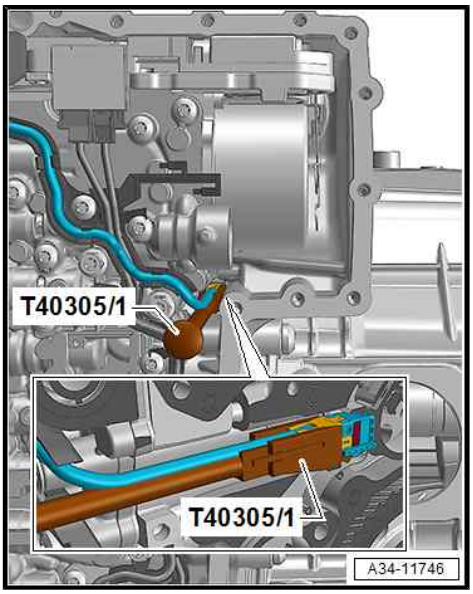

Protected by copyright. Copying for private or commercial purposes, in part or in whole, is not permitted unless authorised by AUDI AG. AUDI AG does not guarantee or accept any liability with respect to the correctness of information in this document. Copyright by AUDI AG.

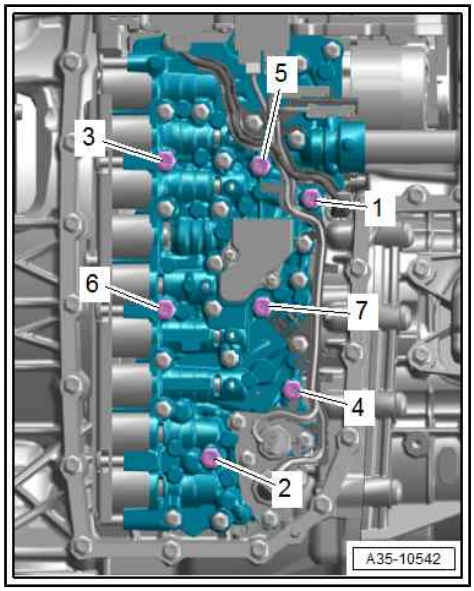

WARNING

System may be under pressure.

- *Make sure that ATF accumulator is discharged* *⇒ "1.3 Deactivating ATF pump and discharging hydraulic accumulator", page 4* .
- *If the current state of the system is unclear (e.g. if the gearbox control unit is defective), only loosen the bolts on the mechatronic unit very slightly so that the oil pressure in the hydraulic accumulator can dissipate slowly.*
- *Put on safety goggles.*

– Loosen bolts by a half turn in the sequence -1 to 7-.

– Unscrew bolts -2 and 5- and replace them with two guide pins - T40199- .

– Remove remaining bolts -1, 3, 4, 6, 7-.

Caution

Risk of damage to mechatronic unit.

- *Loosen only the bolts marked -1 to 7-.*
- *If other bolts are loosened, this may affect the operation of the mechatronic unit or the mechatronic unit could come apart.*

Note

- *The mechatronic unit may be tightly seated.*
- *If it is necessary to lever off the mechatronic unit, get help from a second person to ensure that the mechatronic unit does not drop out. Alternatively, screw bolts -1- and -2- in again slightly to catch mechatronic unit when levering it out.*

Caution

Risk of damage to mechatronic unit.

- *When setting down the mechatronic unit, the side with the bolt heads must be facing downwards.*

– Detach mechatronic unit.

Caution

Mechatronic unit will be damaged if it becomes dirty.

- *It is important to have a clean working area when you are working on a removed mechatronic unit.*

- Place removed mechatronic unit on a clean surface and cover it. Use sheeting or lint-free cloths.

Protected by copyright. Copying for private or commercial purposes, in part or in whole, is not permitted unless authorised by AUDI AG. AUDI AG does not guarantee or accept any liability with respect to the correctness of information in this document. Copyright by AUDI AG.

– Seal off ATF openings with cover - T40322/1-4- .

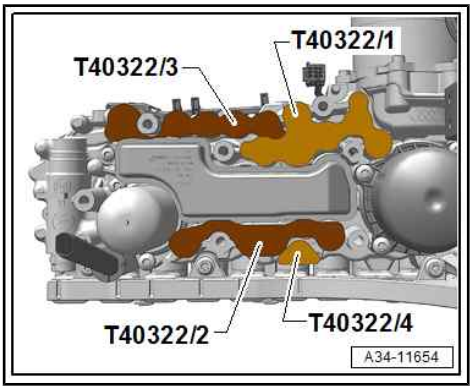

Installing

Installation is carried out in reverse order; note the following:

> **Caution**
>
> - *If the control unit has not been deactivated, the pump on the gearbox auxiliary hydraulic pump - V552- may start running as soon as the connector is plugged in* *⇒ "1.3 Deactivating ATF pump and discharging hydraulic accumulator", page 4* *.*
> - *This may damage the pump or cause oil to escape at high pressure.*
> - *To avoid this, only plug electrical connector for gearbox control unit in after fitting oil pan and when gearbox has been filled with ATF.*

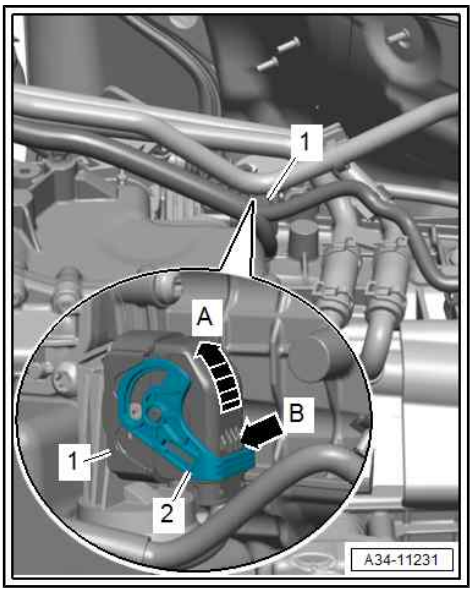

- Only install clean components: do not remove new mechatronic unit from packaging until just before installation.

– Renew gaskets -1, 2, 3, 4-.

Note

-1- only on vehicles with parking lock solenoid - N486- .

Protected by copyright. Copying for private or commercial purposes, in part or in whole, is not permitted unless authorised by AUDI AG. AUDI AG does not guarantee or assume liability with respect to the correctness of information in this document. Copyright by AUDI AG.

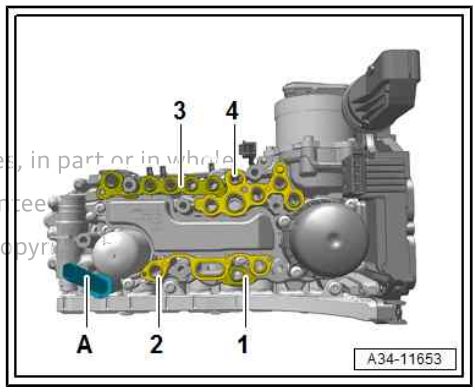

- Screw in the two guide pins - T40199- hand-tight, as shown in illustration.

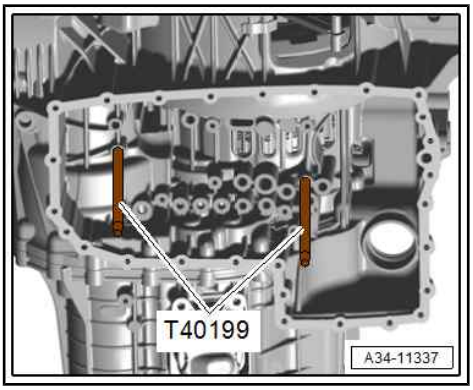

Note

The guide pins - T40199- ensure that the mechatronic unit is kept straight while it is being installed.

– Insert mechatronic unit evenly and screw in bolts -6 and 7- hand-tight.
– Unscrew guide pins - T40199- .
– Fit remaining securing bolts according to tightening sequence ⇒ Fig. ""Mechatronic unit - tightening torque and sequence"" , page 56 . .

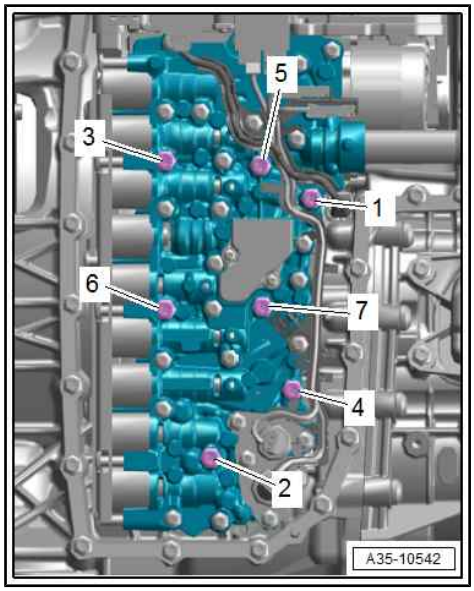

– Plug in electrical connector using assembly tool - T40305- .
– Install oil pan ⇒ "9.5 Removing and installing oil pan", page 59 .

Install oil pan with new gasket and tighten to specified torque ⇒ Fig. ""Oil pan - tightening torque and sequence"", page 56 .

– Tighten ATF drain plug.

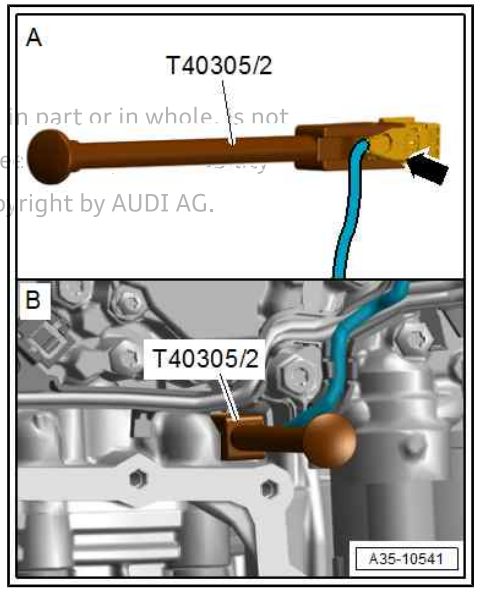

Protected by copyright. Copying for private or commercial purposes, in part or in whole, is not permitted unless authorised by AUDI AG. AUDI AG does not guarantee or accept any liability with respect to the correctness of information in this document. Copyright by AUDI AG.

– Fill gearbox with 3.5 litres of ATF using hand pump for gear oil - VAS 6617- ⇒ 7-speed dual clutch gearbox 0CK; Rep. gr. 34 ; ATF; Draining and filling ATF .

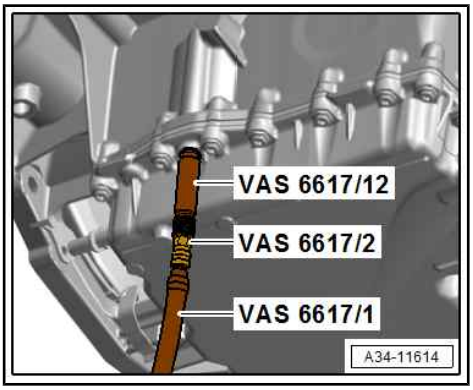

Note

The ATF level can only be adjusted after first operation of the control unit.

- After renewal, basic setting of the following components must be performed individually:

◆ Automatic gearbox control unit - J217- ⇒ page 75

◆ Valve body ⇒ page 75

◆ Mechatronic unit for dual clutch gearbox - J743- ⇒ page 75

◆ Gear sensor - G676- ⇒ Rep. gr. 34 ; Selector mechanism

◆ Gearbox auxiliary hydraulic pump - V552- ⇒ page 81

◆ Gear selector movement sensors - G487/G488/G489/G490- ⇒ page 48

◆ Automatic gearbox pressure regulating valve - N215/N216- ⇒ page 78

◆ Solenoid valves and pressure regulating valves in valve body ⇒ page 86

Protected by copyright. Copying for private or commercial purposes, in part or in whole, is not permitted unless authorized by AUDI AG. AUDI AG does not guarantee or accept any liability with respect to the correctness of information in this document. Copyright by AUDI AG.

Procedure

– Connect ⇒ Vehicle diagnostic tester.

– Select `Diagnosis` mode and begin diagnosis.

– Select `Test plan` tab.

– Choose `Select own test` and select following options one after the other:

◆ Drive system

◆ 7-speed dual clutch gearbox 0CK/0CL

◆ 01 - Self-diagnosis compatible systems

◆ 02 - Gearbox electronics 0CK

◆ 02 - Gearbox electronics, functions

– Check ATF level ⇒ 7-speed dual clutch gearbox 0CK; Rep. gr. 34 ; ATF; Checking ATF level .

– Install subframe cross brace ⇒ Running gear, axles, steering; Rep. gr. 40 ; Subframe; Removing and installing subframe cross brace .

– Install noise insulation ⇒ General body repairs, exterior; Rep. gr. 66 ; Noise insulation .

9.7 Removing and installing automatic gearbox control unit - J217-

Special tools and workshop equipment required

- Torque wrench - VAS 6583-

- Cover - T40322/1-4-

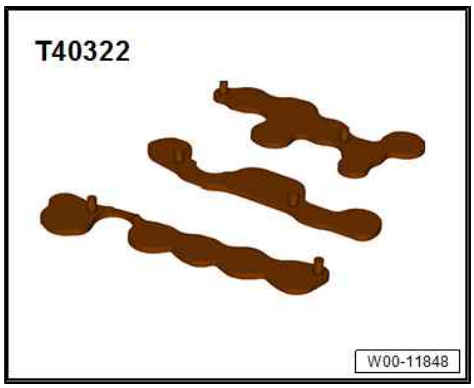

- Support - T40321-

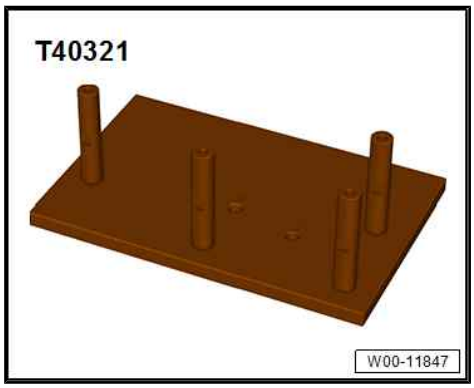

Removing

Protected by copyright. Copying for private or commercial purposes, in part or in whole, is not permitted unless authorised by AUDI AG. AUDI AG does not guarantee or accept any liability with respect to the correctness of information in this document. Copyright by AUDI AG.

WARNING

System is pressurised.

- *The electric ATF pump must always be deactivated and the hydraulic accumulator must be discharged before opening the gearbox.*
- *See also*
  ⇒ "1.3 Deactivating ATF pump and discharging hydraulic accumulator", page 4 .

Note

- *General repair instructions ⇒ page 1 .*
- *Rules for cleanliness when working on the dual clutch gearbox ⇒ page 5 .*
- *Disabling ATF pump and discharging accumulator ⇒ "1.3 Deactivating ATF pump and discharging hydraulic accumulator", page 4 .*

Caution

Risk of irreparable damage to automatic gearbox control unit - J217- by static discharge.

- ***Before handling electrical connectors, mechanic must discharge static. To do so, touch vehicle earth, heater radiator, or lifting platform, with your hand.***
- ***Do not touch contact pins in gearbox connector with bare hands.***

– Remove oil pan
⇒ "9.5 Removing and installing oil pan", page 59 .

– Release electrical connector for hydraulic pressure sender 1 - G545- -1- and hydraulic pressure sender 2 - G546- -2- at lugs -arrows- and unplug from automatic gearbox control unit - J217- .

– Secure connector in the transport retainer, as shown.

– Remove mechatronic unit
⇒ "9.6 Removing and installing mechatronic unit", page 62 .

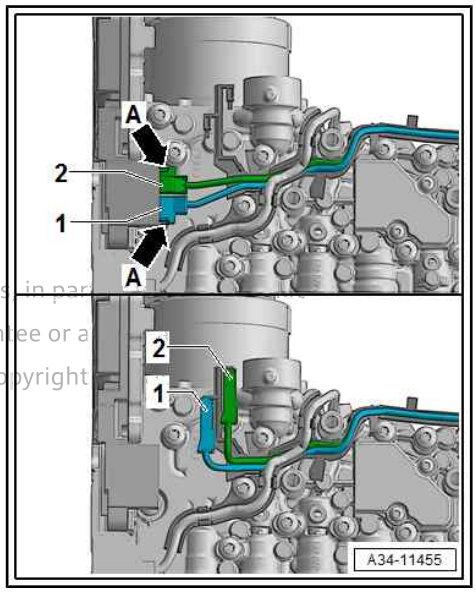

Caution

Mechatronic unit will be damaged if it becomes dirty.

- ***It is important to have a clean working area when you are working on a removed mechatronic unit.***

Protected by copyright. Copying for private or commercial purposes, in part or in whole, is not permitted unless authorised by AUDI AG. AUDI AG does not guarantee or assume liability with respect to the correctness of information in this document. Copyright

– Seal off ATF openings with cover - T40322/1-4- .

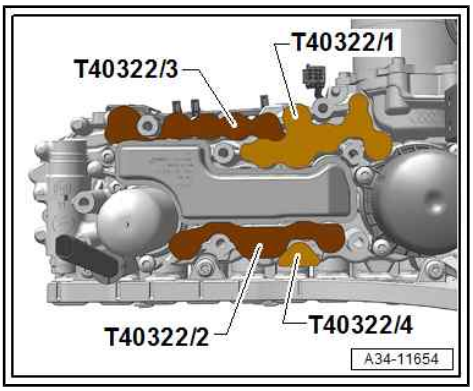

– Secure mechatronic unit to mounting bracket .

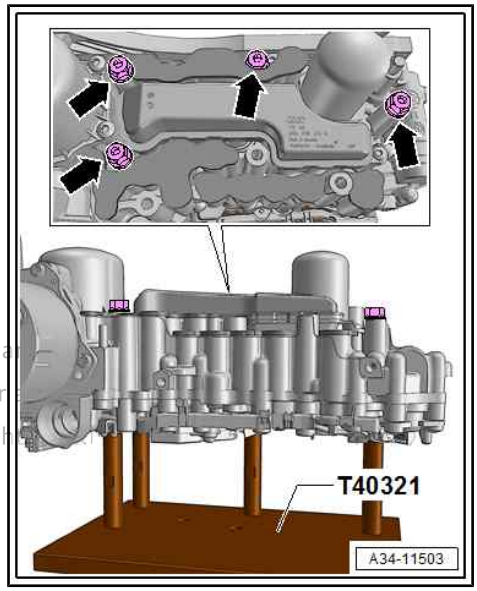

Protected by copyright. Copying for private or commercial purposes, in pa
permitted unless authorised by AUDI AG. AUDI AG does not guarantee or
with respect to the correctness of information in this document. Copyrigh

– Disengage and detach cover -1- for sensor arm at lugs -arrows-.

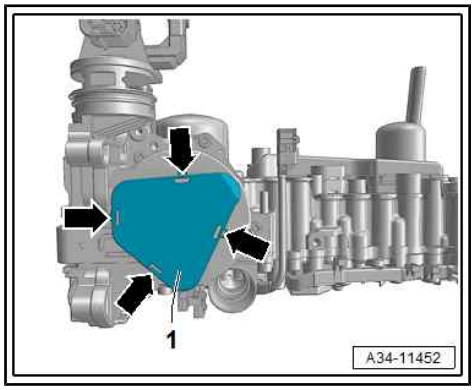

– Remove bolts in the sequence -3 to 1-.

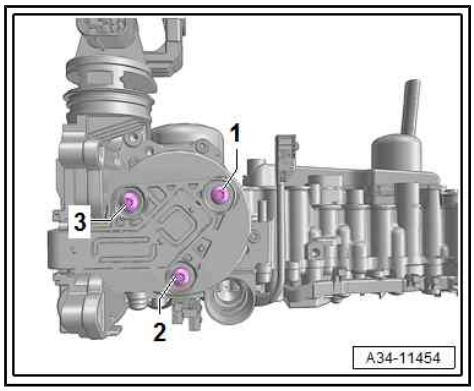

– Swivel rotor position sender for gearbox auxiliary hydraulic pump - G847- -1- to the side until it reaches its engagement position.

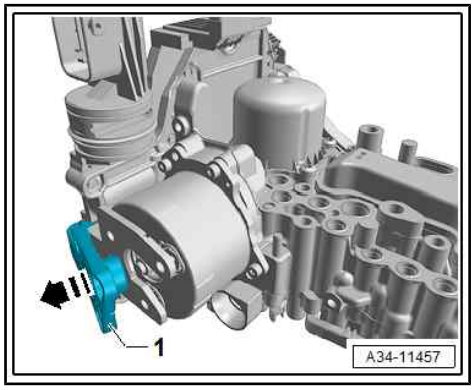

– Engage electrical connector for gear selector movement sensor 1 - G487- and gear selector movement sensor 2 - G488- in transport retainer -arrow- and loosen bolts in the sequence -4 to 1-.

– Detach automatic gearbox control unit - J217- from valve body.

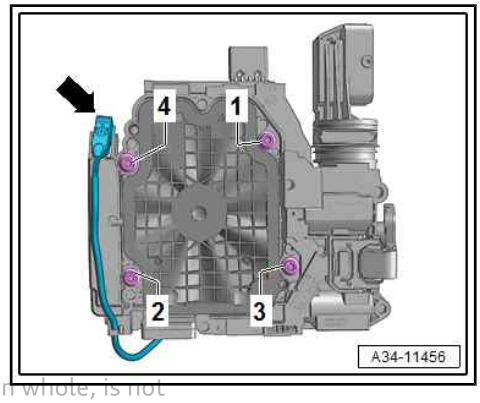

Protected by copyright. Copying for private or commercial purposes, in part or in whole, is not permitted unless authorised by AUDI AG. AUDI AG does not guarantee or accept any liability with respect to the correctness of information in this document. Copyright by AUDI AG.

Installing

Installation is carried out in reverse order; note the following:

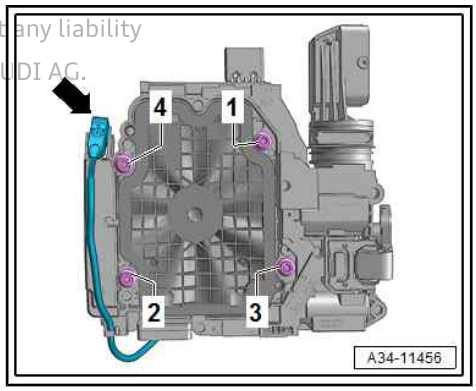

Note

Remove oil residue and dirt from threaded holes before installing control unit.

– Press control unit evenly onto valve body and tighten securing bolts in the sequence -1 to 4- to specified torque.

Note

- *The ATF pump is fitted with a swarf protector.*
- *Ensure that it is fitted correctly.*

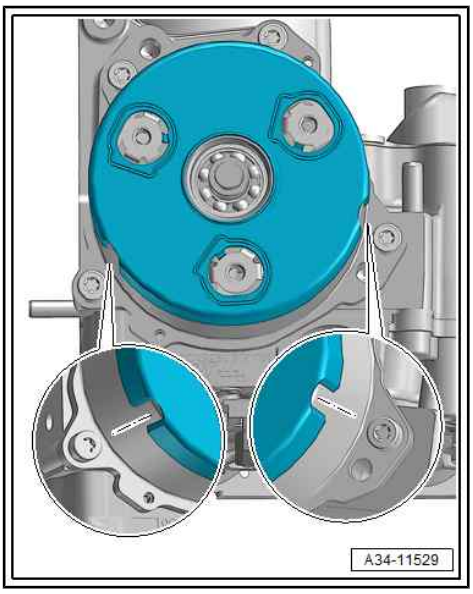

– Press sensor arm -1- onto ATF pump -2- by hand and tighten bolts -arrows- hand-tight.

Caution

Risk of damage to ATF pump.

- *Sensor arm -1- must be in contact with the ATF pump -2- while being bolted on.*

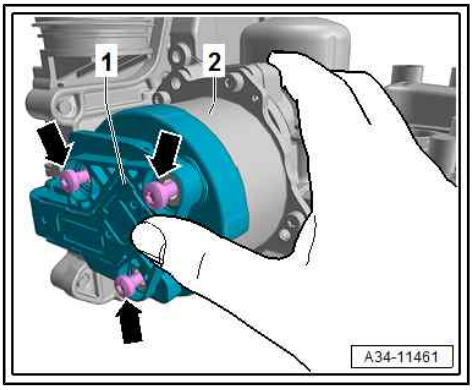

– Tighten securing bolts to specified torque in the sequence -1 to 3-.

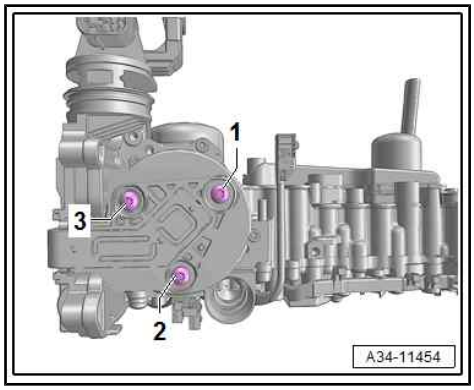

– Install cover -1- for sensor arm -arrows-.

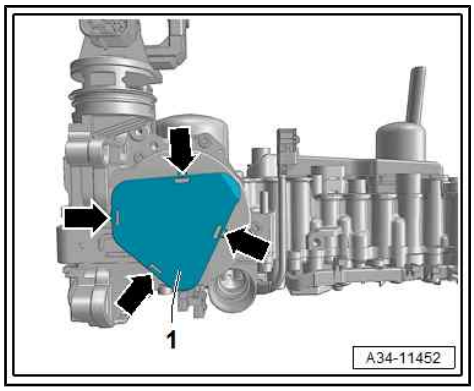

Protected by copyright. Copying for private or commercial purposes, in part or in whole, is not permitted unless authorised by AUDI AG. AUDI AG does not guarantee or accept any liability with respect to the correctness of information in this document. Copyright by AUDI AG.

– Plug in hydraulic pressure sender 1 - G545- and hydraulic pressure sender 2 - G546- .

Protected by copyright. Copying for private or commercial purposes, in whole, is not permitted unless authorised by AUDI AG. AUDI AG does not guarantee or assume any liability with respect to the correctness of information in this document. Copyright by AUDI AG.

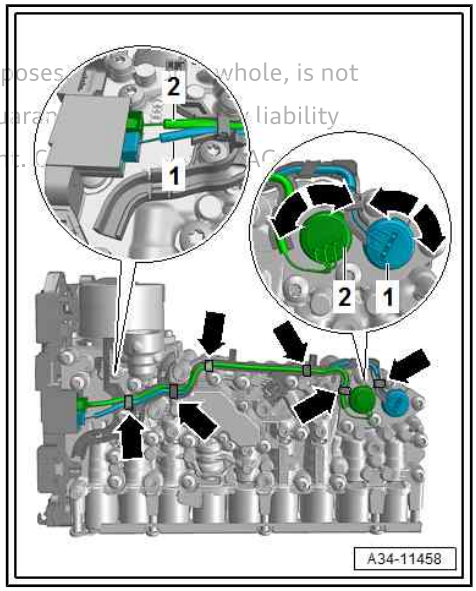

Note

- *Do not interchange connectors.*
- *Ensure that connections -1 and 2- are made correctly, as shown.*
- *See also*
  ⇒ "9.9 Removing and installing hydraulic pressure sender 1 G545 and hydraulic pressure sender 2 G546 ", page 76 .

– Install mechatronic unit
⇒ "9.6 Removing and installing mechatronic unit", page 62 .

Tightening torques:

⇒ "9.1 Exploded view - mechatronic unit", page 54

⇒ "9.2 Exploded view - valve body", page 56

⇒ "9.4 Exploded view - automatic gearbox control unit J217 ", page 59

- Function "Replace control unit" must be performed with ⇒ Vehicle diagnostic tester if automatic gearbox control unit - J217- has been renewed.
- Function "Replace valve body" must be performed with ⇒ Vehicle diagnostic tester if valve body has been renewed.

Procedure

– Connect ⇒ Vehicle diagnostic tester.

– Select `Diagnosis` mode and begin diagnosis.

– Select `Test plan` tab.

– Choose `Select own test` and select following options one after the other:

- Drive system
- 7-speed dual clutch gearbox 0CK/0CL
- 01 - Self-diagnosis compatible systems
- 02 - Gearbox electronics 0CK
- 02 - Gearbox electronics, functions
- 02 - Replace control unit/mechatronic unit or 02 - Replace valve body

9.8 Removing and installing valve body

- Same procedure as: Removing and installing automatic gearbox control unit - J217-
  ⇒ "9.7 Removing and installing automatic gearbox control unit J217 ", page 69 .

9.9 Removing and installing hydraulic pressure sender 1 - G545- and hydraulic pressure sender 2 - G546-

Note

The mechatronic unit remains installed.

WARNING

System is pressurised.

- ***The electric ATF pump must always be deactivated and the hydraulic accumulator must be discharged before opening the gearbox.***
- ***See also***
  ⇒ "1.3 Deactivating ATF pump and discharging hydraulic accumulator", page 4 .

Protected by copyright. Copying for private or commercial purposes, in part or in whole, is not permitted unless authorised by AUDI AG. AUDI AG does not guarantee or accept any liability with respect to the correctness of information in this document. Copyright by AUDI AG.

– Remove oil pan ⇒ page 59 .

– Release catch -arrows- for electrical connector for hydraulic pressure sender 1 - G545- -1- and hydraulic pressure sender 2 - G546- -2- and unplug from automatic gearbox control unit - J217- .

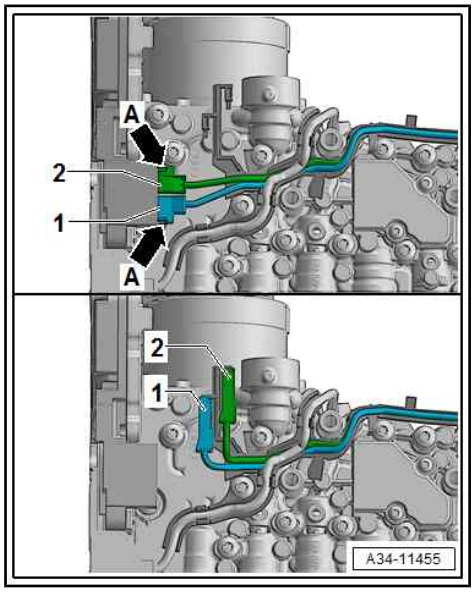

– Use assembly tool - T40305/1- to unplug electrical connector.

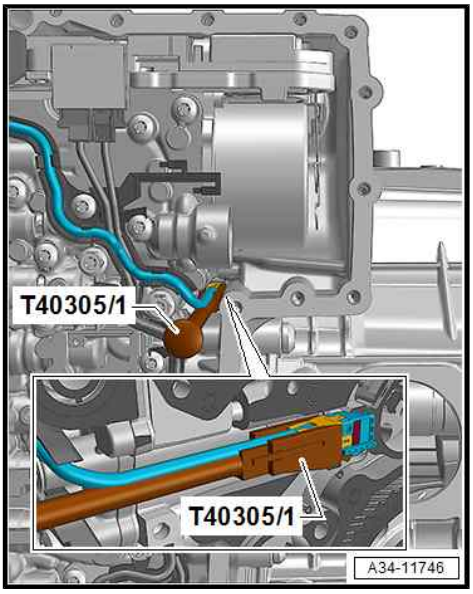

– Unscrew securing bolts in the sequence -7 to 1-.
– Detach hydraulic pressure sender 1 - G545- -1- and hydraulic pressure sender 2 - G546- with retaining plate -arrow A- and wiring guide -arrow B-.

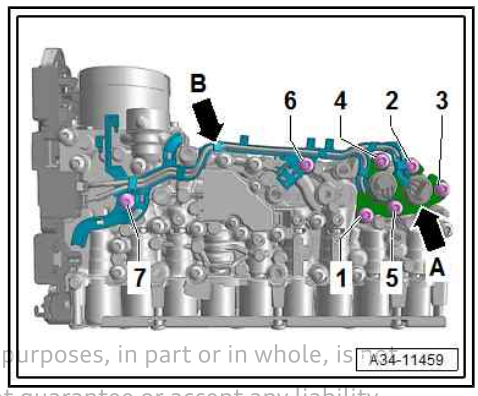

Protected by copyright. Copying for private or commercial purposes, in part or in whole, is not permitted unless authorised by AUDI AG. AUDI AG does not guarantee or accept any liability with respect to the correctness of information in this document. Copyright by AUDI AG.

Installing

Note

Renew wiring guide -2-.

– Coat new seals -1- with ATF and fit in valve body as shown.
– Install wiring guide -2- hand-tight with both securing bolts -arrows-.

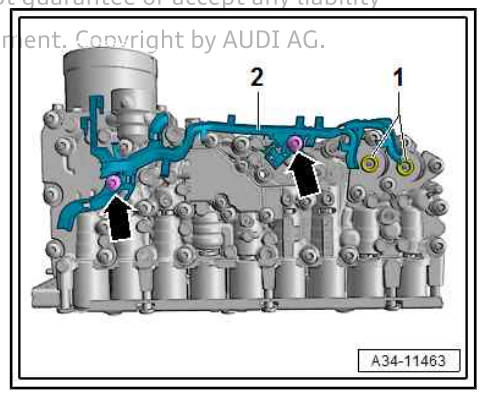

– Screw in hydraulic pressure sender 1 - G545- -1- and hydraulic pressure sender 2 - G546- with retaining plate -arrow A- and securing bolts -1 to 5- hand-tight.

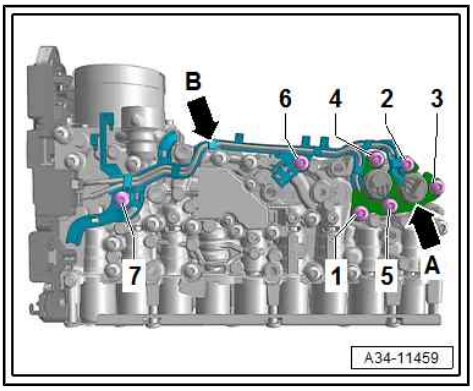

– Clip hydraulic pressure sender 1 - G545- -1- and hydraulic pressure sender 2 - G546- into wiring guide and engage on automatic gearbox control unit - J217- .

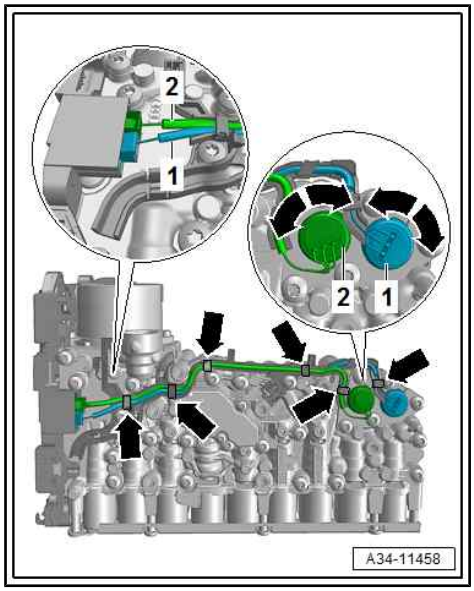

Note

- *Ensure that wiring is routed uniformly.*
- *Wiring must not stick out or be kinked.*
- *Adjust wiring routing by turning the pressure sensors -arrows- as shown.*

– Tightening torque and sequence
⇒ "9.1 Exploded view - mechatronic unit", page 54

– Plug in electrical connector using assembly tool - T40305- .

– Install oil pan ⇒ page 59 .

– After renewing hydraulic pressure sender 1 - G545- -1- and hydraulic pressure sender 2 - G546- , clutch valves must be calibrated in automatic gearbox control unit - J217- .

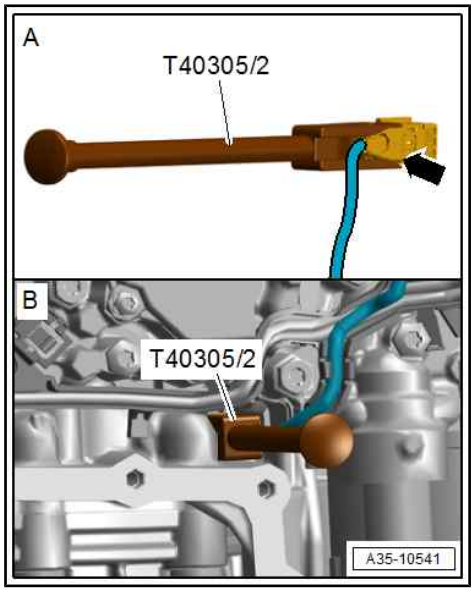

Procedure

– Connect ⇒ Vehicle diagnostic tester.

– Select `Diagnosis` mode and begin diagnosis.

– Select `Test plan` tab.

– Choose `Select own test` and select following options one after the other:

- Drive system
- 7-speed dual clutch gearbox 0CK/0CL
- 01 - Self-diagnosis compatible systems
- 02 - Gearbox electronics 0CK
- 02 - Gearbox electronics, functions
- 02 - Basic setting
- ⇒ Clutch valve calibration

9.10 Removing and installing gearbox auxiliary hydraulic pump - V552-

Special tools and workshop equipment required

Protected by copyright. Copying for private or commercial purposes, in part or in whole, is not permitted unless authorised by AUDI AG. AUDI AG does not guarantee or accept any liability with respect to the correctness of information in this document. Copyright by AUDI AG.

- Locking pin - T10492-

- Torque wrench - VAS 6583-

WARNING

System is pressurised.

- *Deactivate ATF pump and discharge hydraulic accumulator before removing oil pan.*
- *See also*
  ⇒ "1.3 Deactivating ATF pump and discharging hydraulic accumulator", page 4 .

Caution

Mechatronic unit will be damaged if it becomes dirty.

- *It is important to have a clean working area when you are working on a removed mechatronic unit.*

Removing

– Remove mechatronic unit
⇒ "9.6 Removing and installing mechatronic unit", page 62 .

– Remove automatic gearbox control unit - J217-
⇒ "9.7 Removing and installing automatic gearbox control unit J217", page 69 .

Protected by copyright. Copying for private or commercial purposes, in part or in whole, is not permitted unless authorised by AUDI AG. AUDI AG does not guarantee or accept any liability with respect to the correctness of information in this document. Copyright by AUDI AG.

– Secure mechatronic unit in vice with support - T40321- as shown.

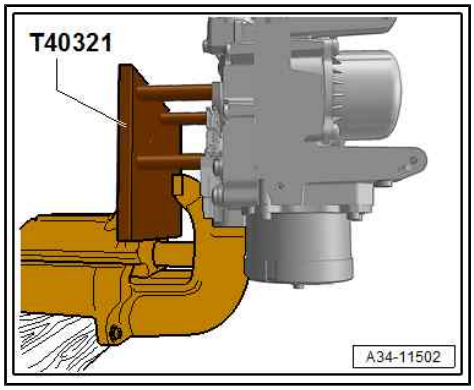

– Remove bolts -arrows-.

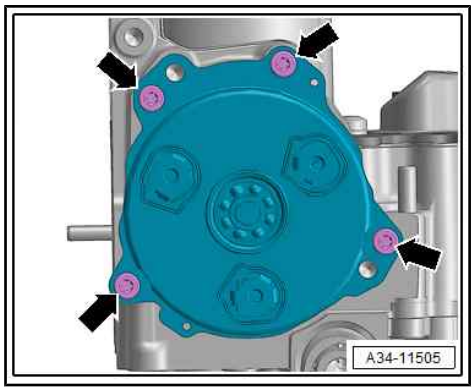

– Take out ATF motor -1- with ATF pump -2- downwards; take care not to drop ATF pump -2- when doing so.

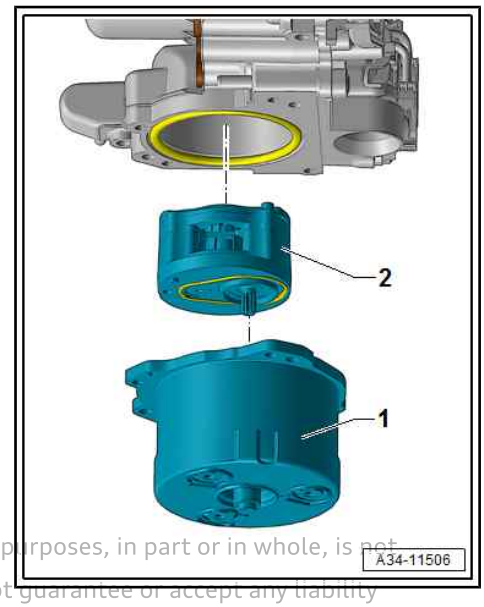

Installing

> ⚠ **Caution**
>
> ***Mechatronic unit will be damaged if it becomes dirty.***
>
> ♦ ***It is important to have a clean working area when you are working on a removed mechatronic unit.***

Protected by copyright. Copying for private or commercial purposes, in part or in whole, is not permitted unless authorised by AUDI AG. AUDI AG does not guarantee or accept any liability with respect to the correctness of information in this document. Copyright by AUDI AG.

– Position ATF pump on ATF motor, ensuring that locating elements -arrows- align correctly.

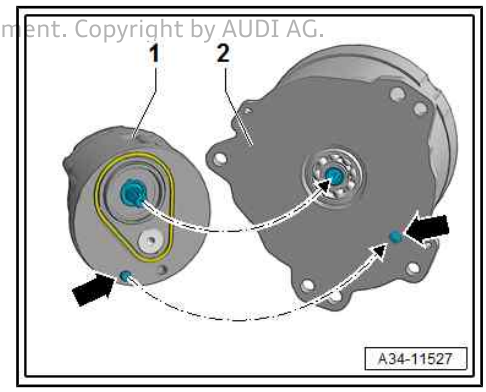

– Use locking pins - T10492- to insert ATF motor and ATF pump into valve body.

– With locking pins - T10492- fitted, screw in bolts evenly until they make contact and then tighten bolts.

– Remove locking pins - T10492- .

Tightening torque ⇒ “9.2 Exploded view - valve body”, page 56

– Install automatic gearbox control unit - J217- ⇒ “9.7 Removing and installing automatic gearbox control unit J217 ”, page 69 .

• After renewing gearbox auxiliary hydraulic pump - V552- , run “Calibration of auxiliary hydraulic pump” function using ⇒ Vehicle diagnostic tester.

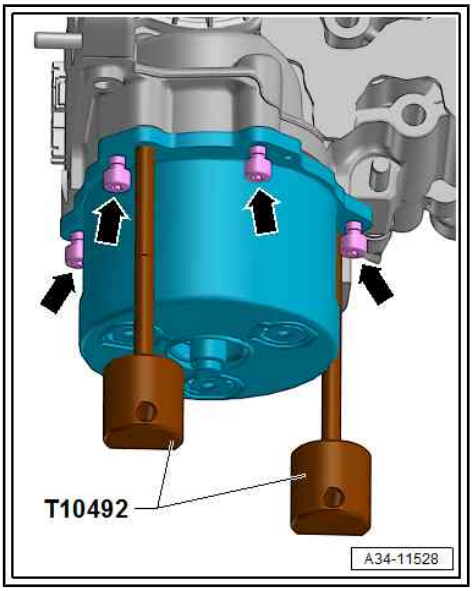

Procedure

– Connect ⇒ Vehicle diagnostic tester.

– Select `Diagnosis` mode and begin diagnosis.

– Select `Test plan` tab.

– Choose `Select own test` and select following options one after the other:

♦ Drive system

♦ 7-speed dual clutch gearbox 0CK/0CL

♦ 01 - Self-diagnosis compatible systems

♦ 02 - Gearbox electronics 0CK

♦ 02 - Gearbox electronics, functions

♦ 02 - Basic setting

♦ ⇒ Calibration of auxiliary hydraulic pump

– Check ATF level ⇒ 7-speed dual clutch gearbox 0CK; Rep. gr. 34 ; ATF; Checking ATF level .

9.11 Removing and installing solenoid valves and pressure regulating valves in valve body

Note

Protected by copyright. Copying for private or commercial purposes, in part or in whole, is not permitted unless authorised by AUDI AG. AUDI AG does not guarantee or accept any liability with respect to the accuracy of the information in this document. Copyright by AUDI AG.

Check that required replacement parts are available before performing repairs ⇒ Electronic parts catalogue .

Special tools and workshop equipment required

- Torque wrench - VAS 6583-

- Cover - T40322/1-4-

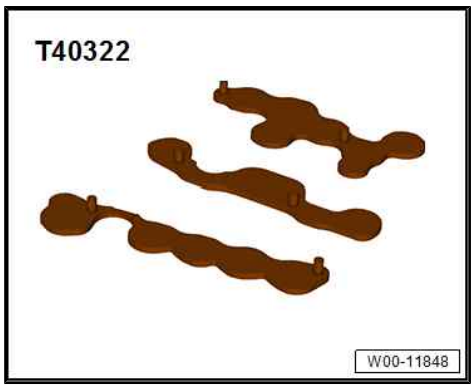

- Support - T40321-

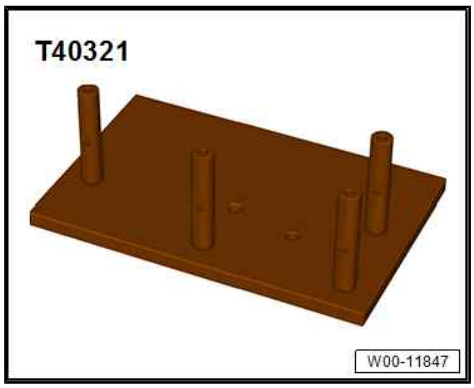

- Ruler - T40100-

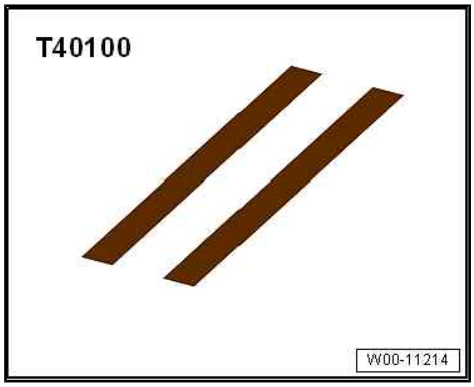

Protected by copyright. Copying for private or commercial purposes, in part or in whole, is not permitted unless authorised by AUDI AG. AUDI AG does not guarantee or accept any liability with respect to the correctness of information in this document. Copyright by AUDI AG.

WARNING

System is pressurised.

- *Deactivate ATF pump and discharge hydraulic accumulator before removing oil pan.*
- *See also*
  ⇒ "1.3 Deactivating ATF pump and discharging hydraulic accumulator", page 4 .

Caution

Mechatronic unit will be damaged if it becomes dirty.

- *Absolute cleanliness must be maintained when working on the hydraulic control system.*
- *Even small amounts of dirt can cause system malfunctions.*
- *Do not remove replacement parts from their packaging until immediately prior to installation.*
- *Protect open oil passages from dirt.*

Note

For electrical allocation of pressure regulating valves and solenoid valves, refer to *⇒ "1 Gearbox control system", page 99* .

Removing

- Check that required replacement parts are available before performing repairs ⇒ Electronic parts catalogue .

Note

- *Do not remove clutch cooling valve -arrow-; it must remain in valve body.*
- *The highly precise fit prevents re-installation as the valve body would be damaged.*

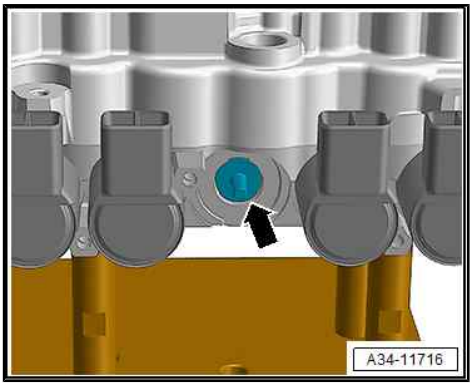

– Remove mechatronic unit
  ⇒ "9.6 Removing and installing mechatronic unit", page 62 .

– Remove automatic gearbox control unit - J217-
  ⇒ "9.7 Removing and installing automatic gearbox control unit J217 ", page 69 .

Protected by copyright. Copying for private or commercial purposes, in part or in whole, is not permitted unless authorised by AUDI AG. AUDI AG does not guarantee or accept any liability with respect to the correctness of information in this document. Copyright by AUDI AG.

– Remove bolts -arrows- and detach contact element.

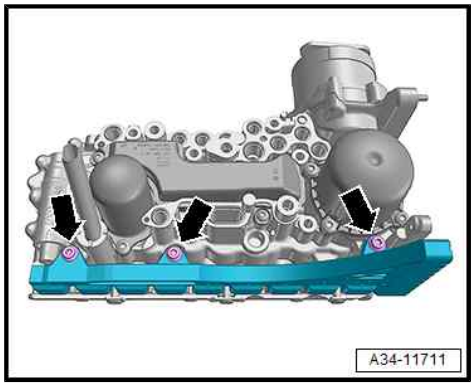

Note

- *Hold solenoid valve 5 - N92- -1- when removing mounting rail.*
- *Clutch cooling valve -2- and spring -3- must remain in valve body.*

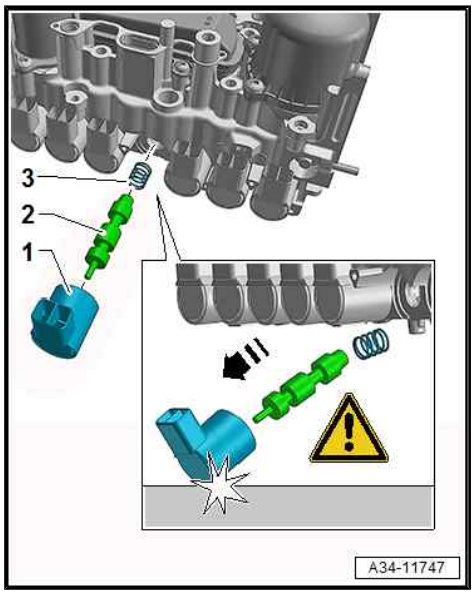

– Remove bolts -arrows- and detach mounting rail.

Protected by copyright. Copying for private or commercial pu
permitted unless authorised by AUDI AG. AUDI AG does no
with respect to the correctness of information in this docu

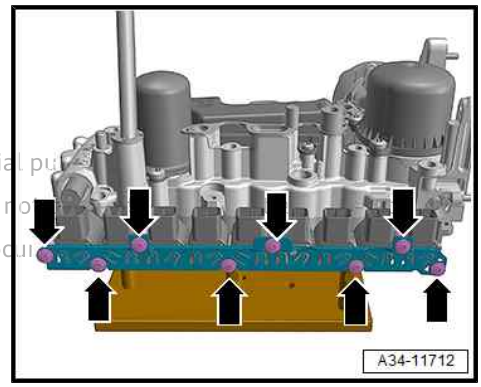

– Remove valves; to do so pry them out carefully, as shown, if necessary.

Installing

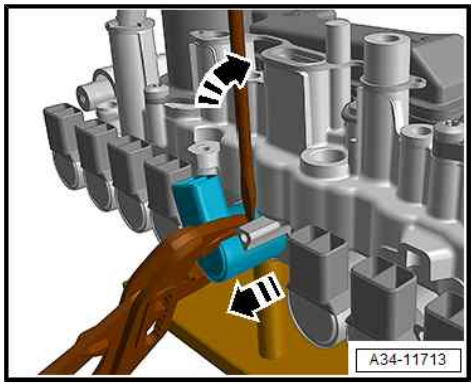

– Lightly lubricate valve seat with ATF and press in valves as far as stop.
– Hold solenoid valve 5 - N92- -arrow-.
– Adjust connecting contacts so that they are aligned using ruler - T40100- , as shown.

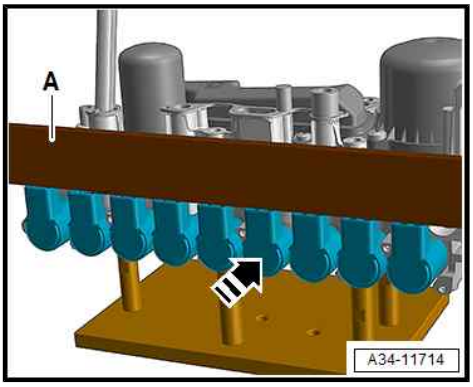

– Attach contact element evenly.

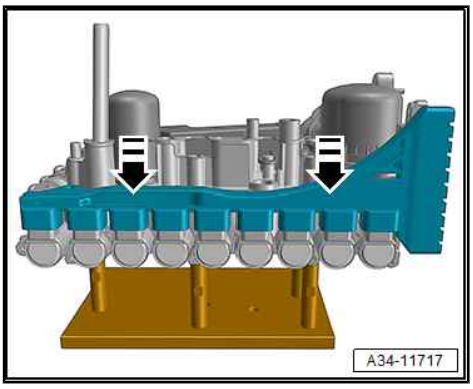

– Install mounting rail and tighten bolts -arrows- to specified torque.

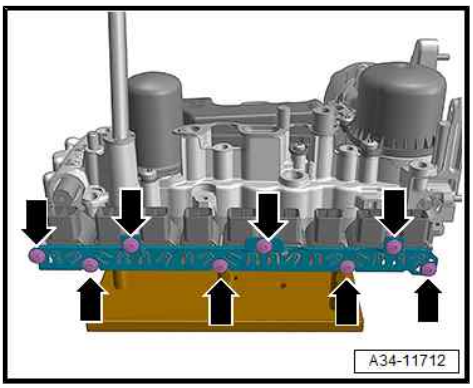

Protected by copyright. Copying for private or commercial purposes, in part or in whole, is not permitted unless authorised by AUDI AG. AUDI AG does not guarantee or accept any liability with respect to the correctness of information in this document. Copyright by AUDI AG.

– Tighten bolts -arrows- to specified torque.

Tightening torque ⇒ “9.2 Exploded view - valve body”, page 56

– Install automatic gearbox control unit - J217-
⇒ “9.7 Removing and installing automatic gearbox control unit J217 ”, page 69 .

– Install mechatronic unit
⇒ “9.6 Removing and installing mechatronic unit”, page 62 .

• After renewing solenoid valves , run “Calibration of valves” function using ⇒ Vehicle diagnostic tester.

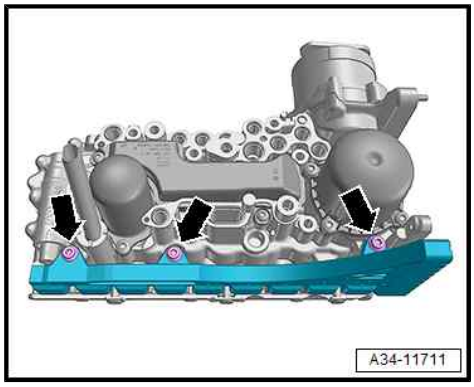

Procedure

– Connect ⇒ Vehicle diagnostic tester.

– Select `Diagnosis` mode and begin diagnosis.

– Select `Test plan` tab.

– Choose `Select own test` and select following options one after the other:

♦ Drive system

♦ 7-speed dual clutch gearbox 0CK/0CL

♦ 01 - Self-diagnosis compatible systems

♦ 02 - Gearbox electronics 0CK

♦ 02 - Gearbox electronics, functions

♦ 02 - Basic setting

♦ ⇒ Cooling oil valve/clutch valve calibration

9.12 Removing and installing filters in valve body

• Check that required replacement parts are available before performing repairs ⇒ Electronic parts catalogue .

Special tools and workshop equipment required

♦ Torque wrench - VAS 6583-

Protected by copyright. Copying for private or commercial purposes, in part or in whole, is not permitted unless authorised by AUDI AG. AUDI AG does not guarantee or accept any liability with respect to the correctness of information in this document. Copyright by AUDI AG.

- Cover - T40322/1-4-

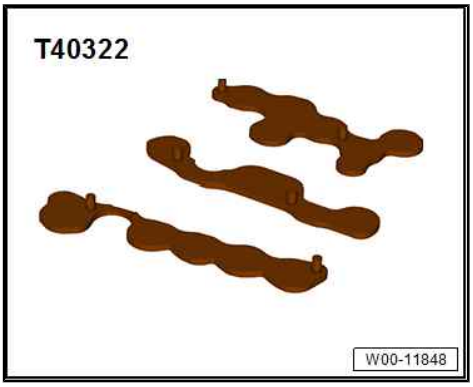

- Support - T40321-

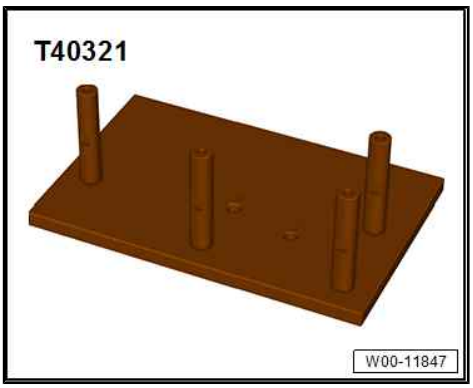

Caution

Mechatronic unit will be damaged if it becomes dirty.

- *Absolute cleanliness must be maintained when working on the hydraulic control system.*
- *Even small amounts of dirt can cause system malfunctions.*
- *Do not remove replacement parts from their packaging until immediately prior to installation.*
- *Protect open oil passages from dirt.*

– Remove mechatronic unit
⇒ “9.6 Removing and installing mechatronic unit”, page 62 .

Protected by copyright. Copying for private or commercial purposes, in part or in whole, is not permitted unless authorised by AUDI AG. AUDI AG does not guarantee or accept any liability with respect to the correctness of information in this document. Copyright by AUDI AG.

Protected by copyright. Copying for private or commercial purposes, in part or in whole, is not permitted unless authorised by AUDI AG. AUDI AG does not guarantee or accept any liability with respect to the correctness of information in this document. Copyright by AUDI AG.

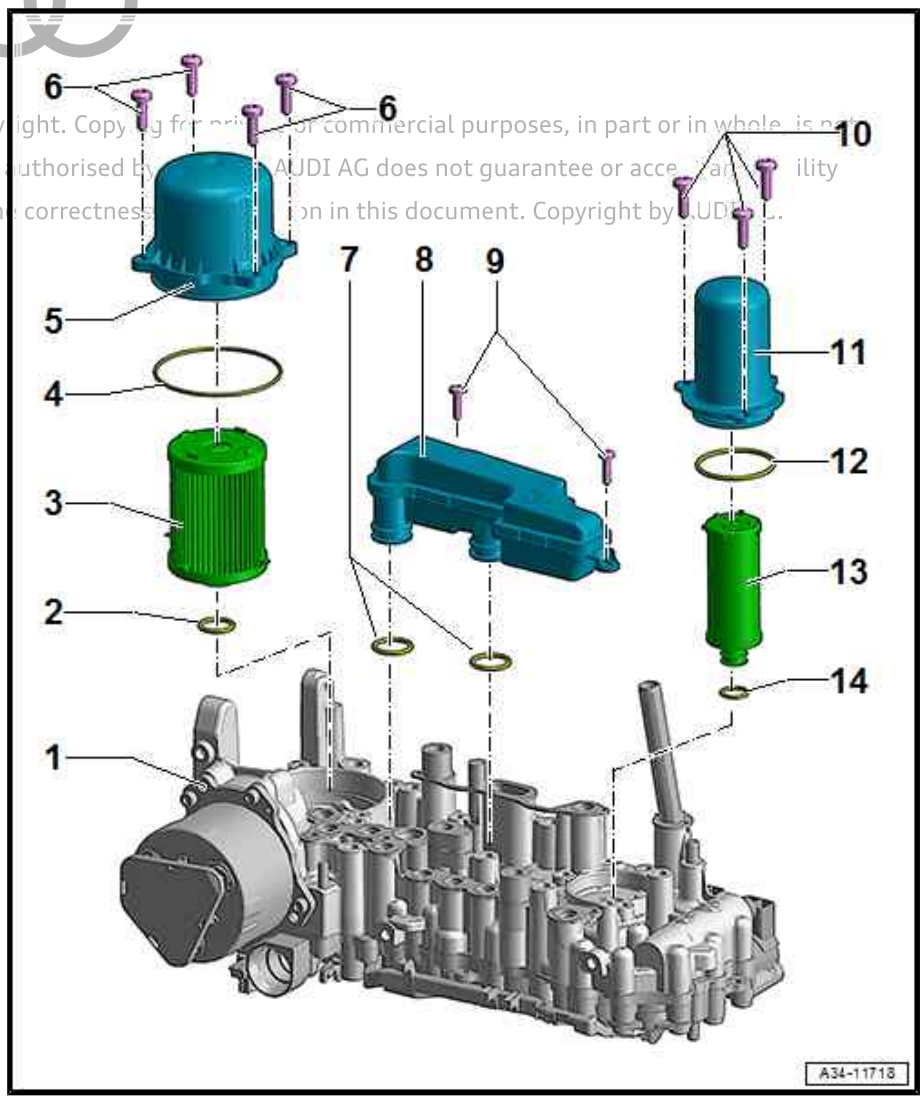

1 - Valve body
- ❑ Removing and installing: Refer to procedure for removing automatic gearbox control unit - J217- ⇒ “9.7 Removing and installing automatic gearbox control unit J217 ”, page 69 .

2 - Seal
- ❑ Renew

3 - Low pressure filter
- ❑ Renew

4 - Seal
- ❑ Renew

5 - Filter cover
- ❑ Renew

6 - Bolts
- ❑ Renew
- ❑ M6 x 20
- ❑ Tightening torque and sequence ⇒ page 89
- ❑ 8 Nm +60°

7 - Seal
- ❑ Renew

8 - Intake filter
- ❑ Renew

9 - Bolts
- ❑ Renew
- ❑ M5 x 18

10 - Bolts
- ❑ Renew
- ❑ M6 x 20
- ❑ Tightening torque and sequence ⇒ page 89

11 - Filter cover
- ❑ Renew
- ❑ Observe fitting instructions ⇒ page 89

12 - Seal
- ❑ Renew

13 - High-pressure filter
- ❑ Renew

14 - Seal
- ❑ Renew

Tightening torque and sequence for filter caps

High-pressure filter cap -A-

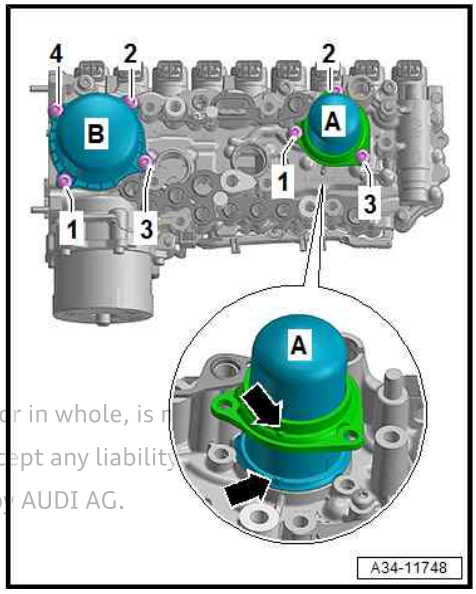

Note

Observe -arrows-.

Stage	Bolts	Tightening torque/angle specification
1.	-1 … 3-	Screw in by hand until contact is made
2.	-1 … 3-	8 Nm
3.	-1 … 3-	Turn 90° further

Protected by copyright. Copying for private or commercial purposes, in part or in whole, is not permitted unless authorised by AUDI AG. AUDI AG does not guarantee or accept any liability with respect to the correctness of information in this document. Copyright by AUDI AG.

Low-pressure filter cap -B-

Stage	Bolts	Tightening torque/angle specification
1.	-1 … 4-	Screw in by hand until contact is made
2.	-1 … 4-	8 Nm
3.	-1 … 4-	Turn 60° further

35 – Gears, shafts

1 Dismantling and assembling gears and shafts

1.1 Dismantling and assembling gear cluster

⇒ "1.1.1 Exploded view - input shaft 1", page 90

⇒ "1.1.2 Dismantling and assembling input shaft 1", page 91

1.1.1 Exploded view - input shaft 1

Note

Components for which repair work is currently possible.

1 - Thrust washer
2 - 7th speed selector gear
3 - 7th gear inner bearing race
4 - 7th gear needle bearing
5 - 7th gear synchro-ring
6 - Synchro-hub
7 - Thrust blocks
8 - Locking collar
9 - 5th gear synchro-ring
10 - 5th speed selector gear
11 - Thrust washer
12 - 5th gear inner bearing race
- ❑ Leave in position on input shaft

13 - 5th gear needle bearing

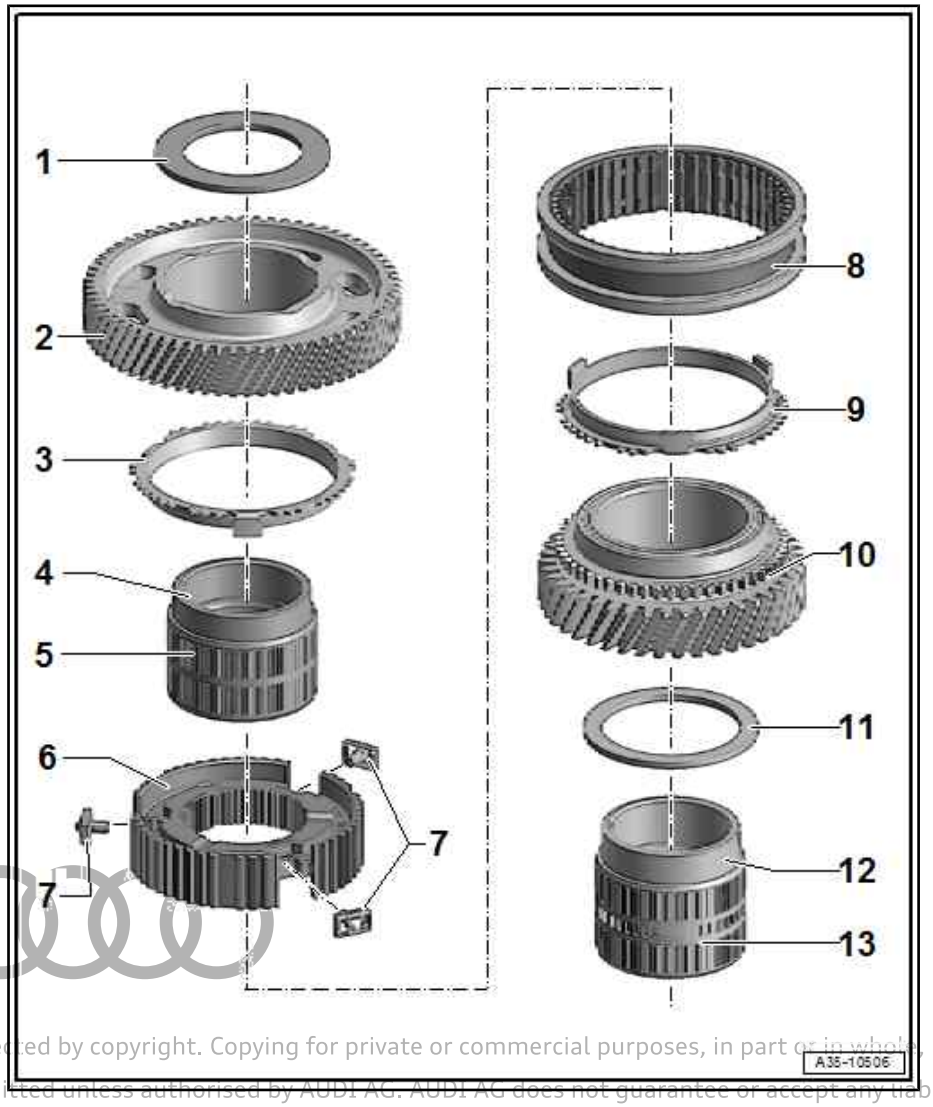

Protected by copyright. Copying for private or commercial purposes, in part or in whole, is not permitted unless authorised by AUDI AG. AUDI AG does not guarantee or accept any liability with respect to the correctness of information in this document. Copyright by AUDI AG.

1.1.2 Dismantling and assembling input shaft 1

Special tools and workshop equipment required

- Two-arm puller, e.g. KUKKO 20-10 - VAS 251 001-

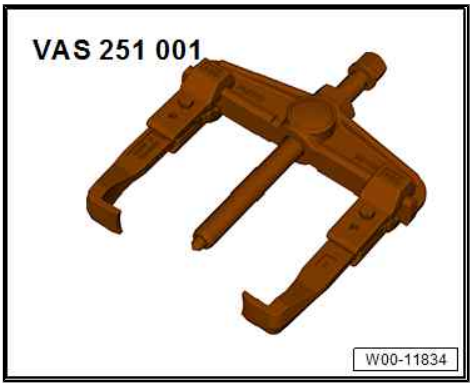

- Assembly tool - T10431/1-

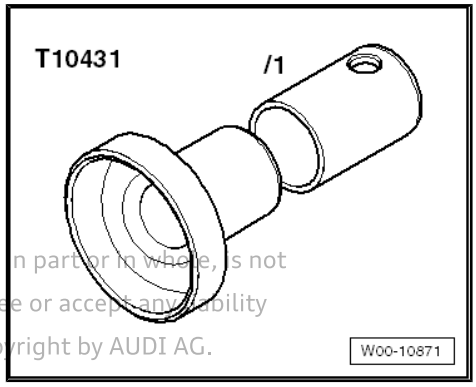

Protected by copyright. Copying for private or commercial purposes, in part or in whole, is not permitted unless authorised by AUDI AG. AUDI AG does not guarantee or accept any liability with respect to the correctness of information in this document. Copyright by AUDI AG.

- Assembly tool - T10219/1-

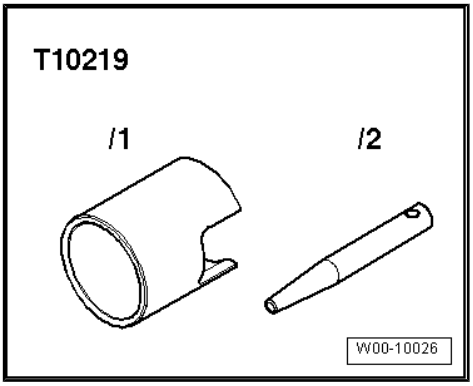

- Hot air blower - V.A.G 1416-

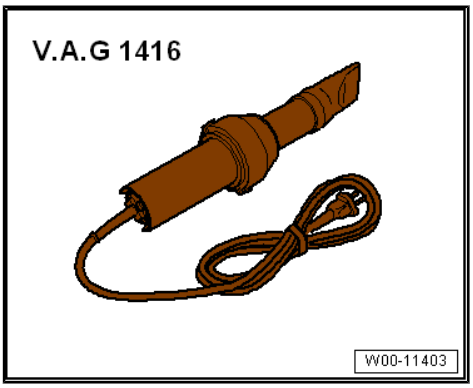

♦ Thrust plate - VW401-

♦ Thrust plate - VW402-

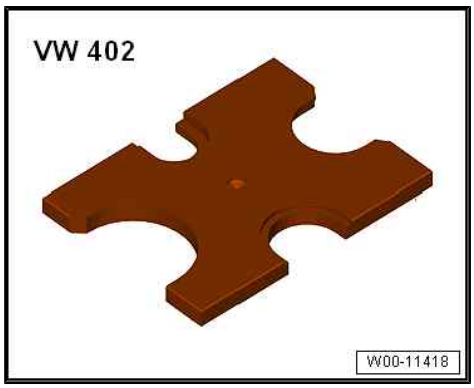

Dismantling:

Note

On vehicles with four-wheel drive, the inner bearing race "F" must be pulled off before the gear cluster is lifted out.

Protected by copyright. Copying for private or commercial purposes, in
permitted unless authorised by AUDI AG. AUDI AG does not guarantee ... lity
with respect to the correctness of information in this document. C...

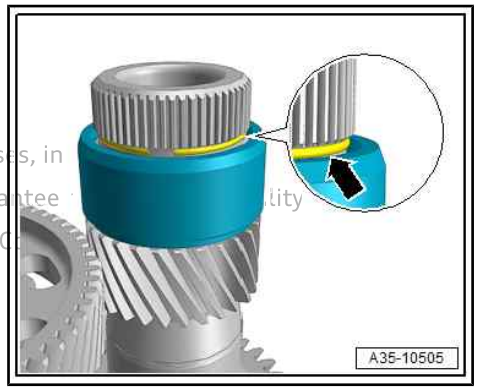

Vehicles with four-wheel drive:

– Remove gearbox housing
⇒ "4.3.1 Removing and installing gear cluster", page 34 .

– Remove circlip -arrow-.

– Pull off inner bearing race "F" -arrow- with two-arm puller, e.g. KUKKO 20-10 - VAS 251 001- and thrust piece - T10431/1- .

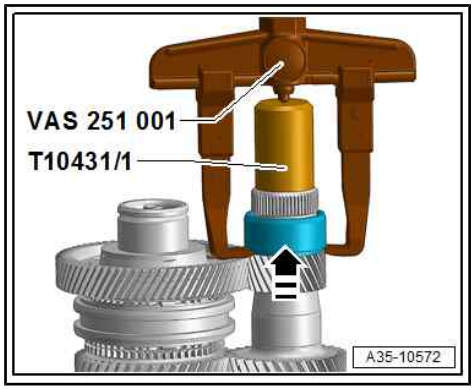

All vehicles (continued):

– Remove gear cluster and set it down on a clean work surface ⇒ “4.3.1 Removing and installing gear cluster”, page 34 .

– Unscrew bolt -arrow- and detach selector forks 4/6 and 5/7 together in pairs.

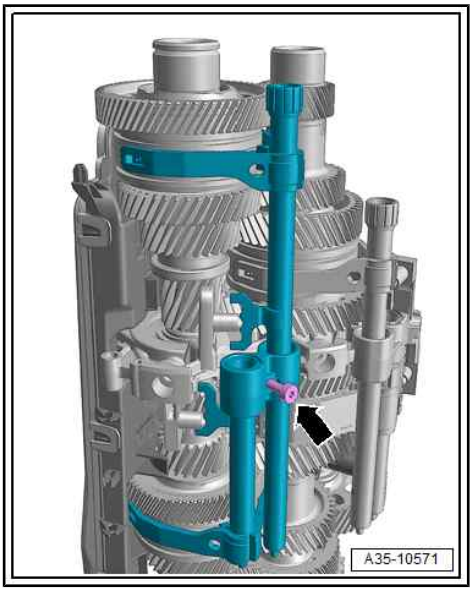

Caution

Risk of damage to input shaft

- *When pulling out input shaft 1, there is a risk that the 7th speed selector gear may be released and fall out.*

– Pull input shaft out of gear cluster.

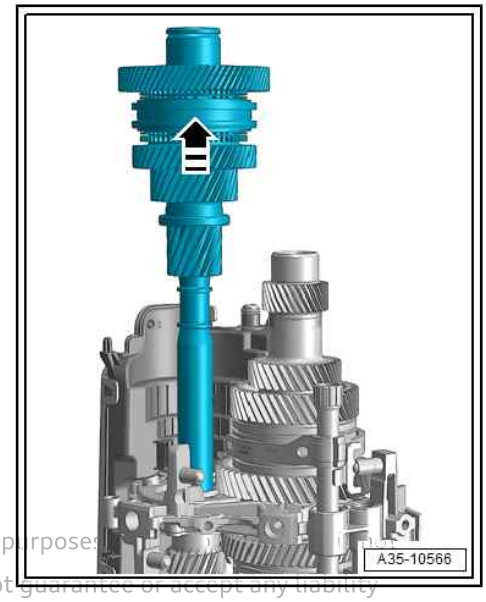

Protected by copyright. Copying for private or commercial purposes, in part, is not permitted unless authorised by AUDI AG. AUDI AG does not guarantee or accept any liability with respect to the correctness of information in this document. Copyright by AUDI AG.

Caution

Risk of damage to components of input shaft 1

- *When pressing out synchromesh, there is a risk that individual components may fall out.*

– Press out synchromesh with selector gear and 5th/7th gear bearings.

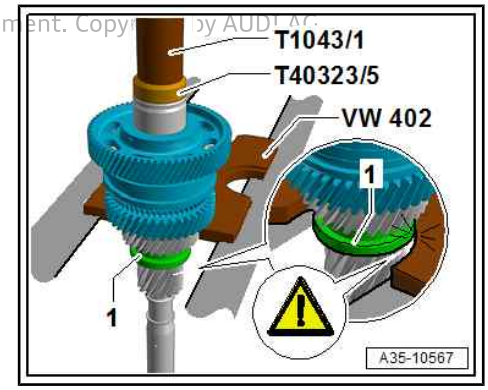

Note

Take care not to damage sensor wheel -1-.

The following components can now be removed:

Protected by copyright. Copying for private or commercial purposes, in part or in whole, is not permitted without the prior consent of AUDI AG. AUDI AG does not guarantee or accept any liability with respect to the correctness of information in this document. Copyright by AUDI AG.

Note

Mark the installation position of the individual components if necessary.

1 - Thrust washer

Note

- *Deposits and dirt on the thrust washer are not critical.*
- *If necessary, clean the thrust washer before installation.*

2 - 7th speed selector gear

3 - 7th gear inner bearing race

4 - 7th gear needle bearing

5 - 7th gear synchro-ring

6 - Synchro-hub

7 - Thrust blocks

8 - Locking collar

9 - 5th gear synchro-ring

10 - 5th speed selector gear

11 - Thrust washer

12 - 5th gear inner bearing race

- ❑ Leave in position on input shaft

13 - 5th gear needle bearing

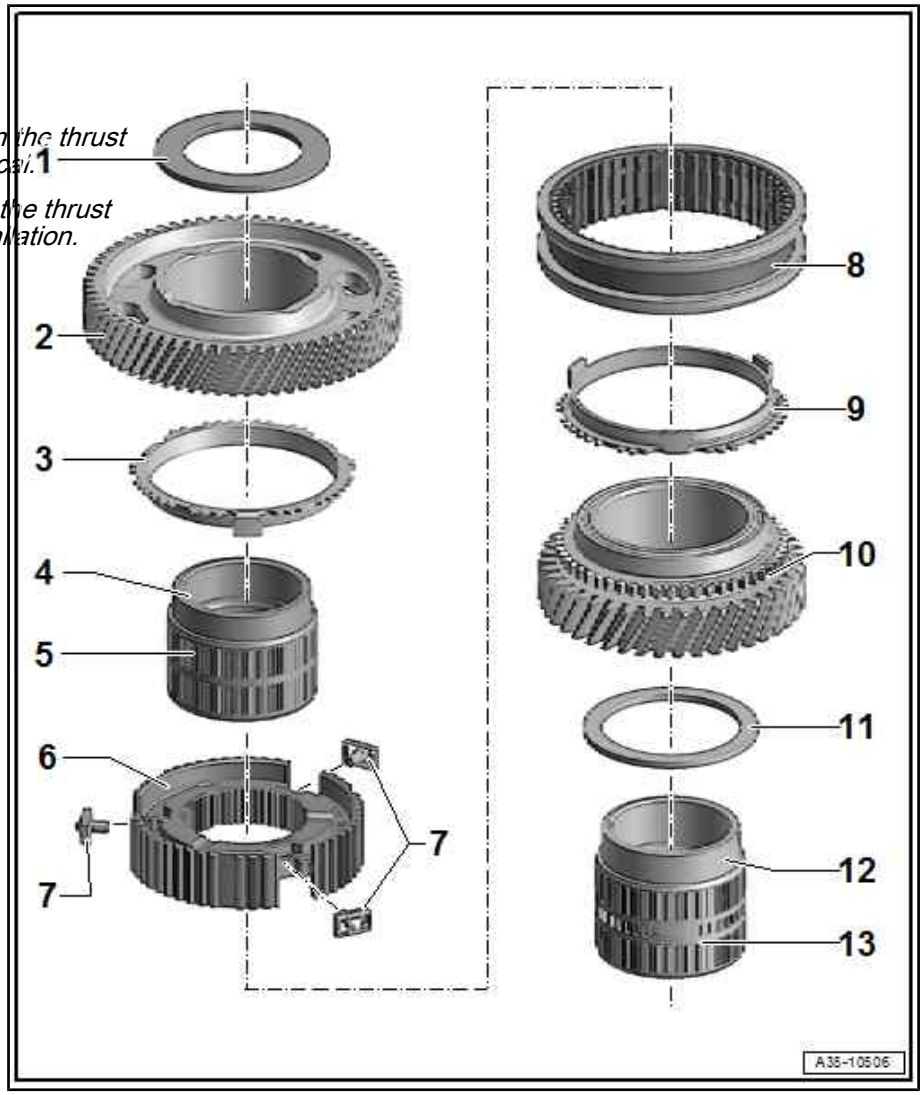

Assembling:

– Install 5th speed selector gear -1- with synchro-ring -2- and fit synchro-hub -3- so that marking faces upwards.

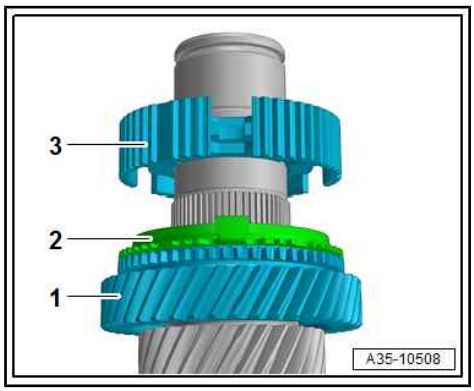

– Fit inner bearing race, making sure that oil drillings -arrows- are approx. 90° apart.

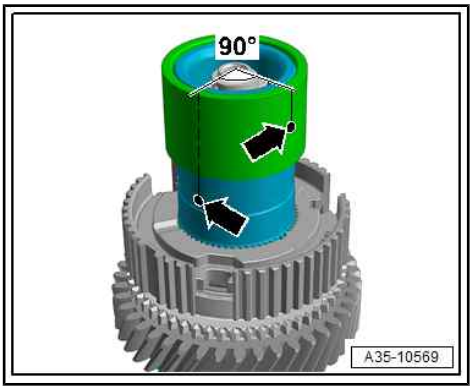

– Using assembly tool - T10219- , press on inner bearing race -1- with synchro-hub -2- approx. two thirds of way towards stop.
– Lift 5th gear synchro-hub with 5th speed selector gear -3- until locating element on synchro-ring is aligned with recess on synchro-hub -arrows-.
– At the same time, press in inner bearing race -1- and synchro-hub -2- as far as stop.

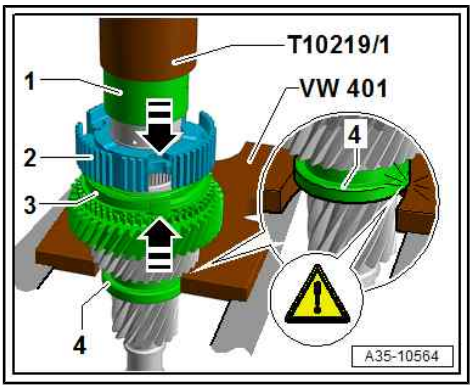

– Use flywheel -1- as assembly support for input shaft 1 -2-, as illustrated.

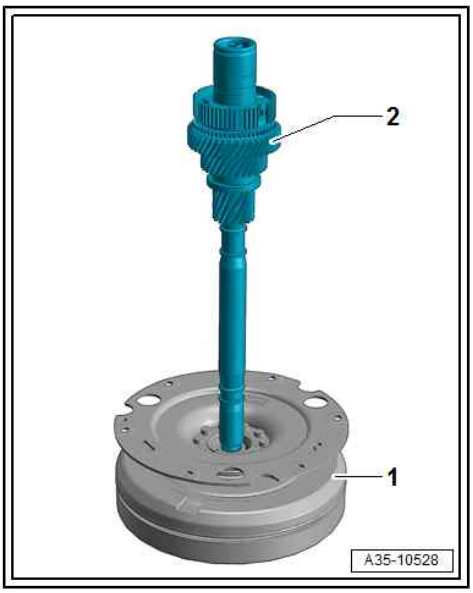

– Fit the three thrust blocks -arrows-.

Protected by copyright. Copying for private or commercial purposes, in part or in whole, is not permitted unless authorised by AUDI AG. AUDI AG does not guarantee or assume any liability with respect to the correctness of information in this document. Co

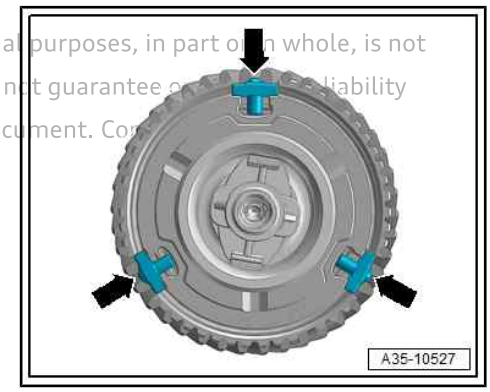

– Press on locking collar with double toothing on recess -arrow A- and with marking facing upwards.

– When pressing thrust blocks on, press thrust block balls in slightly by hand.

Protected by copyright. Copying for private or commer... permitted unless authorised by AUDI AG. AUDI AG does ... with respect to the correctness of information in this document. Copyright by AUDI AG.

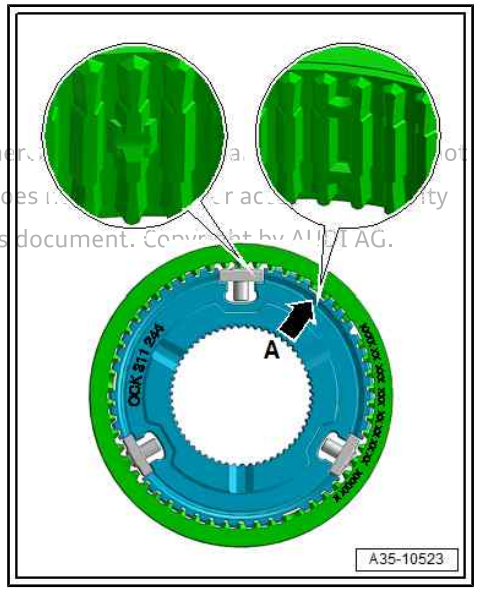

– Fit synchro-ring -1- with 7th gear needle bearing -2- and 7th speed selector gear -3-.

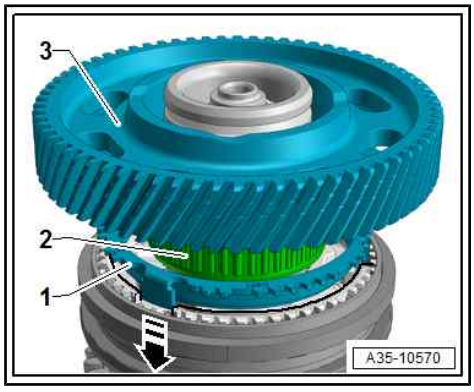

Note

- *Deposits and dirt on the thrust washer -1- are not critical.*
- *If necessary, clean the thrust washer before installation.*

– Press on thrust washer -1- using assembly tool - T10219- .

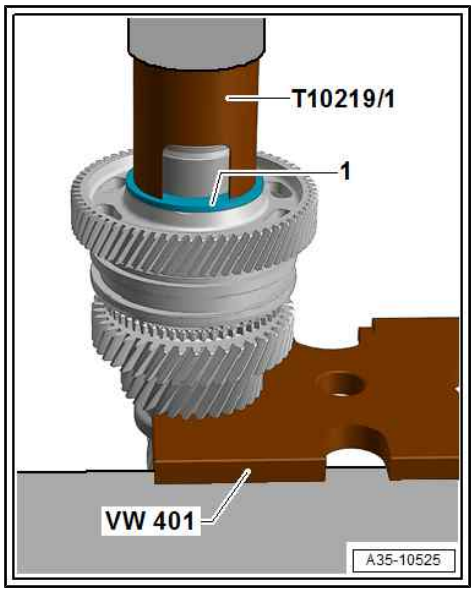

– Guide input shaft 1 carefully into gear cluster -arrow-, ensuring that needle bearings -A and B- are fitted correctly.

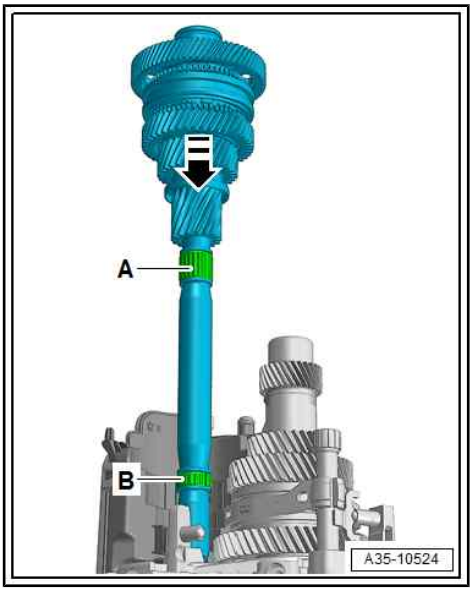

– Install selector forks and tighten bolt -arrow- to 6 Nm +30°.

Vehicles with four-wheel drive:

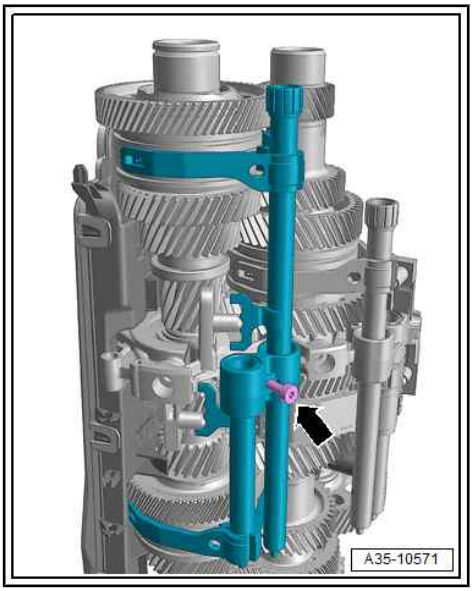

Protected by copyright. Copying for private or commercial purposes, in part or in whole, is not permitted unless authorised by AUDI AG. AUDI AG does not guarantee or accept any liability with respect to the correctness of information in this document. Copyright by AUDI AG.

– Heat up inner bearing race “F” using hot air blower - V.A.G 1416- and slide it on as far as stop with projection facing downwards -arrow A-.

– Install circlip -arrow-.

All vehicles (continued):

– Install gear cluster
⇒ “4.3.1 Removing and installing gear cluster”, page 34 .

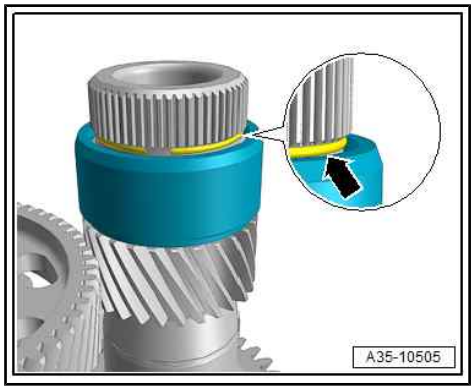

Protected by copyright. Copying for private or commercial purposes, in part or in whole, is not permitted unless authorised by AUDI AG. AUDI AG does not guarantee or accept any liability with respect to the correctness of information in this document. Copyright by AUDI AG.

39 – Final drive - front differential

1 Gearbox control system

⇒ "1.1 Overview of fitting locations - gearbox control system", page 99

1.1 Overview of fitting locations - gearbox control system

1 - Mechatronic unit for dual clutch gearbox - J743-

2 - Gearbox oil temperature sender - G93-

3 - Temperature sender in control unit - G510-

4 - Automatic gearbox control unit - J217-

5 - Gearbox input speed sender 2 - G612-

6 - Gearbox input speed sender 1 - G632-

7 - Gear selector movement sensor 4 - G490-

8 - Gear selector movement sensor 3 - G489-

9 - Electric pump 2 for gearbox - V553-

10 - Gearbox oil temperature sender 2 - G754-

11 - Gear selector movement sensor 2 - G488-

12 - Gear selector movement sensor 1 - G487-

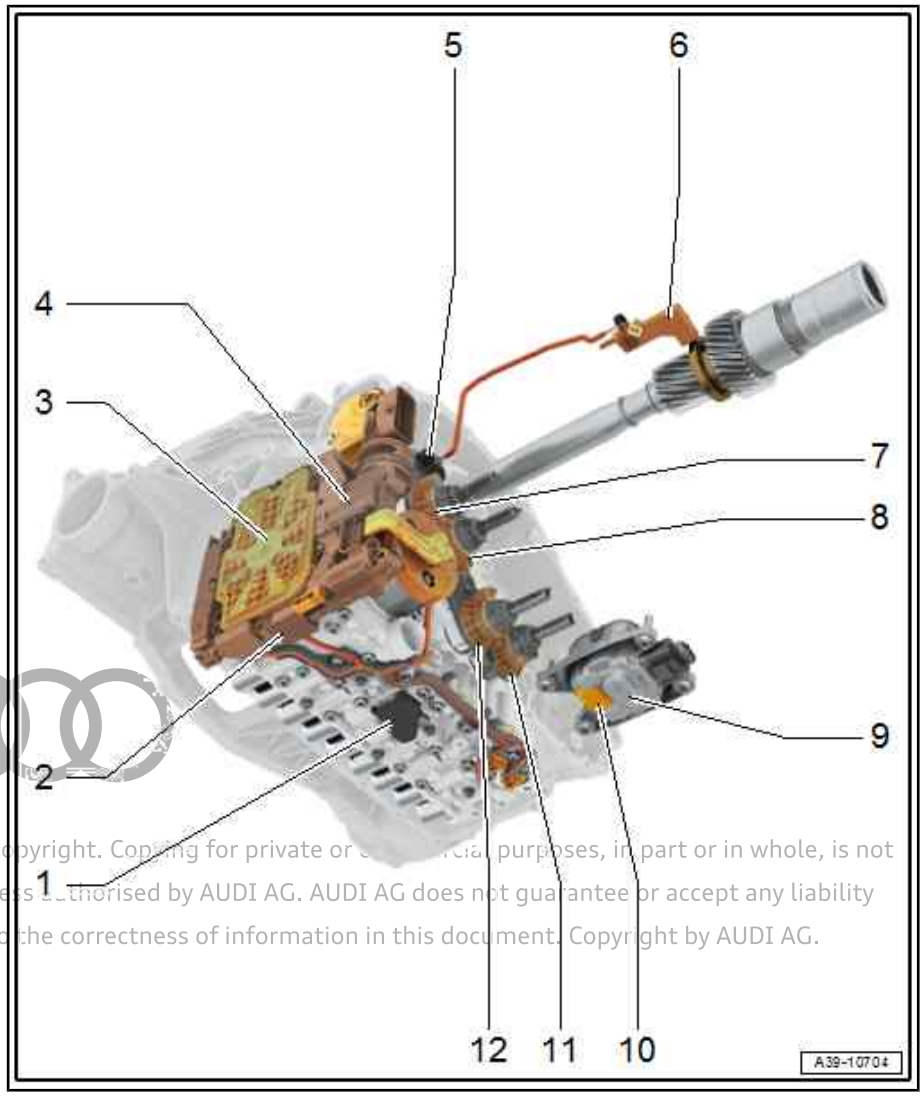

Protected by copyright. Copying for private or commercial purposes, in part or in whole, is not permitted unless authorised by AUDI AG. AUDI AG does not guarantee or accept any liability with respect to the correctness of information in this document. Copyright by AUDI AG.

1 - Gearbox auxiliary hydraulic pump - V552-

2 - Rotor position sender for gearbox auxiliary hydraulic pump - G847-

3 - Gear sensor 2 - G869-

4 - Gear sensor - G676-

5 - Automatic gearbox pressure regulating valve 3 - N217-

6 - Solenoid valve 4 - N91-

7 - Solenoid valve 3 - N90-

8 - Solenoid valve 5 - N92-

9 - Solenoid valve 6 - N93-

10 - Solenoid valve 1 - N88-

11 - Solenoid valve 2 - N89-

12 - Automatic gearbox pressure regulating valve 2 - N216-

13 - Automatic gearbox pressure regulating valve 1 - N215-

14 - Hydraulic pressure sender 1 - G545-

15 - Hydraulic pressure sender 2 - G546-

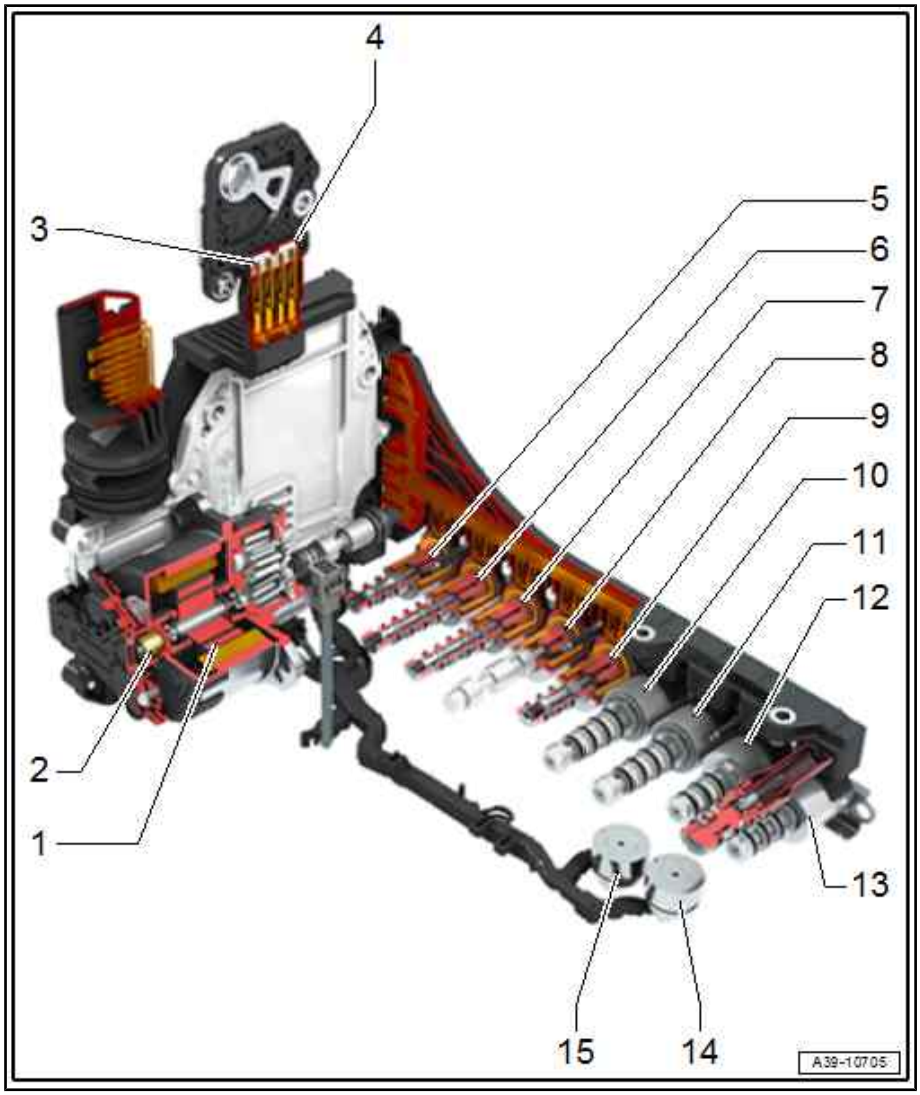

Protected by copyright. Copying for private or commercial purposes, in part or in whole, is not permitted unless authorised by AUDI AG. AUDI AG does not guarantee or accept any liability with respect to the correctness of information in this document. Copyright by AUDI AG.

2 Oil seals

⇒ “2.1 Overview of fitting locations - oil seals”, page 101

⇒ “2.2 Renewing oil seal (left-side)”, page 101

⇒ “2.3 Renewing oil seal (right-side)”, page 105

2.1 Overview of fitting locations - oil seals

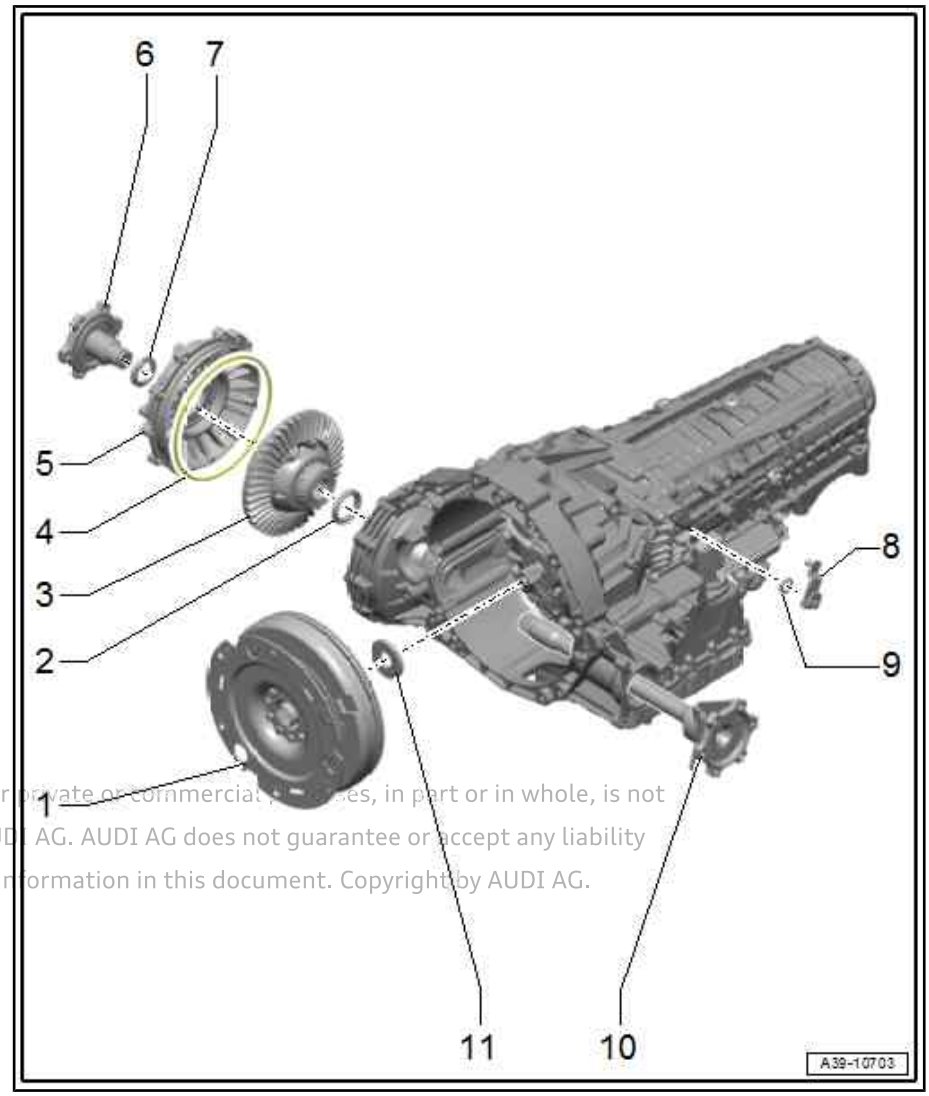

1 - Flywheel

- ❑ Removing and installing ⇒ “1.2 Removing and installing flywheel”, page 7

2 - Flange shaft oil seal (left-side)

- ❑ Renewing ⇒ “2.2 Renewing oil seal (left-side)”, page 101

3 - Front differential

4 - O-ring

- ❑ Renew after removal

5 - Cover for final drive

- ❑ Tightening torque and sequence: ⇒ page 107

6 - Flange shaft (right-side)

- ❑ Removing and installing ⇒ “3.3 Removing and installing flange shaft (right-side)”, page 109

7 - Flange shaft oil seal (right-side)

- ❑ Removing and installing ⇒ “2.3 Renewing oil seal (right-side)”, page 105

Protected by copyright. Copying for private or commercial purposes, in part or in whole, is not permitted unless authorised by AUDI AG. AUDI AG does not guarantee or accept any liability with respect to the correctness of information in this document. Copyright by AUDI AG.

8 - Gearbox selector lever

- ❑ Removing and installing ⇒ 7-speed dual clutch gearbox 0CK; Rep. gr. 34 ; Selector mechanism; Renewing selector shaft oil seal

9 - Selector shaft oil seal ⇒ 7-speed dual clutch gearbox 0CK; Rep. gr. 34 ; Selector mechanism; Renewing selector shaft oil seal

- ❑ Renew

10 - Flange shaft (left-side)

- ❑ Removing and installing ⇒ “3.2 Removing and installing flange shaft (left-side)”, page 107

11 - Input shaft oil seal (at clutch cover)

- ❑ Renewing ⇒ “1.5 Renewing input shaft oil seal”, page 17

2.2 Renewing oil seal (left-side)

Special tools and workshop equipment required

- Oil seal extractor - 3240-

Protected by copyright. Copying for private or commercial purposes, in pa
permitted unless authorised by AUDI AG. AUDI AG does not guarante
with respect to the correctness of information in this document. Copy

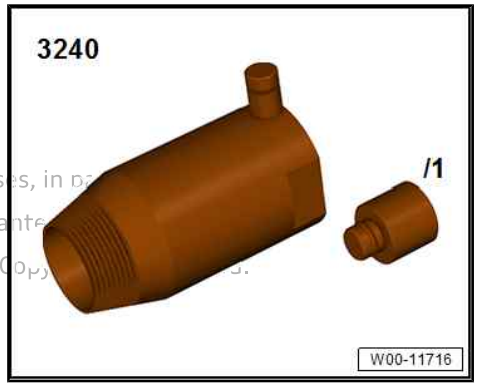

- Thrust piece - T40164-

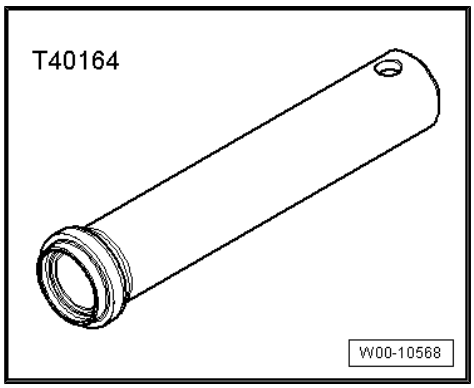

- Puller - T10037-

- Sealing grease - G 052 128 A1-

Removing

– Remove drive shafts (left and right) ⇒ Running gear, axles, steering; Rep. gr. 40 ; Drive shaft; Removing and installing drive shaft .

– Detach flange shaft (left-side) slightly from gearbox, but do not remove it ⇒ page 107 .

– Remove flange shaft (right-side) ⇒ page 109 .

Unscrew bolts -arrows- and detach cover for final drive.

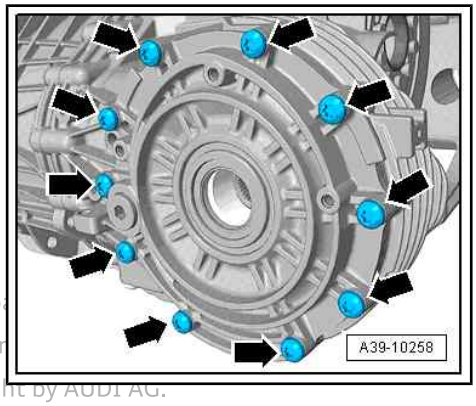

Caution

Risk of damage to the differential.

- *Detach cover for final drive from gearbox housing slowly and carefully. The differential may otherwise fall out of the gearbox.*
- *A differential which has fallen to the ground can no longer be installed. Renew gearbox if differential has fallen to the ground.*

Protected by copyright. Copying for private or commercial purposes, in part or in whole, is not permitted unless authorised by AUDI AG. AUDI AG does not guarantee or assume any liability with respect to the correctness of information in this document. Copyright by AUDI AG.

– Carefully detach cover for front final drive (some remaining gear oil may drain off).

– Carefully remove differential -arrow- and set it down on a soft surface.

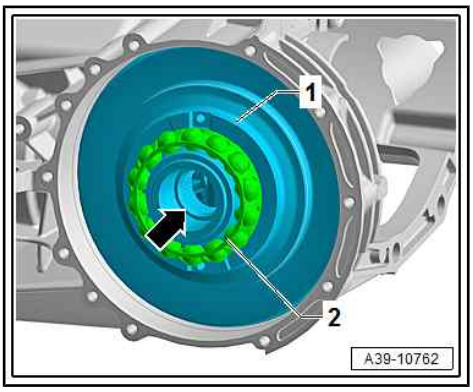

– Adjust inner part of oil seal extractor -3240- so that it is flush with outer part and secure inner part with knurled screw -arrow-.

– Lubricate threaded head of oil seal extractor, put it in position and screw into oil seal (apply firm pressure) until oil seal turns along with it.

– Continue turning and simultaneously pulling oil seal extractor until oil seal is pulled out.

– Clamp flat surfaces of oil seal extractor in a vice and remove oil seal with pliers.

– Check seal seat in gearbox housing for damage and rework if necessary.

– Clean contact surface and sealing surface.

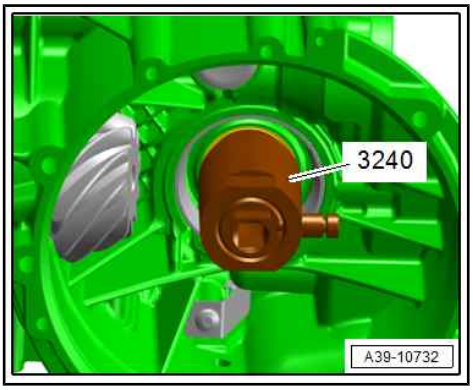

Installing

Installation is carried out in the reverse order; note the following:

– Thoroughly clean area of gearbox housing leading to differential -arrow A-, and seat for oil seal -arrow B-.

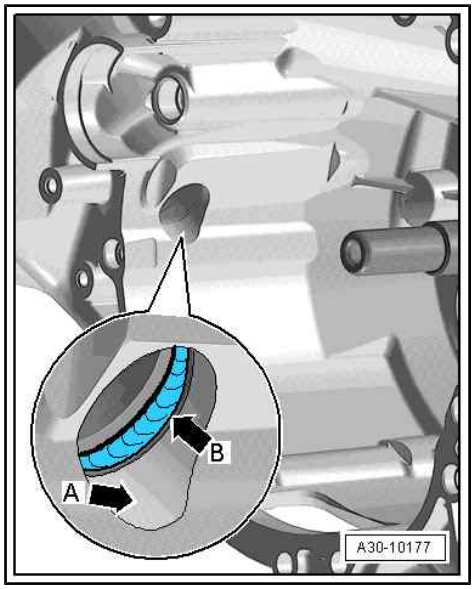

– Lightly oil outer circumference of new oil seal and slide onto thrust piece - T40164- .

• Open side of oil seal faces towards thrust piece - T40164- .

– Drive in oil seal onto stop (take care to keep seal straight).

– Pack space between sealing lip and dust lip half-full with sealing grease - G 052 128 A1- .

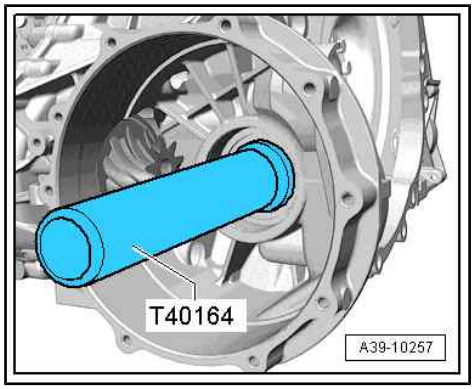

– Fit differential -arrow-.

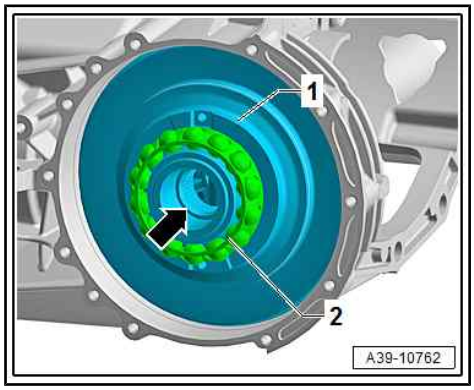

– Renew O-ring -A- on cover for front final drive and lubricate lightly with gear oil.

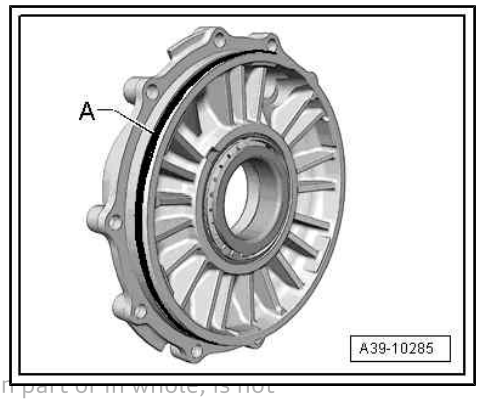

Protected by copyright. Copying for private or commercial purposes, in part or in whole, is not permitted unless authorised by AUDI AG. AUDI AG does not guarantee or accept any liability with respect to the correctness of information in this document. Copyright by AUDI AG.

– Install cover for final drive and tighten bolts -arrows-. Tightening torque ⇒ page 107
– Install flange shaft (left-side) ⇒ page 107 .
– Install flange shaft (right-side) ⇒ page 109 .

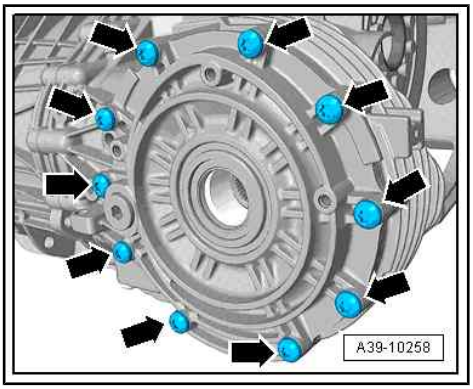

2.3 Renewing oil seal (right-side)

Special tools and workshop equipment required

♦ Thrust piece - T40163-

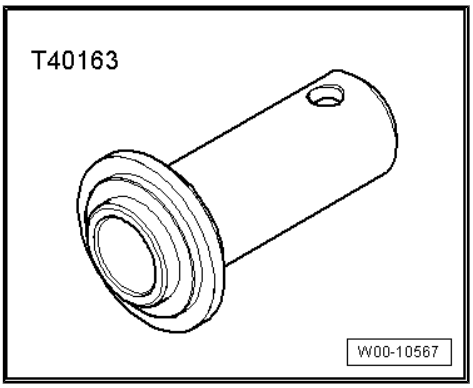

♦ Sealing grease - G 052 128 A1-

Removing

• Gearbox in vehicle
– Remove flange shaft (right-side) ⇒ “3.3 Removing and installing flange shaft (right-side)”, page 109 .
– Lever out flange shaft oil seal.

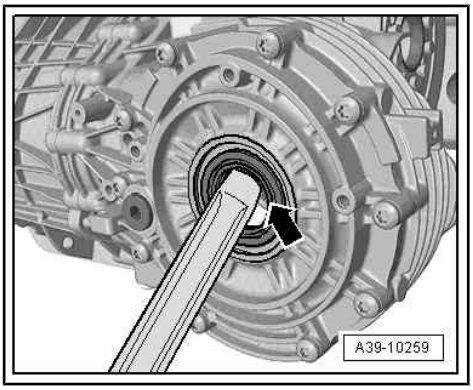

Installing

Installation is carried out in reverse order; note the following:

– Lightly oil outer circumference of new oil seal.
– Drive in oil seal onto stop using thrust piece - T40163- . Take care to keep seal straight when installing.
– Pack space between sealing lip and dust lip half-full with sealing grease - G 052 128 A1- .
– Install flange shaft (right-side) ⇒ page 109 .

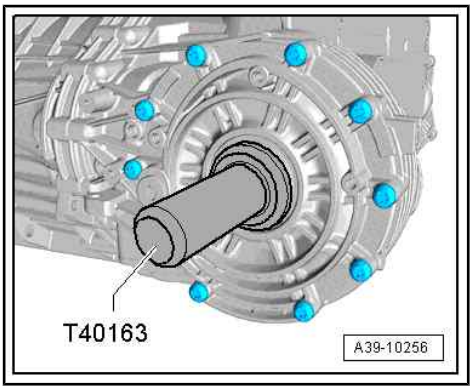

Protected by copyright. Copying for private or commercial purposes, in part or in whole, is not permitted unless authorised by AUDI AG. AUDI AG does not guarantee or accept any liability with respect to the correctness of information in this document. Copyright by AUDI AG.

3 Differential

⇒ “3.1 Exploded view - differential”, page 106

⇒ “3.2 Removing and installing flange shaft (left-side)”, page 107

⇒ “3.3 Removing and installing flange shaft (right-side)”, page 109

3.1 Exploded view - differential

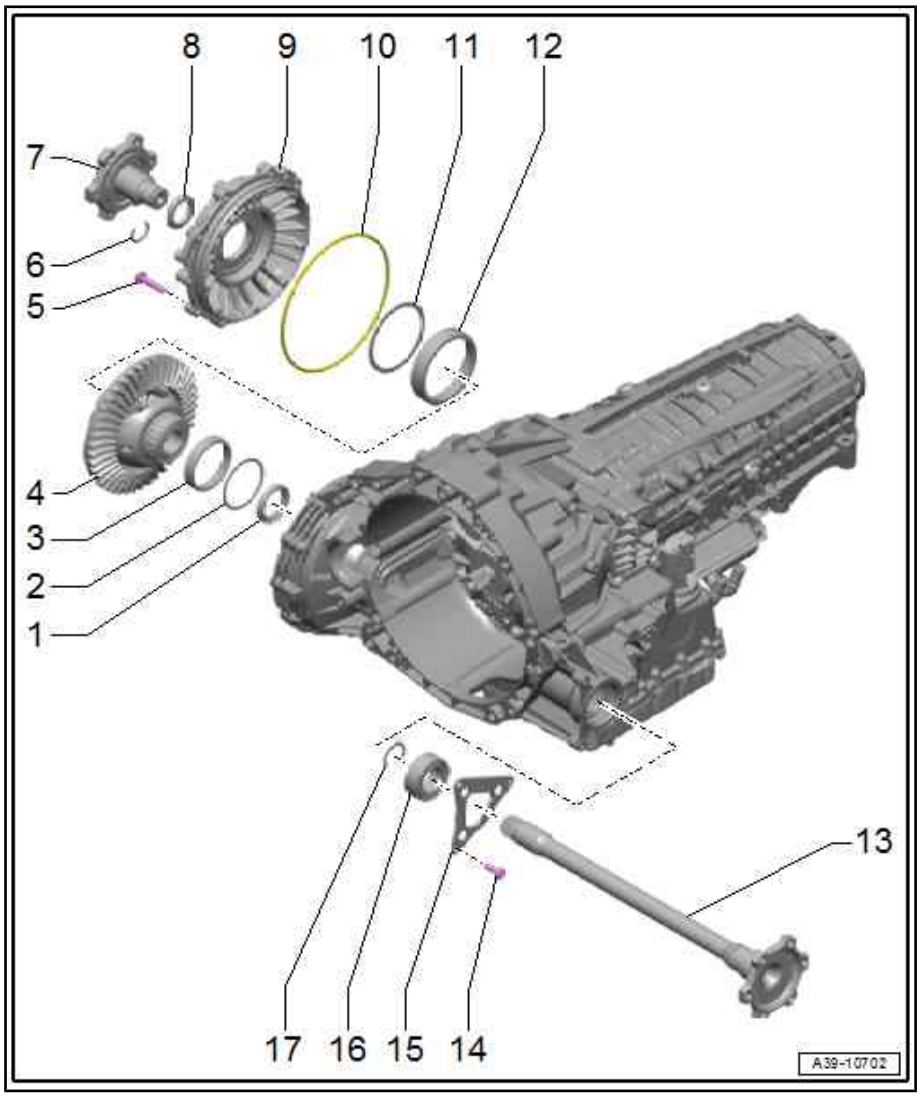

1 - Flange shaft oil seal (left-side)

- ❑ Renewing ⇒ page 101

2 - Shim

- ❑ Behind tapered roller bearing outer race

3 - Tapered roller bearing outer race

4 - Front differential

5 - Bolt

- ❑ Tightening torque and tightening sequence ⇒ Fig. ““Cover for final drive - tightening torque and sequence”“ , page 107 .

6 - Circlip

- ❑ Renew

7 - Flange shaft (right-side)

- ❑ Removing and installing ⇒ “3.3 Removing and installing flange shaft (right-side)”, page 109

8 - Flange shaft oil seal (right-side)

- ❑ Renew ⇒ “2.3 Renewing oil seal (right-side)”, page 105

9 - Cover for final drive

- ❑ Removing and installing ⇒ “2.3 Renewing oil seal (right-side)”, page 105

10 - O-ring

- ❑ Renew after removal

Protected by copyright. Copying for private or commercial purposes, in part or in whole, is not permitted unless authorised by AUDI AG. AUDI AG does not guarantee or accept any liability with respect to the correctness of information in this document. Copyright by AUDI AG.

11 - Shim

- ❑ Behind tapered roller bearing outer race

12 - Tapered roller bearing outer race

13 - Flange shaft (left-side)

- ❑ Removing and installing ⇒ “3.2 Removing and installing flange shaft (left-side)”, page 107

14 - Bolt

- ❑ 3x
- ❑ Tightening torque: 10 Nm + 90°

15 - Bearing plate

❑ Secured to flange shaft (left-side) together with bearing -item 16- by circlip -17-

16 - Bearing

❑ For flange shaft (left-side)

17 - Circlip

❑ For bearing for flange shaft (left-side)

Protected by copyright. Copying for private or commercial purposes, in part or in whole, is not permitted unless authorised by AUDI AG. AUDI AG does not guarantee or accept any liability with respect to the correctness of information in this document. Copyright by AUDI AG.

Cover for final drive - tightening torque and sequence

– Tighten bolts in stages in the sequence described:

Stage	Bolts	Tightening torque/angle specification
1.	-1 … 12-	3 Nm
2.	-1 … 12-	20 Nm
3.	-1 … 12-	Turn 90° further

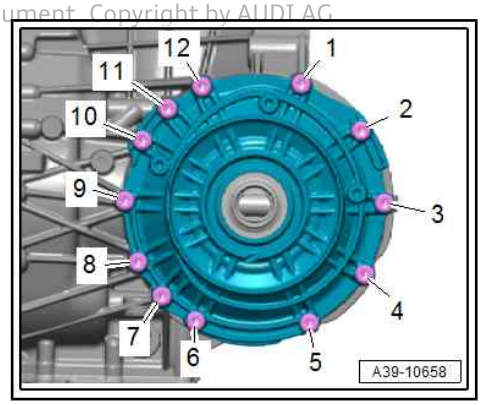

3.2 Removing and installing flange shaft (left-side)

Special tools and workshop equipment required

♦ Engine and gearbox jack - V.A.G 1383 A-

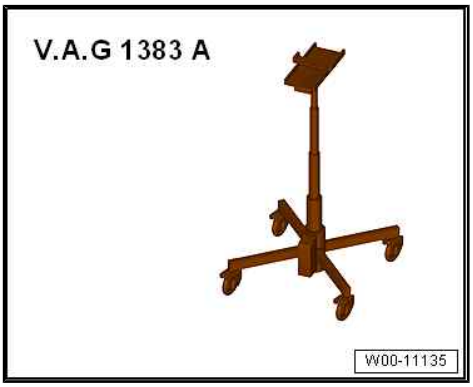

♦ Sealing grease ⇒ Electronic parts catalogue

Removing

• Gearbox in vehicle

– Drain gear oil ⇒ 7-speed dual clutch gearbox 0CJ, 0CK, 0CL, 0DN; Rep. gr. 34 ; Gear oil; Draining and filling gear oil .

– Remove drive shaft (left-side) ⇒ Running gear, axles, steering; Rep. gr. 40 ; Drive shaft; Removing and installing drive shaft .

– Remove heat shield for drive shaft (left-side) ⇒ Running gear, axles, steering; Rep. gr. 40 ; Drive shaft; Removing and installing heat shield for drive shaft .

– Remove shock absorber fork (left-side) ⇒ Running gear, axles, steering; Rep. gr. 40 ; Suspension strut, upper links; Removing and installing shock absorber fork .

– Unscrew bolts -arrows- on mounting bracket for flange shaft.

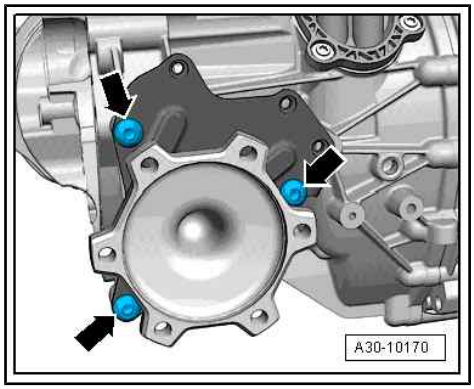

– Pull cover -arrow- (bottom) out of gearbox.

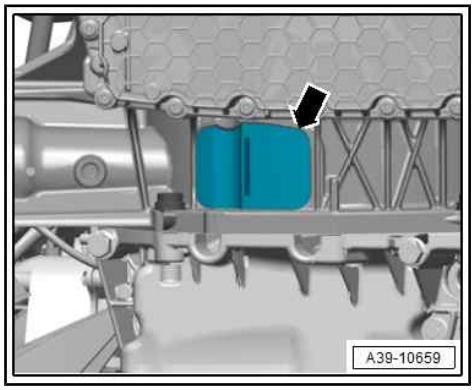

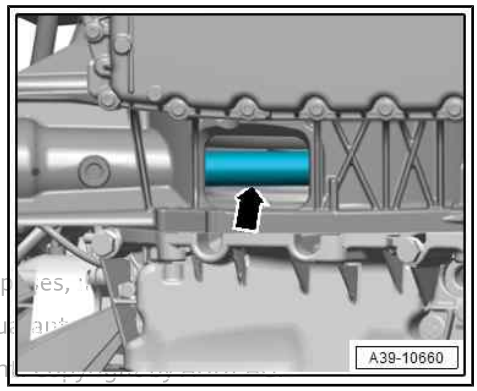

WARNING

Risk of damage to oil seal between final drive and gearbox housing when detaching flange shaft.

- *Hold flange shaft -arrow- so that it is centred, otherwise oil seal will be damaged by flange shaft splines.*
- *If the oil seal is damaged, it must be renewed.*

Protected by copyright. Copying for private or commercial purposes, in part or in whole, is not permitted unless authorised by AUDI AG. AUDI AG does not guarantee or assume any liability with respect to the correctness of information in this document. Copyright by AUDI AG.

– To avoid damaging oil seal, support flange shaft and guide it out through opening in gearbox.

– Remove flange shaft (left-side) from gearbox in direction of -arrow A-.

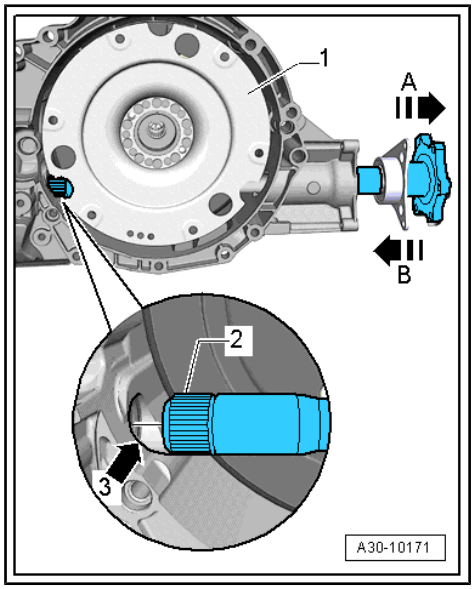

Note

-Items 1, 3- and -arrow B- can be disregarded.

Installing

Installation is carried out in reverse order; note the following:

Note

Renew bolts which are tightened by turning through a specified angle.

WARNING

Risk of damage to oil seal between final drive and gearbox housing when inserting flange shaft.

- *Hold flange shaft -arrow- so that it is centred, otherwise oil seal will be damaged by flange shaft splines.*
- *If the oil seal is damaged, it must be renewed.*

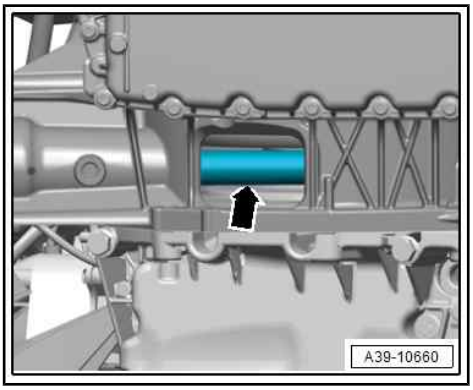

– To avoid damaging oil seal, support flange shaft and guide it in through opening in gearbox.

Protected by copyright. Copying for private or commercial purposes, in part or in whole, is not permitted. Translation, duplication and storage in other media are also not permitted. No liability is accepted with respect to the correctness of information in this document. Copyright by AUDI AG.

– Slide flange-shaft (left-side) -2- into gearbox in direction of -arrow B- (keep end of shaft centred while guiding it into oil seal on front final drive -arrow 3-).

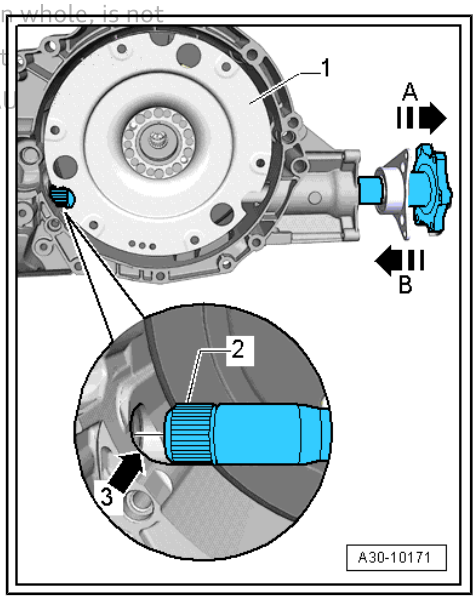

– Install shock absorber fork ⇒ Running gear, axles, steering; Rep. gr. 40 ; Suspension strut, upper links; Removing and installing shock absorber fork .

Tightening torque

- ⇒ “3.1 Exploded view - differential”, page 106
- Upper links and coupling rod ⇒ Running gear, axles, steering; Rep. gr. 40 ; Suspension strut, upper links; Exploded view - suspension strut, upper links
- Drive shaft ⇒ Running gear, axles, steering; Rep. gr. 40 ; Drive shaft; Exploded view - drive shaft
- ⇒ Running gear, axles, steering; Rep. gr. 40 ; Drive shaft; Removing and installing heat shield for drive shaft

3.3 Removing and installing flange shaft (right-side)

Special tools and workshop equipment required

- Circlip pliers - VAS 5503A-

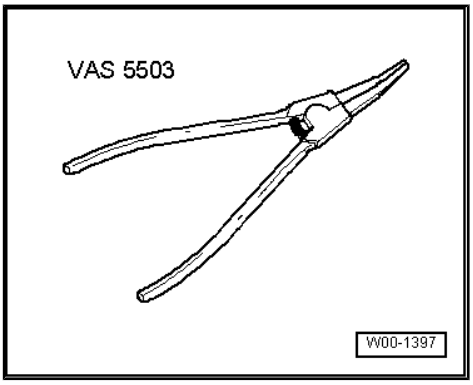

♦ Used oil collection and extraction unit - VAS 6622A-

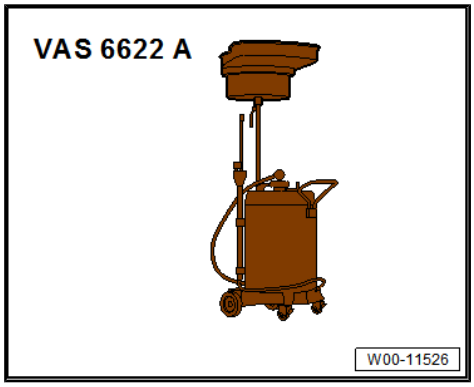

♦ Puller - T10037-

♦ Sealing grease - G 052 128 A1-

Removing

- Gearbox in vehicle

– Remove drive shaft (right-side) ⇒ Running gear, axles, steering; Rep. gr. 40 ; Drive shaft; Removing and installing drive shaft .

– Remove heat shield for drive shaft (right-side) ⇒ Running gear, axles, steering; Rep. gr. 40 ; Drive shaft; Removing and installing heat shield for drive shaft .

– Place used oil collection and extraction unit - VAS 6622A- below gearbox.

– Remove flange shaft (right-side); to do so, secure puller - T10037- to gearbox housing -arrow-.

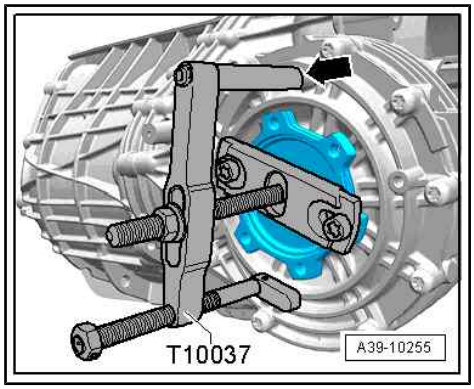

Protected by copyright. Copying for private or commercial purposes, in part or in whole, is not permitted unless authorised by AUDI AG. AUDI AG does not guarantee or accept any liability with respect to the correctness of information in this document. Copyright by AUDI AG.

Installing

Installation is carried out in reverse order; note the following:

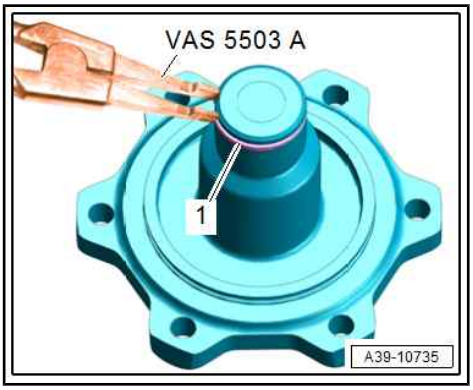

Note

Renew circlip after removal

- Insert circlip -1- with circlip pliers - VAS 5503A- .
- Check flange shaft oil seal (right-side) for damage and renew if necessary.
- Pack space between sealing lip and dust lip half-full with sealing grease - G 052 128 A1- .
- Fit flange shaft (right-side).
- Fill up gear oil and check oil level ⇒ 7-speed dual clutch gearbox 0CJ, 0CK, 0CL, 0DN; Rep. gr. 34 ; Gear oil; Draining and filling gear oil .

Tightening torques

- ⇒ Running gear, axles, steering; Rep. gr. 40 ; Drive shaft; Exploded view - drive shaft
- ⇒ Running gear, axles, steering; Rep. gr. 40 ; Drive shaft; Removing and installing heat shield for drive shaft

Protected by copyright. Copying for private or commercial purposes, in part or in whole, is not permitted unless authorised by AUDI AG. AUDI AG does not guarantee or accept any liability with respect to the correctness of information in this document. Copyright by AUDI AG.

4 Centre differential

⇒ “4.1 Exploded view - centre differential”, page 112
⇒ “4.2 Removing and installing centre differential”, page 113
⇒ “4.3 Renewing oil seal for rear splined shaft”, page 114
⇒ “4.4 Renewing ball bearing for rear splined shaft”, page 118
⇒ “4.5 Renewing ball bearing for centre differential”, page 121

4.1 Exploded view - centre differential

1 - Centre differential

2 - Bearing
- ❑ For centre differential

3 - Spring

4 - Circlip
- ❑ Secures ball bearing in centre differential housing

5 - Circlip
- ❑ Secures rear splined shaft

6 - Ball bearing
- ❑ For rear splined shaft

7 - Housing
- ❑ For centre differential

8 - Bolt
- ❑ M8 × 40
- ❑ Renew
- ❑ 10 Nm + 90°

9 - Rear splined shaft

10 - Oil seal

11 - Dust ring

12 - Damper weight
- ❑ Depending on version

13 - Bolt
- ❑ 30 Nm

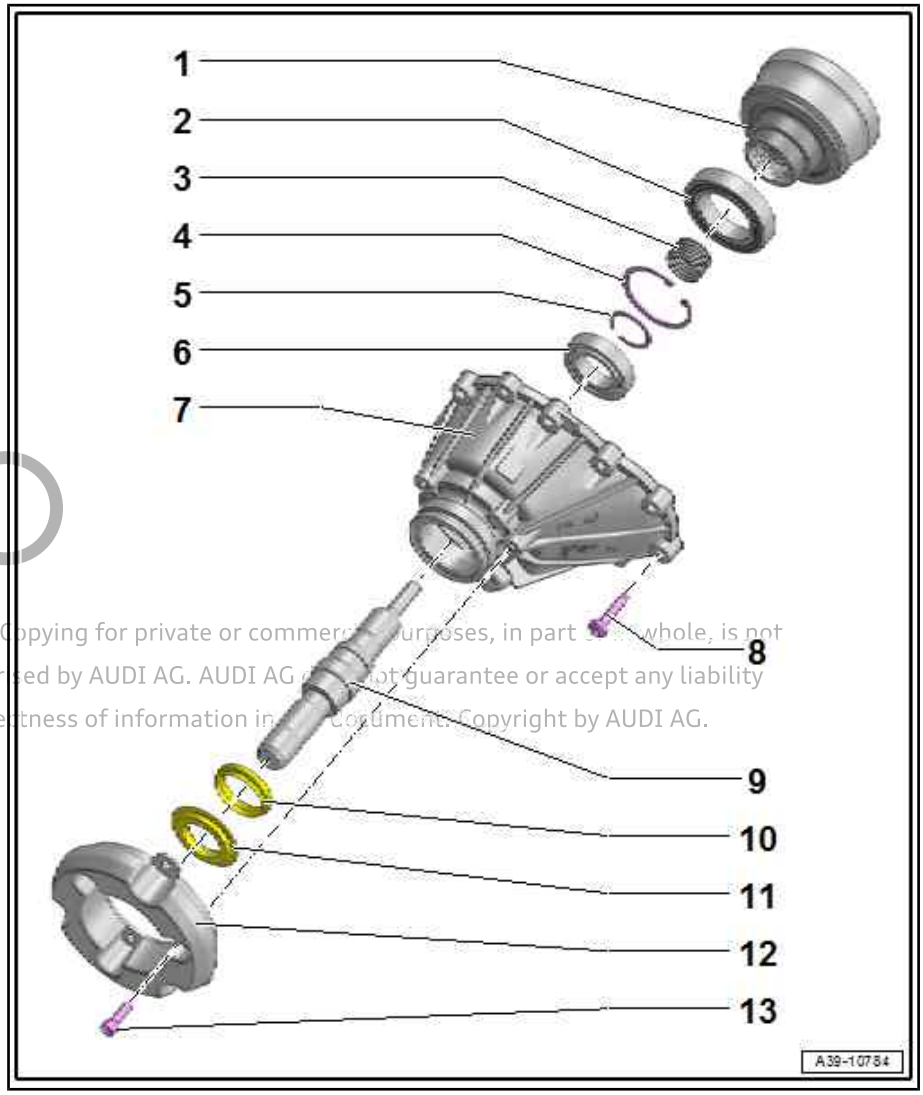

Protected by copyright. Copying for private or commercial purposes, in part or whole, is not permitted unless authorised by AUDI AG. AUDI AG does not guarantee or accept any liability with respect to the correctness of information in this document. Copyright by AUDI AG.

Centre differential housing - tightening torque and sequence

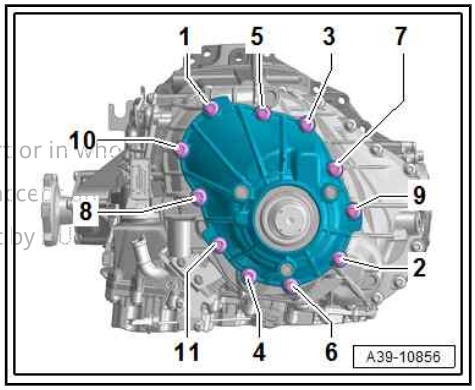

Note

Protected by copyright. Copying for private or commercial purposes, in part or in whole, is not permitted unless authorised by AUDI AG. AUDI AG does not guarantee or accept liability with respect to the correctness of information in this document. Copyright by AUDI AG.

Renew bolts which are tightened by turning through a specified angle.

– Tighten bolts in 3 stages in the sequence shown:

Stage	Bolts	Tightening torque/angle specification
1.	-1- and -11-	3 Nm
2.	-1 … 11-	10 Nm
3.	-1 … 11-	Turn 90° further

4.2 Removing and installing centre differential

Removing

- Gearbox installed

Note

- *General repair instructions* *⇒ page 1* .
- *Rules for cleanliness* *⇒ page 5* .

– Remove propshaft ⇒ Rear final drive; Rep. gr. 39 ; Propshaft; Removing and installing propshaft .

– Drain gear oil ⇒ 7-speed dual clutch gearbox 0CJ, 0CK, 0CL, 0DN; Rep. gr. 34 ; Gear oil; Draining and filling gear oil .

Caution

Gearbox components must be handled with care, otherwise they will be damaged.

- *The centre differential is pre-tensioned with a spring.*
- *Detach centre differential housing from gearbox carefully towards the rear. Take care that centre differential does not drop out of gearbox.*

– Slacken bolts securing centre differential housing in the sequence -11 ... 1- and remove bolts.

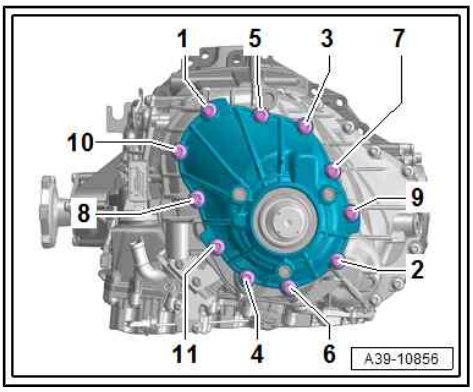

– Detach oil guide.

Protected by copyright. Copying for private or commercial p in whole, is not permitted unless authorised by AUDI AG. AUDI AG does no any liability with respect to the correctness of information in this doc DI AG.

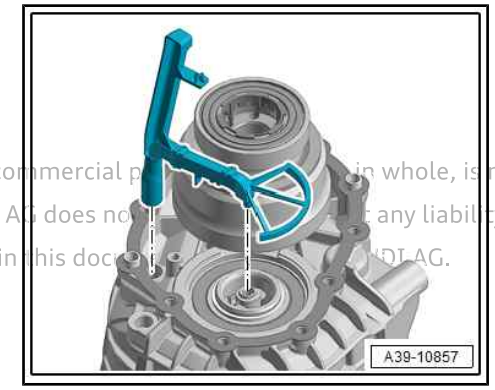

– Secure centre differential -1- to prevent it from falling out, or pull it off output shaft towards rear.

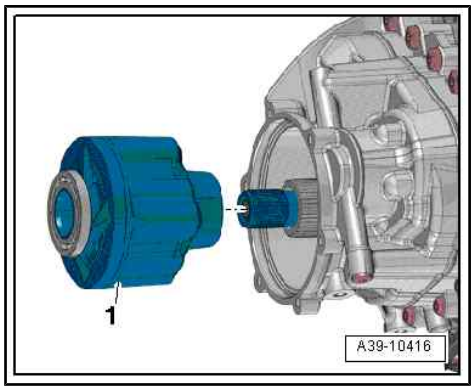

Installing

Installation is carried out in reverse order; note the following:

– Fit centre differential onto splines of output shaft. At the same time turn centre differential slightly.

– Install oil guide.

– Install propshaft ⇒ Rear final drive; Rep. gr. 39 ; Propshaft; Removing and installing propshaft .

– Fill up gear oil and check oil level ⇒ 7-speed dual clutch gearbox 0CJ, 0CK, 0CL, 0DN; Rep. gr. 34 ; Gear oil; Draining and filling gear oil .

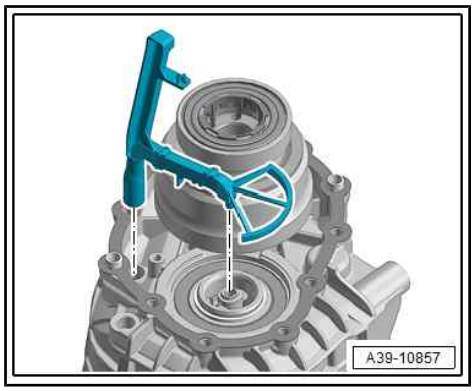

Tightening torques

♦ ⇒ Fig. ""Centre differential housing - tightening torque and sequence"" , page 113

4.3 Renewing oil seal for rear splined shaft

4.3.1 Vehicles with centre differential

Special tools and workshop equipment required

♦ Extractor tool - T20143/1-

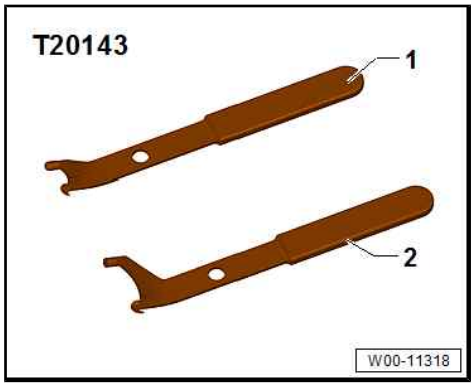

- Assembly tool - T40239-

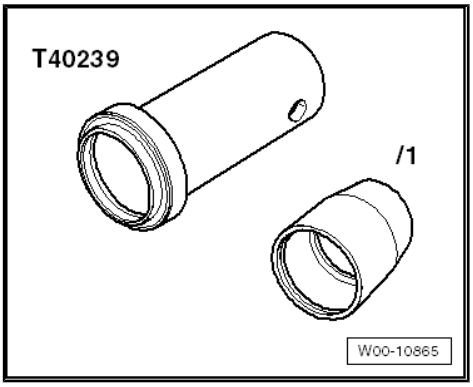

- Sealing grease - G 052 128 A1-

Procedure

Note

- *General repair instructions ⇒ page 1 .*
- *Rules for cleanliness ⇒ page 5 .*

– Remove propshaft ⇒ Rear final drive; Rep. gr. 39 ; Propshaft; Removing and installing propshaft .

– Pry off dust ring -1-.

Note

The dust ring cannot be removed without being damaged.

Protected by copyright. Copying for private or commercial purposes, in p
permitted unless authorised by AUDI AG. AUDI AG does not guarantee o
with respect to the correctness of information in this document. Copyrig

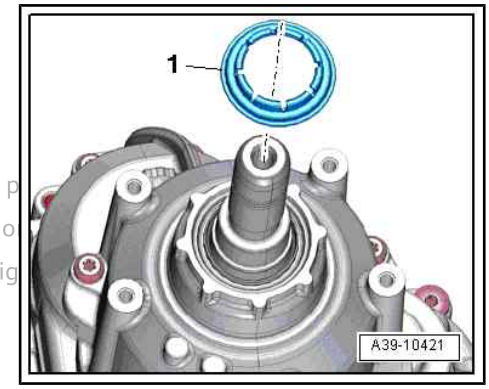

– Pull out oil seal for rear splined shaft.

– Clean contact surface and sealing surface.

– Lubricate outer circumference of seal with gear oil.

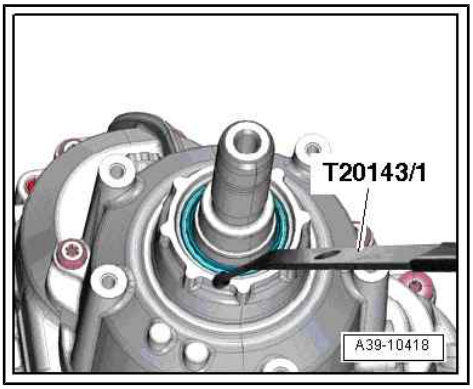

– Fit guide sleeve - T40239/1- -item 1- onto rear splined shaft.

– Pack space between sealing lip and dust lip half-full with sealing grease - G 052 128 A1- .

– Push oil seal -2- over guide sleeve -item 1- and onto rear splined shaft.

• Installation position: open side of oil seal should face gearbox housing.

Protected by copyright. Copying for private or commerc
permitted unless authorised by AUDI AG. AUDI AG does
with respect to the correctness of information in this do

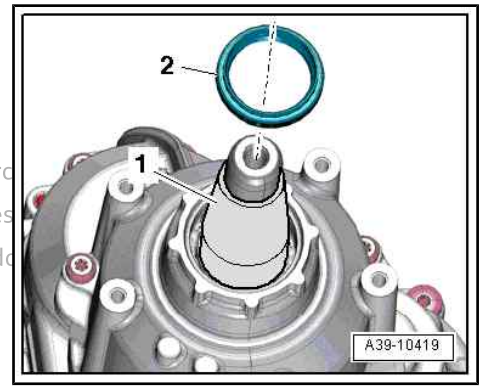

– Drive in oil seal as far as stop using thrust piece - T40239- , -item 1-. Make sure oil seal remains straight.

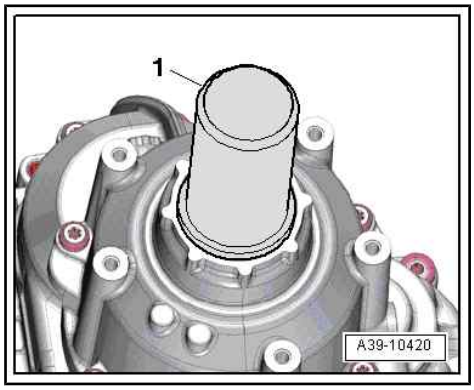

Note

Pull guide sleeve - T40239/1- carefully out of oil seal so that sealing lip is not rolled back.

– Clip on new dust ring -1-.

– Install propshaft ⇒ Rear final drive; Rep. gr. 39 ; Propshaft; Removing and installing propshaft .

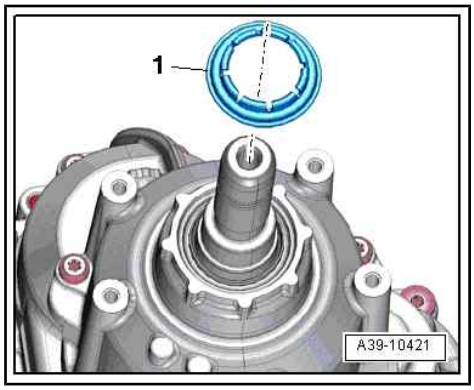

4.3.2 Vehicles with four-wheel drive coupling

Removing and installing selector shaft oil seal (with gearbox installed in vehicle)

Special tools and workshop equipment required

♦ Protective assembly sleeve - T40367/1-

♦ Thrust piece - T40367/2-

♦ Extractor tool - T20143/2-

Protected by copyright. Copying for private or commercial purposes, in part or in whole, is not permitted unless authorised by AUDI AG. AUDI AG does not guarantee or assume any liability with respect to the correctness of information in this document. Copyright by AUDI AG.

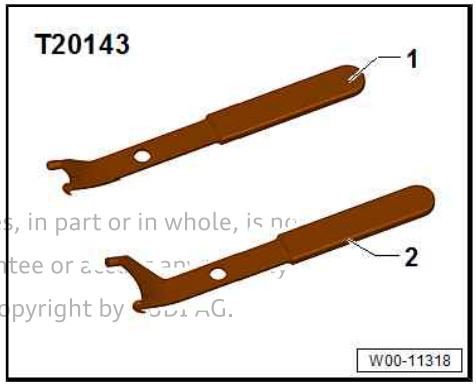

♦ Sealing grease ; select correct type from ⇒ Electronic parts catalogue

Removing

– Remove propshaft ⇒ Rear final drive; Rep. gr. 39 ; Propshaft; Removing and installing propshaft .

– Remove four-wheel drive coupling ⇒ Rear final drive; Rep. gr. 39 ; Four-wheel drive coupling; Removing and installing four-wheel drive coupling .

– Lever out output shaft oil seal using extractor tool - T20143/2- .

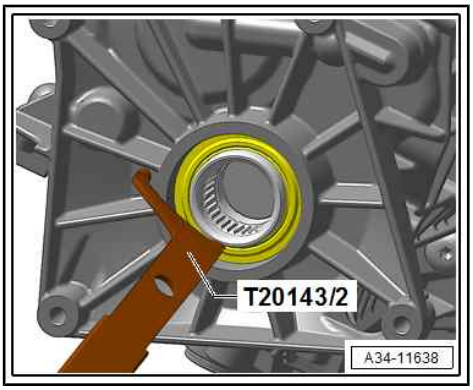

Installing

– Lightly oil outer circumference of oil seal.

– Pack space between sealing lip and dust lip half-full with sealing grease .

– Use protective assembly sleeve - T40367/1- to fit seal.

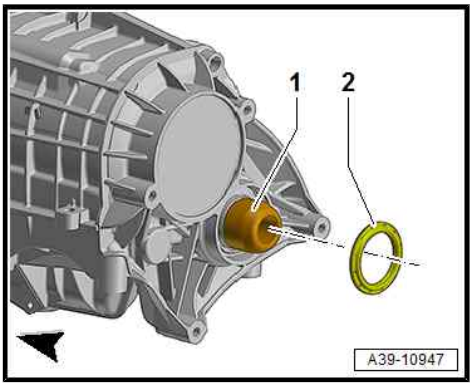

– Press in seal as far as stop using thrust piece - T40367/2- .
– Install four-wheel drive coupling ⇒ Rear final drive; Rep. gr. 39 ; Four-wheel drive coupling; Removing and installing four-wheel drive coupling .
– Install propshaft ⇒ Rear final drive; Rep. gr. 39 ; Propshaft; Removing and installing propshaft .

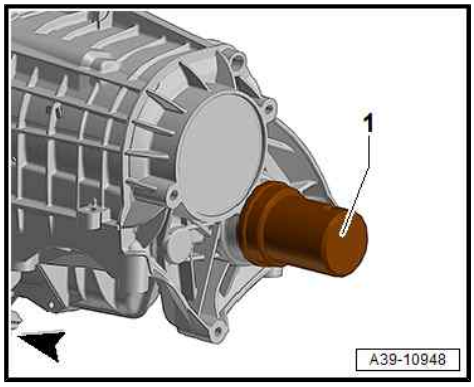

4.4 Renewing ball bearing for rear splined shaft

Special tools and workshop equipment required

♦ Thrust plate - VW 401-

♦ Thrust plate - VW 402-

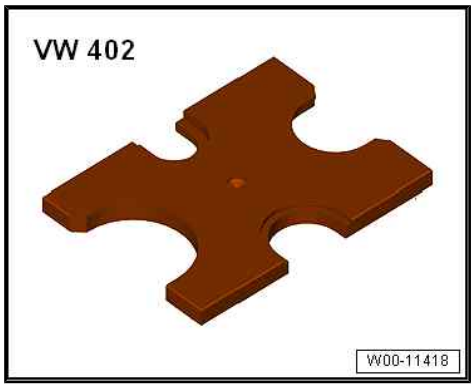

♦ Press tool - VW 409-

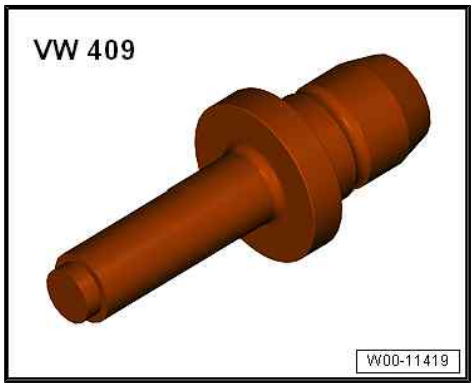

Protected by copyright. Copying for private or commercial purposes, in part or in whole, is not permitted unless authorised by AUDI AG. AUDI AG does not guarantee or accept any liability with respect to the correctness of information in this document. Copyright by AUDI AG.

- Press tool - VW 412-

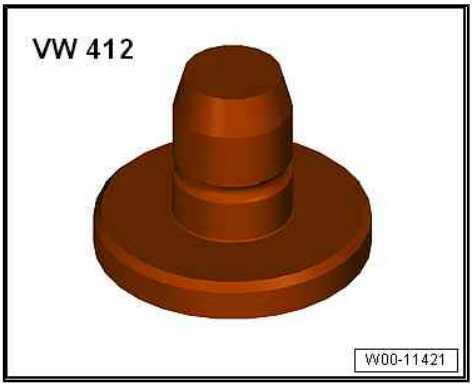

- Tube - VW 415A-

- Tube - 2040-

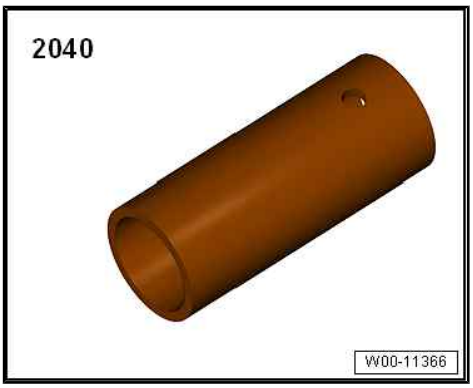

Procedure

– Remove centre differential housing ⇒ page 113 .

– Remove circlip -A- for rear splined shaft and circlip -B- for ball bearing.

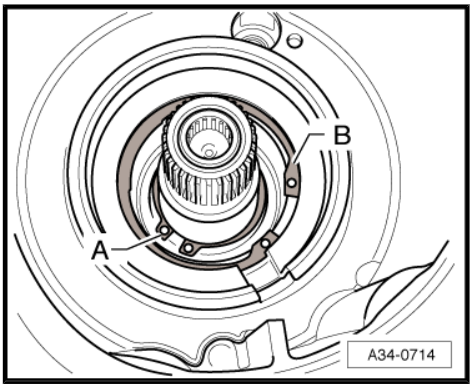

Protected by copyright. Copying for private or commercial purposes, in part or in whole, is not permitted unless authorised by AUDI AG. AUDI AG does not guarantee or accept any liability with respect to the correctness of information in this document. Copyright by AUDI AG.

– Press rear splined shaft out of centre differential housing using press tool - VW 409- .

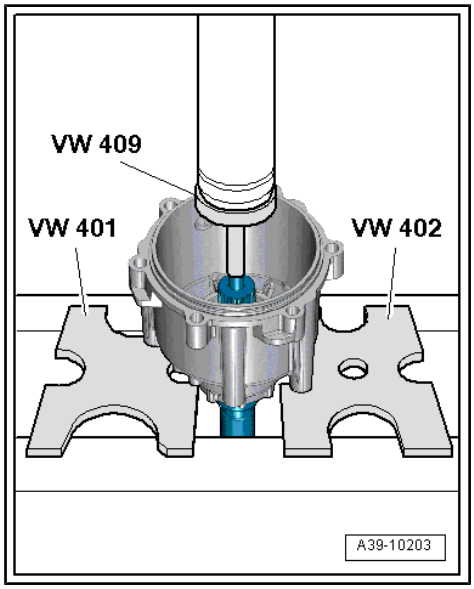

– Prise out oil seal.

Note

To prevent damage to the housing, place something underneath (e.g. metal bar -A-) .

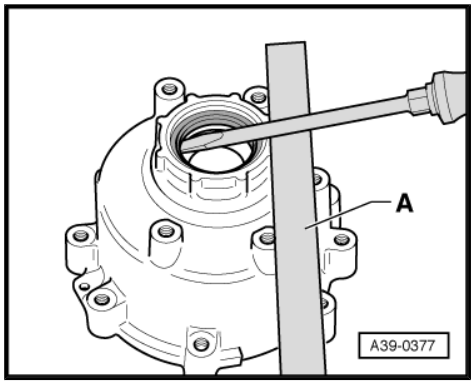

– Press out ball bearing for rear splined shaft.

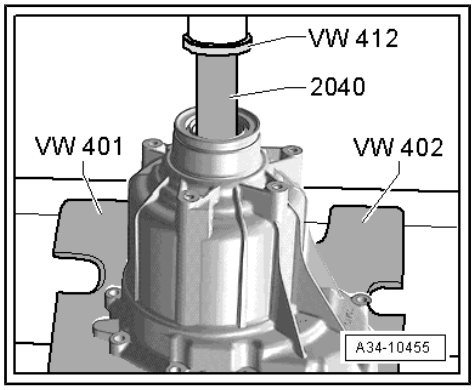

– Press in ball bearing for rear splined shaft.

• Collar of tube - VW 415 A- -arrow- faces press tool - VW 412- .

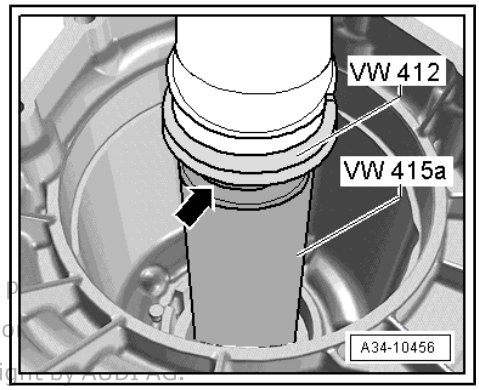

Protected by copyright. Copying for private or commercial purposes, in p
permitted unless authorised by AUDI AG. AUDI AG does not guarantee c
with respect to the correctness of information in this document. Copyright by AUDI AG.

– Fit circlip -B- for ball bearing.

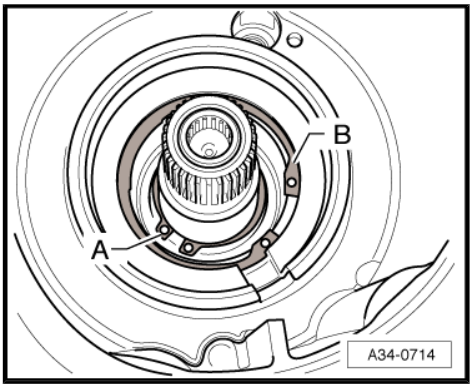

Note

Item -A- can be disregarded.

– Press rear splined shaft into centre differential housing using press tool - VW 412- .

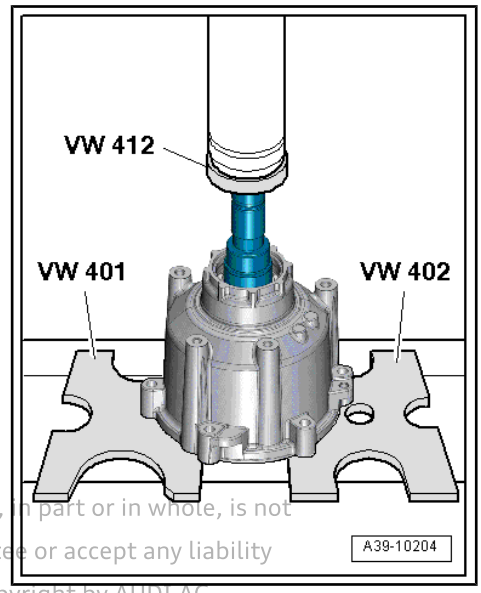

Protected by copyright. Copying for private or commercial purposes, in part or in whole, is not permitted unless authorised by AUDI AG. AUDI AG does not guarantee or accept any liability with respect to the correctness of information in this document. Copyright by AUDI AG.

– Fit circlip -arrow- into groove on rear splined shaft.

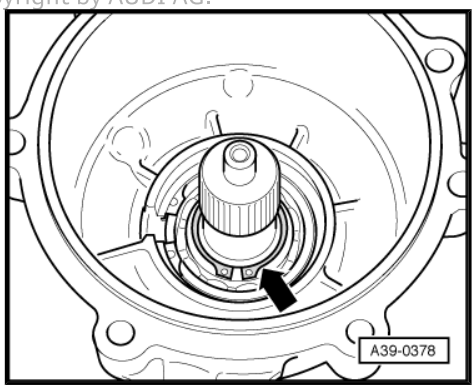

– Install centre differential housing ⇒ page 113 .

– Install oil seal for rear splined shaft ⇒ page 114 .

– Fill up gear oil and check oil level ⇒ 7-speed dual clutch gearbox 0CJ, 0CK, 0CL, 0DN; Rep. gr. 34 ; Gear oil; Draining and filling gear oil .

4.5 Renewing ball bearing for centre differential

Special tools and workshop equipment required

- Thrust plate - VW 401-

Protected by copyright. Copying for private or commercial purposes, in
permitted unless authorised by AUDI AG. AUDI AG does not guarantee or
with respect to the correctness of information in this document. Copyright by AUDI

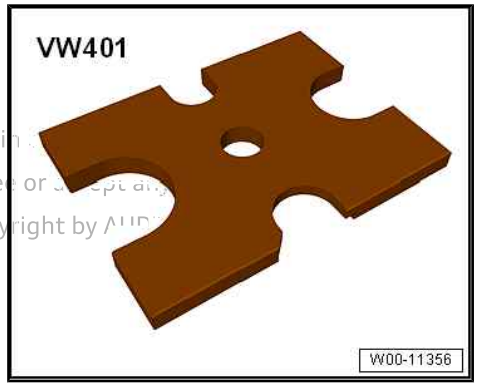

- Thrust plate - VW 402-

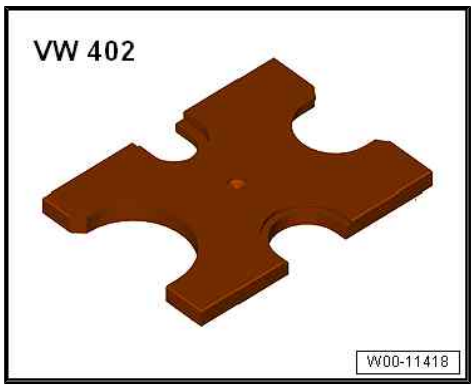

- Press tool - VW 412-

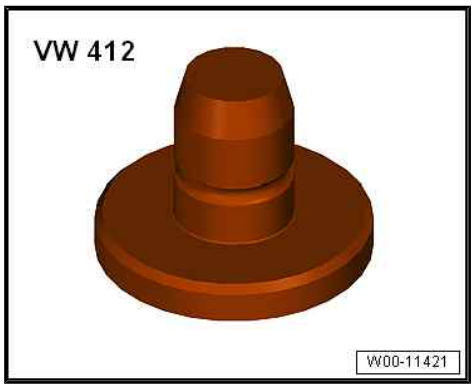

- Thrust piece - VW 432-

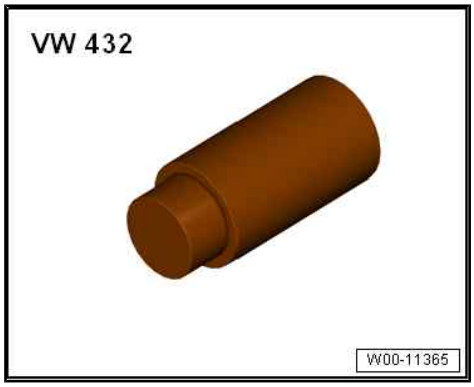

♦ Assembly tool - 3350-

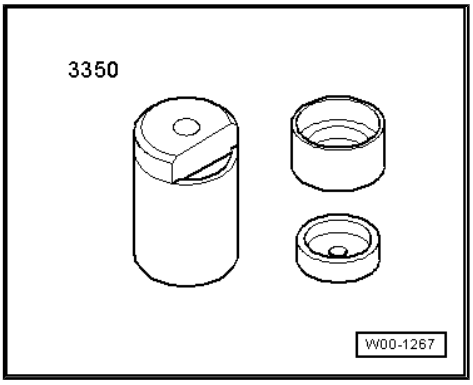

♦ Splitter - VAS 251 411-

Procedure

– Remove centre differential housing ⇒ page 113 .

– Pull centre differential -1- off output shaft towards the rear.

Protected by copyright. Copying for private or commercial purposes, in part or
permitted unless authorised by AUDI AG. AUDI AG does not guarantee or accep
with respect to the correctness of information in this document. Copyright by

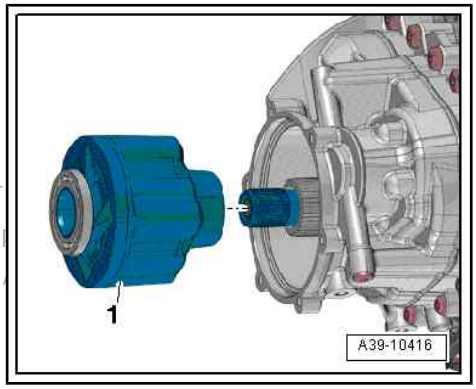

– Press ball bearing off centre differential.

A - Splitter - VAS 251 411-

• The collar of press tool - VW 432- points towards ball bearing.

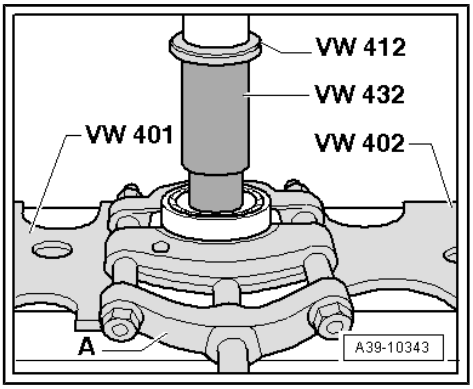
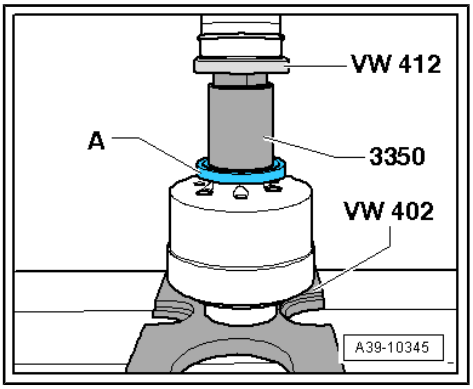
– Press ball bearing onto centre differential.