# Alfa Romeo
## 1974 2000 GT Veloce
USA Version

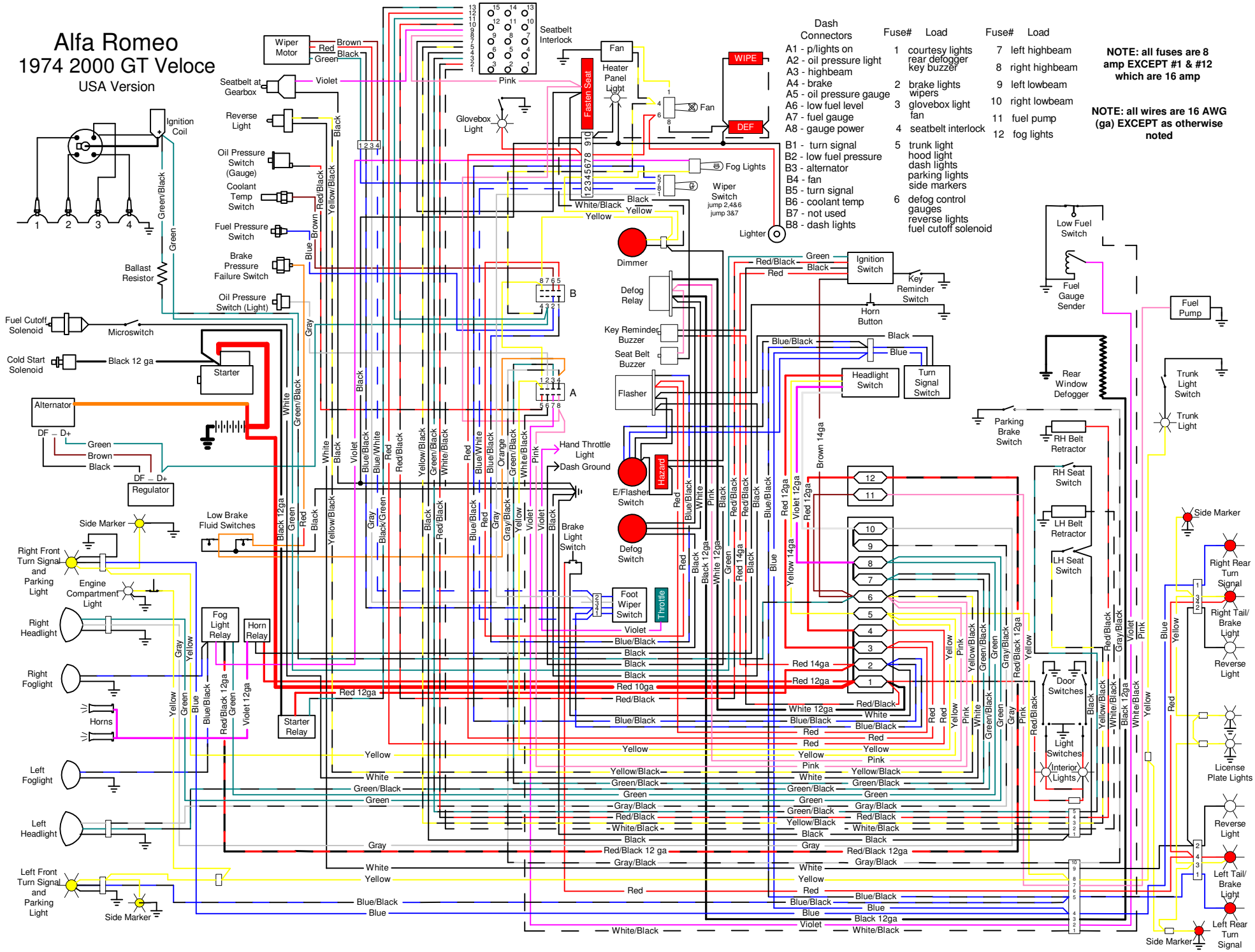


| Dash Connectors | Fuse# | Load | Fuse# | Load |
|---|---|---|---|---|
| A1 - p/lights on | 1 | courtesy lights<br>rear defogger<br>key buzzer | 7 | left highbeam |
| A2 - oil pressure light | | | 8 | right highbeam |
| A3 - highbeam | | | 9 | left lowbeam |
| A4 - brake | 2 | brake lights<br>wipers | 10 | right lowbeam |
| A5 - oil pressure gauge | 3 | glovebox light<br>fan | 11 | fuel pump |
| A6 - low fuel level | 4 | seatbelt interlock | 12 | fog lights |
| A7 - fuel gauge | 5 | trunk light<br>hood light<br>dash lights<br>parking lights<br>side markers | | |
| A8 - gauge power | 6 | defog control<br>gauges<br>reverse lights<br>fuel cutoff solenoid | | |
| B1 - turn signal | | | | |
| B2 - low fuel pressure | | | | |
| B3 - alternator | | | | |
| B4 - fan | | | | |
| B5 - turn signal | | | | |
| B6 - coolant temp | | | | |
| B7 - not used | | | | |
| B8 - dash lights | | | | |

**NOTE: all fuses are 8 amp EXCEPT #1 & #12 which are 16 amp**

**NOTE: all wires are 16 AWG (ga) EXCEPT as otherwise noted**