Workshop Manual

Audi A4 2008 ➤ ,
Audi A5 Cabriolet 2009 ➤ ,
Audi A5 Coupé 2008 ➤ , Audi A6 2011 ➤ ,
Audi A6 China 2012 ➤ ,
Audi A7 Sportback 2011 ➤ ,
Audi Q5 2008 ➤ , Audi Q5 China 2010 ➤

Servicing 7-speed dual clutch gearbox 0B5 (S tronic)

Edition 12.2018

Protected by copyright. Copying for private or commercial purposes, in part or in whole, is not permitted unless authorised by AUDI AG. AUDI AG does not guarantee or accept any liability with respect to the correctness of information in this document. Copyright by AUDI AG.

List of Workshop Manual Repair Groups

Repair Group

00 - Technical data
30 - Clutch
34 - Controls, housing
35 - Gears, shafts
39 - Final drive - front differential

Protected by copyright. Copying for private or commercial purposes, in part or in whole, is not permitted unless authorised by AUDI AG. AUDI AG does not guarantee or accept any liability with respect to the correctness of information in this document. Copyright by AUDI AG.

Technical information should always be available to the foremen and mechanics, because their careful and constant adherence to the instructions is essential to ensure vehicle road-worthiness and safety. In addition, the normal basic safety precautions for working on motor vehicles must, as a matter of course, be observed.

All rights reserved.
No reproduction without prior agreement from publisher.

Copyright © 2018 Audi AG, Ingolstadt

D3E80439E38

Contents

00 - Technical data 1

1 Repair instructions 1
1.1 Rules for cleanliness 1
1.2 General repair instructions 1
1.3 Contact corrosion 3

30 - Clutch 4

1 Clutch 4
1.1 Exploded view - flywheel and dual clutch 4
1.2 Removing and installing flywheel 5
1.3 Removing dual clutch 7
1.4 Installing dual clutch 10

34 - Controls, housing 13

1 Mechatronic unit 13
1.1 Exploded view - mechatronic unit 13
1.2 Removing and installing oil pan 17
1.3 Removing and installing ATF filter 18
1.4 Removing and installing mechatronic unit 19
1.5 Exploded view - printed circuits for mechatronic unit 27
1.6 Removing and installing printed circuits for mechatronic unit 30
1.7 Removing and installing exchangeable ATF filter 32

2 Transporting gearbox 37

3 Dismantling and assembling gearbox 39
3.1 Exploded view - transmission unit 39
3.2 Removing and installing sensor module with integrated senders and sensors G612 , G632 , G676 and printed circuit 3 41
3.3 Removing and installing oil pump and suction-jet pump 53
3.4 Renewing oil seals for partition in gearbox housing 56

4 Securing to engine and gearbox support 60

5 ATF 62
5.1 Exploded view - ATF drain, filler and inspection plugs 62
5.2 Draining and filling ATF 62

35 - Gears, shafts 65

1 Input shaft 65
1.1 Renewing ball bearing for input shaft 65
1.2 Renewing input shaft oil seal 68

39 - Final drive - front differential 70

1 Final drive 70
1.1 Exploded view - final drive 70

2 Gear oil 72
2.1 Exploded view - gear oil drain and inspection plugs 72
2.2 Draining and filling gear oil 72
2.3 Removing and installing gearbox oil temperature sender 2 G754 75

3 Oil seals 77
3.1 Renewing oil seal (left-side) 77
3.2 Renewing oil seal (right-side) 79
3.3 Renewing selector shaft oil seal 80

4 Differential 81
4.1 Removing and installing flange shaft (left-side) 81

Protected by copyright. Copying for private or commercial purposes, in part or in whole, is not permitted unless authorised by AUDI AG. AUDI AG does not guarantee or accept any liability with respect to the correctness of information in this document. Copyright by AUDI AG.

4.2 Checking and adjusting preload of ball bearing for flange shaft (left-side) 83
4.3 Renewing mounting bracket and ball bearing for flange shaft (left-side) 89
4.4 Removing and installing flange shaft (right-side) 91
5 Centre differential 94
5.1 Exploded view - centre differential 94
5.2 Removing and installing centre differential 98
5.3 Servicing centre differential housing 105
5.4 Renewing oil seal for rear splined shaft 113

Protected by copyright. Copying for private or commercial purposes, in part or in whole, is not permitted unless authorised by AUDI AG. AUDI AG does not guarantee or accept any liability with respect to the correctness of information in this document. Copyright by AUDI AG.

00 – Technical data

Protected by copyright. Copying for private or commercial purposes, in part or in whole, is not permitted unless authorised by AUDI AG. AUDI AG does not guarantee or accept any liability with respect to the correctness of information in this document. Copyright by AUDI AG.

1 Repair instructions

(ARL006144; Edition 12.2018)

⇒ “1.1 Rules for cleanliness”, page 1

⇒ “1.2 General repair instructions”, page 1

⇒ “1.3 Contact corrosion”, page 3

1.1 Rules for cleanliness

- Thoroughly clean all joints and connections and the surrounding areas before disconnecting.
- Use cleaning fluid - D 009 401 04- to clean the gearbox and its components.
- Use lint-free cloths for cleaning, such as the “WYPALL X70 / WORKHORSE” cloth from Kimberly-Clark Professional.
- Seal off open lines and connections immediately with clean plugs or sealing caps from engine bung set - VAS 6122- .
- After removal, place parts on a clean surface and cover them. Use sheeting or lint-free cloths.
- Carefully cover or seal open components if repairs cannot be carried out immediately.
- Only install clean components; replacement parts should only be unpacked immediately prior to installation.
- Protect unplugged electrical connectors against dirt and moisture and make sure connections are dry when attaching.

1.2 General repair instructions

Use of Workshop Manuals

Any special work to be carried out with the gearbox installed in the vehicle is described separately for different models in the corresponding edition of the Workshop Manual “7-speed dual clutch gearbox 0B5 (S tronic)”. Such repair work is not described in this Servicing Manual; however brief reference may be made to some of the procedures involved. For satisfactory repairs please always refer to both Workshop Manuals.

Proper tools and the maximum possible care and cleanliness are essential for satisfactory repairs to the transmission units. The usual basic safety precautions also naturally apply when carrying out repair work.

To avoid repetition, a number of generally applicable instructions for the various repair procedures are summarised here. They apply to the work described in this Manual.

Environmental and waste disposal regulations for oil

- ATF, gear oil and any other type of oil must be handled with care.
- Dispose of drained oil properly.
- Always adhere to statutory environmental and waste disposal regulations.
- Observe the information shown on the packaging of the oil.

Special tools

For a complete list of special tools used in this Workshop Manual
⇒ Workshop equipment and special tools

Gearbox

- Observe rules for cleanliness when working on the dual clutch gearbox ⇒ page 1 .
- Components to be re-used must be cleaned, checked and, if necessary, renewed prior to installation.
- When installing gearbox, ensure that dowel sleeves are fitted correctly.

O-rings, oil seals and gaskets

- Always renew O-rings, oil seals and gaskets.
- After removing gaskets and seals, always inspect the contact surface on the housing or shaft for burrs resulting from removal or for other signs of damage.
- Thoroughly clean housing joint surfaces before assembling.
- Before installing, lightly lubricate outer circumference and sealing lips of oil seals with ATF or gear oil, depending on fitting location.
- Lightly lubricate O-rings with ATF or gear oil (depending on fitting location) before installation to prevent them getting crushed during assembly.
- Use only ATF for parts running in ATF. Other lubricants will cause malfunction of the gearbox hydraulics.
- The open side of the oil seal should face the side containing the fluid.
- After installation, check and correct ATF level or gear oil level (MTF) ⇒ 7-speed dual clutch gearbox; Rep. gr. 34 ; ATF; Checking ATF level or ⇒ 7-speed dual clutch gearbox; Rep. gr. 39 ; Gear oil; Checking gear oil level . Specifications ⇒ Electronic parts catalogue

Nuts, bolts

- Loosen bolts in reverse sequence to specified tightening sequence.
- Bolts and nuts used to secure covers and housings must be tightened in steps according to the specified tightening sequence and method.
- Bolts and nuts which secure covers and housings should be loosened and tightened in diagonal sequence and in stages if no tightening sequence is specified.
- Always renew self-locking bolts and nuts.
- Unless otherwise specified, use a wire brush to clean the threads of bolts which are secured with locking fluid. Then install bolts with locking fluid; for locking fluid refer to ⇒ Electronic parts catalogue .
- Threaded holes which take self-locking bolts or bolts coated with locking fluid must be cleaned using a thread tap or similar. Otherwise there is a danger of the bolts shearing off the next time they are removed.
- The tightening torques stated apply to non-oiled nuts and bolts.

Circlips, snap rings

- Do not over-stretch circlips.

For internal use only. copyright. Copying for private or commercial purposes, in part or in whole, is not permitted unless authorised by AUDI AG. AUDI AG does not guarantee or accept any liability with respect to the correctness of information in this document. Copyright by AUDI AG.

- Renew circlips which have been damaged or over-tensioned.
- Circlips must be properly seated in the base of the groove.

Bearings

- Install needle bearings so the lettering (side with thicker metal) faces towards the installing tool.
- Lightly lubricate bearings with gear oil or ATF, depending on fitting location.
- Do not interchange inner or outer races of bearings of the same size.
- Always renew the tapered roller bearings on one shaft together and use new bearings from a single manufacturer.

Shims

- Use a micrometer to measure the shims at several points. Different shim thicknesses make it possible to obtain the exact shim thickness required; if necessary, fit 2 shims.
- Check for burrs and damage. Install only shims which are in perfect condition.

Mechatronic unit

> **Caution**
>
> ***The gearbox control unit (mechatronic unit) can be damaged by electrostatic discharge.***
>
> - ***Before handling the electrical connector or mechatronic unit, the mechanic must discharge static by briefly touching an earthed metal object, such as vehicle earth, lifting platform or heater radiator, etc.***
> - ***Do not touch contact pins in gearbox connector with bare hands.***

This document is copyright protected and provided for personal use only. Any other use or distribution of the content, in whole or in part, is not permitted unless authorised by AUDI AG. AUDI AG does not guarantee or accept any liability with respect to the correctness of information in this document. Copyright by AUDI AG.

1.3 Contact corrosion

Contact corrosion can occur if unsuitable fasteners are used (e.g. bolts, nuts, washers, etc.).

For this reason, only fasteners with a special surface coating are fitted.

Additionally, all rubber and plastic parts and all adhesives are made of non-conductive materials.

If you are not sure whether used parts can be re-installed, always fit new parts ⇒ Electronic parts catalogue .

Please note:

- We recommend only genuine spare parts: these have been fully tested.
- We recommend the use of accessories approved by Audi.
- Damage caused by contact corrosion is not covered by warranty.

30 – Clutch

1 Clutch

⇒ “1.1 Exploded view - flywheel and dual clutch”, page 4

⇒ “1.2 Removing and installing flywheel”, page 5

⇒ “1.3 Removing dual clutch”, page 7

⇒ “1.4 Installing dual clutch”, page 10

1.1 Exploded view - flywheel and dual clutch

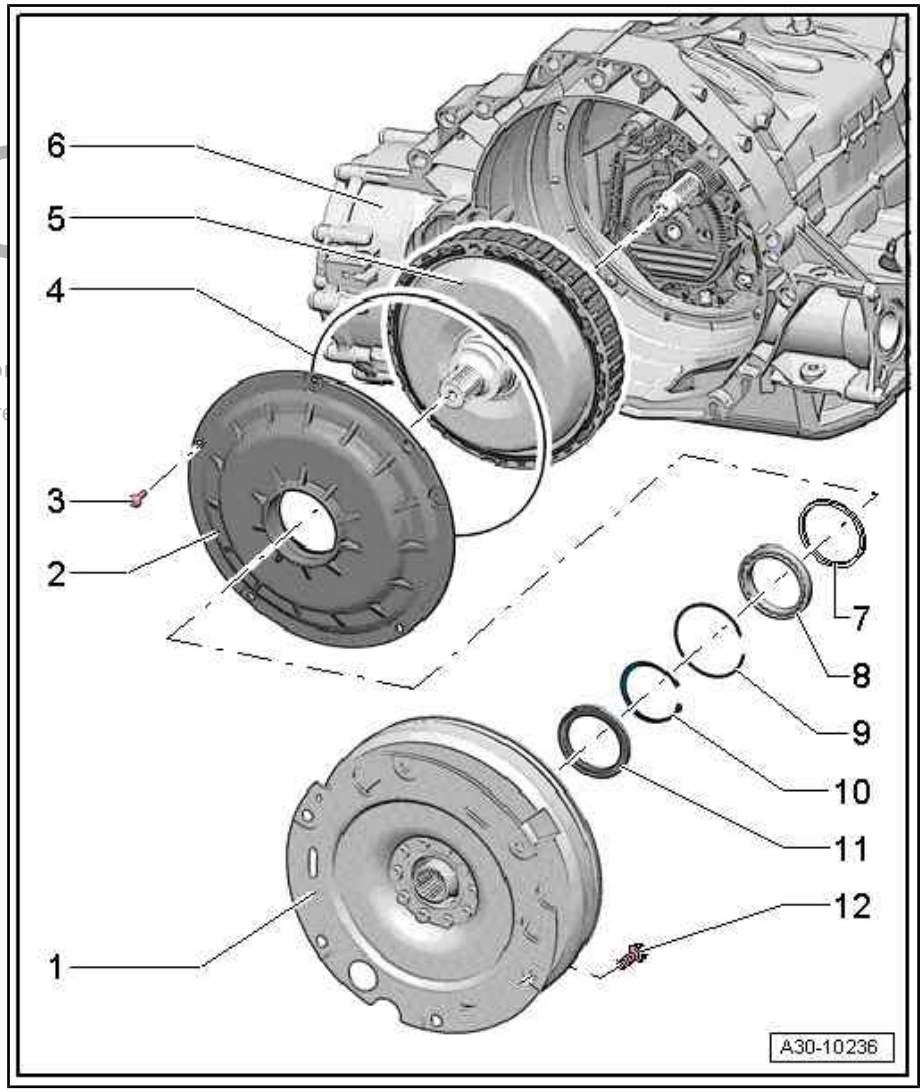

1 - Flywheel

- ❑ Different versions are available; for correct version refer to ⇒ Electronic parts catalogue
- ❑ Removing and installing ⇒ page 5

2 - Clutch cover

- ❑ Different versions (without or with thrust washer ⇒ Item 7 (page 4)); observe notes and allocation in ⇒ Electronic parts catalogue
- ❑ Removing ⇒ “1.3 Removing dual clutch”, page 7
- ❑ Installing ⇒ “1.4 Installing dual clutch”, page 10

3 - Bolt

- ❑ Tightening torque and sequence ⇒ page 5

4 - O-ring

- ❑ Renew

5 - Dual clutch

- ❑ Different versions are available; for correct version refer to ⇒ Electronic parts catalogue
- ❑ Removing ⇒ page 7
- ❑ Installing ⇒ page 10

- After renewing dual clutch, run appropriate “Guided Function” on a vehicle diagnostic tester ⇒ 7-speed dual clutch gearbox; Rep. gr. 39 ; Gearbox control system

6 - Gearbox housing

7 - Thrust washer

- ❑ Not installed in all versions; note allocation to clutch cover in ⇒ Electronic parts catalogue

8 - Ball bearing

- ❑ For dual clutch
- ❑ Renewing ⇒ page 65

9 - Circlip

- ❑ Renew
- ❑ For ball bearing

10 - Circlip

- ❑ Renew
- ❑ For dual clutch

11 - Oil seal

- ❑ For input shaft
- ❑ Renewing ⇒ page 68

12 - Bolt

- ❑ Renew
- ❑ 60 Nm

Tightening torque and sequence for clutch cover

– Tighten bolts in 3 stages in the sequence shown:

Stage	Bolts	Tightening torque
1.	-1 ... 5-	Screw in evenly by hand until bolt heads make contact with clutch cover
2.	-1 ... 5-	Tighten bolts consecutively in steps of 90° until clutch cover makes contact with gearbox housing
3.	-1 ... 5-	10 Nm

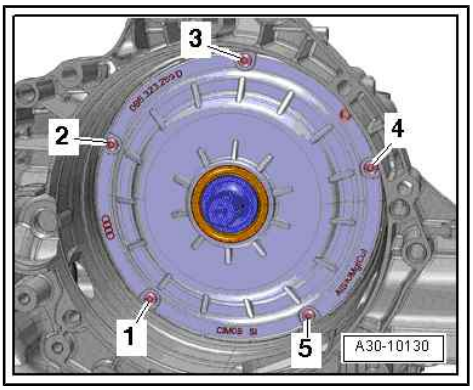

1.2 Removing and installing flywheel

Special tools and workshop equipment required

- ♦ Extractor - T40176-

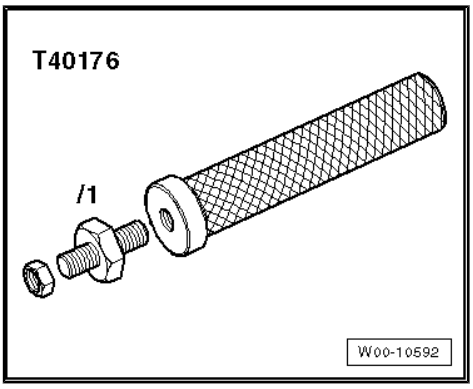

- ♦ Grease for clutch plate splines - G 000 100-
- ♦ Sealing grease ⇒ Electronic parts catalogue

Protected by copyright. Copying for private or commercial purposes, in part or in whole, is not permitted unless authorised by AUDI AG. AUDI AG does not guarantee or accept any liability with respect to the correctness of information in this document. Copyright by AUDI AG.

Removing

- Gearbox is secured to engine and gearbox support - VAS 6095- ⇒ page 60 .

– Remove flange shaft (left-side) ⇒ page 81 .

– Attach extractor - T40176- to flywheel -A- using nut -B- -arrow-.

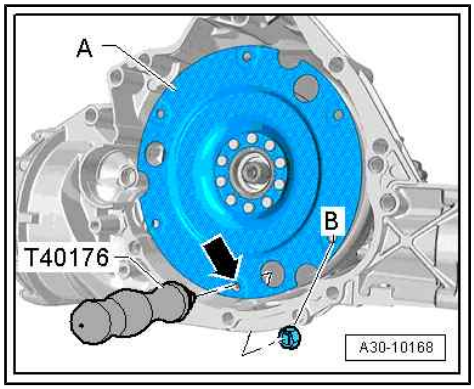

– Turn extractor - T40176- upwards.

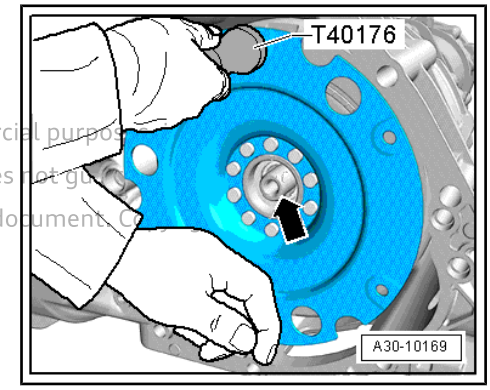

Note

Keep hold of the bottom of the flywheel, as shown in the illustration, to prevent it from tilting over.

Protected by copyright. Copying for private or commercial purposes, in part or in whole, is not permitted unless authorised by AUDI AG. AUDI AG does not guarantee or accept any liability with respect to the correctness of information in this document. Copyright by AUDI AG.

– Pull flywheel off input shaft -arrow- keeping flywheel straight.

Installing

Installation is carried out in reverse sequence; note the following:

– Thoroughly clean area of gearbox housing leading to differential -arrow A-, and oil seal -arrow B-.

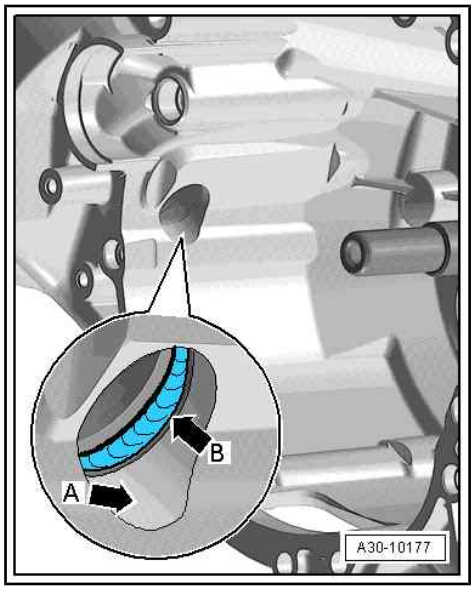

Note

If oil seal between differential and gearbox housing -arrow B- is damaged, it must be renewed *⇒ page 77* *.*

– Pack space between sealing lip and dust lip half full with sealing grease; for sealing grease refer to ⇒ Electronic parts catalogue .

– Clean input shaft -arrow-.

– Apply a thin coating of grease for clutch plate splines - G 000 100- to splines on input shaft.

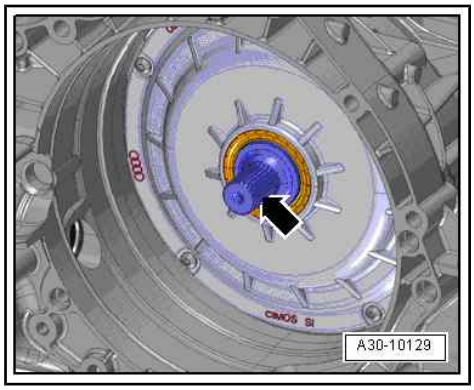

– Carefully slide flywheel onto input shaft -arrow-, taking care to keep flywheel straight.

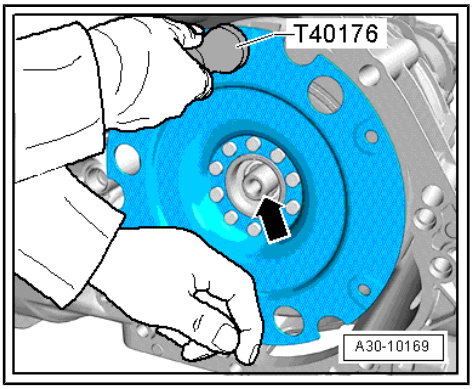

– Detach extractor - T40176- from flywheel -A-.
– Install flange shaft (left-side) ⇒ page 81 .

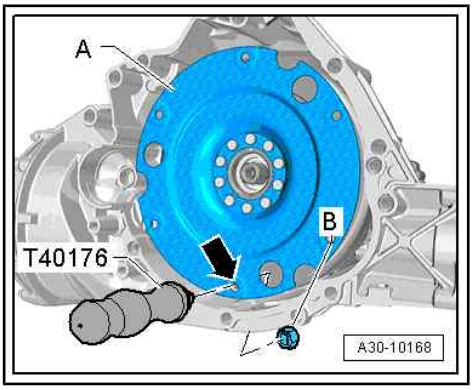

1.3 Removing dual clutch

Protected by copyright. Copying for private or commercial purposes, in part or in whole, is not permitted unless authorised by AUDI AG. AUDI AG does not guarantee or accept any liability with respect to the correctness of information in this document. Copyright by AUDI AG.

Special tools and workshop equipment required

Protected by copyright. Copying for private or commercial purposes, in part or in whole, is not permitted unless authorised by AUDI AG. AUDI AG does not guarantee or accept any liability with respect to the correctness of information in this document. Copyright by AUDI AG.

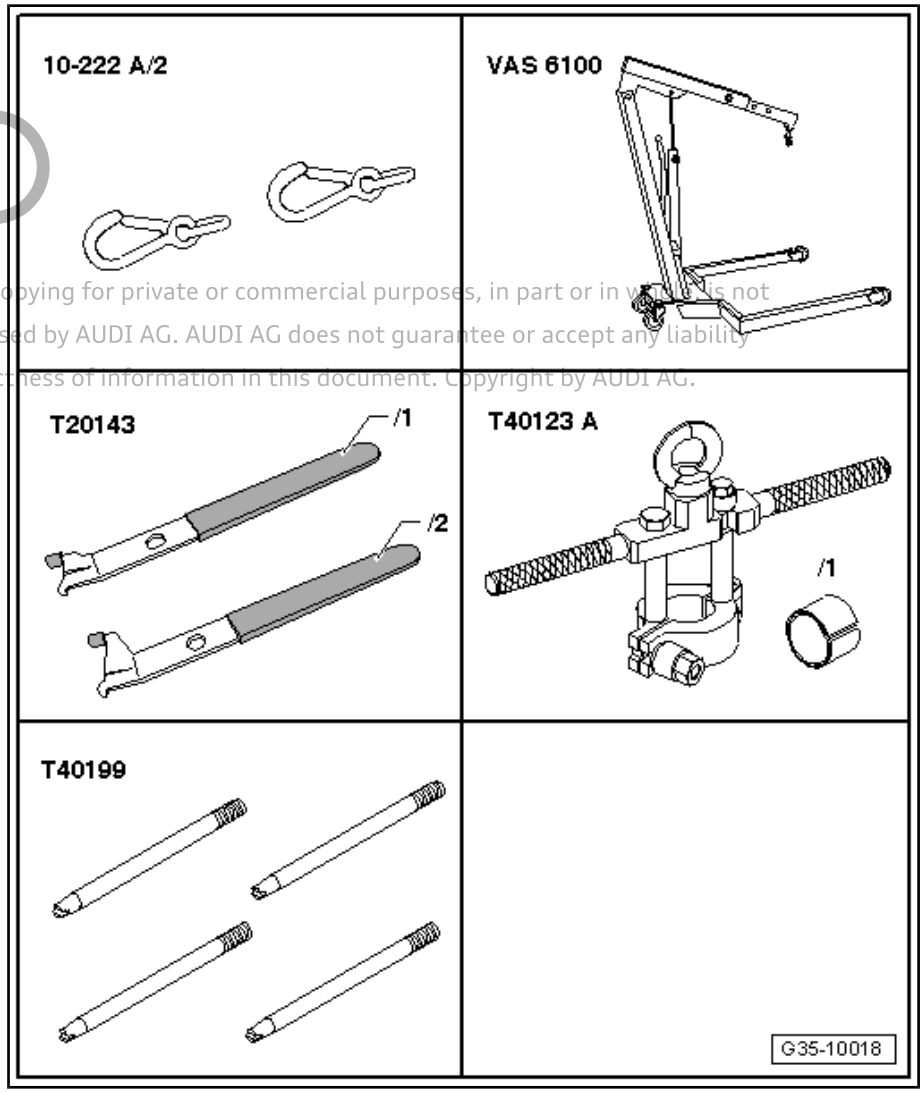

- Hook - 10 - 222 A /2-
- Workshop hoist - VAS 6100-
- Extractor hook -T20143/2-
- Puller for ATF supply - T40123 A-
- Centring tool - T40199-

Removing

- Gearbox is secured to engine and gearbox support - VAS 6095- ⇒ page 60 .

– Remove flywheel ⇒ page 5 .

– Drain ATF ⇒ page 62 .

– Prise out oil seal for input shaft with extractor tool -T20143/2- .

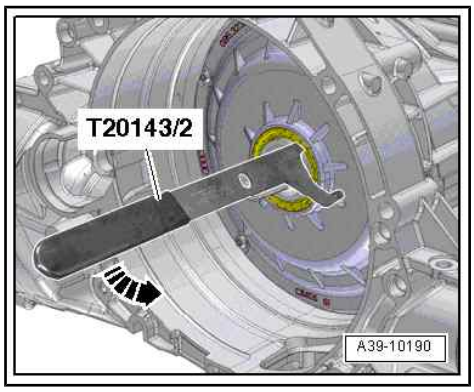

– Remove bolts -1 … 5-.

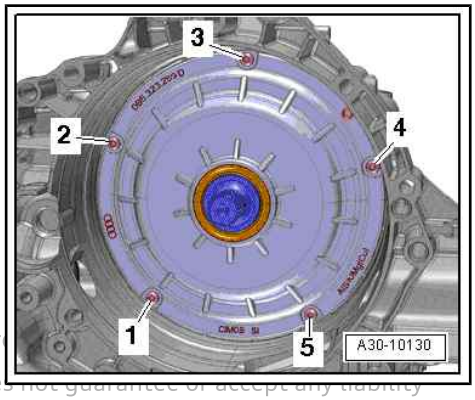

Protected by copyright. Copying for private or commer
permitted unless authorised by AUDI AG. AUDI AG does not guarantee or accept any liability
with respect to the correctness of information in this d

– Turn gearbox into a vertical position on engine and gearbox support - VAS 6095- .

– Slide sleeve -T40123 A/1- onto input shaft.

– Position puller for ATF supply unit - T40123 A- on input shaft.

• Lip -arrow- of puller for ATF supply unit must reach underneath sleeve -T40123 A/1- .

– Close puller for ATF supply unit and tighten knurled nut -1- (to approx. 20 Nm).

– Check that puller for ATF supply unit is securely seated on input shaft.

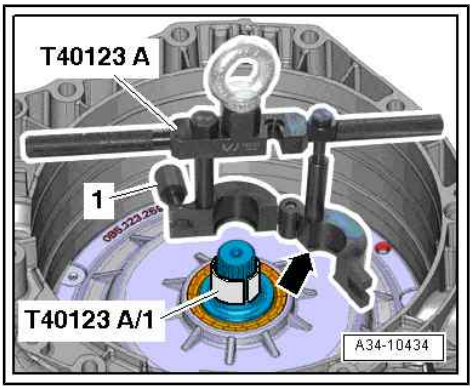

– Connect puller for ATF supply unit - T40123 A- to hook - 10 - 222 A /2- and attach to workshop hoist - VAS 6100- .

– Carefully pull dual clutch out of gearbox housing.

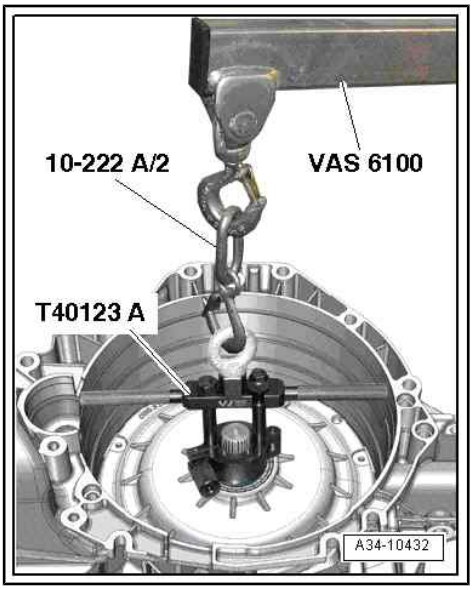

– Place dual clutch (with cover) down on a soft surface so that the thin collar -arrow A- is not damaged.

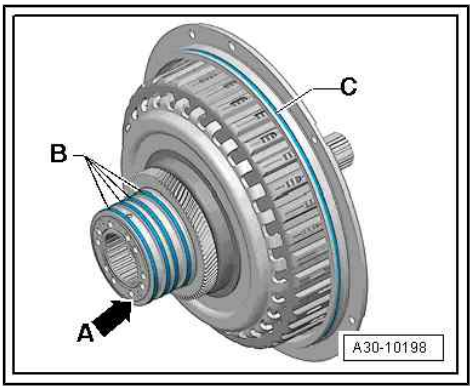

– Remove circlip -arrow- using circlip pliers.

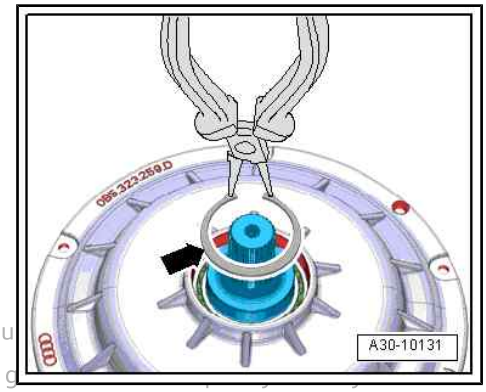

Protected by copyright. Copying for private or commercial pu
permitted unless authorised by AUDI AG. AUDI AG does not g
with respect to the correctness of information in this docume

– Detach clutch cover -2- from dual clutch -1-.

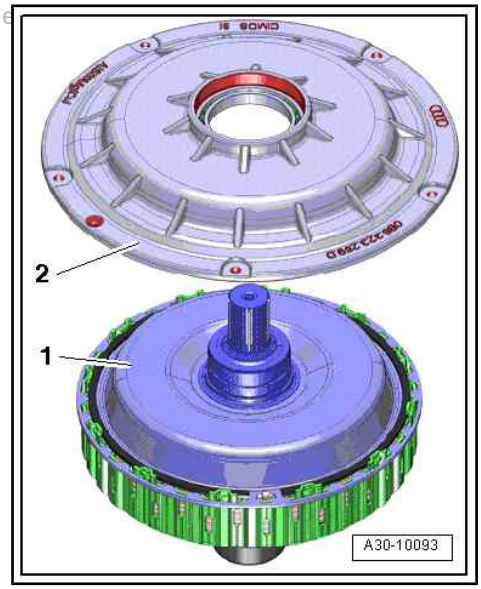

Note

- *If the clutch cover cannot be detached, knock lightly on the input shaft with a plastic hammer while a second mechanic lifts the clutch cover by hand.*
- *Take care not to damage the thin collar -arrow A-.*

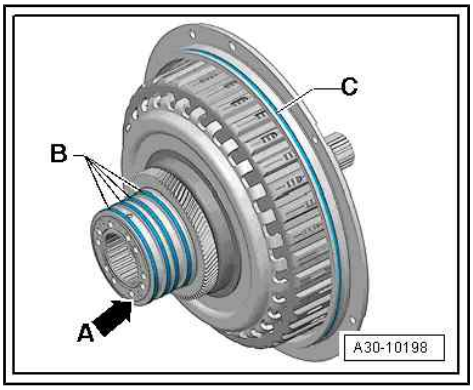

1.4 Installing dual clutch

Installation is carried out in reverse sequence; note the following:

Note

Renew O-ring and circlip.

– Clean sealing surface on clutch cover.

– Turn rectangular section seals -B- on hub and check for freedom of movement and axial play.

Note

If any of the rectangular section seals do not move freely, the dual clutch must not be fitted.

– Clean gearbox housing in area of dual clutch and clean sealing surface.

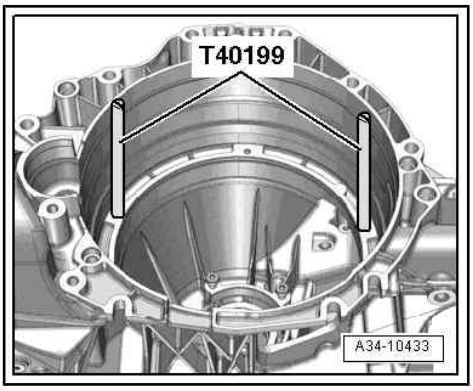

Note

Make sure that no particles of dirt fall into the gearbox when cleaning the housing.

– Screw centring tool - T40199- into threaded holes in gearbox housing, as shown in illustration.

– Check rotating port -arrow- in gearbox for scoring.

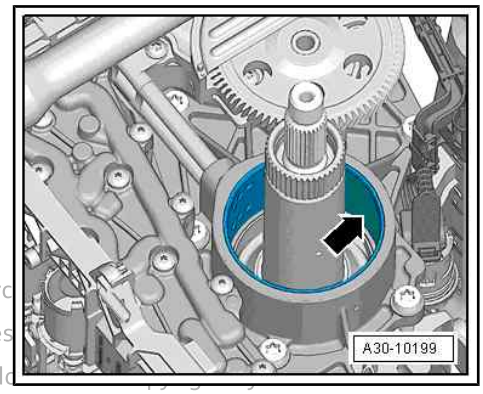

Protected by copyright. Copying for private or commerc
permitted unless authorised by AUDI AG. AUDI AG does
with respect to the correctness of information in this do

– Lightly lubricate O-ring -C- and hub -B- of dual clutch with ATF before installation.

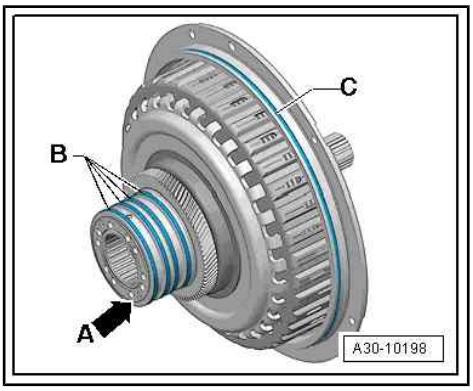

– Insert dual clutch into gearbox housing, as shown in illustration (lift and rotate dual clutch slightly so that input shaft engages in splines on ATF pump and gearbox shafts).

• Dual clutch is installed correctly if contact can be felt between O-ring of clutch cover and edge of gearbox housing.

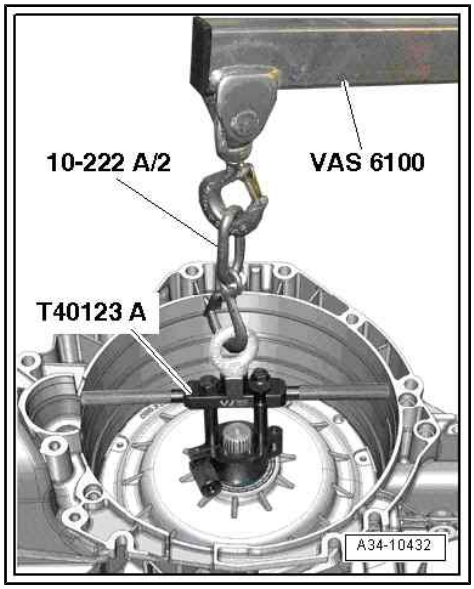

Caution

- *The new O-ring must not be crushed during installation.*
- *It is important to tighten bolts -1 to 5- for the clutch cover in the correct sequence (⇒ page 5).*

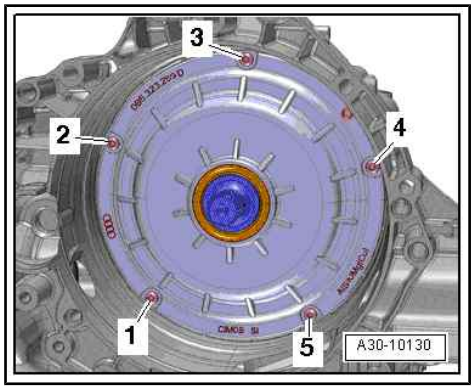

– Tighten bolts -1 to 5- for clutch cover to specified torque in specified sequence ⇒ page 5 .

– Renew oil seal for input shaft ⇒ page 68 .

– Install flywheel ⇒ page 5 .

– Fill up with ATF after installing gearbox ⇒ 7-speed dual clutch gearbox; Rep. gr. 34 ; ATF; Draining and filling ATF .

• After renewing dual clutch, run appropriate “Guided Function” on a vehicle diagnostic tester ⇒ 7-speed dual clutch gearbox; Rep. gr. 39 ; Gearbox control system .

Protected by copyright. Copying for private or commercial purposes, in part or in whole, is not permitted unless authorised by AUDI AG. AUDI AG does not guarantee or accept any liability with respect to the correctness of information in this document. Copyright by AUDI AG.

34 – Controls, housing

1 Mechatronic unit

⇒ “1.1 Exploded view - mechatronic unit”, page 13

⇒ “1.2 Removing and installing oil pan”, page 17

⇒ “1.3 Removing and installing ATF filter”, page 18

⇒ “1.4 Removing and installing mechatronic unit”, page 19

⇒ “1.5 Exploded view - printed circuits for mechatronic unit”, page 27

⇒ “1.6 Removing and installing printed circuits for mechatronic unit”, page 30

⇒ “1.7 Removing and installing exchangeable ATF filter”, page 32

1.1 Exploded view - mechatronic unit

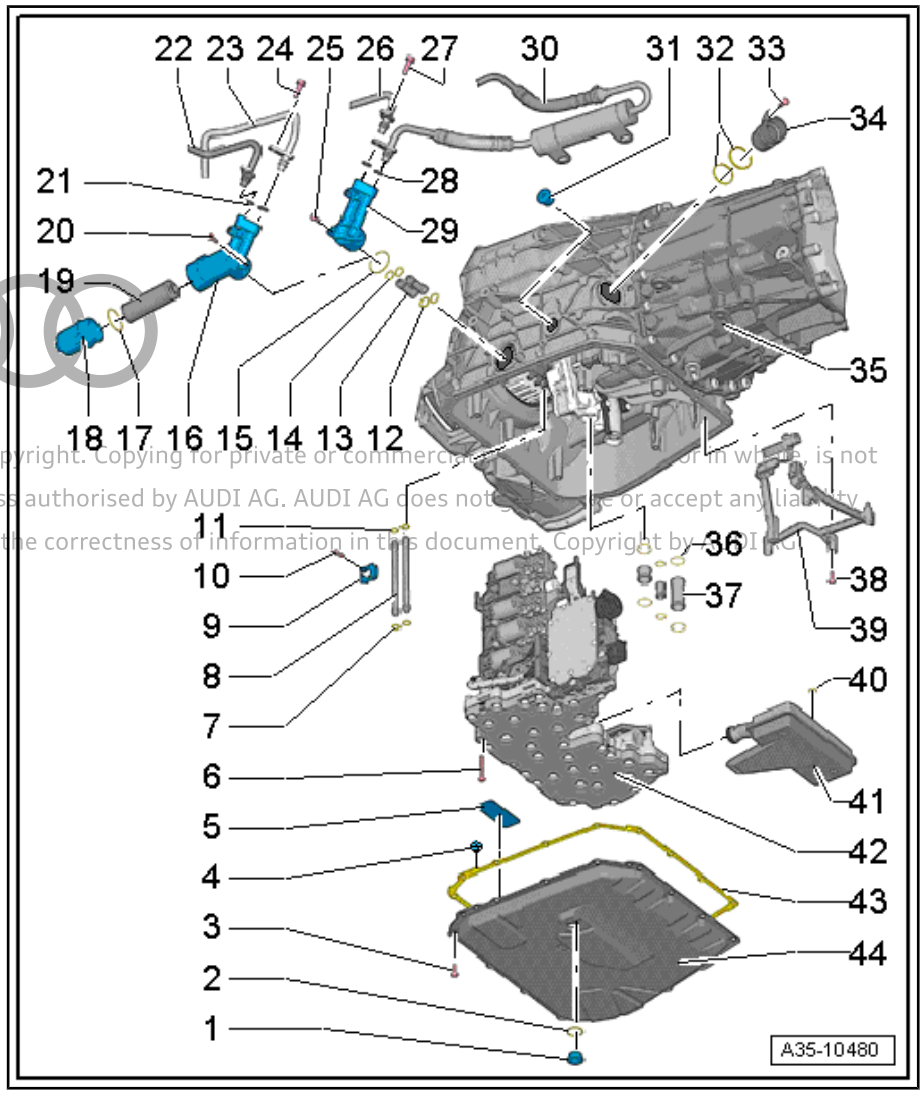

Protected by copyright. Copying for private or commercial purposes, in part or in whole, is not permitted unless authorised by AUDI AG. AUDI AG does not guarantee or accept any liability with respect to the correctness of information in this document. Copyright by AUDI AG.

1 - ATF drain plug

- ❑ Tightening torque ⇒ Item 1 (page 62)

2 - Seal

- ❑ Renew

3 - Bolt

- ❑ Tightening torque and sequence ⇒ page 16
- ❑ Renew

4 - Spreader rivet

- ❑ In original equipment version for securing gasket to ATF oil pan
- ❑ Not essential for installation

5 - Magnet

- ❑ 2x
- ❑ Insert in recess in ATF oil pan
- ❑ Ensure that the magnet is in full contact with the ATF oil pan

6 - Bolt

- ❑ Renew
- ❑ Tightening torque and sequence ⇒ page 16

7 - O-rings

- ❑ Renew

8 - ATF pressure pipes (clutch pressure)

- ❑ Different versions are installed; the ATF pressure pipes (clutch pressure) are combined as one unit and made of plastic on newer gearboxes
- ❑ Plastic ATF pressure pipes are also compatible with older gearboxes

- ❑ Renew

9 - Retaining plate

- ❑ Only for ATF pressure pipes (clutch pressure) made of metal

10 - Bolt

- ❑ 10 Nm
- ❑ Only for ATF pressure pipes (clutch pressure) made of metal

11 - O-rings

- ❑ Renew

12 - O-rings

- ❑ Renew

13 - ATF pipes

- ❑ Different versions possible

14 - O-rings

- ❑ Renew

15 - O-ring

- ❑ Renew
- ❑ Different versions possible

16 - Filter housing for exchangeable ATF filter

- ❑ For gearboxes with exchangeable ATF filter
- ❑ After removal, renew components which do not have a factory-fitted locating element ⇒ page 27

17 - O-ring

- ❑ For gearboxes with exchangeable ATF filter
- ❑ Renew

18 - Cap for ATF filter

- ❑ For gearboxes with exchangeable ATF filter
- ❑ Note different versions
- ❑ 8 Nm

19 - Exchangeable ATF filter

- ❑ Renew after changing ATF or after performing gearbox repairs
- ❑ Note correct allocation ⇒ Electronic parts catalogue (also called filter element)
- ❑ ⇒ “1.7 Removing and installing exchangeable ATF filter”, page 32

20 - Bolt

- ❑ 3x
- ❑ 10 Nm
- ❑ For gearboxes with exchangeable ATF filter

Protected by copyright. Copying for private or commercial purposes, in part or in whole, is not permitted unless authorised by AUDI AG. AUDI AG does not guarantee or accept any liability with respect to the correctness of information in this document. Copyright by AUDI AG.

21 - O-rings

- ❑ Renew
- ❑ For gearboxes with exchangeable ATF filter

22 - ATF line (return)

- ❑ For gearboxes with exchangeable ATF filter
- ❑ Removing and installing ⇒ 7-speed dual clutch gearbox; Rep. gr. 34 ; ATF circuit; Removing and installing ATF lines

23 - ATF line (supply)

- ❑ For gearboxes with exchangeable ATF filter
- ❑ Removing and installing ⇒ 7-speed dual clutch gearbox; Rep. gr. 34 ; ATF circuit; Removing and installing ATF lines

24 - Bolt

- ❑ Tightening torque ⇒ 7-speed dual clutch gearbox; Rep. gr. 34 ; ATF circuit; Exploded view - ATF circuit
- ❑ For gearboxes with exchangeable ATF filter

25 - Bolt

- ❑ 3x
- ❑ 10 Nm
- ❑ For gearboxes with in-line ATF filter

26 - ATF line (return)

- ❑ For gearboxes with in-line ATF filter
- ❑ Removing and installing ⇒ 7-speed dual clutch gearbox; Rep. gr. 34 ; ATF circuit; Removing and installing ATF lines

27 - Bolt

- ❑ Tightening torque ⇒ 7-speed dual clutch gearbox; Rep. gr. 34 ; ATF circuit; Exploded view - ATF circuit
- ❑ For gearboxes with in-line ATF filter

28 - O-rings

- ❑ Renew
- ❑ For gearboxes with in-line ATF filter

29 - Connection piece for ATF lines

- ❑ For gearboxes with in-line ATF filter

30 - In-line ATF filter

- ❑ Renew if gearbox is renewed or if ATF is very dirty
- ❑ Removing and installing ⇒ 7-speed dual clutch gearbox; Rep. gr. 34 ; ATF circuit; Removing and installing ATF filter

Protected by copyright. Copying for private or commercial purposes, in part or in whole, is not permitted unless authorised by AUDI AG. AUDI AG does not guarantee or accept any liability with respect to the correctness of information in this document. Copyright by AUDI AG.

31 - ATF filler and inspection plug

- ❑ Tightening torque ⇒ Item 4 (page 62)

32 - O-rings

- ❑ Renew

33 - Bolt

- ❑ 8 Nm

34 - Connector housing

- – To remove, unscrew bolt -item 33- and turn connector housing anti-clockwise

35 - Gearbox housing

36 - O-rings

- ❑ Renew

37 - ATF pipes

- ❑ Different versions are installed; the ATF pipes are combined as one unit and made of plastic on newer gearboxes.
- ❑ Plastic ATF pressure pipes are also compatible with older gearboxes
- ❑ Renew

38 - Bolt

- ❑ 5x
- ❑ 8 Nm

39 - Wiring harness for sensor module

- ❑ Removing and installing ⇒ page 41
- ❑ Renew if sensor module is renewed

40 - O-ring

- ❑ Renew

Protected by copyright. Copying for private or commercial purposes, in part or in whole, is not permitted unless authorised by AUDI AG. AUDI AG does not guarantee or accept any liability with respect to the correctness of information in this document. Copyright by AUDI AG.

41 - ATF intake filter

- ❑ Removing and installing ⇒ page 18

42 - Mechatronic unit for dual clutch gearbox - J743-

- ❑ Removing and installing ⇒ page 19

- After renewing mechatronic unit for dual clutch gearbox - J743- , run appropriate “Guided Function” on a vehicle diagnostic tester ⇒ 7-speed dual clutch gearbox, Rep. gr. 39 , Gearbox control system

- ❑ Disconnecting printed circuit from mechatronic unit for dual clutch gearbox - J743- ⇒ page 27

43 - Gasket

- ❑ Renew
- ❑ Installing ⇒ page 17

44 - ATF oil pan

- ❑ Removing and installing ⇒ page 17

Tightening torque and sequence for ATF oil pan

– Tighten bolts in 2 stages as follows:

1. Screw in bolts -arrows- by hand.
2. Tighten bolts -1 … 15- diagonally in stages to 10 Nm.

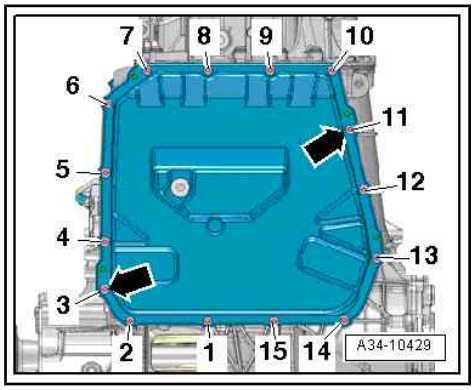

Tightening torque and sequence for mechatronic unit

– Tighten bolts to 10 Nm in sequence -1 ... 6-.

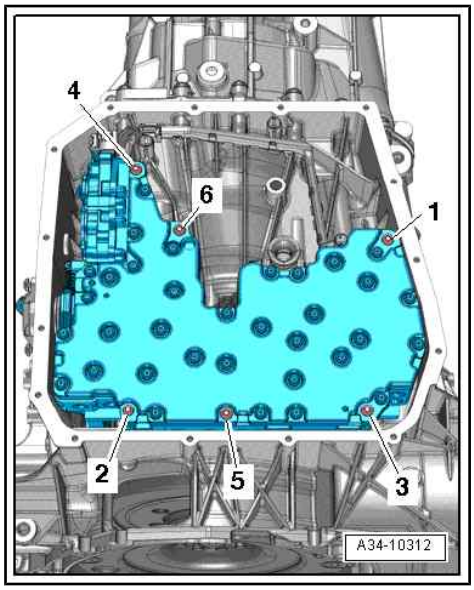

1.2 Removing and installing oil pan

Removing

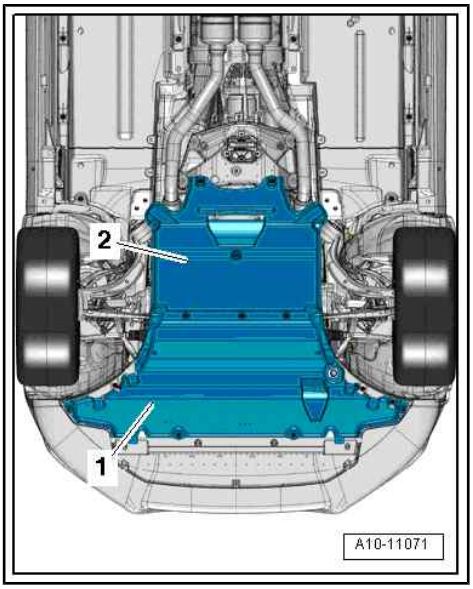

Note

- *Observe the general repair instructions ⇒ page 1 .*
- *Rules for cleanliness when working on the dual clutch gearbox ⇒ page 1 .*

Gearbox installed

The ATF oil pan can also be removed and installed with the gearbox installed in the vehicle. Depending on the vehicle type and engine version, additional steps may be necessary in order to access the ATF oil pan ⇒ 7-speed dual clutch gearbox; Rep. gr. 34 ; Mechatronic unit .

Gearbox removed

– Gearbox secured to engine and gearbox support ⇒ page 60
– Place used oil collection and extraction unit - V.A.G 1782- below gearbox.
– Drain ATF ⇒ page 62 .

– Slacken bolts -1 … 15- in diagonal sequence.
– Remove bolts and detach ATF oil pan.

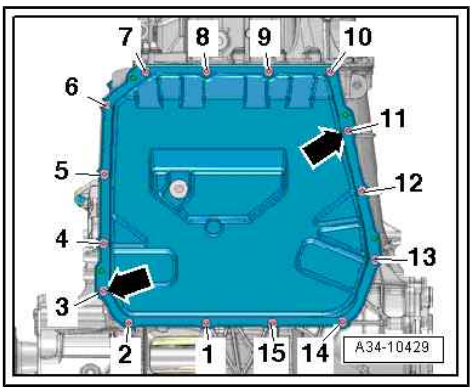

Note

Disregard -arrows-.

Installing

Installation is carried out in reverse sequence; note the following:

– Clean sealing surfaces.
– Renew bolts and gasket for ATF oil pan.
– Insert studs -arrow- on new gasket -2- into ATF oil pan -1-.
– Secure gasket to ATF oil pan with spreader rivets -3- (if fitted).

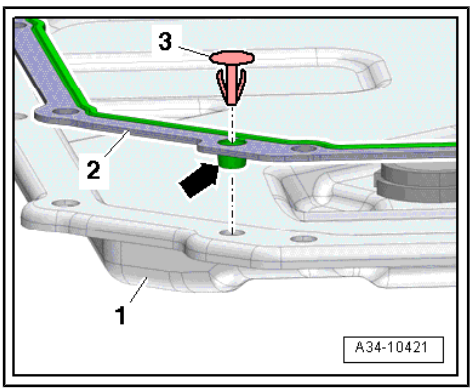

Note

Clips -item 3- are only used as an assembly aid during production.

Protected by copyright. Copying for private or commercial purposes, in part or in whole, is not permitted unless authorised by AUDI AG. AUDI AG does not guarantee or accept any liability with respect to the correctness of information in this document. Copyright by AUDI AG.

– Clean magnets -arrows- in ATF oil pan.
– Ensure that magnets make full contact with ATF oil pan.

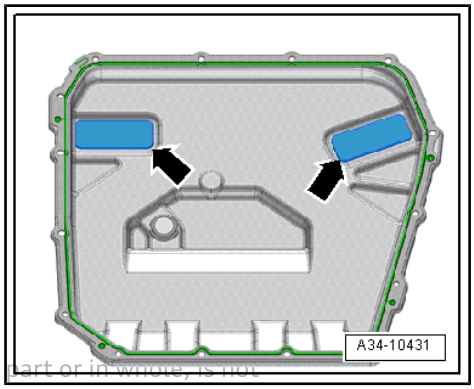

Protected by copyright. Copying for private or commercial purposes, in part or in whole, is not permitted unless authorised by AUDI AG. AUDI AG does not guarantee or assume any liability with respect to the correctness of information in this document. Copyright by AUDI AG.

– Tighten bolts for ATF oil pan ⇒ page 16 .
– Fill up with ATF after installing ATF oil pan ⇒ 7-speed dual clutch gearbox; Rep. gr. 34 ; ATF; Draining and filling ATF .

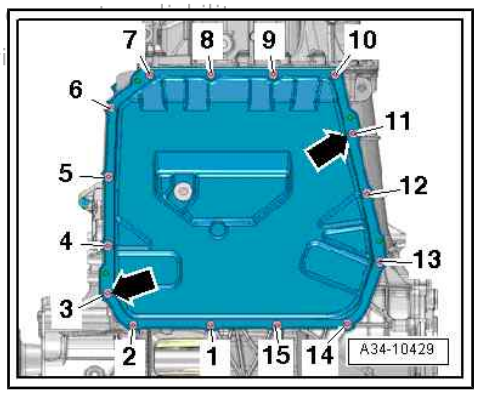

1.3 Removing and installing ATF filter

Special tools and workshop equipment required

♦ Used oil collection and extraction unit - V.A.G 1782-

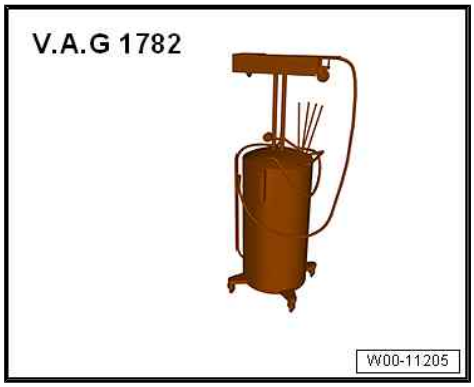

Removing

Note

♦ *Observe the general repair instructions* *⇒ page 1* .
♦ *Rules for cleanliness when working on the dual clutch gearbox* *⇒ page 1* .

– Place used oil collection and extraction unit - V.A.G 1782- below gearbox.
– Remove ATF oil pan ⇒ page 17 .
– Carefully pull ATF intake filter off mechatronic unit towards rear in direction of -arrow-.

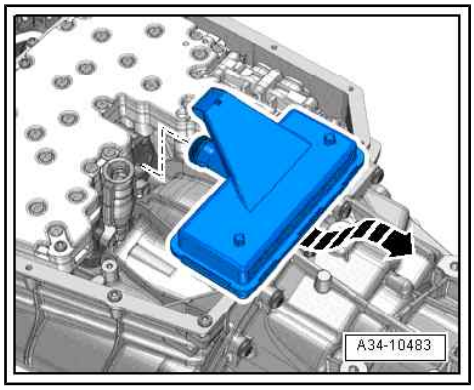

Installing

Installation is carried out in reverse sequence; note the following:

– Fit O-ring -2- to support (rear) on ATF intake filter -1-.

– Carefully insert intake neck of ATF intake filter into opening on oil pump as far as stop.

• It must be possible to insert support with O-ring into hole on gearbox housing.

– Install ATF oil pan ⇒ page 17 .

– Fill up with ATF after installing gearbox ⇒ 7-speed dual clutch gearbox; Rep. gr. 34 ; ATF; Draining and filling ATF .

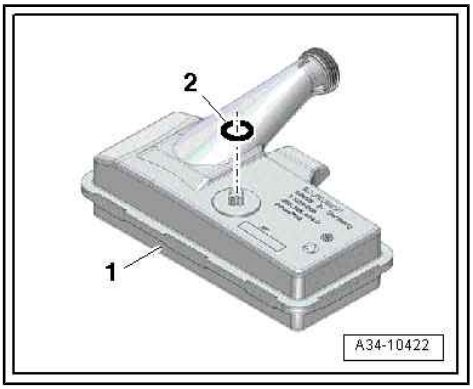

1.4 Removing and installing mechatronic unit

Special tools and workshop equipment required

♦ Used oil collection and extraction unit - V.A.G 1782-

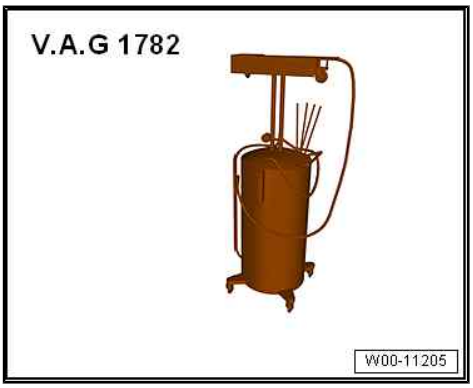

Removing

Note

♦ *General repair instructions* *⇒ page 1* .

♦ *Rules for cleanliness when working on the dual clutch gearbox* *⇒ page 1* .

Caution

The gearbox control unit (mechatronic unit) can be irreparably damaged by electrostatic discharge.

♦ ***Before handling the electrical connector, the mechanic must discharge static by briefly touching an earthed metal object, such as vehicle earth, lifting platform or heater radiator, etc.***

♦ ***Do not touch contact pins in gearbox connector with bare hands.***

Protected by copyright. Copying for private or commercial purposes, in part or in whole, is not permitted unless authorised by AUDI AG. AUDI AG does not guarantee or accept any liability with respect to the correctness of information in this document. Copyright by AUDI AG.

Gearbox installed

– Remove noise insulation -1- and -2- ⇒ General body repairs, exterior; Rep. gr. 66 ; Noise insulation; Removing and installing noise insulation .

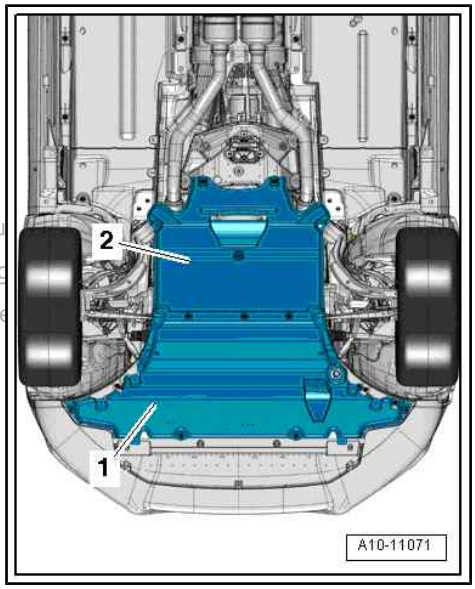

Caution

Risk of damage to gearbox

- *The engine must not be started when there is no more ATF in the gearbox and the mechatronic unit for dual clutch gearbox - J743- has been removed.*

Protected by copyright. Copying for private or commercial pu
permitted unless authorised by AUDI AG. AUDI AG does not g
with respect to the correctness of information in this docume

– Move selector lever to position “P”.

– Switch off ignition and remove ignition key.

– Turn fastener anti-clockwise -arrow- and unplug electrical connector at gearbox.

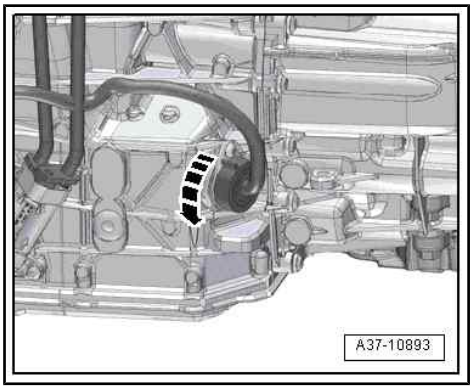

Gearbox removed or installed

– Remove ATF oil pan ⇒ page 17 .

– Remove bolt -1-.

– Turn connector housing -2- anti-clockwise -arrow- and detach.

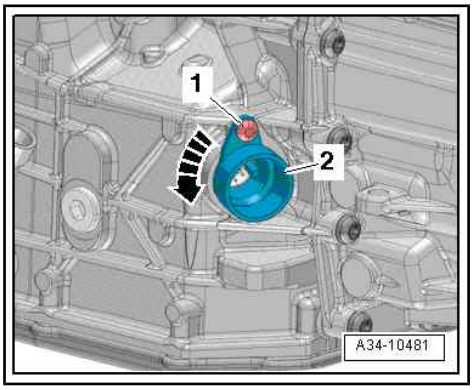

Vehicles with in-line ATF filter:

– Unscrew bolts -arrows- and remove connecting piece for ATF lines ⇒ 7-speed dual clutch gearbox; Rep. gr. 34 ; ATF circuit .

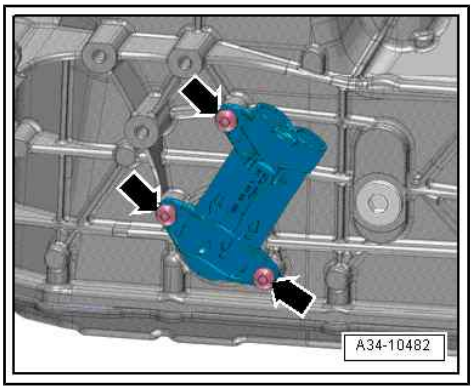

Vehicles with exchangeable ATF filter:

– Unscrew bolts -arrows- and remove housing for exchangeable ATF filter ⇒ 7-speed dual clutch gearbox; Rep. gr. 34 ; ATF circuit .

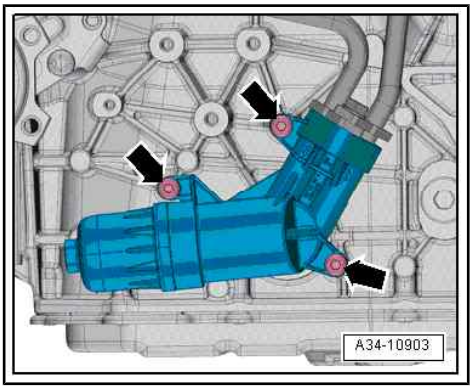

All vehicles (continued):

Note

- *The ATF pipes -2- must not be left fitted in the mechatronic unit, otherwise they would obstruct its removal.*
- *Always renew seals -3- and -4-.*

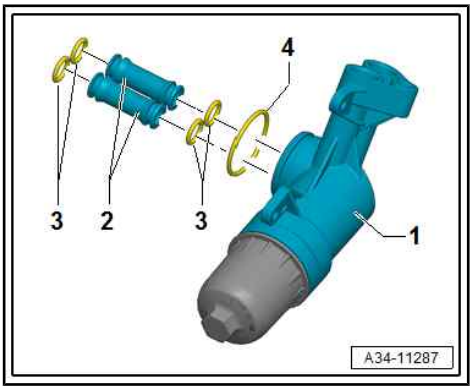

– Carefully pull ATF filter off mechatronic unit towards rear in direction of -arrow-.

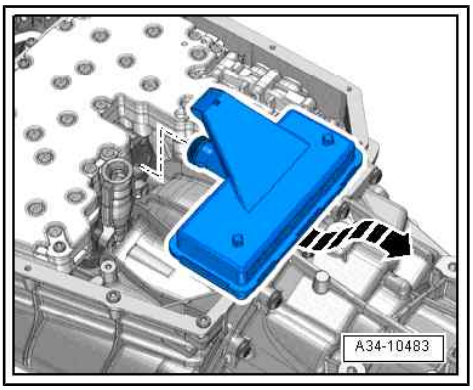

Caution

The gearbox control unit (mechatronic unit) can be irreparably damaged by electrostatic discharge.

- ***Before handling the electrical connector, the mechanic must discharge static by briefly touching an earthed metal object, such as vehicle earth, lifting platform or heater radiator, etc.***
- ***Do not touch contact pins in gearbox connector with bare hands.***

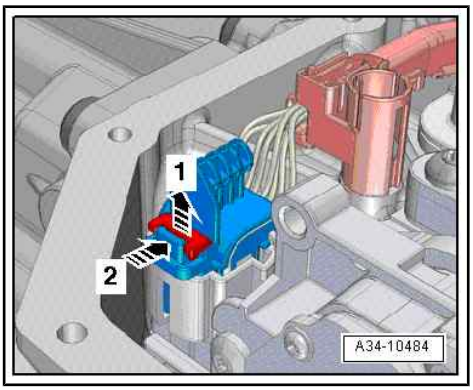

– Unplug electrical connector (to do so, pull retainer -arrow 1- and press down release catch -arrow 2-).

Protected by copyright. Copying for private or commercial purposes, in part or in whole, is not permitted unless authorised by AUDI AG. AUDI AG does not guarantee or accept any liability with respect to the correctness of information in this document. Copyright by AUDI AG.

– Remove bolts in reverse sequence -6 ... 1-.

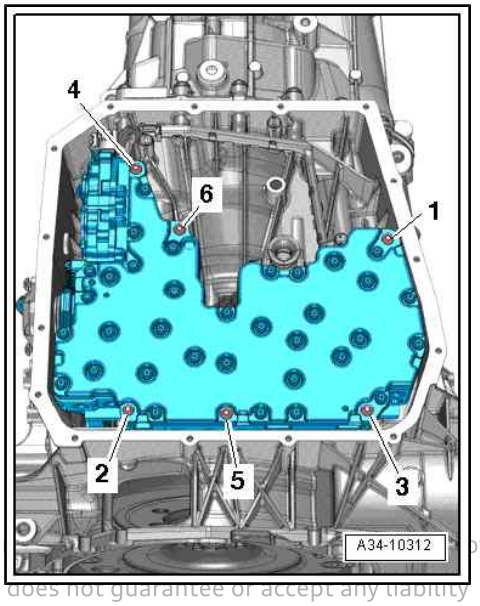

Caution

Risk of damage to mechatronic unit.

- *Loosen only the bolts marked -6 ... 1-.*
- *If other bolts are loosened, this may affect the operation of the mechatronic unit or the mechatronic unit could come apart.*

Note

- *Ensure that the sealing surface is not damaged.*
- *The mechatronic unit may be tightly seated.*
- *If it is necessary to lever off the mechatronic unit, get help from a second person to ensure that the mechatronic unit does not drop out. Alternatively, screw bolts -1- and -2- in again slightly to catch mechatronic unit when levering it out.*

Protected by copyright. Copying for private or commercial purposes, in part or in whole, is not permitted unless authorised by AUDI AG. AUDI AG does not guarantee or accept any liability with respect to the correctness of information in this document. Copyright by AUDI AG.

– Detach mechatronic unit.

Caution

Risk of damage to senders on rear side of mechatronic unit.

- *When setting down the mechatronic unit, the side with the bolt heads must be facing downwards.*

Installing

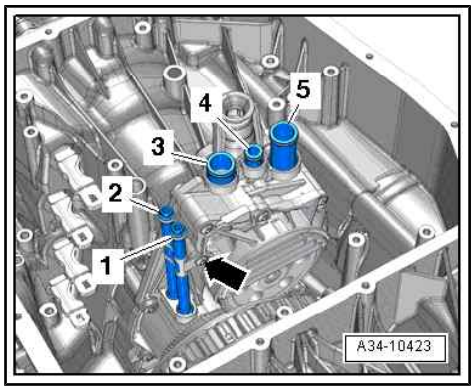

Note

- *The ATF pressure pipes -1 … 5- are made of plastic on newer gearboxes.*
- *In this case, the retainer for ATF pressure pipes -1 and 2- is not fitted.*
- *The metal ATF pressure pipes can be replaced with plastic ATF pressure pipes; to do so, unscrew securing bolt -arrow- and remove retainer.*
- *Lightly lubricate seals with ATF before fitting.*

– Remove bolt -arrow- for retainer for ATF pressure pipes (if fitted).

– Renew ATF pressure pipes (clutch pressure) -1- and -2-.

– Renew ATF pipes -3 … 5-.

– Tighten bolt -arrow- without retainer for ATF pressure pipes (if previously fitted).

• Tightening torques
⇒ “1.1 Exploded view - mechatronic unit”, page 13

Note

Make sure that all selector forks and gear actuators are in »centre position« before installing mechatronic unit for dual clutch gearbox - J743- .

Protected by copyright. Copying for private or commercial purpose
permitted unless authorised by AUDI AG. AUDI AG does not guara
with respect to the correctness of information in this document. C

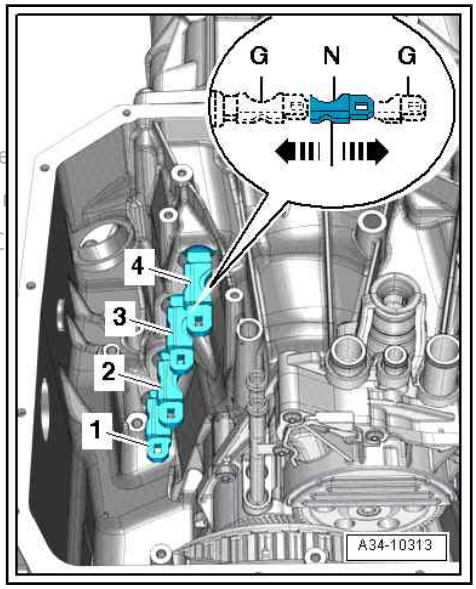

Adjusting selector forks:

– First check each of the selector forks -1 … 4- by hand.

Each selector fork has 3 positions:

- Gear engaged -G-
- Neutral -N- (centre position)
- Gear engaged -G-

– Move the 4 selector forks once into each position -arrows-, one after the other.

– Then shift all selector forks back into »centre position« -N-.

Adjusting gear actuators:

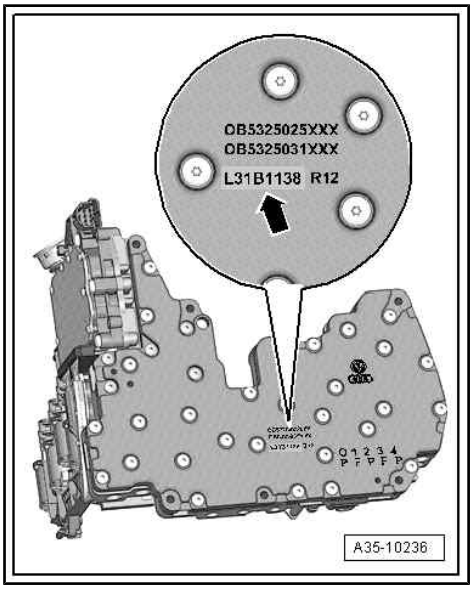

Caution

The gearbox control unit (mechatronic unit) can be irreparably damaged by electrostatic discharge.

- *Before handling the electrical connector, the mechanic must discharge static by briefly touching an earthed metal object, such as vehicle earth, lifting platform or heater radiator, etc.*
- *Do not touch contact pins in gearbox connector with bare hands.*
- *Do not apply any pressure to the sensors when levering out the plungers.*

The gear actuators have to be adjusted differently according to the production date of the mechatronic unit.

The production date can only be read off from the identification on the mechatronic unit -arrow-.

The identification on the mechatronic unit comprises the following information:

Identification of mechatronic unit				Explanation: in this example “L31B1138”
L	3 1	B 1	1 3 8	
L				Year of manufacture: L = 2010 K = 2009 J = 2008 ... etc.
	3 1			Calendar week of year of manufacture
		B 1		Manufacturer's code for day and shift no. Monday: shift 1 = A1, shift 2 = B1, shift 3 = C1 Tuesday: shift 1 = D1, shift 2 = E1, shift 3 = F1 Wednesday: shift 1 = G1, shift 2 = H1, shift 3 = I1 ... etc.
			1 3 8	Serial number of unit per shift and day, in this case the 138th mechatronic unit in shift B1

From serial number “L31B1138” onwards, the gear actuators in the mechatronic unit must be adjusted to a different value.

Reproduction or copying of this document for private or commercial purposes, in part or in whole, is not permitted without the authorisation of AUDI AG. AUDI AG does not guarantee or accept any liability with respect to the correctness of information in this document. Copyright by AUDI AG.

Note

- *A mechatronic unit with the identification e.g. "L31A1140" was manufactured before a unit with the identification "L31B1138" since it was made in the 1st shift (A1) on Monday.*
- *Similarly, a mechatronic unit with the identification "L31C1009" was manufactured after a unit with the identification "L31B1138" since it was made in the 3rd shift (C1) on Monday.*

– Adjust the four gear actuators on rear side of mechatronic unit to dimension -a- (in »centre position«) by carefully pulling or pushing each gear actuator outwards or inwards.

Mechatronic units with identification up to "L31B1137":

- Dimension -a- = 28 mm

Mechatronic units with identification from "L31B1138" onwards:

- Dimension -a- = 32 mm

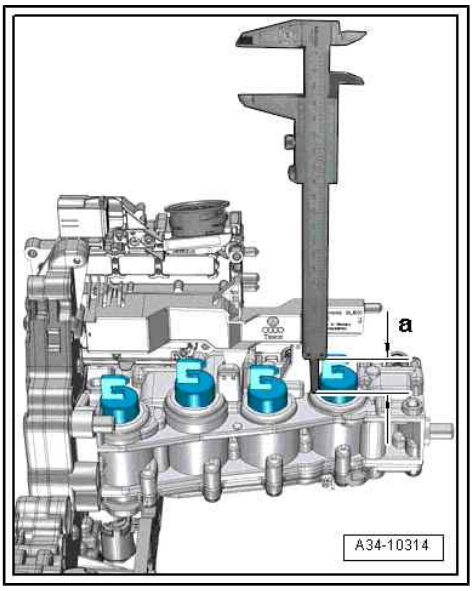

– Align coupling lugs -arrows- of gear actuators so that they engage in eyes of selector forks when installing.

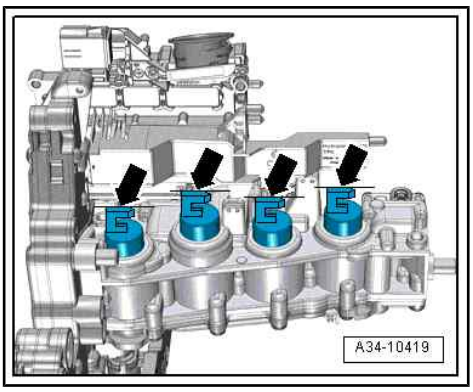

Protected by copyright. Copying for private or commercial purposes, in part or in whole, is not permitted unless authorised by AUDI AG. AUDI AG does not guarantee or accept any liability with respect to the correctness of information in this document. Copyright by AUDI AG.

– Insert mechatronic unit into gearbox housing.

- Dowel pins of mechatronic unit should fit easily into holes on gearbox.
- If mechatronic unit cannot be installed easily, a selector fork or gear actuator may be out of centre position. Check centre positions and re-adjust if necessary.

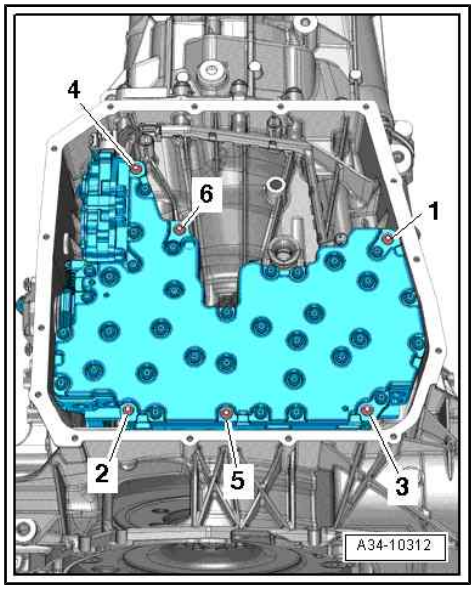

After inserting mechatronic unit:

– Check all gear actuators through opening between mechatronic unit and gearbox housing using an electric hand torch or similar.

- All four coupling lugs of gear actuators must engage in corresponding eyes of selector forks.

– Tighten bolts for mechatronic unit ⇒ page 16 .

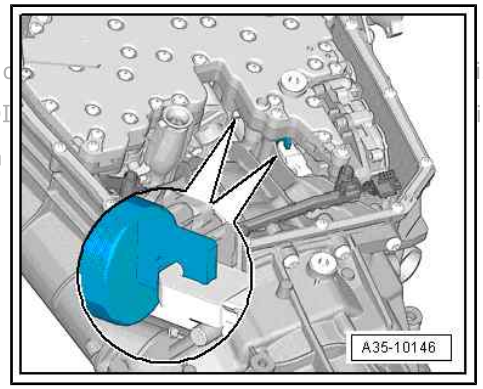

Protected by copyright. Copying for private or commercial purposes, in part, is not permitted unless authorised by AUDI AG. AUDI AG does not guarantee or assume any liability with respect to the correctness of information in this document.

Installation is carried out in the reverse order; note the following:

Caution

The gearbox control unit (mechatronic unit) can be irreparably damaged by electrostatic discharge.

- *Before handling the electrical connector, the mechanic must discharge static by briefly touching an earthed metal object, such as vehicle earth, lifting platform or heater radiator, etc.*
- *Do not touch contact pins in gearbox connector with bare hands.*

– Make sure that electrical connector on mechatronic unit is properly engaged and secured.

– Install intake ATF filter ⇒ page 18 .

– Install ATF oil pan ⇒ page 17 .

– Install ATF filter housing / connecting piece for ATF lines (depending on version) ⇒ 7-speed dual clutch gearbox; Rep. gr. 34 ; ATF circuit .

Note

Renew filter housing if it does not have a factory-fitted locating element -arrow-.

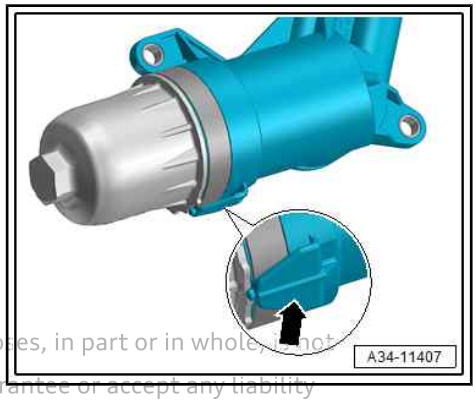

Protected by copyright. Copying for private or commercial purposes, in part or in whole, is not permitted unless authorised by AUDI AG. AUDI AG does not guarantee or accept any liability with respect to the correctness of information in this document. Copyright by AUDI AG.

Caution

Risk of leaks!

- *Always renew seals on oil lines and filter housing and coat new seals with ATF.*
- *Ensure that sealing surfaces are clean.*

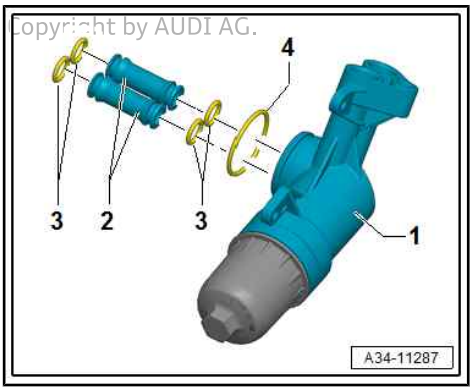

Gearbox removed

– Install gearbox ⇒ 7-speed dual clutch gearbox; Rep. gr. 34 ; Removing and installing gearbox; Installing gearbox .

Gearbox installed

– Fill up ATF ⇒ 7-speed dual clutch gearbox; Rep. gr. 34 ; ATF; Draining and filling ATF .

- After renewing mechatronic unit for dual clutch gearbox -J743- , run appropriate “Guided Function” on a vehicle diagnostic tester ⇒ 7-speed dual clutch gearbox; Rep. gr. 39 ; Gearbox control system .

1.5 Exploded view - printed circuits for mechatronic unit

Note

The swarf protectors must be fitted before the printed circuits are installed *⇒ page 29* *.*

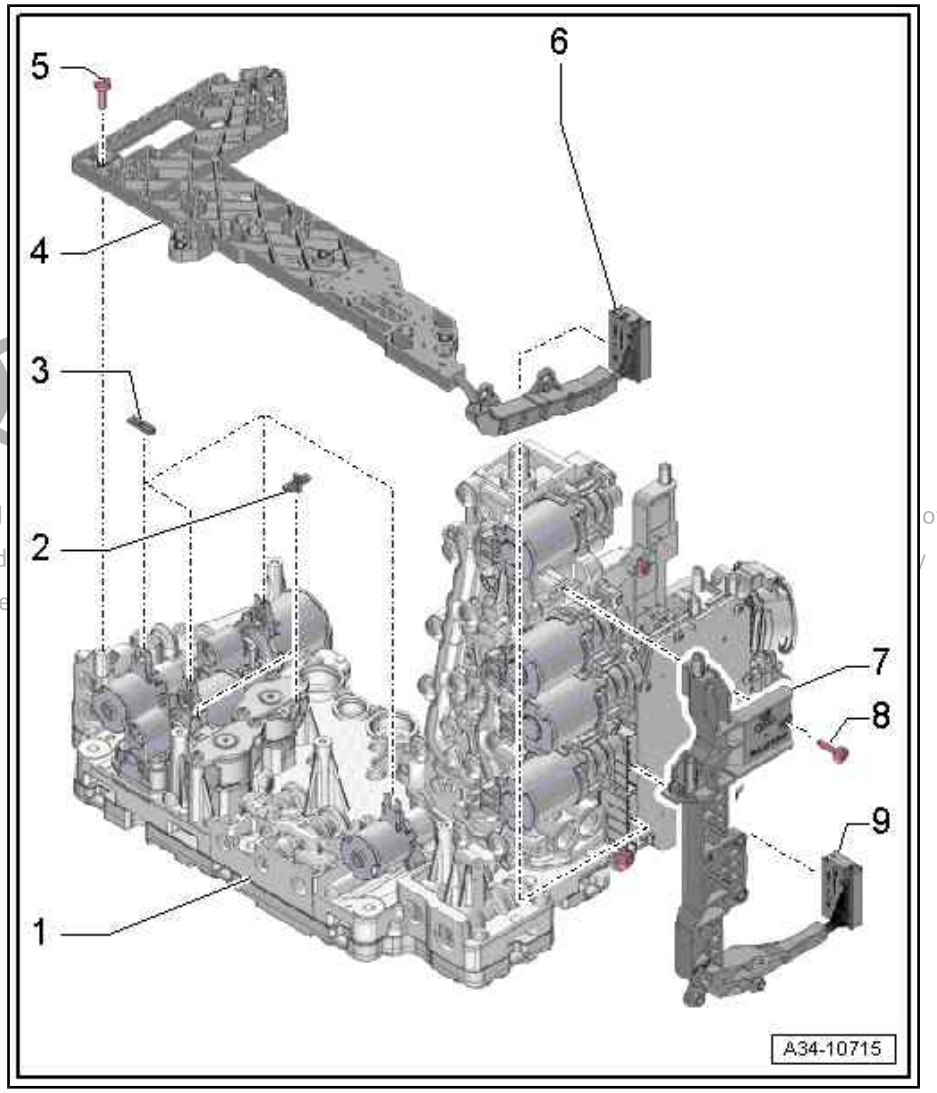

1 - Mechatronic unit for dual clutch gearbox - J743-

- ❑ Removing and installing ⇒ page 19

- After renewing mechatronic unit for dual clutch gearbox - J743- , run appropriate "Guided Function" on a vehicle diagnostic tester ⇒ 7-speed dual clutch gearbox; Rep. gr. 39 ; Gearbox control system .

2 - Swarf protector
⇒ page 29

3 - Swarf protector
⇒ page 29

4 - Printed circuit 1

- ❑ Removing and installing ⇒ page 30
- ❑ The contact springs on the printed circuit are only designed to be plugged in once. A printed circuit must not be used again after it has been unplugged.

5 - Bolt

- ❑ Tightening torque and sequence ⇒ page 28

6 - Electrical multi-pin connector

- ❑ To release, use a screwdriver with maximum blade width 3.5 mm ⇒ page 30

7 - Printed circuit 2

- ❑ Removing and installing ⇒ page 30
- ❑ The contact springs on the printed circuit are only designed to be plugged in once. A printed circuit must not be used again after it has been unplugged.

8 - Bolt

- ❑ Tightening torque and sequence ⇒ page 29

9 - Electrical multi-pin connector

- ❑ To release, use a screwdriver with maximum blade width 3.5 mm ⇒ page 30

Printed circuit 1 - tightening torque and sequence

– Tighten bolts to 3 Nm in sequence -1 ... 5-.

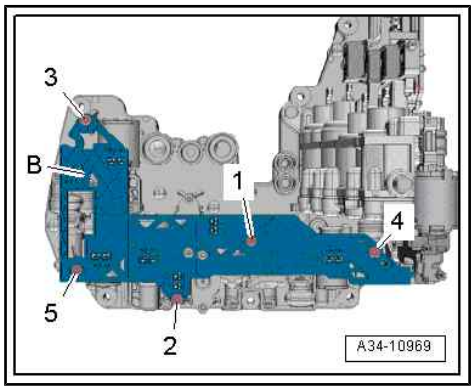

Printed circuit 2 - tightening torque and sequence

– Tighten bolts to 3 Nm in sequence -1 ... 5-.

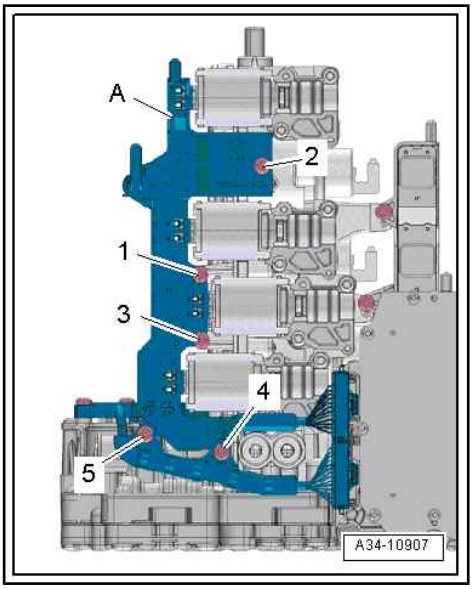

Exploded view - swarf protectors

1 - Swarf protector
- ❑ 2x
- ❑ Rectangular

2 - Swarf protector
- ❑ 2x
- ❑ Cap

3 - Swarf protector
- ❑ 6x
- ❑ Cross-shaped

Protected by copyright. Copying for private or commercial purposes, in part or in whole is not permitted unless authorised by AUDI AG. AUDI AG does not guarantee or accept any liability with respect to the correctness of information in these documents. Copyright by AUDI AG.

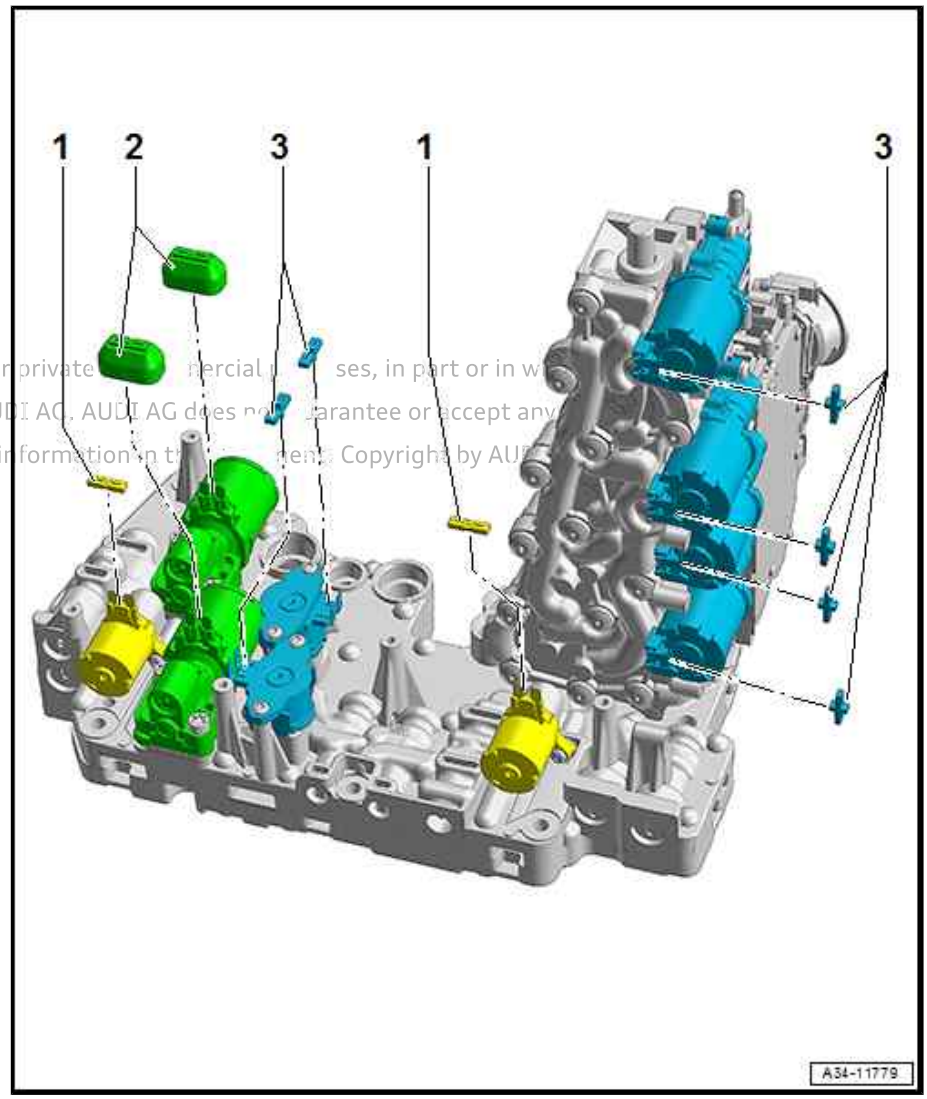

1.6 Removing and installing printed circuits for mechatronic unit

Protected by copyright. Copying for private or commercial purposes, in part or in whole, is not permitted without the consent of by AUDI AG. AUDI AG does not guarantee or accept any liability with respect to the correctness of information in this document. Copyright by AUDI AG.

Removing

– Remove mechatronic unit for dual clutch gearbox - J743- ⇒ page 19 .

– Place mechatronic unit on a clean, soft surface.

> **Caution**
>
> *The gearbox control unit (mechatronic unit) can be damaged by electrostatic discharge.*
>
> - *Before handling the electrical connector, the mechanic must discharge static by briefly touching an earthed metal object, such as vehicle earth, lifting platform or heater radiator, etc.*

> **Caution**
>
> *The gearbox control unit (mechatronic unit) can be damaged if unsuitable tools are used.*
>
> - *The mechatronic unit must be renewed if the catch on the mechatronic unit is damaged when releasing and unplugging the electrical connectors.*
> - *To release, use a screwdriver with maximum blade width -a- = 3.5 mm.*

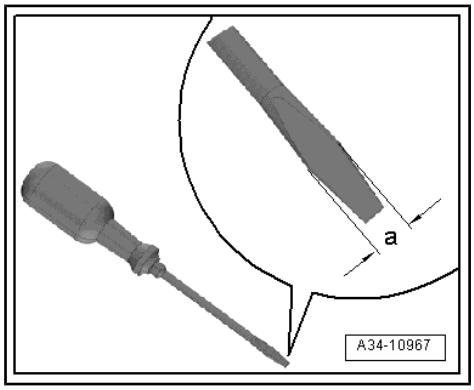

– Using a screwdriver -3-, carefully release electrical connectors -1- and -2- on mechatronic unit in direction of -arrow A- and unplug in direction of -arrow B-.

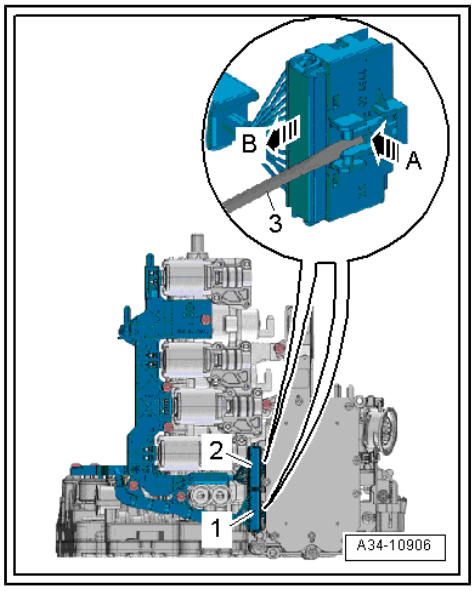

– Unscrew bolts -1, 2, 3- on small printed circuit -A- about 5 mm.

– Remove bolts -4- and -5- completely and swivel wiring to one side.

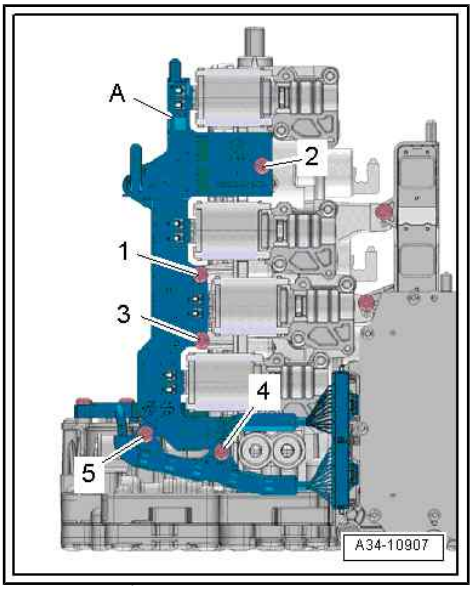

> **Caution**
>
> ***Risk of loose contacts.***
>
> ♦ ***The contact springs on the printed circuit are only designed to be plugged in once. A printed circuit must not be used again after it has been unplugged.***

Protected by copyright. Copying for private or commercial purposes, in part
permitted unless authorised by AUDI AG. AUDI AG does not guarantee or ac
with respect to the correctness of information in this document. Copyright b

– Pull out printed circuit 2 until contact tabs -1- of valves are released from contact springs -2- on printed circuit.

– Unscrew bolts -1, 2, 3- completely and remove printed circuit 2.

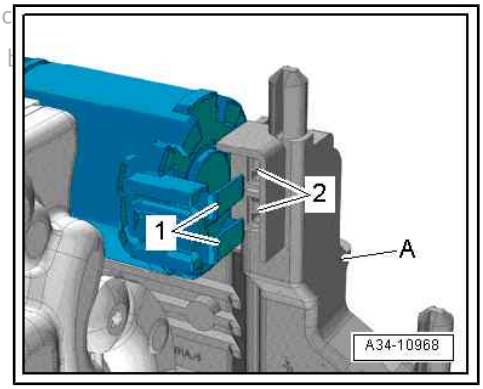

– Unscrew bolts -1 … 5- on large printed circuit -B- about 5 mm.

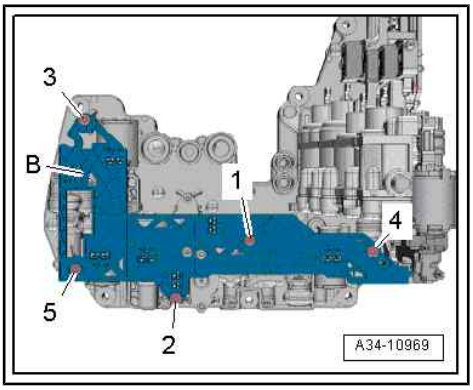

> **Caution**
>
> ***Risk of loose contacts.***
>
> ♦ ***The contact springs on the printed circuit are only designed to be plugged in once. A printed circuit must not be used again after it has been unplugged.***

– Pull out printed circuit 1 until contact tabs -1- of valves are released from contact springs -2- on printed circuit.

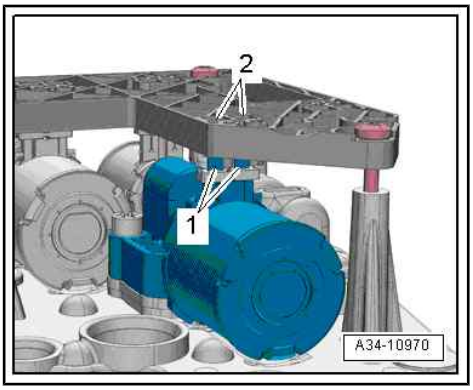

– Unscrew bolts -1 … 5- completely and remove printed circuit 1.

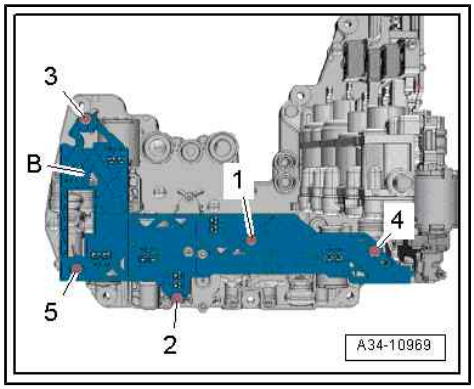

Installing

Note

- *The swarf protectors must be fitted before the printed circuits are installed* ⇒ page 29 .
- *Install swarf protectors even if none was previously fitted in gearbox.*

– Carefully place new printed circuit 1 -B- on mechatronic unit initially.

– Screw in bolts -1 … 5- about 2 turns as a guide.

– Carefully press printed circuit 1 into contacts.

– Screw in bolts -1 … 5- by hand until they make contact and then tighten to specified torque.

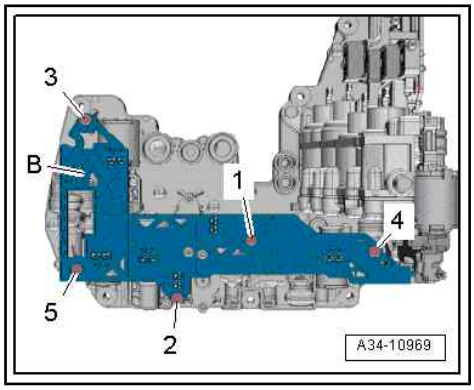

– Carefully place new printed circuit 2 -A- on mechatronic unit initially.

– Screw in bolts -1, 2, 3- about 2 turns as a guide.

– Carefully press printed circuit 2 into contacts.

– Fit wiring onto dowel pins on small printed circuit.

– Screw in bolts -1 … 5- by hand until they make contact and then tighten to specified torque.

– Plug in electrical connectors so that they engage audibly.

– Install mechatronic unit for dual clutch gearbox - J743- ⇒ page 19 .

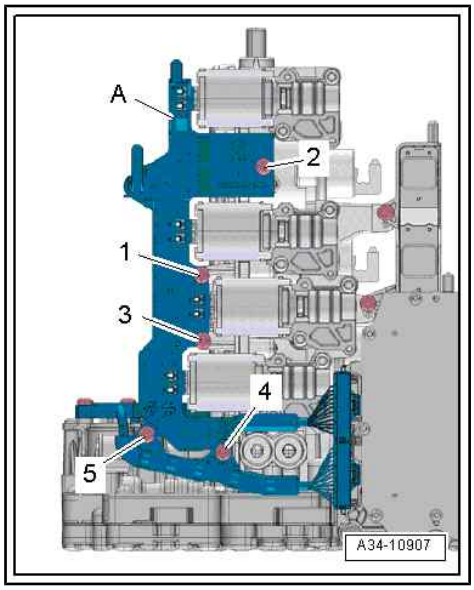

1.7 Removing and installing exchangeable ATF filter

Protected by copyright. Copying for private or commercial purposes, in part or in whole, is not permitted unless authorised by AUDI AG. AUDI AG does not guarantee or accept any liability with respect to the correctness of information in this document. Copyright by AUDI AG.

Special tools and workshop equipment required

- Used oil collection and extraction unit - V.A.G 1782-

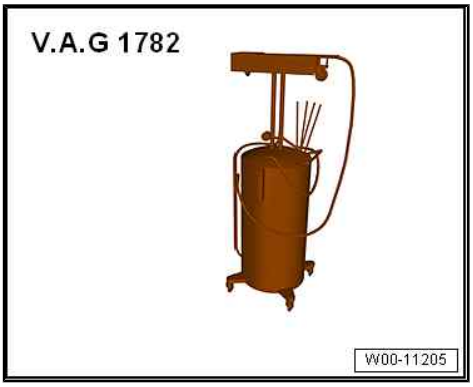

Protected by copyright. Copying for private or commercial purp
permitted unless authorised by AUDI AG. AUDI AG does not gu
with respect to the correctness of information in this documen

Note

- *There are two different types of ATF filter, depending on the engine version and date of manufacture.*
- *The in-line ATF filter -arrow- only has to be renewed when the gearbox is renewed. Removing and installing ⇒ 7-speed dual clutch gearbox; Rep. gr. 34 ; ATF circuit*

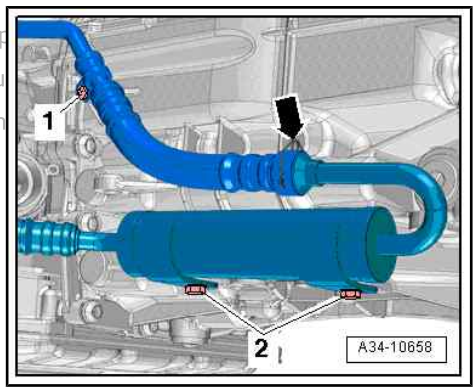

Note

The exchangeable ATF filter -A- must also be renewed every time the ATF is changed.

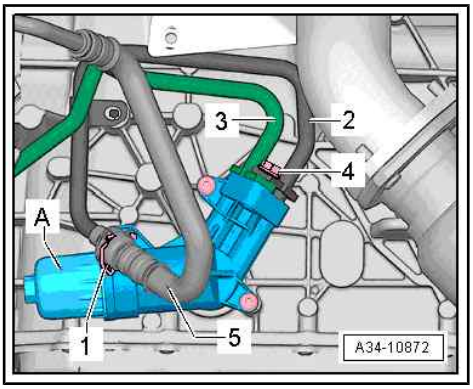

Removing exchangeable ATF filter

Note

- ⇒ *"1.1 Rules for cleanliness", page 1*
- *Before fitting a replacement gearbox, always blow through the ATF lines and ATF cooler with compressed air (not more than 10 bar). Flush with ATF if the system is very dirty.*

– Drain ATF ⇒ page 62 .

– If fitted, unfasten retaining strap -3- and remove locating element -1-.

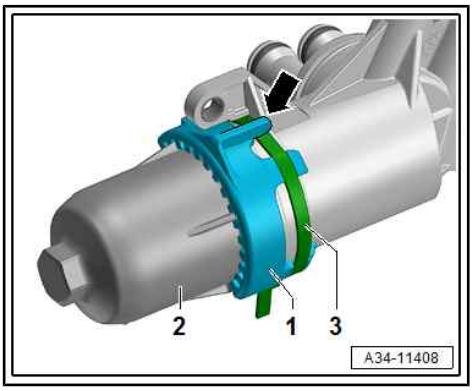

– Unscrew and remove cap -1- for exchangeable ATF filter and allow ATF to drain off.
– Pull out exchangeable ATF filter -2- in direction of -arrow- and remove downwards.

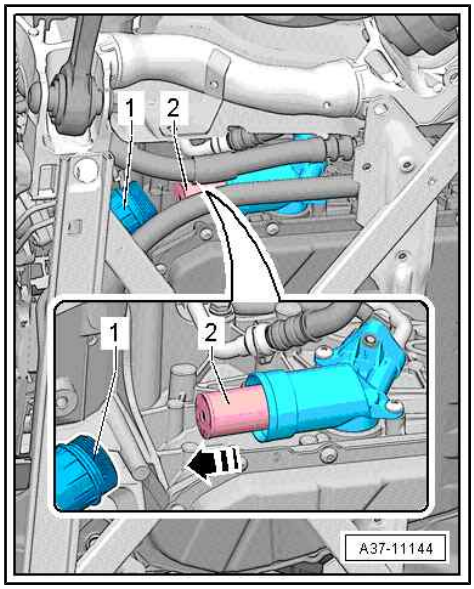

Installing

> **Caution**
>
> *Risk of leaks!*
>
> - *Always renew seals on oil lines and filter housing and coat new seals with ATF.*
> - *Ensure that sealing surfaces are clean.*

Installation is carried out in reverse sequence; note the following:

Two different ATF filter housing versions are in use.

If the locating element -arrow- (fitted at the factory) is not present, an ATF filter cap with a retrofittable locating element must be installed.

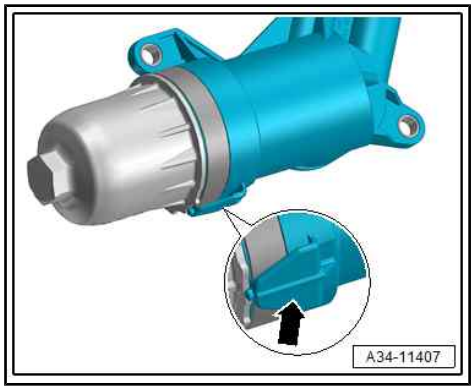

> **Note**
>
> *The retrofittable locating element and the corresponding ATF filter cap are available in the ⇒ Electronic parts catalogue (from approx. July 2014 onwards).*

> **Caution**
>
> *Risk of leaks at ATF filter!*
>
> - *It is important that only the correct version of the ATF filter cap is used for the corresponding ATF filter housing.*

Protected by copyright. Copying for private or commercial purposes, in part or in whole, is not permitted unless authorised by AUDI AG. AUDI AG does not guarantee or accept any liability with respect to the correctness of information in this document. Copyright by AUDI AG.

ATF filter cap versions for ATF filter housings:

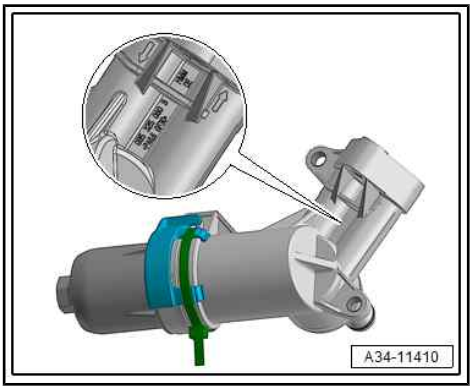

Note

Note part number for ATF filter housing!

ATF filter housing:	Corresponding ATF filter cap:	Locating element:
0B5.325.060.B	0B5.325.240.C	Retrofitted
0B5.325.060.C	0B5.325.240.B	Fitted at factory

Note

- *O-ring on cap for exchangeable ATF filter must be renewed.*
- *Exchangeable ATF filter must be renewed.*

Caution

Risk of damage to gearbox

The new exchangeable ATF filter must not come into contact with water. Even small amounts of water, such as drips from the engine compartment or wet hands will cause the surface of the exchangeable ATF filter to swell. Small particles of paper can then separate from the surface of the filter and contaminate the mechatronic unit.

– Lubricate O-ring -2- on new exchangeable ATF filter -1- before fitting.

Protected by copyright. Copying for private or commercial pur
permitted unless authorised by AUDI AG. AUDI AG does not g
with respect to the correctness of information in this docume

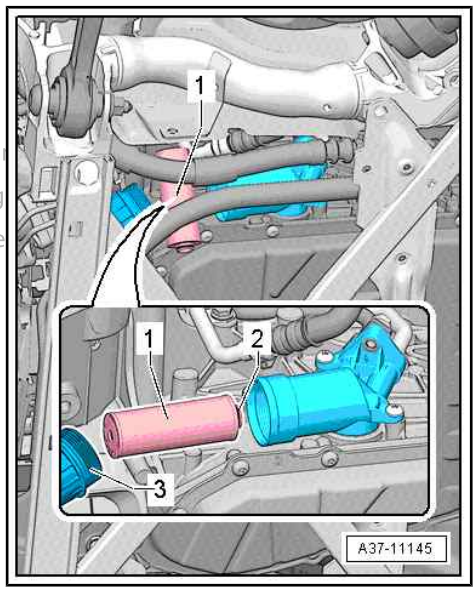

– Lubricate O-ring -2- on cap -1- for exchangeable ATF filter.
– Screw on cap -1- for exchangeable ATF filter and tighten it to specified torque.

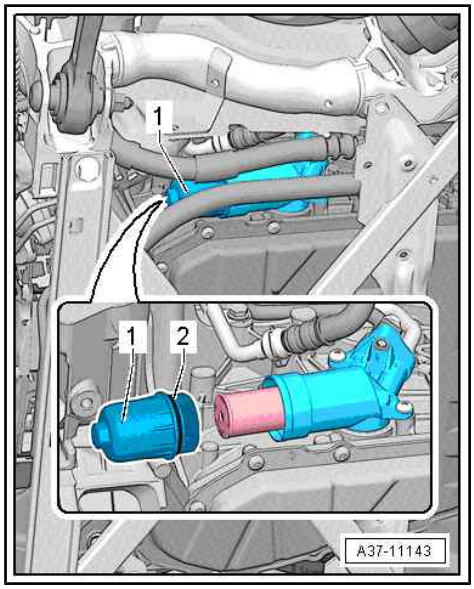

Vehicles without factory-fitted locating element:

Caution

Risk of leaks on filter housing!

- *Filter housings without a factory-fitted locating element must always be fitted with a filter cap with a retrofittable locating element -1-.*

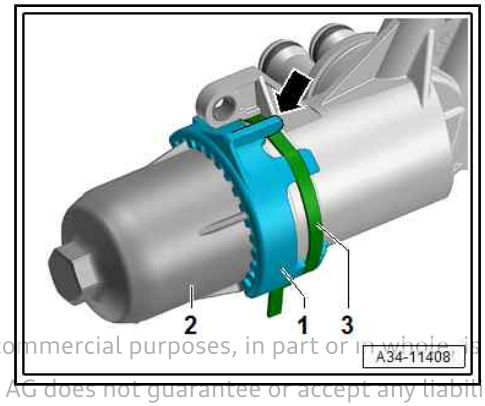

– Secure locating element -1- on ATF filter cap -2- with retaining strap -3-.

Protected by copyright. Copying for private or commercial purposes, in part or in whole, is not permitted unless authorised by AUDI AG. AUDI AG does not guarantee or accept any liability with respect to the correctness of information in this document. Copyright by AUDI AG.

Note

The lug on the locating element -arrow- should rest against the filter housing, as shown.

– Clean gearbox and attachments.

Tightening torque
⇒ "1.1 Exploded view - mechatronic unit", page 13

– Fill up ATF ⇒ 7-speed dual clutch gearbox; Rep. gr. 34 ; ATF; Draining and filling ATF .

2 Transporting gearbox

Special tools and workshop equipment required

- Workshop hoist - VAS 6100-

- Hook and support tool - T40197-

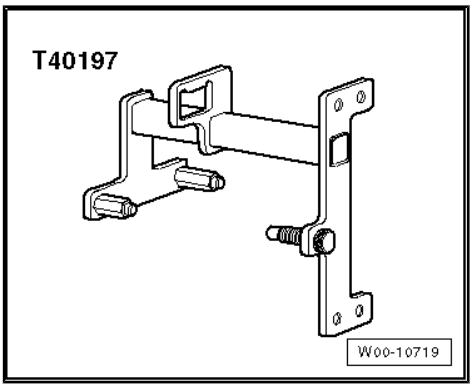

- Hook and support tool - T40294-

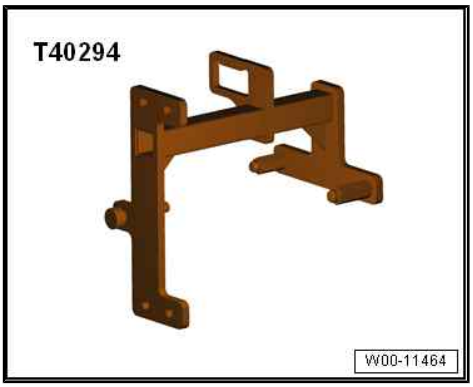

DANGER!

Injury risk: The hook and support tool T40197 must NOT be used for the repair procedure *⇒ "3.2 Removing and installing sensor module with integrated senders and sensors G612 , G632 , G676 and printed circuit 3 ", page 41* .

Use only the hook and support tool T40294 for this operation.

Reproduction or copying for commercial purposes, in part or in whole, is not permitted unless authorised by AUDI AG. AUDI AG does not guarantee or accept any liability with respect to the correctness of information in this document. Copyright by AUDI AG.

Procedure

- Gearbox removed

> ⚠ **Caution**
>
> ***Risk of damage to gearbox components if gearbox is not supported correctly when removed.***
>
> ◆ ***Do not set down the gearbox on its ATF oil pan.***

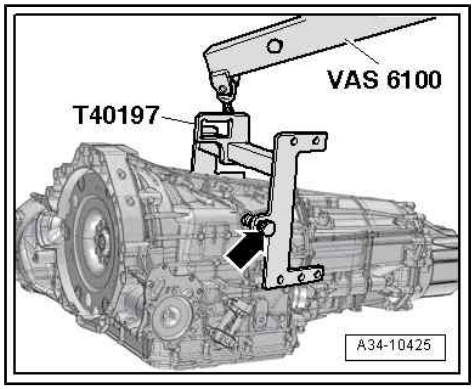

– Attach hook and support tool - T40197- to drillings in housing on right-side of gearbox and secure to left side of gearbox with knurled screw -arrow-.

– The workshop hoist - VAS 6100- can be used to lift and move the gearbox.

Protected by copyright. Copying for private or commercial purposes, in part or in whole, is not permitted unless authorised by AUDI AG. AUDI AG does not guarantee or accept any liability with respect to the correctness of information in this document. Copyright by AUDI AG.

3 Dismantling and assembling gearbox

⇒ “3.1 Exploded view - transmission unit”, page 39

⇒ “3.2 Removing and installing sensor module with integrated senders and sensors G612 , G632 , G676 and printed circuit 3 ”, page 41

⇒ “3.3 Removing and installing oil pump and suction-jet pump”, page 53

⇒ “3.4 Renewing oil seals for partition in gearbox housing”, page 56

3.1 Exploded view - transmission unit

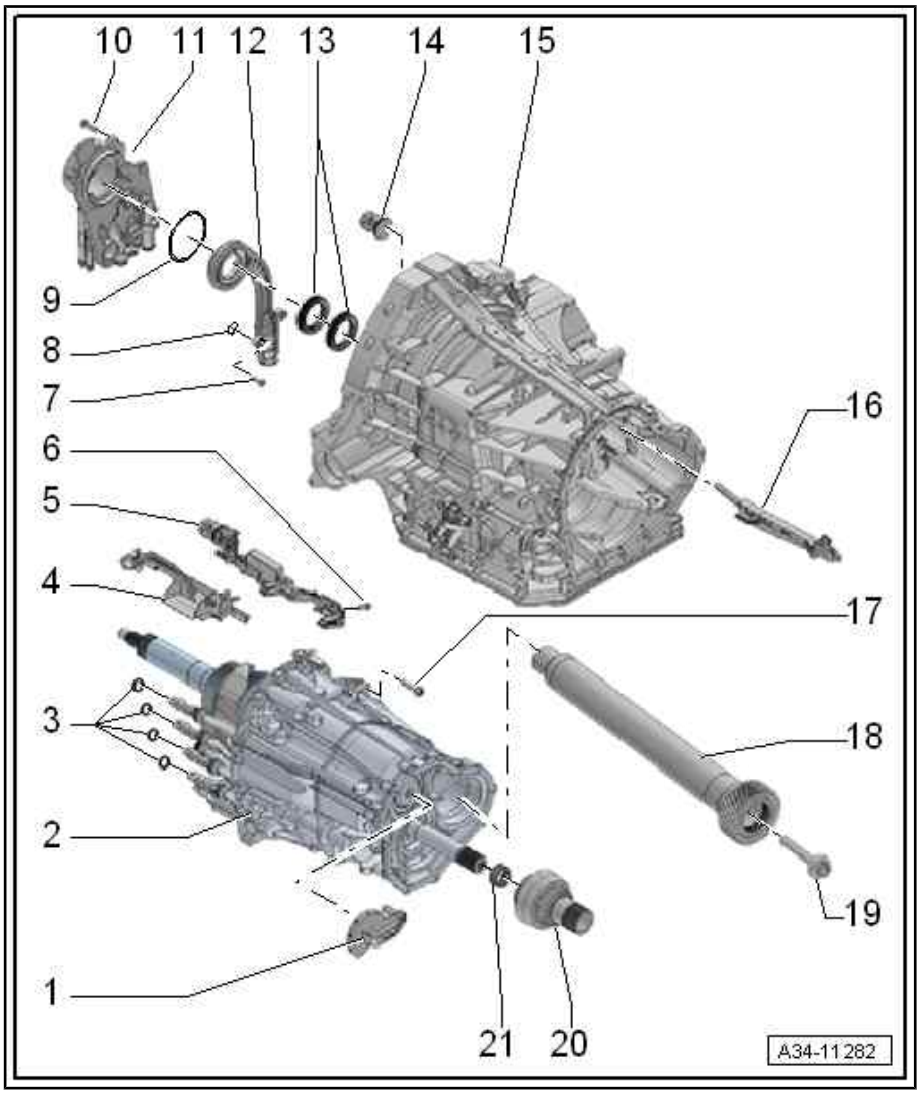

1 - Oil duct

- ❑ For input shaft

2 - Intermediate gearbox housing

- ❑ With gear cluster

3 - Seals for gear actuators

- ❑ Renew only if damaged
- ❑ Removing and installing ⇒ Fig. ““Renewing seals for gear actuators”“ , page 40

4 - Oil collector (front)

- ❑ Must be renewed if removed
- ❑ Clipped onto sensor module

5 - Sensor module

- ❑ With integrated gearbox input speed sender 2 - G612- , gearbox input speed sender 1 - G632- , gear sensor - G676- and printed circuit 3
- ❑ Different versions are available; for correct version refer to ⇒ Electronic parts catalogue
- ❑ Removing and installing ⇒ page 41

6 - Bolt

- ❑ 8 Nm
- ❑ Different versions are available; for correct version refer to ⇒ Electronic parts catalogue

7 - Bolt

- ❑ 4.5 Nm

8 - O-ring

- ❑ Renew

9 - O-ring

- ❑ Renew

Protected by copyright. Copying for private or commercial purposes, in part or in whole, is not permitted unless authorised by AUDI AG. AUDI AG does not guarantee or accept any liability with respect to the correctness of information in this document. Copyright by AUDI AG.

10 - Bolt

- ❑ 5x
- ❑ 25 Nm

11 - Oil pump

- ❑ Removing and installing ⇒ page 53

12 - Suction-jet pump

- ❑ Renew small O-ring (not shown in illustration)

13 - Oil seal

- ❑ Twin-lip oil seal (two parts are pressed together)
- ❑ For partition in gearbox housing
- ❑ Renewing ⇒ page 56

14 - Connector housing for sensor module

- ❑ Removing and installing
  ⇒ "3.2 Removing and installing sensor module with integrated senders and sensors G612 , G632 , G676 and printed circuit 3 ", page 41

Protected by copyright. Copyright for private or commercial purposes, in part or in whole, is not permitted unless authorised by AUDI AG. AUDI AG does not guarantee or accept any liability with respect to the correctness of information in this document. Copyright by AUDI AG.

15 - Gearbox housing

16 - Oil duct

- ❑ Leading to front axle drive

17 - Bolt

- ❑ Renew
- ❑ Tightening torque and sequence ⇒ page 41

18 - Side shaft

- ❑ With spur gear

19 - Bolt

- ❑ Secures side shaft to pinion shaft
- ❑ Renew
- ❑ 150 Nm +90°

20 - Spur gear

21 - Needle bearing

Renewing seals for gear actuators

> ⚠ **Caution**
>
> *Risk of damage to gear actuator*
>
> ♦ *Do not use any sharp tools to remove seals.*

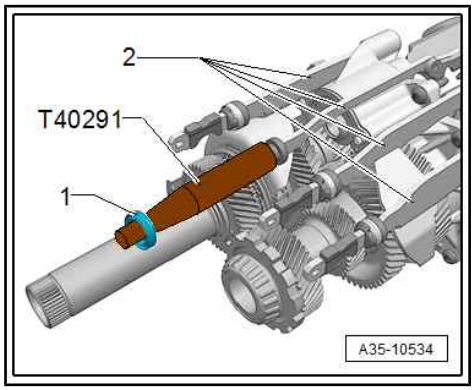

– Remove seal from corresponding gear actuator -2- by hand.

– Coat new seal -1- with MTF and slide onto assembly sleeve - T40291- .

– Fit assembly sleeve - T40291- onto corresponding gear actuator -2- and slide on seal -1-.

Tightening torque and sequence for bolts securing intermediate gearbox housing to gearbox housing

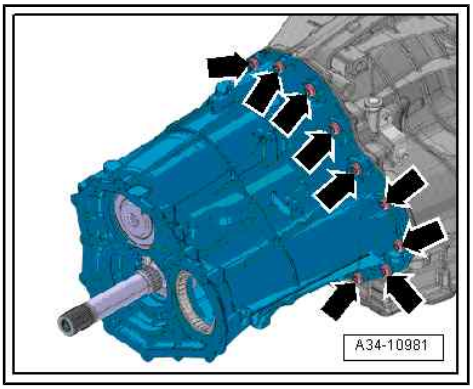

Note

Renew bolts.

– Tighten bolts in 2 stages as follows:

Stage	Bolts	Tightening torque/angle specification
1.	-arrows-	8 Nm in diagonal sequence
2.	-arrows-	Turn 120° further in diagonal sequence

3.2 Removing and installing sensor module with integrated senders and sensors - G612- , -G632- , -G676- and printed circuit 3

Protected by copyright. Copying for private or commercial purposes, in part or in whole, is not permitted unless authorised by AUDI AG. AUDI AG does not guarantee or accept any liability w spect to the correctness of information in this document. Copyright by AUDI AG.

DANGER!

Warning:

Injury risk: The hook and support tool T40197 must NOT be used for the repair procedure described below.

Use only the hook and support tool T40294 for this operation.

Special tools and workshop equipment required

- Hook and support tool - T40294-
- Counterhold tool - T40217-
- Socket -T40228-
- Sealant ⇒ Electronic parts catalogue

Note

- *The gearbox input speed sender 2 - G612- , gearbox input speed sender 1 - G632- , gear sensor - G676- and printed circuit 3 are integrated components of the sensor module . The components can only be renewed as one unit (sensor module).*
- *Renew wiring harness for sensor module (location ⇒ Item 39 (page 15)) when renewing sensor module .*

Removing

- Gearbox is secured to engine and gearbox support - VAS 6095- ⇒ page 60 .

– Remove flywheel ⇒ page 5 .

– Remove dual clutch ⇒ page 7 .

– Remove mechatronic unit for dual clutch gearbox - J743- ⇒ page 19 .

– Remove oil pump and suction-jet pump ⇒ page 53 .

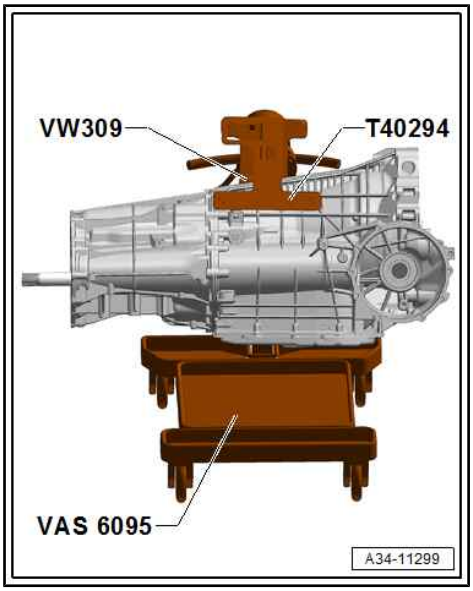

Note

Wiring harness for sensor module must be renewed when sensor module is renewed.

– Slacken off bolts -arrows- on wiring harness for sensor module.

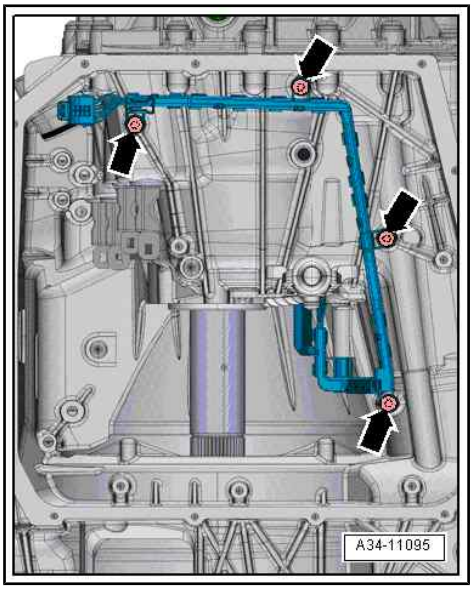

– Loosen bolt -1-.

– Unplug electrical connector at sensor module (to do so, pull retainer -arrow A- and detach connector -arrow B-).

– Remove wiring harness for sensor module.

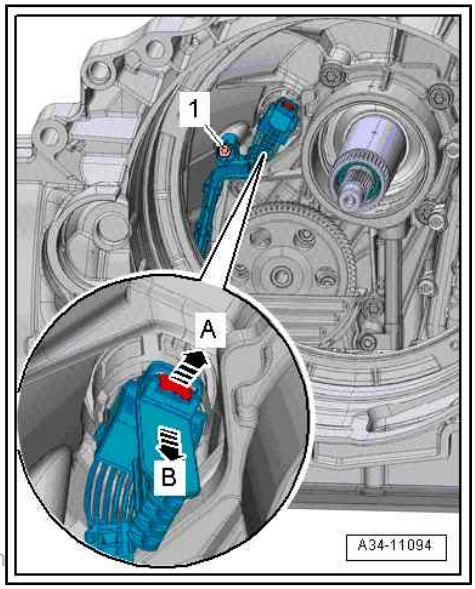

Protected by copyright. Copying for private or comm
permitted unless authorised by AUDI AG. AUDI AG does not guarantee or accept any liability
with respect to the correctness of information in this document. Copyright by AUDI AG.

– To remove connector housing for sensor module fit bit -T40228- onto connector housing and turn anti-clockwise (-arrow A-) as far as stop.
– Pull connector housing for sensor module off in direction of -arrow B-.
– Remove centre differential housing and centre differential ⇒ page 98 .

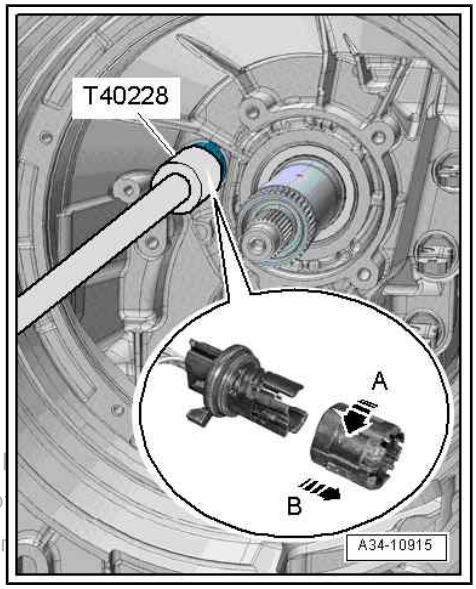

Protected by copyright. Copying for private or commercial
permitted unless authorised by AUDI AG. AUDI AG does no
with respect to the correctness of information in this docu

– Detach oil duct for input shaft -arrow-.

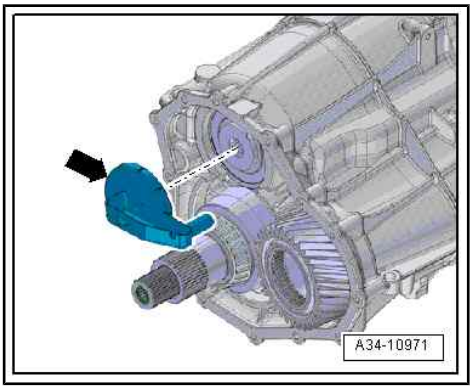

– Loosen twelve-point bolt -A- securing side shaft -B- to pinion shaft as follows:
– Apply twelve-point socket -C- (21 mm) with extension -D- to twelve-point bolt -A-.
– Engage external teeth -arrow 1- of counterhold tool - T40217- in internal splines -arrow 2- of side shaft.

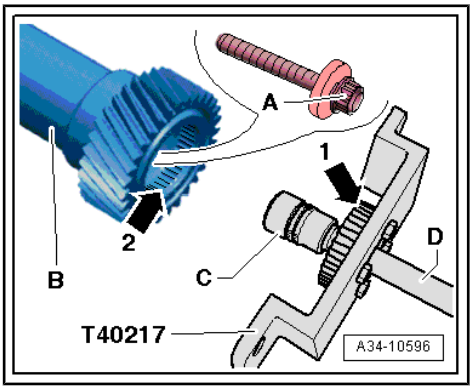

– Bolt counterhold tool - T40217- to intermediate gearbox housing -arrows-.

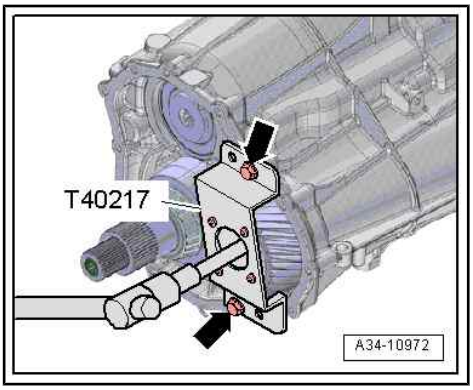

DANGER!

Injury risk: The hook and support tool T40197 must NOT be used for the repair procedure described below.

Use only the hook and support tool T40294 for this operation.

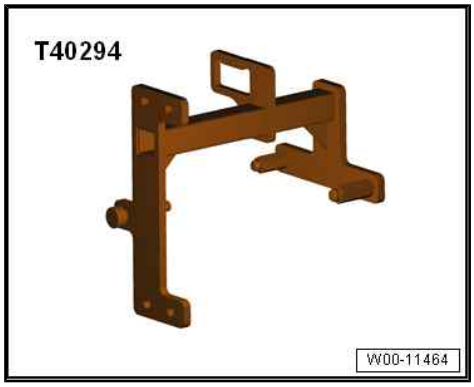

– Remove bolt -1- and take out side shaft -2-.

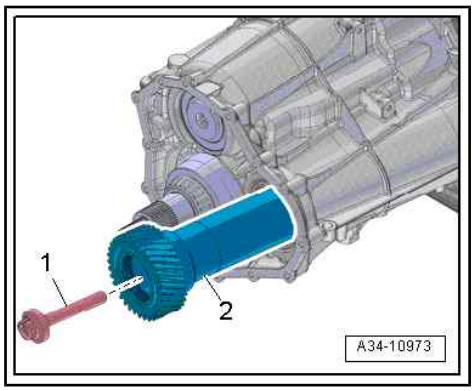

Note

The bolt has a high release torque.

– Detach spur gear -1- and needle bearing -2- from output shaft -3-.

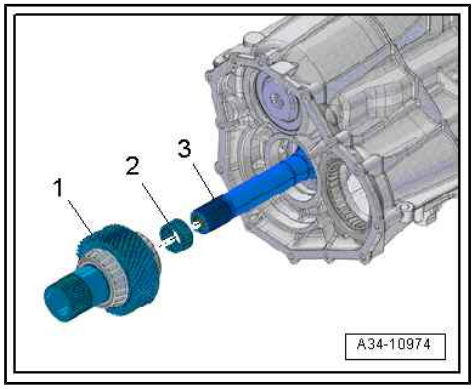

– Wrap adhesive tape around outer input shaft -arrow- in order to avoid damaging inner sealing surface of suction-jet pump when removing and installing.
– After attaching adhesive tape, lubricate tape lightly with grease.

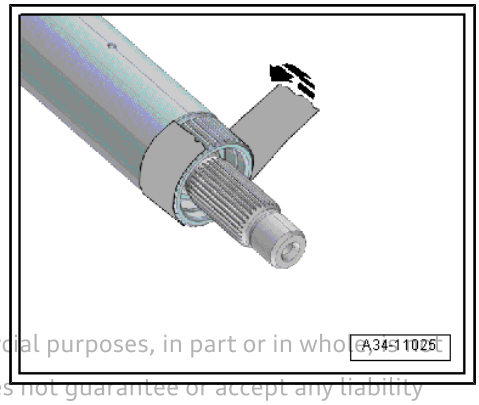

Protected by copyright. Copying for private or commercial purposes, in part or in whole, is not permitted unless authorised by AUDI AG. AUDI AG does not guarantee or accept any liability with respect to the correctness of information in this document. Copyright by AUDI AG.

– Bring gearbox housing into a vertical position on engine and gearbox support.

• Clutch end faces downwards.

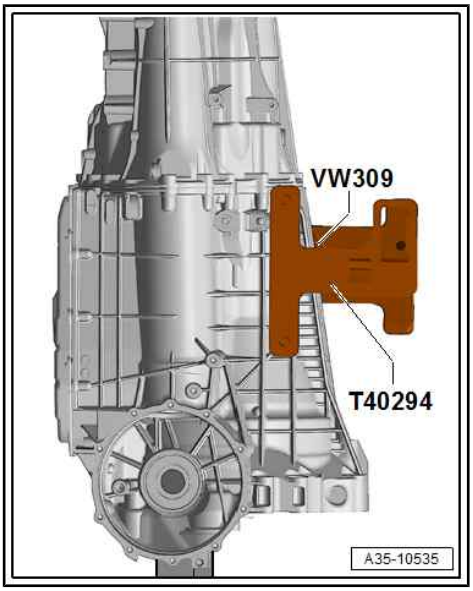

– Remove bolts -arrows- for intermediate gearbox housing all around circumference.

– Screw 3 guide pins -T40288- into holes for bolts in gearbox housing (spaced at approx. 120°).

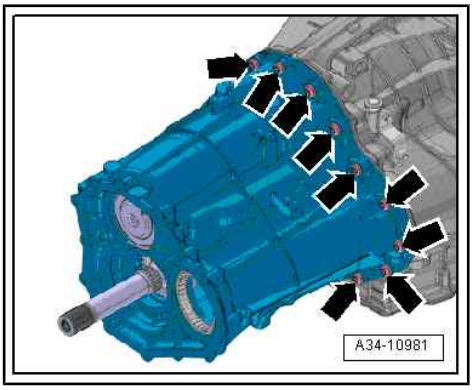

Note

The guide pins -T40288- assist in the removal of the gearbox housing and prevent damage to the seals and components.

– Suspend intermediate gearbox housing -1- with gear cluster on workshop hoist - VAS 6100- , as shown in illustration.

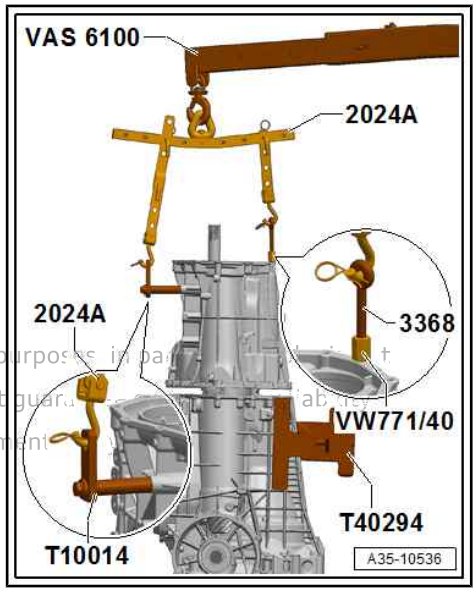

WARNING

Risk of accident if parts of the lifting equipment are not correctly secured.

- ***Eye-head bolt - 3368- and -VW 771/40- are not properly secured unless the corresponding threads are screwed in all the way.***
- ***Secure hooks and locating pins of lifting tackle - 2024 A- with locking pins.***

Copyright by copying for private or commercial purposes, in part or in whole, is not permitted unless authorised by AUDI AG. AUDI AG does not guarantee or assume liability with respect to the correctness of information in this document.

– Lift intermediate housing off gearbox housing slowly and carefully.

– Place intermediate gearbox housing down on workbench.

– Unscrew bolt -arrow- and remove sensor module -2-.

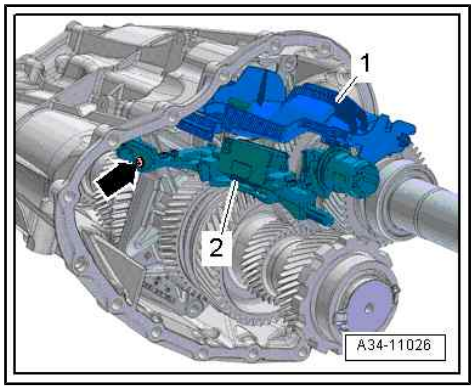

Note

Oil collector (front) -1- is attached and removed together with sensor module .

– Release retaining tab and detach oil collector (front) -1- from sensor module .

Installing

- Tightening torques
  ⇒ "3.1 Exploded view - transmission unit", page 39

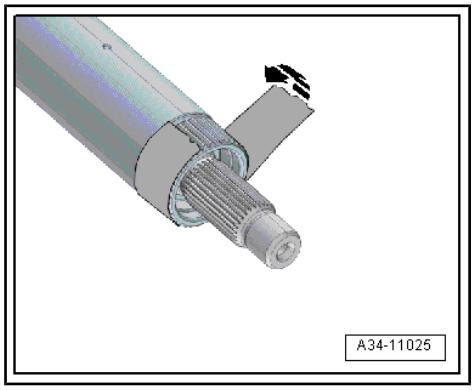

Note

- *Renew bolts which are tightened by turning through a specified angle.*
- *Depending on version, different types of sensor module and securing bolt are installed. Select correct type ⇒ Electronic parts catalogue .*

– Wrap adhesive tape around splines of outer input shaft -arrow- in order to avoid damaging inner sealing surface of suction-jet pump when installing.

– After attaching adhesive tape, lubricate tape lightly with grease.

– Use a screwdriver -arrow- to drive out both oil seals for partition in gearbox housing from the gearbox side.

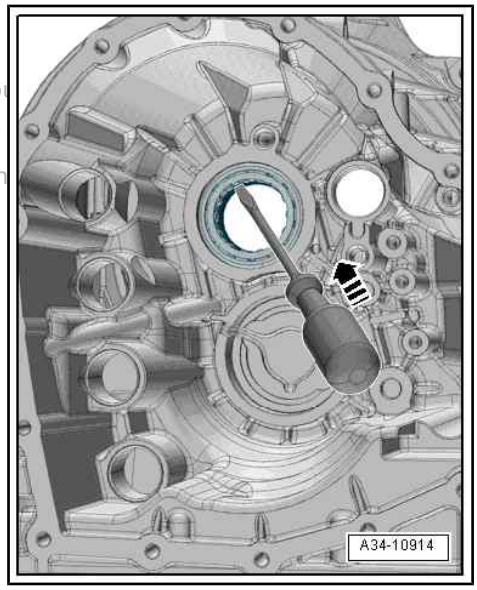

Protected by copyright. Copying for private or commercial pu
permitted unless authorised by AUDI AG. AUDI AG does not
with respect to the correctness of information in this docum

Note

- *Always renew both oil seals for partition in gearbox housing.*
- *To avoid damage to the seals, only press them in after joining gearbox housing and intermediate housing.*

– Insert sensor module in guide holes and secure -arrow-.
– Renew oil collector.

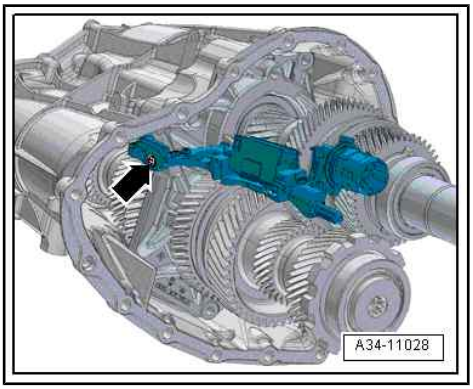

– Insert oil collector (front) into holes on intermediate housing and into guide on sensor module -arrows-.
• Oil collector should engage audibly.

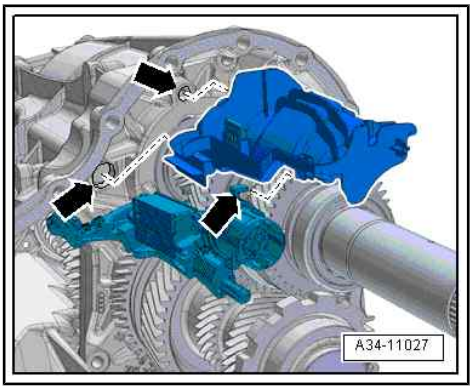

Preparations for installing electrical connector for sensor module :

Note

Renew O-rings on electrical connector -2- for sensor module if sensor module is not being renewed.

– Check that electrical connector -2- is properly engaged in bracket -1- for sensor module .
– Slide connector housing -3- onto connector until it engages audibly; do not turn.
– Lightly lubricate seals for gear actuators with MTF ⇒ Item 3 (page 39) .
– Check that catches -4- can be pressed in.
– Check seating of oil collector.
– Check seating of seal for sensor module -5-.

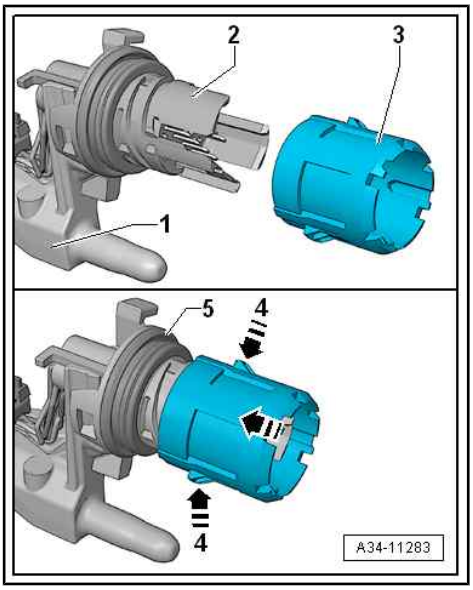

Protected by copyright. Copying for private or commercial purposes, in part or in whole, is not permitted unless authorised by AUDI AG. AUDI AG does not guarantee or accept any liability with respect to the correctness of information in this document. Copyright by AUDI AG.

– Bring gearbox housing into a vertical position on engine and gearbox support.

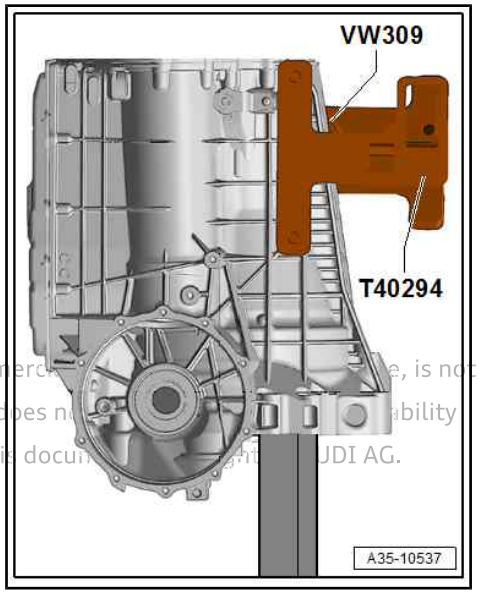

Protected by copyright. Copying for private or commerc e, is not permitted unless authorised by AUDI AG. AUDI AG does n ability with respect to the correctness of information in this docu UDI AG.

– Move gearbox selector lever as far as stop in direction of travel -arrow-.

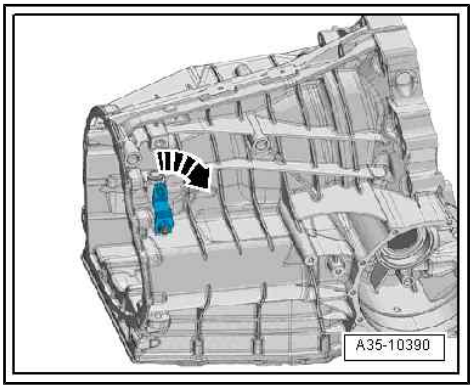

– Check that dowel sleeves -1- and -2- are fitted in gearbox housing.

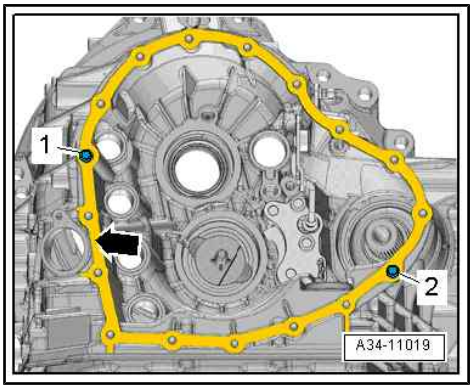

Note

- *The sealing surfaces of the gearbox housing should be roughened slightly before assembly.*
- *When doing so, make sure that no dirt is allowed to enter the gearbox.*
- *Suitable abrasive tool: 3M bristle disc or similar*

– Apply a thin coat of sealant evenly to flange of gearbox housing -arrow-. For sealant, refer to ⇒ Electronic parts catalogue .

– Check that magnet -arrow- is fitted in gearbox housing.

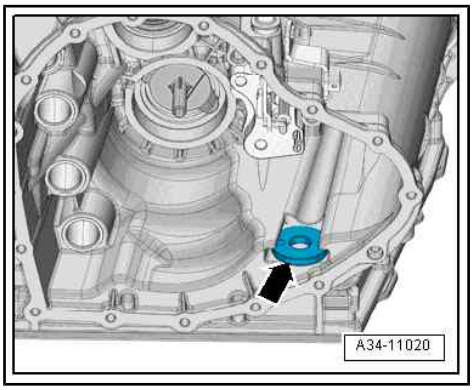

– Insert oil duct for front axle drive into gearbox housing.

• Oil duct must be inserted into holes in gearbox housing at three locations -arrows-.

Protected by copyright. Copying for private or commercial purpos
permitted unless authorised by AUDI AG. AUDI AG does not guara
with respect to the correctness of information in this document.

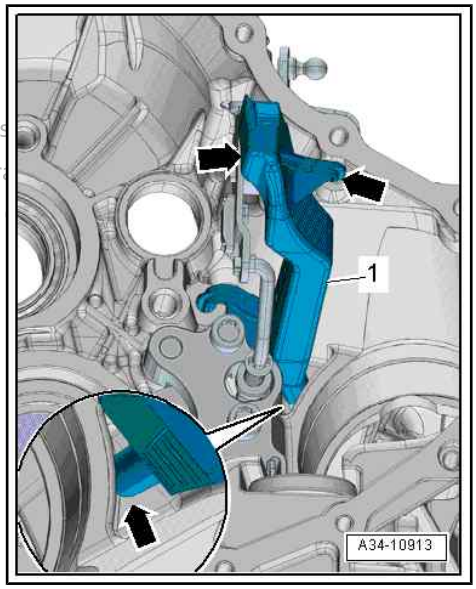

– Screw guide pins -T40288- into threaded holes (spaced at approx. 120°).

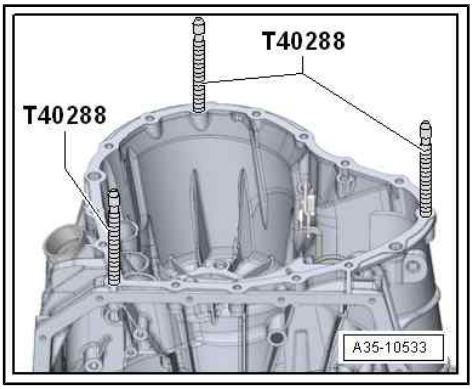

– Suspend intermediate gearbox housing -1- with gear cluster on workshop hoist - VAS 6100- , as shown in illustration.

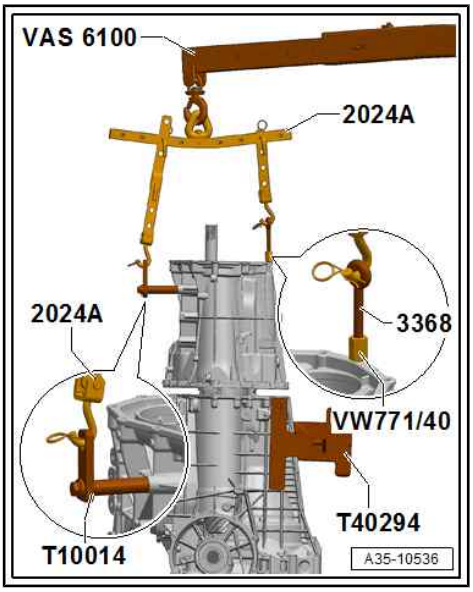

WARNING

Risk of accident if parts of the lifting equipment are not correctly secured.

- *Eye-head bolt - 3368- and -VW 771/40- are not properly secured unless the corresponding threads are screwed in all the way.*
- *Secure hooks and locating pins of lifting tackle - 2024 A- with locking pins.*

– Lower intermediate housing slowly and carefully into gearbox housing.

Caution

Risk of damage to sensor module .

- *When guiding in the intermediate gearbox housing, ensure that the sensor module does not make contact with the oil duct -1- and become damaged.*

Selector fork seals can be damaged ⇒ Item 3 (page 39) .

- *When guiding in the intermediate gearbox housing, ensure that the selector fork seals do not make contact with the gearbox housing.*

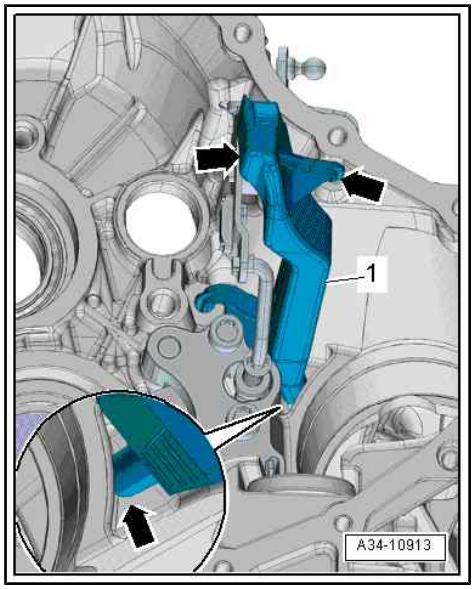

– While lowering intermediate gearbox housing, guide housing so that electrical connector -1- for sensor module is inserted straight into hole -arrow- on gearbox housing.

Note

For greater clarity, the illustration shows this procedure looking towards the gearbox housing; however you should observe the procedure looking towards the intermediate housing.

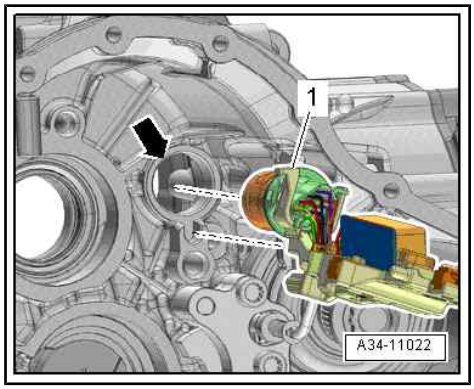

– Guide intermediate housing into position until it makes full contact with gearbox housing and secure with bolts ⇒ page 41 .

– Check that catches of connector for sensor module are engaged in gearbox housing.

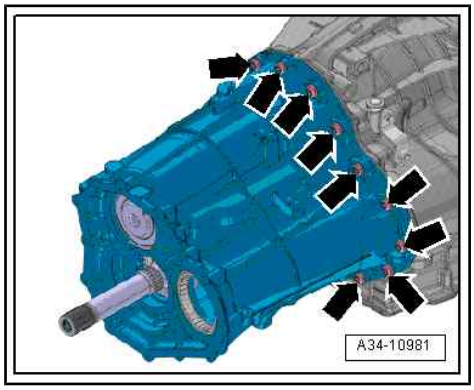

Protected by copyright. Copying for private or commercial purposes, in part or in whole, is not permitted unless authorised by AUDI AG. AUDI AG does not guarantee or accept any liability with respect to the correctness of information in this document. Copyright by AUDI AG.

– Fit bit -T40228- onto connector housing of sensor module and ensure that it is flush.

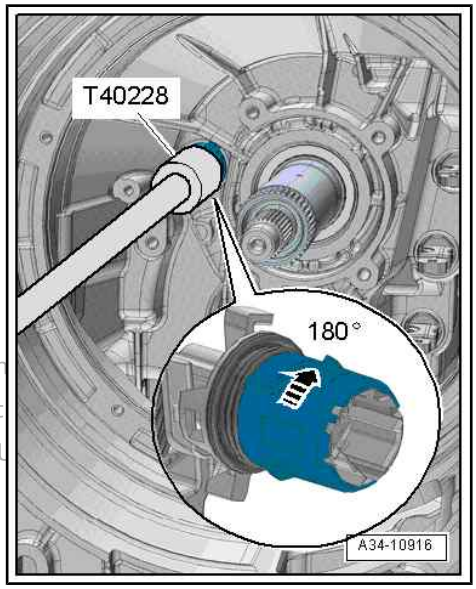

Note

The lugs of the bit -T40228- must securely engage in the recesses on the connector housing of the sensor module .

– Using bit -T40228- , turn connector housing 180° clockwise and engage -arrow-.

– Install oil seals for partition in gearbox housing ⇒ page 56 .

– Install oil pump and suction-jet pump ⇒ page 53 .

Protected by copyright. Copying for private or commercial purposes, in part or in
permitted unless authorised by AUDI AG. AUDI AG does not guarantee or accept
with respect to the correctness of information in this document. Copyright by AU

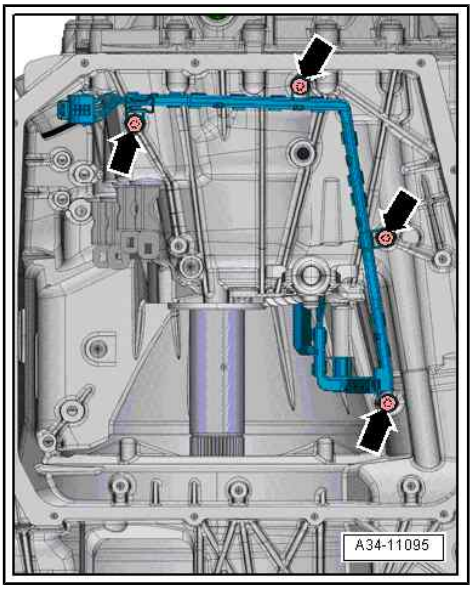

Note

- *Wiring harness for sensor module must be renewed when sensor module is renewed.*
- *Tightening torque for bolts ⇒ Item 38 (page 15)*

– Tighten bolts -arrows- on wiring harness for sensor module.

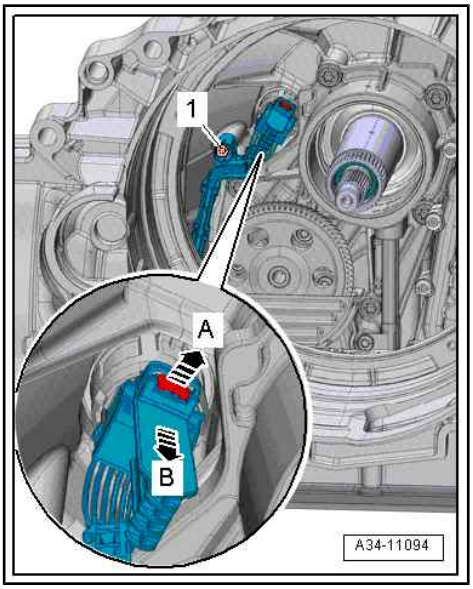

– Plug in electrical connector carefully at sensor module in opposite direction to -arrow B-, making sure it is fully inserted.

– Lock retainer in opposite direction to -arrow A-.

– Make sure that electrical connector is properly engaged and secured on sensor module .

– Tighten bolt -1-.

Note

Tightening torque for bolt ⇒ Item 38 (page 15)

– Fit needle bearing -2- and spur gear -1- onto output shaft -3-.

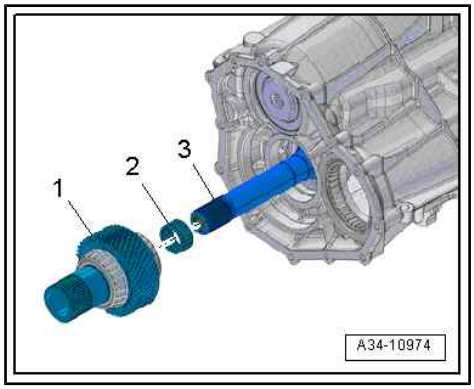

– Insert side shaft -2- and bolt -1- into intermediate gearbox housing.

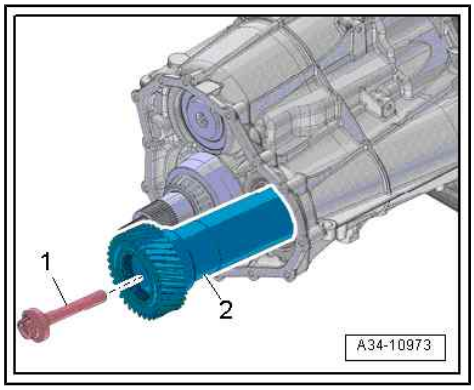

– Insert side shaft -B- all the way onto pinion shaft and into gearbox cover.

Tighten twelve-point bolt -A- securing side shaft -B- to pinion shaft as follows:

– Apply twelve-point socket -C- (21 mm) with extension -D- to twelve-point bolt -A-.

– Engage external teeth -arrow 1- of counterhold tool - T40217- in internal splines -arrow 2- of side shaft.

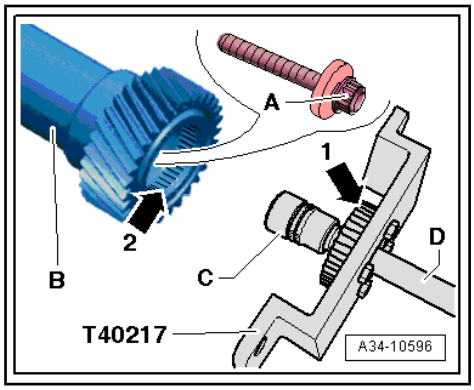

– Bolt counterhold tool - T40217- to intermediate gearbox housing -arrows-.

– Tighten bolt for side shaft.

Protected by copyright. Copying for private or commercial purpose
permitted unless authorised by AUDI AG. AUDI AG does not guaran
with respect to the correctness of information in this document. Co

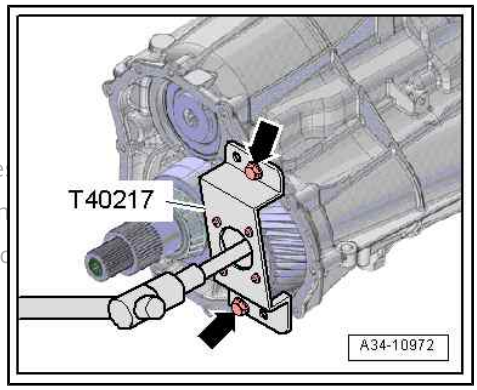

– Attach oil duct for input shaft -arrow-.

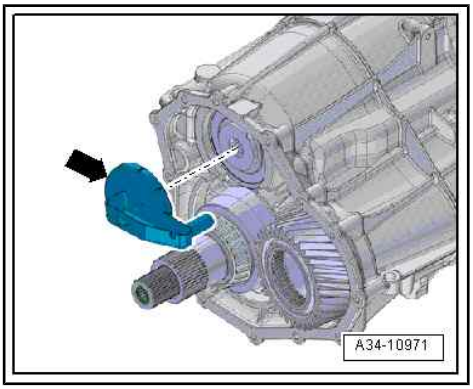

The remaining installation steps are carried out in the reverse sequence.

– Install centre differential housing and centre differential ⇒ page 98 .

– Install mechatronic unit for dual clutch gearbox - J743- ⇒ page 19 .

– Press oil seals for partition into gearbox housing ⇒ page 56 .

– Install dual clutch ⇒ page 10 .

– Install flywheel ⇒ page 5 .

3.3 Removing and installing oil pump and suction-jet pump

Special tools and workshop equipment required

- ♦ Counterhold tool - T40217-
- ♦ Socket -T40228-
- ♦ Sealant ⇒ Electronic parts catalogue

Removing

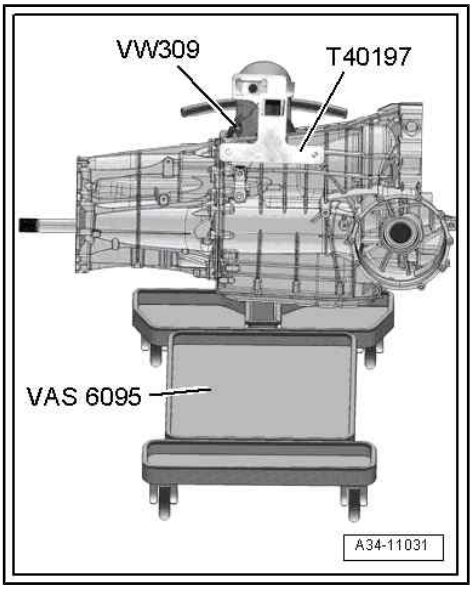

- Gearbox is secured to engine and gearbox support - VAS 6095- ⇒ page 60 .

– Remove flywheel ⇒ page 5 .

– Remove dual clutch ⇒ page 7 .

– Remove mechatronic unit for dual clutch gearbox - J743- ⇒ page 19 .

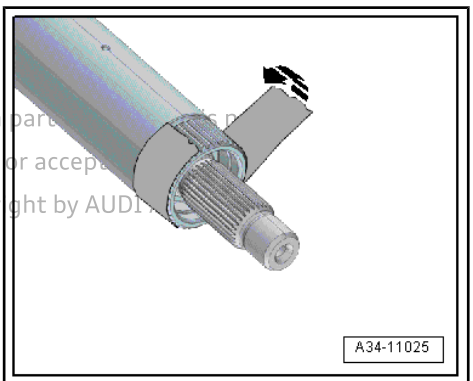

– Wrap adhesive tape around outer input shaft -arrow- in order to avoid damaging inner sealing surface of suction-jet pump when removing and installing.

– After attaching adhesive tape, lubricate tape lightly with grease.

Protected by copyright. Copying for private or commercial purposes, in part or in whole, is not permitted unless authorised by AUDI AG. AUDI AG does not guarantee or accept any liability with respect to the correctness of information in this document. Copyright by AUDI AG.

– Remove bolts -arrows- and slide oil pump forwards on input shaft.

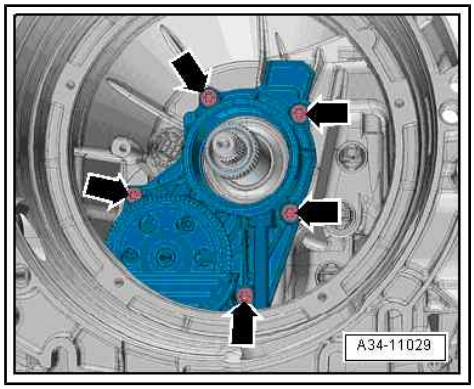

– At rear side of oil pump -1-, remove bolts -arrows- for suction-jet pump -2-.

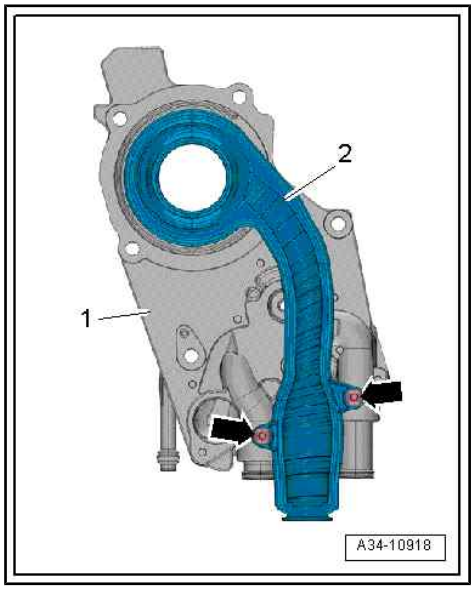

Note

For better clarity, oil pump is removed in illustration.

– Pull oil pump and suction-jet pump separately off input shaft.

Installing

- Tightening torques
  ⇒ “3.1 Exploded view - transmission unit”, page 39

Protected by copyright. Copying for private or commercial purposes, in part or in whole, is not permitted unless authorised by AUDI AG. AUDI AG does not guarantee or accept any liability with respect to the correctness of information in this document. Copyright by AUDI AG.

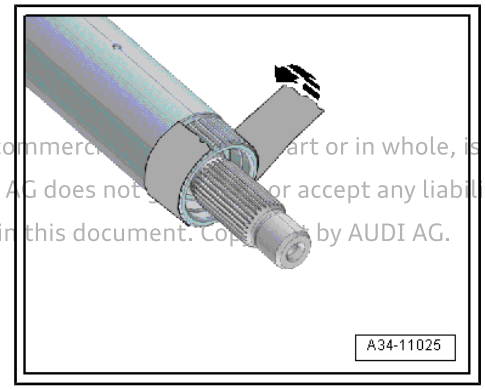

Note

- ♦ *Renew bolts which are tightened by turning through a specified angle.*
- ♦ *Renew O-rings.*

– Wrap adhesive tape around splines of outer input shaft -arrow- in order to avoid damaging inner sealing surface of suction-jet pump when installing.

– After attaching adhesive tape, lubricate tape lightly with grease.

– Push O-ring -2- onto seal seat on suction-jet pump -1-.

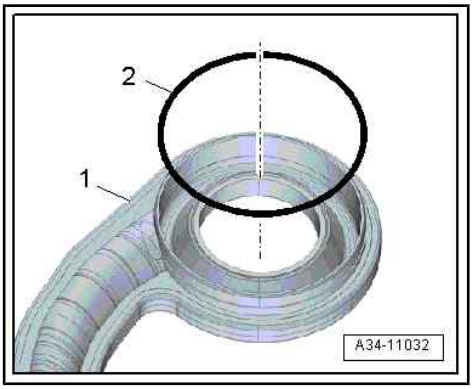

– Check for damage on sealing surface -arrow- inside large opening on suction-jet pump; renew suction-jet pump if necessary.

– Check that small O-ring -1- is correctly seated on suction-jet pump.

Protected by copyright. Copying for private or commercial purposes, in part or in whole, is permitted unless authorised by AUDI AG. AUDI AG does not guarantee or accept any liability with respect to the correctness of information in this document. Copyright by AUDI AG.

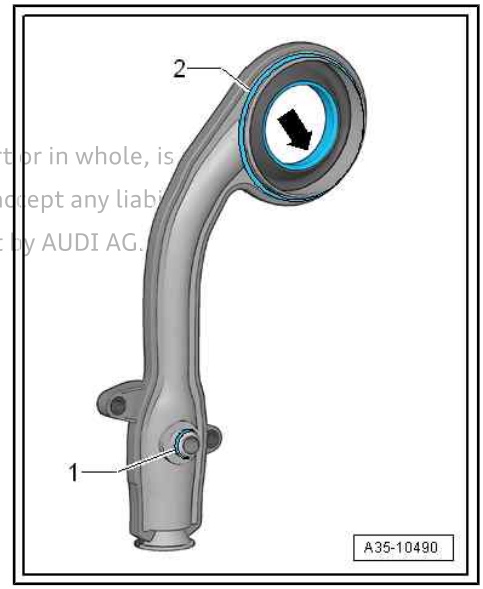

– Slide suction-jet pump -2- and oil pump -1- separately onto input shaft.

Note

For better clarity, oil pump is removed in illustration.

– Fit suction-jet pump onto oil pump and tighten bolts -arrows-.

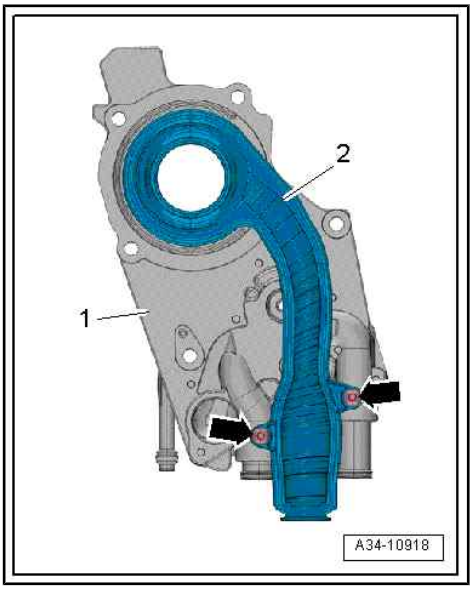

– Secure oil pump -arrows-.

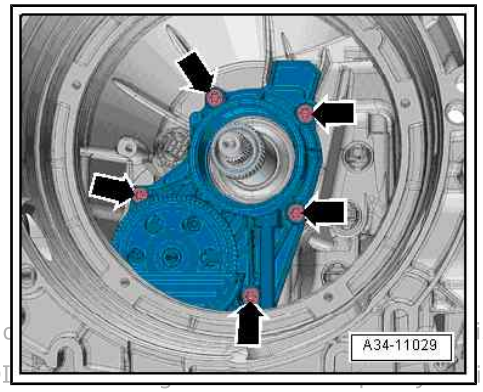

Protected by copyright. Copying for private or c is not permitted unless authorised by AUDI AG. AUDI ility with respect to the correctness of information in this document. Copyright by AUDI AG.

The remaining installation steps are carried out in the reverse sequence.

– Remove adhesive tape.

– Install mechatronic unit for dual clutch gearbox - J743- ⇒ page 19 .

– Install dual clutch ⇒ page 10 .

– Install flywheel ⇒ page 5 .

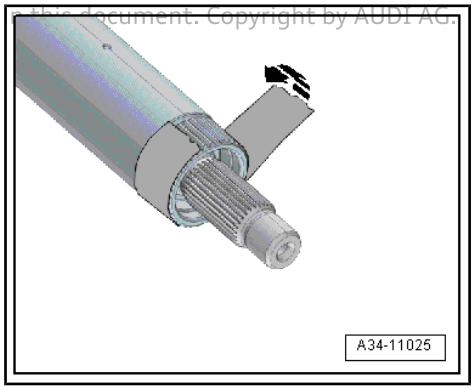

3.4 Renewing oil seals for partition in gearbox housing

Special tools and workshop equipment required

♦ Thrust piece -T40260-

Procedure

• Gearbox is secured to engine and gearbox support - VAS 6095- ⇒ page 60 .

– Remove flywheel ⇒ page 5 .

– Remove dual clutch ⇒ page 7 .

– Remove mechatronic unit for dual clutch gearbox - J743- ⇒ page 19 .

– Remove oil pump and suction-jet pump ⇒ page 53 .

Caution

Risk of damage to gearbox

- *When carrying out the following work, the surface of the input shaft must not be allowed to come into contact with hard objects. Damage at the sealing surface of the input shaft will cause leaks.*

– Apply an awl to oil seal and make a small hole -arrow-.

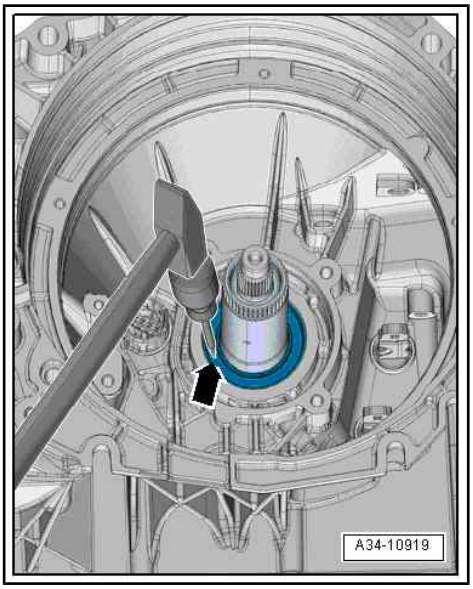

– Screw a self-tapping screw -arrow- with large head into hole in oil seal.

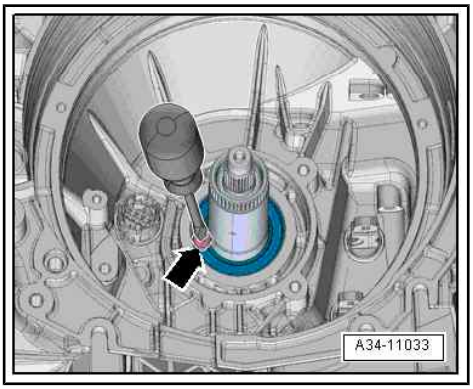

– Extract outer oil seal using a wide screwdriver -arrow-.

– Remove inner oil seal in the same way.

Caution

Risk of damage to roller bearing behind inner oil seal.

- *Do not knock awl too far into inner oil seal to avoid damaging the cage of the roller bearing behind it.*

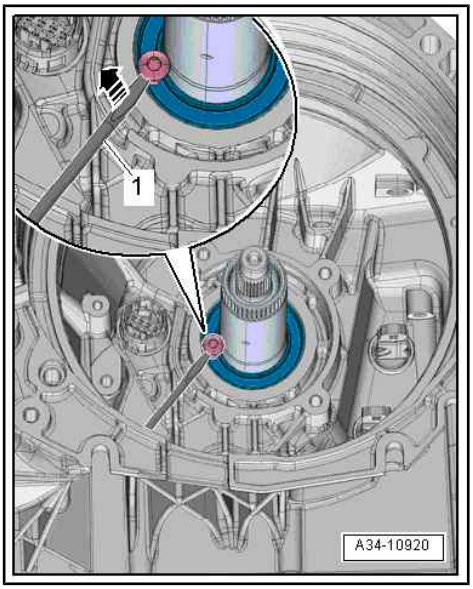

Protected by copyright. Copying for private or commercial purposes, in part or in whole, is not permitted unless authorised by AUDI AG. AUDI AG does not guarantee or accept any liability with respect to the correctness of information in this document. Copyright by AUDI AG.

Note

If gearbox is dismantled, use a screwdriver -arrow- to drive out the two oil seals from the gearbox end.

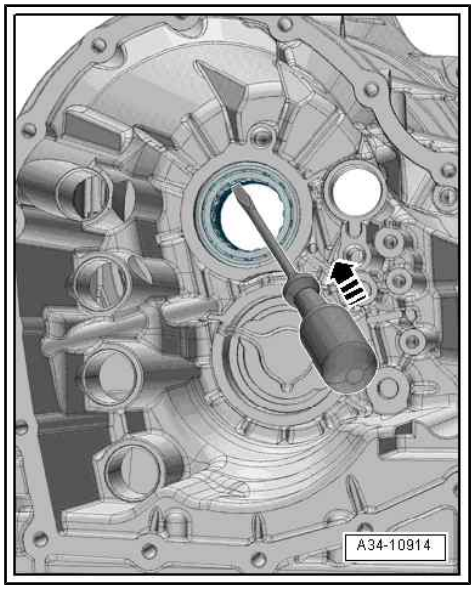

– Position new oil seals correctly for installation.

Note

Oil seals -1- and -2- are supplied as a single unit and must be lubricated with MTF before installing.

- Spiral spring -A- on outer oil seal -1 - (on dual clutch side) should face towards dual clutch.
- Spiral spring -B- on inner oil seal -2- (on gearbox side) should face towards gearbox.

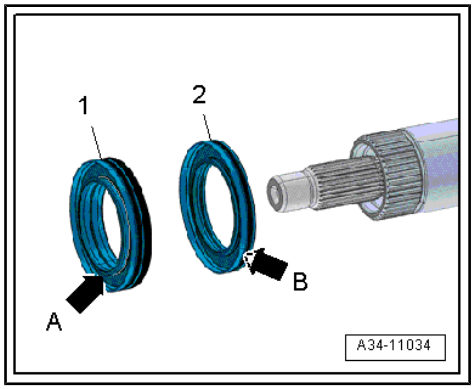

Caution

Risk of leaks if installed incorrectly.

- ***Wrap adhesive tape around splines of outer input shaft before installing oil seal.***
- ***After pushing oil seal over splines, check that sealing lips have not folded over.***

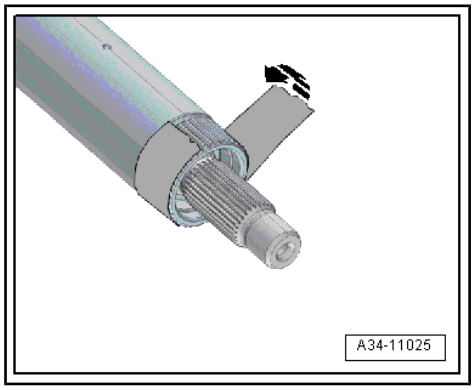

– Clip oil seals together and push them over input shaft.

Protected by copyright. Copying for private or commercial purposes, in part or in whole, is not permitted unless authorised by AUDI AG. AUDI AG does not guarantee or accept any liability with respect to the correctness of information in this document. Copyright by AUDI AG.

– Using thrust piece -T40260- , drive in oil seals from clutch side until flush.

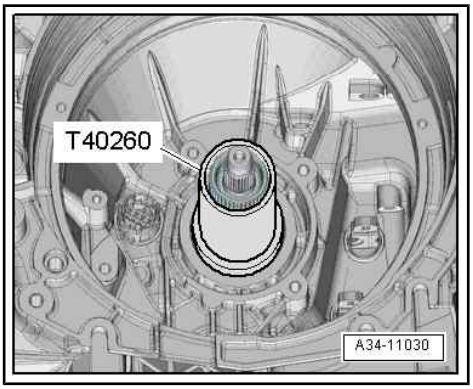

Note

Thrust piece -T40260- can be lengthened with tube - VW 415 A- .

The remaining installation steps are carried out in the reverse sequence.

– Install oil pump ⇒ page 53 .
– Install mechatronic unit for dual clutch gearbox - J743- ⇒ page 19 .
– Install dual clutch ⇒ page 10 .
– Install flywheel ⇒ page 5 .

Protected by copyright. Copying for private or commercial purposes, in part or in whole, is not permitted unless authorised by AUDI AG. AUDI AG does not guarantee or accept any liability with respect to the correctness of information in this document. Copyright by AUDI AG.

4 Securing to engine and gearbox support

Protected by copyright. Copying for private or commercial purposes, in part or in whole, is not permitted unless authorised by AUDI AG. AUDI AG does not guarantee or accept any liability with respect to the correctness of information in this document. Issued by AUDI AG.

Special tools and workshop equipment required

- Engine and gearbox support - VAS 6095-

- Support plate - VW 309-

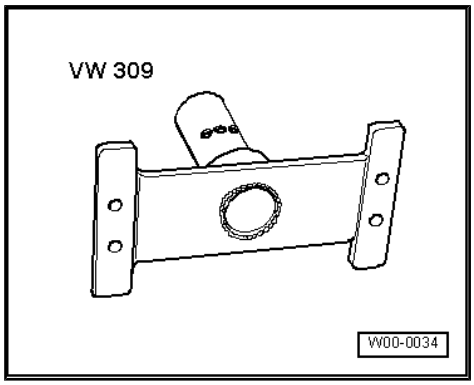

- Hook and support tool - T40197-

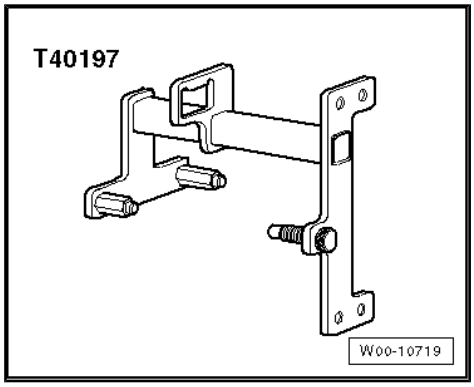

- Hook and support tool - T40294-

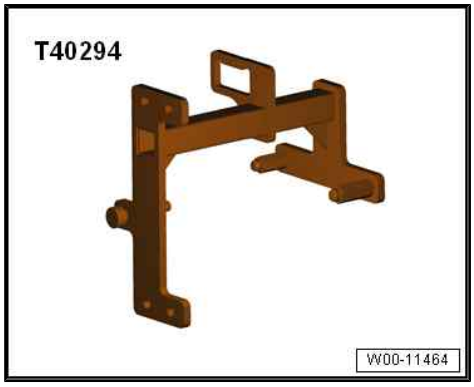

DANGER!

Injury risk: The hook and support tool T40197 must NOT be used for the repair procedure ⇒ "3.2 Removing and installing sensor module with integrated senders and sensors G612 , G632 , G676 and printed circuit 3 ", page 41 .

Use only the hook and support tool T40294 for this operation.

Procedure

- Gearbox is on workshop hoist - VAS 6100- ⇒ page 37 .

– Secure support plate - VW 309- to hook and support tool - T40197- .

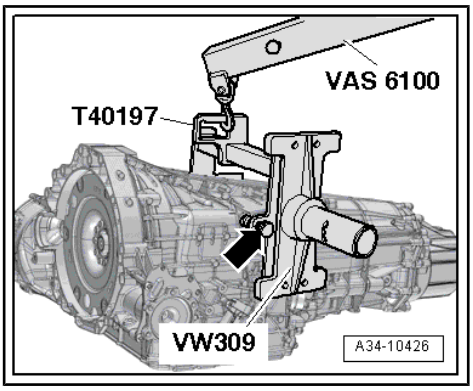

– Using workshop hoist - VAS 6100- , insert gearbox into engine and gearbox support - VAS 6095- .

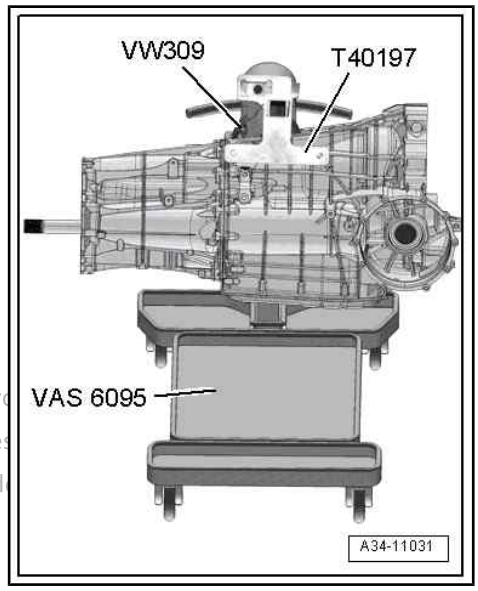

Note

If the filled gearbox with oil pan is to be turned upside-down on the engine and gearbox support, the breathers for gearbox housing and final drive must be sealed.

Protected by copyright. Copying for private or commerc
permitted unless authorised by AUDI AG. AUDI AG does
with respect to the correctness of information in this d

5 ATF

⇒ “5.1 Exploded view - ATF drain, filler and inspection plugs”, page 62

⇒ “5.2 Draining and filling ATF”, page 62

5.1 Exploded view - ATF drain, filler and inspection plugs

1 - ATF drain plug

- ❑ 45 Nm

2 - Seal

- ❑ For ATF drain plug
- ❑ Renew

3 - Filler and inspection plug for gear oil (MTF)

- ❑ In gearbox section, front final drive and transfer box
- ❑ Tightening torque: 45 Nm

4 - ATF filler and inspection plug

- ❑ 45 Nm

5 - Drain plug for gear oil (MTF)

- ❑ In gearbox section, front final drive and transfer box
- ❑ Tightening torque for drain plug: 45 Nm
- ❑ On some versions the gearbox oil temperature sender 2 - G754- also serves as a drain plug for the gear oil (MTF); tightening torque, removing and installing ⇒ “2.3 Removing and installing gearbox oil temperature sender 2 G754 ”, page 75

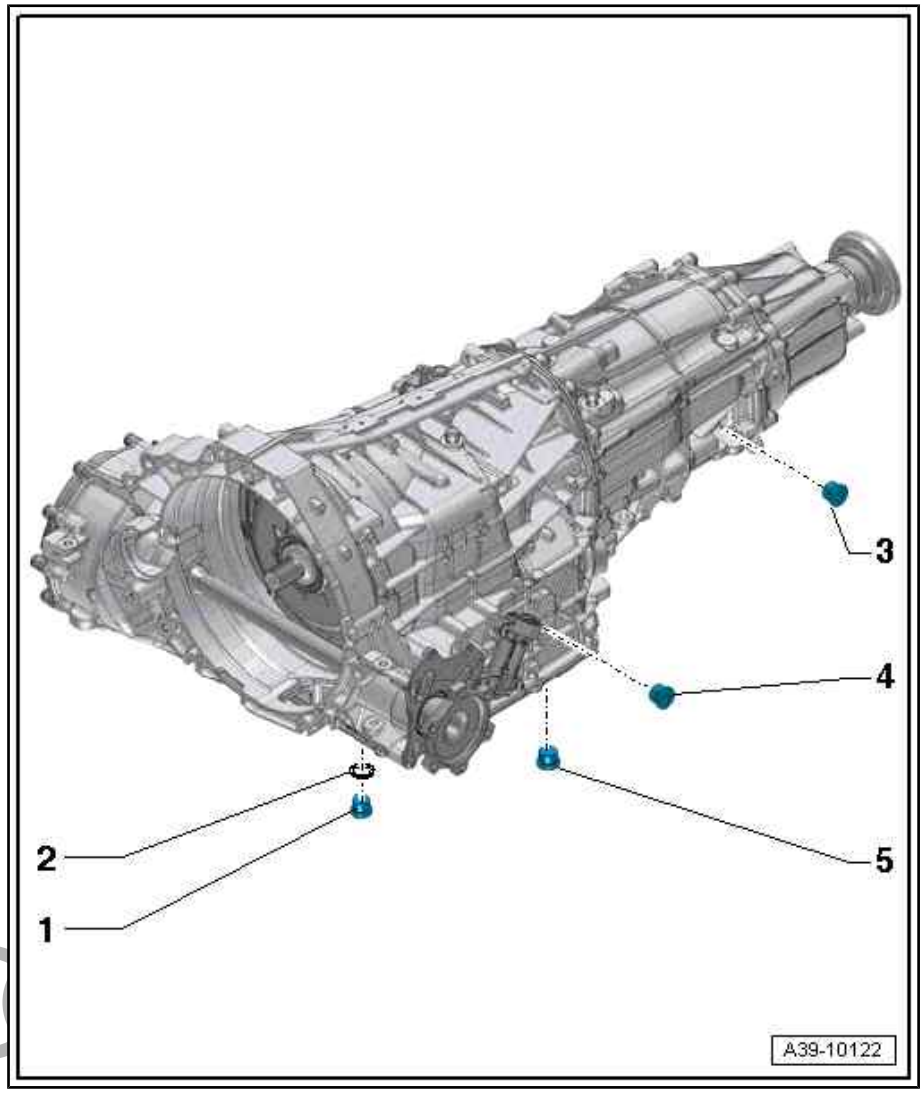

Protected by copyright. Copying for private or commercial purposes, in part or in whole, is not permitted unless authorised by AUDI AG. AUDI AG does not guarantee or accept any liability with respect to the correctness of information in this document. Copyright by AUDI AG.

5.2 Draining and filling ATF

Checking and correcting ATF level: the gearbox must be installed in the vehicle in order to check and correct the ATF level ⇒ 7-speed dual clutch gearbox; Rep. gr. 34 ; ATF; Checking ATF level .

Special tools and workshop equipment required

♦ Used oil collection and extraction unit - V.A.G 1782-

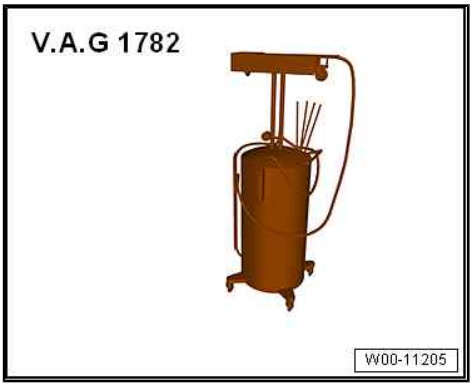

♦ Safety goggles

Draining ATF

Gearbox installed:

- Engine not running.
- Vehicle must be absolutely horizontal (drive it onto a four pillar lifting platform or over an inspection pit).
- Selector lever in “P”.
- Parking brake button must be pulled up to apply the electro-mechanical parking brake.

– Remove rear noise insulation -2- ⇒ General body repairs, exterior; Rep. gr. 66 ; Noise insulation; Removing and installing noise insulation .

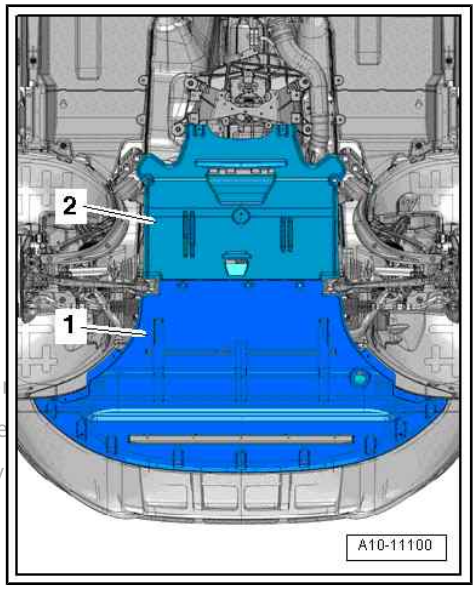

Protected by copyright. Copying for private or commercial purposes, in part or
permitted unless authorised by AUDI AG. AUDI AG does not guarantee or acce
with re to the ctness of information in this document. Copyright by

Caution

Risk of damage to gearbox

♦ *The engine must not be started if only a little or no ATF remains in gearbox after repair work or after excessive ATF leakage.*

Gearbox removed:

- Gearbox secured to engine and gearbox support ⇒ page 60

Gearbox removed or installed:

– Place used oil collection and extraction unit - V.A.G 1782- below gearbox.

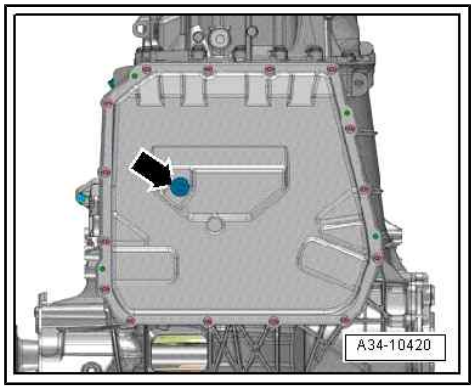

WARNING

Risk of eye injury.

- *Put on safety goggles.*

– Remove ATF drain plug -arrow- and allow ATF to drain off.

Note

- *Always adhere to waste disposal regulations.*
- *Renew the seal for the ATF drain plug.*

– Tighten ATF drain plug.

On gearbox versions with exchangeable ATF filter -2-:

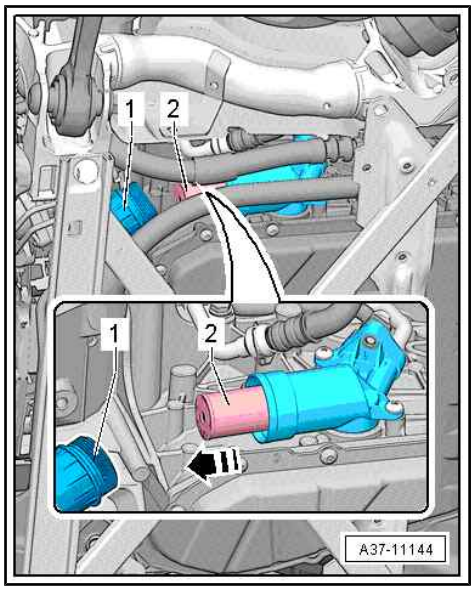

Caution

Risk of damage to gearbox

- *The exchangeable ATF filter -2- must always be renewed when the ATF is changed.*

– Renew ATF filter (exchangeable filter) ⇒ page 32 .

Continued for all gearboxes:

Filling gearbox with ATF

Caution

Risk of damage to gearbox

- *Use only the ATF supplied as a replacement part for dual clutch gearbox 0B5.*
- *Select correct type ⇒ Electronic parts catalogue .*
- *Other types of ATF or other oils cause malfunctions and/ or failure of the gearbox.*
- *The ATF filling unit must be clean and the ATF must not be mixed with other types of fluid!*

Protected by copyright. Copying for private or commercial purposes, in part or in whole, is not permitted unless authorised by AUDI AG. AUDI AG does not guarantee or accept any liability with respect to the correctness of information in this document. Copyright by AUDI AG.

– Fill up ATF ⇒ 7-speed dual clutch gearbox; Rep. gr. 34 ; ATF; Draining and filling ATF .

35 – Gears, shafts

1 Input shaft

⇒ “1.1 Renewing ball bearing for input shaft”, page 65

⇒ “1.2 Renewing input shaft oil seal”, page 68

1.1 Renewing ball bearing for input shaft

Special tools and workshop equipment required

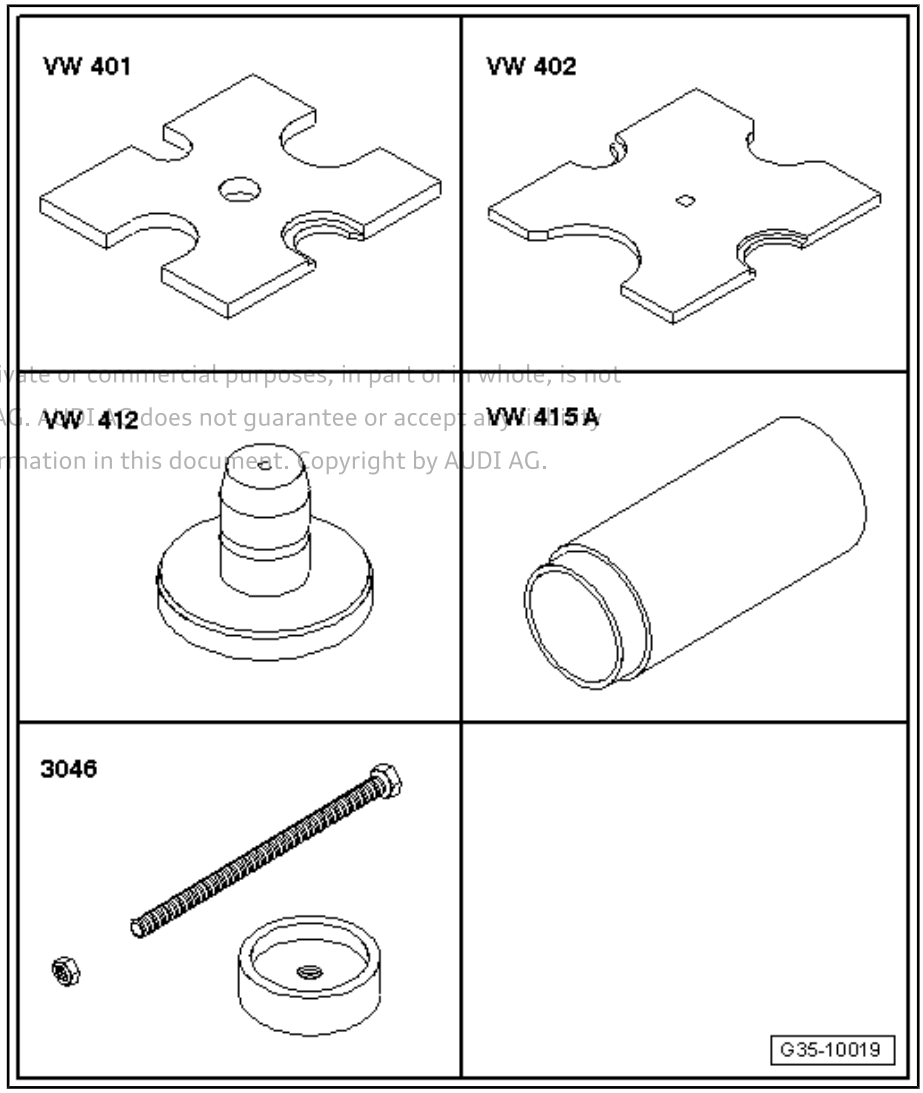

Protected by copyright. Copying for private or commercial purposes, in part or in whole, is not permitted unless authorised by AUDI AG. AUDI AG does not guarantee or accept any liability with respect to the correctness of information in this document. Copyright by AUDI AG.

- Thrust plate - VW 401-
- Thrust plate - VW 402-
- Press tool - VW 412-
- Tube - VW 415 A-
- Fitting tool - 3046-

Removing

– Remove dual clutch -1- ⇒ page 7 .

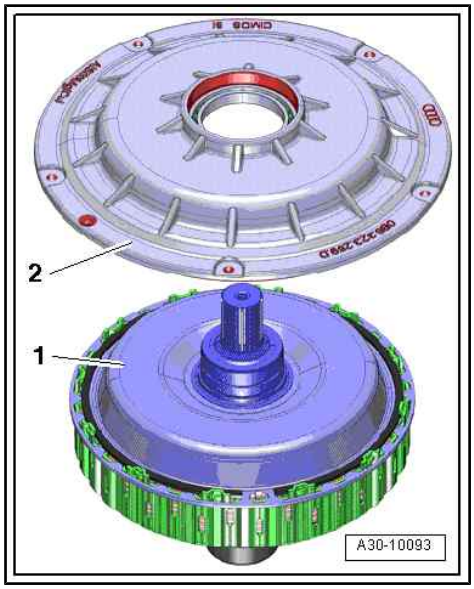

– Remove circlip -arrow- from detached clutch cover.

Protected by copyright. Copying for private or commercial pu
permitted unless authorised by AUDI AG. AUDI AG does not g
with respect to the correctness of information in this docume

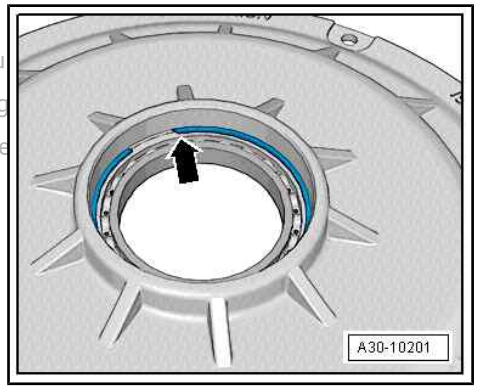

– Press out ball bearing for dual clutch.

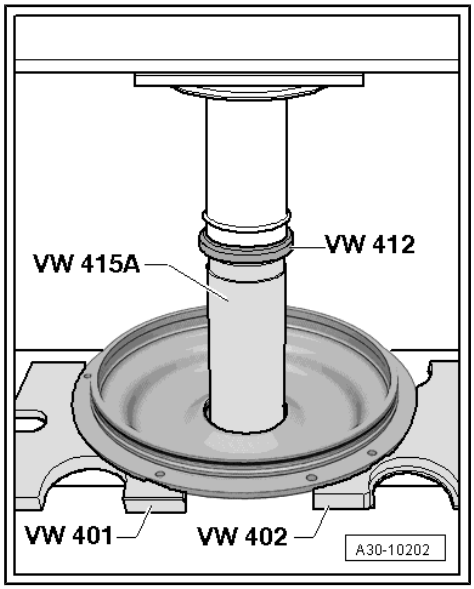

Note

- *Depending on the version of the clutch cover, a thrust washer -2- may be installed behind the ball bearing -3-. The thrust washer must be re-installed or, if necessary, renewed when installing a new ball bearing.*
- *Renew ball bearing -3-.*

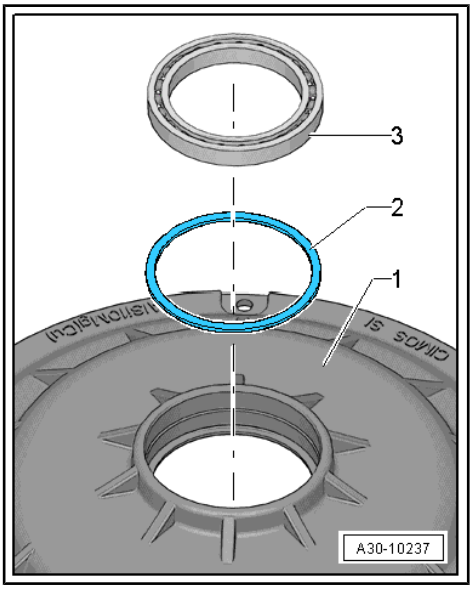

Installing

Installation is carried out in reverse sequence; note the following:

– Renew O-rings and circlips ⇒ page 4 .

Note

Clutch cover with or without thrust washer -2-, depending on version. Observe notes and allocation in ⇒ Electronic parts catalogue .

– If originally installed, insert thrust washer -2- in cover -1-.

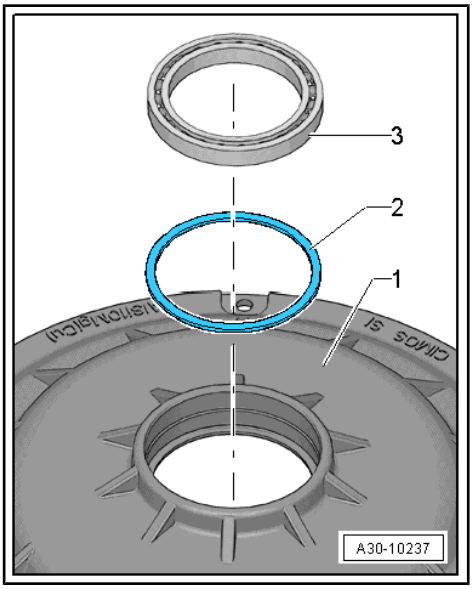

– Press in new ball bearing for dual clutch as far as stop.

• Position tube - VW 415 A- with thin collar facing upwards.

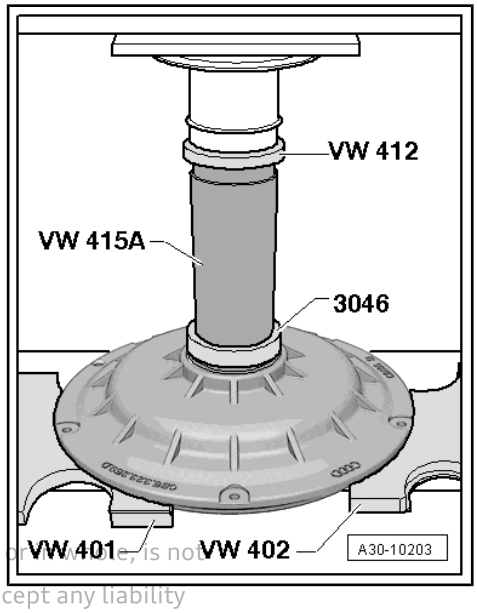

Protected by copyright. Copying for private or commercial purposes, in part or whole, is not permitted unless authorised by AUDI AG. AUDI AG does not guarantee or accept any liability with respect to the correctness of information in this document. Copyright by AUDI AG.

– Install new circlip -arrow- for ball bearing.
– Clean sealing surface on clutch cover.

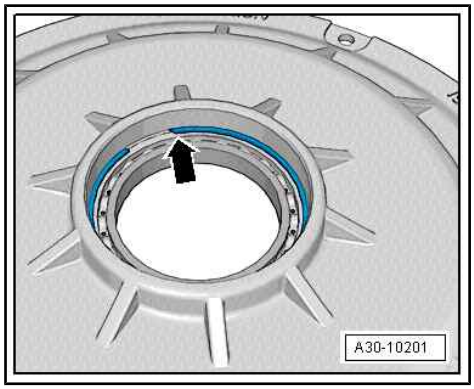

1.2 Renewing input shaft oil seal

Special tools and workshop equipment required

♦ Extractor hook -T20143/2-

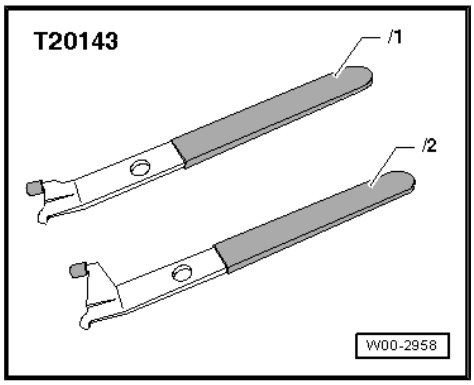

♦ Assembly tool - T40198-

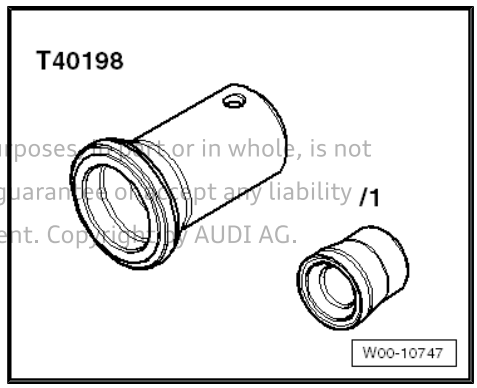

Protected by copyright. Copying for private or commercial purposes, in part or in whole, is not permitted unless authorised by AUDI AG. AUDI AG does not guarantee or accept any liability with respect to the correctness of information in this document. Copyright by AUDI AG.

♦ Sealing grease ⇒ Electronic parts catalogue

Procedure

• Gearbox is secured to engine and gearbox support - VAS 6095- ⇒ page 60 .
– Remove flywheel ⇒ page 5 .

– Prise out oil seal for input shaft with extractor tool -T20143/2- .

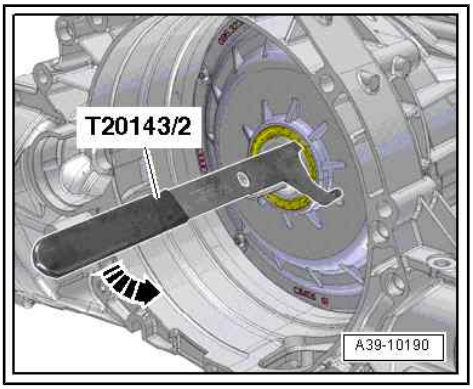

– Fit guide sleeve -T40198/1- onto input shaft.
– Lightly oil outer circumference of new oil seal.
– Pack space between sealing lip and dust lip half full with sealing grease; for sealing grease refer to ⇒ Electronic parts catalogue .
– Fit oil seal onto guide sleeve.
• Installation position: open side of oil seal points towards gearbox

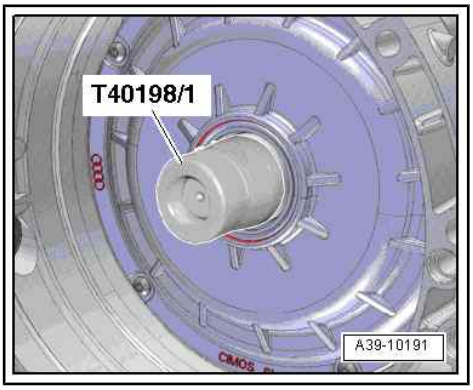

– Drive in oil seal onto stop using thrust piece -T40198- . Take care to keep seal straight when installing.
– Install flywheel ⇒ page 5 .

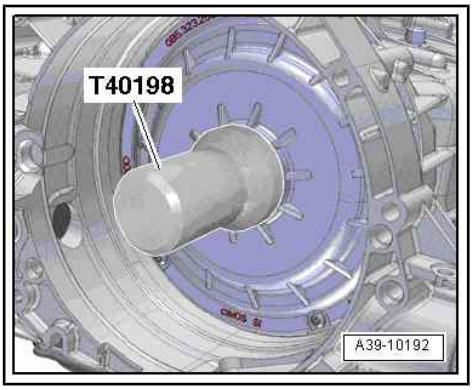

Protected by copyright. Copying for private or commercial purposes, in part or in whole, is not permitted unless authorised by AUDI AG. AUDI AG does not guarantee or accept any liability with respect to the correctness of information in this document. Copyright by AUDI AG.

39 – Final drive - front differential

1 Final drive

⇒ "1.1 Exploded view - final drive", page 70

1.1 Exploded view - final drive

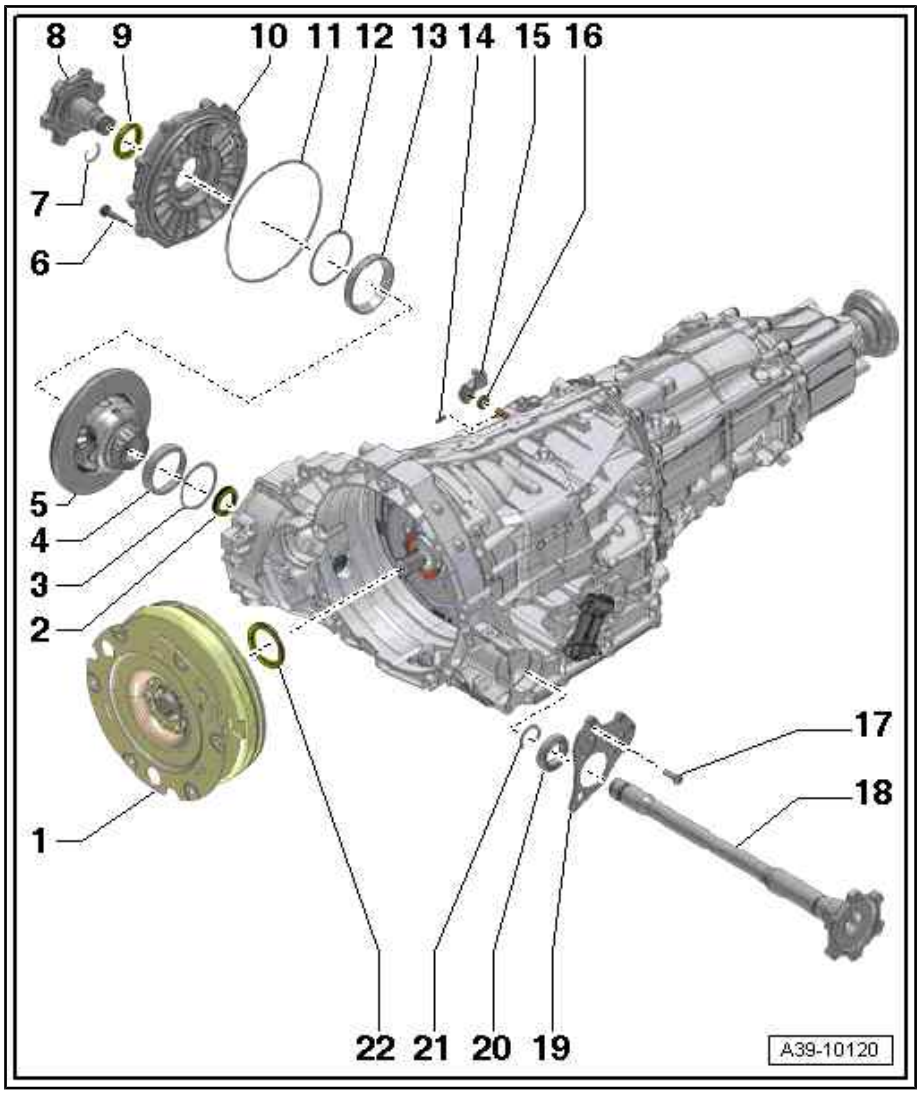

1 - Flywheel
- ❑ Removing and installing ⇒ page 5

2 - Oil seal
- ❑ For flange shaft (left-side)
- ❑ Between final drive and gearbox housing
- ❑ Renewing ⇒ page 77

3 - Shim
- ❑ Behind tapered roller bearing outer race

4 - Tapered roller bearing outer race

5 - Differential

6 - Bolt
- ❑ 10x
- ❑ Tightening torque and sequence ⇒ page 71

7 - Circlip
- ❑ Renew

8 - Flange shaft (right-side)
- ❑ Removing and installing ⇒ page 91

9 - Oil seal
- ❑ For flange shaft (right-side)
- ❑ Renewing ⇒ page 79

10 - Cover for front final drive
- ❑ Removing and installing ⇒ page 77

11 - O-ring
- ❑ On cover for front final drive
- ❑ Renew

12 - Shim
- ❑ Behind tapered roller bearing outer race

13 - Tapered roller bearing outer race

14 - Pin

15 - Gearbox selector lever

16 - Oil seal
- ❑ For selector shaft

Protected by copyright. Copying for private or commercial purposes, in part or in whole, is not permitted unless authorised by AUDI AG. AUDI AG does not guarantee or accept any liability with respect to the correctness of information in this document. Copyright by AUDI AG.

- ❑ Renewing ⇒ 7-speed dual clutch gearbox; Rep. gr. 34 ; Selector mechanism; Renewing selector shaft oil seal

17 - Bolt

- ❑ 3x
- ❑ 10 Nm + 45°

18 - Flange shaft (left-side)

- ❑ Removing and installing ⇒ page 81

19 - Mounting bracket

- ❑ Secured to flange shaft (left-side) together with ball bearing -item 20- by retaining clip -21-.
- ❑ If wear is visible on mounting bracket, check preload of ball bearing for flange shaft (left-side) ⇒ page 83

20 - Ball bearing

- ❑ For flange shaft (left-side)
- ❑ Checking preload of ball bearing for flange shaft (left-side) ⇒ page 83
- ❑ Renewing ⇒ page 89

21 - Circlip

- ❑ For bearing for flange shaft (left-side)
- ❑ Renew

22 - Oil seal

- ❑ For input shaft
- ❑ Renewing ⇒ page 68

Tightening torque and sequence for cover for front final drive

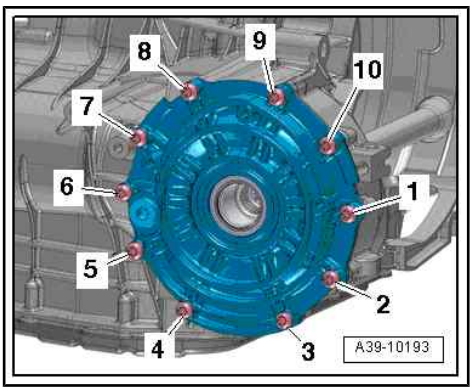

Note

Renew bolts which are tightened by turning through a specified angle.

– Tighten bolts in 3 stages in the sequence shown:

Stage	Bolts	Tightening torque/angle specification
1.	-1 … 10-	3 Nm
2.	-1 … 10-	20 Nm
3.	-1 … 10-	Turn 90° further

Protected by copyright. Copying for private or commercial purposes, in part or in whole, is not permitted unless authorised by AUDI AG. AUDI AG does not guarantee or accept any liability with respect to the correctness of information in this document. Copyright by AUDI AG.

2 Gear oil

⇒ “2.1 Exploded view - gear oil drain and inspection plugs”, page 72

⇒ “2.2 Draining and filling gear oil”, page 72

⇒ “2.3 Removing and installing gearbox oil temperature sender 2 G754 ”, page 75

2.1 Exploded view - gear oil drain and inspection plugs

The gear clusters, front final drive and transfer box in the dual clutch gearbox 0B5 have a common oil system. The same plug is used for filling and inspection.

1 - ATF drain plug

- ❑ Tightening torque: 45 Nm

2 - Seal

- ❑ For ATF drain plug
- ❑ Renew

3 - Filler and inspection plug for gear oil (MTF)

- ❑ In gearbox section, front final drive and transfer box
- ❑ 45 Nm

4 - ATF filler and inspection plug

- ❑ Tightening torque: 45 Nm

5 - Drain plug for gear oil (MTF)

- ❑ In gearbox section, front final drive and transfer box
- ❑ 45 Nm
- ❑ On some versions the gearbox oil temperature sender 2 - G754- also serves as a drain plug for the gear oil (MTF); tightening torque, removing and installing ⇒ “2.3 Removing and installing gearbox oil temperature sender 2 G754 ”, page 75

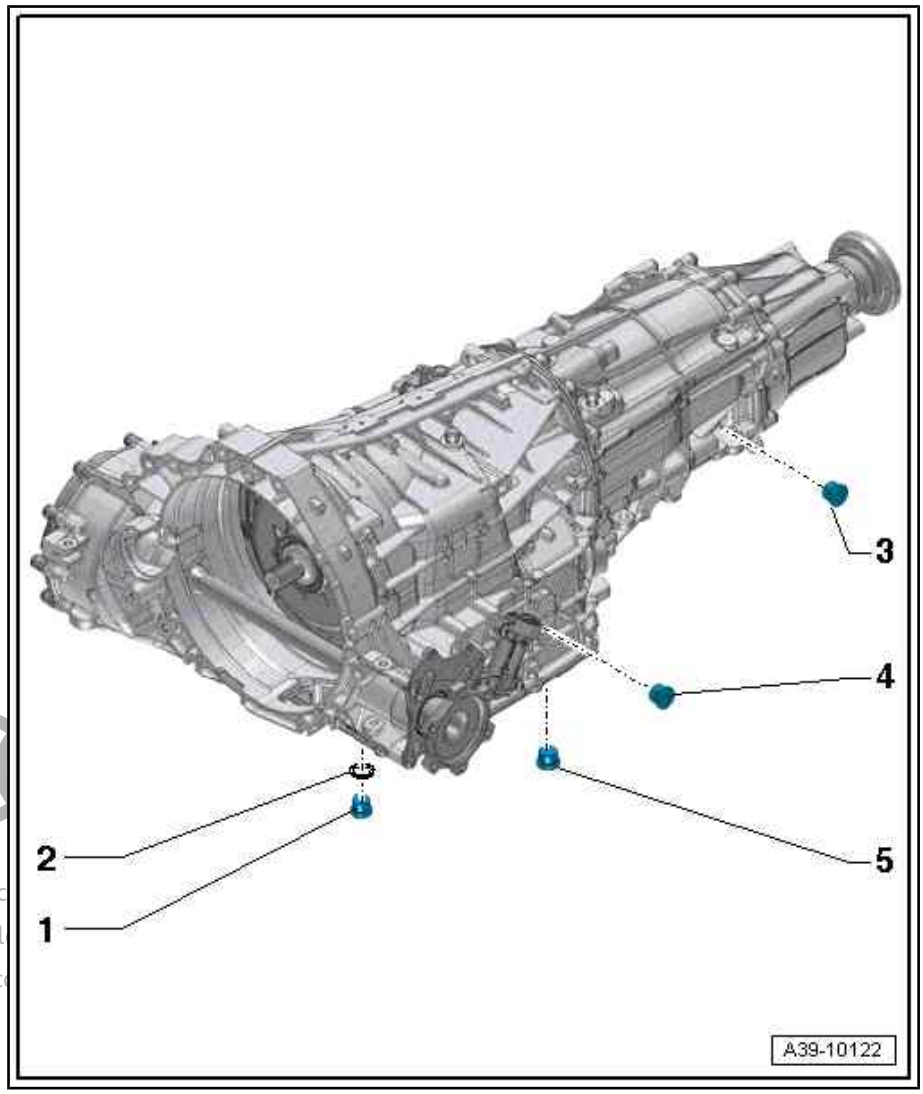

2.2 Draining and filling gear oil

Checking and correcting gear oil level (MTF): the gearbox must be installed in the vehicle in order to check and correct the gear oil level (MTF) ⇒ 7-speed dual clutch gearbox; Rep. gr. 39 ; Gear oil; Checking gear oil level .

Special tools and workshop equipment required

- Used oil collection and extraction unit - V.A.G 1782-

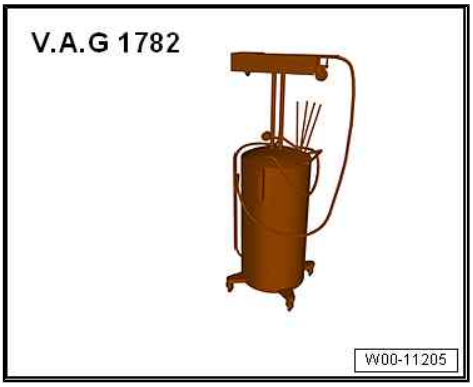

- Safety goggles

Protected by copyright. Copying for private or commercial purposes, in part or in whole, is not permitted unless authorised by AUDI AG. AUDI AG does not guarantee or accept any liability with respect to the correctness of information in this document. Copyright by AUDI AG.

Procedure

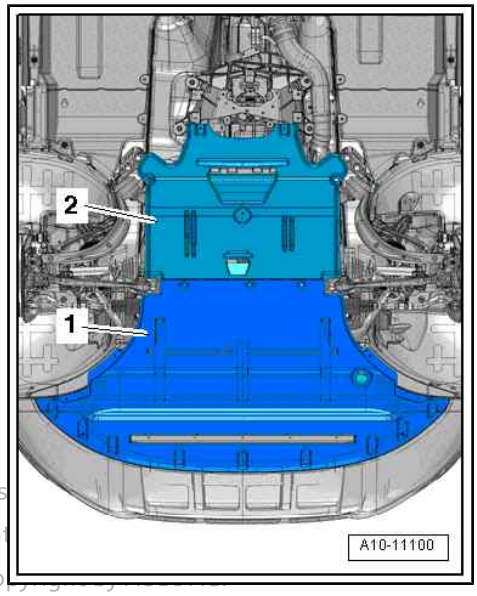

Note

- *Observe the general repair instructions ⇒ page 1 .*
- *Rules for cleanliness when working on the dual clutch gearbox ⇒ page 1 .*

- Gear oil about 20 °C (room temperature).

Gearbox installed:

- Vehicle must be absolutely horizontal (drive it onto a four-pillar lifting platform or over an inspection pit).

– Remove rear noise insulation -2- ⇒ General body repairs, exterior; Rep. gr. 66 ; Noise insulation; Removing and installing noise insulation .

Protected by copyright. Copying for private or commercial purposes
permitted unless authorised by AUDI AG. AUDI AG does not guarant
th respect to the correctness of information in this document. Co

Caution

Risk of damage to gearbox

If there is no gear oil (MTF) in the gearbox (or not enough oil):

- ***The engine must not be started.***
- ***The vehicle must not be towed.***

Gearbox removed:

- Gearbox secured to engine and gearbox support ⇒ page 60

Gearbox removed or installed:

– Place used oil collection and extraction unit - V.A.G 1782- below gearbox.

WARNING

Risk of eye injury.

- ***Put on safety goggles.***

Note

- *A cloth should be placed on the tunnel cross member to prevent gear oil (MTF) from running into the casting pockets on the tunnel cross member.*
- *In the following description, vehicles with drain plug for gear oil (MTF) are differentiated from vehicles that are fitted with gearbox oil temperature sender 2 - G754- instead of drain plug for gear oil (MTF).*

– Place suitable cloth on tunnel cross member.

Vehicles with drain plug for gear oil (MTF) -arrow-:

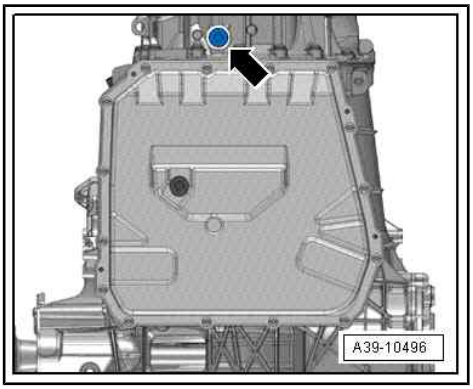

Note

The drain plug for gear oil (MTF) is located behind the gearbox oil pan.

– Unscrew drain plug for gear oil (MTF) -arrow- under gearbox housing.
– Drain gear oil (MTF).
– Tighten drain plug for gear oil (MTF) -arrow-.
• Tightening torque ⇒ page 72

Vehicles with gearbox oil temperature sender 2 - G754- -1- fitted in place of drain plug for gear oil (MTF):

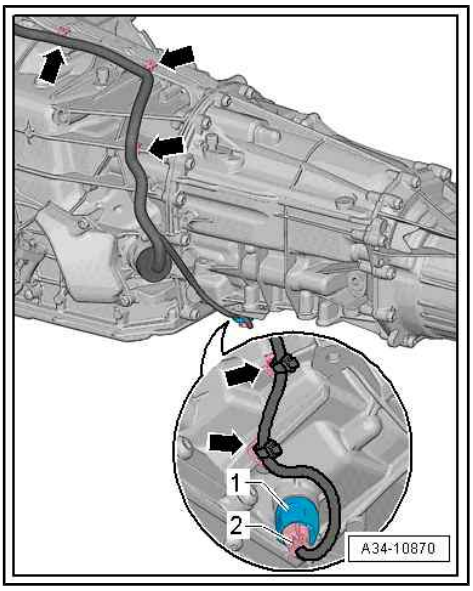

– Gearbox installed in vehicle: switch off ignition.

Note

Always switch off ignition before unplugging connector at gearbox oil temperature sender 2 - G754- . If the ignition is on, the gearbox reverts to a backup programme. This increments the counter for high temperature operation, and after 10 minutes an entry is recorded in the event memory of the automatic gearbox control unit - J217- .

– Unplug connector -2- from gearbox oil temperature sender 2 - G754- , move clear to the top and tie up.

Note

Keep gear oil away from connector -2- and contacts on gearbox oil temperature sender 2 - G754- . The connector contacts must be cleaned immediately if they come into contact with gear oil (MTF). The gear oil (MTF) causes contact problems in the connector contacts.

– Unscrew gearbox oil temperature sender 2 - G754- -1-.
– Drain gear oil (MTF).
– Tighten gearbox oil temperature sender 2 - G754- -1- and plug in connector -2-.
• Tightening torque ⇒ page 72

All vehicles (continued):

– Fill up gear oil (MTF) ⇒ 7-speed dual clutch gearbox; Rep. gr. 39 ; Gear oil; Draining and filling gear oil .

Copyright by AUDI AG. Reproduction for private or commercial purposes, in part or in whole, is not permitted unless authorised by AUDI AG. AUDI AG does not guarantee or accept any liability with respect to the correctness of information in this document. Copyright by AUDI AG.

2.3 Removing and installing gearbox oil temperature sender 2 - G754-

In conjunction with certain engine versions the 7-speed dual clutch gearbox 0B5 (S tronic) has an additional gearbox oil temperature sender 2 - G754- , which monitors the temperature of the gear oil (MTF) employed for the gear cluster.

♦ Fitting location: in place of drain plug for gear oil (MTF)

Procedure

Gearbox installed:

– Remove rear noise insulation -2- ⇒ General body repairs, exterior; Rep. gr. 66 ; Noise insulation; Removing and installing noise insulation .

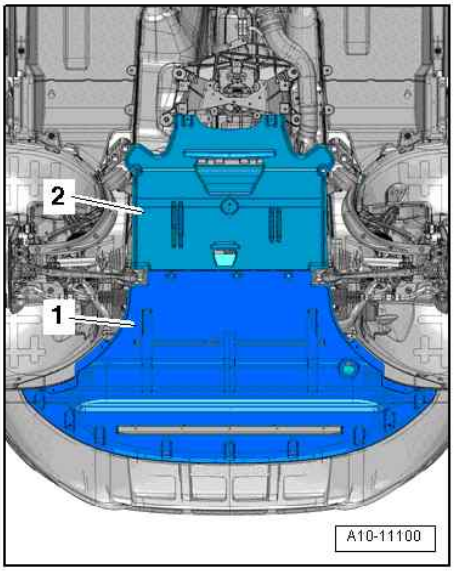

Caution

Risk of damage to gearbox

If there is no gear oil (MTF) in the gearbox (or not enough oil):

- *The engine must not be started.*
- *The vehicle must not be towed.*

Gearbox removed:

- Gearbox secured to engine and gearbox support ⇒ page 60

Gearbox removed or installed:

– Place used oil collection and extraction unit - V.A.G 1782- below gearbox.

– Unplug connector -2- from gearbox oil temperature sender 2 - G754- .

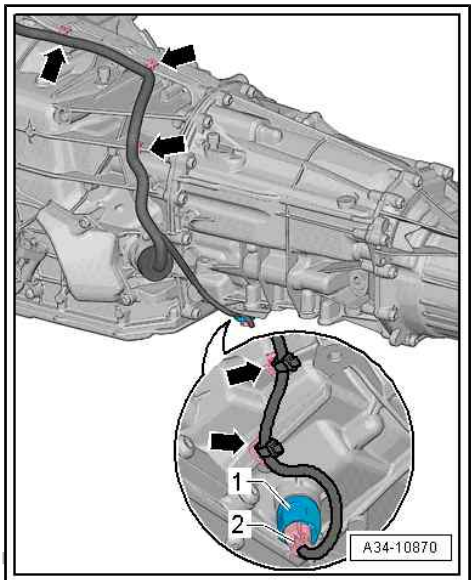

Note

Keep gear oil away from connector -2- and contacts on gearbox oil temperature sender 2 - G754- . The connector contacts must be cleaned immediately if they come into contact with gear oil (MTF). The gear oil (MTF) causes contact problems in the connector contacts.

– Unscrew gearbox oil temperature sender 2 - G754- -1-.

– Drain gear oil (MTF).

Installation is carried out in reverse sequence; note the following:

- Tightening torque: gearbox oil temperature sender 2 - G754- to gearbox, 45 Nm

– Secure wiring harness to gearbox -arrows-.

– Fill up gear oil (MTF) ⇒ 7-speed dual clutch gearbox; Rep. gr. 39 ; Gear oil; Draining and filling gear oil .

– Clean gearbox and tunnel cross member.

Protected by copyright. Copying for private or commercial pu
permitted unless authorised by AUDI AG. AUDI AG does not guarantee or accept any liability
with respect to the correctness of information in this document. Copyright by AUDI AG.

3 Oil seals

⇒ “3.1 Renewing oil seal (left-side)”, page 77
⇒ “3.2 Renewing oil seal (right-side)”, page 79
⇒ “3.3 Renewing selector shaft oil seal”, page 80

3.1 Renewing oil seal (left-side)

Special tools and workshop equipment required

- Used oil collection and extraction unit - V.A.G 1782-

Protected by copyright. Copying for private or commercial purposes, in part or in whole, is not permitted unless authorised by AUDI AG. AUDI AG does not guarantee or accept any liability with respect to the correctness of information in this document. Copyright by AUDI AG.

- Thrust piece - T40164-

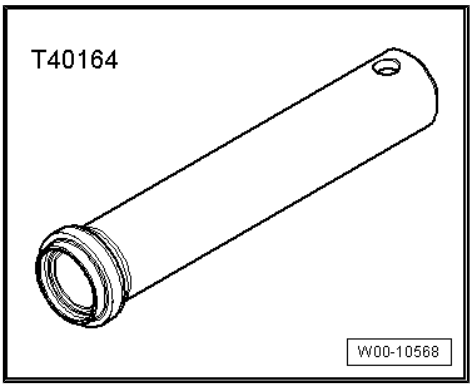

- Sealing grease ⇒ Electronic parts catalogue

Procedure

- Gearbox is secured to engine and gearbox support - VAS 6095- ⇒ page 60 .

– Place used oil collection and extraction unit - V.A.G 1782- below gearbox.

– Remove flange shaft (right-side) ⇒ page 91 .

– Remove bolts -arrows-.

– Carefully detach cover for front final drive (gear oil will drain off).

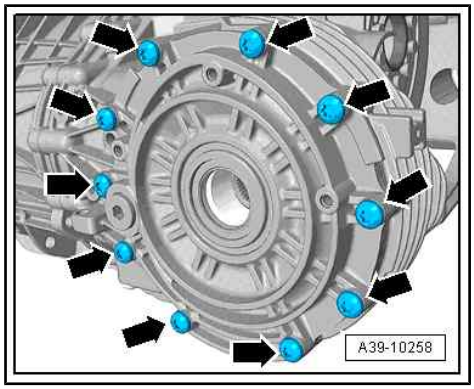

Caution

Risk of damage to the differential.

- *Detach cover for front final drive slowly and carefully from gearbox housing. The differential may otherwise fall out of the gearbox.*
- *A differential which has fallen to the ground can no longer be installed. Renew gearbox if differential has fallen to the ground.*
- *Make sure that the inner bearing races and shims for the differential do not drop out of the gearbox housing and the front final drive cover.*
- *Inner bearing races and shims cannot be re-allocated to their original positions by the workshop if they have dropped out.*

Protected by copyright. Copying for private or commercial purposes, in part or in whole, is not permitted unless authorised by AUDI AG. AUDI AG does not guarantee or accept any liability with respect to the correctness of information in this document. Copyright by AUDI AG.

– Carefully remove differential -arrow- and set it down on a soft surface.

– Remove flange shaft (left-side) ⇒ page 81 .

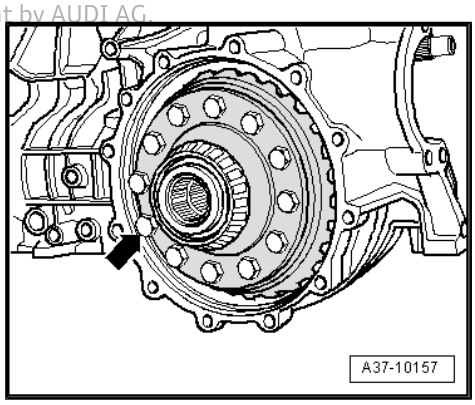

Caution

Risk of damage to fitting surface in gearbox housing.

- *Apply screwdriver with care.*

– Press out oil seal from rear side using a screwdriver.

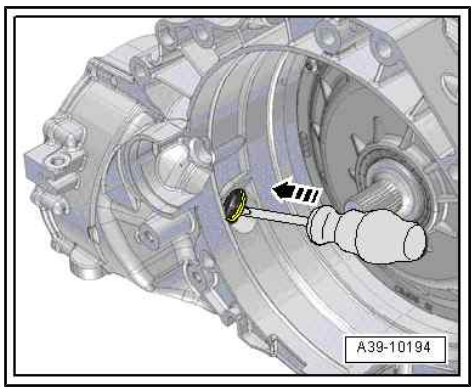

– Lightly oil outer circumference of new oil seal and slide onto thrust piece - T40164- .

• Open side of oil seal faces towards thrust piece - T40164- .

– Drive in oil seal for flange shaft (left-side) as far as stop using thrust piece - T40164- ; keep seal straight when installing.

– Pack space between sealing lip and dust lip half full with sealing grease; for sealing grease refer to ⇒ Electronic parts catalogue .

– Fit differential.

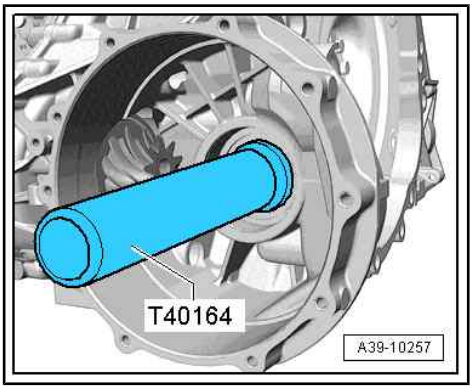

– Install cover for front final drive with new O-ring and tighten bolts ⇒ page 71 .

– Install flange shaft (left-side) ⇒ page 81 .

– Install flange shaft (right-side) ⇒ page 91 .

– Fill up gear oil (MTF) ⇒ 7-speed dual clutch gearbox; Rep. gr. 39 ; Gear oil; Draining and filling gear oil .

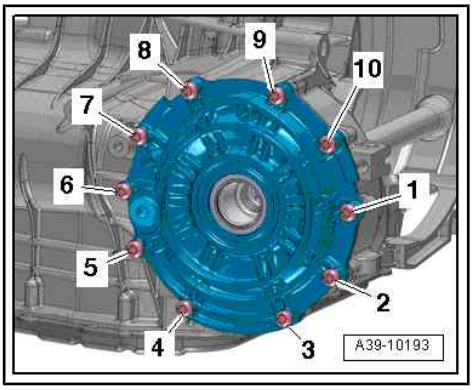

3.2 Renewing oil seal (right-side)

Special tools and workshop equipment required

♦ Thrust piece - T40163-

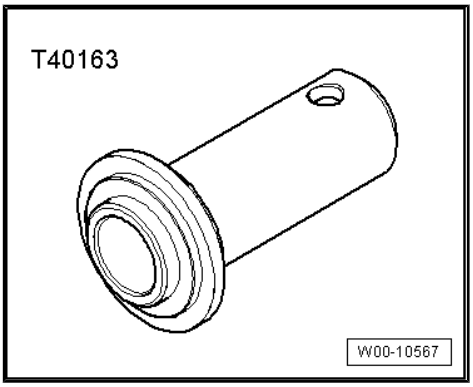

♦ Assembly lever

♦ Sealing grease ⇒ Electronic parts catalogue

Procedure

– Remove flange shaft (right-side) ⇒ page 91 .

– Lever out oil seal for flange shaft -arrow-.

– Lightly oil outer circumference of new oil seal.

Protected by copyright. Copying for private or commercial purposes, in part or in whole, is not permitted unless authorised by AUDI AG. AUDI AG does not guarantee the accuracy, completeness or timeliness of the information in this document. Copyright © AUDI AG.

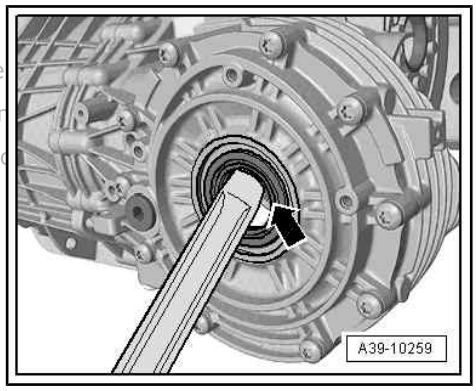

– Drive in oil seal for flange shaft (right-side) as far as stop using thrust piece - T40163- ; keep seal straight when installing.
– Pack space between sealing lip and dust lip half full with sealing grease; for sealing grease refer to ⇒ Electronic parts catalogue .
– Install flange shaft (right-side) ⇒ page 91 .

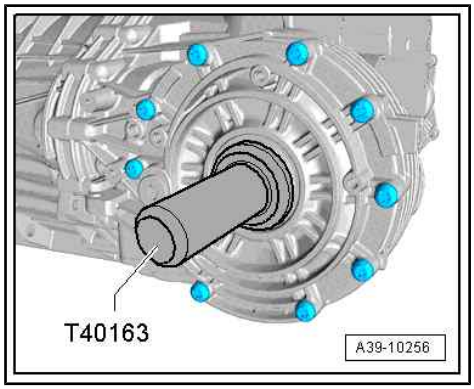

3.3 Renewing selector shaft oil seal

- Gearbox in vehicle

Description of work sequence ⇒ 7-speed dual clutch gearbox; Rep. gr. 34 ; Selector mechanism; Renewing selector shaft oil seal

Protected by copyright. Copying for private or commercial purposes, in part or in whole, is not permitted unless authorised by AUDI AG. AUDI AG does not guarantee or accept any liability with respect to the correctness of information in this document. Copyright by AUDI AG.

4 Differential

⇒ "4.1 Removing and installing flange shaft (left-side)", page 81

⇒ "4.2 Checking and adjusting preload of ball bearing for flange shaft (left-side)", page 83

⇒ "4.3 Renewing mounting bracket and ball bearing for flange shaft (left-side)", page 89

⇒ "4.4 Removing and installing flange shaft (right-side)", page 91

4.1 Removing and installing flange shaft (left-side)

Special tools and workshop equipment required

- ♦ Sealing grease ⇒ Electronic parts catalogue

Removing

Protected by copyright. Copying for private or commercia
permitted unless authorised by AUDI AG. AUDI AG does n
with respect to the correctness of information in this doc

- Gearbox is secured to engine and gearbox support - VAS 6095- ⇒ page 60 .

– Tilt gearbox to rear on engine and gearbox support to prevent gear oil from escaping.

– Unscrew bolts -arrows- on mounting bracket for flange shaft.

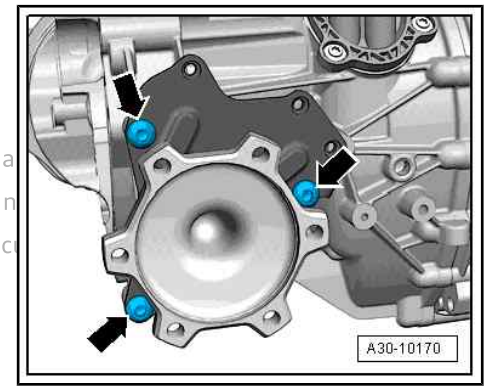

– Remove flange shaft (left-side) -2- from gearbox in direction of -arrow A-.

Note

-Item 1- and -arrows 3, B- can be disregarded.

– Remove flywheel ⇒ page 5 .

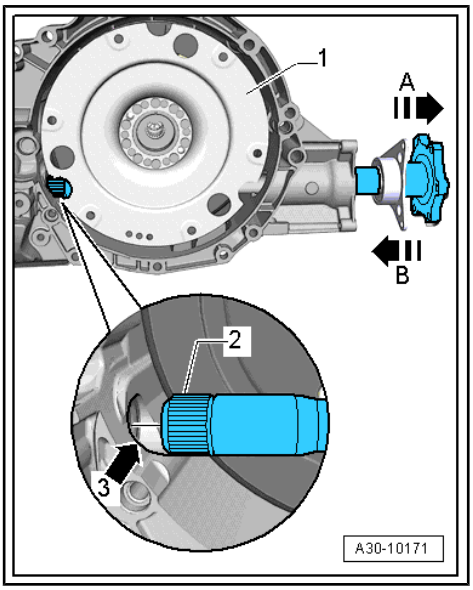

Installing

Installation is carried out in reverse sequence; note the following:

- Tightening torque
  ⇒ "1.1 Exploded view - final drive", page 70

– Thoroughly clean flange shaft (left-side), area of gearbox housing leading to differential -arrow A-, and oil seal -arrow B-.

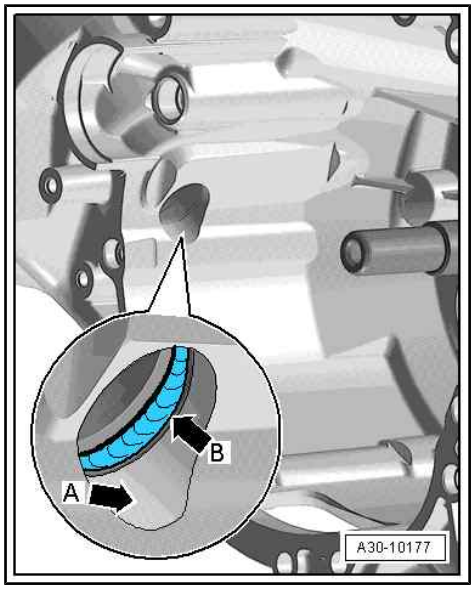

Note

If oil seal between differential and gearbox housing -arrow B- is damaged, it must be renewed *⇒ page 77* *.*

– Pack space between sealing lip and dust lip half full with sealing grease; for sealing grease refer to ⇒ Electronic parts catalogue .

– Thoroughly clean flange shaft (left-side).

The following steps must be taken for vehicles listed below (up to vehicle identification number shown):

Vehicle model	Vehicle identification number	Place of manufacture
Audi A4 2008	up to WAUZZZ8K9BN034383	Germany, Neckarsulm
Audi A4 2008	up to WAUZZZ8KXBA082742	Germany, Ingolstadt
Audi A5 Cabriolet 2008	up to WAUVGAFH3BN009542	Germany, Neckarsulm
Audi A5 Coupé 2008	up to WAUZZZ8T9BA902081	Germany, Ingolstadt
Audi Q5 2008	up to WAUZZZ8R2BA061817	Germany, Ingolstadt

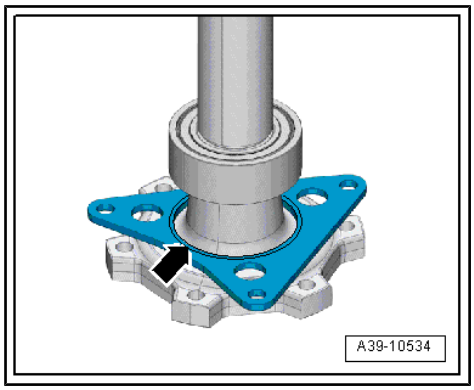

– Check preload of ball bearing for flange shaft (left-side) according to wear pattern on mounting bracket -arrow-
⇒ page 83 .

Protected by copyright. Copying for private or commercial purposes, in part or in whole, is not permitted unless authorised by AUDI AG. AUDI AG does not guarantee or accept any liability with respect to the correctness of information in this document. Copyright by AUDI AG.

- Depending on wear pattern, optimise preload of ball bearing for flange shaft (left-side) as required ⇒ page 84 .
- Depending on wear pattern, adjust preload of ball bearing for flange shaft (left-side) as required ⇒ page 85 .

Continued for all vehicle models

– Install flywheel ⇒ page 5 .

– Turn flywheel -1- so that you can see opening to differential -arrow 3-.

– Slide flange-shaft (left-side) -2- into gearbox in direction of -arrow B- (keep end of shaft centred while guiding it into oil seal on front final drive -arrow 3-).

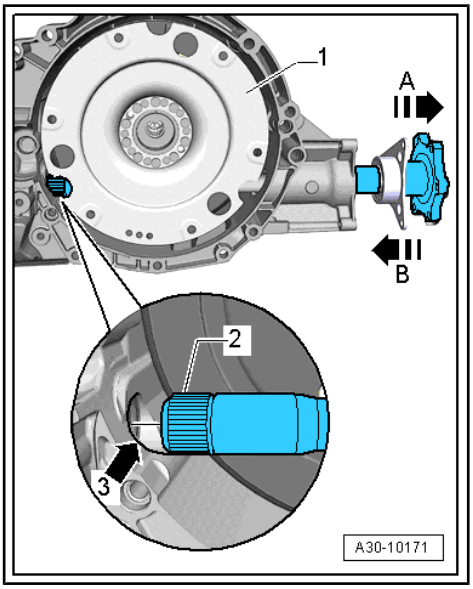

Note

♦ *The splines -2- on the flange shaft will damage the oil seal between the final drive and the gearbox housing if you do not keep the flange shaft centred.*

♦ *If the oil seal is damaged, it must be renewed.*

♦ *-Arrow A- can be disregarded.*

– Fill up gear oil (MTF) ⇒ 7-speed dual clutch gearbox; Rep. gr. 39 ; Gear oil; Draining and filling gear oil .

4.2 Checking and adjusting preload of ball bearing for flange shaft (left-side)

⇒ "4.2.1 Checking preload of ball bearing for flange shaft (left-side)", page 83

⇒ "4.2.2 Optimising preload of ball bearing for flange shaft (left-side)", page 84

⇒ "4.2.3 Adjusting preload of ball bearing for flange shaft (left-side)", page 85

4.2.1 Checking preload of ball bearing for flange shaft (left-side)

Check preload of ball bearing according to wear pattern on mounting bracket -arrow-.

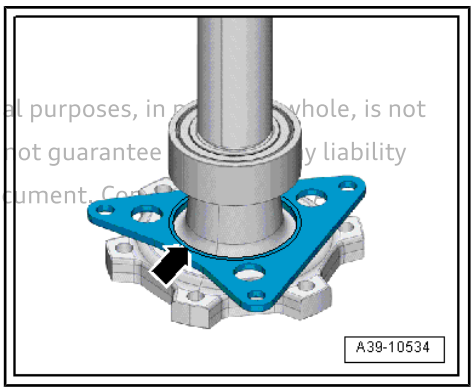

Protected by copyright. Copying for private or commercial purposes, in part or in whole, is not permitted unless authorised by AUDI AG. AUDI AG does not guarantee [illegible] y liability [illegible] this document. Con[illegible]

Note

♦ *It is only necessary to check preload of ball bearing for flange shaft (left-side) on certain vehicles; for list of vehicles see table* *⇒ page 82* .

♦ *This measure is not required on later vehicles because of a design change.*

• Flange shaft (left-side) must be removed ⇒ page 81 .

Wear pattern “A”

- Slight impressions in vicinity of hole in mounting bracket -arrows-.
- No trace of scoring or material worn down around circumference.

– Optimise preload of ball bearing for flange shaft (left-side) ⇒ page 84 .

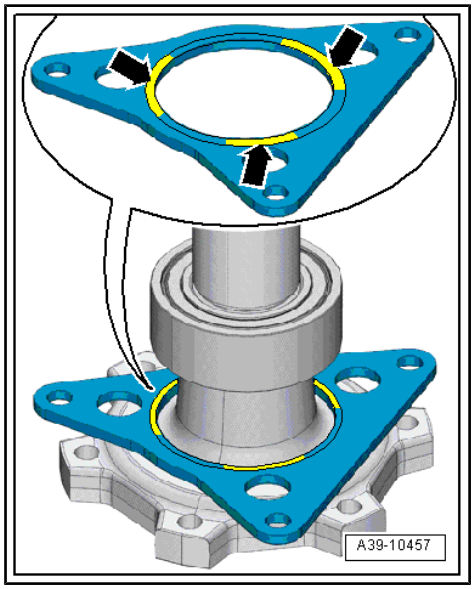

Wear pattern “B”

- Scoring and possibly material worn down around circumference of hole in mounting bracket -arrow-.

– Adjust preload of bearing for flange shaft (left-side) ⇒ page 85 .

– Renew mounting bracket, ball bearing and circlip ⇒ page 89 .

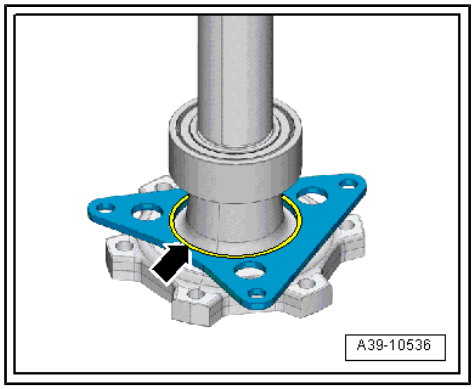

4.2.2 Optimising preload of ball bearing for flange shaft (left-side)

Note

- *It is only necessary to optimise preload of ball bearing for flange shaft (left-side) on certain vehicles; for list of vehicles see table ⇒ page 82 .*
- *This measure is not required on later vehicles because of a design change.*

Procedure

- Flange shaft (left-side) must be removed ⇒ page 81 .

Protected by copyright. Copying for private or commercial purposes, in part or in whole, is not permitted unless authorised by AUDI AG. AUDI AG does not guarantee or accept any liability with respect to the correctness of information in this document. Copyright by AUDI AG.

Requirements for optimising:

- Mounting bracket shows no trace of scoring or material worn down around circumference.
- Slight impressions in vicinity of hole in mounting bracket -arrows- are permissible.

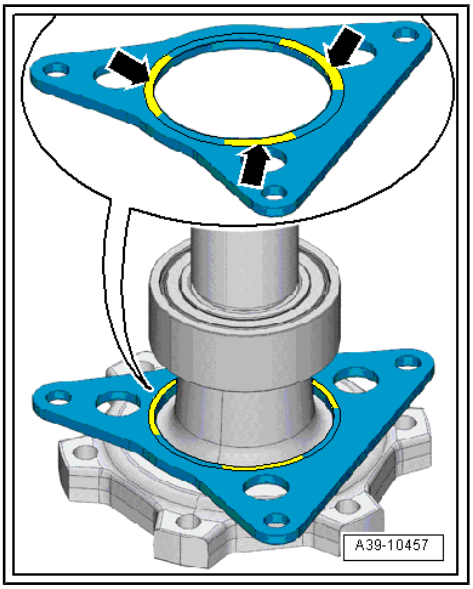

- Mounting bracket with wear pattern “A” ⇒ page 84 (mounting bracket has no traces of scoring or material worn down around circumference).
- A shim is inserted in the bearing seat in the gearbox to optimise the preload of the ball bearing.

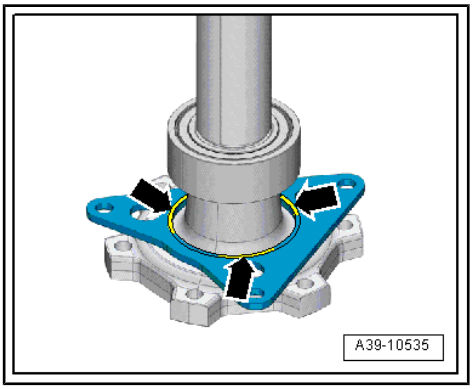

– Before installing flange shaft , insert shim - 0B4 409 227- -item 1- in bearing seat in gearbox to optimise preload of ball bearing.
– Install flange shaft (left-side) ⇒ page 81 .

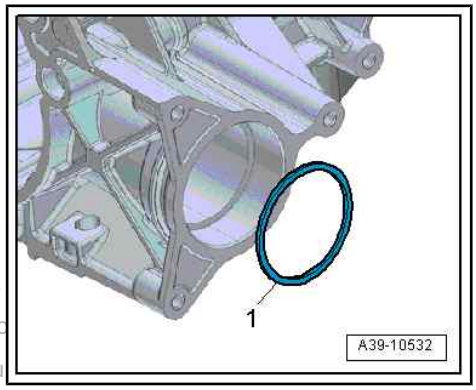

Protected by copyright. Copying for private or commercial
permitted unless authorised by AUDI AG. AUDI AG does no
with respect to the correctness of information in this docu

4.2.3 Adjusting preload of ball bearing for flange shaft (left-side)

Note

- *It is only necessary to optimise preload of ball bearing for flange shaft (left-side) on certain vehicles; for list of vehicles see table* *⇒ page 82* *.*
- *This measure is not required on later vehicles because of a design change.*

- Flange shaft (left-side) must be removed ⇒ page 81 .
- Mounting bracket with wear pattern “B” ⇒ page 84 (scoring and possibly material worn down around circumference of hole).
- Mounting bracket and ball bearing must be renewed ⇒ page 89 .

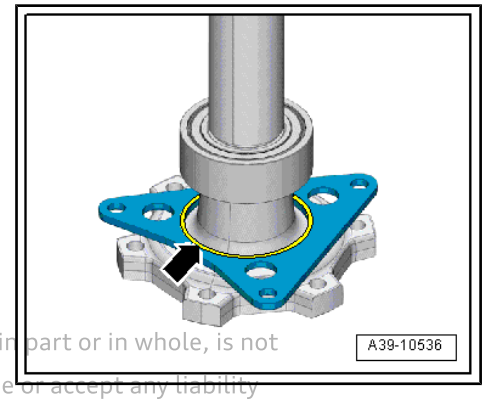

Protected by copyright. Copying for private or commercial purposes, in part or in whole, is not permitted unless authorised by AUDI AG. AUDI AG does not guarantee or accept any liability with respect to the correctness of information in this document. Copyr

Procedure

– Attach emery cloth (grain size 150) to sanding block and clean coarse dirt and corrosion off contact surface -arrow-.

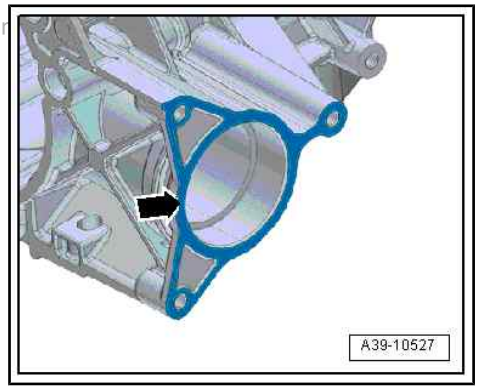

Note

The contact surface does not have to be sanded down to bare metal; it is sufficient to remove coarse dirt and corrosion.

– Clean contact surface and bearing seat.

– Fit new ball bearing -arrow- for flange shaft (left-side) in bearing seat.

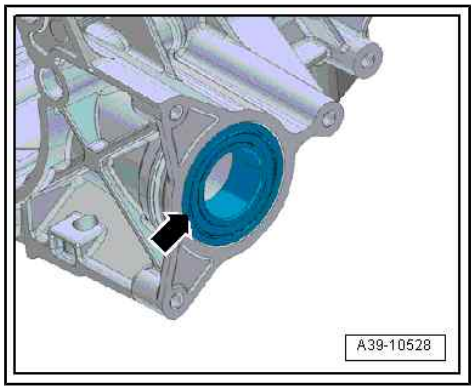

Continued procedure:

♦ If bearing protrudes slightly outside contact surface ⇒ page 87

♦ If bearing is below contact surface ⇒ page 88

Procedure if bearing protrudes outside contact surface

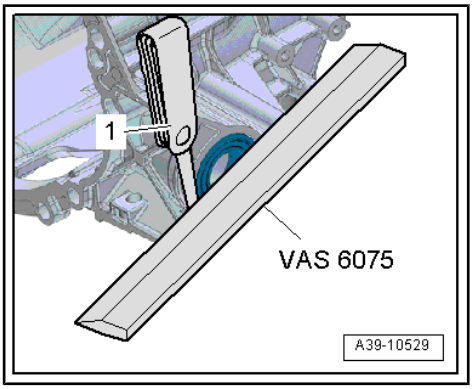

– Apply straight edge (500 mm) - VAS 6075- across bearing and measure distance to contact surface on gearbox housing on both sides using feeler gauge.
– Note down measured value.
– Re-apply straight edge at an angle of 90° across bearing and measure distance to contact surface on gearbox housing on both sides using feeler gauge.
– Note down measured value.

Determining shim(s):

Note

The smallest of the 4 measured values is used to determine the shim(s).

- Specification: bearing should protrude by 0.5 ... 0.8 mm

	Smallest amount of bearing protrusion (0.1 mm in this example)
+	Thickness of shim(s) (thickness 0.3 mm)
=	Bearing preload (specification 0.5 ... 0.8 mm)

Example:

1 shim:

0.1 mm + 0.3 mm = 0.4 mm, “bearing preload insufficient”

2 shims:

0.1 mm + 0.3 mm + 0.3 mm = 0.7 mm “bearing preload in specified range”

- Result: Inserting 2 shims of 0.3 mm thickness gives a bearing preload of 0.7 mm (inside tolerance range of 0.5 … 0.8 mm)

Protected by copyright. Copying for private or commercial purposes, in part or in whole, is not permitted unless authorised by AUDI AG. AUDI AG does not guarantee or accept any liability with respect to the correctness of information in this document. Copyright by AUDI AG.

Procedure if bearing is below contact surface

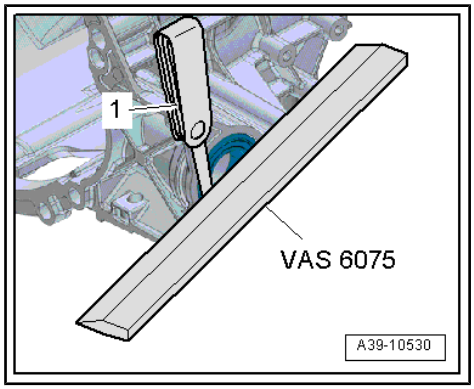

Note

Use only the method described here to measure the distance below the contact surface.

– Apply straight edge (500 mm) - VAS 6075- across contact surface on gearbox housing and measure distance to bearing on both sides using feeler gauge.

– Note down measured value.

– Re-apply straight edge at an angle of 90° across contact surface on gearbox housing and measure distance to bearing on both sides using feeler gauge.

– Note down measured value.

Determining shim(s):

Note

Protected by copyright. Copying for private or commercial purposes, in part or in whole, is not permitted unless authorised by AUDI AG. AUDI AG does not guarantee or accept any liability with respect to the correctness of information in this document. Copyright by AUDI AG.

♦ *The largest of the 4 measured values is used to determine the shim(s).*

♦ *The measured distance below the contact surface is taken as a minus value ("–") for the calculation.*

• Specification: bearing should protrude by 0.5 ... 0.8 mm

–	Largest distance below surface (–0.15 mm in this example)
+	Thickness of shim(s) (thickness 0.3 mm)
=	Bearing preload (specification 0.5 ... 0.8 mm)

Example:

1 shim:

-0.15 mm + 0.3 mm = 0.15 mm, "bearing preload insufficient"

3 shims:

-0.15 mm + 0.3 mm + 0.3 mm + 0.3 mm = 0.75 mm, "bearing preload in specified range"

• Result: Inserting 3 shims of 0.3 mm thickness gives a bearing preload of 0.75 mm (inside tolerance range of 0.5 … 0.8 mm)

All versions (continued):

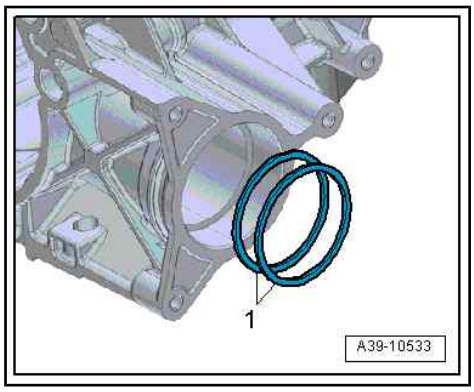

– Renew mounting bracket, ball bearing and circlip ⇒ page 89 .

– Before installing flange shaft fit calculated number of shims -0B4 409 227- -item 1- in bearing seat in gearbox.

– Install flange shaft (left-side) ⇒ page 81 .

4.3 Renewing mounting bracket and ball bearing for flange shaft (left-side)

Special tools and workshop equipment required

- Thrust plate - VW 401-

- Thrust plate - VW 402-

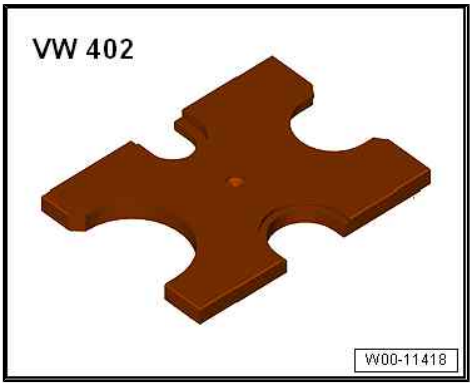

- Press tool - VW 412-

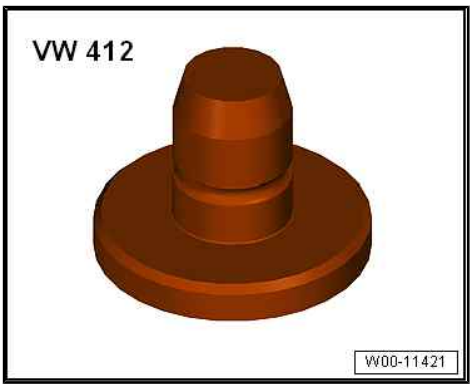

- Tube - VW 516-

Protected by copyright. Copying for private or commercial purposes, ... whole, is not permitted unless authorised by AUDI AG. AUDI AG does not guarantee or accept any liability with respect to the correctness of information in this document. Copyright by AUDI AG.

– Remove flange shaft (left-side) ⇒ page 81 .
– Remove circlip -1- from flange shaft.

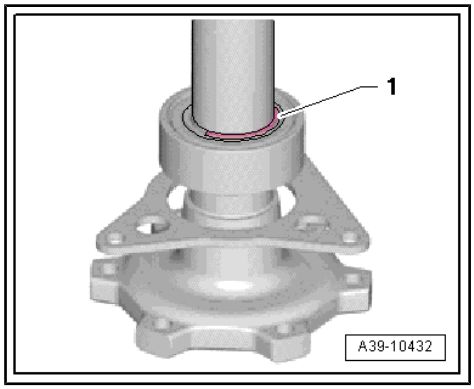

– Press ball bearing -A- off flange shaft.

Protected by copyright. Copying for private or commercial purposes, in part or in whole, is not permitted unless authorised by AUDI AG. AUDI AG does not guarantee or accept any liability with respect to the correctness of information in this document. Copyright by AUDI AG.

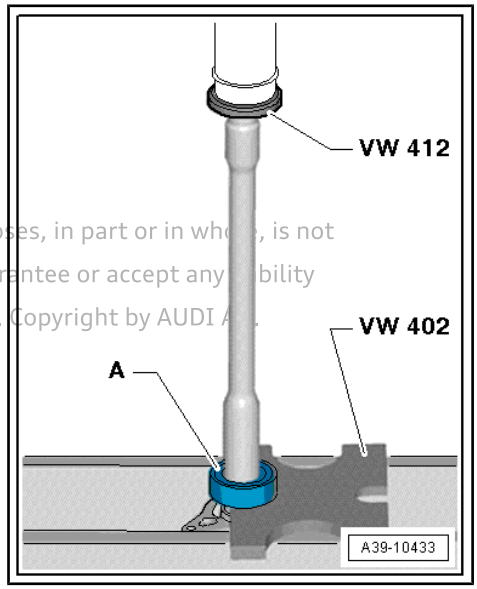

– Fit new mounting bracket -1-.
• Installation position: side with lettering faces towards flange for drive shaft.
– Fit new ball bearing -2-.

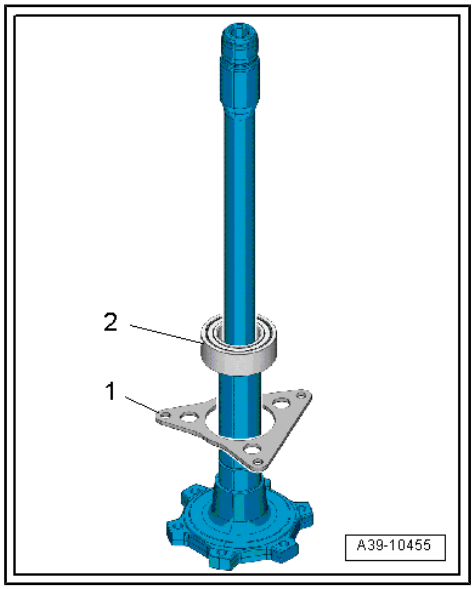

– With mounting bracket -B- installed, press on ball bearing -A- as far as stop.

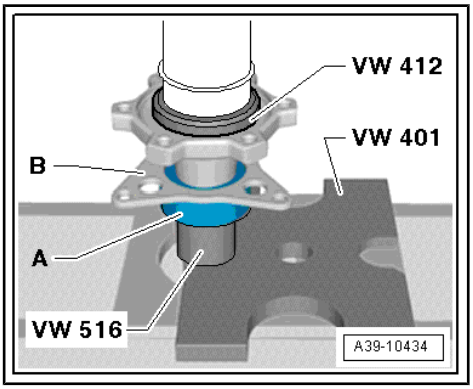

– Fit circlip -1- in annular groove on flange shaft.

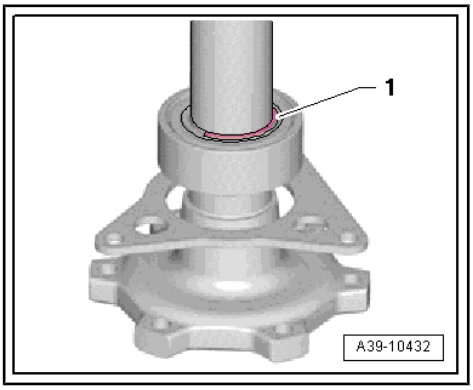

4.4 Removing and installing flange shaft (right-side)

Special tools and workshop equipment required

♦ Adapter - VW295A-

♦ Multi-purpose tool - VW 771-

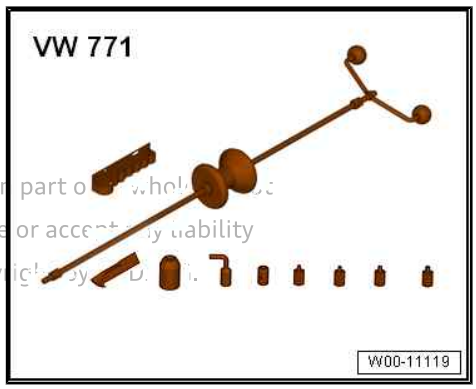

Protected by copyright. Copying for private or commercial purposes, in part or whole is not permitted unless authorised by AUDI AG. AUDI AG does not guarantee or accept any liability with respect to the correctness of information in this document. Copyright by AUDI AG.

Protected by copyright. Copying for private or commercial purposes, in part or in whole, is not permitted unless authorised by AUDI AG. AUDI AG does not guarantee or accept any liability with respect to the correctness of information in this document. Copyright by AUDI AG.

- Eye-head bolt - 3368-

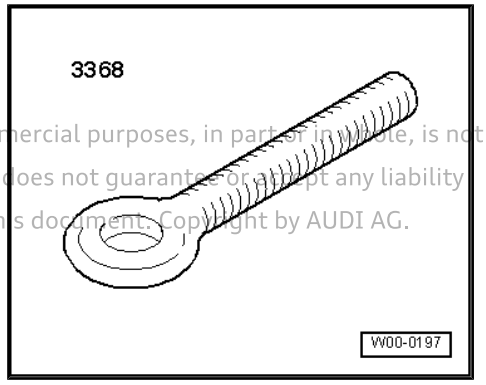

- Used oil collection and extraction unit - V.A.G 1782-

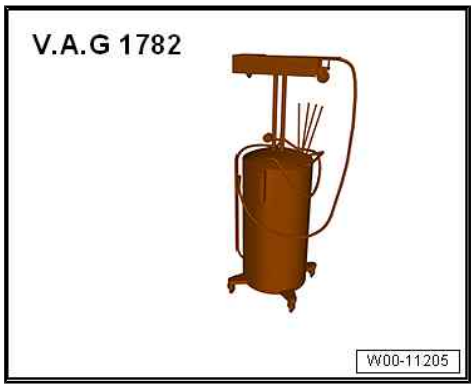

- Sealing grease ⇒ Electronic parts catalogue
- Nuts M10 (2x)

Removing

- Gearbox is secured to engine and gearbox support - VAS 6095- ⇒ page 60 .

– Place used oil collection and extraction unit - V.A.G 1782- below gearbox.

– Screw eye-head bolt - 3368- into threaded hole in flange shaft (right-side).

– Attach multi-purpose tool - VW 771- with -VW 771/13- to eye-head bolt - 3368- and knock out flange shaft.

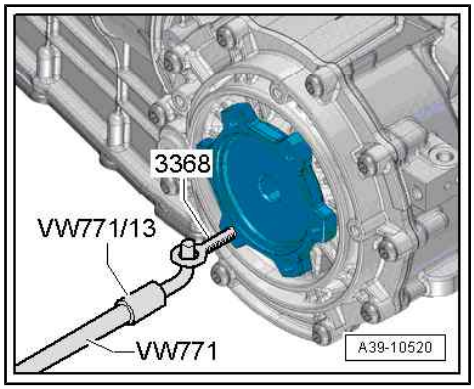

Installing

Installation is carried out in reverse sequence; note the following:

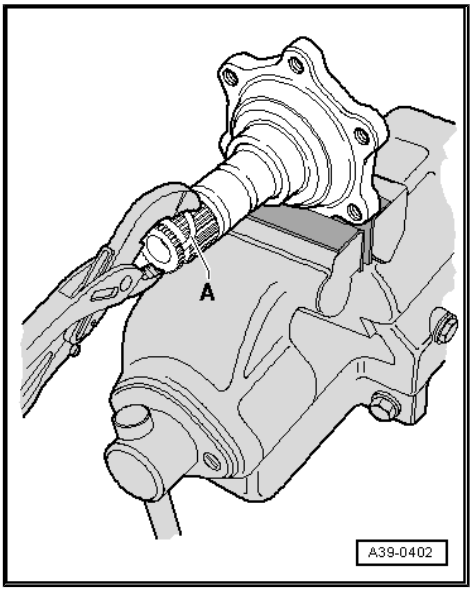

Note

Renew circlip for flange shaft (right-side).

- Clamp flange shaft in vice, using jaw protectors. Use new circlip -A- to press old circlip out of groove in flange shaft.
- Pack space between sealing lip and dust lip half full with sealing grease; for sealing grease refer to ⇒ Electronic parts catalogue .
- Drive in flange shaft (right-side) with drift - VW 295- .
- Fill up gear oil (MTF) ⇒ 7-speed dual clutch gearbox; Rep. gr. 39 ; Gear oil; Draining and filling gear oil .

Protected by copyright. Copying for private or commercial purposes, in part or in whole, is not permitted unless authorised by AUDI AG. AUDI AG does not guarantee or accept any liability with respect to the correctness of information in this document. Copyright by AUDI AG.

5 Centre differential

⇒ “5.1 Exploded view - centre differential”, page 94

⇒ “5.2 Removing and installing centre differential”, page 98

⇒ “5.3 Servicing centre differential housing”, page 105

⇒ “5.4 Renewing oil seal for rear splined shaft”, page 113

5.1 Exploded view - centre differential

⇒ “5.1.1 Exploded view - centre differential, bolted propshaft”, page 94

⇒ “5.1.2 Exploded view - centre differential, propshaft with splines”, page 96

5.1.1 Exploded view - centre differential, bolted propshaft

Note

- *⇒ “1 Repair instructions”, page 1*
- *⇒ “1.1 Rules for cleanliness”, page 1*

The centre differential housing can also be removed and installed with the gearbox installed in the vehicle ⇒ page 98 .

Protected by copyright. Copying for private or commercial purposes, in part or in whole, is not permitted unless authorised by AUDI AG. AUDI AG does not guarantee or accept any liability with respect to the correctness of information in this document. Copyright by AUDI AG.

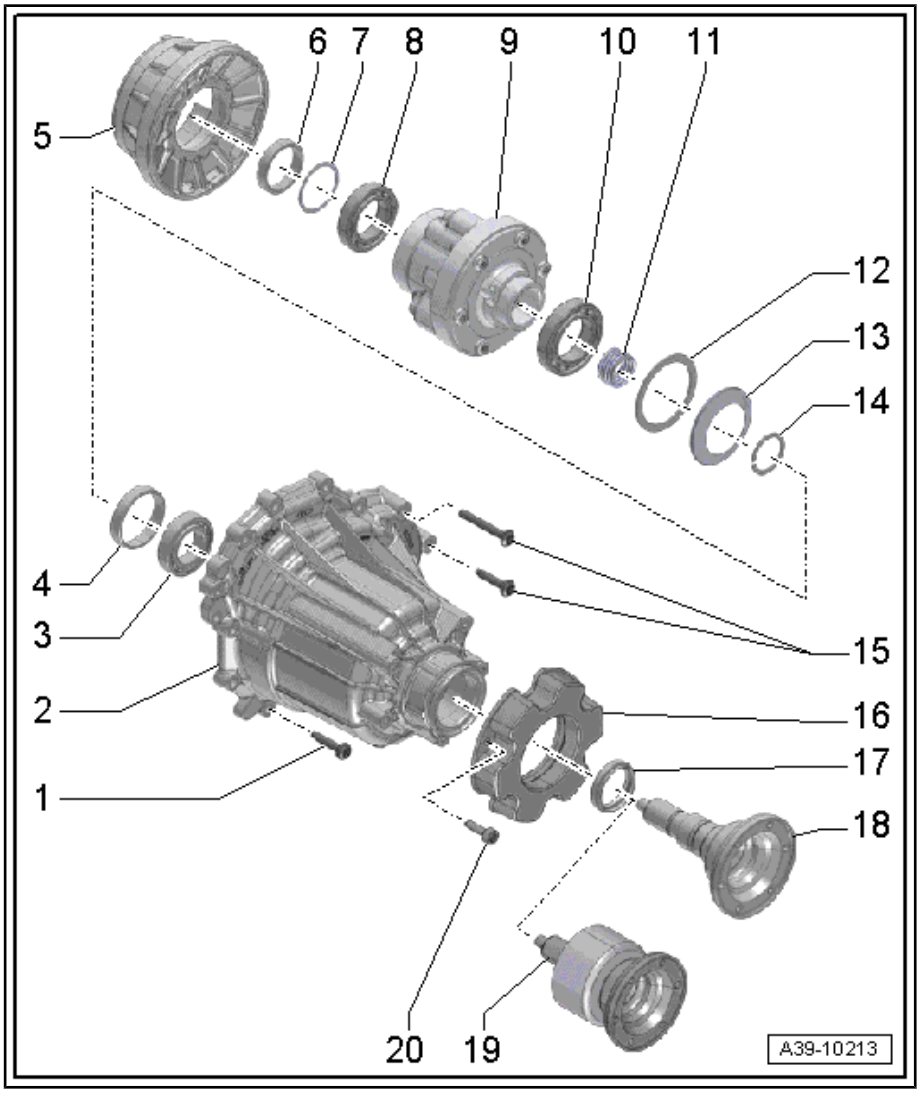

1 - Bolt
- ❑ Aluminium bolts
- ❑ 11x
- ❑ Renew
- ❑ Tightening torque and sequence ⇒ page 96

2 - Housing
- ❑ For centre differential
- ❑ ⇒ “5.2.1 Removing and installing centre differential - bolted propshaft”, page 98

3 - Ball bearing
- ❑ For flange shaft
- ❑ ⇒ “5.3.1 Removing and installing rear flange shaft, oil seal and ball bearing”, page 105

4 - Spacer sleeve
- ❑ Pressing out and pressing in ⇒ “5.3.1 Removing and installing rear flange shaft, oil seal and ball bearing”, page 105

5 - Bearing plate
- ❑ Installation position: shoulder must engage in recess in intermediate gearbox housing

6 - Spacer sleeve

7 - Shim

8 - Ball bearing
- ❑ For centre differential

9 - Centre differential

10 - Ball bearing
- ❑ For centre differential

11 - Spring

12 - Shim

13 - Dished spring
- ❑ Installation position: convex side (which curves outwards) faces oil seal -item 17-

14 - Circlip
- ❑ For flange shaft
- ❑ Removing and installing ⇒ “5.3.1 Removing and installing rear flange shaft, oil seal and ball bearing”, page 105

15 - Bolt
- ❑ Steel bolts
- ❑ 2x
- ❑ Renew
- ❑ Tightening torque and sequence ⇒ page 96

Protected by copyright. Copying for private or commercial purposes, in part or in whole, is not permitted unless authorised by AUDI AG. AUDI AG does not guarantee or accept any liability with respect to the correctness of information in this document. Copyright by AUDI AG.

16 - Damper weight

- ❑ Depending on version

17 - Oil seal

- ❑ ⇒ “5.3.1 Removing and installing rear flange shaft, oil seal and ball bearing”, page 105

18 - Flange shaft (rear)

- ❑ Without vibration damper
- ❑ For correct version, refer to ⇒ Electronic parts catalogue
- ❑ Pressing out and pressing in
  ⇒ “5.3.1 Removing and installing rear flange shaft, oil seal and ball bearing”, page 105

19 - Flange shaft (rear)

- ❑ With vibration damper
- ❑ For correct version, refer to ⇒ Electronic parts catalogue
- ❑ Pressing out and pressing in
  ⇒ “5.3.1 Removing and installing rear flange shaft, oil seal and ball bearing”, page 105

20 - Bolt

- ❑ Renew
- ❑ 20 Nm +90°

Tightening torque and sequence for centre differential housing (bolted propshaft)

– Tighten bolts in 8 stages as follows:

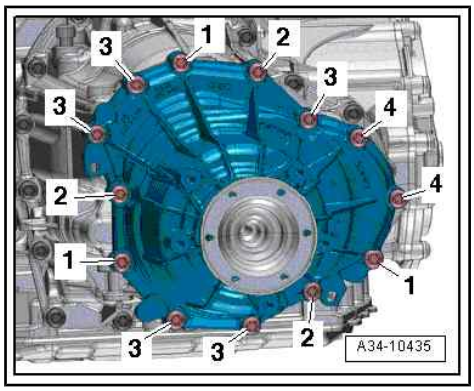

Stage	Bolts	Tightening torque/angle specification
1.	Aluminium bolts -1-	8 Nm
2.	Aluminium bolts -2-	Screw in by hand until contact is made
3.	Aluminium bolts -1-	Slacken bolts again and screw in by hand until they make contact
4.	Aluminium bolts -3-	Screw in by hand until contact is made
5.	Steel bolts -4-	Screw in by hand until contact is made
6.	-1, 2, 3, 4-	10 Nm in diagonal sequence
7.	Steel bolts -4-	15 Nm
8.	-1, 2, 3, 4-	Turn 90° further in diagonal sequence

Protected by copyright. Copying for private or commercial purposes, in part or in whole, is not permitted unless authorised by AUDI AG. AUDI AG does not guarantee or accept any liability with respect to the correctness of information in this document. Copyright by AUDI AG.

5.1.2 Exploded view - centre differential, propshaft with splines

Note

- ♦ *⇒ “1 Repair instructions”, page 1*
- ♦ *⇒ “1.1 Rules for cleanliness”, page 1*

The centre differential housing can also be removed and installed with the gearbox installed in the vehicle ⇒ page 98 .

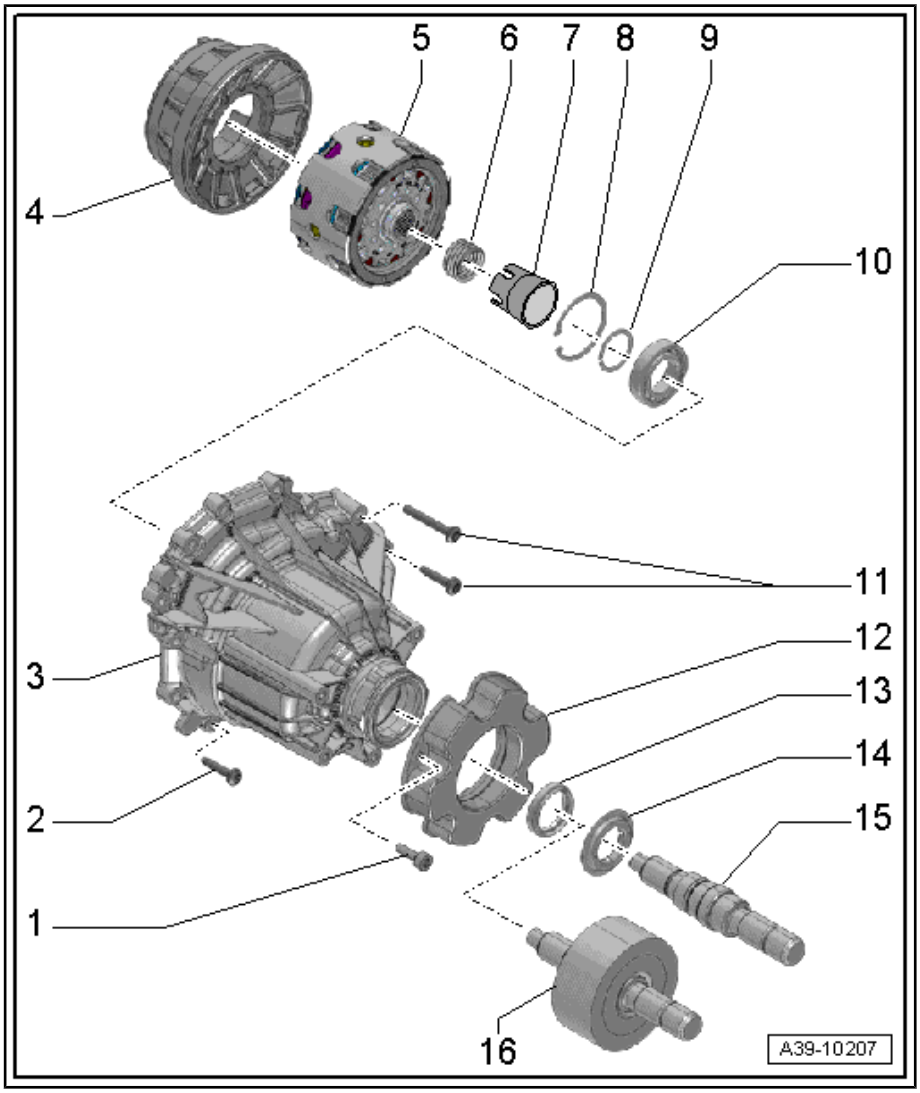

1 - Bolt
- ❑ Renew
- ❑ 20 Nm +90°

2 - Bolt
- ❑ Aluminium bolts
- ❑ 11x
- ❑ Renew
- ❑ Tightening torque and sequence ⇒ page 98

3 - Housing
- ❑ For centre differential
- ❑ ⇒ “5.2 Removing and installing centre differential”, page 98

4 - Bearing plate
- ❑ Installation position: shoulder must engage in recess in intermediate gearbox housing

5 - Centre differential

6 - Spring

7 - Assembly sleeve
- ❑ Does not have to be re-installed

8 - Circlip
- ❑ For ball bearing for rear splined shaft
- ❑ Removing and installing ⇒ “5.3.2 Removing and installing rear splined shaft, oil seal and ball bearing”, page 109

9 - Circlip
- ❑ For rear splined shaft
- ❑ Removing and installing ⇒ “5.3.2 Removing and installing rear splined shaft, oil seal and ball bearing”, page 109

Protected by copyright. Copying for private or commercial purposes, in part or in whole, is not permitted unless authorised by AUDI AG. AUDI AG does not guarantee or accept any liability with respect to the correctness of information in this document. Copyright by AUDI AG.

10 - Ball bearing
- ❑ For rear splined shaft
- ❑ ⇒ “5.3.2 Removing and installing rear splined shaft, oil seal and ball bearing”, page 109

11 - Bolt
- ❑ Steel bolts
- ❑ 2x
- ❑ Renew
- ❑ Tightening torque and sequence ⇒ page 98

12 - Damper weight
- ❑ Depending on version

13 - Oil seal
- ❑ Renewing on vehicles with vibration damper ⇒ page 109
- ❑ Renewing on vehicles without vibration damper ⇒ page 113

14 - Dust ring

- ❑ Depending on version; for vehicles without torsional vibration damper, refer to ⇒ Electronic parts catalogue
- ❑ Renew if removed

15 - Rear splined shaft without vibration damper

- ❑ For correct version, refer to ⇒ Electronic parts catalogue
- ❑ Pressing out and pressing in
  ⇒ “5.3.2 Removing and installing rear splined shaft, oil seal and ball bearing”, page 109

16 - Rear splined shaft with vibration damper

- ❑ For correct version, refer to ⇒ Electronic parts catalogue
- ❑ Pressing out and pressing in
  ⇒ “5.3.2 Removing and installing rear splined shaft, oil seal and ball bearing”, page 109

Tightening torque and sequence for centre differential housing (propshaft with splines on gearbox end)

– Tighten bolts in 8 stages as follows:

Stage	Bolts	Tightening torque/angle specification
1.	Aluminium bolts -1-	8 Nm
2.	Aluminium bolts -2-	Screw in by hand until contact is made
3.	Aluminium bolts -1-	Slacken bolts again and screw in by hand until they make contact
4.	Aluminium bolts -3-	Screw in by hand until contact is made
5.	Steel bolts -4-	Screw in by hand until contact is made
6.	-1, 2, 3, 4-	10 Nm in diagonal sequence
7.	Steel bolts -4-	15 Nm
8.	-1, 2, 3, 4-	Turn 90° further in diagonal sequence

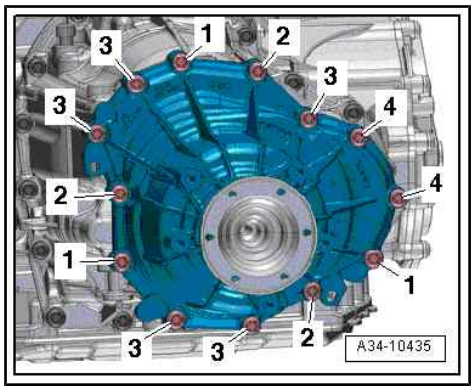

Protected by copyright. Copying for private or commercial purposes, in part or in whole, is not permitted unless authorised by AUDI AG. AUDI AG does not guarantee or accept any liability with respect to the correctness of information in this document. Copyright by AUDI AG.

5.2 Removing and installing centre differential

⇒ “5.2.1 Removing and installing centre differential - bolted propshaft”, page 98

⇒ “5.2.2 Removing and installing centre differential - propshaft with splines”, page 102

5.2.1 Removing and installing centre differential - bolted propshaft

Special tools and workshop equipment required

♦ Used oil collection and extraction unit - V.A.G 1782-

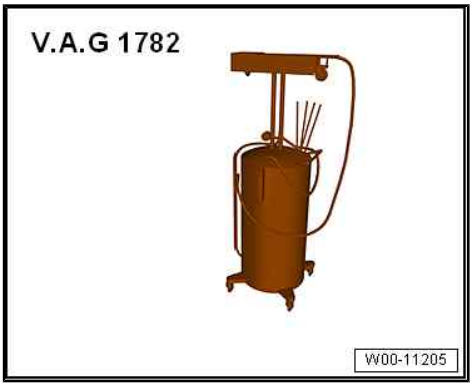

♦ Sealant ⇒ Electronic parts catalogue

Removing with gearbox in vehicle

The centre differential housing can also be removed when the gearbox is in the vehicle.

– Make preparations according to specific model ⇒ 7-speed dual clutch gearbox; Rep. gr. 39 ; Centre differential .

Removing with gearbox removed

– Secure gearbox to engine and gearbox support - VAS 6095- ⇒ page 60 .

Continued for gearbox removed or installed

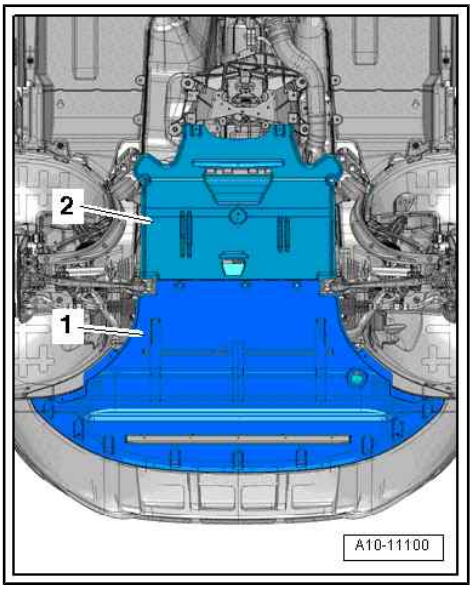

– Place used oil collection and extraction unit - V.A.G 1782- below gearbox.

– Remove bolts -1 … 4- and carefully detach centre differential housing; gear oil (MTF) will drain off.

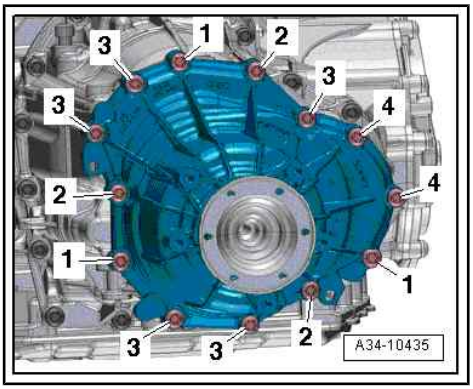

Protected by copyright. Copying for private or commercial purposes, in part or in whole, is not permitted unless authorised by AUDI AG. AUDI AG does not guarantee or accept any liability with respect to the correctness of information in this document. Copyright by AUDI AG.

Caution

Risk of damage to the centre differential.

- *Pull the centre differential housing slowly and carefully towards the rear off the gearbox. The centre differential may otherwise fall out of the gearbox.*
- *A centre differential which has fallen to the ground can no longer be installed.*

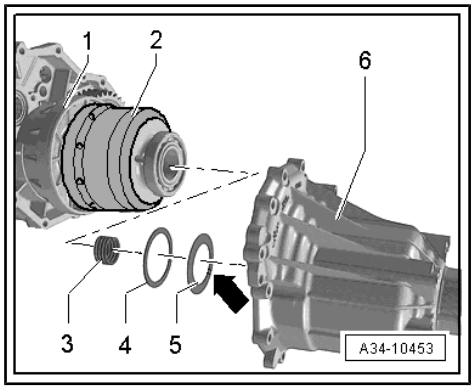

– Remove spring -3-, shim(s) -4- and dished spring -5-.

– Detach centre differential -2- towards rear.

If bearing plate -1- remains behind in centre differential housing, proceed as follows:

Caution

Risk of damage to the sealing surface of the centre differential housing.

- *Tap the housing in several places with a hammer.*

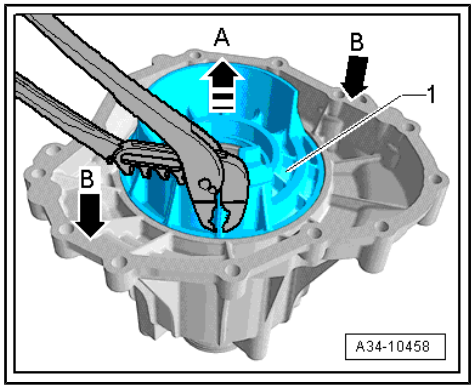

– Grip one of the side ribs on bearing plate -1- with pliers and pull off in direction of -arrow A-.

– While doing so, carefully tap alternate sides of housing -arrows B- with a rubber-headed hammer.

Installing

Installation is carried out in reverse sequence; note the following:

- Tightening torques
  ⇒ "5.1.1 Exploded view - centre differential, bolted propshaft", page 94

Note

Renew the bolts for the centre differential housing.

– Thoroughly clean both housing joint surfaces; they must be free from oil and grease.

Protected by copyright. Copying for private or commercial purposes, in part or in whole, is not permitted unless authorised by AUDI AG. AUDI AG does not guarantee or accept any liability with respect to the correctness of information in this document. Copyright by AUDI AG.

– Apply bead of sealant -arrow 1- evenly and not too thick on housing joint surface; for sealant refer to ⇒ Electronic parts catalogue .
– To avoid contact corrosion, apply a ring of sealant around each bolt hole -arrow 2-.
– Lightly lubricate fitting surfaces for bearing plate with gear oil (MTF).

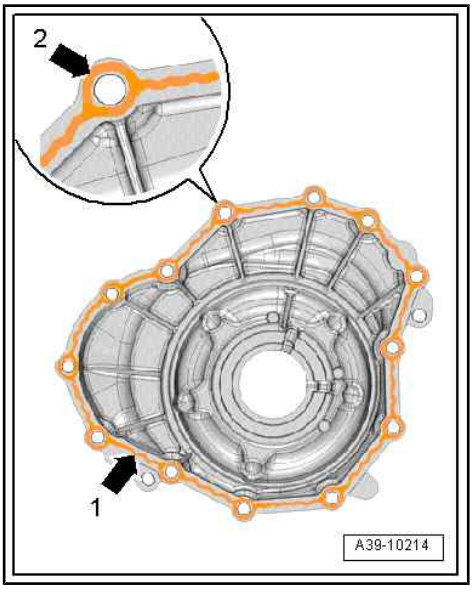

– Check that spacer sleeve -2- and shim -1- are fitted on output shaft.

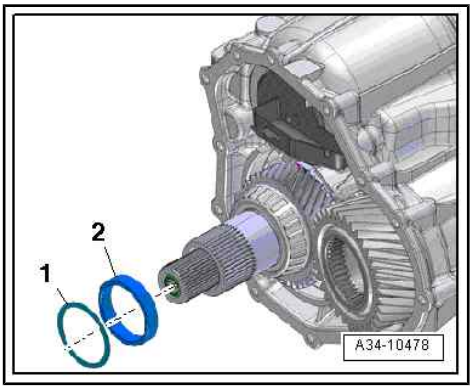

– Lightly lubricate surfaces of both races on outside of bearing plate with a small quantity of gear oil (MTF).
– Insert bearing plate.
• Installation position: shoulder of bearing plate -arrow A- must engage in recess on intermediate gearbox housing -arrow B-.

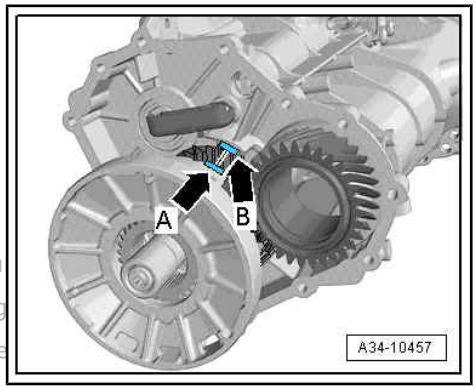

Protected by copyright. Copying for private or commercial pu
permitted unless authorised by AUDI AG. AUDI AG does not g
with respect to the correctness of information in this docume

– Fit centre differential -2- onto gearbox -1-.
– Insert spring -3- in centre differential.
– Apply a small quantity of grease to dished spring -5- and shim (s) -4- and secure in place in centre differential housing -6-.
• Installation position of dished spring: convex side (which curves outwards) faces flange shaft.

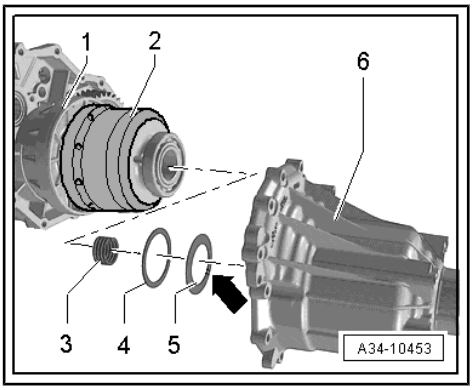

– Press centre differential housing fully onto intermediate gearbox housing, keeping it centred, and hold in place.
– Tighten bolts for centre differential housing ⇒ page 96 .
– Install gearbox ⇒ 7-speed dual clutch gearbox; Rep. gr. 34 ; Removing and installing gearbox; Installing gearbox .

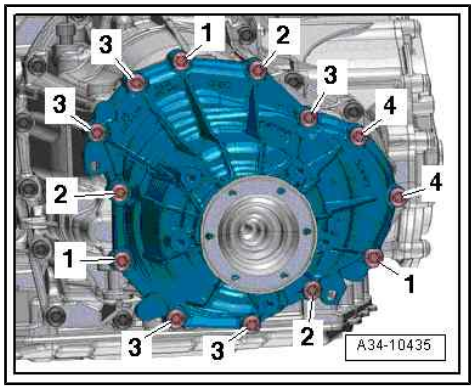

Note

Please refer to the vehicle data sticker or the identification on the rear final drive to find out which type of rear final drive is installed in the vehicle. Then select the appropriate Workshop Manual for the rear final drive.

– Install propshaft (bolted) ⇒ Rear final drive; Rep. gr. 39 ; Propshaft; Exploded view - propshaft .
– Fill up gear oil (MTF) ⇒ 7-speed dual clutch gearbox; Rep. gr. 39 ; Gear oil; Draining and filling gear oil .

5.2.2 Removing and installing centre differential - propshaft with splines

Special tools and workshop equipment required

♦ Used oil collection and extraction unit - V.A.G 1782-

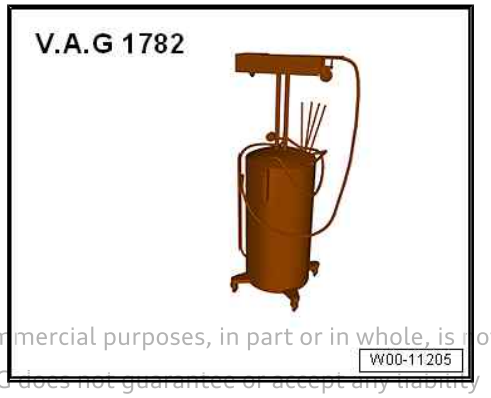

Protected by copyright. Copying for private or commercial purposes, in part or in whole, is not permitted unless authorised by AUDI AG. AUDI AG does not guarantee or accept any liability with respect to the correctness of information in this document. Copyright by AUDI AG.

♦ Sealant ⇒ Electronic parts catalogue

Removing with gearbox in vehicle

The centre differential housing can also be removed when the gearbox is in the vehicle.

– Make preparations according to specific model ⇒ 7-speed dual clutch gearbox; Rep. gr. 39 ; Centre differential .

Removing with gearbox removed

– Secure gearbox to engine and gearbox support - VAS 6095- ⇒ page 60 .

Continued for gearbox removed or installed

– Place used oil collection and extraction unit - V.A.G 1782- below gearbox.

– Remove bolts -1 … 4- and carefully detach centre differential housing; gear oil (MTF) will drain off.

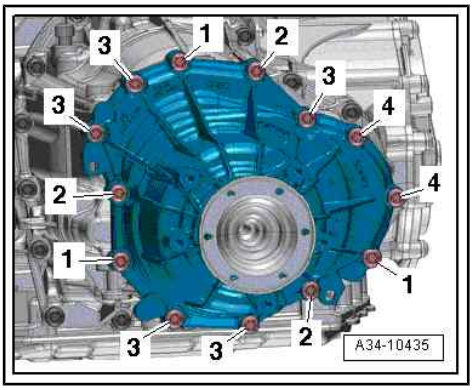

> ⚠ **Caution**
>
> ***Risk of damage to the centre differential.***
>
> ♦ ***Pull the centre differential housing slowly and carefully towards the rear off the gearbox. The centre differential may otherwise fall out of the gearbox.***
>
> ♦ ***A centre differential which has fallen to the ground can no longer be installed.***

– Remove assembly sleeve -4- and spring -3-.

– Detach centre differential -2- towards rear.

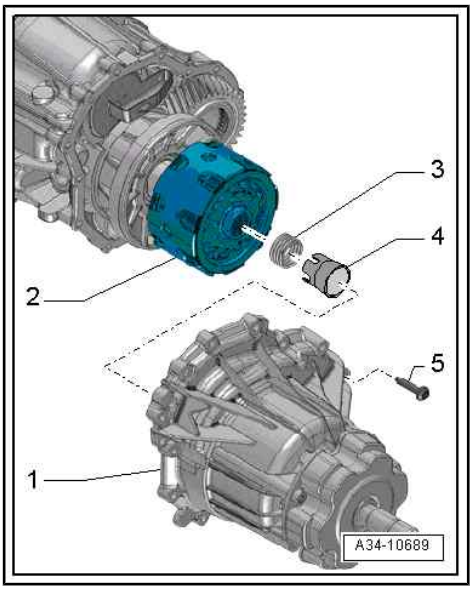

Protected by copyright. Copying for private or commercial purposes, in part or in whole, is not permitted unless authorised by AUDI AG. AUDI AG does not guarantee or accept any liability with respect to the correctness of information in this document. Copyright by AUDI AG.

If bearing plate -1- remains behind in centre differential housing, proceed as follows:

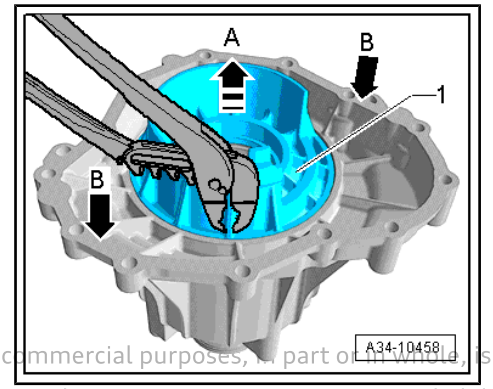

Caution

Risk of damage to the sealing surface of the centre differential housing.

- *Carefully tap the housing in several places with a hammer.*

Note

In this case, the centre differential is detached together with the centre differential housing.

Protected by copyright. Copying for private or commercial purposes, in part or in whole, is not permitted unless authorised by AUDI AG. AUDI AG does not guarantee or accept any liability with respect to the correctness of information in this document. Copyright by AUDI AG.

– Grip one of the side ribs on bearing plate -1- with pliers and pull off in direction of -arrow A-.

– While doing so, carefully tap alternate sides of housing -arrows B- with a rubber-headed hammer.

Installing

Installation is carried out in reverse sequence; note the following:

- Tightening torques
  ⇒ “5.1 Exploded view - centre differential”, page 94

Note

Renew the bolts for the centre differential housing.

– Thoroughly clean both housing joint surfaces; they must be free from oil and grease.

– Apply bead of sealant -arrow 1- evenly and not too thick on housing joint surface; for sealant refer to ⇒ Electronic parts catalogue .

– To avoid contact corrosion, apply a ring of sealant around each bolt hole -arrow 2-.

– Lightly lubricate fitting surfaces for bearing plate with gear oil (MTF).

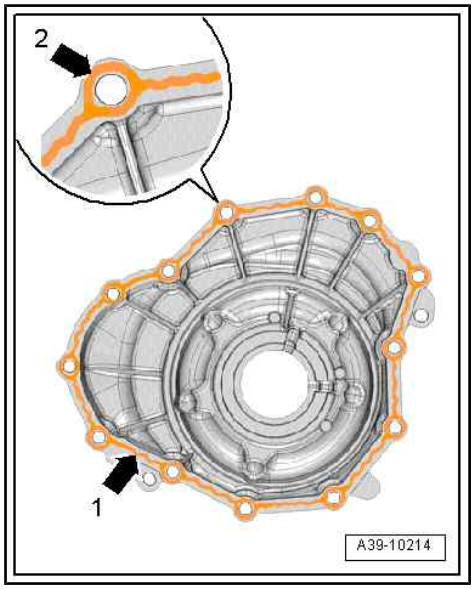

– Lightly lubricate surfaces of both races on outside of bearing plate with a small quantity of gear oil (MTF).

– Insert bearing plate.

• Installation position: shoulder of bearing plate -arrow A- must engage in recess on intermediate gearbox housing -arrow B-.

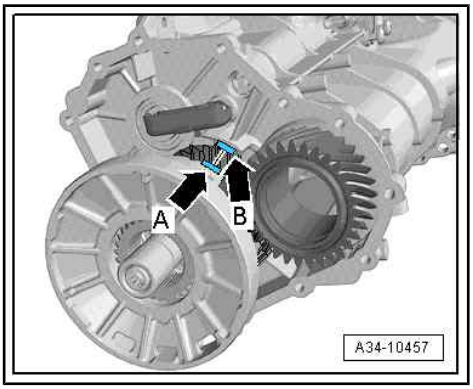

– Fit centre differential -2- onto gearbox.

Note

Assembly sleeve -4- is only required for production and does not have to be re-installed.

– Insert spring -3- in centre differential.

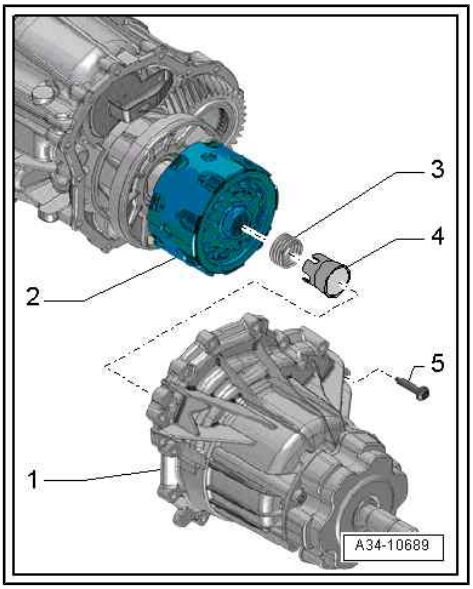

– Press centre differential housing fully onto intermediate gearbox housing, keeping it centred, and hold in place.

– Tighten bolts for centre differential housing ⇒ page 96 .

– Install gearbox ⇒ 7-speed dual clutch gearbox; Rep. gr. 34 ; Removing and installing gearbox; Installing gearbox .

Protected by copyright. Copying for private or commercial purposes, in par
permitted unless authorised by AUDI AG. AUDI AG does not guarantee or a
with

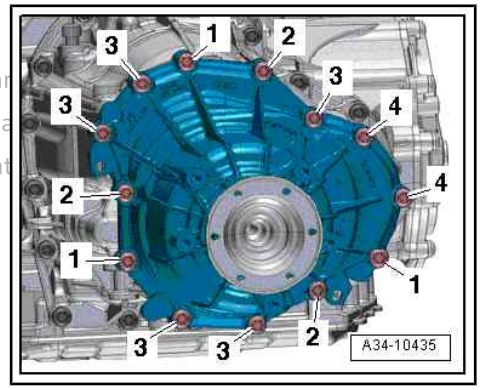

Note

Please refer to the vehicle data sticker or the identification on the rear final drive to find out which type of rear final drive is installed in the vehicle. Then select the appropriate Workshop Manual for the rear final drive.

– Install propshaft (version with splines) ⇒ Rear final drive; Rep. gr. 39 ; Propshaft; Exploded view - propshaft .

– Fill up gear oil (MTF) ⇒ 7-speed dual clutch gearbox; Rep. gr. 39 ; Gear oil; Draining and filling gear oil .

5.3 Servicing centre differential housing

⇒ "5.3.1 Removing and installing rear flange shaft, oil seal and ball bearing", page 105

⇒ "5.3.2 Removing and installing rear splined shaft, oil seal and ball bearing", page 109

5.3.1 Removing and installing rear flange shaft, oil seal and ball bearing

Special tools and workshop equipment required

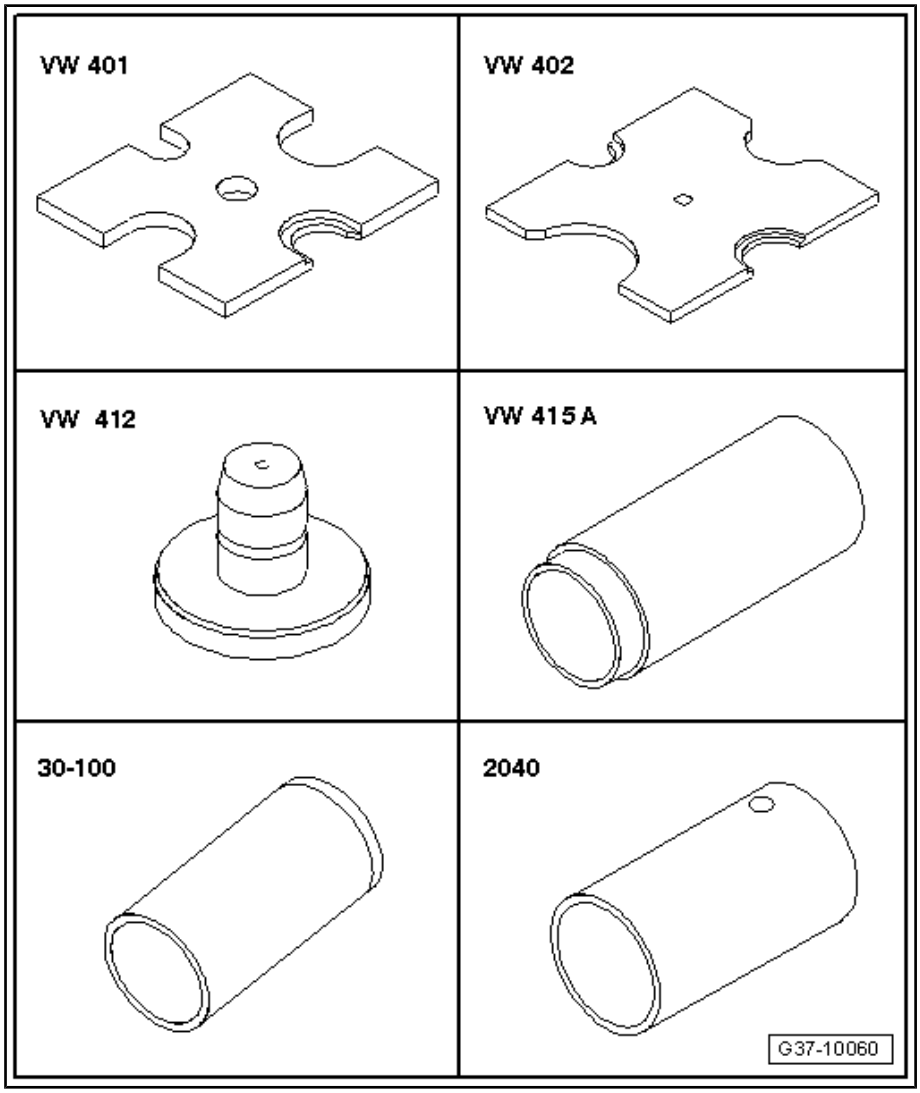

- Thrust plate - VW 401-
- Thrust plate - VW 402-
- Press tool - VW 412-
- Tube - VW 415 A-
- Drift sleeve - 30 - 100-
- Tube - 2040-
- Thrust piece - T40165-

Copyright by AUDI AG. Copying for private or commercial purposes, in part or in whole, is not permitted unless authorised by AUDI AG. AUDI AG does not guarantee or accept any liability with respect to the correctness of information in this document. Copyright by AUDI AG.

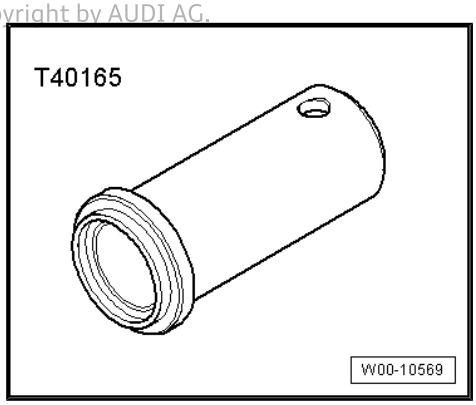

- Plate - T40285- for vehicles with torsional vibration damper or without vibration damper

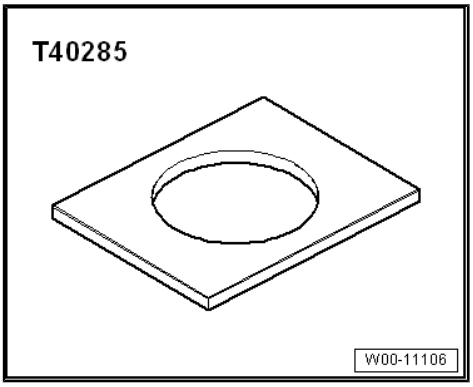

- Sealing grease ⇒ Electronic parts catalogue

Procedure

Protected by copyright. Copying for private or commercial purposes, in part or
permitted unless authorised by AUDI AG. AUDI AG does not guarantee or acce
with respect to the correctness of information in this document. Copyright by

– Remove centre differential housing ⇒ page 98 .

– Remove circlip -arrow-.

Gearboxes with vibration damper (bolted version)

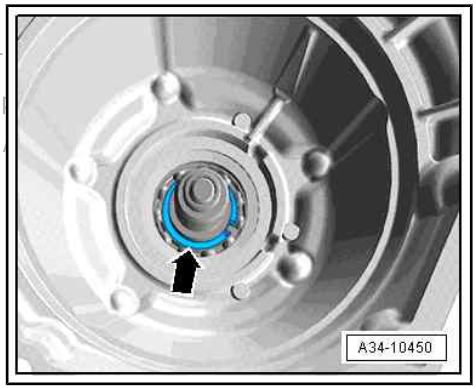

– Press out flange shaft (position centre differential housing in such a way that the flange shaft does not make contact with thrust plates -VW 401- and -VW 402- when it is pressed out).

Gearboxes with torsional vibration damper or without vibration damper

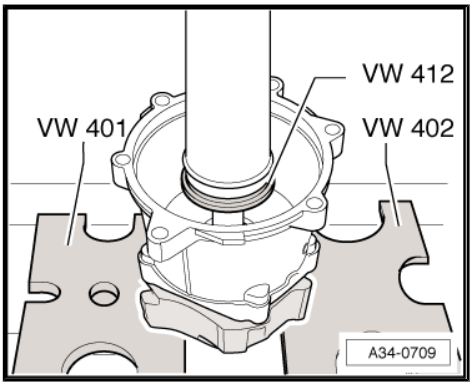

– Press out flange shaft (allow centre differential housing to rest on plate - T40285-).

All gearbox versions

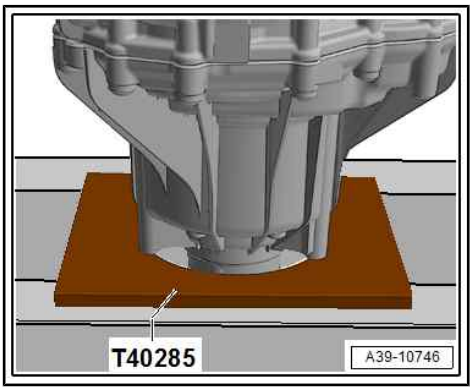

– Lever out oil seal -1-.

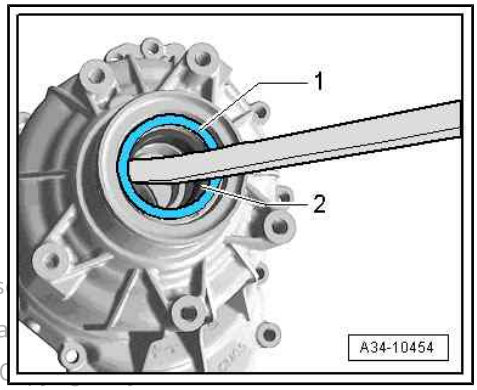

Note

Disregard -item 2-.

Protected by copyright. Copying for private or commercial purpos
permitted unless authorised by AUDI AG. AUDI AG does not guara
with respect to the correctness of information in this document. (

– If necessary, press out ball bearing for flange shaft and spacer sleeve.

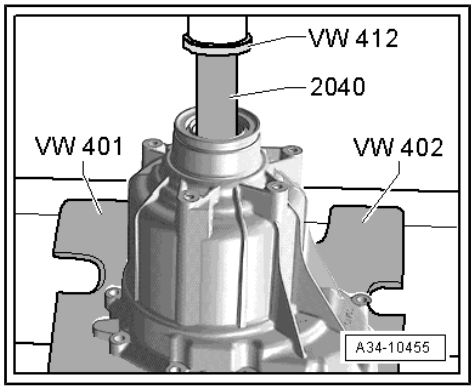

– Press in ball bearing for flange shaft.

• Collar of tube - VW 415 A- -arrow- faces press tool - VW 412- .

– Now press in spacer sleeve ⇒ Item 4 (page 95) using tube - VW 415 A- .

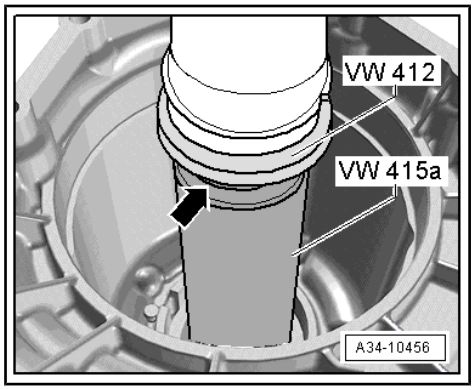

– Lightly oil outer circumference of oil seal and drive in onto stop using thrust piece - T40165- .

• Installation position: open side of oil seal points towards gearbox

– Pack space between sealing lip and dust lip half full with sealing grease; for sealing grease refer to ⇒ Electronic parts catalogue .

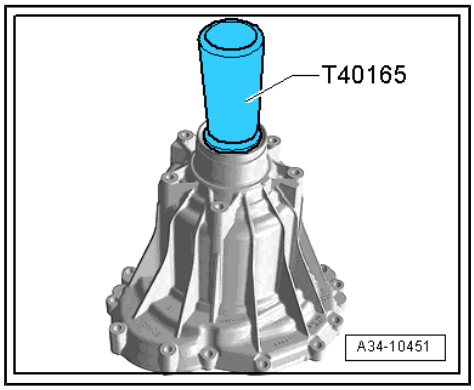

– Press in flange shaft.
– Insert flange shaft into centre differential housing from below.
– Place housing with flange shaft on thrust plate - VW 402- under workshop press.
– Press inner bearing race onto flange shaft using drift sleeve - 30 - 100- .

Protected by copyright. Copying for private or commercial purposes, in part or
permitted unless authorised by AUDI AG. AUDI AG does not guarantee or accept
with respect to the correctness of information in this document. Copyright by AUDI

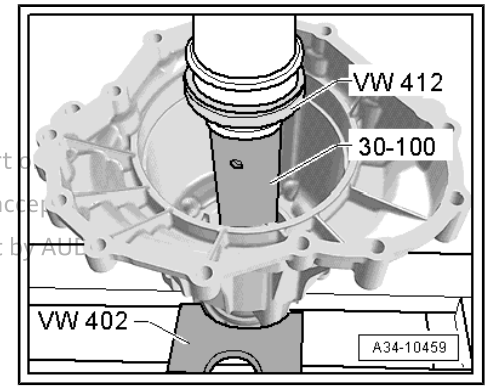

– Fit new circlip -arrow- onto flange shaft.
– Install centre differential housing ⇒ page 98 .

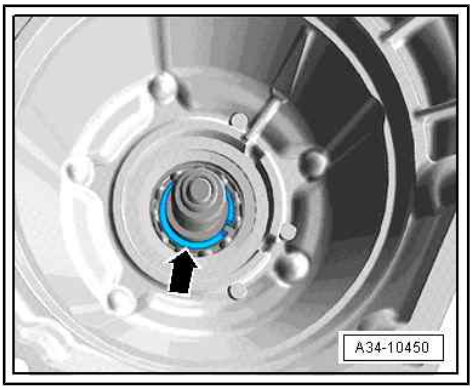

5.3.2 Removing and installing rear splined shaft, oil seal and ball bearing

Special tools and workshop equipment required

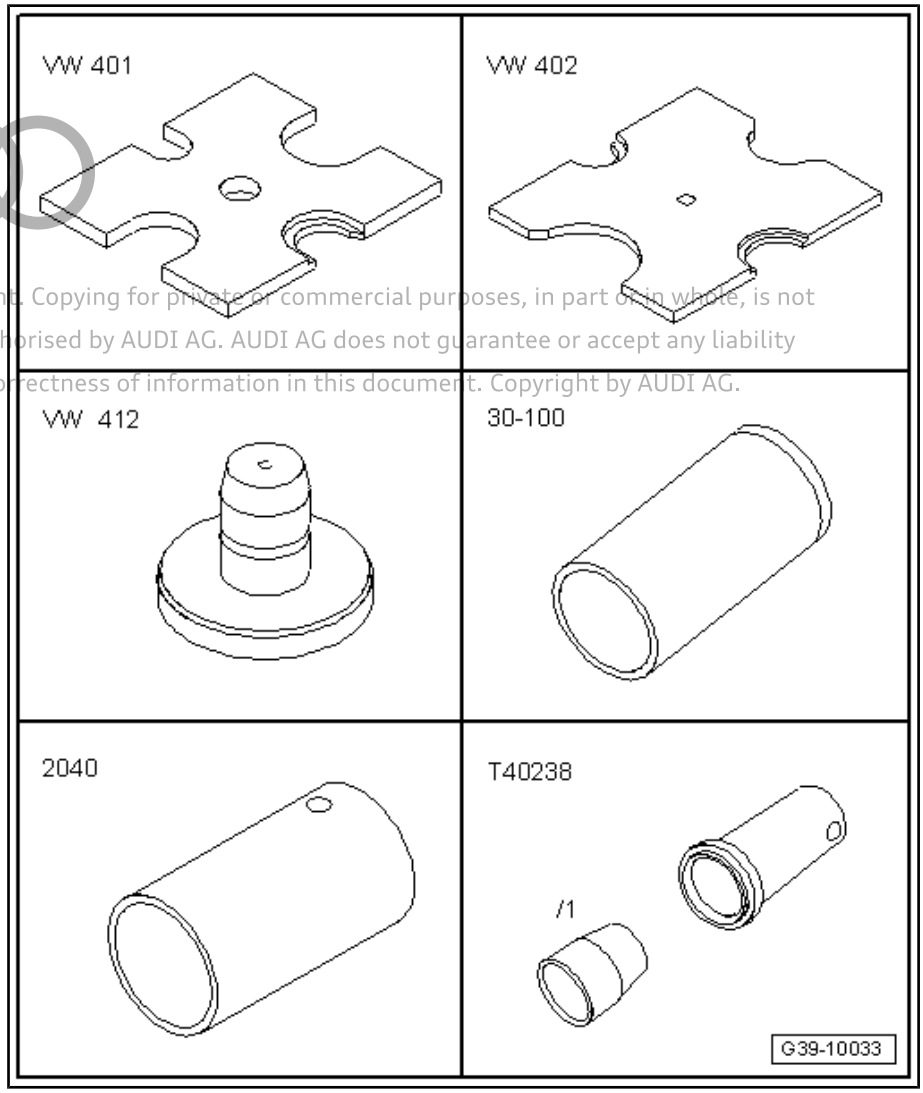

Protected by copyright. Copying for private or commercial purposes, in part or in whole, is not permitted unless authorised by AUDI AG. AUDI AG does not guarantee or accept any liability with respect to the correctness of information in this document. Copyright by AUDI AG.

- Thrust plate - VW 401-
- Thrust plate - VW 402-
- Press tool - VW 412-
- Drift sleeve - 30 - 100-
- Tube - 2040-
- Assembly tool - T40238-
- Sealing grease ⇒ Electronic parts catalogue

Procedure

– Remove centre differential housing ⇒ page 98 .

– Remove circlip -arrow A-.

– Additionally remove circlip -arrow B- if ball bearing is also being removed.

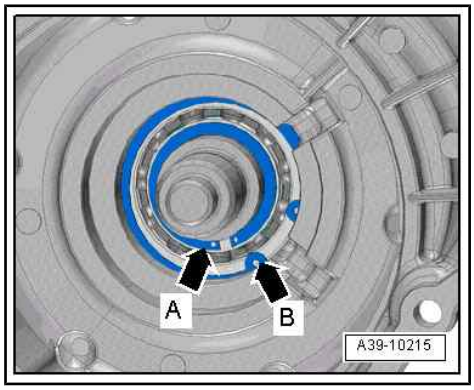

Rear splined shaft without vibration damper:

– Pry off dust ring -1-.

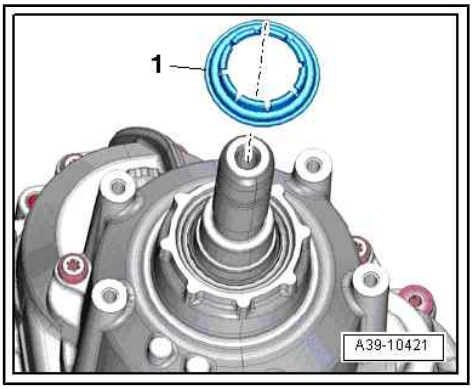

Note

The dust ring cannot be removed without being damaged.

– Press out rear splined shaft (position centre differential housing in such a way that the shaft does not make contact with thrust plates -VW 401- and -VW 402- when it is pressed out).

Rear splined shaft with vibration damper:

– Press out rear splined shaft (position centre differential housing in such a way that the vibration damper does not make contact with thrust plates -VW 401- and -VW 402- when the shaft is pressed out).

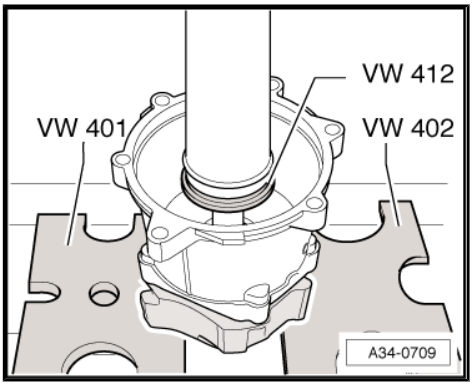

Both types:

– Lever out oil seal -1-.

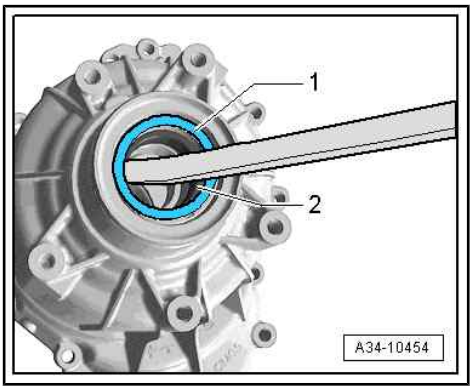

Note

Disregard -item 2-.

– If necessary, press out ball bearing for rear splined shaft.

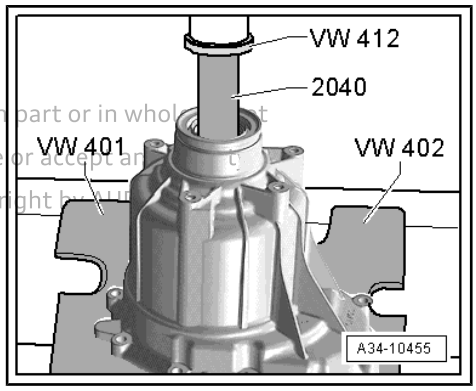

Protected by copyright. Copying for private or commercial purposes, in part or in whole, is not permitted unless authorised by AUDI AG. AUDI AG does not guarantee or accept any liability with respect to the correctness of information in this document. Copyright by AUDI AG.

– Press in ball bearing for rear splined shaft.

• Collar of tube - VW 415 A- -arrow- faces press tool - VW 412- .

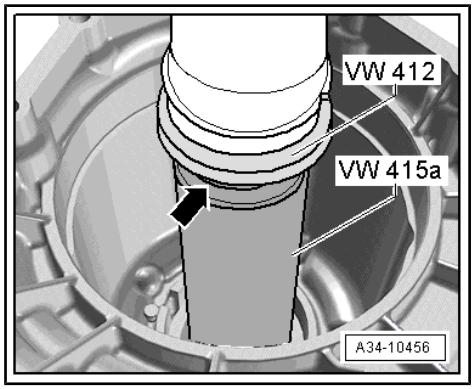

– Lightly oil outer circumference of oil seal and drive in onto stop using assembly tool - T40238- .

• Installation position: open side of oil seal points towards gearbox

– Pack space between sealing lip and dust lip half full with sealing grease; for sealing grease refer to ⇒ Electronic parts catalogue .

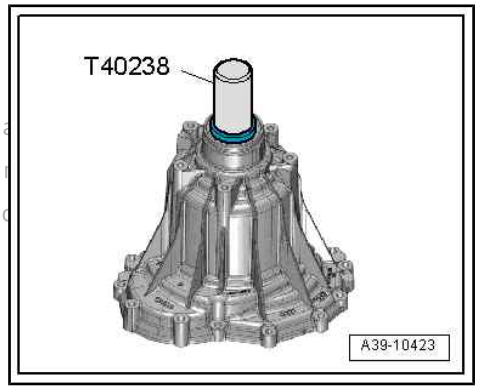

Protected by copyright. Copying for private or commercia
permitted unless authorised by AUDI AG. AUDI AG does n
with respect to the correctness of information in this doc

– Press rear splined shaft into centre differential housing as follows:

– If originally fitted, secure vibration damper to centre differential housing. Tightening torque
⇒ “5.1 Exploded view - centre differential”, page 94

– Insert rear splined shaft into centre differential housing from below.

– Place housing with rear splined shaft on thrust plate - VW 402- under workshop press.

– Position drift sleeve - 30 - 100- on inner race of ball bearing.

– Press in rear splined shaft.

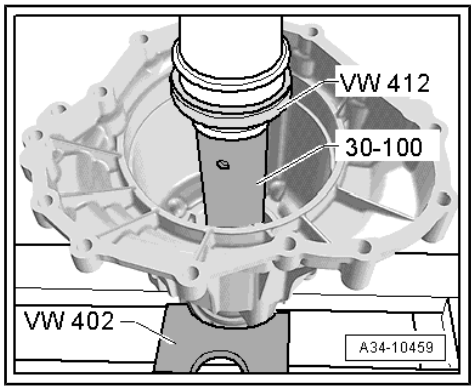

– Fit new circlips -arrow A- for rear splined shaft and -arrow B- for ball bearing.

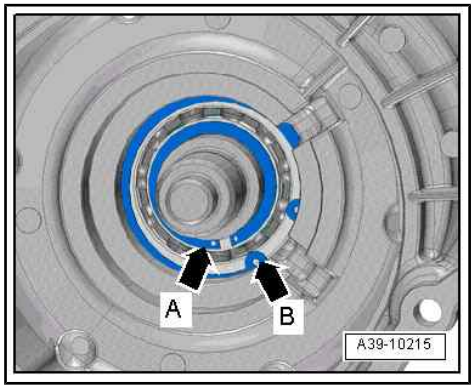

Rear splined shaft without vibration damper:

– Clip on new dust ring -1-.

Both types:

– Install centre differential housing ⇒ page 98 .

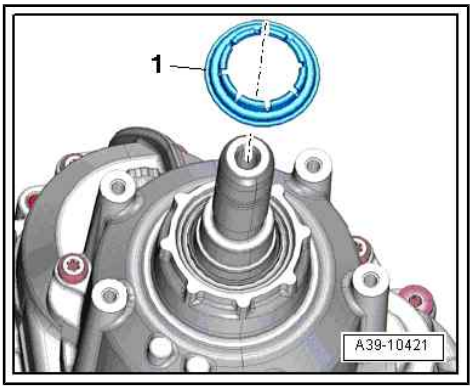

5.4 Renewing oil seal for rear splined shaft

⇒ "5.4.1 Renewing oil seal for rear splined shaft - rear splined shaft without vibration damper", page 113

⇒ "5.4.2 Renewing oil seal for rear splined shaft - rear splined shaft with vibration damper", page 116

5.4.1 Renewing oil seal for rear splined shaft - rear splined shaft without vibration damper

Special tools and workshop equipment required

♦ Extractor hook -T20143/1-

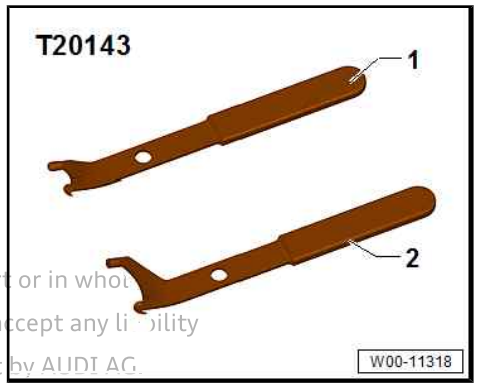

Protected by copyright. Copying for private or commercial purposes, in part or in whole, is not permitted unless authorised by AUDI AG. AUDI AG does not guarantee or accept any liability with respect to the correctness of information in this document. Copyright by AUDI AG.

♦ Assembly tool - T40238-

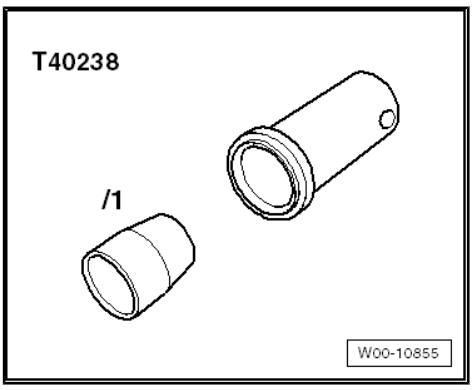

♦ Sealing grease ⇒ Electronic parts catalogue

Procedure

Note

- ⇒ *"1 Repair instructions", page 1*
- ⇒ *"1.1 Rules for cleanliness", page 1*

Gearbox installed

Oil seal for rear splined shaft can be renewed with gearbox installed.

Note

Please refer to the vehicle data sticker or the identification on the rear final drive to find out which type of rear final drive is installed in the vehicle. Then select the appropriate Workshop Manual for the rear final drive.

Protected by copyright. Copying for private or commercial purposes, in part or in whole, is not permitted unless authorised by AUDI AG. AUDI AG does not guarantee or accept any liability with respect to the correctness of information in this document. Copyright by AUDI AG.

– Remove propshaft (version with splines) ⇒ Rear final drive; Rep. gr. 39 ; Propshaft; Removing and installing propshaft .

Gearbox removed

– Use tensioning strap -1- to secure gearbox to gearbox support - T40173- .

or

– Gearbox is secured to engine and gearbox support - VAS 6095- ⇒ page 60 .

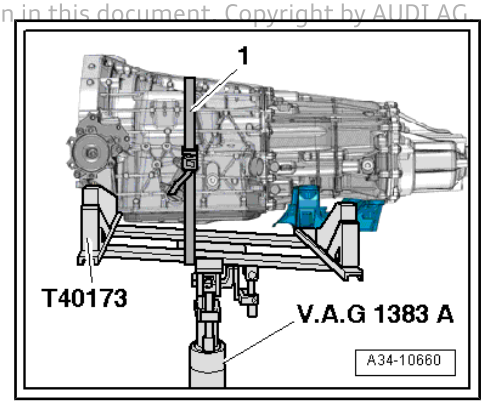

Continued for gearbox removed or installed

– Pry off dust ring -1-.

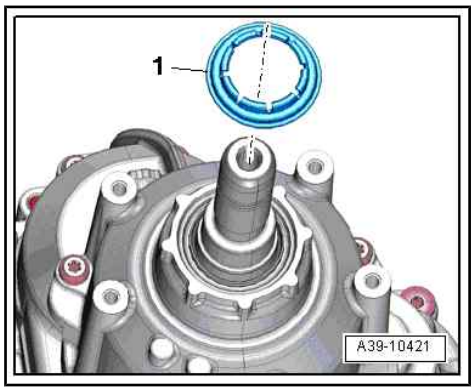

Note

The dust ring cannot be removed without being damaged.

– Pull out oil seal for rear splined shaft.
– Clean contact surface and sealing surface.
– Lubricate outer circumference of seal with gear oil.

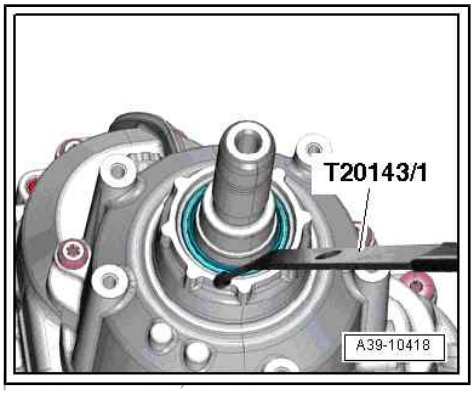

Protected by copyright. Copying for private or commercial purposes, in part or in whole, is not permitted unless authorized by AUDI AG. AUDI AG does not guarantee or assume any liability with respect to the correctness of information in this document. Copyright by AUDI AG.

– Fit guide sleeve -T40238/1- -item 1- onto rear splined shaft.
– Pack space between sealing lip and dust lip half full with sealing grease; for sealing grease refer to ⇒ Electronic parts catalogue .
– Slide on oil seal -2-.
• Installation position: the open side of the seal should face the gearbox housing.

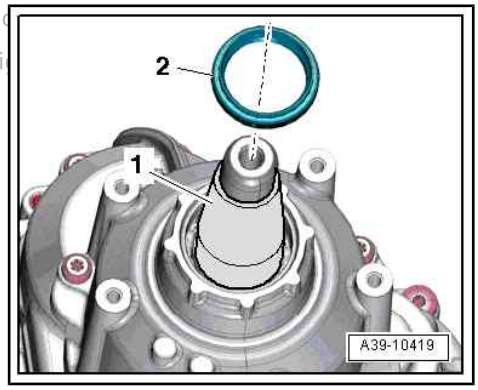

– Drive in oil seal evenly all round as far as stop using assembly tool - T40238- . Make sure oil seal remains straight.

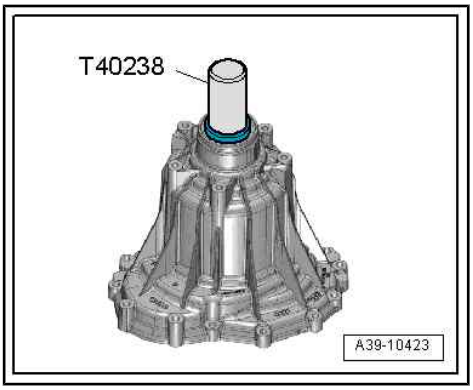

– Clip on new dust ring -1-.
– Install gearbox ⇒ 7-speed dual clutch gearbox; Rep. gr. 34 ; Removing and installing gearbox; Installing gearbox .

Continued for gearbox installed

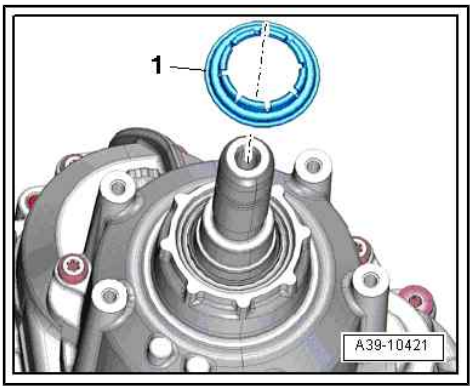

Note

Please refer to the vehicle data sticker or the identification on the rear final drive to find out which type of rear final drive is installed in the vehicle. Then select the appropriate Workshop Manual for the rear final drive.

– Install propshaft (version with splines) ⇒ Rear final drive; Rep. gr. 39 ; Propshaft; Exploded view - propshaft .
– Fill up gear oil (MTF) ⇒ 7-speed dual clutch gearbox; Rep. gr. 39 ; Gear oil; Draining and filling gear oil .

5.4.2 Renewing oil seal for rear splined shaft - rear splined shaft with vibration damper

On vehicles with vibration damper the rear splined shaft must be removed in order to renew the oil seal for the rear splined shaft.

⇒ “5.3.2 Removing and installing rear splined shaft, oil seal and ball bearing”, page 109

Protected by copyright. Copying for private or commercial purposes, in part or in whole, is not permitted unless authorised by AUDI AG. AUDI AG does not guarantee or accept any liability with respect to the correctness of information in this document. Copyright by AUDI AG.