SPECIFICATIONS

FASTENER TIGHTENING SPECIFICATIONS

Fastener Tightening Specifications

Application	Specification	
	Metric	English
Brake Caliper Bleed Screw	12 N.m	106 lb in
Brake Caliper Guide Pin Bolt	31 N.m	23 lb ft
Brake Caliper Inlet Fitting Bolt	45 N.m	33 lb ft
Front Brake Caliper Mounting Bracket Bolt	175 N.m	125 lb ft
Rear Brake Caliper Mounting Bracket Bolt	175 N.m	125 lb ft

DISC BRAKE COMPONENT SPECIFICATIONS

Disc Brake Component Specifications

Application	Specification	
	Metric	English
Front Brakes		
• Rotor Discard Thickness	30.3 mm	1.19 in
• Rotor Maximum Allowable Assembled Lateral Runout	0.06 mm	0.002 in
• Rotor Maximum Allowable Scoring	1.50 mm	0.059 in
• Rotor Maximum Allowable Thickness Variation	0.025 mm	0.001 in
• Rotor Minimum Allowable Thickness After Refinish	30.6 mm	1.205 in
• Rotor Thickness - New	32 mm	1.26 in
Rear Brakes		
• Rotor Discard Thickness	24.5 mm	0.965 in
• Rotor Maximum Allowable Assembled Lateral Runout	0.06 mm	0.002 in
• Rotor Maximum Allowable Scoring	1.50 mm	0.059 in
• Rotor Maximum Allowable Thickness Variation	0.025 mm	0.001 in
• Rotor Minimum Allowable Thickness After Refinish	24.9 mm	0.980 in
• Rotor Thickness - New	26 mm	1.02 in

DIAGNOSTIC INFORMATION AND PROCEDURES

DIAGNOSTIC STARTING POINT - DISC BRAKES

Begin the disc brake system diagnosis with **Diagnostic Starting Point - Hydraulic Brakes** in Hydraulic Brakes. The use of the Diagnostic Starting Point will lead to the identification of the correct procedure for diagnosing the system and where the procedure is located.

BRAKE ROTOR THICKNESS MEASUREMENT

CAUTION: Refer to Brake Dust Caution in Cautions and Notices.

1. If the inboard friction surface of the brake rotor is not accessible, reposition and support the caliper with the brake pads. Refer to **Brake Pads Replacement - Front** and/or **Brake Pads Replacement - Rear** .
2. Clean the friction surfaces of the brake rotor with denatured alcohol, or an equivalent approved brake cleaner.

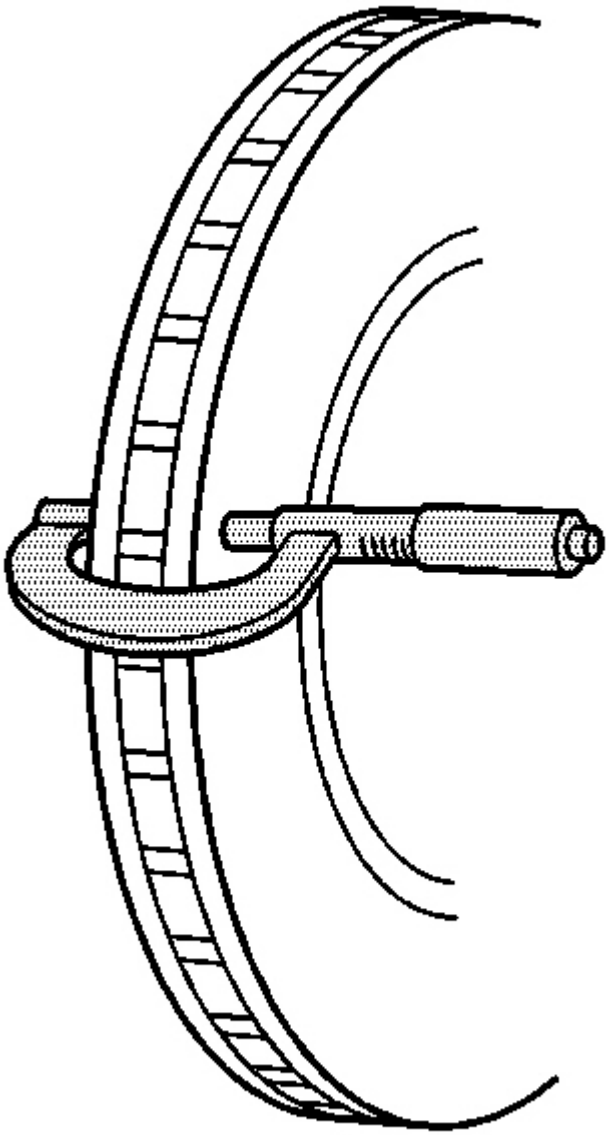

<u>Fig. 1: Measuring Brake Rotor</u>
Courtesy of GENERAL MOTORS CORP.

3. Using a micrometer calibrated in thousanths-of-a-millimeter, or ten-thousanths-of-an-inch, measure and record the thickness of the brake rotor at four or more points, evenly spaced around the rotor.

   Ensure that the measurements are only taken within the friction surfaces and that the micrometer is

positioned the same distance from the outer edge of the rotor, about 13 mm (1/2 in), for each measurement.

4. Compare the lowest thickness measurement recorded to the following specifications:

   Specification:
   - Front brake rotor minimum allowable thickness after refinishing: 30.6 mm (1.205 in)
   - Front brake rotor discard thickness: 30.3 mm (1.19 in)
   - Rear brake rotor minimum allowable thickness after refinishing: 24.9 mm (0.980 in)
   - Rear brake rotor discard thickness: 24.5 mm (0.965 in)

5. If the lowest thickness measurement of the brake rotor is above the minimum allowable thickness after refinishing specification, the rotor may be able to be refinished, depending upon surface and wear conditions which may be present.
6. If the lowest thickness measurement of the brake rotor is at or below the minimum allowable thickness after refinishing specification, the rotor may not be refinished.
7. If the lowest thickness measurement of the brake rotor is at or below the discard thickness specification, the rotor requires replacement.

BRAKE ROTOR THICKNESS VARIATION MEASUREMENT

CAUTION: Refer to Brake Dust Caution in Cautions and Notices.

IMPORTANT: Any disc brake rotor that exhibits thickness variation exceeding the maximum acceptable level must be refinished or replaced. Thickness variation exceeding the maximum acceptable level can cause brake pulsation.

1. If the inboard friction surface of the brake rotor is not accessible, reposition and support the caliper with the brake pads. Refer to **Brake Pads Replacement - Front** and/or **Brake Pads Replacement - Rear** .
2. Clean the friction surfaces of the brake rotor with denatured alcohol, or an equivalent approved brake cleaner.

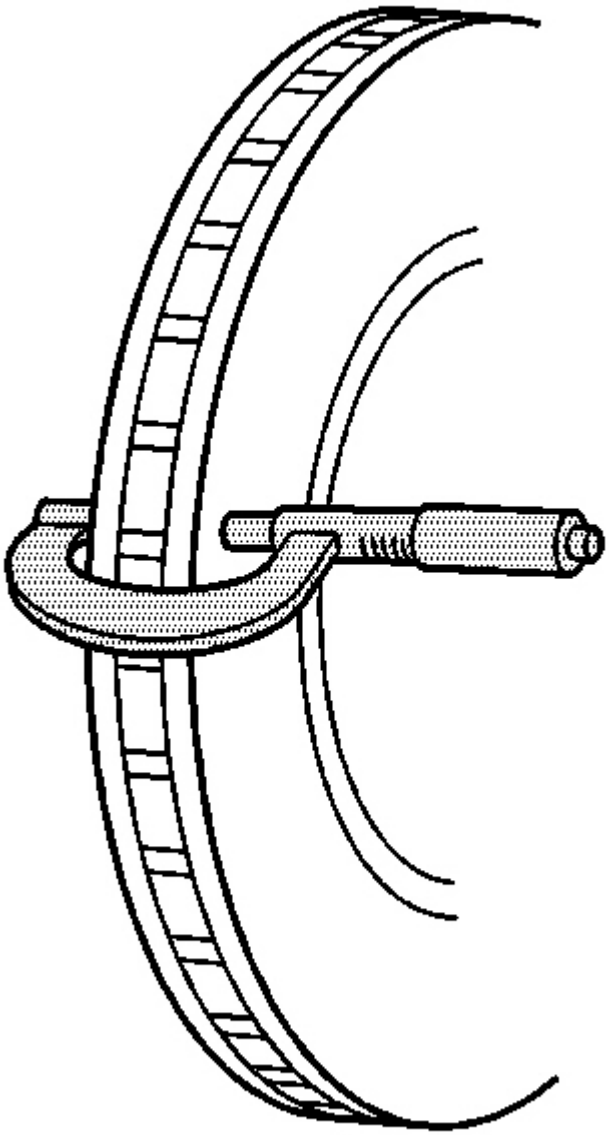

<u>Fig. 2: Measuring Brake Rotor</u>
Courtesy of GENERAL MOTORS CORP.

3. Using a micrometer calibrated in thousanths-of-a-millimeter, or ten-thousanths-of-an-inch, measure and record the thickness of the brake rotor at four or more points, evenly spaced around the rotor.

   Ensure that the measurements are only taken within the friction surfaces and that the micrometer is

positioned the same distance from the outer edge of the rotor, about 13 mm (1/2 in), for each measurement.

4. Calculate the difference between the highest and lowest thickness measurements recorded to obtain the amount of thickness variation.
5. Compare the thickness variation measurement to the following specification:

   Specification: Brake rotor maximum allowable thickness variation: 0.02 mm (0.001 in)

   IMPORTANT: Whenever a brake rotor is refinished or replaced, the assembled lateral runout (LRO) of the rotor must be measured to ensure optimum performance of the disc brakes.

6. If the brake rotor thickness variation measurement exceeds the specification, the rotor requires refinishing or replacement.

BRAKE ROTOR SURFACE AND WEAR INSPECTION

CAUTION: Refer to Brake Dust Caution in Cautions and Notices.

1. If the inboard friction surface of the brake rotor is not accessible, reposition and support the caliper with the brake pads. Refer to **Brake Pads Replacement - Front** and/or **Brake Pads Replacement - Rear** .
2. Clean the friction surfaces of the brake rotor with denatured alcohol, or an equivalent approved brake cleaner.
3. Inspect the friction surfaces of the brake rotor for the following Braking Surface Conditions:
   - Heavy rust and/or pitting

     Light surface rust can be removed with an abrasive disc. Heavy surface rust and/or pitting must be removed by refinishing the rotor.

   - Cracks and/or heat spots
   - Excessive blueing discoloration
4. If the friction surfaces of the brake rotor exhibit one or more of the Braking Surface Conditions, the rotor requires refinishing or replacement.

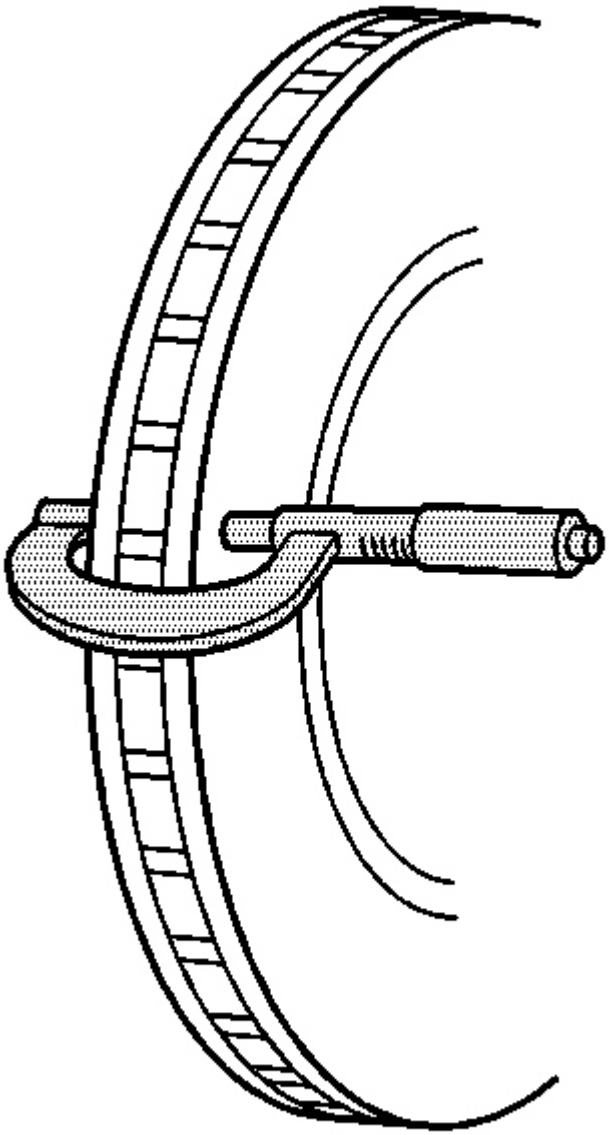

Fig. 3: Measuring Brake Rotor
Courtesy of GENERAL MOTORS CORP.

5. Using a micrometer calibrated in thousanths-of-a-millimeter, or ten-thousanths-of-an-inch, measure and record the scoring depth of any grooves present on the rotor friction surfaces.
6. Compare the groove scoring depth recorded to the following specification:

Specification: Brake rotor maximum allowable scoring: 1.50 mm (0.059 in)

7. If the brake rotor scoring depth exceeds the specification, or if an excessive amount of scoring is present, the rotor requires refinishing or replacement.

BRAKE ROTOR ASSEMBLED LATERAL RUNOUT (LRO) MEASUREMENT

Tools Required

- **J 39544-KIT** Torque-Limiting Socket Set, or equivalent. See **Special Tools and Equipment** .
- **J 41013** Rotor Resurfacing Kit. See **Special Tools and Equipment** .
- **J 42450-A** Wheel Hub Resurfacing Kit. See **Special Tools and Equipment** .
- **J 45101** Hub and Wheel Runout Gage. See **Special Tools and Equipment** .
- **J 45101-100** Conical Brake Rotor Washers. See **Special Tools and Equipment** .

CAUTION: Refer to Brake Dust Caution in Cautions and Notices.

IMPORTANT:

- **Brake rotor assembled lateral runout (LRO) exceeding the maximum allowable specification can cause thickness variation to develop in the brake rotor over time, usually between 4 800-11 300 km (3,000-7,000 mi).**
- **Brake rotor thickness variation MUST be checked BEFORE checking for assembled lateral runout (LRO). Thickness variation exceeding the maximum acceptable level can cause brake pulsation. Refer to Brake Rotor Thickness Variation Measurement .**

1. Matchmark the position of the brake rotor to the wheel studs if this has not been done already.

IMPORTANT: Whenever the brake rotor has been separated from the hub/axle flange, any rust or contaminants should be cleaned from the hub/axle flange and the brake rotor mating surfaces. Failure to do this may result in excessive assembled lateral runout (LRO) of the brake rotor, which could lead to brake pulsation.

2. Inspect the mating surface of the hub/axle flange and the brake rotor to ensure that there are no foreign particles, corrosion, rust, or debris remaining. If the wheel hub/axle flange and/or if the brake rotor mating surfaces exhibit these conditions, perform the following steps:
   1. Remove the brake rotor from the vehicle. Refer to **Brake Rotor Replacement - Front** and/or **Brake Rotor Replacement - Rear** .
   2. Using the **J 42450-A** , thoroughly clean any rust or corrosion from the mating surface of the hub/axle flange. See **Special Tools and Equipment** .
   3. Using the **J 41013** , thoroughly clean any rust or corrosion from the mating surface of the brake rotor. See **Special Tools and Equipment** .

4. Clean the friction surfaces of the brake rotor with denatured alcohol, or an equivalent approved brake cleaner.

3. Install the rotor to the hub/axle flange using the matchmark made prior to removal.

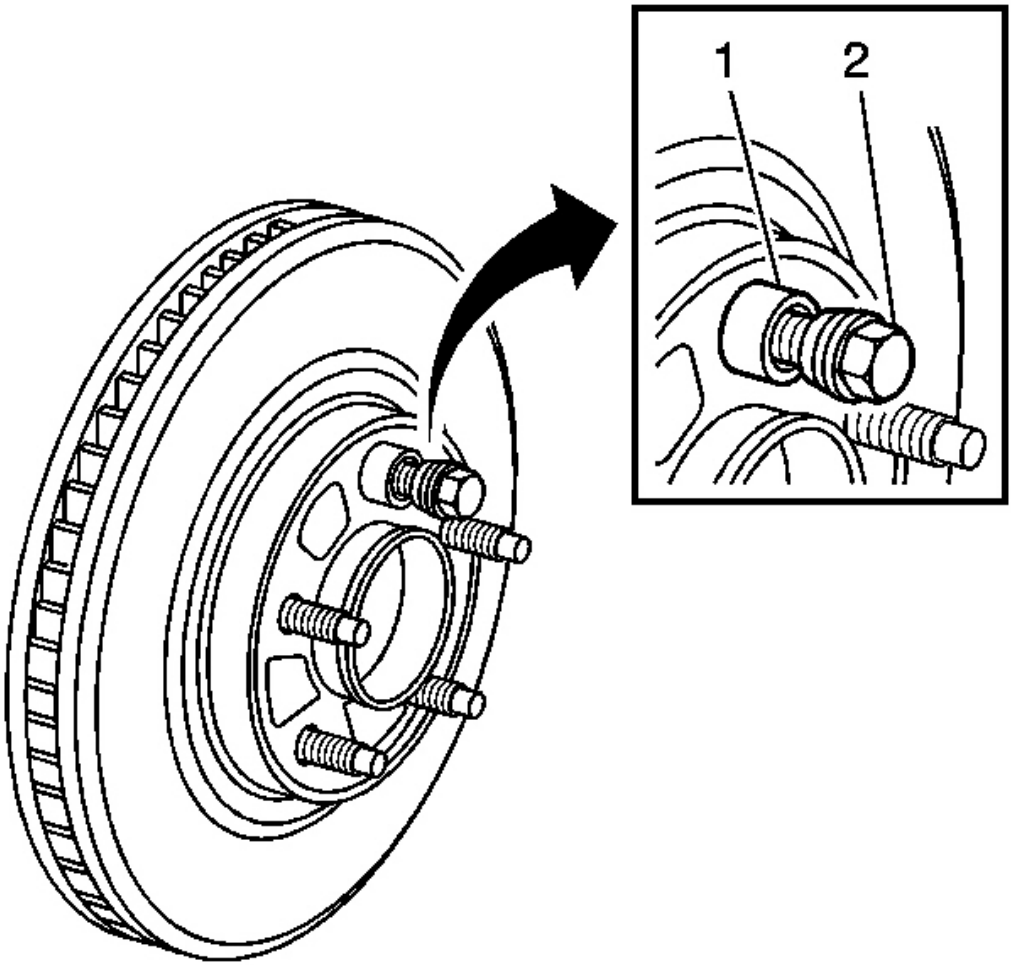

Fig. 4: Identifying J 45101-100
Courtesy of GENERAL MOTORS CORP.

4. Hold the rotor firmly in place against the hub/axle flange and install one of the **J 45101-100** (1), and one lug nut (2) onto the upper-most wheel stud. See **Special Tools and Equipment** .
5. Continue to hold the rotor secure and tighten the lug nut firmly by hand.

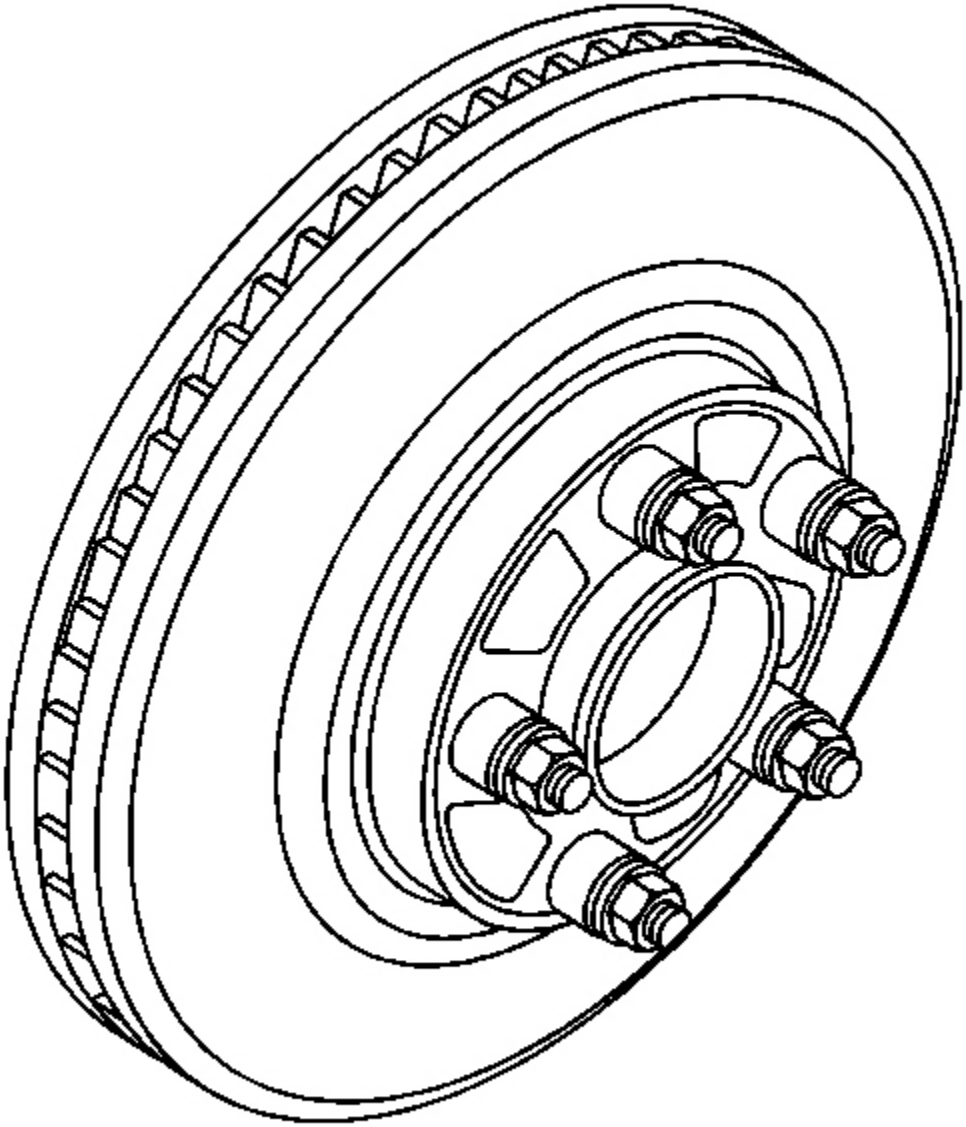

Fig. 5: Identifying Brake Rotor
Courtesy of GENERAL MOTORS CORP.

6. Install the remaining **J 45101-100** and lug nuts onto the wheel studs and tighten the nuts firmly by hand in a star-pattern. See **Special Tools and Equipment** .
7. Using the **J 39544-KIT** , or equivalent, tighten the lug nuts in a star-pattern to specification, in order to properly secure the rotor. See **Special Tools and Equipment** . Refer to **Tire and Wheel Removal and**

Installation in Tires and Wheels.

8. If the brake rotor has been REFINISHED or REPLACED with a new rotor, proceed to step 14.
9. If the brake rotor meets the following criteria, proceed to step 10.
    - The rotor is within specifications and is being REUSED
    - The rotor has NOT been refinished
    - The rotor does NOT exhibit thickness variation exceeding the maximum allowable level

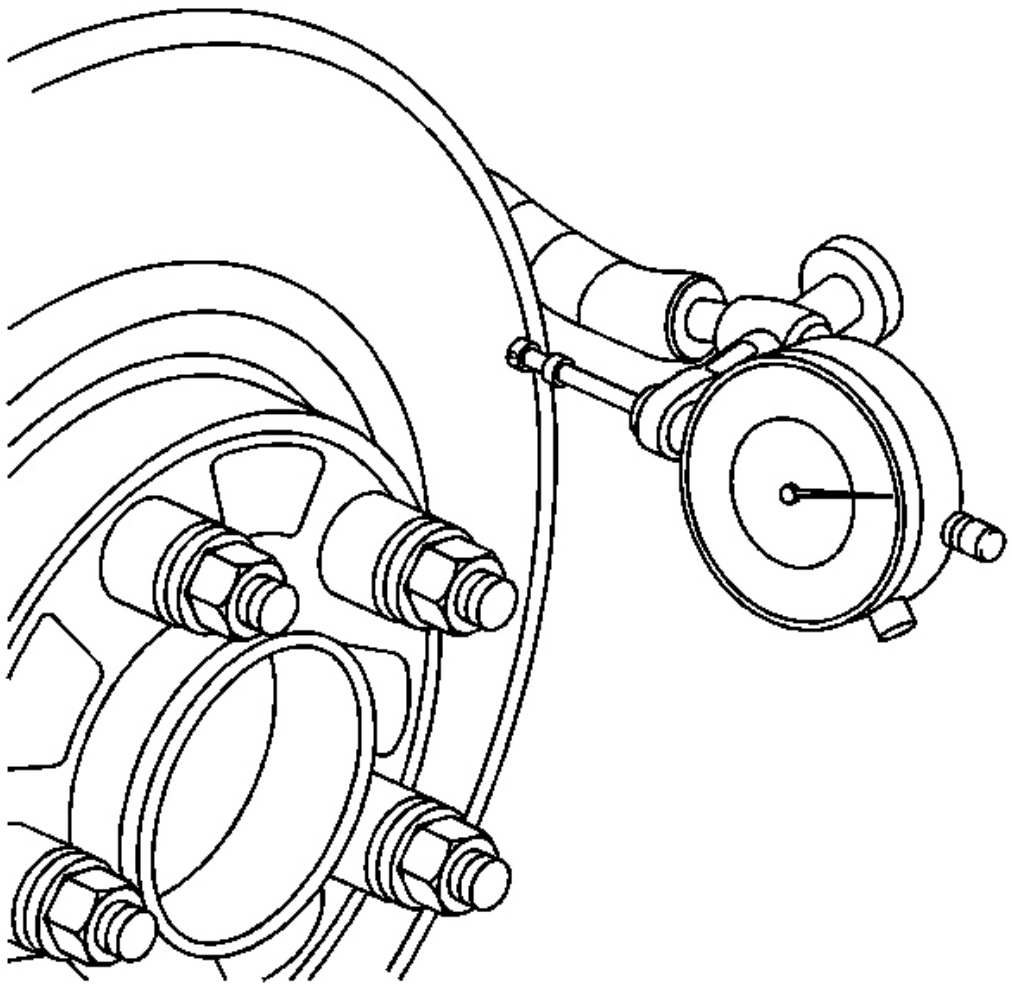

Fig. 6: Using Dial Indicator To Measure Lateral Runout
Courtesy of GENERAL MOTORS CORP.

10. Mount a dial indicator, **J 45101** , or equivalent, to the steering knuckle and position the indicator button

so it contacts the brake rotor friction surface at a 90 degree angle, approximately 13 mm (0. See **Special Tools and Equipment** .5 in) from the outer edge of the rotor.

11. Measure and record the assembled LRO of the brake rotor.
    1. Rotate the rotor until the lowest reading is displayed on the indicator dial, then set the dial to zero.
    2. Rotate the rotor until the highest reading is displayed on the dial.
    3. Mark the location of the high spot relative to the nearest wheel stud, or studs.
    4. Measure and record the amount of LRO.
12. Compare the brake rotor assembled LRO to the following specification:

    Specification:

    - Front brake rotor maximum allowable assembled lateral runout: 0.05 mm (0.002 in)
    - Rear brake rotor maximum allowable assembled lateral runout: 0.05 mm (0.002 in)

13. If the brake rotor assembled LRO is within specifications, proceed to step 18.

    If the brake rotor assembled LRO exceeds the specification, refinish the rotor to ensure true parallelism, refer to **Brake Rotor Refinishing** . After refinishing the rotor, proceed to step 14.

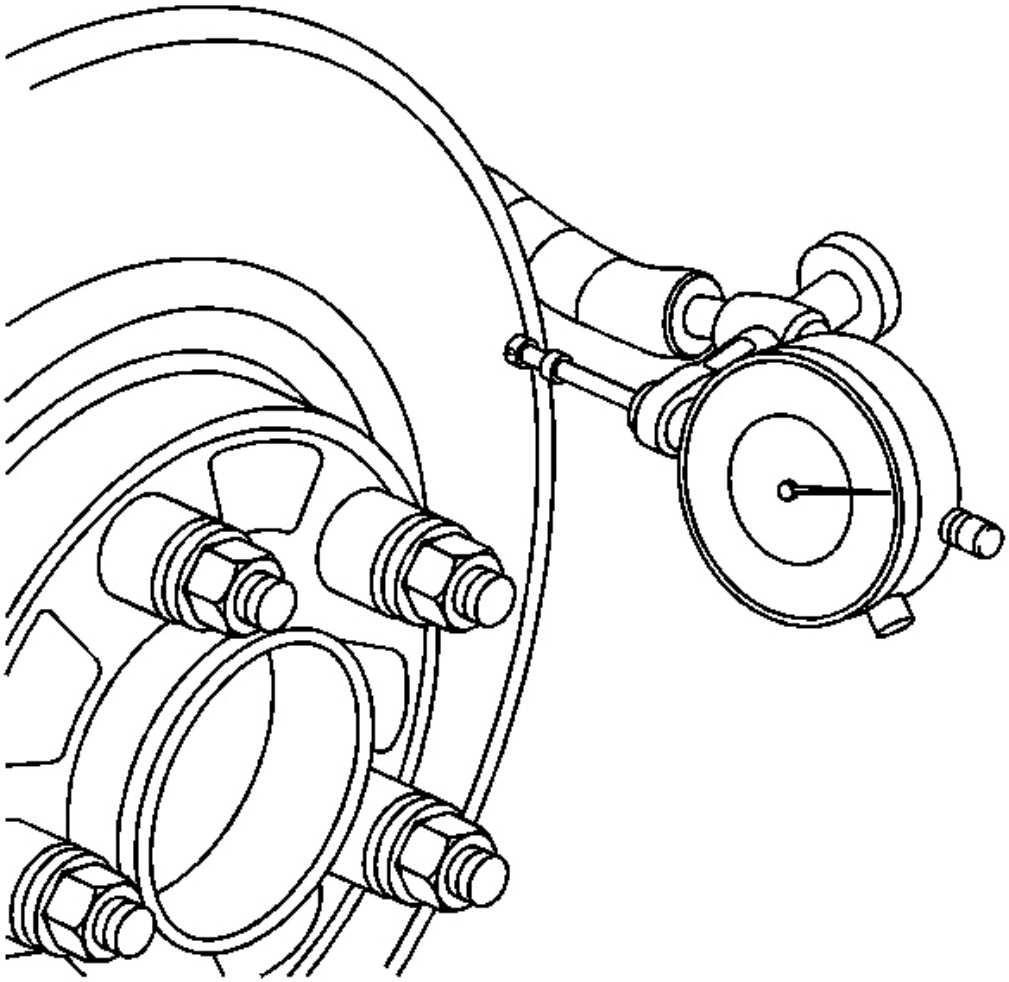

Fig. 7: Using Dial Indicator To Measure Lateral Runout
Courtesy of GENERAL MOTORS CORP.

14. Mount a dial indicator, **J 45101** , or equivalent, to the steering knuckle and position the indicator button so it contacts the brake rotor friction surface at a 90 degree angle, approximately 13 mm (0. See **Special Tools and Equipment** .5 in) from the outer edge of the rotor.
15. Measure and record the assembled LRO of the brake rotor.
    1. Rotate the rotor until the lowest reading is displayed on the indicator dial, then set the dial to zero.
    2. Rotate the rotor until the highest reading is displayed on the dial.
    3. Mark the location of the high spot relative to the nearest wheel stud, or studs.
    4. Measure and record the amount of LRO.

16. Compare the brake rotor assembled LRO to the following specification:

    Specification:

    - Front brake rotor maximum allowable assembled lateral runout: 0.05 mm (0.002 in)
    - Rear brake rotor maximum allowable assembled lateral runout: 0.05 mm (0.002 in)

17. If the brake rotor assembled LRO measurement exceeds the specification, bring the LRO to within specifications. Refer to **Brake Rotor Assembled Lateral Runout (LRO) Correction** .
18. If the brake rotor assembled LRO measurement is within specification, install the brake caliper and depress the brake pedal several times to secure the rotor in place before removing the **J 45101-100** and the lug nuts. See **Special Tools and Equipment** .

BRAKE PAD INSPECTION

CAUTION: Refer to Brake Dust Caution in Cautions and Notices.

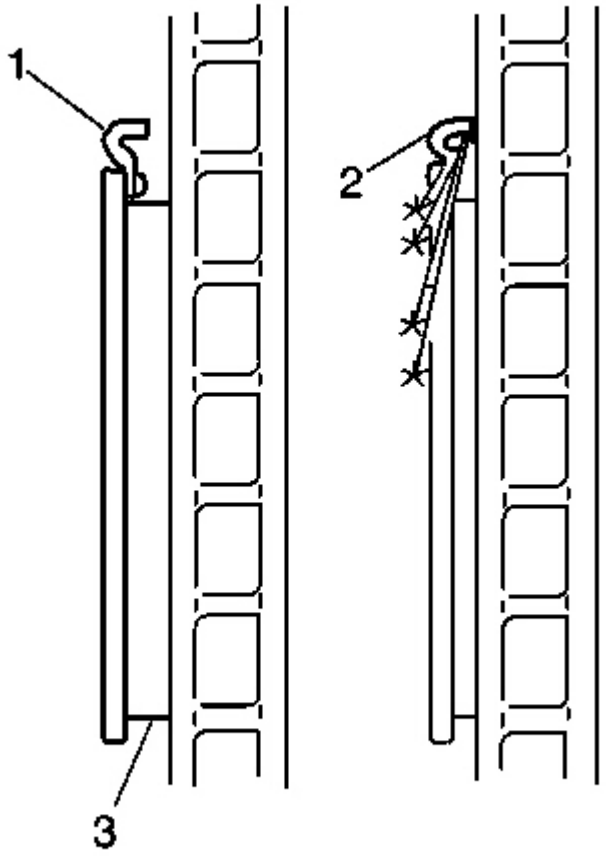

Fig. 8: View Of Brake Pads & Audible Wear Sensors
Courtesy of GENERAL MOTORS CORP.

- Inspect the disc brake pads at regular intervals, or whenever the tire and wheel assemblies are removed from the vehicle.
- If replacement is necessary, always replace disc brake pads in axle sets.
- Inspect both edges of the disc brake pad friction surfaces (3). The highest rate of wear normally occurs at the trailing edge of the disc brake pads.
- Inspect the thickness of the disc brake pads (3) in order to ensure that they have not worn prematurely. The disc brake pad wear should be approximately even per axle set.
- Both front and rear disc brake pads have integral, audible wear sensors (1). When the disc brake pad wear reaches the minimum allowable thickness, the wear sensor contacts the disc brake rotor (2). The wear indicator will then produce an audible, high-pitched warning noise during wheel rotation.
- Replace the disc brake pads when the friction surface (3) is worn to within 0.76 mm (0.030 in) of the

mounting plates.

- Remove the brake calipers and inspect the friction surfaces of the inner and outer disc brake pads to ensure that they are level. Place the disc brake pad friction surfaces together and measure the gap between the surfaces. If more than 0.13 mm (0.005 in) gap exists midway between the length of the disc brake pads, replace the disc brake pads.
- Verify that any disc brake pad shims that may be required are in place and not damaged or excessively corroded. Replace any missing or damaged shims in order to preserve proper disc brake performance.
- Replace the disc brake pads if any have separated from the mounting plates.
- Inspect the disc brake pads friction surfaces for cracks, fractures, or damage which may cause noise or otherwise impair disc brake performance.

BRAKE CALIPER INSPECTION

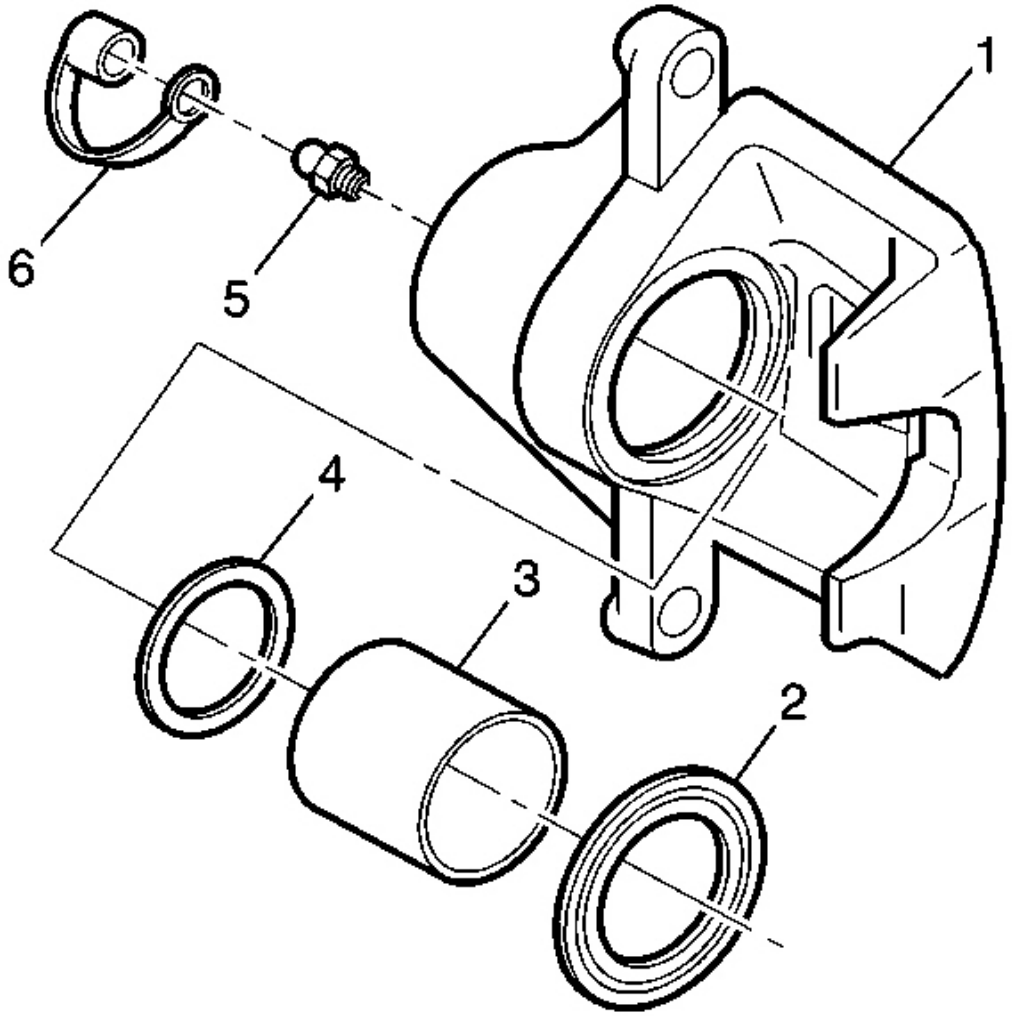

Fig. 9: Exploded View Of Brake Caliper
Courtesy of GENERAL MOTORS CORP.

CAUTION: Refer to Brake Dust Caution in Cautions and Notices.

CAUTION: Refer to Brake Fluid Irritant Caution in Cautions and Notices.

1. Inspect the brake caliper housing (1) for cracks, excess wear, and/or damage. If any of these conditions

are present, the brake caliper requires replacement.

2. Inspect the caliper piston dust boot seal (2) for cracks, tears, cuts, deterioration and/or improper seating in the caliper body. If any of these conditions are present, the brake caliper requires overhaul or replacement.
3. Inspect for brake fluid leakage around the caliper piston dust boot seal (2) and on the disc brake pads. If there is any evidence of brake fluid leakage, the brake caliper requires overhaul or replacement.

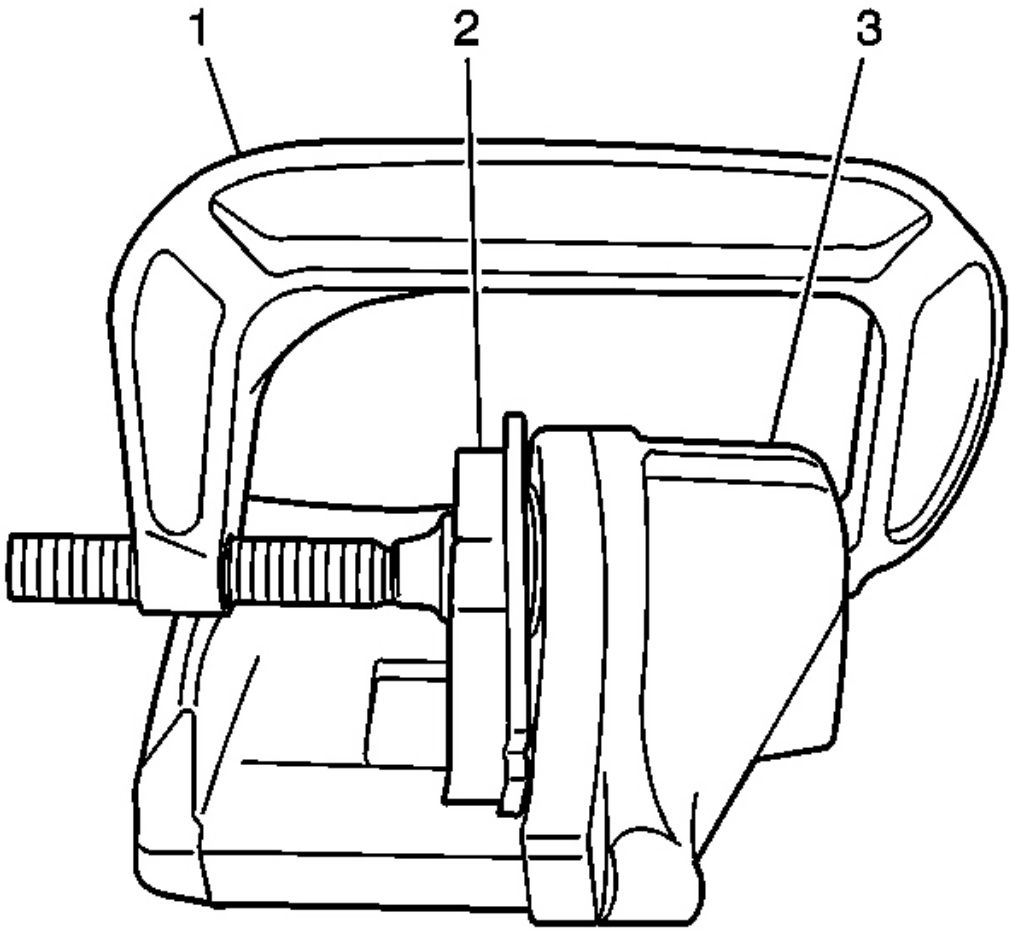

Fig. 10: Compressing Caliper Pistons
Courtesy of GENERAL MOTORS CORP.

4. Inspect for smooth and complete travel of the caliper piston, or pistons, into the caliper bore, or bores:

   The movement of a caliper piston into a caliper bore should be smooth and even. If a caliper piston is frozen or difficult to bottom, the caliper requires overhaul or replacement.

- For single piston caliper applications, insert a discarded inner brake pad (2) or block of wood in front of the piston. Using a large C-clamp (1) installed over the body of the caliper (3) and against the brake pad or block of wood, slowly bottom the piston in the bore.
- For dual piston caliper applications, insert a discarded inner brake pad (2) or block of wood in front of the pistons. Using 2 large C-clamps (1) installed over the body of the caliper (3) and against the brake pad or block of wood, slowly bottom the pistons evenly into the bores.

DISC BRAKE MOUNTING AND HARDWARE INSPECTION - FRONT

CAUTION: Refer to Brake Dust Caution in Cautions and Notices.

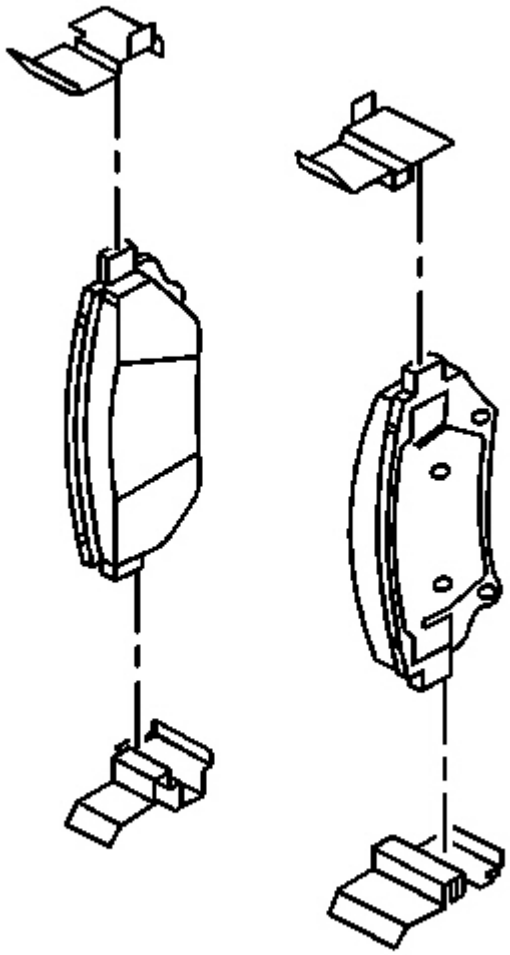

Fig. 11: Disc Brake Pad Mounting Hardware
Courtesy of GENERAL MOTORS CORP.

1. Inspect the disc brake pad mounting hardware for the following:
    - Missing mounting hardware.
    - Excessive corrosion.
    - Bent mounting tabs.
    - Looseness at the caliper mounting bracket.
    - Looseness at the disc brake pads.
2. If any of the conditions listed are found, the disc brake pad mounting hardware requires replacement.

3. Ensure the disc brake pads are held firmly in place on the caliper mounting bracket, yet slide easily on the mounting hardware without binding.

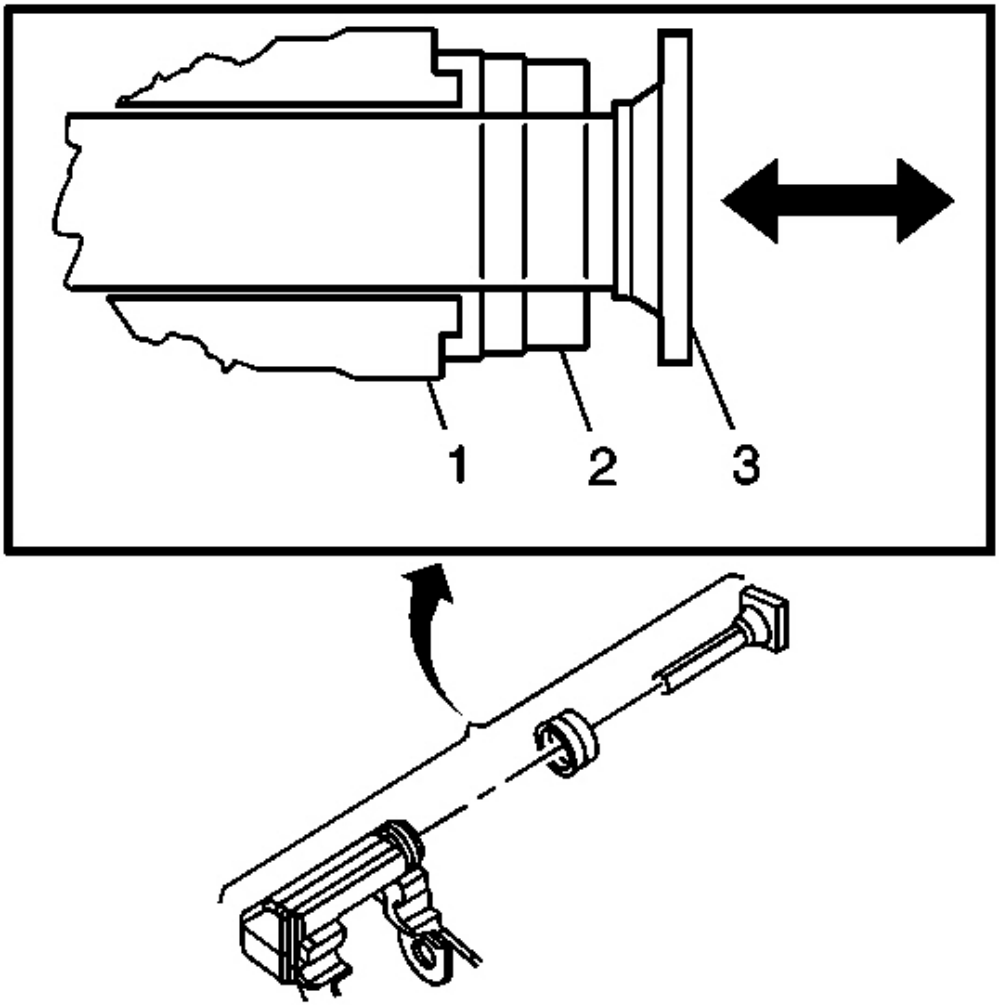

Fig. 12: Inspecting Caliper Slide Pins
Courtesy of GENERAL MOTORS CORP.

4. Inspect the caliper slide pins (3) by gently pulling outward, without disengaging the slides from the boots, then pushing inward, and observe for the following:
   - Binding
   - Seizing

- Looseness
- Bent or damaged slide pins
- Cracked or torn slide pin boots (2)
- Missing slide pin boots
- Bent or damaged caliper mounting bracket

5. If any of the conditions listed are found, the caliper mounting hardware requires replacement.

DISC BRAKE MOUNTING AND HARDWARE INSPECTION - REAR

CAUTION: Refer to Brake Dust Caution in Cautions and Notices.

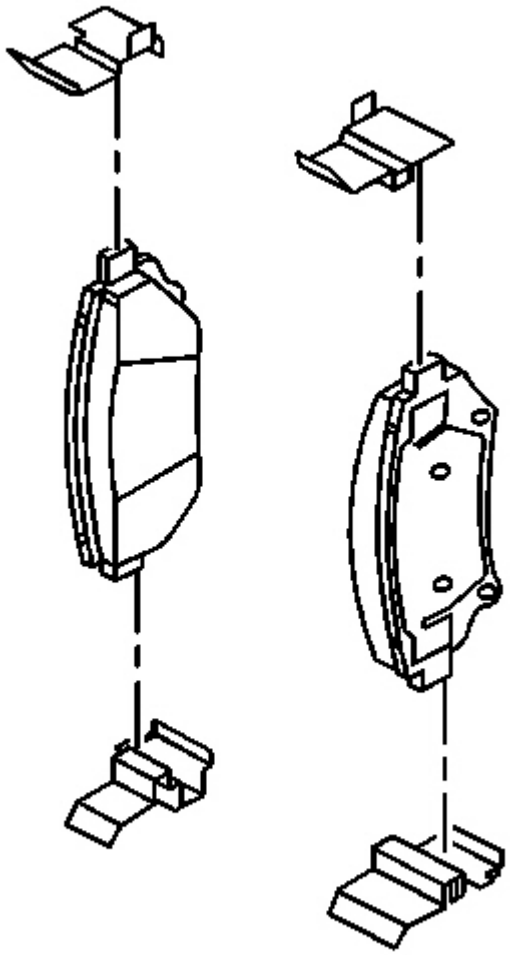

Fig. 13: Disc Brake Pad Mounting Hardware
Courtesy of GENERAL MOTORS CORP.

1. Remove the disc brake caliper from the caliper mounting bracket.
2. Remove the disc brake pads from the caliper mounting bracket.
3. Inspect the disc brake pad mounting hardware for the following:
    - Missing mounting hardware
    - Excessive corrosion
    - Bent mounting tabs
    - Looseness at the caliper mounting bracket

- Looseness at the disc brake pads

4. If any of the conditions listed are found, the disc brake pad mounting hardware requires replacement.
5. Ensure the disc brake pads are held firmly in place on the caliper mounting bracket, yet slide easily on the mounting hardware without binding.

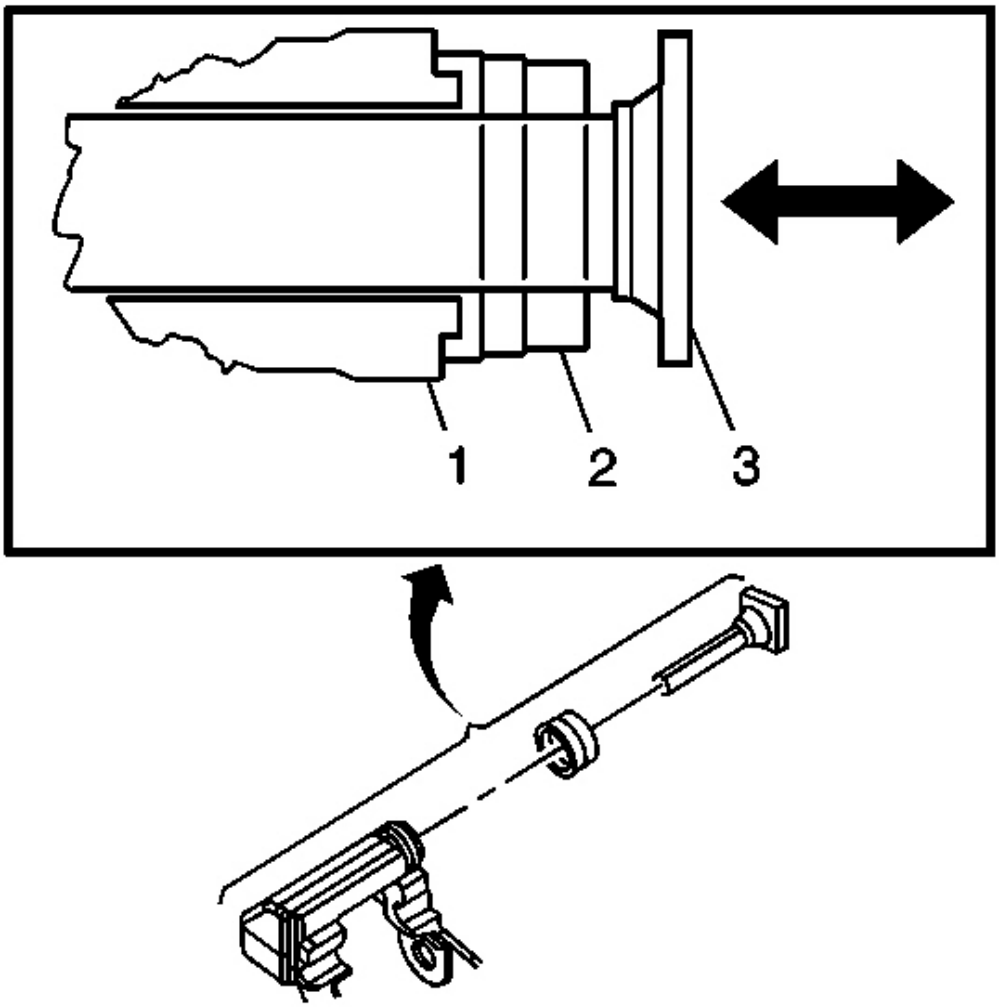

Fig. 14: Inspecting Caliper Slide Pins
Courtesy of GENERAL MOTORS CORP.

6. Inspect the caliper slide pins (3) by gently pulling outward (without disengaging the slides from the boots), then pushing inward, and observe for the following:

- Binding
- Seizing
- Looseness
- Bent or damaged slide pins
- Cracked or torn slide pin boots (2)
- Missing slide pin boots
- Bent or damaged caliper mounting bracket

7. If any of the conditions listed are found, the caliper mounting hardware requires replacement.
8. Install the disc brake pads to the caliper mounting bracket.
9. Install the disc brake caliper to the mounting bracket.

REPAIR INSTRUCTIONS

BRAKE PADS REPLACEMENT - FRONT

Removal Procedure

CAUTION: Refer to Brake Dust Caution in Cautions and Notices.

1. Inspect the fluid level in the brake master cylinder reservoir.
2. If the brake fluid level is midway between the maximum-full point and the minimum allowable level, no brake fluid needs to be removed from the reservoir before proceeding.
3. If the brake fluid level is higher than midway between the maximum-full point and the minimum allowable level, remove brake fluid to the midway point before proceeding.
4. Raise and suitably support the vehicle. Refer to **Lifting and Jacking the Vehicle** in General Information.
5. Remove the tire and wheel assembly. Refer to **Tire and Wheel Removal and Installation** in Tires and Wheels.
6. Hand tighten a wheel lug nut to a wheel stud to secure the rotor to the hub.

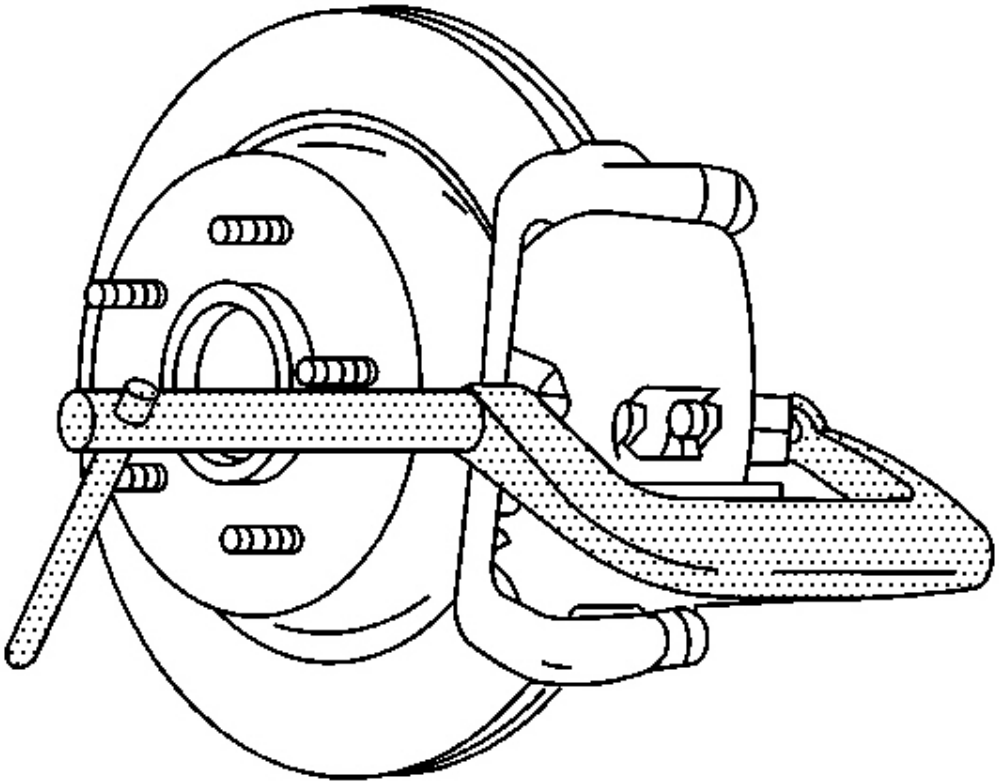

Fig. 15: Inspecting Caliper For Looseness
Courtesy of GENERAL MOTORS CORP.

7. Install large C-clamp over the body of the brake caliper with the C-clamp ends against the rear of the caliper body and against the outboard brake pad.
8. Tighten the C-clamp evenly until the caliper pistons are compressed into the caliper bores enough to allow the caliper to slide past the brake rotor.
9. Remove the C-clamp from the caliper.

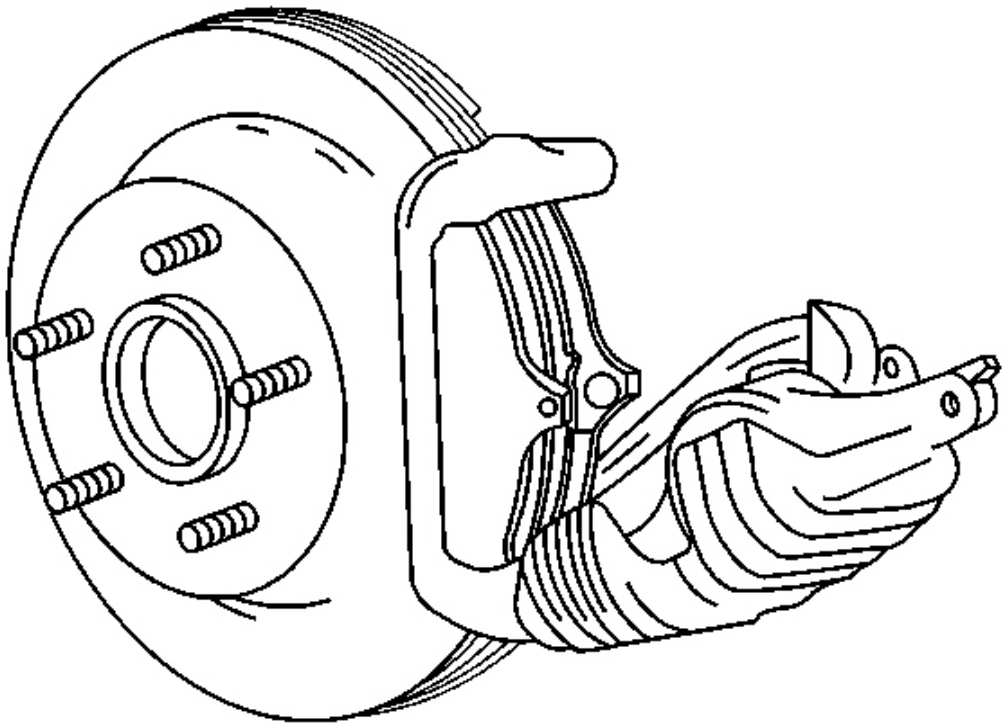

Fig. 16: View Of Brake Caliper & Bracket
Courtesy of GENERAL MOTORS CORP.

10. Remove the upper brake caliper guide pin bolt.

NOTE: **Support the brake caliper with heavy mechanic's wire, or equivalent, whenever it is separated from its mount and the hydraulic flexible brake hose is still connected. Failure to support the caliper in this manner will cause the flexible brake hose to bear the weight of the caliper, which may cause damage to the brake hose and in turn may cause a brake fluid leak.**

11. Pivot the brake caliper body downward and secure the caliper out of the way with heavy mechanic's wire or equivalent; ensure that there is no tension on the hydraulic brake flexible hose. Do NOT disconnect the hydraulic brake flexible hose from the caliper.
12. Remove the brake pads from the caliper bracket.
13. Remove and inspect the brake pad retainers from the caliper bracket.

Installation Procedure

1. Inspect the caliper slide boots for cuts, tears, or deterioration. If damaged, replace the slides and the boots. Refer to **Disc Brake Hardware Replacement - Front** .

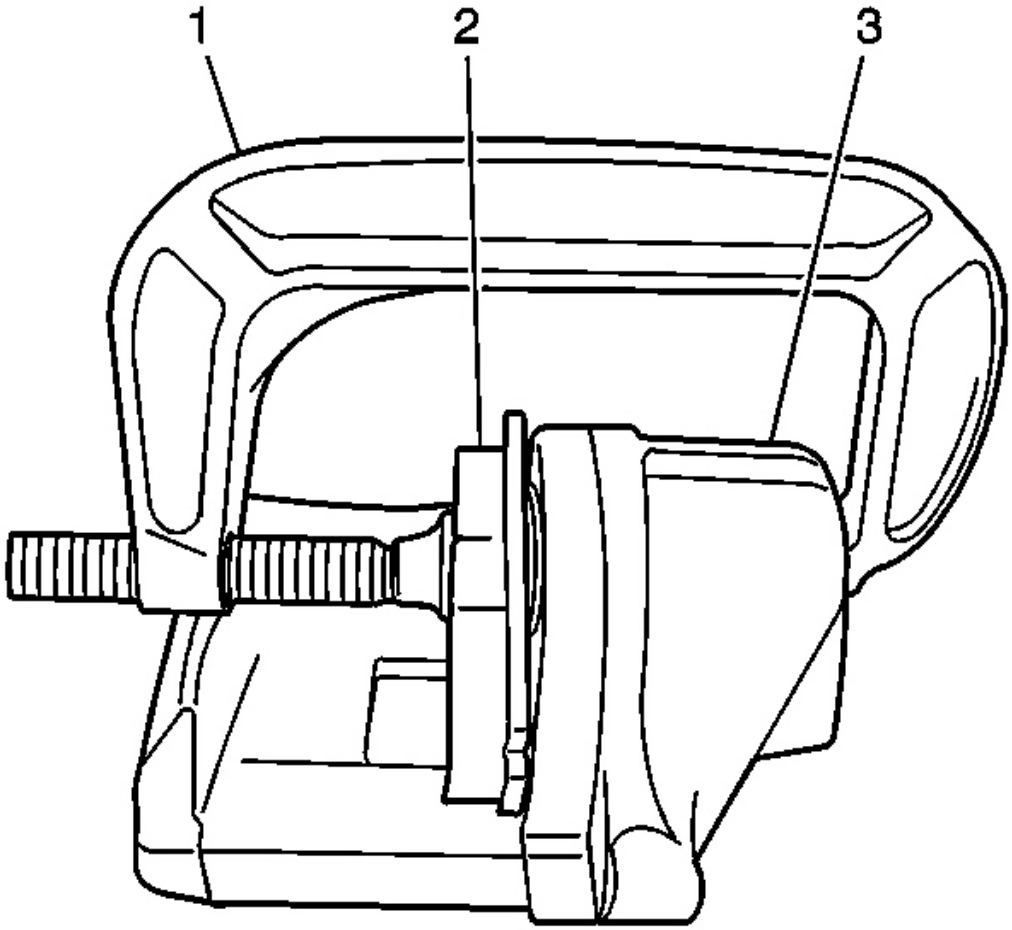

Fig. 17: Compressing Caliper Pistons
Courtesy of GENERAL MOTORS CORP.

2. Install large C-clamp (1) over the body of the brake caliper (3) with the C-clamp ends against the rear of the caliper body and against an old inboard brake pad (2) or a wood block installed against the caliper pistons.
3. Tighten the C-clamp (1) evenly until the caliper pistons are compressed completely into the caliper bores.
4. Remove the C-clamp and the old brake pad or wood block from the caliper.

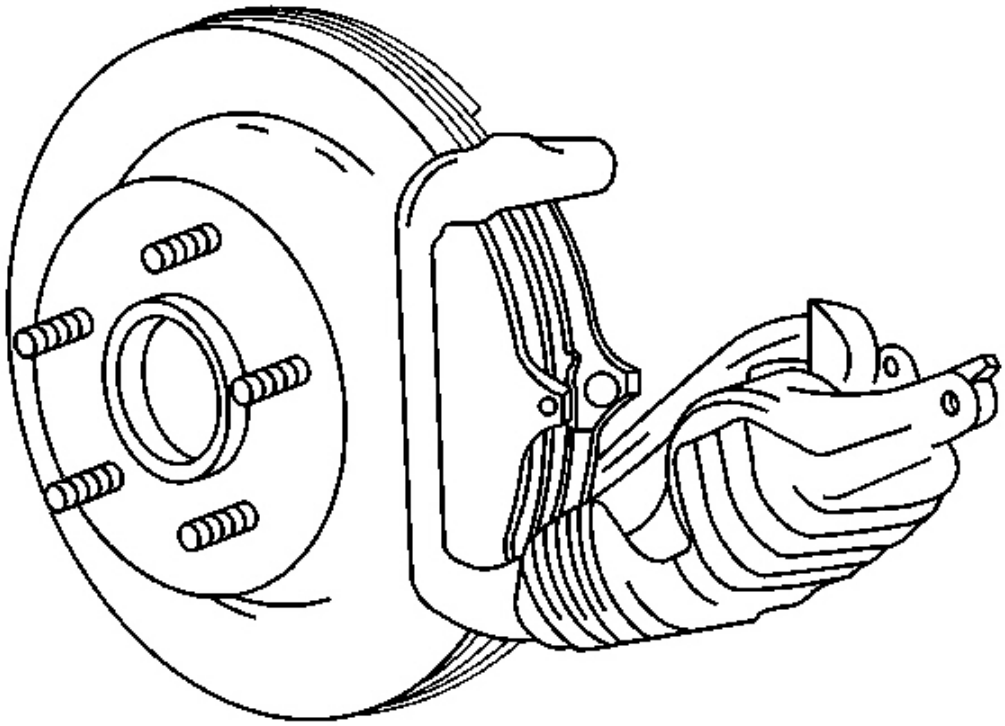

Fig. 18: View Of Brake Caliper & Bracket
Courtesy of GENERAL MOTORS CORP.

5. Install the brake pad retainers to the caliper bracket.
6. Install the brake pads to the caliper bracket. The brake pad wear sensor, mounted on the inboard brake pad, must be positioned so that it is in the trailing position during forward rotation of the brake rotor.
7. Pivot the brake caliper upward, over the brake pads and into the caliper bracket.

NOTE: Refer to Fastener Notice in Cautions and Notices.

8. Install the upper brake caliper guide pin bolt.

   Tighten: Tighten the brake caliper guide pin bolt to 31 N.m (23 lb ft).

9. Install the tire and wheel assembly. Refer to **Tire and Wheel Removal and Installation** in Tires and Wheels.
10. Lower the vehicle.
11. With the engine OFF, gradually apply the brake pedal to approximately 2/3 of its travel distance.

12. Slowly release the brake pedal.
13. Wait 15 seconds, then repeat steps 11-12 until a firm brake pedal apply is obtained; this will properly seat the brake caliper pistons and brake pads.
14. Fill the brake master cylinder reservoir to the proper level. Refer to **Master Cylinder Reservoir Filling** in Hydraulic Brakes.
15. Burnish the pads and rotors. Refer to **Burnishing Pads and Rotors** .

BRAKE PADS REPLACEMENT - REAR

Removal Procedure

CAUTION: Refer to Brake Dust Caution in Cautions and Notices.

1. Inspect the fluid level in the brake master cylinder reservoir.
2. If the brake fluid level is midway between the maximum-full point and the minimum allowable level, no brake fluid needs to be removed from the reservoir before proceeding.
3. Raise and suitably support the vehicle. Refer to **Lifting and Jacking the Vehicle** in General Information.
4. Remove the tire and wheel assembly. Refer to **Tire and Wheel Removal and Installation** in Tires and Wheels.
5. Hand tighten a wheel lug nut to a wheel stud to secure the rotor to the hub.

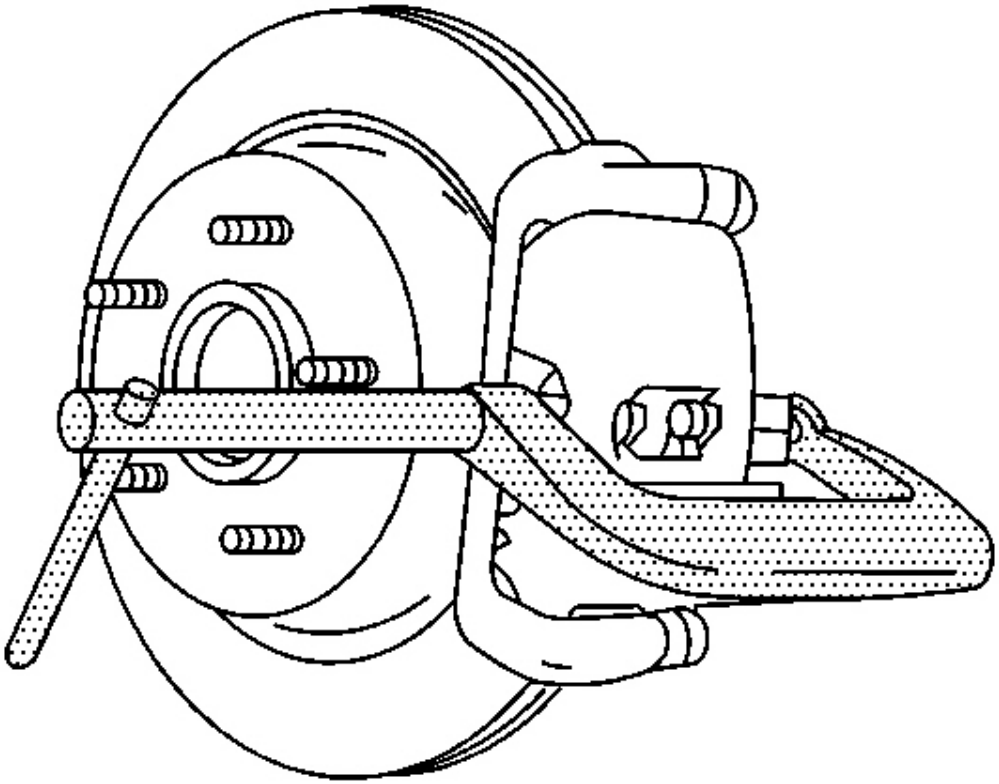

Fig. 19: Inspecting Caliper For Looseness
Courtesy of GENERAL MOTORS CORP.

6. Install a large C-clamp over the body of the brake caliper with the C-clamp ends against the rear of the caliper body and against the outboard brake pad.
7. Tighten the C-clamp until the caliper piston is compressed into the caliper bore enough to allow the caliper to slide past the brake rotor.
8. Remove the C-clamp from the caliper.

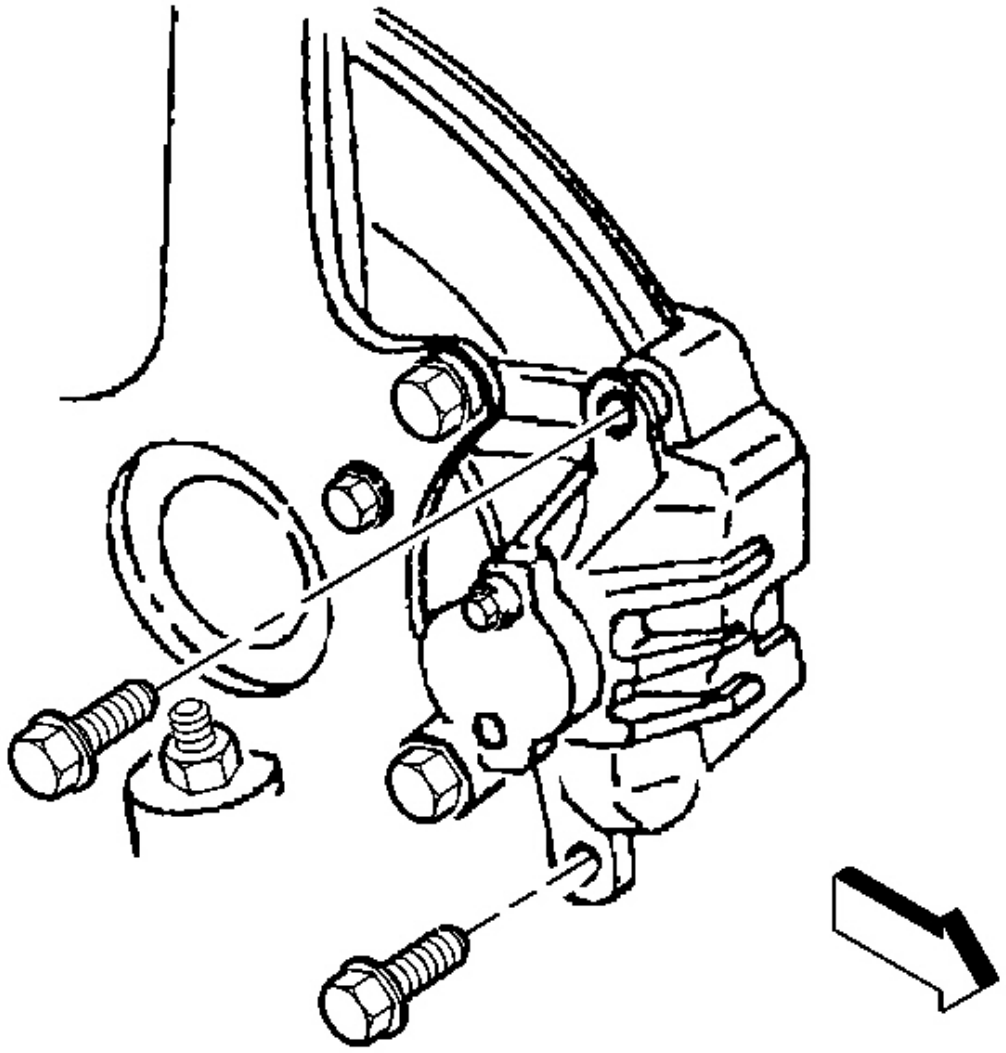

Fig. 20: View Of Caliper Assembly
Courtesy of GENERAL MOTORS CORP.

9. Remove the brake caliper guide pin bolts.

NOTE: **Support the brake caliper with heavy mechanic's wire, or equivalent, whenever it is separated from its mount and the hydraulic flexible brake hose is still connected. Failure to support the caliper in this manner will cause the flexible brake hose to bear the weight of the caliper, which may cause damage to the brake hose and in turn may cause a brake fluid leak.**

10. Remove the brake caliper from the caliper bracket and support the caliper out of the way with heavy mechanic's wire or equivalent; ensure that there is no tension on the hydraulic brake flexible hose. Do NOT disconnect the hydraulic brake flexible hose from the caliper.
11. Remove the brake pads from the caliper bracket.
12. Remove and inspect the brake pad retainers from the caliper bracket.

Installation Procedure

1. Inspect the caliper slide boots for cuts, tears, or deterioration. If damaged, replace the slides and the boots. Refer to **Disc Brake Hardware Replacement - Rear** .

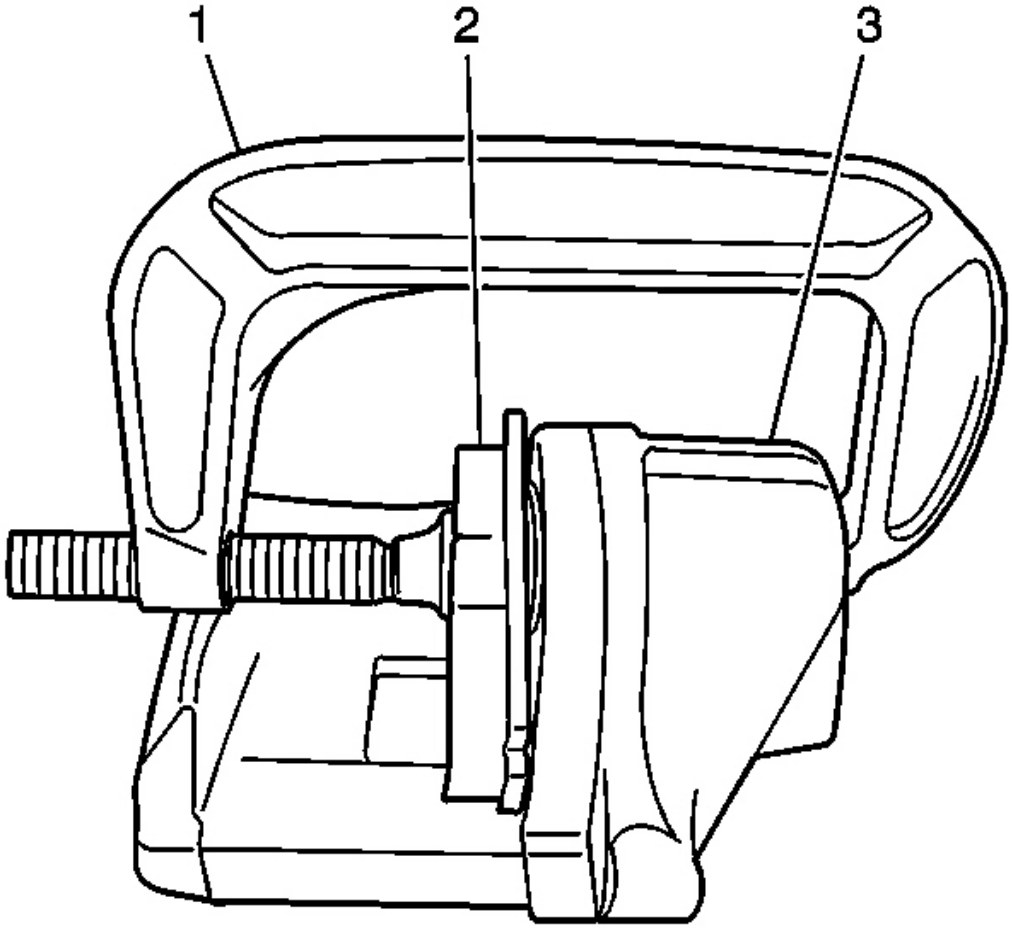

Fig. 21: Compressing Caliper Pistons
Courtesy of GENERAL MOTORS CORP.

2. Install a large C-clamp (1) over the body of the brake caliper (3) with the C-clamp ends against the rear of the caliper body and against an old inboard brake pad (2) or a wood block installed against the caliper piston.
3. Tighten the C-clamp (1) until the caliper piston is compressed completely into the caliper bore.
4. Remove the C-clamp and the old brake pad or wood block from the caliper.

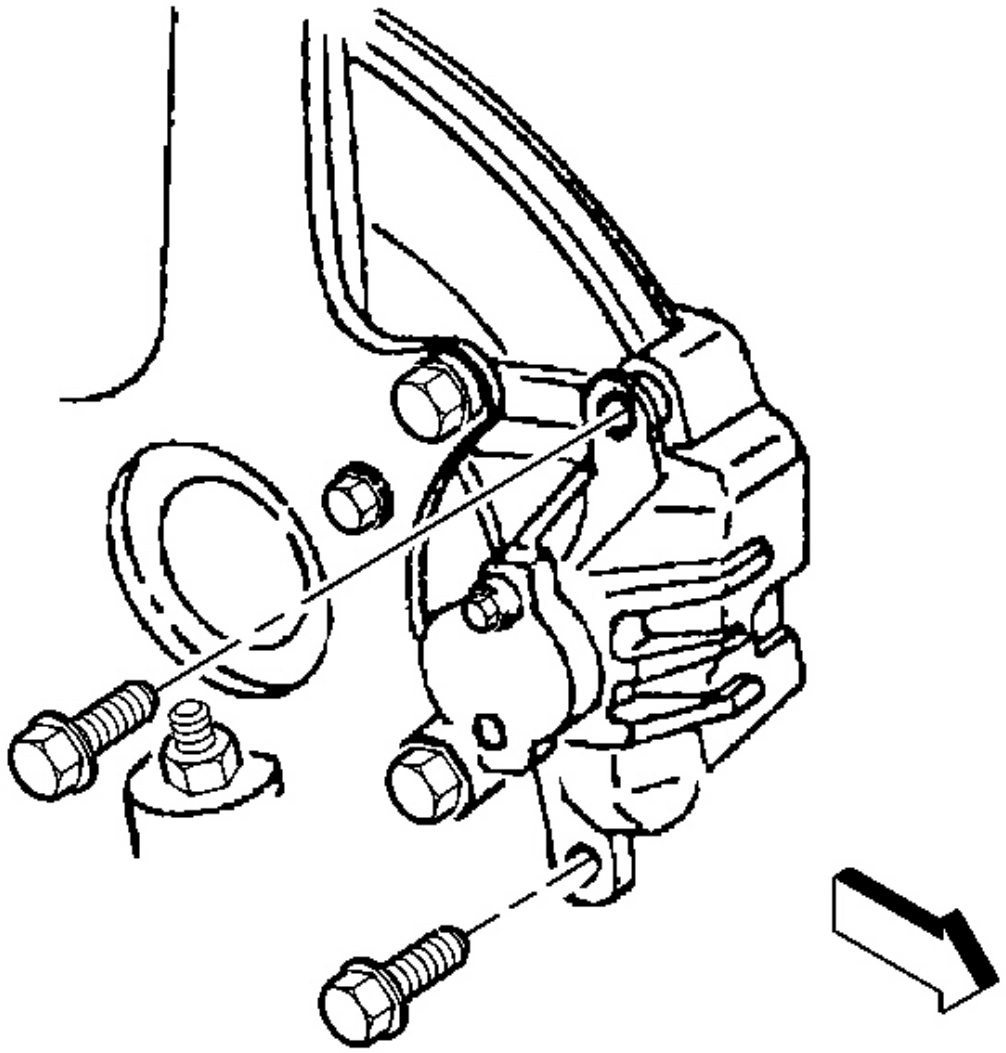

Fig. 22: View Of Caliper Assembly
Courtesy of GENERAL MOTORS CORP.

5. Install the brake pad retainers to the caliper bracket.
6. Install the brake pads to the caliper bracket. The brake pad wear sensor, mounted on the inboard brake pad, must be positioned so that it is in the trailing position during forward rotation of the brake rotor.
7. Install the brake caliper to the caliper bracket.

NOTE: Refer to Fastener Notice in Cautions and Notices.

8. Install the brake caliper guide pin bolts.

   Tighten: Tighten the brake caliper guide pin bolts to 31 N.m (23 lb ft).

9. Install the tire and wheel assembly. Refer to **Tire and Wheel Removal and Installation** in Tires and Wheels.
10. Lower the vehicle.
11. With the engine OFF, gradually apply the brake pedal to approximately 2/3 of its travel distance.
12. Slowly release the brake pedal.
13. Wait 15 seconds, then repeat steps 11-12 until a firm brake pedal apply is obtained; this will properly seat the brake caliper pistons and brake pads.
14. Fill the brake master cylinder reservoir to the proper level. Refer to **Master Cylinder Reservoir Filling** in Hydraulic Brakes.
15. Burnish the pads and rotors. Refer to **Burnishing Pads and Rotors** .

BURNISHING PADS AND ROTORS

CAUTION: Road test a vehicle under safe conditions and while obeying all traffic laws. Do not attempt any maneuvers that could jeopardize vehicle control. Failure to adhere to these precautions could lead to serious personal injury and vehicle damage.

CAUTION: Refer to Brake Dust Caution in Cautions and Notices.

Burnishing the brake pads and brake rotors is necessary in order to ensure that the braking surfaces are properly prepared after service has been performed on the disc brake system.

This procedure should be performed whenever the disc brake rotors have been refinished or replaced, and/or whenever the disc brake pads have been replaced.

1. Select a smooth road with little or no traffic.
2. Accelerate the vehicle to 48 km/h (30 mph).

IMPORTANT: Use care to avoid overheating the brakes while performing this step.

3. Using moderate to firm pressure, apply the brakes to bring the vehicle to a stop. Do not allow the brakes to lock.
4. Repeat steps 2 and 3 until approximately 20 stops have been completed. Allow sufficient cooling periods between stops in order to properly burnish the brake pads and rotors.

BRAKE CALIPER REPLACEMENT - FRONT

Removal Procedure

CAUTION: Refer to Brake Fluid Irritant Caution in Cautions and Notices.

NOTE: Refer to Brake Fluid Effects on Paint and Electrical Components Notice in Cautions and Notices.

1. Inspect the fluid level in the brake master cylinder reservoir.
2. If the brake fluid level is midway between the maximum-full point and the minimum allowable level, no brake fluid needs to be removed from the reservoir before proceeding.
3. If the brake fluid level is higher than midway between the maximum-full point and the minimum allowable level, remove brake fluid to the midway point before proceeding.
4. Raise and suitably support the vehicle. Refer to **Lifting and Jacking the Vehicle** in General Information.
5. Remove the tire and wheel assembly. Refer to **Tire and Wheel Removal and Installation** in Tires and Wheels.

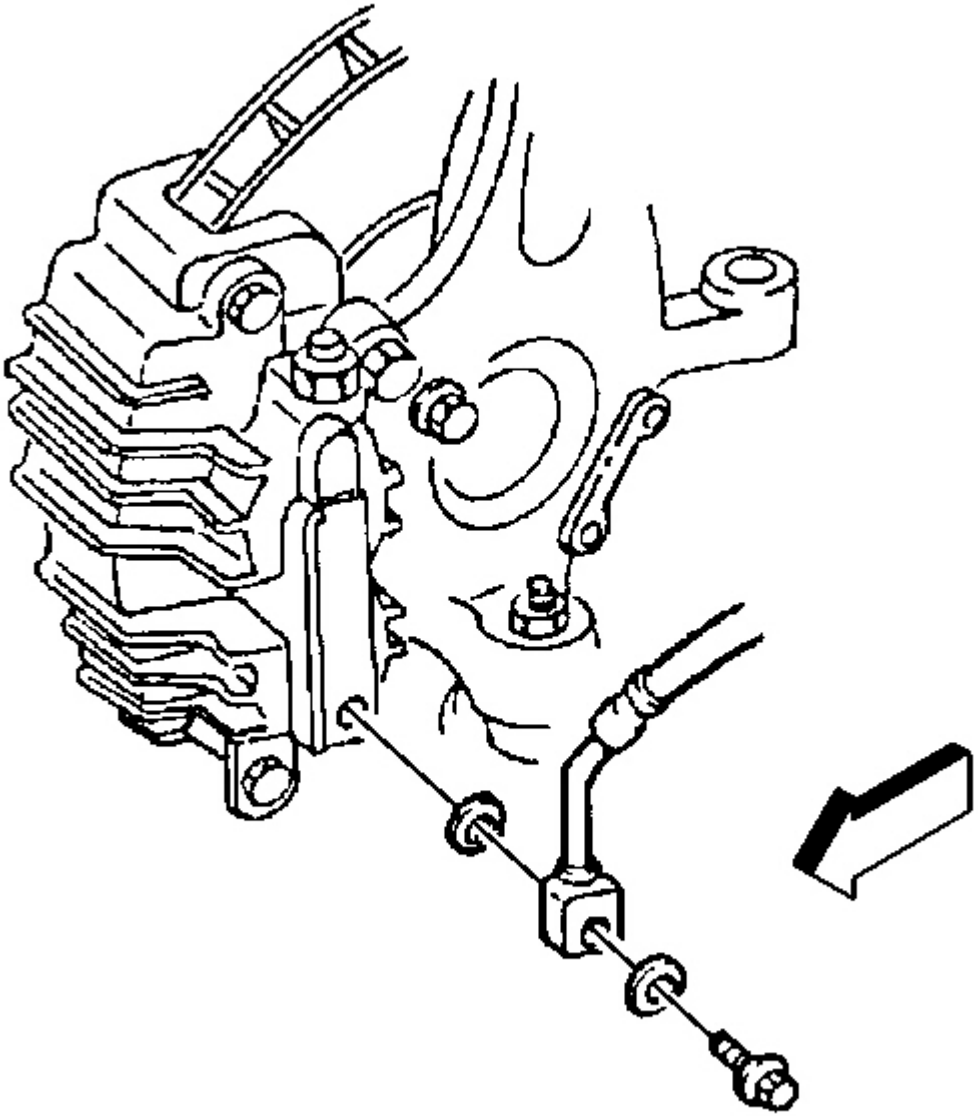

Fig. 23: View Of Brake Caliper & Components
Courtesy of GENERAL MOTORS CORP.

6. Remove the brake caliper inlet fitting bolt from the caliper.
7. Remove the brake hose from the brake caliper.
8. Remove and discard the two copper brake hose gaskets. These gaskets may be stuck to the brake caliper and/or the brake hose end.

9. Plug the opening in the brake caliper and the brake hose to prevent fluid loss and contamination.

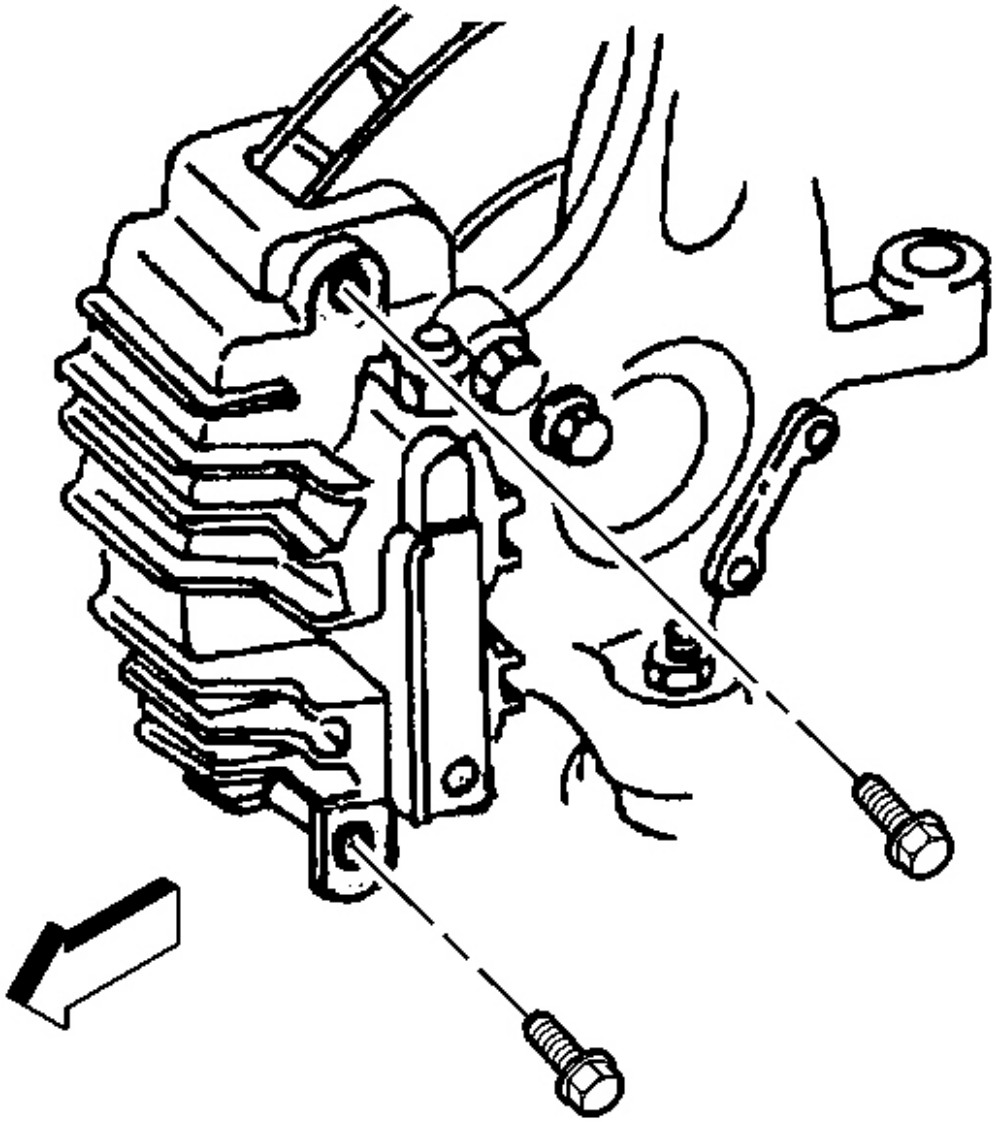

Fig. 24: View Of Brake Caliper & Pin Bolts
Courtesy of GENERAL MOTORS CORP.

10. Remove the brake caliper guide pin bolts.
11. Remove the brake caliper from the caliper mounting bracket.

Installation Procedure

1. Inspect the caliper slide boots for cuts, tears, or deterioration. If damaged, replace the slides and the boots. Refer to **Disc Brake Hardware Replacement - Front** .

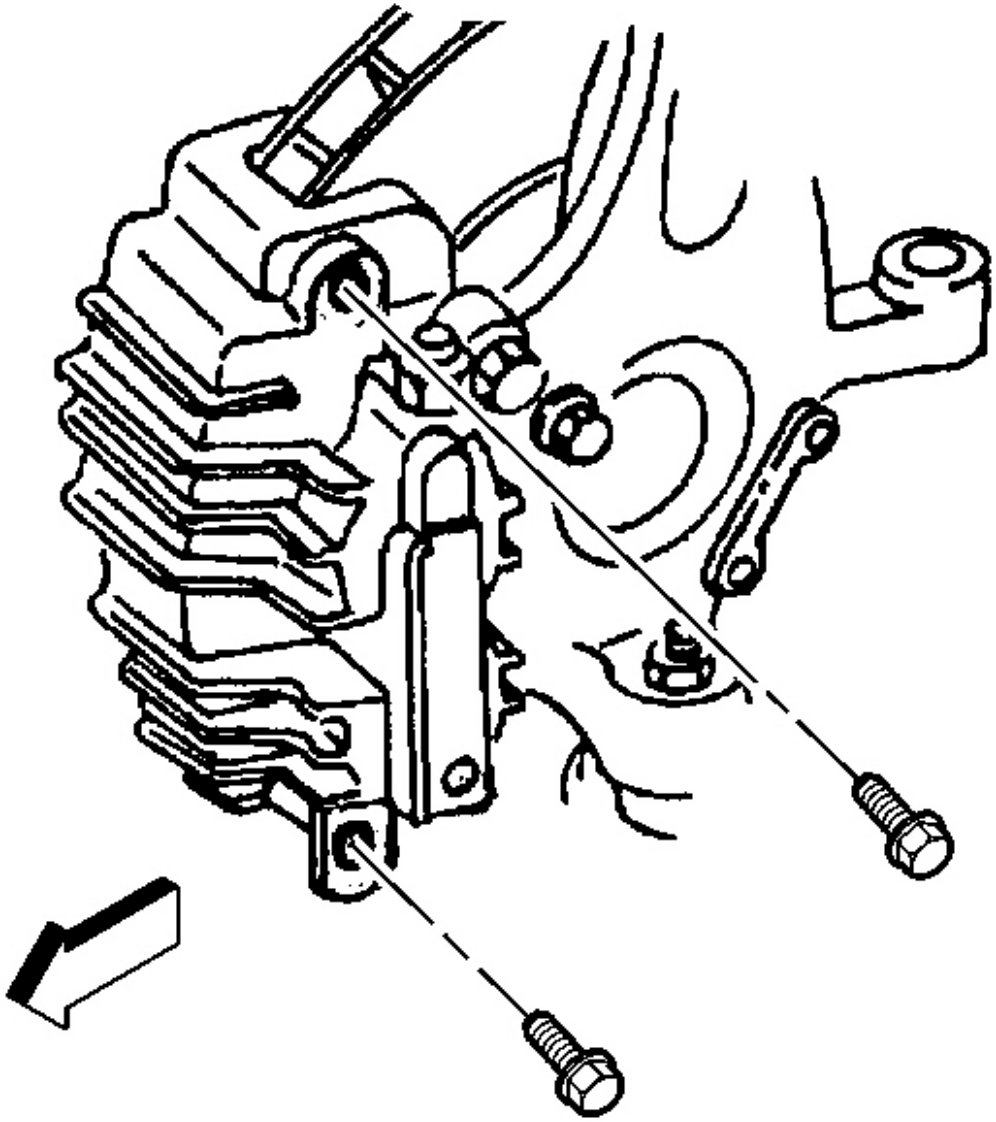

Fig. 25: View Of Brake Caliper & Pin Bolts
Courtesy of GENERAL MOTORS CORP.

2. Install the brake caliper to the caliper mounting bracket.

NOTE: Refer to Fastener Notice in Cautions and Notices.

3. Install the brake caliper guide pin bolts.

Tighten: Tighten the brake caliper guide pin bolts to 31 N.m (23 lb ft).

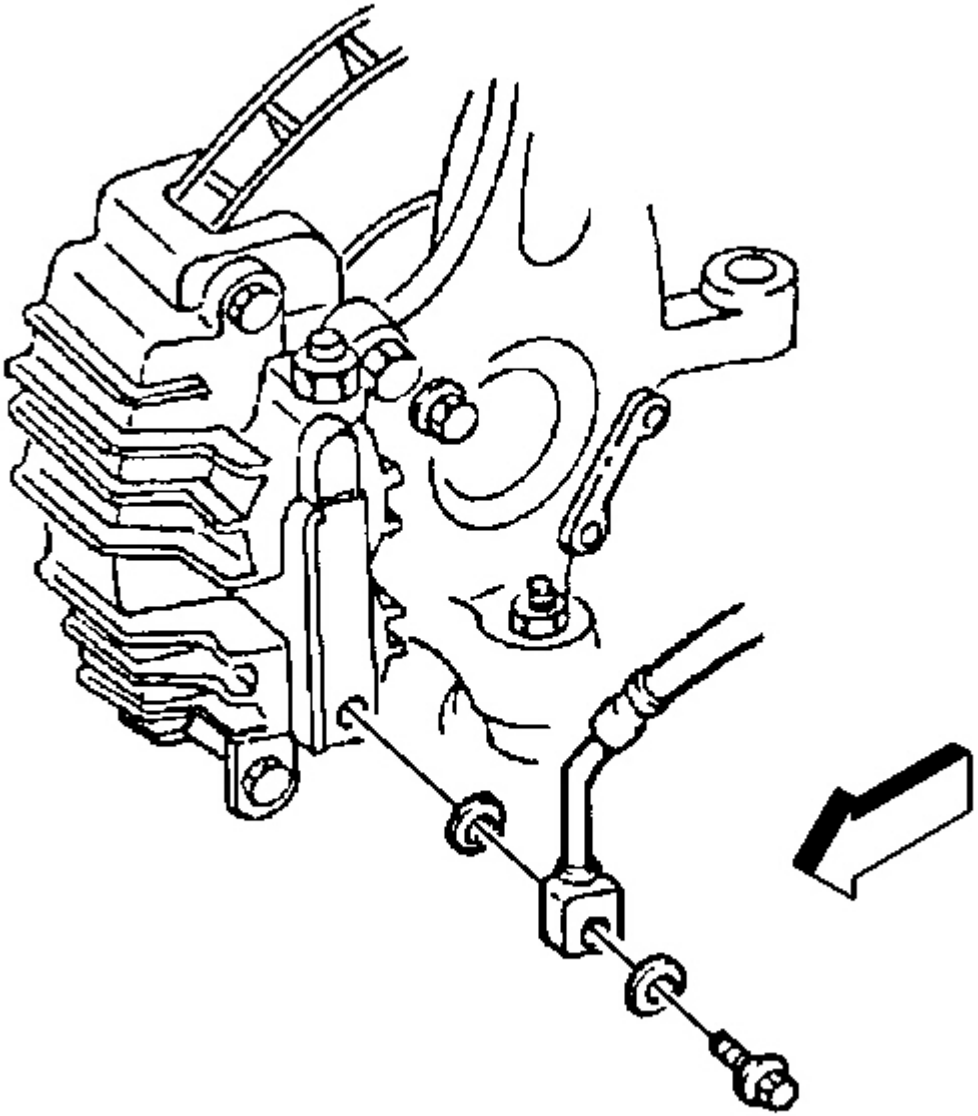

Fig. 26: View Of Brake Caliper & Components
Courtesy of GENERAL MOTORS CORP.

4. Remove the plug from the brake caliper opening and the brake hose.

IMPORTANT: Install NEW copper brake hose gaskets.

5. Assemble the NEW copper brake hose gaskets, and the brake caliper inlet fitting bolt to the brake hose.
6. Install the brake hose and the brake caliper inlet fitting bolt to the brake caliper.

   Tighten: Tighten the brake caliper inlet fitting bolt to 45 N.m (33 lb ft).

7. Bleed the hydraulic brake system. Refer to **Hydraulic Brake System Bleeding (Manual)** or **Hydraulic Brake System Bleeding (Pressure)** in Hydraulic Brakes.
8. Install the tire and wheel assembly. Refer to **Tire and Wheel Removal and Installation** in Tires and Wheels.
9. Lower the vehicle.

BRAKE CALIPER REPLACEMENT - REAR

Removal Procedure

CAUTION: Refer to Brake Fluid Irritant Caution in Cautions and Notices.

NOTE: Refer to Brake Fluid Effects on Paint and Electrical Components Notice in Cautions and Notices.

1. Inspect the fluid level in the brake master cylinder reservoir.
2. If the brake fluid level is midway between the maximum-full point and the minimum allowable level, no brake fluid needs to be removed from the reservoir before proceeding.
3. If the brake fluid level is higher than midway between the maximum-full point and the minimum allowable level, remove brake fluid to the midway point before proceeding.
4. Raise and suitably support the vehicle. Refer to **Lifting and Jacking the Vehicle** in General Information.
5. Remove the tire and wheel assembly. Refer to **Tire and Wheel Removal and Installation** in Tires and Wheels.

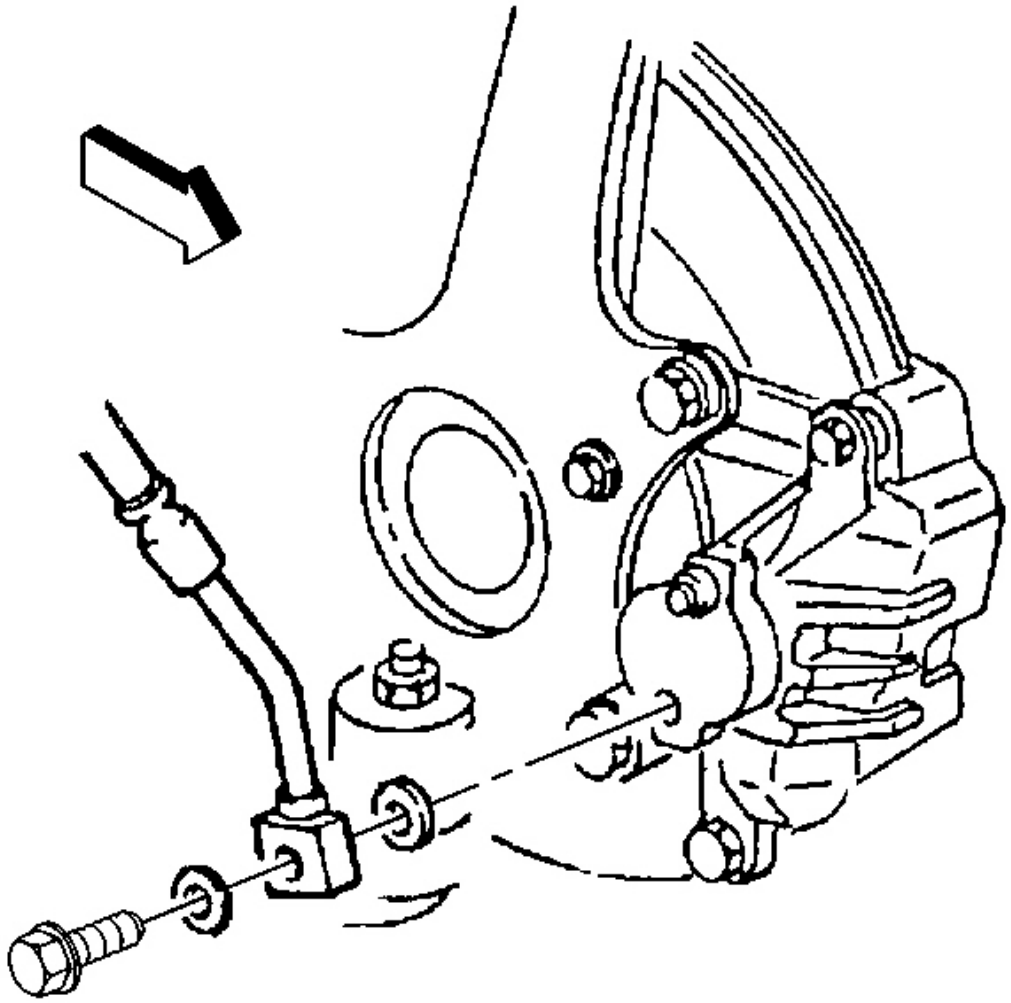

Fig. 27: View Of Rear Brake Hose
Courtesy of GENERAL MOTORS CORP.

6. Remove the brake caliper inlet fitting bolt from the caliper.
7. Remove the brake hose from the brake caliper.
8. Remove and discard the two copper brake hose gaskets. These gaskets may be stuck to the brake caliper and/or the brake hose end.
9. Plug the opening in the brake caliper and the brake hose to prevent fluid loss and contamination.

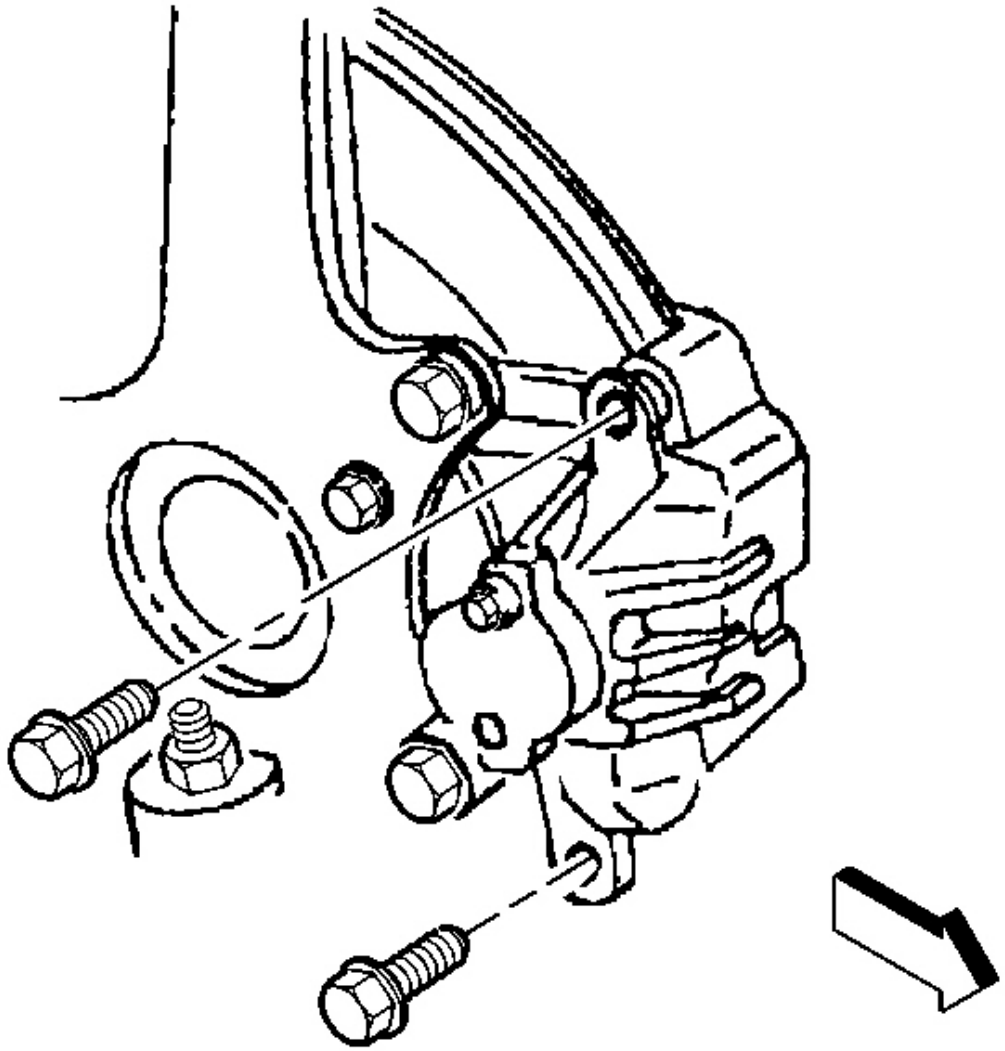

Fig. 28: View Of Caliper Assembly
Courtesy of GENERAL MOTORS CORP.

10. Remove the brake caliper guide pin bolts.
11. Remove the brake caliper from the caliper mounting bracket.

Installation Procedure

1. Inspect the caliper slide boots for cuts, tears, or deterioration. If damaged, replace the slides and the boots. Refer to **Disc Brake Hardware Replacement - Rear** .

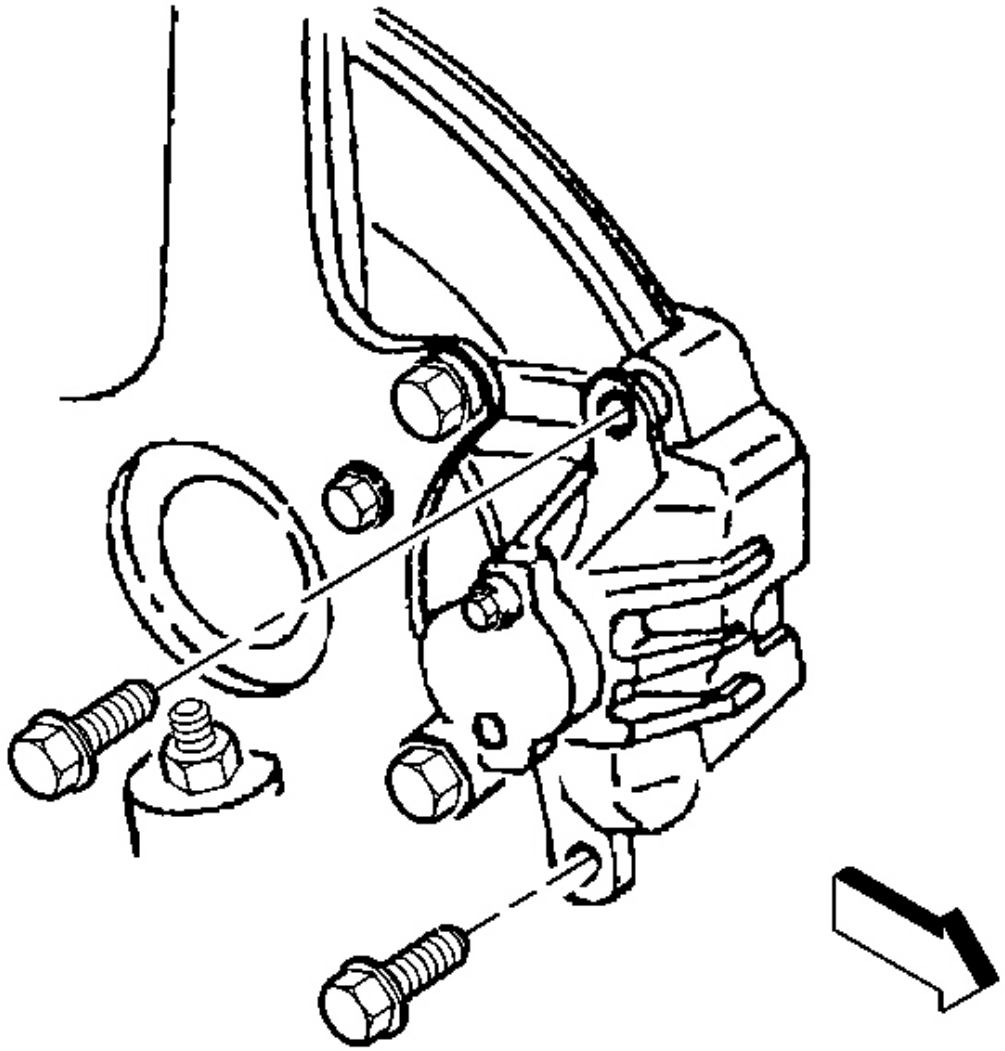

Fig. 29: View Of Caliper Assembly
Courtesy of GENERAL MOTORS CORP.

2. Install the brake caliper to the caliper mounting bracket.

NOTE: **Refer to Fastener Notice in Cautions and Notices.**

3. Install the brake caliper guide pin bolts.

Tighten: Tighten the brake caliper guide pin bolts to 31 N.m (23 lb ft).

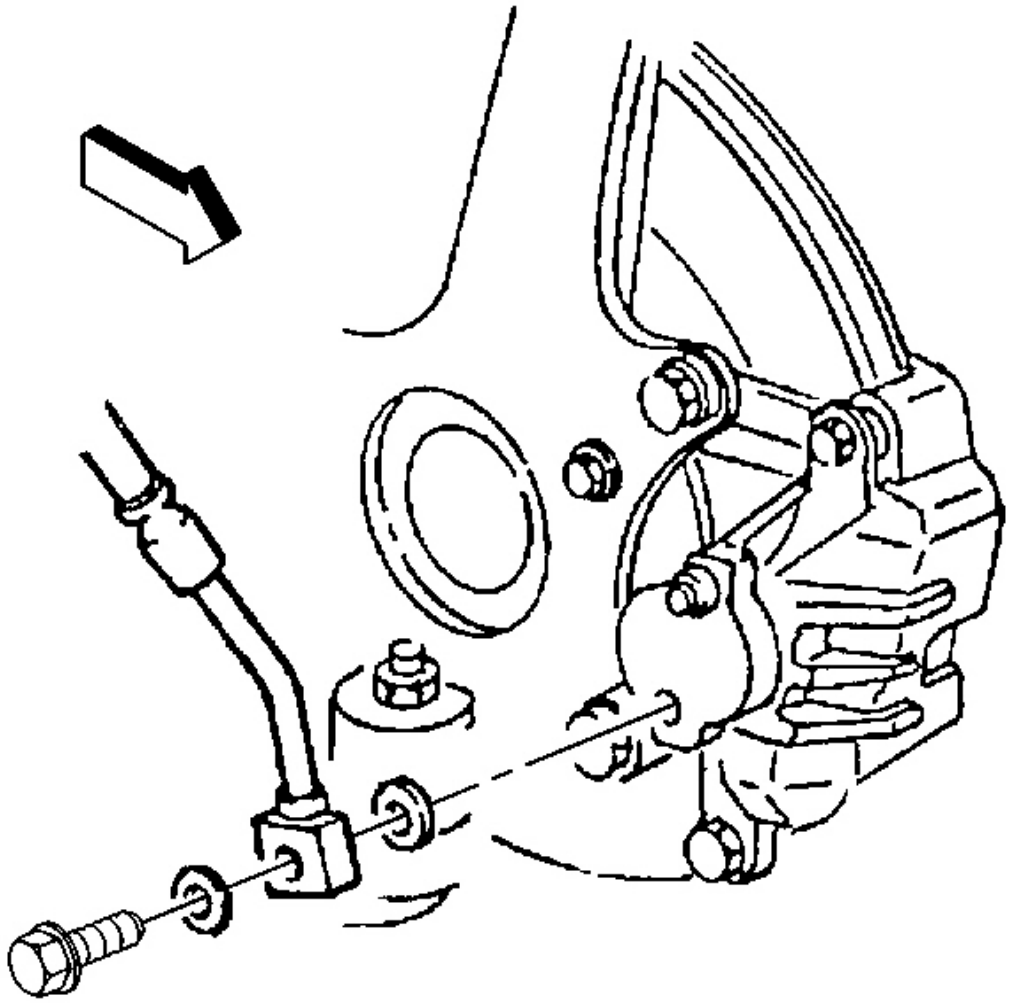

Fig. 30: View Of Rear Brake Hose
Courtesy of GENERAL MOTORS CORP.

4. Remove the plug from the brake caliper opening and the brake hose.

IMPORTANT: Install NEW copper brake hose gaskets.

5. Assemble the NEW copper brake hose gaskets, and the brake caliper inlet fitting bolt to the brake hose.
6. Install the brake hose and the brake caliper inlet fitting bolt to the brake caliper.

Tighten: Tighten the brake caliper inlet fitting bolt to 45 N.m (33 lb ft).

7. Bleed the hydraulic brake system. Refer to **Hydraulic Brake System Bleeding (Manual)** or **Hydraulic Brake System Bleeding (Pressure)** in Hydraulic Brakes.
8. Install the tire and wheel assembly. Refer to **Tire and Wheel Removal and Installation** in Tires and Wheels.
9. Lower the vehicle.

BRAKE CALIPER OVERHAUL - FRONT

CAUTION: Refer to Brake Fluid Irritant Caution in Cautions and Notices.

NOTE: Refer to Brake Fluid Effects on Paint and Electrical Components Notice in Cautions and Notices.

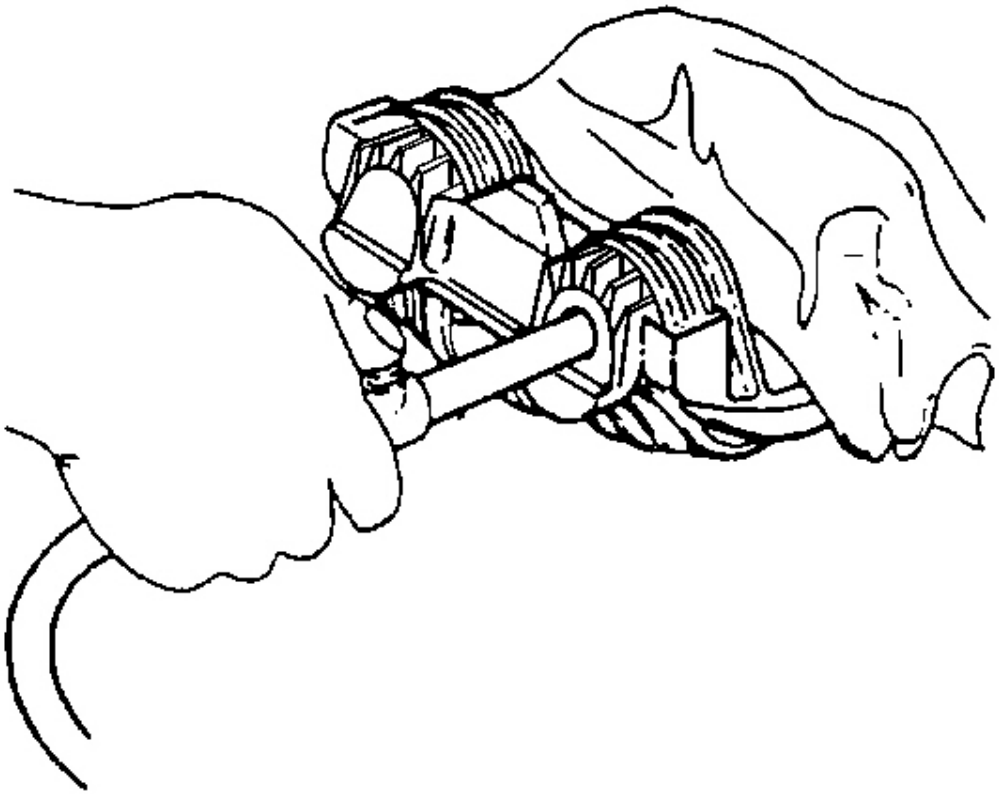

Fig. 31: Applying Compressed Air To Pistons - Front

Courtesy of GENERAL MOTORS CORP.

CAUTION: Do not place your fingers in front of the piston in order to catch or protect the piston while applying compressed air. This could result in serious injury.

NOTE: Use clean cloths to pad interior of caliper housing during piston removal. Use just enough air to ease the pistons out of the bores. If the pistons are blown out, even with the padding provided, it may be damaged.

1. Remove the front brake caliper from the vehicle. Refer to **Brake Caliper Replacement - Front** .
2. Remove the brake caliper pistons from the caliper bore by directing low pressure compressed air into the caliper bore through the fluid inlet hole.

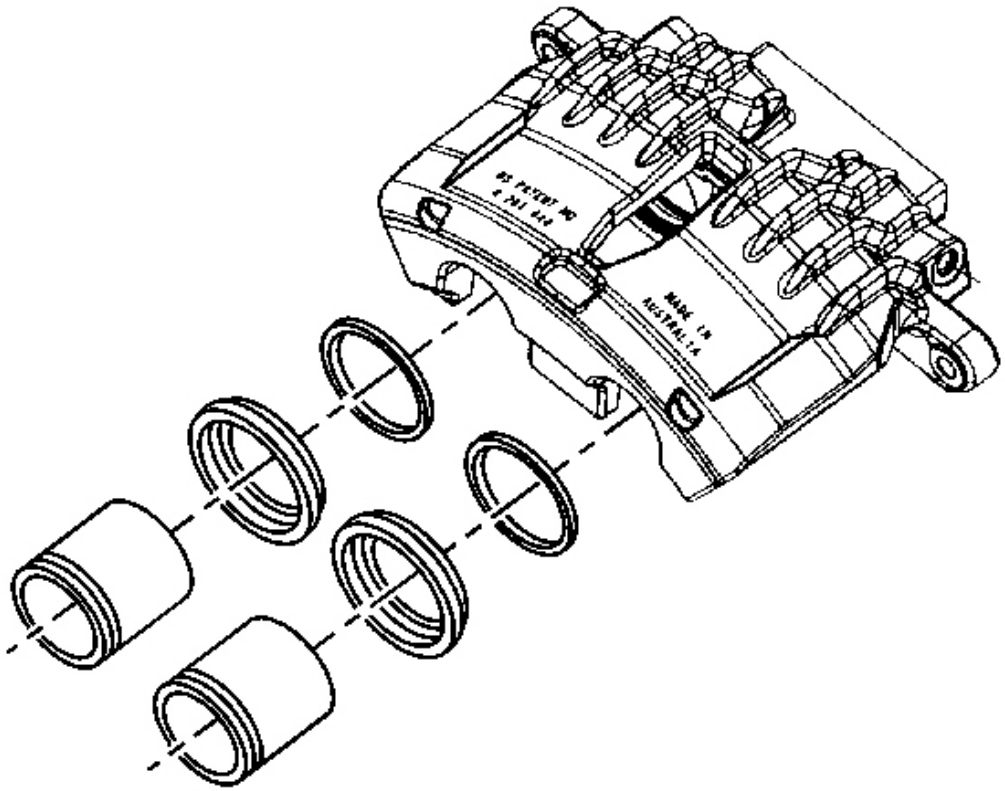

Fig. 32: View Of Caliper Components
Courtesy of GENERAL MOTORS CORP.

3. Using a small wooden or plastic tool, remove the piston dust boot seals from the seal counterbores in the caliper and discard the boot seals.
4. Using a small wooden or plastic tool, remove the piston seals from the caliper bores and discard the piston seals.
5. Remove the bleeder valve and cap from the caliper.

IMPORTANT: Do not use abrasives to clean the brake caliper pistons.

6. Clean the brake caliper piston bores and seal counterbores, and the caliper pistons with denatured alcohol, or equivalent.
7. Dry the caliper piston bores and counterbores, and the pistons with non-lubricated, filtered compressed air.
8. Inspect the caliper bores for cracks, scoring, pitting, excessive rust, and/or excessive corrosion.
9. If light rust or light corrosion are present in the caliper bores, attempt to remove the imperfection with a fine emery paper. If the imperfection cannot be removed, replace the caliper assembly.
10. If cracks, scoring, pitting, excessive rust, and/or excessive corrosion are present in the caliper bores, replace the caliper assembly.
11. Inspect the caliper pistons for cracks, scoring, and/or damage to the chrome plating. Replace the caliper pistons if any of these conditions exist.
12. Lubricate the new piston seals with Delco Supreme 11(R) GM P/N 12377967 (Canadian P/N 992667), or equivalent DOT-3 brake fluid from a clean, sealed brake fluid container.
13. Install the lubricated, new piston seals into the caliper bores.
14. Install the new piston dust boot seal over the piston.
15. Install the caliper pistons into the caliper bores.
    1. Install the boots over the ends of the pistons so that the fold will face toward the brake caliper housing piston bore openings.
    2. Seat the boots into the brake caliper bore grooves and slide the pistons into the brake caliper bores.
    3. Push the pistons down to the bottom of the brake caliper bores.
    4. Make sure the boots are properly seated into the piston grooves and into the groove in the brake caliper bores.

NOTE: Refer to Fastener Notice in Cautions and Notices.

16. Install the caliper bleed screw.

    Tighten: Tighten the caliper bleed screw to 12 N.m (106 lb in).

17. Install the caliper bleed screw cap.
18. Install the caliper to the vehicle. Refer to **Brake Caliper Replacement - Front** .

BRAKE CALIPER OVERHAUL - REAR

CAUTION: Refer to Brake Fluid Irritant Caution in Cautions and Notices.

NOTE: Refer to Brake Fluid Effects on Paint and Electrical Components Notice in Cautions and Notices.

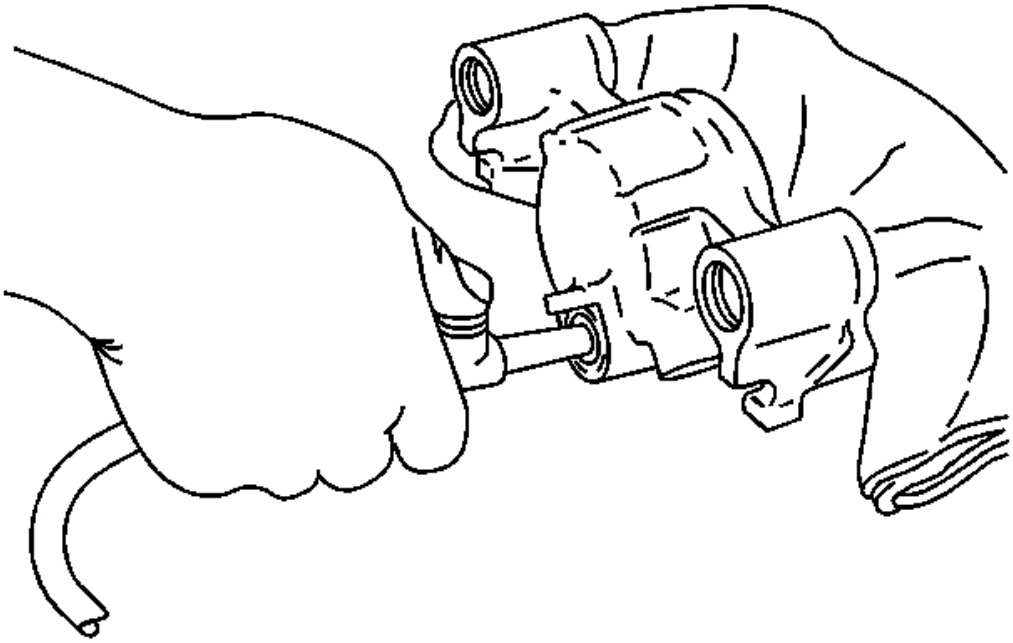

Fig. 33: Applying Compressed Air To Caliper Fluid Inlet Hole
Courtesy of GENERAL MOTORS CORP.

CAUTION: Do not place your fingers in front of the piston in order to catch or protect the piston while applying compressed air. This could result in serious injury.

NOTE: Use clean cloths to pad interior of caliper housing during piston removal. Use just enough air to ease the pistons out of the bores. If the pistons are blown out, even with the padding provided, it may be damaged.

1. Remove the rear brake caliper from the vehicle. Refer to **Brake Caliper Replacement - Rear** .
2. Remove the brake caliper piston from the caliper bore by directing low pressure compressed air into the caliper bore through the fluid inlet hole.

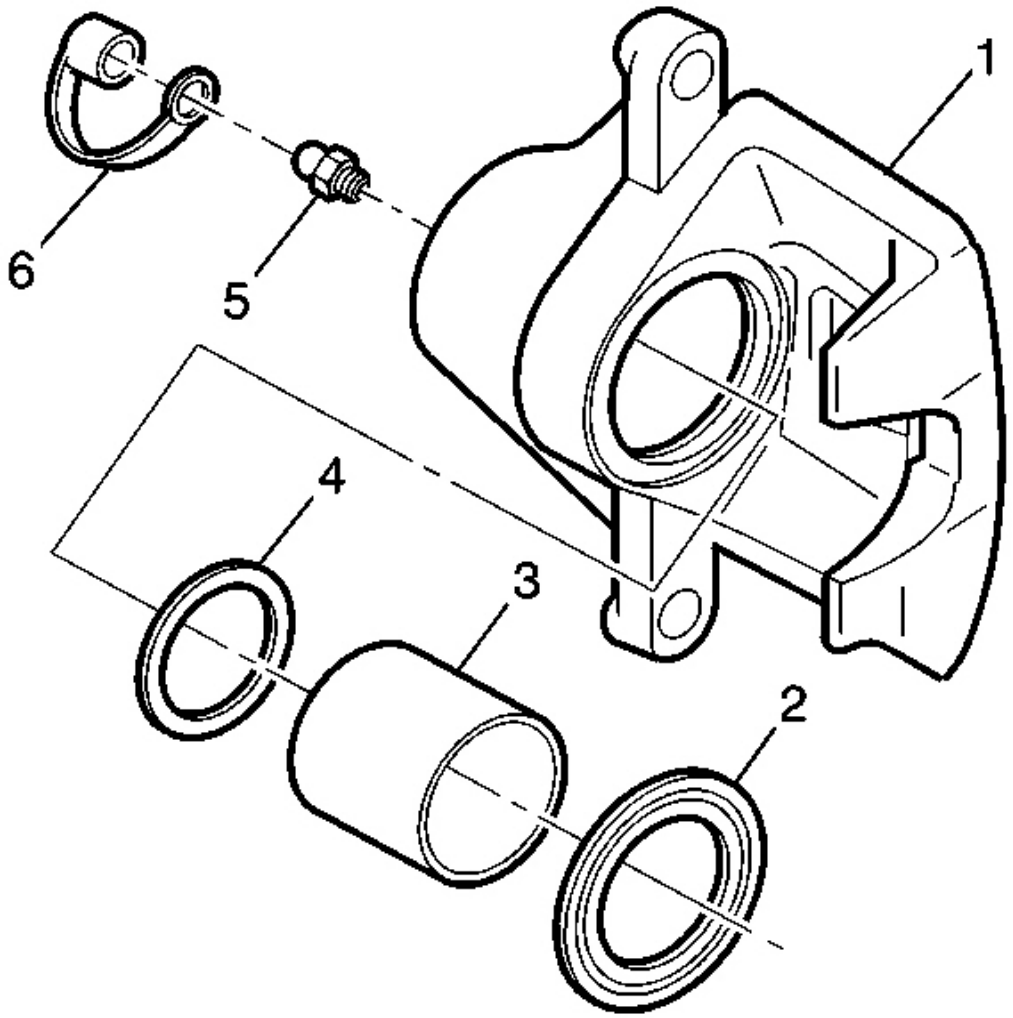

Fig. 34: Exploded View Of Brake Caliper
Courtesy of GENERAL MOTORS CORP.

3. Using a small wooden or plastic tool, remove the piston dust boot seal (2) from the seal counterbore in the caliper (1) and discard the boot seal.
4. Using a small wooden or plastic tool, remove the piston seal (4) from the caliper bore and discard the piston seal.
5. Remove the bleeder valve (5) and cap (6) from the caliper (1).

IMPORTANT: Do not use abrasives to clean the brake caliper piston.

6. Clean the brake caliper piston bore and seal counterbore, and the caliper piston with denatured alcohol, or equivalent.
7. Dry the caliper piston bore and counterbore, and the piston with non-lubricated, filtered compressed air.
8. Inspect the caliper bore for cracks, scoring, pitting, excessive rust, and/or excessive corrosion.
9. If light rust or light corrosion are present in the caliper bore, attempt to remove the imperfection with a fine emery paper. If the imperfection cannot be removed, replace the caliper assembly.
10. If cracks, scoring, pitting, excessive rust, and/or excessive corrosion are present in the caliper bore, replace the caliper assembly.
11. Inspect the caliper piston for cracks, scoring, and/or damage to the chrome plating. Replace the caliper piston if any of these conditions exist.
12. Lubricate the new piston seal with Delco Supreme 11(R) GM P/N 12377967 (Canadian P/N 992667), or equivalent DOT-3 brake fluid from a clean, sealed brake fluid container.
13. Install the lubricated, new piston seal into the caliper bore.

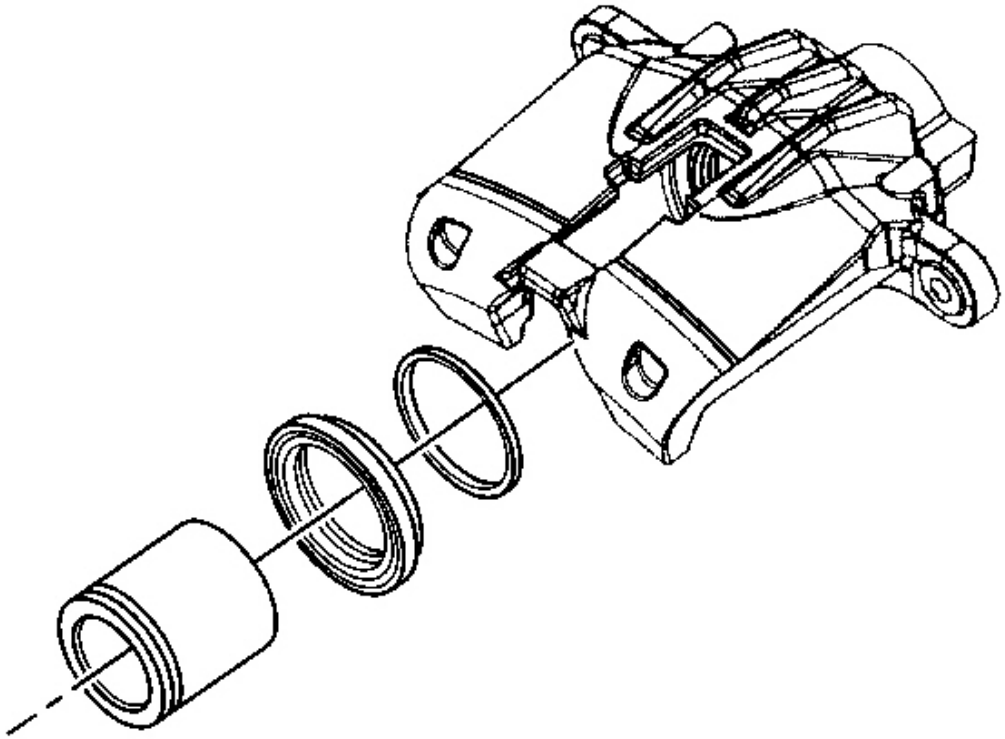

Fig. 35: View Of Piston Components
Courtesy of GENERAL MOTORS CORP.

14. Install the new piston dust boot seal over the piston.
15. Install the caliper piston into the caliper bore.
    1. Install the boot over the end of the piston so that the fold will face toward the brake caliper housing piston bore opening.
    2. Seat the boot into the brake caliper bore groove and slide the piston into the brake caliper bore.
    3. Push the piston down to the bottom of the brake caliper bore.
    4. Make sure the boot are properly seated into the piston groove and into the groove in the brake caliper bore.

NOTE: Refer to Fastener Notice in Cautions and Notices.

16. Install the caliper bleed screw.

    Tighten: Tighten the caliper bleed screw to 12 N.m (106 lb in).

17. Install the caliper bleed screw cap.
18. Install the caliper to the vehicle. Refer to **Brake Caliper Replacement - Rear** .

DISC BRAKE HARDWARE REPLACEMENT - FRONT

Removal Procedure

CAUTION: Refer to Brake Dust Caution in Cautions and Notices.

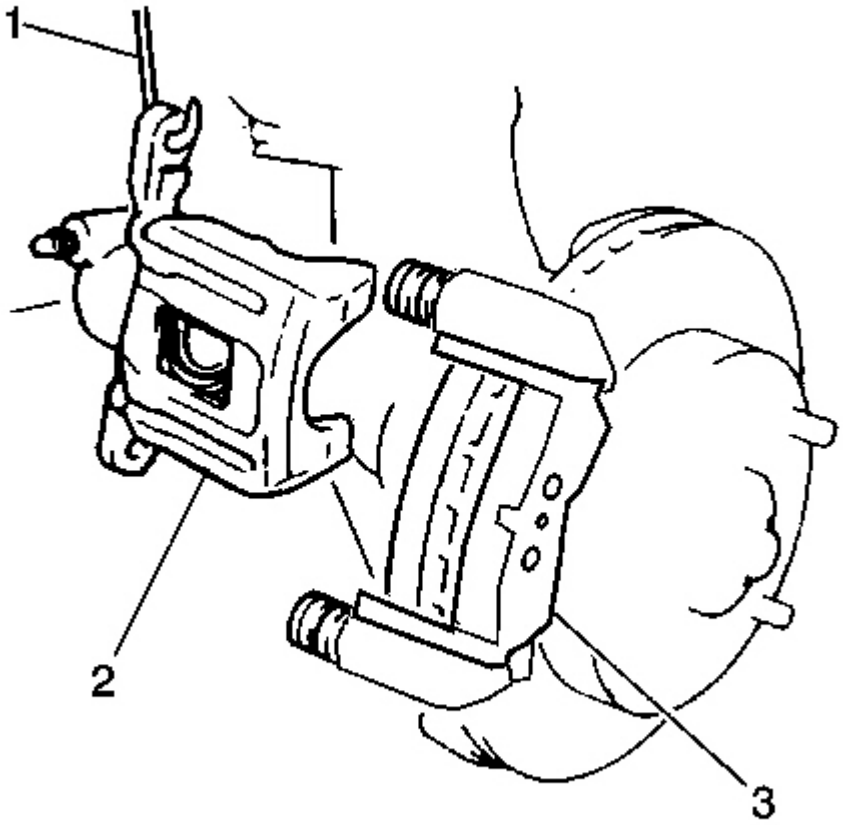

Fig. 36: Identifying Front Brake Caliper
Courtesy of GENERAL MOTORS CORP.

NOTE: **Support the brake caliper with heavy mechanic's wire, or equivalent, whenever it is separated from its mount and the hydraulic flexible brake hose is still connected. Failure to support the caliper in this manner will cause the flexible brake hose to bear the weight of the caliper, which may cause damage to the brake hose and in turn may cause a brake fluid leak.**

1. Remove the brake caliper from the mounting bracket and support the brake caliper (2) with heavy mechanic's wire (1), or equivalent; do NOT disconnect the hydraulic brake flexible hose from the caliper. Refer to **Brake Caliper Replacement - Front** .

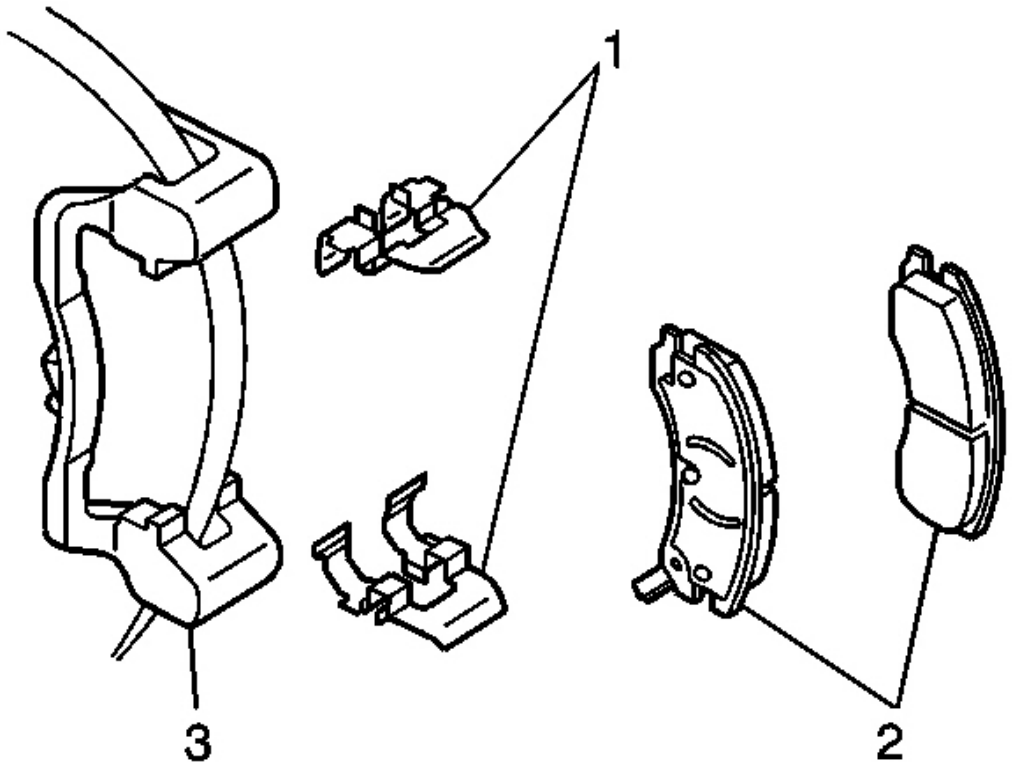

Fig. 37: Brake Pads, Brake Pad Retainers, & Caliper Bracket
Courtesy of GENERAL MOTORS CORP.

2. Remove the brake pads (2) from the brake caliper bracket.
3. Remove the brake pad retainers (1) from the brake caliper bracket.

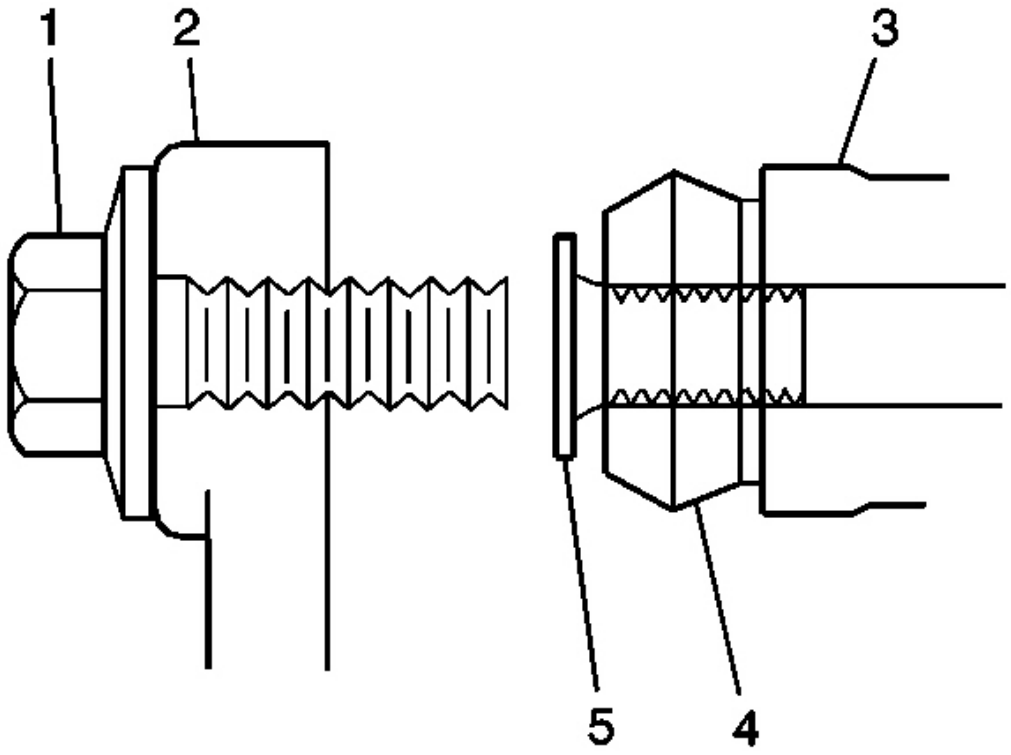

Fig. 38: Caliper Mounting Bolt, Bracket, Boot & Pins
Courtesy of GENERAL MOTORS CORP.

4. Remove the caliper pins (5) from the disc brake caliper mounting bracket (3).
5. Remove the caliper pin boots (4) from the disc brake caliper mounting bracket.
6. Lightly wire brush all brake pad contact areas in order to remove any corrosion.

Installation Procedure

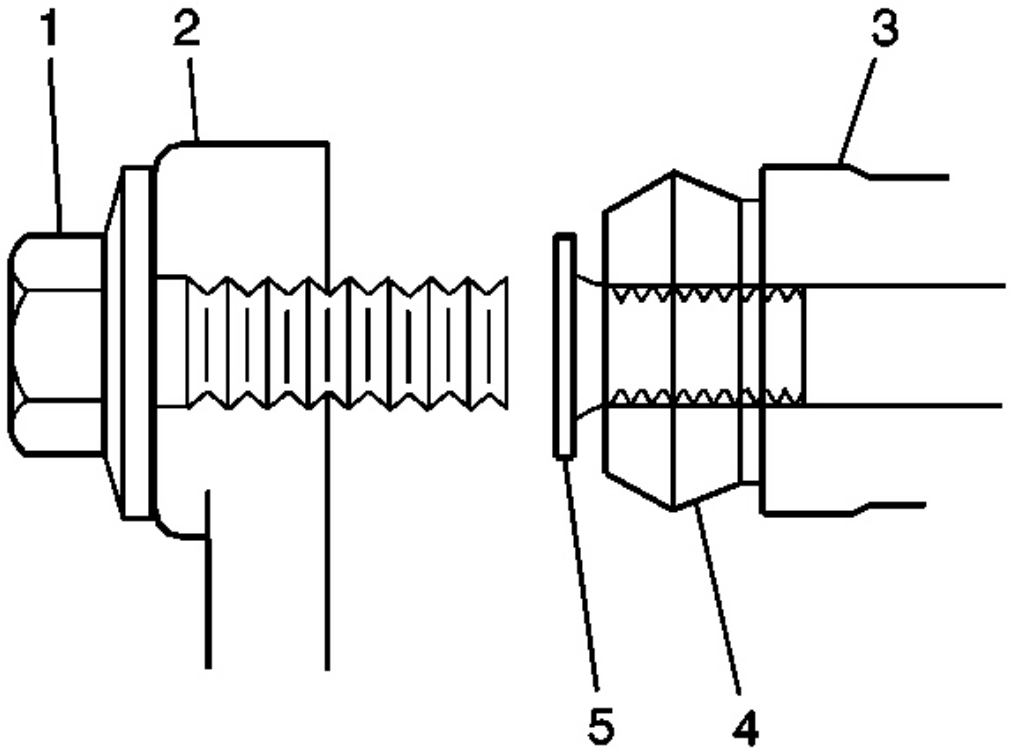

Fig. 39: Caliper Mounting Bolt, Bracket, Boot & Pins
Courtesy of GENERAL MOTORS CORP.

1. Install the caliper pin boots (4) to the disc brake caliper mounting bracket.
2. Lubricate the caliper pins (5) with high temperature silicone lubricant.
3. Install the caliper pins to the disc brake caliper mounting bracket (3).

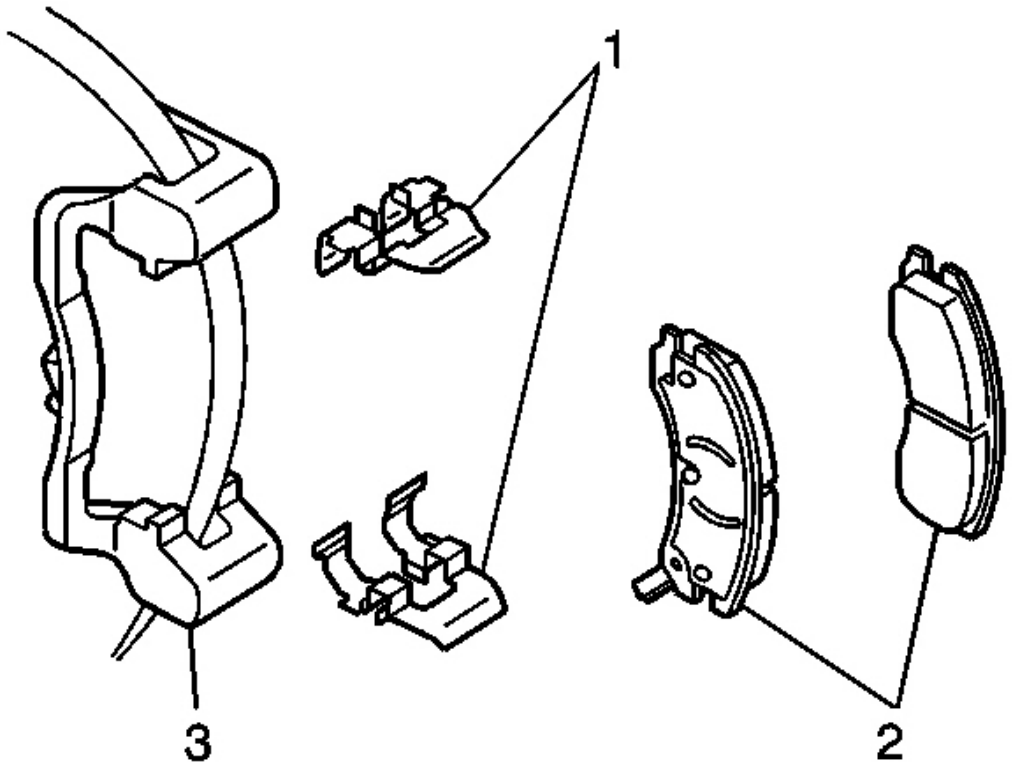

Fig. 40: Brake Pads, Brake Pad Retainers, & Caliper Bracket
Courtesy of GENERAL MOTORS CORP.

4. Install the brake pad retainers (1) to the caliper bracket.
5. Install the brake pads (2) to the caliper bracket.
6. Install the disc brake caliper to the mounting bracket.

NOTE: **Refer to Fastener Notice in Cautions and Notices.**

7. Install the disc brake caliper bolts.

   Tighten: Tighten the disc brake caliper bolts to 31 N.m (23 lb ft).

   Apply and release the brake pedal 3/4 stroke as many times as necessary in order to obtain a firm brake pedal.

DISC BRAKE HARDWARE REPLACEMENT - REAR

Removal Procedure

CAUTION: Refer to Brake Dust Caution in Cautions and Notices.

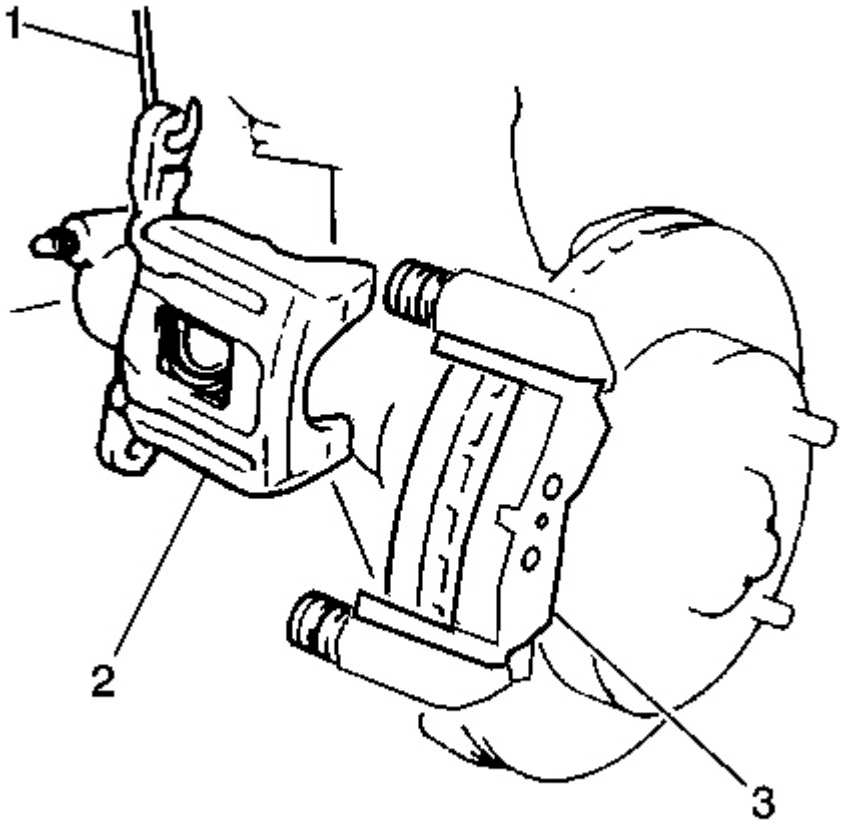

Fig. 41: Identifying Front Brake Caliper
Courtesy of GENERAL MOTORS CORP.

NOTE: Support the brake caliper with heavy mechanic's wire, or equivalent, whenever it is separated from its mount and the hydraulic flexible brake hose is still connected. Failure to support the caliper in this manner will cause the flexible brake hose to bear the weight of the caliper, which may cause damage to the brake hose and in turn may cause a brake fluid leak.

1. Remove the brake caliper from the mounting bracket and support the brake caliper (2) with heavy

mechanic's wire (1), or equivalent; do NOT disconnect the hydraulic brake flexible hose from the caliper. Refer to **Brake Caliper Replacement - Rear** .

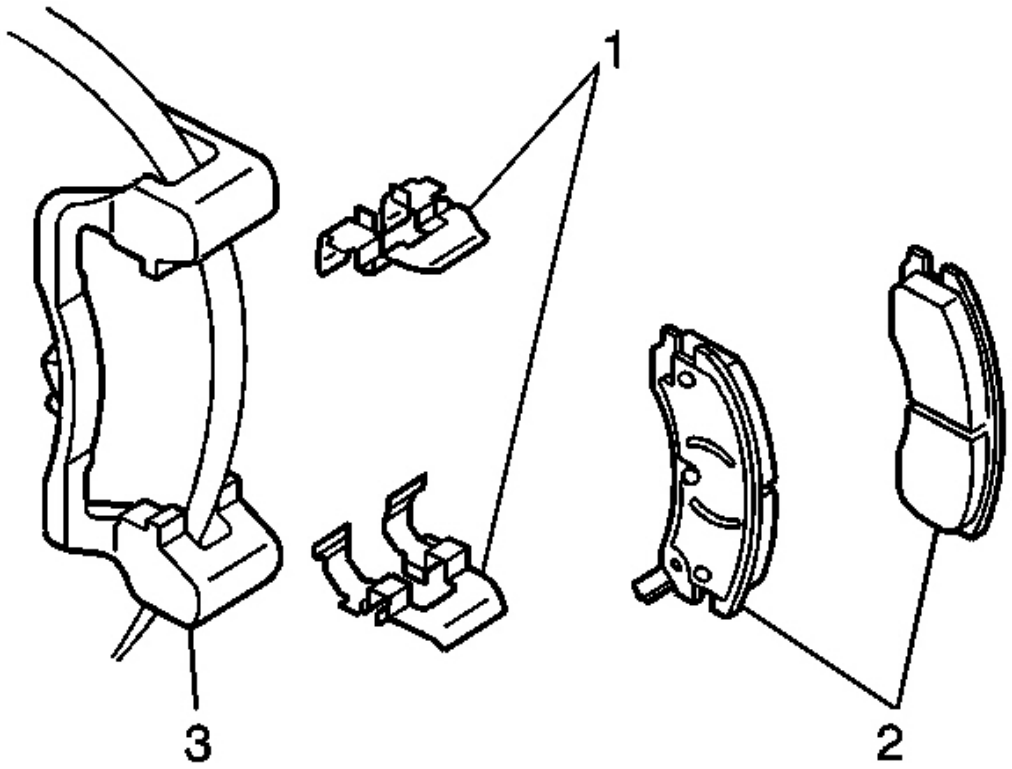

Fig. 42: Brake Pads, Brake Pad Retainers, & Caliper Bracket
Courtesy of GENERAL MOTORS CORP.

2. Remove the brake pads (2) from the brake caliper bracket.
3. Remove the brake pad retainers (1) from the brake caliper bracket.

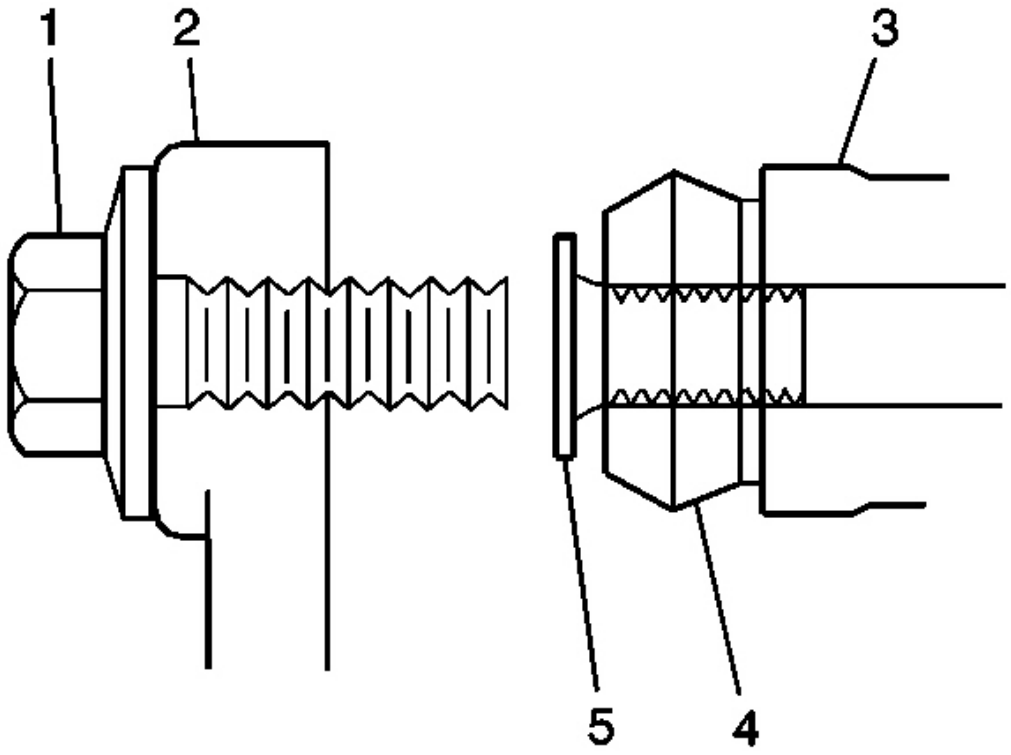

Fig. 43: Caliper Mounting Bolt, Bracket, Boot & Pins
Courtesy of GENERAL MOTORS CORP.

4. Remove the caliper pins (5) from the disc brake caliper mounting bracket (3).
5. Remove the caliper pin boots (4) from the disc brake caliper mounting bracket.
6. Lightly wire brush all brake pad contact areas in order to remove any corrosion.

Installation Procedure

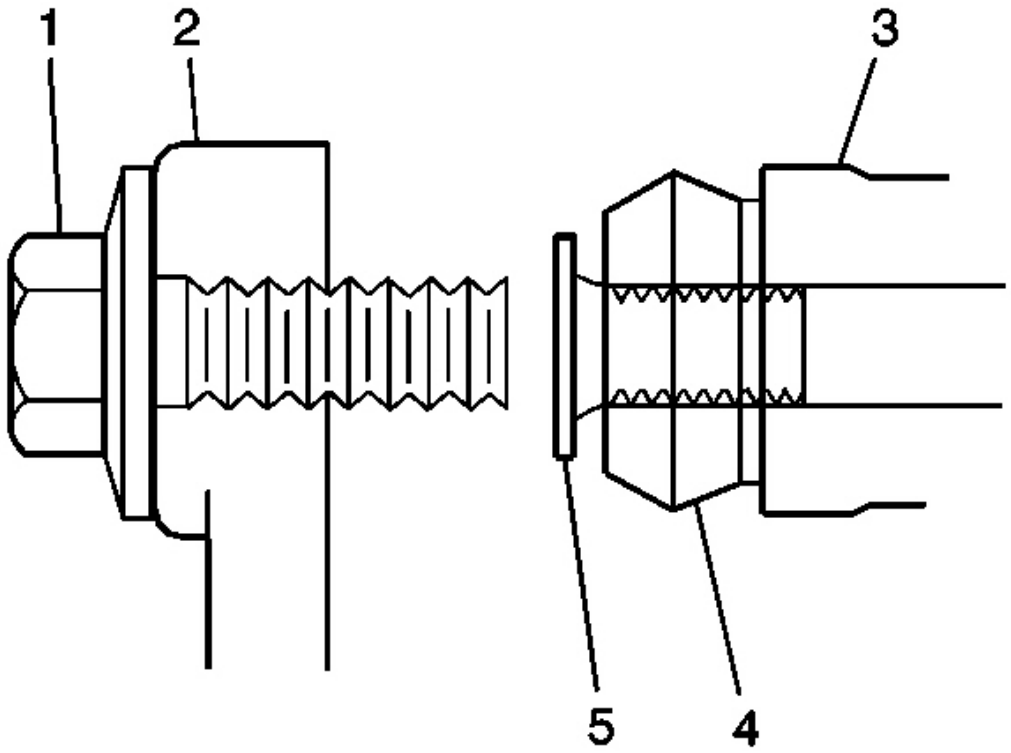

Fig. 44: Caliper Mounting Bolt, Bracket, Boot & Pins
Courtesy of GENERAL MOTORS CORP.

1. Install the caliper pin boots (4) to the disc brake caliper mounting bracket.
2. Lubricate the caliper pins (5) with high temperature silicone lubricant.
3. Install the caliper pins to the disc brake caliper mounting bracket (3).

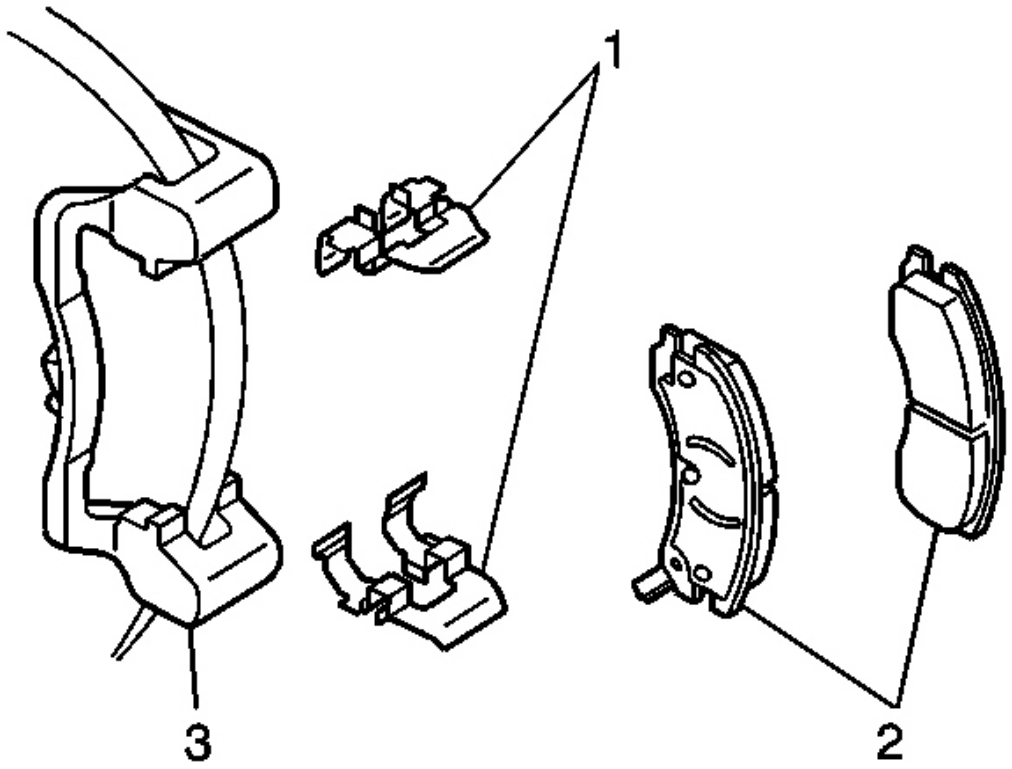

Fig. 45: Brake Pads, Brake Pad Retainers, & Caliper Bracket
Courtesy of GENERAL MOTORS CORP.

4. Install the brake pad retainers (1) to the caliper bracket.
5. Install the brake pads (2) to the caliper bracket.
6. Install the disc brake caliper to the mounting bracket.

NOTE: **Refer to Fastener Notice in Cautions and Notices.**

7. Install the disc brake caliper bolts.

   Tighten: Tighten the disc brake caliper bolts to 31 N.m (23 lb ft).

   Apply and release the brake pedal 3/4 stroke as many times as necessary in order to obtain a firm brake pedal.

BRAKE CALIPER BRACKET REPLACEMENT - FRONT

Removal Procedure

CAUTION: Refer to Brake Dust Caution in Cautions and Notices.

NOTE: Support the brake caliper with heavy mechanic's wire, or equivalent, whenever it is separated from its mount and the hydraulic flexible brake hose is still connected. Failure to support the caliper in this manner will cause the flexible brake hose to bear the weight of the caliper, which may cause damage to the brake hose and in turn may cause a brake fluid leak.

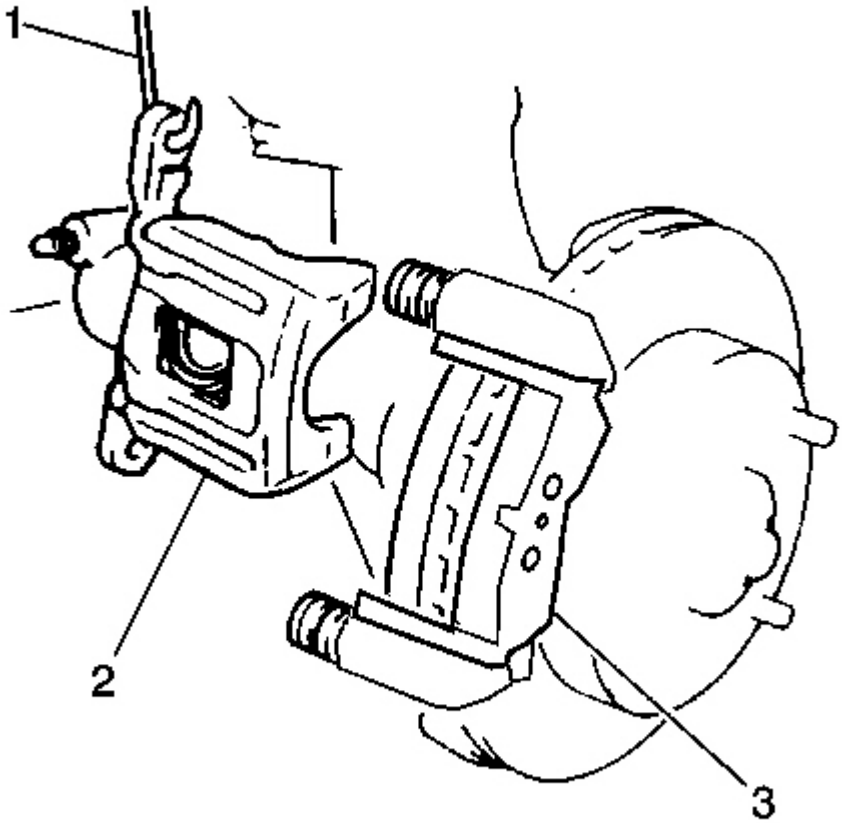

Fig. 46: Identifying Front Brake Caliper
Courtesy of GENERAL MOTORS CORP.

1. Remove the brake caliper from the mounting bracket and support the brake caliper (2) with heavy

mechanic's wire (1), or equivalent; do NOT disconnect the hydraulic brake flexible hose from the caliper. Refer to **Brake Caliper Replacement - Front** .

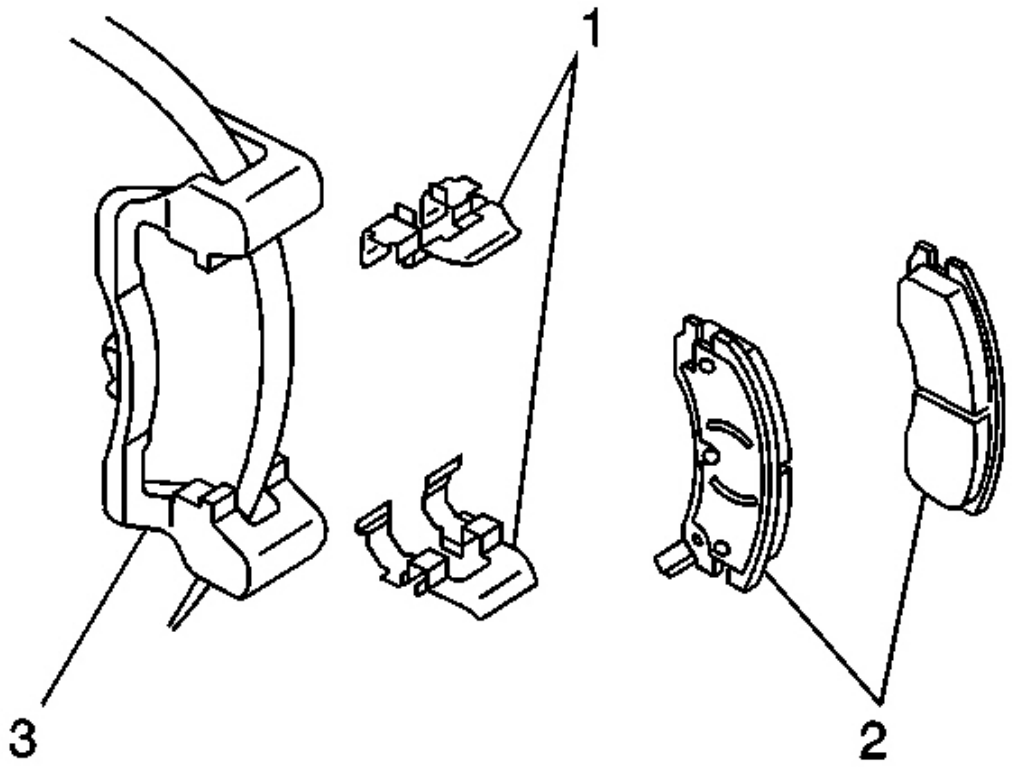

Fig. 47: Identifying Brake Components
Courtesy of GENERAL MOTORS CORP.

2. Remove the brake pads (2) from the brake caliper bracket (3).
3. Remove the brake pad retainers (1) from the brake caliper bracket (3).

IMPORTANT: The brake caliper mounting bracket bolts must not be reused. Replace the bolts with new bolts whenever the bolts are removed or become loose.

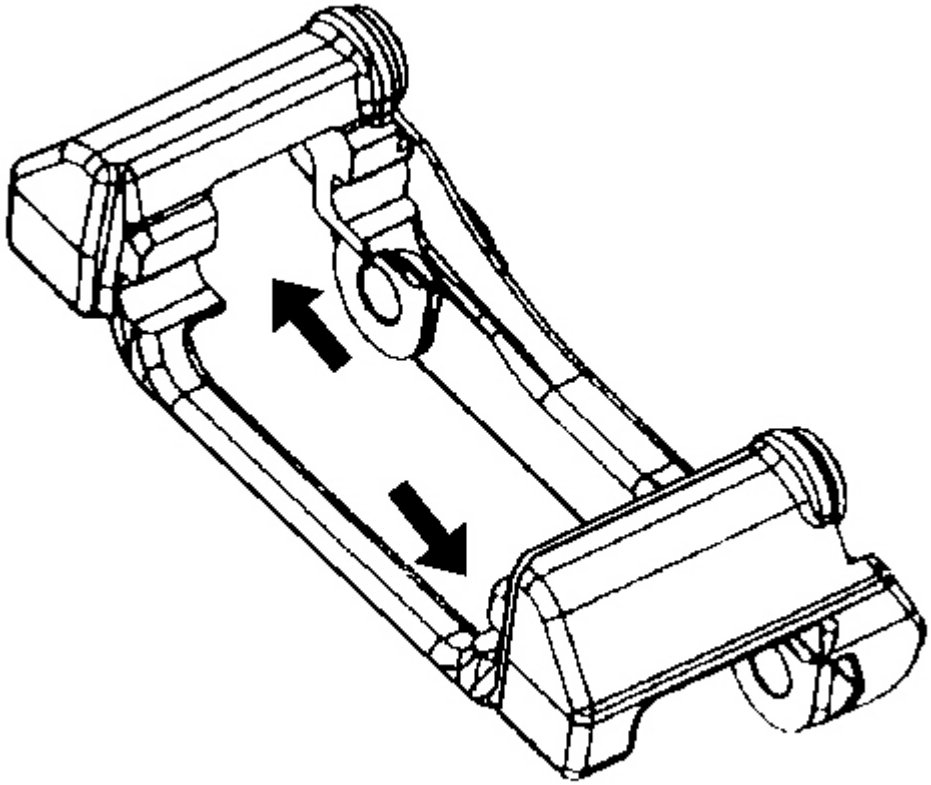

Fig. 48: Inspecting Brake Caliper Mounting Bracket Guide
Courtesy of GENERAL MOTORS CORP.

4. Remove the brake caliper mounting bracket bolts and washers.
5. Discard the brake caliper mounting bracket bolts.
6. Remove the brake caliper mounting bracket from the knuckle.
7. Inspect the brake caliper bracket.
8. Replace the brake caliper bracket if cracked or damaged.
9. Clean all the bolt adhesive residue from the brake caliper mounting bracket and the knuckle mating surfaces.

Installation Procedure

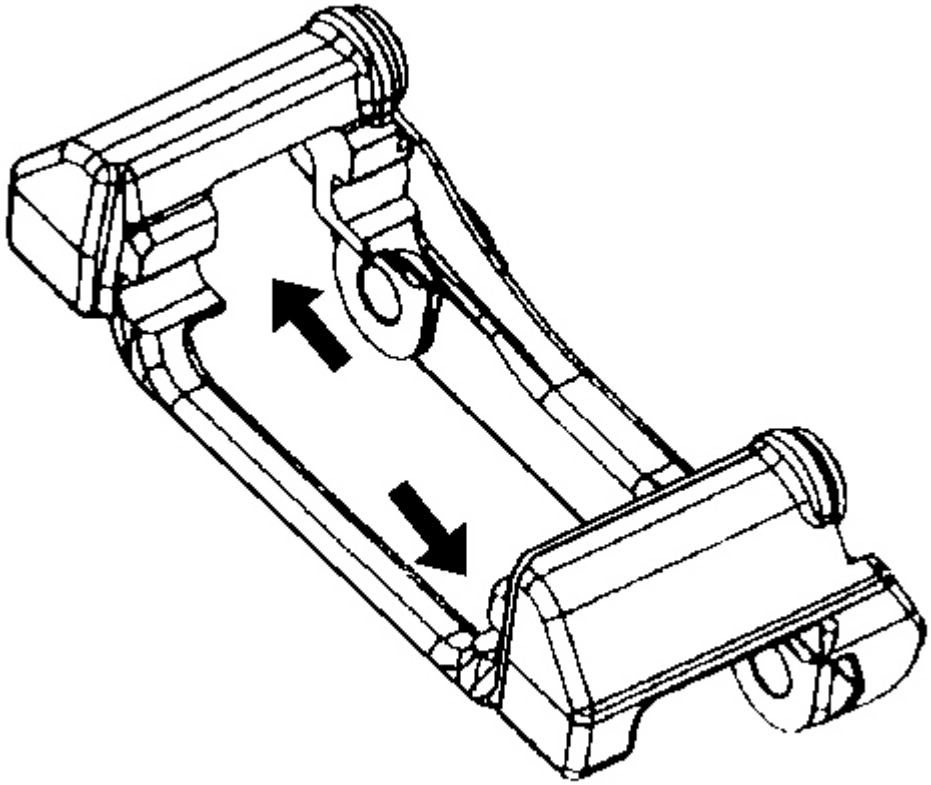

Fig. 49: Inspecting Brake Caliper Mounting Bracket Guide
Courtesy of GENERAL MOTORS CORP.

1. Install the brake caliper mounting bracket to the knuckle.

NOTE: **Refer to Fastener Notice in Cautions and Notices.**

2. Install the two NEW brake caliper mounting bracket bolts and washers.

   The new brake caliper mounting bracket bolts will come with an adhesive already applied to the threads.

   Tighten: Tighten the front brake caliper mounting bracket bolts to 175 N.m (125 lb ft).

3. Lubricate the brake caliper pin bolts with high temperature silicone lubricant.

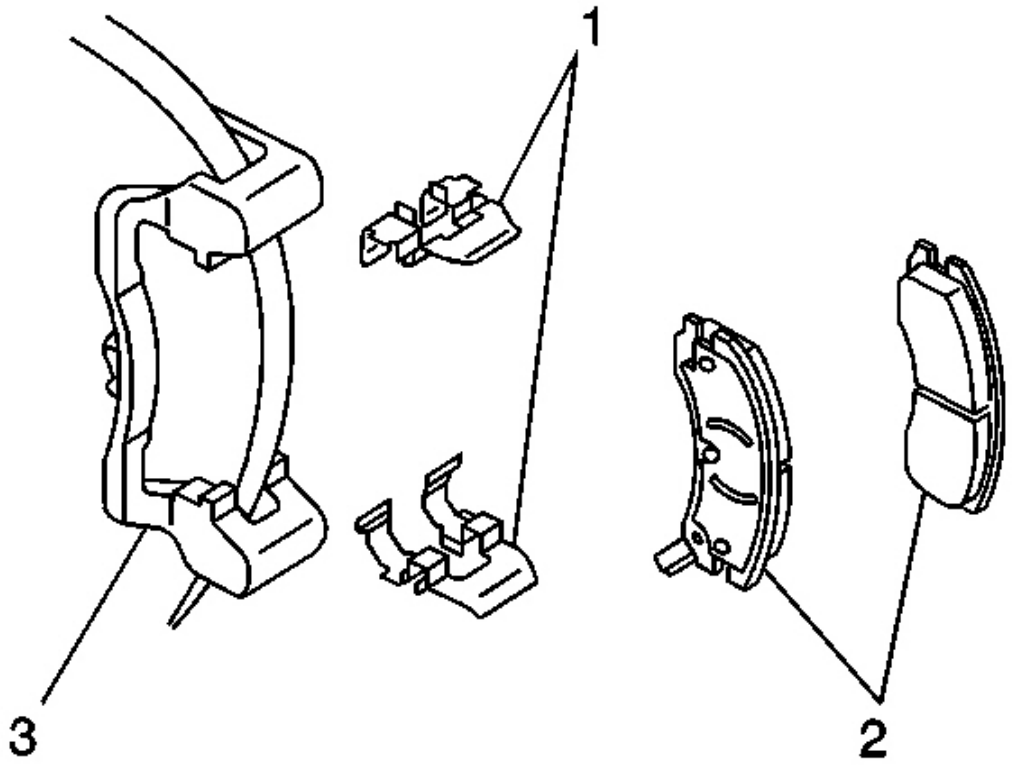

Fig. 50: Identifying Brake Components
Courtesy of GENERAL MOTORS CORP.

4. Install the brake pad retainers (1) to the brake caliper bracket (3).
5. Install the brake pads (2) to the brake caliper bracket (3).
6. Install the brake caliper. Refer to **Brake Caliper Replacement - Front** .

BRAKE CALIPER BRACKET REPLACEMENT - REAR

Removal Procedure

CAUTION: Refer to Brake Dust Caution in Cautions and Notices.

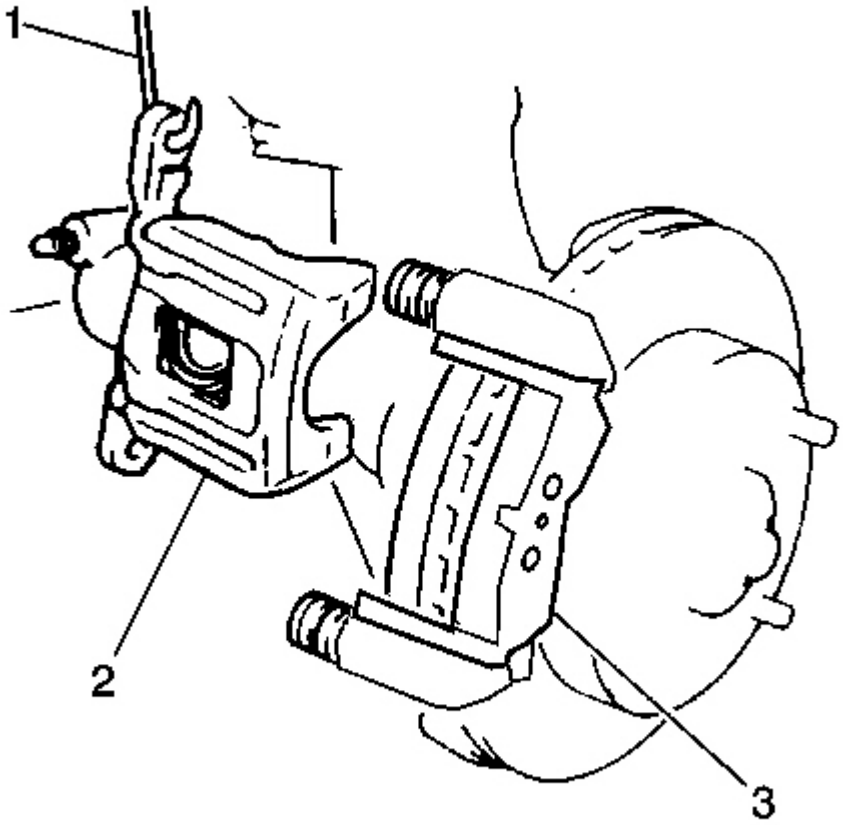

Fig. 51: Identifying Front Brake Caliper
Courtesy of GENERAL MOTORS CORP.

NOTE: **Support the brake caliper with heavy mechanic's wire, or equivalent, whenever it is separated from its mount and the hydraulic flexible brake hose is still connected. Failure to support the caliper in this manner will cause the flexible brake hose to bear the weight of the caliper, which may cause damage to the brake hose and in turn may cause a brake fluid leak.**

1. Remove the brake caliper from the mounting bracket and support the brake caliper (2) with heavy mechanic's wire (1), or equivalent; do NOT disconnect the hydraulic brake flexible hose from the caliper. Refer to **Brake Caliper Replacement - Rear** .

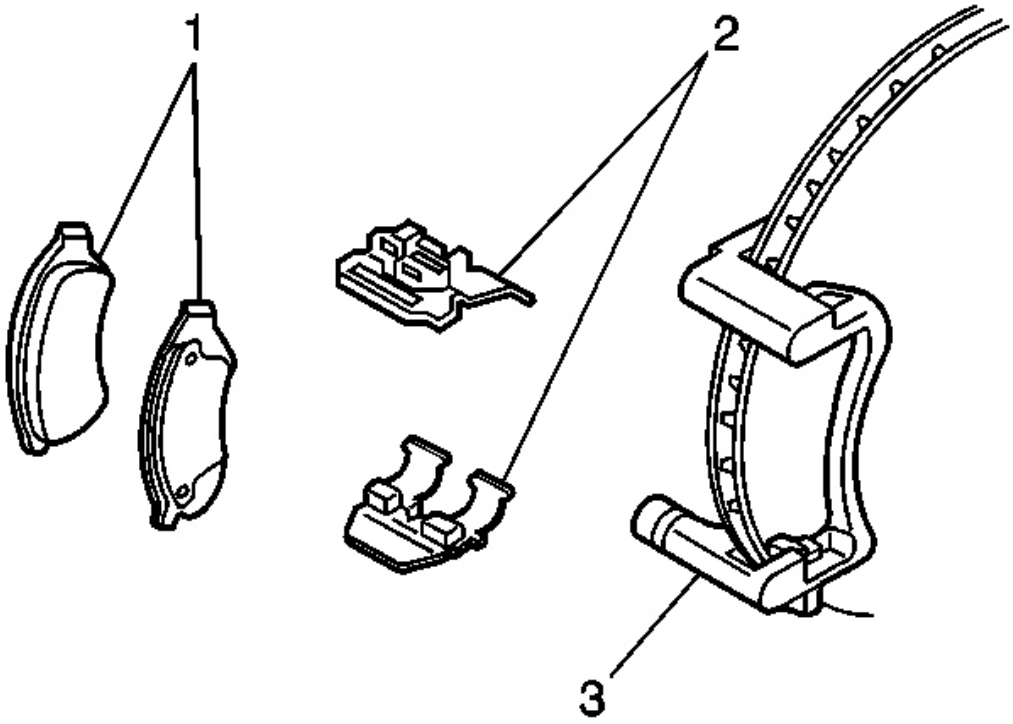

Fig. 52: Removing/Installing Front Brake Pads
Courtesy of GENERAL MOTORS CORP.

2. Remove the brake pads (1) from the brake caliper bracket (3).
3. Remove the brake pad retainers (2) from the brake caliper bracket (3).

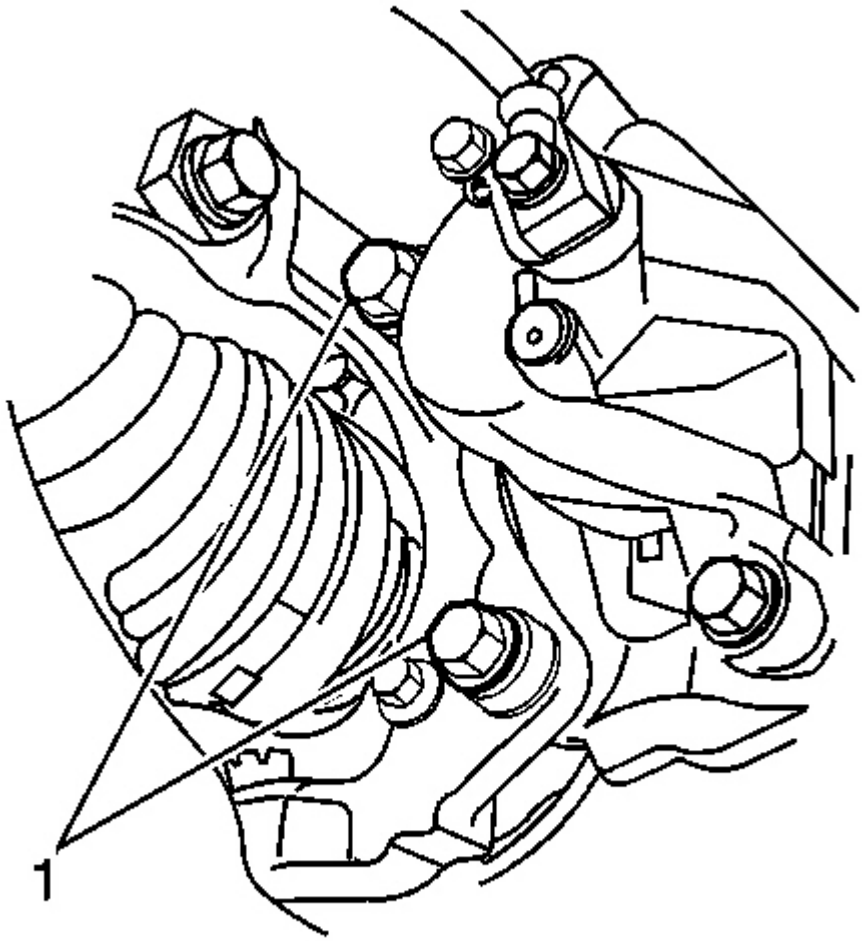

Fig. 53: Brake Caliper Bracket Bolts (1)
Courtesy of GENERAL MOTORS CORP.

IMPORTANT: The brake caliper mounting bracket bolts must not be reused. Replace the bolts with new bolts whenever the bolts are removed or become loose.

4. Remove the brake caliper bracket bolts (1) and discard.
5. Remove the brake caliper bracket.
6. Inspect the brake mounting and hardware. Refer to **Disc Brake Mounting and Hardware Inspection - Rear** .
7. Inspect the brake caliper bracket for cracks or damage.

8. Replace the brake caliper bracket if cracked or damaged.
9. Clean all the bolt adhesive residue from the brake caliper mounting bracket and the knuckle mating surfaces.

Installation Procedure

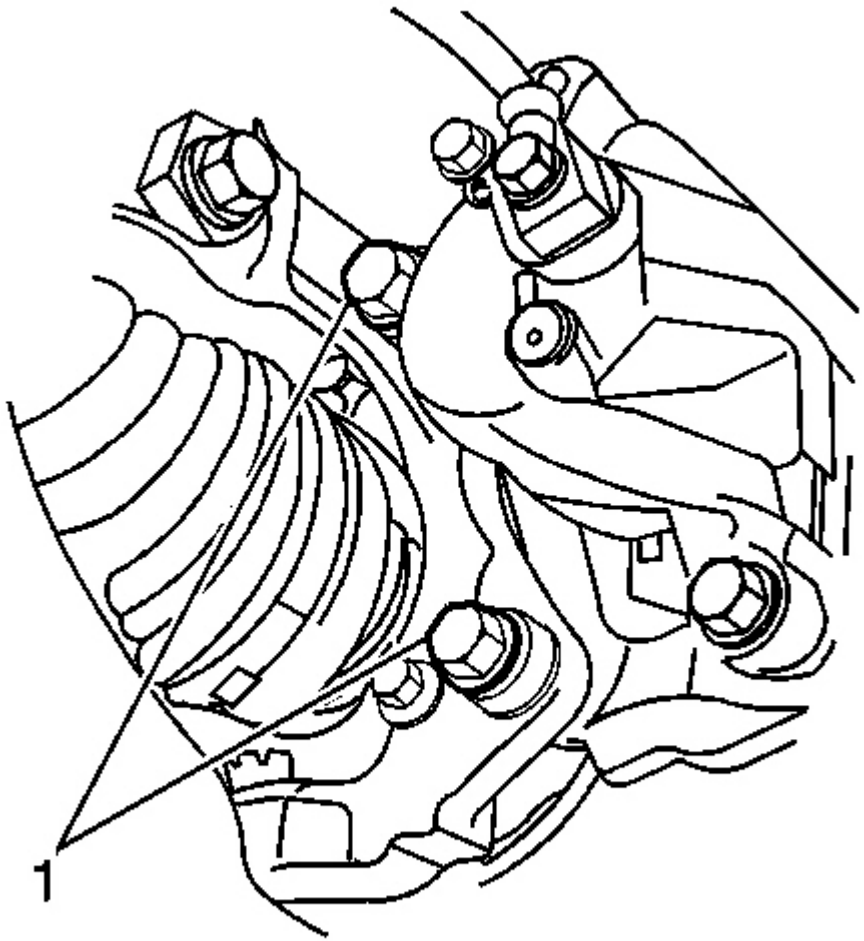

Fig. 54: Brake Caliper Bracket Bolts (1)
Courtesy of GENERAL MOTORS CORP.

1. Install the brake caliper bracket to the suspension knuckle.

NOTE: Refer to Fastener Notice in Cautions and Notices.

2. Install the two NEW brake caliper mounting bracket bolts (1) and washers.

   The new brake caliper mounting bracket bolts will come with an adhesive already applied to the threads.

   Tighten: Tighten the brake caliper mounting bracket bolts to 175 N.m (125 lb ft).

3. Lubricate the brake caliper pin bolts with high temperature silicone lubricant.

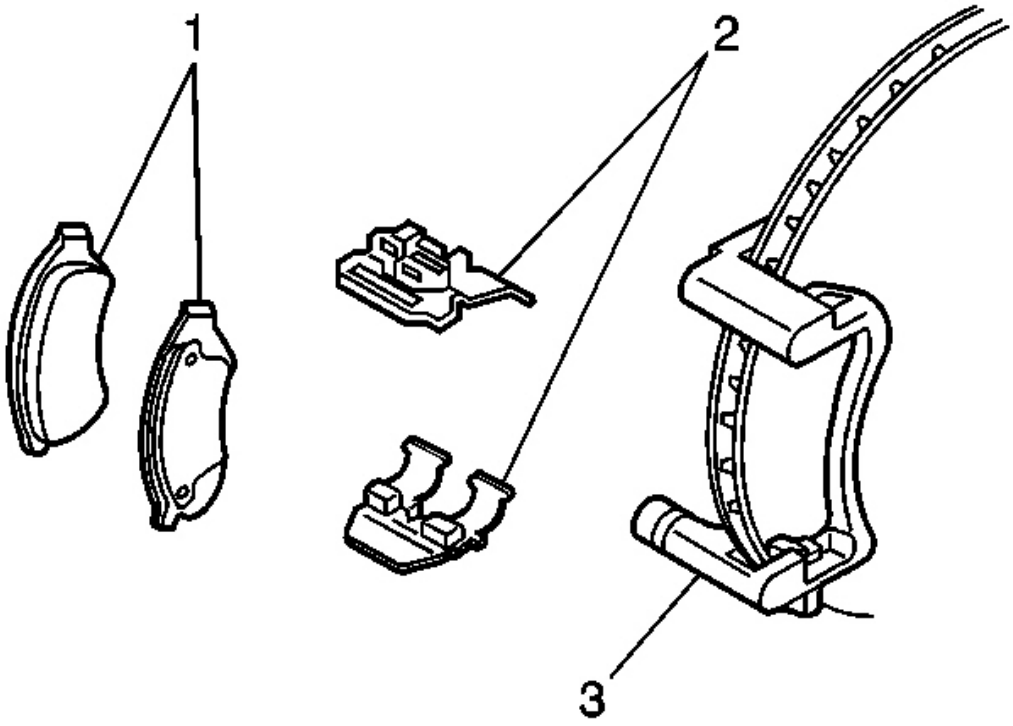

Fig. 55: Removing/Installing Front Brake Pads
Courtesy of GENERAL MOTORS CORP.

4. Install the brake pad retainers (2) to the brake caliper bracket (3).
5. Install the brake pads (1) to the brake caliper bracket (3).
6. Install the brake caliper. Refer to **Brake Caliper Replacement - Rear** .

BRAKE ROTOR REPLACEMENT - FRONT

Tools Required

- **J 41013** Rotor Resurfacing Kit. See **Special Tools and Equipment** .
- **J 42450-A** Wheel Hub Resurfacing Kit. See **Special Tools and Equipment** .

CAUTION: Refer to Brake Dust Caution in Cautions and Notices.

Removal Procedure

1. Raise and support the vehicle. Refer to **Lifting and Jacking the Vehicle** in General Information.
2. Remove the tire and wheel assembly. **Tire and Wheel Removal and Installation** in Tires and Wheels.
3. Install a C-clamp over the body of the brake caliper, with the C-clamp ends against the rear of the caliper body and the outboard disc brake pad.
4. Using the C-clamp, compress the piston into the caliper bore just enough to allow the caliper to slide away from the rotor.
5. Remove the C-clamp.

NOTE: Support the brake caliper with heavy mechanic's wire, or equivalent, whenever it is separated from its mount and the hydraulic flexible brake hose is still connected. Failure to support the caliper in this manner will cause the flexible brake hose to bear the weight of the caliper, which may cause damage to the brake hose and in turn may cause a brake fluid leak.

6. Remove the caliper bracket bolts. Do not disconnect the brake flexible hose bolt.

   Remove the brake caliper and the caliper mounting bracket as an assembly from the suspension knuckle and support the assembly with heavy mechanic's wire, or equivalent. Ensure that there is no tension on the hydraulic brake flexible hose. Refer to **Brake Caliper Bracket Replacement - Front** .

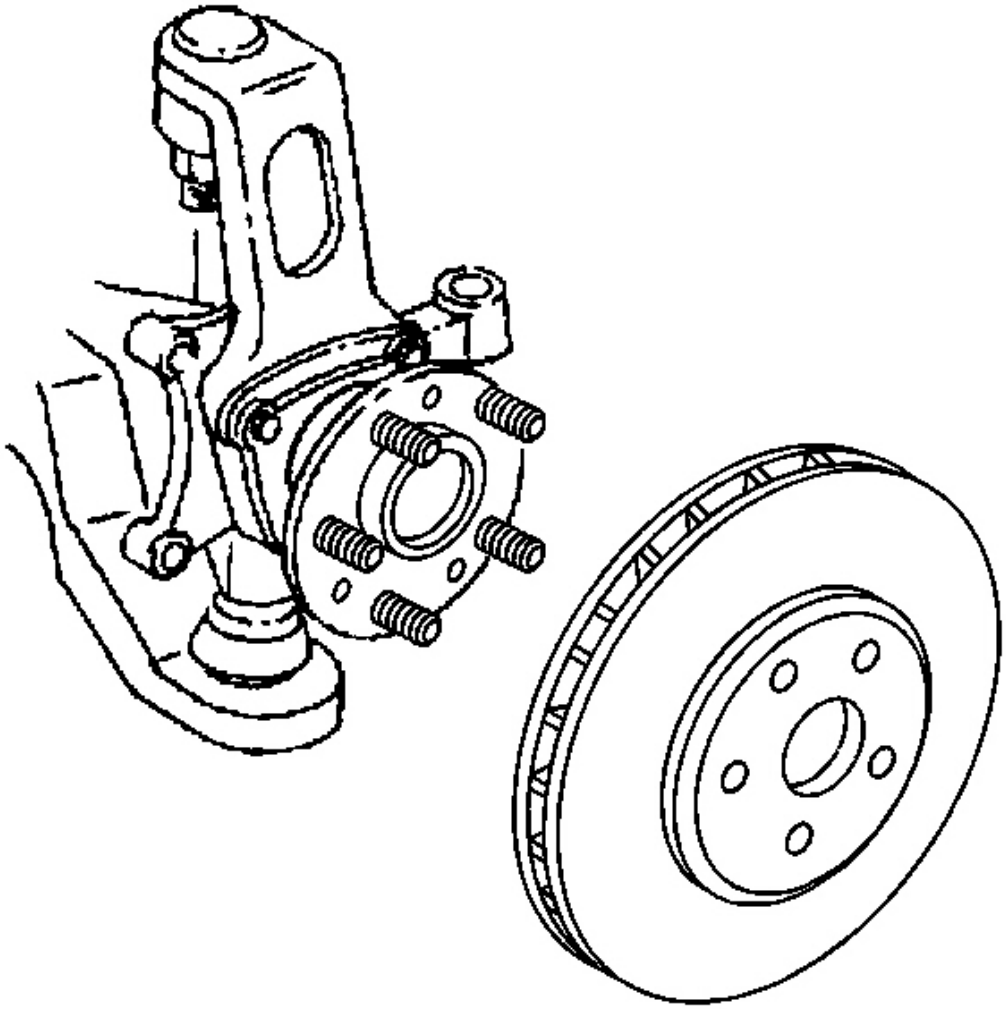

Fig. 56: View Of Brake Rotor & Wheel Studs
Courtesy of GENERAL MOTORS CORP.

7. Matchmark the position of the brake rotor to the wheel studs.
8. Remove the brake rotor.

Installation Procedure

IMPORTANT: Whenever the brake rotor has been separated from the hub/axle flange, any rust or contaminants should be cleaned from the hub/axle flange and the brake rotor mating surfaces. Failure to do this may result in excessive

assembled lateral runout (LRO) of the brake rotor, which could lead to brake pulsation.

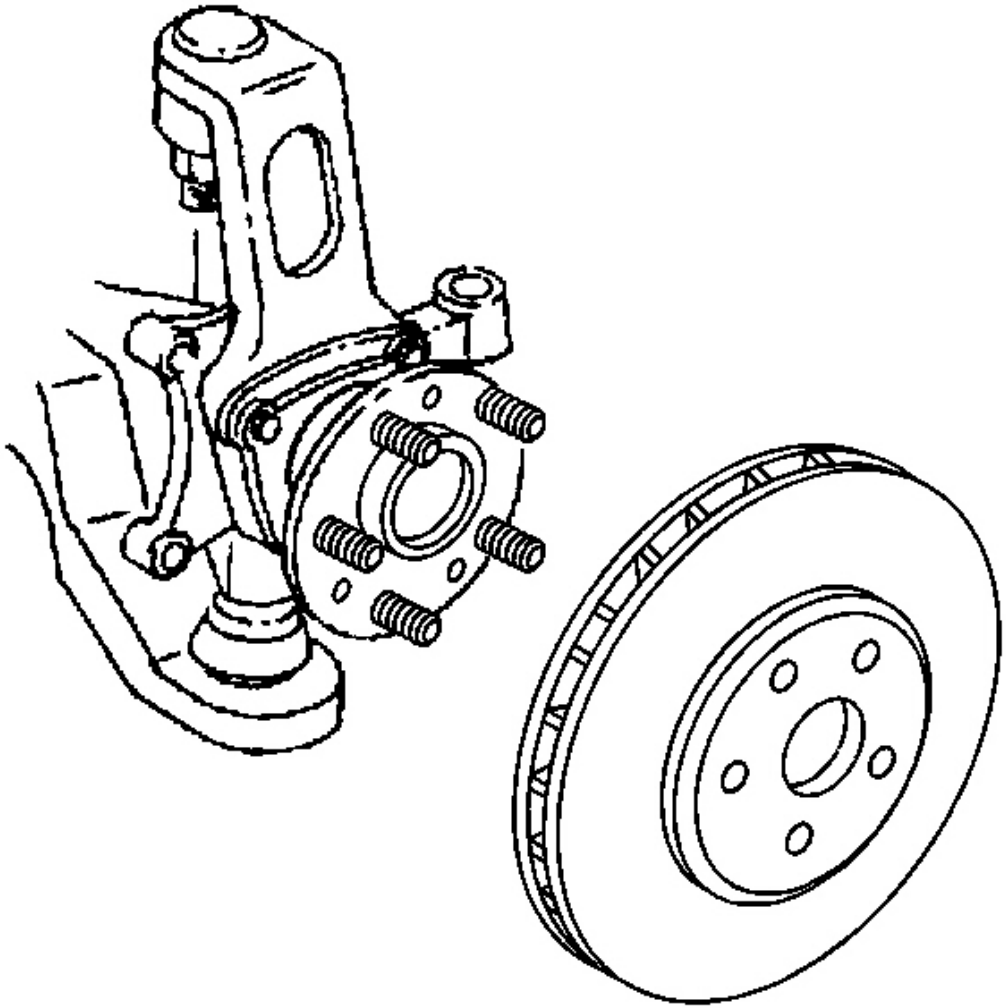

Fig. 57: View Of Brake Rotor & Wheel Studs
Courtesy of GENERAL MOTORS CORP.

1. Using the **J 42450-A** , thoroughly clean any rust or corrosion from the mating surface of the hub/axle flange. See **Special Tools and Equipment** .
2. Using the **J 41013** , thoroughly clean any rust or corrosion from the mating surface and mounting surface of the brake rotor. See **Special Tools and Equipment** .
3. Inspect the mating surfaces of the hub/axle flange and the rotor to ensure that there are no foreign

particles or debris remaining.

4. Install the brake rotor to the hub/axle flange. Use the matchmark made prior to removal for proper orientation to the flange.
5. If the brake rotor was removed and installed as part of a brake system repair, measure the assembled lateral runout (LRO) of the brake rotor to ensure optimum performance of the disc brakes. Refer to **Brake Rotor Assembled Lateral Runout (LRO) Measurement** .
6. If the brake rotor assembled LRO measurement exceeds the specification, bring the LRO to within specifications. Refer to **Brake Rotor Assembled Lateral Runout (LRO) Correction** .
7. Install the brake caliper and the brake caliper bracket as an assembly to the suspension knuckle. Refer to **Brake Caliper Bracket Replacement - Front** .
8. Install the tire and wheel assembly. Refer to **Tire and Wheel Removal and Installation** in Tires and Wheels.
9. Lower the vehicle.
10. If the brake rotor was refinished or replaced, or if new brake pads were installed, burnish the pads and rotors. Refer to **Burnishing Pads and Rotors** .

BRAKE ROTOR REPLACEMENT - REAR

Tools Required

- **J 2619-01** Slide Hammer with Adapter. See **Special Tools and Equipment** .
- **J 41013** Rotor Resurfacing Kit. See **Special Tools and Equipment** .
- **J 42450-A** Wheel Hub Resurfacing Kit. See **Special Tools and Equipment** .
- **J-46277** Rotor Removal Tool. See **Special Tools and Equipment** .

CAUTION: Refer to Brake Dust Caution in Cautions and Notices.

Removal Procedure

1. Check to be sure that the park brake is released.
2. Raise and support the vehicle. Refer to **Lifting and Jacking the Vehicle** in General Information.
3. Remove the tire and wheel assembly. Refer to **Tire and Wheel Removal and Installation** in Tires and Wheels.

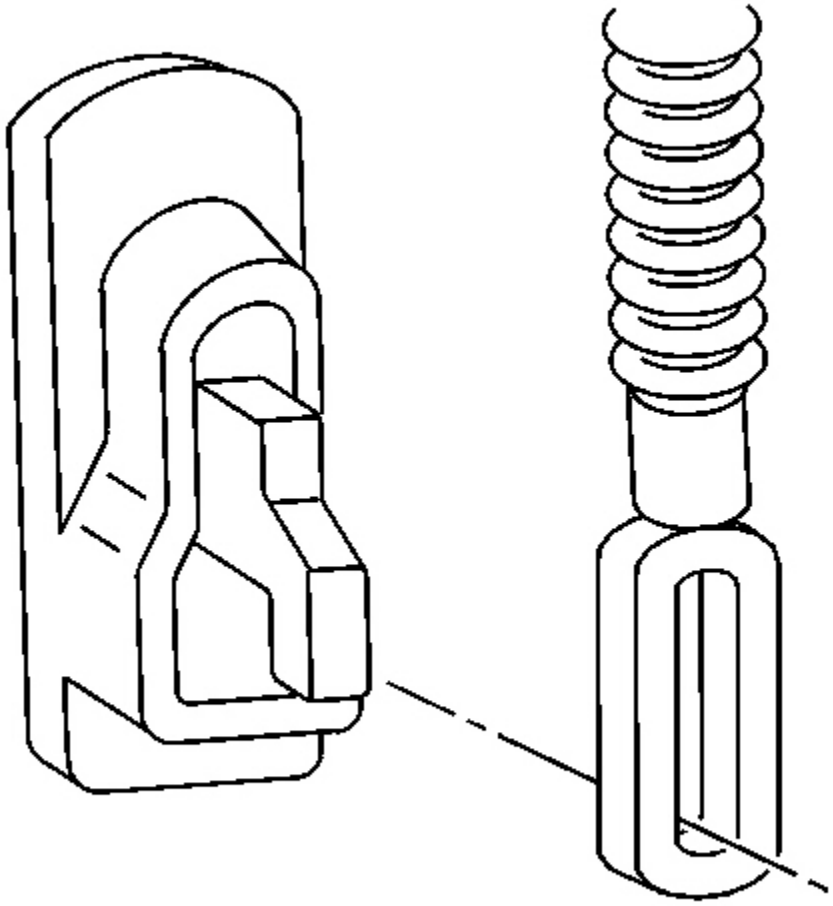

Fig. 58: View Of Park Brake Cable & Apply Lever
Courtesy of GENERAL MOTORS CORP.

4. Disconnect the park brake cable from the park brake apply lever.

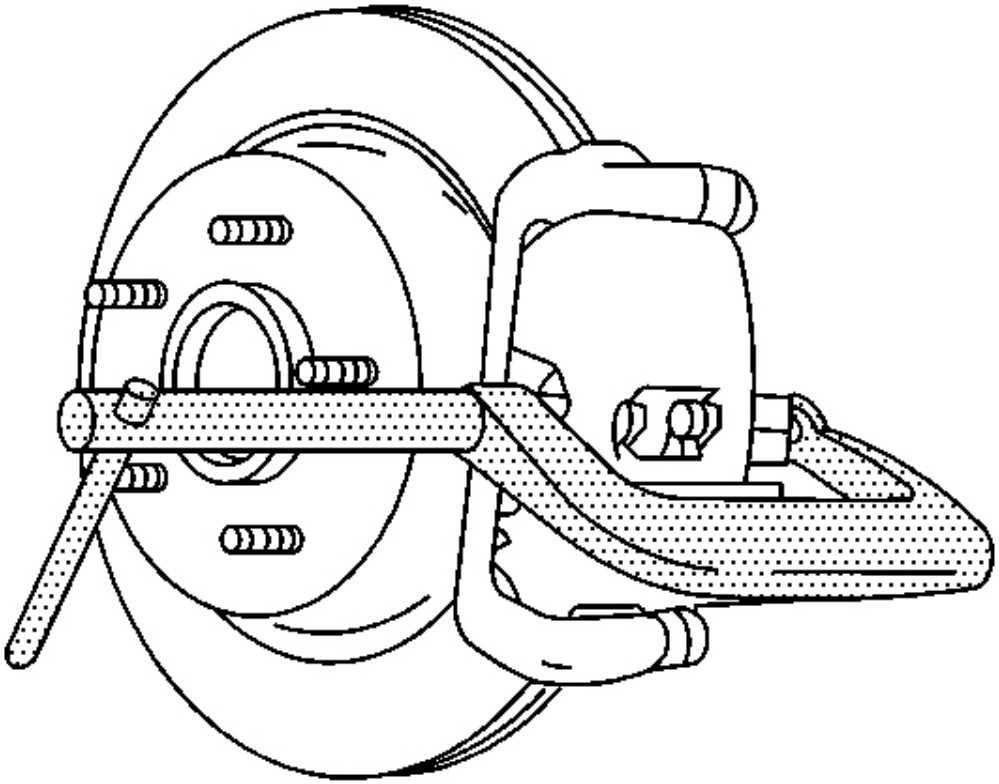

Fig. 59: Inspecting Caliper For Looseness
Courtesy of GENERAL MOTORS CORP.

5. Install a C-clamp over the body of the brake caliper, with the C-clamp ends against the rear of the caliper body and the outboard disc brake pad.
6. Using the C-clamp, compress the piston into the caliper bore just enough to allow the caliper to slide away from the rotor.
7. Remove the C-clamp.

NOTE: **Support the brake caliper with heavy mechanic's wire, or equivalent, whenever it is separated from its mount and the hydraulic flexible brake hose is still connected. Failure to support the caliper in this manner will cause the flexible brake hose to bear the weight of the caliper, which may cause damage to the brake hose and in turn may cause a brake fluid leak.**

8. Remove the caliper bracket bolts. Do not disconnect the brake flexible hose bolt.

9. Remove the brake caliper and the caliper mounting bracket as an assembly from the suspension knuckle and support the assembly with heavy mechanic's wire, or equivalent. Ensure that there is no tension on the hydraulic brake flexible hose. Refer to **Brake Caliper Bracket Replacement - Rear** .
10. Matchmark the position of the brake rotor to the wheel studs.
11. Remove the brake rotor. Do not force the rotor off. If the rotor is difficult to remove, ease it off by gently rotating it as you pull outward.

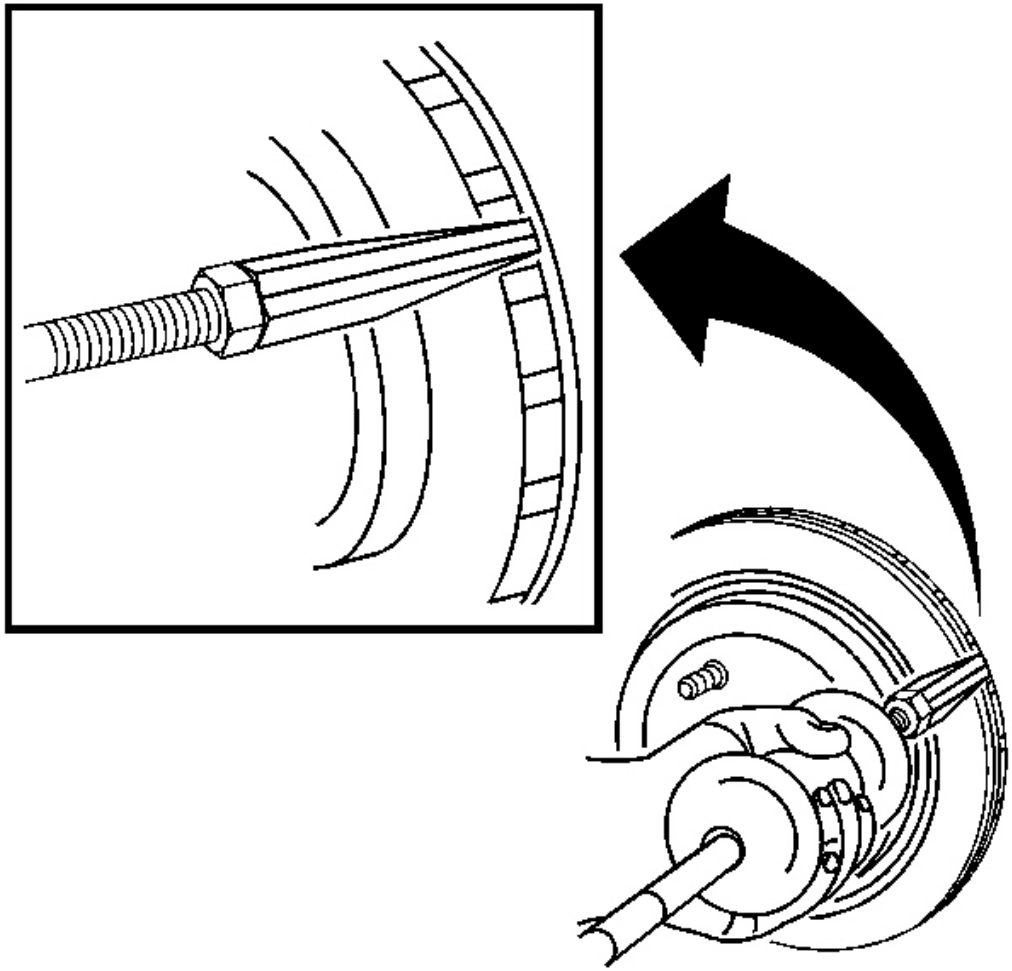

Fig. 60: View Of Rotor From Hub Assembly Removal Using J-46277 & J 2619-01
Courtesy of GENERAL MOTORS CORP.

IMPORTANT: The following service procedure is to be used only if the rear brake rotors cannot be removed without using force.

12. If the rear brake cannot be removed, perform the following:
    1. Assemble**J-46277** to. See **Special Tools and Equipment** .**J 2619-01** . See **Special Tools and Equipment** .
    2. Insert **J-46277** between the rotor friction surfaces in the vent section of the rotor. See **Special Tools and Equipment** . DO NOT place the **J-46277** on the rotor friction surface. See **Special Tools and Equipment** .
    3. Using the **J-46277** and. See **Special Tools and Equipment** .**J 2619-01** , remove the rotor from the hub assembly. See **Special Tools and Equipment** .
    4. Inspect the park brake components for the following conditions:
        - Bent or broken hold down spring
        - Broken, cracked or worn brake shoe lining
        - Bent or damaged brake shoe
        - Worn, bent or damaged backing plate
    5. Replace any defective parts found.

Installation Procedure

IMPORTANT: Whenever the brake rotor has been separated from the hub/axle flange, any rust or contaminants should be cleaned from the hub/axle flange and the brake rotor mating surfaces. Failure to do this may result in excessive assembled lateral runout (LRO) of the brake rotor, which could lead to brake pulsation.

1. Using the **J 42450-A** , thoroughly clean any rust or corrosion from the mating surface of the hub/axle flange. See **Special Tools and Equipment** .
2. Using the **J 41013** , thoroughly clean any rust or corrosion from the mating surface and mounting surface of the brake rotor. See **Special Tools and Equipment** .
3. Inspect the mating surfaces of the hub/axle flange and the rotor to ensure that there are no foreign particles or debris remaining.

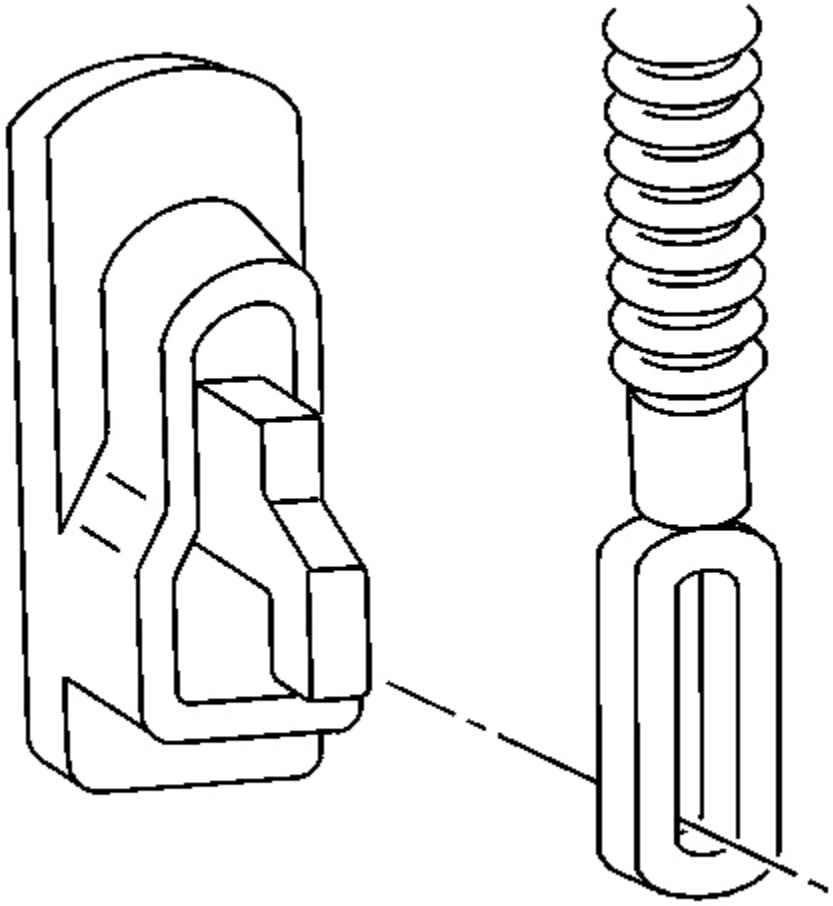

Fig. 61: View Of Park Brake Cable & Apply Lever
Courtesy of GENERAL MOTORS CORP.

4. Connect the park brake cable to the park brake lever.
5. Adjust the clearance of the park brake shoe to the drum-in-hat portion of the brake rotor. Refer to **Park Brake Adjustment** in Park Brake.

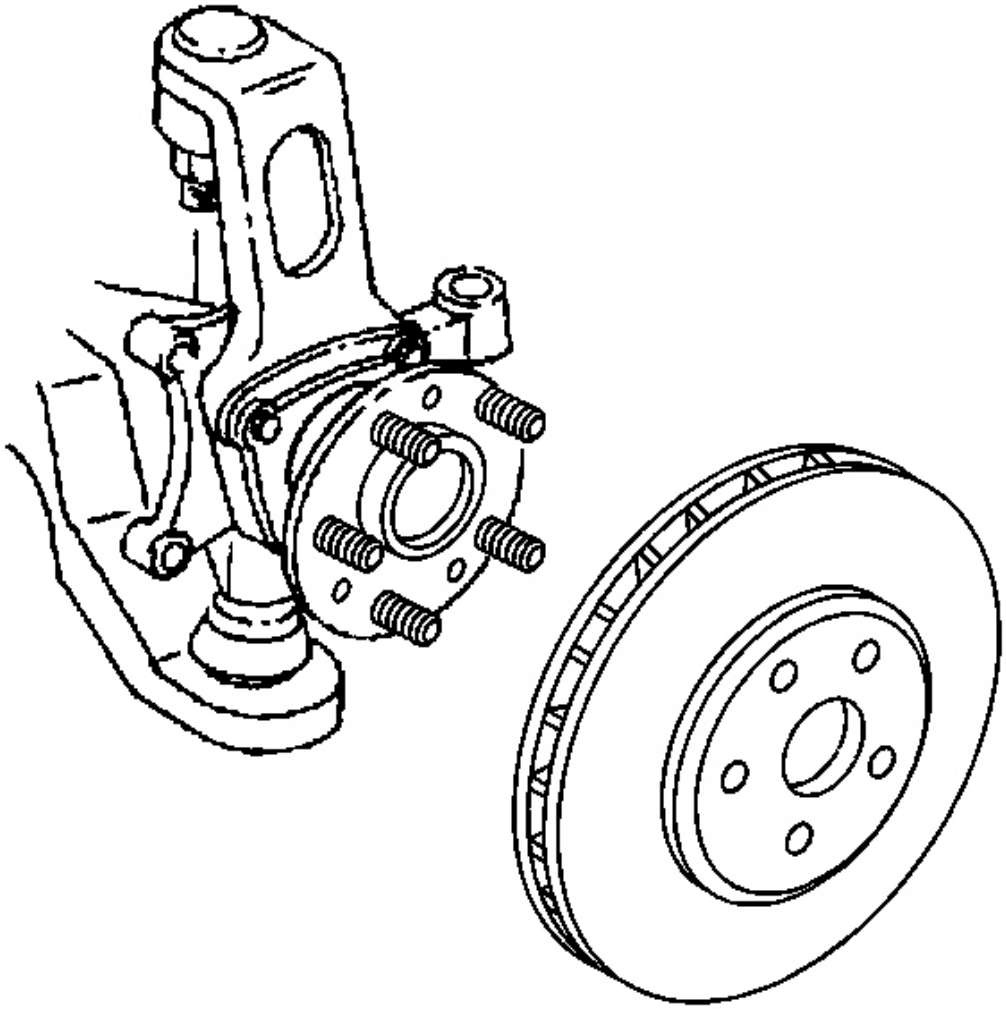

Fig. 62: View Of Brake Rotor & Wheel Studs
Courtesy of GENERAL MOTORS CORP.

6. Install the brake rotor to the hub/axle flange. Use the matchmark made prior to removal for proper orientation to the flange.
7. If the brake rotor was removed and installed as part of a brake system repair, measure the assembled lateral runout (LRO) of the brake rotor to ensure optimum performance of the disc brakes. Refer to **Brake Rotor Assembled Lateral Runout (LRO) Measurement** .
8. If the brake rotor assembled LRO measurement exceeds the specification, bring the LRO to within specifications. Refer to **Brake Rotor Assembled Lateral Runout (LRO) Correction** .
9. Install the brake caliper and the brake caliper bracket as an assembly to the suspension knuckle. Refer to

Brake Caliper Bracket Replacement - Rear .

10. Install the tire and wheel assembly. Refer to **Tire and Wheel Removal and Installation** in Tires and Wheels.
11. Lower the vehicle.
12. If the brake rotor was refinished or replaced, or if new brake pads were installed, burnish the pads and rotors. Refer to **Burnishing Pads and Rotors** .

BRAKE ROTOR ASSEMBLED LATERAL RUNOUT (LRO) CORRECTION

IMPORTANT:

- **Brake rotor thickness variation MUST be checked BEFORE checking for assembled lateral runout (LRO). Thickness variation exceeding the maximum acceptable level can cause brake pulsation. Refer to Brake Rotor Thickness Variation Measurement .**
- **Brake rotor assembled lateral runout (LRO) exceeding the maximum allowable specification can cause thickness variation to develop in the brake rotor over time, usually between 4 800-11 300 km (3,000-7,000 mi). Refer to Brake Rotor Assembled Lateral Runout (LRO) Measurement .**

Review the following acceptable methods for bringing the brake rotor assembled LRO to within specifications. Determine which method to use for the specific vehicle being repaired.

- The indexing method of correcting assembled LRO is most effective when the LRO specification is only exceeded by a relatively small amount: 0.025-0.127 mm (0.001-0.005 in). Indexing is used to achieve the best possible match of high spots to low spots between related components. Refer to **Brake Rotor Assembled Lateral Runout (LRO) Correction - Indexing** .
- The correction plate method of correcting assembled LRO involves the addition of a tapered plate between the brake rotor and the hub/axle flange. The correction plate method can be used to correct LRO that exceeds the specification by up to 0.23 mm (0.009 in). Refer to **Brake Rotor Assembled Lateral Runout (LRO) Correction - Correction Plates** .
- The on-vehicle brake lathe method is used to bring the LRO to within specifications through compensating for LRO while refinishing the brake rotor. Refer to **Brake Rotor Assembled Lateral Runout (LRO) Correction - On-Vehicle Lathe** .

If the assembled LRO cannot be corrected using these methods, then other components must be suspected as causing and/or contributing to the LRO concern.

BRAKE ROTOR ASSEMBLED LATERAL RUNOUT (LRO) CORRECTION - INDEXING

Tools Required

- **J 39544-KIT** Torque-Limiting Socket Set, or equivalent. See **Special Tools and Equipment** .
- **J 45101-100** Conical Brake Rotor Washers. See **Special Tools and Equipment** .

CAUTION: Refer to Brake Dust Caution in Cautions and Notices.

IMPORTANT:

- **Brake rotor thickness variation MUST be checked BEFORE checking for assembled lateral runout (LRO). Thickness variation exceeding the maximum acceptable level can cause brake pulsation. Refer to Brake Rotor Thickness Variation Measurement .**
- **Brake rotor assembled lateral runout (LRO) exceeding the maximum allowable specification can cause thickness variation to develop in the brake rotor over time, usually between 4 800-11 300 km (3,000-7,000 mi). Refer to Brake Rotor Assembled Lateral Runout (LRO) Measurement .**

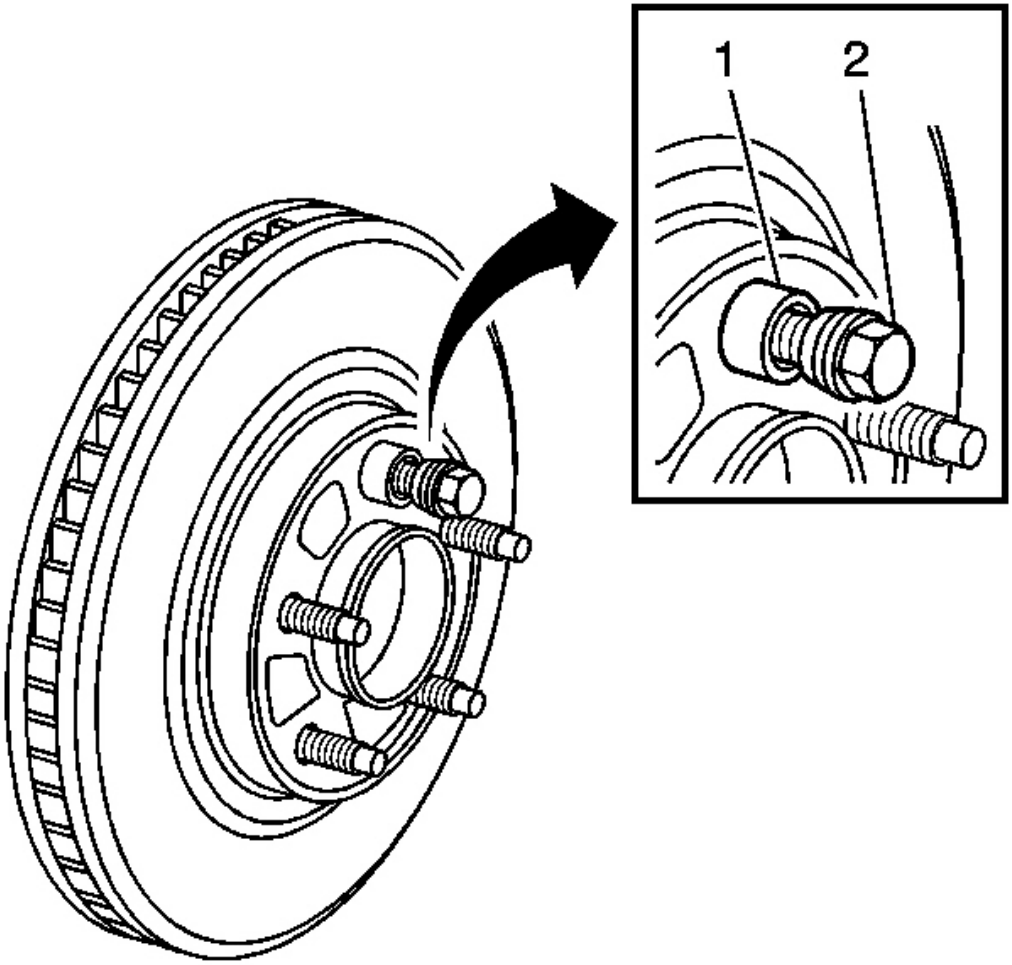

Fig. 63: Identifying J 45101-100

Courtesy of GENERAL MOTORS CORP.

1. Remove the **J 45101-100** and the lug nuts that were installed during the assembled LRO measurement procedure. See **Special Tools and Equipment** .
2. Inspect the mating surface of the hub/axle flange and the brake rotor to ensure that there are no foreign particles or debris remaining.
3. Index the brake rotor in a different orientation to the hub/axle flange.
4. Hold the rotor firmly in place against the hub/axle flange and install one of the**J 45101-100** (1) and one lug nut (2) onto the upper-most wheel stud. See **Special Tools and Equipment** .
5. Continue to hold the rotor secure and tighten the lug nut firmly by hand.

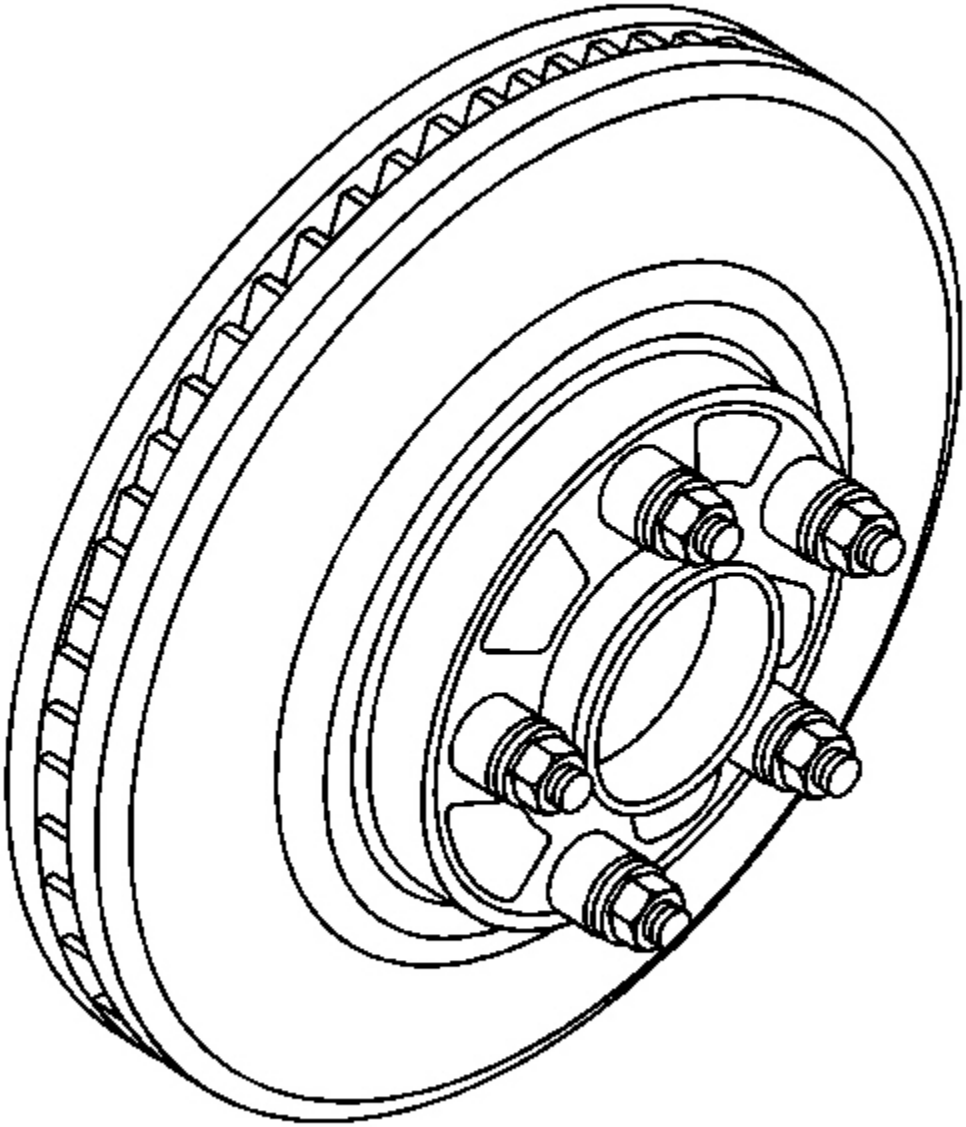

Fig. 64: Identifying Brake Rotor
Courtesy of GENERAL MOTORS CORP.

6. Install the remaining**J 45101-100** and lug nuts onto the wheel studs and tighten the nuts firmly by hand in a star-pattern. See **Special Tools and Equipment** .
7. Using the **J 39544-KIT** , or equivalent, tighten the lug nuts in a star-pattern to specification, in order to properly secure the rotor. See **Special Tools and Equipment** . Refer to **Tire and Wheel Removal and**

Installation in Tires and Wheels.

8. Measure the assembled LRO of the brake rotor. Refer to **Brake Rotor Assembled Lateral Runout (LRO) Measurement** .
9. Compare the amount of change between this measurement and the original measurement.
10. If this measurement is within specifications, proceed to step 14.
11. If this measurement still exceeds specifications, repeat steps 1-9 until the best assembled LRO measurement is obtained.
12. Matchmark the final location of the rotor to the wheel studs if the orientation is different than it was originally.
13. If the brake rotor assembled LRO measurement still exceeds the maximum allowable specification, refer to **Brake Rotor Assembled Lateral Runout (LRO) Correction** .
14. If the brake rotor assembled LRO is within specification, install the brake caliper and depress the brake pedal several times to secure the rotor in place before removing the **J 45101-100** and the lug nuts. See **Special Tools and Equipment** .

BRAKE ROTOR ASSEMBLED LATERAL RUNOUT (LRO) CORRECTION - CORRECTION PLATES

Tools Required

- **J 39544-KIT** Torque-Limiting Socket Set, or equivalent. See **Special Tools and Equipment** .
- **J 45101-100** Conical Brake Rotor Washers. See **Special Tools and Equipment** .

CAUTION: Refer to Brake Dust Caution in Cautions and Notices.

IMPORTANT:

- **Brake rotor thickness variation MUST be checked BEFORE checking for assembled lateral runout (LRO). Thickness variation exceeding the maximum acceptable level can cause brake pulsation. Refer to Brake Rotor Thickness Variation Measurement .**
- **Brake rotor assembled lateral runout (LRO) exceeding the maximum allowable specification can cause thickness variation to develop in the brake rotor over time, usually between 4 800-11 300 km (3,000-7,000 mi). Refer to Brake Rotor Assembled Lateral Runout (LRO) Measurement .**

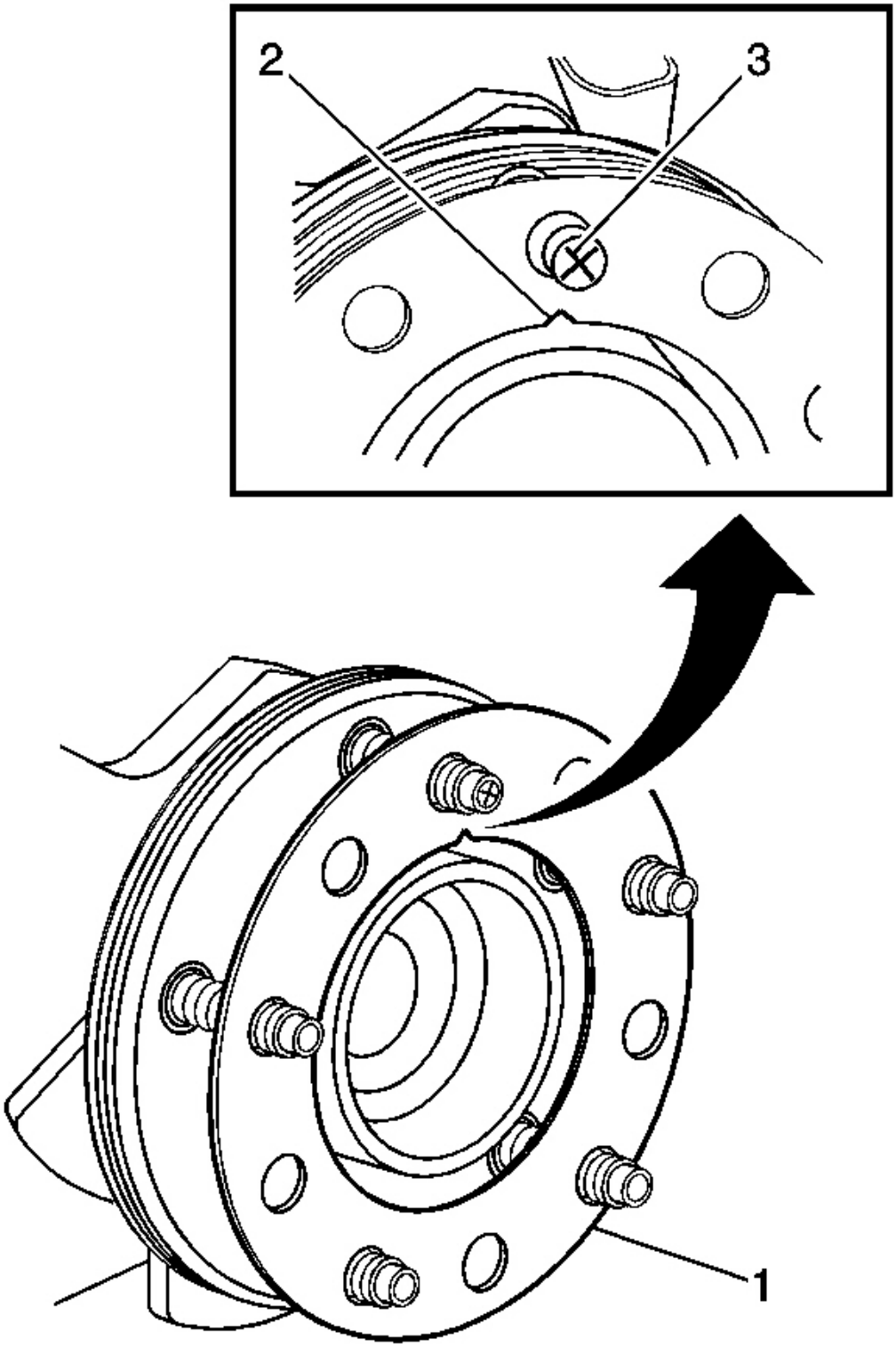
2
3
1

Fig. 65: Correction Plate, High Spot Mark & V-Shaped Notch
Courtesy of GENERAL MOTORS CORP.

1. Rotate the brake rotor to position the high spot, identified and marked during the brake rotor assembled LRO measurement procedure, to face upward.
2. Remove the**J 45101-100** and the lug nuts that were installed during the assembled LRO measurement procedure and/or the indexing correction procedure. See **Special Tools and Equipment** .
3. Inspect the mounting surface of the hub/axle flange and the brake rotor to ensure that there are no foreign particles or debris remaining.
4. Select the correction plate, following the manufacturer's instructions, which has a specification closest to the assembled LRO measurement.

   For example: If the assembled LRO measurement was 0.076 mm (0.003 in), the 0.076 mm (0.003 in) correction plate would be used. If the measurement was 0.127 mm (0.005 in), the 0.152 mm (0.006 in) correction plate would be used.

5. Determine the positioning for the correction plate (1) using the high spot mark (3) made during the brake rotor assembled LRO measurement procedure.

IMPORTANT:

- **Do NOT install used correction plates in an attempt to correct brake rotor assembled lateral runout (LRO).**
- **Do NOT stack up, or install more than one correction plate onto one hub/axle flange location, in an attempt to correct brake rotor assembled LRO.**

6. Install the correction plate (1) onto the hub/axle flange, with the V-shaped notch (2) orientated to align with the high spot mark (3), that was positioned to face upward.

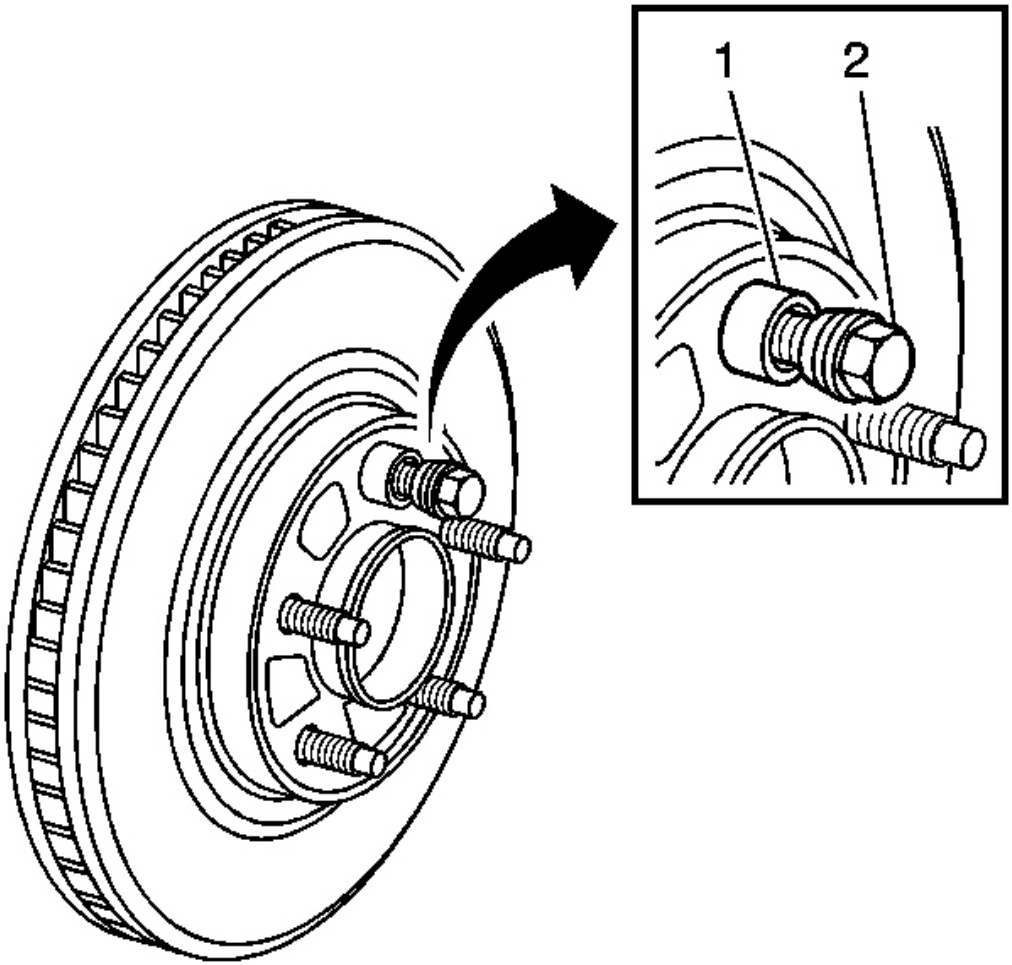

Fig. 66: Identifying J 45101-100
Courtesy of GENERAL MOTORS CORP.

7. Install the brake rotor to the hub/axle flange. Use the matchmark made prior to removal for proper orientation to the flange.
8. Hold the rotor firmly in place against the hub/axle flange and install one of the**J 45101-100** (1) and one lug nut (2) onto the upper-most wheel stud. See **Special Tools and Equipment** .
9. Continue to hold the rotor secure and tighten the lug nut firmly by hand.

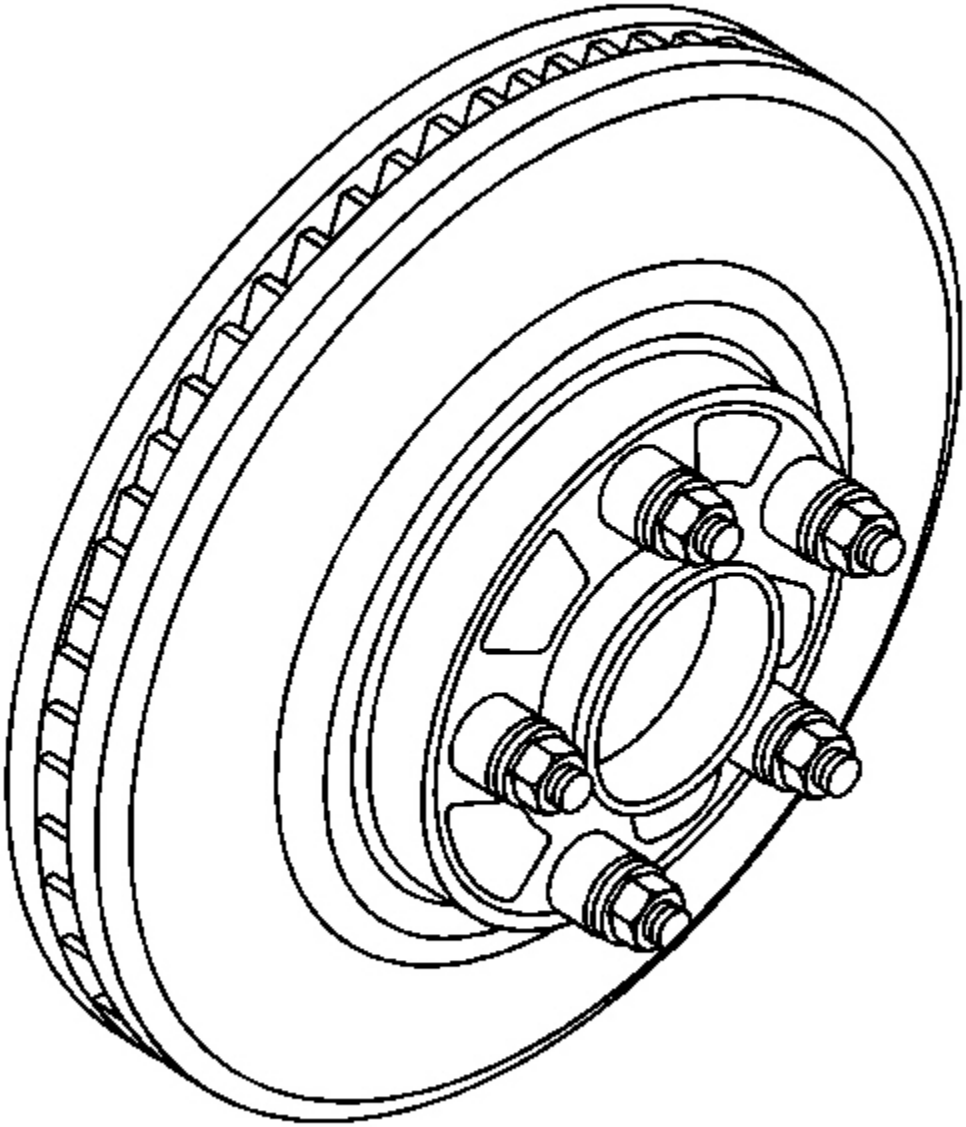

Fig. 67: Identifying Brake Rotor
Courtesy of GENERAL MOTORS CORP.

10. Install the remaining **J 45101-100** and lug nuts onto the wheel studs and tighten the nuts firmly by hand in a star-pattern. See **Special Tools and Equipment** .
11. Using the **J 39544-KIT** , or equivalent, tighten the lug nuts in a star-pattern to specification, in order to properly secure the rotor. See **Special Tools and Equipment** . Refer to **Tire and Wheel Removal and**

Installation in Tires and Wheels.

12. Measure the assembled LRO of the brake rotor. Refer to **Brake Rotor Assembled Lateral Runout (LRO) Measurement** .
13. If the brake rotor assembled LRO measurement still exceeds the maximum allowable specification, refer to **Brake Rotor Assembled Lateral Runout (LRO) Correction** .
14. If the brake rotor assembled LRO measurement is within specification, install the brake caliper and depress the brake pedal several times to secure the rotor in place before removing the **J 45101-100** and the lug nuts. See **Special Tools and Equipment** .

BRAKE ROTOR ASSEMBLED LATERAL RUNOUT (LRO) CORRECTION - ON-VEHICLE LATHE

Tools Required

J 45101-100 Conical Brake Rotor Washers. See **Special Tools and Equipment** .

CAUTION: Refer to Brake Dust Caution in Cautions and Notices.

IMPORTANT:

- **Brake rotor thickness variation MUST be checked BEFORE checking for assembled lateral runout (LRO). Thickness variation exceeding the maximum acceptable level can cause brake pulsation. Refer to Brake Rotor Thickness Variation Measurement .**
- **Brake rotor assembled lateral runout (LRO) exceeding the maximum allowable specification can cause thickness variation to develop in the brake rotor over time, usually between 4 800-11 300 km (3,000-7,000 mi). Refer to Brake Rotor Assembled Lateral Runout (LRO) Measurement .**

1. Ensure that the caliper and caliper bracket that are already being supported, are clear from contacting any rotating components, such as the brake rotor.
2. Remove the **J 45101-100** and the lug nuts that were installed during the assembled LRO measurement procedure and/or the indexing correction procedure. See **Special Tools and Equipment** .
3. Inspect the mounting surface of the hub/axle flange and the brake rotor to ensure that there are no foreign particles or debris remaining.
4. Set up the lathe, following the manufacturer's instructions.
5. Refinish the brake rotor, following the brake lathe manufacturer's instructions.
6. After each successive cut, inspect the brake rotor thickness. Refer to **Brake Rotor Thickness Measurement** .
7. If at any time the brake rotor exceeds the minimum allowable thickness after refinish specification, the brake rotor must be replaced. After replacing the rotor, proceed to step 10.
8. After refinishing the brake rotor, use the following procedure in order to obtain the desired non-directional finish:
    1. Follow the brake lathe manufacturer's recommended speed setting for applying a non-directional finish

2. Using moderate pressure, apply the non-directional finish:
    - If the lathe is equipped with a non-directional finishing tool, apply the finish with 120 grit aluminum oxide sandpaper
    - If the lathe is not equipped with a non-directional finishing tool, apply the finish with a sanding block and 150 grit aluminum oxide sandpaper
3. After applying a non-directional finish, clean each friction surface of the brake rotor with denatured alcohol, or an equivalent approved brake cleaner

9. Remove the lathe from the vehicle.
10. Measure the assembled LRO of the brake rotor. Refer to **Brake Rotor Assembled Lateral Runout (LRO) Measurement** .
11. If the brake rotor assembled LRO measurement still exceeds the maximum allowable specification, refer to **Brake Rotor Assembled Lateral Runout (LRO) Correction** .
12. If the brake rotor assembled LRO is within specification, install the brake caliper and depress the brake pedal several times to secure the rotor in place before removing the **J 45101-100** and the lug nuts. See **Special Tools and Equipment** .

BRAKE ROTOR REFINISHING

Tools Required

- **J 41013** Rotor Resurfacing Kit. See **Special Tools and Equipment** .
- **J 42450-A** Wheel Hub Resurfacing Kit. See **Special Tools and Equipment** .

CAUTION: Refer to Brake Dust Caution in Cautions and Notices.

IMPORTANT:

- **The disc brake rotors do not require refinishing as part of routine brake system service. New disc brake rotors do not require refinishing.**

  Do not refinish disc brake rotors in an attempt to correct the following conditions:

  - **Brake system noise - squeal, growl, groan**
  - **Uneven and/or premature disc brake pad wear**
  - **Superficial or cosmetic corrosion/rust of the disc brake rotor friction surface**
  - **Scoring of the disc brake rotor friction surface less than the maximum allowable specification**
- **Before refinishing a brake rotor, the rotor MUST first be checked for adequate thickness to allow the rotor to be refinished and remain above the minimum allowable thickness after refinish specification. Refer to Brake Rotor Thickness Measurement .**

Disc brake rotors should only be refinished if they have adequate thickness to be refinished and if one or more of the following conditions exist:

- **Thickness variation in excess of the maximum allowable specification**
- **Excessive corrosion/rust and/or pitting**
- **Cracks and/or heat spots**
- **Excessive blueing discoloration**
- **Scoring of the disc brake rotor surface in excess of the maximum allowable specification**

- **Disc brake rotors may need to be refinished as part of the process for correcting brake rotor assembled lateral runout (LRO) that exceeds the maximum allowable specification.**

IMPORTANT: Whenever the brake rotor has been separated from the hub/axle flange, clean any rust or contaminants from the hub/axle flange and the brake rotor mating surfaces. Failure to do this may result in increased assembled lateral runout (LRO) of the brake rotor, which could lead to brake pulsation.

1. Using the **J 42450-A** , thoroughly clean any rust or corrosion from the mating surface of the hub/axle flange. See **Special Tools and Equipment** .
2. Using the **J 41013** , thoroughly clean any rust or corrosion from the mating surface and mounting surface of the brake rotor. See **Special Tools and Equipment** .
3. Inspect the mating surfaces of the hub/axle flange and the rotor to ensure that there are no foreign particles or debris remaining.
4. Mount the brake rotor to the brake lathe according to the lathe manufacturer's instructions, ensuring that all mounting attachments and adapters are clean and free of debris.
5. Ensure that any vibration dampening attachments are securely in place.
6. With the brake lathe running, slowly bring in the cutting tools until they just contact the brake rotor friction surfaces.
7. Observe the witness mark on the brake rotor. If the witness mark extends approximately three-quarters or more of the way around the brake rotor friction surface on each side, the brake rotor is properly mounted to the lathe.
8. If the witness mark does not extend three-quarters or more of the way around the brake rotor, re-mount the rotor to the lathe.
9. Following the brake lathe manufacturer's instructions, refinish the brake rotor.
10. After each successive cut, inspect the brake rotor thickness. Refer to **Brake Rotor Thickness Measurement** .
11. If at any time the brake rotor exceeds the minimum allowable thickness after refinish specification, the brake rotor must be replaced.

12. After refinishing the brake rotor, use the following procedure in order to obtain the desired non-directional finish:
    1. Follow the brake lathe manufacturer's recommended speed setting for applying a non-directional finish
    2. Using moderate pressure, apply the non-directional finish:
        - If the lathe is equipped with a non-directional finishing tool, apply the finish with 120 grit aluminum oxide sandpaper
        - If the lathe is not equipped with a non-directional finishing tool, apply the finish with a sanding block and 150 grit aluminum oxide sandpaper
    3. After applying a non-directional finish, clean each friction surface of the brake rotor with denatured alcohol, or an equivalent approved brake cleaner
13. Remove the brake rotor from the brake lathe.
14. Measure the assembled lateral runout (LRO) of the brake rotor to ensure optimum performance of the disc brakes. Refer to **Brake Rotor Assembled Lateral Runout (LRO) Measurement** .
15. If the brake rotor assembled LRO measurement exceeds the specification, bring the LRO to within specifications. Refer to **Brake Rotor Assembled Lateral Runout (LRO) Correction** .

DESCRIPTION AND OPERATION

DISC BRAKE SYSTEM DESCRIPTION AND OPERATION

System Component Description

The disc brake system consists of the following components:

Disc Brake Pads

Applies mechanical output force from the hydraulic brake calipers to friction surfaces of brake rotors.

Disc Brake Rotors

Uses mechanical output force applied to friction surfaces from the disc brake pads to slow speed of tire and wheel assembly rotation.

Disc Brake Pad Hardware

Secures disc brake pads firmly in proper relationship to the hydraulic brake calipers. Enables a sliding motion of brake pads when mechanical output force is applied.

Disc Brake Caliper Hardware

Provides mounting for hydraulic brake caliper and secures the caliper firmly in proper relationship to caliper bracket. Enables a sliding motion of the brake caliper to the brake pads when mechanical output force is applied.

System Operation

Mechanical output force is applied from the hydraulic brake caliper pistons to the inner brake pads. As the pistons press the inner brake pads outward, the caliper housings draw the outer brake pads inward. This allows the output force to be equally distributed. The brake pads apply the output force to the friction surfaces on both sides of the brake rotors, which slows the rotation of the tire and wheel assemblies. The correct function of both the brake pad and brake caliper hardware is essential for even distribution of braking force.

SPECIAL TOOLS AND EQUIPMENT

SPECIAL TOOLS

Special Tools

Illustration	Tool Number/ Description
	J 2619-01 Slide Hammer with Adapter
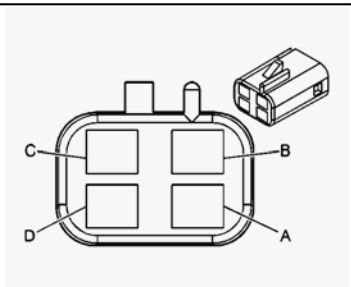	J 39544-KIT Torque Limiting Socket Set
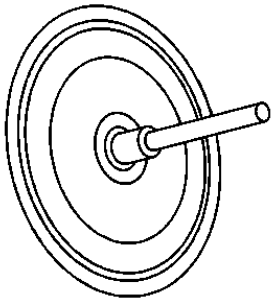	J 41013 Rotor Resurfacing Kit
	J 42450-A Wheel Hub Resurfacing Kit

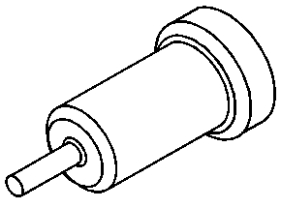	
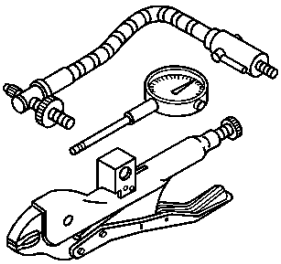	J 45101 Hub and Wheel Runout Gage
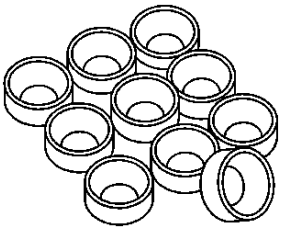	J 45101-100 Conical Brake Rotor Washers
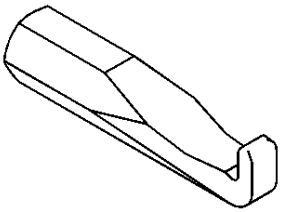	J 46277 Rotor Removal Tool

SPECIFICATIONS

FASTENER TIGHTENING SPECIFICATIONS

Fastener Tightening Specifications

Application	Specification	
	Metric	English
Brake Booster Mounting Nuts	27 N.m	20 lb ft
Brake Caliper Inlet Fitting Bolt	45 N.m	33 lb ft
Brake Pedal Pivot Nut	29 N.m	21 lb ft
Brake Pipe to Flexible Brake Hose Tube Nut	18 N.m	13 lb ft
Brake Pipe to Master Cylinder Tube Nut	24 N.m	18 lb ft
Master Cylinder Mounting Nuts	29 N.m	21 lb ft
Telescoping Column Motor Mounting Bracket Screw	7 N.m	62 lb in
Washer Solvent Container Retaining Nuts	7.5 N.m	66 lb in

BRAKE COMPONENT SPECIFICATIONS

Brake Component Specifications

Application	Specification	
	Metric	English
Brake Caliper Bleeder Valve (Front)	12 N.m	106 lb in
Brake Caliper Bleeder Valve (Rear)	12 N.m	106 lb in

BRAKE SYSTEM SPECIFICATIONS

Brake System Specifications

Application	Specification	
	Metric	English
Brake Pedal Travel • Maximum specification with 310 N (70 lbs) of force applied to the brake pedal with the ignition OFF and the booster power reserve depleated	74 mm	2.91 in

SCHEMATIC AND ROUTING DIAGRAMS

BRAKE WARNING SYSTEM SCHEMATICS

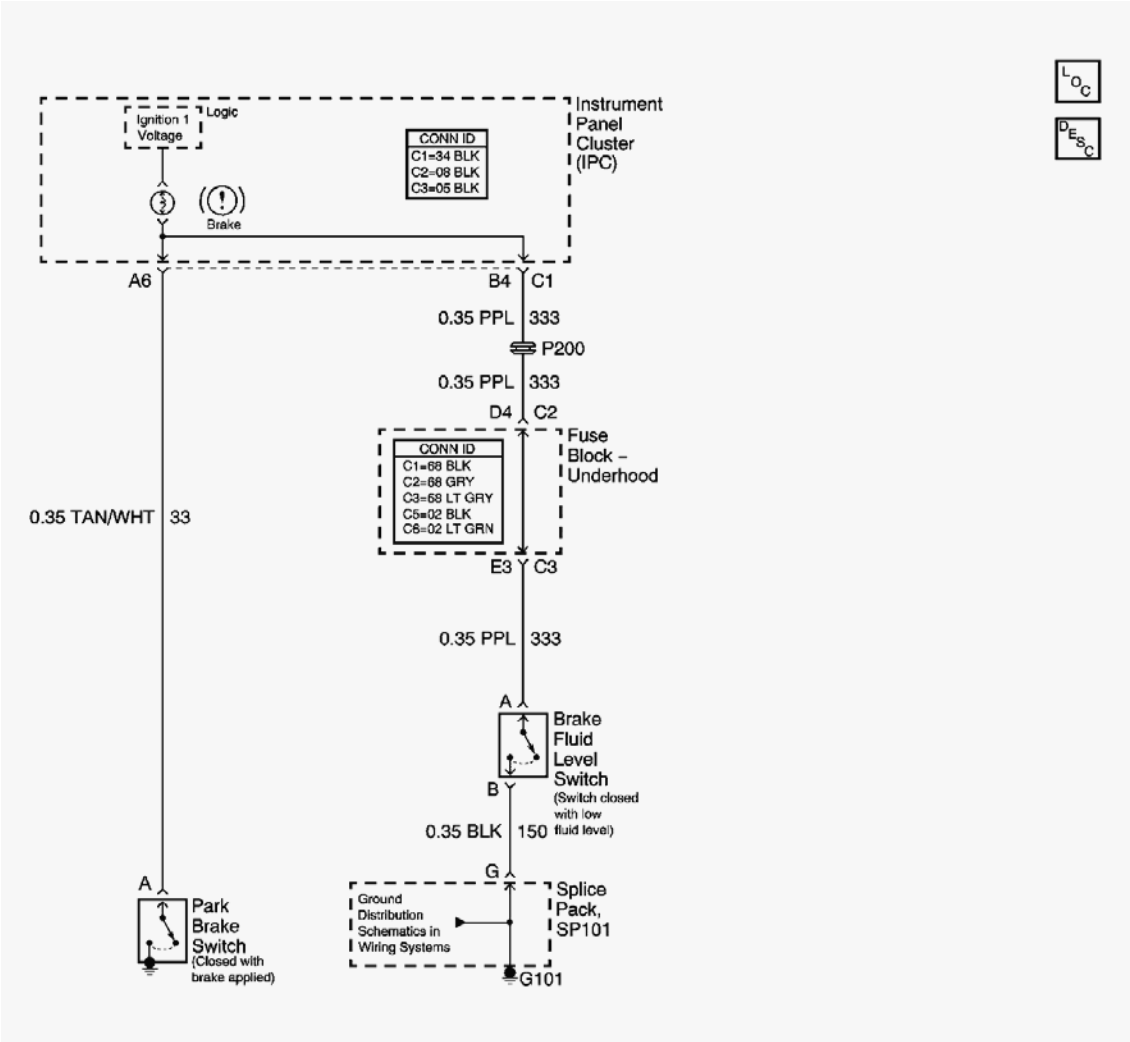

Fig. 1: Brake Warning System Schematics
Courtesy of GENERAL MOTORS CORP.

COMPONENT LOCATOR

HYDRAULIC BRAKES COMPONENT VIEWS

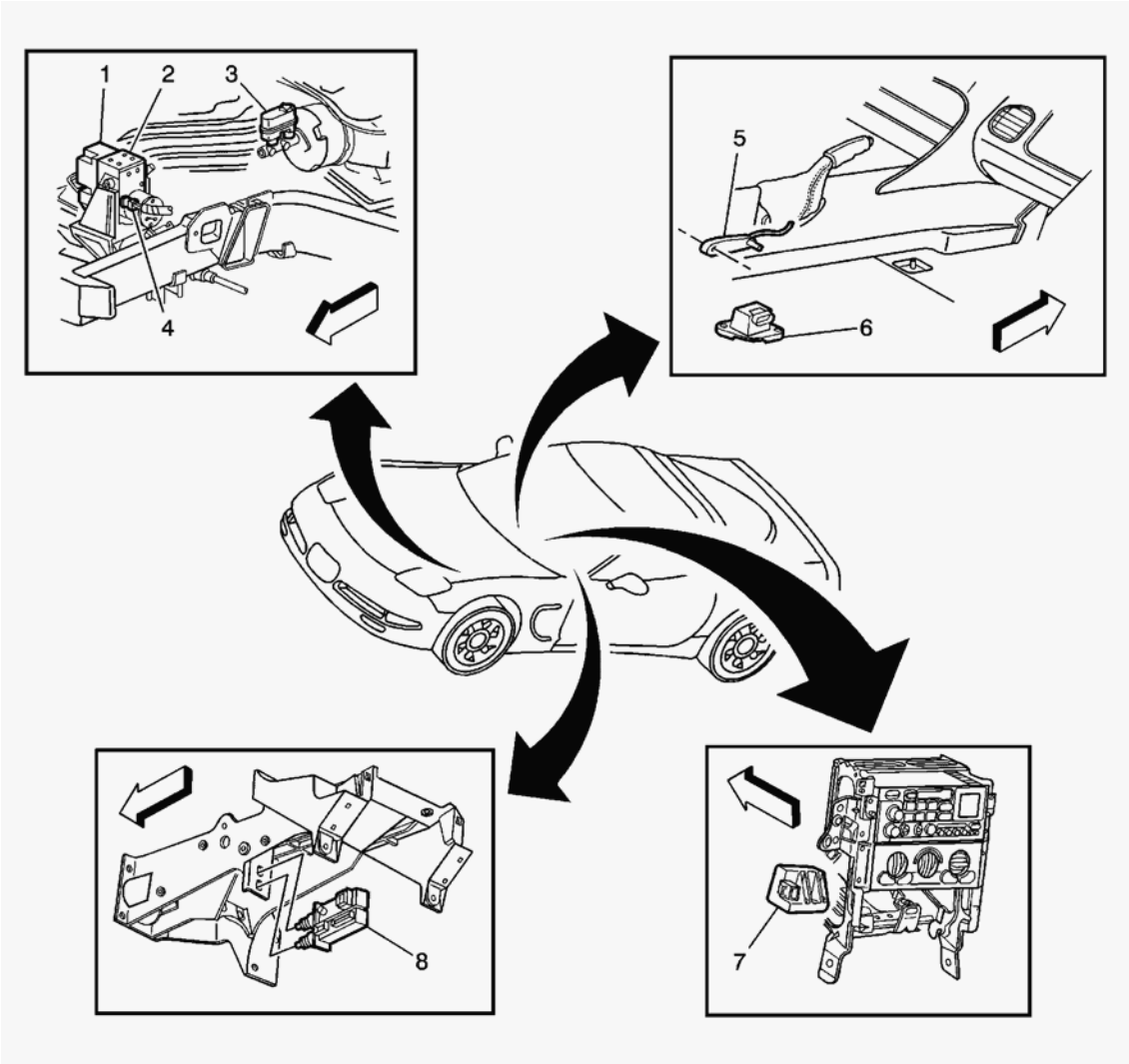

Fig. 2: ABS Components View - Switches, Sensors And Modules
Courtesy of GENERAL MOTORS CORP.

Callouts For Fig. 2

Callout	Component Name
1	Electronic Brake Control Module (EBCM)
2	Brake Pressure Modular Valve (BPMV)
3	Brake Fluid Level Switch
4	Brake Fluid Pressure Sensor
5	Park Brake Switch
6	Lateral Accelerometer Sensor
7	Yaw Rate Sensor
8	Stoplamp Switch

HYDRAULIC BRAKES CONNECTOR END VIEWS

Brake Fluid Level Switch Terminal Identification

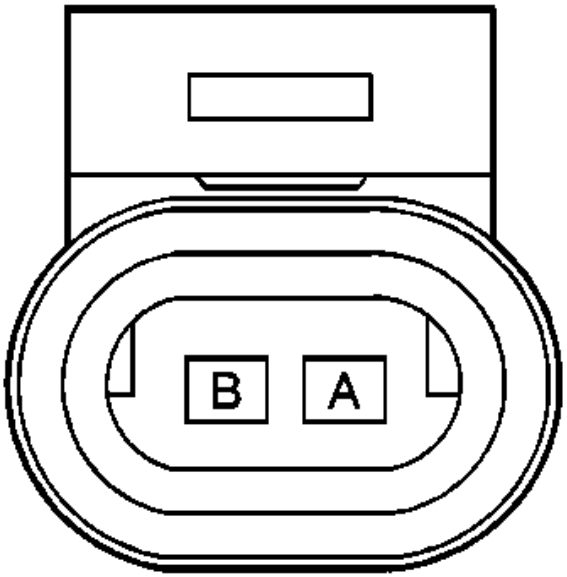

Connector Part Information		• 12162192 • 2 Way F Metri-Pack 150.2 Series (BLK)	
Pin	**Wire Color**	**Circuit No.**	**Function**
A	PPL	333	Brake Fluid Level Sensor Signal
B	BLK	150	Ground

Park Brake Switch Terminal Identification

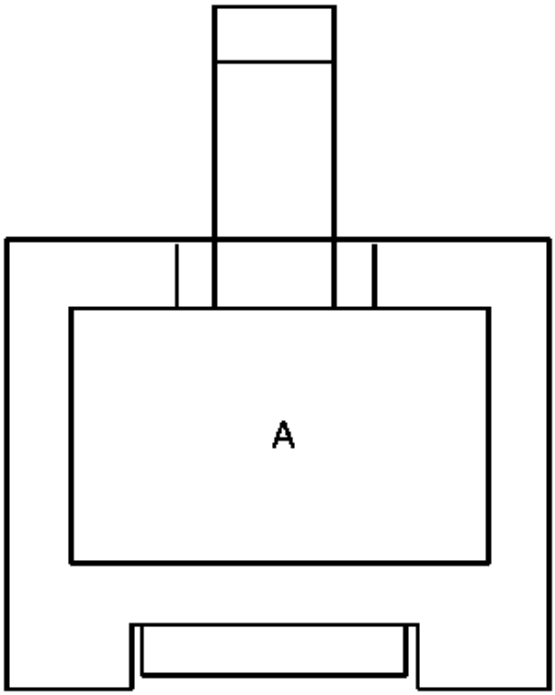

Connector Part Information		• 08911256 • 1 Way F 56 Series (NAT)	
Pin	**Wire Color**	**Circuit No.**	**Function**
A	TAN/WHT	33	Brake Warning Indicator Control

DIAGNOSTIC INFORMATION AND PROCEDURES

DIAGNOSTIC STARTING POINT - HYDRAULIC BRAKES

Begin the hydraulic brake system diagnosis with the **Diagnostic System Check - Hydraulic Brakes** . The Diagnostic System Check will provide the following information:

- The identification of the control module(s) which command the system.
- The ability of the control module(s) to communicate through the serial data circuit.
- The identification of any stored diagnostic trouble codes (DTCs) and their status.

The use of the Diagnostic System Check will identify the correct procedure for diagnosing the system and where the procedure is located.

DIAGNOSTIC SYSTEM CHECK - HYDRAULIC BRAKES

Test Description

The numbers below refer to the step numbers on the diagnostic table.

2: Lack of communication may be due to a partial malfunction of the serial data circuit or due to a total malfunction of the serial data circuit. The specified procedure will determine the particular condition.

4: The presence of DTCs which begin with "U" indicate some other module is not communicating. The specified procedure with compile the available information before tests are performed.

Diagnostic System Check - Hydraulic Brakes

Step	Action	Yes	No
1	Install a scan tool. Does the scan tool power up?	Go to **Step 2**	Go to **Scan Tool Does Not Power Up** in Data Link Communication
2	1. Turn ON the ignition, with the engine OFF. 2. Attempt to establish communication with the following control modules: • Electronic brake control module (EBCM) • Instrument panel cluster (IPC) Does the scan tool communicate with all control modules?	Go to **Step 3**	Go to **Scan Tool Does Not Communicate with Class 2 Device** in Data Link Communication
3	Select the display DTCs function on the scan tool for the following control modules: • Electronic brake control module (EBCM) • Instrument panel cluster (IPC) Does the scan tool display any DTCs?	Go to **Step 4**	Go to **Symptoms - Hydraulic Brakes**
4	Does the scan tool display any DTCs which begin with a "U"?	Go to **Scan Tool Does Not Communicate with Class 2 Device** in Data Link Communication	Go to **Diagnostic Trouble Code (DTC) List**

SCAN TOOL DATA LIST

Instrument Panel Cluster (IPC)

Scan Tool Parameter	Data List	Units Displayed	Typical Data Value
Ignition ON, engine OFF, brake fluid level normal, and park brake released.			
Brake Fluid Level	Inputs	OK/Low	OK
Park Brake Switch	Inputs	On/Off	Off

SCAN TOOL DATA DEFINITIONS

Brake Fluid Level

The scan tool displays OK or Low. The status of the brake fluid level sensor signal.

Park Brake Switch

The scan displays Off or On. The status of the park brake switch signal.

DIAGNOSTIC TROUBLE CODE (DTC) LIST

Diagnostic Trouble Code (DTC) List

DTC	Diagnostic Procedure	Module(s)
C1247	**DTC C1247**	EBCM
C1248	**DTC C1248** in Antilock Brake System	EBCM

DTC C1247

Circuit Description

The brake fluid level switch monitors the level of brake fluid in the master cylinder. When the IPC sees the brake fluid level switch input grounded, it turns ON the red Brake indicator and sends a serial data message to the EBCM that tells the EBCM that the brake fluid level is low.

Conditions for Running the DTC

The ignition is ON.

Conditions for Setting the DTC

The EBCM receives a serial data message from the IPC indicating that the brake fluid level is low.

Action Taken When the DTC Sets

- The EBCM disables the TCS/VSES until the DTC becomes a history DTC.
- The red Brake warning indicator turns ON.

- The Traction Control and Active Handling indicator turns ON.
- The DIC displays the following messages:
  - Low Brake Fluid
  - Service Traction System
  - Service Active Handling
- The ABS remains functional.

Conditions for Clearing the DTC

- The condition for the DTC is no longer present and the DTC is cleared with a scan tool.
- The EBCM automatically clears the history DTC when a current DTC is not detected in 100 consecutive drive cycles.

Diagnostic Aids

Inspect the master cylinder reservoir for the proper brake fluid level.

DTC C1247

Step	Action	Yes	No
Schematic Reference: Brake Warning System Schematics **Connector End View Reference: Hydraulic Brakes Connector End Views or Instrument Panel, Gages, and Console Connector End Views**			
1	Did you perform the Hydraulic Brake Diagnostic System Check?	Go to **Step 2**	Go to **Diagnostic System Check - Hydraulic Brakes**
2	Inspect the brake fluid level. Is the brake fluid level OK?	Go to **Step 3**	Go to **Brake Fluid Loss**
3	1. Install a scan tool. 2. Turn ON the ignition, with the engine OFF. 3. With a scan tool, observe the Brake Fluid Level parameter in the Instrument Panel Cluster data list. Does the scan tool indicate that the Brake Fluid Level parameter is OK?	Go to **Testing for Intermittent Conditions and Poor Connections** in Wiring Systems	Go to **Step 4**
4	1. Turn OFF the ignition. 2. Disconnect the brake fluid level switch. 3. Turn ON the ignition, with the engine OFF. 4. With a scan tool, observe the Brake Fluid Level parameter. Does the scan tool indicate that the Brake Fluid		

	Level parameter is OK?	Go to **Step 6**	Go to **Step 5**
5	Test the signal circuit of the brake fluid level switch for a short to ground. Refer to **Circuit Testing** and **Wiring Repairs** in Wiring Systems. Did you find and correct the condition?	Go to **Step 10**	Go to **Step 7**
6	Inspect for poor connections at the harness connector of the brake fluid level switch. Refer to **Testing for Intermittent Conditions and Poor Connections** and **Connector Repairs** in Wiring Systems. Did you find and correct the condition?	Go to **Step 10**	Go to **Step 8**
7	Inspect for poor connections at the harness connector of the instrument cluster (IPC). Refer to **Testing for Intermittent Conditions and Poor Connections** and **Connector Repairs** in Wiring Systems. Did you find and correct the condition?	Go to **Step 10**	Go to **Step 9**
8	Replace the brake fluid level switch. Refer to **Master Cylinder Fluid Level Sensor Replacement** . Did you complete the repair?	Go to **Step 10**	-
9	Replace the instrument cluster (IPC). Refer to **Instrument Panel Cluster (IPC) Replacement** in Instrument Panel, Gauges and Console. Did you complete the repair?	Go to **Step 10**	-
10	Operate the system in order to verify the repair. Did you correct the condition?	System OK	Go to **Step 2**

SYMPTOMS - HYDRAULIC BRAKES

IMPORTANT: The following steps must be completed before using the symptom tables.

1. Perform **Diagnostic System Check - Hydraulic Brakes** before using the brake indicator symptom tables in order to verify that all of the following are true:
   - There are no DTCs set.
   - The control module(s) can communicate via the serial data link.
2. Perform the **Brake System Vehicle Road Test** before using the hydraulic brake symptom tables in order to duplicate the customer's concern.
3. Review the system operation in order to familiarize yourself with the system functions. Refer to the following:
   - **Brake Warning System Description and Operation**
   - **Hydraulic Brake System Description and Operation**
   - **Brake Assist System Description and Operation**
   - **Disc Brake System Description and Operation** in Disc Brakes

Visual/Physical Inspection

- Inspect for aftermarket devices which could affect the operation of the brake warning system. Refer to **Checking Aftermarket Accessories** in Wiring Systems.
- Inspect the easily accessible or visible system components for obvious damage or conditions which could cause the symptom.

Intermittent

Faulty electrical connections or wiring may be the cause of intermittent conditions. Refer to **Testing for Intermittent Conditions and Poor Connections** in Wiring Systems.

Symptom List

Refer to a symptom diagnostic procedure from the following list in order to diagnose the symptom:

- **Brake Warning Indicator Always On**
- **Brake Warning Indicator Inoperative**
- **Brake Pulsation**
- **Brake System Noise**
- **Braking Action Uneven - Pulls to One Side**
- **Braking Action Uneven - Front to Rear**
- **Brake Pedal Excessive Travel**
- **Brake Pedal Excessive Effort**
- **Brakes Drag**
- **Brake System Slow Release**
- **Brake Fluid Loss**

BRAKE WARNING INDICATOR ALWAYS ON

Brake Warning Indicator Always On

Step	Action	Yes	No
Schematic Reference: Brake Warning System Schematics **Connector End View Reference: Hydraulic Brakes Connector End Views or Instrument Panel, Gages, and Console Connector End Views**			
1	Did you perform the Hydraulic Brake Diagnostic System Check?	Go to **Step 2**	Go to **Diagnostic System Check - Hydraulic Brakes**
2	1. Turn ON the ignition, with the engine OFF. 2. Release the park brake. 3. With a scan tool, observe the Park Brake Switch parameter in the Instrument Panel Cluster data list.	Go to **Testing for**	

	Does the scan tool indicate that the Park Brake Switch parameter is Off?	**Intermittent Conditions and Poor Connections** in Wiring Systems	Go to **Step 3**
3	1. Turn OFF the ignition. 2. Disconnect the park brake switch. 3. Turn ON the ignition, with the engine OFF. 4. With a scan tool, observe the Park Brake Switch parameter. Does the scan tool indicate that the Park Brake Switch parameter is Off?	Go to **Step 5**	Go to **Step 4**
4	Test the signal circuit of the park brake switch for a short to ground. Refer to **Circuit Testing** and **Wiring Repairs** in Wiring Systems. Did you find and correct the condition?	Go to **Step 9**	Go to **Step 6**
5	Inspect for poor connections at the harness connector of the park brake switch. Refer to **Testing for Intermittent Conditions and Poor Connections** and **Connector Repairs** in Wiring Systems. Did you find and correct the condition?	Go to **Step 9**	Go to **Step 7**
6	Inspect for poor connections at the harness connector of the instrument cluster (IPC). Refer to **Testing for Intermittent Conditions and Poor Connections** and **Connector Repairs** in Wiring Systems. Did you find and correct the condition?	Go to **Step 9**	Go to **Step 8**
7	Replace the park brake switch. Refer to **Park Brake Warning Lamp Switch Replacement** in Park Brake. Did you complete the repair?	Go to **Step 9**	-
8	Replace the instrument cluster (IPC). Refer to **Instrument Panel Cluster (IPC) Replacement** in Instrument Panel, Gauges and Console. Did you complete the repair?	Go to **Step 9**	-
9	Operate the system in order to verify the repair. Did you correct the condition?	System OK	Go to **Step 2**

BRAKE WARNING INDICATOR INOPERATIVE

Brake Warning Indicator Inoperative

Step	Action	Yes	No
Schematic Reference: Brake Warning System Schematics **Connector End View Reference: ABS Connector End Views or Instrument Panel, Gages, and**			

Console Connector End Views in Instrument Panel, Gages, and Console			
1	Did you perform the Hydraulic Brake Diagnostic System Check?	Go to **Step 2**	Go to **Diagnostic System Check - Hydraulic Brakes**
2	1. Turn OFF the ignition. 2. Turn ON the ignition, with the engine OFF. 3. Observe the red Brake indicator. Does the red Brake indicator illuminate briefly during the displays test?	Go to **Step 3**	Go to **Step 11**
3	Apply the park brake. Does the red Brake indicator illuminate?	Go to **Step 4**	Go to **Step 5**
4	1. Turn OFF the ignition. 2. Release the park brake. 3. Disconnect the brake fluid level switch. 4. Connect a 3 amp fused jumper wire between the signal circuit of the brake fluid level switch and the ground circuit of the brake fluid level switch. 5. Turn ON the ignition, with the engine OFF. Does the red Brake indicator illuminate?	Go to **Step 10**	Go to **Step 7**
5	1. Turn OFF the ignition. 2. Disconnect the park brake switch. 3. Connect a 3 amp fused jumper wire between the signal circuit of the park brake switch and a good ground. 4. Turn ON the ignition, with the engine OFF. Does the red Brake indicator illuminate?	Go to **Step 9**	Go to **Step 6**
6	Test the signal circuit of the park brake switch for a high resistance or a open. Refer to **Circuit Testing** and **Wiring Repairs** in Wiring Systems. Did you find and correct the condition?	Go to **Step 15**	Go to **Step 11**
7	Test the signal circuit of the brake fluid level switch for a high resistance or a open. Refer to **Circuit Testing** and **Wiring Repairs** in Wiring Systems. Did you find and correct the condition?	Go to **Step 15**	Go to **Step 8**
8	Test the ground circuit of the brake fluid level switch for a high resistance or an open. Refer to **Circuit Testing** and **Wiring Repairs** in Wiring Systems. Did you find and correct the condition?	Go to **Step 15**	Go to **Step 11**
	Inspect for poor case ground or poor connections at the harness connector of the park brake switch. Refer to **Testing for**		

9	**Intermittent Conditions and Poor Connections** and **Connector Repairs** in Wiring Systems. Did you find and correct the condition?	Go to **Step 15**	Go to **Step 12**
10	Inspect for poor connections at the harness connector of the brake fluid level switch. Refer to **Testing for Intermittent Conditions and Poor Connections** and **Connector Repairs** in Wiring Systems. Did you find and correct the condition?	Go to **Step 15**	Go to **Step 13**
11	Inspect for poor connections at the harness connector of the IPC. Refer to **Testing for Intermittent Conditions and Poor Connections** and **Connector Repairs** in Wiring Systems. Did you find and correct the condition?	Go to **Step 15**	Go to **Step 14**
12	Replace the park brake switch. Refer to **Park Brake Warning Lamp Switch Replacement** in Park Brake. Did you complete the repair?	Go to **Step 15**	-
13	Replace the brake fluid level switch. Refer to **Master Cylinder Fluid Level Sensor Replacement** . Did you complete the repair?	Go to **Step 15**	-
14	Replace the instrument panel cluster (IPC). Refer to **Instrument Panel Cluster (IPC) Replacement** in Instrument Panel, Gages and Console. Did you complete the repair?	Go to **Step 15**	-
15	Operate the vehicle in order to verify the repair. Did you correct the condition?	System OK	Go to **Step 2**

BRAKE PULSATION

Test Description

The numbers below refer to the step numbers on the diagnostic table:

2: Suspension components that are not operating properly may cause a disturbance to the vehicle during application of the brake system.

3: Antilock brake system operation could produce feedback through the brake pedal during application of the brake system.

Brake Pulsation

Step	Action	Yes	No
1	Were you sent here from the Hydraulic Brake Symptom table?	Go to **Step 2**	Go to **Diagnostic Starting Point - Hydraulic Brakes**
2	Inspect the suspension system for proper operation. Refer to **Diagnostic Starting Point - Suspension General Diagnosis** in Suspension General Diagnosis. Did you find and correct a condition?	Go to **Step 6**	Go to **Step 3**

3	Inspect the antilock brake system for proper operation. Refer to **Diagnostic Starting Point - Antilock Brake System** in Antilock Brake System. Did you find and correct a condition?	Go to **Step 6**	Go to **Step 4**
4	Inspect the disc brake system for proper operation. Refer to **Disc Brake System Diagnosis** . Did you find and correct a condition?	Go to **Step 6**	Go to **Step 5**
5	Inspect the hydraulic brake system for proper operation. Refer to **Hydraulic Brake System Diagnosis** . Did you find and correct a condition?	Go to **Step 6**	Go to **Diagnostic Starting Point - Hydraulic Brakes**
6	Road test the vehicle in order to confirm proper operation. Refer to **Brake System Vehicle Road Test** . Is the condition still present?	Go to **Step 2**	System OK

BRAKE SYSTEM NOISE

Brake System Noise

Step	Action	Yes	No
1	Were you sent here from the Hydraulic Brake Symptom table?	Go to **Step 2**	Go to **Diagnostic Starting Point - Hydraulic Brakes**
2	Inspect the disc brake system for proper operation. Refer to **Disc Brake System Diagnosis** . Did you find and correct a condition?	Go to **Step 9**	Go to **Step 3**
3	Inspect the brake assist system for proper operation. Refer to **Brake Assist System Diagnosis** . Did you find and correct a condition?	Go to **Step 9**	Go to **Step 4**
4	Inspect the hydraulic brake system for proper operation. Refer to **Hydraulic Brake System Diagnosis** . Did you find and correct a condition?	Go to **Step 9**	Go to **Step 5**
5	Is the vehicle equipped with a drum-in-rotor type of park brake system?	Go to **Step 6**	Go to **Step 8**
6	Ensure the park brake shoes are not adjusted too tightly, possibly causing a noise under certain conditions. Are the park brake shoes adjusted too tightly?	Go to **Step 7**	Go to **Step 8**
7	1. Clean and inspect the park brake shoes for excessive wear and/or damage. 2. Inspect the drum portion of the rotors for excessive wear, blueing discoloration, heat spots, and excessive radial runout. 3. If any of these conditions are present, replace the affected components. 4. Adjust the park brake system. Did you find and correct a condition?	Go to **Step 9**	Go to **Step 8**

8	Inspect the park brake system for proper operation. Refer to **Park Brake System Diagnosis** in Park Brake. Did you find and correct a condition?	Go to **Step 9**	Go to **Diagnostic Starting Point - Hydraulic Brakes**
9	Road test the vehicle in order to confirm proper operation. Refer to **Brake System Vehicle Road Test** . Is the condition still present?	Go to **Step 2**	System OK

BRAKING ACTION UNEVEN - PULLS TO ONE SIDE

Test Description

The numbers below refer to the step numbers on the diagnostic table:

2: Suspension components that are not operating properly may cause a disturbance to the vehicle during application of the brake system.

3: Steering components that are not operating properly may cause a disturbance to the vehicle during application of the brake system.

Braking Action Uneven - Pulls to One Side

Step	Action	Yes	No
1	Were you sent here from the Hydraulic Brake Symptom table?	Go to **Step 2**	Go to **Diagnostic Starting Point - Hydraulic Brakes**
2	Inspect the suspension system for proper operation. Refer to **Diagnostic Starting Point - Suspension General Diagnosis** in Suspension General Diagnosis. Did you find and correct a condition?	Go to **Step 6**	Go to **Step 3**
3	Inspect the steering system for proper operation. Refer to **Diagnostic Starting Point - Power Steering System (w/o Electro-Hydraulic Steering)** in Power Steering System. Did you find and correct a condition?	Go to **Step 6**	Go to **Step 4**
4	Inspect the hydraulic brake system for proper operation. Refer to **Hydraulic Brake System Diagnosis** . Did you find and correct a condition?	Go to **Step 6**	Go to **Step 5**
5	Inspect the disc brake system for proper operation. Refer to **Disc Brake System Diagnosis** . Did you find and correct a condition?	Go to **Step 6**	Go to **Diagnostic Starting Point - Hydraulic Brakes**
6	Road test the vehicle in order to confirm proper operation. Refer to **Brake System Vehicle Road Test** . Is the condition still present?	Go to **Step 2**	System OK

BRAKING ACTION UNEVEN - FRONT TO REAR

Test Description

The number below refers to the step number on the diagnostic table:

2: Suspension components that are not operating properly may cause a disturbance to the vehicle during application of the brake system.

Braking Action Uneven - Front to Rear

Step	Action	Yes	No
1	Were you sent here from the Hydraulic Brake Symptom table?	Go to **Step 2**	Go to **Diagnostic Starting Point - Hydraulic Brakes**
2	Inspect the suspension system for proper operation. Refer to **Diagnostic Starting Point - Suspension General Diagnosis** in Suspension General Diagnosis. Did you find and correct a condition?	Go to **Step 6**	Go to **Step 3**
3	Inspect the hydraulic brake system for proper operation. Refer to **Hydraulic Brake System Diagnosis** . Did you find and correct a condition?	Go to **Step 6**	Go to **Step 4**
4	Inspect the disc brake system for proper operation. Refer to **Disc Brake System Diagnosis** . Did you find and correct a condition?	Go to **Step 6**	Go to **Step 5**
5	Inspect the brake assist system for proper operation. Refer to **Brake Assist System Diagnosis** . Did you find and correct a condition?	Go to **Step 6**	Go to **Diagnostic Starting Point - Hydraulic Brakes**
6	Road test the vehicle in order to confirm proper operation. Refer to **Brake System Vehicle Road Test** . Is the condition still present?	Go to **Step 2**	System OK

BRAKE PEDAL EXCESSIVE TRAVEL

Brake Pedal Excessive Travel

Step	Action	Yes	No
1	Were you sent here from the Hydraulic Brake Symptom table?	Go to **Step 2**	Go to **Diagnostic Starting Point - Hydraulic Brakes**
2	Inspect for proper brake pedal travel. Refer to **Brake Pedal Travel Measurement and Inspection** . Is the brake pedal travel distance within the acceptable limits?	Go to **Step 5**	Go to **Step 3**
	1. Inspect for worn, missing, misaligned, bent or damaged brake pedal system components. • For the brake pedal pushrod component inspection, refer to **Brake Pedal Pushrod Inspection** . • Inspect the brake pedal bushings for excessive wear and/or damage and inspect the brake pedal for a misaligned, bent, and/or damaged condition.		

3	2. Replace the brake pedal system components that are worn, missing, misaligned, bent or damaged. Refer to the following procedures as necessary: • **Brake Pedal Assembly Replacement** • **Vacuum Brake Booster Replacement** - for pedal pushrod replacement Did you find and replace any worn, missing, misaligned, bent or damaged brake pedal system components?	Go to **Step 4**	Go to **Step 5**
4	Inspect for proper brake pedal travel. Refer to **Brake Pedal Travel Measurement and Inspection** . Is the brake pedal travel distance within the acceptable limits?	Go to **Step 8**	Go to **Step 5**
5	Inspect the hydraulic brake system for proper operation. Refer to **Hydraulic Brake System Diagnosis** . Did you find and correct a condition?	Go to **Step 8**	Go to **Step 6**
6	Inspect the disc brake system for proper operation. Refer to **Disc Brake System Diagnosis** . Did you find and correct a condition?	Go to **Step 8**	Go to **Step 7**
7	Inspect the brake assist system for proper operation. Refer to **Brake Assist System Diagnosis** . Did you find and correct a condition?	Go to **Step 8**	Go to **Diagnostic Starting Point - Hydraulic Brakes**
8	Road test the vehicle to confirm proper operation. Refer to **Brake System Vehicle Road Test** . Is the condition still present?	Go to **Step 2**	System OK

BRAKE PEDAL EXCESSIVE EFFORT

Brake Pedal Excessive Effort

Step	Action	Yes	No
1	Were you sent here from the Hydraulic Brake Symptom table?	Go to **Step 2**	Go to **Diagnostic Starting Point - Hydraulic Brakes**
2	Inspect the brake assist system for proper operation. Refer to **Brake Assist System Diagnosis** . Did you find and correct a condition?	Go to **Step 5**	Go to **Step 3**
3	Inspect the hydraulic brake system for proper operation. Refer to **Hydraulic Brake System Diagnosis** . Did you find and correct a condition?	Go to **Step 5**	Go to **Step 4**
4	Inspect the disc brake system for proper operation. Refer to **Disc Brake System Diagnosis** . Did you find and correct a condition?	Go to **Step 5**	Go to **Diagnostic Starting Point - Hydraulic Brakes**
5	Road test the vehicle to confirm proper operation. Refer to **Brake System Vehicle Road Test** . Is the condition still present?	Go to **Step 2**	System OK

BRAKES DRAG

Brakes Drag

Step	Action	Yes	No
1	Were you sent here from the Hydraulic Brake Symptom table?	Go to **Step 2**	Go to **Diagnostic Starting Point - Hydraulic Brakes**
2	Is the vehicle equipped with an adjustable stop lamp switch and/or an adjustable cruise control release switch?	Go to **Step 3**	Go to **Step 4**
3	1. Inspect the stop lamp switch for proper adjustment to ensure that the brake pedal is fully releasing. 2. Inspect the cruise control release switch, if equipped, for proper adjustment to ensure that the brake pedal is fully releasing. Did you find and correct a condition?	Go to **Step 14**	Go to **Step 4**
4	Is the vehicle equipped with a drum-in-rotor type of park brake system?	Go to **Step 5**	Go to **Step 7**
5	Ensure the park brake shoes are not adjusted too tightly, possibly causing drag under certain conditions. Are the park brake shoes adjusted too tightly?	Go to **Step 6**	Go to **Step 7**
6	1. Clean and inspect the park brake shoes for excessive wear and/or damage. 2. Inspect the drum portion of the rotors for excessive wear, blueing discoloration, heat spots, and excessive radial runout. 3. If any of these conditions are present, replace the affected components. 4. Adjust the park brake system Did you find and correct a condition?	Go to **Step 14**	Go to **Step 7**
7	Inspect the park brake system for proper operation. Refer to **Park Brake System Diagnosis** in Park Brake. Did you find and correct a condition?	Go to **Step 14**	Go to **Step 8**
8	Inspect the disc brake system for proper operation. Refer to **Disc Brake System Diagnosis** . Did you find and correct a condition?	Go to **Step 14**	Go to **Step 9**
9	1. Separate the brake booster pushrod from the brake pedal. 2. Inspect the brake corners to determine if the brake drag condition is still present. Do the brake corners still exhibit the brake drag condition?	Go to **Step 11**	Go to **Step 10**
10	Replace the brake pedal assembly.	Go to	-

	Did you complete the replacement?	**Step 14**	
11	1. Separate the master cylinder from the brake booster. Do not disconnect any brake pipes. 2. Inspect the brake corners to determine if the brake drag condition is still present. Do the brake corners still exhibit the brake drag condition?	Go to **Step 13**	Go to **Step 12**
12	Replace the brake booster assembly. Did you complete the replacement?	Go to **Step 14**	-
13	Inspect the hydraulic brake system for proper operation. Refer to **Hydraulic Brake System Diagnosis** . Did you find and correct a condition?	Go to **Step 14**	Go to **Diagnostic Starting Point - Hydraulic Brakes**
14	1. Install or connect components that were removed or disconnected during diagnosis. 2. Road test the vehicle in order to confirm proper operation. Refer to **Brake System Vehicle Road Test** . Is the condition still present?	Go to **Step 2**	System OK

BRAKE SYSTEM SLOW RELEASE

Brake System Slow Release

Step	Action	Yes	No
1	Were you sent here from the Hydraulic Brake Symptom table?	Go to **Step 2**	Go to **Diagnostic Starting Point - Hydraulic Brakes**
2	Inspect the hydraulic brake system for proper operation. Refer to **Hydraulic Brake System Diagnosis** . Did you find and correct a condition?	Go to **Step 5**	Go to **Step 3**
3	Inspect the brake assist system for proper operation. Refer to **Brake Assist System Diagnosis** . Did you find and correct a condition?	Go to **Step 5**	Go to **Step 4**
4	Inspect the disc brake system for proper operation. Refer to **Disc Brake System Diagnosis** . Did you find and correct a condition?	Go to **Step 5**	Go to **Diagnostic Starting Point - Hydraulic Brakes**
5	Road test the vehicle to confirm proper operation. Refer to **Brake System Vehicle Road Test** . Is the condition still present?	Go to **Step 2**	System OK

BRAKE FLUID LOSS

Brake Fluid Loss

Step	Action	Yes	No
	Were you sent here from the Hydraulic Brake Symptom table?		Go to **Diagnostic**

1		Go to **Step 2**	**Starting Point - Hydraulic Brakes**
2	Inspect the hydraulic brake system for proper operation. Refer to **Hydraulic Brake System Diagnosis** . Did you find and correct a condition?	Go to **Step 6**	Go to **Step 3**
3	Inspect the disc brake system for proper operation. Refer to **Disc Brake System Diagnosis** . Did you find and correct a condition?	Go to **Step 6**	Go to **Step 4**
4	1. Separate the master cylinder from the vacuum brake booster. Do not disconnect any brake pipes. Refer to **Master Cylinder Replacement** . 2. Inspect the rear of the master cylinder for a brake fluid leak. 3. Inspect for brake fluid in the vacuum brake booster. Did you find a brake fluid leak?	Go to **Step 5**	Go to **Diagnostic Starting Point - Hydraulic Brakes**
5	Replace the brake master cylinder and the vacuum brake booster. Refer to **Master Cylinder Replacement** and **Vacuum Brake Booster Replacement** . Did you complete the replacement?	Go to **Step 6**	-
6	1. Install or connect components that were removed or disconnected during diagnosis. 2. Road test the vehicle to confirm proper operation. Refer to **Brake System Vehicle Road Test** . Is the condition still present?	Go to **Step 2**	System OK

DISC BRAKE SYSTEM DIAGNOSIS

Test Description

The numbers below refer to the step numbers on the diagnostic table:

9: Lubricant leaks from non-brake system components may come in contact with and contaminate brake system components.

10: Lubricant leaks from non-brake system components may come in contact with and contaminate brake system components.

13: Disc brake rotor thickness variation that exceeds the maximum acceptable level can cause brake pulsation.

17: Disc brake rotor thickness variation that exceeds the maximum acceptable level can cause brake pulsation.

20: Disc brake rotor assembled lateral runout (LRO) that exceeds the maximum acceptable level can lead to thickness variation.

Disc Brake System Diagnosis

Step	Action	Yes	No
DEFINITION: This diagnostic table is designed to diagnose ONLY the components of the DISC brake system in order to determine if the DISC brake system is operating properly. You will be directed by the appropriate Symptom table to go to other brake system diagnostic tables as appropriate.			
1	Were you sent here from a Brake Symptom table?	Go to **Step 2**	Go to **Diagnostic Starting Point - Hydraulic Brakes**
2	Visually inspect the disc brake pads for the following conditions: Refer to **Brake Pad Inspection** in Disc Brakes. • Lining thickness below specifications • Uneven and/or abnormal wear - edge-to-edge and/or side-to-side • Looseness or damage - including pad hardware • Evidence of contamination from an external substance Did you find any conditions to indicate a concern with any of the front and/or rear disc brake pads?	Go to **Step 3**	Go to **Step 12**
3	Are any of the front and/or rear disc brake pads contaminated?	Go to **Step 8**	Go to **Step 4**
4	Are any of the front and/or rear disc brake pads worn unevenly?	Go to **Step 7**	Go to **Step 5**
5	Are any of the front and/or rear disc brake pads and/or pad hardware loose or damaged?	Go to **Step 7**	Go to **Step 6**
6	1. Remove and inspect the worn disc brake pads for glazing, looseness, heat spots or damage. 2. Replace the worn disc brake pads as a complete axle set. Refer to **Brake Pads Replacement - Front** and/or **Brake Pads Replacement - Rear** in Disc Brakes. Did you complete the inspection and replacement?	Go to **Step 12**	-
	NOTE: **Support the brake caliper with heavy mechanic's wire, or equivalent, whenever it is separated from its mount and the hydraulic flexible brake hose is still connected. Failure to support the caliper in this manner will cause the flexible brake hose to bear the weight of the caliper, which may**		

7	**cause damage to the brake hose and in turn may cause a brake fluid leak.** **IMPORTANT:** **Do NOT disconnect the hydraulic brake flex hoses from the calipers.** 1. Remove the front and/or rear disc brake calipers, as appropriate, from the mounting brackets and support the calipers. Refer to **Brake Caliper Replacement - Front** and/or **Brake Caliper Replacement - Rear** in Disc Brakes. 2. Inspect the disc brake caliper mounting bracket and the mounting/sliding hardware for the following conditions: Refer to **Disc Brake Mounting and Hardware Inspection - Front** and/or **Disc Brake Mounting and Hardware Inspection - Rear** in Disc Brakes. • Binding or seized hardware • Worn, damaged or missing hardware components • Loose, bent, cracked, or damaged caliper mounting bracket 3. Replace components as required. Refer to the following procedures in Disc Brakes, as required: • **Brake Caliper Bracket Replacement - Front** • **Brake Caliper Bracket Replacement - Rear** • **Disc Brake Hardware Replacement - Front** • **Disc Brake Hardware Replacement - Rear** 4. Replace the unevenly-worn, loose or damaged disc brake pads as a complete axle set. Refer to **Brake Pads Replacement - Front** and/or **Brake Pads Replacement - Rear** in Disc Brakes. Did you complete the inspection and replacement?	Go to **Step 12**	-
8	1. Inspect the disc brake calipers, brake hoses and brake pipes for evidence of an external brake fluid leak. 2. Replace any components found to be leaking brake fluid. Refer to the following procedures as required: • **Brake Caliper Overhaul - Front** or **Brake Caliper Replacement - Front** in Disc Brakes • **Brake Caliper Overhaul - Rear** or **Brake Caliper Replacement - Rear** in Disc Brakes • **Brake Hose Replacement - Front**		

	• **Brake Hose Replacement - Rear** • **Brake Pipe Replacement** Did you find and correct the source of the leak causing contamination of the pads?	Go to **Step 11**	Go to **Step 9**
9	1. Inspect the wheel drive shaft outer seals for damage and evidence of a grease leak. 2. Replace any wheel drive shaft seal that is found to be leaking grease which may be the source of the contamination to the pads. Refer to **Wheel Drive Shaft Outer Joint and Seal Replacement** in Wheel Drive Shafts. Did you find and correct the source of the leak causing contamination of the pads?	Go to **Step 11**	Go to **Step 10**
10	1. Inspect the automatic transmission cooling system lines, if equipped, for damage and evidence of an external fluid leak which may be the source of the contamination to the pads. 2. Inspect the power steering system hoses for damage and evidence of an external fluid leak which may be the source of the contamination to the pads. 3. Replace any components found to be leaking fluid which may be the source of the contamination to the pads. Did you find and correct the source of the leak causing contamination of the pads?	Go to **Step 11**	-
	1. Clean the remaining disc brake system components to remove any traces of the contaminant. **NOTE:** **Support the brake caliper with heavy mechanic's wire, or equivalent, whenever it is separated from its mount and the hydraulic flexible brake hose is still connected. Failure to support the caliper in this manner will cause the flexible brake hose to bear the weight of the caliper, which may cause damage to the brake hose and in turn may cause a brake fluid leak.** **IMPORTANT:** **Do NOT disconnect the hydraulic brake flex hoses from the calipers.** 2. Remove the front and/or rear disc brake calipers, as appropriate, from the mounting brackets and support the calipers. Refer to **Brake Caliper Replacement - Front** and/or		

11	**Brake Caliper Replacement - Rear** in Disc Brakes. 3. Inspect the disc brake caliper mounting/sliding hardware for the following conditions: Refer to **Disc Brake Mounting and Hardware Inspection - Front** and/or **Disc Brake Mounting and Hardware Inspection - Rear** in Disc Brakes. • Binding or seized hardware • Distorted, worn, damaged or missing hardware components 4. Replace the caliper mounting/sliding hardware components as required. Refer to **Disc Brake Hardware Replacement - Front** and/or **Disc Brake Hardware Replacement - Rear** in Disc Brakes. 5. Replace the contaminated disc brake pads as a complete axle set. Refer to **Brake Pads Replacement - Front** and/or **Brake Pads Replacement - Rear** in Disc Brakes. Did you complete the cleaning, inspection and replacement?	Go to **Step 12**	-
12	1. Check the thickness of each of the disc brake rotors. **IMPORTANT:** **Make the following determination AND ANSWER the question INDIVIDUALLY for EACH rotor.** 2. Make a determination for each brake rotor if the rotor can be REFINISHED and REMAIN ABOVE the minimum requirements. Refer to **Brake Rotor Thickness Measurement** in Disc Brakes.Does the disc brake rotor meet the minimum requirements for REFINISHING?	Go to **Step 13**	Go to **Step 16**
13	**IMPORTANT:** **Perform the following inspection AND ANSWER the question INDIVIDUALLY for EACH rotor.** Inspect each of the disc brake rotors for thickness variation that exceeds the maximum acceptable level. Refer to **Brake Rotor Thickness Variation Measurement** in Disc Brakes.Does the brake rotor exhibit thickness variation that exceeds the maximum acceptable level?	Go to **Step 15**	Go to **Step 14**
	1. Inspect each of the disc brake rotors for the following surface and wear conditions:		

14	Refer to **Brake Rotor Surface and Wear Inspection** in Disc Brakes. • Heavy rust and/or pitting • Cracks and/or heat spots • Excessive blueing discoloration • Deep or excessive scoring beyond maximum acceptable level **IMPORTANT:** **Make the following determination AND ANSWER the question INDIVIDUALLY for EACH rotor.** 2. Make a determination for each brake rotor if the rotor requires refinishing based upon the results of the inspection. If the brake rotor exhibits any of the conditions listed previously, it requires refinishing. Does the brake rotor require REFINISHING?	Go to **Step 15**	Go to **Step 20**
15	1. Refinish the brake rotor. Refer to **Brake Rotor Refinishing** in Disc Brakes. 2. Inspect the brake rotor thickness. Refer to **Brake Rotor Thickness Measurement** in Disc Brakes. Were you able to REFINISH the brake rotor within the minimum requirements?	Go to **Step 20**	Go to **Step 19**
16	Is the brake rotor at or below the DISCARD requirements?	Go to **Step 19**	Go to **Step 17**
17	**IMPORTANT:** **Perform the following inspection AND ANSWER the question INDIVIDUALLY for EACH rotor.** Inspect each of the disc brake rotors for thickness variation that exceeds the maximum acceptable level. Refer to **Brake Rotor Thickness Variation Measurement** in Disc Brakes.Does the brake rotor exhibit thickness variation that exceeds the maximum acceptable level?	Go to **Step 19**	Go to **Step 18**
	1. Inspect each of the disc brake rotors for the following surface and wear conditions: Refer to **Brake Rotor Surface and Wear Inspection** in Disc Brakes.		

18	• Heavy rust and/or pitting • Cracks and/or heat spots • Excessive blueing discoloration • Deep or excessive scoring beyond maximum acceptable level **IMPORTANT:** **Make the following determination AND ANSWER the question INDIVIDUALLY for EACH rotor.** 2. Make a determination for each brake rotor if the rotor requires replacement based upon the results of the inspection. If the brake rotor exhibits any of the conditions listed previously, it requires replacement. Does the brake rotor require REPLACEMENT?	Go to **Step 19**	Go to **Step 20**
19	**IMPORTANT:** **Whenever a brake rotor is replaced, the assembled lateral runout (LRO) of the rotor must be measured to ensure optimum performance of the disc brakes.** Replace the brake rotor. Refer to **Brake Rotor Replacement - Front** or **Brake Rotor Replacement - Rear** in Disc Brakes.Did you complete the replacement?	Go to **Step 22**	-
20	**IMPORTANT:** **Perform the following inspection AND ANSWER the question INDIVIDUALLY for EACH rotor.** Inspect each of the disc brake rotors for assembled lateral runout (LRO) that exceeds the maximum acceptable level. Refer to **Brake Rotor Assembled Lateral Runout (LRO) Measurement** in Disc Brakes.Does the brake rotor exhibit assembled LRO that exceeds the maximum acceptable level?	Go to **Step 21**	Go to **Step 22**
21	Correct the LRO for each brake rotor that was determined to have LRO exceeding the maximum acceptable level. Refer to **Brake Rotor Assembled Lateral Runout (LRO) Correction** in Disc Brakes. Did you complete the operation?	Go to **Step 22**	-
22	Install or connect components that were removed or disconnected during diagnosis. Did you complete the operation?	Disc Brake System OK Return to Symptom Table	-

HYDRAULIC BRAKE SYSTEM DIAGNOSIS

Hydraulic Brake System Diagnosis

Step	Action	Yes	No
DEFINITION: This diagnostic table is designed to diagnose ONLY the components of the HYDRAULIC brake system in order to determine if the HYDRAULIC brake system is operating properly. You will be directed by the appropriate Symptom table to go to other brake system diagnostic tables as appropriate.			
1	Were you sent here from a Brake Symptom table?	Go to **Step 2**	Go to **Diagnostic Starting Point - Hydraulic Brakes**
2	Inspect and adjust the brake fluid level in the brake master cylinder. Refer to **Master Cylinder Reservoir Filling** . Was the brake fluid level low?	Go to **Step 3**	Go to **Step 4**
3	1. Inspect the brake fluid for the following conditions, indicating brake fluid contamination: • Fluid separation, indicating two types of fluid are present ▪ Swirled appearance - oil-based substance ▪ Layered appearance - silicone-based substance • Fluid discoloration ▪ Cloudy appearance - moisture ▪ Dark appearance/suspended particles in fluid - dirt, rust, corrosion, brake dust 2. Inspect the master cylinder reservoir cap diaphragm and the reservoir-to-master cylinder grommets for swelling, indicating fluid contamination. Do any of the above conditions exist?	Go to **Step 5**	Go to **Step 6**
4	1. Inspect the brake fluid for the following conditions, indicating brake fluid contamination: • Fluid separation, indicating two types of fluid are present ▪ Swirled appearance - oil-based substance ▪ Layered appearance - silicone-based substance • Fluid discoloration ▪ Cloudy appearance - moisture ▪ Dark appearance/suspended particles in fluid - dirt, rust, corrosion, brake dust 2. Inspect the master cylinder reservoir cap diaphragm and the reservoir-to-master cylinder grommets for swelling, indicating fluid contamination.		

	Do any of the above conditions exist?	Go to **Step 5**	Go to **Step 12**

5	1. Flush the hydraulic brake system. Refer to **Hydraulic Brake System Flushing** .
	2. If the brake fluid WAS contaminated with an oil-based or a silicone-based fluid, indicated by fluid separation and/or a swollen master cylinder reservoir cap diaphragm and/or swollen reservoir-to-master cylinder grommets, perform the following steps. Refer to the procedures indicated.
	  1. Remove ALL of the following components listed. Each component contains internal rubber seals/linings which have been contaminated.
	  2. Clean out the hydraulic brake pipes using denatured alcohol, or equivalent.
	  3. Dry the brake pipes using non-lubricated, filtered air.
	  4. Repair or replace ALL of the following components listed. Each component contains internal rubber seals/linings which have been contaminated.
	  • **Master Cylinder Overhaul** or **Master Cylinder Replacement**
	  • Brake master cylinder reservoir: Clean the brake master cylinder reservoir using denatured alcohol, or equivalent, then dry the reservoir using non-lubricated, filtered air, or if necessary, replace the brake master cylinder reservoir.
	  • Replace the brake master cylinder reservoir cap diaphragm.
	  • **Brake Hose Replacement - Front**
	  • **Brake Hose Replacement - Rear**
	  • **Brake Caliper Overhaul - Front** or **Brake Caliper Replacement - Front** in Disc Brakes
	  • **Brake Caliper Overhaul - Rear** or **Brake Caliper Replacement - Rear** in Disc Brakes
	  • **Brake Pressure Modulator Valve (BPMV) Replacement** in Antilock Brake System
	3. If the brake fluid was NOT contaminated with an oil-based fluid, but WAS contaminated with water or dirt, rust, corrosion, and/or brake dust, replace the brake master cylinder reservoir cap diaphragm which may have allowed moisture or dirt to enter the system.
	4. Refill and bleed the hydraulic brake system. Refer to **Hydraulic Brake System Bleeding (Manual)** or **Hydraulic Brake System Bleeding (Pressure)** .
			-

	Did you complete the operation and any required repairs and/or replacements?	Go to **Step 9**	
6	1. Inspect the following hydraulic brake system components for external fluid leaks Repair or replace any of the components found to be leaking brake fluid. Refer to the appropriate procedures: • **Master Cylinder Overhaul** or **Master Cylinder Replacement** Brake master cylinder reservoir cap diaphragm • **Brake Hose Replacement - Front** • **Brake Hose Replacement - Rear** • **Brake Pipe Replacement** • **Brake Caliper Overhaul - Front** or **Brake Caliper Replacement - Front** in Disc Brakes • **Brake Caliper Overhaul - Rear** or **Brake Caliper Replacement - Rear** in Disc Brakes • **Brake Pressure Modulator Valve (BPMV) Replacement** in Antilock Brake System 2. If you repaired or replaced any of the brake system components listed, bleed the hydraulic brake system. Refer to **Hydraulic Brake System Bleeding (Manual)** or **Hydraulic Brake System Bleeding (Pressure)** . While bleeding the hydraulic brake system, observe for the following conditions: • The presence of air in the system at a bleeder valve location other than at the repair location, except if the brake master cylinder was replaced • An unrestricted and even flow of brake fluid per axle during the bleeding procedure Did you find and correct a condition?	Go to **Step 7**	Go to **Step 12**
7	Was there air in the system at a bleeder valve location other than at the repair location, except if the brake master cylinder was replaced?	Go to **Step 19**	Go to **Step 8**
8	Was the flow of brake fluid unrestricted and even per axle during the bleeding procedure?	Go to **Step 9**	Go to **Step 10**
9	Inspect the hydraulic function of the brake calipers for proper operation. Refer to **Hydraulic Brake Component Operation Visual Inspection** . Was the hydraulic function of the brake calipers operating properly?	Go to **Step 21**	Go to **Step 14**
10	Was the flow of brake fluid restricted or uneven through front axle hydraulic components during the bleeding procedure?	Go to **Step 13**	Go to **Step 11**
	Was the flow of brake fluid restricted or uneven through rear axle	Go to **Step**	

11	hydraulic components during the bleeding procedure?	**17**	-
12	Inspect the hydraulic function of the brake calipers for proper operation. Refer to **Hydraulic Brake Component Operation Visual Inspection** . Was the hydraulic function of the brake calipers operating properly?	Go to **Step 15**	Go to **Step 13**
13	Determine if the brake caliper is restricting the flow of brake fluid and/or not operating properly: 1. Raise and support the vehicle. Refer to **Lifting and Jacking the Vehicle** in General Information. 2. Remove the tire and wheel assemblies. Refer to **Tire and Wheel Removal and Installation** in Tires and Wheels. 3. Open the suspected caliper bleeder valve. 4. Using a large C-clamp, compress the caliper piston and observe for an unrestricted flow of brake fluid and for free movement of the caliper piston. 5. Close the caliper bleeder valve. Was the flow of brake fluid unrestricted and did the caliper piston move freely?	Go to **Step 17**	Go to **Step 14**
14	Repair or replace any brake caliper that was not operating properly. Refer to the appropriate procedure. • **Brake Caliper Overhaul - Front** or **Brake Caliper Replacement - Front** in Disc Brakes • **Brake Caliper Overhaul - Rear** or **Brake Caliper Replacement - Rear** in Disc Brakes Did you complete the repair and/or replacement?	Go to **Step 21**	-
15	Bleed the hydraulic brake system to observe for the presence of air in the system and to observe for an unrestricted and even flow of brake fluid per axle during the bleeding procedure. Refer to **Hydraulic Brake System Bleeding (Manual)** or **Hydraulic Brake System Bleeding (Pressure)** . Was there air in the system?	Go to **Step 19**	Go to **Step 16**
16	Was the flow of brake fluid unrestricted and even per axle during the bleeding procedure?	Go to **Step 21**	Go to **Step 17**
	1. Inspect the hydraulic brake pipes and flexible brake hoses for signs of a fluid restriction; such as being bent, kinked, pinched or damaged. Refer to **Brake Pipe and Hose Inspection** . 2. Replace any of the hydraulic brake pipes and/or flexible brake hoses found to be bent, kinked, pinched, or damaged. Refer to		

17	the following procedures as necessary: • **Brake Hose Replacement - Front** • **Brake Hose Replacement - Rear** • **Brake Pipe Replacement** 3. If none of the hydraulic brake pipes or flexible brake hoses were visibly bent, kinked, pinched, or damaged, replace the hydraulic brake flex hose at the restricted location. Did you find and correct a condition?	Go to **Step 21**	Go to **Step 18**
18	Replace the brake pressure modulator valve (BPMV), in order to correct the hydraulic brake dynamic rear proportioning mechanical operation. Refer to **Brake Pressure Modulator Valve (BPMV) Replacement** in Antilock Brake System. Did you complete the replacement?	Go to **Step 21**	-
19	1. Inspect the hydraulic brake system components for brake fluid seepage at a seal and/or fitting location, which may have drawn air into the system. 2. Inspect the hydraulic brake system components for evidence of a recent repair, which may have introduced air into the system. 3. Repair or replace any of the components found to be installed incorrectly or seeping brake fluid. Did you find and correct a condition?	Go to **Step 21**	Go to **Step 20**
20	1. Inspect the brake master cylinder for internal fluid leaks. Refer to **Brake System Internal Leak Test** . 2. Repair or replace the brake master cylinder if it is found to be leaking brake fluid internally. Refer to **Master Cylinder Overhaul** or **Master Cylinder Replacement** . Did you find and correct a condition?	Go to **Step 21**	Return to Symptom Table
21	Install or connect components that were removed or disconnected during diagnosis. Did you complete the operation?	Hydraulic Brake System OK Return to Symptom Table	-

BRAKE ASSIST SYSTEM DIAGNOSIS

Brake Assist System Diagnosis

Step	Action	Yes	No
DEFINITION: This diagnostic table is designed to diagnose ONLY the components of the brake ASSIST system in order to determine if the brake ASSIST system is operating properly. You will be			

directed by the appropriate Symptom table to go to other brake system diagnostic tables as appropriate.			
1	Were you sent here from a Brake Symptom table?	Go to **Step 2**	Go to **Diagnostic Starting Point - Hydraulic Brakes**
2	Inspect for proper brake pedal travel. Refer to **Brake Pedal Travel Measurement and Inspection** . Is the brake pedal travel distance within the acceptable limits?	Go to **Step 5**	Go to **Step 3**
3	1. Inspect for worn, missing, misaligned, bent or damaged brake pedal system components. • For the brake pedal pushrod component inspection, refer to **Brake Pedal Pushrod Inspection** . • Inspect the brake pedal bushings for excessive wear and/or damage and inspect the brake pedal for a misaligned, bent and/or damaged condition. 2. Replace the brake pedal system components that are worn, missing, misaligned, bent or damaged. Refer to the following procedures as necessary. • **Brake Pedal Assembly Replacement** • **Vacuum Brake Booster Replacement** - for a bent or damaged pedal pushrod replacement Did you find and replace any worn, missing, misaligned, bent or damaged brake pedal system components?	Go to **Step 4**	Go to **Step 5**
4	Reinspect for proper brake pedal travel. Refer to **Brake Pedal Travel Measurement and Inspection** . Is the brake pedal travel distance within the acceptable limits?	Go to **Step 8**	Go to **Step 5**
5	Check the engine vacuum source that supplies vacuum to the vacuum brake booster. Refer to **Brake System Vacuum Source Test** . Is the vacuum reading within the acceptable limits?	Go to **Step 6**	Go to **Diagnostic Starting Point - Engine Mechanical** in Engine Mechanical - 5.7L
6	During the vacuum source inspection, did the vacuum booster check valve operate properly?	Go to **Step 8**	Go to **Step 7**
7	Replace the vacuum booster check valve. Refer to **Vacuum Brake Booster Check Valve and/or Hose Replacement** . Did you complete the replacement?	Go to **Step 8**	-
	1. Pump the brake pedal several times until the brake pedal effort increases significantly. 2. Maintain moderate foot pressure on the brake		

8	pedal and start the engine. Observe pedal operation. Did the brake pedal drop slightly, then remain firm after the engine was started?	Go to **Step 9**	Go to **Step 12**
9	1. Release the brake pedal. 2. Turn the ignition OFF, then wait 15 seconds. 3. Pump the brake pedal two times to check for vacuum booster available vacuum reserve. Observe pedal effort. If operating properly, the vacuum brake booster should maintain assist for at least two pedal applications. Did the brake pedal effort increase significantly?	Go to **Step 12**	Go to **Step 10**
10	Inspect the brake pedal pushrod and the brake pedal for misalignment, a bent condition and/or damage. Is the brake pedal pushrod and/or the brake pedal misaligned, bent or damaged?	Go to **Step 11**	Go to **Step 13**
11	Replace the brake pedal pushrod and/or the brake pedal, as necessary. Refer to the following procedures: • **Brake Pedal Assembly Replacement** • **Vacuum Brake Booster Replacement** - for a bent or damaged pedal pushrod replacement Did you complete the replacement?	Go to **Step 13**	-
12	Replace the vacuum brake booster. Refer to **Vacuum Brake Booster Replacement** . Did you complete the replacement?	Go to **Step 13**	-
13	Install or connect any components that were removed or disconnected during diagnosis. Did you complete the operation?	Brake Assist System OK Return to Symptom Table	-

BRAKE SYSTEM VEHICLE ROAD TEST

Preliminary Inspections

1. Visually inspect easily accessible brake system components for obvious damage and/or leaks which may indicate that the vehicle should not be driven until further inspections have been completed.
2. Inspect the brake master cylinder reservoir fluid level and adjust only if necessary for brake system road

testing. Refer to **Master Cylinder Reservoir Filling** .

3. Inspect the tire inflation pressures and adjust as necessary.
4. Inspect the tire tread patterns to ensure that they are the same or very similar, especially per axle.
5. Ensure that the vehicle is not loaded unevenly prior to brake system road testing.

Road Testing Procedure

CAUTION: Road test a vehicle under safe conditions and while obeying all traffic laws. Do not attempt any maneuvers that could jeopardize vehicle control. Failure to adhere to these precautions could lead to serious personal injury and vehicle damage.

1. Start the engine and allow it to idle.
2. Check to see if the brake system warning lamp remains illuminated.
3. If the brake system warning lamp remains illuminated, DO NOT proceed to test drive the vehicle until it is diagnosed and repaired. Refer to **Symptoms - Hydraulic Brakes** .
4. Select a smooth, dry, clean and level road or large lot that is as free of traffic and obstacles as possible for brake system low speed road testing.
5. With the transmission in PARK, lightly apply the brake pedal. Observe both the pedal feel and the pedal travel.
6. If the brake pedal apply felt spongy, or the pedal travel was excessive, DO NOT drive the vehicle until it is repaired.
7. If the brake pedal apply did not feel spongy and the pedal travel was not excessive, proceed to step 8.
8. Release and apply the brakes.
9. While continuing to apply the brakes, shift the transmission into DRIVE, release the brakes and allow the engine to idle the vehicle away from the stopped position. Observe for a slow release of the brake system.
10. With the aid of an assistant to observe the vehicle's performance from outside of the vehicle, drive the vehicle at a low speed and lightly apply the brakes while driving past the assistant. Have the assistant observe for brake system noise from the side of the vehicle closest to them, while you observe both the pedal effort and the pedal travel.
11. If the brake pedal apply effort was excessive, or the pedal travel was excessive, DO NOT continue to test drive the vehicle until it is repaired.
12. If the brake pedal apply effort was not excessive and the pedal travel was not excessive, proceed to step 13.
13. Drive the vehicle in the opposite direction, at the same low speed and lightly apply the brakes while driving past the assistant. Have the assistant observe for brake system noise from the side of the vehicle closest to him.
14. Drive the vehicle at a low speed and shift the transmission into NEUTRAL without applying the brakes. Observe for a rapid deceleration in vehicle speed, indicating possible brake drag.
15. Select a smooth, dry, clean and level road that is as free of heavy traffic as possible for brake system moderate speed road testing.
16. Drive the vehicle at a moderate speed. Observe for a pull and/or incorrect tracking of the vehicle without

the brakes applied.

17. While continuing to drive the vehicle at a moderate speed, perform several light applies of the brakes. Observe the pedal effort and the pedal travel, observe for brake system noise, pulsation and/or brake drag.
18. If the brake pedal apply effort was excessive, or the pedal travel was excessive, DO NOT continue to test drive the vehicle until it is repaired.
19. If the brake pedal apply effort was not excessive and the pedal travel was not excessive, proceed to step 20.
20. While continuing to drive the vehicle at a moderate speed, perform several moderate applies of the brakes. Observe the pedal effort and the pedal travel, observe for brake system pulsation and/or uneven braking action - either side to side, or front to rear.

    A small amount of vehicle front end dip is expected during a moderate apply of the brakes.

21. If the brake pedal apply effort was excessive, or the pedal travel was excessive, DO NOT continue to test drive the vehicle until it is repaired.

BRAKE PEDAL TRAVEL MEASUREMENT AND INSPECTION

Tools Required

J 28662 Brake Pedal Effort Gauge. See **Special Tools and Equipment** .

1. With the ignition OFF and the brakes cool, apply the brakes 3-5 times, or until the brake pedal effort increases significantly, in order to deplete the brake booster power reserve.
2. Install the**J 28662** to the brake pedal. See **Special Tools and Equipment** .

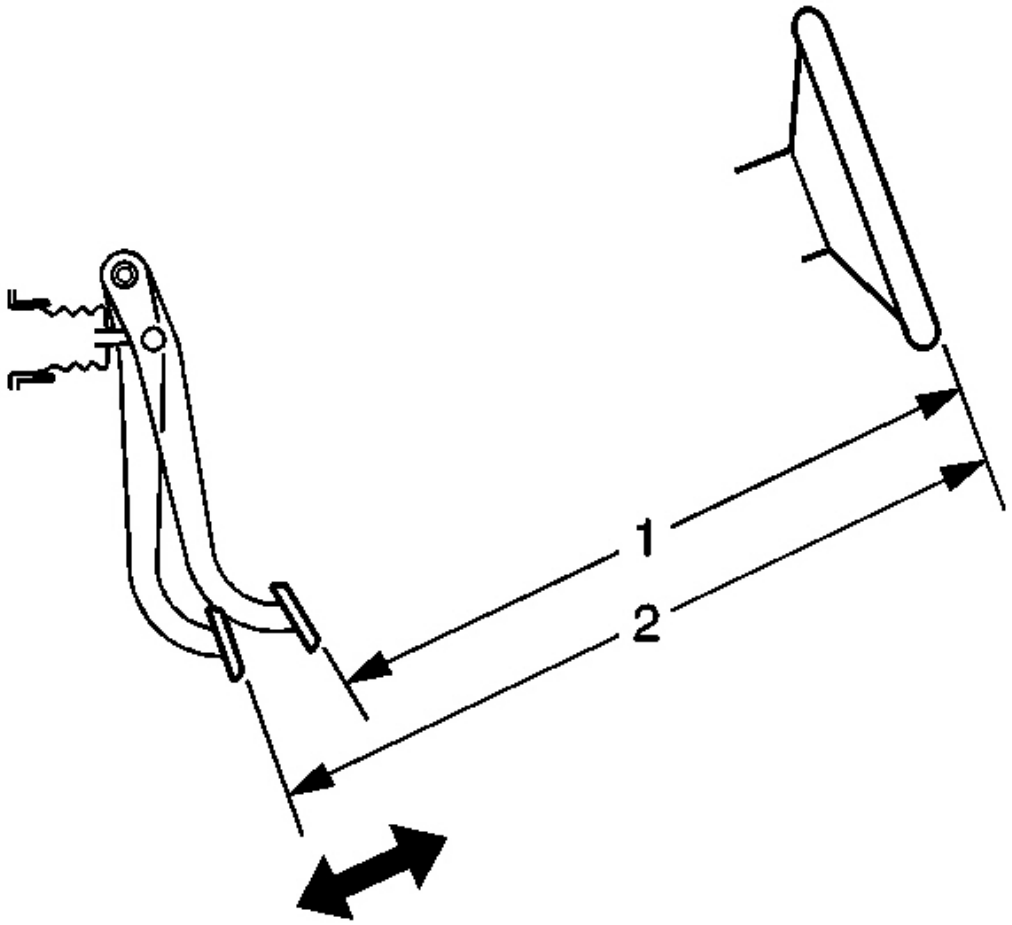

Fig. 3: Measuring Brake Pedal Travel Component View
Courtesy of GENERAL MOTORS CORP.

3. Measure and record the distance (1) from the brake pedal to the rim of the steering wheel; note the points of measurement.
4. Apply and maintain the brakes with 310 N (70 lb) of force to the brake pedal, as indicated on the **J 28662** . See **Special Tools and Equipment** .
5. While maintaining 310 N (70 lb) of force to the brake pedal, measure and record the distance (2) from the same point on the brake pedal to the same point on the rim of the steering wheel.
6. Release the brakes and repeat steps 4 and 5 to obtain a second measurement. After obtaining a second measurement, proceed to step 7.
7. Average the first and second measurements recorded during the two applies of the brakes.
8. Subtract the initial measurement, unapplied (1), from the averaged, applied measurement (2) to obtain the

brake pedal travel distance.

Specification: Maximum brake pedal travel - measured with the ignition OFF, brake booster power assist depleted, and the brakes cool: 70 mm (2.75 in).

BRAKE SYSTEM VACUUM SOURCE TEST

1. Disconnect the engine vacuum hose from the vacuum brake booster check valve.
2. Install a vacuum gage to the engine vacuum hose.
3. Start the engine and allow the engine to idle until normal operating temperatures are reached.
4. Check to see if the engine vacuum reading is within the specified normal engine vacuum range.

   Specification: 47-68 kPa (14-20 in Hg)

5. Turn the ignition OFF.
6. If the engine vacuum reading is within the specified normal range, proceed to step 10.
7. If the engine vacuum reading is NOT within the specified normal range, inspect the engine vacuum hose for the following conditions.
   - Tight connection to the engine
   - Collapse, deformation or contamination
   - Cracks, cuts, dry-rot
8. If any of these conditions were found with the engine vacuum hose, replace the hose, then repeat steps 2-4.
9. If none of these conditions were found with the engine vacuum hose, then there is an engine vacuum source problem, check the engine vacuum system.
10. Remove the vacuum brake booster check valve from the booster.
11. Install the check valve to the engine vacuum hose.
12. Install the vacuum gage to the check valve.
13. Start the engine and allow the engine to idle until normal operating temperatures are reached.
14. Turn the ignition OFF.
15. Check to see if the engine vacuum reading is maintained within the specified normal engine vacuum range.

    Specification: 47-68 kPa (14-20 in Hg)

16. If the engine vacuum reading is maintained within the specified normal range, proceed to step 18.
17. If the engine vacuum reading is NOT maintained within the specified normal range, replace the brake booster check valve, then repeat steps 11-15.
18. Inspect the brake booster check valve grommet for the following conditions:
    - Firm connection to the vacuum brake booster
    - Deformation or contamination

- Cracks, cuts, dry-rot

19. If any of these conditions were found with the check valve grommet, replace the grommet.

BRAKE SYSTEM EXTERNAL LEAK INSPECTION

CAUTION: Refer to Brake Fluid Irritant Caution in Cautions and Notices.

NOTE: Refer to Brake Fluid Effects on Paint and Electrical Components Notice in Cautions and Notices.

1. In order to inspect for external brake fluid leaks, first check the fluid level in the master cylinder.

   While a slight brake fluid level drop can be considered a normal condition due to brake lining wear, a very low level may indicate a brake fluid leak in the hydraulic system.

2. If the fluid level is abnormally low, adjust the brake fluid level. Refer to **Master Cylinder Reservoir Filling** .
3. Start the engine and allow it to idle.
4. Apply constant, moderate foot pressure to the brake pedal.

   If the brake pedal gradually falls away while under foot pressure, there may be a brake fluid leak.

5. Turn OFF the ignition.
6. Visually inspect the following brake system components for brake fluid leaks, excessive corrosion, and damage. Give particular attention to all brake pipe and flexible hose connections to ensure that there are not any slight brake fluid leaks - even though the brake pedal may feel firm and hold steady:
   - Master cylinder brake pipe fittings
   - All brake pipe connections
   - Brake pipes
   - Brake hoses and connections
   - Brake calipers and/or wheel cylinders, if equipped
7. While slight dampness around the master cylinder reservoir can be considered acceptable, brake fluid leaking from any of the brake system components requires immediate attention. If any of these components exhibit signs of brake fluid leakage, repair or replace those components. After the repair or replacement, reinspect the hydraulic brake system to assure proper function.

BRAKE SYSTEM INTERNAL LEAK TEST

CAUTION: Refer to Brake Fluid Irritant Caution in Cautions and Notices.

NOTE: **Refer to Brake Fluid Effects on Paint and Electrical Components Notice in Cautions and Notices.**

1. Start the engine and allow it to idle.
2. Apply light, steady pressure to the brake pedal. Observe both the brake pedal feel and travel.
3. Release the brakes and turn OFF the ignition.
4. If the brake pedal apply felt spongy, but the brake pedal travel was not excessive, perform the following steps:
    1. Inspect the brake system for external leaks. Refer to **Brake System External Leak Inspection** .
    2. Pressure bleed the brake system in order to purge any air that may be trapped in the system. Refer to **Hydraulic Brake System Bleeding (Manual)** or **Hydraulic Brake System Bleeding (Pressure)** .

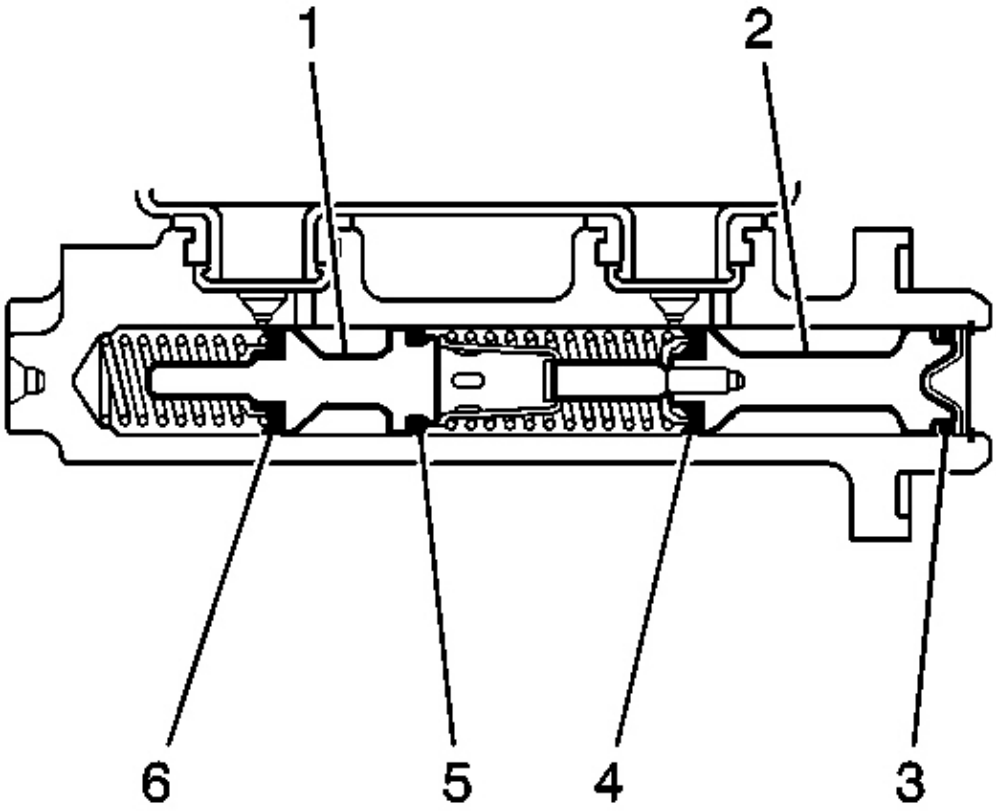

Fig. 4: Identifying Master Cylinder Components View
Courtesy of GENERAL MOTORS CORP.

5. If the brake pedal apply did not feel spongy, but the brake pedal travel was excessive, perform the following steps:
    1. Loosen the master cylinder-to-brake power booster mounting nuts.
    2. Carefully pull the master cylinder away from the brake power booster just enough to inspect the mounting surface of the master cylinder.
    3. Inspect the master cylinder mounting surface at the primary piston (2) for brake fluid leaks.
6. If the master cylinder exhibits any leakage around the primary piston (2), then the primary piston primary seal (4) and/or secondary seal (3) is leaking and the master cylinder requires overhaul or replacement.
7. If the master cylinder primary piston (2) does not exhibit any leakage, pressure bleed the brake system. Refer to **Hydraulic Brake System Bleeding (Manual)** or **Hydraulic Brake System Bleeding (Pressure)** .
8. If the brake pedal apply did not feel spongy, and the brake pedal travel was initially steady and not excessive, but then gradually fell, then the master cylinder requires overhaul or replacement due to an internal leak past the secondary piston (1) from the secondary piston primary seal (6) or secondary seal (5).
9. If the brake pedal apply did not feel spongy, and the brake pedal travel was initially steady and not excessive, then fell slightly, then became steady again, then the brake pressure modulator valve (BPMV) may be leaking internally, and may require replacement.

HYDRAULIC BRAKE COMPONENT OPERATION VISUAL INSPECTION

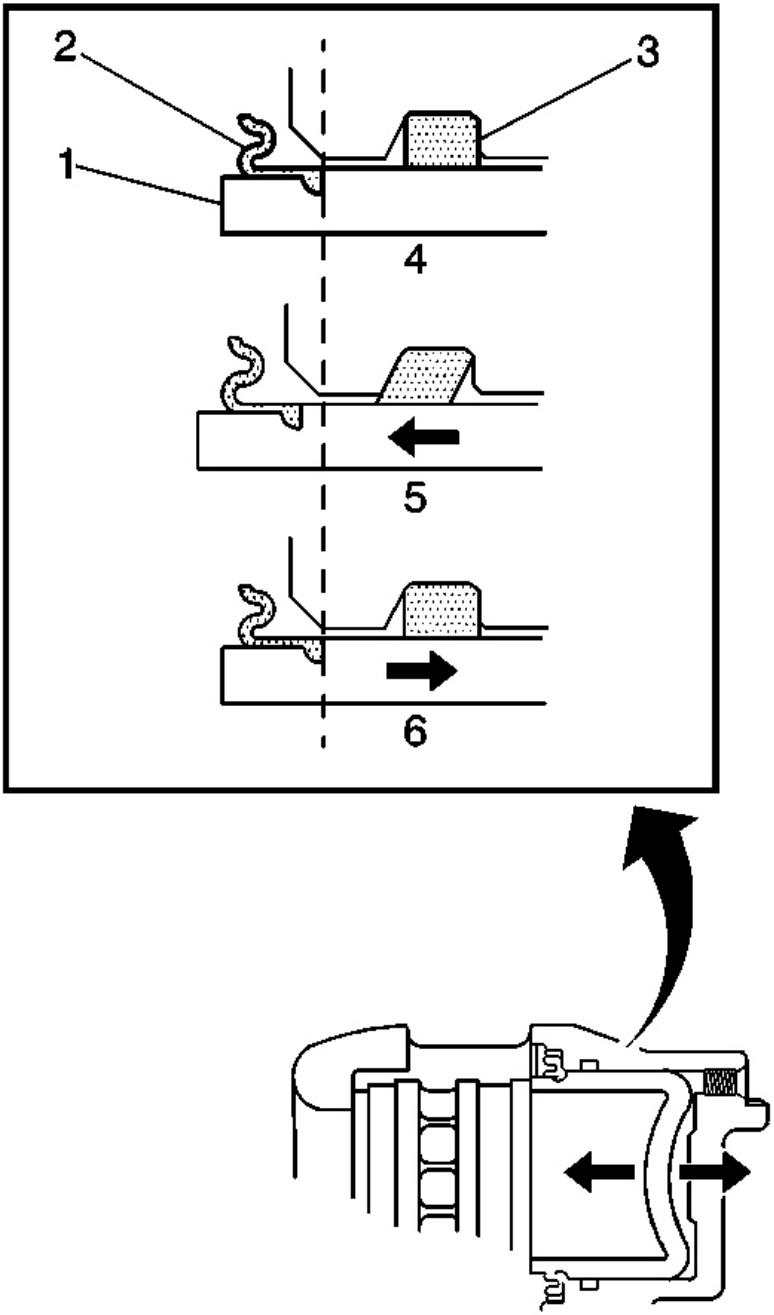

Fig. 5: Exploded View Of Caliper Piston Terminal Identification
Courtesy of GENERAL MOTORS CORP.

CAUTION: Refer to Brake Fluid Irritant Caution in Cautions and Notices.

NOTE: **Refer to Brake Fluid Effects on Paint and Electrical Components Notice in Cautions and Notices.**

1. With the tire and wheel assemblies removed and the brake rotors retained by wheel lug nuts, visually inspect the caliper piston dust boot (2) sealing area to ensure that there are no brake fluid leaks.
2. If any evidence of a brake fluid leak is present, the brake caliper requires overhaul or replacement.
3. While the brake system is at rest (4), observe the position of the caliper piston (1) in relation to the caliper housing.
4. Have an assistant apply and release the brake pedal several times while you observe the operation of the hydraulic brake caliper.
    1. Observe the caliper piston (1) for unrestricted and even movement during each apply of the brake system (5).
    2. Observe the caliper piston (1) for an unrestricted and even return motion during each release of the brake system (6).
5. If the caliper piston (1) did not exhibit unrestricted and even movement during brake system apply and/or release, the piston square seal (3) may be worn or damaged and the caliper may require overhaul or replacement.

BRAKE PIPE AND HOSE INSPECTION

CAUTION: Refer to Brake Fluid Irritant Caution in Cautions and Notices.

NOTE: **Refer to Brake Fluid Effects on Paint and Electrical Components Notice in Cautions and Notices.**

1. Visually inspect all of the brake pipes for the following conditions:
    - Kinks, improper routing, missing or damaged retainers
    - Leaking fittings, excessive corrosion
2. If any of the brake pipes exhibited any of the conditions listed, then the identified pipe, or pipes, require replacement.
3. Ensure that the vehicle axles are properly supported at ride height in order to maintain the proper relationship of the flexible brake hoses to the chassis.

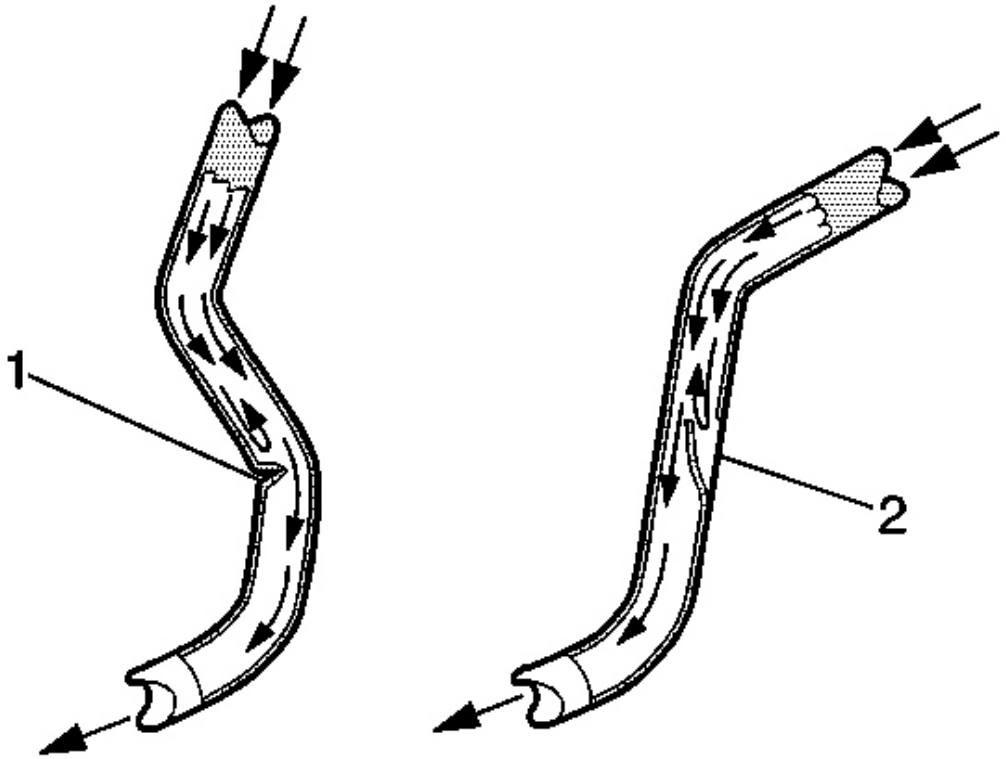

Fig. 6: Inspecting Brake Hoses Component View
Courtesy of GENERAL MOTORS CORP.

4. Visually inspect all of the flexible brake hoses for the following conditions:
   - Kinks (1), improper routing, twists, chafing, missing or damaged retainers
   - Leaking connections, cracking, dry-rot, blisters, bulges
5. If any of the flexible brake hoses exhibited any of the conditions listed, then the identified flexible brake hose, or hoses require replacement.
6. Squeeze the flexible brake hoses with firm finger pressure to check for soft spots (2), indicating an internal restriction. Check the entire length of each flexible brake hose.
7. If any of the flexible brake hoses were found to have soft spots (2), then the identified flexible brake hose, or hoses require replacement.

BRAKE PEDAL PUSHROD INSPECTION

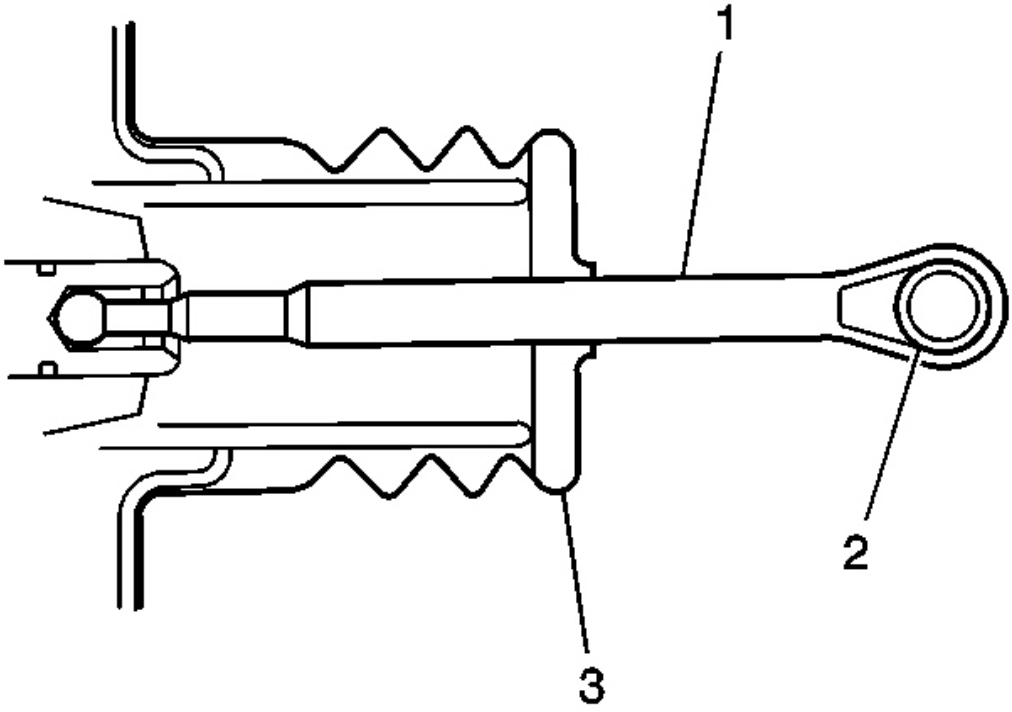

Fig. 7: Inspecting Brake Pedal Pushrod Component View
Courtesy of GENERAL MOTORS CORP.

1. Disconnect the brake pedal pushrod (1) from the brake pedal.
2. Inspect the brake pedal pushrod eyelet bushing (2), if equipped, for cracks and/or excessive wear.
3. Reposition the pedal pushrod boot (3) toward the front of the vehicle to expose as much of the pedal pushrod (1) as possible.
4. Inspect the brake pedal pushrod (1) for straightness.
5. If the brake pedal pushrod eyelet bushing (2) exhibited cracks and/or excessive wear, then the bushing requires replacement.
6. If the brake pedal pushrod (1) is not straight, then the pushrod requires replacement.
7. Return the pedal pushrod boot (3) to its original position on the pedal pushrod (1).
8. Connect the brake pedal pushrod (1) to the brake pedal.

REPAIR INSTRUCTIONS

MASTER CYLINDER RESERVOIR FILLING

CAUTION: Refer to Brake Fluid Irritant Caution in Cautions and Notices.

NOTE: When adding fluid to the brake master cylinder reservoir, use only Delco Supreme 11(R), GM P/N 12377967 (Canadian P/N 992667), or equivalent DOT-3 brake fluid from a clean, sealed brake fluid container. The use of any type of fluid other than the recommended type of brake fluid, may cause contamination which could result in damage to the internal rubber seals and/or rubber linings of hydraulic brake system components.

NOTE: Refer to Brake Fluid Effects on Paint and Electrical Components Notice in Cautions and Notices.

1. Visually inspect the brake fluid level through the brake master cylinder reservoir.
2. If the brake fluid level is at or below the half-full point during routine fluid checks, the brake system should be inspected for wear and possible brake fluid leaks.
3. If the brake fluid level is at or below the half-full point during routine fluid checks, and an inspection of the brake system did not reveal wear or brake fluid leaks, the brake fluid may be topped-off up to the maximum-fill level.
4. If brake system service was just completed, the brake fluid may be topped-off up to the maximum-fill level.
5. If the brake fluid level is above the half-full point, adding brake fluid is not recommended under normal conditions.
6. If brake fluid is to be added to the master cylinder reservoir, clean the outside of the reservoir on and around the reservoir cap prior to removing the cap and diaphragm. Use only Delco Supreme 11(R), GM P/N 12377967 (Canadian P/N 992667), or equivalent DOT-3 brake fluid from a clean, sealed brake fluid container.

MASTER CYLINDER RESERVOIR REPLACEMENT

Removal Procedure

CAUTION: Refer to Brake Fluid Irritant Caution in Cautions and Notices.

NOTE: Refer to Brake Fluid Effects on Paint and Electrical Components Notice in Cautions and Notices.

1. Remove the master cylinder from the vehicle. Refer to **Master Cylinder Replacement** .
2. Secure the master cylinder in a vise. Do not clamp the master cylinder body, secure only at the flange.

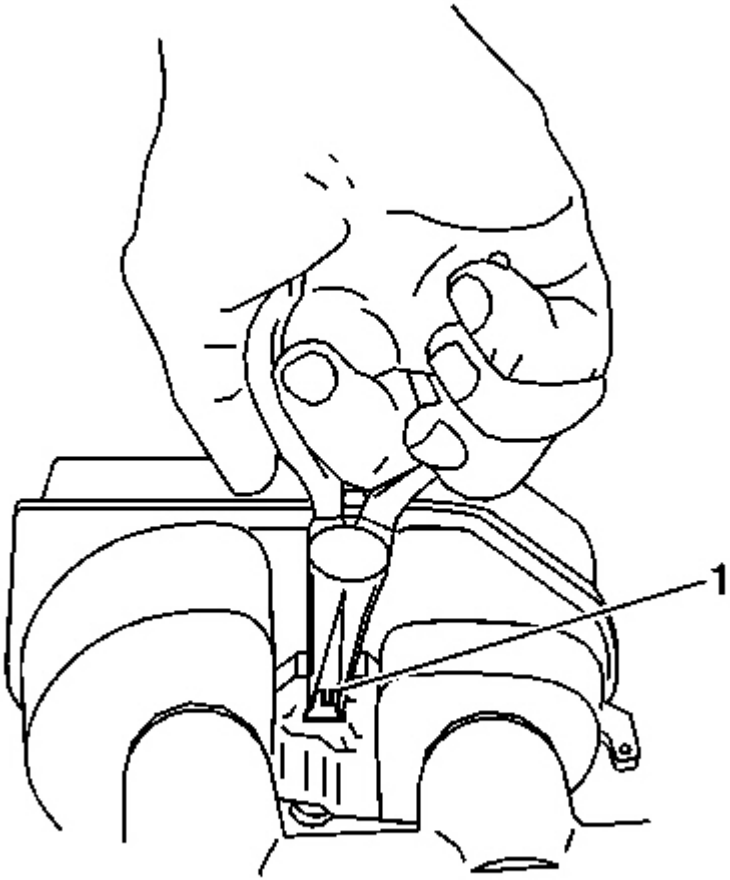

Fig. 8: Removing Brake Fluid Level Sensor Component View
Courtesy of GENERAL MOTORS CORP.

3. Remove the brake fluid level sensor. Using needle nose pliers, carefully depress the retaining tabs on the end of the brake fluid level sensor (1) and press the sensor through the reservoir to remove.

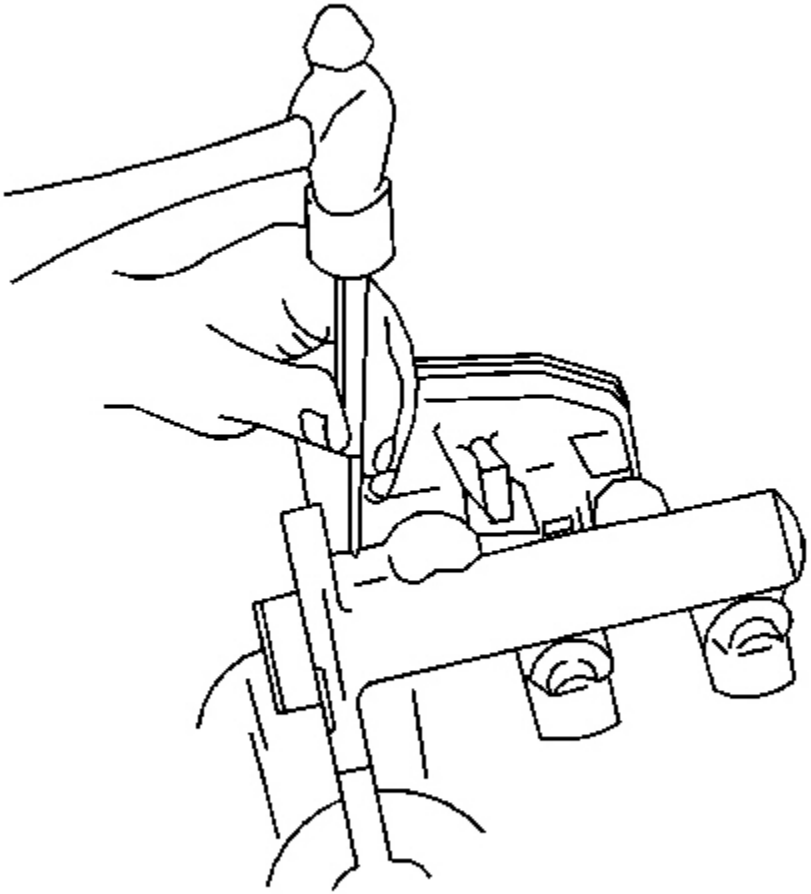

Fig. 9: Installing Reservoir Retaining Pins Component View
Courtesy of GENERAL MOTORS CORP.

4. Carefully tap out the reservoir retaining pins.
5. Remove the reservoir from the master cylinder by pulling the reservoir straight up and away from the cylinder.
6. Remove the seals from the master cylinder.

Installation Procedure

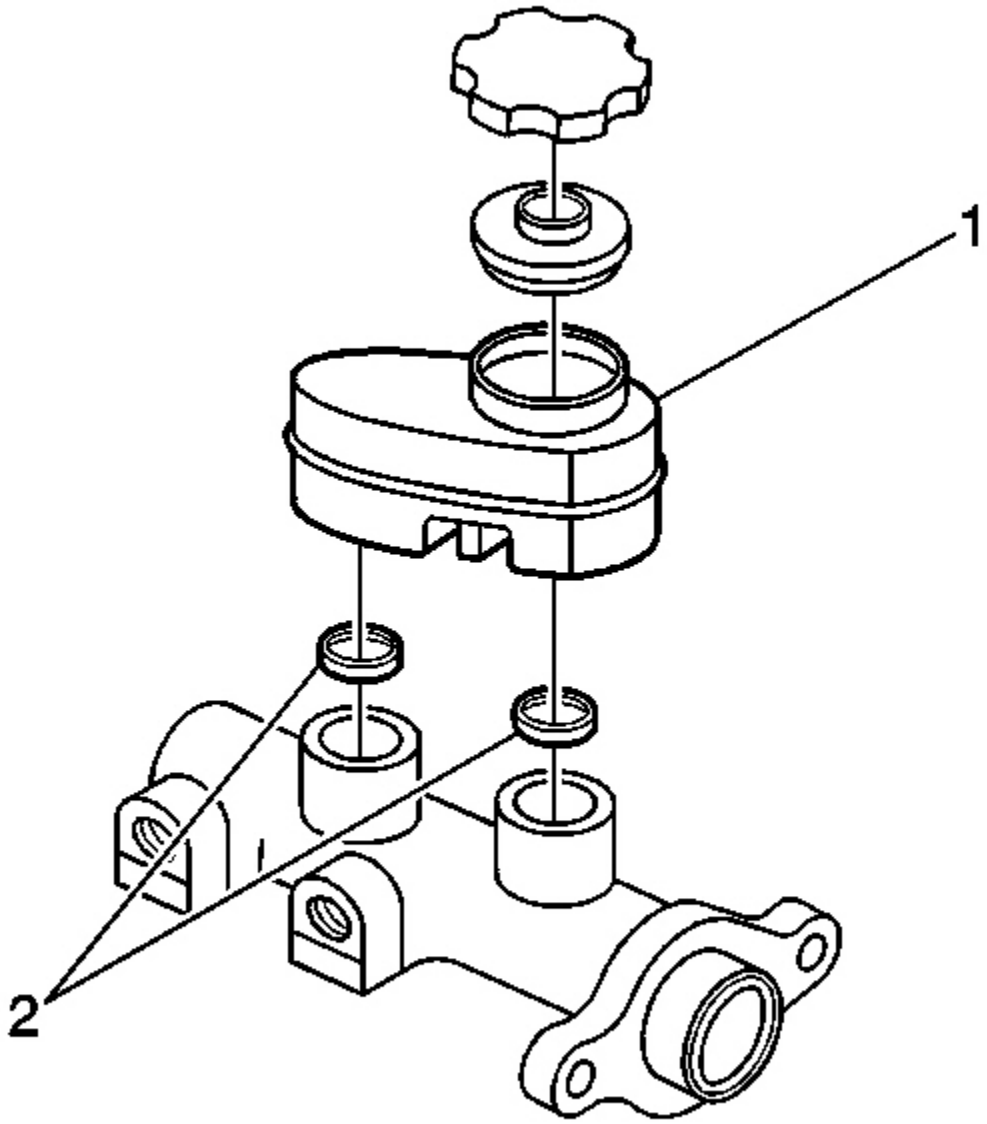

Fig. 10: Reservoir To Master Cylinder
Courtesy of GENERAL MOTORS CORP.

1. Inspect the reservoir (1) for cracks or deformation. If cracks or deformities are found, replace the reservoir.
2. Clean the reservoir with denatured alcohol, or equivalent.
3. Dry the reservoir with non-lubricated, filtered air.

4. Lubricate the new seals (2) and the outer surface area of the reservoir-to-housing barrels with Delco Supreme 11(R) GM P/N 12377967 (Canadian P/N 992667), or equivalent DOT-3 brake fluid from a clean, sealed brake fluid container.
5. Install the lubricated seals (2); make sure they are fully seated.
6. Install the reservoir (1) to the master cylinder by pressing the reservoir straight down on the master cylinder until the pin holes are aligned.

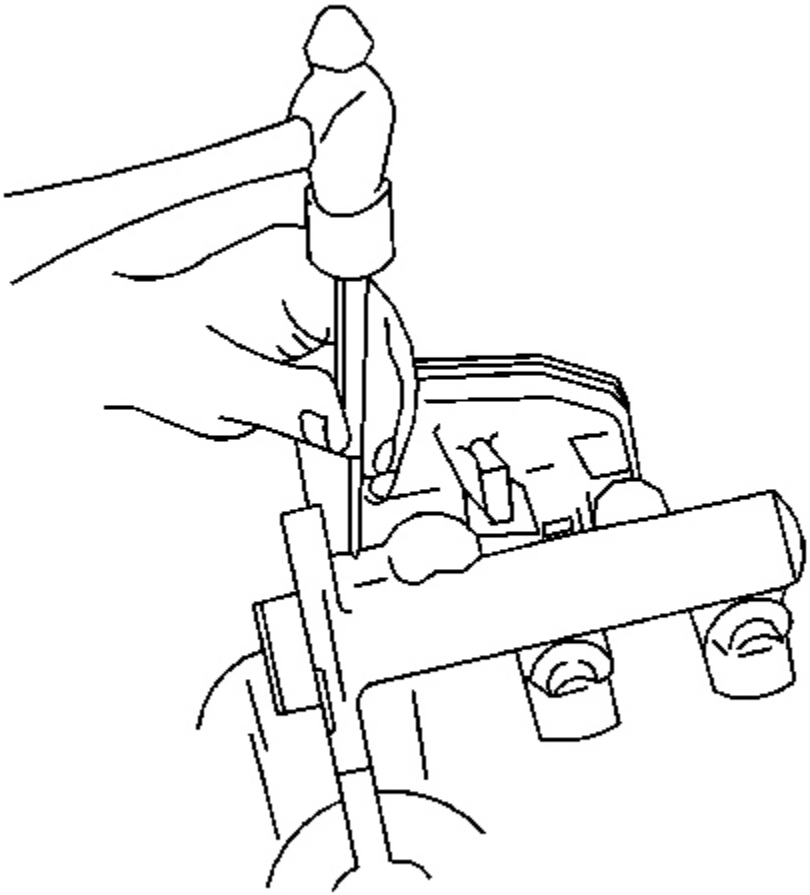

Fig. 11: Installing Reservoir Retaining Pins
Courtesy of GENERAL MOTORS CORP.

7. Carefully tap the reservoir retaining pins into place to secure the reservoir.
8. Place the brake fluid level sensor into the reservoir, press into place to secure the sensor retaining tabs.

9. Remove the master cylinder from the vise.
10. Install master cylinder to the vehicle. Refer to **Master Cylinder Replacement** .

MASTER CYLINDER REPLACEMENT

Removal Procedure

CAUTION: Refer to Brake Fluid Irritant Caution in Cautions and Notices.

NOTE: Refer to Brake Fluid Effects on Paint and Electrical Components Notice in Cautions and Notices.

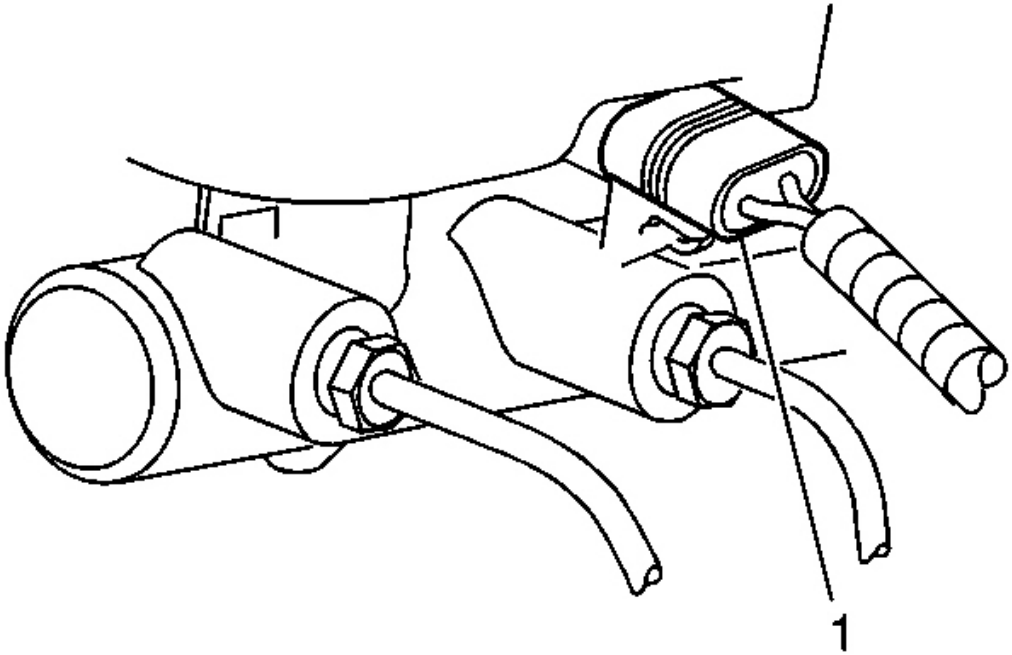

Fig. 12: View Of Master Cylinder
Courtesy of GENERAL MOTORS CORP.

1. Disconnect the electrical connector (1) from the brake fluid level sensor.

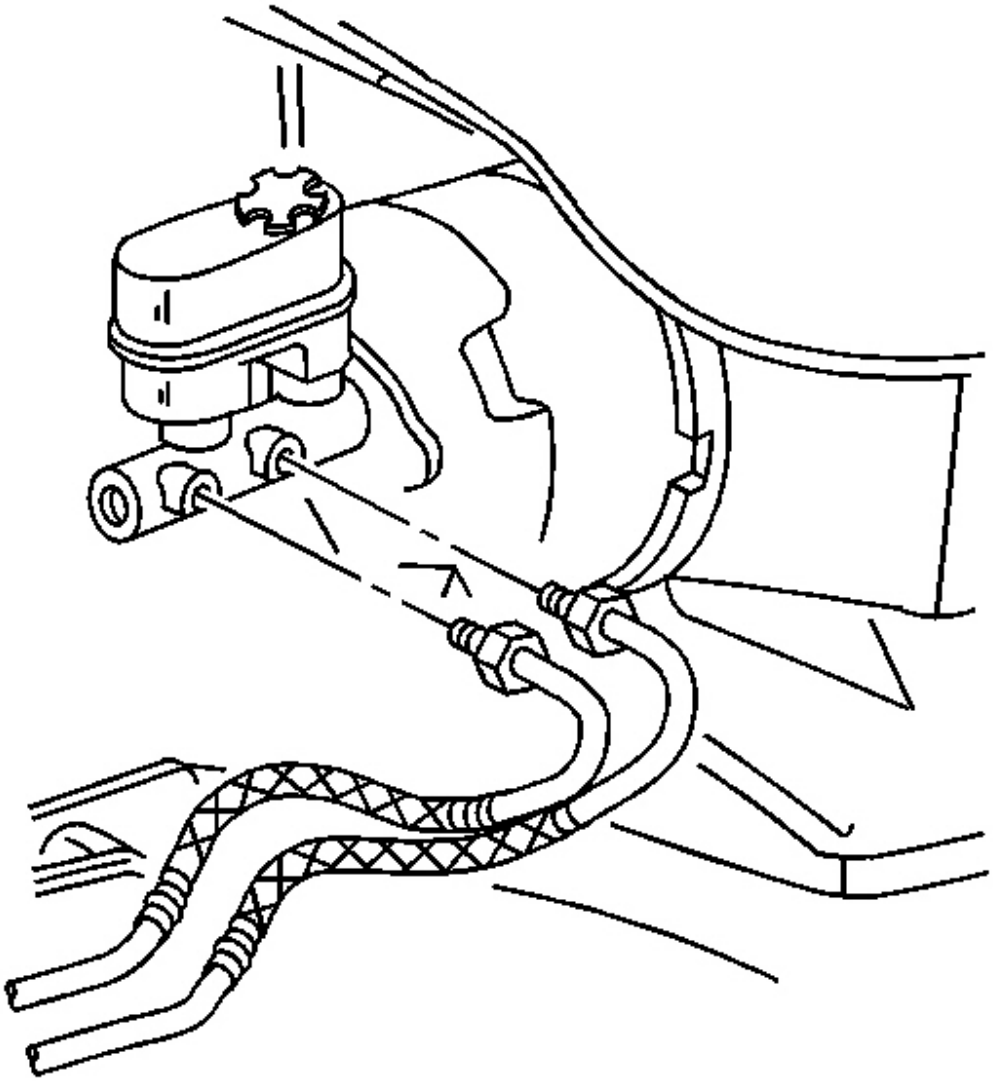

Fig. 13: Brake Pipes To Master Cylinder
Courtesy of GENERAL MOTORS CORP.

2. Disconnect the brake pipes from the master cylinder.

IMPORTANT: Install a rubber cap or plug to the exposed brake pipe fitting ends in order to prevent brake fluid loss and contamination.

3. Plug the open brake pipe ends.

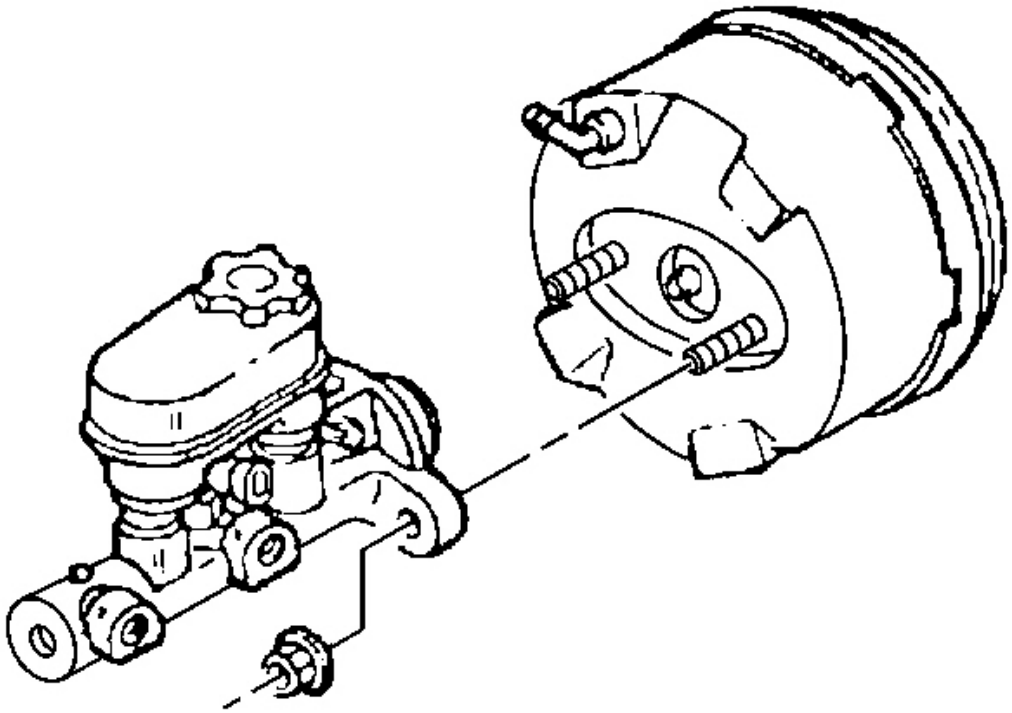

Fig. 14: Master Cylinder Reservoir At Brake Booster
Courtesy of GENERAL MOTORS CORP.

4. Remove master cylinder mounting nuts.
5. Remove the master cylinder from the vehicle.
6. Drain the master cylinder reservoir of all brake fluid.

Installation Procedure

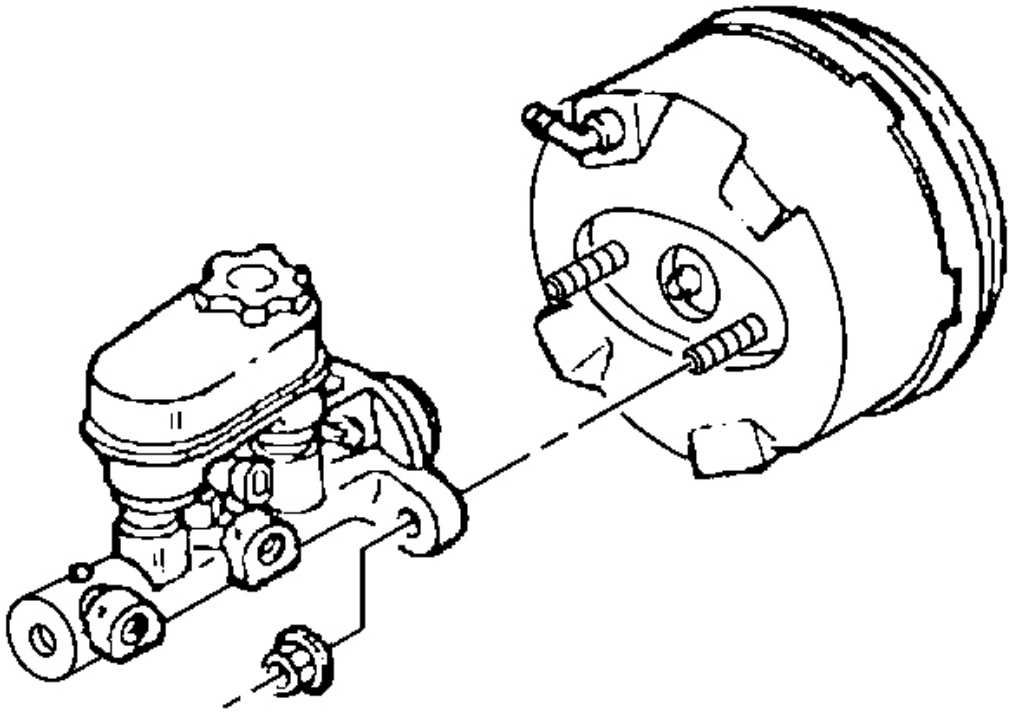

Fig. 15: Master Cylinder Reservoir At Brake Booster
Courtesy of GENERAL MOTORS CORP.

1. Bench bleed the master cylinder. Refer to **Master Cylinder Bench Bleeding** .
2. Install the master cylinder to the brake booster.

NOTE: **Refer to Fastener Notice in Cautions and Notices.**

3. Install the master cylinder mounting nuts.

   Tighten: Tighten the master cylinder mounting nuts to 29 N.m (21 lb ft).

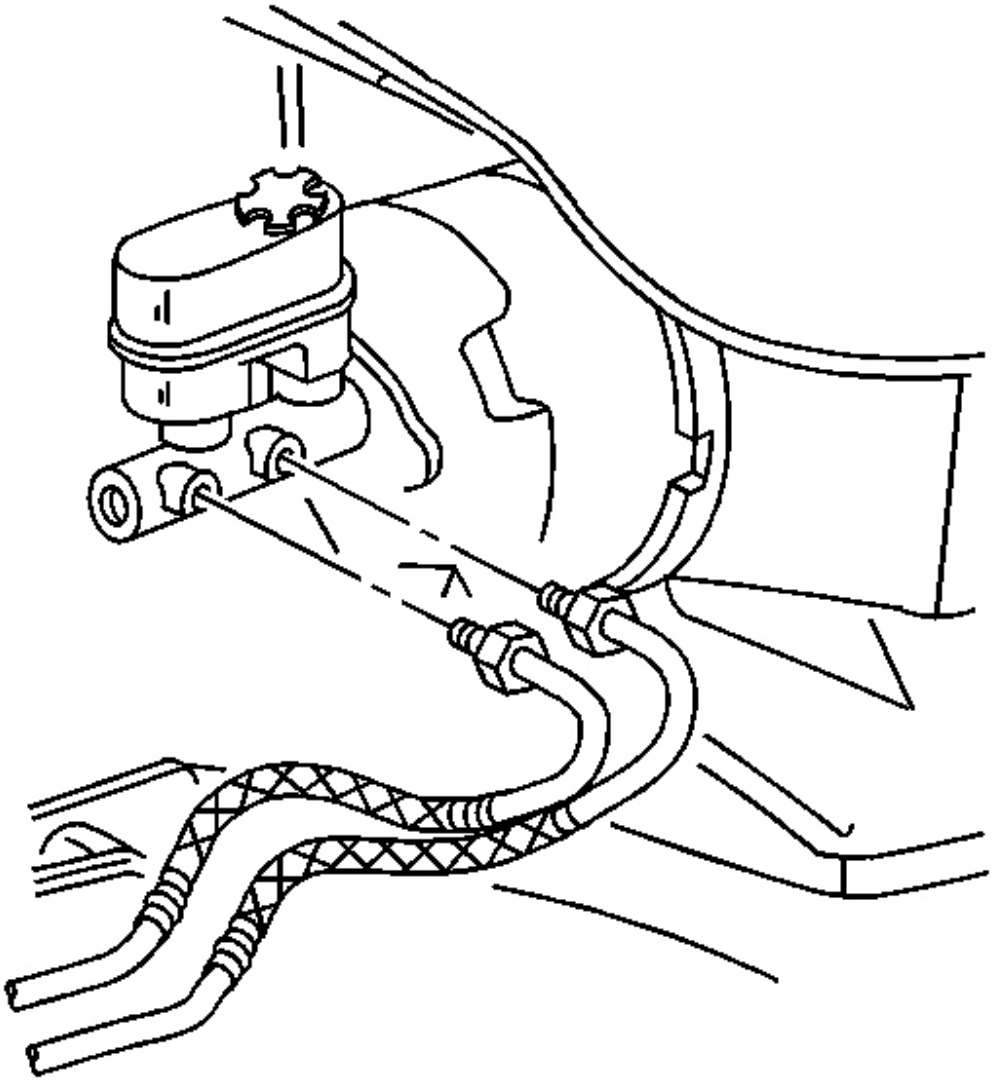

Fig. 16: Brake Pipes To Master Cylinder
Courtesy of GENERAL MOTORS CORP.

4. Remove the plugs from the brake pipes
5. Connect the brake pipes to the master cylinder.

Tighten: Tighten the brake pipe fittings at the master cylinder to 24 N.m (18 lb ft).

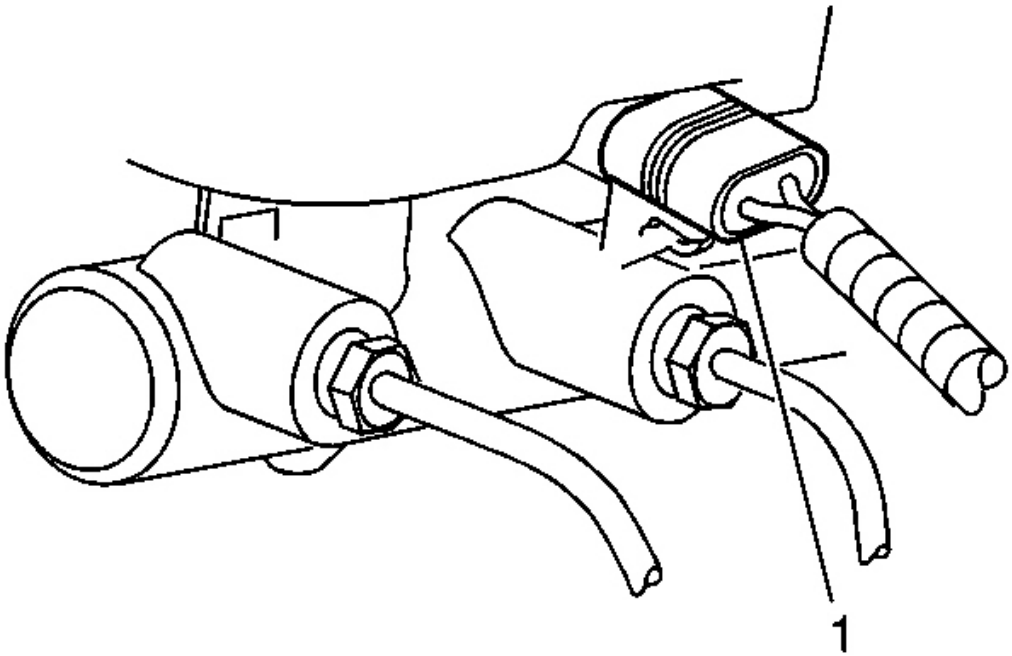

Fig. 17: View Of Master Cylinder
Courtesy of GENERAL MOTORS CORP.

6. Connect the electrical connector (1) to the brake fluid level sensor.
7. Bleed the hydraulic brake system. Refer to **Hydraulic Brake System Bleeding (Manual)** or **Hydraulic Brake System Bleeding (Pressure)** .

MASTER CYLINDER OVERHAUL

CAUTION: Refer to Brake Fluid Irritant Caution in Cautions and Notices.

NOTE: Refer to Brake Fluid Effects on Paint and Electrical Components Notice in Cautions and Notices.

Disassembly Procedure

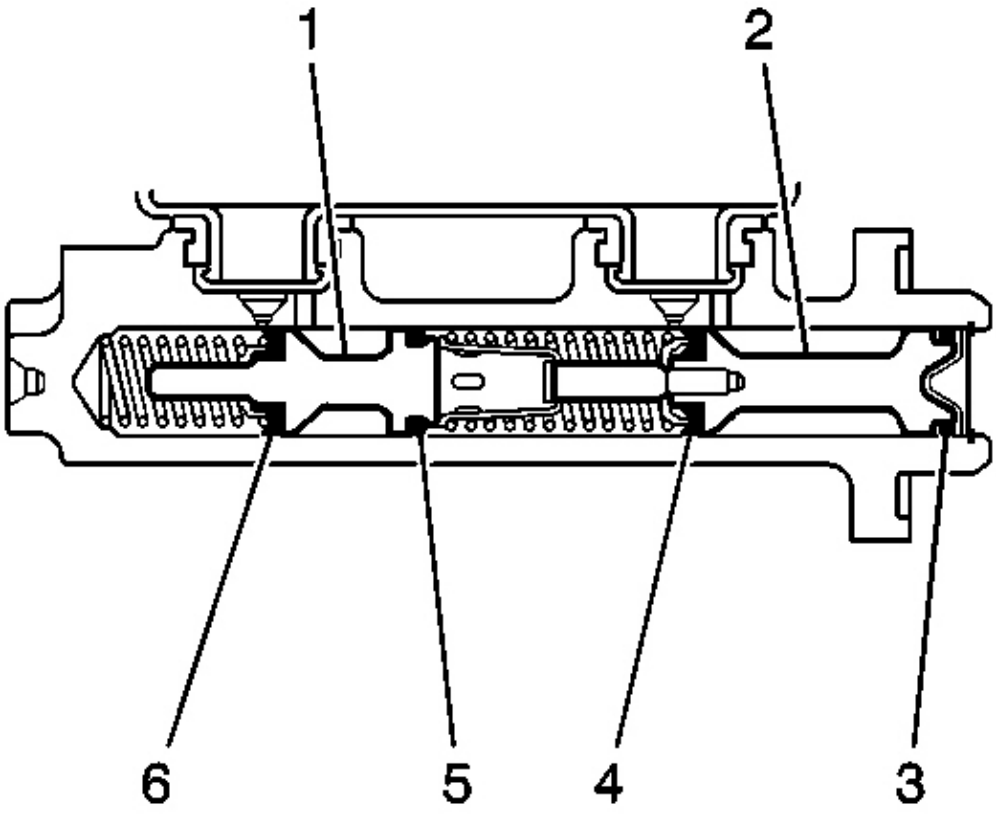

Fig. 18: Identifying Master Cylinder Components
Courtesy of GENERAL MOTORS CORP.

1. Remove the brake master cylinder from the vehicle. Refer to **Master Cylinder Replacement** .
2. Secure the mounting flange of the brake master cylinder in a bench vise so that the rear of the primary piston is accessible.
3. Clean the outside of the master cylinder reservoir on and around the reservoir cap prior to removing the cap and diaphragm.
4. Remove the reservoir cap and diaphragm from the reservoir.
5. Inspect the reservoir cap and diaphragm for the following conditions. If any of these conditions are present, replace the affected components.
   - Cuts or cracks
   - Nicks or deformation
6. Remove the master cylinder reservoir from the master cylinder. Refer to **Master Cylinder Reservoir Replacement** .

7. Using a smooth, round-ended tool, depress the primary piston (2) and remove the piston retainer.
8. Remove the primary piston assembly from the cylinder bore.
9. Plug the cylinder inlet ports and the rear outlet port. Apply low pressure, non-lubricated, filtered air into the front outlet port, in order the remove the secondary piston (1) with the primary (6) and secondary (5) seals, and the return spring.
10. Discard the primary piston assembly, the piston retainer, and the seals and seal retainer from the secondary piston.

Assembly Procedure

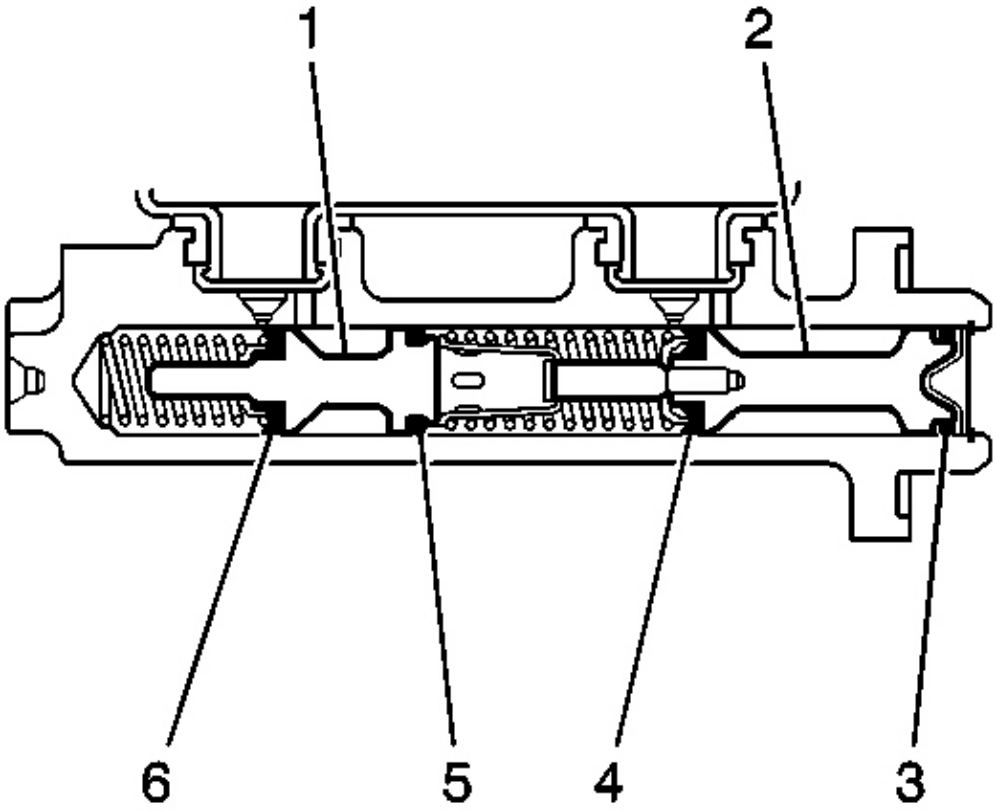

Fig. 19: Identifying Master Cylinder Components
Courtesy of GENERAL MOTORS CORP.

IMPORTANT: Do not use abrasives to clean the brake master cylinder bore.

1. Clean the interior and exterior of the master cylinder, the secondary piston (1), and the return spring in denatured alcohol, or equivalent.
2. Inspect the master cylinder bore, inlet and outlet ports, the secondary piston (1), and the return spring for cracks, scoring, pitting, and/or corrosion. Replace the master cylinder if any of these conditions exist.
3. Dry the master cylinder and the individual components with non-lubricated, filtered air.
4. Lubricate the master cylinder bore, the secondary piston (1), the return spring, and all of the individual overhaul components with Delco Supreme 11(R), GM P/N 12377967 (Canadian P/N 992667), or equivalent DOT-3 brake fluid from a clean, sealed brake fluid container.
5. Assemble the lubricated, new primary seal (6) and retainer, and new secondary seal (5) onto the secondary piston.
6. Install the lubricated return spring and secondary piston assembly (1) into the cylinder bore.
7. Install the lubricated, new primary piston assembly (2) into the cylinder bore.
8. Using a smooth, round-ended tool, depress the primary piston (2) and install the new piston retainer.
9. Install the master cylinder reservoir to the master cylinder. Refer to **Master Cylinder Reservoir Replacement** .
10. Install the reservoir cap and diaphragm to the reservoir.
11. Install the master cylinder to the vehicle. Refer to **Master Cylinder Replacement** .

MASTER CYLINDER BENCH BLEEDING

CAUTION: Refer to Brake Fluid Irritant Caution in Cautions and Notices.

NOTE: Refer to Brake Fluid Effects on Paint and Electrical Components Notice in Cautions and Notices.

NOTE: When adding fluid to the brake master cylinder reservoir, use only Delco Supreme 11(R), GM P/N 12377967 (Canadian P/N 992667), or equivalent DOT-3 brake fluid from a clean, sealed brake fluid container. The use of any type of fluid other than the recommended type of brake fluid, may cause contamination which could result in damage to the internal rubber seals and/or rubber linings of hydraulic brake system components.

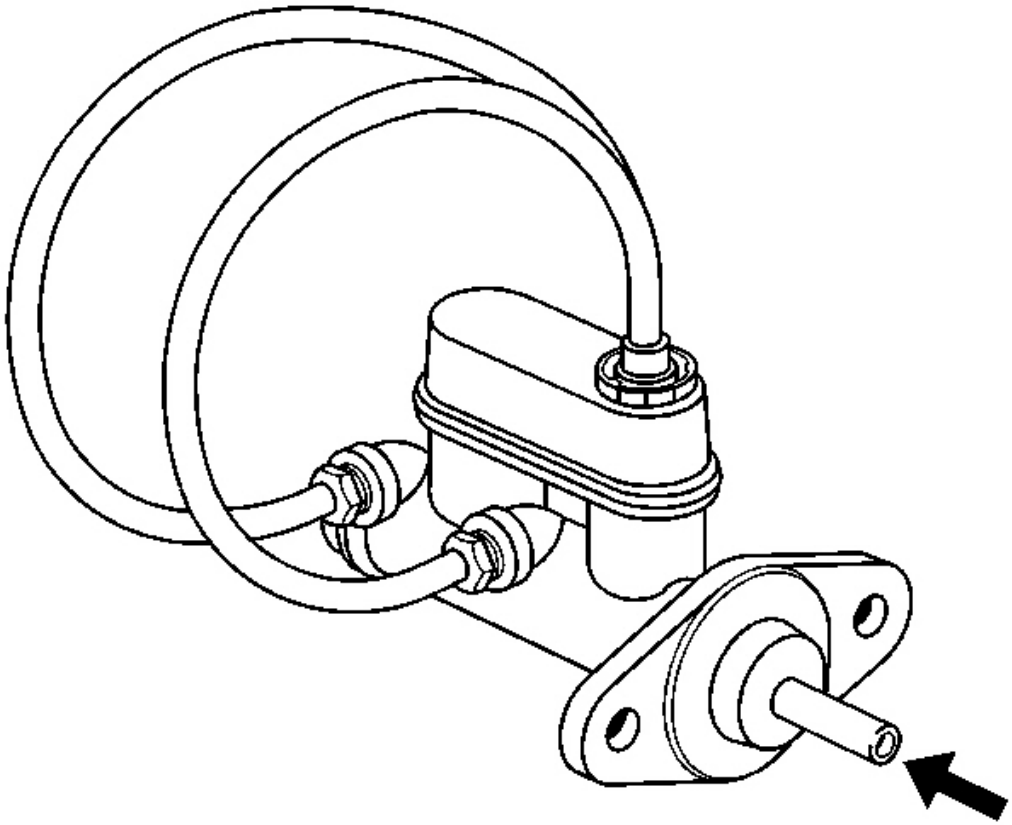

Fig. 20: Bleeding Master Cylinder
Courtesy of GENERAL MOTORS CORP.

1. Secure the mounting flange of the brake master cylinder in a bench vise so that the rear of the primary piston is accessible.
2. Remove the master cylinder reservoir cap and diaphragm.
3. Install suitable fittings to the master cylinder ports that match the type of flare seat required and also provide for hose attachment.
4. Install transparent hoses to the fittings installed to the master cylinder ports, then route the hoses into the master cylinder reservoir.
5. Fill the master cylinder reservoir to at least the half-way point with Delco Supreme 11(R), GM P/N 12377967 (Canadian P/N 992667), or equivalent DOT-3 brake fluid from a clean, sealed brake fluid container.
6. Ensure that the ends of the transparent hoses running into the master cylinder reservoir are fully submerged in the brake fluid.
7. Using a smooth, round-ended tool, depress and release the primary piston as far as it will travel, a depth

of about 25 mm (1 in), several times. Observe the flow of fluid coming from the ports.

As air is bled from the primary and secondary pistons, the effort required to depress the primary piston will increase and the amount of travel will decrease.

8. Continue to depress and release the primary piston until fluid flows freely from the ports with no evidence of air bubbles.
9. Remove the transparent hoses from the master cylinder reservoir.
10. Install the master cylinder reservoir cap and diaphragm.
11. Remove the fittings with the transparent hoses from the master cylinder ports. Wrap the master cylinder with a clean shop cloth to prevent brake fluid spills.
12. Remove the master cylinder from the vise.

MASTER CYLINDER FLUID LEVEL SENSOR REPLACEMENT

Removal Procedure

1. Disconnect the electrical connector from brake fluid level sensor.

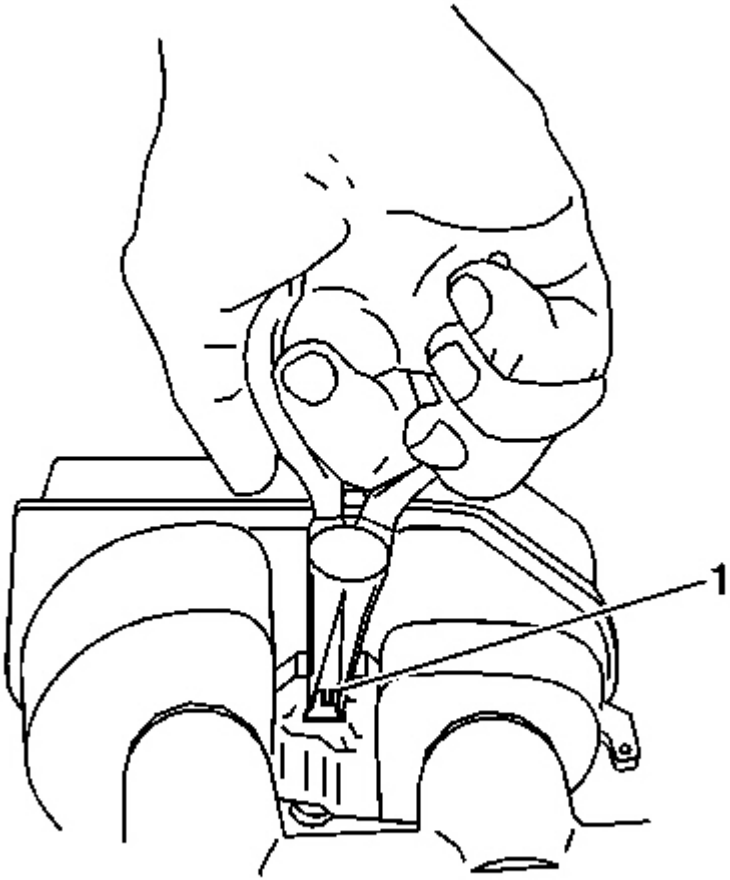

Fig. 21: Removing Brake Fluid Level Sensor
Courtesy of GENERAL MOTORS CORP.

2. Remove the brake fluid level sensor. Using needle nose pliers, carefully depress the retaining tabs on the end of the brake fluid level sensor (1) and press the sensor through the reservoir to remove.

Installation Procedure

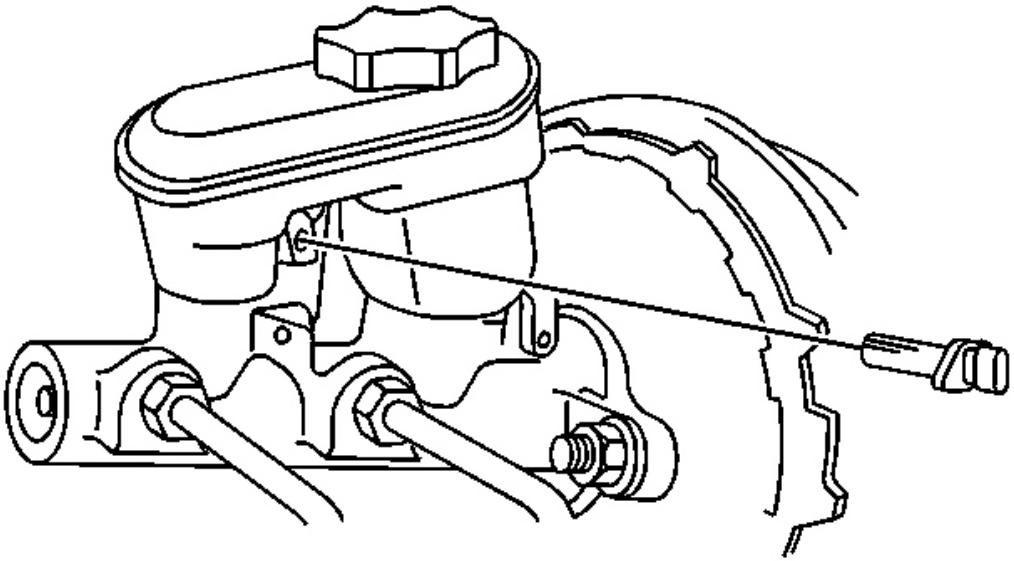

Fig. 22: Electrical Connector To Brake Fluid Level Sensor
Courtesy of GENERAL MOTORS CORP.

1. Place the brake fluid level sensor into the reservoir, press into place to secure the sensor retaining tabs.
2. Connect the electrical connector to the brake fluid level sensor.

BRAKE PEDAL ASSEMBLY REPLACEMENT

Removal Procedure

1. Remove the instrument panel knee bolster trim panel. Refer to **Trim Panel Replacement - Knee Bolster** in Instrument Panel, Gages, and Console.

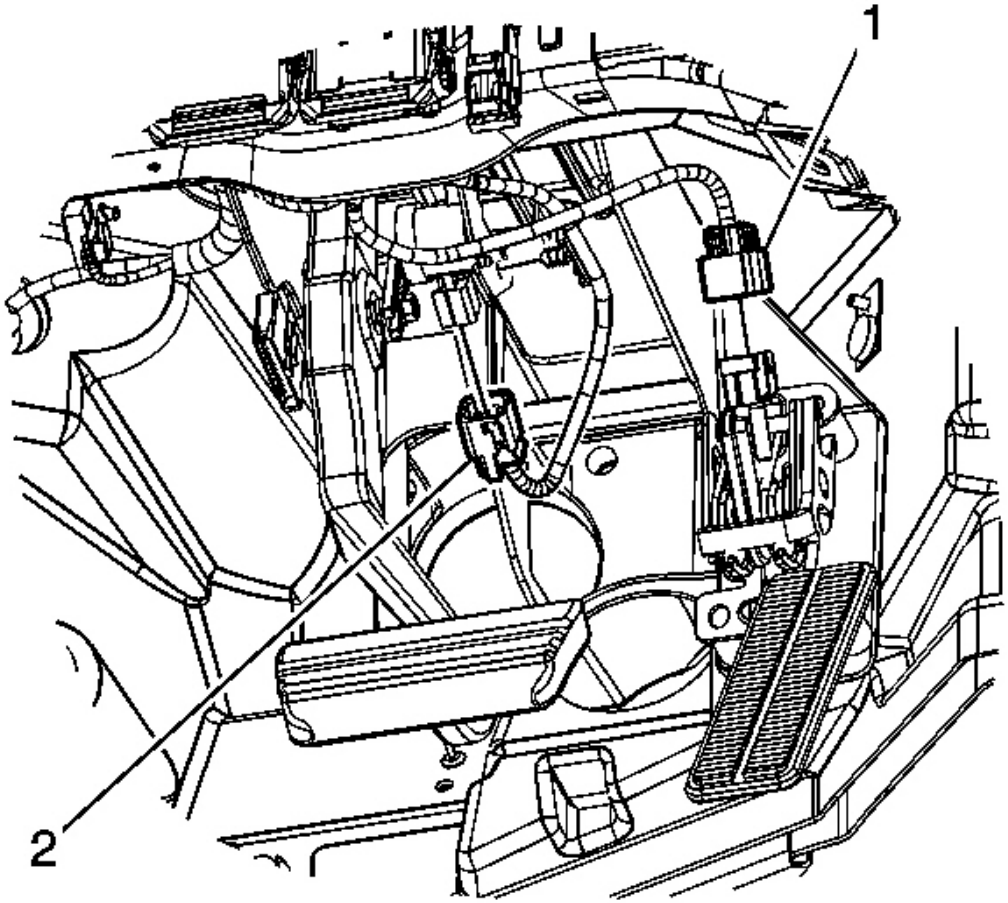

Fig. 23: Accelerator Pedal Position Sensor & Brake Apply Sensor
Courtesy of GENERAL MOTORS CORP.

2. Disconnect the accelerator pedal position sensor (1) and brake apply sensor (2).

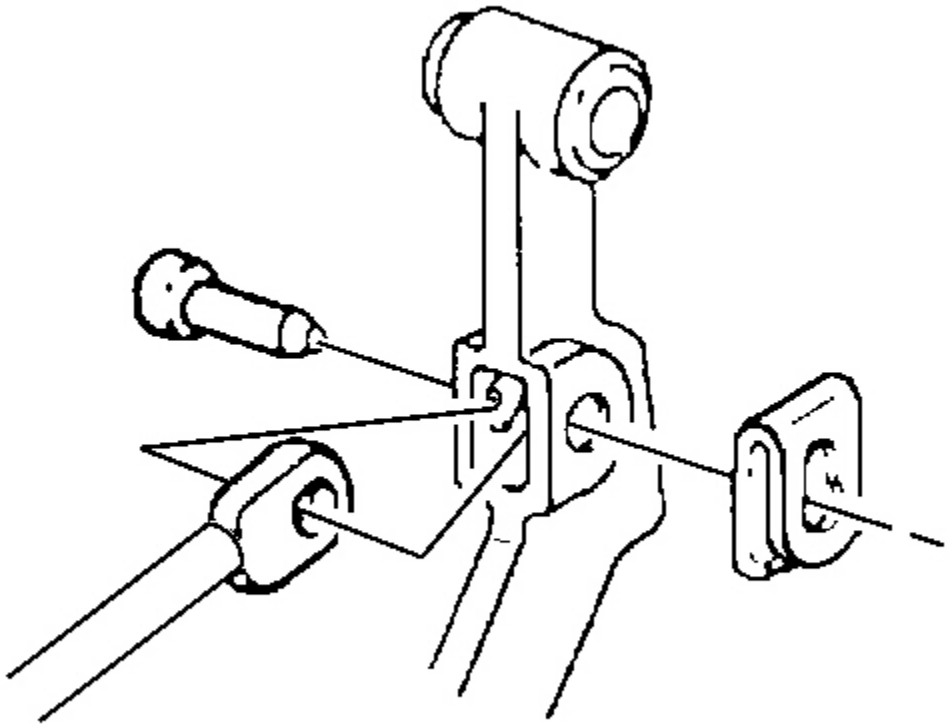

Fig. 24: Isolation Mat To Brake Pedal
Courtesy of GENERAL MOTORS CORP.

3. Remove the retainer, washer, brake booster pushrod, and brake pedal pin from the brake pedal.
4. Reposition the isolation mat by cutting a small slit in the mat.

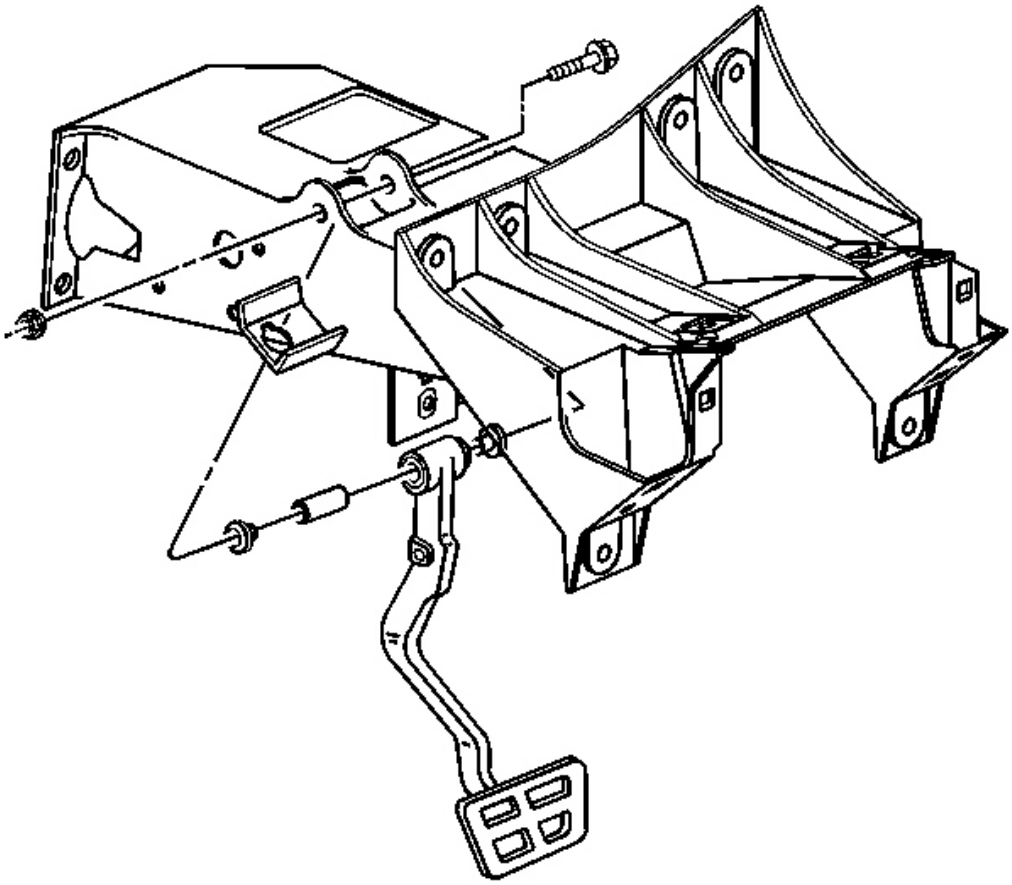

Fig. 25: Brake Pedal To Mounting Bracket
Courtesy of GENERAL MOTORS CORP.

5. Remove the brake pedal pivot bolt and nut.
6. Remove the brake pedal from the mounting bracket.

Installation Procedure

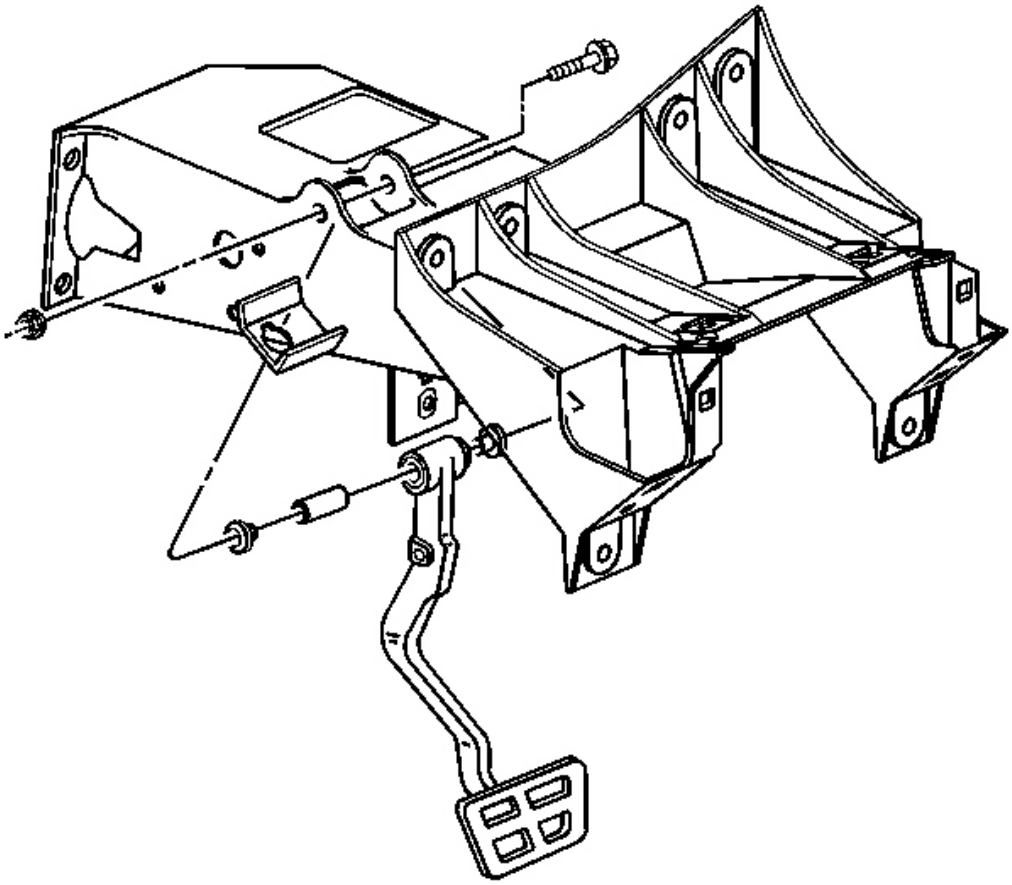

Fig. 26: Brake Pedal To Mounting Bracket
Courtesy of GENERAL MOTORS CORP.

1. Lubricate the bushings, pivot bolt, and all friction parts with high temperature silicone brake lubricant.
2. Install the brake pedal to the mounting bracket.

NOTE: **Refer to Fastener Notice in Cautions and Notices.**

3. Install the pivot bolt and nut.

   Tighten: Tighten the brake pedal pivot nut to 29 N.m (21 lb ft).

4. Reposition the dash isolation mat.

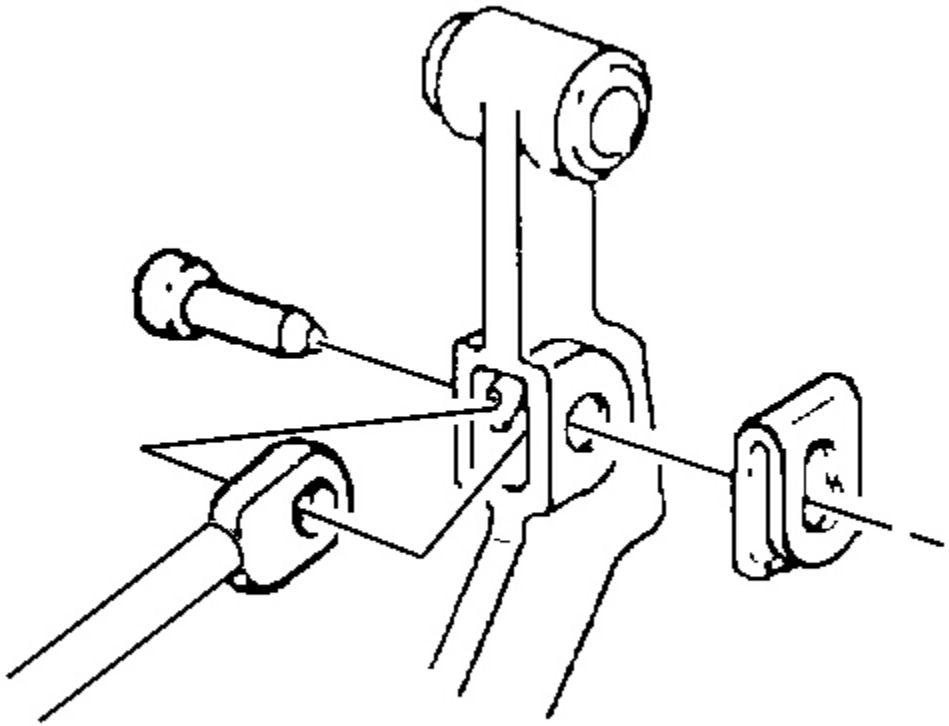

Fig. 27: Isolation Mat To Brake Pedal
Courtesy of GENERAL MOTORS CORP.

5. Install the retainer, washer, brake booster pushrod, and brake pedal pin to the brake pedal. Verify proper engagement of the retainer to the brake pedal pin by rotating the retainer.

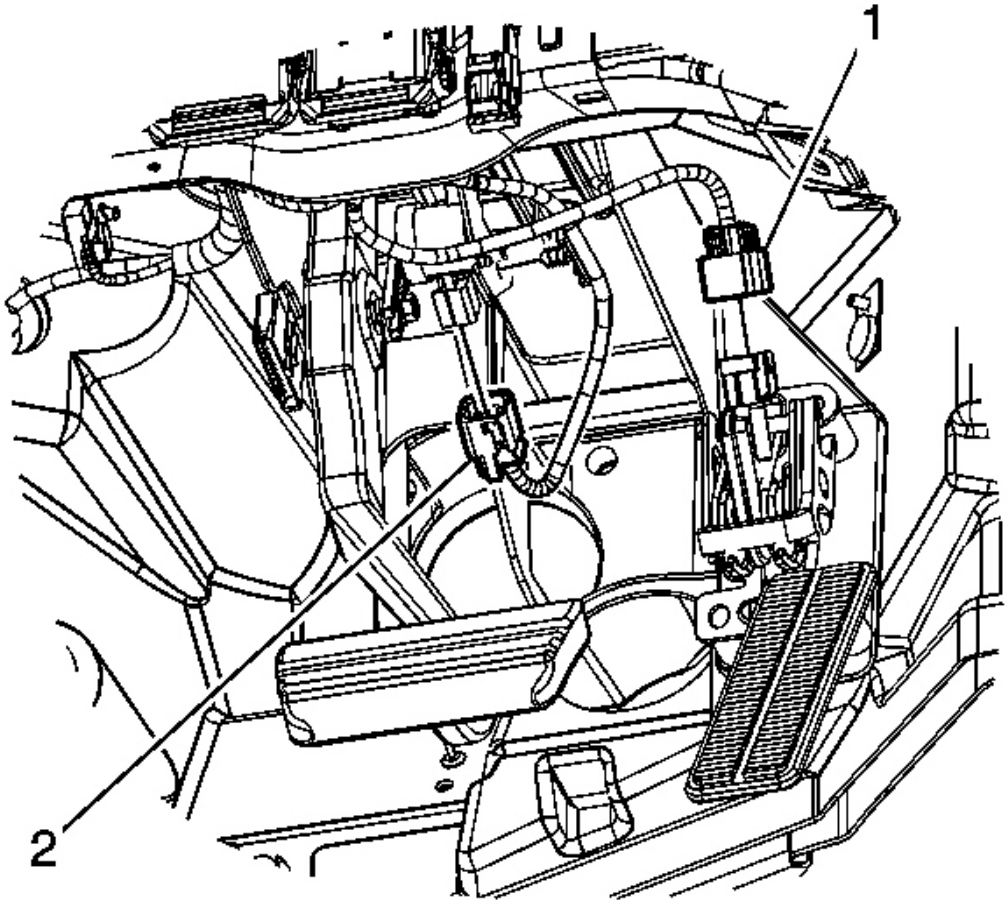

Fig. 28: Accelerator Pedal Position Sensor & Brake Apply Sensor
Courtesy of GENERAL MOTORS CORP.

6. Connect the accelerator pedal position sensor (1) and brake apply sensor (2).
7. Install the instrument panel knee bolster trim panel. Refer to **Trim Panel Replacement - Knee Bolster** in Instrument Panel, Gages, and Console.

BRAKE PIPE REPLACEMENT

Tools Required

J 45405 Pipe Flaring Tool Kit. See **Special Tools and Equipment** .

CAUTION: Refer to Brake Fluid Irritant Caution in Cautions and Notices.

CAUTION: **Always use double walled steel brake pipe when replacing brake pipes. The use of any other pipe is not recommended and may cause brake system failure. Carefully route and retain replacement brake pipes. Always use the correct fasteners and the original location for replacement brake pipes. Failure to properly route and retain brake pipes may cause damage to the brake pipes and cause brake system failure.**

NOTE: **Refer to Brake Fluid Effects on Paint and Electrical Components Notice in Cautions and Notices.**

IMPORTANT: **When servicing brake pipes, note the following:**

- **If sectioning brake pipe, use replacement pipe of the same type and outside diameter.**
- **Use fittings of the appropriate size and type.**
- **Only create flares of the same type or design as originally equipped on the vehicle.**

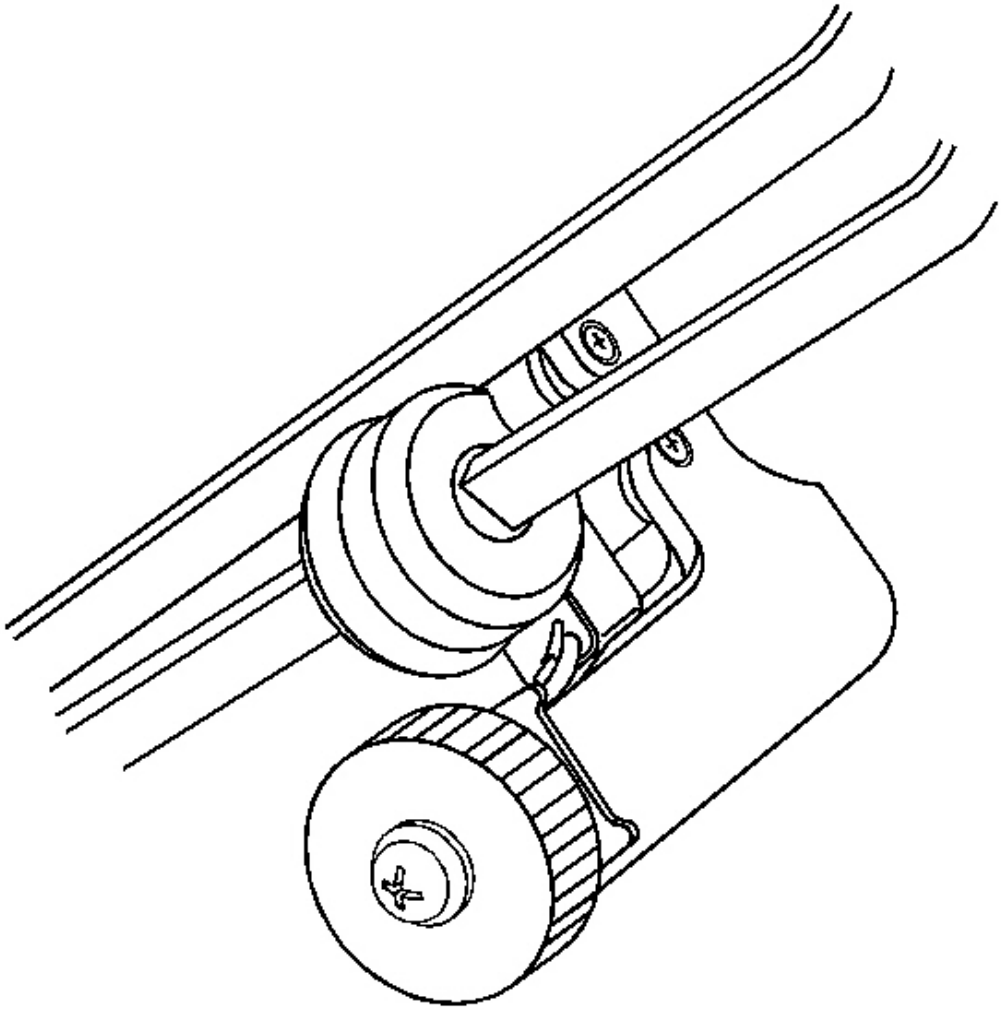

Fig. 29: Sectioning Brake Pipe Using Pipe Cutter
Courtesy of GENERAL MOTORS CORP.

1. Inspect the section of brake pipe to be replaced.
2. Release the brake pipe to be replaced from the retainers, as required.
3. Select an appropriate location to section the brake pipe, if necessary.
   - Allow adequate clearance in order to maneuver the **J 45405** . See **Special Tools and Equipment** .
   - Avoid sectioning the brake pipe at bends or mounting points.
4. Using a string or wire, measure the length of the pipe to be replaced including all pipe bends.
5. Add to the measurement taken the appropriate additional length required for each flare to be created.

Specification: 6.35 mm (0.250 in) for 4.76 mm (3/16 in) diameter pipe

IMPORTANT: Ensure that the brake pipe end to be flared is cut at a square, 90 degree angle to the pipe length.

6. Using the pipe cutter included in the **J 45405** , carefully cut the brake pipe squarely to the measured length. See **Special Tools and Equipment** .
7. Remove the sectioned brake pipe from the vehicle.
8. Select the appropriate size of brake pipe and tube nuts, as necessary. The brake pipe outside diameter determines brake pipe size.

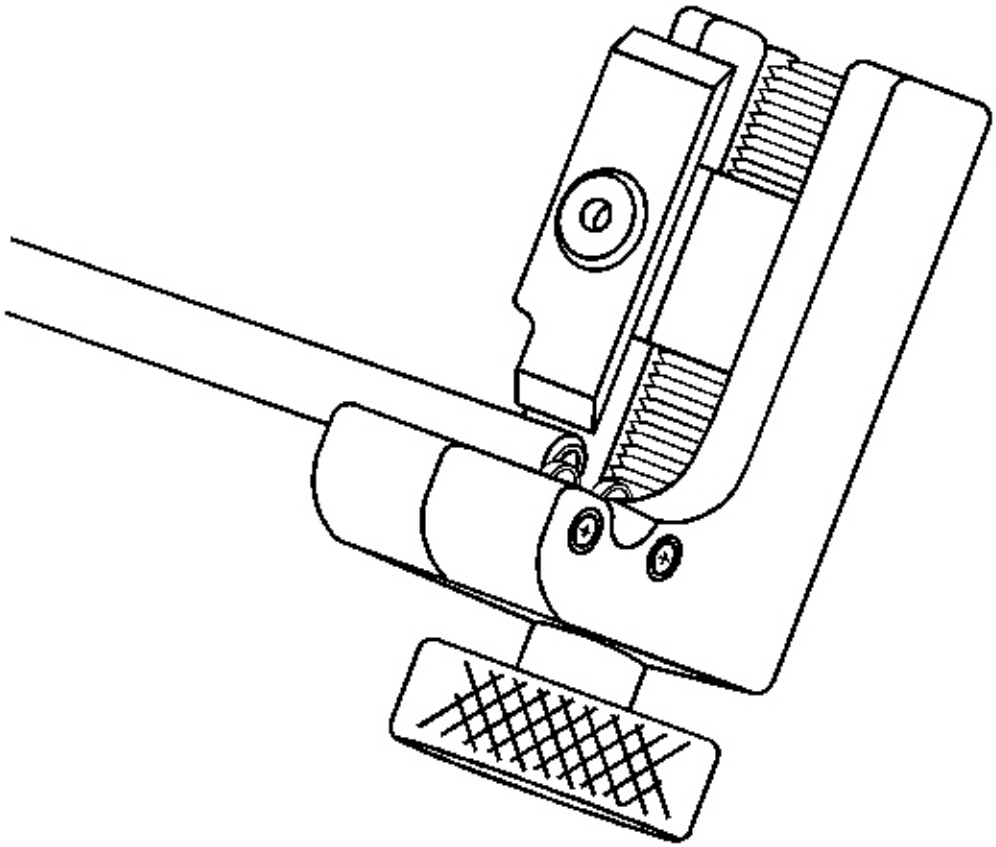

Fig. 30: Stripping Nylon Coating From Brake Pipe Ends
Courtesy of GENERAL MOTORS CORP.

9. Strip the nylon coating from the brake pipe ends to be flared, if necessary.

- Select the appropriate blade on the coating stripping tool included in the **J 45405** , by unthreading the blade block from the stripping tool and installing the block with the desired blade facing the tool rollers. See **Special Tools and Equipment** .

  Specification: 6.35 mm (0.250 in) blade for 4.76 mm (3/16 in) diameter pipe

- Insert the brake pipe end to be flared into the stripping tool to the depth of the ledge on the tool rollers.
- While holding the brake pipe firmly against the stripping tool roller ledges, rotate the thumbwheel of the tool until the blade contacts the brake pipe coated surface.

IMPORTANT: Do not gouge the metal surface of the brake pipe.

- Rotate the stripping tool in a clockwise direction, ensuring that the brake pipe end remains against the tool roller ledges.
- After each successive revolution of the stripping tool, carefully rotate the thumbwheel of the tool clockwise, in order to continue stripping the coating from the brake pipe until the metal pipe surface is exposed.
- Loosen the thumbwheel of the tool and remove the brake pipe.

IMPORTANT: Ensure that all loose remnants of the nylon coating have been removed from the brake pipe.

- Inspect the stripped end of the brake pipe to ensure that the proper amount of coating has been removed.

  Specification: 6.35 mm (0.250 in) for 4.76 mm (3/16 in) diameter pipe

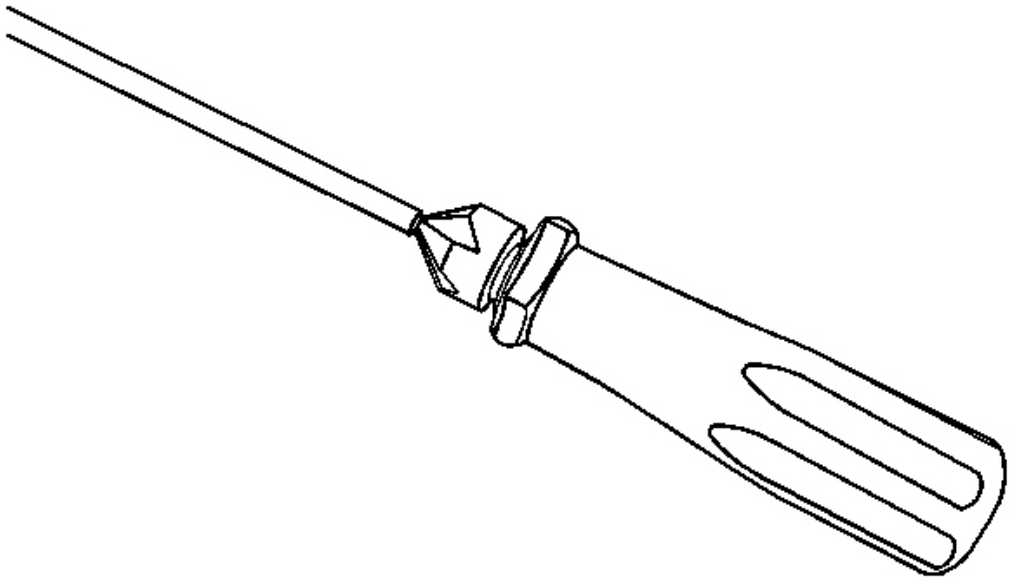

Fig. 31: Chamfering Pipe Using De-Burring Tool
Courtesy of GENERAL MOTORS CORP.

10. Chamfer the inside and outside diameter of the pipe with the de-burring tool included in the **J 45405** . See **Special Tools and Equipment** .
11. Install the tube nuts on the brake pipe, noting their orientation.
12. Clean the brake pipe and the **J 45405** of lubricant, contaminants, and debris. See **Special Tools and Equipment** .

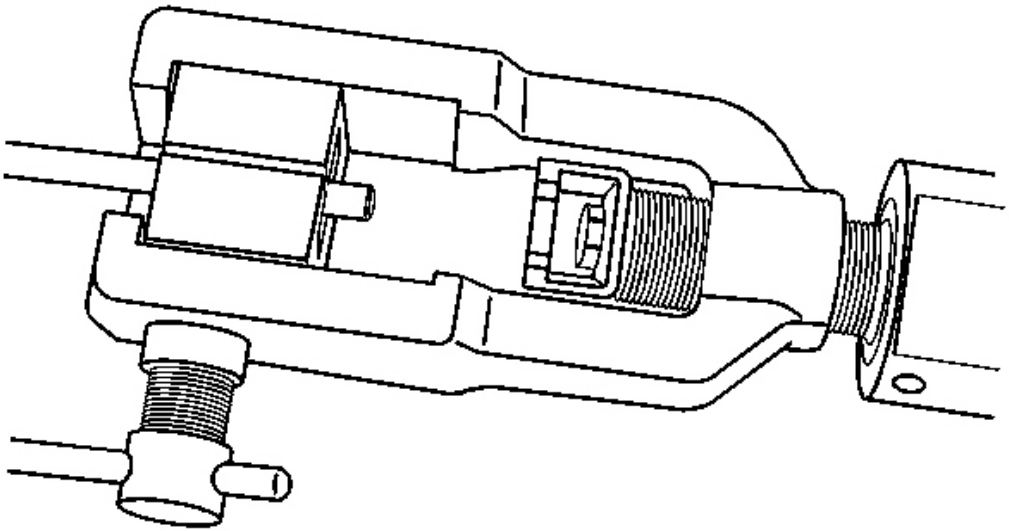

Fig. 32: View Of Pipe Flaring Tool
Courtesy of GENERAL MOTORS CORP.

13. Loosen the die clamping screw of the **J 45405** . See **Special Tools and Equipment** .
14. Select the corresponding die set and install the die halves into the die cage with the full, flat face of one die facing the clamping screw, and the counterbores of both dies facing the forming ram.

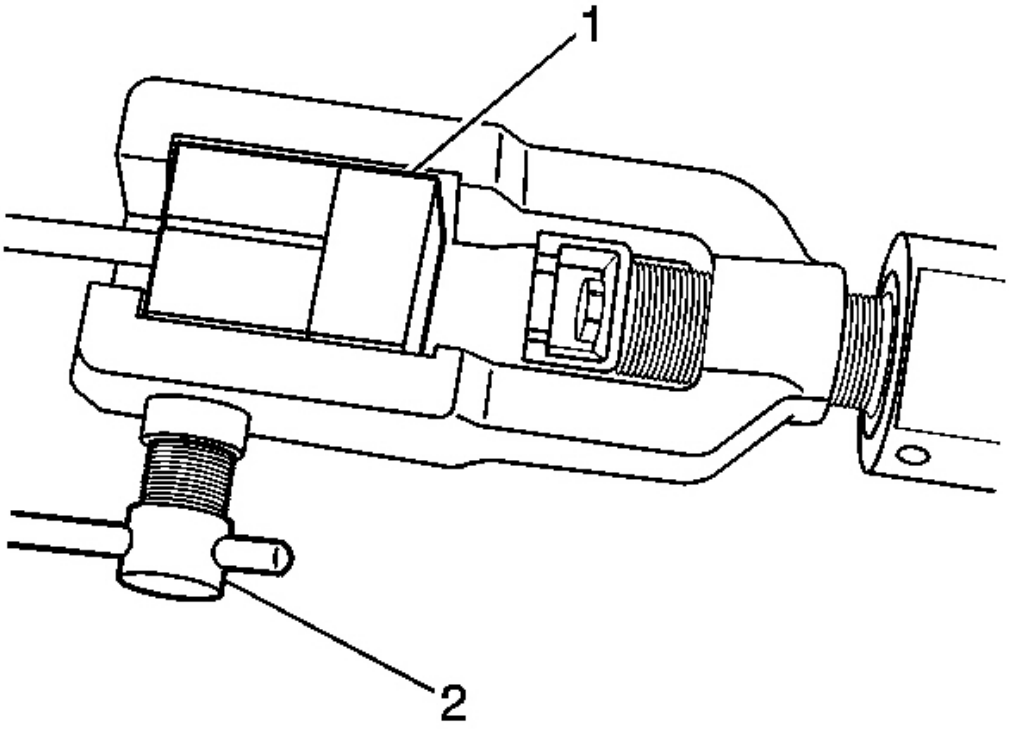

Fig. 33: View Of Pipe Flaring Tool J 45405
Courtesy of GENERAL MOTORS CORP.

15. Place the flat face of an unused die (1) against the die halves in the clamping cage and hold firmly against the counterbored face of the dies.
16. Insert the prepared end of the pipe to be flared through the back of the dies until the pipe is seated against the flat surface of the unused die (1).
17. Remove the unused die (1).
18. Ensure that the rear of both dies are seated firmly against the enclosed end of the die cage.
19. Firmly hand tighten the clamping screw (2) against the dies.

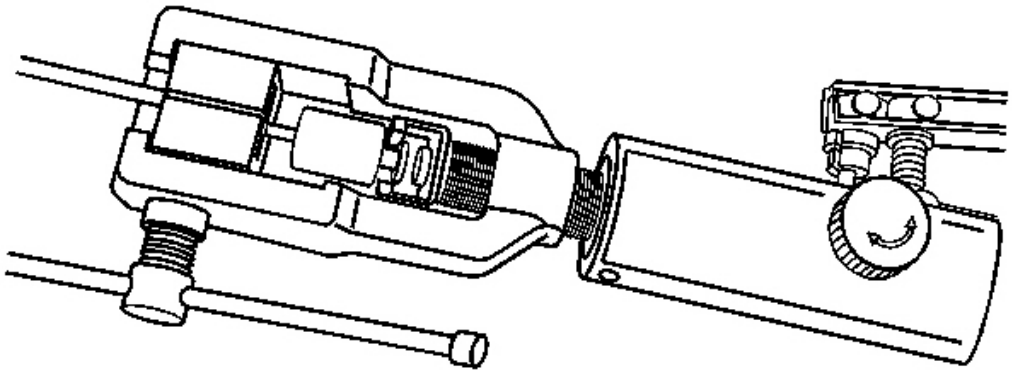

Fig. 34: Rotating J 45405 To Bottom Against Die Cage
Courtesy of GENERAL MOTORS CORP.

20. Select the appropriate forming mandrel and place into the forming ram.
21. Rotate the hydraulic fluid control valve clockwise to the closed position.
22. Rotate the body of the **J 45405** until it bottoms against the die cage. See **Special Tools and Equipment** .

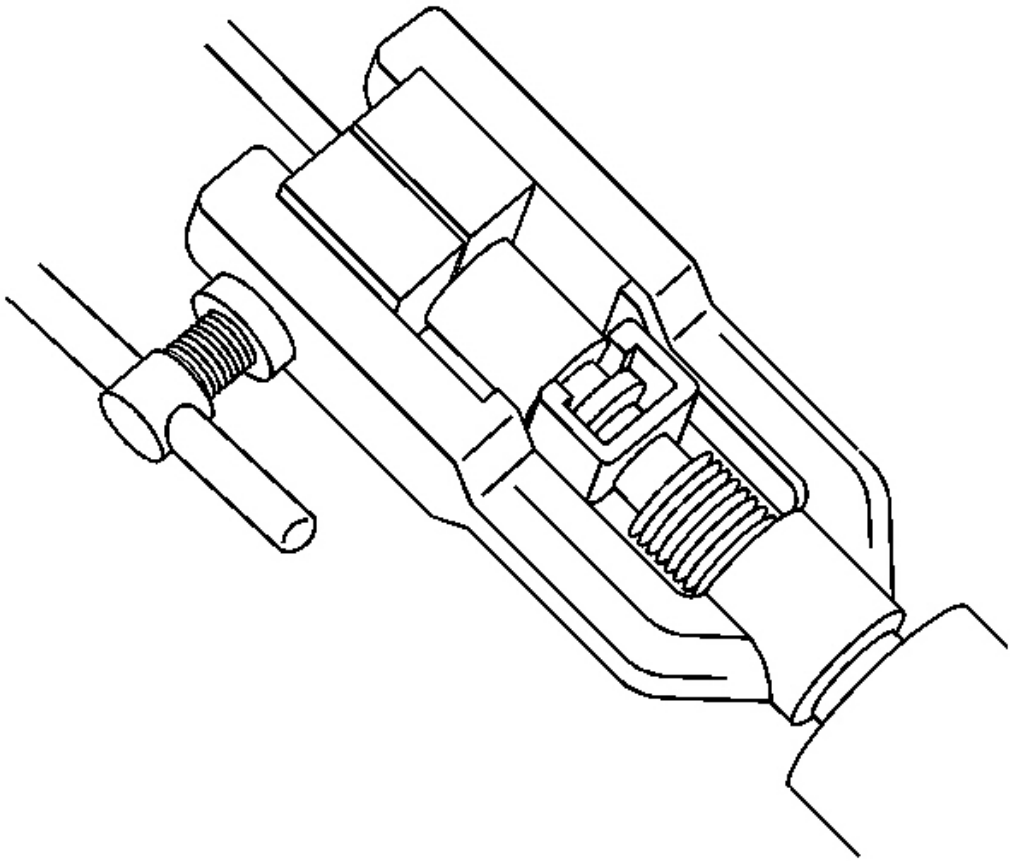

Fig. 35: View Of Pipe Flaring Tool
Courtesy of GENERAL MOTORS CORP.

23. While guiding the forming mandrel into the exposed end of pipe to be flared, operate the lever of the **J 45405** until the forming mandrel bottoms against the clamping dies. See **Special Tools and Equipment** .
24. Rotate the hydraulic fluid control valve counterclockwise to the open position to allow the hydraulic forming ram to retract.
25. Loosen the die clamping screw and remove the dies and pipe.
26. If necessary, lightly tap the dies until the die halves separate.

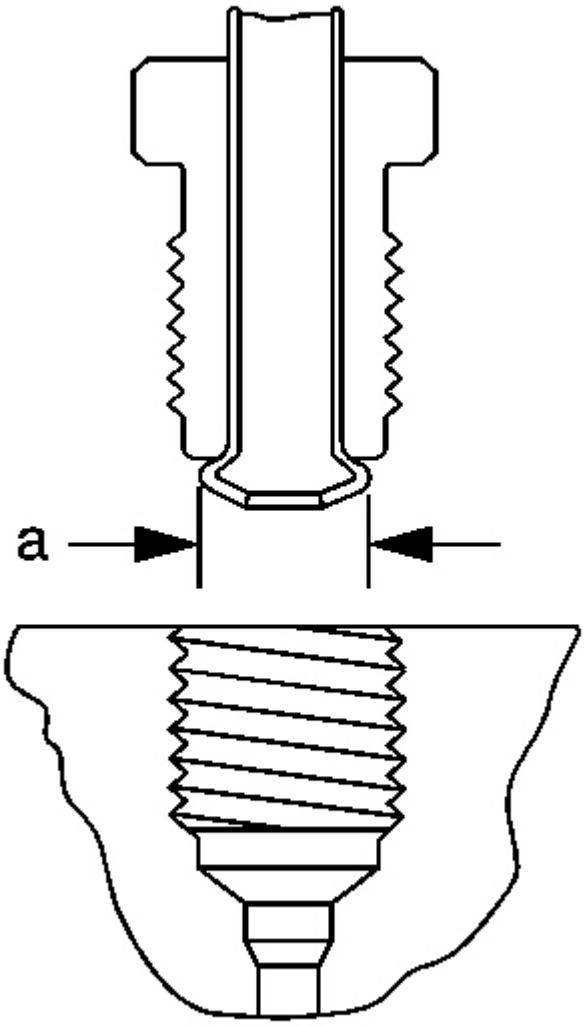

Fig. 36: Inspecting Brake Pipe Flare
Courtesy of GENERAL MOTORS CORP.

27. Inspect the brake pipe flare for correct shape and diameter (a).

    Specification: 7.10 mm (0.279 in) +/- 0.18 mm (0.007 in) flare diameter for 4.76 mm (3/16 in) diameter pipe

28. If necessary, using the removed section of pipe as a template, shape the new pipe with a suitable brake pipe bending tool.

IMPORTANT: When installing the pipe, maintain a clearance of 19 mm (3/4 in) from all moving or vibrating components.

29. Install the pipe to the vehicle with the appropriate brake pipe unions as required.
30. If previously released, secure the brake pipe to the retainers.
31. Bleed the hydraulic brake system. Refer to **Hydraulic Brake System Bleeding (Manual)** or **Hydraulic Brake System Bleeding (Pressure)** .
32. With the aid of an assistant, inspect the brake pipe flares for leaks by starting the engine and applying the brakes.

BRAKE HOSE REPLACEMENT - FRONT

Removal Procedure

CAUTION: Refer to Brake Fluid Irritant Caution in Cautions and Notices.

NOTE: Refer to Brake Fluid Effects on Paint and Electrical Components Notice in Cautions and Notices.

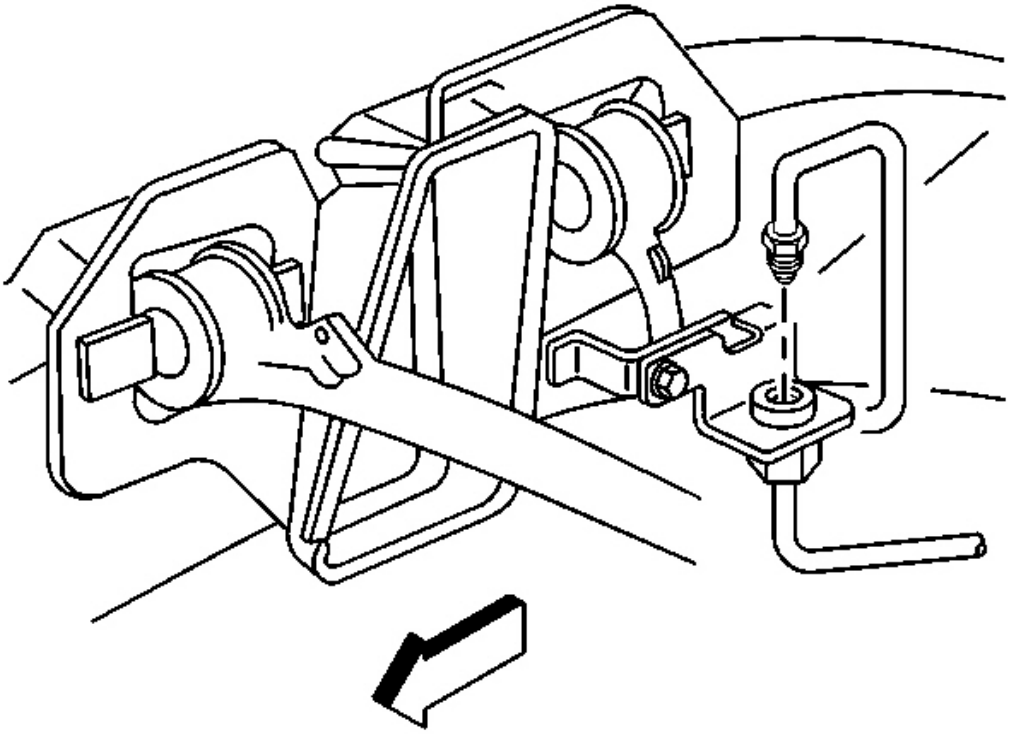

Fig. 37: Brake Pipe Fitting To Brake Hose
Courtesy of GENERAL MOTORS CORP.

1. Raise and suitably support the vehicle. Refer to **Lifting and Jacking the Vehicle** in General Information.
2. Remove the tire and wheel assembly. Refer to **Tire and Wheel Removal and Installation** in Tires and Wheels.
3. Clean all dirt and foreign material from the brake hose and brake pipe fitting.

IMPORTANT: Install a rubber cap or plug to the exposed brake pipe fitting end to prevent brake fluid loss and contamination.

4. Use a backup wrench on the hose fitting, disconnect the brake pipe fitting from the brake hose, then cap or plug the brake pipe fitting end.

   Do not bend the brake pipe or the bracket.

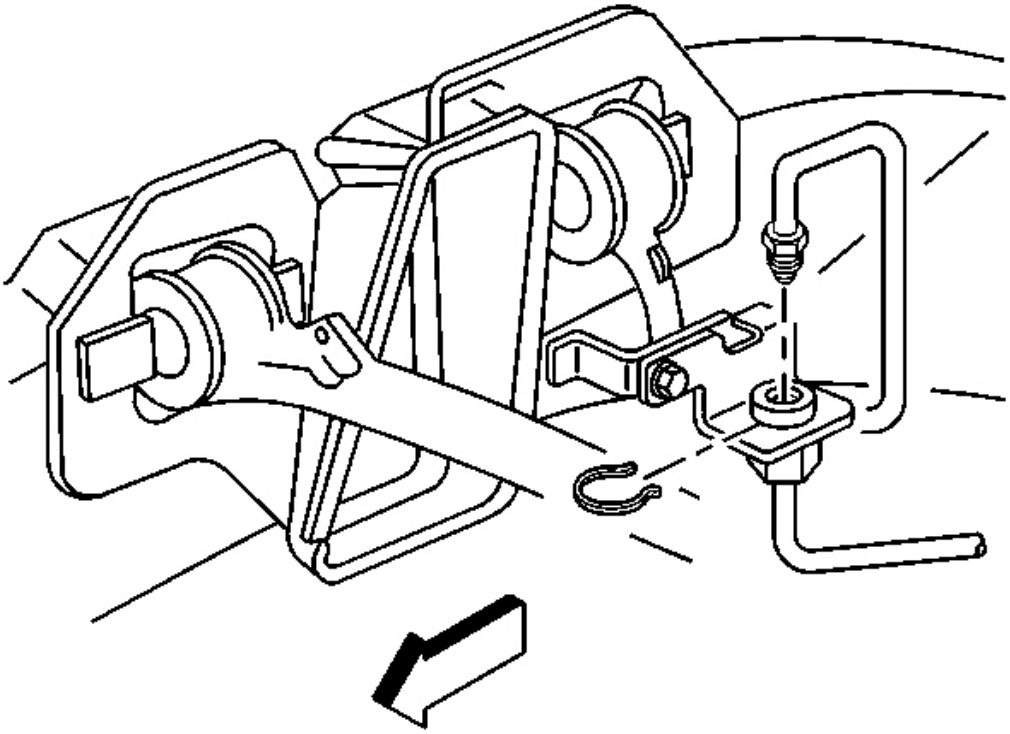

Fig. 38: Brake Hose To Hose Bracket
Courtesy of GENERAL MOTORS CORP.

5. Remove the brake hose retainer from the brake hose at the hose bracket.
6. Remove the brake hose from the hose bracket.

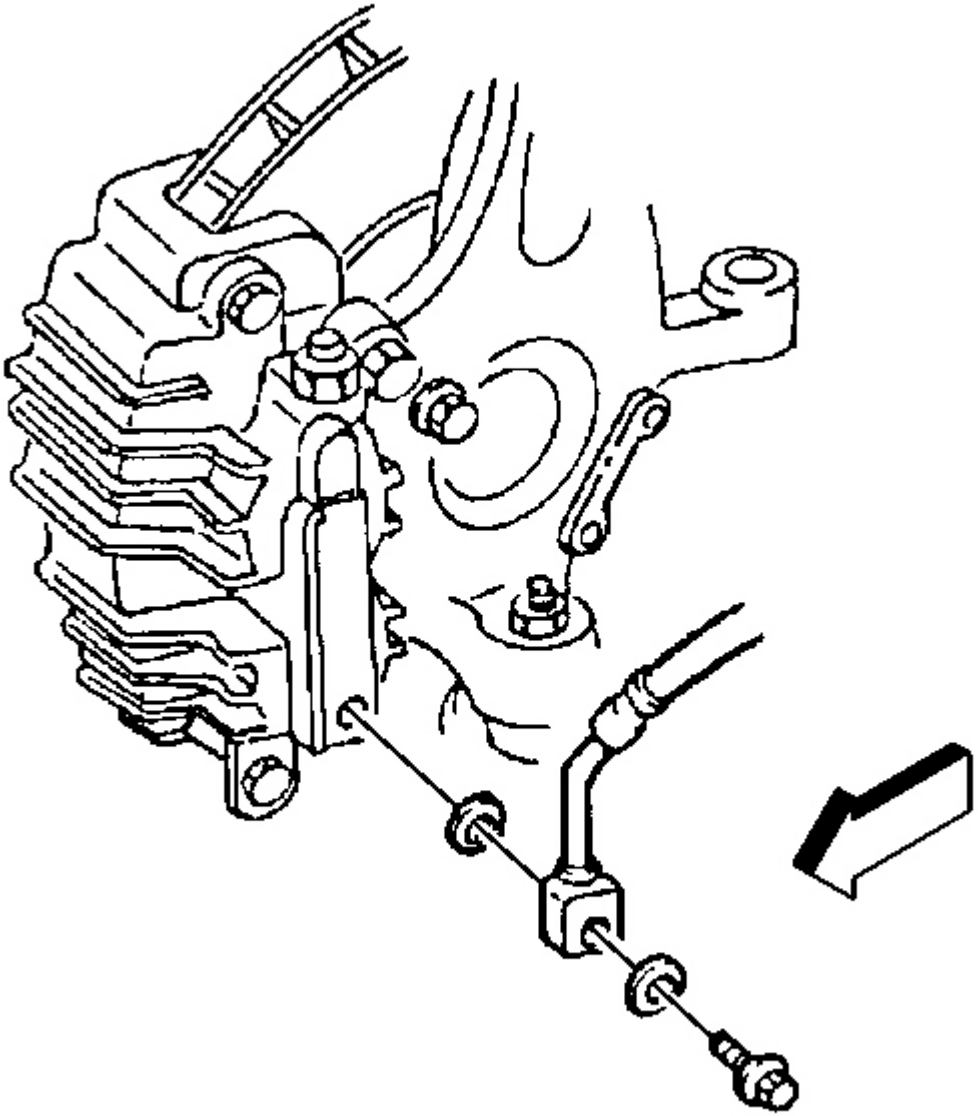

Fig. 39: Brake Hose To Brake Caliper
Courtesy of GENERAL MOTORS CORP.

7. Remove the brake caliper inlet fitting bolt from the caliper.
8. Remove the brake hose from the brake caliper.
9. Remove and discard the two copper brake hose gaskets. These gaskets may be stuck to the brake caliper and/or the brake hose end.

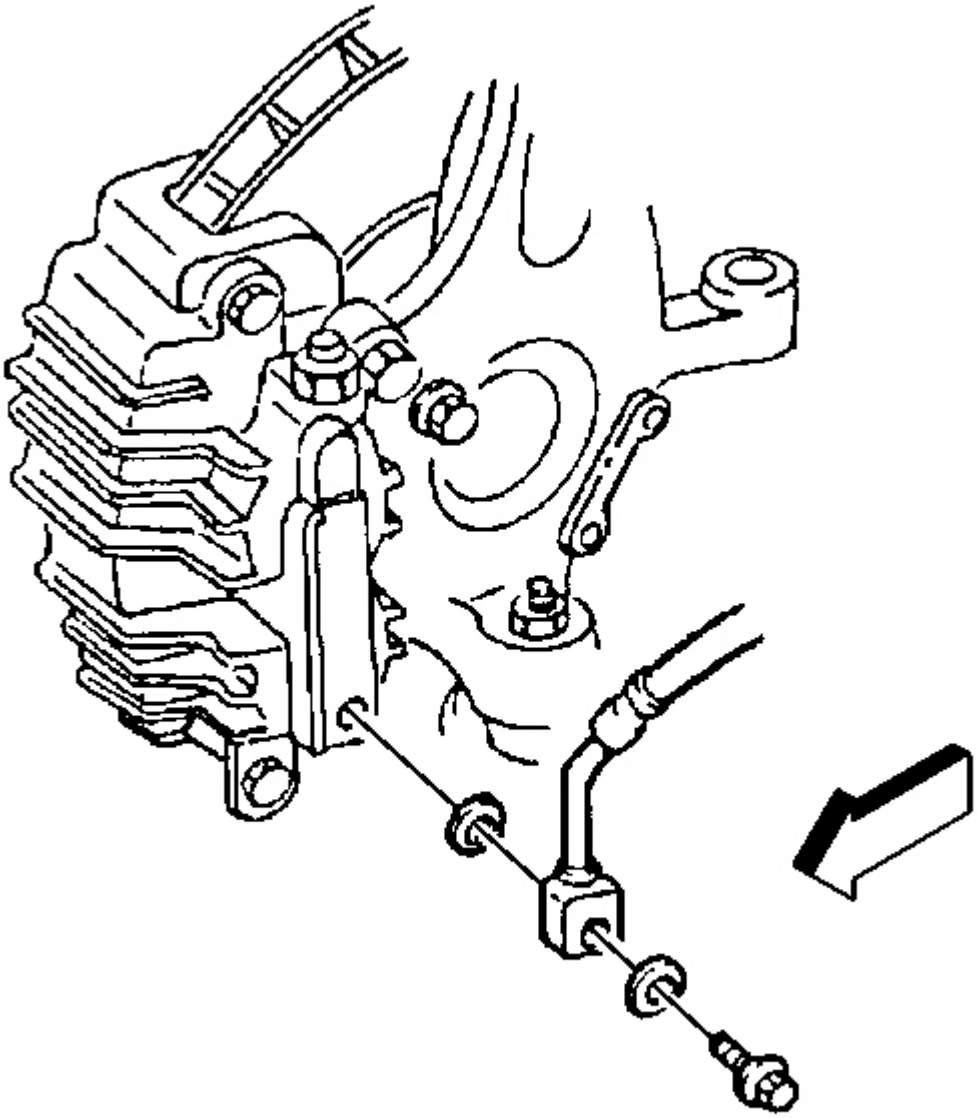

Fig. 40: Brake Hose To Brake Caliper
Courtesy of GENERAL MOTORS CORP.

IMPORTANT: Install NEW copper brake hose gaskets.

1. Assemble the NEW copper brake hose gaskets, and the brake caliper inlet fitting bolt to the brake hose.

NOTE: Refer to Fastener Notice in Cautions and Notices.

2. Install the brake hose and the brake caliper inlet fitting bolt to the brake caliper.

Tighten: Tighten the brake caliper inlet fitting bolt to 45 N.m (33 lb ft).

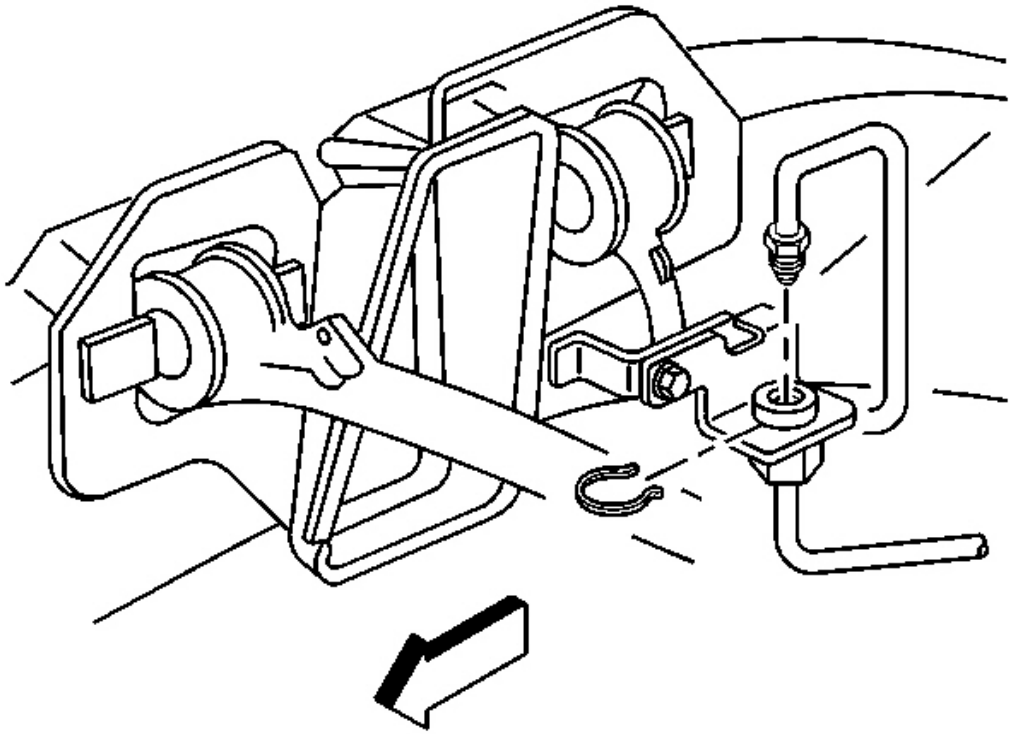

Fig. 41: Brake Hose To Hose Bracket
Courtesy of GENERAL MOTORS CORP.

3. Install the brake hose to the hose bracket. Ensure that the hose is not kinked or twisted.
4. Install the retainer onto the brake hose fitting at the bracket.

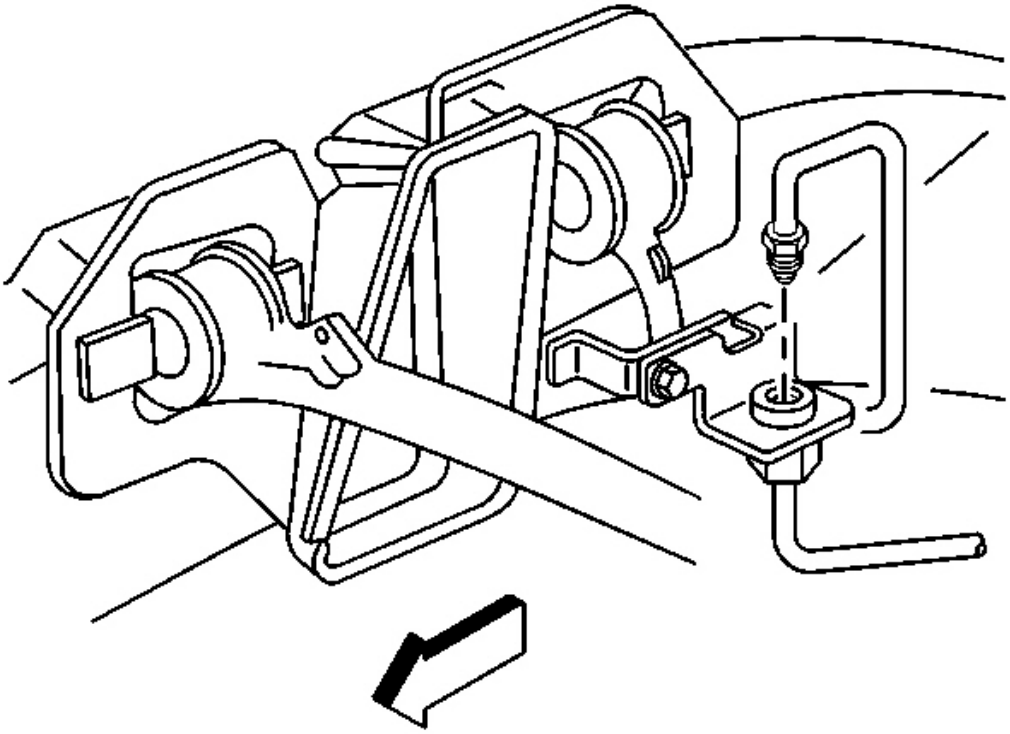

Fig. 42: Brake Pipe Fitting To Brake Hose
Courtesy of GENERAL MOTORS CORP.

5. Remove the rubber cap or plug from the exposed brake pipe fitting end.
6. Connect the brake pipe fitting to the brake hose:
   - Use a backup wrench on the hose fitting.
   - Do not bend the bracket or pipe.

   Tighten: Tighten the brake pipe fitting to 18 N.m (13 lb ft).

7. Install the tire and wheel assembly. Refer to **Tire and Wheel Removal and Installation** in Tires and Wheels.
8. Bleed the hydraulic brake system. Refer to **Hydraulic Brake System Bleeding (Manual)** or **Hydraulic Brake System Bleeding (Pressure)** .
9. Lower the vehicle.

BRAKE HOSE REPLACEMENT - REAR

Removal Procedure

CAUTION: Refer to Brake Fluid Irritant Caution in Cautions and Notices.

NOTE: Refer to Brake Fluid Effects on Paint and Electrical Components Notice in Cautions and Notices.

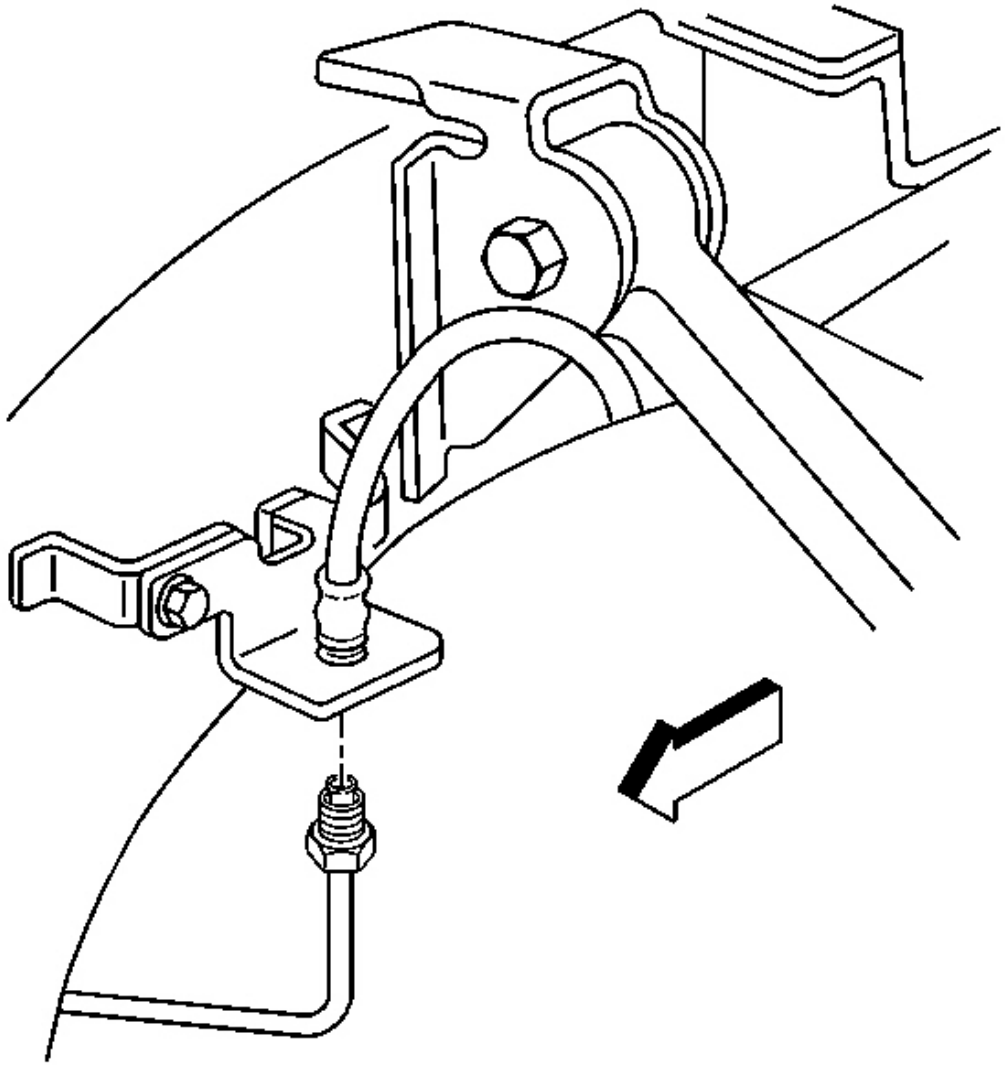

Fig. 43: Rear Tire And Wheel Assembly & Brake Pipe Fitting End

Courtesy of GENERAL MOTORS CORP.

1. Raise and suitably support the vehicle. Refer to **Lifting and Jacking the Vehicle** in General Information.
2. Remove the rear tire and wheel assembly. Refer to **Tire and Wheel Removal and Installation** in Tires and Wheels.
3. Clean all dirt and foreign material from the brake hose and brake pipe fitting.

IMPORTANT: Install a rubber cap or plug to the exposed brake pipe fitting end to prevent brake fluid loss and contamination.

4. Use a backup wrench on the hose fitting, disconnect the brake pipe fitting from the brake hose, then cap or plug the brake pipe fitting end.

   Do not bend the brake pipe or the bracket.

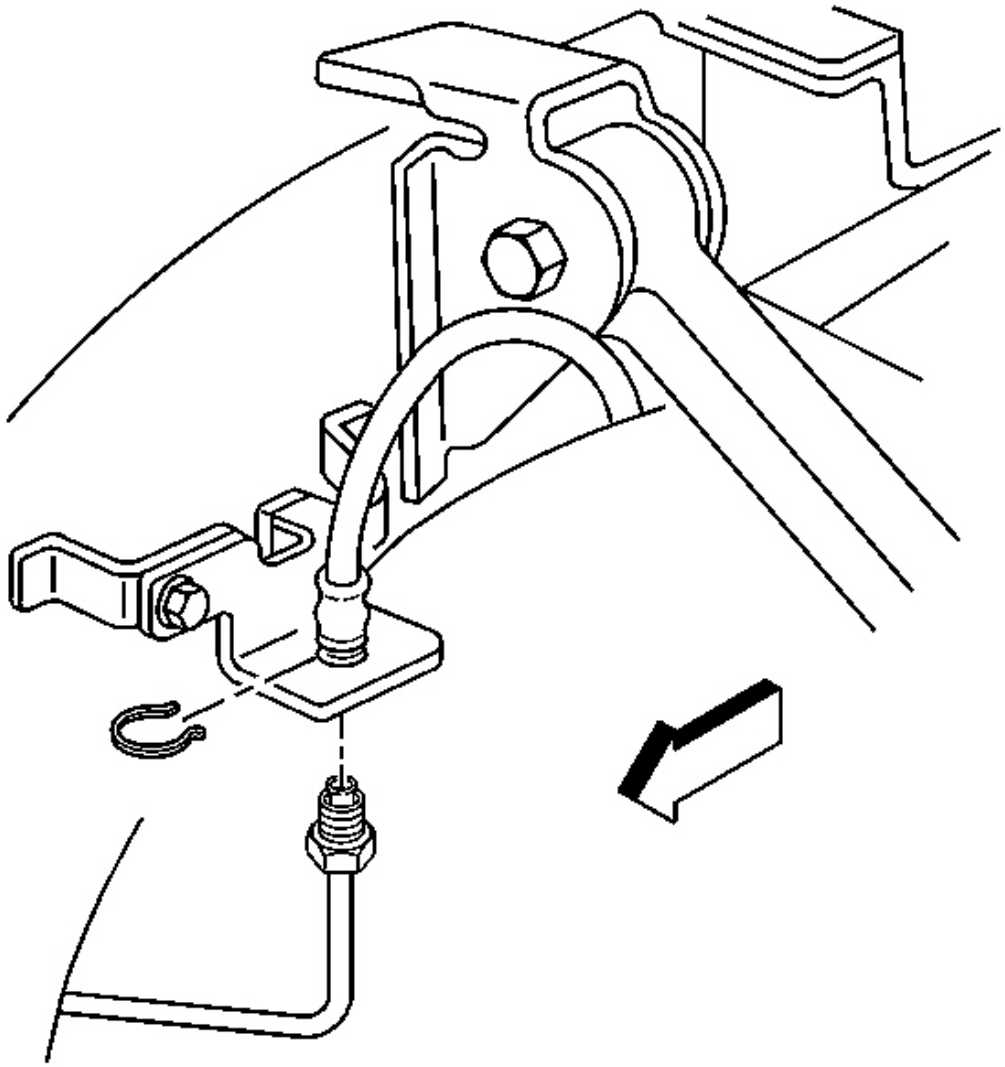

Fig. 44: Brake Hose Retainer To Brake Hose At Hose Bracket
Courtesy of GENERAL MOTORS CORP.

5. Remove the brake hose retainer from the brake hose at the hose bracket.
6. Remove the brake hose from the bracket.

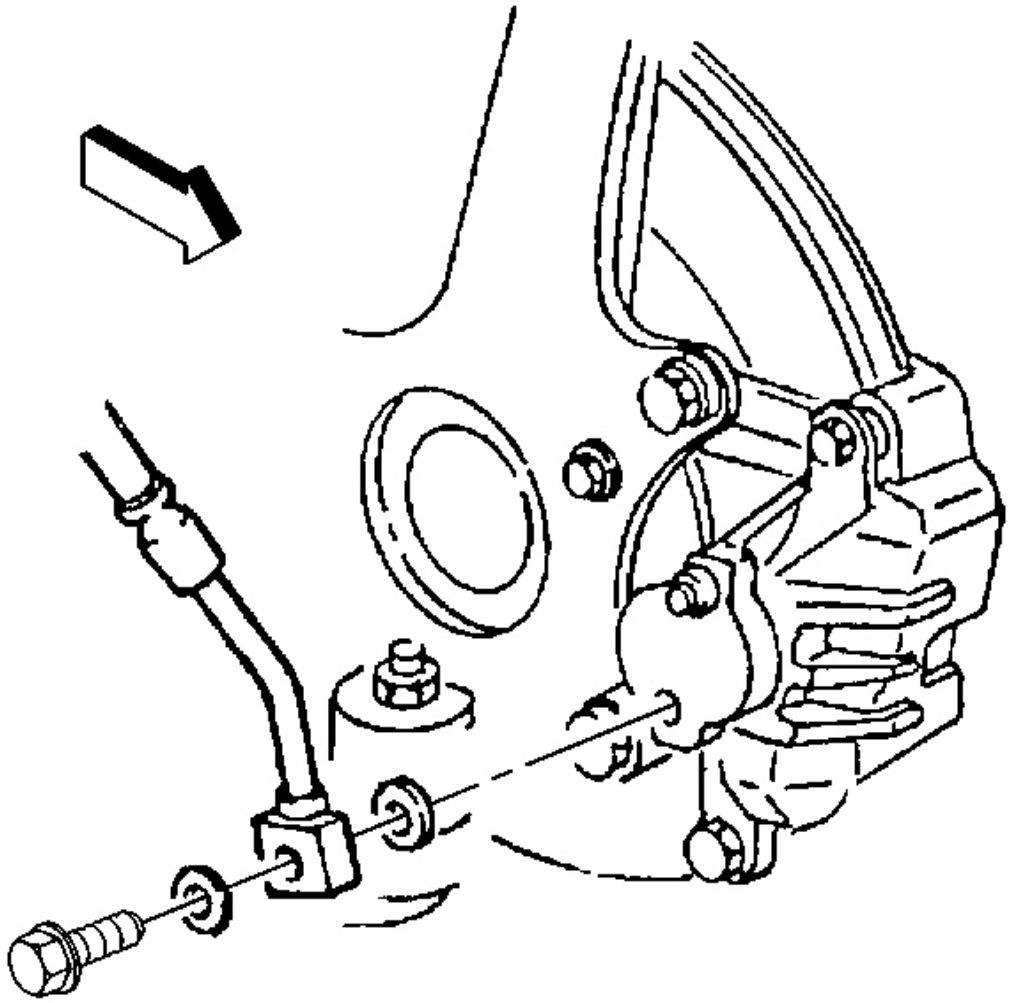

Fig. 45: Brake Caliper Inlet Fitting Bolt To Caliper
Courtesy of GENERAL MOTORS CORP.

7. Remove the brake caliper inlet fitting bolt from the caliper.
8. Remove the brake hose from the brake caliper.
9. Remove and discard the two copper brake hose gaskets. These gaskets may be stuck to the brake caliper and/or the brake hose end.

Installation Procedure

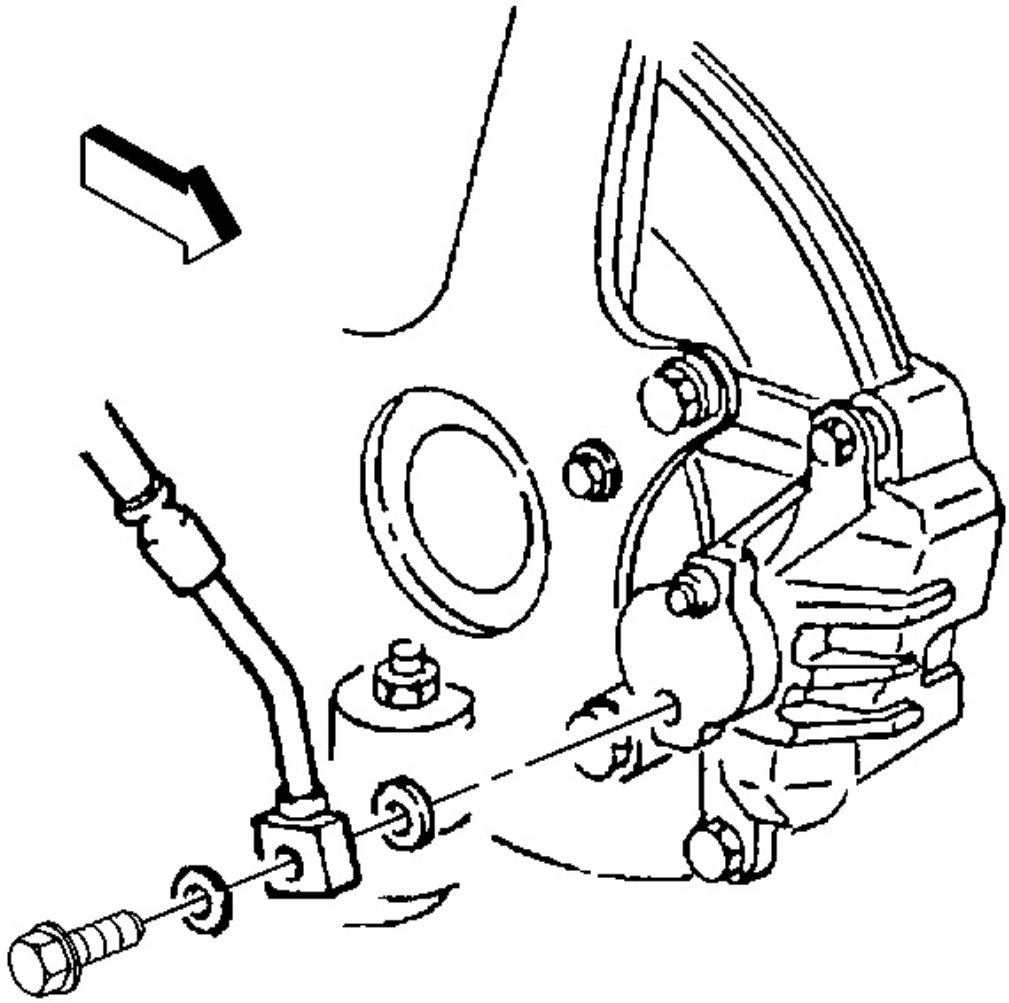

Fig. 46: Brake Caliper Inlet Fitting Bolt To Caliper
Courtesy of GENERAL MOTORS CORP.

IMPORTANT: Install NEW copper brake hose gaskets.

1. Assemble the NEW copper brake hose gaskets, and the brake caliper inlet fitting bolt to the brake hose.

   NOTE: Refer to Fastener Notice in Cautions and Notices.

2. Install the brake hose and the brake caliper inlet fitting bolt to the brake caliper.

Tighten: Tighten the brake caliper inlet fitting bolt to 45 N.m (33 lb ft).

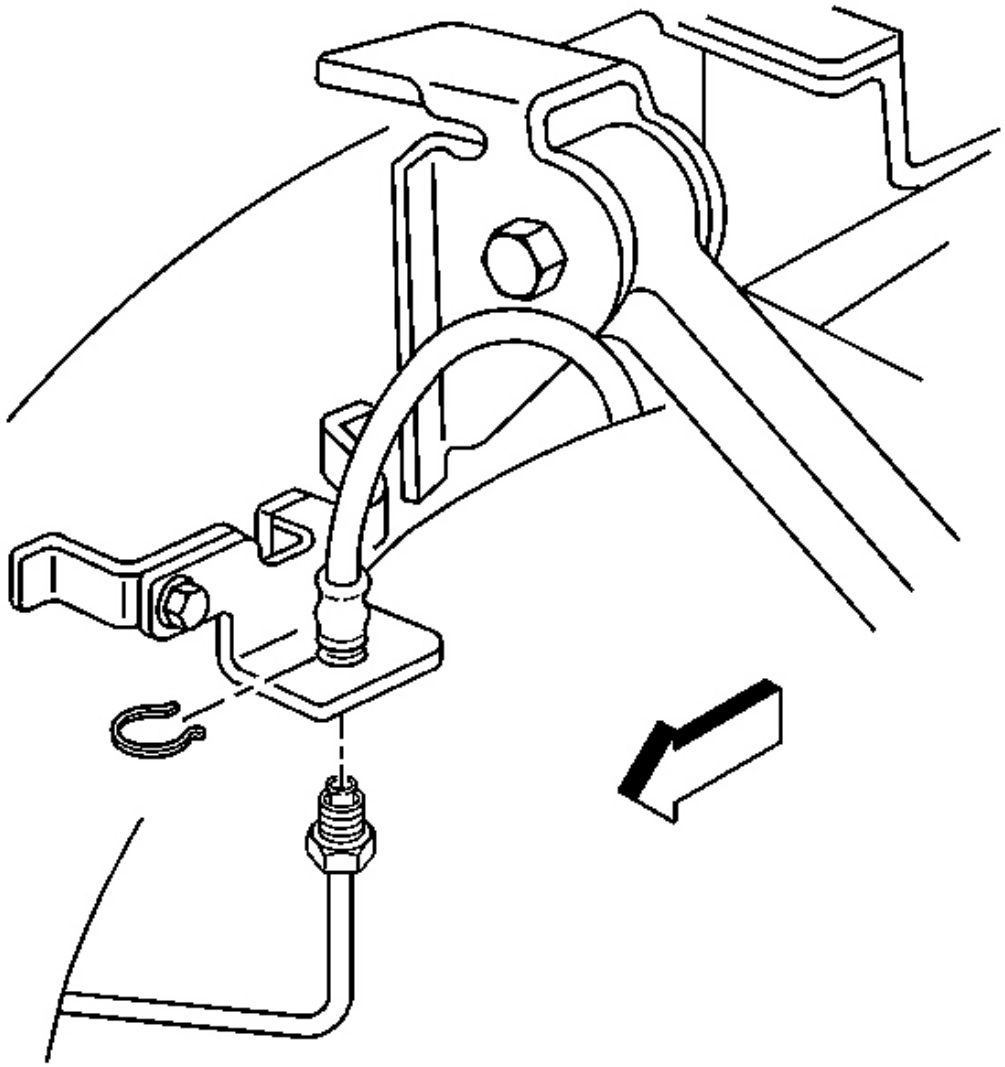

Fig. 47: Brake Hose Retainer To Brake Hose At Hose Bracket
Courtesy of GENERAL MOTORS CORP.

3. Install the brake hose to the hose bracket. Ensure that the hose is not kinked or twisted.
4. Install the retainer onto the brake hose fitting at the bracket.

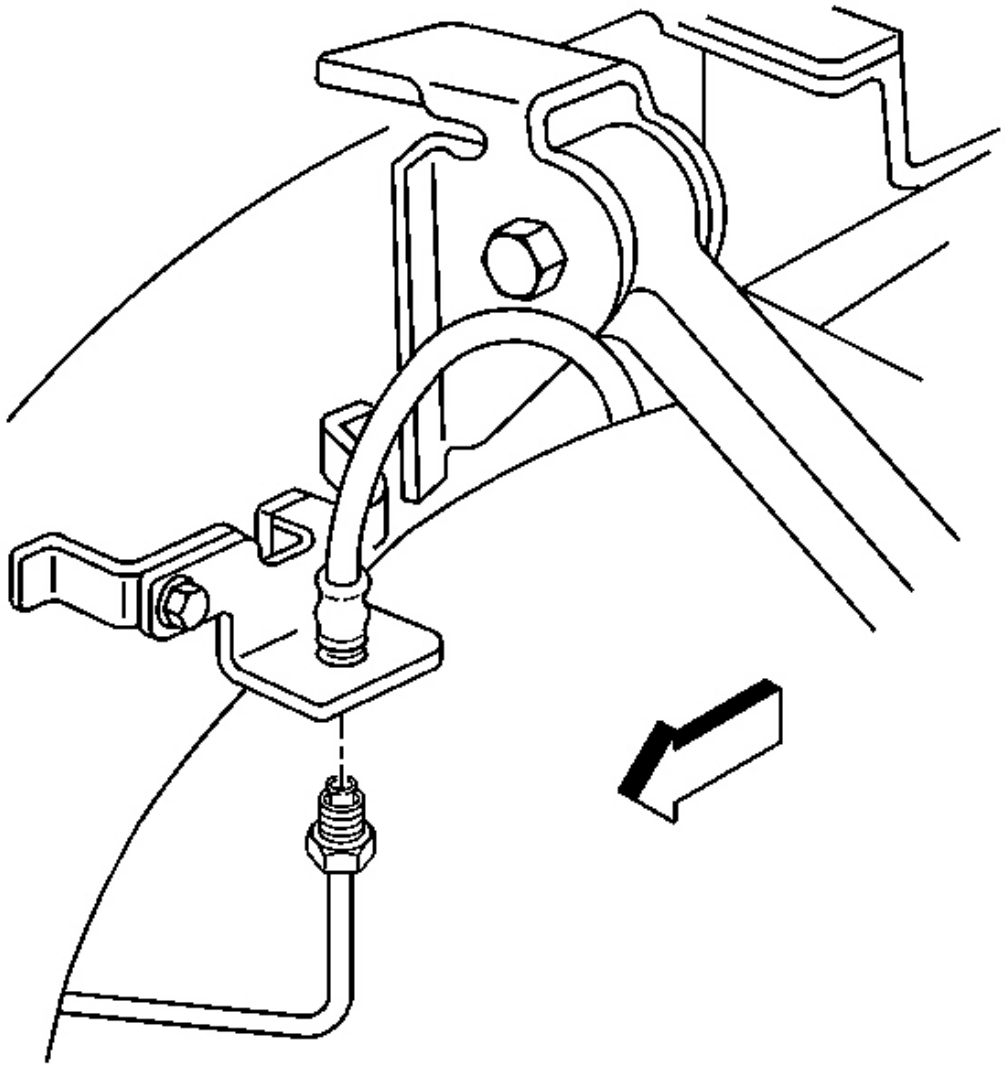

Fig. 48: Rear Tire And Wheel Assembly & Brake Pipe Fitting End
Courtesy of GENERAL MOTORS CORP.

5. Remove the rubber cap or plug from the exposed brake pipe fitting end.
6. Connect the brake pipe fitting to the brake hose:
    - Use a backup wrench on the hose fitting.
    - Do not bend the bracket or pipe.

    Tighten: Tighten the brake pipe fitting to 18 N.m (13 lb ft).

7. Install the tire and wheel assembly. Refer to **Tire and Wheel Removal and Installation** in Tires and Wheels.
8. Bleed the hydraulic brake system. Refer to **Hydraulic Brake System Bleeding (Manual)** or **Hydraulic Brake System Bleeding (Pressure)** .
9. Lower the vehicle.

HYDRAULIC BRAKE SYSTEM BLEEDING (MANUAL)

CAUTION: Refer to Brake Fluid Irritant Caution in Cautions and Notices.

NOTE: When adding fluid to the brake master cylinder reservoir, use only Delco Supreme 11(R), GM P/N 12377967 (Canadian P/N 992667), or equivalent DOT-3 brake fluid from a clean, sealed brake fluid container. The use of any type of fluid other than the recommended type of brake fluid, may cause contamination which could result in damage to the internal rubber seals and/or rubber linings of hydraulic brake system components.

NOTE: Refer to Brake Fluid Effects on Paint and Electrical Components Notice in Cautions and Notices.

1. Place a clean shop cloth beneath the brake master cylinder to prevent brake fluid spills.
2. With the ignition OFF and the brakes cool, apply the brakes 3-5 times, or until the brake pedal effort increases significantly, in order to deplete the brake booster power reserve.
3. If you have performed a brake master cylinder bench bleeding on this vehicle, or if you disconnected the brake pipes from the master cylinder, you must perform the following steps:
    1. Ensure that the brake master cylinder reservoir is full to the maximum-fill level. If necessary, add Delco Supreme 11(R), GM P/N 12377967 (Canadian P/N 992667), or equivalent DOT-3 brake fluid from a clean, sealed brake fluid container.

       If removal of the reservoir cap and diaphragm is necessary, clean the outside of the reservoir on and around the cap prior to removal.

    2. With the rear brake pipe installed securely to the master cylinder, loosen and separate the front brake pipe from the front port of the brake master cylinder.
    3. Allow a small amount of brake fluid to gravity bleed from the open port of the master cylinder.
    4. Reconnect the brake pipe to the master cylinder port and tighten securely.
    5. Have an assistant slowly depress the brake pedal fully and maintain steady pressure on the pedal.
    6. Loosen the same brake pipe to purge air from the open port of the master cylinder.
    7. Tighten the brake pipe, then have the assistant slowly release the brake pedal.
    8. Wait 15 seconds, then repeat steps 3.3-3.7 until all air is purged from the same port of the master cylinder.

9. With the front brake pipe installed securely to the master cylinder, after all air has been purged from the front port of the master cylinder, loosen and separate the rear brake pipe from the master cylinder, then repeat steps 3.3-3.8.
10. After completing the final master cylinder port bleeding procedure, ensure that both of the brake pipe-to-master cylinder fittings are properly tightened.

4. Fill the brake master cylinder reservoir with Delco Supreme 11(R), GM P/N 12377967 (Canadian P/N 992667), or equivalent DOT-3 brake fluid from a clean, sealed brake fluid container. Ensure that the brake master cylinder reservoir remains at least half-full during this bleeding procedure. Add fluid as needed to maintain the proper level.

   Clean the outside of the reservoir on and around the reservoir cap prior to removing the cap and diaphragm.

5. Install a proper box-end wrench onto the RIGHT REAR wheel hydraulic circuit bleeder valve.
6. Install a transparent hose over the end of the bleeder valve.
7. Submerge the open end of the transparent hose into a transparent container partially filled with Delco Supreme 11(R), GM P/N 12377967 (Canadian P/N 992667), or equivalent DOT-3 brake fluid from a clean, sealed brake fluid container.
8. Have an assistant slowly depress the brake pedal fully and maintain steady pressure on the pedal.
9. Loosen the bleeder valve to purge air from the wheel hydraulic circuit.
10. Tighten the bleeder valve, then have the assistant slowly release the brake pedal.
11. Wait 15 seconds, then repeat steps 8-10 until all air is purged from the same wheel hydraulic circuit.
12. With the right rear wheel hydraulic circuit bleeder valve tightened securely, after all air has been purged from the right rear hydraulic circuit, install a proper box-end wrench onto the LEFT FRONT wheel hydraulic circuit bleeder valve.
13. Install a transparent hose over the end of the bleeder valve, then repeat steps 7-11.
14. With the left front wheel hydraulic circuit bleeder valve tightened securely, after all air has been purged from the left front hydraulic circuit, install a proper box-end wrench onto the LEFT REAR wheel hydraulic circuit bleeder valve.
15. Install a transparent hose over the end of the bleeder valve, then repeat steps 7-11.
16. With the left rear wheel hydraulic circuit bleeder valve tightened securely, after all air has been purged from the left rear hydraulic circuit, install a proper box-end wrench onto the RIGHT FRONT wheel hydraulic circuit bleeder valve.
17. Install a transparent hose over the end of the bleeder valve, then repeat steps 7-11.
18. After completing the final wheel hydraulic circuit bleeding procedure, ensure that each of the 4 wheel hydraulic circuit bleeder valves are properly tightened.
19. Fill the brake master cylinder reservoir to the maximum-fill level with Delco Supreme 11(R), GM P/N 12377967 (Canadian P/N 992667), or equivalent DOT-3 brake fluid from a clean, sealed brake fluid container.
20. Slowly depress and release the brake pedal. Observe the feel of the brake pedal.

IMPORTANT: If it is determined that air was induced into the system upstream of the

ABS modulator prior to servicing, the ABS Automated Bleed Procedure must be performed.

21. If the brake pedal feels spongy, repeat the bleeding procedure again. If the brake pedal still feels spongy after repeating the bleeding procedure, perform the following steps:
    1. Inspect the brake system for external leaks. Refer to **Brake System External Leak Inspection** .
    2. Pressure bleed the hydraulic brake system in order to purge any air that may still be trapped in the system.
22. Turn the ignition key ON, with the engine OFF. Check to see if the brake system warning lamp remains illuminated.

IMPORTANT: DO NOT allow the vehicle to be driven until it is diagnosed and repaired.

23. If the brake system warning lamp remains illuminated, refer to **Symptoms - Hydraulic Brakes** .

HYDRAULIC BRAKE SYSTEM BLEEDING (PRESSURE)

Tools Required

- **J 29532** Diaphragm Type Brake Pressure Bleeder, or equivalent. See **Special Tools and Equipment** .
- **J 35589-A** Master Cylinder Bleeder Adapter. See **Special Tools and Equipment** .

CAUTION: Refer to Brake Fluid Irritant Caution in Cautions and Notices.

NOTE: When adding fluid to the brake master cylinder reservoir, use only Delco Supreme 11(R), GM P/N 12377967 (Canadian P/N 992667), or equivalent DOT-3 brake fluid from a clean, sealed brake fluid container. The use of any type of fluid other than the recommended type of brake fluid, may cause contamination which could result in damage to the internal rubber seals and/or rubber linings of hydraulic brake system components.

NOTE: Refer to Brake Fluid Effects on Paint and Electrical Components Notice in Cautions and Notices.

1. Place a clean shop cloth beneath the brake master cylinder to prevent brake fluid spills.
2. With the ignition OFF and the brakes cool, apply the brakes 3-5 times, or until the brake pedal effort increases significantly, in order to deplete the brake booster power reserve.
3. If you have performed a brake master cylinder bench bleeding on this vehicle, or if you disconnected the brake pipes from the master cylinder, you must perform the following steps:
    1. Ensure that the brake master cylinder reservoir is full to the maximum-fill level. If necessary, add Delco Supreme 11(R), GM P/N 12377967 (Canadian P/N 992667), or equivalent DOT-3 brake fluid from a clean, sealed brake fluid container.

If removal of the reservoir cap and diaphragm is necessary, clean the outside of the reservoir on and around the cap prior to removal.

2. With the rear brake pipe installed securely to the master cylinder, loosen and separate the front brake pipe from the front port of the brake master cylinder.
3. Allow a small amount of brake fluid to gravity bleed from the open port of the master cylinder.
4. Reconnect the brake pipe to the master cylinder port and tighten securely.
5. Have an assistant slowly depress the brake pedal fully and maintain steady pressure on the pedal.
6. Loosen the same brake pipe to purge air from the open port of the master cylinder.
7. Tighten the brake pipe, then have the assistant slowly release the brake pedal.
8. Wait 15 seconds, then repeat steps 3.3-3.7 until all air is purged from the same port of the master cylinder.
9. With the front brake pipe installed securely to the master cylinder, after all air has been purged from the front port of the master cylinder, loosen and separate the rear brake pipe from the master cylinder, then repeat steps 3.3-3.8.
10. After completing the final master cylinder port bleeding procedure, ensure that both of the brake pipe-to-master cylinder fittings are properly tightened.

4. Fill the brake master cylinder reservoir to the maximum-fill level with Delco Supreme 11(R), GM P/N 12377967 (Canadian P/N 992667), or equivalent DOT-3 brake fluid from a clean, sealed brake fluid container.

   Clean the outside of the reservoir on and around the reservoir cap prior to removing the cap and diaphragm.

5. Install the **J 35589-A** to the brake master cylinder reservoir. See **Special Tools and Equipment** .
6. Check the brake fluid level in the **J 29532** , or equivalent. See **Special Tools and Equipment** . Add Delco Supreme 11(R), GM P/N 12377967 (Canadian P/N 992667), or equivalent DOT-3 brake fluid from a clean, sealed brake fluid container as necessary to bring the level to approximately the half-full point.
7. Connect the **J 29532** , or equivalent, to the. See **Special Tools and Equipment** .**J 35589-A** . See **Special Tools and Equipment** .
8. Charge the **J 29532** , or equivalent, air tank to 175-205 kPa (25-30 psi). See **Special Tools and Equipment** .
9. Open the **J 29532** , or equivalent, fluid tank valve to allow pressurized brake fluid to enter the brake system. See **Special Tools and Equipment** .
10. Wait approximately 30 seconds, then inspect the entire hydraulic brake system in order to ensure that there are no existing external brake fluid leaks.

    Any brake fluid leaks identified require repair prior to completing this procedure.

11. Install a proper box-end wrench onto the RIGHT REAR wheel hydraulic circuit bleeder valve.
12. Install a transparent hose over the end of the bleeder valve.
13. Submerge the open end of the transparent hose into a transparent container partially filled with Delco Supreme 11(R), GM P/N 12377967 (Canadian P/N 992667), or equivalent DOT-3 brake fluid from a

clean, sealed brake fluid container.

14. Loosen the bleeder valve to purge air from the wheel hydraulic circuit. Allow fluid to flow until air bubbles stop flowing from the bleeder, then tighten the bleeder valve.
15. With the right rear wheel hydraulic circuit bleeder valve tightened securely, after all air has been purged from the right rear hydraulic circuit, install a proper box-end wrench onto the LEFT FRONT wheel hydraulic circuit bleeder valve.
16. Install a transparent hose over the end of the bleeder valve, then repeat steps 13-14.
17. With the left front wheel hydraulic circuit bleeder valve tightened securely, after all air has been purged from the left front hydraulic circuit, install a proper box-end wrench onto the LEFT REAR wheel hydraulic circuit bleeder valve.
18. Install a transparent hose over the end of the bleeder valve, then repeat steps 13-14.
19. With the left rear wheel hydraulic circuit bleeder valve tightened securely, after all air has been purged from the left rear hydraulic circuit, install a proper box-end wrench onto the RIGHT FRONT wheel hydraulic circuit bleeder valve
20. Install a transparent hose over the end of the bleeder valve, then repeat steps 13-14.
21. After completing the final wheel hydraulic circuit bleeding procedure, ensure that each of the 4 wheel hydraulic circuit bleeder valves are properly tightened.
22. Close the **J 29532** , or equivalent, fluid tank valve, then disconnect the. See **Special Tools and Equipment** .**J 29532** , or equivalent, from the. See **Special Tools and Equipment** .**J 35589-A** . See **Special Tools and Equipment** .
23. Remove the **J 35589-A** from the brake master cylinder reservoir. See **Special Tools and Equipment** .
24. Fill the brake master cylinder reservoir to the maximum-fill level with Delco Supreme 11(R), GM P/N 12377967 (Canadian P/N 992667), or equivalent DOT-3 brake fluid from a clean, sealed brake fluid container.
25. Slowly depress and release the brake pedal. Observe the feel of the brake pedal.

IMPORTANT: If it is determined that air was induced into the system upstream of the ABS modulator prior to servicing, the ABS Automated Bleed Procedure must be performed.

26. If the brake pedal feels spongy, perform the following steps:
    1. Inspect the brake system for external leaks. Refer to **Brake System External Leak Inspection** .
    2. Using a scan tool, perform the antilock brake system automated bleeding procedure to remove any air that may have been trapped in the BPMV. Refer to **ABS Automated Bleed Procedure** in Antilock Brake System.
27. Turn the ignition key ON, with the engine OFF. Check to see if the brake system warning lamp remains illuminated.

IMPORTANT: DO NOT allow the vehicle to be driven until it is diagnosed and repaired.

28. If the brake system warning lamp remains illuminated, refer to **Symptoms - Hydraulic Brakes** .

HYDRAULIC BRAKE SYSTEM FLUSHING

CAUTION: Refer to Brake Fluid Irritant Caution in Cautions and Notices.

NOTE: Refer to Brake Fluid Effects on Paint and Electrical Components Notice in Cautions and Notices.

NOTE: When adding fluid to the brake master cylinder reservoir, use only Delco Supreme 11(R), GM P/N 12377967 (Canadian P/N 992667), or equivalent DOT-3 brake fluid from a clean, sealed brake fluid container. The use of any type of fluid other than the recommended type of brake fluid, may cause contamination which could result in damage to the internal rubber seals and/or rubber linings of hydraulic brake system components.

1. Inspect the brake fluid for the following conditions, indicating brake fluid contamination:
   - Fluid separation, indicating two types of fluid are present; a substance other than the recommended brake fluid has been introduced into the brake hydraulic system
     - Swirled appearance - oil-based substance
     - Layered appearance - silicone-based substance
   - Fluid discoloration, indicating the presence of moisture or particles that have been introduced into the brake hydraulic system
     - Cloudy appearance - moisture
     - Dark appearance/suspended particles in fluid - dirt, rust, corrosion, brake dust
2. Inspect the master cylinder reservoir cap diaphragm and the reservoir-to-master cylinder grommets for swelling, indicating brake fluid contamination.
3. If the brake fluid WAS contaminated with an oil-based or a silicone-based substance, indicated by fluid separation and/or a swollen master cylinder reservoir cap diaphragm and/or swollen reservoir-to-master cylinder grommets, perform the following:
   1. Remove ALL of the following components listed from the vehicle. Each component contains internal rubber seals/linings which have been contaminated by the contaminated brake fluid in the brake hydraulic system.

      Refer to the procedures indicated:

      - **Master Cylinder Replacement**
      - **Brake Hose Replacement - Front**
      - **Brake Hose Replacement - Rear**
      - **Brake Caliper Replacement - Front** in Disc Brakes
      - **Brake Caliper Replacement - Rear** in Disc Brakes
      - **Brake Pressure Modulator Valve (BPMV) Replacement** in Antilock Brake System
   2. Clean out all the hydraulic brake pipes using denatured alcohol, or equivalent.

3. Dry the brake pipes using non-lubricated, filtered air.
4. Repair or replace ALL of the following components listed and install them to the vehicle. Each component contains internal rubber seals/linings which have been contaminated by the contaminated brake fluid in the brake hydraulic system.

   Refer to the procedures indicated:

   - **Master Cylinder Overhaul** or **Master Cylinder Replacement** ; also perform the following:

     Clean the brake master cylinder reservoir using denatured alcohol, or equivalent, then dry the reservoir using non-lubricated, filtered air. Inspect the reservoir for cracks and/or damage and replace if necessary. Refer to **Master Cylinder Reservoir Replacement** .

     Replace the brake master cylinder reservoir cap diaphragm.

   - **Brake Hose Replacement - Front**
   - **Brake Hose Replacement - Rear**
   - **Brake Caliper Overhaul - Front** or **Brake Caliper Replacement - Front** in Disc Brakes
   - **Brake Caliper Overhaul - Rear** or **Brake Caliper Replacement - Rear** in Disc Brakes
   - **Brake Pressure Modulator Valve (BPMV) Replacement** in Antilock Brake System

4. If the brake fluid was NOT contaminated with an oil-based or a silicone-based substance, but WAS contaminated with water or dirt, rust, corrosion, and/or brake dust, replace the brake master cylinder reservoir cap diaphragm. The diaphragm may have allowed the moisture or particles to enter the hydraulic system.
5. Fill the brake master cylinder reservoir to the maximum-fill level with Delco Supreme 11(R), GM P/N 12377967 (Canada P/N 992667) or equivalent, DOT-3 brake fluid from a clean, sealed brake fluid container.
6. Pressure bleed the hydraulic brake system. Begin the procedure with the pressure bleeder reservoir filled to the maximum-fill level with the correct brake fluid as indicated. Refer to **Hydraulic Brake System Bleeding (Manual)** or **Hydraulic Brake System Bleeding (Pressure)** .

VACUUM BRAKE BOOSTER REPLACEMENT

Removal Procedure

CAUTION: Refer to Battery Disconnect Caution in Cautions and Notices.

1. Disconnect the battery negative cable. Refer to **Battery Negative Cable Disconnect/Connect Procedure** in Engine Electrical.

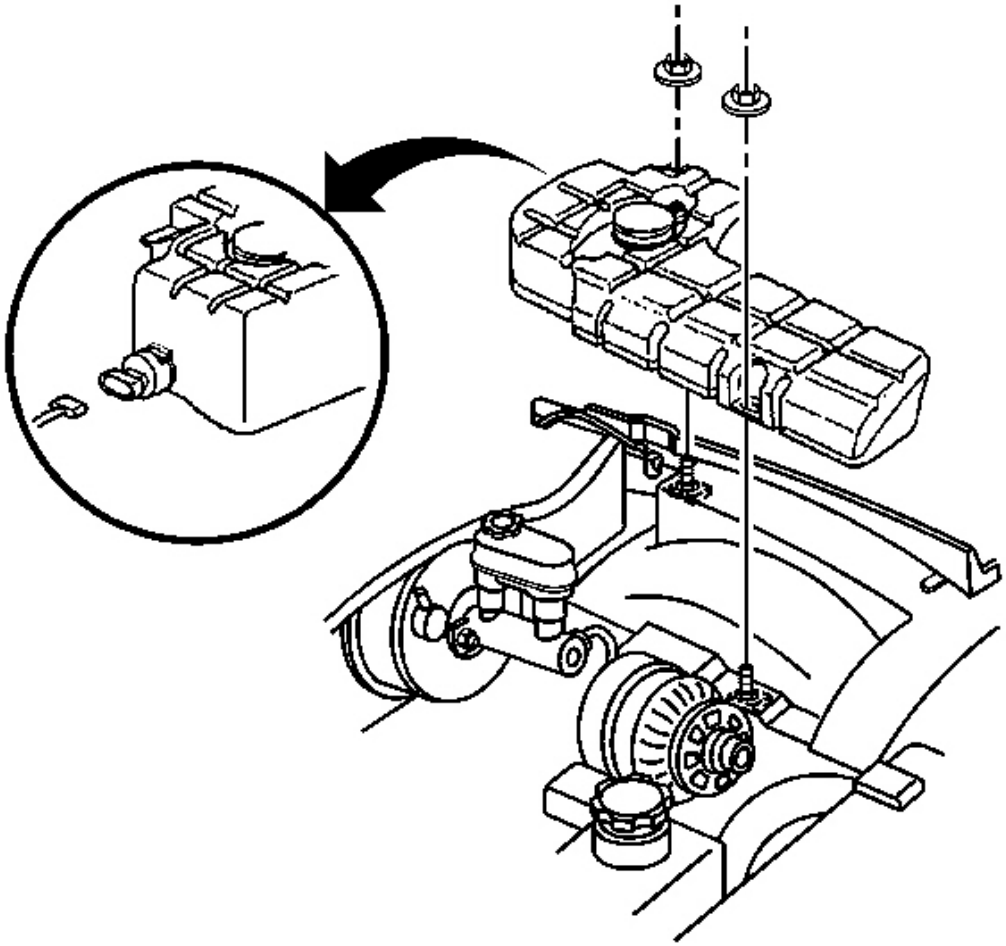

Fig. 49: Electrical Connections & Washer Hose At Container
Courtesy of GENERAL MOTORS CORP.

2. Remove the washer solvent container retaining nuts.
3. Lift the washer solvent container from the left wheelhouse.
4. Disconnect the electrical connections and the washer hose from the container.
5. Plug the washer pump outlet.

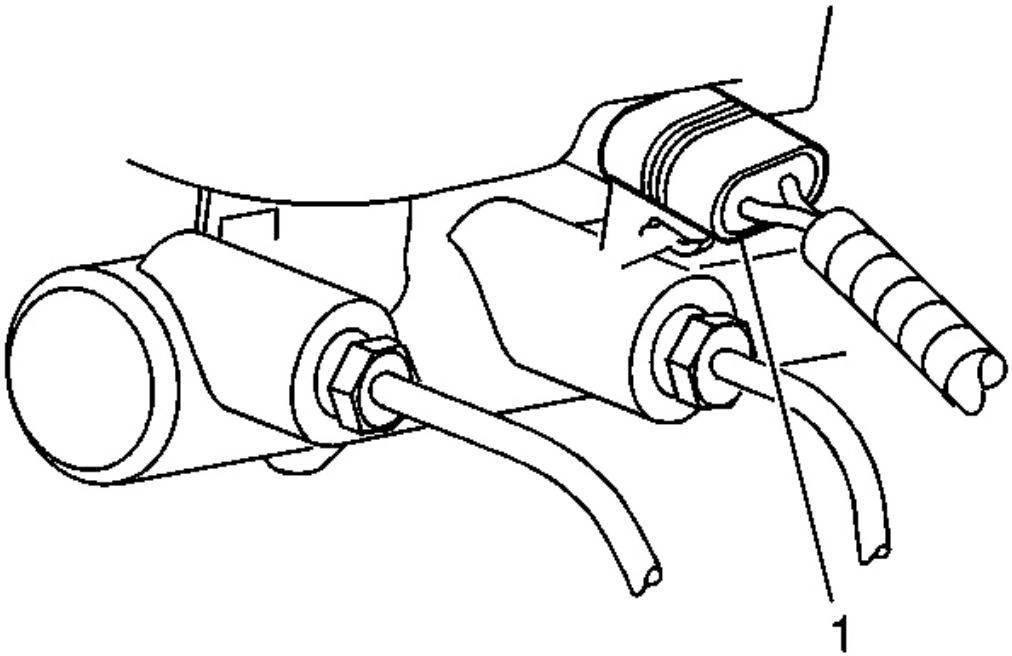

Fig. 50: View Of Master Cylinder
Courtesy of GENERAL MOTORS CORP.

6. Disconnect the electrical connector (1) from the brake fluid level sensor.

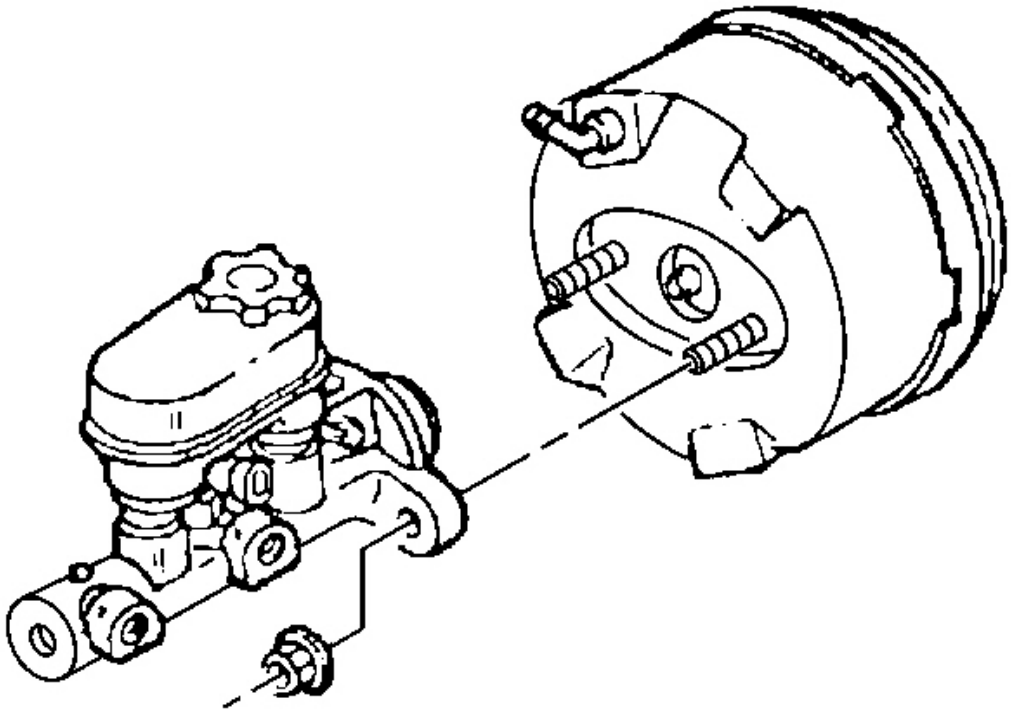

Fig. 51: Master Cylinder Reservoir At Brake Booster
Courtesy of GENERAL MOTORS CORP.

7. Remove the nuts securing the master cylinder to the brake booster.
8. Remove the master cylinder from the brake booster without disconnecting the brake pipes and position the master cylinder aside.

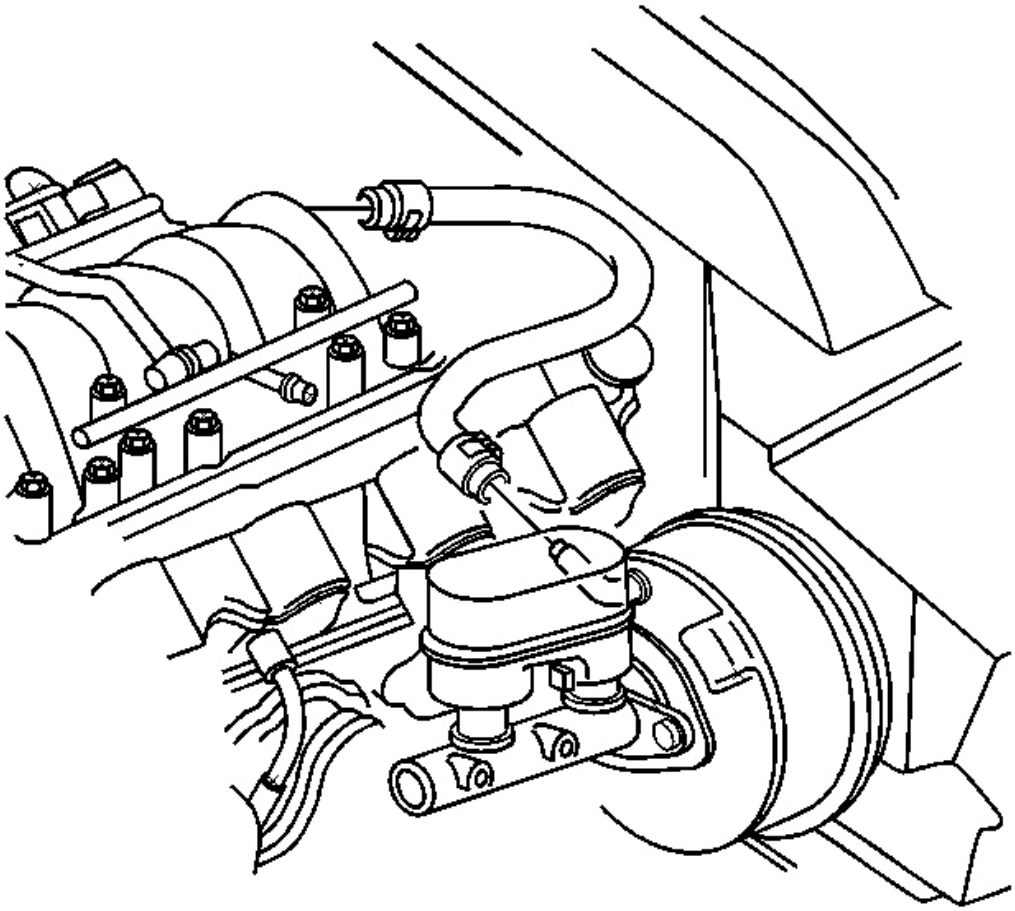

Fig. 52: Identifying Vacuum Booster Hose
Courtesy of GENERAL MOTORS CORP.

9. Disconnect the brake booster vacuum hose from the booster check valve.
10. Remove the instrument panel lower trim panel. Refer to **Trim Panel Replacement - Knee Bolster** in Instrument Panel, Gages, and Console.

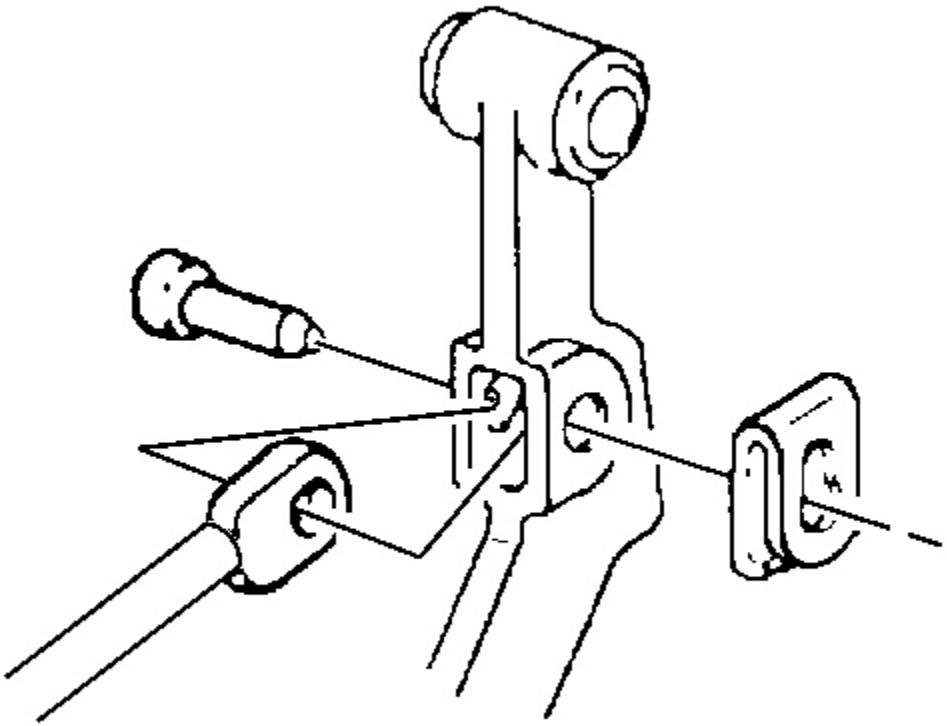

Fig. 53: Isolation Mat To Brake Pedal
Courtesy of GENERAL MOTORS CORP.

11. Remove the retainer, washer, brake pedal pin, and brake booster pushrod from the brake pedal.

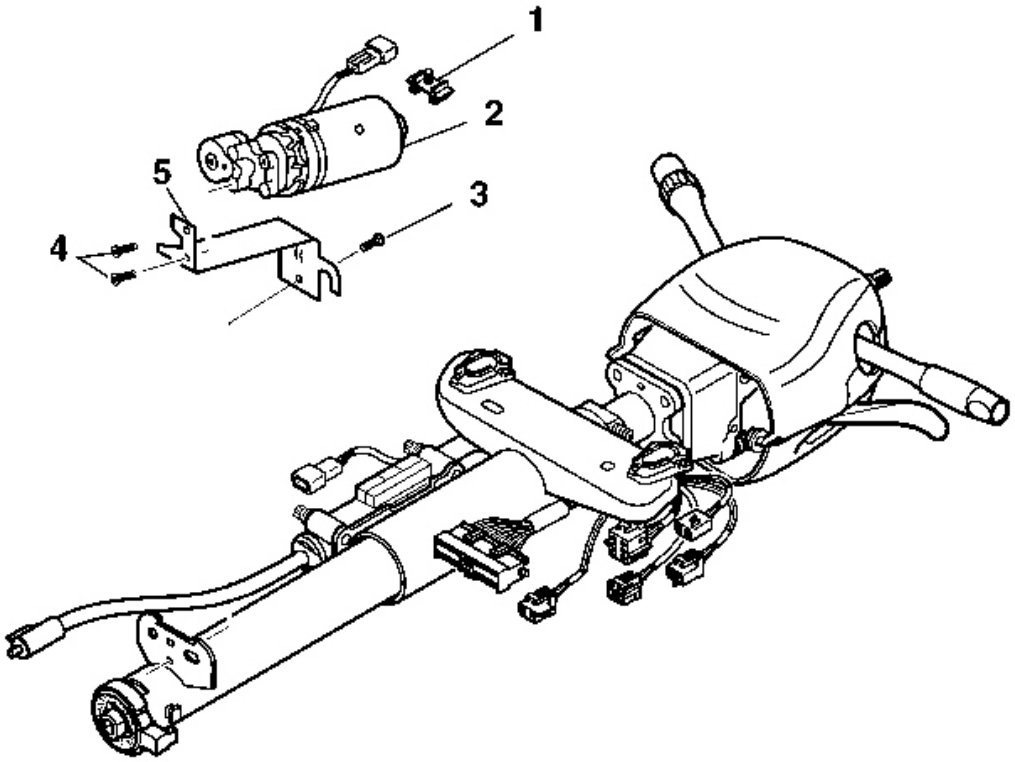

Fig. 54: Motor Assembly To Right Of Steering Column
Courtesy of GENERAL MOTORS CORP.

12. Remove the screw (3) from the telescoping column motor mounting bracket (5), if equipped.
13. Position the motor assembly to the right of the steering column.

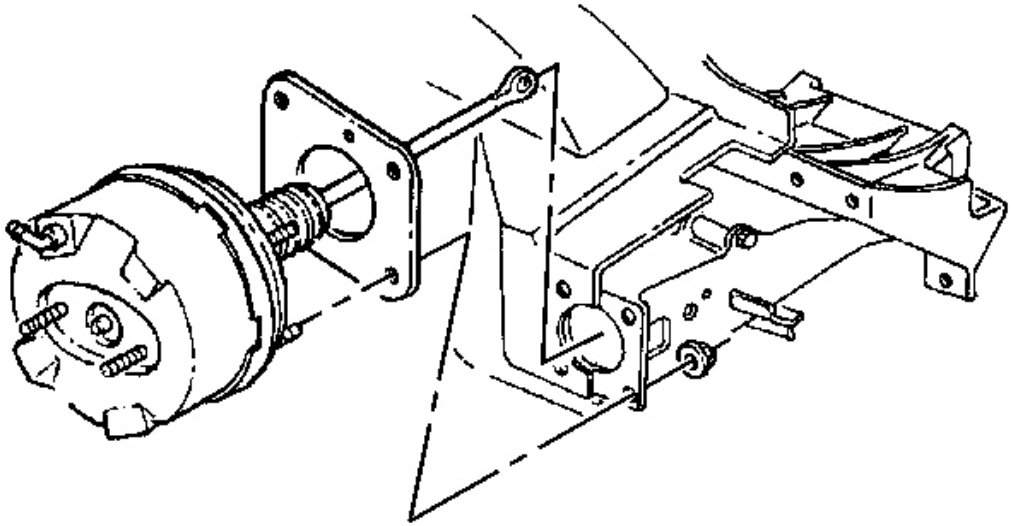

Fig. 55: Brake Booster Mounting Nuts & Washers To Booster Studs
Courtesy of GENERAL MOTORS CORP.

IMPORTANT: The brake booster is retained to the cowl with push-on nuts.

14. Remove the brake booster mounting nuts and washers from the booster studs.
15. In order to remove the booster from the cowl, perform the following steps:
    - In order to release the booster mounting studs from the push-on nuts, move booster from side to side.
    - Pull the booster straight out.
16. Remove the brake booster and seal from the cowl.
17. Inspect the booster seal and sealing surfaces for damage. Replace the seal if necessary.

Installation Procedure

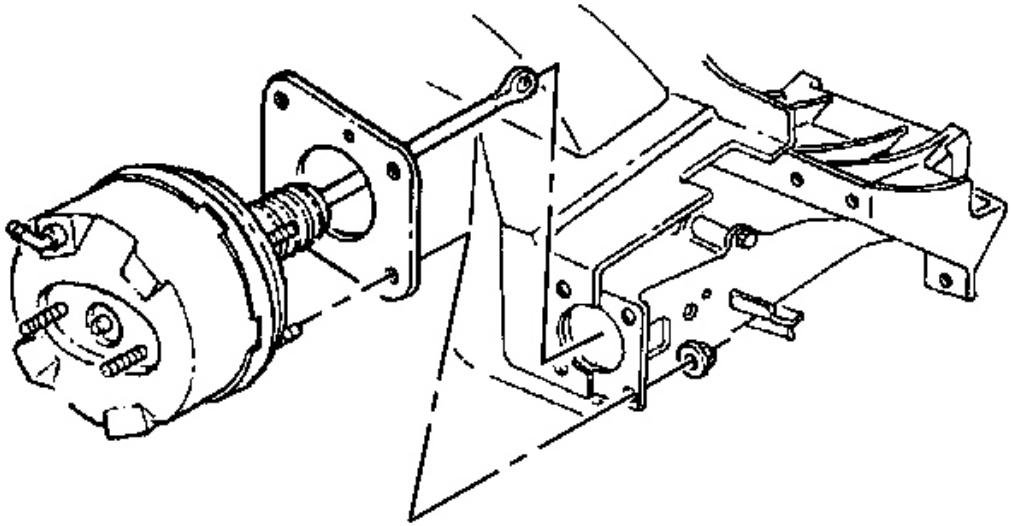

Fig. 56: Brake Booster Mounting Nuts & Washers To Booster Studs
Courtesy of GENERAL MOTORS CORP.

1. Install the seal and brake booster to the front of dash.

NOTE: **Refer to Fastener Notice in Cautions and Notices.**

2. Install brake booster mounting nuts and washers to the booster studs.

Tighten: Tighten the brake booster mounting nuts to 27 N.m (19 lb ft).

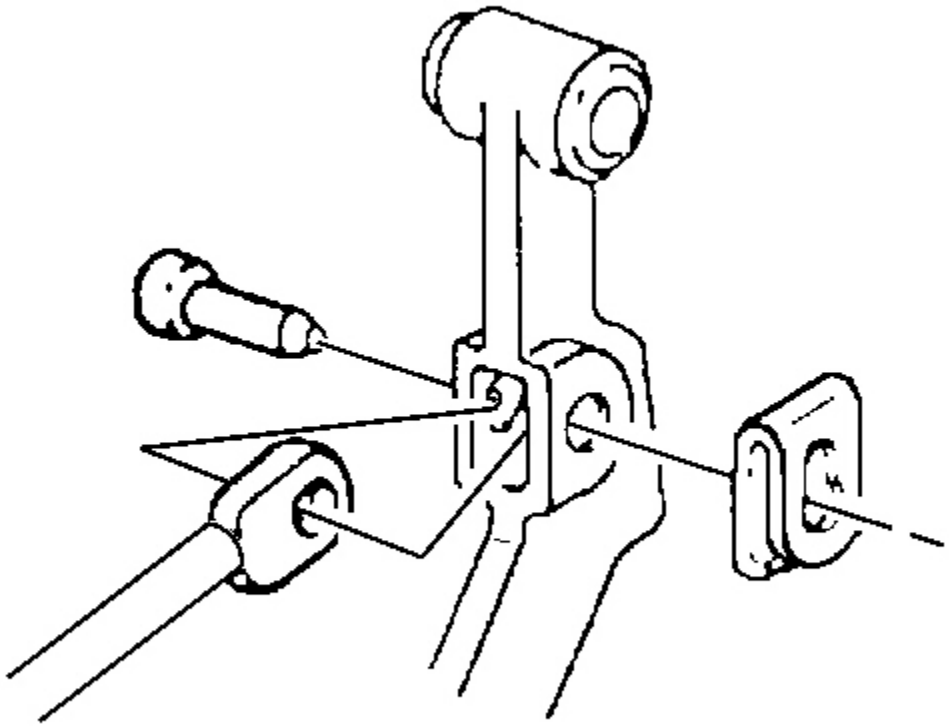

Fig. 57: Isolation Mat To Brake Pedal
Courtesy of GENERAL MOTORS CORP.

3. Install the brake booster pushrod, brake pedal pin, washer, and retainer to the brake pedal. Verify proper engagement of the retainer to the brake pedal by rotating the retainer.

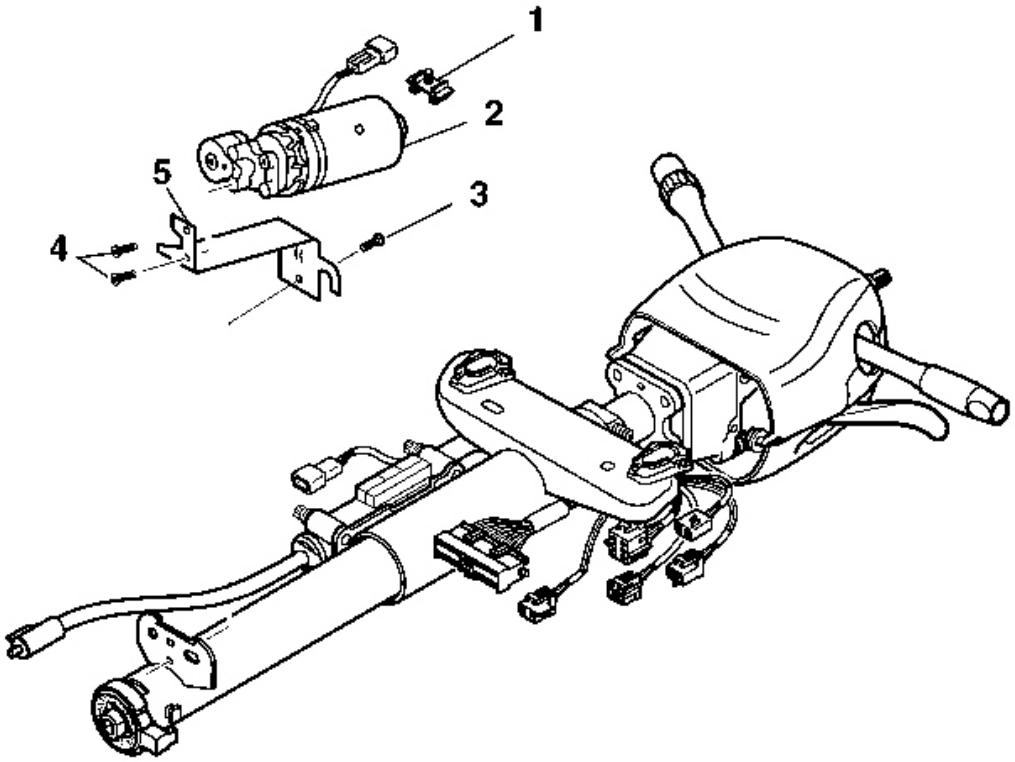

Fig. 58: Motor Assembly To Right Of Steering Column
Courtesy of GENERAL MOTORS CORP.

4. Reposition the telescoping column motor assembly to the steering column, if equipped.
5. Install the screw (3) to the motor mounting bracket (5).

   Tighten: Tighten the screw to 7 N.m (62 lb in)

6. Install the instrument panel lower trim panel. Refer to **Trim Panel Replacement - Knee Bolster** in Instrument Panel, Gages, and Console.

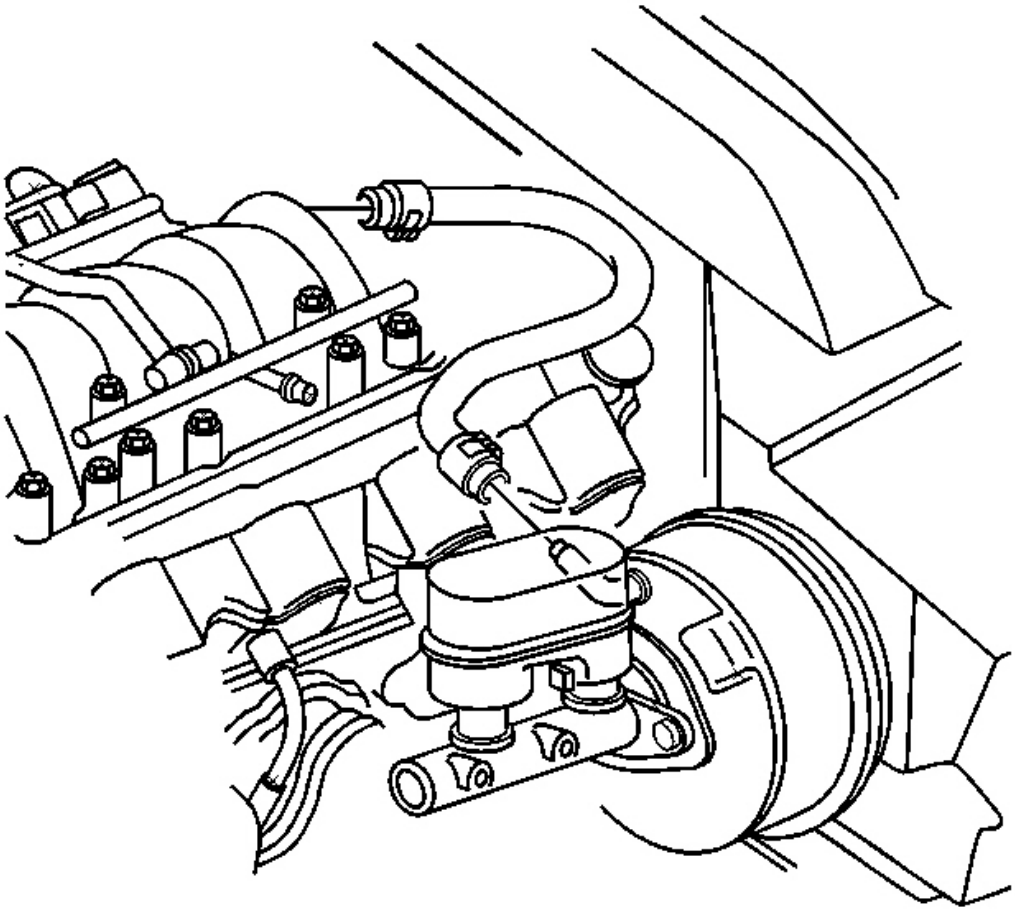

Fig. 59: Identifying Vacuum Booster Hose
Courtesy of GENERAL MOTORS CORP.

7. Connect the brake booster vacuum hose to the brake booster check valve.

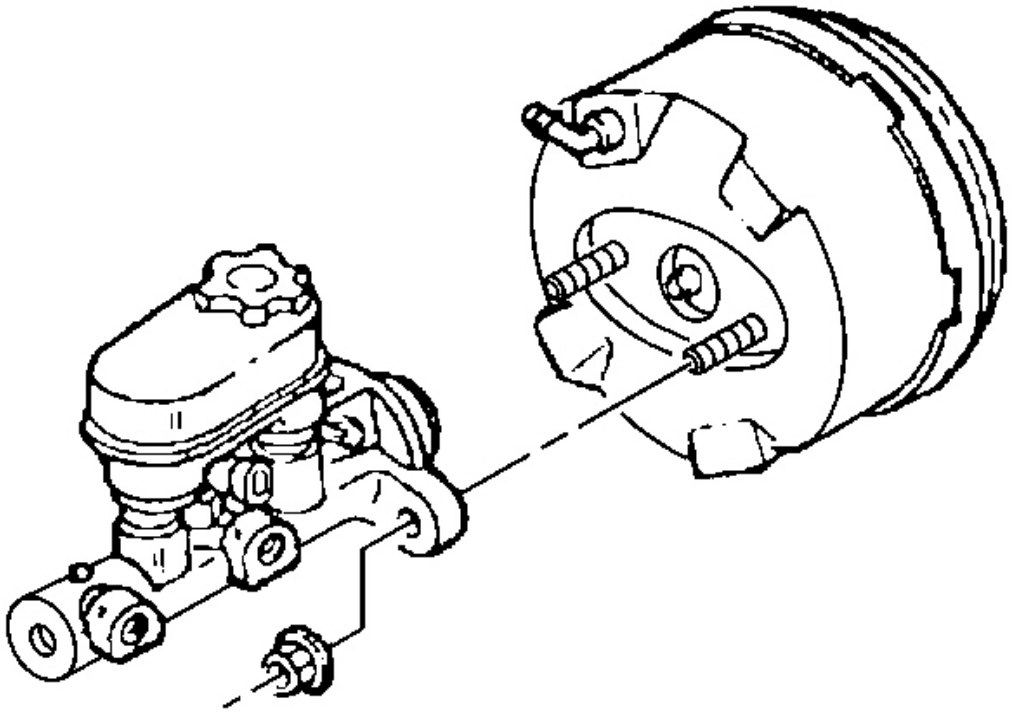

Fig. 60: Master Cylinder Reservoir At Brake Booster
Courtesy of GENERAL MOTORS CORP.

8. Install the master cylinder to the brake booster.
9. Install the master cylinder mounting nuts.

Tighten: Tighten the master cylinder mounting nuts to 29 N.m (21 lb ft).

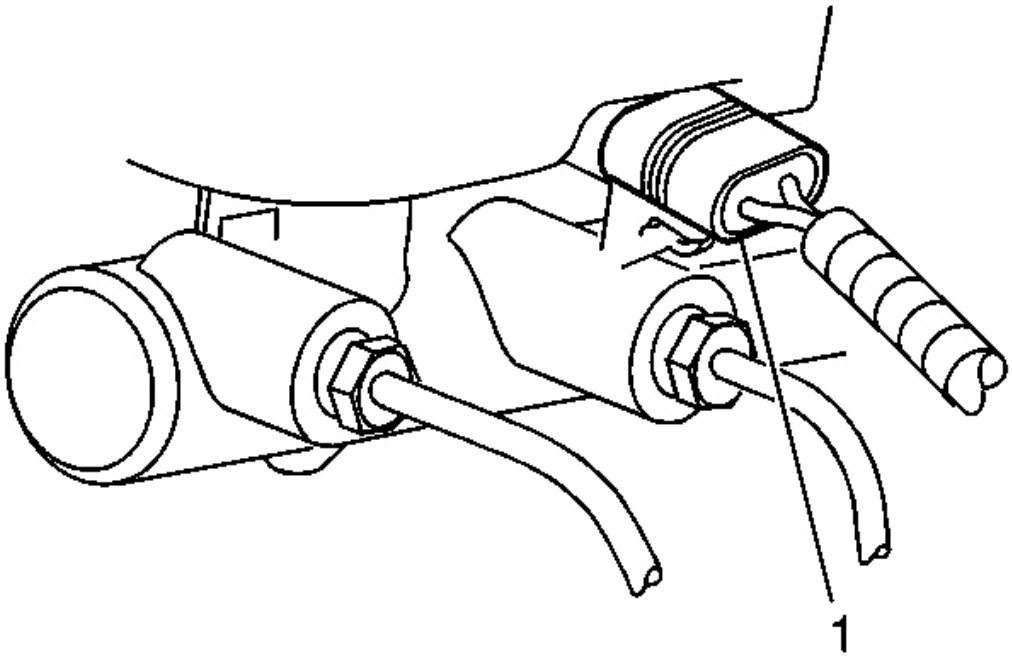

Fig. 61: View Of Master Cylinder
Courtesy of GENERAL MOTORS CORP.

10. Connect the electrical connector (1) to the brake fluid level sensor.

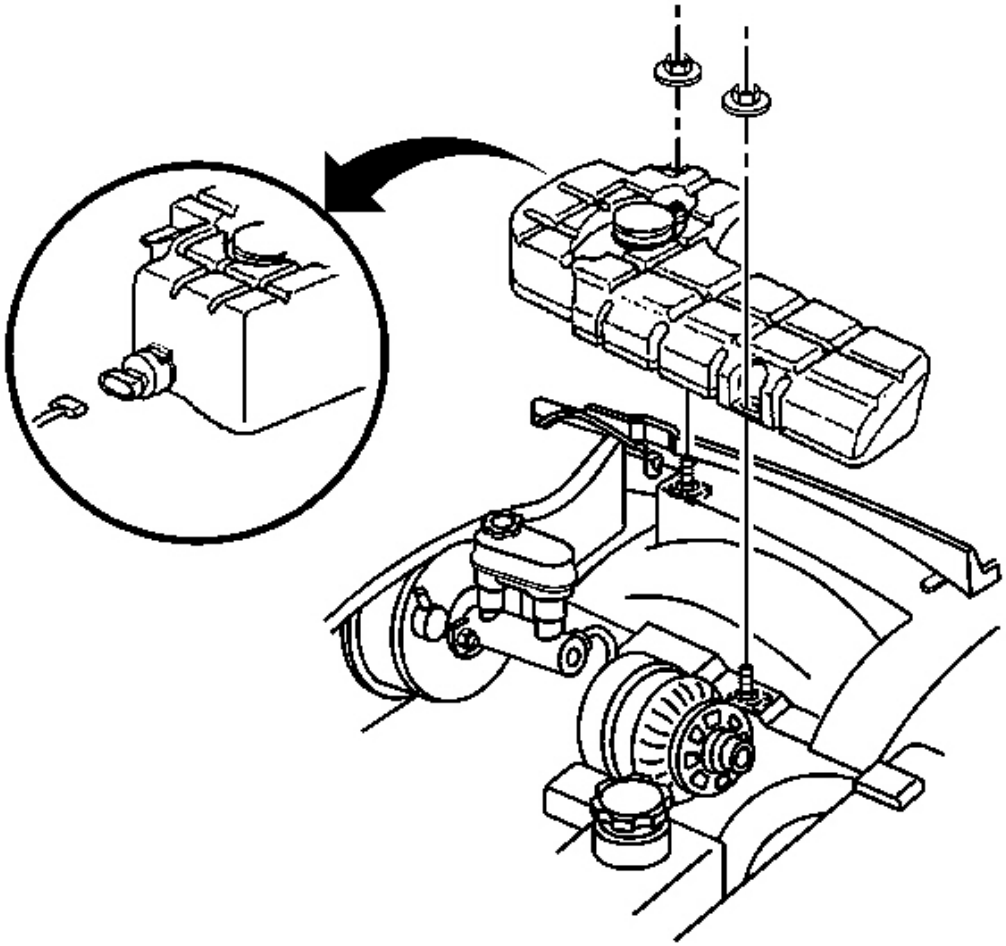

Fig. 62: Electrical Connections & Washer Hose At Container
Courtesy of GENERAL MOTORS CORP.

11. Connect the electrical connector and the washer hose to the washer solvent container.
12. Install washer solvent container to the wheelhouse.
13. Install the washer solvent container retaining nuts.

    Tighten: Tighten the washer solvent container retaining nuts to 7.5 N.m (66 lb in).

14. Connect the battery negative cable. Refer to **Battery Negative Cable Disconnect/Connect Procedure** in Engine Electrical.
15. Program the transmitters. Refer to **Transmitter Programming** in Keyless Entry.

VACUUM BRAKE BOOSTER CHECK VALVE AND/OR HOSE REPLACEMENT

Removal Procedure

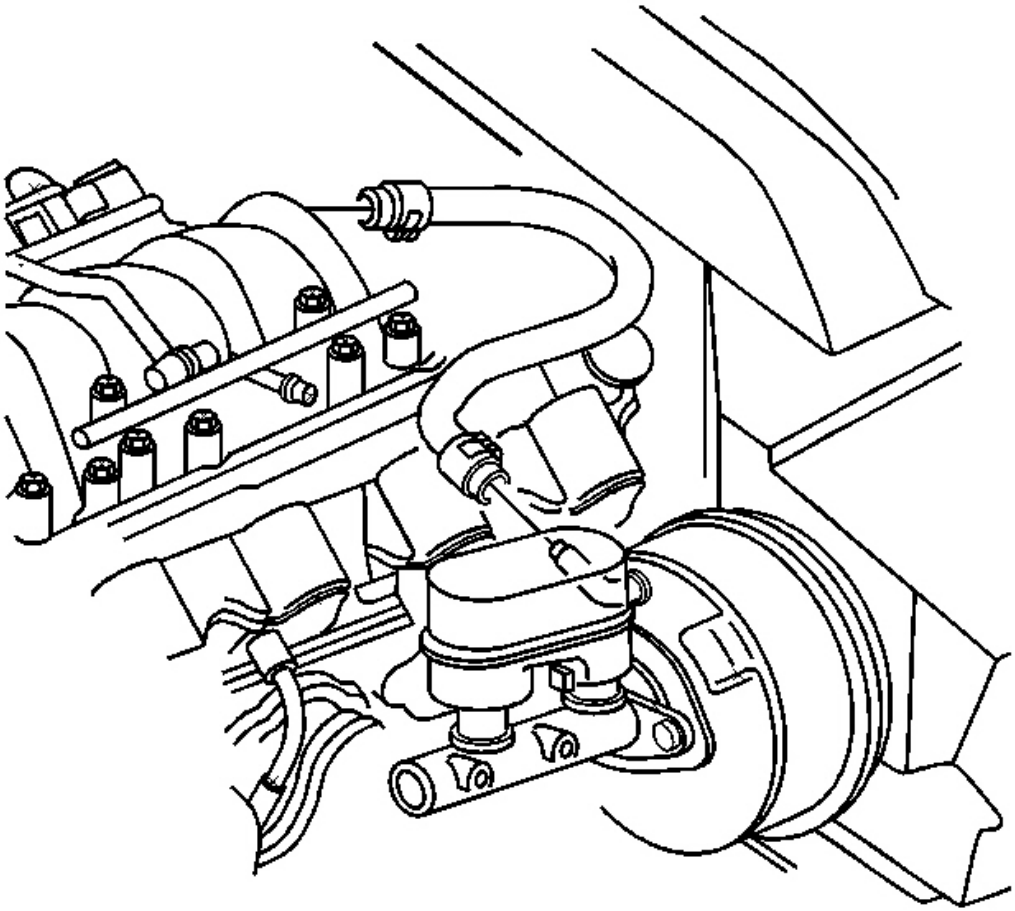

Fig. 63: Identifying Vacuum Booster Hose
Courtesy of GENERAL MOTORS CORP.

1. Disconnect the brake booster vacuum hose from the brake booster vacuum check valve.
2. Remove the vacuum check valve from the brake booster, if replacing the check valve.

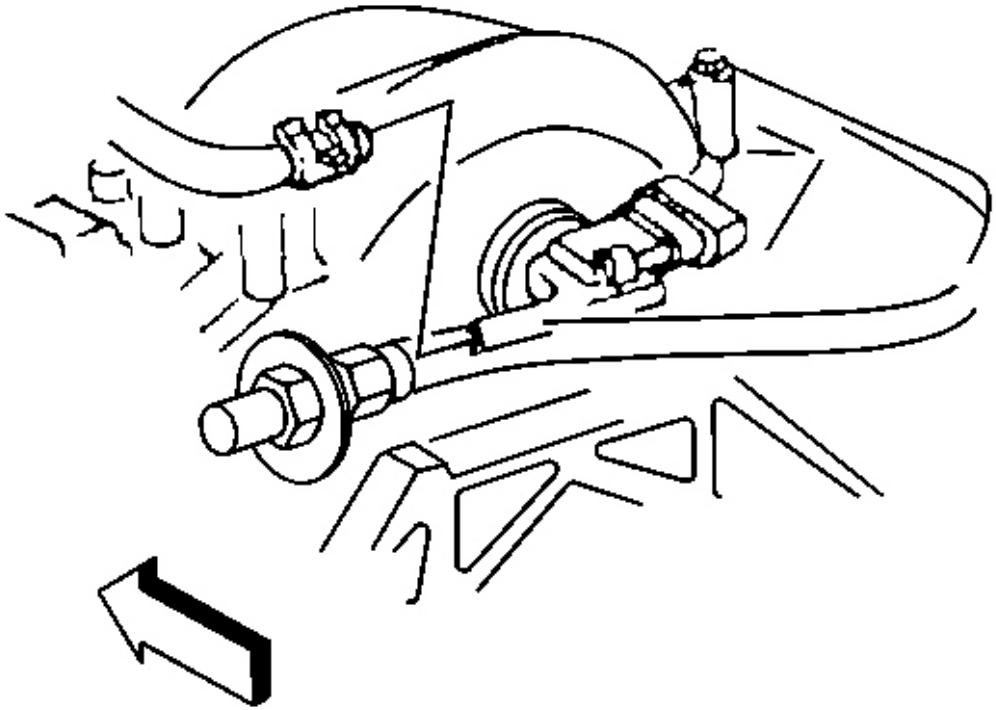

Fig. 64: Brake Booster Vacuum Hose To Intake Manifold
Courtesy of GENERAL MOTORS CORP.

3. Remove the intake manifold, if replacing the brake booster vacuum hose. Refer to **Intake Manifold Replacement** in Engine Mechanical.
4. Disconnect the brake booster vacuum hose from the intake manifold and remove the hose.

Installation Procedure

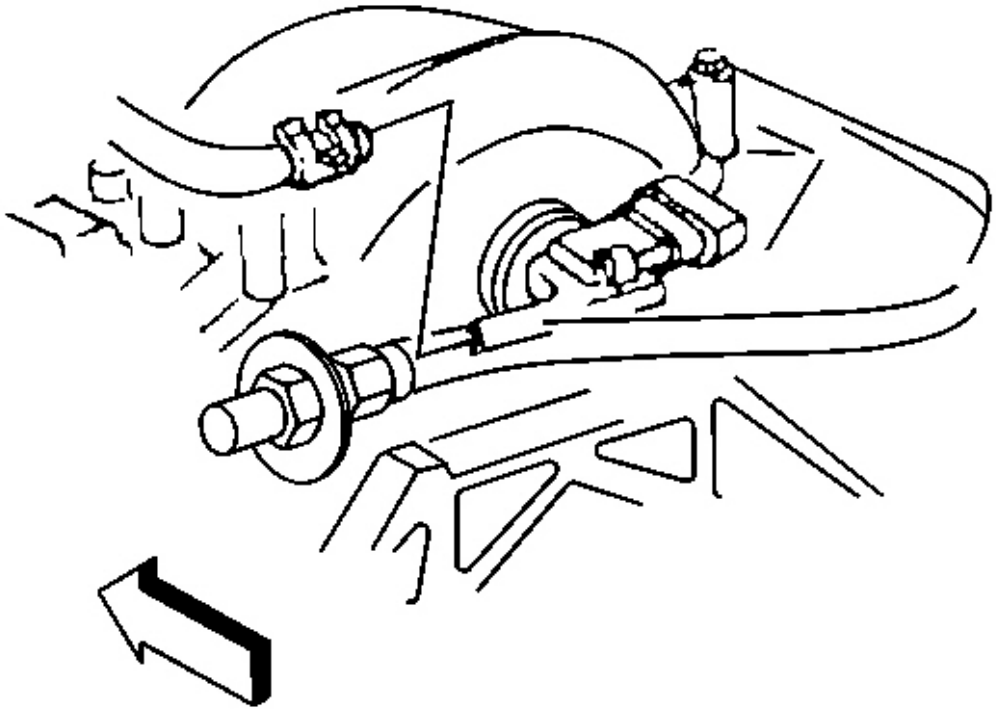

Fig. 65: Brake Booster Vacuum Hose To Intake Manifold
Courtesy of GENERAL MOTORS CORP.

1. Connect the brake booster vacuum hose to the intake manifold, if disconnected previously.
2. Install the intake manifold, if removed previously. Refer to **Intake Manifold Replacement** in Engine Mechanical.

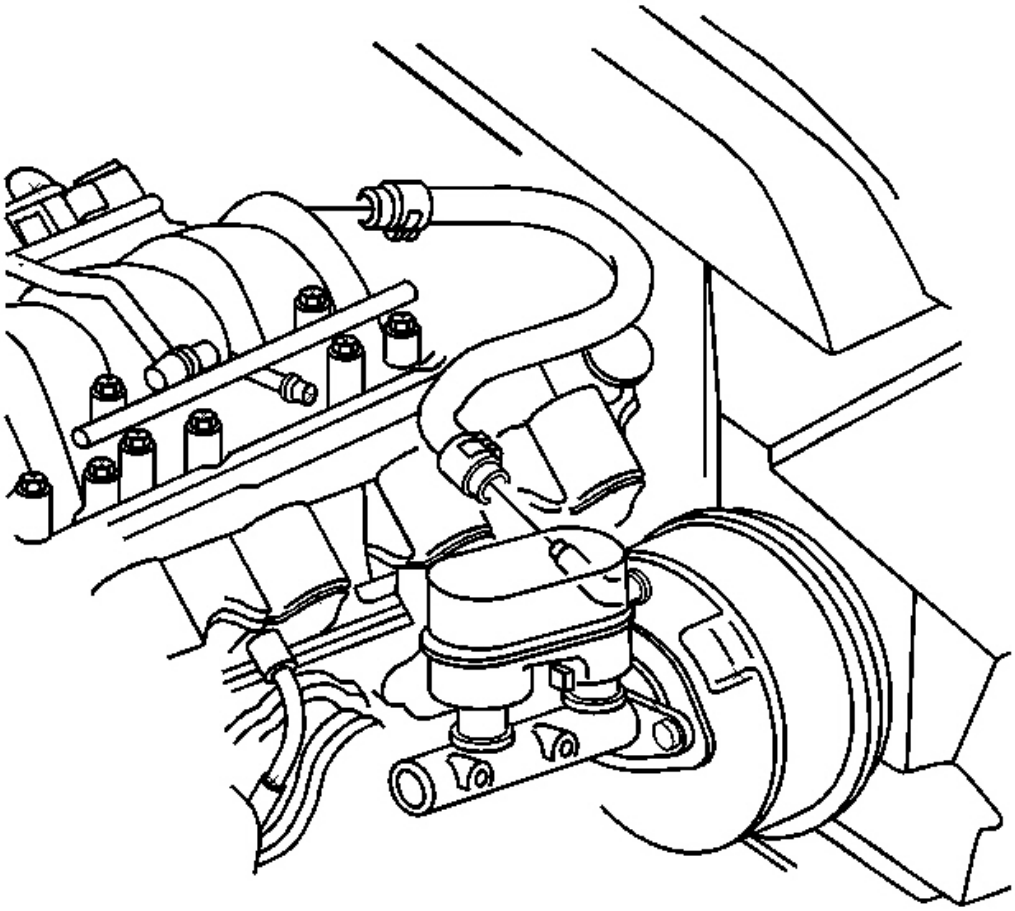

Fig. 66: Identifying Vacuum Booster Hose
Courtesy of GENERAL MOTORS CORP.

3. Install the vacuum check valve to the brake booster, if removed previously.
4. Connect the booster vacuum hose to the brake booster check valve.

DESCRIPTION AND OPERATION

BRAKE WARNING SYSTEM DESCRIPTION AND OPERATION

Brake System Indicator(s)

BRAKE

The IPC illuminates the brake indicator when the following occurs:

- The IPC detects a low brake fluid condition (signal circuit is low).
- The IPC detects the park brake is engaged (signal circuit low).
- The IPC performs the displays test at the start of each ignition cycle. The indicator illuminates for approximately 3 seconds.
- There is a Dynamic Rear Proportioning (DRP) failure.

LOW BRAKE FLUID

The IPC illuminates the LOW BRAKE FLUID indicator in the message center when the IPC receives a hardwire input from the brake fluid level sensor (signal is low).

HYDRAULIC BRAKE SYSTEM DESCRIPTION AND OPERATION

System Component Description

The hydraulic brake system consists of the following:

Hydraulic Brake Master Cylinder Fluid Reservoir

Contains supply of brake fluid for the hydraulic brake system.

Hydraulic Brake Master Cylinder

Converts mechanical input force into hydraulic output pressure. Hydraulic output pressure is distributed from the master cylinder through two hydraulic circuits, supplying diagonally-opposed wheel apply circuits.

Hydraulic Brake Pressure Balance Control System

Regulates brake fluid pressure delivered to hydraulic brake wheel circuits, in order to control the distribution of braking force. Pressure balance control is achieved through dynamic rear proportioning (DRP), which is a function of the ABS modulator. Refer to **ABS Description and Operation** in Antilock Brake System for specific information on the operation of DRP.

Hydraulic Brake Pipes and Flexible Brake Hoses

Carries brake fluid to and from hydraulic brake system components.

Hydraulic Brake Wheel Apply Components

Converts hydraulic input pressure into mechanical output force.

System Operation

Mechanical force is converted into hydraulic pressure by the master cylinder, regulated to meet braking system demands by the pressure balance control system, and delivered to the hydraulic brake wheel circuits by the pipes and flexible hoses. The wheel apply components then convert the hydraulic pressure back into mechanical force which presses linings against rotating brake system components.

BRAKE ASSIST SYSTEM DESCRIPTION AND OPERATION

System Component Description

The brake assist system consists of the following:

Brake Pedal

Receives, multiplies and transfers brake system input force from driver.

Brake Pedal Pushrod

Transfers multiplied input force received from brake pedal to brake booster.

Vacuum Brake Booster

Uses source vacuum to decrease effort required by driver when applying brake system input force. When brake system input force is applied, air at atmospheric pressure is admitted to the rear of both vacuum diaphragms, providing a decrease in brake pedal effort required. When input force is removed, vacuum replaces atmospheric pressure within the booster.

Vacuum Source

Supplies force used by vacuum brake booster to decrease brake pedal effort.

Vacuum Source Delivery System

Enables delivery and retention of source vacuum for vacuum brake booster.

System Operation

Brake system input force is multiplied by the brake pedal and transferred by the pedal pushrod to the hydraulic brake master cylinder. Effort required to apply the brake system is reduced by the vacuum brake booster.

SPECIAL TOOLS AND EQUIPMENT

SPECIAL TOOLS

Special Tools

Illustration	Tool Number/ Description

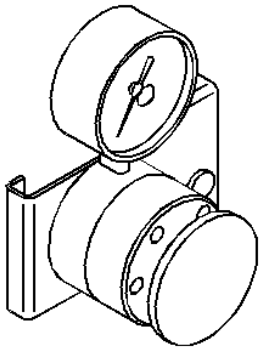	J 28662 Brake Pedal Effort Gage
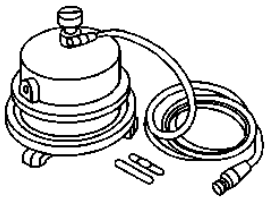	J 29532 Diaphragm Type Brake Pressure Bleeder
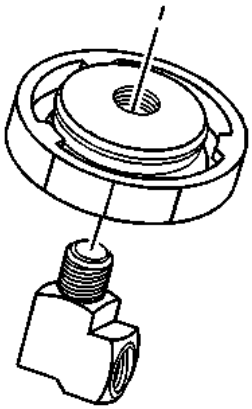	J 35589-A Brake Pressure Bleeder Adapter

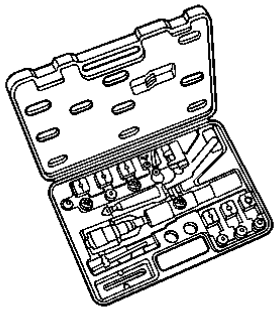	J 45405 Pipe Flaring Tool Kit

SPECIFICATIONS

FASTENER TIGHTENING SPECIFICATIONS

Fastener Tightening Specifications

Application	Specification	
	Metric	English
Actuator Mounting Bolts	70 N.m	52 lb ft
Parking Brake Lever Assembly Mounting Bolts	28 N.m	21 lb ft
Parking Brake Lever Boot Nuts	10 N.m	89 lb in

DIAGNOSTIC INFORMATION AND PROCEDURES

DIAGNOSTIC STARTING POINT - PARK BRAKE

Begin the system diagnosis by reviewing the system description and operation. Reviewing the description and operation information will help you determine the correct symptom diagnostic procedure when a malfunction exists. Reviewing the description and operation information will also help you determine if the condition described by the customer is normal operation. Refer to **Symptoms - Park Brake** in order to identify the correct procedure for diagnosing the system and where the procedure is located.

SYMPTOMS - PARK BRAKE

IMPORTANT: Review the system operation in order to familiarize yourself with the system functions.

Refer to **Park Brake System Description and Operation** .

Visual/Physical Inspection

- Inspect for aftermarket devices which could affect the operation of the park brake system.
- Inspect the easily accessible or visible system components for obvious damage or conditions which could cause the symptom.

Symptom List

Refer to a symptom diagnostic procedure from the following list in order to diagnose the symptom:

Park Brake Will Not Hold or Release

PARK BRAKE WILL NOT HOLD OR RELEASE

Park Brake Will Not Hold or Release

Step	Action	Yes	No
1	Were you sent here from the Park Brake Symptom table?	Go to **Step 2**	Go to **Diagnostic Starting Point - Park Brake**
2	Inspect the park brake system for proper operation. Refer to **Park Brake System Diagnosis** . Did you find and correct a condition?	Go to **Step 5**	Go to **Step 3**
3	Inspect the disc brake system for proper operation. Refer to **Disc Brake System Diagnosis** in Hydraulic Brakes. Did you find and correct a condition?	Go to **Step 5**	Go to **Step 4**
4	Inspect the hydraulic brake system for proper operation. Refer to **Hydraulic Brake System Diagnosis** in Hydraulic Brakes. Did you find and correct a condition?	Go to **Step 5**	Go to **Diagnostic Starting Point - Park Brake**
5	Road test the vehicle in order to confirm proper operation. Refer to **Brake System Vehicle Road Test** in Hydraulic Brakes. Is the condition still present?	Go to **Step 2**	System OK

PARK BRAKE SYSTEM DIAGNOSIS

Park Brake System Diagnosis

Step	Action	Yes	No
DEFINITION: This diagnostic table is designed to diagnose ONLY the components of the PARK brake system in order to determine if the PARK brake system is operating properly. You will be directed by the appropriate Symptom table to go to other brake system diagnostic tables as appropriate.			
1	Were you sent here from a Hydraulic Brake Symptom table?	Go to **Step 4**	Go to **Step 2**
2	Were you sent here from a Park Brake Symptom table?	Go to **Step 4**	Go to **Step 3**
3	Is the symptom related to the ability of the park brake system to hold and/or release?	Go to **Diagnostic Starting Point - Park Brake**	Go to **Diagnostic Starting Point - Hydraulic Brakes** in Hydraulic Brakes
4	1. Raise and support the vehicle with the rear axle supported by jack stands. Refer to **Lifting and Jacking the Vehicle** in General Information. 2. Shift the transmission into NEUTRAL. 3. With the park brake RELEASED, attempt to rotate the rear wheels to check the rear brakes for a significant amount of drag. Do the rear brakes have a significant amount of drag?	Go to **Step 11**	Go to **Step 5**
	1. Shift the transmission into NEUTRAL. 2. Apply the park brake.		

5	3. Attempt to rotate the rear wheels to check the rear brakes for a significant amount of drag. Do the rear brakes have a significant amount of drag?	Go to **Step 6**	Go to **Step 7**
6	1. Release the park brake. 2. Rotate the rear wheels to check the rear brakes for a significant reduction in the amount of drag. Did the rear brakes exhibit a significant reduction in the amount of drag?	Go to **Step 21**	Go to **Step 11**
7	Visually inspect the park brake cable connections and the cables that are accessible on the UNDERSIDE of the vehicle for disconnections and/or damage. Were any of the park brake cables disconnected and/or damaged?	Go to **Step 8**	Go to **Step 9**
8	Reconnect or replace the park brake cables as necessary. Refer to the following procedures as necessary: • **Park Brake Cable Replacement - Front** • **Park Brake Cable Replacement - Rear** Did you complete the repair and/or replacement?	Go to **Step 9**	-
9	Check the adjustment of the park brake. Refer to **Park Brake Adjustment** . Was the park brake adjusted properly?	Go to **Step 11**	Go to **Step 10**
10	Adjust the park brake. Refer to **Park Brake Adjustment** . Were you able to adjust the park brake?	Go to **Step 16**	Go to **Step 11**
11	**NOTE:** **Do not depress the brake pedal with the brake rotors and/or the brake drums removed, or with the brake calipers repositioned away from the brake rotors, or damage to the brake system may result.** 1. Remove the rear brake rotors. Refer to **Brake Rotor Replacement - Rear** in Disc Brakes. 2. Inspect the park brake shoe hardware for looseness, damaged, broken or missing components. 3. Check the park brake actuators for a seized condition. Does the park brake hardware and/or the park brake		

	actuators require replacement?	Go to **Step 12**	Go to **Step 13**
12	1. Replace park brake hardware components as necessary. Refer to **Park Brake Shoe Replacement** . 2. Replace the park brake actuators as necessary. Refer to **Park Brake Actuator Replacement** . Did you complete the replacement?	Go to **Step 13**	-
13	Have an assistant apply and release the park brake, while you observe the park brake cables for free movement. Did the park brake cables move freely?	Go to **Step 14**	Go to **Step 17**
14	Check the adjustment of the park brake. Refer to **Park Brake Adjustment** . Was the park brake adjusted properly?	Go to **Step 16**	Go to **Step 15**
15	Adjust the park brake. Refer to **Park Brake Adjustment** . Were you able to adjust the park brake?	Go to **Step 16**	Go to **Step 26**
16	1. With the transmission still in NEUTRAL, apply the park brake. 2. Attempt to rotate the rear wheels to check the rear brakes for a significant amount of drag. 3. Release the park brake. 4. Rotate the rear wheels to check the rear brakes for a significant reduction of drag. Did the park brake apply and release properly?	Go to **Step 28**	Return to Symptom Table
17	Disconnect the park brake cable connections that are accessible on the UNDERSIDE of the vehicle one at a time and check each cable for free movement. Do any of the park brake cables accessible on the underside of the vehicle require replacement?	Go to **Step 18**	Go to **Step 19**
18	Replace any of the park brake cables that do not have free movement - not releasing properly. Refer to the following procedures as necessary: • **Park Brake Cable Replacement - Front** • **Park Brake Cable Replacement - Rear** Did you complete the replacement?	Go to **Step 19**	-
	Disconnect the front park brake cable connection accessible INSIDE the vehicle at the park brake lever assembly and check for free movement.		

19	Replace the front park brake cable if it does not have free movement. Refer to **Park Brake Cable Replacement - Front** . Did you find and correct a condition?	Go to **Step 24**	Go to **Step 20**
20	Replace the park brake lever assembly - not releasing properly. Refer to **Park Brake Lever Assembly Replacement** . Did you complete the replacement?	Go to **Step 25**	-
21	Check the adjustment of the park brake. Refer to **Park Brake Adjustment** . Is the park brake adjusted properly?	Go to **Step 28**	Go to **Step 22**
22	Adjust the park brake. Refer to **Park Brake Adjustment** . Were you able to adjust the park brake?	Go to **Step 27**	Go to **Step 23**
23	1. Remove the rear brake rotors, if they have not yet been removed. Refer to **Brake Rotor Replacement - Rear** in Disc Brakes. 2. Inspect the park brake actuators for a seized condition. 3. Replace the park brake actuators as necessary. Refer to **Park Brake Actuator Replacement** . Did you find and correct a condition?	Go to **Step 24**	Go to **Step 26**
24	Adjust the park brake. Refer to **Park Brake Adjustment** . Were you able to adjust the park brake?	Go to **Step 27**	Go to **Step 26**
25	Adjust the park brake. Refer to **Park Brake Adjustment** . Were you able to adjust the park brake?	Go to **Step 27**	Return to Symptom Table
26	1. Replace the component that is used to adjust the park brake system. Refer to **Park Brake Lever Assembly Replacement** . 2. Adjust the park brake. Refer to **Park Brake Adjustment** . Did you complete the replacement and adjustment?	Go to **Step 27**	Return to Symptom Table
27	1. With the transmission still in NEUTRAL, apply the park brake. 2. Attempt to rotate the rear wheels to check the rear brakes for a significant amount of drag. 3. Release the park brake. 4. Rotate the rear wheels to check the rear brakes for a significant reduction of drag.		

	Did the park brake apply and release properly?	Go to **Step 28**	Return to Symptom Table
28	Install or connect any components that were removed or disconnected during diagnosis. Did you complete the operation?	Park Brake System OK Return to Symptom Table	-

PARK BRAKE SHOE INSPECTION

CAUTION: Refer to Brake Dust Caution in Cautions and Notices.

1. Raise and suitably support the vehicle. Refer to **Lifting and Jacking the Vehicle** in General Information.
2. Remove the rear brake rotor. Refer to **Brake Rotor Replacement - Rear** in Disc Brakes.
3. Inspect and replace the park brake shoe and lining if any of the following conditions are found:
   - Excessive wear indicated by the park brake lining being worn down to the shoe
   - Brake lining cracking
   - Oil or fluid contamination
4. Adjust the park brake shoes if necessary. Refer to **Park Brake Adjustment** .
5. Install the rear brake rotor. Refer to **Brake Rotor Replacement - Rear** in Disc Brakes.
6. Lower the vehicle.

REPAIR INSTRUCTIONS

PARK BRAKE SHOE REPLACEMENT

Removal Procedure

CAUTION: Refer to Brake Dust Caution in Cautions and Notices.

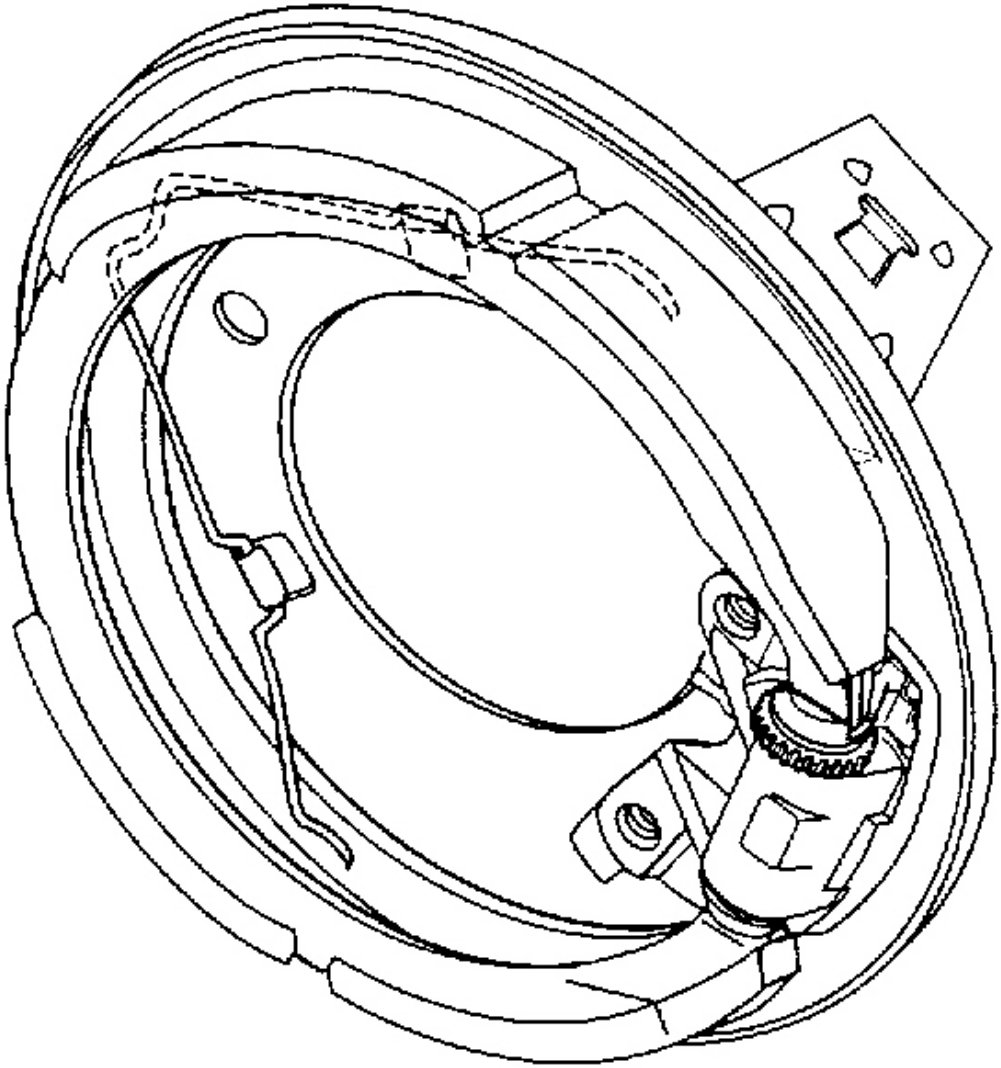

Fig. 1: View Of Drum Brake
Courtesy of GENERAL MOTORS CORP.

1. Remove the brake rotor. Refer to **Brake Rotor Replacement - Rear** in Disc Brakes.
2. Remove the wheel bearing/hub. Refer to **Wheel Bearing/Hub Replacement - Rear** in Rear Suspension.
3. Rotate the parking brake adjusting nut until all park brake shoe adjustment has been removed.
4. Remove the parking brake shoe retaining spring.

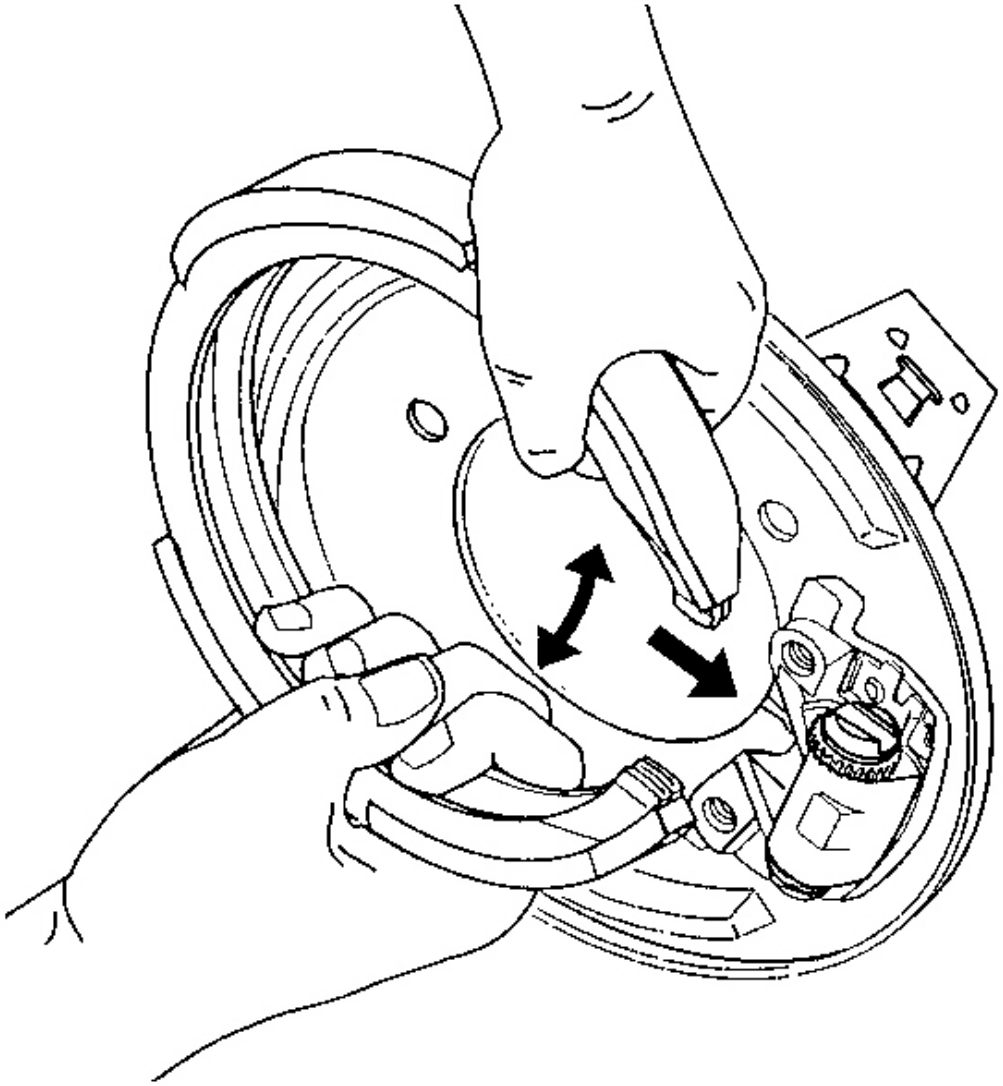

Fig. 2: Park Brake Shoe Assembly
Courtesy of GENERAL MOTORS CORP.

5. Remove the park brake shoe assembly by grasping the shoe and spreading slightly while pulling the shoe from the actuator assembly.

Installation Procedure

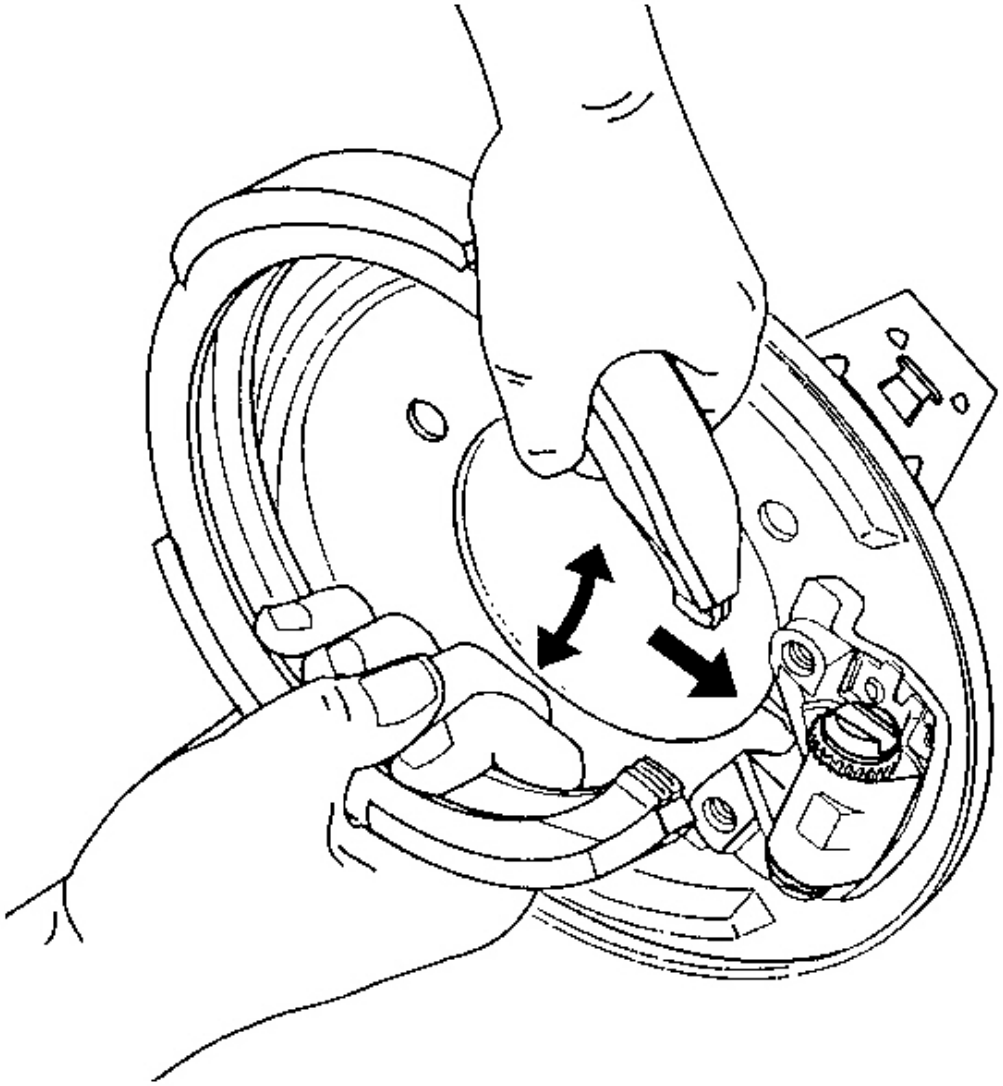

Fig. 3: Park Brake Shoe Assembly
Courtesy of GENERAL MOTORS CORP.

1. Install the park brake shoe assembly by grasping the shoe and spreading slightly while pulling the shoe over the actuator assembly.

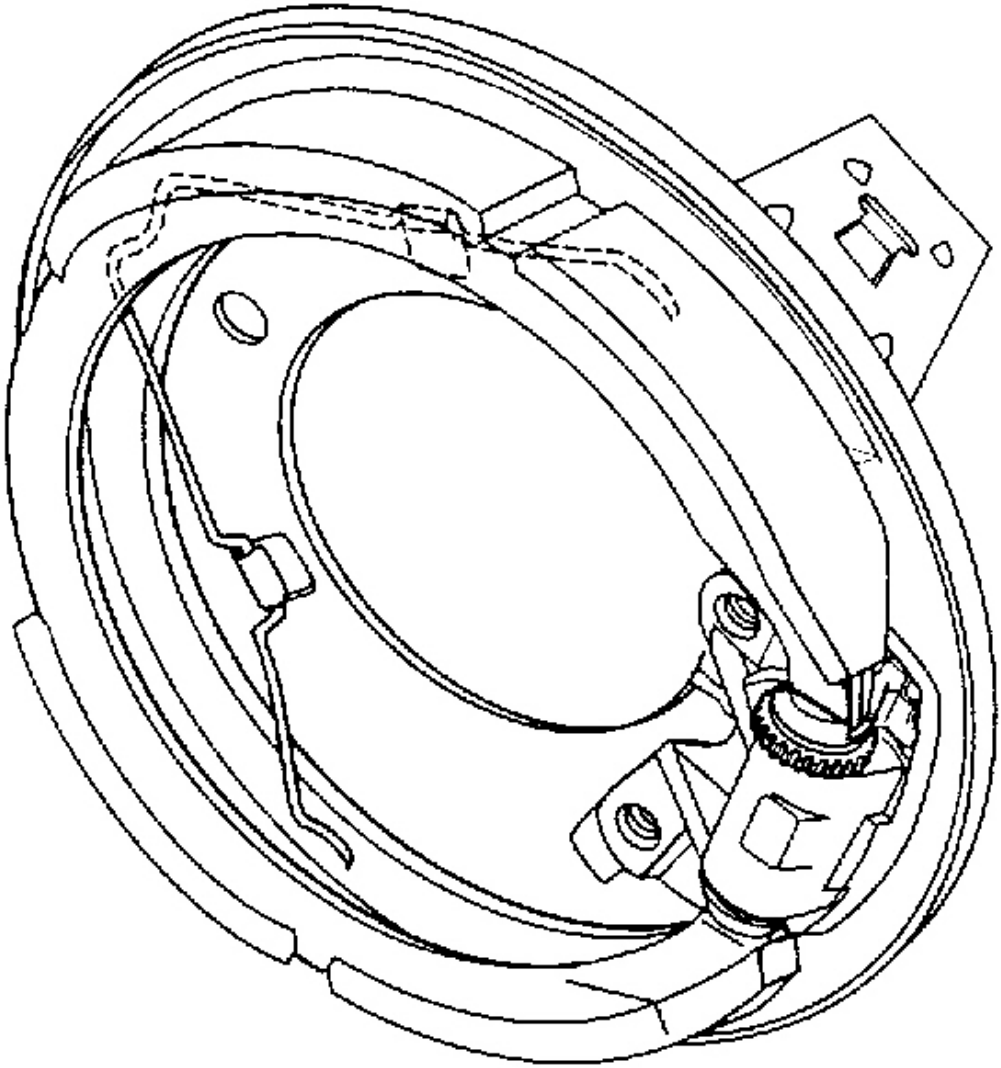

Fig. 4: View Of Drum Brake
Courtesy of GENERAL MOTORS CORP.

2. Install the parking brake shoe retaining spring.
3. Adjust the parking brake shoe-to-drum clearance. Refer to **Park Brake Adjustment** .
4. Install the wheel bearing/hub. Refer to **Wheel Bearing/Hub Replacement - Rear** in Rear Suspension.
5. Install the brake rotor. Refer to **Brake Rotor Replacement - Rear** in Disc Brakes.

PARK BRAKE LEVER ASSEMBLY REPLACEMENT

Removal Procedure

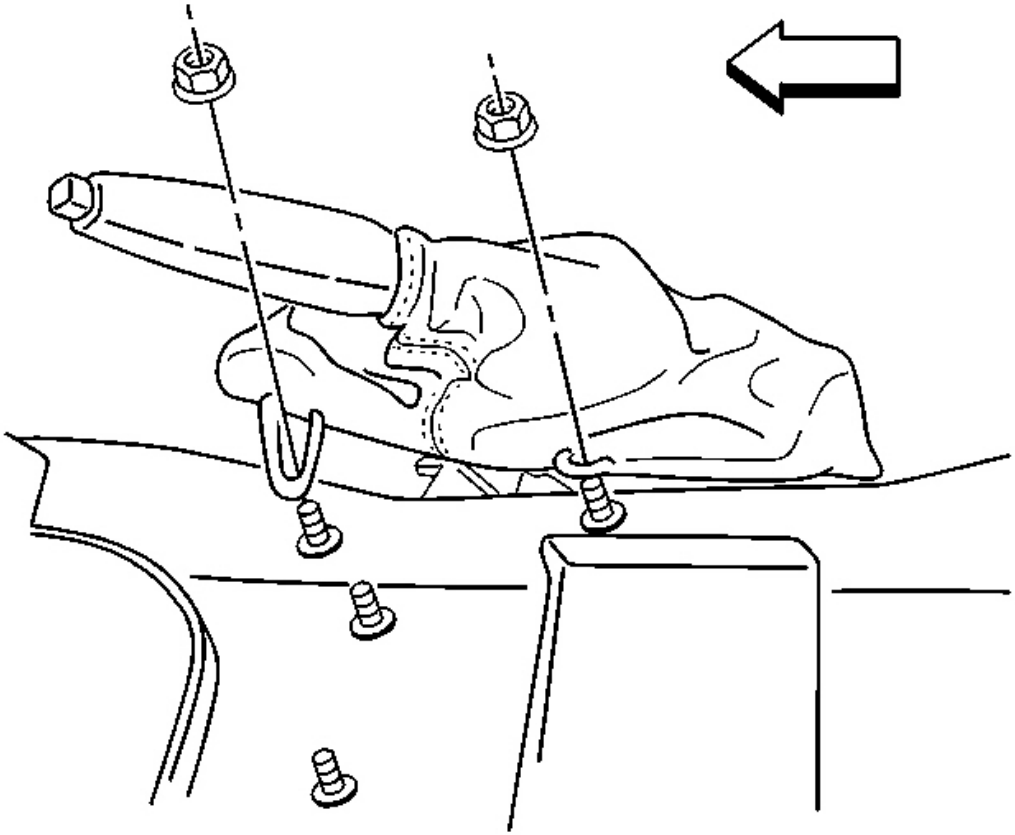

Fig. 5: Disengage Retainer Clips On Park Brake Lever Boot
Courtesy of GENERAL MOTORS CORP.

1. Remove the accessory trim plate. Refer to **Console Replacement** in Instrument Panel, Gages, and Console.
2. Remove the passenger seat. Refer to **Seat Replacement (Power)** or **Seat Replacement (Manual)** in Seats.
3. Lift and disengage retainer clips on park brake lever boot.

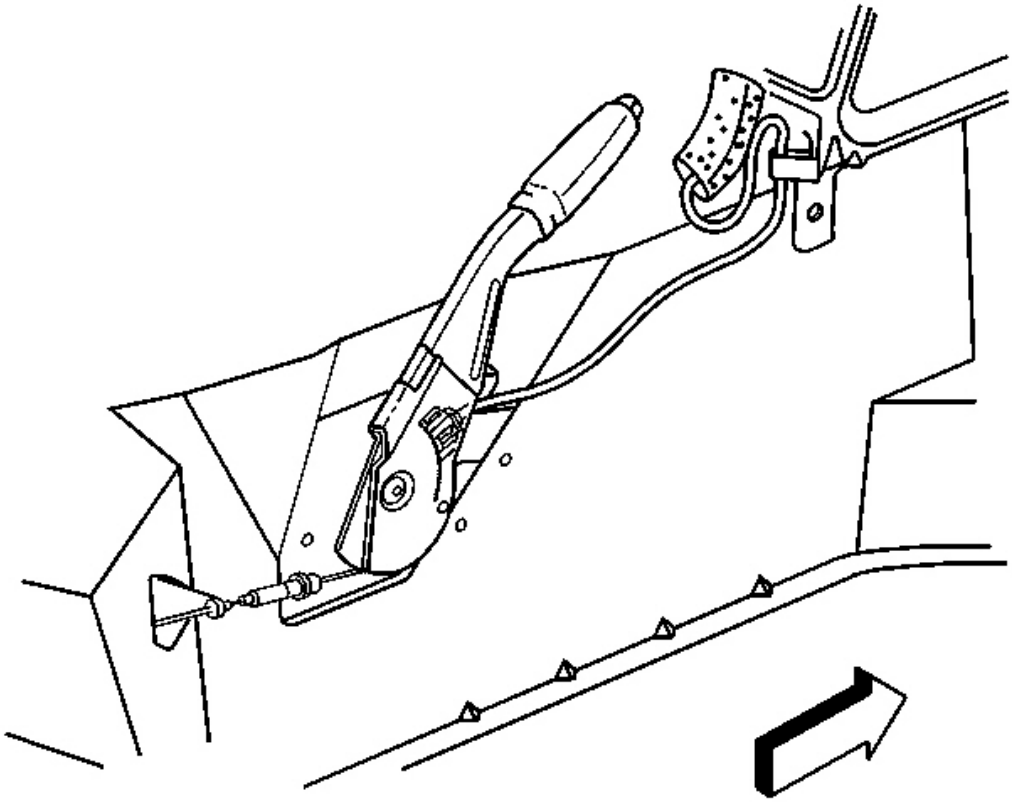

Fig. 6: Parking Brake Electrical Connector
Courtesy of GENERAL MOTORS CORP.

4. Disconnect the parking brake electrical connector.
5. Disable the parking brake automatic adjuster. Refer to **Disabling the Park Brake Cable Automatic Adjuster** .

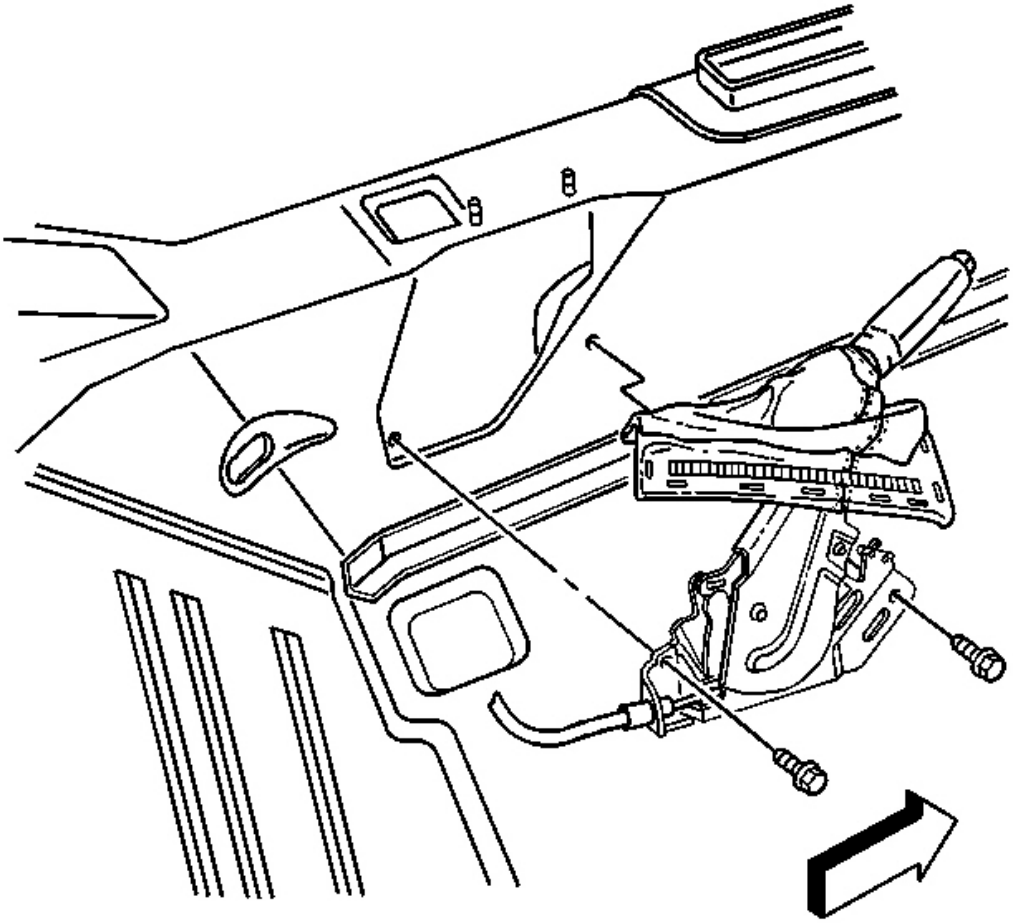

Fig. 7: Parking Brake Lever Assembly Mounting Bolts
Courtesy of GENERAL MOTORS CORP.

6. Remove the parking brake lever assembly mounting bolts.
7. Reposition the park brake lever.

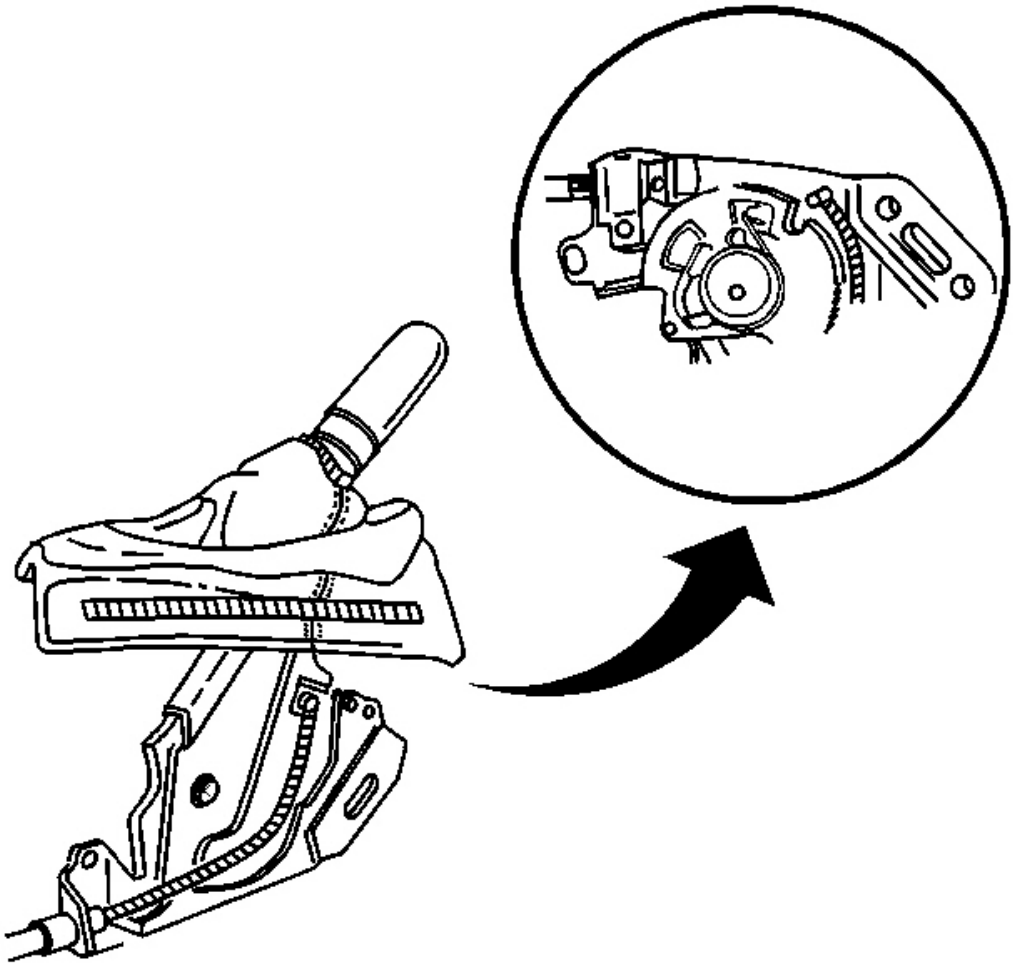

Fig. 8: Front Parking Brake Cable To Drive Sector & Park Brake Lever Assembly
Courtesy of GENERAL MOTORS CORP.

8. Disconnect the front parking brake cable from the drive sector and park brake lever assembly.

Installation Procedure

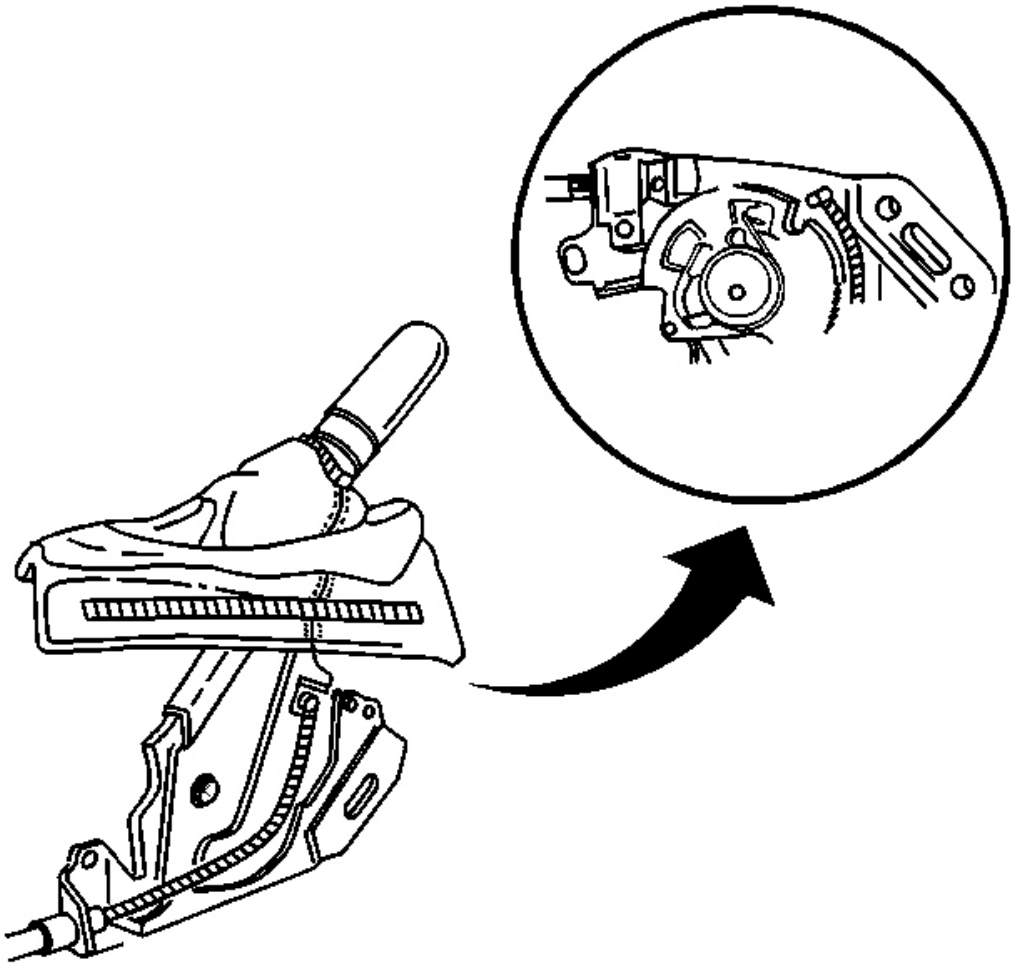

Fig. 9: Front Parking Brake Cable To Drive Sector & Park Brake Lever Assembly
Courtesy of GENERAL MOTORS CORP.

1. Connect the front parking brake cable to the drive sector and park brake lever assembly.

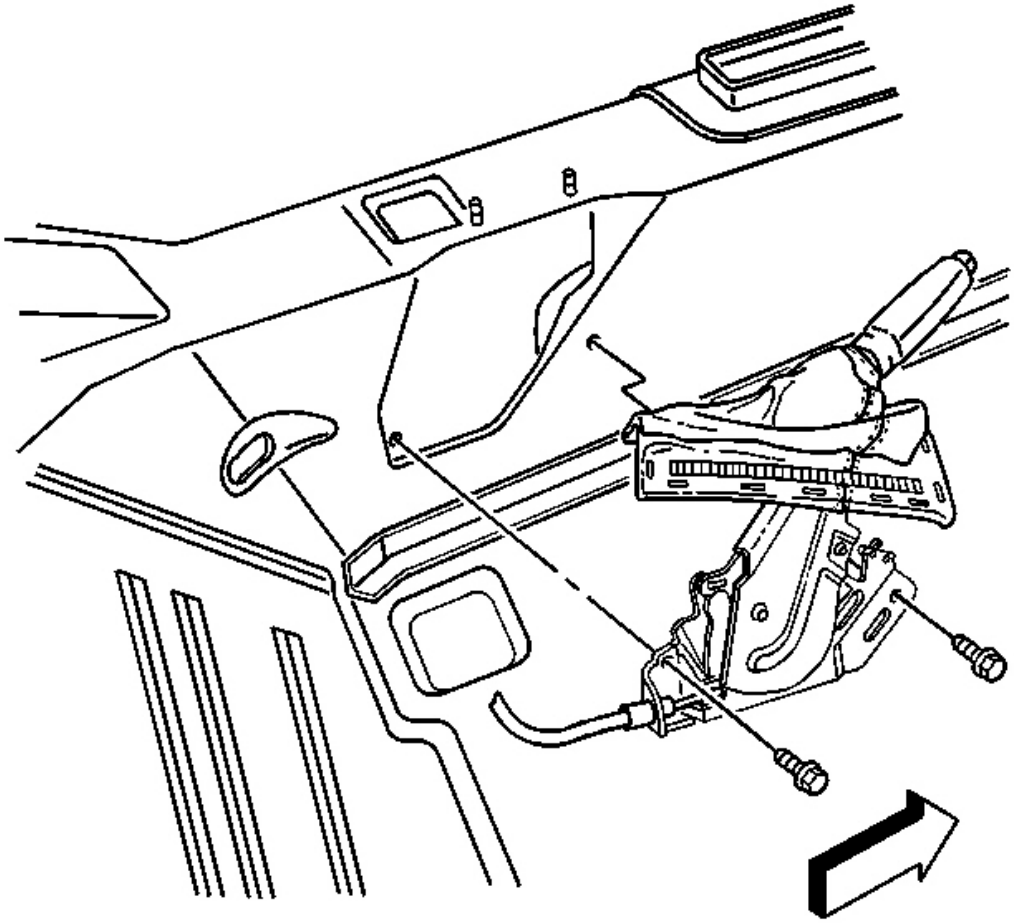

Fig. 10: Parking Brake Lever Assembly Mounting Bolts
Courtesy of GENERAL MOTORS CORP.

NOTE: Refer to Fastener Notice in Cautions and Notices.

2. Install the parking brake lever assembly mounting bolts.

   Tighten: Tighten the parking brake lever assembly mounting bolts to 28 N.m (21 lb ft).

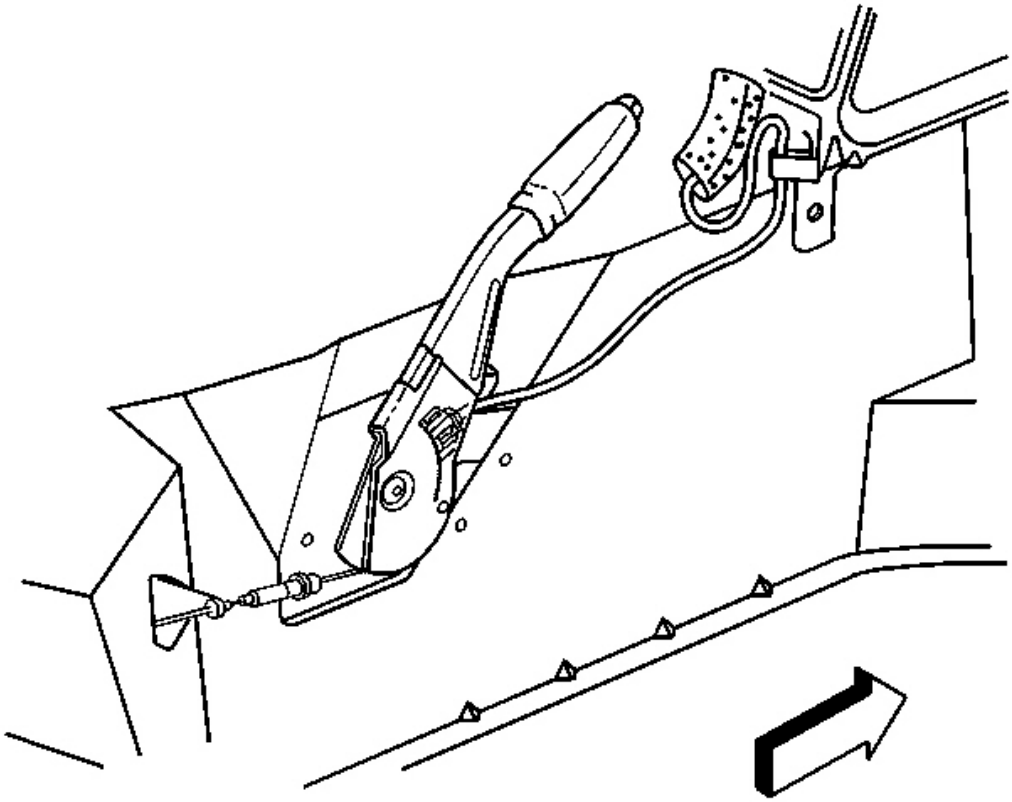

Fig. 11: Parking Brake Electrical Connector
Courtesy of GENERAL MOTORS CORP.

3. Connect the parking brake electrical connector.
4. Enable the parking brake automatic adjuster. Refer to **Enabling the Park Brake Cable Automatic Adjuster** .

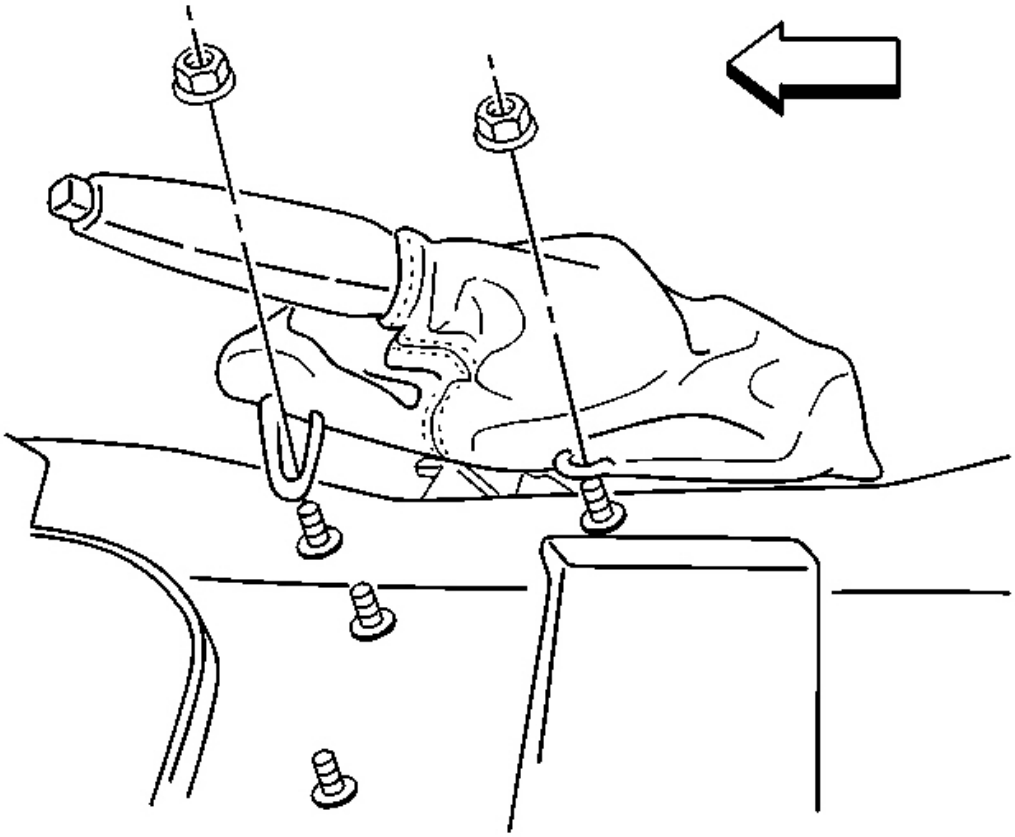

Fig. 12: Disengage Retainer Clips On Park Brake Lever Boot
Courtesy of GENERAL MOTORS CORP.

5. Install the parking brake lever boot nuts.

   Tighten: Tighten the parking brake lever boot nuts to 10 N.m (89 lb in).

6. Install the passenger seat. Refer to **Seat Replacement (Power)** or **Seat Replacement (Manual)** in Seats.
7. Install the accessory trim plate. Refer to **Console Replacement** in Instrument Panel, Gages, and Console.

PARK BRAKE WARNING LAMP SWITCH REPLACEMENT

Removal Procedure

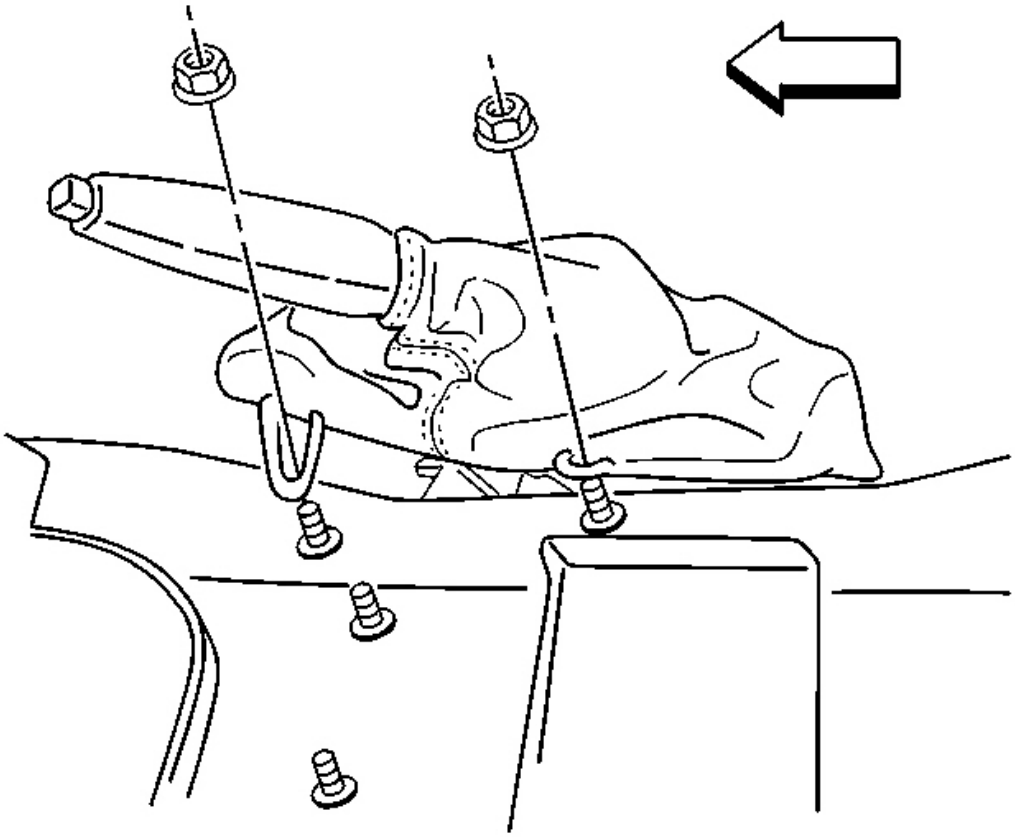

Fig. 13: Disengage Retainer Clips On Park Brake Lever Boot
Courtesy of GENERAL MOTORS CORP.

1. Remove the console. Refer to **Console Replacement** in Instrument Panel, Gages, and Console.
2. Remove the passenger seat. Refer to **Seat Replacement (Power)** or **Seat Replacement (Manual)** in Seats.
3. Lift and disengage retainer clips on park brake lever boot.

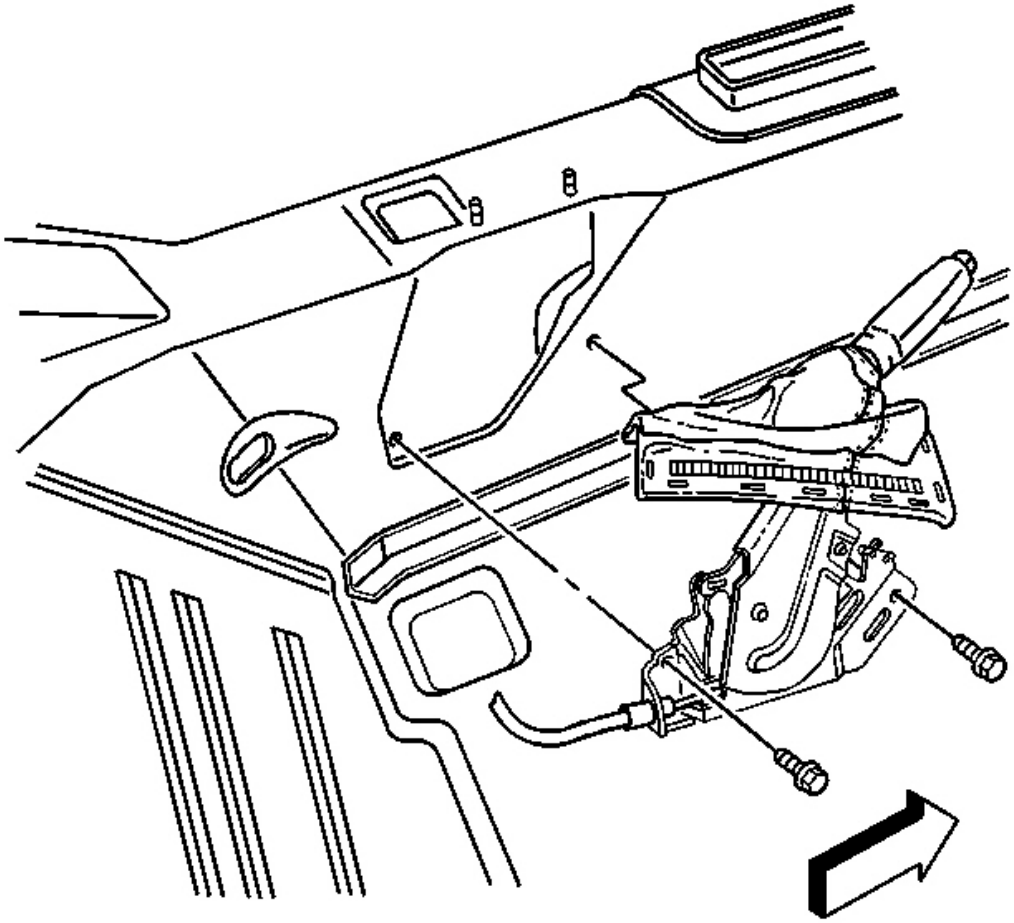

Fig. 14: Parking Brake Lever Assembly Mounting Bolts
Courtesy of GENERAL MOTORS CORP.

4. Lift the park brake lever slightly until it engages the first stop.
5. Remove the park brake lever assembly mounting bolts.
6. Disconnect the electrical connector from the park brake switch.
7. Position the park brake lever assembly to the rear of the vehicle.
8. Remove the park brake switch.

Installation Procedure

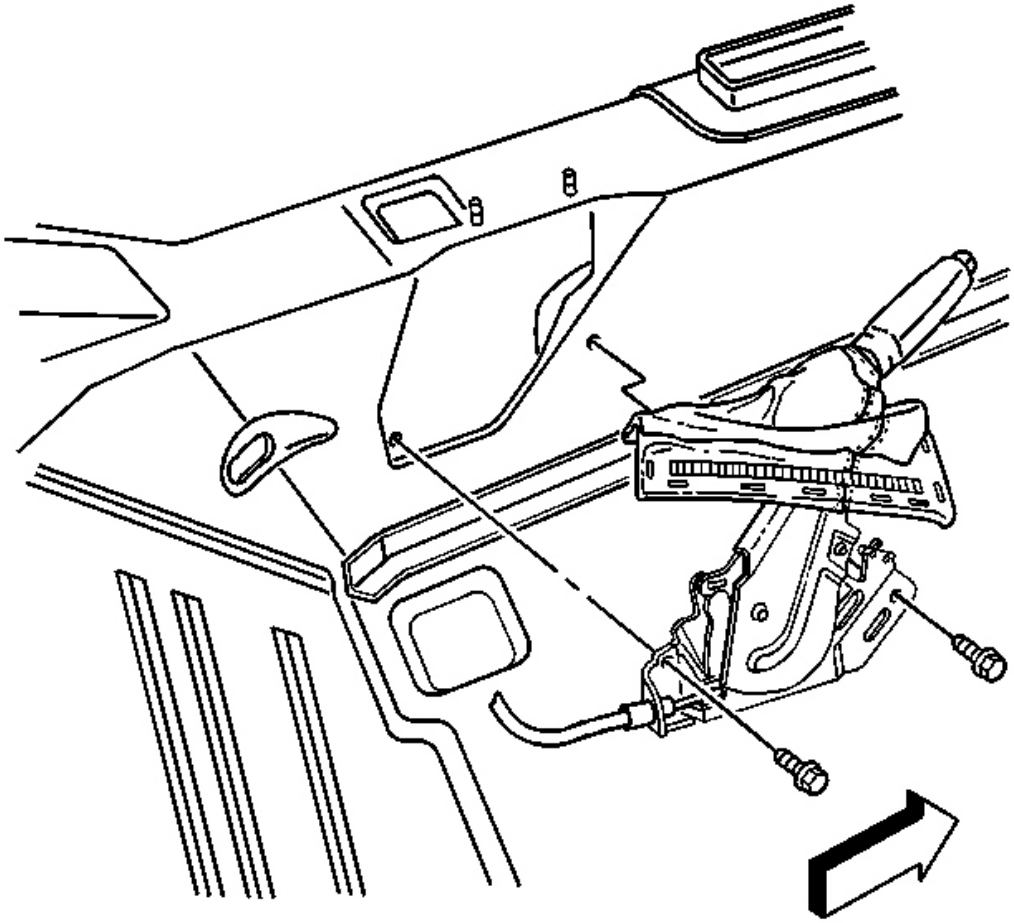

Fig. 15: Parking Brake Lever Assembly Mounting Bolts
Courtesy of GENERAL MOTORS CORP.

1. Install the park brake switch to the park brake lever assembly.
2. Position the park brake lever assembly to the driveline tunnel.
3. Connect the electrical connector to the park brake switch.

NOTE: Refer to Fastener Notice in Cautions and Notices.

4. Install the mounting bolts to the park brake lever assembly.

Tighten: Tighten the park brake lever assembly mounting bolts to 28 N.m (21 lb ft)

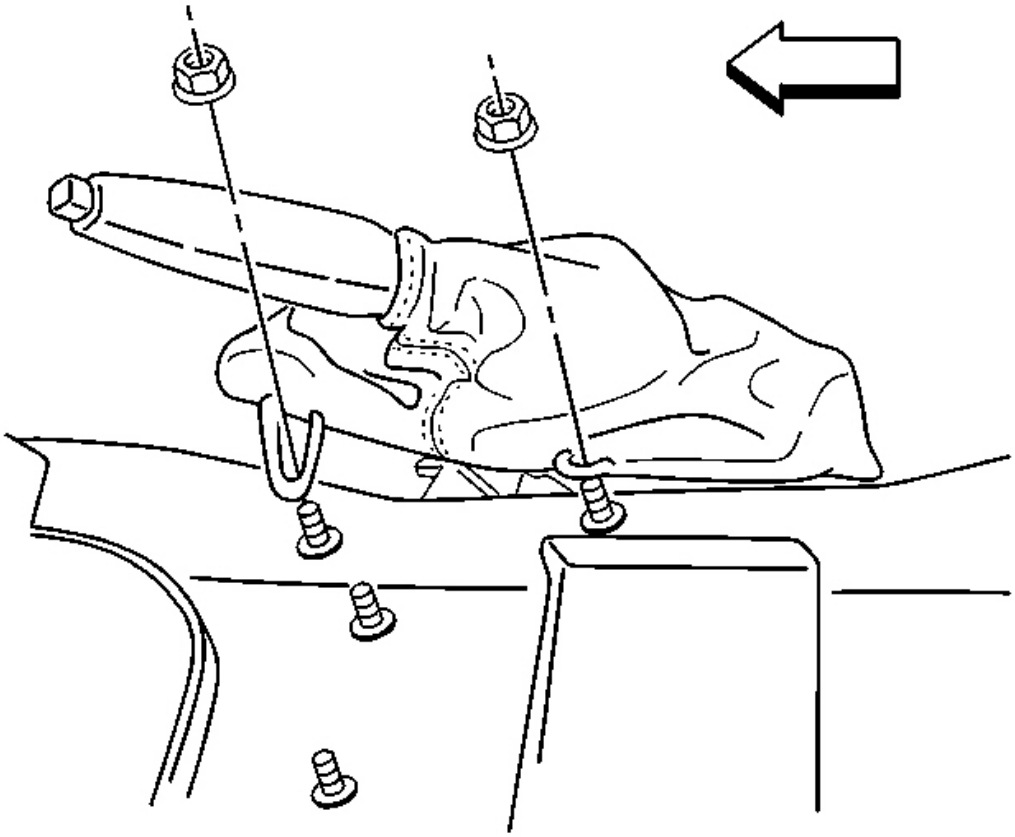

Fig. 16: Disengage Retainer Clips On Park Brake Lever Boot
Courtesy of GENERAL MOTORS CORP.

5. Position the park brake lever assembly boot to the driveline tunnel.
6. Install the park brake lever assembly boot nuts.

   Tighten: Tighten the park brake lever assembly boot nuts to 10 N.m (89 lb in)

7. Install the passenger seat. Refer to **Seat Replacement (Power)** or **Seat Replacement (Manual)** in Seats.
8. Install the console. Refer to **Console Replacement** in Instrument Panel, Gages, and Console.
9. Release the park brake lever.

PARK BRAKE CABLE REPLACEMENT - FRONT

Removal Procedure

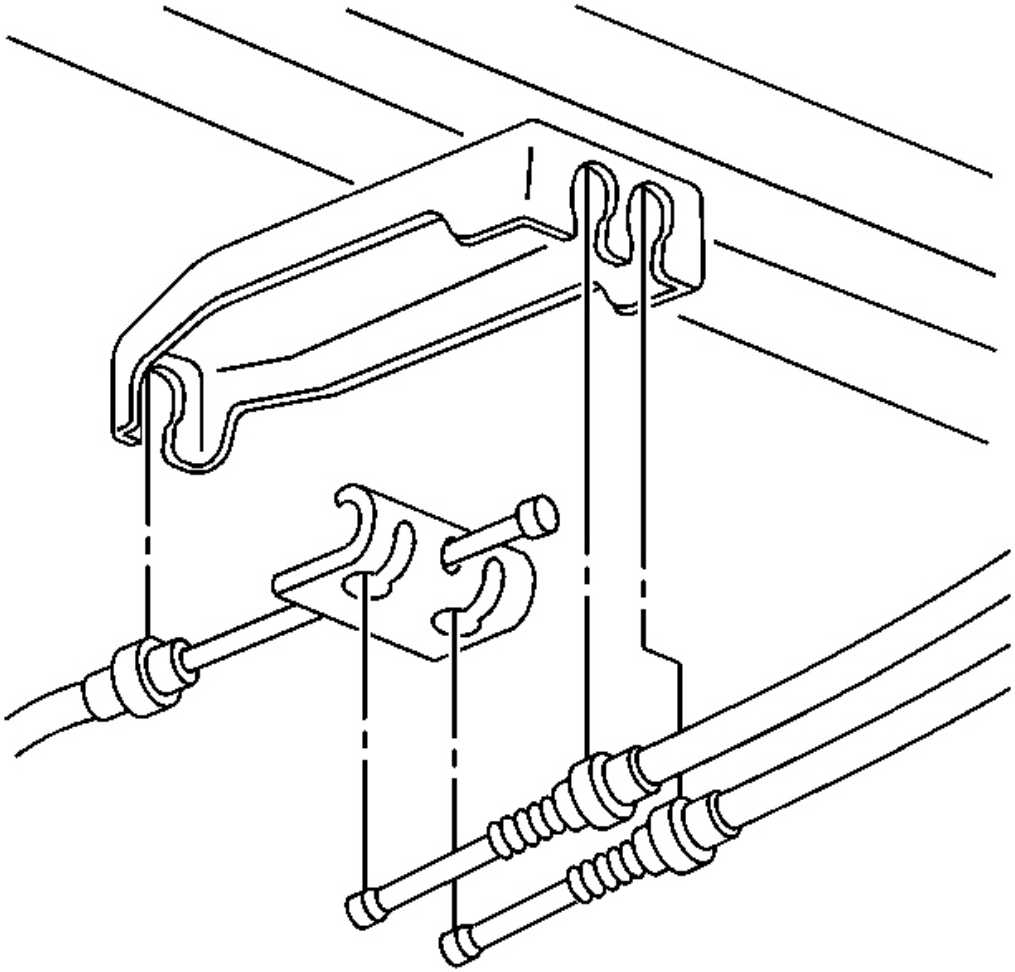

Fig. 17: Front & Rear Park Brake Cables To Equalizer & Retainer
Courtesy of GENERAL MOTORS CORP.

1. Remove the park brake lever. Refer to **Park Brake Lever Assembly Replacement** .
2. Raise and support the vehicle. Refer to **Lifting and Jacking the Vehicle** in General Information.
3. Remove the RH muffler. Refer to **Muffler Replacement - Right** in Engine Exhaust.
4. Disconnect the rear park brake cables from the equalizer.
5. Disconnect the front park brake cable from the cable retainer.

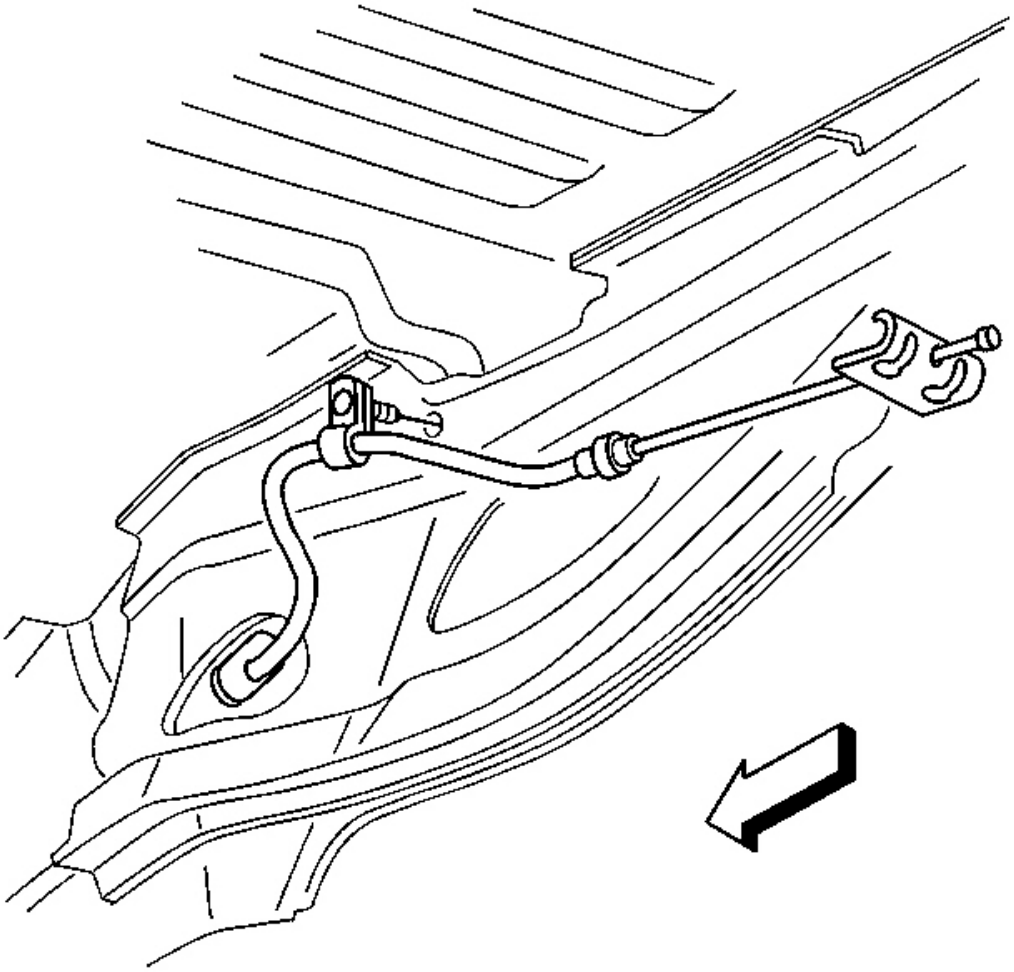

Fig. 18: Pass-Through Grommet & Front Bracket To Cable
Courtesy of GENERAL MOTORS CORP.

6. Remove the front park brake cable bracket from the tunnel.
7. Lower the vehicle.
8. Remove the front cable from the vehicle
9. Remove the pass-through grommet and front bracket from the cable.

Installation Procedure

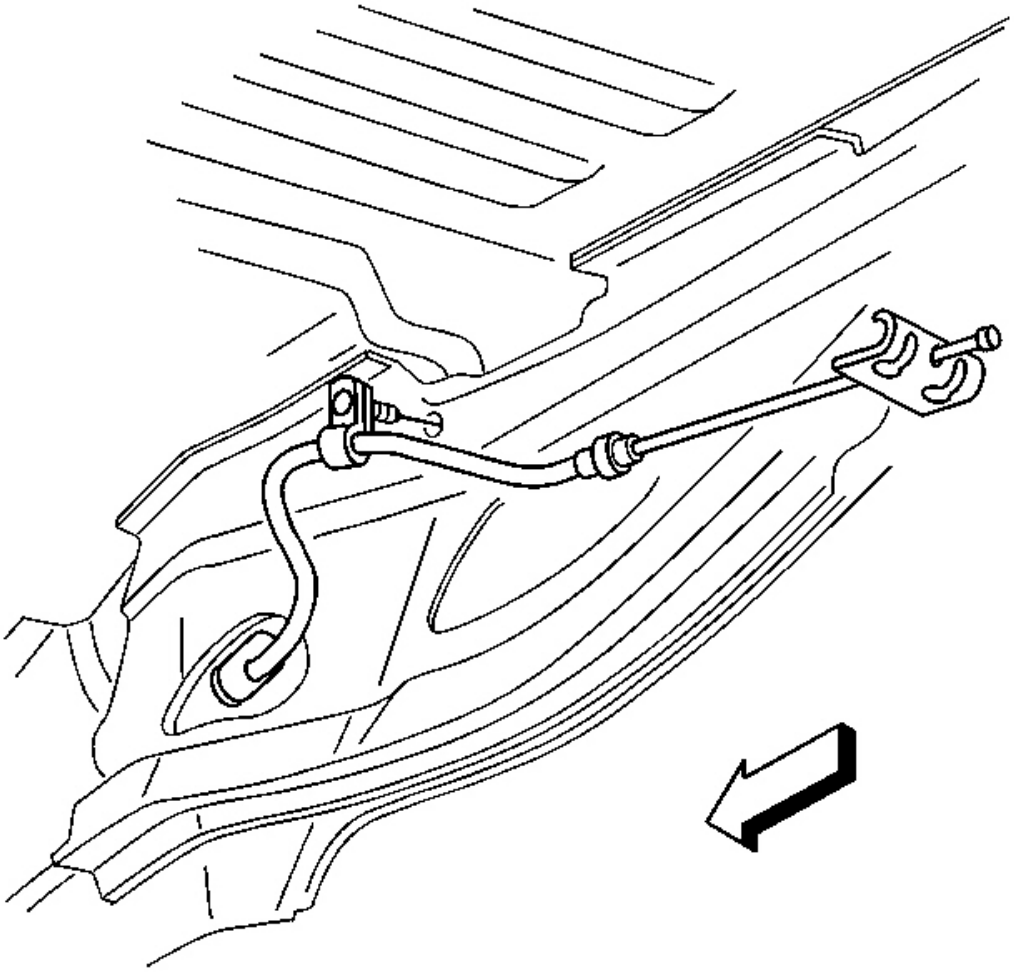

Fig. 19: Pass-Through Grommet & Front Bracket To Cable
Courtesy of GENERAL MOTORS CORP.

1. Install the front bracket and pass-through grommet to the cable.
2. Install the front park brake cable to the vehicle. Insure the pass-through grommet is properly installed.
3. Raise and support the vehicle. Refer to **Lifting and Jacking the Vehicle** in General Information.
4. Install the front park brake cable bracket to the tunnel.

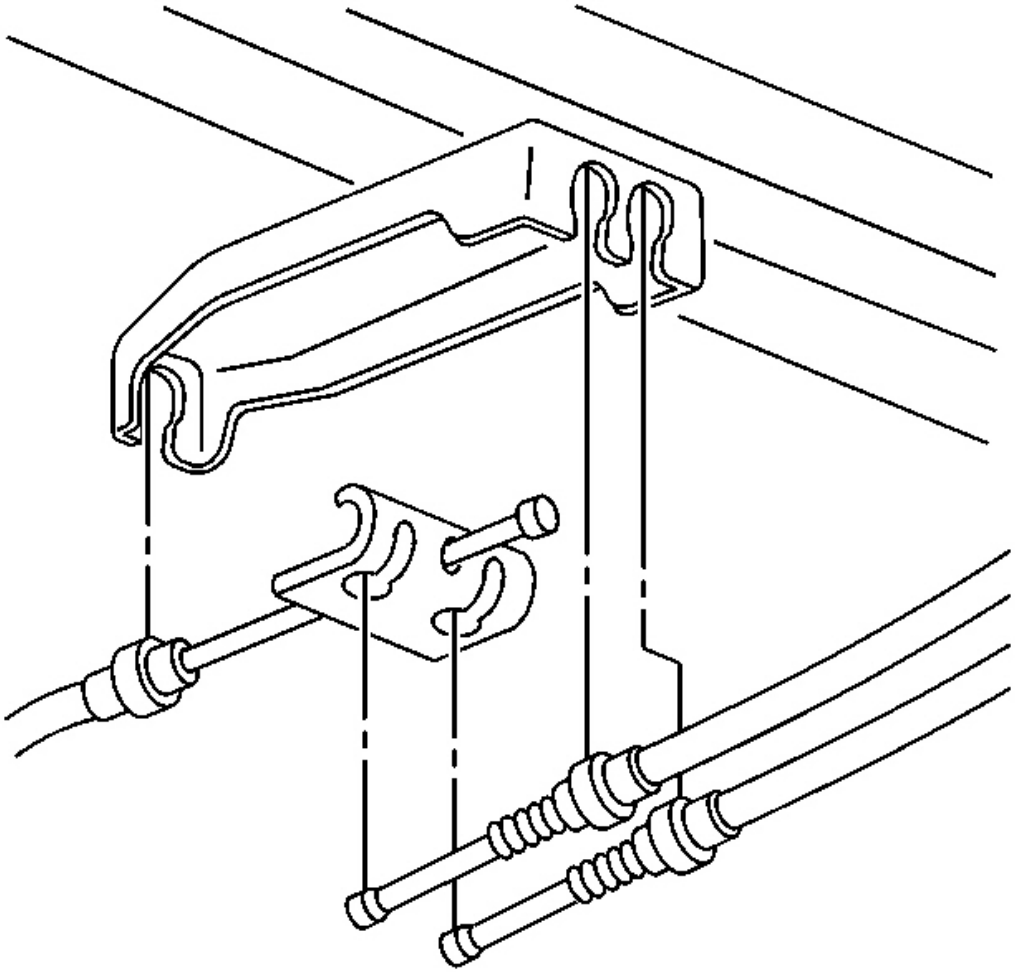

Fig. 20: Front & Rear Park Brake Cables To Equalizer & Retainer
Courtesy of GENERAL MOTORS CORP.

5. Connect the front park brake cable to the park brake cable retainer.
6. Connect the rear park brake cables to the equalizer.
7. Install the RH muffler. Refer to **Muffler Replacement - Right** in Engine Exhaust.
8. Lower the vehicle.
9. Install the park brake lever. Refer to **Park Brake Lever Assembly Replacement** .

PARK BRAKE CABLE REPLACEMENT - REAR

Removal Procedure

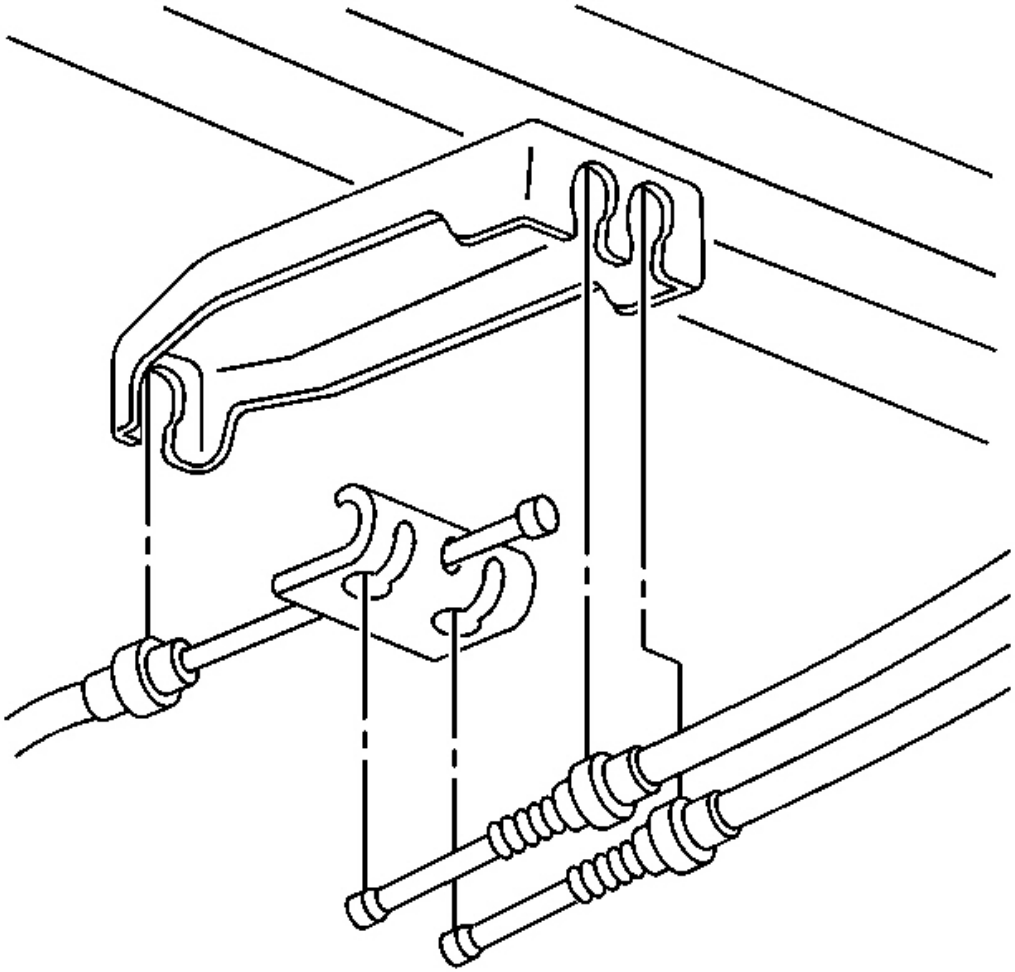

Fig. 21: Front & Rear Park Brake Cables To Equalizer & Retainer
Courtesy of GENERAL MOTORS CORP.

1. Disable the park brake automatic adjuster. Refer to **Disabling the Park Brake Cable Automatic Adjuster** .
2. Raise and support the vehicle. Refer to **Lifting and Jacking the Vehicle** in General Information.
3. Remove the RH muffler. Refer to **Muffler Replacement - Right** in Engine Exhaust.
4. Disconnect the rear park brake cable at the retainer and equalizer.

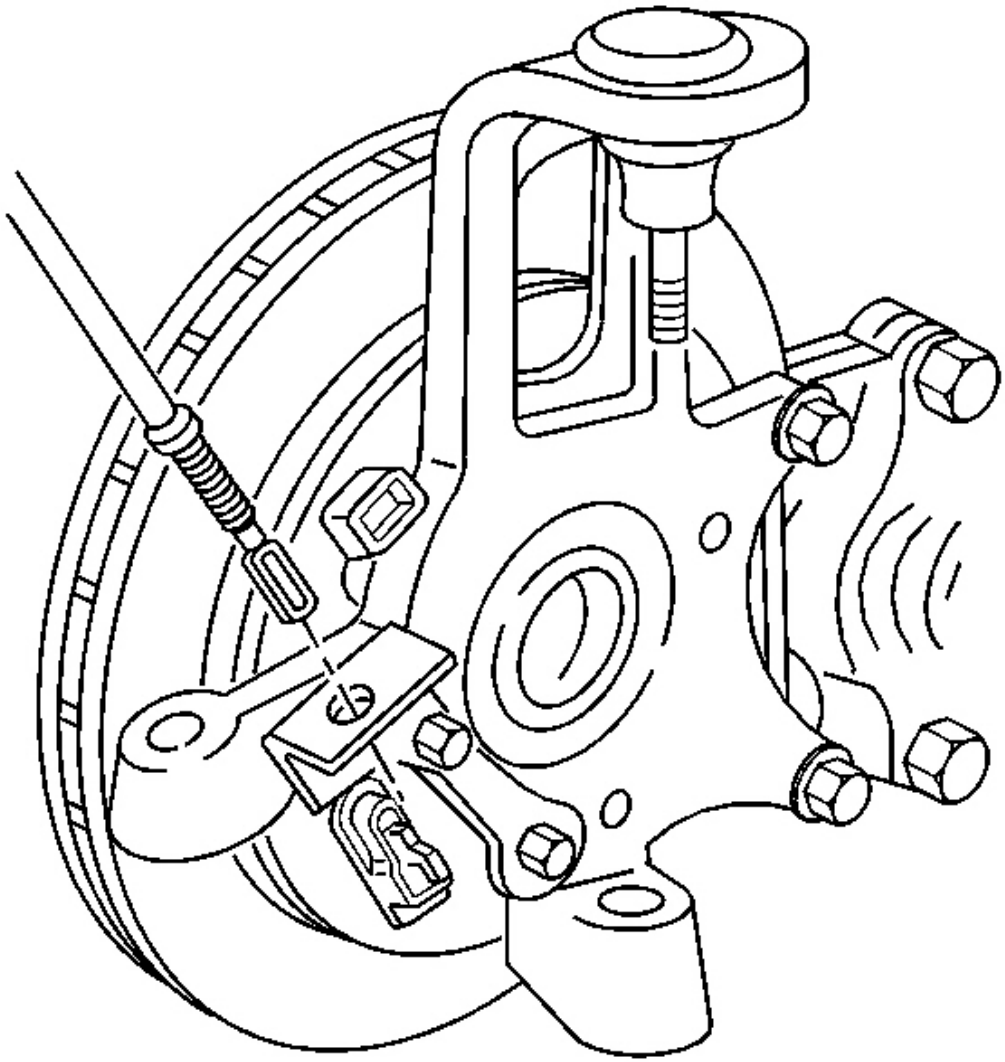

Fig. 22: Rear Park Brake Cable To Rear Suspension Mounting Bracket
Courtesy of GENERAL MOTORS CORP.

5. Remove the rear park brake cable from the rear suspension mounting bracket.
6. Remove the rear park brake cable retainer nut.
7. Remove the rear park brake cable from the vehicle.

Installation Procedure

1. Install the rear parking brake cable to the vehicle.
2. Install the rear parking brake cable retainer nut.

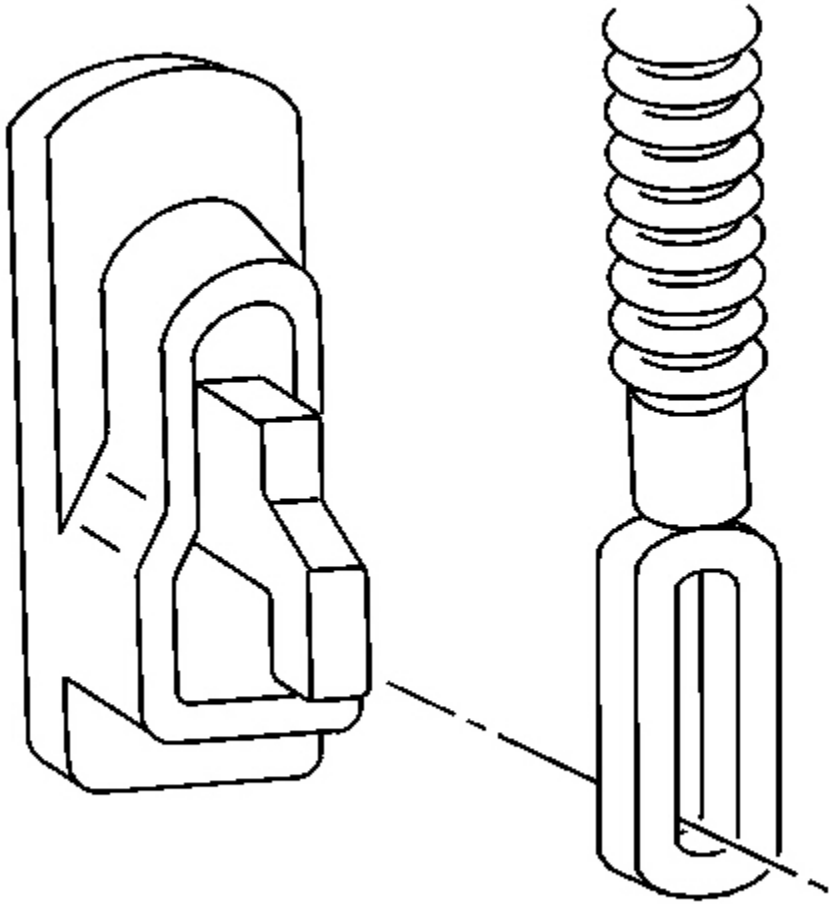

Fig. 23: Rear Park Brake Cable To Rear Suspension Mounting Bracket
Courtesy of GENERAL MOTORS CORP.

3. Connect the rear park brake cable to the rear suspension mounting bracket.

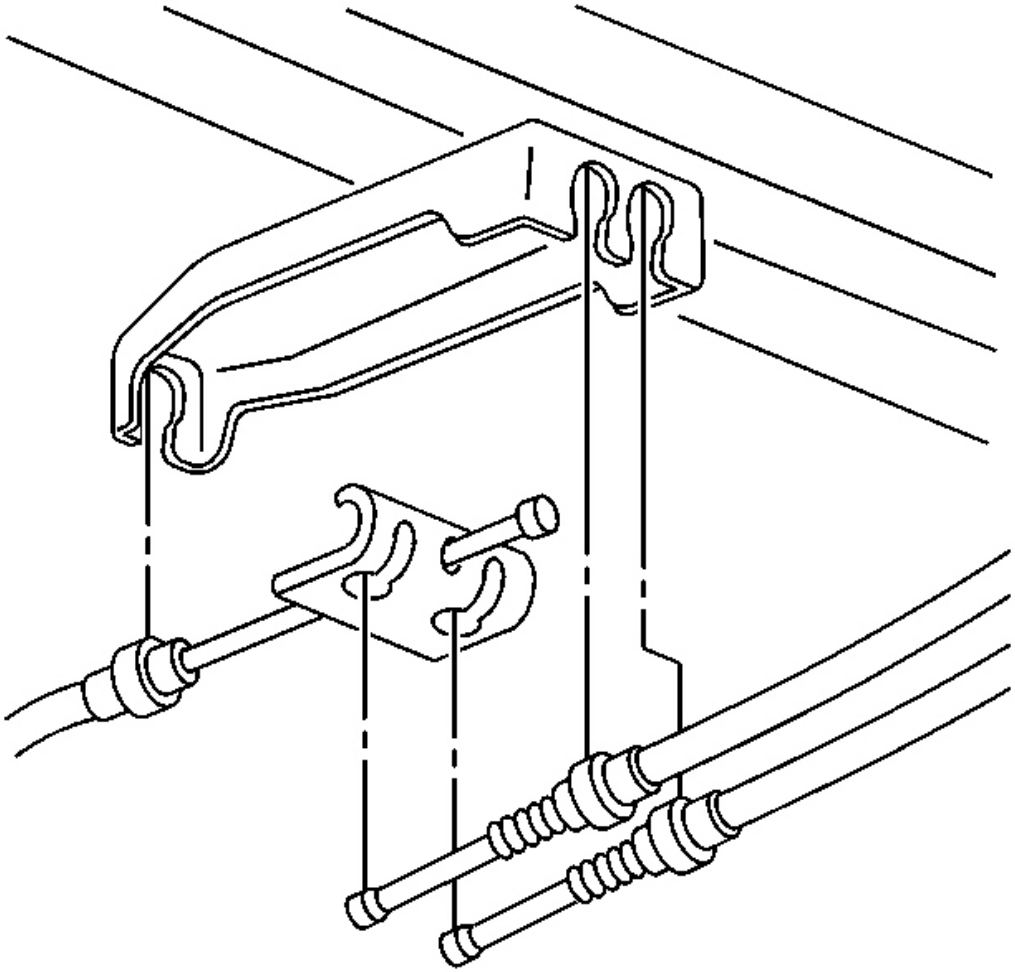

Fig. 24: Front & Rear Park Brake Cables To Equalizer & Retainer
Courtesy of GENERAL MOTORS CORP.

4. Connect the rear park brake cable to the retainer and equalizer.
5. Install the RH muffler. Refer to **Muffler Replacement - Right** in Engine Exhaust.
6. Lower the vehicle.
7. Enable park brake automatic adjuster. Refer to **Enabling the Park Brake Cable Automatic Adjuster** .

DISABLING THE PARK BRAKE CABLE AUTOMATIC ADJUSTER

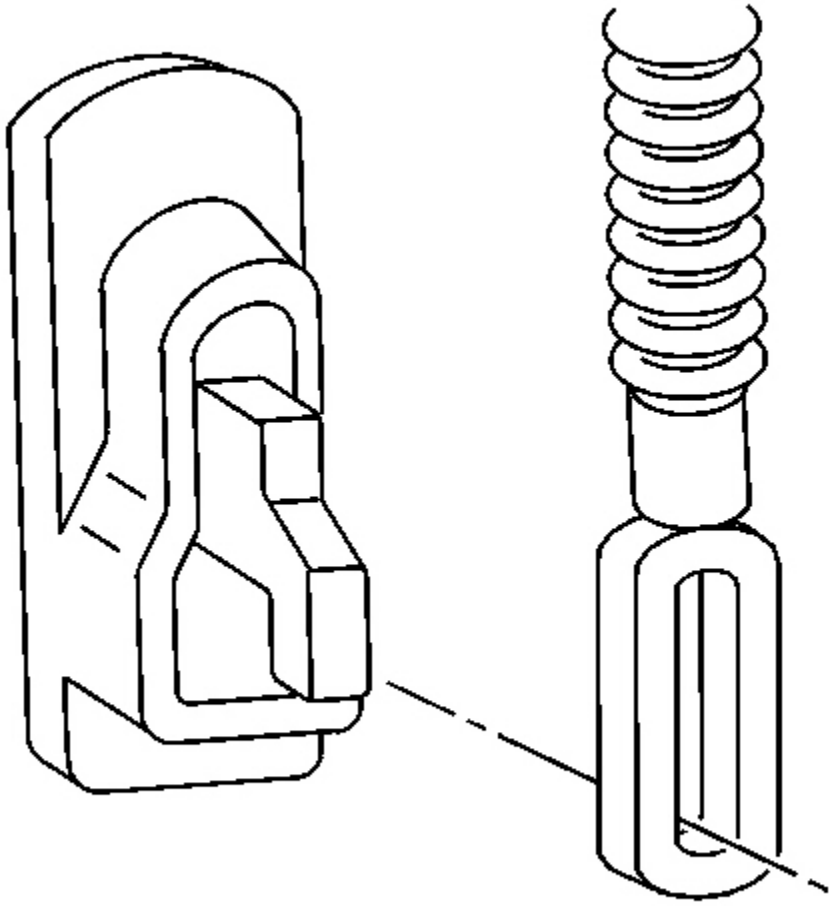

Fig. 25: Rear Park Brake Cable To Rear Suspension Mounting Bracket
Courtesy of GENERAL MOTORS CORP.

1. Raise and support the vehicle. Refer to **Lifting and Jacking the Vehicle** in General Information.
2. Remove the rear tire and wheel assembly. Refer to **Tire and Wheel Removal and Installation** in Tires and Wheels.
3. Disconnect the park brake cable from the left and right park brake actuators.
4. Lower the vehicle.
5. Reposition carpet away from park brake lever.

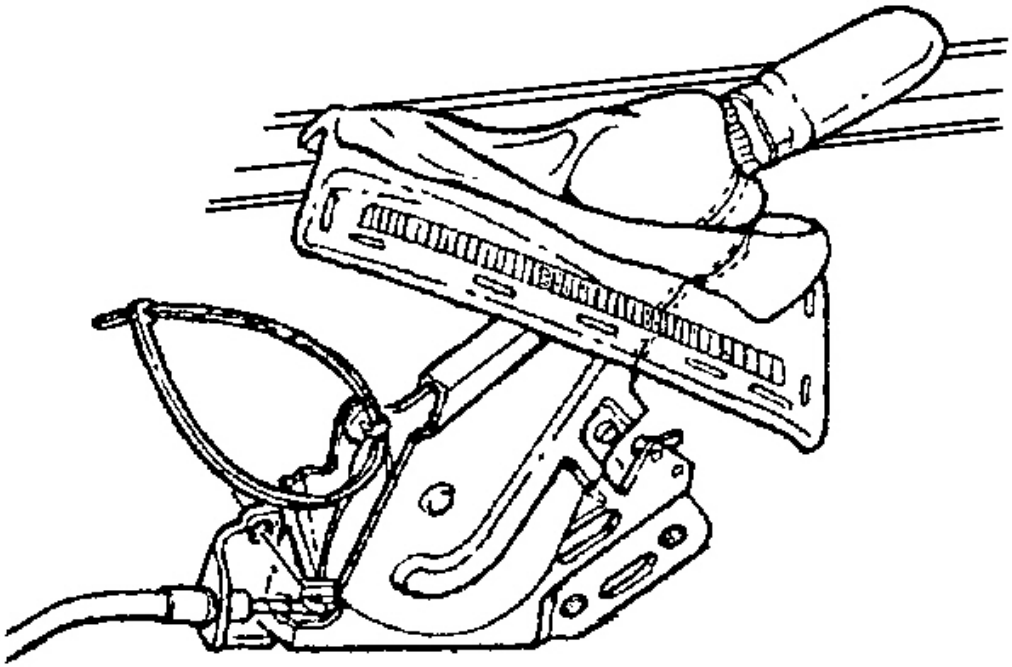

Fig. 26: Park Brake Cable At Rivet To Park Brake Lever
Courtesy of GENERAL MOTORS CORP.

6. With the aid of an assistant, pull the disconnected park brake cable downward until it is fully extended and insert a rivet, drill bit or cotter key through the holes in the park brake lever mechanism as they line up. Do not overextend the cable.

ENABLING THE PARK BRAKE CABLE AUTOMATIC ADJUSTER

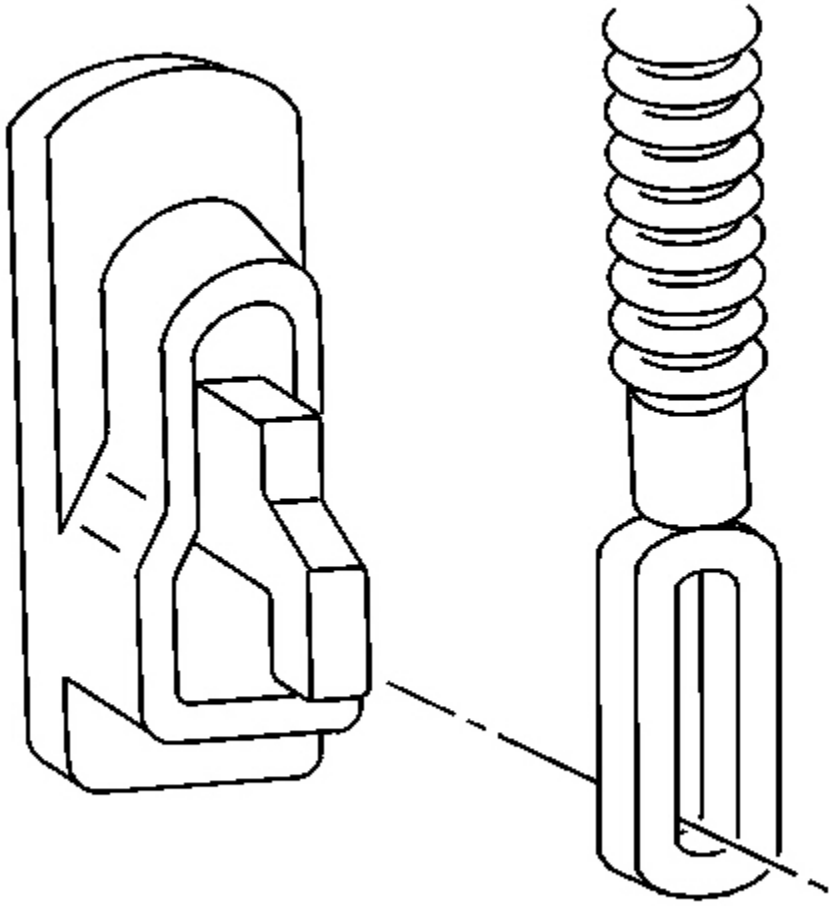

Fig. 27: Rear Park Brake Cable To Rear Suspension Mounting Bracket
Courtesy of GENERAL MOTORS CORP.

1. Raise and support the vehicle. Refer to **Lifting and Jacking the Vehicle** in General Information.
2. Remove the rear tire and wheel assembly. Refer to **Tire and Wheel Removal and Installation** in Tires and Wheels.
3. Install the park brake cable to the left and right park brake actuators.
4. Install the rear tire and wheel assembly. Refer to **Tire and Wheel Removal and Installation** in Tires and Wheels.
5. Lower the vehicle.

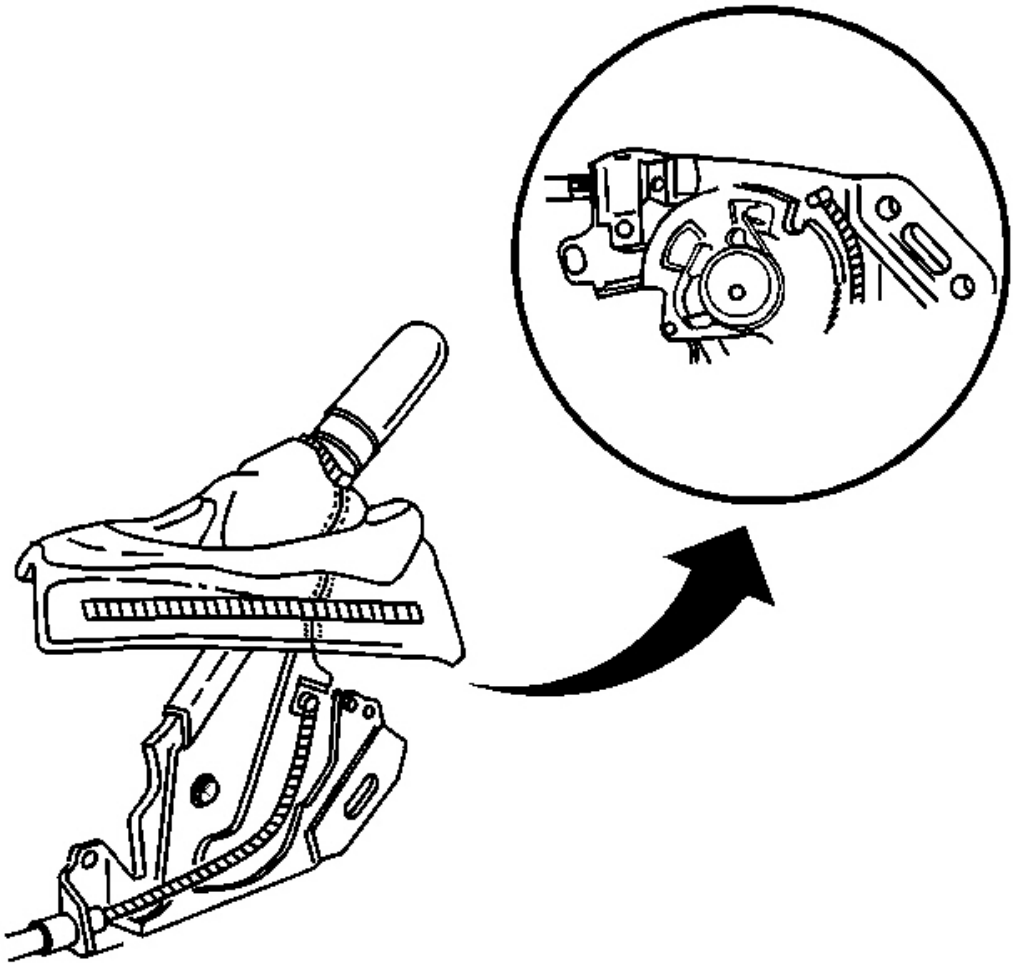

Fig. 28: Front Parking Brake Cable To Drive Sector & Park Brake Lever Assembly
Courtesy of GENERAL MOTORS CORP.

6. Reposition the carpet away from the parking brake lever.
7. Remove any rivet, drill bit or cotter key from the park brake lever.
8. Install the park brake cable to the park brake lever.
9. Install the carpet to its original position.
10. Cycle the park brake lever three times in order to obtain proper park brake cable tension.

PARK BRAKE ACTUATOR REPLACEMENT

Removal Procedure

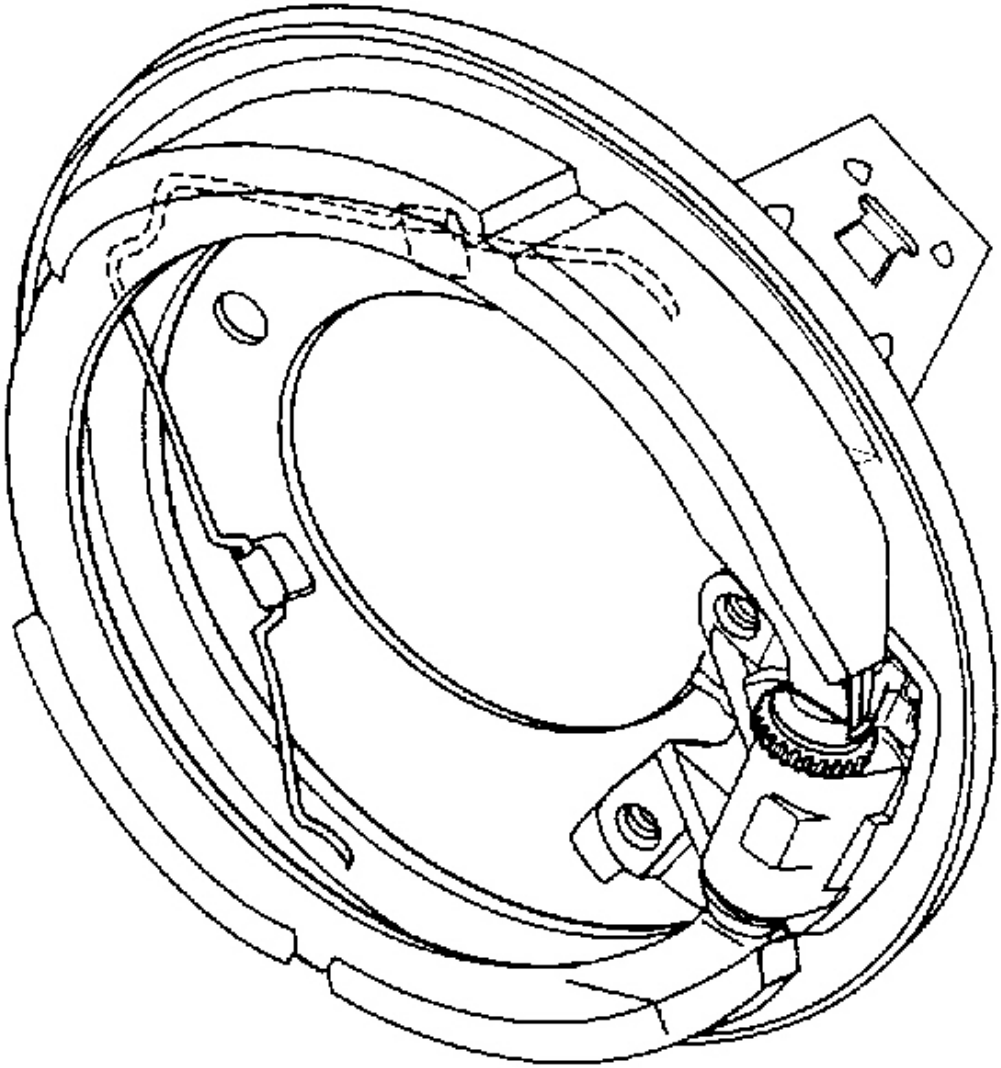

Fig. 29: View Of Drum Brake
Courtesy of GENERAL MOTORS CORP.

1. Remove the rear brake rotor. Refer to **Brake Rotor Replacement - Rear** in Disc Brakes.
2. Rotate the park brake adjuster nut until the bolt is in the closed position.
3. Remove the park brake shoe retaining spring.

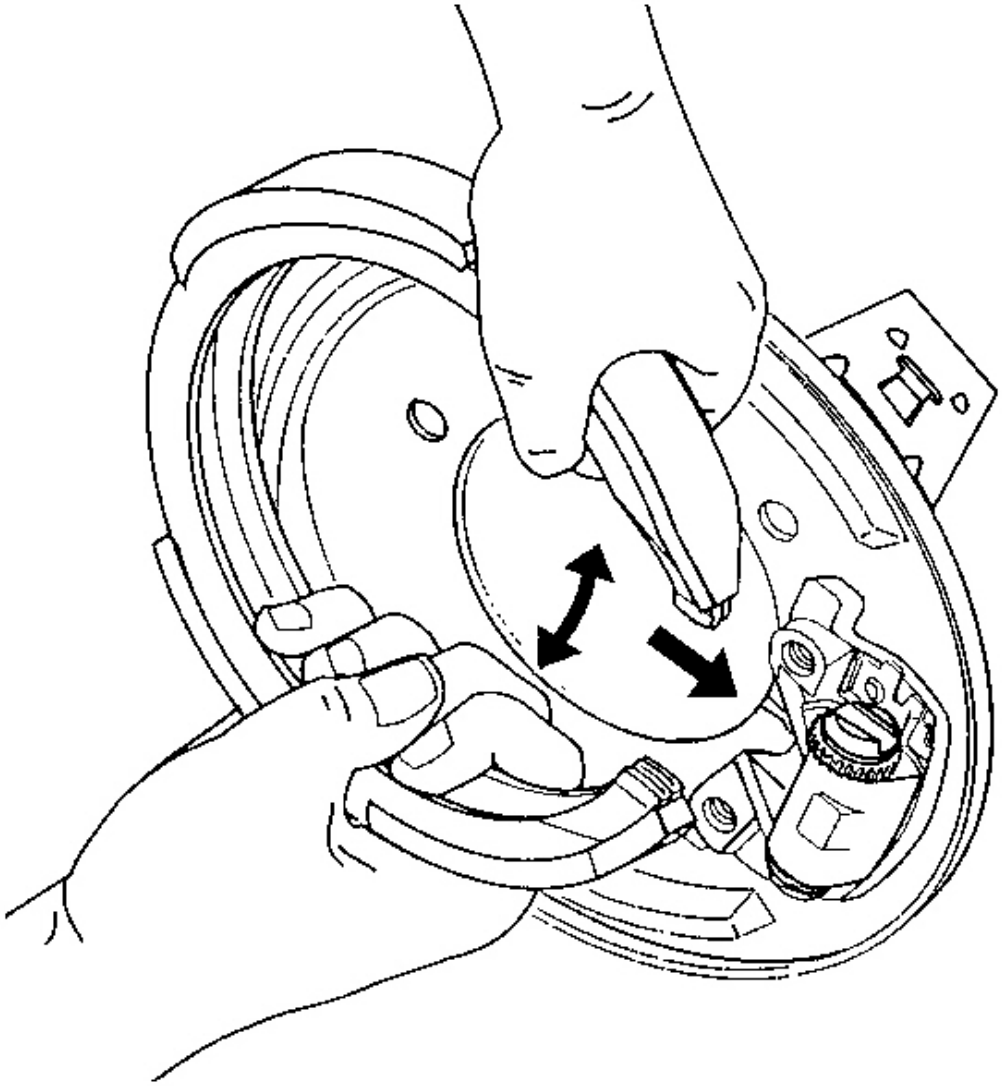

Fig. 30: Park Brake Shoe Assembly
Courtesy of GENERAL MOTORS CORP.

4. Remove the park brake shoe assembly by grasping the shoe and spreading slightly while pulling the shoe from the actuator assembly.

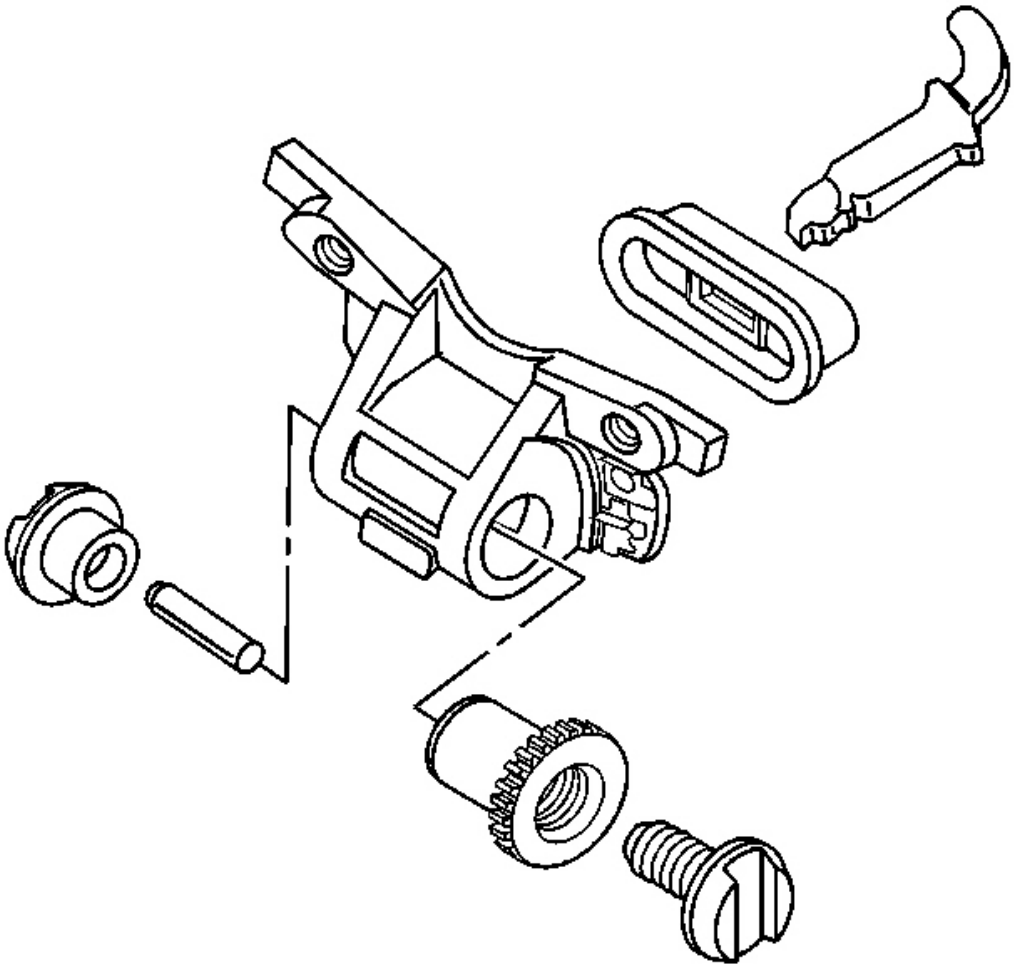

Fig. 31: Actuator Mounting Bolts
Courtesy of GENERAL MOTORS CORP.

5. Remove the two actuator mounting bolts.
6. Remove the actuator assembly from the dust shield.

Installation Procedure

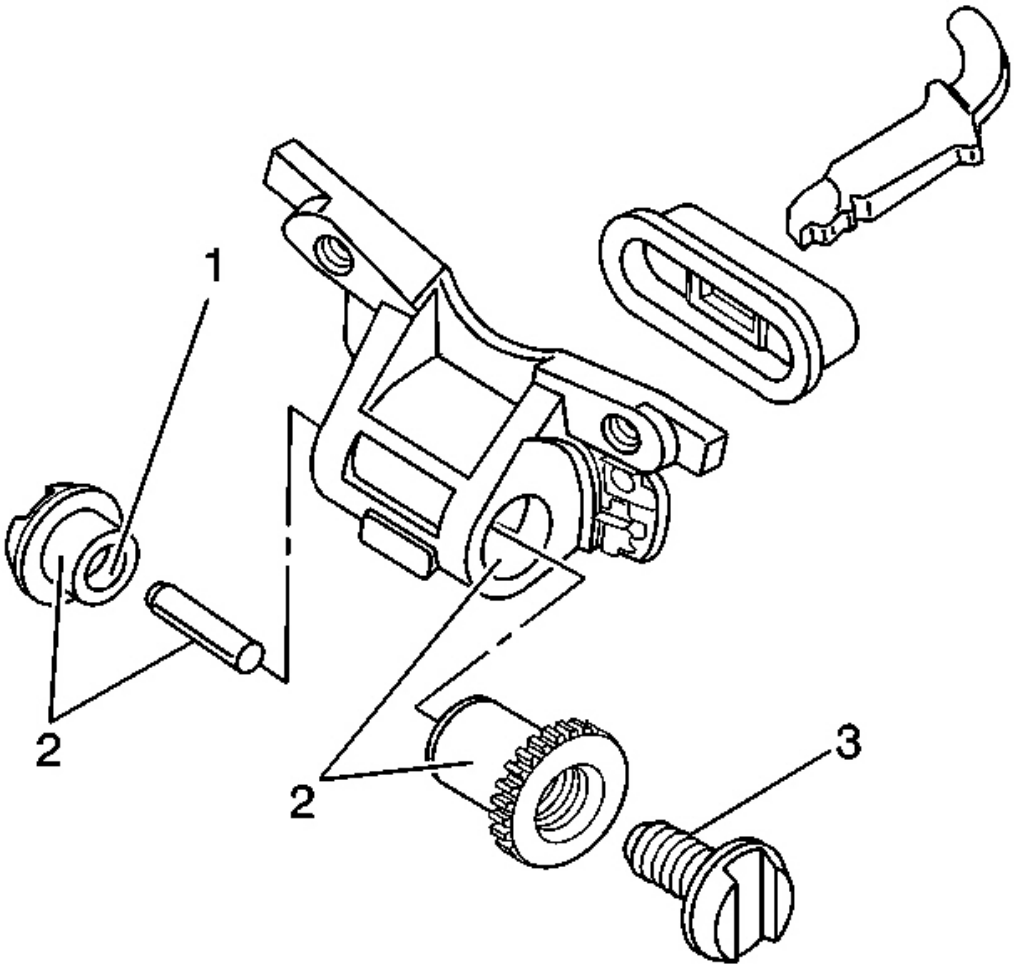

Fig. 32: Brake Caliper Bolt Shaft
Courtesy of GENERAL MOTORS CORP.

1. Apply high temperature, silicone lubricant to positions 1 and 2. Do not apply grease to the bolt threads (3).
2. Install the actuator to the dust shield.
3. Apply high temperature, silicone lubricant to the brake caliper bolt shaft. Do not lubricate the bolt threads.

NOTE: Refer to Fastener Notice in Cautions and Notices.

4. Install the actuator mounting bolts.

Tighten: Tighten the actuator mounting bolts to 70 N.m (52 lb ft)

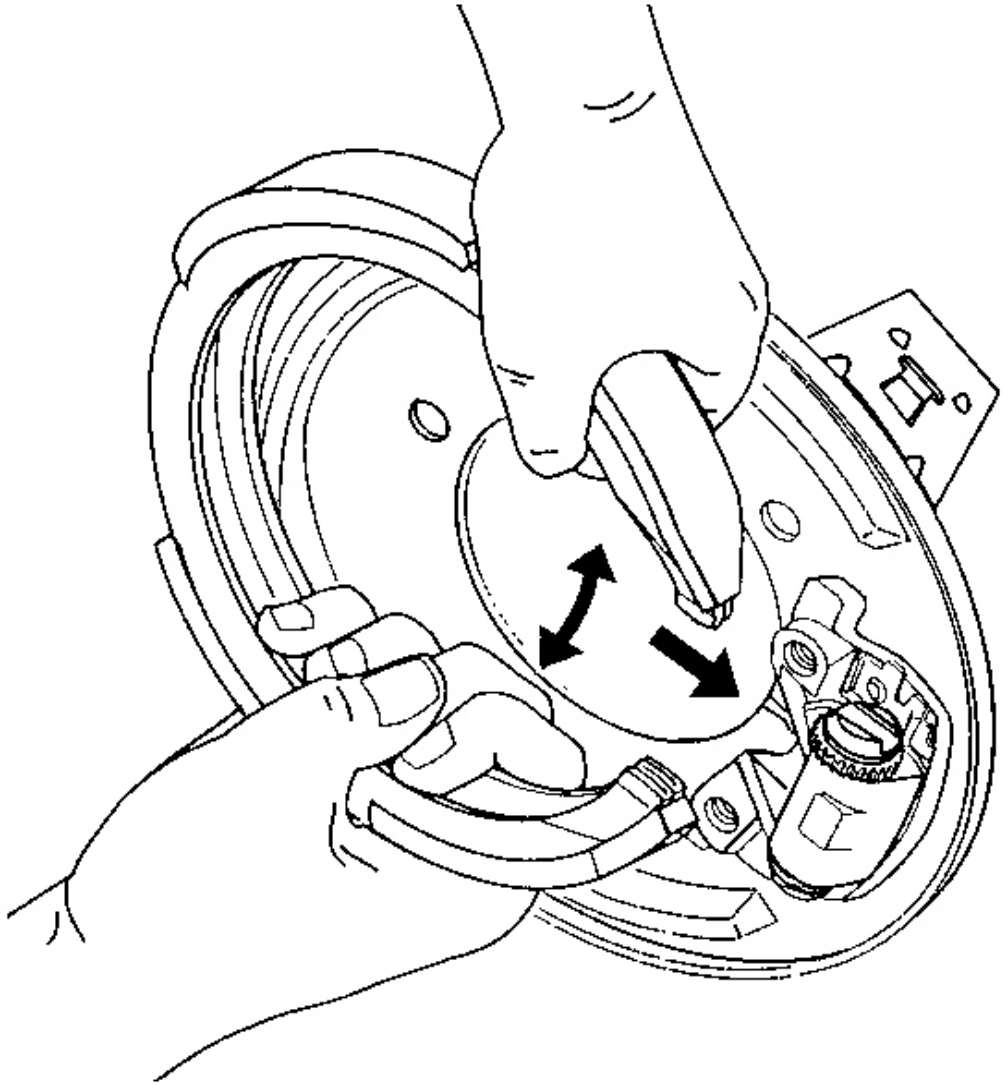

Fig. 33: Park Brake Shoe Assembly
Courtesy of GENERAL MOTORS CORP.

5. Install the park brake shoe assembly by grasping the shoe and spreading slightly while pulling the shoe over the actuator assembly.

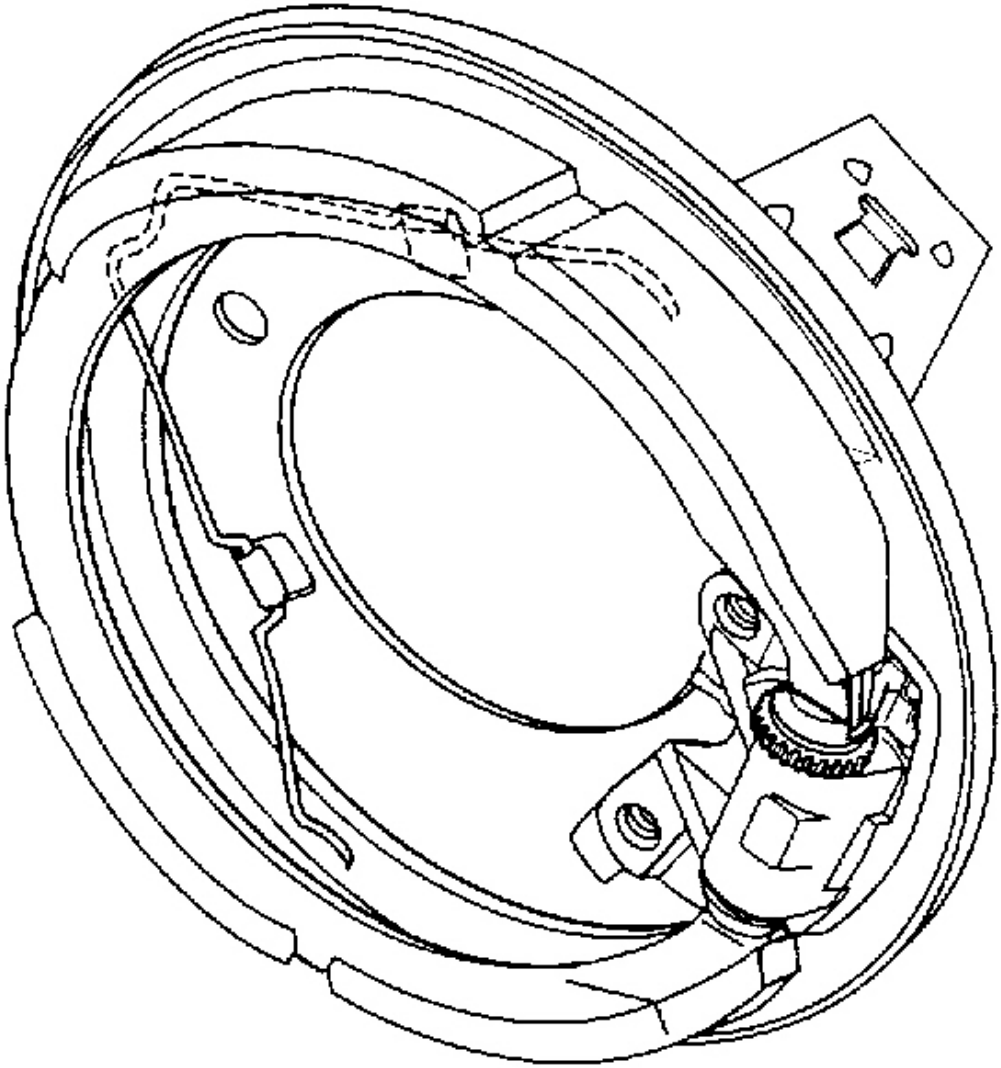

Fig. 34: View Of Drum Brake
Courtesy of GENERAL MOTORS CORP.

6. Install the park brake shoe retaining spring.
7. Adjust the park brake. Refer to **Park Brake Adjustment** .
8. Install the brake rotor. Refer to **Brake Rotor Replacement - Rear** in Disc Brakes.

PARK BRAKE ADJUSTMENT

Tools Required

J 21177-A Drum to Brake Shoe Clearance Gauge. See **Special Tools and Equipment** .

IMPORTANT: Park brake adjustment is not necessary after replacing the park brake lever or park brake cables. The park brake cables are tensioned automatically by cycling the park brake lever three times.

1. Apply and fully release the parking brake three times.
2. Verify that the parking brake lever releases completely.
3. Turn ON the ignition. Verify that the red BRAKE warning indicator lamp is off.
4. Turn OFF the ignition.
5. Raise and support the vehicle. Refer to **Lifting and Jacking the Vehicle** in General Information.
6. Remove the rear tire and wheel assemblies. Refer to **Tire and Wheel Removal and Installation** in Tires and Wheels.

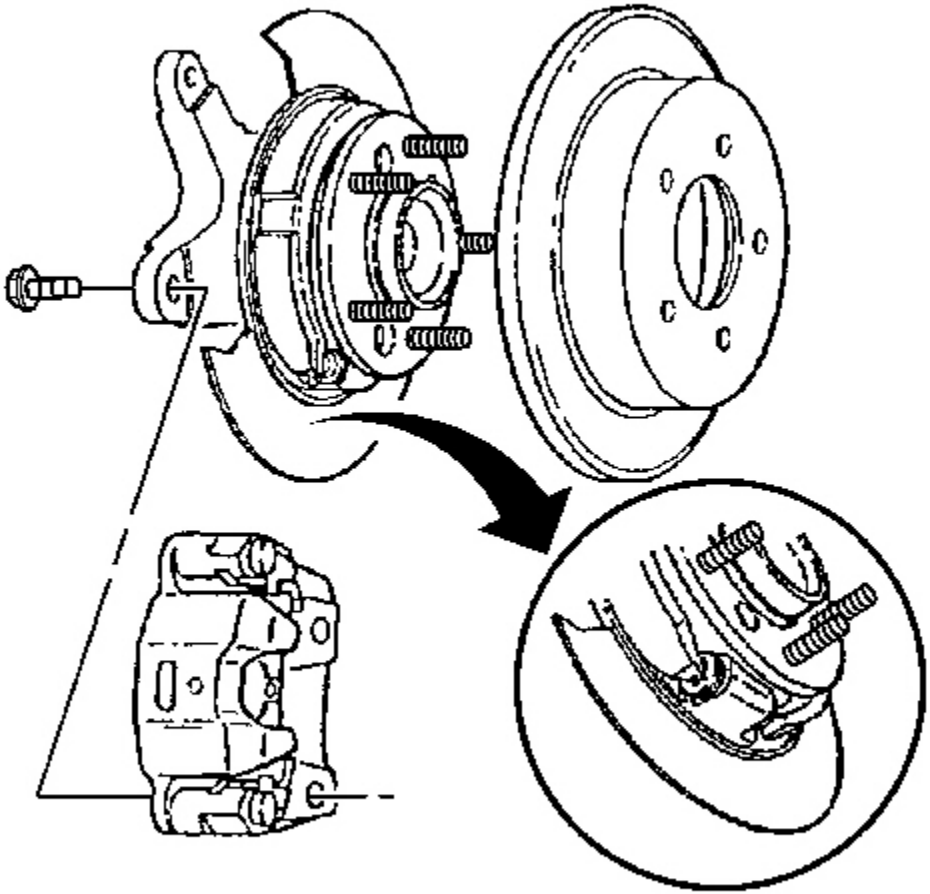

Fig. 35: Identifying Rear Brake Components
Courtesy of GENERAL MOTORS CORP.

IMPORTANT: Do not operate the park brake lever with the rear disc brake rotor removed.

7. Remove the rear disc brake rotors. Refer to **Brake Rotor Replacement - Rear** in Disc Brakes.

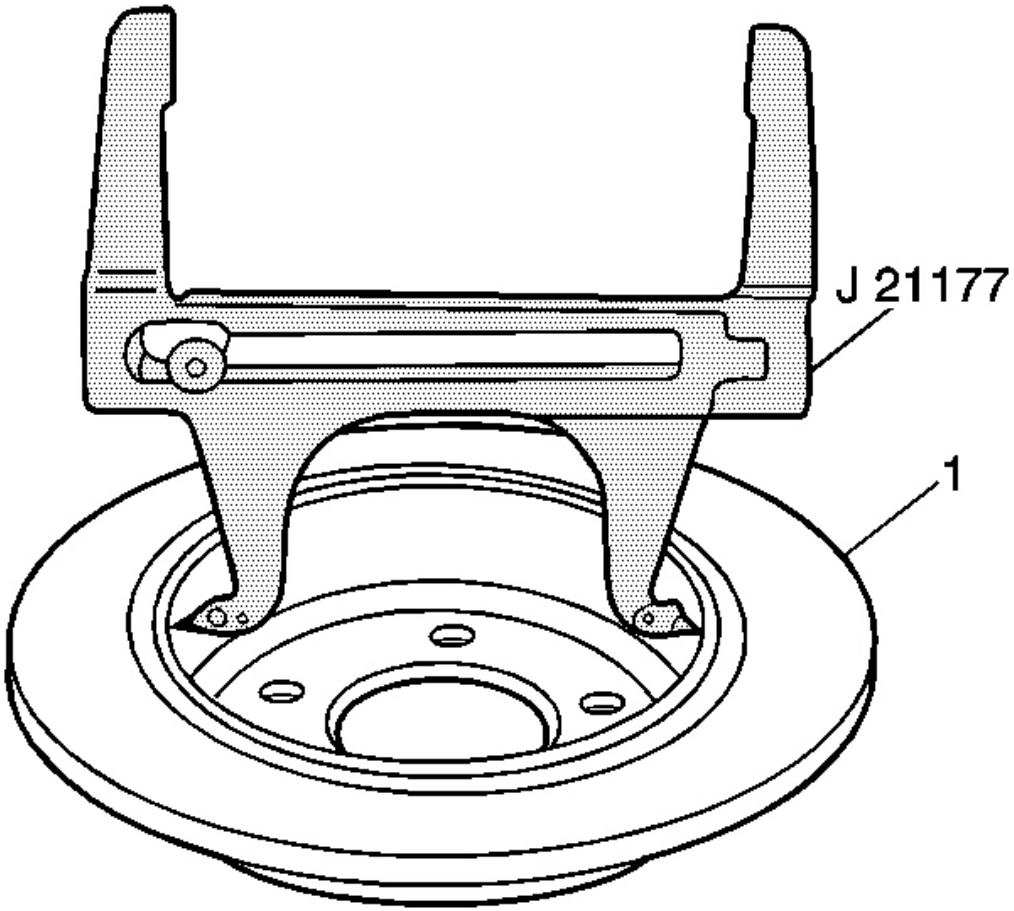

Fig. 36: Applying J 21177-A To Inside Of Brake Drum
Courtesy of GENERAL MOTORS CORP.

8. Place the inside measurement contacts of the**J 21177-A** at the widest point of the drum portion of the brake rotor (1). See **Special Tools and Equipment** .
9. Tighten the set screw on the tool in order to ensure the proper measurement when removing the tool from the drum.

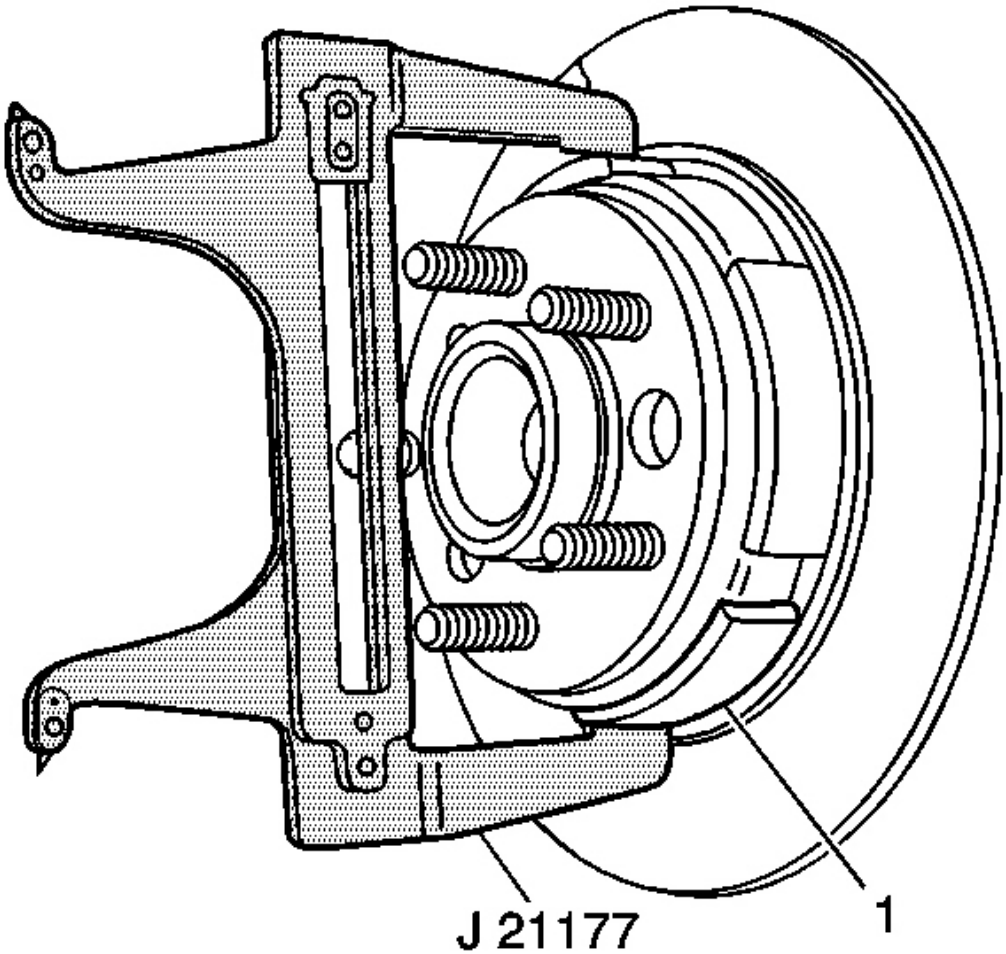

Fig. 37: Adjusting Parking Brake Shoes Using J 21177-A
Courtesy of GENERAL MOTORS CORP.

IMPORTANT: If the gap between the adjuster nut and the adjuster screw exceeds 5 mm (0.25 in) during the adjustment procedure, the park brake shoe must be replaced.

10. Position the outside measurement contacts of the **J 21177-A** over the park brake shoe (1) at the widest point. See **Special Tools and Equipment** .
11. Adjust the park brake shoe-to-drum clearance by rotating the adjustment nut on the park brake actuator.

    Specification: 0.38 mm (0.015 in)

12. Install the rear brake rotors. Refer to **Brake Rotor Replacement - Rear** in Disc Brakes.
13. Install the rear tire and wheel assemblies. Refer to **Tire and Wheel Removal and Installation** in Tires and Wheels.
14. Apply and release the park brake lever three times.
15. Apply the park brake lever. Inspect the rotation of the rear wheels:
    - The wheels should not rotate forward.
    - The wheels should drag or not rotate rearward.
16. If the rear tire and wheel assemblies rotate forward or do not exhibit drag rearward, repeat the adjustment procedure.
17. Release the parking lever. Verify that the wheels rotate freely
18. Lower the vehicle

DESCRIPTION AND OPERATION

PARK BRAKE SYSTEM DESCRIPTION AND OPERATION

System Component Description

The park brake system consists of the following:

Park Brake Lever Assembly

Receives and transfers park brake system apply input force from driver to park brake cable system. Releases applied park brake system when the lever is returned to the at-rest rest position.

Park Brake Cables

Transfers input force received from park brake lever, through park brake cable equalizer, to park brake apply lever.

Park Brake Cable Equalizer

Evenly distributes input force to both the left and right park brake units. An auto adjust spring is used to remove the slack in the park brake cables.

Park Brake Actuator/Adjuster

Uses multiplied input force from apply lever via the cables to expand park brake shoe toward the friction surface of the drum-in-hat portion of the rear brake rotor. Threaded park brake actuators/adjusters are also used to control clearance between the park brake shoe and the friction surface of the drum-in-hat portion of the rear brake rotor.

Park Brake Shoe (Rear Disc, Drum-In-Hat System)

Applies mechanical output force from park brake actuator/adjuster to friction surface of the drum-in-hat portion of the rear brake rotor.

System Operation

Park brake apply input force is received by the park brake lever assembly being raised, transferred and evenly distributed, through the park brake cables and the park brake cable equalizer, to the left and right park brake apply levers. The park brake apply levers multiply and transfer the apply input force to the park brake actuators/adjusters which expand the park brake shoe toward the friction surface of the drum-in-hat portion of the rear brake rotor in order to prevent the rotation of the rear tire and wheel assemblies. The park brake lever assembly releases an applied park brake system when the lever is returned to the at-rest rest position.

SPECIAL TOOLS AND EQUIPMENT

SPECIAL TOOLS

Special Tools

Illustration	Tool Number/ Description
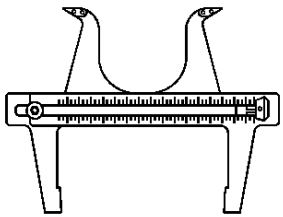	J 21177-A Drum to Brake Shoe Clearance Gauge