SPECIFICATIONS

FASTENER TIGHTENING SPECIFICATIONS

Fastener Tightening Specifications

Application	Specification	
	Metric	English
Center Rail to Balance Link Bolt	23 N.m	17 lb ft
Center Rail to Rear Side Rail Screw	19 N.m	14 lb ft
Clock Spring Nut	4 N.m	35 lb in
Control Link Bracket Screws	13 N.m	10 lb ft
Elastic Strap Attaching Screws	2 N.m	18 lb in
Folding Top Mounting Bolts	25 N.m	18 lb ft
Folding Top Stowage Lid Hinge to Body Nuts	32 N.m	24 lb ft
Folding Top Stowage Lid Hinge to Lid Bolts	25 N.m	18 lb ft
Folding Top Stowage Lid Latch Bolts	10 N.m	89 lb in
Folding Top Stowage Lid Striker Bolts	10 N.m	89 lb in
Glare Cover Screws	2 N.m	18 lb in
Headliner Attaching Screws	2 N.m	18 lb in
Latch Handle Inboard Bolt	18 N.m	13 lb ft
Latch Handle Outboard Bolt	18 N.m	13 lb ft
Main Control Link Bracket to Roof Bow Screws	13 N.m	10 lb ft
Main Control Link Rod End Screw	15 N.m	11 lb ft
Main Control Link to Center Rail Bolt	20 N.m	15 lb ft
Main Control Link to Side Rail Bolt	20 N.m	15 lb ft
Number Five Bow Weatherstrip Nuts	4 N.m	35 lb in
Number One Bow to Front Rail Nuts	14 N.m	10 lb in
Number One Bow to Side Rail Nuts	14 N.m	10 lb in
Rear Side Rail Retainer Screws	4 N.m	35 lb in
Rear Side Rail to Number Five Bow Bracket Screws	4 N.m	35 lb in
Rod End to Number Five Bow	15 N.m	11 lb ft
Roof Bow to Main Control Link Bracket Screws	13 N.m	10 lb ft
Roof Front Latch Handle Bolts	13 N.m	10 lb ft
Roof Front Latch Handle Striker Bolts	10 N.m	89 lb in
Roof Rear Latch Bolts	10 N.m	89 lb in
Roof Rear Latch Cover Screws	3 N.m	27 lb in
Roof Rear Locator Bracket Bolts	50 N.m	37 lb ft

Roof Rear Locator Pins	25 N.m	18 lb ft
Roof Rear Locator to Locator Bracket Bolts	10 N.m	89 lb in
Roof Rear Striker Bolts	10 N.m	89 lb in
Roof Side Rail Weatherstrip Retainer Screws	4 N.m	35 lb in
Roof Side Weatherstrip Screws	4 N.m	35 lb in
Seal Compression Panel Screws	3 N.m	27 lb in
Seat Belt Upper Guide Bolt	41 N.m	30 lb ft
Seat Belt Upper Guide Nut	42 N.m	31 lb ft
Side Rail Weatherstrip Retainer Screw	4 N.m	35 lb in
Side Rail Weatherstrip Screw	4 N.m	35 lb in
Side Weatherstrip Retainer Screw	4 N.m	35 lb in
Side Weatherstrip Screw	4 N.m	35 lb in
Stowage Lid Extension Bolts	4 N.m	35 lb in
Stowage Lid Hinge Bolts	25 N.m	18 lb ft
Stowage Lid Latch Bolts	10 N.m	89 lb in
Stowage Lid Striker Bolts	10 N.m	89 lb in
Sunshade Retainer Screw	2 N.m	18 lb in
Window Support Strap Screws	2 N.m	18 lb in

REPAIR INSTRUCTIONS

FOLDING TOP LATCH ADJUSTMENT

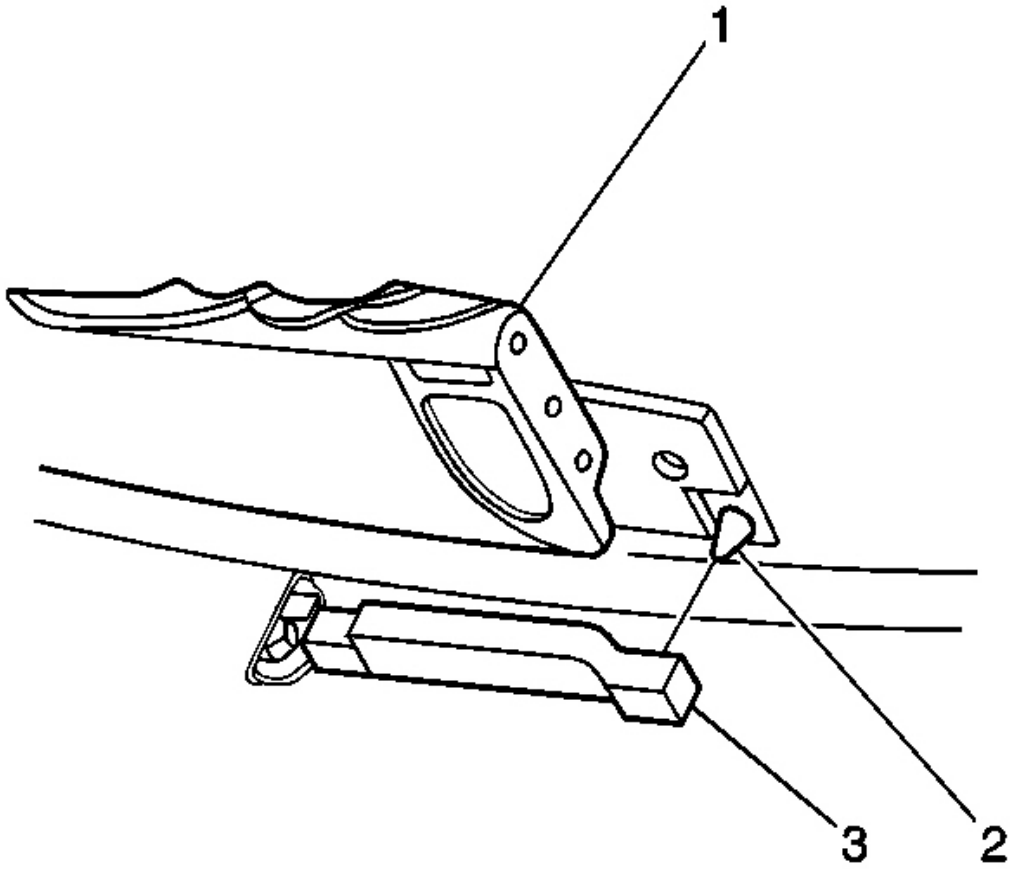

Fig. 1: Latch Handle At Striker
Courtesy of GENERAL MOTORS CORP.

1. Adjust the latch handle (1) for proper fit, by raising or lowering the striker (3).

   IMPORTANT: You should not have to loosen the striker screws.

2. Use a nylon mallet and a drift to punch the striker (3). Punch upward to loosen the striker or punch downward to tighten the striker.

   NOTE: Refer to Fastener Notice in Cautions and Notices.

3. Inspect the striker screws for proper torque.

   Tighten: Tighten the striker screws 10 N.m (89 lb in).

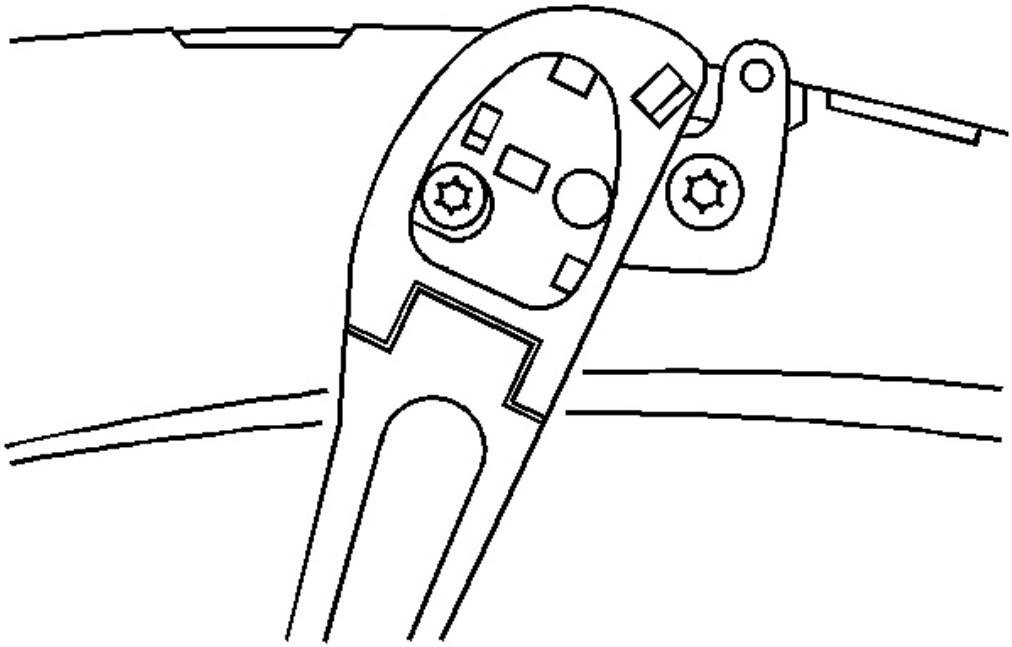

Fig. 2: Latch Handle Bolts
Courtesy of GENERAL MOTORS CORP.

4. Loosen the latch handle bolts.

IMPORTANT: Assure that the latch handle base is parallel to the striker.

5. Reposition the latch handle forward or rearward. To avoid squeaks and rattles maintain a minimum of 2 mm (0.08 in) clearance between latch handle and the latch striker.
6. Tighten the latch handle bolts.

Tighten: Tighten the bolts to 13 N.m (10 lb ft).

FOLDING TOP LATCH LEVER REPLACEMENT

Removal Procedure

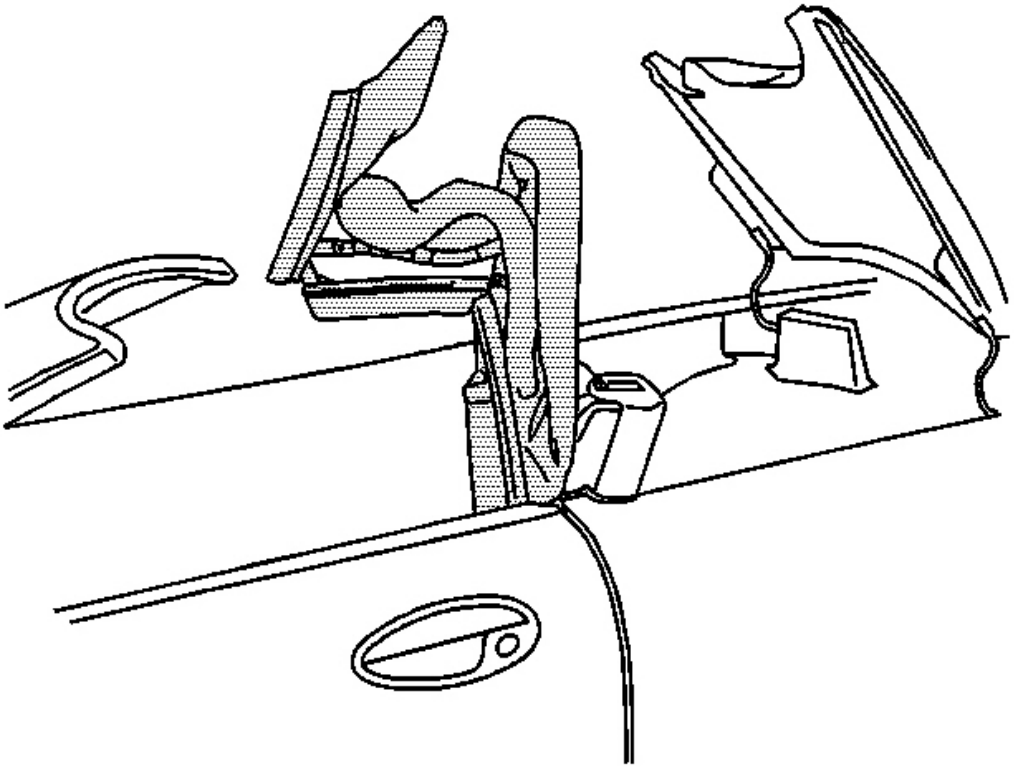

Fig. 3: Folding Top With The #1 Bow And The #5 Bow Up
Courtesy of GENERAL MOTORS CORP.

1. Position the folding top with the #1 bow and the #5 bow up.

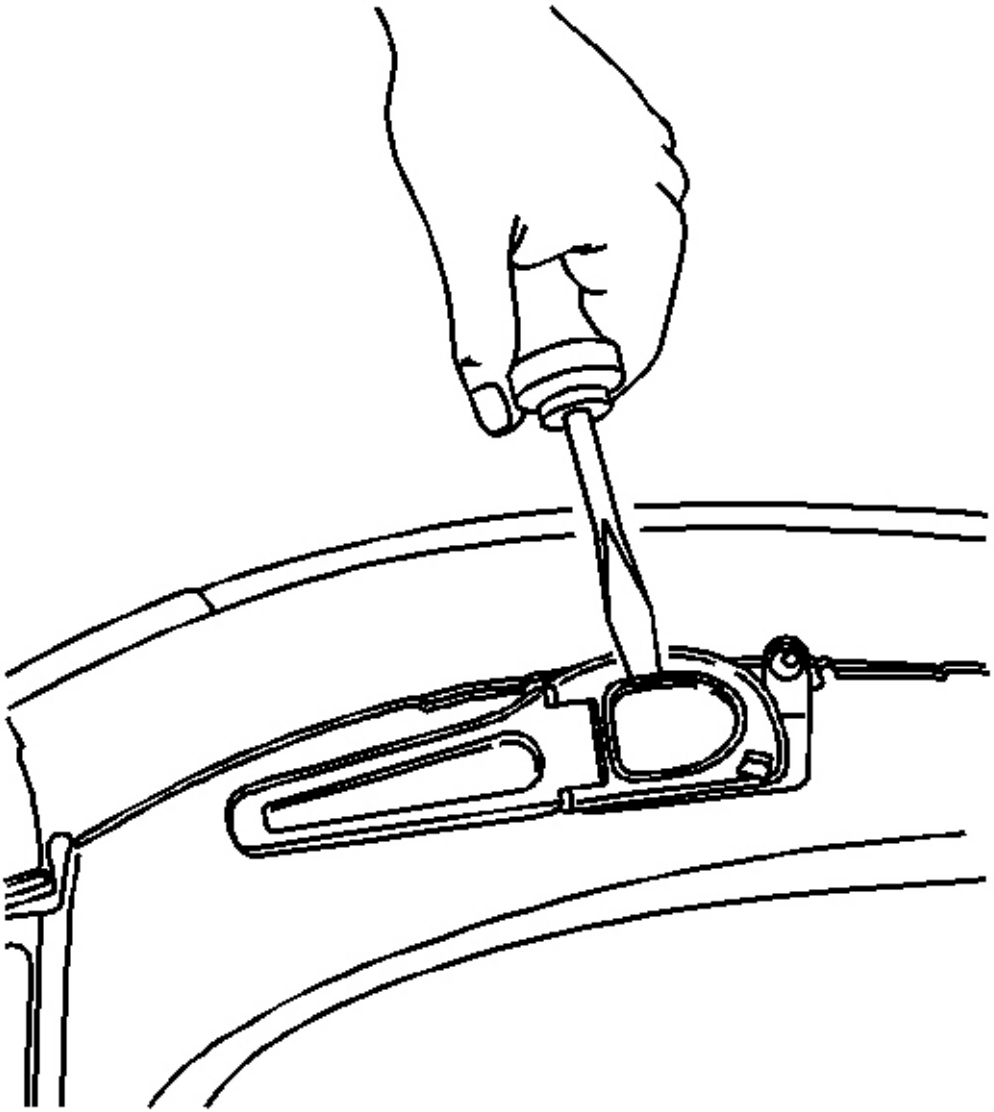

Fig. 4: Trim Cover At Latch
Courtesy of GENERAL MOTORS CORP.

2. Use a grease pencil to mark the location of the latch to be removed.
3. Remove the trim cover from the latch

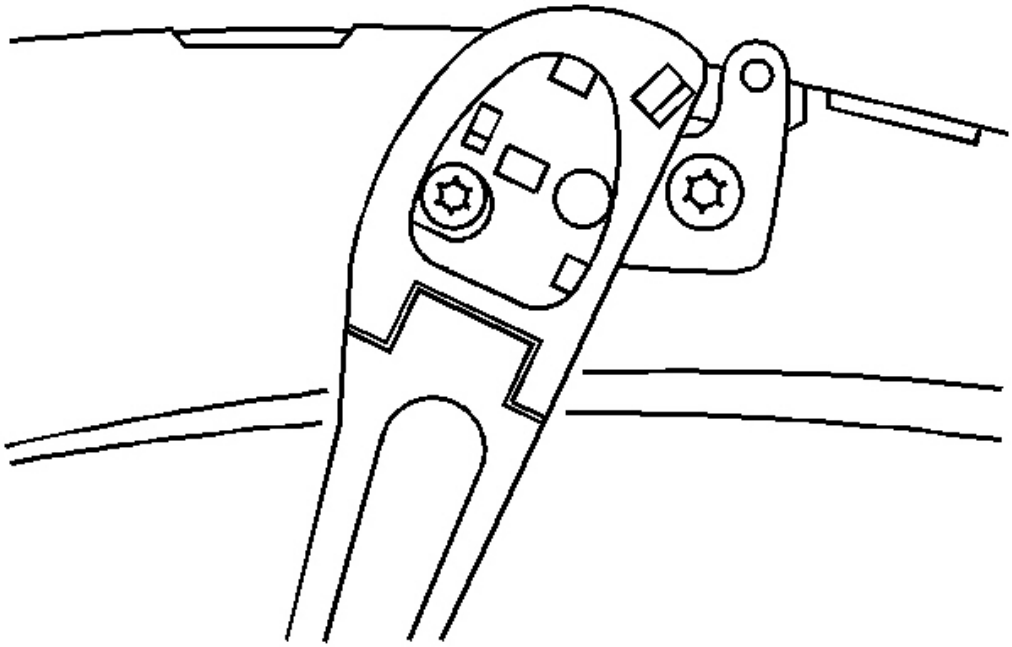

Fig. 5: Latch Handle Bolts
Courtesy of GENERAL MOTORS CORP.

4. Rotate the handle to align the hole with the bolt.

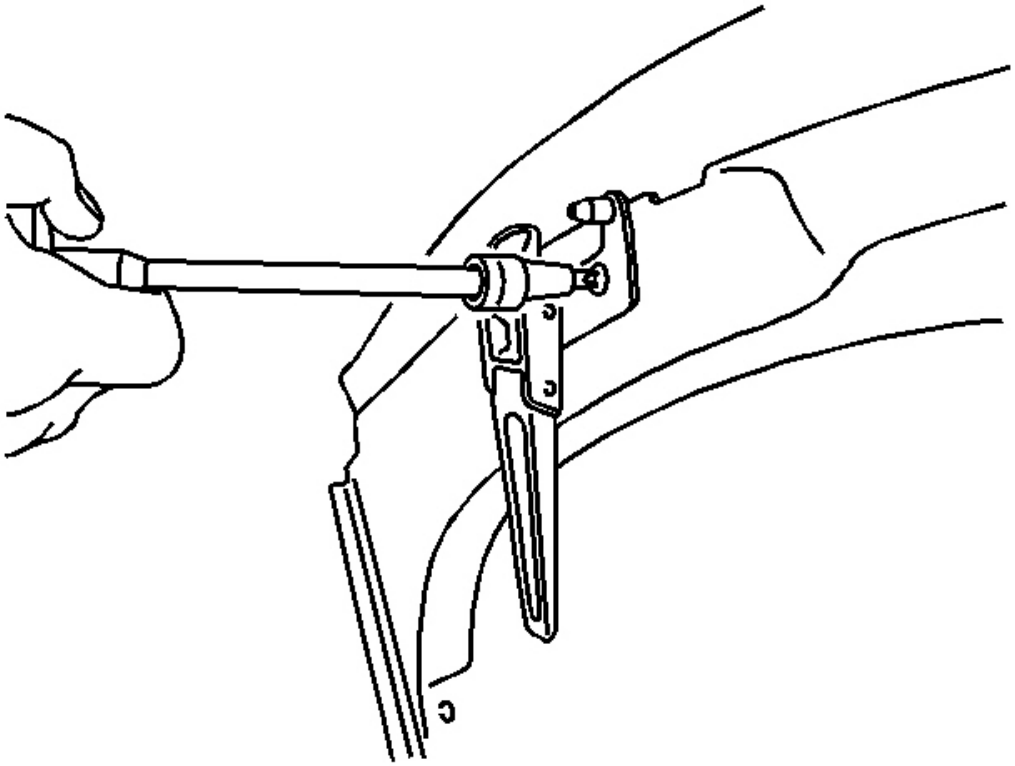

Fig. 6: Bolts & Latch Handle Assembly
Courtesy of GENERAL MOTORS CORP.

IMPORTANT: Do NOT allow the right anchor plate to drop inside the top.

5. Remove the bolts and the latch handle assembly. Before removing the second bolt on the right side, pivot the handle to expose the bolt hole. Loosely replace the bolt to hold the anchor plate in position.

Installation Procedure

IMPORTANT: When you install a new latch, leave the spacing collar on the latch handle to achieve a minimum of 2 mm (0.08 in) clearance to the striker.

1. Remove the latch handle trim cover, if installed.
2. Align the latch to the marks on the roof.
3. Loosely install the latch handle to the roof.
4. Rotate the handle to access the inboard mounting bolt.

- When installing a latch handle with a spacing collar installed, apply forward pressure to the handle while tightening the mounting bolts.
- If the spacing collar is not available, position the latch handle with a minimum of 2 mm (0.08 in) clearance to the latch.

NOTE: Refer to Fastener Notice in Cautions and Notices.

5. Install the inboard bolt.

   Tighten: Tighten the bolt to 18 N.m (13 lb ft).

6. Rotate the handle.
7. Install the outboard bolt.

   Tighten: Tighten the bolt to 18 N.m (13 lb ft).

8. Remove the spacing collar.
9. Completely engage the latch handle.

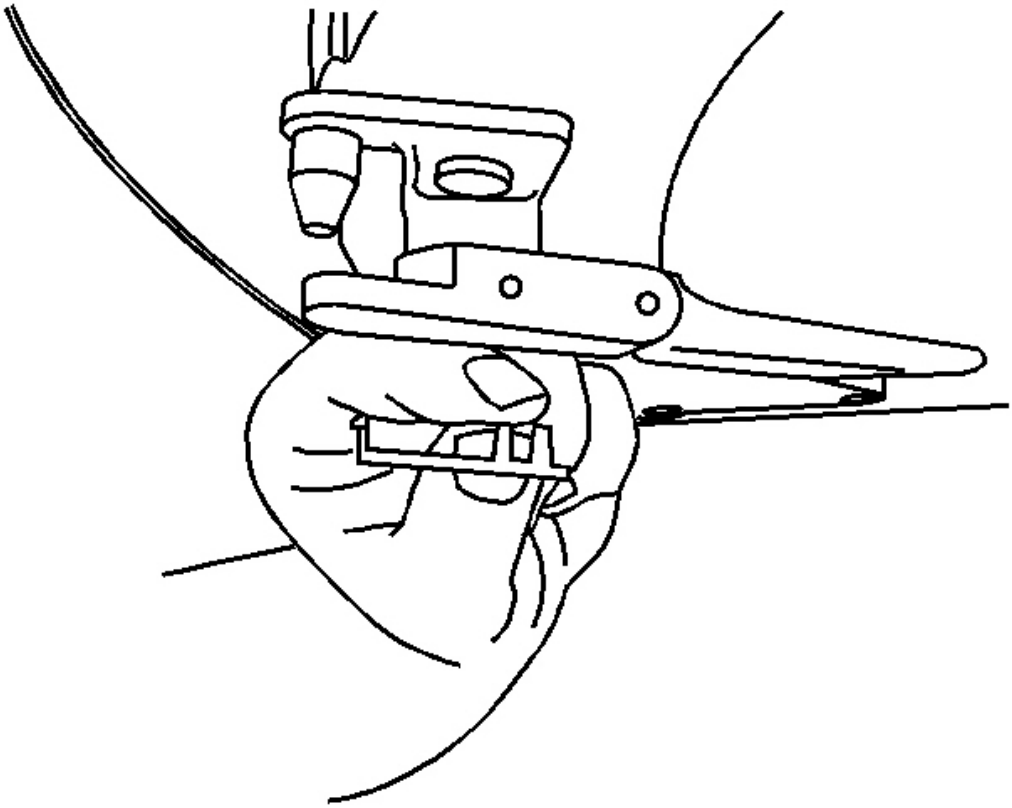

Fig. 7: Trim Cover To Latch Handle
Courtesy of GENERAL MOTORS CORP.

10. Position the trim cover to the latch handle and press the trim cover into place until fully seated.
11. Inspect the top latches for proper operation.
12. Position top to original position.

FOLDING TOP STOWAGE COMPARTMENT LID SWITCH REPLACE

Removal Procedure

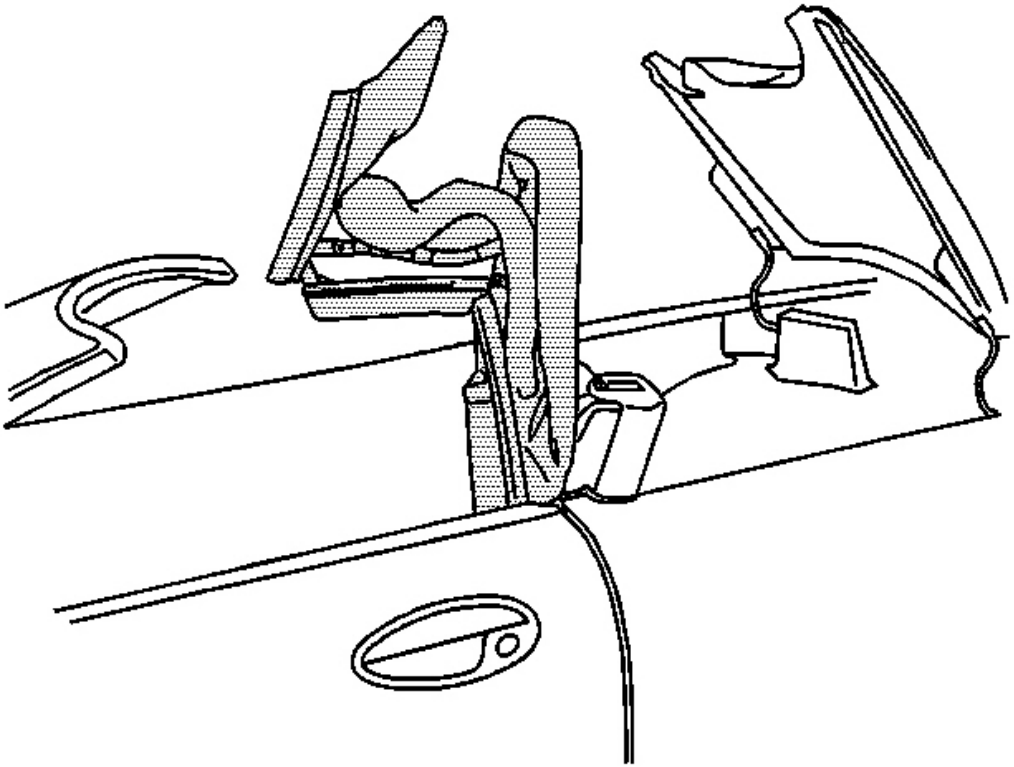

Fig. 8: Folding Top With The #1 Bow And The #5 Bow Up
Courtesy of GENERAL MOTORS CORP.

1. Position the folding top with the #1 bow and the #5 bow up.
2. Open the folding top stowage lid.

   If necessary, you can open the stowage lid manually by pulling on the manual release cable.

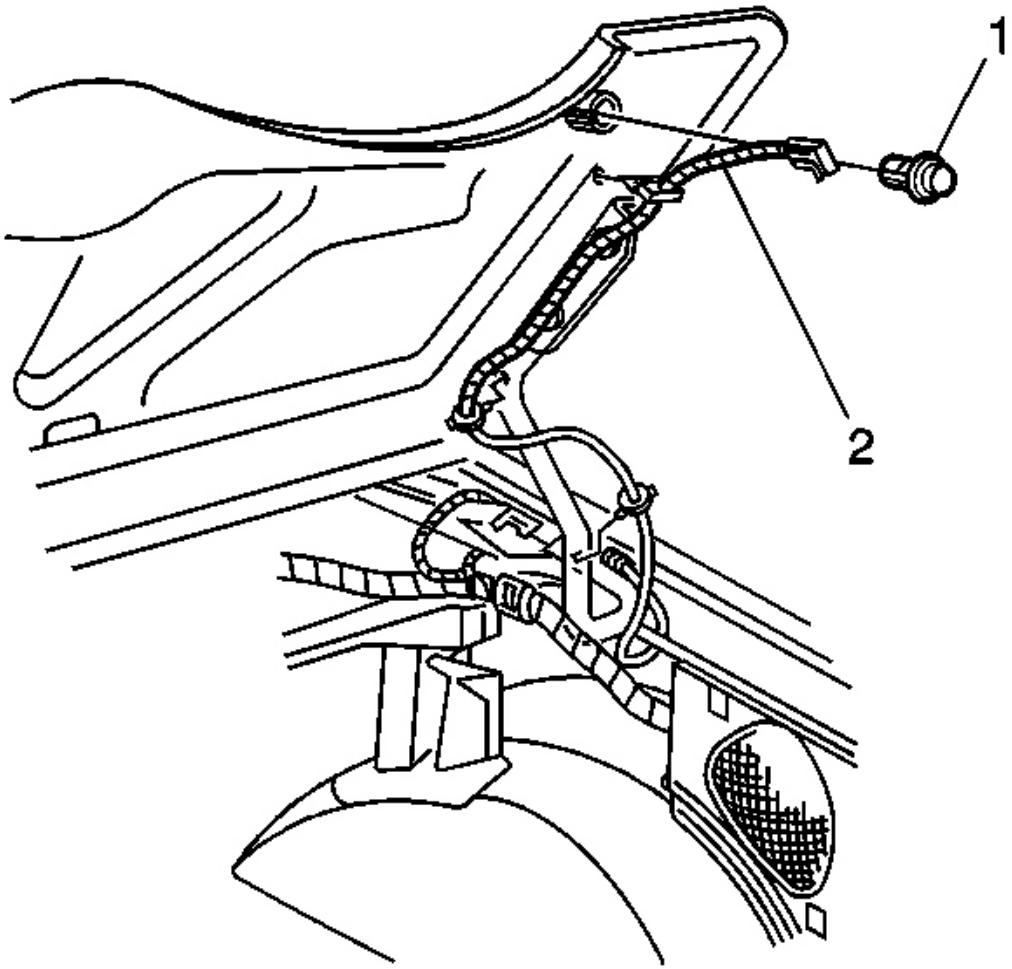

Fig. 9: Harness To Lid Release Switch
Courtesy of GENERAL MOTORS CORP.

3. Remove the lid release switch (1) with a flat-bladed tool.
4. Disconnect the harness (2) from the switch.

Installation Procedure

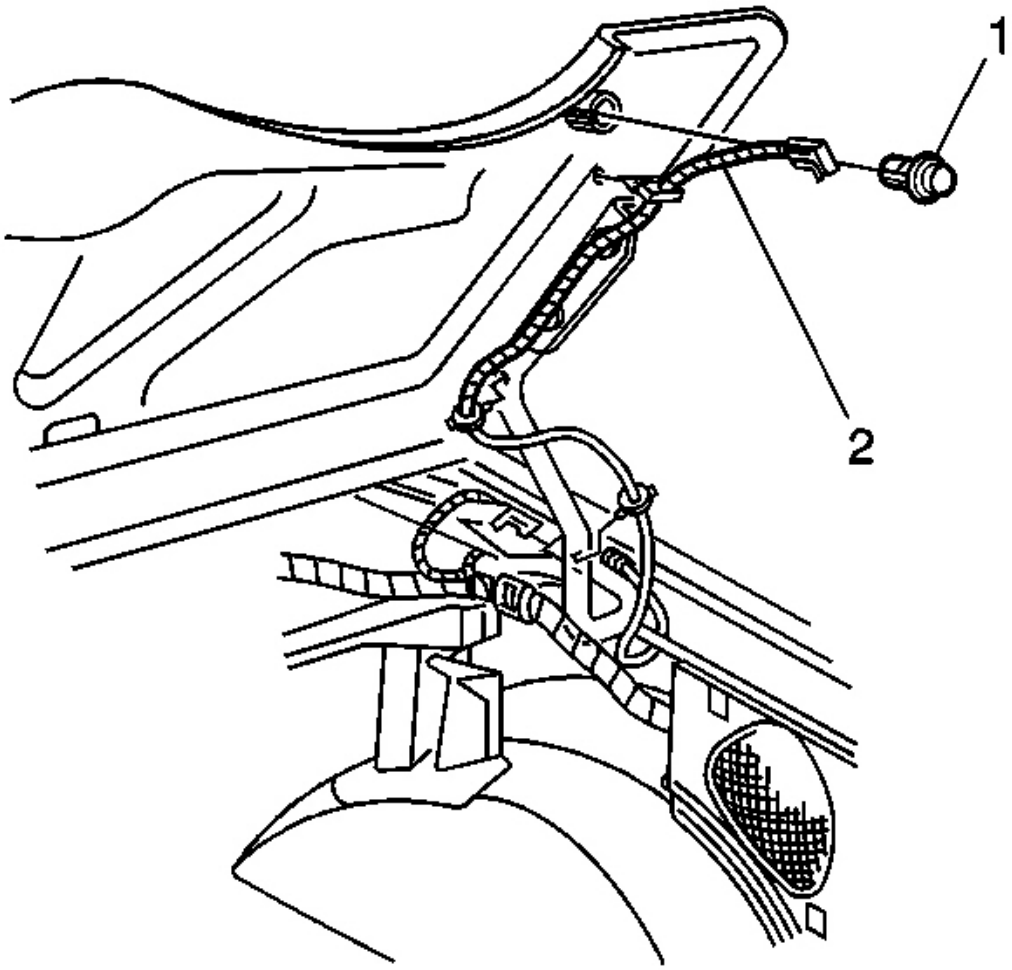

Fig. 10: Harness To Lid Release Switch
Courtesy of GENERAL MOTORS CORP.

1. Connect the harness (2) to the lid release switch.
2. Align the electrical harness to the slot in the rear compartment lid.
3. Install the lid release switch to the rear compartment lid, pressing until fully seated.
4. Check for the proper operation of the lid switch.
5. Position the folding top to the original position.

FOLDING TOP STOWAGE COMPARTMENT LID LATCH REPLACE

Removal Procedure

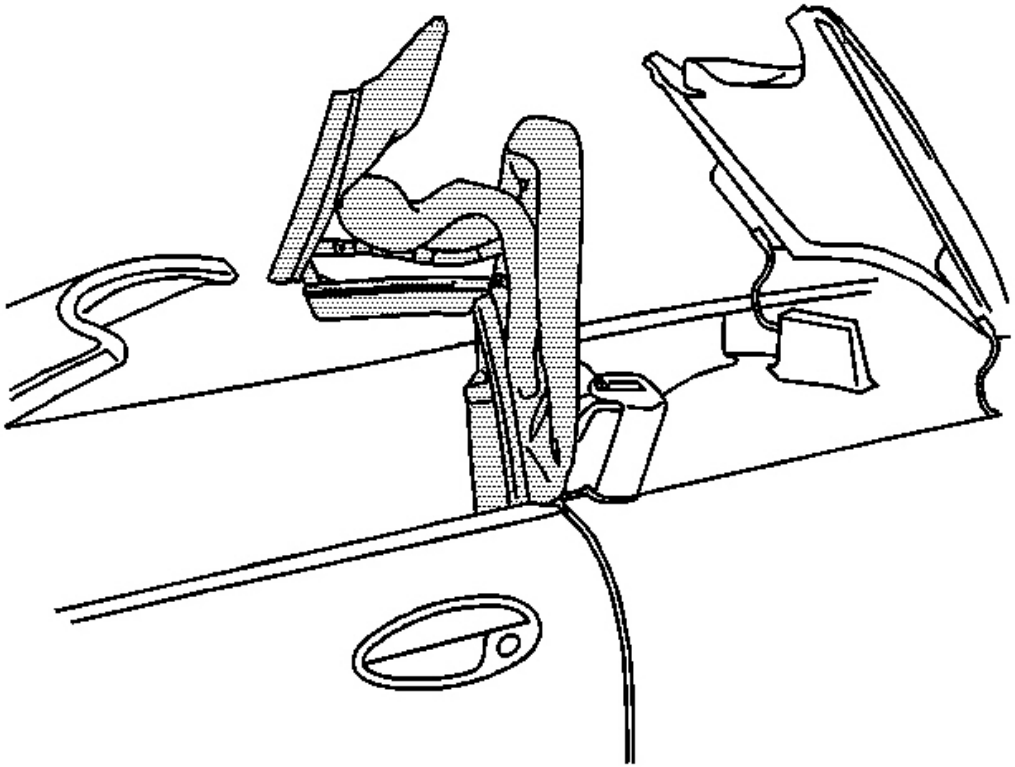

Fig. 11: Folding Top With The #1 Bow And The #5 Bow Up
Courtesy of GENERAL MOTORS CORP.

1. Position the top with the #1 bow and the #5 bow up.
2. Refer to **Compartment Lid Extension - Folding Top Stowage** in Interior Trim.
3. Disconnect the electrical connector from the latch.

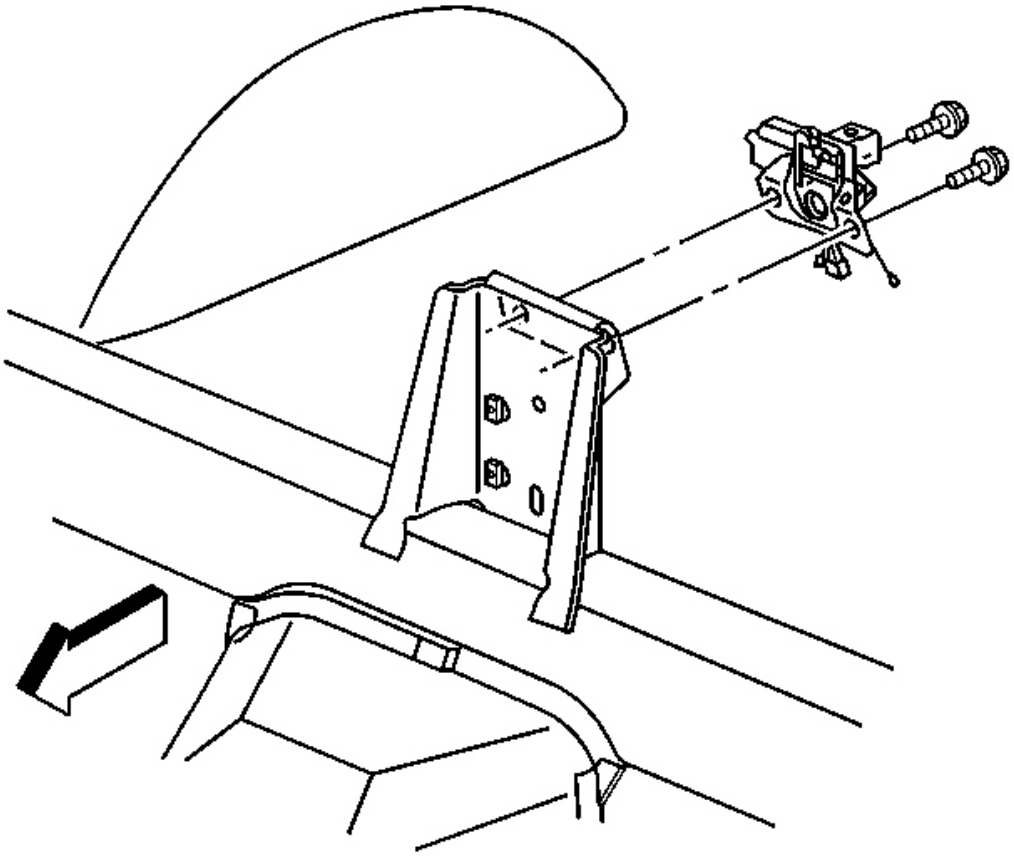

Fig. 12: Latch Bolts To Latch Retainer
Courtesy of GENERAL MOTORS CORP.

4. Remove the latch bolts from the latch retainer.
5. Remove the latch.

Installation Procedure

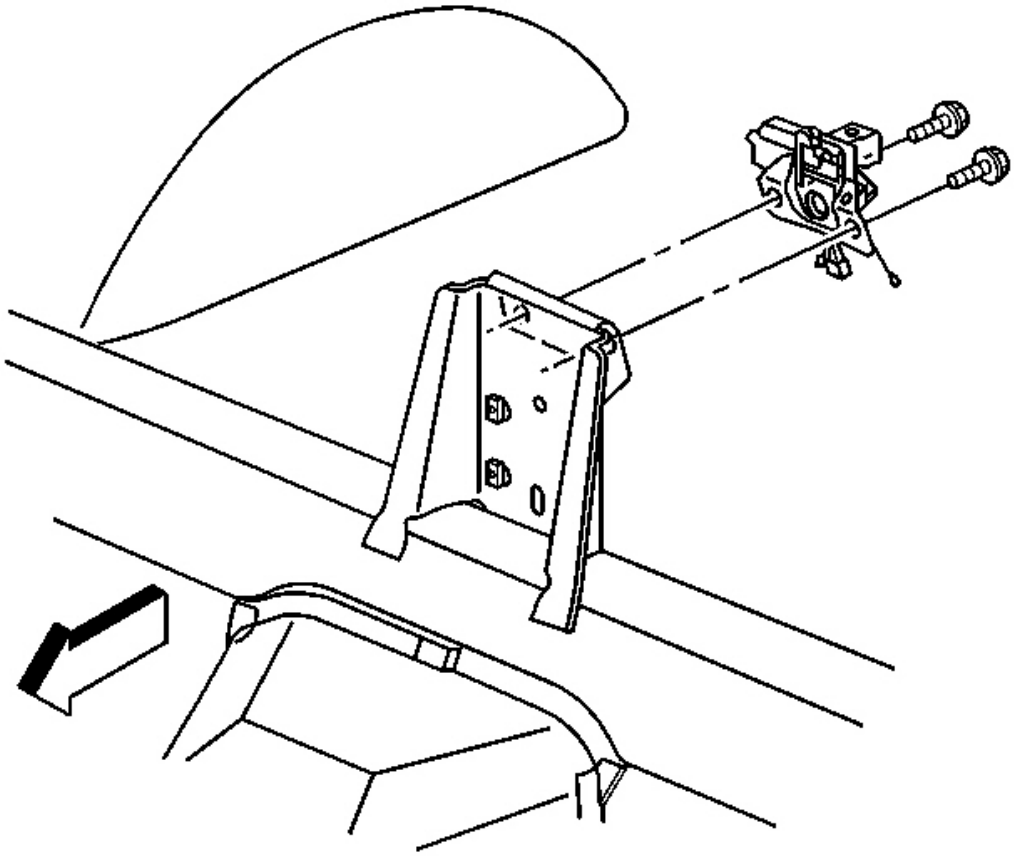

Fig. 13: Latch Bolts To Latch Retainer
Courtesy of GENERAL MOTORS CORP.

1. Position the latch to the retainer and finger-tighten the bolts.
2. Adjust the latch using the following procedures:
   - Adjust the latch up or down to make the lid flush.
   - Adjust the latch side to side gap from the lid to the quarter panels.

NOTE: **Refer to Fastener Notice in Cautions and Notices.**

3. Tighten the latch bolts.

   Tighten: Tighten the bolts to 10 N.m (89 lb in).

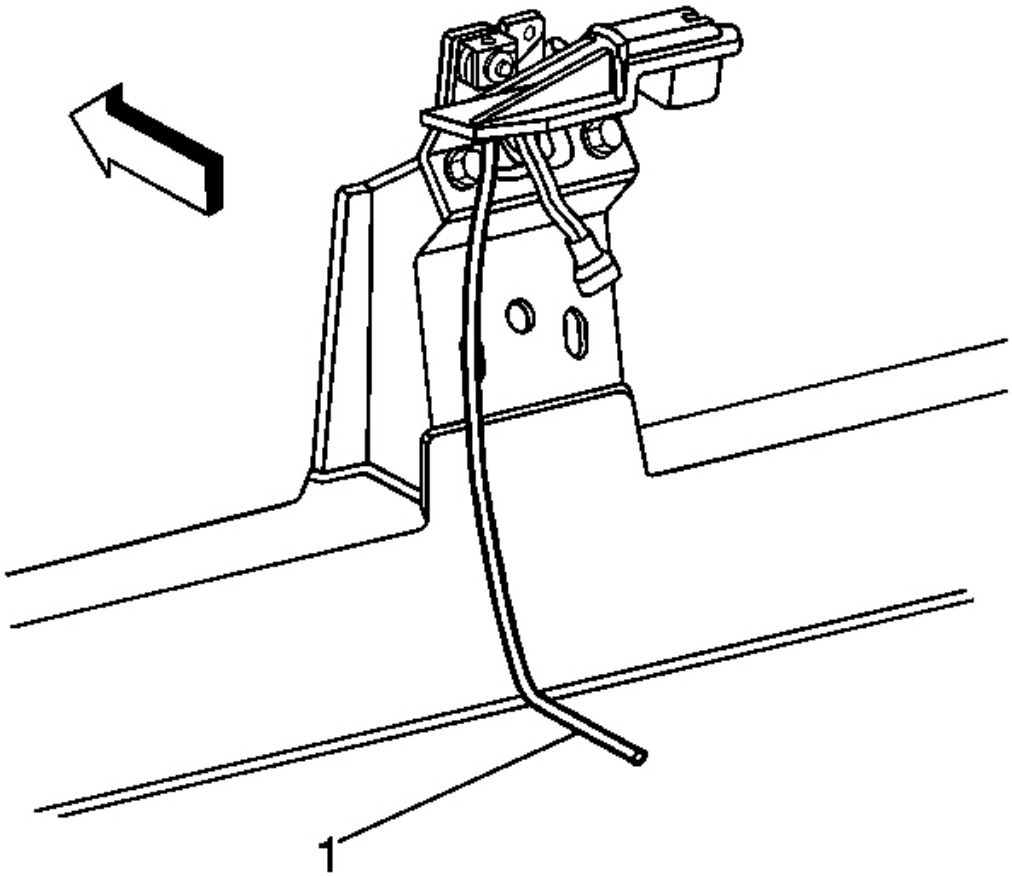

Fig. 14: Electrical Connector To Latch
Courtesy of GENERAL MOTORS CORP.

4. Connect the electrical connector to the latch.
5. Route the manual release cable down over the intermediate carpet. Position the end of the cable on the rear floor carpet.
6. Refer To **Compartment Lid Extension - Folding Top Stowage** in Interior Trim.
7. Close the lid and position the folding top to the original position.

FOLDING TOP STOWAGE COMPARTMENT LID STRIKER

Removal Procedure

1. Open the folding top stowage compartment lid.

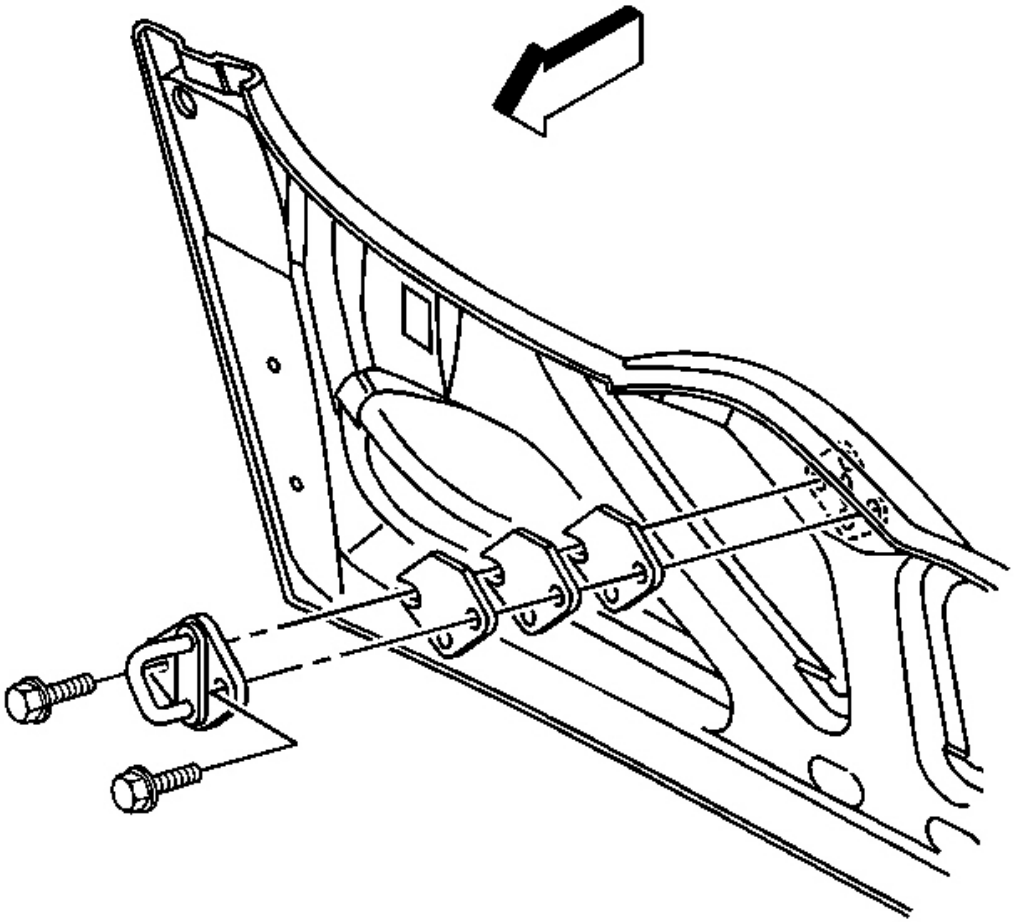

Fig. 15: Bolts At Striker To Lid
Courtesy of GENERAL MOTORS CORP.

2. Remove the bolts attaching the striker to the lid.
3. Remove the striker and the shims.

Installation Procedure

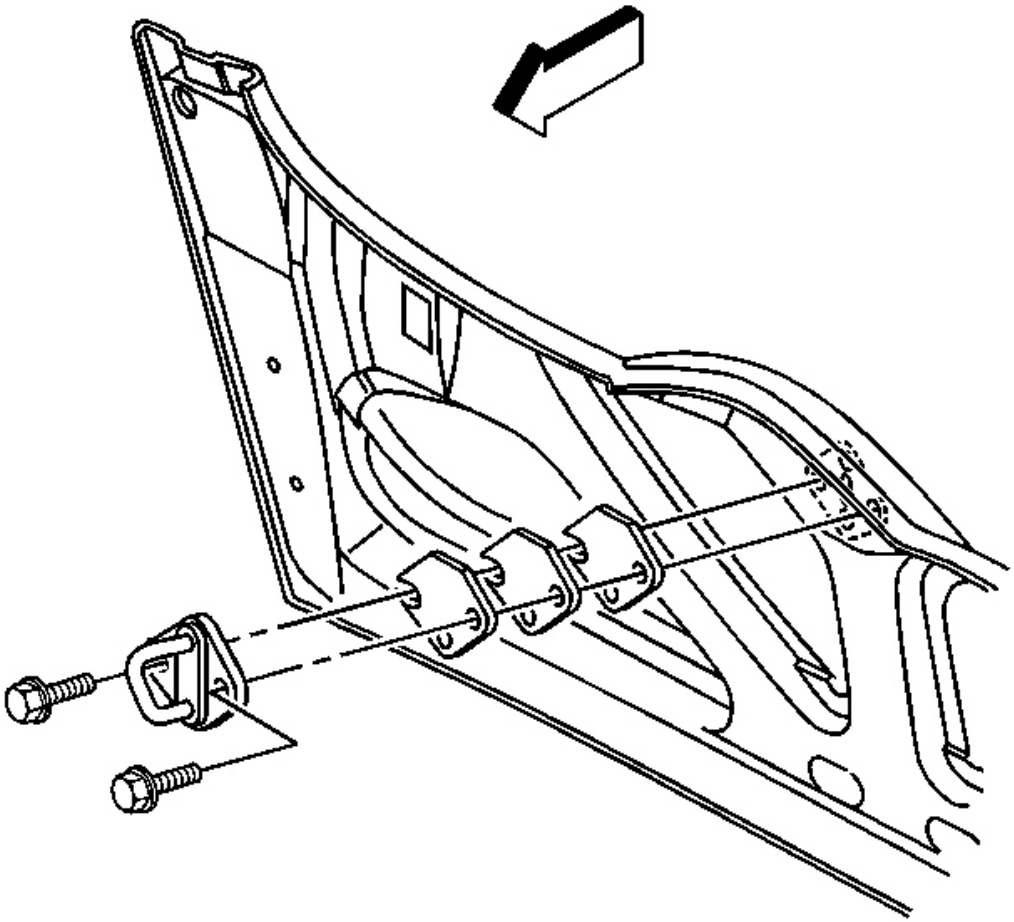

Fig. 16: Bolts At Striker To Lid
Courtesy of GENERAL MOTORS CORP.

1. Position the striker and the shims to the lid with the arrow on the striker pointed downward.

   NOTE: Refer to Fastener Notice in Cautions and Notices.

2. Install the bolts attaching the striker, beginning with the driver side bolt.

   Tighten: Tighten the bolts to 10 N.m (89 lb in).

3. Inspect the operation of the compartment lid.
4. Close the compartment lid.

FOLDING TOP COVER NO. 1 BOW RETAINER REPLACEMENT

Removal Procedure

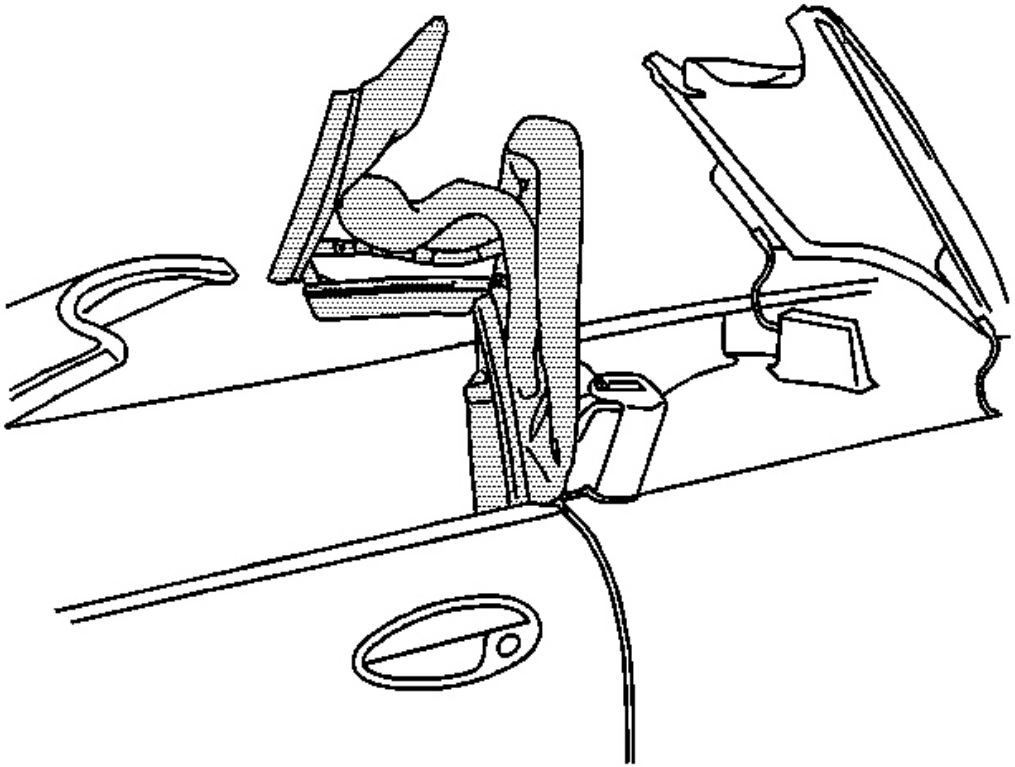

Fig. 17: Folding Top With The #1 Bow And The #5 Bow Up
Courtesy of GENERAL MOTORS CORP.

1. Position the folding top with the #1 and #5 bow up.
2. Remove the seal compression panel. Refer to **Folding Top Seal Compression Panel Replacement** .

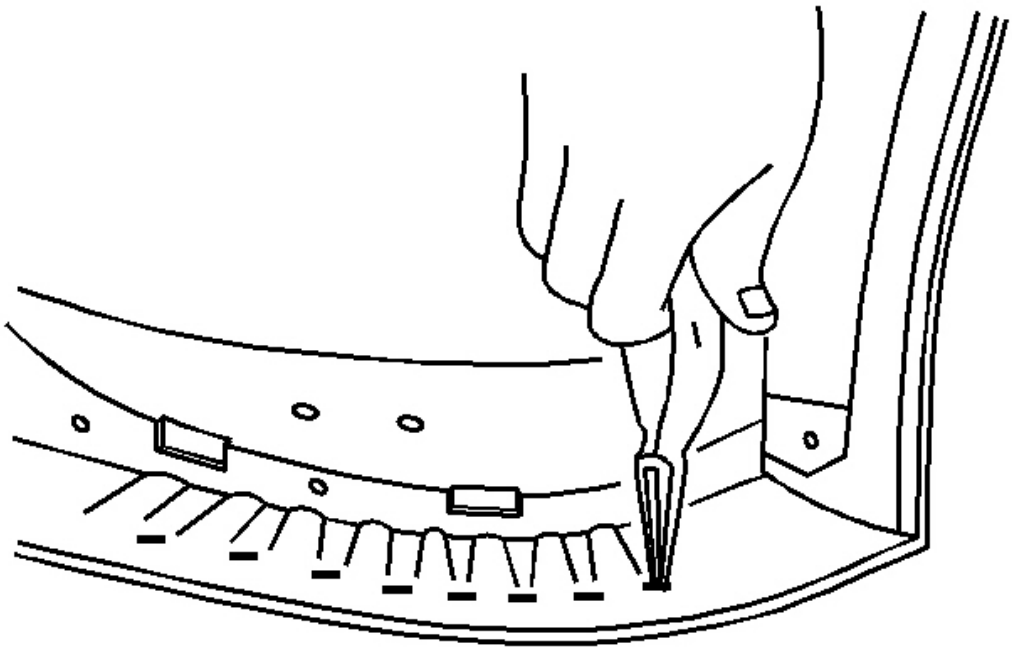

Fig. 18: Top Cover Staples To Bow
Courtesy of GENERAL MOTORS CORP.

3. Use a pair of needle nose pliers to remove the top cover staples from the bow.

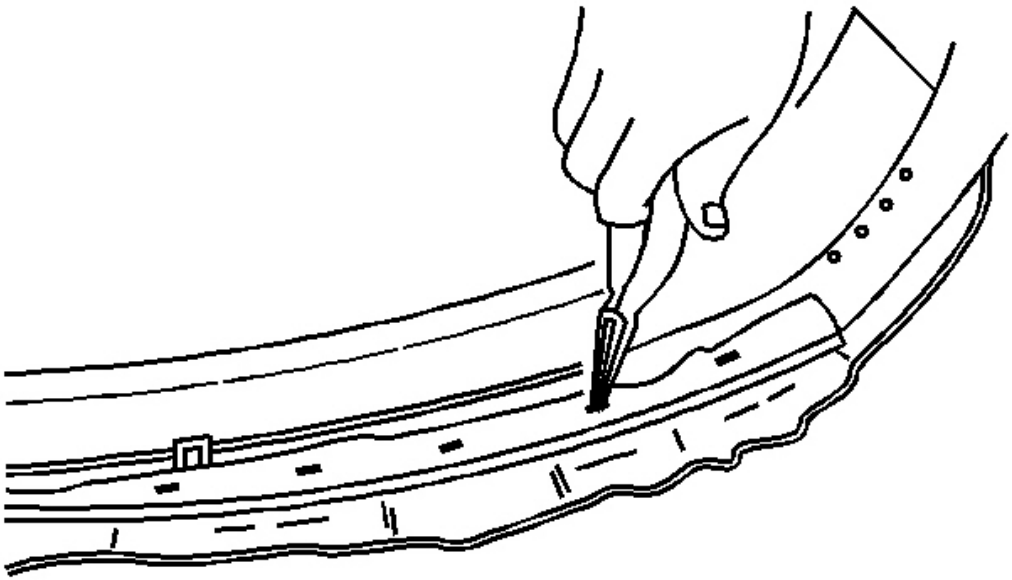

Fig. 19: Headliner Staples To Bow
Courtesy of GENERAL MOTORS CORP.

4. Use a pair of needle nose pliers to remove the headliner staples from the bow.

CAUTION: Refer to Safety Glasses Caution in Cautions and Notices.

5. From the top of the bow, drill out the rivets from the top cover retainer.
6. Remove the top cover retainer.

Installation Procedure

1. Install the top cover retainer to the #1 bow.
2. Using the rivets provided, push the shank of the rivet through the retainer. With an assistant install the rivet into the bow using a large tapered punch, hammer until the rivet is flush.

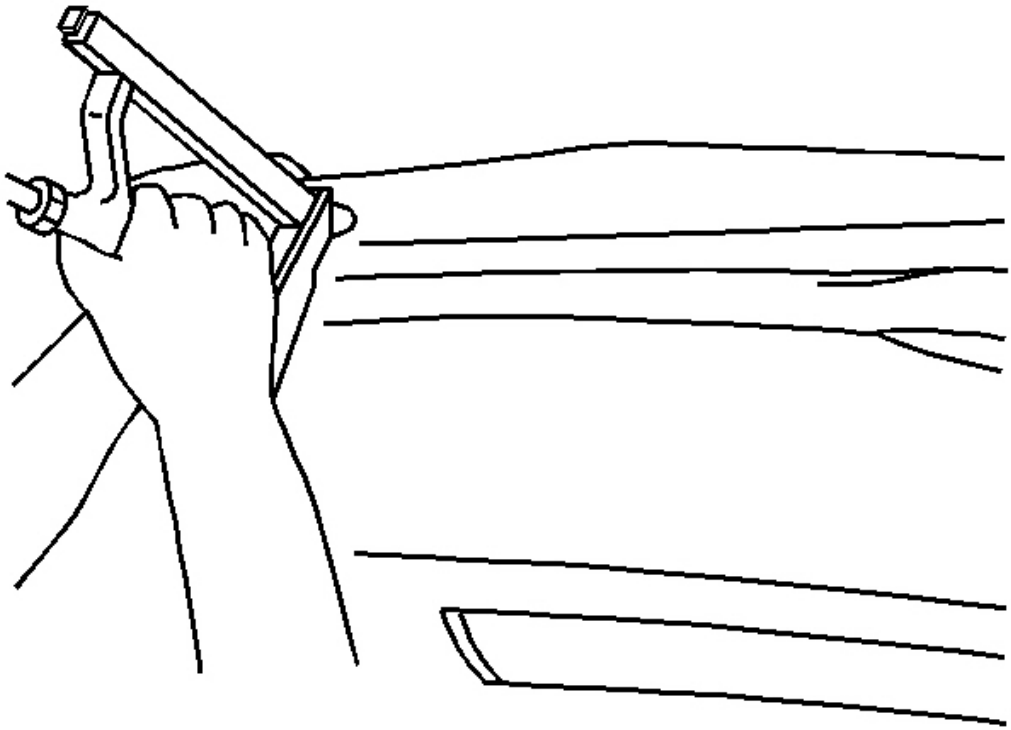

Fig. 20: Staple Headliner To Bow
Courtesy of GENERAL MOTORS CORP.

3. Staple the headliner to the bow.
4. Before stapling the top cover to the #1 bow, refer to **Folding Top Cover Tension Adjustment - Front** .
5. Return the folding top to the original position.

FOLDING TOP COVER NO. 5 BOW RETAINER REPLACEMENT

Removal Procedure

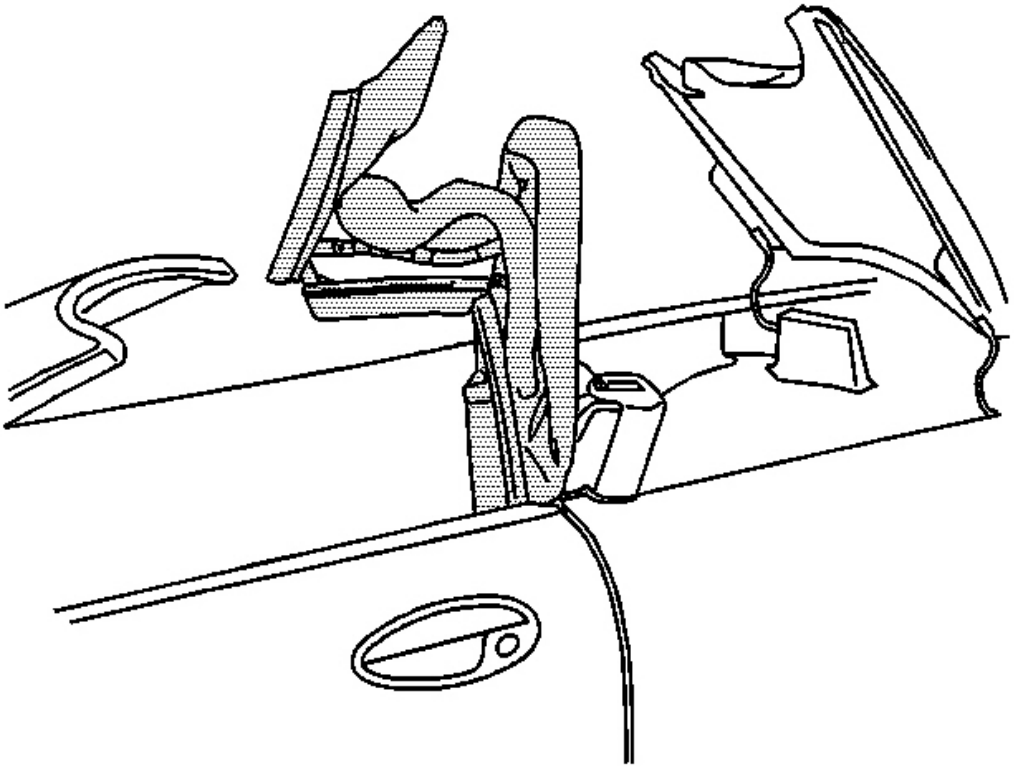

Fig. 21: Folding Top With The #1 Bow And The #5 Bow Up
Courtesy of GENERAL MOTORS CORP.

1. Position the folding top with the #1 and #5 bow up.
2. Remove the #5 bow weatherstrip. Refer to **Weatherstrip Replacement - Folding Top (Front and Center Side Rails)** or **Weatherstrip Replacement - Folding Top (Rear Side Rail)** or **Weatherstrip Replacement - Folding Top (Number Five Bow)** .

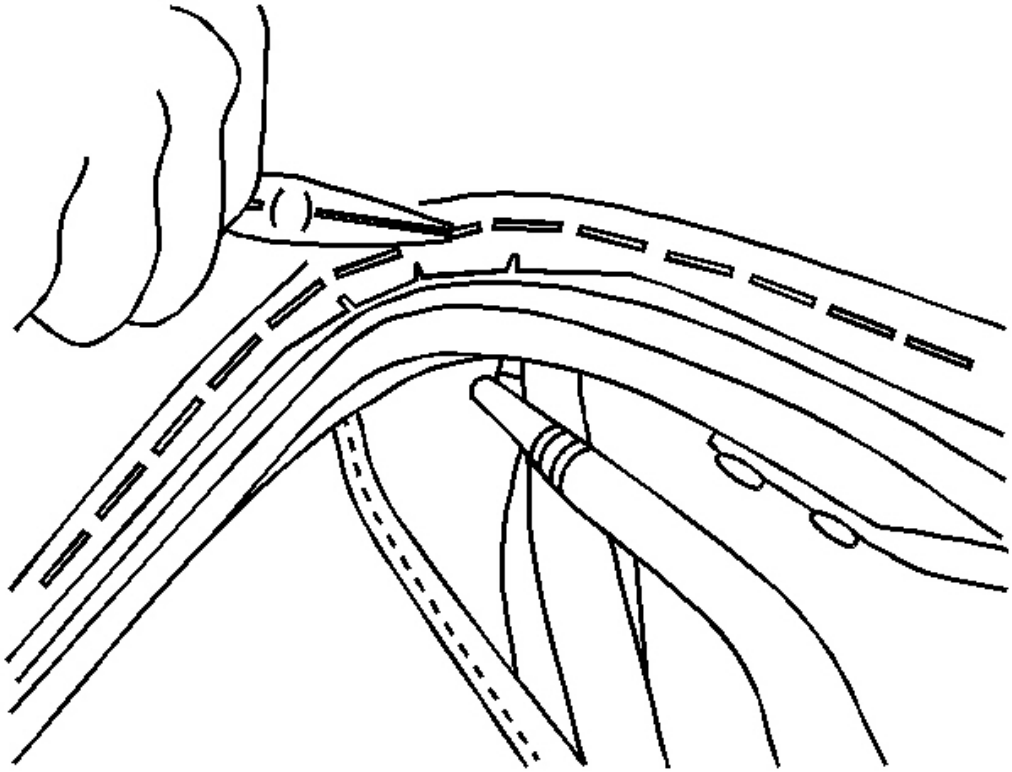

Fig. 22: Needle Nose Pliers To Top Cover Staples To Bow
Courtesy of GENERAL MOTORS CORP.

3. Use a pair of needle nose pliers to remove the top cover staples to the bow.
4. Pull top cover away from the bow.

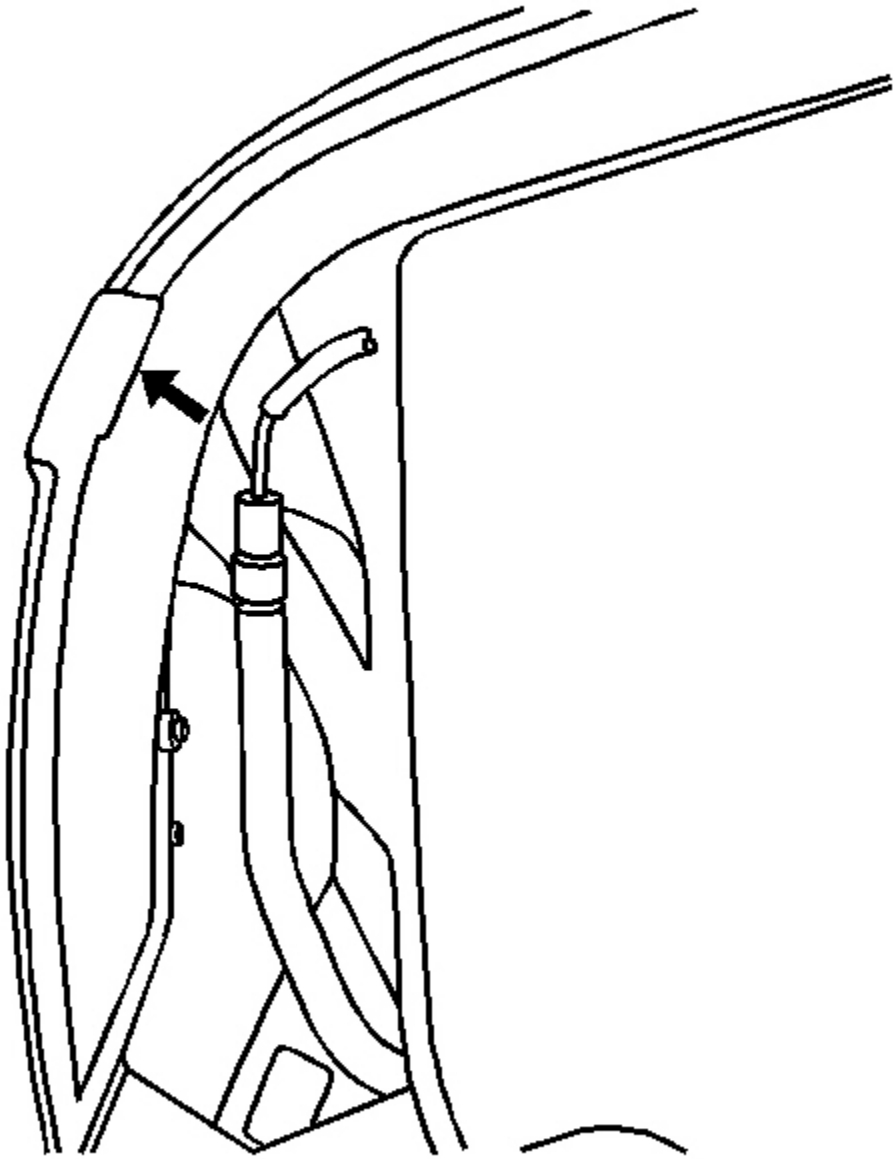

Fig. 23: Stay Pad Staples To Bow
Courtesy of GENERAL MOTORS CORP.

5. Use a pair of needle nose pliers to remove the stay pad staples from the bow.

CAUTION: Refer to Safety Glasses Caution in Cautions and Notices.

6. From the top of the bow, drill out the rivets from the top cover retainers.
7. Remove the top cover retainers.

Installation Procedure

1. Install the top cover retainers to the #5 bow.
2. Using the rivets provided, push the shank of the rivet through the retainer. With an assistant install the rivet into the bow using a large tapered punch, hammer until the rivet is flush.

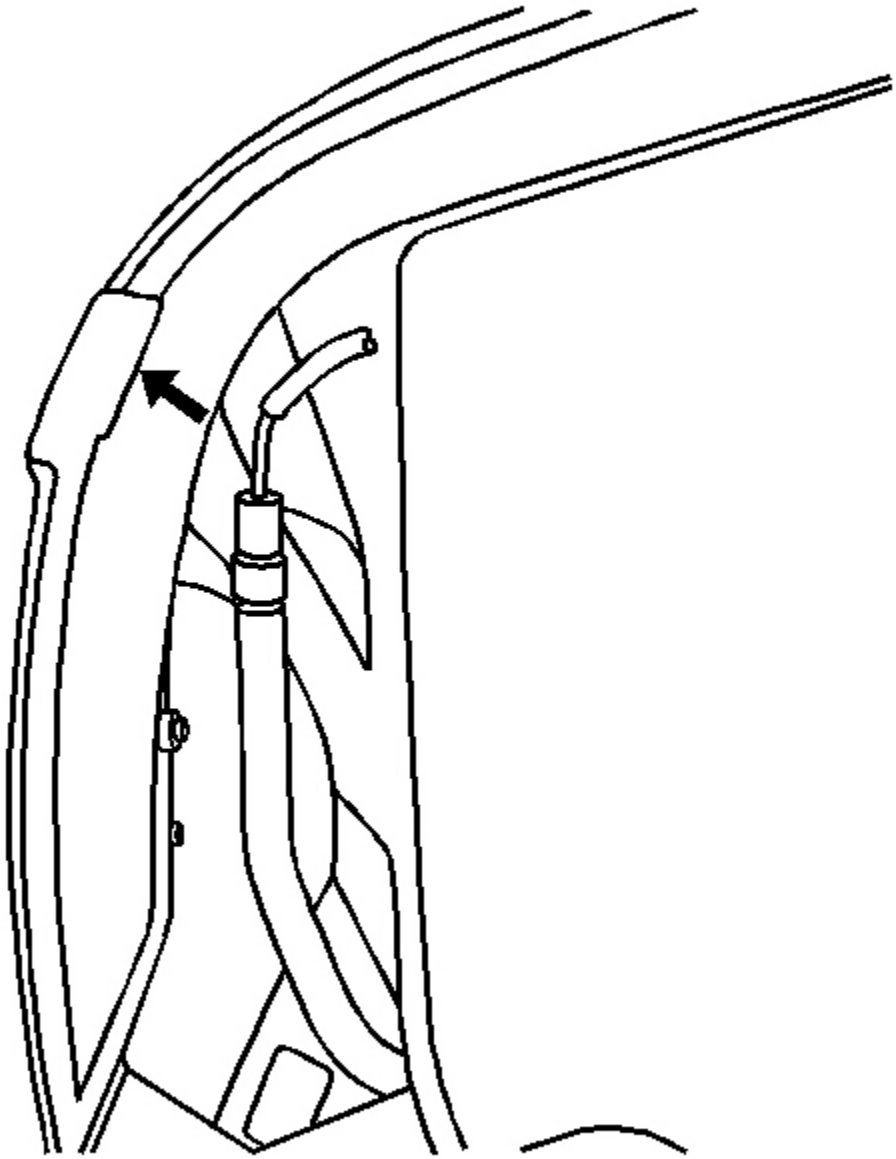

Fig. 24: Stay Pad Staples To Bow
Courtesy of GENERAL MOTORS CORP.

3. Staple the stay pad to the #5 bow.
4. Before stapling the top cover to the #5 bow, refer to **Folding Top Cover Tension Adjustment - Rear** .
5. Return the folding top to the original position.

FOLDING TOP ADJUSTMENT

Pressure Link- Five Bow Pressure on Stowage Lid

Adjust the lower pressure link to change the #5 bow pressure to the stowage compartment lid.

- Decrease the pressure if the top material is contacting and marring the lid.
- Increase the pressure if water is leaking between the top and the lid.

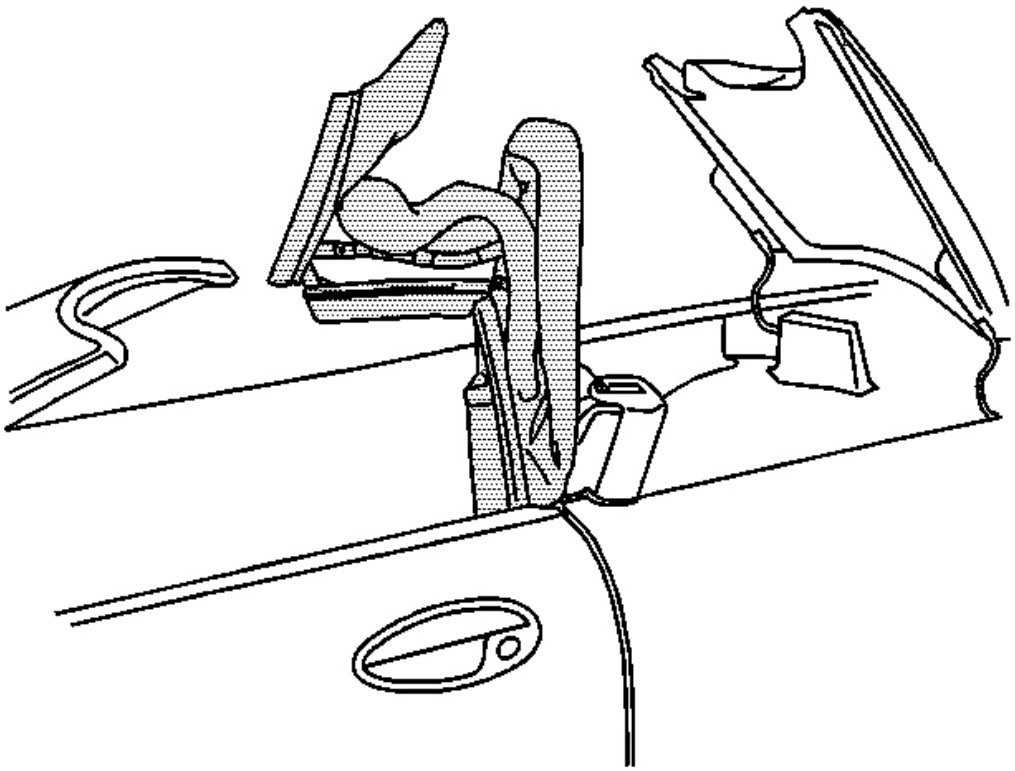

Fig. 25: Folding Top With The #1 Bow And The #5 Bow Up
Courtesy of GENERAL MOTORS CORP.

1. Position the folding top with the #1 bow and the #5 bow up.

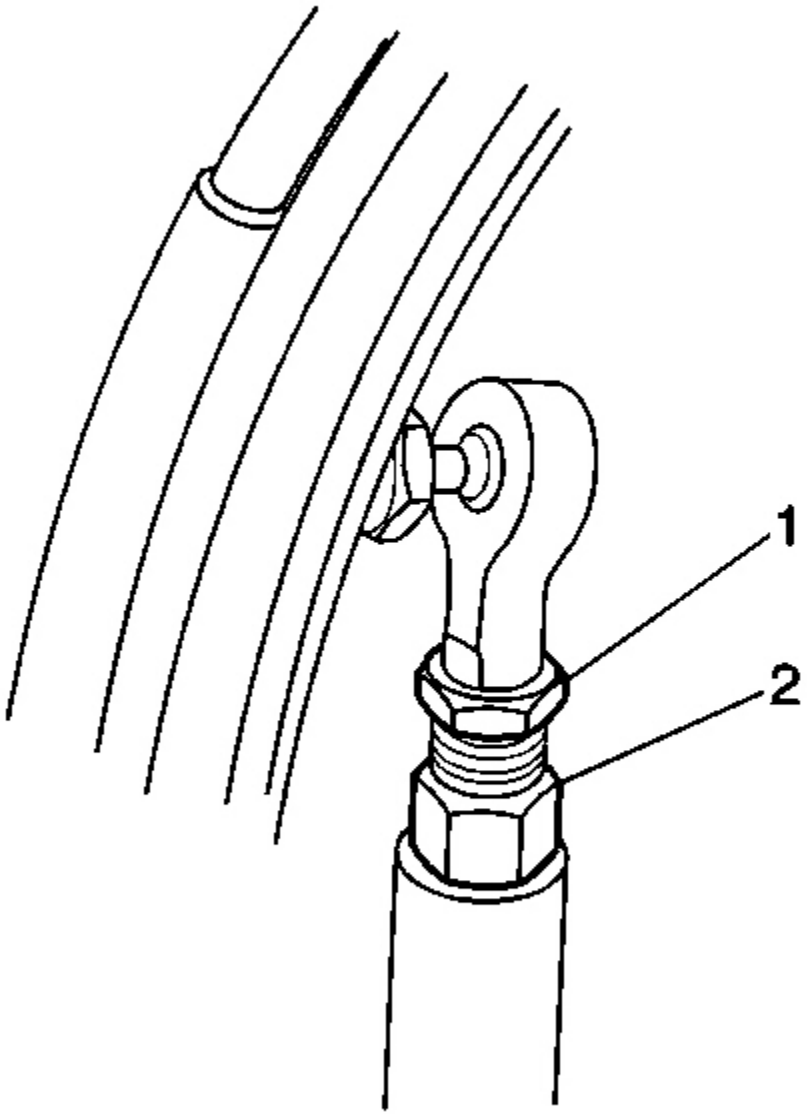

Fig. 26: Jam Nut At Adjuster Attaches To #5 Bow
Courtesy of GENERAL MOTORS CORP.

IMPORTANT: The jam nuts are left handed thread.

2. Loosen the jam nut (1) on the pressure link where the adjuster attaches to the #5 bow.
3. Mark the pressure link large adjustment nut (2) to aid in determining the amount of adjustment.

4. Adjust the pressure link by rotating the large adjustment nut one turn at a time.

   Rotate the nut clockwise to increase the downward pressure of the #5 bow on the stowage lid. Turn the nut counter clockwise to decrease the downward pressure.

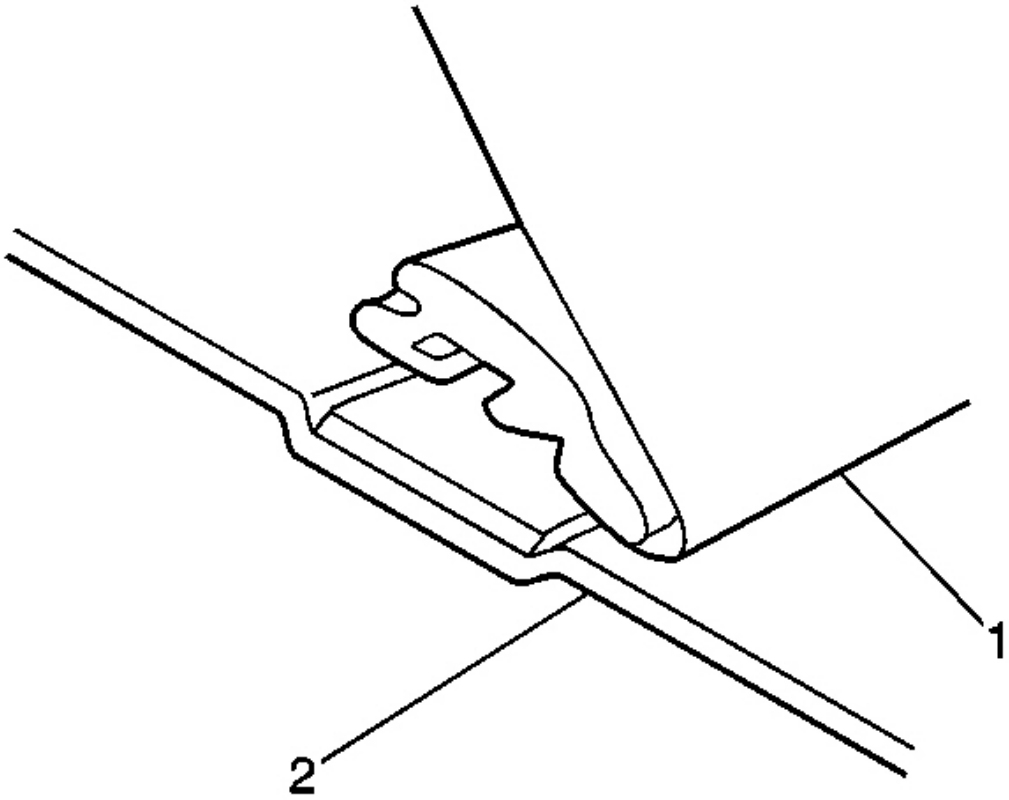

Fig. 27: Gap Between Lid & #5 Bow Top Cover Material
Courtesy of GENERAL MOTORS CORP.

5. Raise the top.
6. Check the gap between the lid (2) and the #5 bow top cover material (1).

   The gap between the lid and the top material should be 2-3 mm (0.08-0.12 in).

   The gap between the five bow top material and the lid should be the same all the way across.

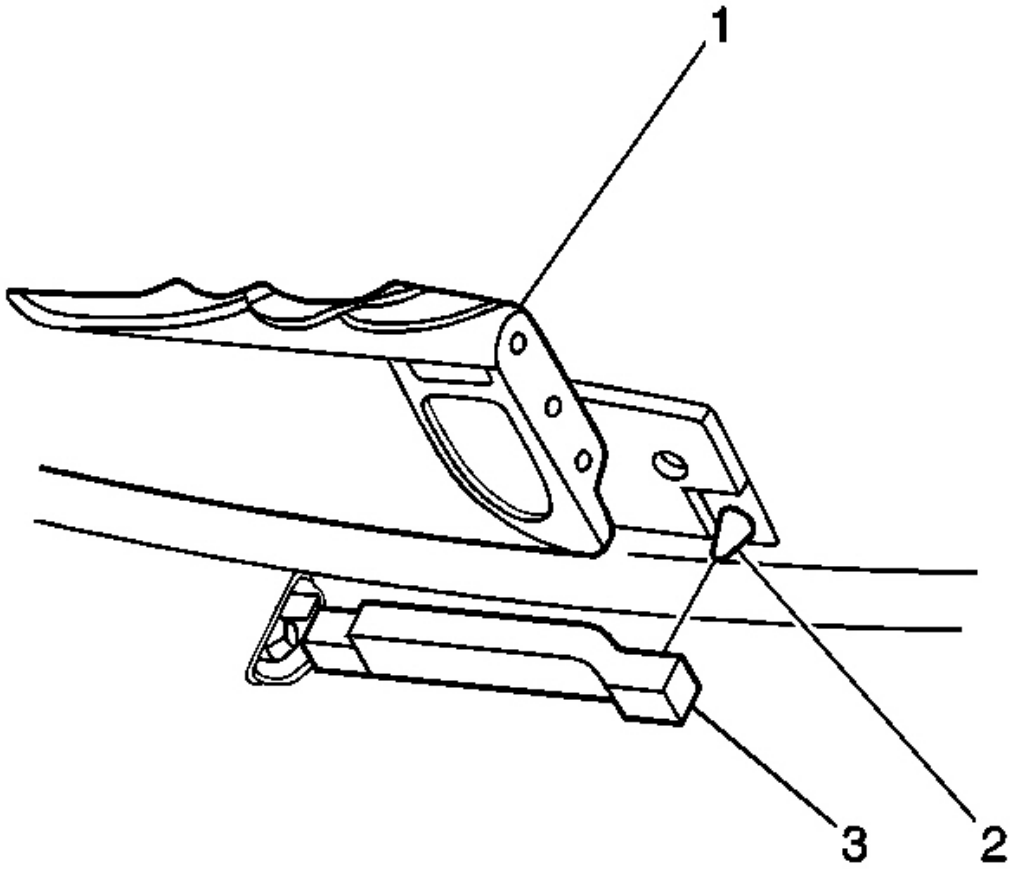

Fig. 28: Latch Handle At Striker
Courtesy of GENERAL MOTORS CORP.

7. Check the alignment of the front latch pins (2) with their receivers (3).

   The front latch pins should be aligned so that when the top is raised the pins drop into the receivers.

8. Lower the top and re-adjust the pressure link as necessary.

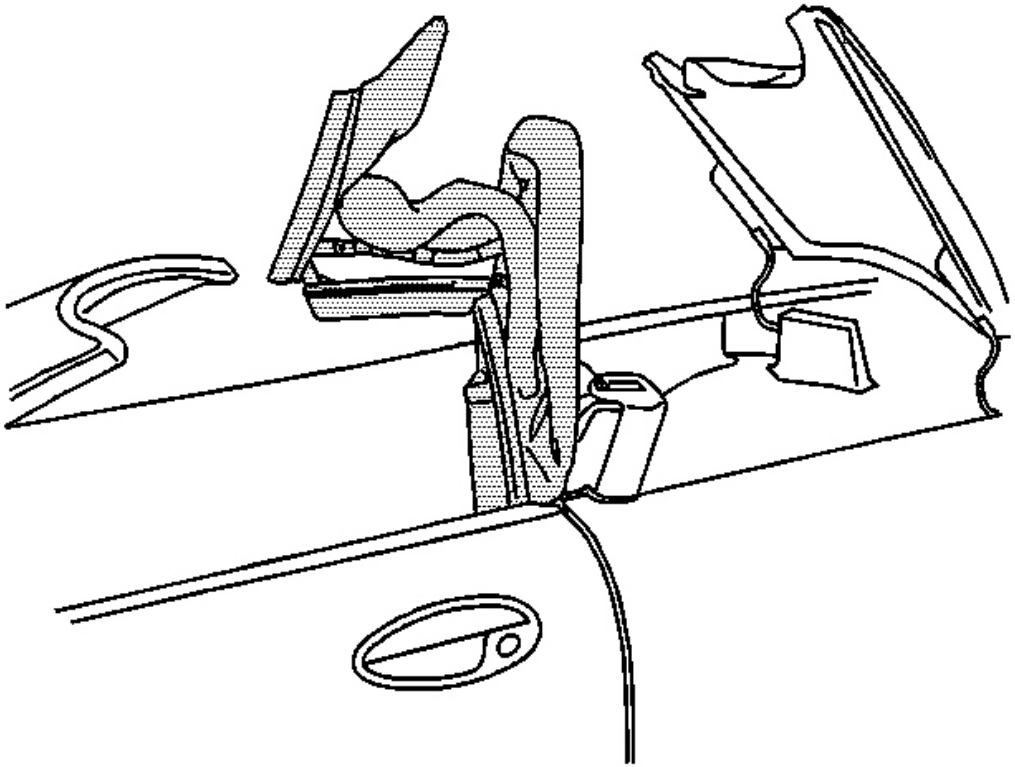

Fig. 29: Folding Top With The #1 Bow And The #5 Bow Up
Courtesy of GENERAL MOTORS CORP.

9. Position the folding top with the #1 bow and the #5 bow up.

NOTE: Refer to Fastener Notice in Cautions and Notices.

10. Tighten the jam nut.

    Tighten: Tighten the nut to 50 N.m (37 lb ft).

11. Raise and close the folding top.
12. Water test the folding top. Refer to **Waterleak Test Preparation** in Waterleaks.
13. Re-adjust the pressure link if necessary.

Side Rail-Top of Door Window Contacting Top Fabric

To eliminate the top center of the window from hooking under the roof material adjust the knurled nut between

the front and center side rails to increase the amount of bow in the side of the top.

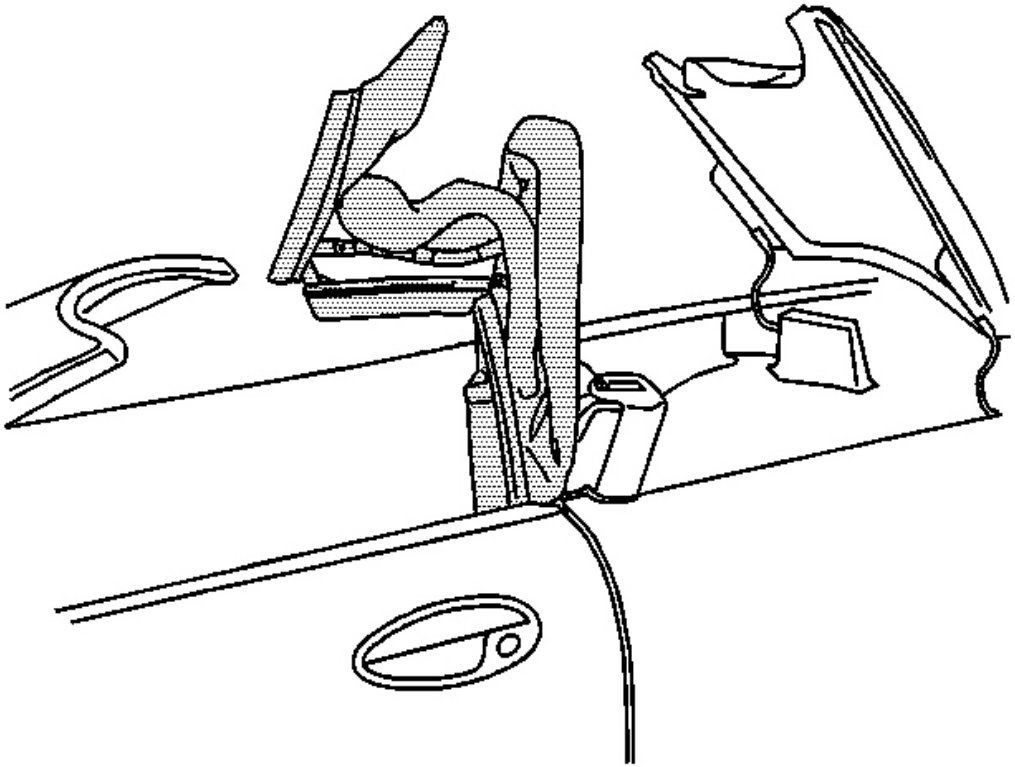

Fig. 30: Folding Top With The #1 Bow And The #5 Bow Up
Courtesy of GENERAL MOTORS CORP.

1. Position the top with the #1 and #5 bow up.

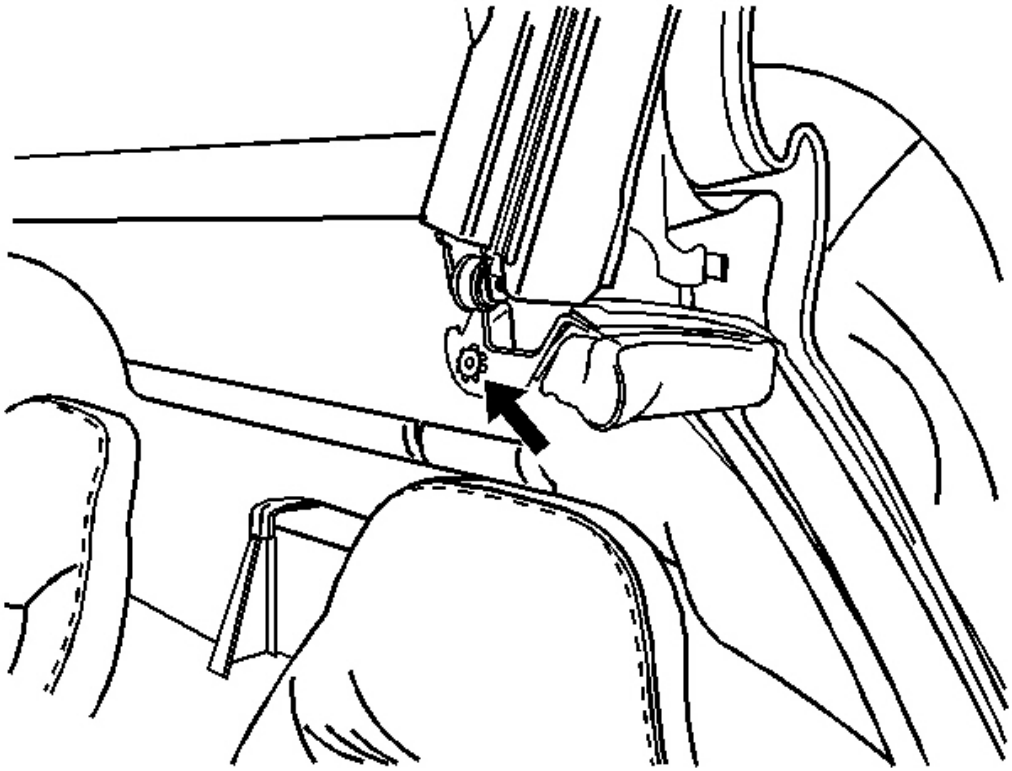

Fig. 31: Knurled Nut To Bow In The Roof
Courtesy of GENERAL MOTORS CORP.

2. Adjust the knurled nut outward to increase the bow in the roof.
3. Raise the top and check the window clearance.

   The window, in a full up position, should not contact the top material when opening and closing the door.

4. Lower and re-adjust the top using the knurled nut as necessary.
5. Raise and close the folding top.
6. Water test the folding top. Refer to **Waterleak Test Preparation** in Waterleaks.
7. Adjust the window if necessary. Refer To **Window Tip-In Adjustment - Door** in Doors.

Rear Side Rail-Loose Fabric

To tighten the roof material, adjust the rear side rail rearward.

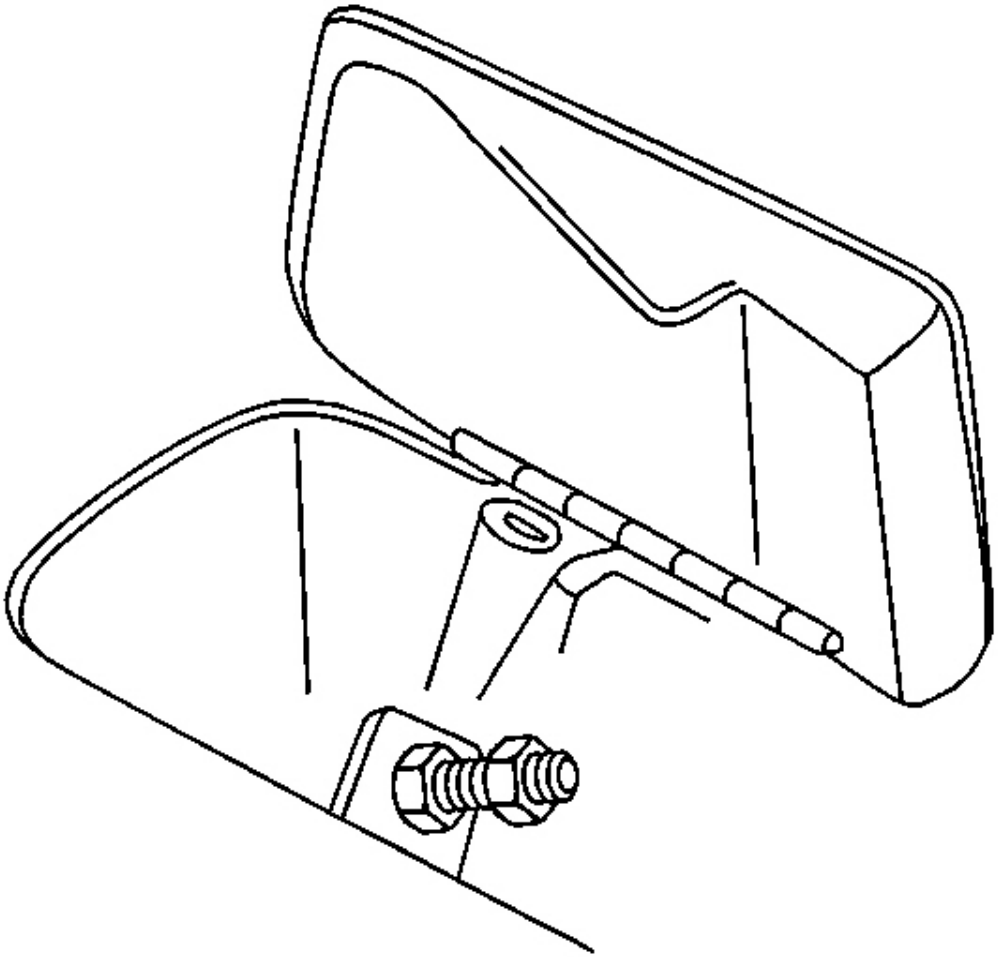

Fig. 32: Top Of Lock Pillar & Adjuster Jam Nut
Courtesy of GENERAL MOTORS CORP.

1. Lower the folding top.
2. Open the small cover/door on top of the lock pillar to access the adjuster.
3. Loosen the adjuster jam nut.
4. Mark the adjuster nut to aid in determining the amount of adjustment.
5. Loosen the adjuster nut one turn at a time.
6. Raise the top and check the top material for tightness.

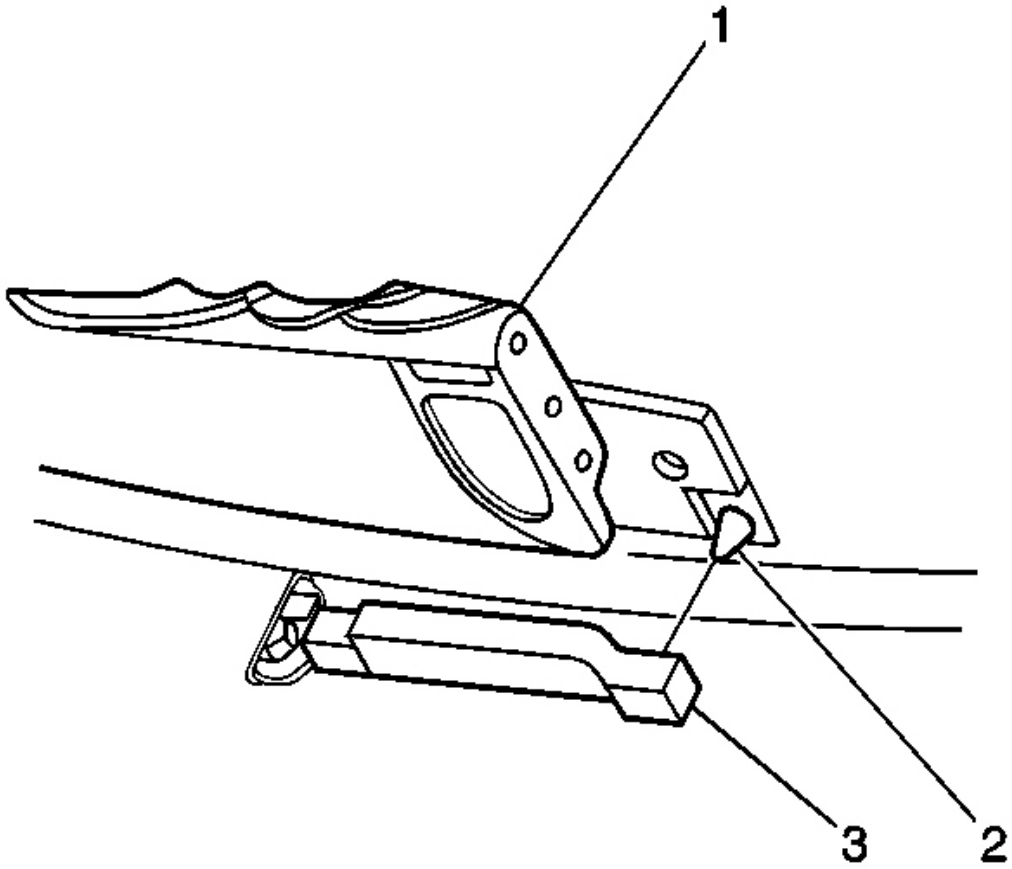

Fig. 33: Latch Handle At Striker
Courtesy of GENERAL MOTORS CORP.

7. Check the alignment of the front latch pins (2) with their receivers. The front latch pins should be aligned so that when the top is raised the pins drop into the receivers.

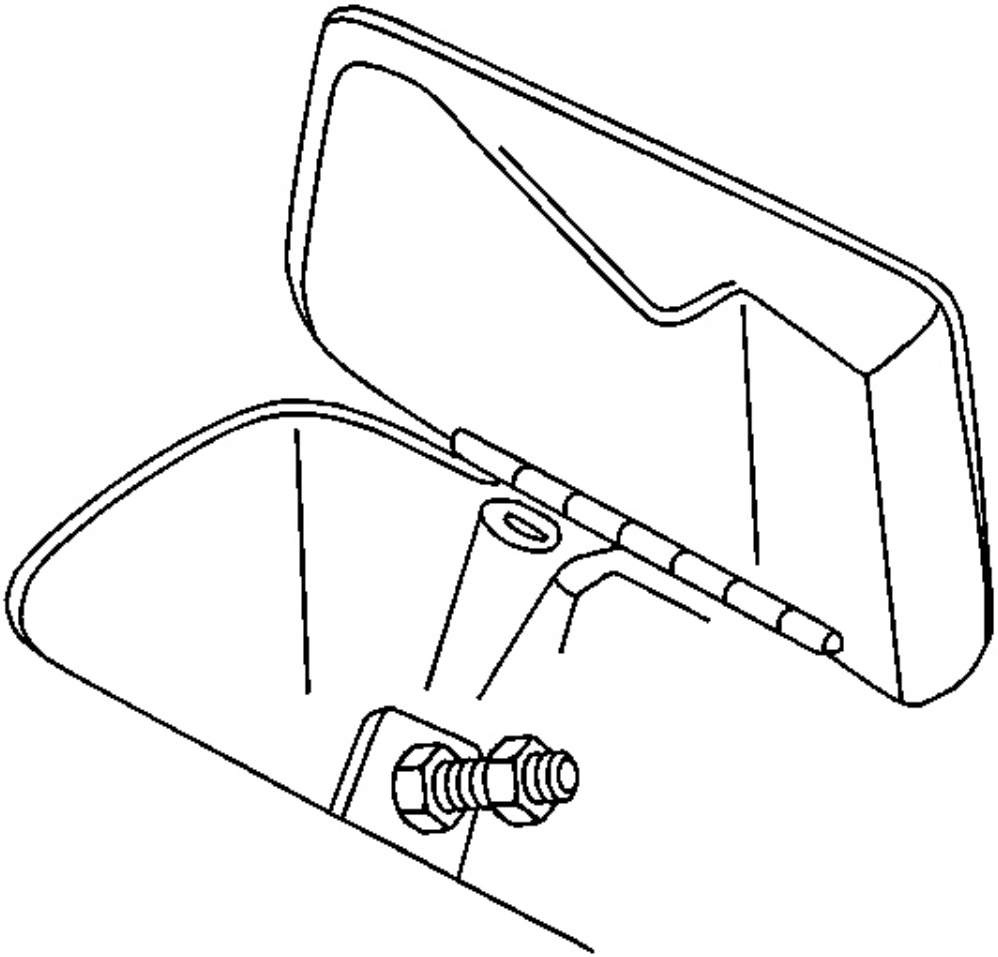

Fig. 34: Top Of Lock Pillar & Adjuster Jam Nut
Courtesy of GENERAL MOTORS CORP.

8. Lower and re-adjust the top using the adjuster as necessary.

NOTE: **Refer to Fastener Notice in Cautions and Notices.**

9. Tighten the jam nut.

   Tighten: Tighten the nut to 50 N.m (37 lb ft).

10. Water test the folding top. Refer to **Waterleak Test Preparation** in Waterleaks.

FOLDING TOP COVER TENSION ADJUSTMENT - FRONT

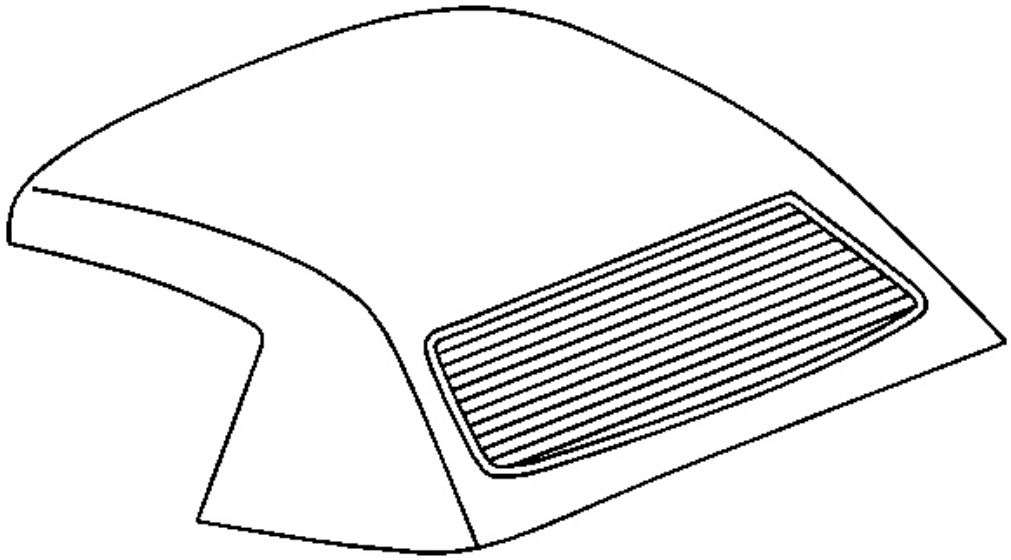

Fig. 35: Convertible Top
Courtesy of GENERAL MOTORS CORP.

1. Close the convertible top.

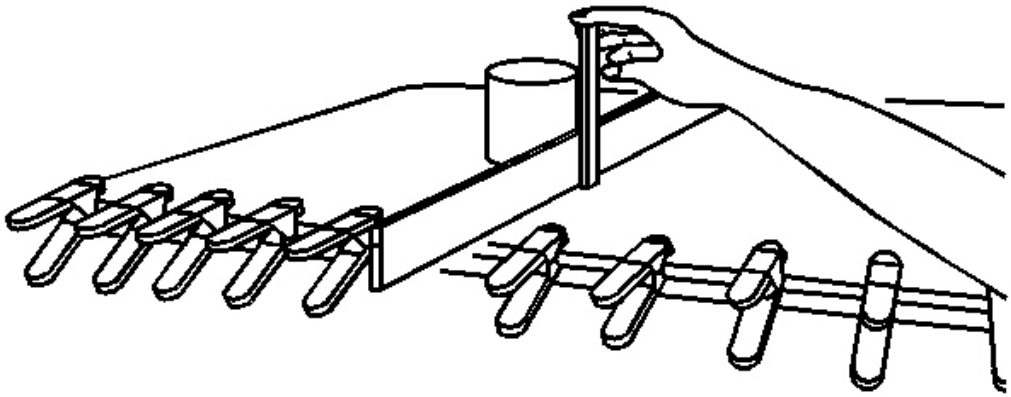

Fig. 36: Folding Top Cover At Top Cover Between #1 & #2 Bows
Courtesy of GENERAL MOTORS CORP.

2. Verify the tension in the folding top cover by setting a 1 M (3.28 ft) straight edge on the top cover between the #1 and the #2 bows.
3. Set a 4.5 kg (10 lb) weight next to the straight edge in the center of the top.
4. Using a ruler, measure the sag distance between the bottom of the straight edge and the top cover:
   - Cloth: 13-15 mm (0.51-0.60 in)
   - Vinyl: 17-20 mm (0.67-0.79 in)
5. If the tension does not meet these specifications, modify the tension by continuing with the following steps.
6. To modify the tension in the folding top cover, remove the folding top. Refer to **Folding Top Replacement**

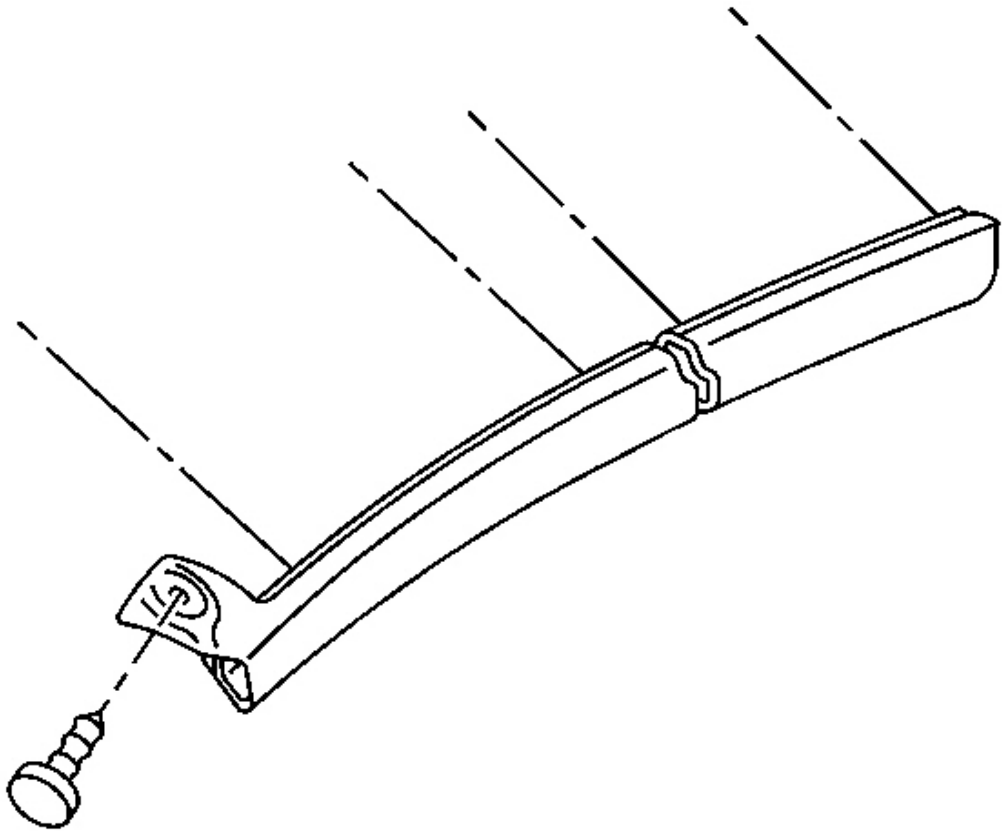

Fig. 37: Weatherstrip Screws At Right & Left Front Side Rail
Courtesy of GENERAL MOTORS CORP.

7. At the #1 bow, remove the weatherstrip screws from the right and from the left front side rail.

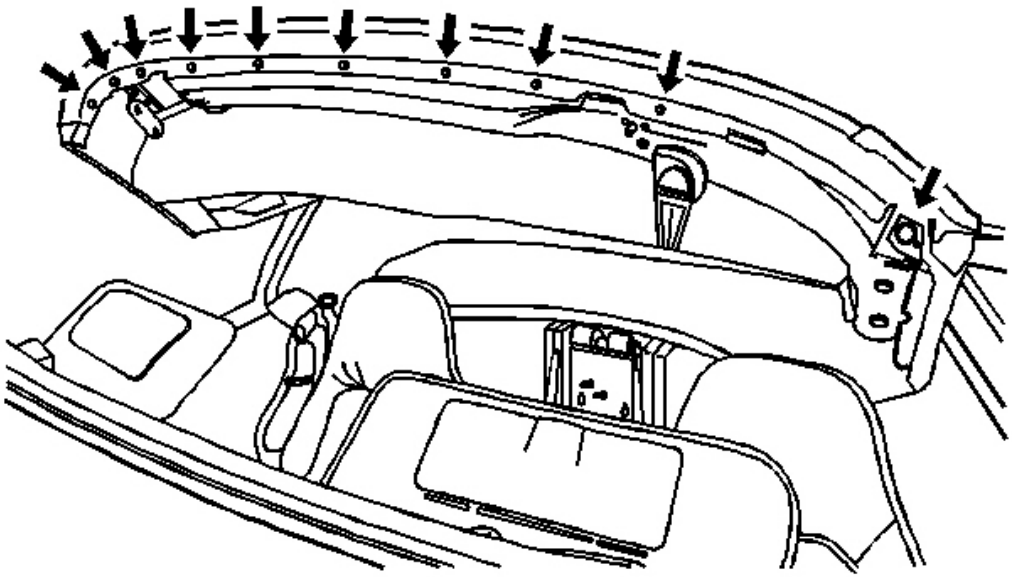

Fig. 38: Seal Compression Panel
Courtesy of GENERAL MOTORS CORP.

8. Remove the screws from the seal compression panel.
9. Remove the seal compression panel.

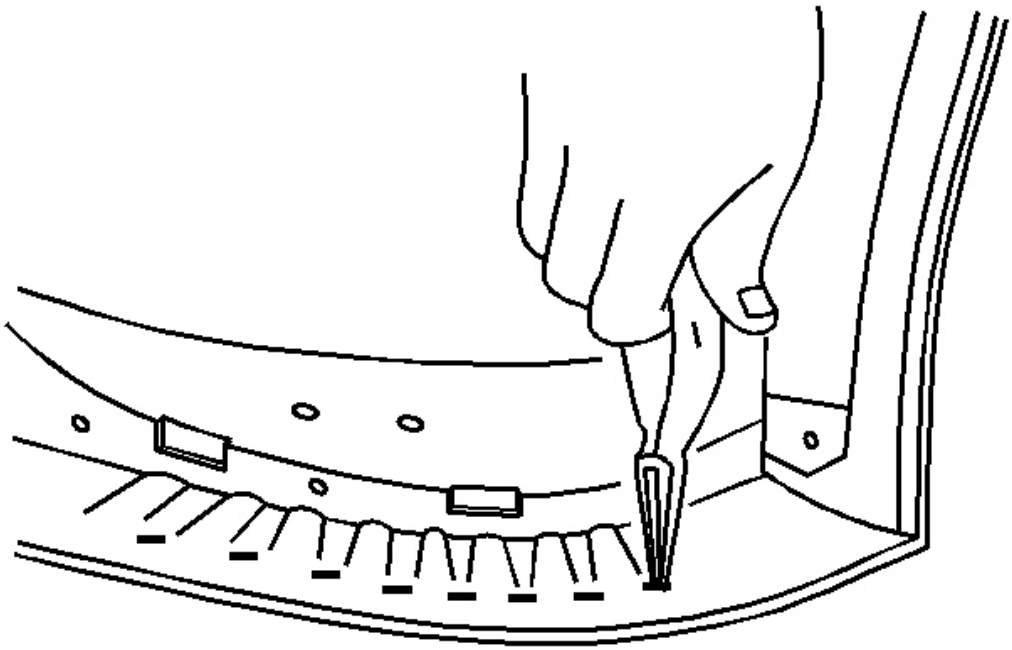

Fig. 39: Top Cover Staples To Bow
Courtesy of GENERAL MOTORS CORP.

10. Using a pair of needle nose pliers remove the top cover staples.
11. Pull the top cover forward to increase the tension.

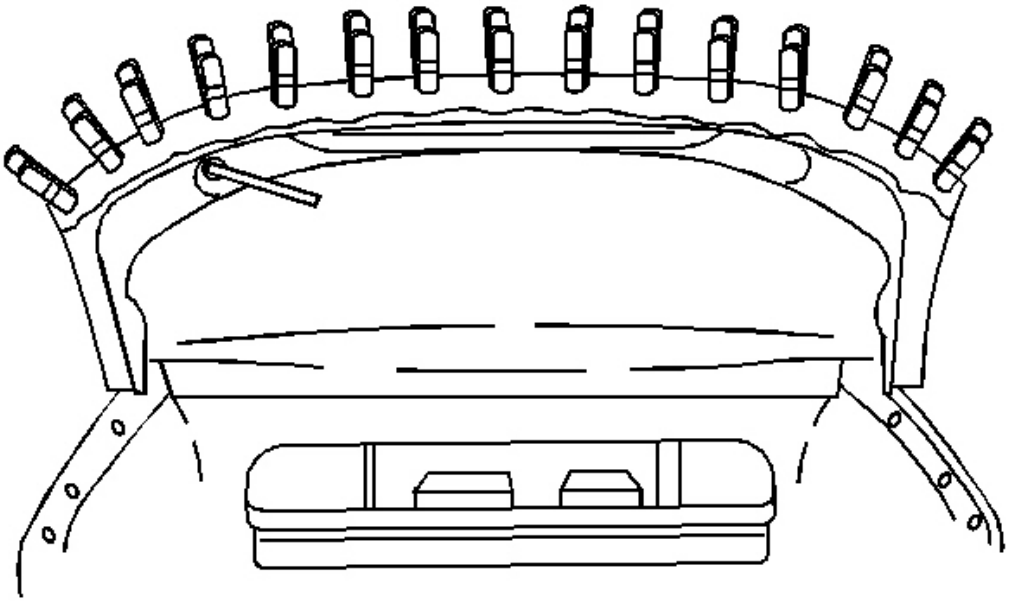

Fig. 40: Steel Rivets At Bow
Courtesy of GENERAL MOTORS CORP.

12. Fold the top cover over the #1 bow and secure with 5 cm (2 in) pinch clamps. Place the clamps directly over the steel rivets within the bow.

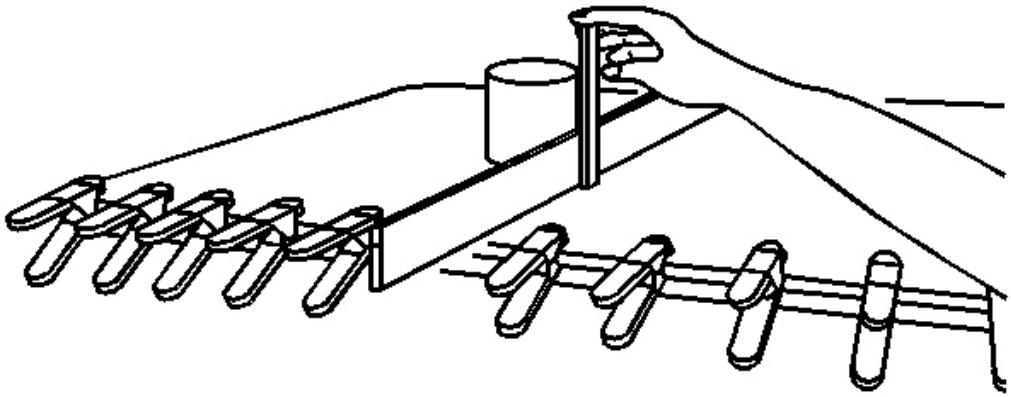

Fig. 41: Folding Top Cover At Top Cover Between #1 & #2 Bows
Courtesy of GENERAL MOTORS CORP.

13. Using a ruler as before, verify the tension again and adjust the tension as necessary.

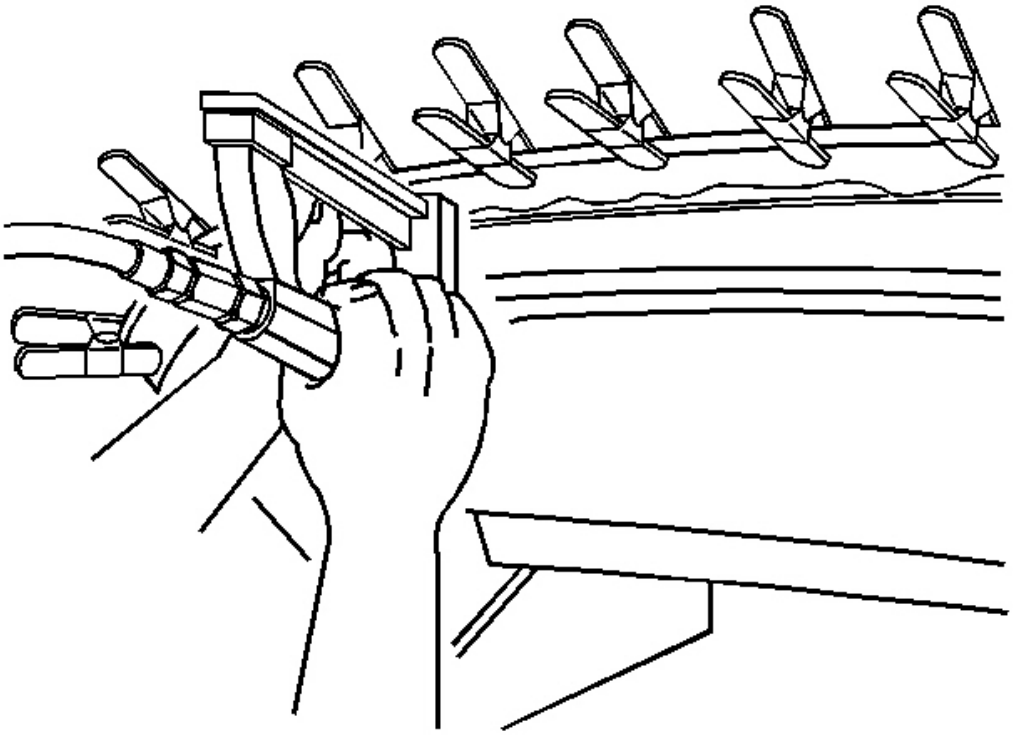

Fig. 42: Staple Top Cover To Bow
Courtesy of GENERAL MOTORS CORP.

14. If the tension is correct, staple the top cover to the bow.

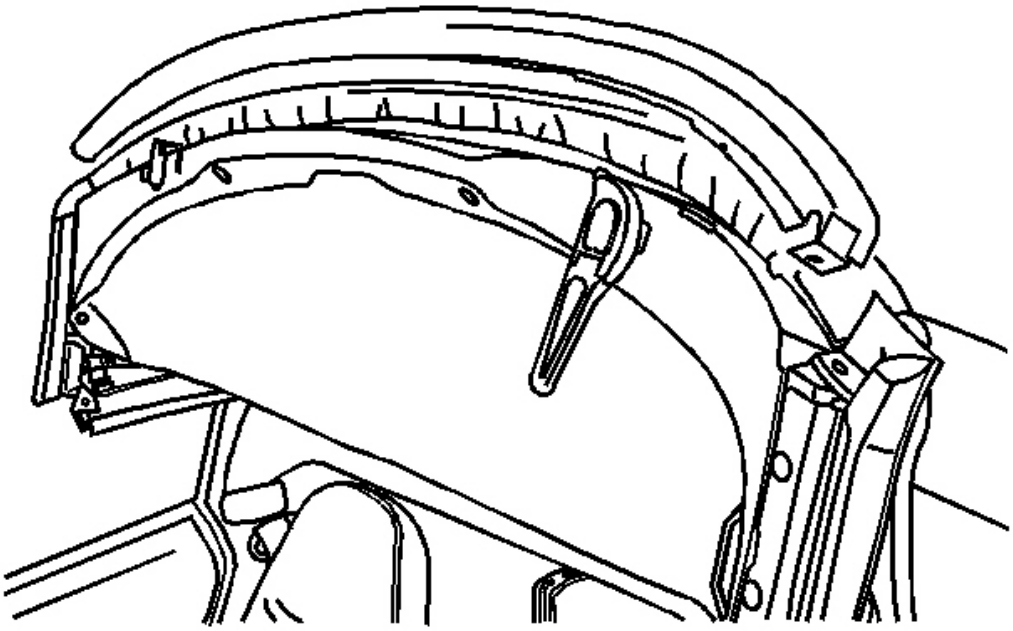

Fig. 43: Seal Compression Panel To Bow
Courtesy of GENERAL MOTORS CORP.

15. Position the seal compression panel to the bow.

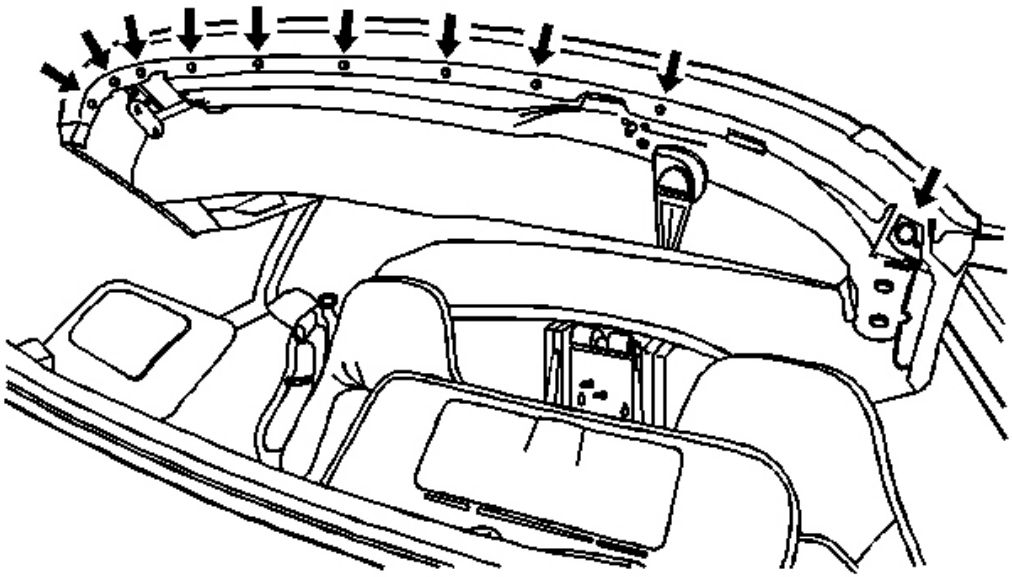

Fig. 44: Seal Compression Panel
Courtesy of GENERAL MOTORS CORP.

NOTE: Refer to Fastener Notice in Cautions and Notices.

16. Install the seal compression panel screws.

    Tighten: Tighten the screws to 3 N.m (26 lb in).

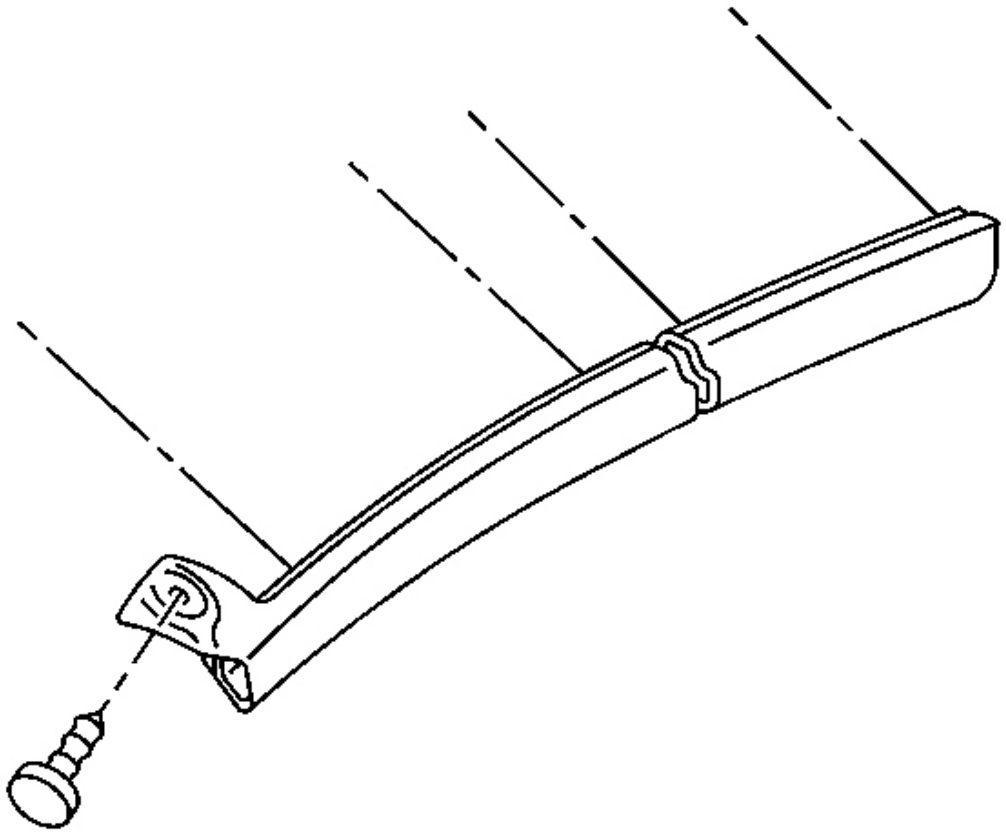

Fig. 45: Weatherstrip Screws At Right & Left Front Side Rail
Courtesy of GENERAL MOTORS CORP.

17. Install the front side rail seal screws.

    Tighten: Tighten the screws to 2 N.m (18 lb in).

18. Reposition the top to the original position.

FOLDING TOP COVER TENSION ADJUSTMENT - REAR

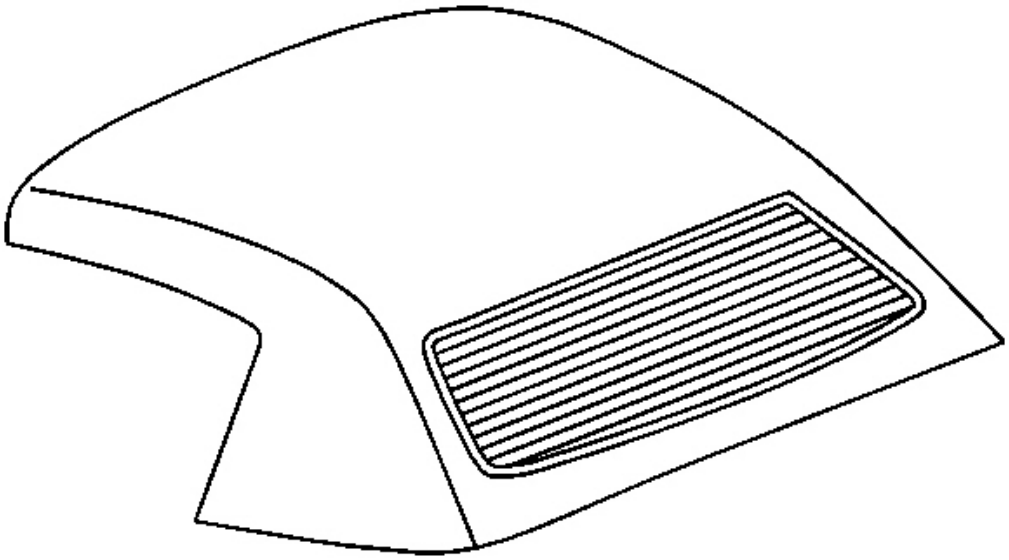

Fig. 46: Convertible Top
Courtesy of GENERAL MOTORS CORP.

1. Close the convertible top.

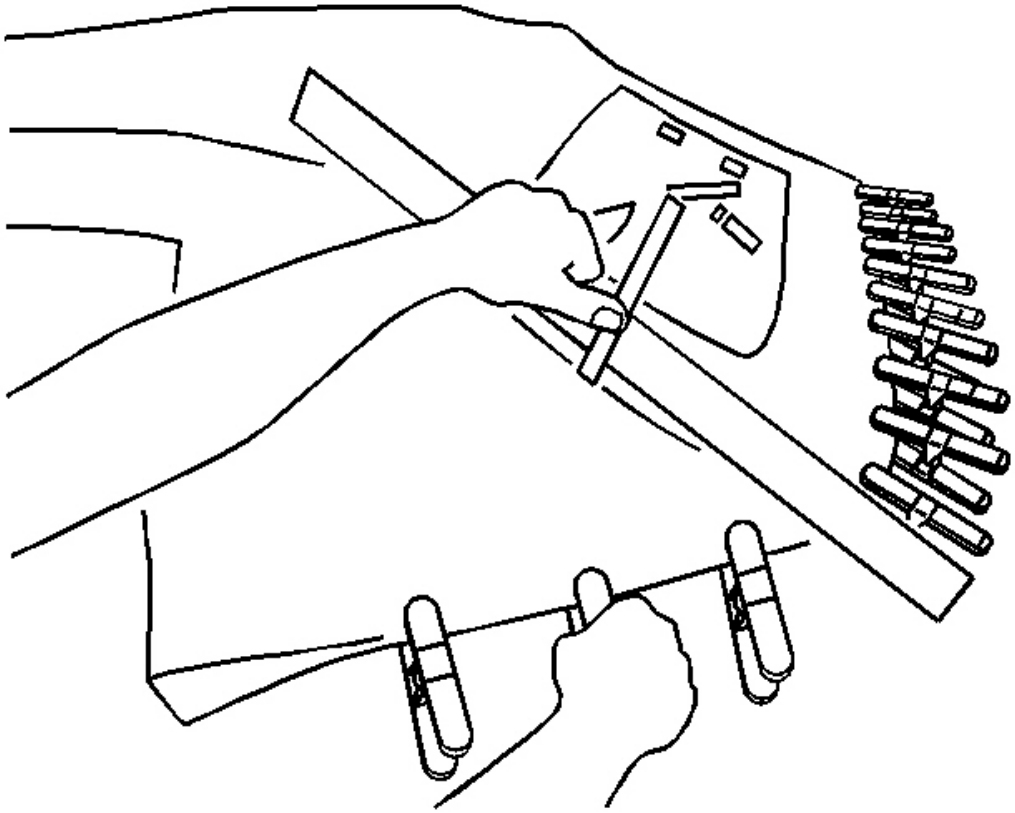

Fig. 47: Folding Top Cover To Top Cover Between #4 & #5 Bows
Courtesy of GENERAL MOTORS CORP.

2. Verify the tension in the folding top cover by setting a 1 m (3.28 ft) straight edge on the top cover between the #4 and the #5 bows.
3. With a ruler, measure the sag distance between the bottom of the straight edge and the top cover:
   - Cloth: 15-20 mm (0.60-0.79 in), normally set at 18 mm (0.70 in)
   - Vinyl: 15-20 mm (0.60-0.79 in), normally set at 15 mm (0.60 in)
4. If the tension does not meet these specifications, modify the tension by continuing with the following steps.
5. To modify the tension, remove the folding top. Refer to **Folding Top Replacement** .
6. Remove the #5 bow weatherstrip. Refer to **Weatherstrip Replacement - Folding Top (Front and Center Side Rails)** or **Weatherstrip Replacement - Folding Top (Rear Side Rail)** or **Weatherstrip Replacement - Folding Top (Number Five Bow)** .

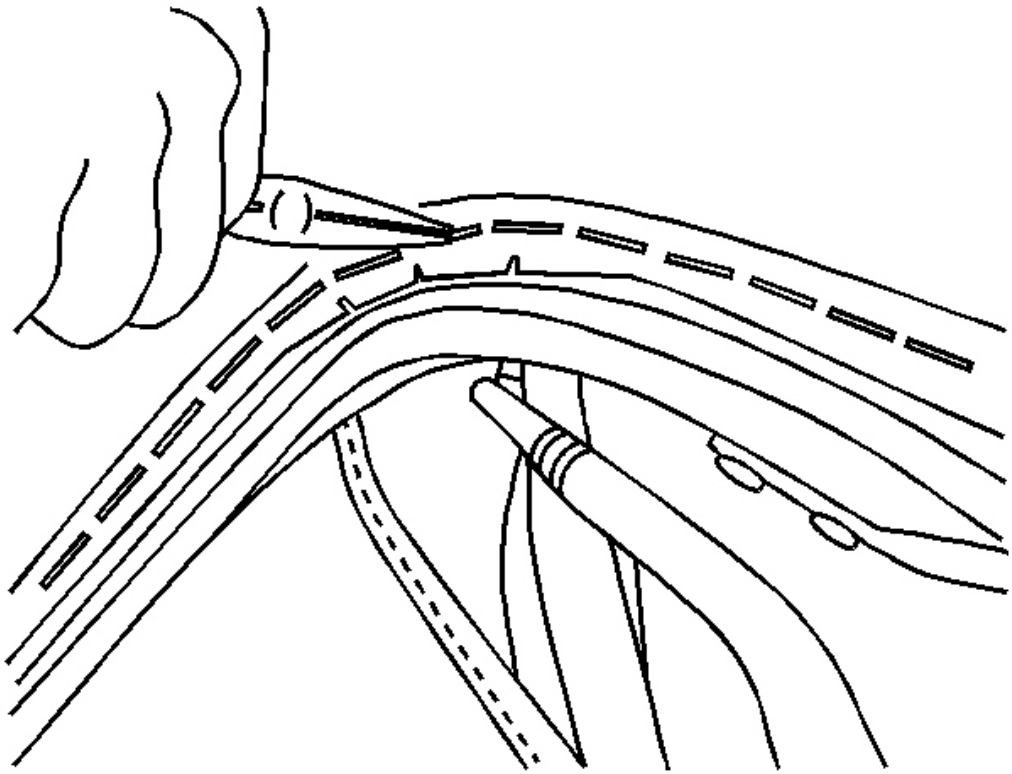

Fig. 48: Needle Nose Pliers To Top Cover Staples To Bow
Courtesy of GENERAL MOTORS CORP.

7. Using a pair of needle-nose pliers remove the top cover staples.
8. Pull the top cover downward to increase the tension.

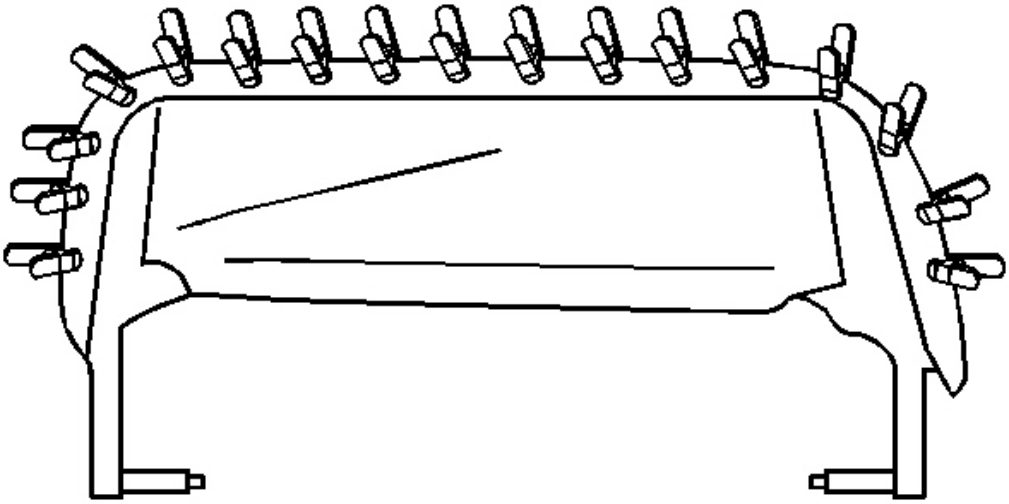

Fig. 49: Top Cover Over #5 Bow & Pinch Clamps
Courtesy of GENERAL MOTORS CORP.

9. Fold the top cover over the #5 bow and secure with 5 cm (2 in) pinch clamps. Place the clamps directly over the steel rivets within the bow.

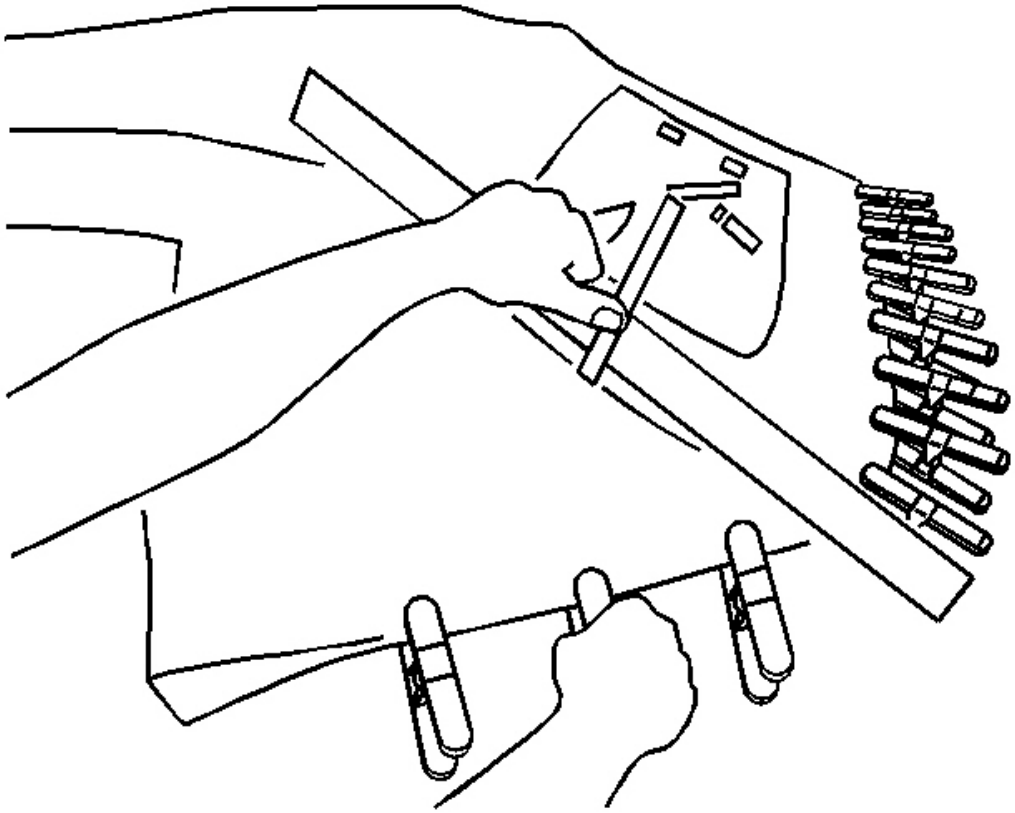

Fig. 50: Folding Top Cover To Top Cover Between #4 & #5 Bows
Courtesy of GENERAL MOTORS CORP.

10. Using a ruler as before, verify the tension again and adjust the tension as necessary.
11. Staple the top cover to the bow.
12. Install the #5 bow weatherstrip. Refer to **Weatherstrip Replacement - Folding Top (Front and Center Side Rails)** or **Weatherstrip Replacement - Folding Top (Rear Side Rail)** or **Weatherstrip Replacement - Folding Top (Number Five Bow)** .
13. Reposition the top to the original position.

FOLDING TOP REPLACEMENT

Removal Procedure

1. Remove the lock pillar upper trim panel. Refer to **Trim Replacement - Lock Pillar (Upper Convertible)** or **Trim Replacement - Lock Pillar (Coupe)** or **Trim Replacement - Lock Pillar (Lower Convertible and Hard Top)** in Interior Trim.

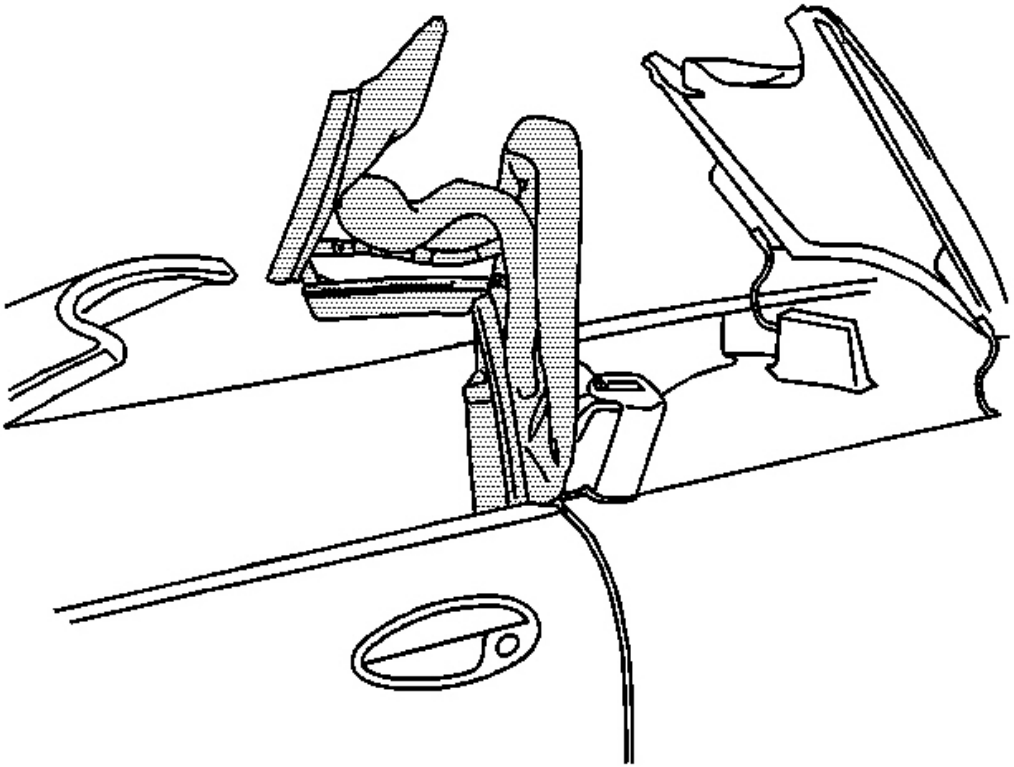

Fig. 51: Folding Top With The #1 Bow And The #5 Bow Up
Courtesy of GENERAL MOTORS CORP.

2. Position the #1 bow and the #5 bow in an up position.
3. Disconnect the rear defogger electrical connections.
4. Using a grease pencil mark the folding top mounting locations on both sides.

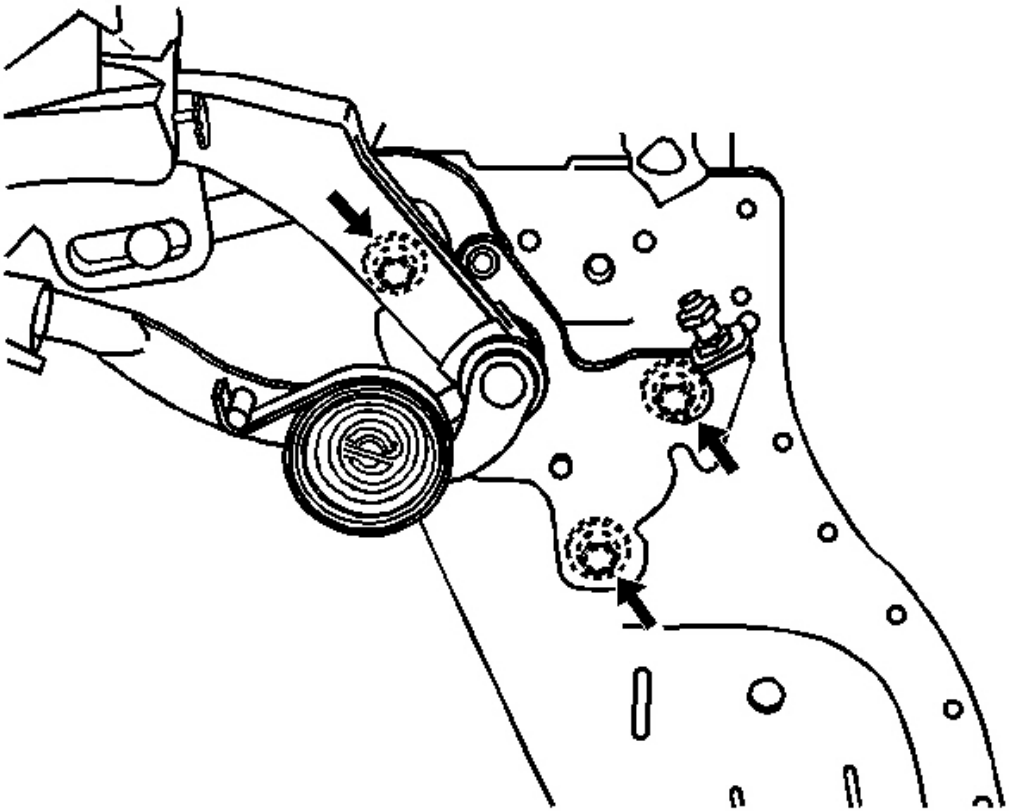

Fig. 52: Folding Top Pillar Bracket Bolts
Courtesy of GENERAL MOTORS CORP.

5. Remove the the folding top pillar bracket bolts with an assistant.
6. With an assistant, slide the top slightly up and then rearward and out of the pillar bracket.

Installation Procedure

1. With an assistant, position the folded top to the vehicle with the top resting on the pillar bracket pin.

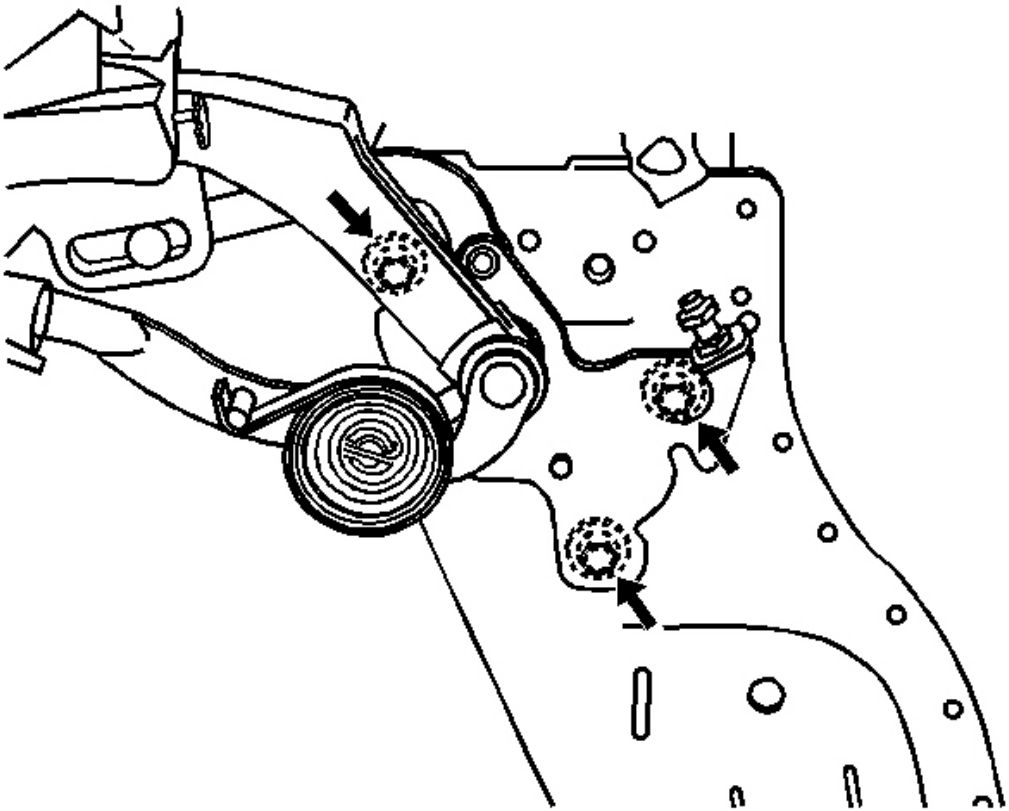

Fig. 53: Folding Top Pillar Bracket Bolts
Courtesy of GENERAL MOTORS CORP.

2. Align the folding top to the marks made upon removal.

NOTE: **Refer to Fastener Notice in Cautions and Notices.**

3. Install the folding top bolts to the body.

Tighten: Tighten the bolts to 25 N.m (18 lb ft).

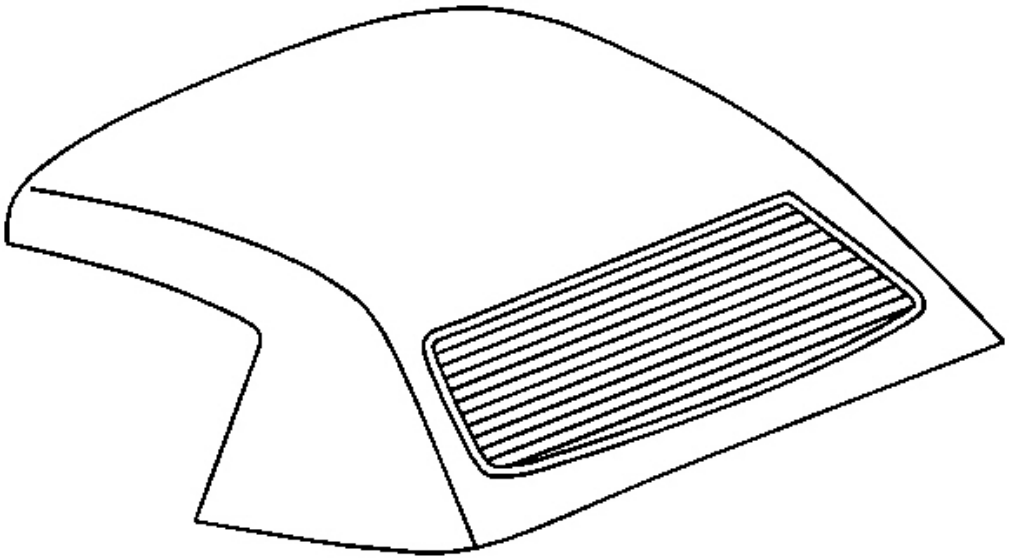

Fig. 54: Convertible Top
Courtesy of GENERAL MOTORS CORP.

4. Close and latch the top.
5. Connect the rear defogger electrical connections.
6. Install the lock pillar trim panel. Refer to **Trim Replacement - Lock Pillar (Upper Convertible)** or **Trim Replacement - Lock Pillar (Coupe)** or **Trim Replacement - Lock Pillar (Lower Convertible and Hard Top)** in Interior Trim.
7. Check top for proper operation.
8. Water test the folding top. Refer to **Waterleak Test Preparation** in Water Leaks.

WEATHERSTRIP REPLACEMENT - FOLDING TOP (FRONT AND CENTER SIDE RAILS)

Removal Procedure

IMPORTANT: You can remove the front side rail and the center side rail weatherstrips separately.

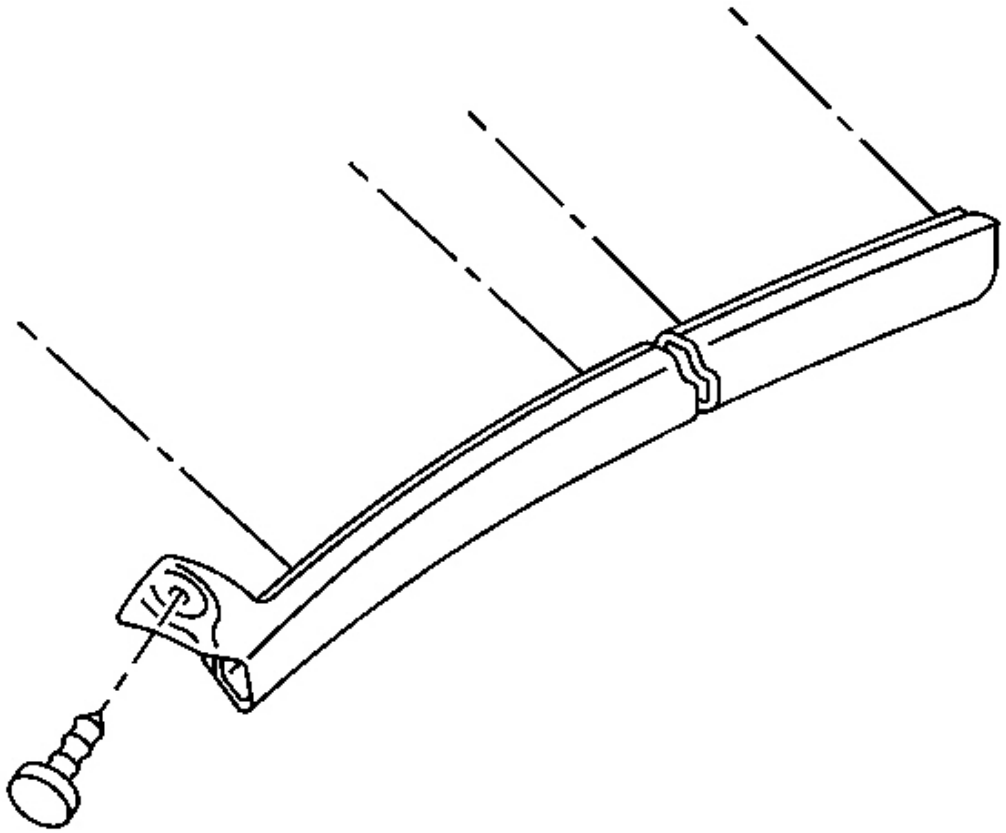

Fig. 55: Weatherstrip Screws At Right & Left Front Side Rail
Courtesy of GENERAL MOTORS CORP.

1. Remove the screw from the front side rail weatherstrip.
2. Remove the front side rail weatherstrip. If required remove the center side rail weatherstrip.
3. Clean the adhesive from the mounting surface using 3M(tm) P/N 8984 or equivalent.

Installation Procedure

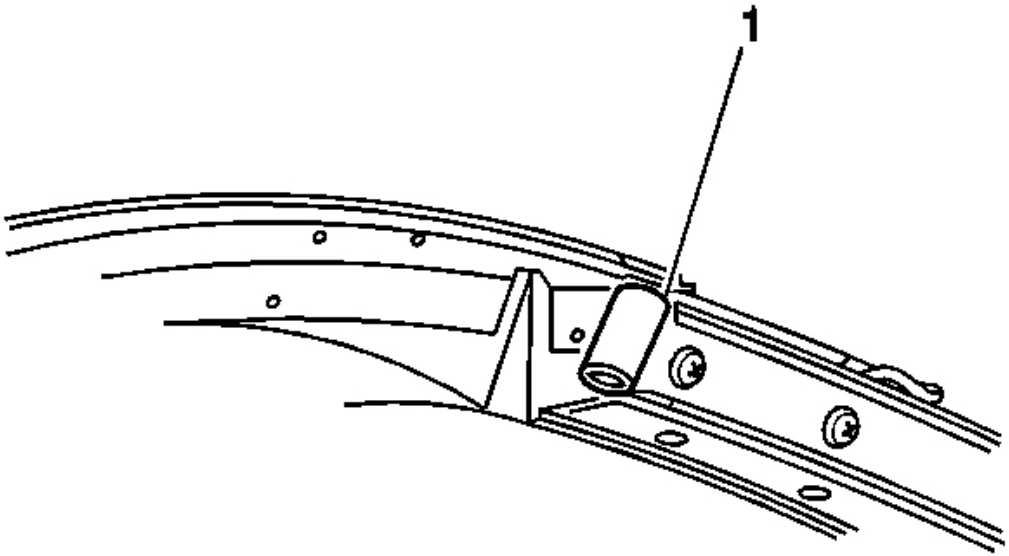

Fig. 56: Forward End Of Front Side Weatherstrip Retainer
Courtesy of GENERAL MOTORS CORP.

1. Apply sealer GM P/N 12345739 (Canadian P/N 10953472), or equivalent to the forward end of the front side weatherstrip retainer (1).

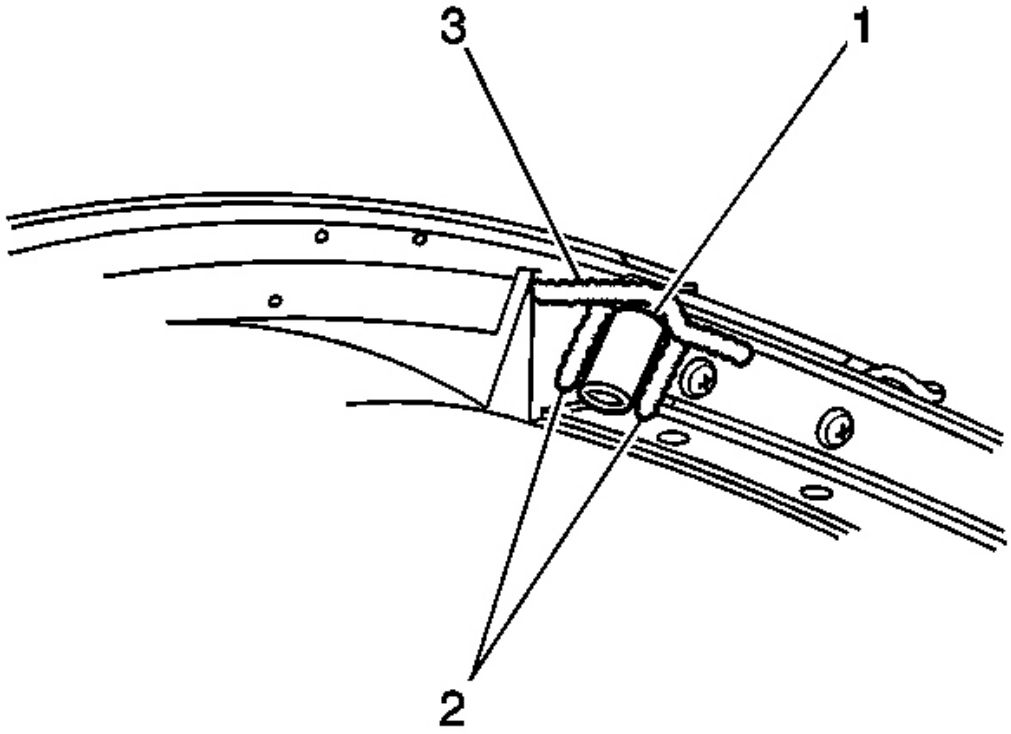

Fig. 57: Front Upper Corner
Courtesy of GENERAL MOTORS CORP.

2. Apply a bead of sealer GM P/N 12345739 (Canadian P/N 10953472), or equivalent 6 mm (2.4 in) high around the front side retainer (1) in the following places:
   - At the front upper corner (3)
   - On both sides (2)

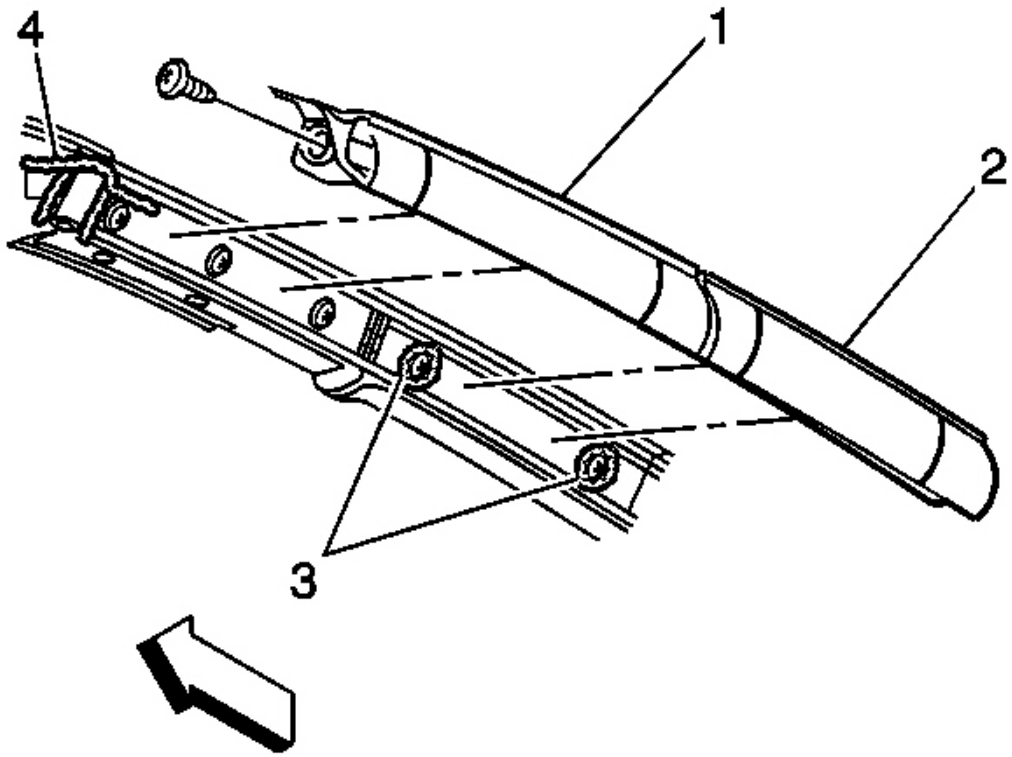

Fig. 58: Center Side Retainer & Weatherstrip
Courtesy of GENERAL MOTORS CORP.

3. Apply a drop of sealer GM P/N 12345739 (Canadian P/N 10953472), or equivalent (3) 12 mm (0.5 in) in diameter to the screw heads of the center side retainer.
4. Remove the protective film from the adhesive on the weatherstrip.

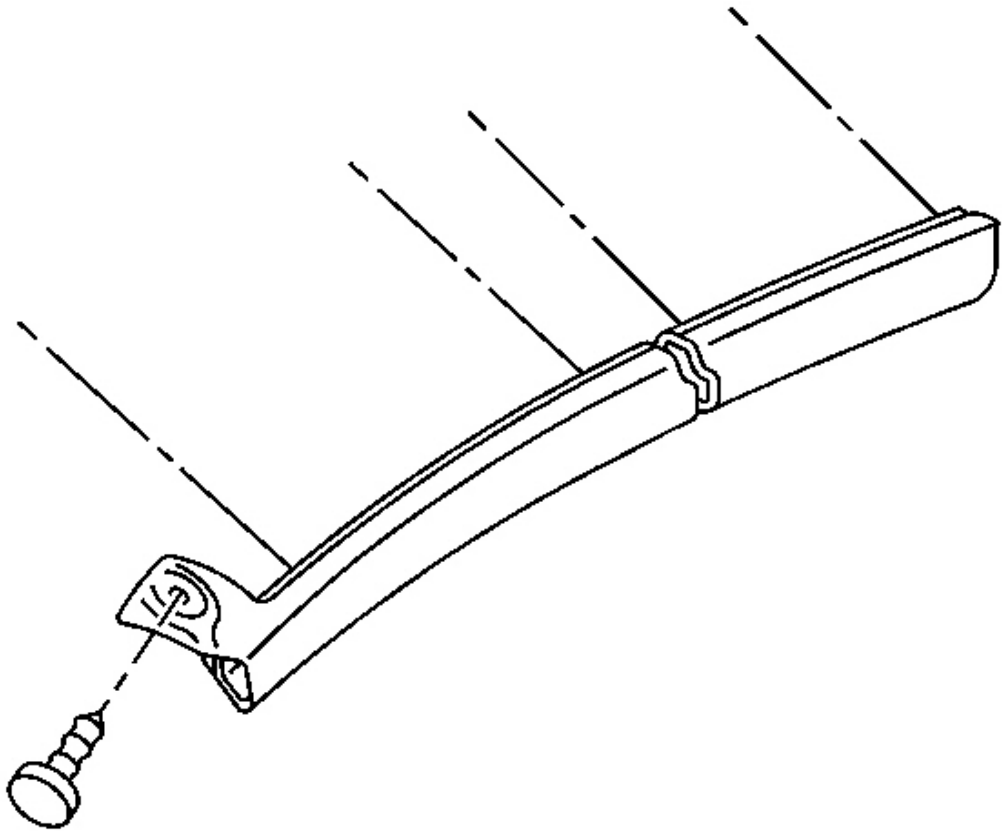

Fig. 59: Weatherstrip Screws At Right & Left Front Side Rail
Courtesy of GENERAL MOTORS CORP.

5. Install the side rail weatherstrip, as necessary.

NOTE: **Refer to Fastener Notice in Cautions and Notices.**

6. Install the screw to the front side rail weatherstrip.

   Tighten: Tighten the screw to 4 N.m (35 lb in).

7. Reposition the top to the original position.

WEATHERSTRIP REPLACEMENT - FOLDING TOP (REAR SIDE RAIL)

Removal Procedure

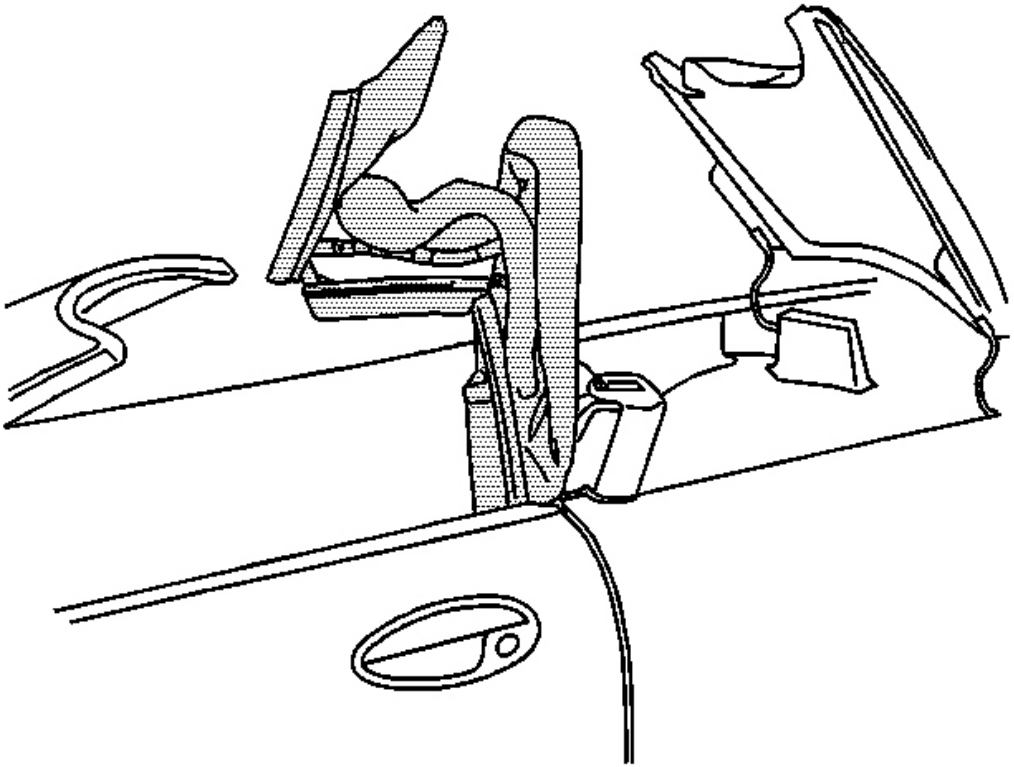

Fig. 60: Folding Top With The #1 Bow And The #5 Bow Up
Courtesy of GENERAL MOTORS CORP.

1. Position the #1 bow and the #5 bow up.

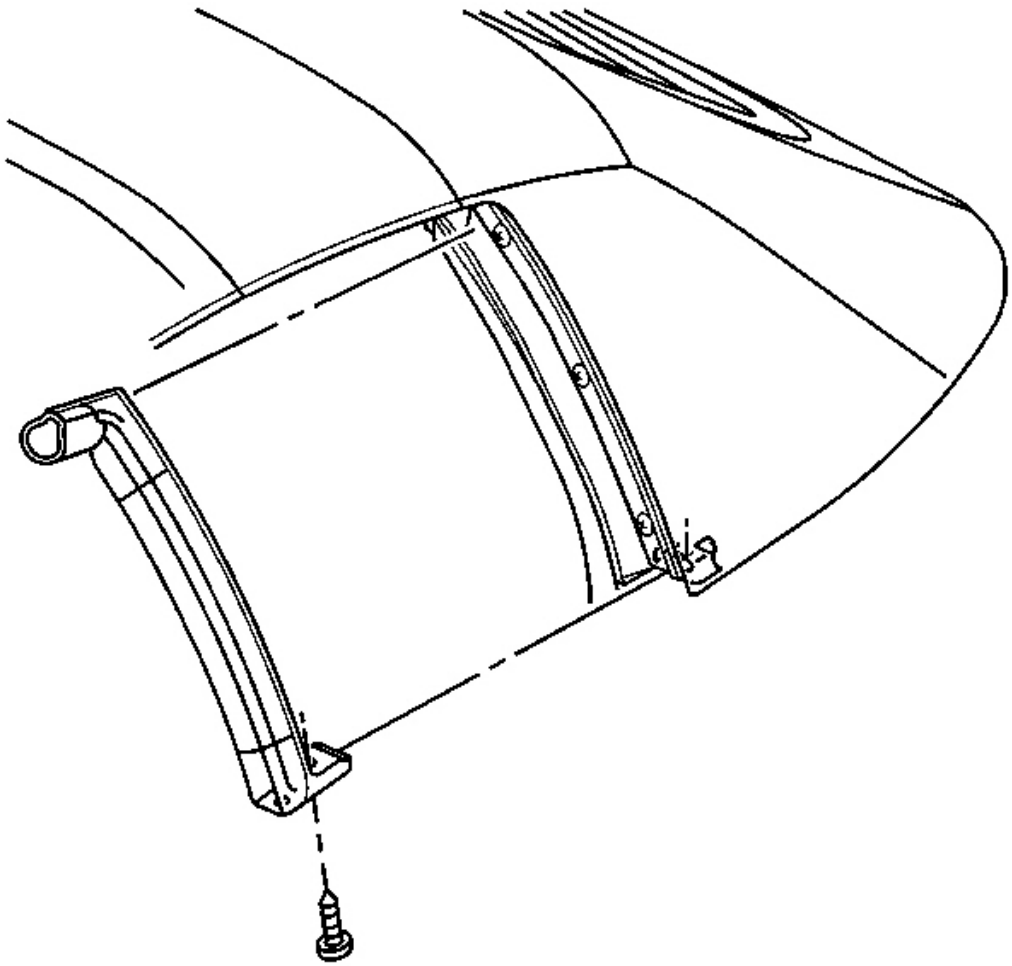

Fig. 61: Push-In Retainers To Bottom Of Rear Side Rail Weatherstrip
Courtesy of GENERAL MOTORS CORP.

2. Remove the push-in retainers from the bottom of the rear side rail weatherstrip.
3. Remove the weatherstrip.
4. Clean the adhesive from the mounting surface using 3M(tm) P/N 8984 or equivalent.

Installation Procedure

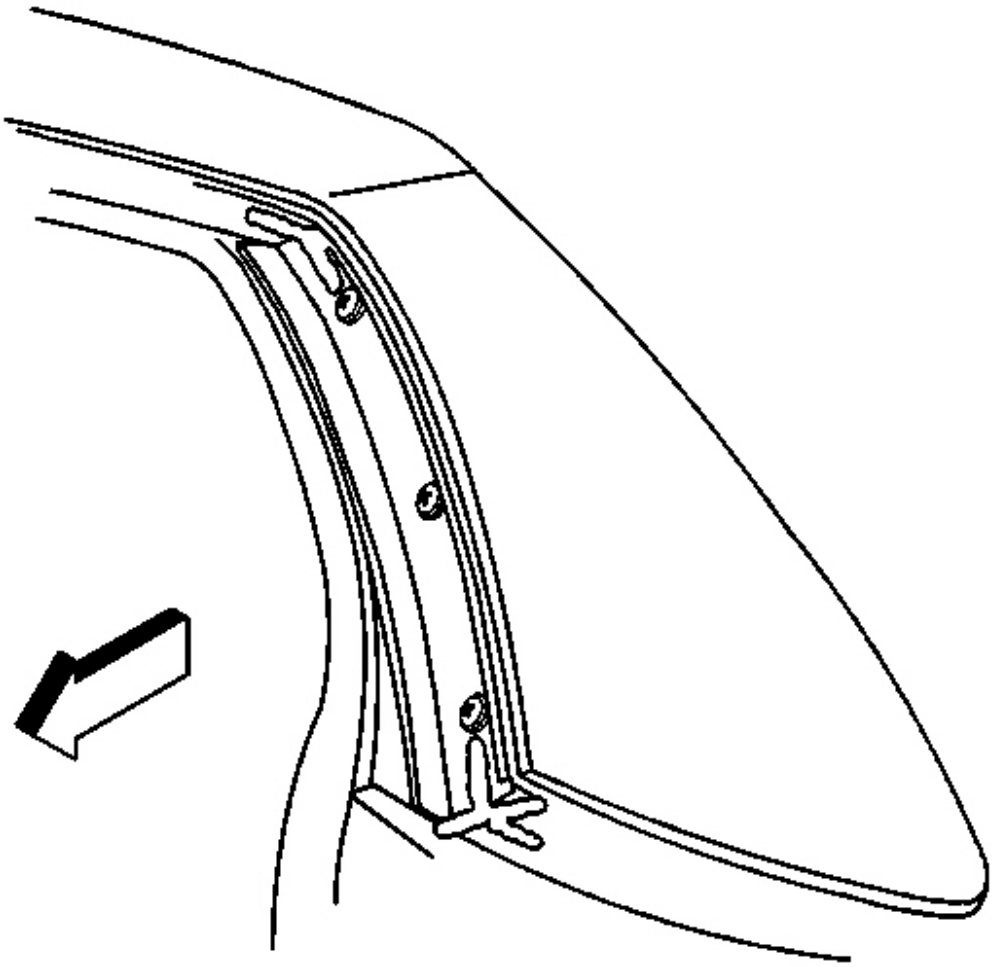

Fig. 62: Upper & Lower Corners Of Weatherstrip Retainer
Courtesy of GENERAL MOTORS CORP.

1. Apply a bead of sealer GM P/N 12345739 (Canadian P/N 10953472), to the upper and lower corners of the weatherstrip retainer.

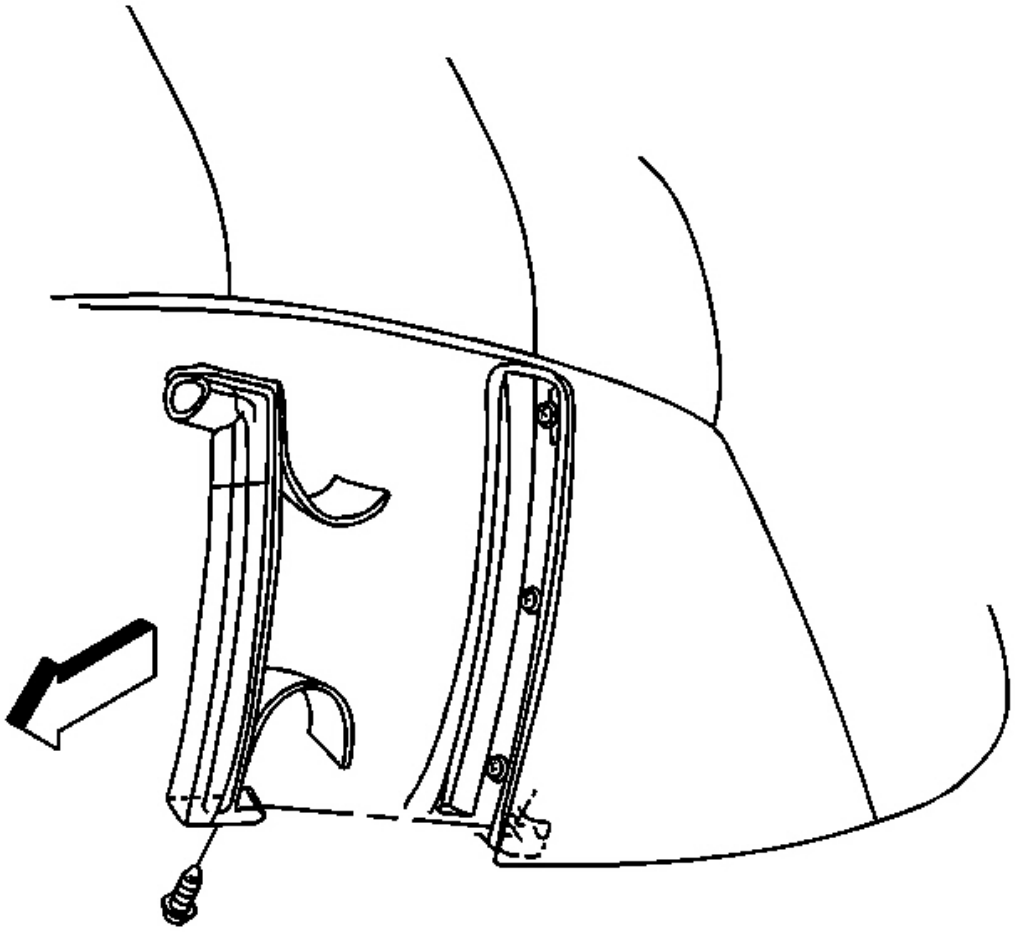

Fig. 63: Rear Weatherstrip & Center Rail Side Weatherstrip
Courtesy of GENERAL MOTORS CORP.

2. Remove the protective film from the adhesive on the back of the weatherstrip.
3. Install the weatherstrip to the rear side rail retainer.
4. Install the rear weatherstrip into the end of the center rail side weatherstrip.
5. Install the push-in retainer to the bottom of the weatherstrip.
6. Reposition the folding top to the original position.

WEATHERSTRIP REPLACEMENT - FOLDING TOP (NUMBER FIVE BOW)

Removal Procedure

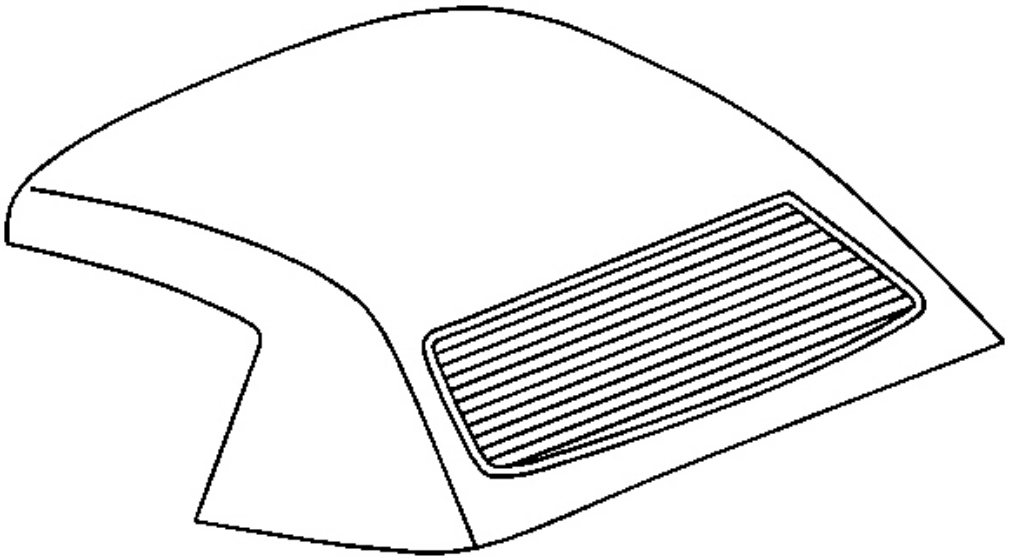

Fig. 64: Convertible Top
Courtesy of GENERAL MOTORS CORP.

1. Position the top closed.
2. Remove the protective pads from the ends of the #5 bow covering the nuts to the 5 bow.

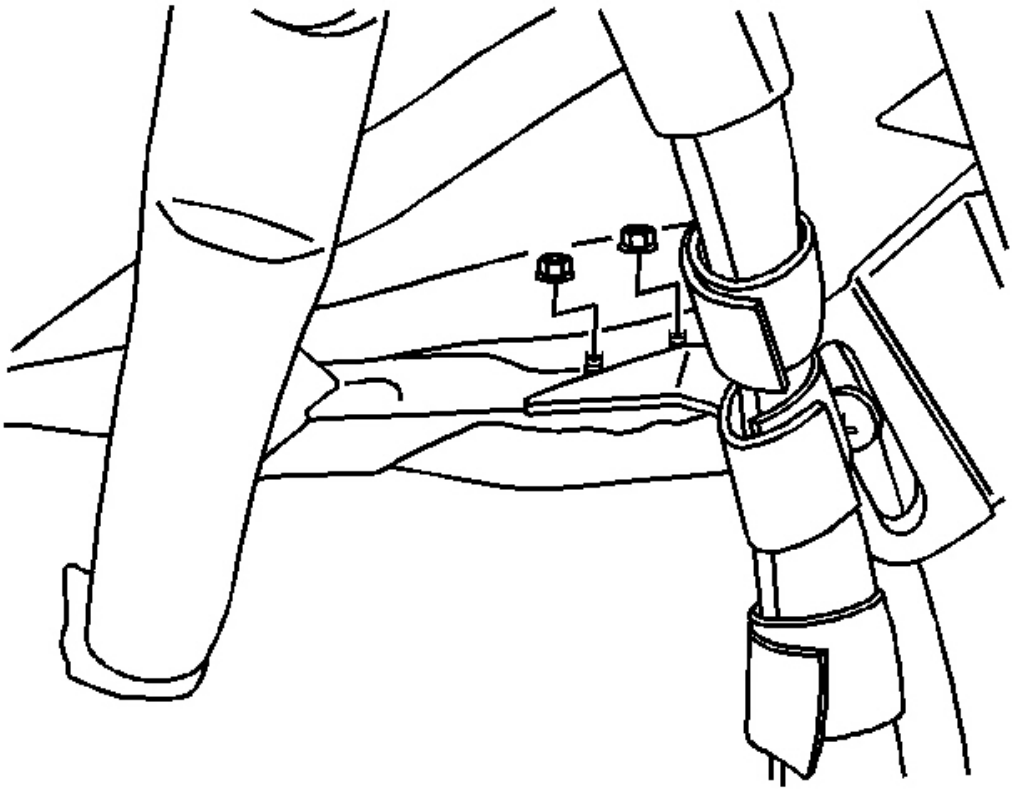

Fig. 65: Weatherstrip To #5 Bow
Courtesy of GENERAL MOTORS CORP.

3. Remove the nuts attaching the ends of the weatherstrip to the 5 bow.

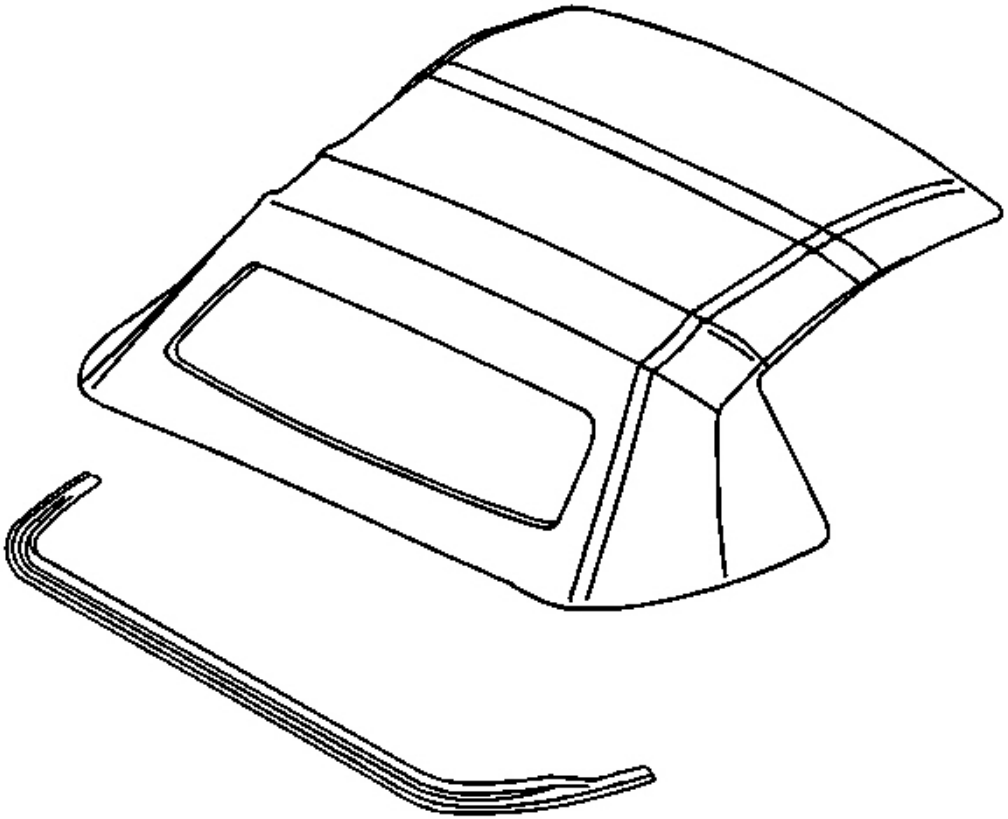

Fig. 66: #5 Bow Weatherstrip
Courtesy of GENERAL MOTORS CORP.

4. Remove the weatherstrip.

Installation Procedure

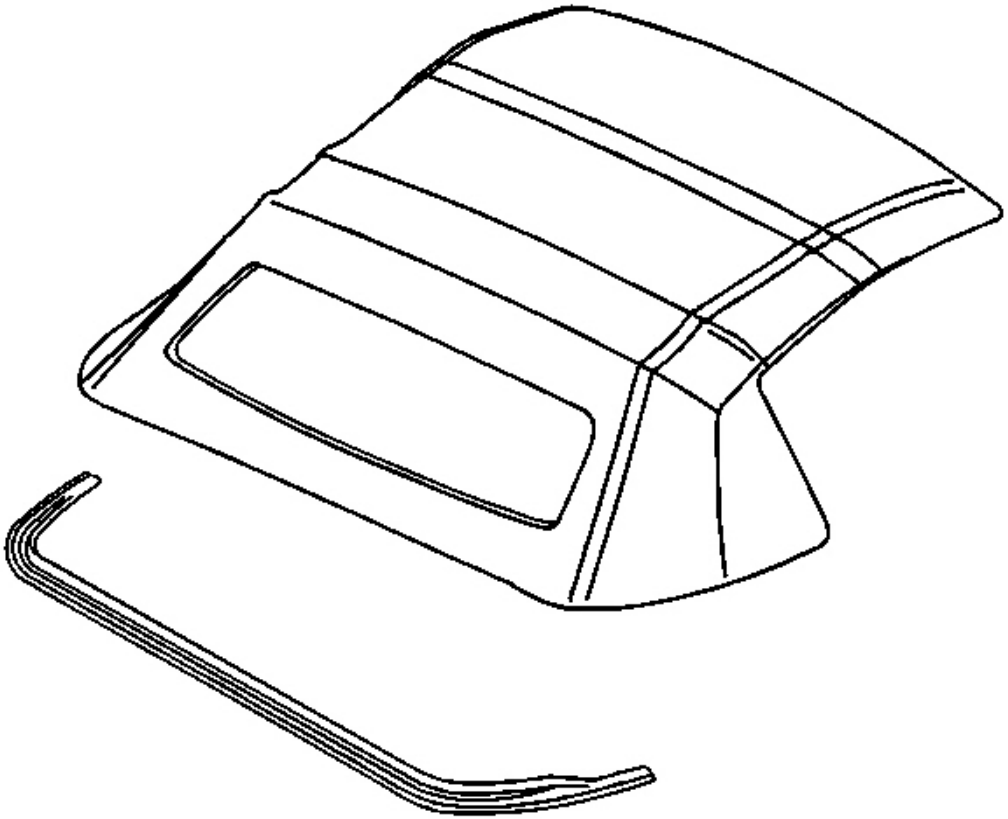

Fig. 67: #5 Bow Weatherstrip
Courtesy of GENERAL MOTORS CORP.

1. Install the #5 bow weatherstrip.

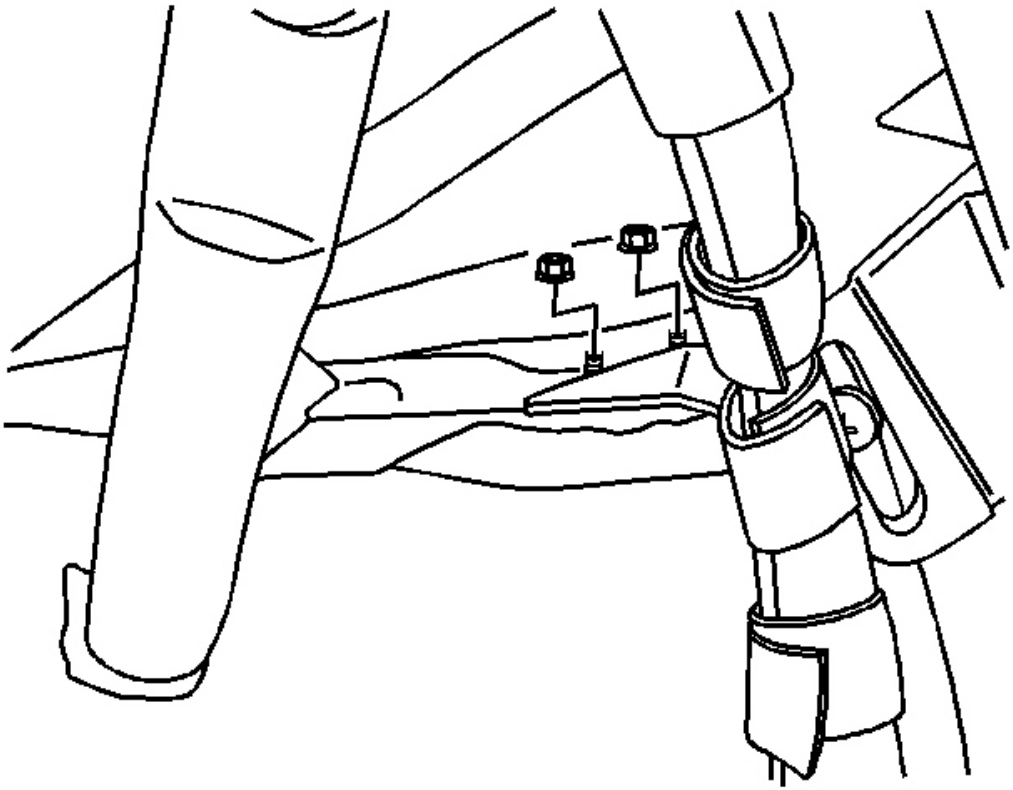

Fig. 68: Weatherstrip To #5 Bow
Courtesy of GENERAL MOTORS CORP.

NOTE: Refer to Fastener Notice in Cautions and Notices.

2. Install the nuts to the ends of the weatherstrip.

   Tighten: Tighten the nuts to 4 N.m (35 lb in).

3. Install the protective pads to the weatherstrip nuts.
4. Install the protective pads to the ends of the bow.
5. Reposition the folding top to the original position.

WEATHERSTRIP RETAINER REPLACEMENT - FOLDING TOP (FRONT AND CENTER SIDE RAIL)

Removal Procedure

1. Remove the front and center side weatherstrip from the retainer. Refer to **Weatherstrip Replacement - Folding Top (Front and Center Side Rails)** or **Weatherstrip Replacement - Folding Top (Rear Side Rail)** or **Weatherstrip Replacement - Folding Top (Number Five Bow)** .

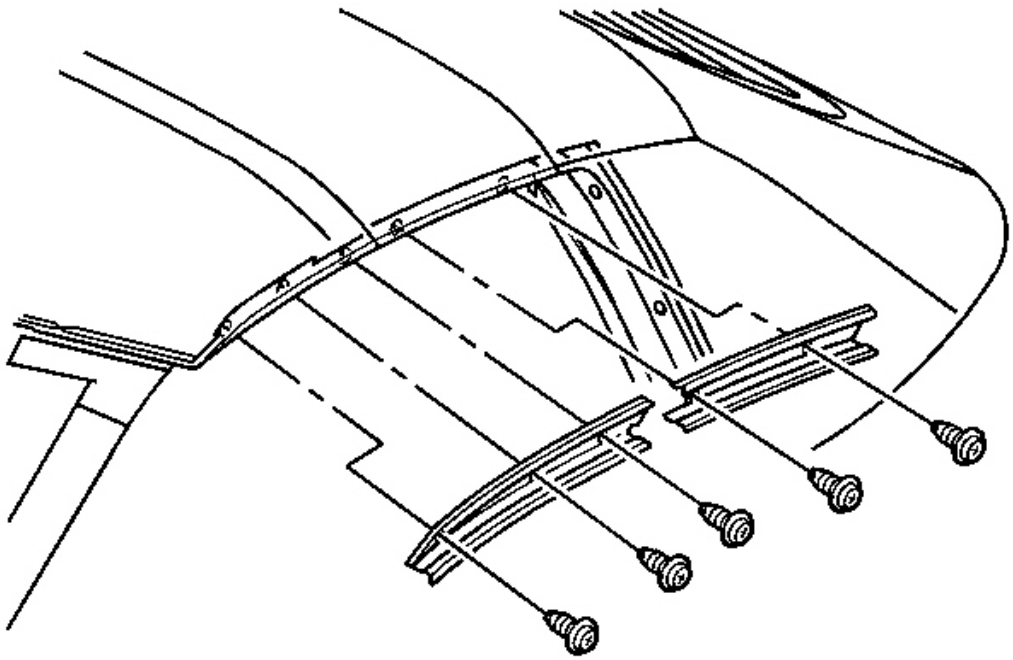

Fig. 69: Screws To Side Weatherstrip Retainer
Courtesy of GENERAL MOTORS CORP.

2. Remove the screws from the side weatherstrip retainer.
3. Remove the retainer.
4. Pull the window blowout clip from the front side retainer.
5. Clean the adhesive from the blowout clip using 3M(tm) P/N 8984 or equivalent.

Installation Procedure

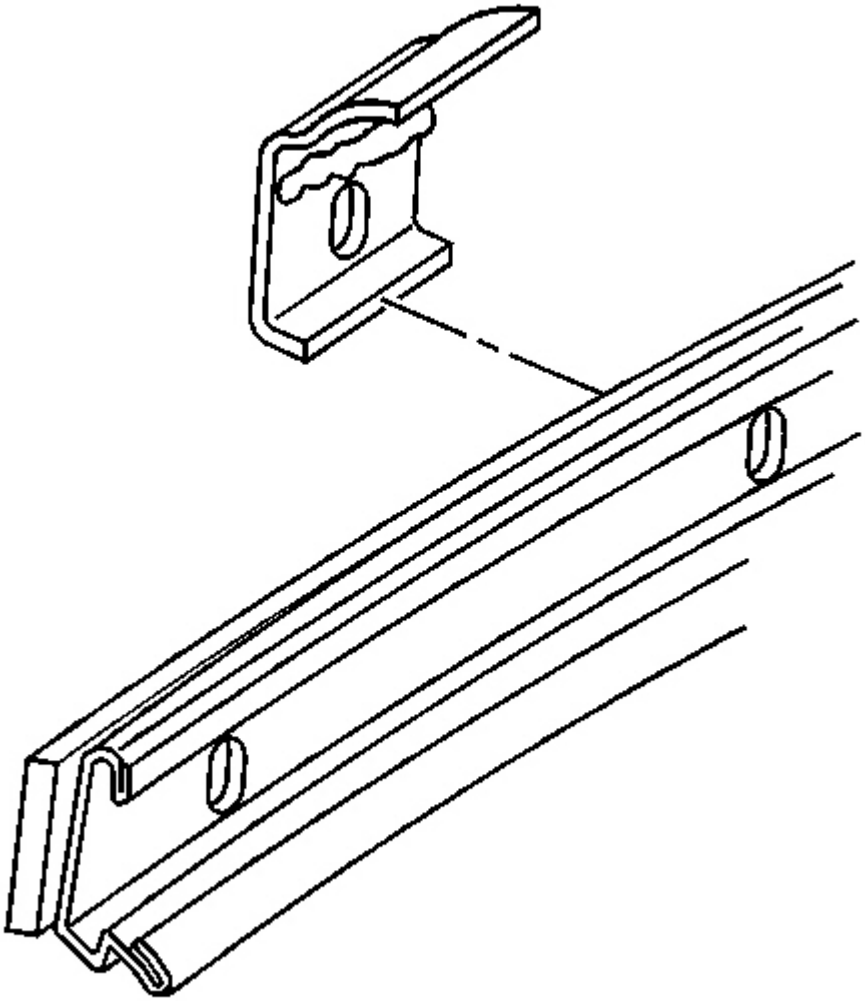

Fig. 70: Front Side Of Blowout Clip To Front Side Retainer
Courtesy of GENERAL MOTORS CORP.

1. Apply sealer, GM P/N 12345739 (Canadian P/N 10953472), or equivalent to the front side of the blowout clip on the front side retainer.
2. Align and install the clip to the middle screw hole of the front side retainer.

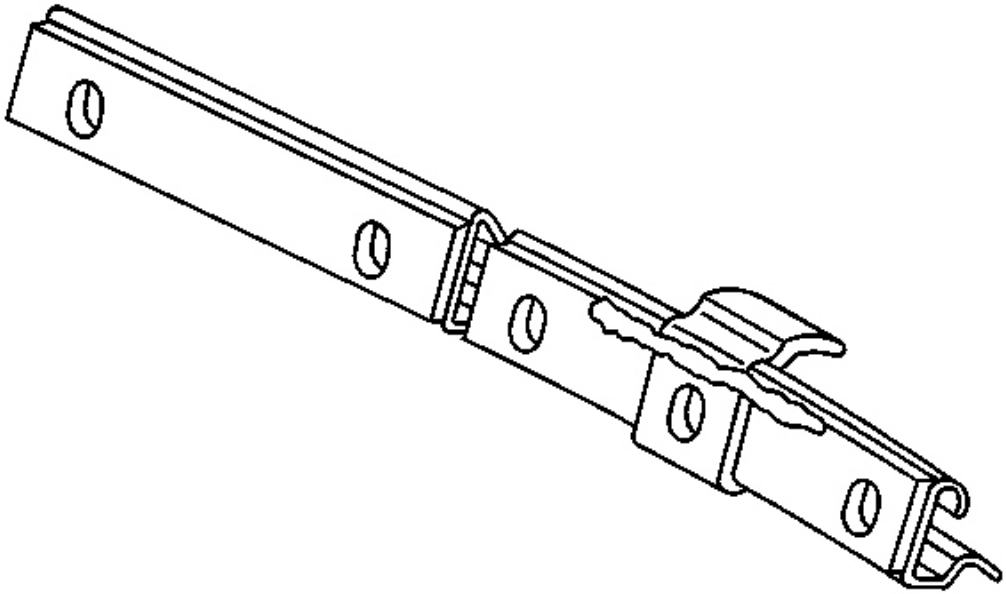

Fig. 71: Rear Of Blowout Clip To Front Side Retainer
Courtesy of GENERAL MOTORS CORP.

3. Apply sealer, GM P/N 12345739 (Canadian P/N 10953472), or equivalent to the rear of the blowout clip and the adjacent area of the front side retainer.

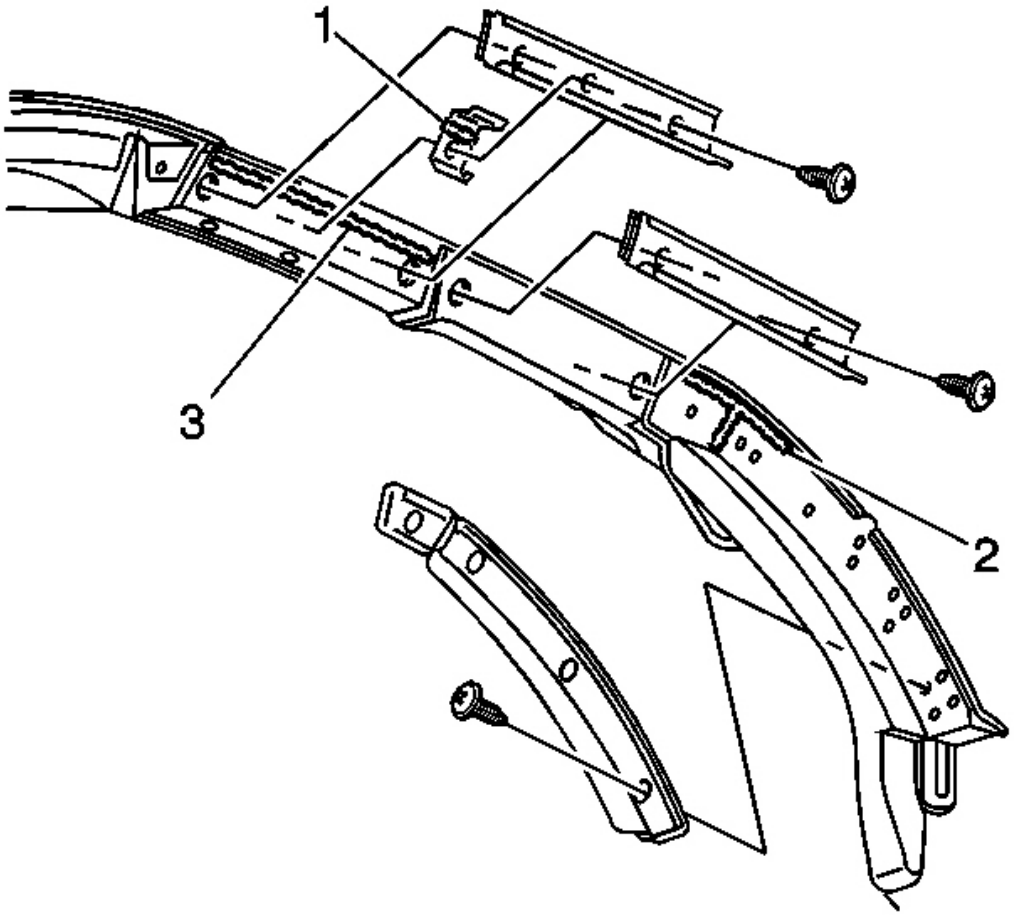

Fig. 72: Upper Edge Of Front Section To Front Side Retainer
Courtesy of GENERAL MOTORS CORP.

4. Apply a bead of sealer, GM P/N 12345739 (Canadian P/N 10953472), or equivalent to the upper edge of the front section of the roof main control link on the front side retainer (3).

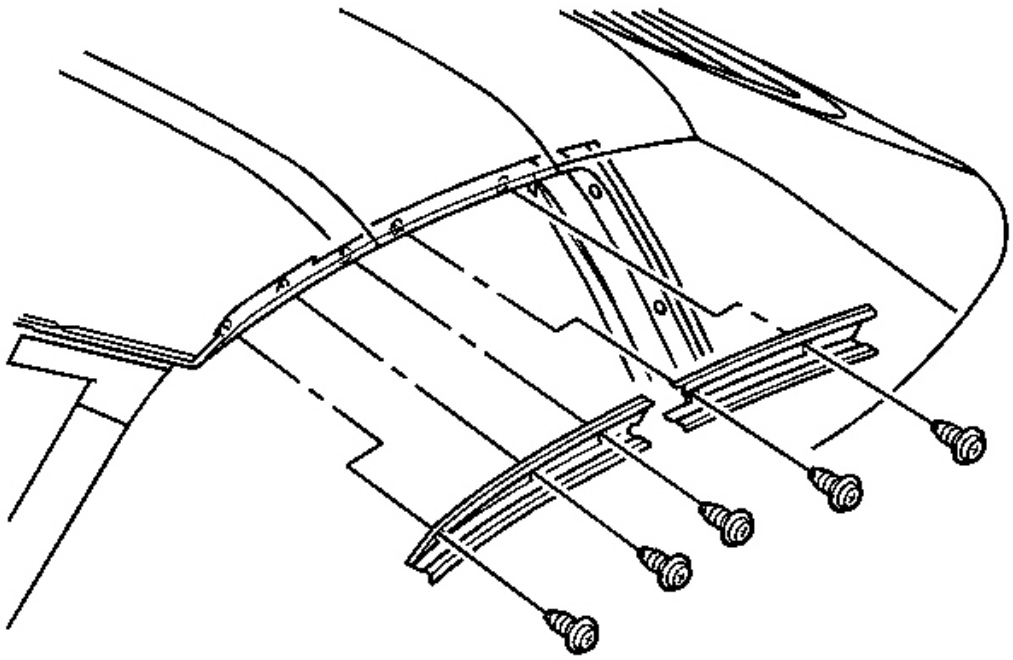

Fig. 73: Screws To Side Weatherstrip Retainer
Courtesy of GENERAL MOTORS CORP.

5. Position the retainer to the side rail.

NOTE: **Refer to Fastener Notice in Cautions and Notices.**

6. Loosely install the front screw attaching the retainer.
7. Install the remaining screws.

   Tighten: Tighten the screws to 4 N.m (35 lb in).

8. Apply sealer GM P/N 12345739 (Canadian P/N 10953472), to the retainer (3, 4) and install the weatherstrip. Refer to **Weatherstrip Replacement - Folding Top (Front and Center Side Rails)** or **Weatherstrip Replacement - Folding Top (Rear Side Rail)** or **Weatherstrip Replacement - Folding Top (Number Five Bow)** .

WEATHERSTRIP RETAINER REPLACEMENT - FOLDING TOP (REAR SIDE RAIL)

Removal Procedure

1. Remove the rear side rail weatherstrip. Refer to **Weatherstrip Replacement - Folding Top (Front and Center Side Rails)** or **Weatherstrip Replacement - Folding Top (Rear Side Rail)** or **Weatherstrip Replacement - Folding Top (Number Five Bow)** .

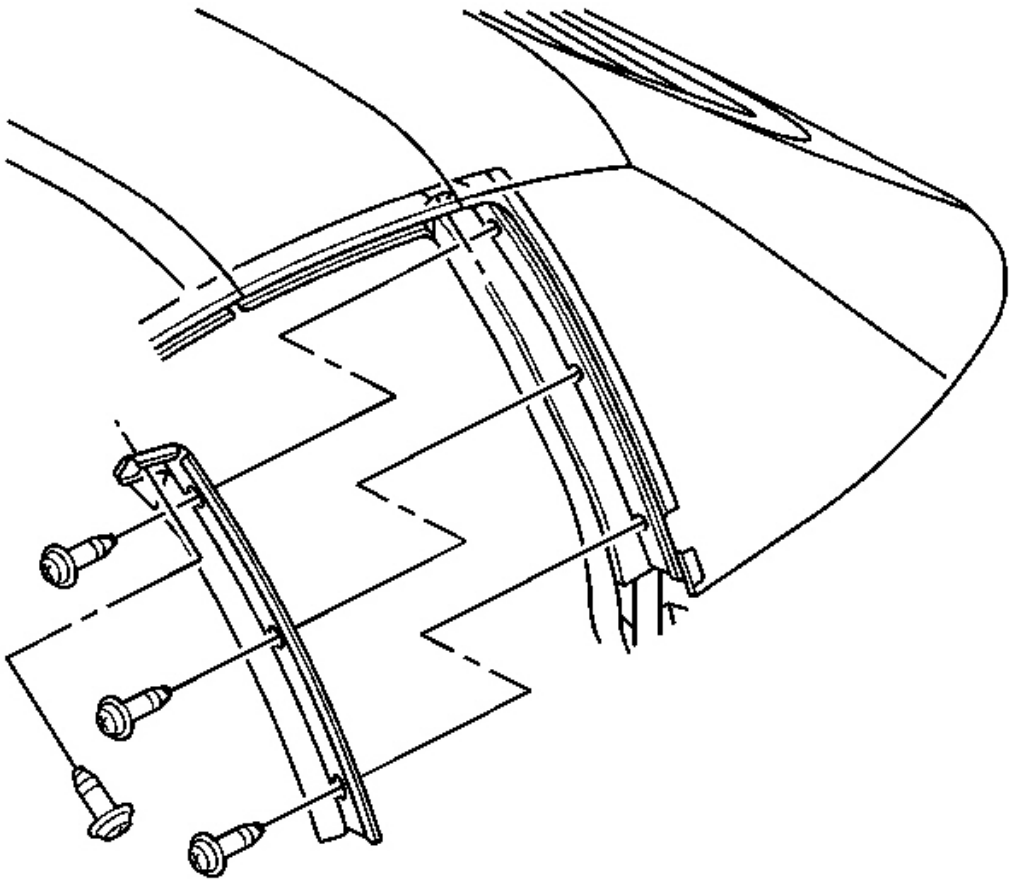

Fig. 74: Retainer To Side Rail Weatherstrip
Courtesy of GENERAL MOTORS CORP.

2. Remove the screws attaching the retainer to the side rail weatherstrip.
3. Remove the retainer.

Installation Procedure

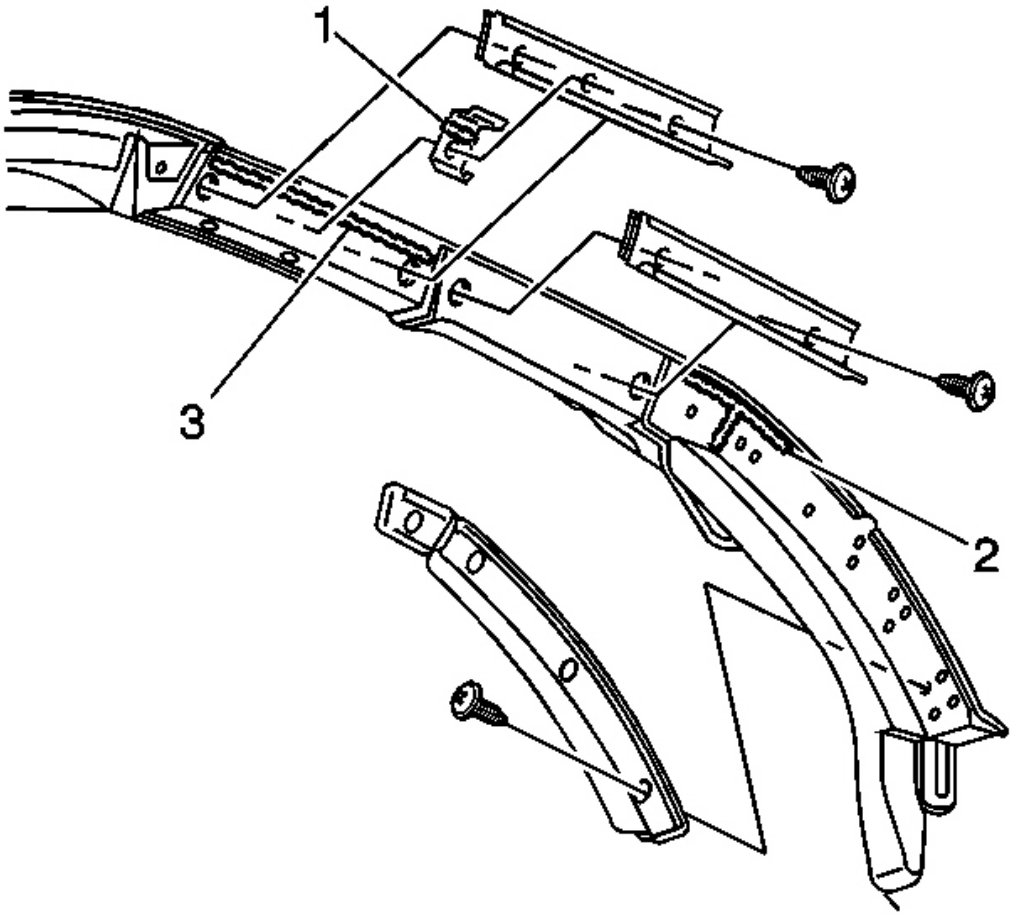

Fig. 75: Upper Edge Of Front Section To Front Side Retainer
Courtesy of GENERAL MOTORS CORP.

1. Apply sealer, GM P/N 12345739 (Canadian P/N 10953472), or equivalent to the upper corner of the roof side rail and to the rear of the main control link (2).

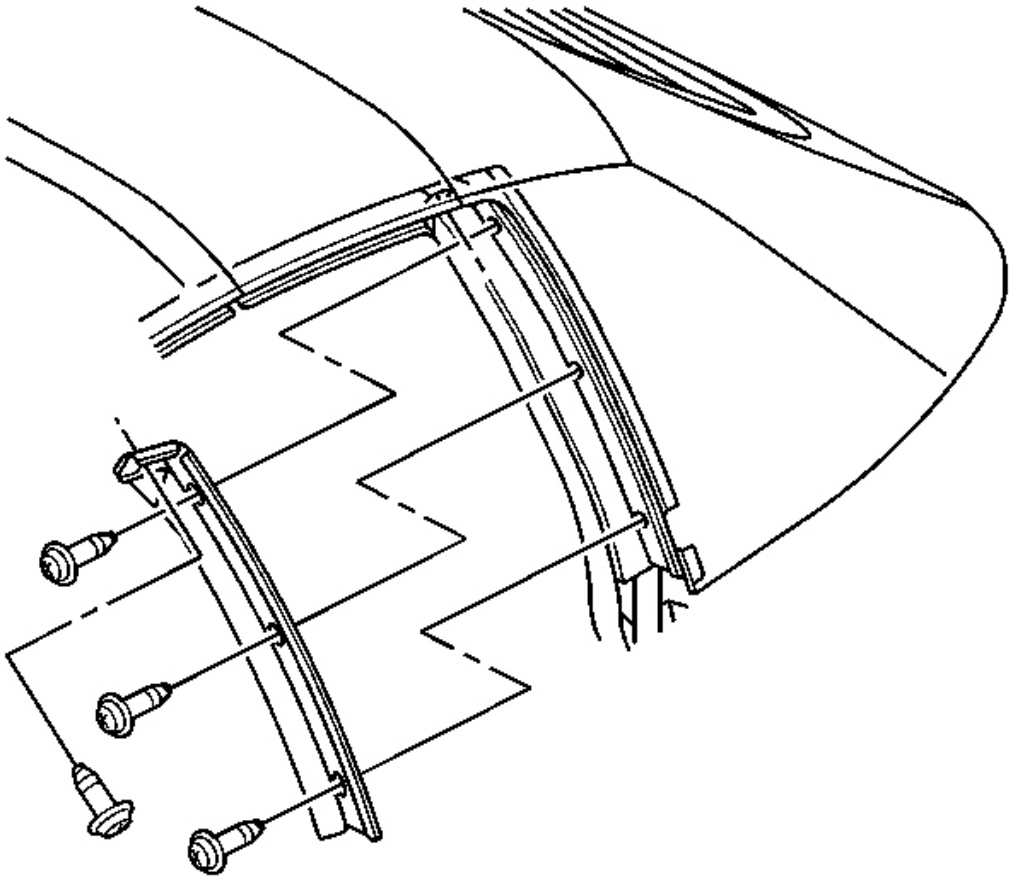

Fig. 76: Retainer To Side Rail Weatherstrip
Courtesy of GENERAL MOTORS CORP.

2. Position the retainer to the rear side rail.

NOTE: **Refer to Fastener Notice in Cautions and Notices.**

3. Install the screws attaching the retainer to the rear side rail.

Tighten: Tighten the screws to 4 N.m (35 lb in).

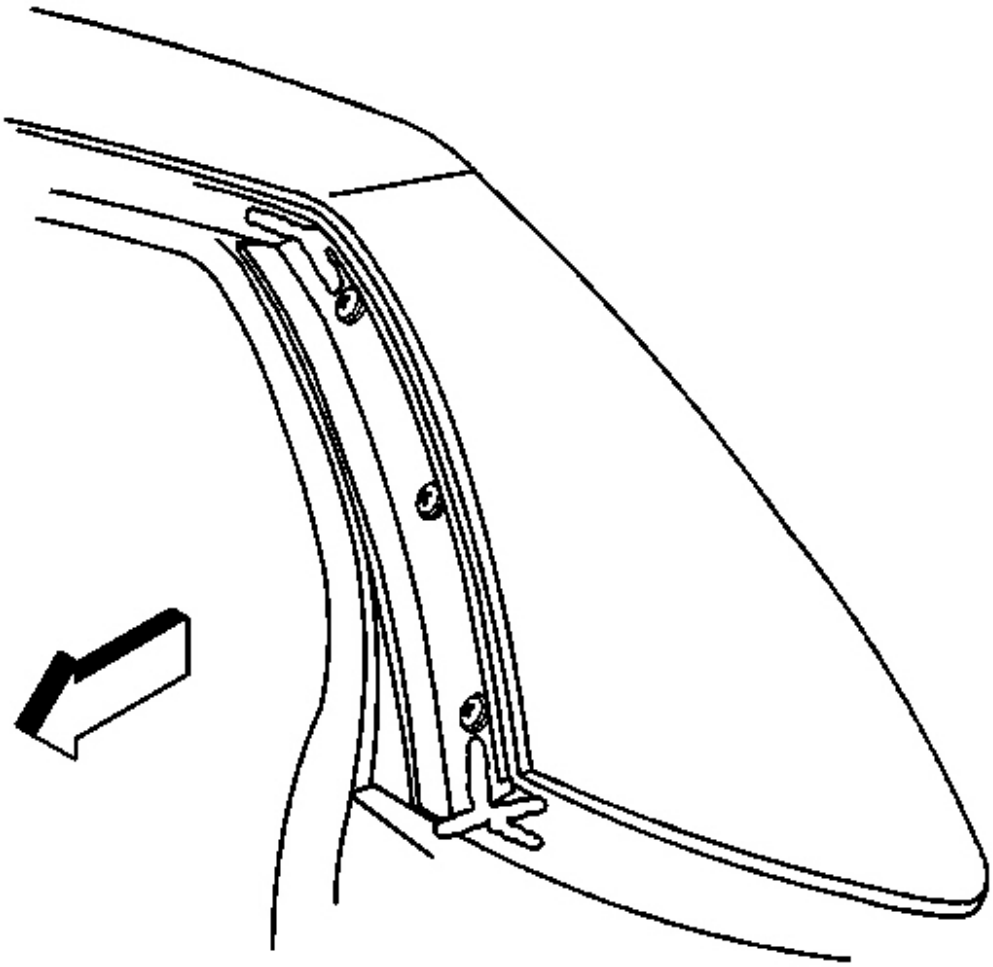

Fig. 77: Upper & Lower Corners Of Weatherstrip Retainer
Courtesy of GENERAL MOTORS CORP.

4. Apply a bead of sealer, GM P/N 12345739 (Canadian P/N 10953472), or equivalent to the upper and the lower corners of the side rail retainer.
5. Install the rear side rail weatherstrip. Refer to **Weatherstrip Replacement - Folding Top (Front and Center Side Rails)** or **Weatherstrip Replacement - Folding Top (Rear Side Rail)** or **Weatherstrip Replacement - Folding Top (Number Five Bow)** .
6. Reposition the folding top to the original position.

WEATHERSTRIP-FOLDING TOP STOWAGE COMPARTMENT LID

Removal Procedure

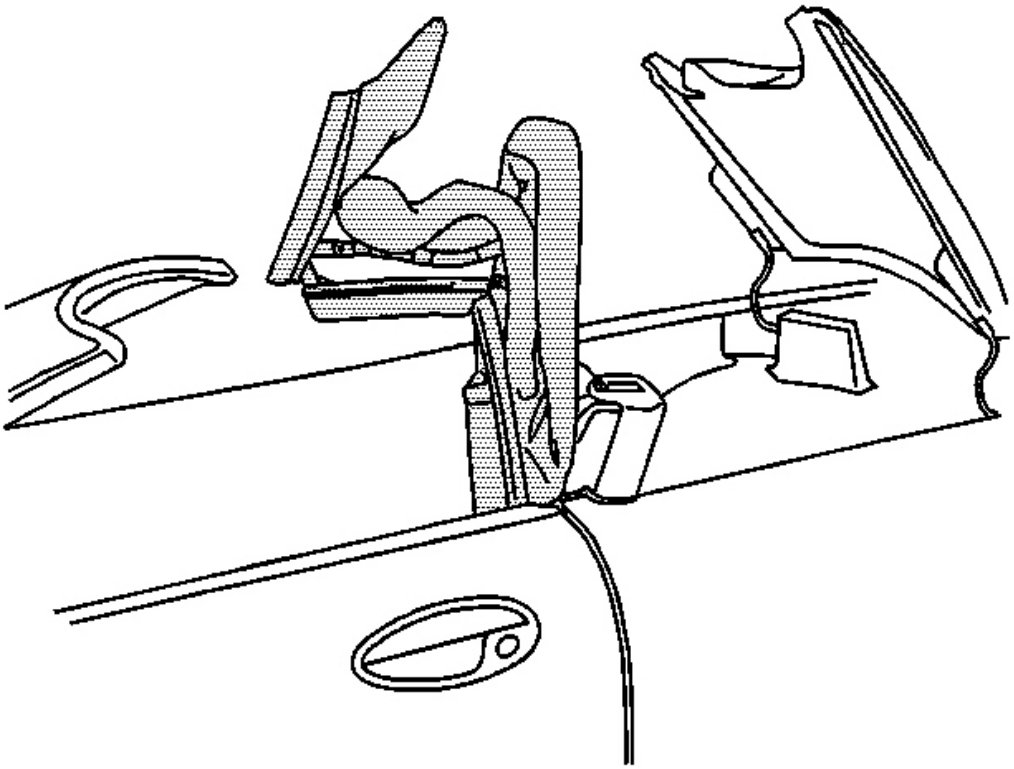

Fig. 78: Folding Top With The #1 Bow And The #5 Bow Up
Courtesy of GENERAL MOTORS CORP.

1. Position the #1 bow and the #5 bow up.
2. Open the folding top stowage compartment lid.
3. Remove the retainer from the lock pillar end of the seal.
4. Pull the molded end of the seal from the lock pillar.

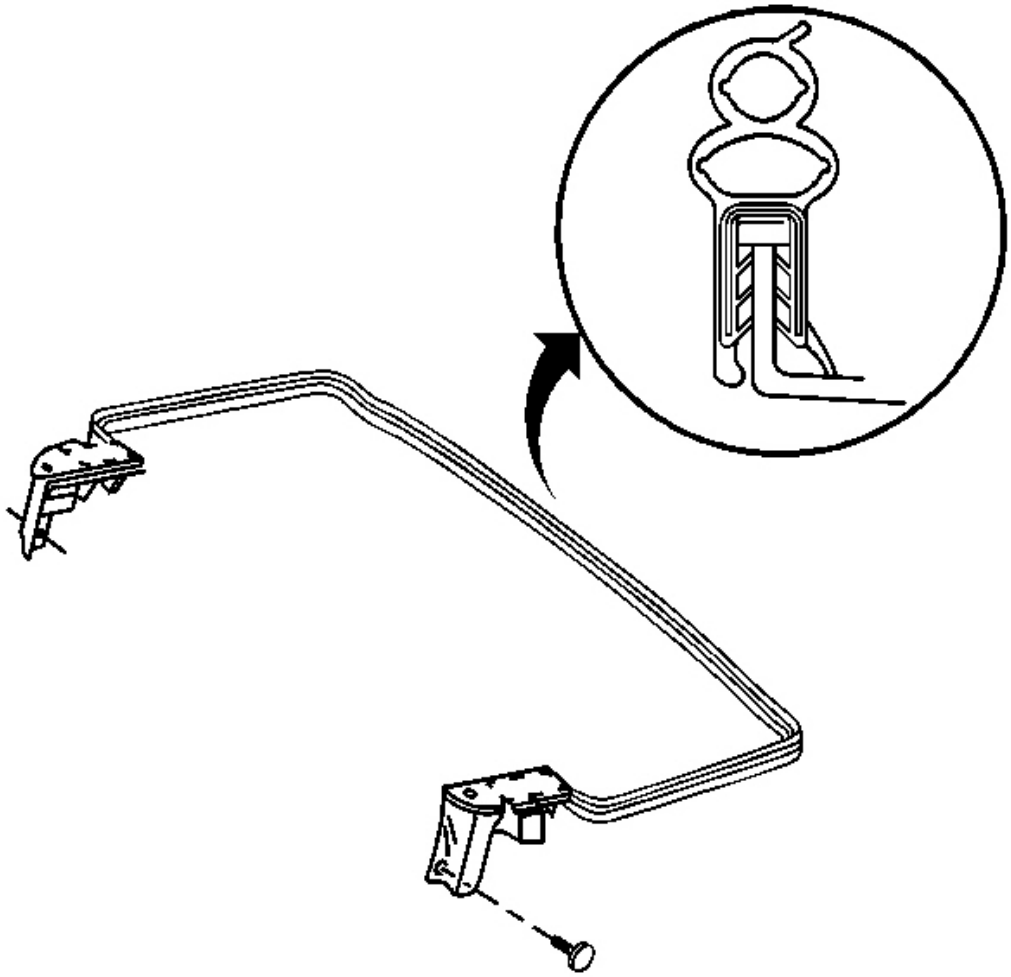

Fig. 79: Weatherstrip To Stowage Compartment Flange
Courtesy of GENERAL MOTORS CORP.

5. Pull the weatherstrip from the stowage compartment flange.

Installation Procedure

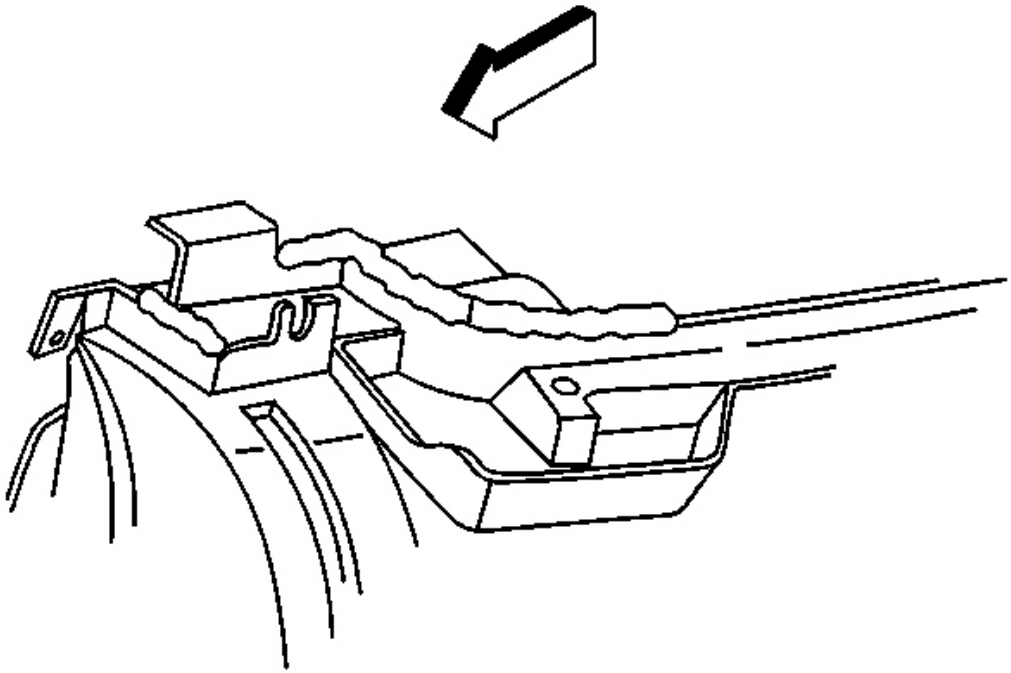

Fig. 80: Lock Pillar Stowage Compartment To Surround Flange
Courtesy of GENERAL MOTORS CORP.

1. Apply a bead of sealer, GM P/N 12345739 or Canadian P/N 10953472, or equivalent to the front seal surface of the lock pillar stowage compartment and to the surround flange.
2. Remove the paper backing from the adhesive on the bottom of the molded ends of the weatherstrip.
3. Position the molded ends of the weatherstrip to the lock pillars.
4. Tuck the outboard lip of the seal underneath the flange of the quarter panels.
5. Secure the molded ends of the weatherstrip with the retainers.

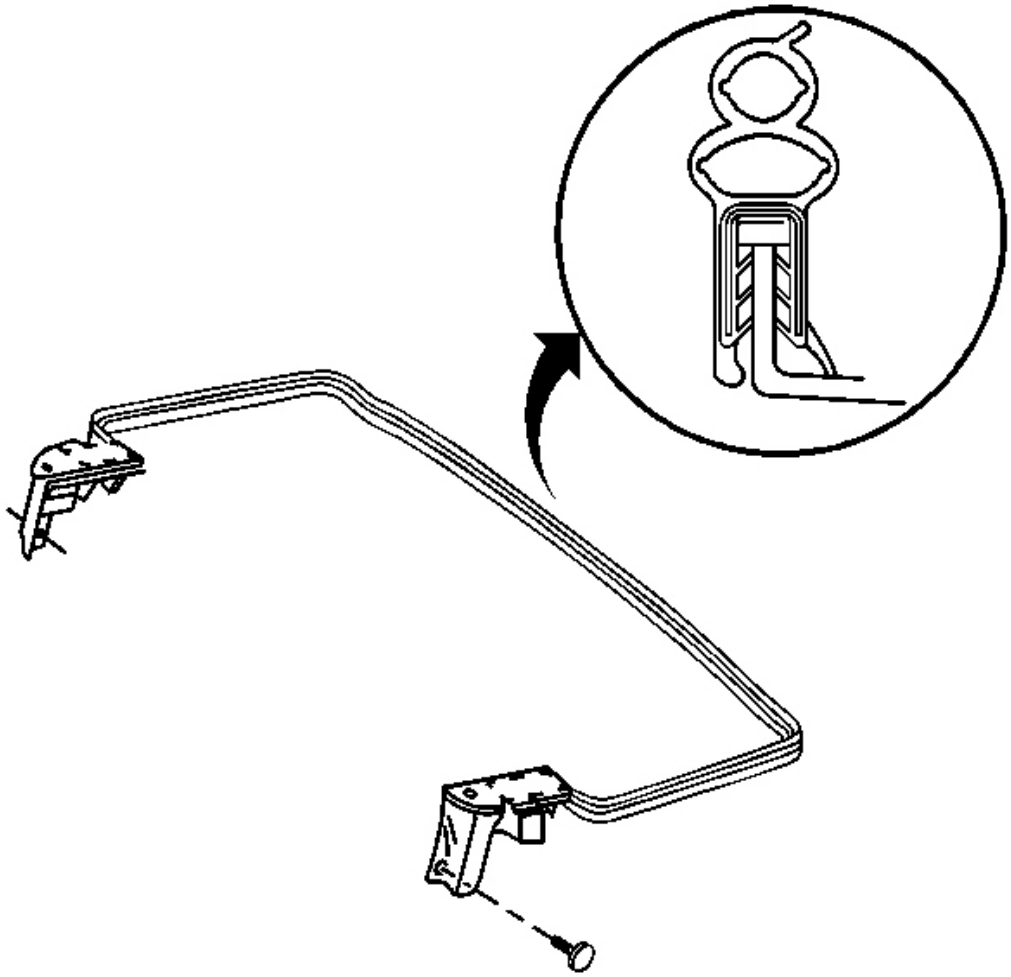

Fig. 81: Weatherstrip To Stowage Compartment Flange
Courtesy of GENERAL MOTORS CORP.

6. Firmly secure the weatherstrip to the stowage compartment flange.
7. Close the folding top stowage compartment.
8. Reposition the folding top to the original position.

FOLDING TOP SIDE RAIL REPLACEMENT

Removal Procedure

1. Remove the folding top and place the top on a clean flat surface. Refer to **Folding Top Replacement** .

2. Remove the following components from the rear side rail:
    1. The headliner screws
    2. The headliner elastic strap screws
    3. The glare cover elastic strap screws
    4. The defogger wire
3. Remove the weatherstrip and retainer from the rear side rail. Refer to **Weatherstrip Retainer Replacement - Folding Top (Front and Center Side Rail)** or **Weatherstrip Retainer Replacement - Folding Top (Rear Side Rail)**

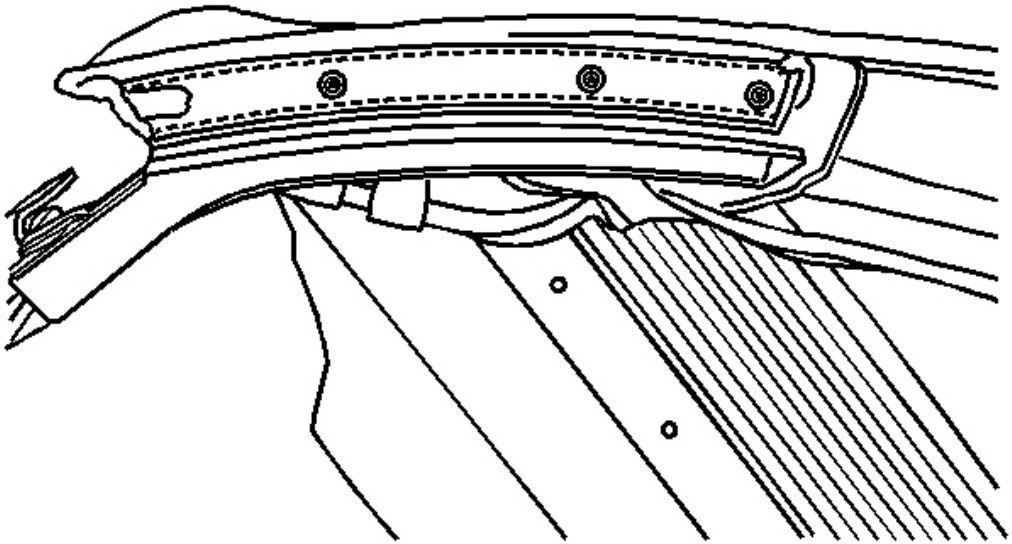

Fig. 82: Top Cover Rivet To Rear Side Rail
Courtesy of GENERAL MOTORS CORP.

CAUTION: Refer to Safety Glasses Caution in Cautions and Notices.

4. Drill out the rivets to the top cover side flap from the rear side rail.
5. Lift the flap and drill out the rivet attaching the tension cable flag.
6. Drill out the top cover rivet to the bottom of the rear side rail.

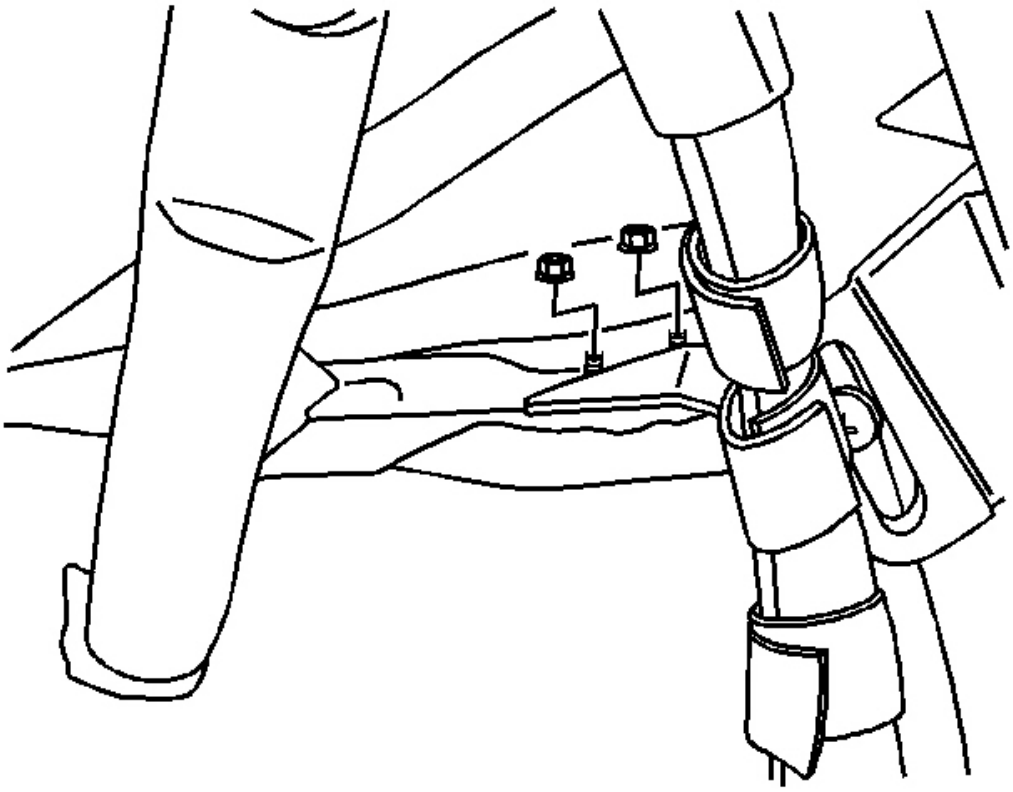

Fig. 83: Weatherstrip To #5 Bow
Courtesy of GENERAL MOTORS CORP.

7. Remove the protective pad from the weatherstrip attaching nuts on the #5 bow.
8. Remove the weatherstrip attaching nuts from the #5 bow.

IMPORTANT: You are not required to completely remove the weatherstrip.

9. Remove the weatherstrip from the bottom of the rear side rail and from the end of the #5 bow. You are not required to completely remove the weatherstrip.
10. Remove the top cover and the protective cover from the bottom of the rear side rail and from the front edge of the #5 bow.
11. Drill out the rivets from the protective cover elastic strap on the rear side rail.
12. Drill out the extension bracket rivet from the #5 bow on the rear side rail.
13. Remove the extension bracket screws from the rear side rail on the #5 bow.
14. Remove the rear side rail screws from the center side rail.

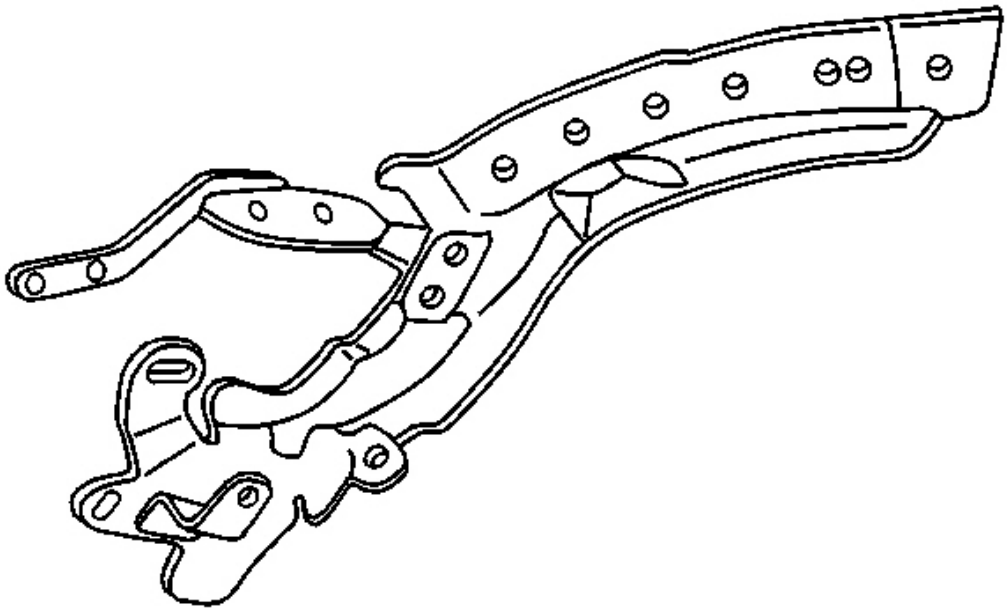

Fig. 84: Rear Side Rail
Courtesy of GENERAL MOTORS CORP.

15. Remove the rear side rail.

Installation Procedure

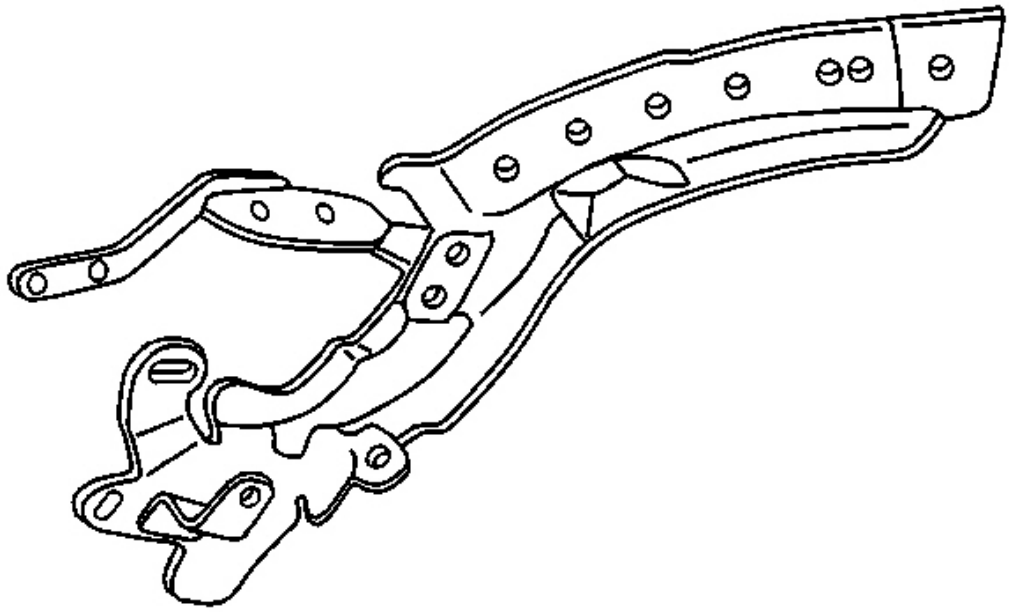

Fig. 85: Rear Side Rail
Courtesy of GENERAL MOTORS CORP.

1. Install the rear side rail.

NOTE: **Refer to Fastener Notice in Cautions and Notices.**

2. Install the center side rail screws to the rear side rail.

   Tighten: Tighten the screws to 19 N.m (14 lb ft).

3. Install the extension bracket screws to the #5 bow.

   Tighten: Tighten the screws to 13 N.m (10 lb ft).

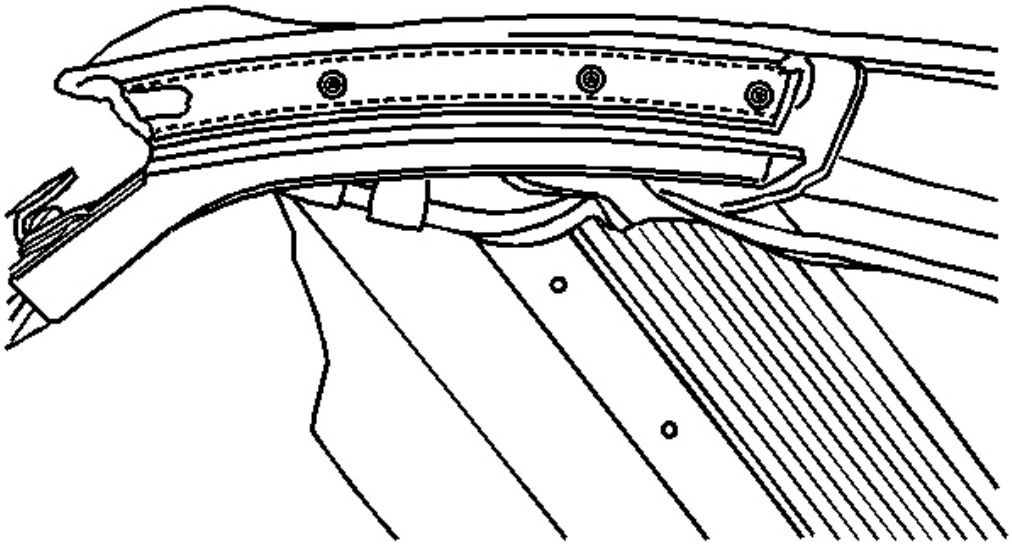

Fig. 86: Top Cover Rivet To Rear Side Rail
Courtesy of GENERAL MOTORS CORP.

4. Rivet the #5 bow to the extension bracket on the rear side rail. Verify that both sides of the rivet are flat.
5. Rivet the protector elastic strap to the rear side rail.
6. Rivet the tension cable flag to the rear side rail. The rolled side of the flag must face forward.
7. Rivet the top cover to the bottom of the rear side rail.
8. Rivet the top flap to the rear side rail.
9. Install the retainer and the seal to the rear side rail. Refer to **Weatherstrip Retainer Replacement - Folding Top (Front and Center Side Rail)** or **Weatherstrip Retainer Replacement - Folding Top (Rear Side Rail)** .
10. Install the screws attaching the headliner elastic strap to the rear side rail.

    Tighten: Tighten the screws to 2 N.m (18 lb in).

11. Install the headliner screws to the rear side rail.

    Tighten: Tighten the screws to 2 N.m (18 lb in).

12. Connect the defogger wire to the rear side rail.
13. Install the folding top to the vehicle. Refer to **Folding Top Replacement** .
14. Position the folding top to the original position.

FOLDING TOP COVER REPLACEMENT

Removal Procedure

1. Remove the convertible top and place the top on a clean flat surface. Refer to **Folding Top Replacement** .
2. Remove the seal compression panel from the #1 bow. Refer to **Folding Top Seal Compression Panel Replacement** .

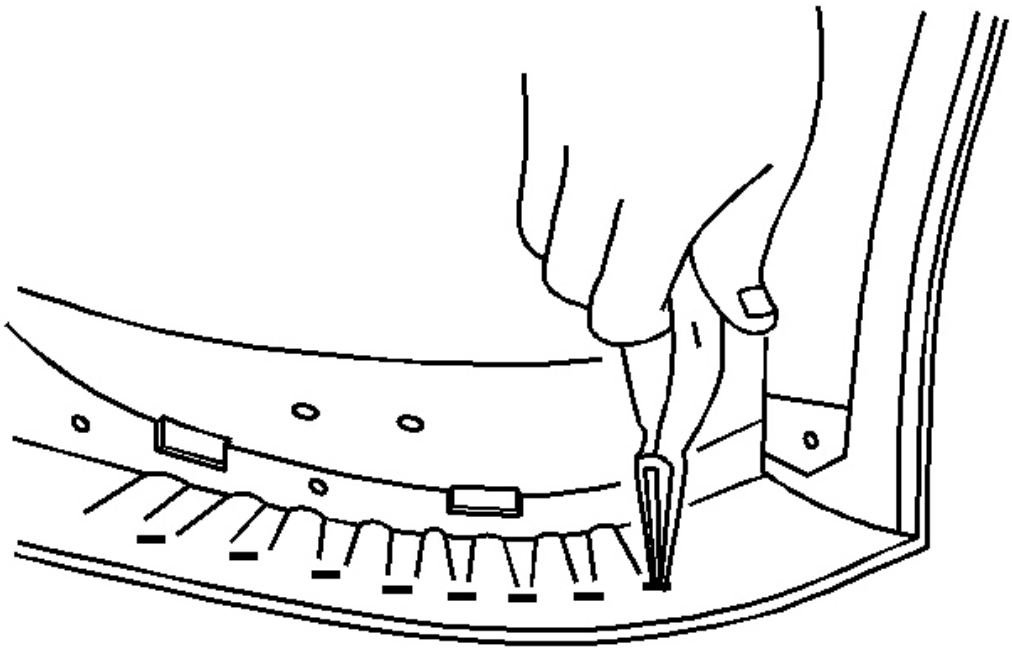

Fig. 87: Top Cover Staples To Bow
Courtesy of GENERAL MOTORS CORP.

3. Using a pair of needle-nosed pliers remove the staples that secure the top cover to the bow.
4. Fold the top material back.

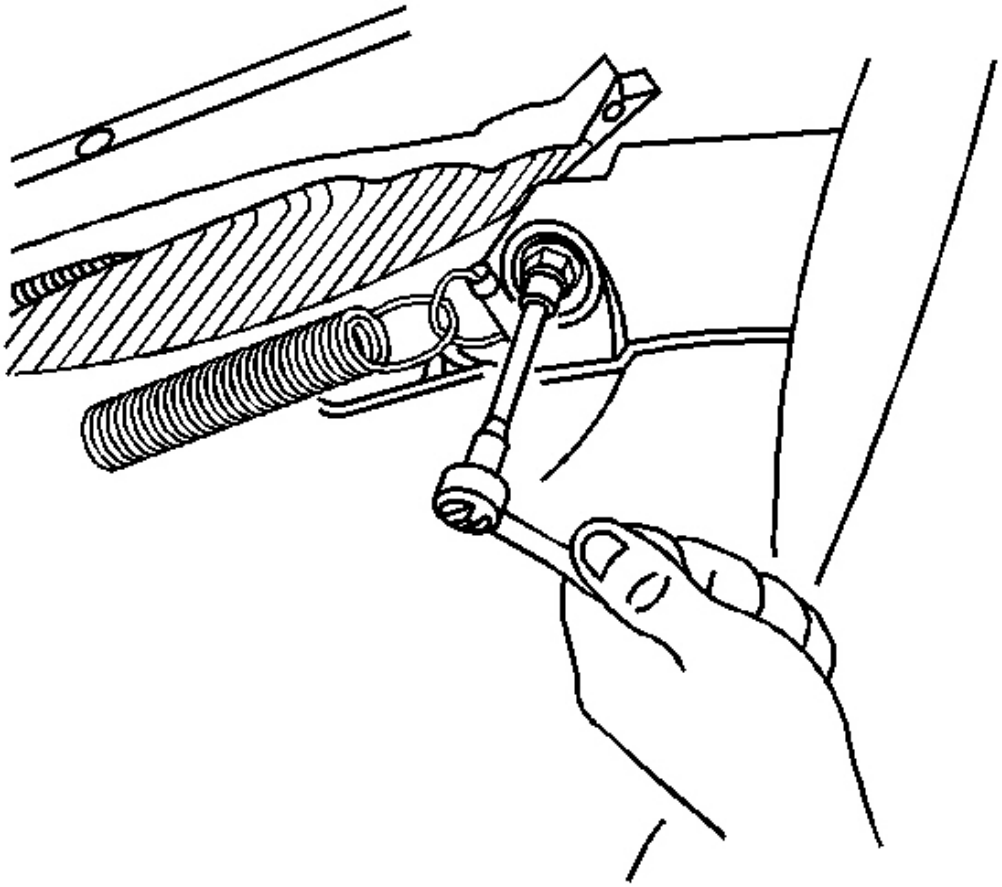

Fig. 88: Tension Cable Screw To Between Side Rail & Roof Bow
Courtesy of GENERAL MOTORS CORP.

5. Remove the tension cable screw and feed the cable out between the side rail and the roof bow.
6. Remove the fourth right and the left screws attaching the top material to the #2 bow.
7. Remove the #5 bow weatherstrip. Refer to **Weatherstrip Replacement - Folding Top (Front and Center Side Rails)** or **Weatherstrip Replacement - Folding Top (Rear Side Rail)** or **Weatherstrip Replacement - Folding Top (Number Five Bow)** .
8. If you are going to reuse the top material mark the location of the material on the #5 bow as a guide for reassembly.

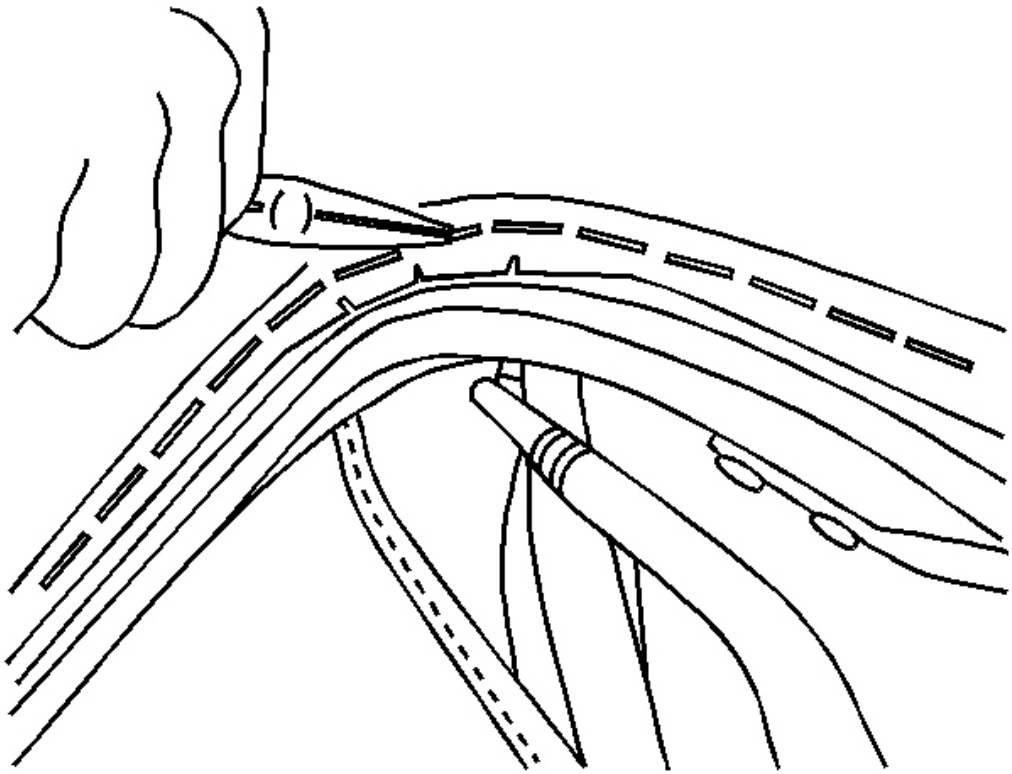

Fig. 89: Needle Nose Pliers To Top Cover Staples To Bow
Courtesy of GENERAL MOTORS CORP.

9. Using a pair of needle-nosed pliers remove the staples which secure the top cover to the bow.

CAUTION: Refer to Safety Glasses Caution in Cautions and Notices.

10. Drill out the rivets attaching the top material to the bottom of the rear side rails.
11. Remove the top material from the #5 bow.
12. Pull the top material from the rear side rail and from the front of the #5 bow.
13. Remove the rear side rail weatherstrip and retainer. Refer to **Weatherstrip Retainer Replacement - Folding Top (Front and Center Side Rail)** or **Weatherstrip Retainer Replacement - Folding Top (Rear Side Rail)** .

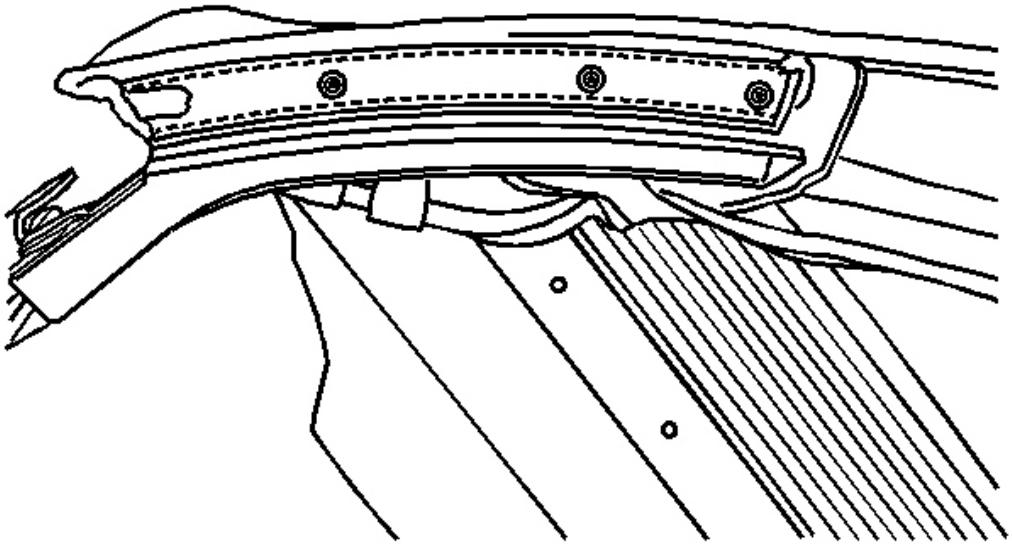

Fig. 90: Top Cover Rivet To Rear Side Rail
Courtesy of GENERAL MOTORS CORP.

14. Drill out the rivets that secure the top cover flaps to the rear side rail.
15. Drill out the rivets that secure the tension cable flag to the rear side rail.

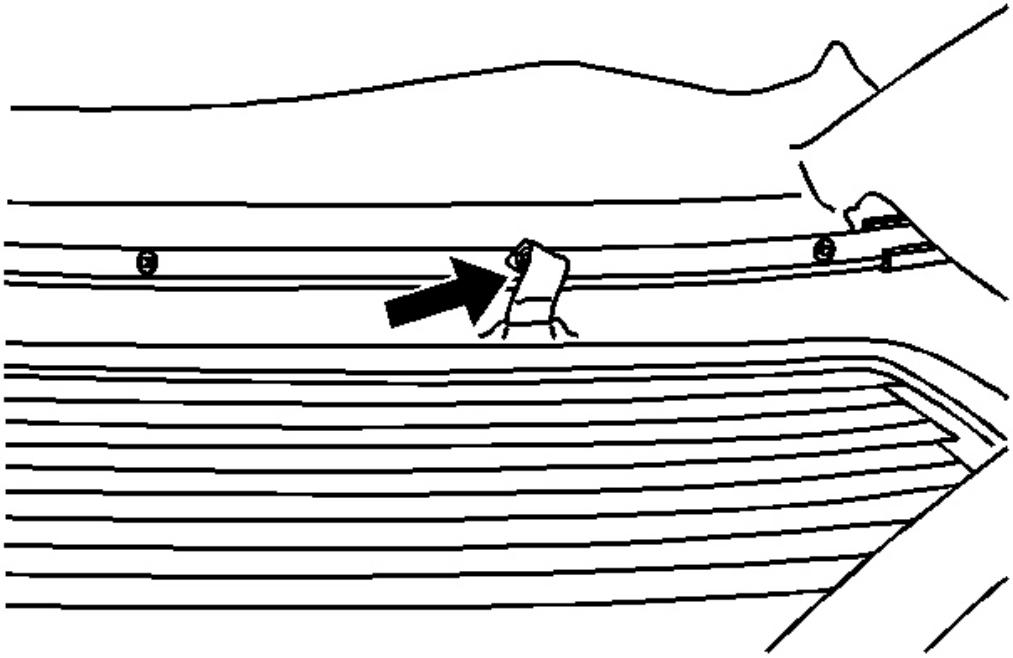

Fig. 91: Rear Window To #4 Bow
Courtesy of GENERAL MOTORS CORP.

16. Remove the screws attaching the rear window support straps to the #4 bow.
17. Remove the top material.

Installation Procedure

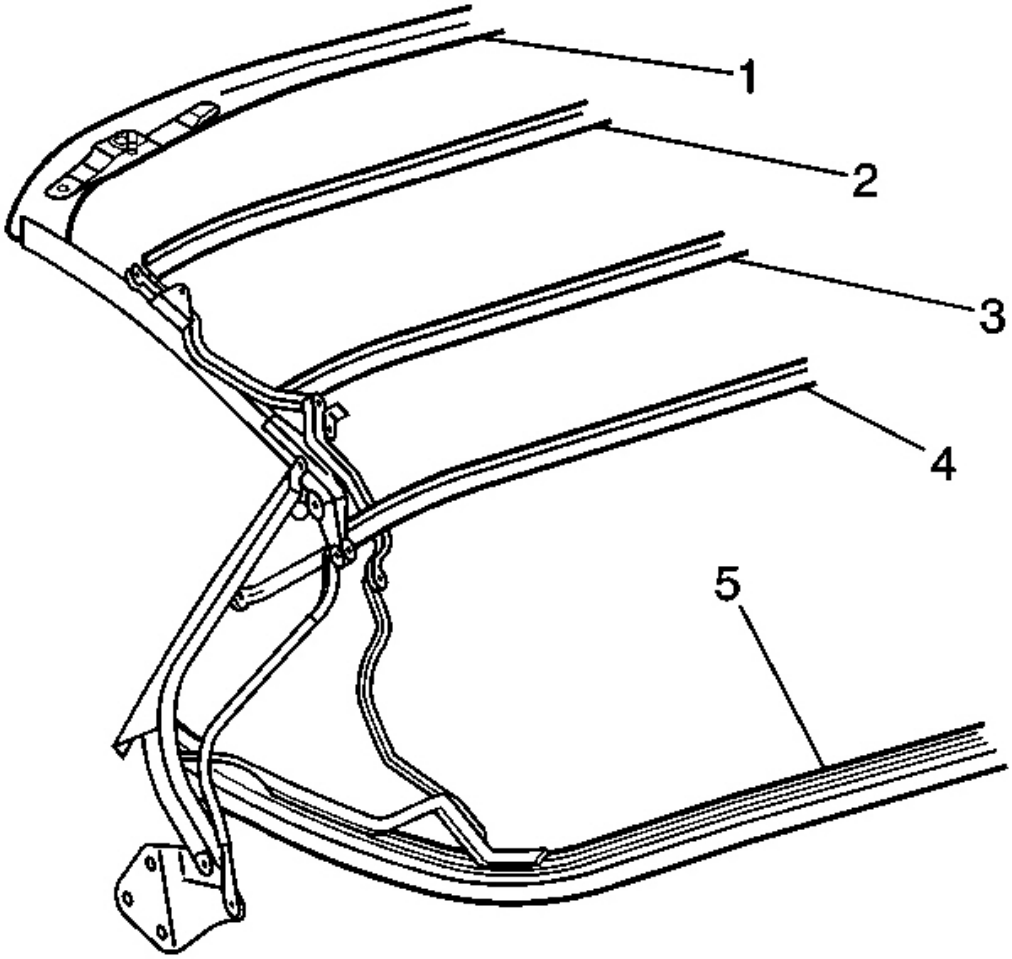

Fig. 92: Top Cover At Roof Bows
Courtesy of GENERAL MOTORS CORP.

1. Position the top cover over the roof bows.

NOTE: **Refer to Fastener Notice in Cautions and Notices.**

2. Attach the top cover to the #2 bow with screws.

Tighten: Tighten the screws to 2 N.m (18 lb in).

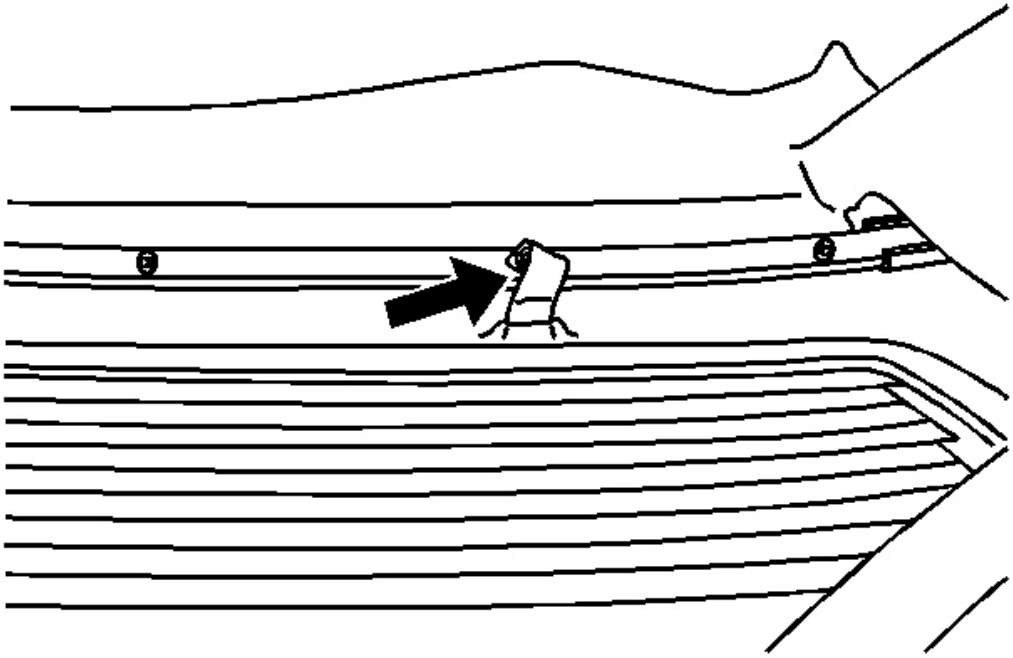

Fig. 93: Rear Window To #4 Bow
Courtesy of GENERAL MOTORS CORP.

3. Attach the rear window support straps to the #4 bow.

   Tighten: Tighten the screws to 2 N.m (18 lb in).

4. Rivet the flag end of the tension cable to the back side of the rear side rail.

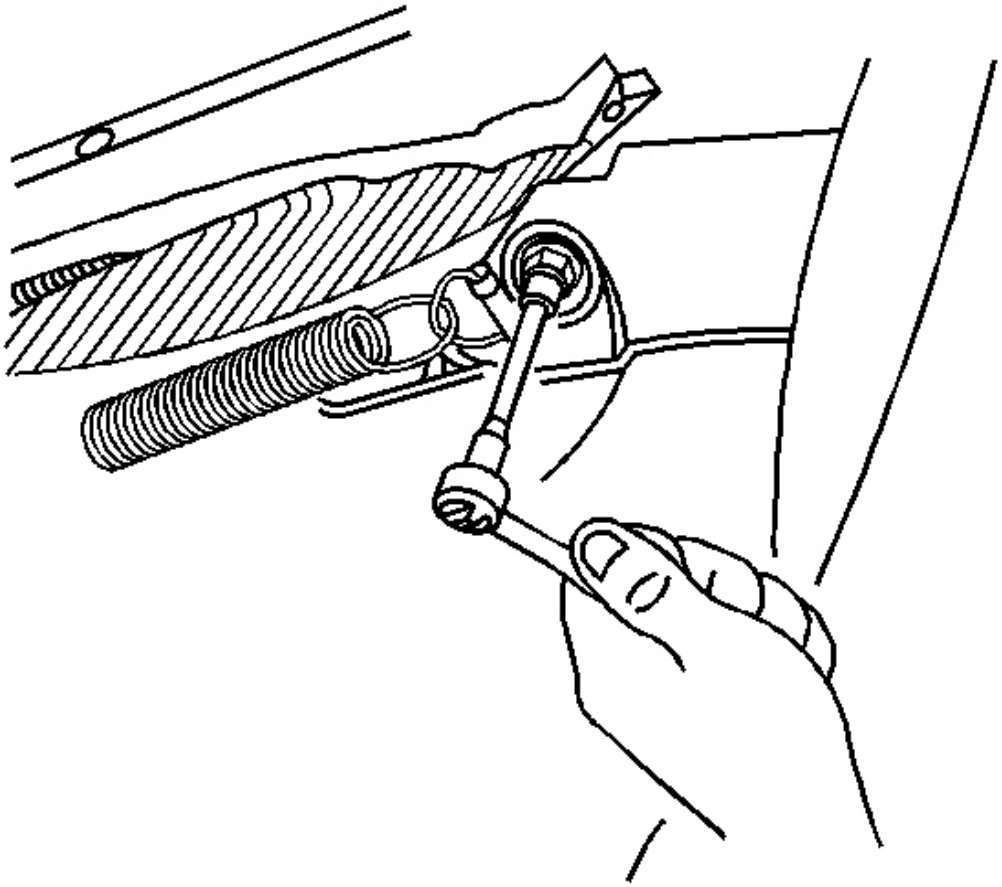

Fig. 94: Tension Cable Screw To Between Side Rail & Roof Bow
Courtesy of GENERAL MOTORS CORP.

5. Route the tension cables and install the cables to the #1 bow.

   Tighten: Tighten the screw to 2 N.m (18 lb in).

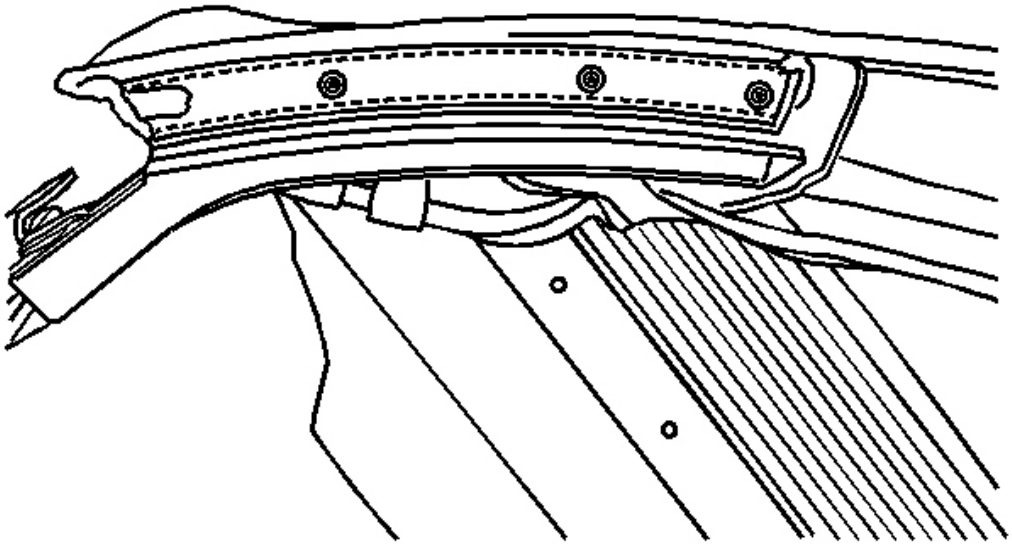

Fig. 95: Top Cover Rivet To Rear Side Rail
Courtesy of GENERAL MOTORS CORP.

6. Rivet the top cover flags to the side rails.
7. Rivet the top cover to the bottom of the rear side rail.
8. Assure that both sides of the rivet are flat so the rivet will not cut the top material or interfere with the seating of the retainer to the rear side rail weatherstrip. Before stapling the top cover to the #5 bow, Refer to **Folding Top Cover Tension Adjustment - Rear** .
9. Before stapling the top cover to the #1 bow, refer to **Folding Top Cover Tension Adjustment - Front** .
10. Install the weatherstrips and the weatherstrip retainers to the rear side rails. Refer to **Weatherstrip Retainer Replacement - Folding Top (Front and Center Side Rail)** or **Weatherstrip Retainer Replacement - Folding Top (Rear Side Rail)** .
11. Install the folding top. Refer to **Folding Top Replacement**
12. Position the folding top to the original position.

FOLDING TOP ROOF BOW REPLACEMENT (NUMBER 1 BOW)

Removal Procedure

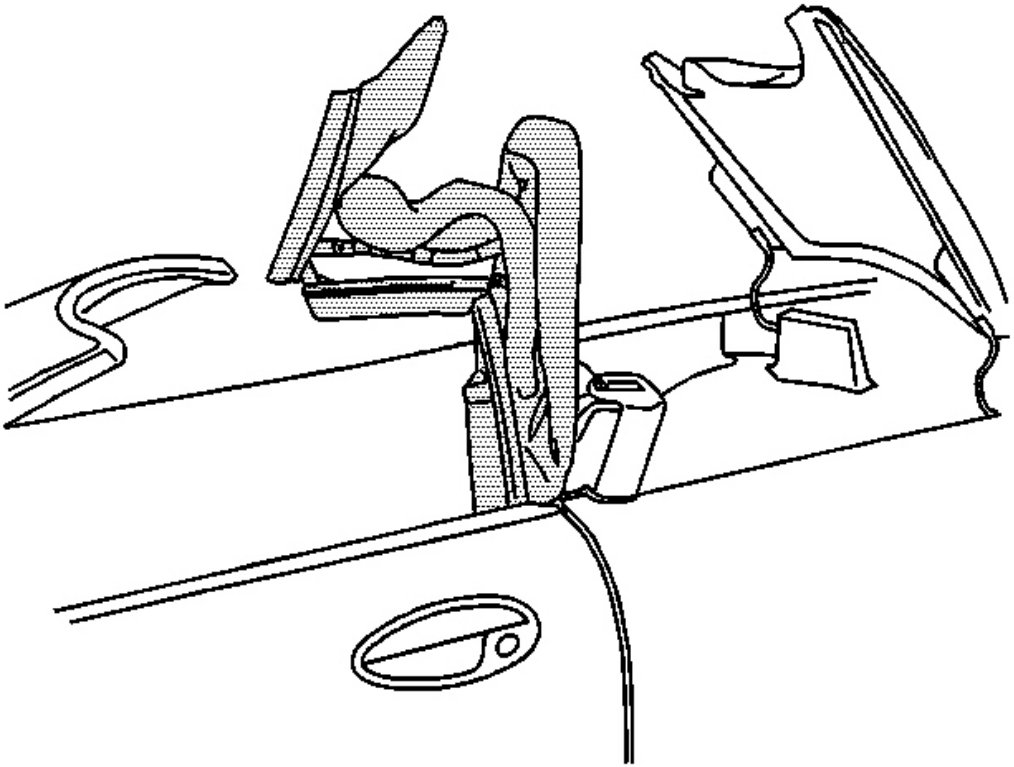

Fig. 96: Folding Top With The #1 Bow And The #5 Bow Up
Courtesy of GENERAL MOTORS CORP.

1. Position the top with the #1 bow up.
2. Remove the seal compression panel. Refer to **Folding Top Seal Compression Panel Replacement** .
3. Using a grease pencil mark the location of the top material where it wraps over the #1 bow to aid in installation.

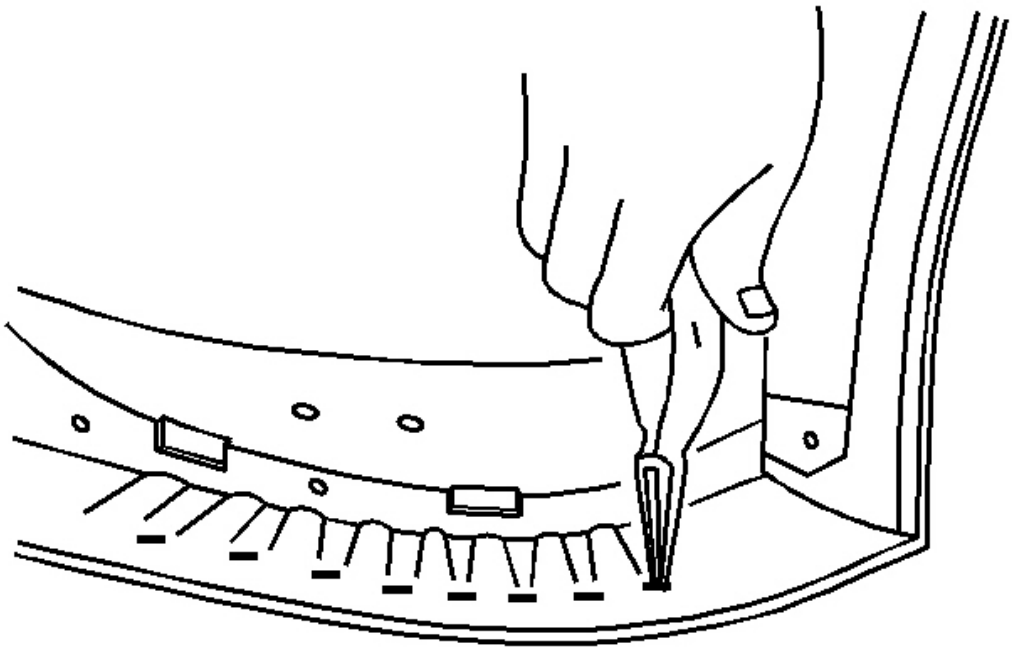

Fig. 97: Top Cover Staples To Bow
Courtesy of GENERAL MOTORS CORP.

4. Using a pair of needle nose pliers remove the top cover staples from the #1 bow.

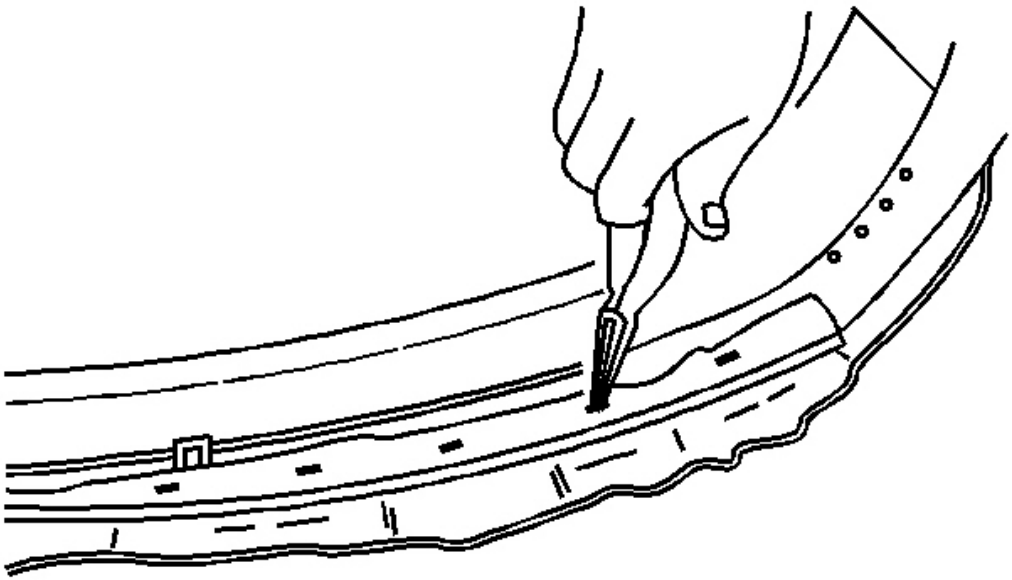

Fig. 98: Headliner Staples To Bow
Courtesy of GENERAL MOTORS CORP.

5. Remove the headliner staples from the #1 bow.

CAUTION: Refer to Safety Glasses Caution in Cautions and Notices.

6. Drill out the stay pad rivets from the #1 bow.

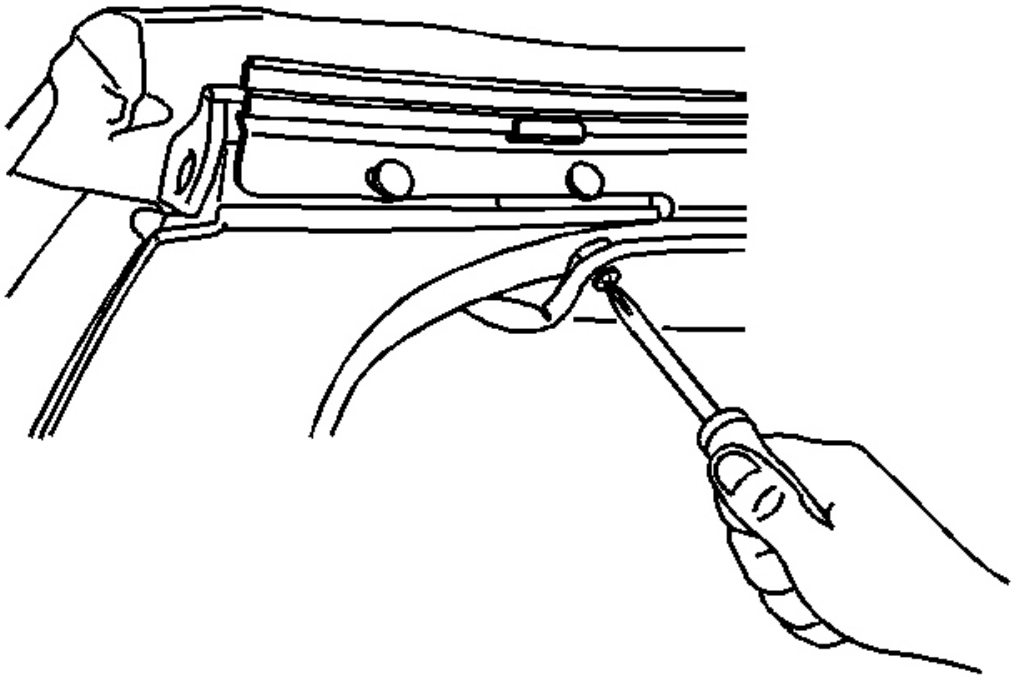

Fig. 99: Headliner Screws To #1 Bow
Courtesy of GENERAL MOTORS CORP.

7. Remove the headliner screws from the #1 bow.

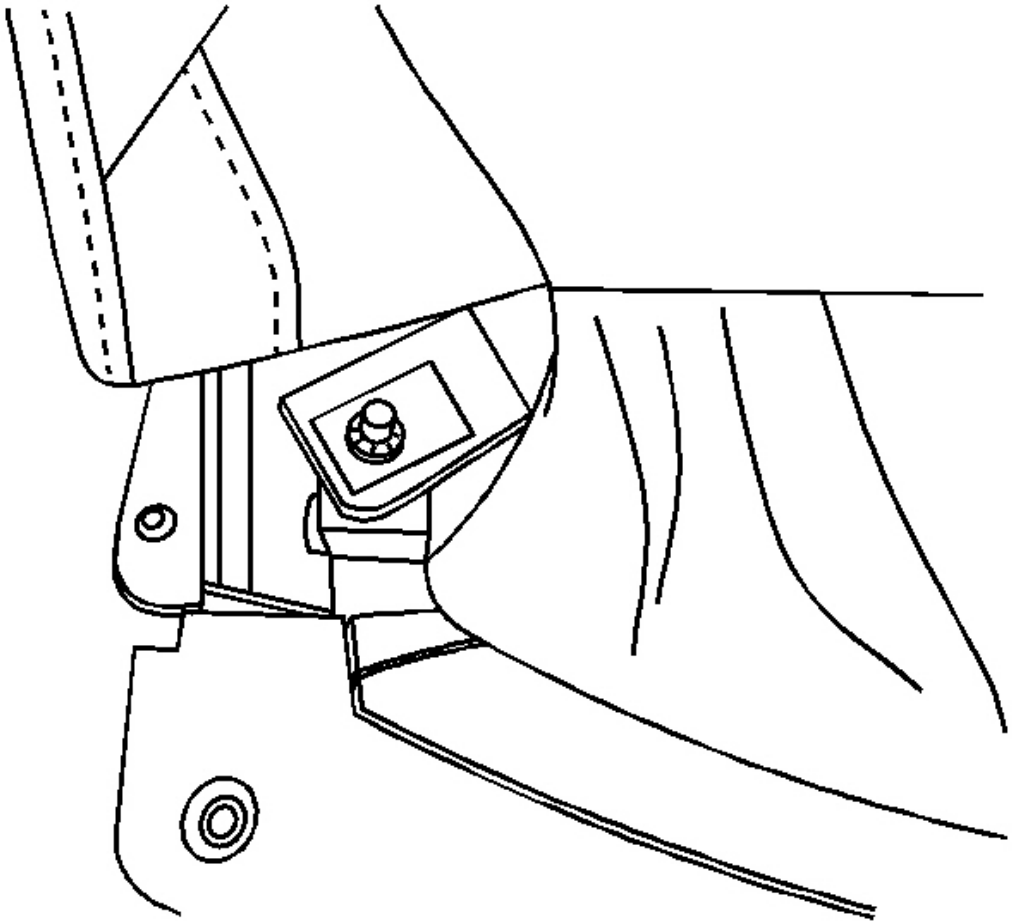

Fig. 100: Headliner Push-On Retainers To #1 Bow
Courtesy of GENERAL MOTORS CORP.

8. Remove the headliner push-on retainers from the #1 bow.

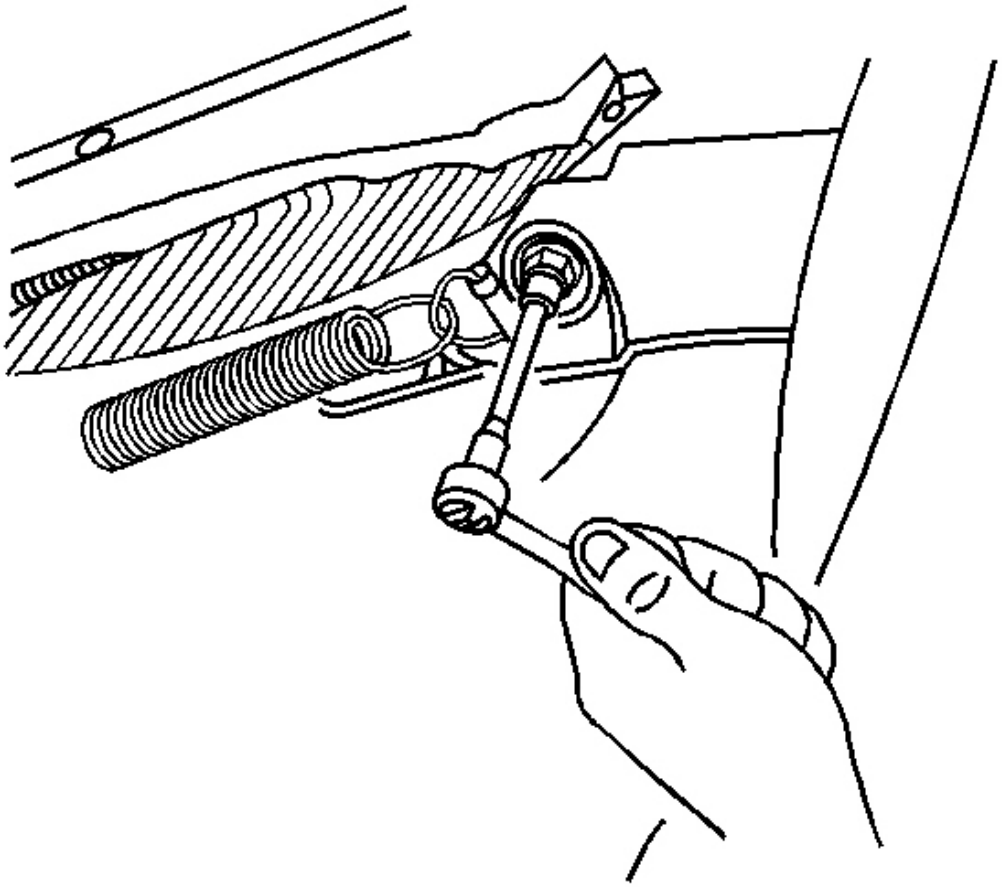

Fig. 101: Tension Cable Screw To Between Side Rail & Roof Bow
Courtesy of GENERAL MOTORS CORP.

9. Remove the tension cables screws from the #1 bow.
10. Using a grease pencil mark the location of the #1 bow to the front side rails.

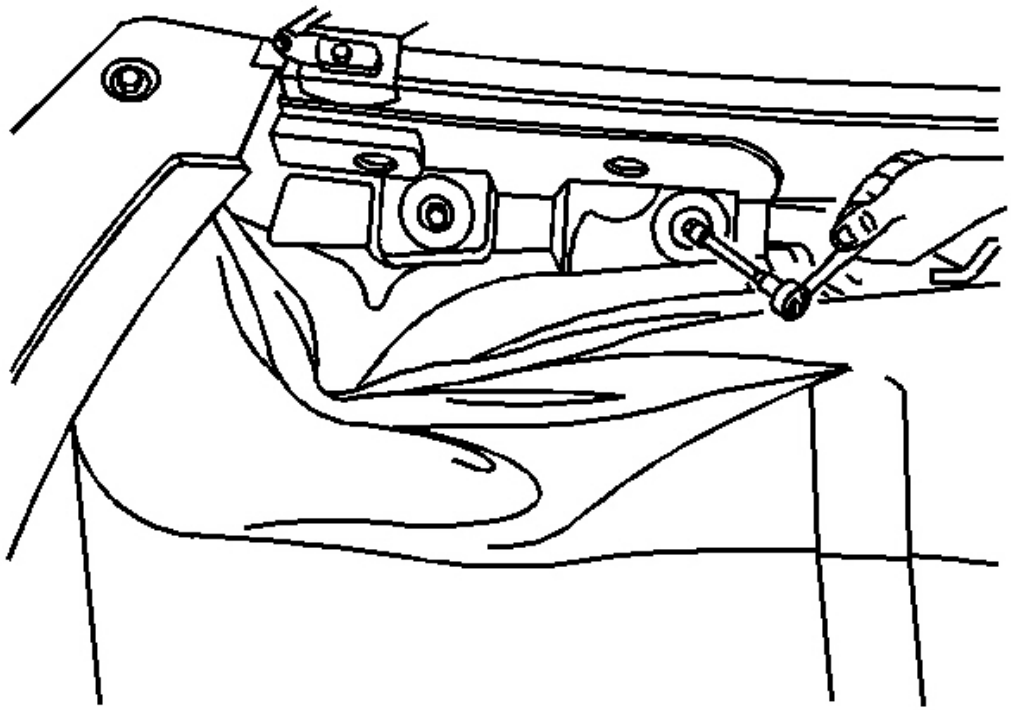

Fig. 102: #1 Bow Nuts To Front Side Rails
Courtesy of GENERAL MOTORS CORP.

11. Remove the #1 bow nuts from the front side rails.
12. Remove the #1 bow.

Installation Procedure

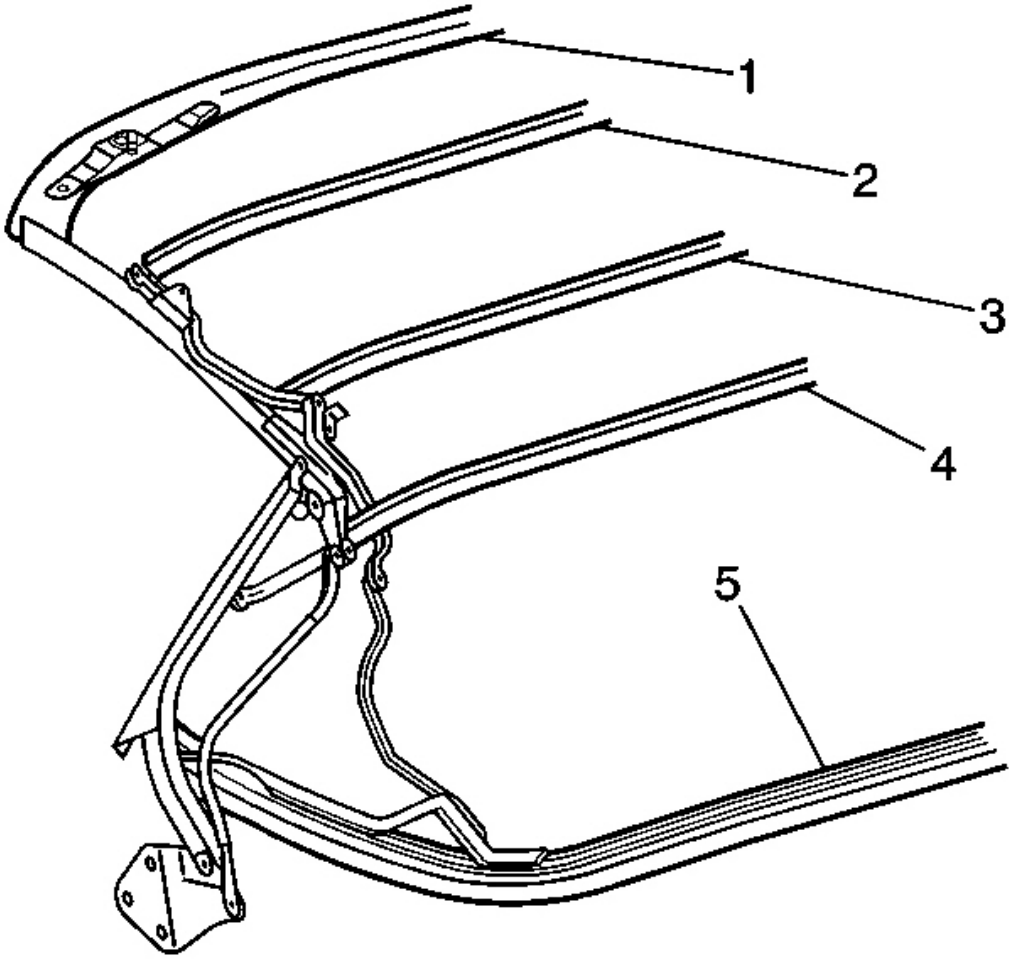

Fig. 103: Top Cover At Roof Bows
Courtesy of GENERAL MOTORS CORP.

1. Position the #1 bow to the marks on the front side rails with the tension cables through the corner slots.

   NOTE: Refer to Fastener Notice in Cautions and Notices.

2. Install the #1 bow (1) nuts to the front side rails.

   Tighten: Tighten the nuts to 14 N.m (10 lb ft).

3. Rivet the stay pad to the #1 bow.

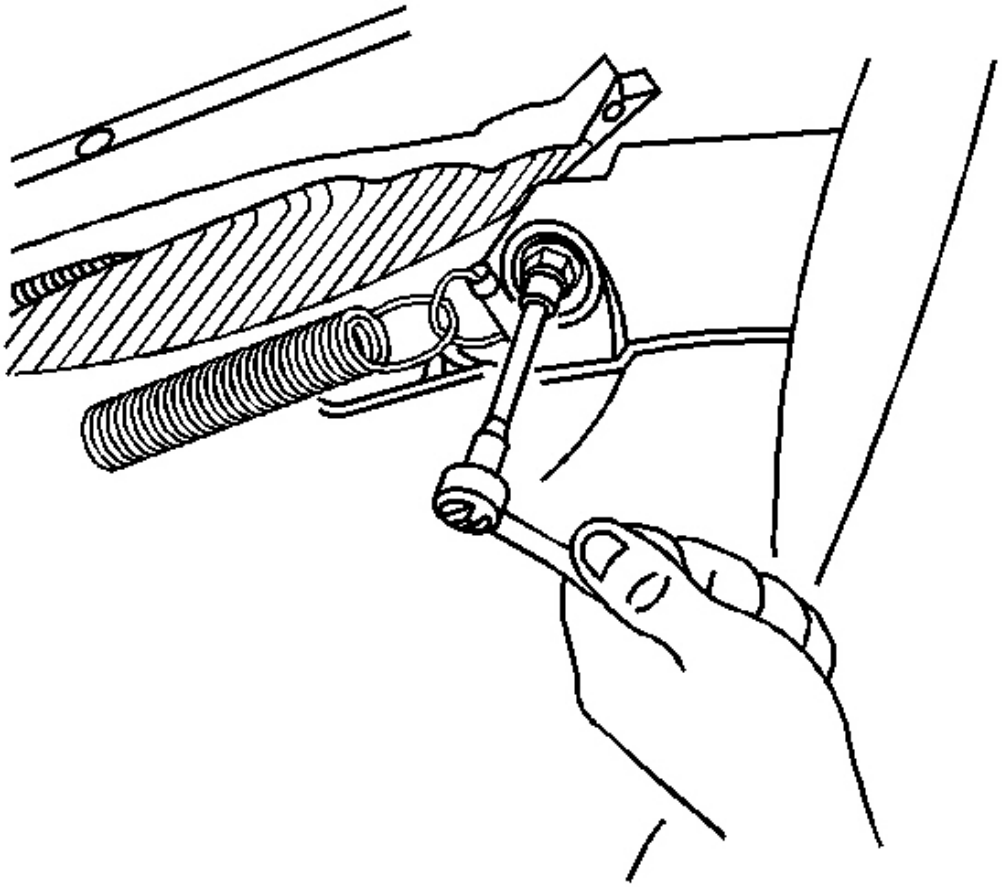

Fig. 104: Tension Cable Screw To Between Side Rail & Roof Bow
Courtesy of GENERAL MOTORS CORP.

4. Install the tension cable screws.

   Tighten: Tighten the screws to 2 N.m (18 lb in).

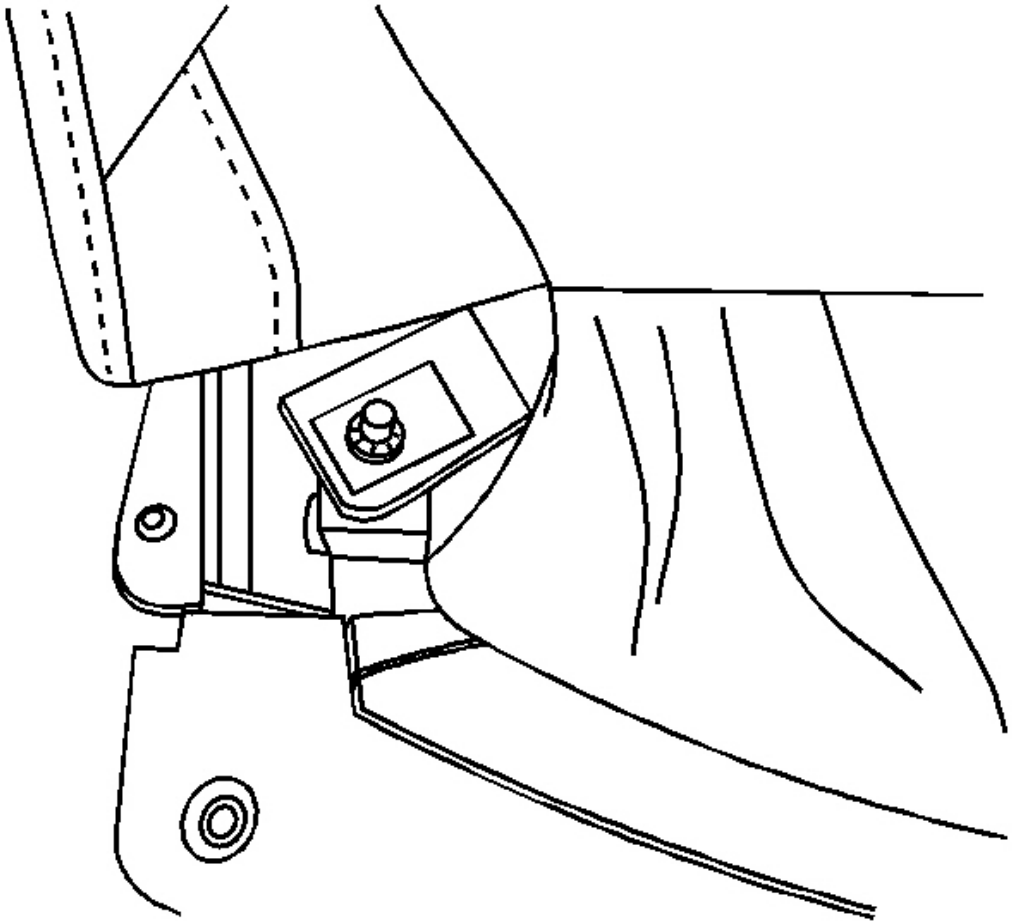

Fig. 105: Headliner Push-On Retainers To #1 Bow
Courtesy of GENERAL MOTORS CORP.

5. Attach the headliner push-on retainers to the #1 bow.

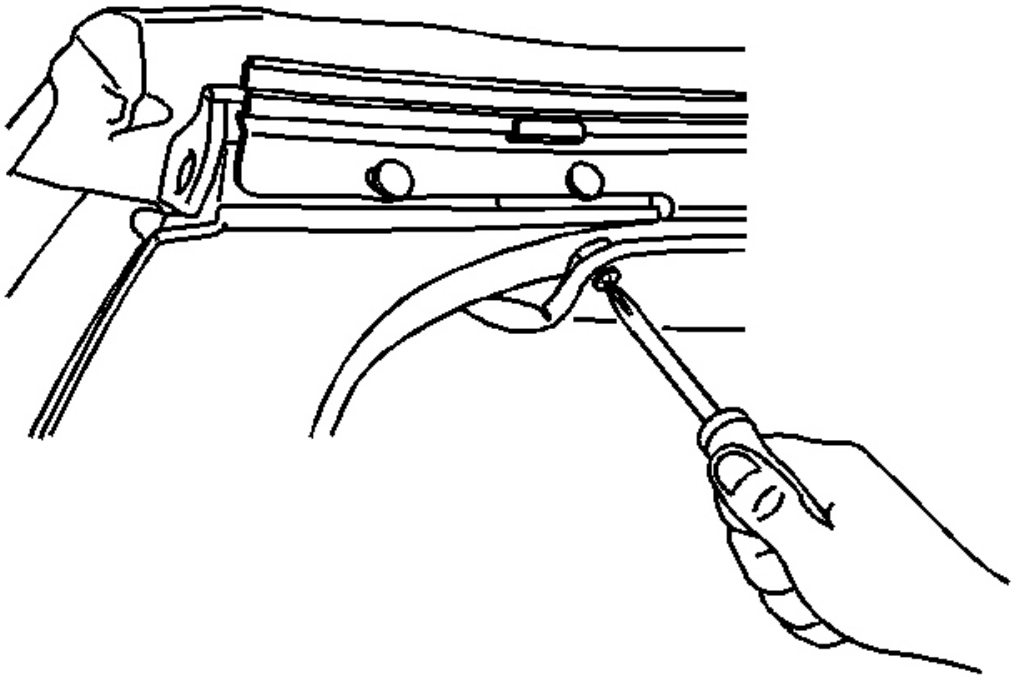

Fig. 106: Headliner Screws To #1 Bow
Courtesy of GENERAL MOTORS CORP.

6. Install the headliner screws to the bow.

   Tighten: Tighten headliner attaching screws to 2 N.m (18 lb in).

7. Rivet the stay pads to the bow.

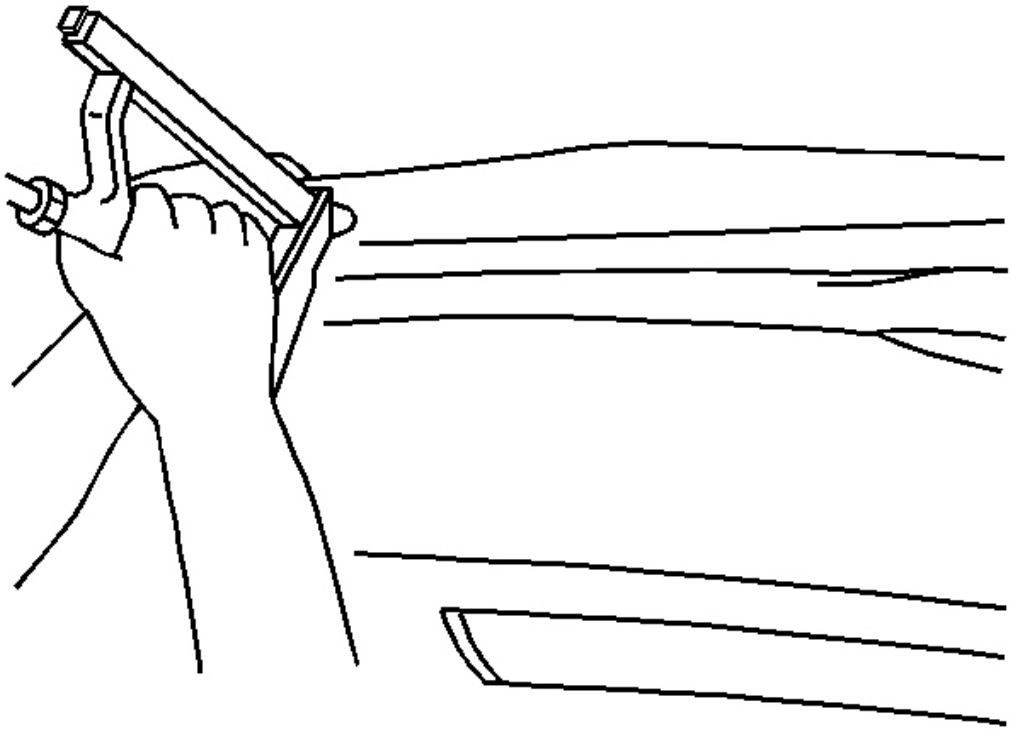

Fig. 107: Staple Headliner To Bow
Courtesy of GENERAL MOTORS CORP.

8. Pull the headliner over the #1 bow and staple the headliner to the bow.
9. Before stapling the top cover, Refer to **Folding Top Cover Tension Adjustment - Front** .
10. Reposition the folding top to the original position.

FOLDING TOP ROOF BOW REPLACEMENT (NUMBER 2 BOW)

Removal Procedure

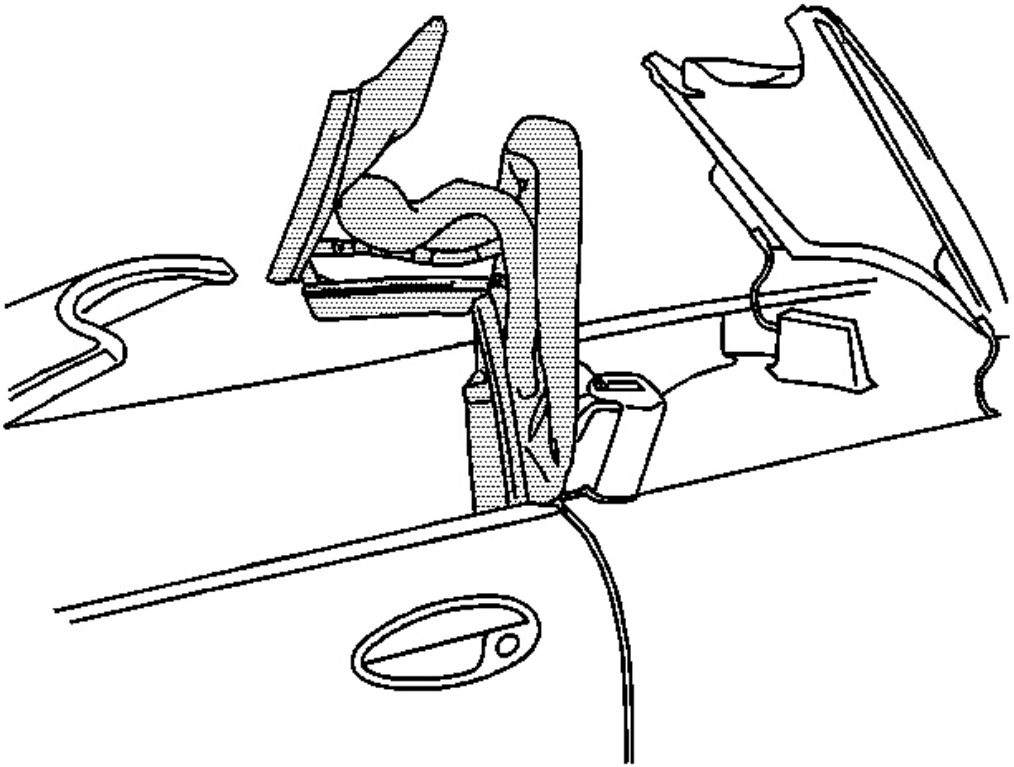

Fig. 108: Folding Top With The #1 Bow And The #5 Bow Up
Courtesy of GENERAL MOTORS CORP.

1. Position the top with the #1 bow up.
2. Remove the seal compression panel. Refer To **Folding Top Seal Compression Panel Replacement** .
3. Using a grease pencil mark the location of the top cover where it wraps over the #1 bow to aid in installation.

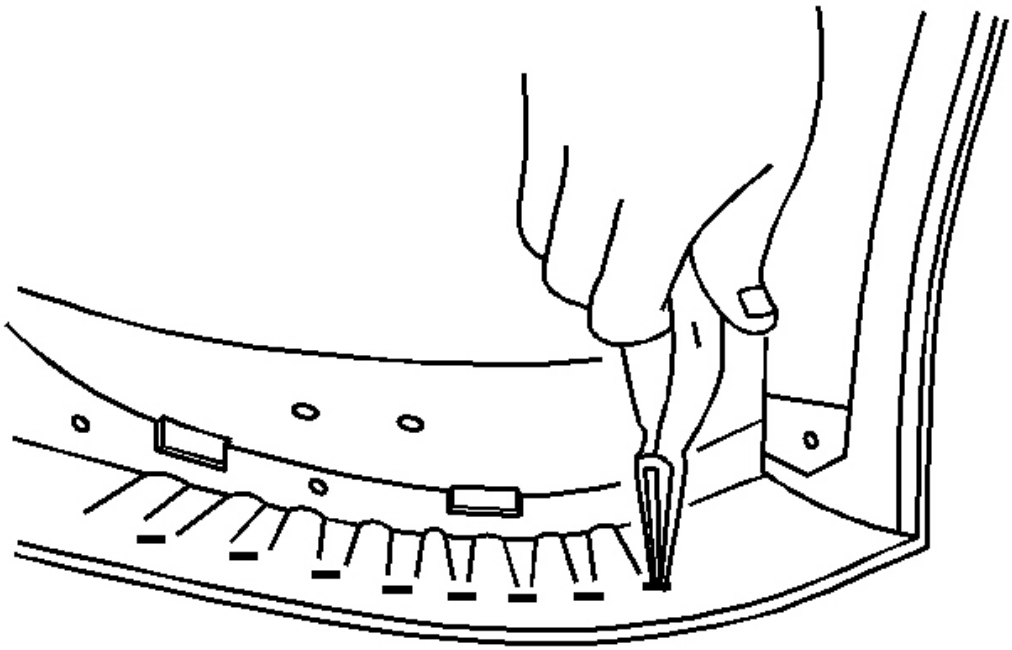

Fig. 109: Top Cover Staples To Bow
Courtesy of GENERAL MOTORS CORP.

4. Using a pair of needle nose pliers remove the top cover staples from the #1 bow.

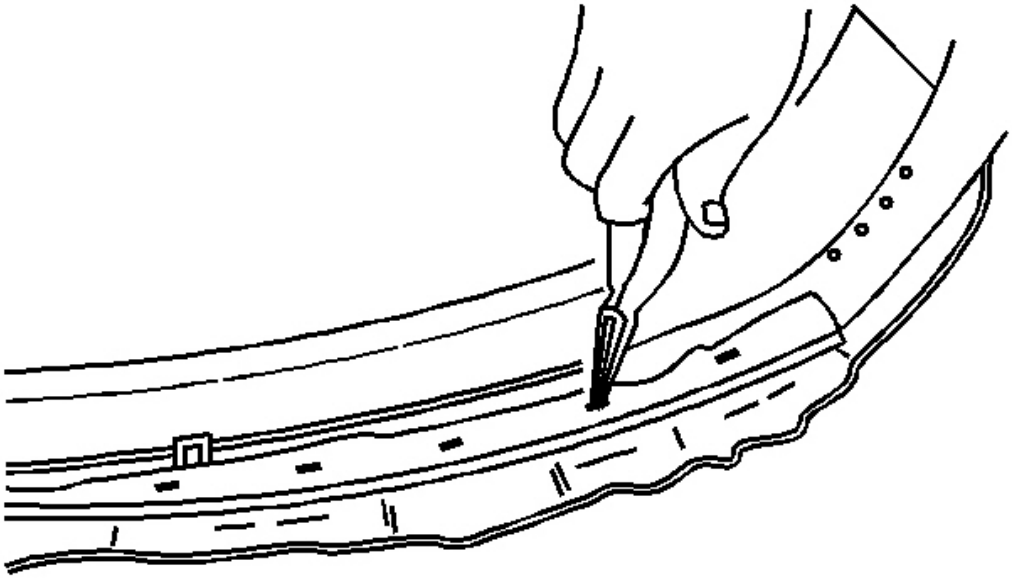

Fig. 110: Headliner Staples To Bow
Courtesy of GENERAL MOTORS CORP.

5. Using a pair of needle nose pliers remove the headliner staples from the #1 bow

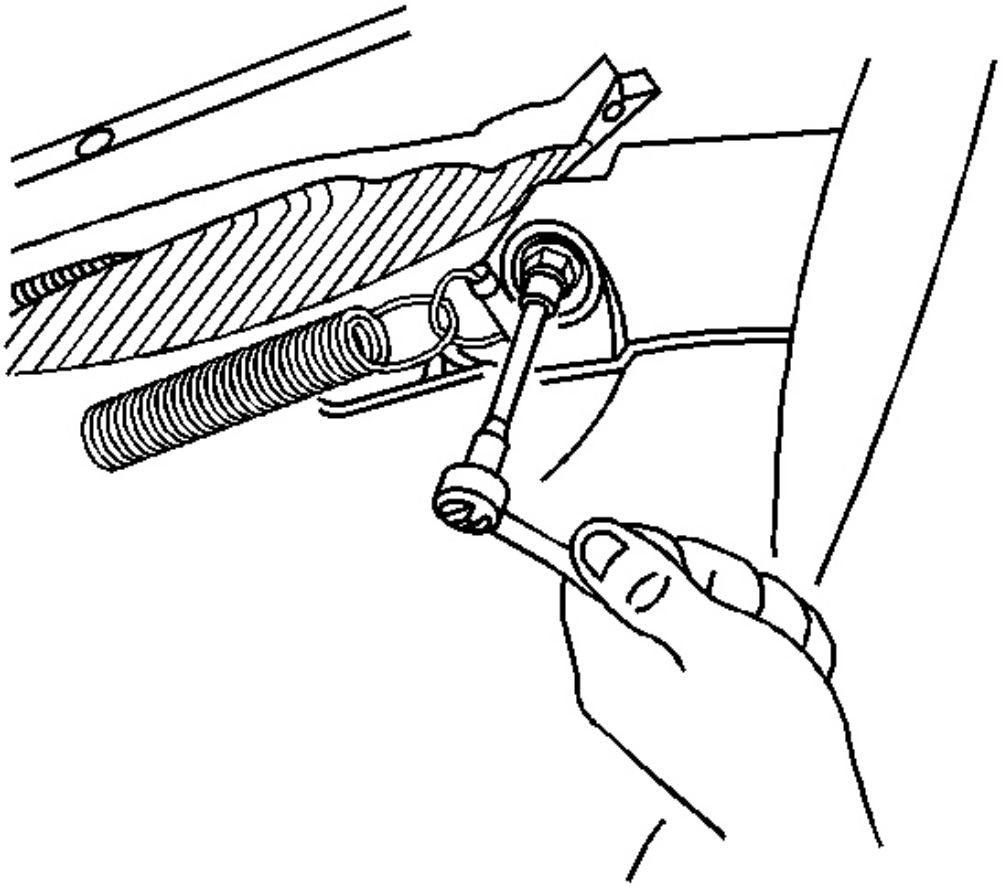

Fig. 111: Tension Cable Screw To Between Side Rail & Roof Bow
Courtesy of GENERAL MOTORS CORP.

6. Remove the tension cables screws from the #1 bow.

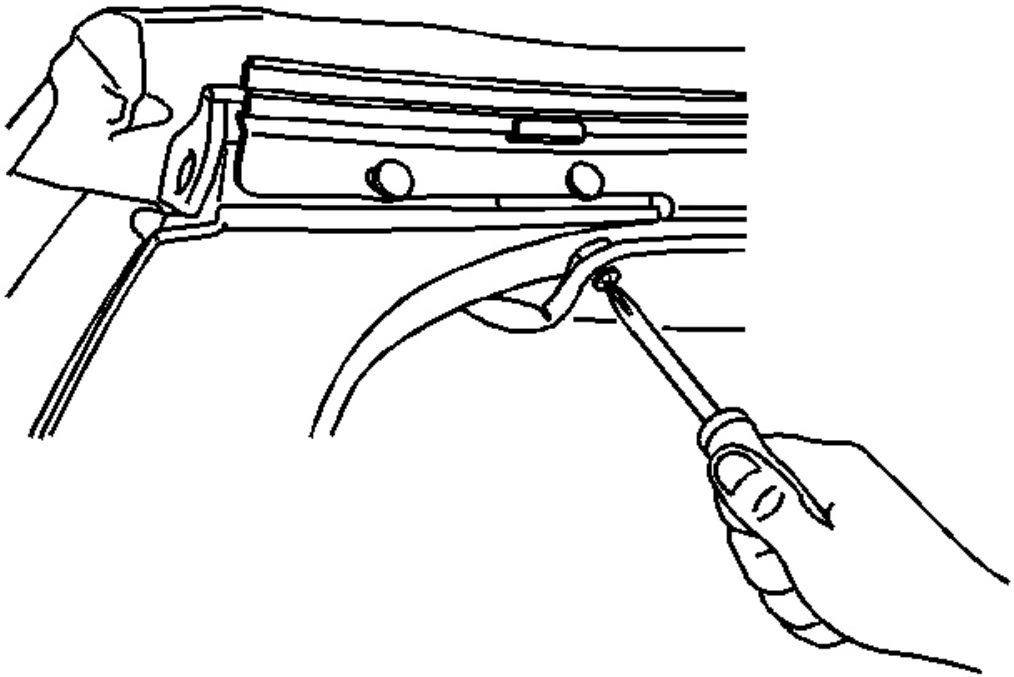

Fig. 112: Headliner Screws To #1 Bow
Courtesy of GENERAL MOTORS CORP.

7. Remove the headliner screws from the #1 bow.

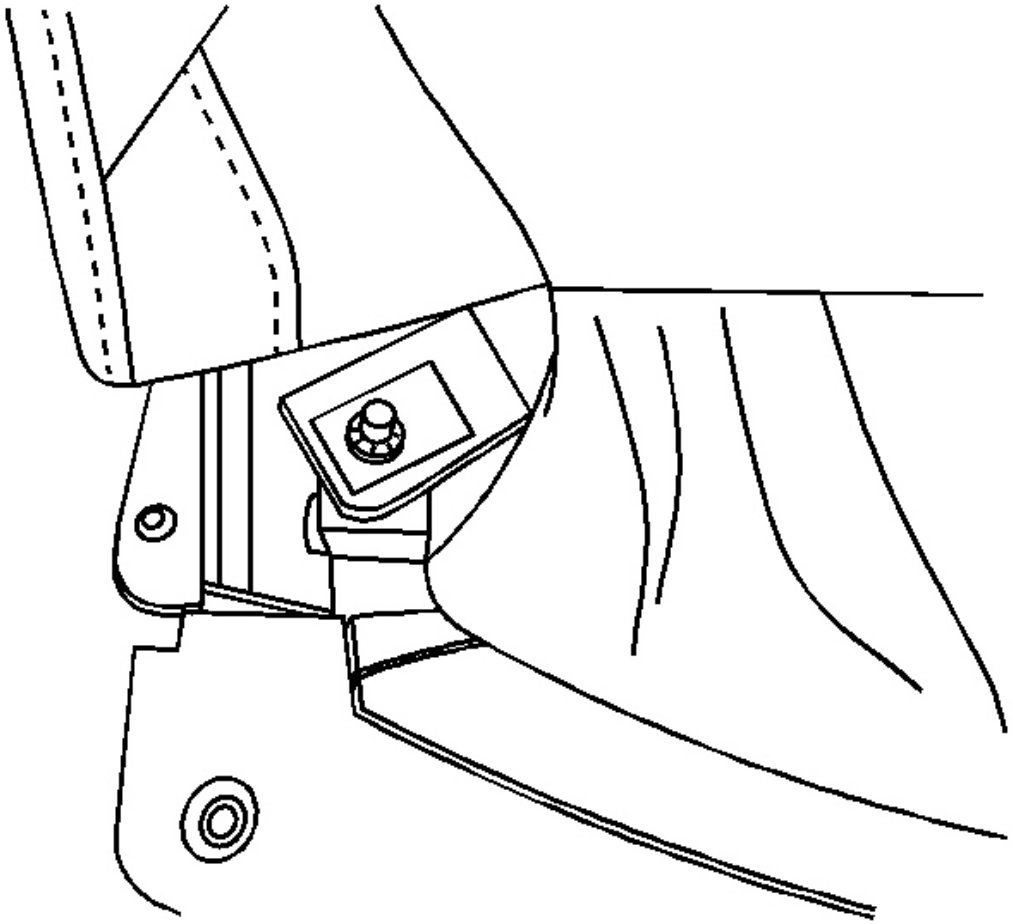

Fig. 113: Headliner Push-On Retainers To #1 Bow
Courtesy of GENERAL MOTORS CORP.

8. Remove the headliner push on retainers from the #1 bow.
9. Fold the top cover back over the #2 bow.

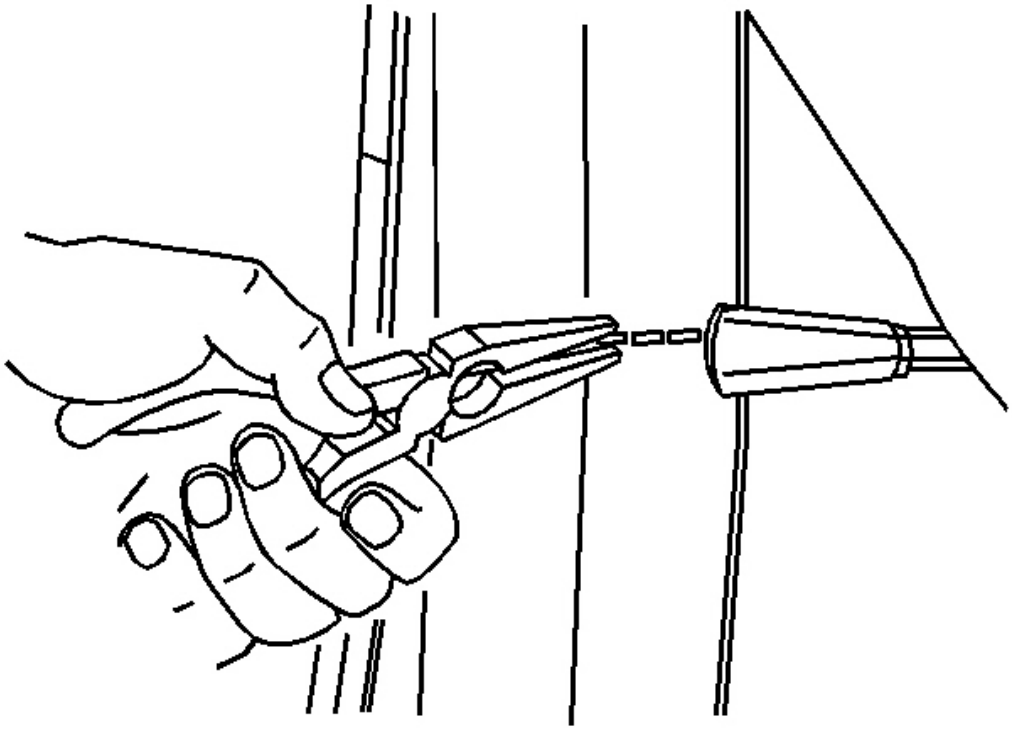

Fig. 114: Stay Pad Staples To #2, #3 & #4 Bow
Courtesy of GENERAL MOTORS CORP.

10. Using a pair of needle nose pliers remove the stay pad staples from the #2 bow.

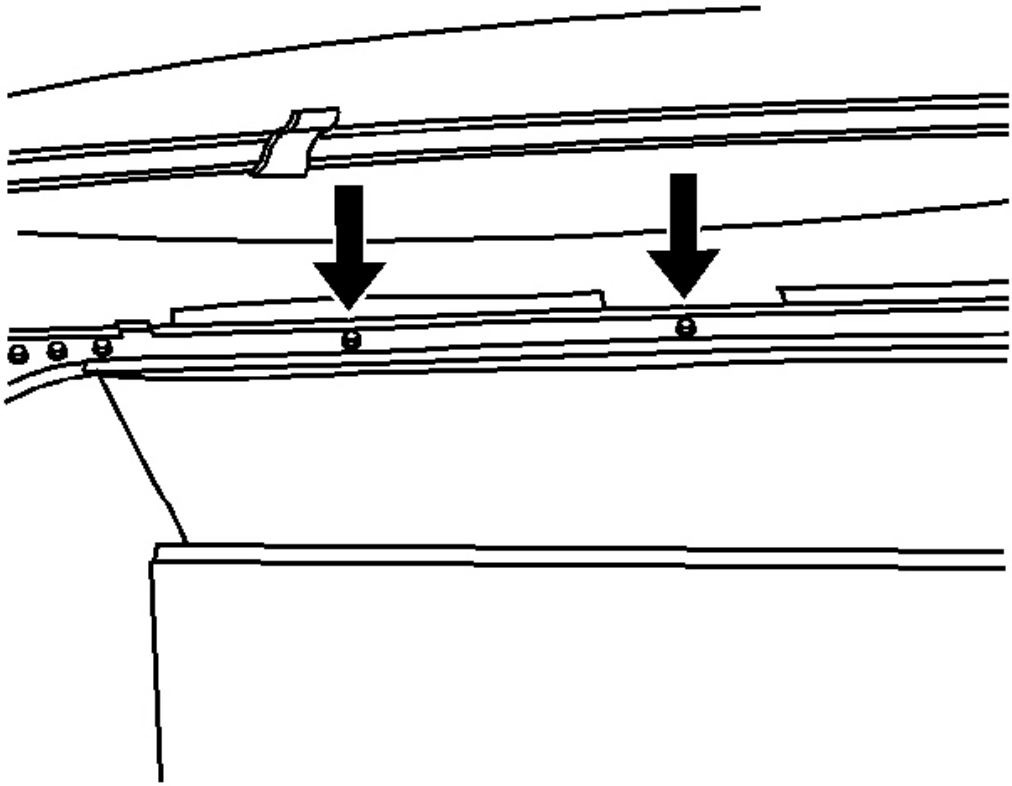

Fig. 115: Headliner Screws To #2 & #4 Bow
Courtesy of GENERAL MOTORS CORP.

11. Remove the headliner screws from the #2 bow.

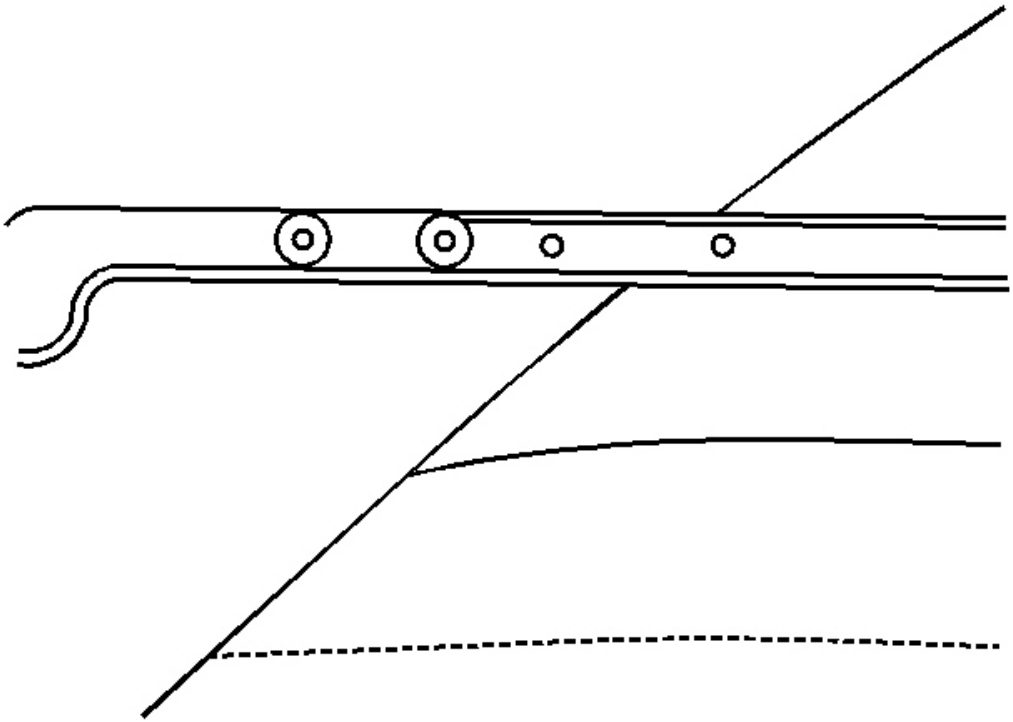

Fig. 116: #2, #3 & #4 Bow Screws To Main Control Link Bracket
Courtesy of GENERAL MOTORS CORP.

12. Remove the #2 bow screws from the main control link bracket.
13. Remove the #2 bow.

Installation Procedure

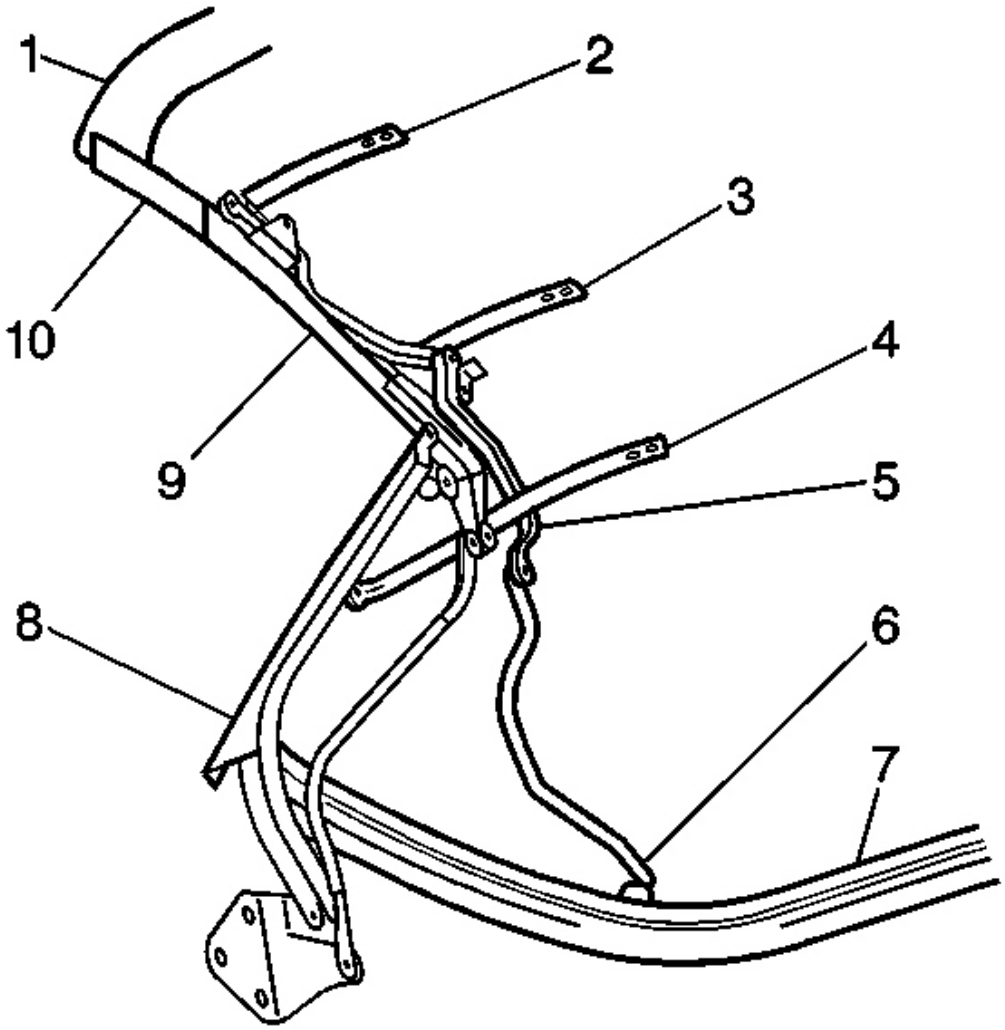

Fig. 117: #2, #3, #4 & #5 Bow To Main Control Link Bracket
Courtesy of GENERAL MOTORS CORP.

1. Install the #2 bow to the main control link bracket.

   NOTE: **Refer to Fastener Notice in Cautions and Notices.**

2. Install the #2 bow screws to the main control link bracket (2).

   Tighten: Tighten the screws to 13 N.m (10 lb in).

3. Close and latch the convertible top.
4. Staple the stay pad to the #2 bow.

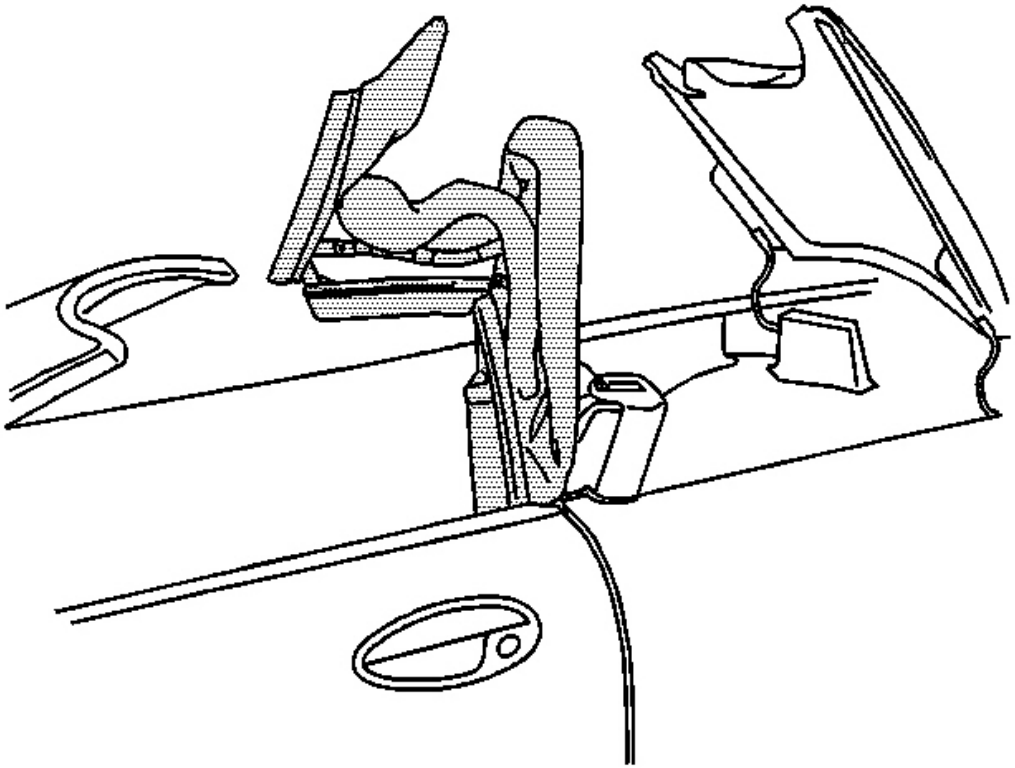

Fig. 118: Folding Top With The #1 Bow And The #5 Bow Up
Courtesy of GENERAL MOTORS CORP.

5. Open the convertible top and position the #1 and #5 bows up.

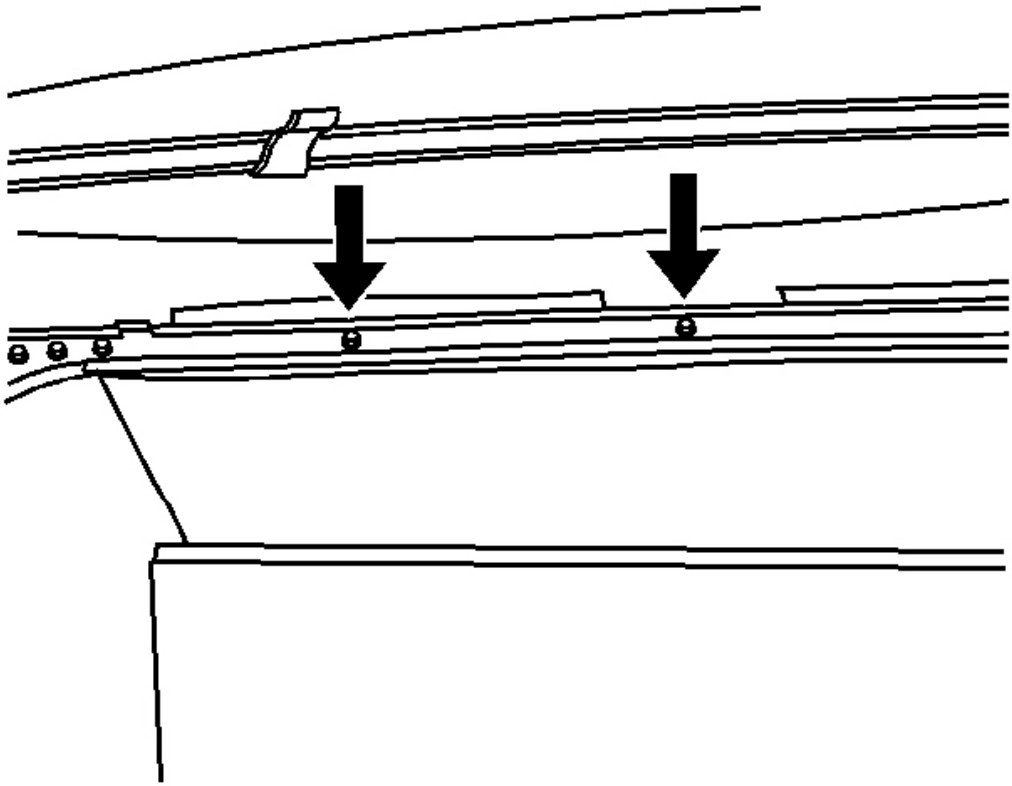

Fig. 119: Headliner Screws To #2 & #4 Bow
Courtesy of GENERAL MOTORS CORP.

6. Install the headliner screws to the #2 bow.

   Tighten: Tighten the screws to 2 N.m (18 lb in).

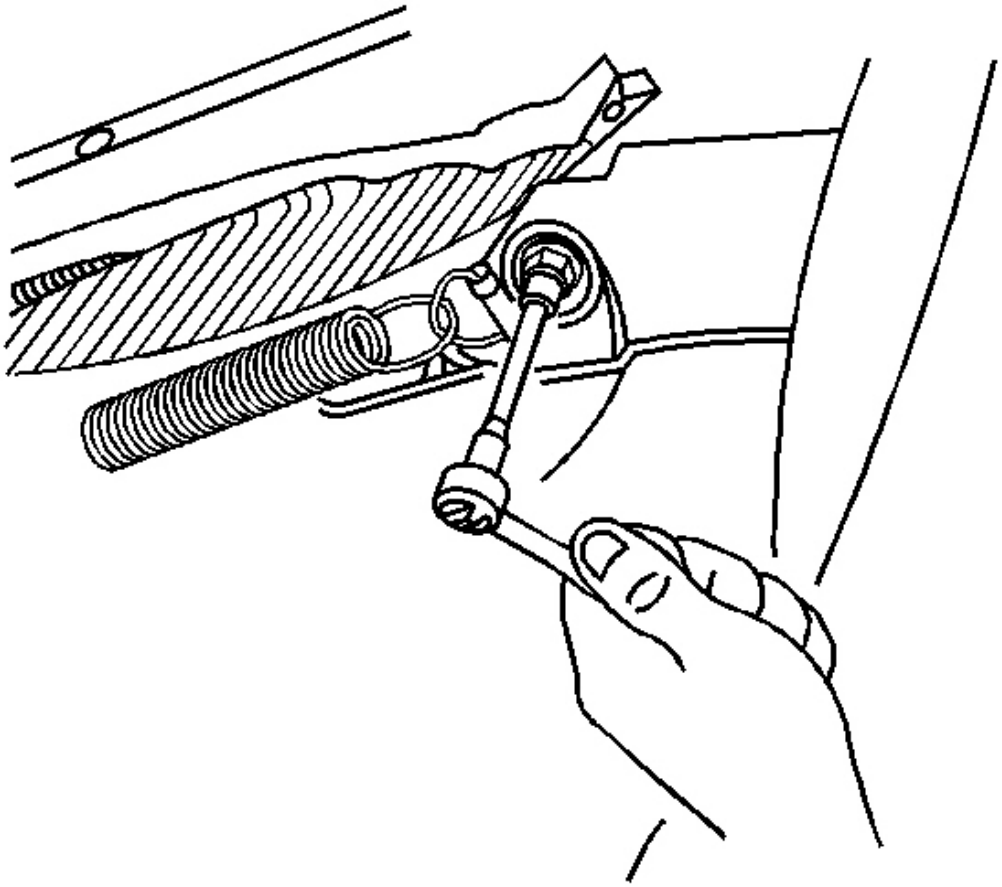

Fig. 120: Tension Cable Screw To Between Side Rail & Roof Bow
Courtesy of GENERAL MOTORS CORP.

7. Install the tension cable screws to the #1 bow.

   Tighten: Tighten the screws to 2 N.m (18 lb in).

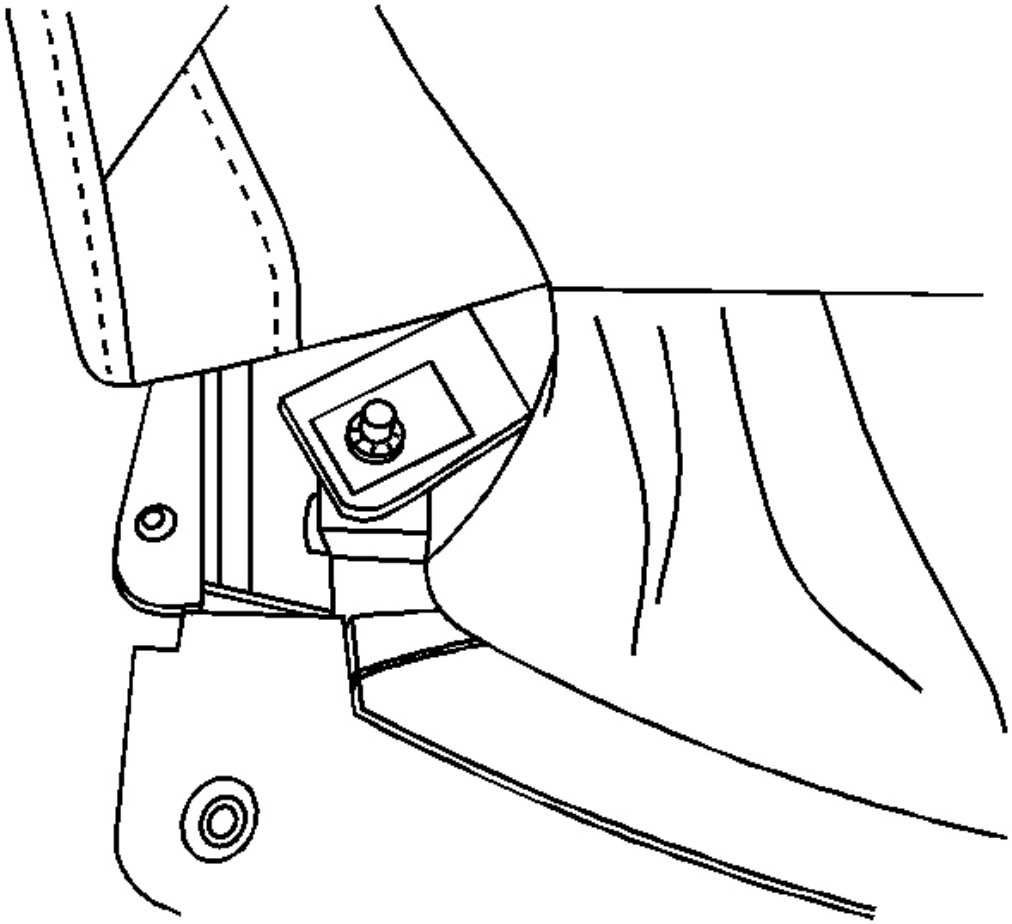

Fig. 121: Headliner Push-On Retainers To #1 Bow
Courtesy of GENERAL MOTORS CORP.

8. Attach the headliner push-on retainers to the #1 bow.

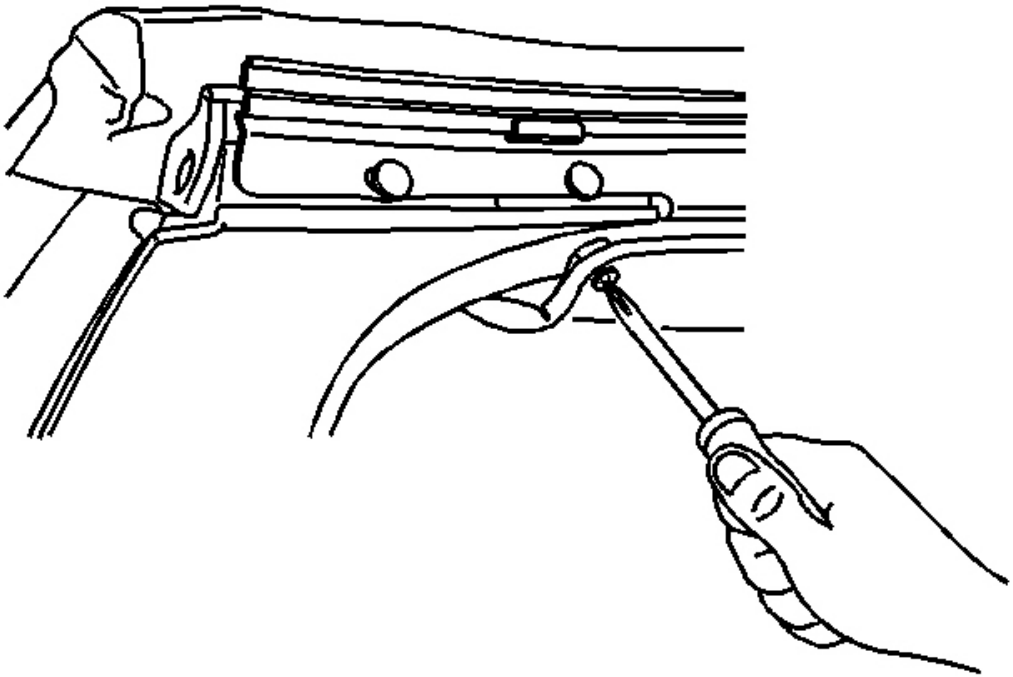

Fig. 122: Headliner Screws To #1 Bow
Courtesy of GENERAL MOTORS CORP.

9. Install the headliner screws to the #1 bow.

   Tighten: Tighten the screws to 2 N.m (18 lb in).

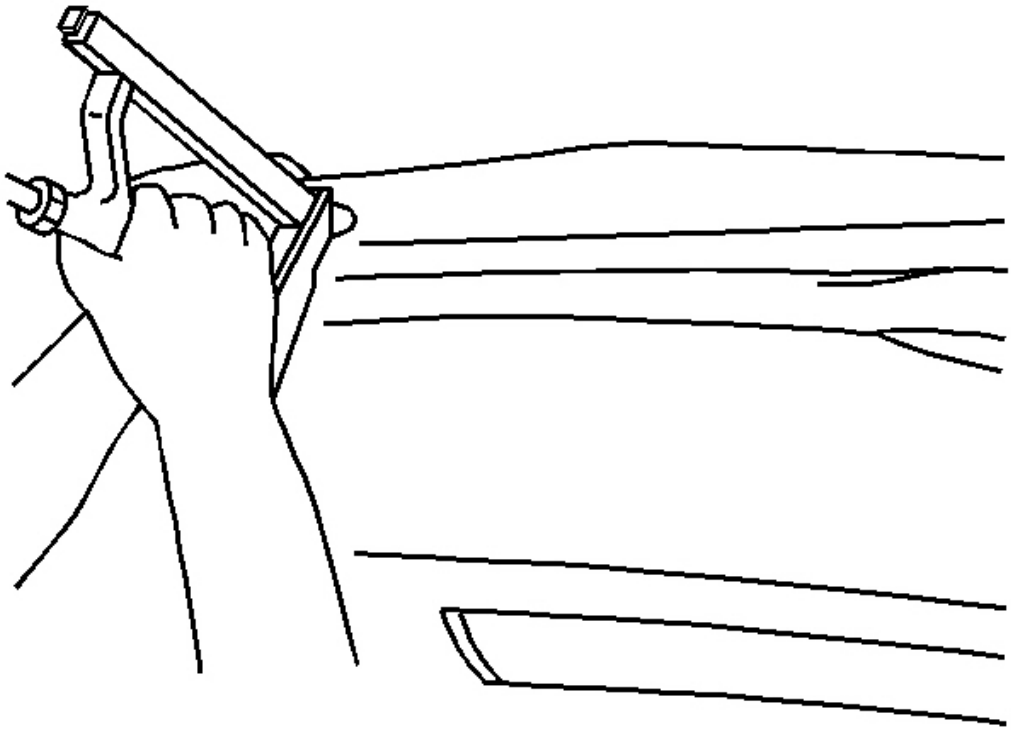

Fig. 123: Staple Headliner To Bow
Courtesy of GENERAL MOTORS CORP.

10. Fold the top cover over the #1 bow and staple into place.
11. Refer to **Folding Top Cover Tension Adjustment - Front** .
12. Reposition the folding top to the original position.

FOLDING TOP ROOF BOW REPLACEMENT (NUMBER 3 BOW)

Removal Procedure

Start at the front of the folding top and work your way rearward.

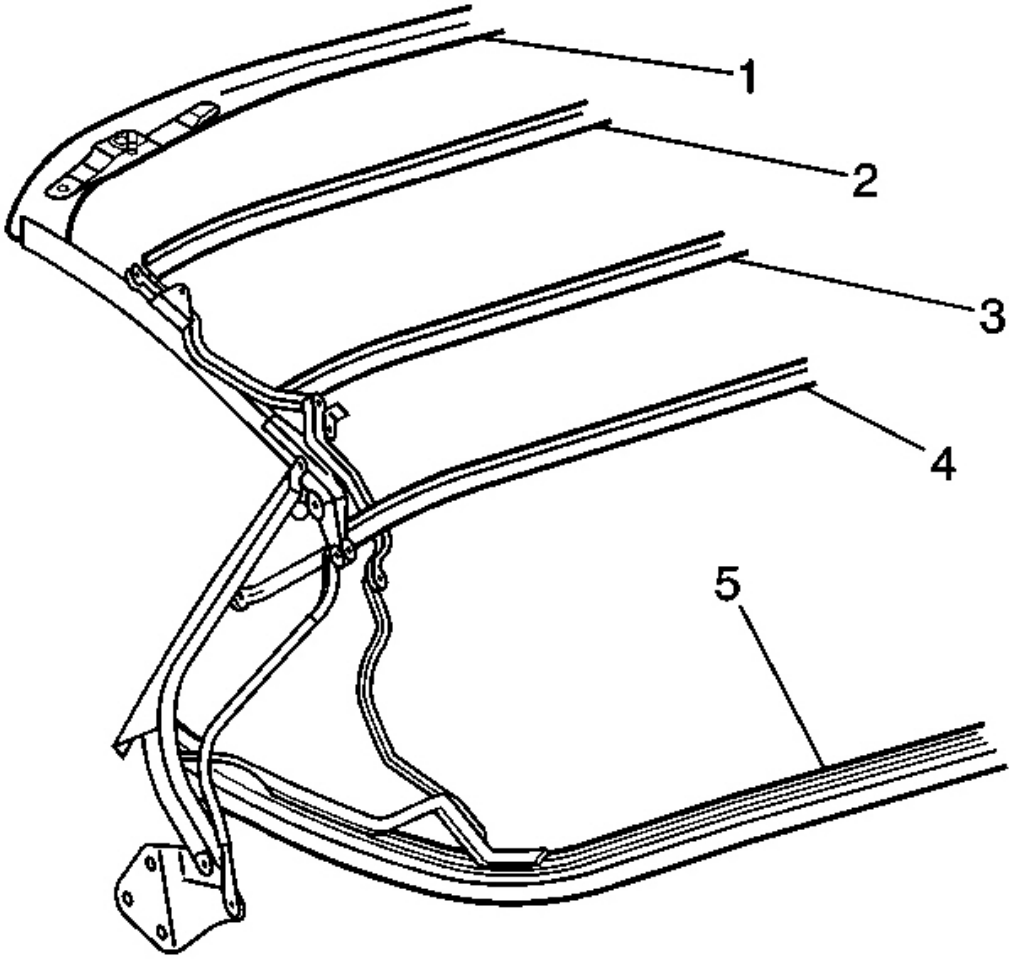

Fig. 124: Top Cover At Roof Bows
Courtesy of GENERAL MOTORS CORP.

1. Perform all steps necessary to remove the #2 bow. Refer to **Folding Top Roof Bow Replacement (Number 1 Bow)** or **Folding Top Roof Bow Replacement (Number 2 Bow)** or **Folding Top Roof Bow Replacement (Number 3 Bow)** or **Folding Top Roof Bow Replacement (Number 4 Bow)** or **Folding Top Roof Bow Replacement (Number 5 Bow)** .
2. Remove the headliner screws from the #3 bow.

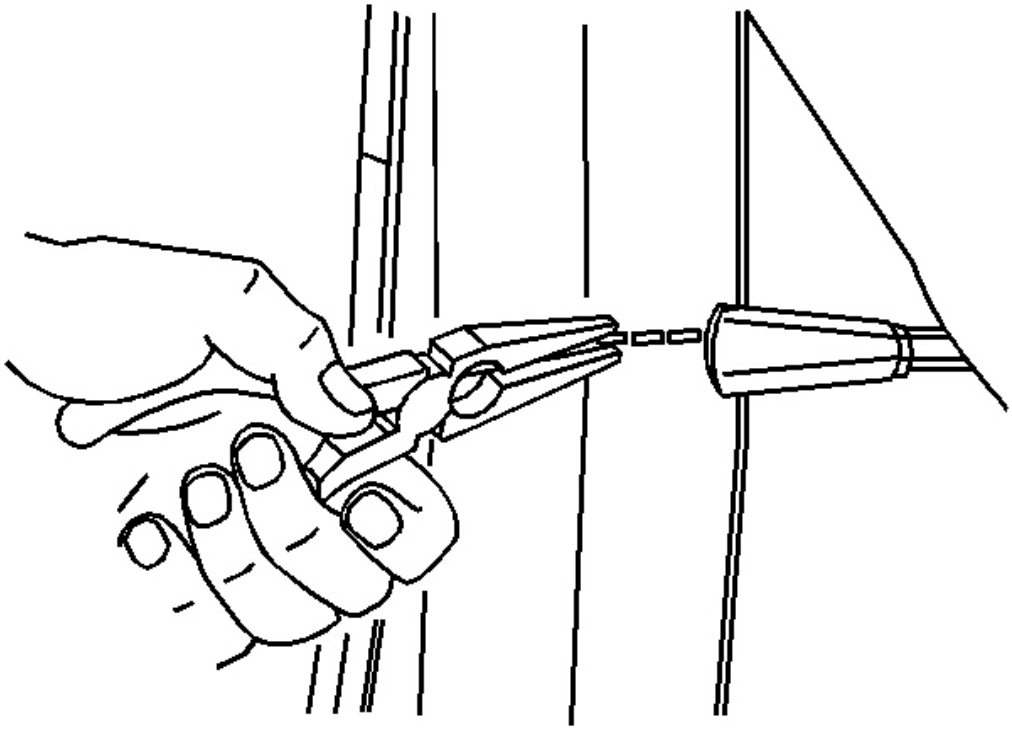

Fig. 125: Stay Pad Staples To #2, #3 & #4 Bow
Courtesy of GENERAL MOTORS CORP.

3. Using a pair of needle nose pliers remove the stay pad staples from the #3 bow.

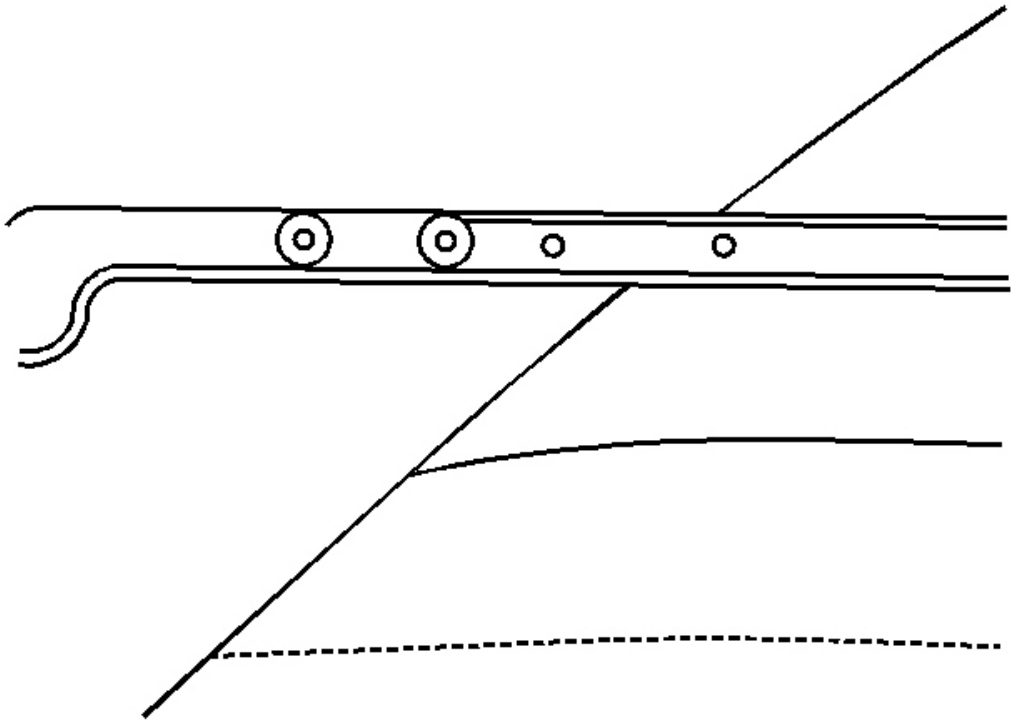

Fig. 126: #2, #3 & #4 Bow Screws To Main Control Link Bracket
Courtesy of GENERAL MOTORS CORP.

4. Remove the #3 bow screws from the main control link bracket.
5. Remove the headliner screws to the #3 bow.
6. Remove the #3 bow.

Installation Procedure

1. Install the #3 bow to the main control link bracket.

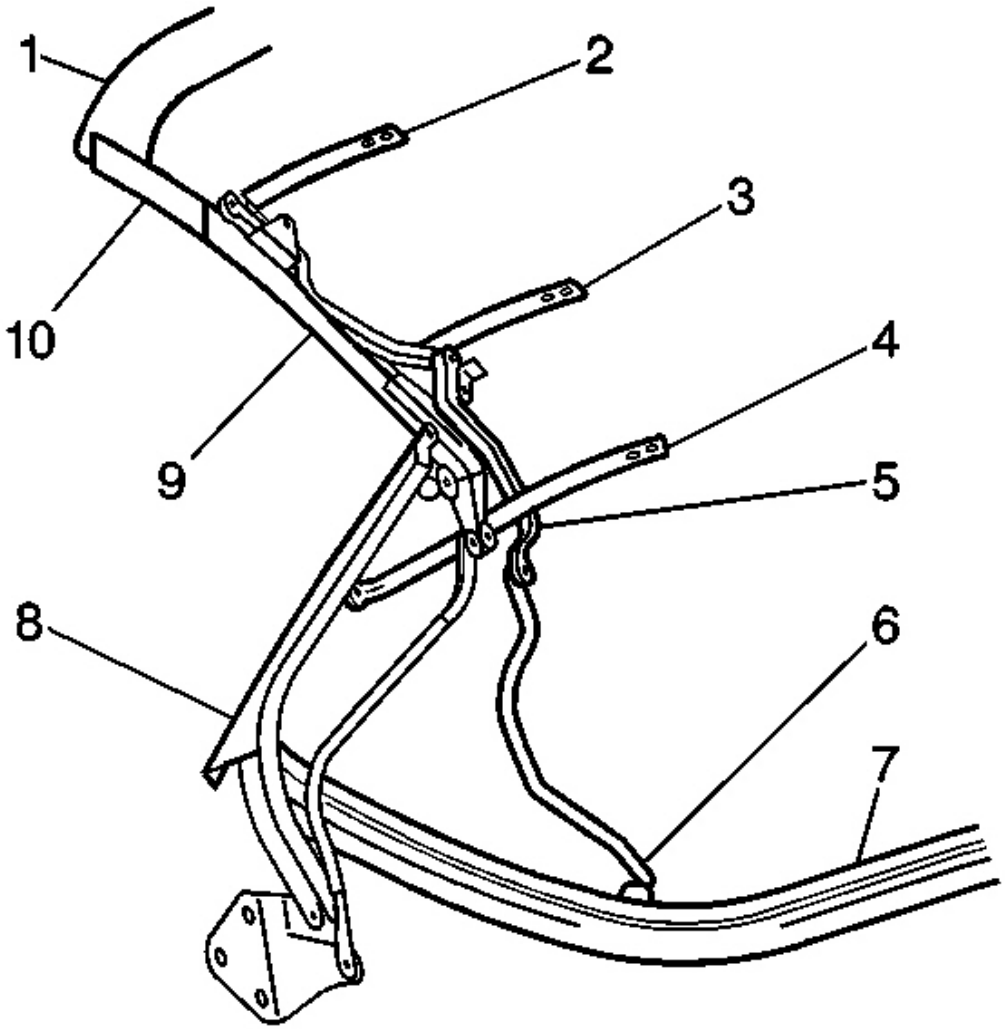

Fig. 127: #2, #3, #4 & #5 Bow To Main Control Link Bracket
Courtesy of GENERAL MOTORS CORP.

NOTE: Refer to Fastener Notice in Cautions and Notices.

2. Install the #3 bow screws to the main control link bracket (3).

   Tighten: Tighten roof bow to the main control link bracket screws to 13 N.m (10 lb ft).

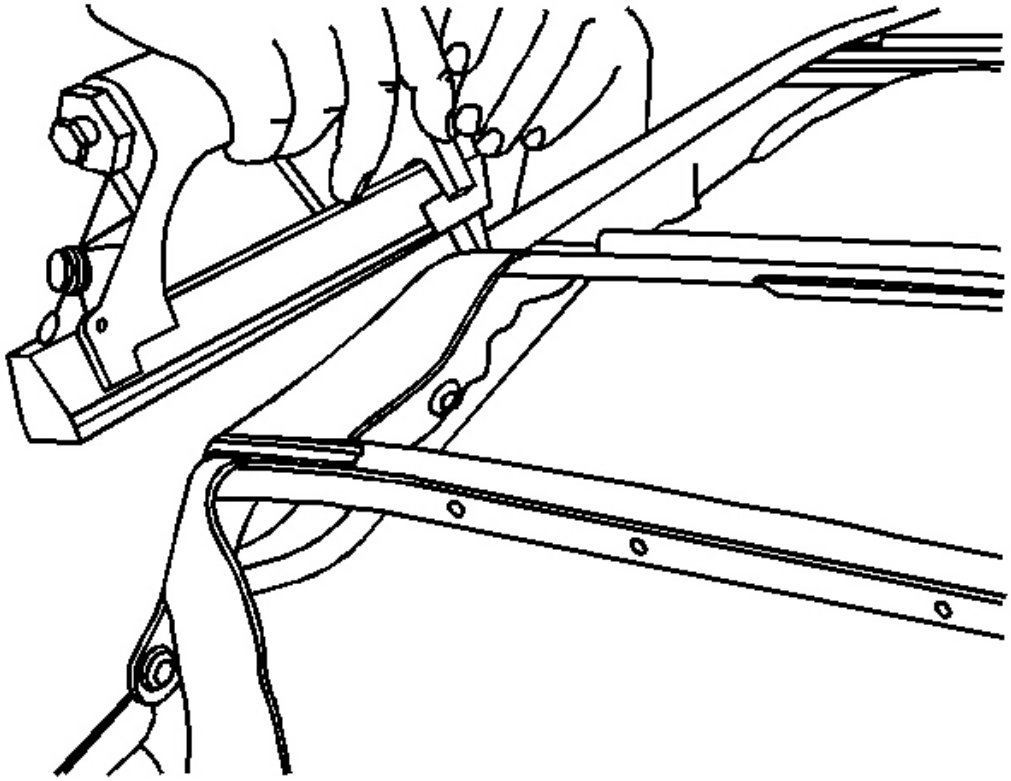

Fig. 128: Staple Stay Pad To #2, #3, & #4 Bow
Courtesy of GENERAL MOTORS CORP.

3. Staple the stay pad to the #3 bow (3).
4. Install the headliner screws to the #3 bow.

   Tighten: Tighten the headliner screws to 2 N.m (18 lb in).

5. Refer to **Folding Top Roof Bow Replacement (Number 1 Bow)** or **Folding Top Roof Bow Replacement (Number 2 Bow)** or **Folding Top Roof Bow Replacement (Number 3 Bow)** or **Folding Top Roof Bow Replacement (Number 4 Bow)** or **Folding Top Roof Bow Replacement (Number 5 Bow)** .

FOLDING TOP ROOF BOW REPLACEMENT (NUMBER 4 BOW)

Removal Procedure

1. Remove the folding top and place the top on a clean flat surface. Refer to **Folding Top Replacement**

2. Remove the #5 bow weatherstrip. Refer to **Weatherstrip Replacement - Folding Top (Front and Center Side Rails)** or **Weatherstrip Replacement - Folding Top (Rear Side Rail)** or **Weatherstrip Replacement - Folding Top (Number Five Bow)** .

CAUTION: Refer to Safety Glasses Caution in Cautions and Notices.

3. Drill out the top cover rivets to the bottom of the right and the left rear side rails.
4. Pull the top cover from the bottom of the rear side rails and from the ends of the #5 bow.
5. Using a grease pencil mark the position of the top cover along the edge where it wraps over the #5 bow to aid in installation.

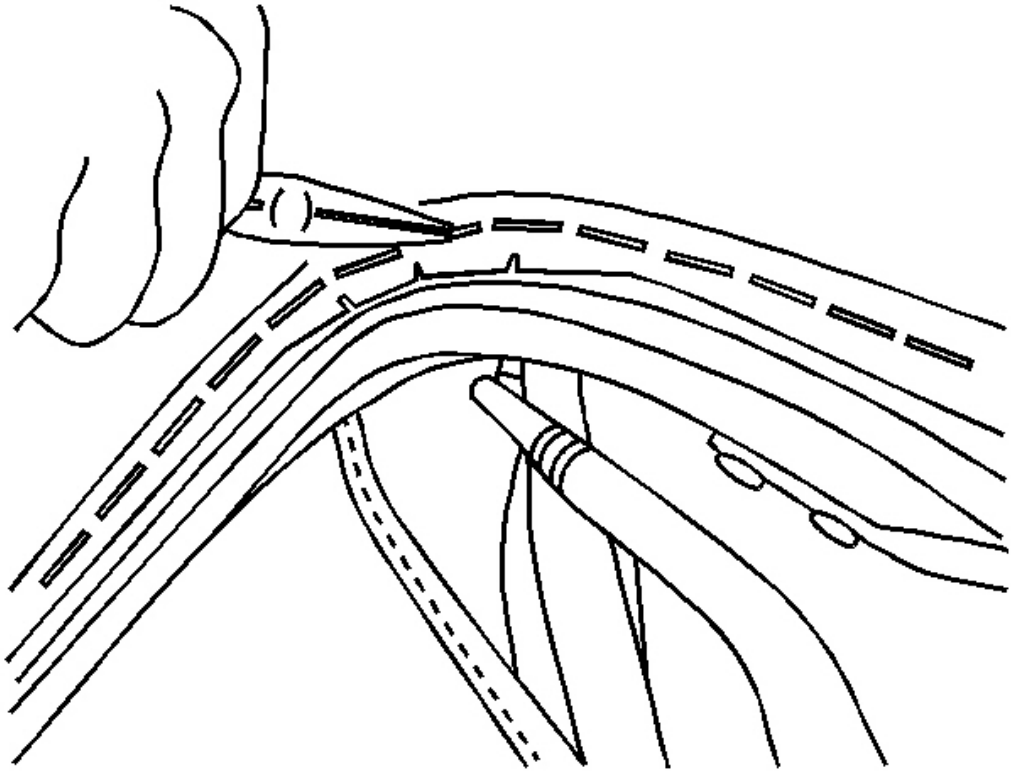

Fig. 129: Needle Nose Pliers To Top Cover Staples To Bow
Courtesy of GENERAL MOTORS CORP.

6. Using a pair of needle nose pliers remove the top cover staples from the #5 bow.
7. Fold the top cover forward over the #3 bow.

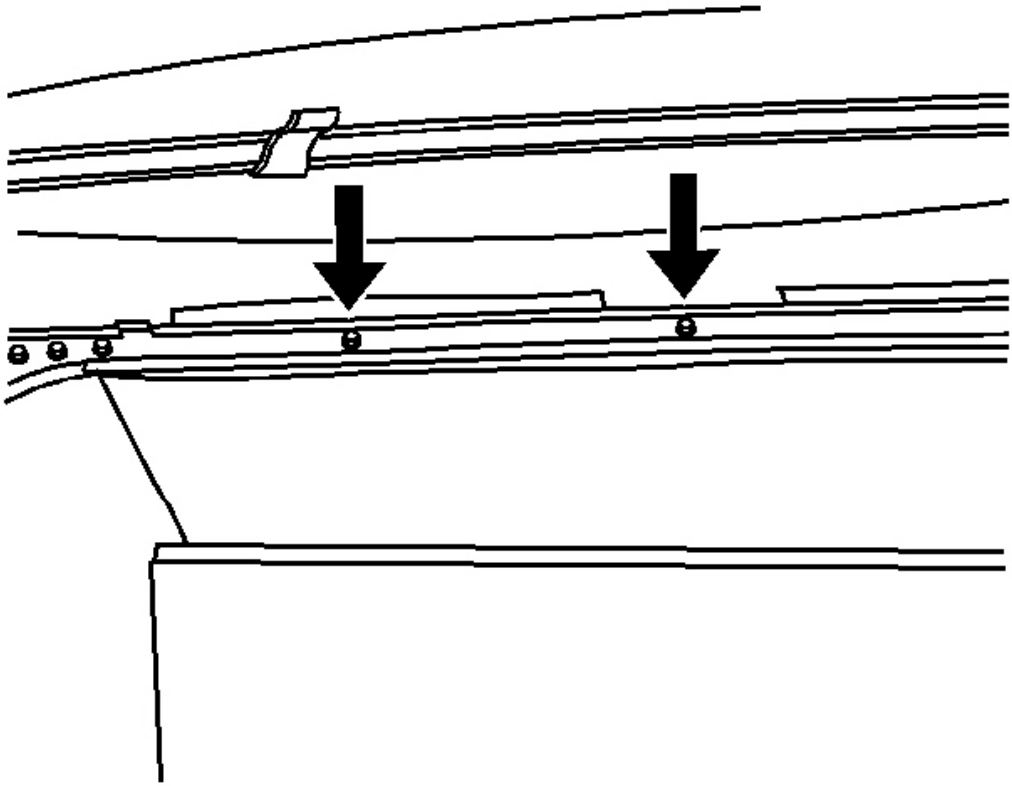

Fig. 130: Headliner Screws To #2 & #4 Bow
Courtesy of GENERAL MOTORS CORP.

8. Remove the headliner screws from the #4 bow.

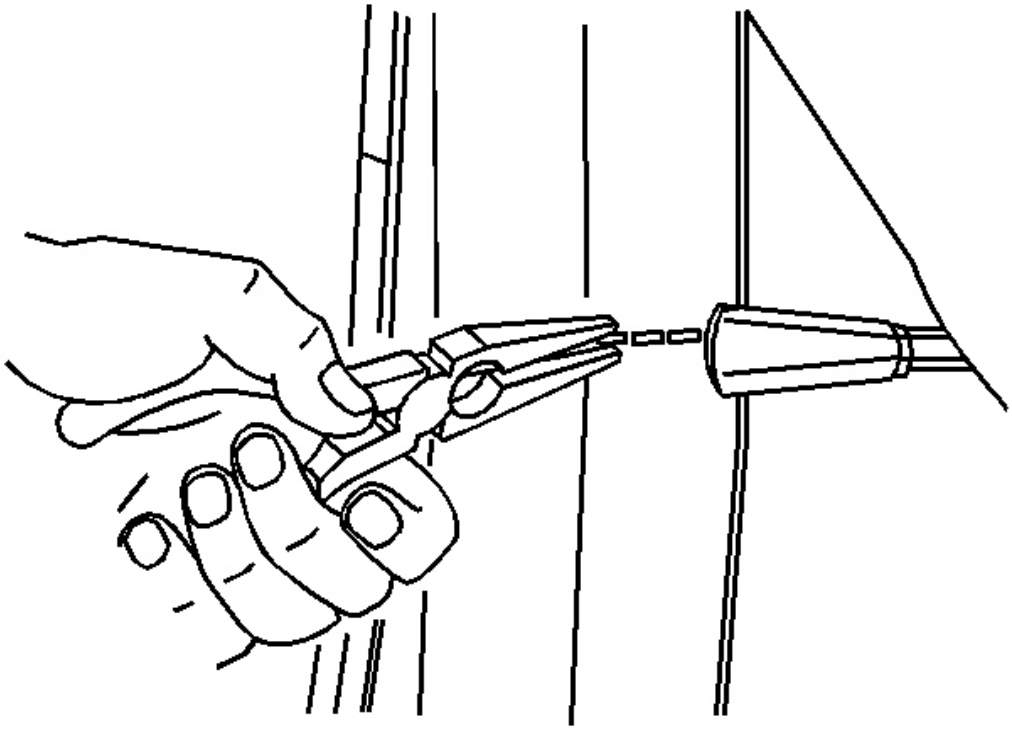

Fig. 131: Stay Pad Staples To #2, #3 & #4 Bow
Courtesy of GENERAL MOTORS CORP.

9. Using a pair of needle nose pliers remove the stay pad staples from the #4 bow.
10. Turn the top over.
11. Remove the glare cover elastic straps screws from the #5 bow.
12. Remove the headliner elastic straps screws from the #5 bow.
13. Remove the headliner elastic straps screws from the rear side rails.
14. Remove the headliner screws from the rear side rails.

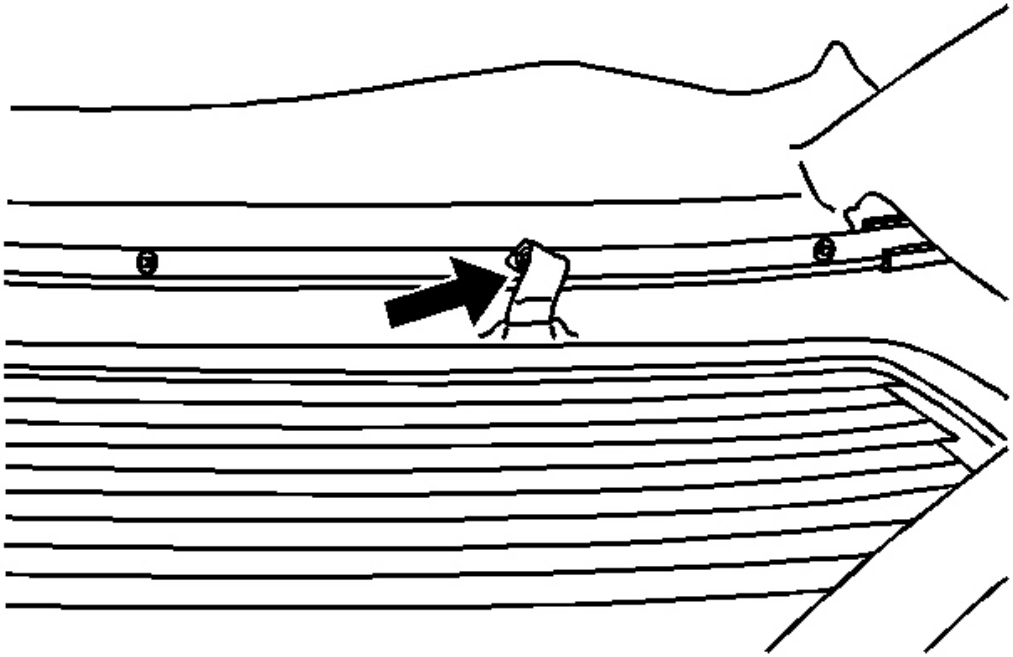

Fig. 132: Rear Window To #4 Bow
Courtesy of GENERAL MOTORS CORP.

15. Remove the rear window support elastic strap screws from the #4 bow.

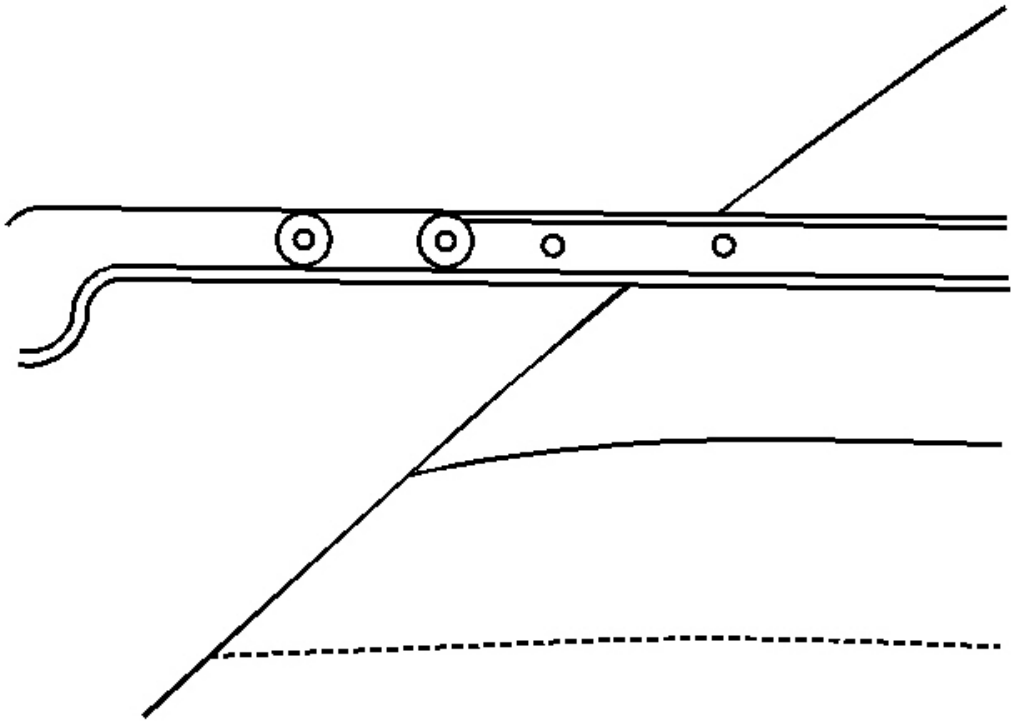

Fig. 133: #2, #3 & #4 Bow Screws To Main Control Link Bracket
Courtesy of GENERAL MOTORS CORP.

16. Remove the #4 bow screws from the main control link bracket.
17. Remove the #4 bow.

Installation Procedure

1. Install the #4 bow to the main control link bracket.

   NOTE: Refer to Fastener Notice in Cautions and Notices.

2. Install the #4 bow screws to the main control link bracket.

   Tighten: Tighten the screws to 13 N.m (10 lb ft).

3. Position the top right side up and in a fully raised position.
4. Staple the stay pad to the #4 bow.

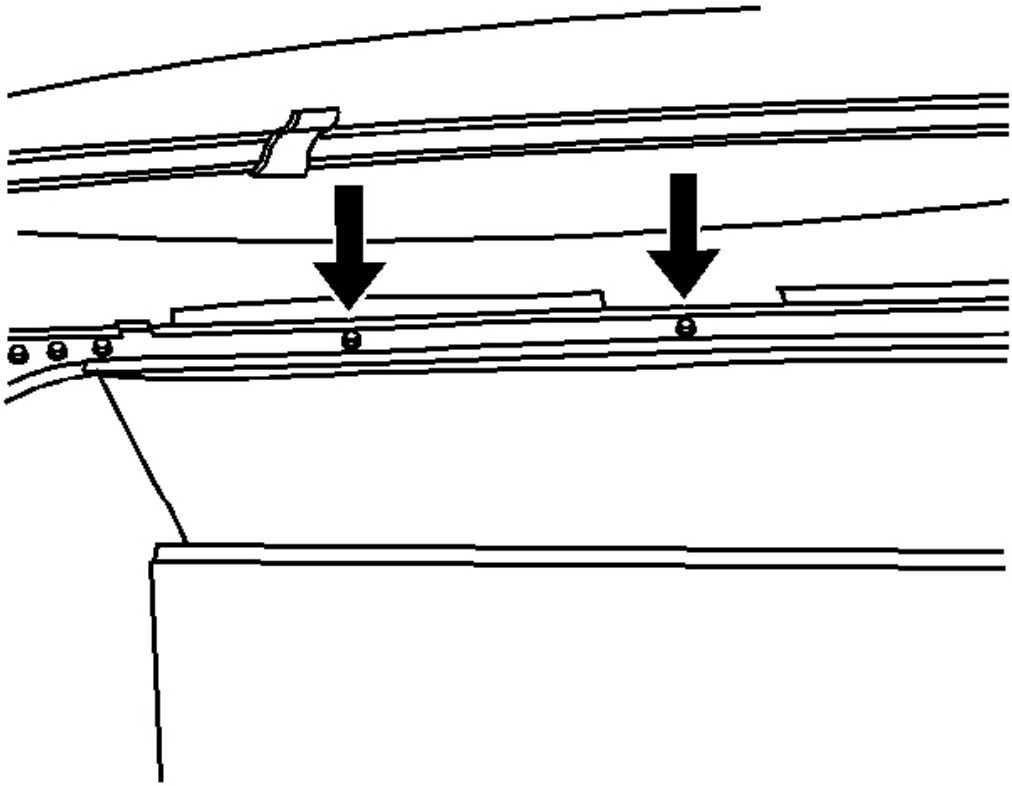

Fig. 134: Headliner Screws To #2 & #4 Bow
Courtesy of GENERAL MOTORS CORP.

5. Install the headliner screws to the #4 bow.

   Tighten: Tighten the screws to 2 N.m (18 lb in).

6. Turn the top over.

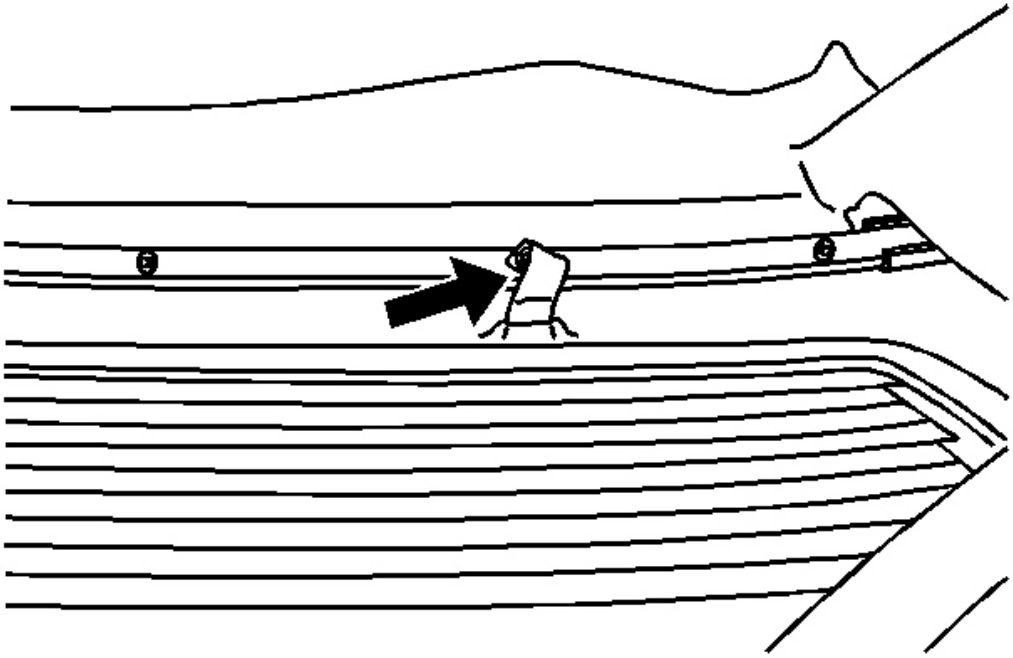

Fig. 135: Rear Window To #4 Bow
Courtesy of GENERAL MOTORS CORP.

7. Install the rear window support elastic strap screws to the #4 bow.

   Tighten: Tighten the screws to 2 N.m 18 lb in).

8. Install the headliner elastic strap screws to the #5 bow

   Tighten: Tighten the screws to 2 N.m (18 lb in).

9. Install the headliner screws to the rear side rails.

   Tighten: Tighten the screws to 2 N.m (18 lb in).

10. Install the glare cover end screws to the #5 bow.

    Tighten: Tighten the screws to 2 N.m (18 lb in).

11. Before stapling the top cover to the #5 bow, Refer to **Folding Top Cover Tension Adjustment - Rear** .
12. Install the folding top. Refer to **Folding Top Replacement** .

13. Reposition the folding top to the original position.

FOLDING TOP ROOF BOW REPLACEMENT (NUMBER 5 BOW)

Removal Procedure

1. Remove the folding top and place the top on a clean flat surface. Refer to **Folding Top Replacement** .
2. Remove the #5 bow weatherstrip. Refer to **Weatherstrip Replacement - Folding Top (Front and Center Side Rails)** or **Weatherstrip Replacement - Folding Top (Rear Side Rail)** or **Weatherstrip Replacement - Folding Top (Number Five Bow)** .
3. Remove the rear side rail seal and retainer. Refer to **Weatherstrip Retainer Replacement - Folding Top (Front and Center Side Rail)** or **Weatherstrip Retainer Replacement - Folding Top (Rear Side Rail)** .

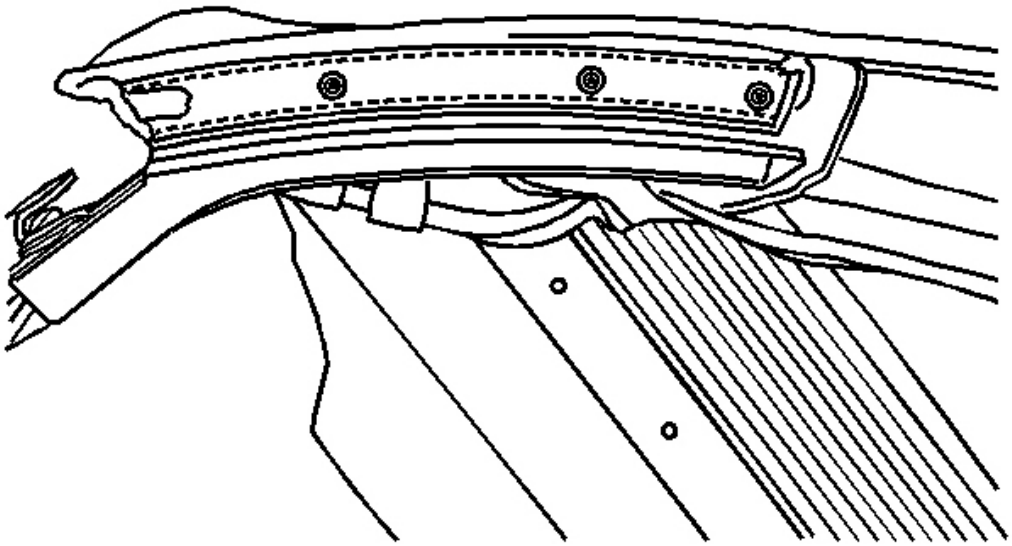

Fig. 136: Top Cover Rivet To Rear Side Rail
Courtesy of GENERAL MOTORS CORP.

CAUTION: Refer to Safety Glasses Caution in Cautions and Notices.

4. Drill out the top cover flap rivets from the rear side rails.
5. Pull the top material from the rear side rails.
6. Drill out the elastic strap rivets from the #5 bow.

7. Drill out the top cover rivets from the bottom of the rear side rails.

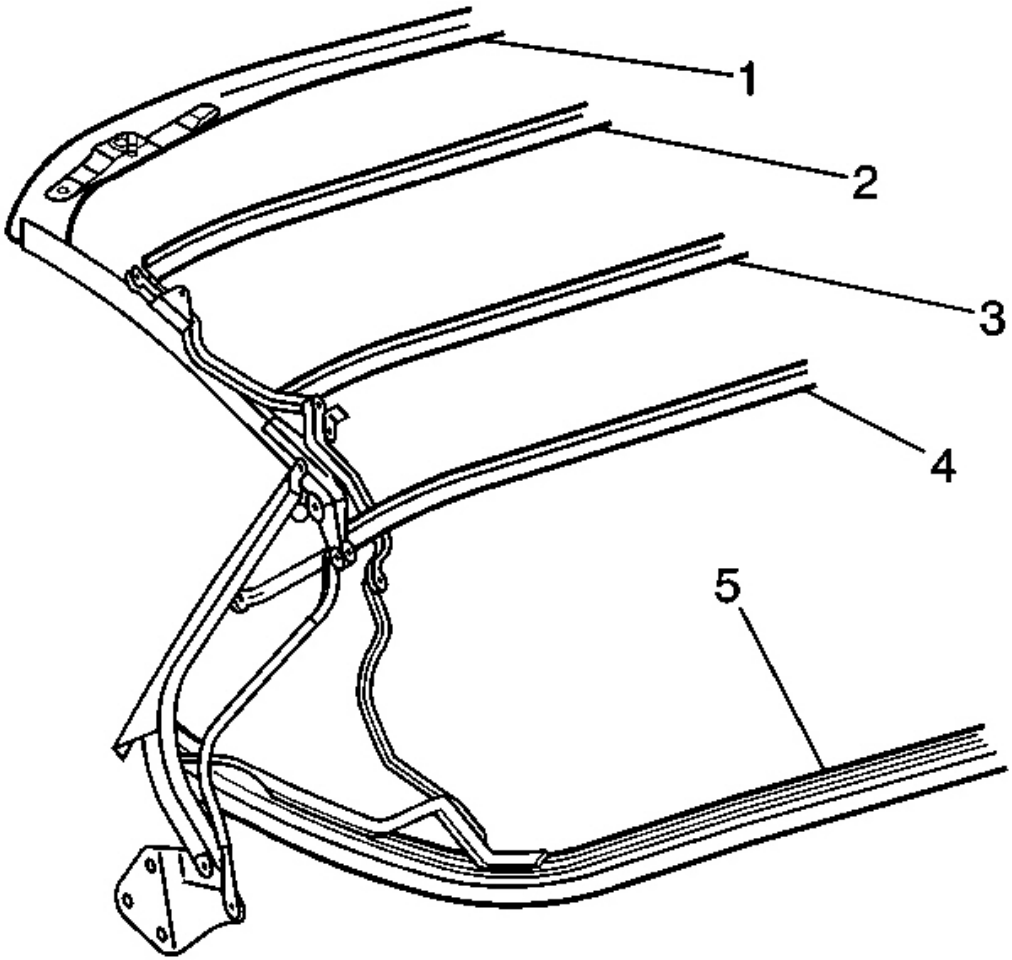

Fig. 137: Top Cover At Roof Bows
Courtesy of GENERAL MOTORS CORP.

8. Pull the top cover from the bottom of the rear side rail and from the front of the #5 bow (5).
9. Using a grease pencil mark the position of the top cover along the edge where it wraps over the #5 bow to aid in installation.

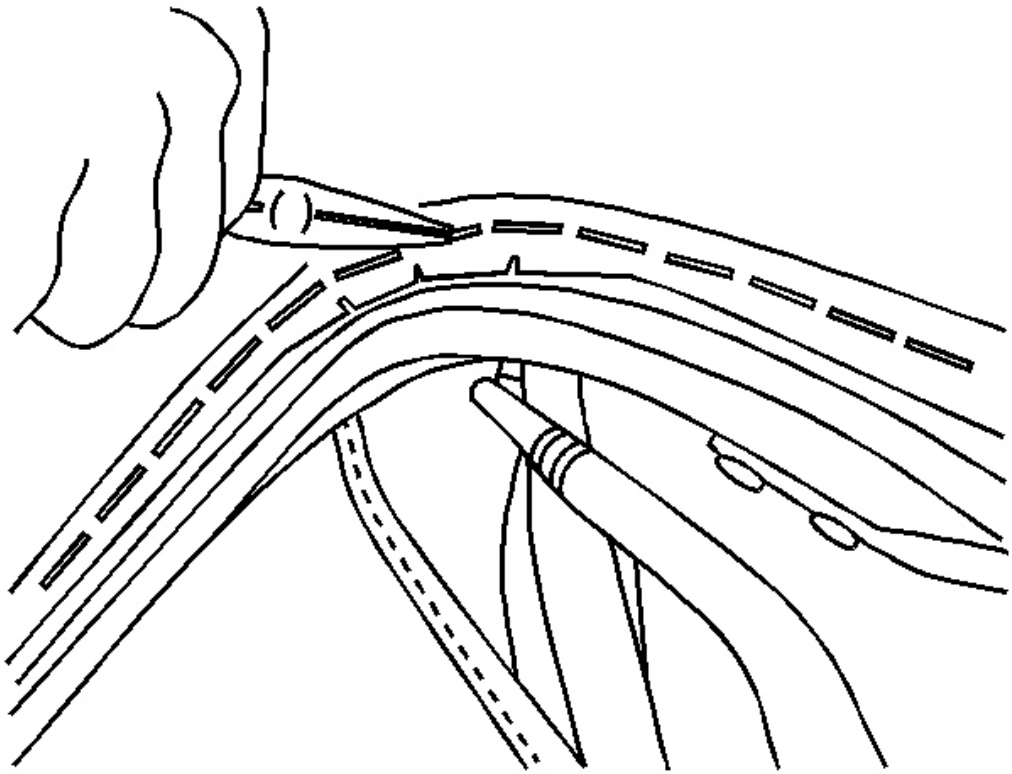

Fig. 138: Needle Nose Pliers To Top Cover Staples To Bow
Courtesy of GENERAL MOTORS CORP.

10. Using a pair of needle nose pliers remove the top cover staples from the #5 bow.
11. Mark the edge of the stay pad where it wraps over the #5 bow to aid in installation.

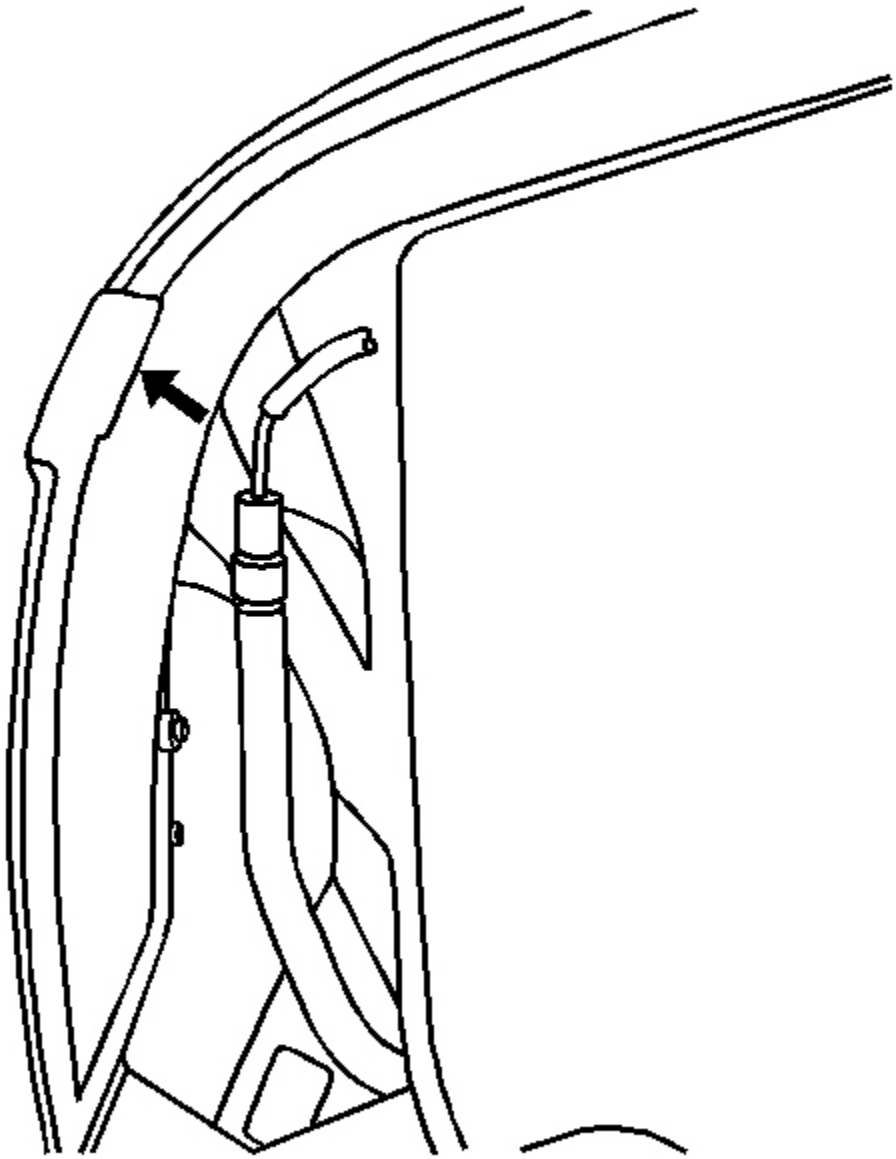

Fig. 139: Stay Pad Staples To Bow
Courtesy of GENERAL MOTORS CORP.

12. Using a pair of needle nose pliers remove the stay pad staples from the #5 bow.

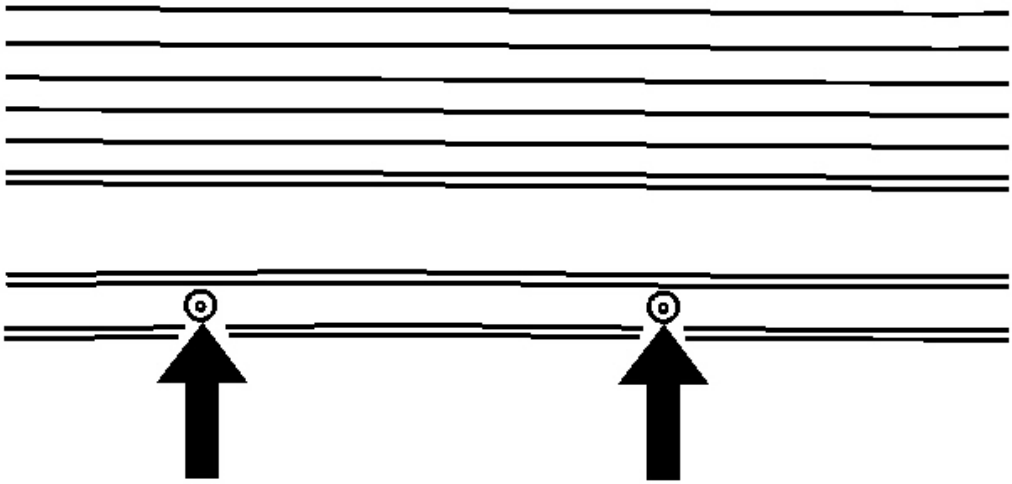

Fig. 140: Glare Cover Screws To #5 Bow
Courtesy of GENERAL MOTORS CORP.

13. Remove the glare cover screws from the #5 bow.
14. Drill out the glare cover rivets to the 5 bow.

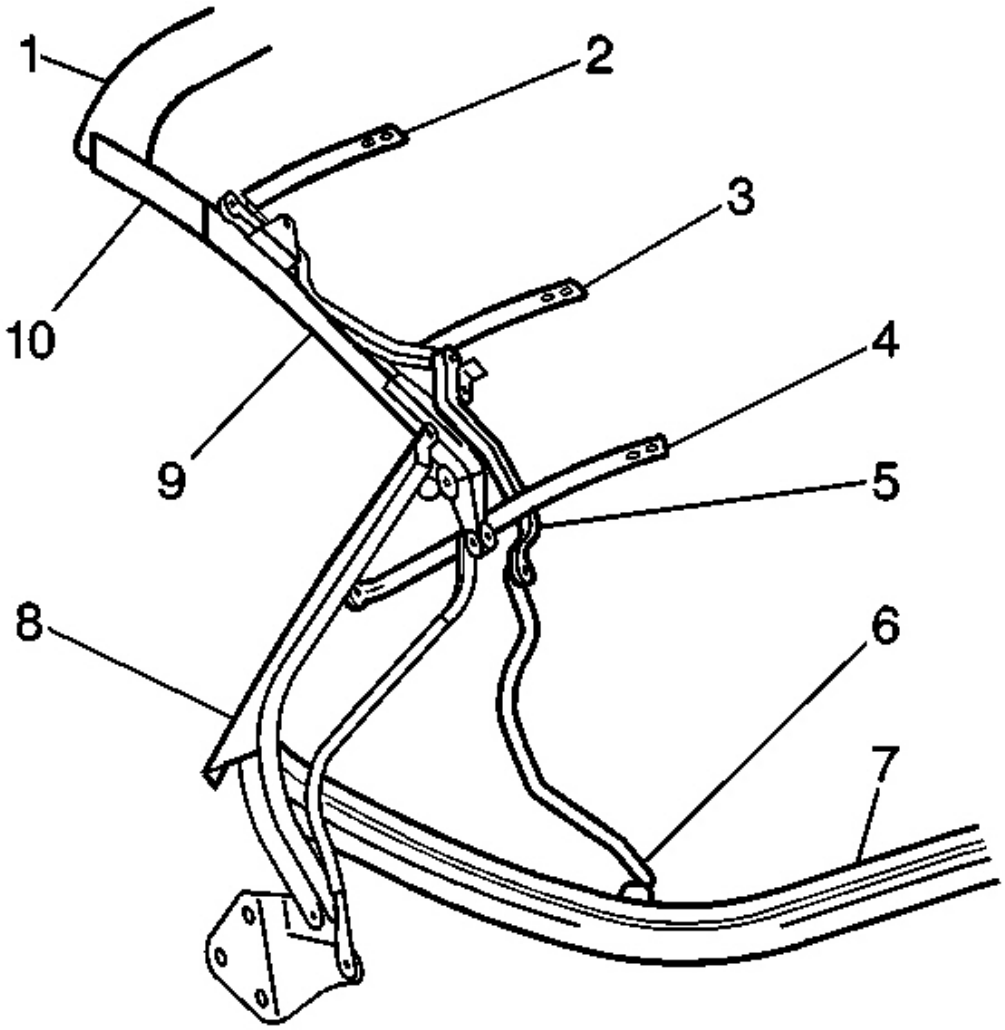

Fig. 141: #2, #3, #4 & #5 Bow To Main Control Link Bracket
Courtesy of GENERAL MOTORS CORP.

15. Remove the right and left main control link rod end screws (6) from the # 5 bow (7).
16. Remove the protector from the right and left outer ends of the #5 bow and the bottom of the rear side rails to expose the rivet.
17. Drill out the right and the left rear side rail extension brackets rivets from the 5 bow.
18. Remove the rear side rail extension bracket screws from the 5 bow.
19. Remove the 5 bow.

Installation Procedure

1. Install the # 5 bow.

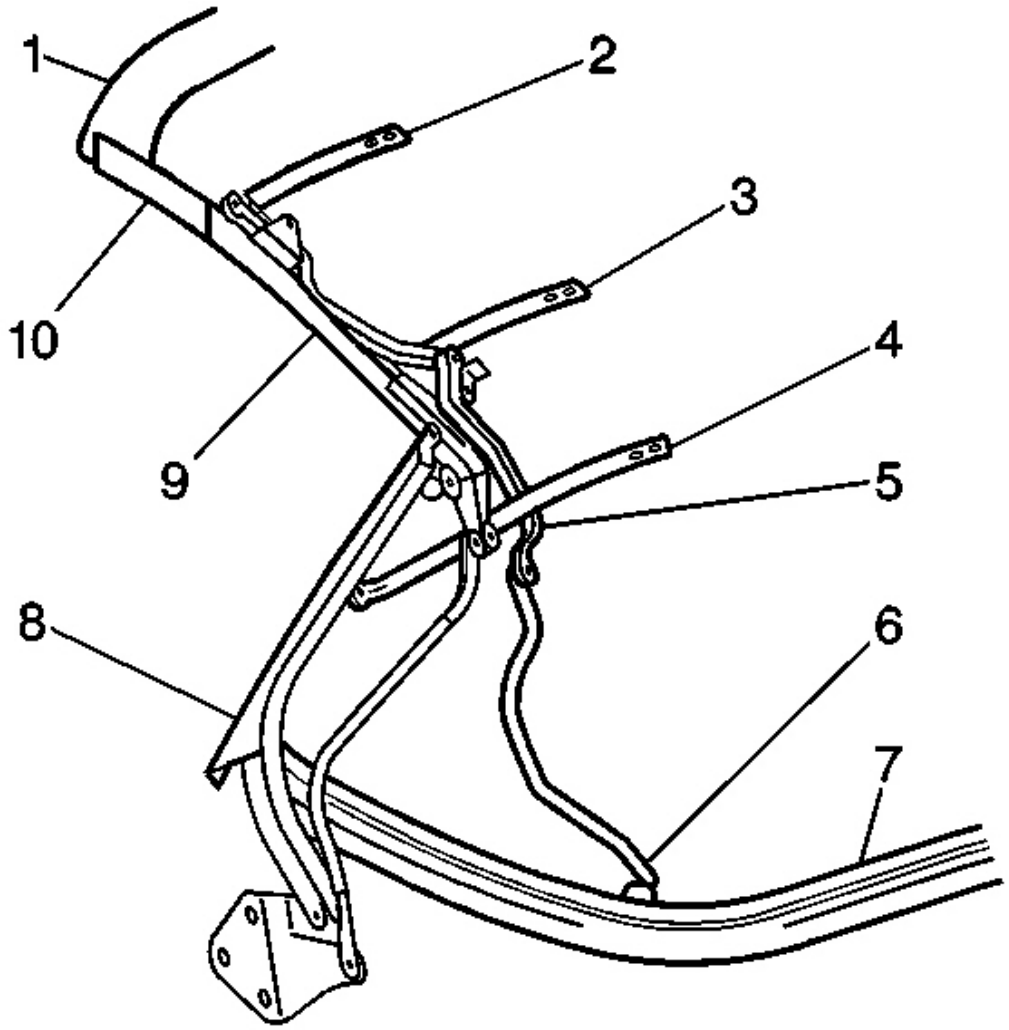

Fig. 142: #2, #3, #4 & #5 Bow To Main Control Link Bracket
Courtesy of GENERAL MOTORS CORP.

NOTE: Refer to Fastener Notice in Cautions and Notices.

2. Install the screws attaching the rear side rail (8) extension brackets to the #5 bow (7).

Tighten: Tighten the rear side rail to the # 5 bow bracket screws to 4 N.m (35 lb in).

3. Install the right and left main control link rod end screws (6) to the #5 bow (7).

   Tighten: Tighten the main control link rod end screws to #5 bow to 15 N.m (11 lb ft).

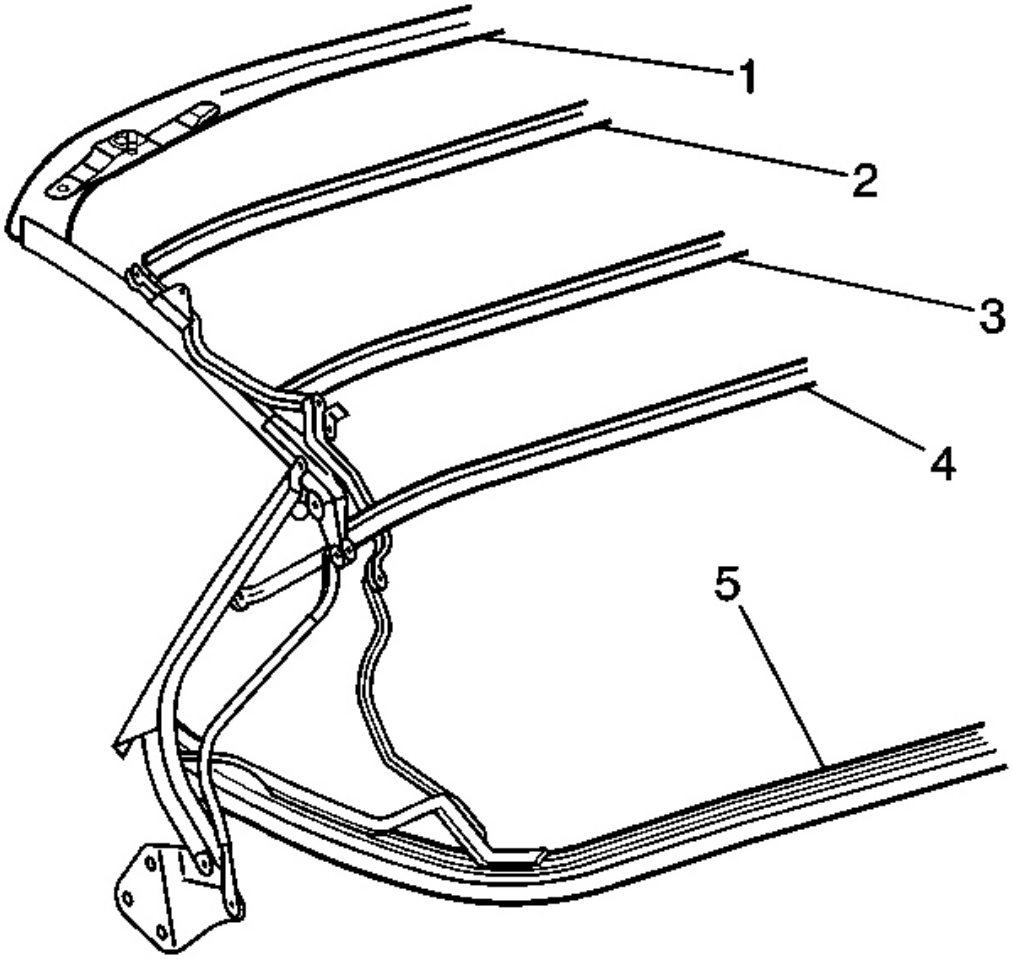

Fig. 143: Top Cover At Roof Bows
Courtesy of GENERAL MOTORS CORP.

4. Install the rear side rail bracket rivets to the 5 bow (5).
5. Make sure both sides of the rivet are flat.
6. Install the glare cover rivets to the #5 bow.

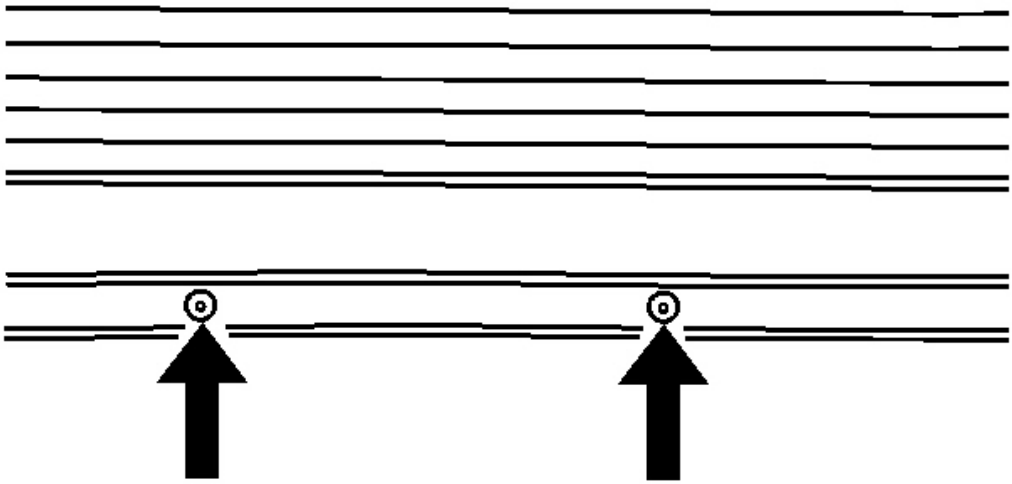

Fig. 144: Glare Cover Screws To #5 Bow
Courtesy of GENERAL MOTORS CORP.

7. Install the glare cover screws to the # 5 bow.

   Tighten: Tighten the screws to 2 N.m (18 lb in).

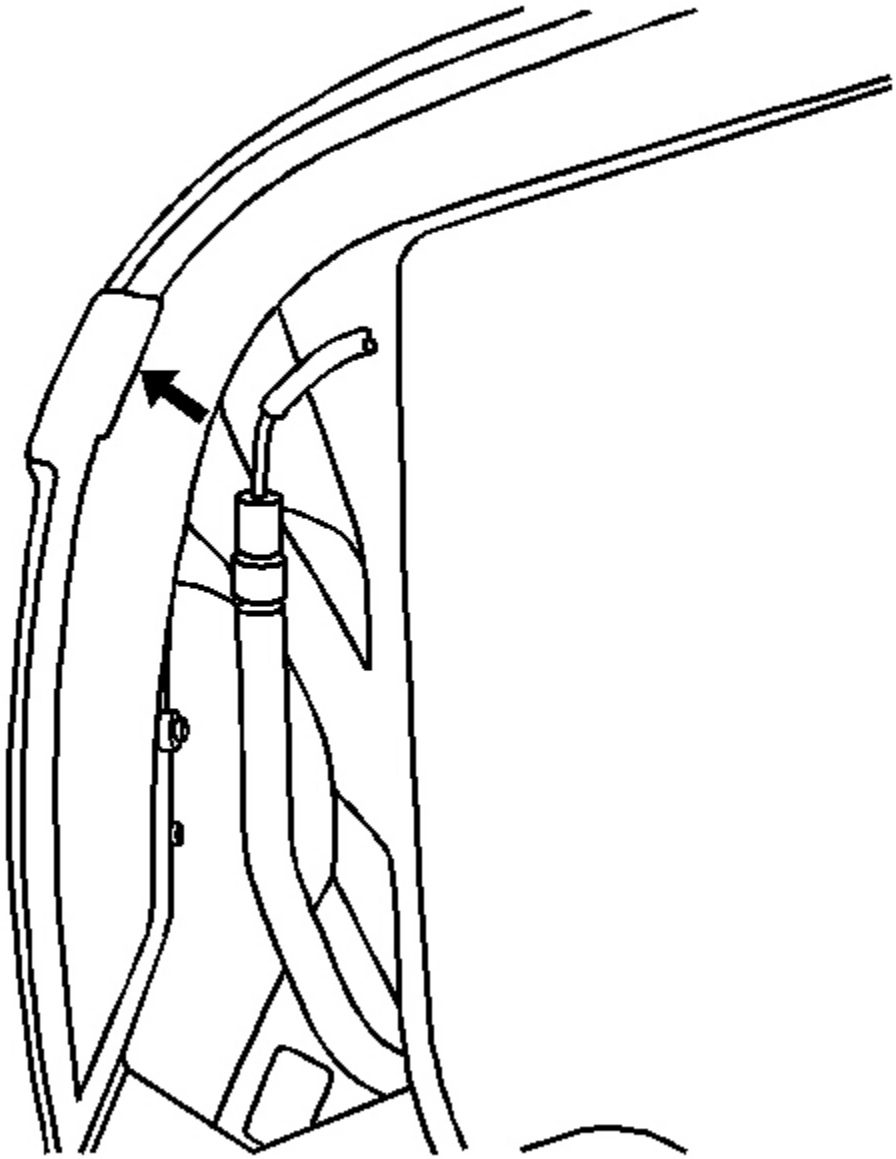

Fig. 145: Stay Pad Staples To Bow
Courtesy of GENERAL MOTORS CORP.

8. Staple the stay pad to the #5 bow.
9. Install the top cover rivets to the bottom of the rear side rail.
10. Install the #5 bow protector elastic strap rivets to the rear side rails.

Make sure both sides of the rivets are flat.

11. Fold the top flap over the rear side rail and rivet the top flap to the rail.
12. Install the rear side rail seal retainer and the seal. Refer to **Weatherstrip Retainer Replacement - Folding Top (Front and Center Side Rail)** or **Weatherstrip Retainer Replacement - Folding Top (Rear Side Rail)** .
13. Install the folding top. Refer to **Folding Top Replacement** .
14. Reposition the folding top to the original position.

FOLDING TOP STAY PAD REPLACEMENT

Removal Procedure

1. Remove the folding top cover. Refer to **Folding Top Cover Replacement** .

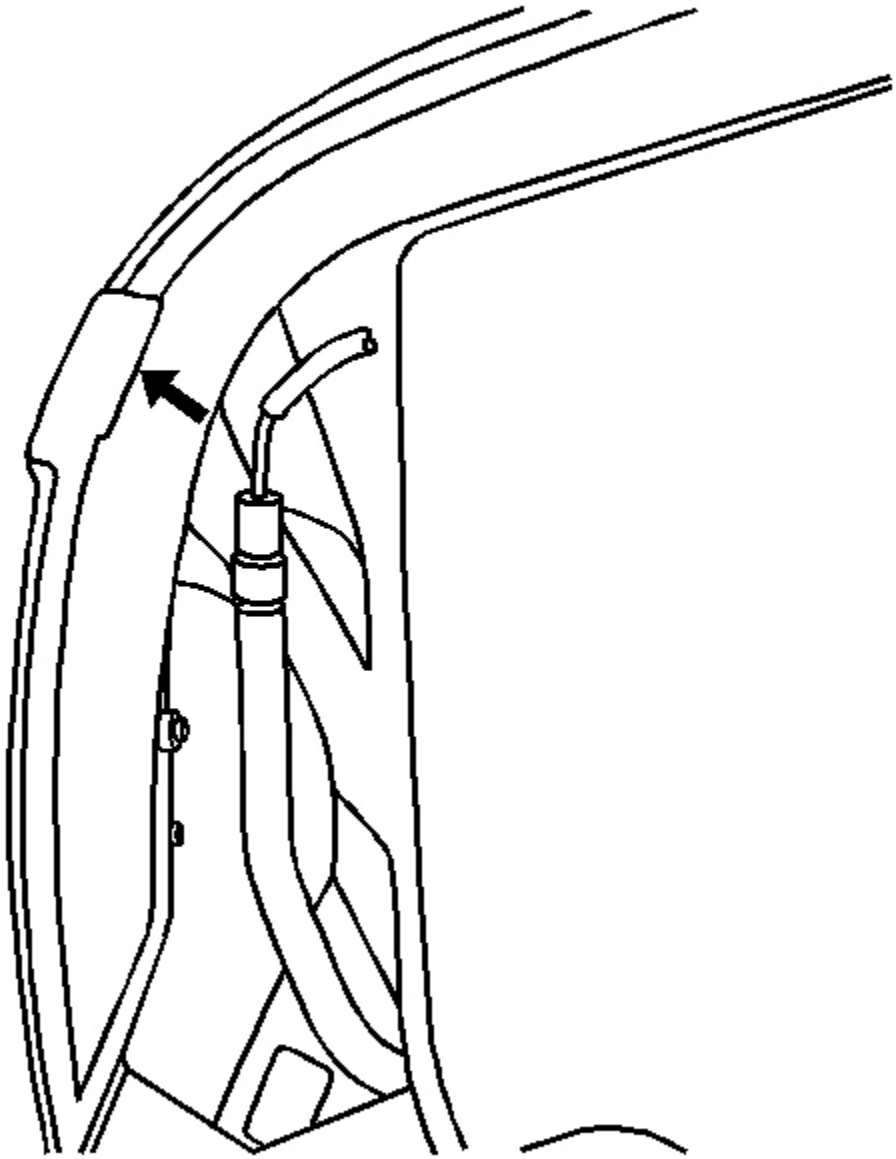

Fig. 146: Stay Pad Staples To Bow
Courtesy of GENERAL MOTORS CORP.

2. Using a pair of needle-nosed pliers, remove the stay pad staples from the #5 bow.
3. Cover the stowage compartment lid to protect the lid from damage.
4. Latch the top.

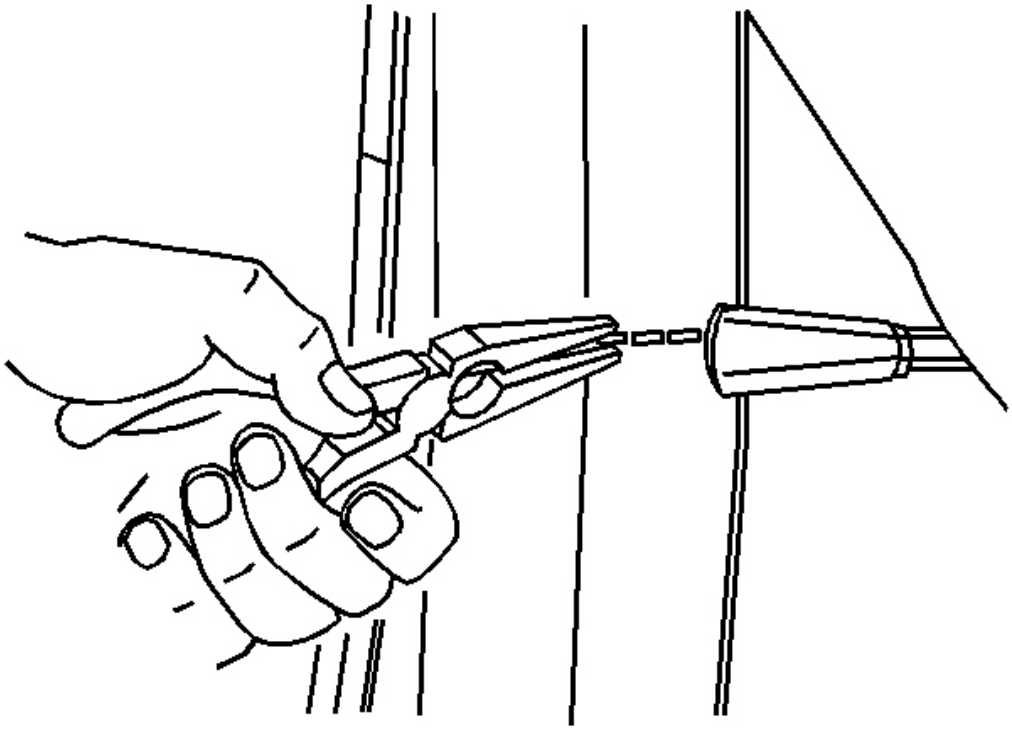

Fig. 147: Stay Pad Staples To #2, #3 & #4 Bow
Courtesy of GENERAL MOTORS CORP.

5. Using a pair of needle-nosed pliers, remove the stay pad staples to the #4, 3, and 2 bows.
6. Drill out the stay pad rivets to the #1 bow.
7. Remove the stay pad.

Installation Procedure

1. Rivet the stay pad to the #1 bow.

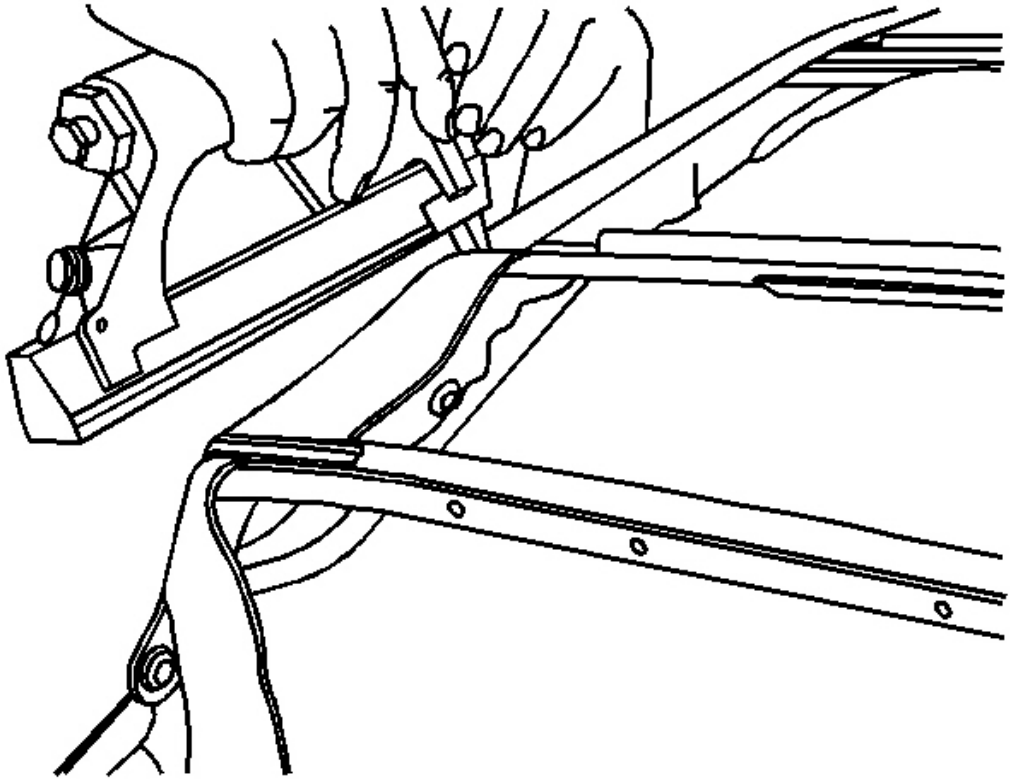

Fig. 148: Staple Stay Pad To #2, #3, & #4 Bow
Courtesy of GENERAL MOTORS CORP.

2. Staple the stay pad to the #4 bow.
3. Staple the stay pad to the #2 and 3 bows.

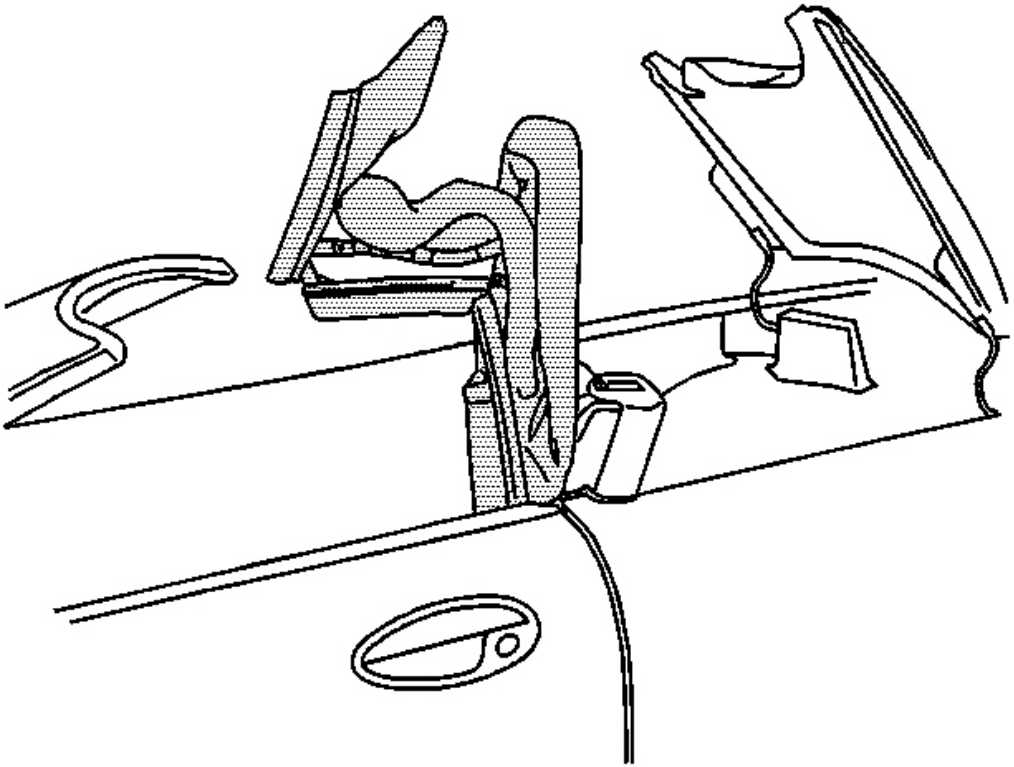

Fig. 149: Folding Top With The #1 Bow And The #5 Bow Up
Courtesy of GENERAL MOTORS CORP.

4. Position the #5 bow in the up position.

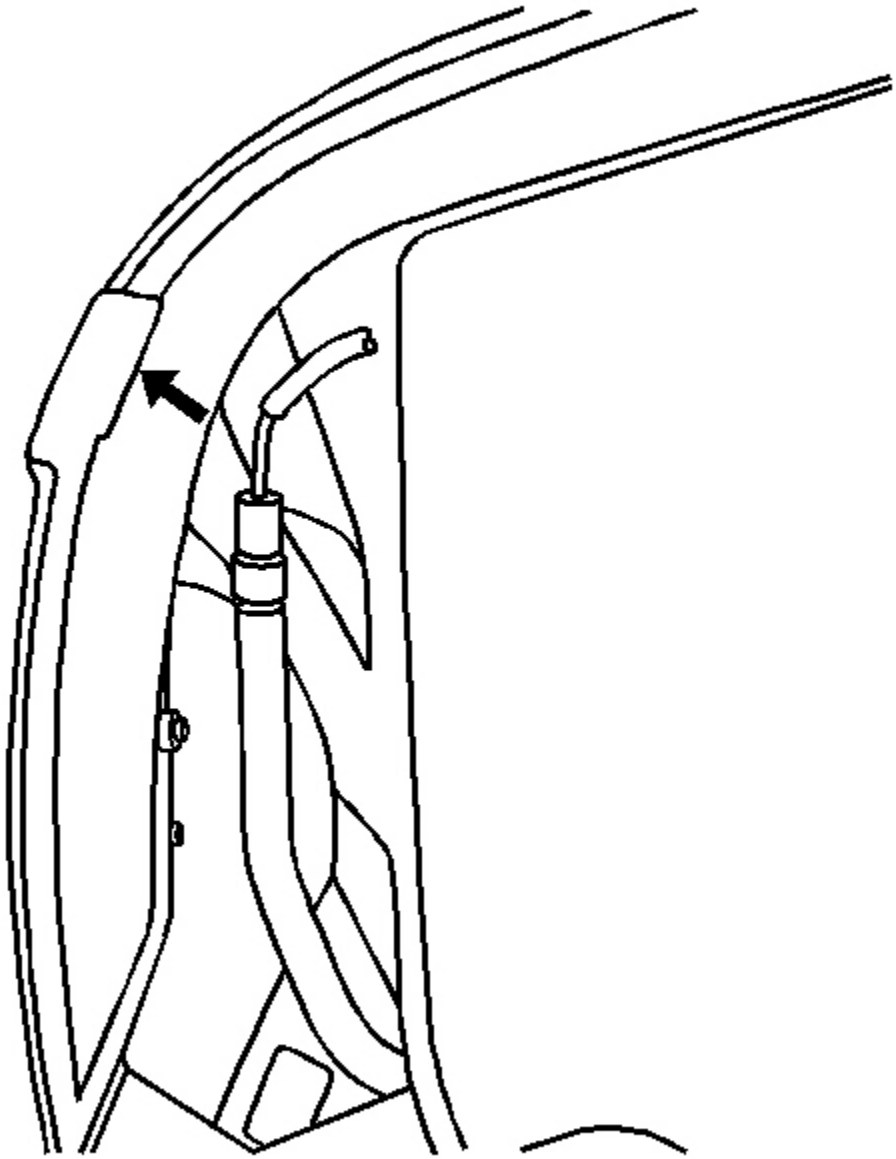

Fig. 150: Stay Pad Staples To Bow
Courtesy of GENERAL MOTORS CORP.

5. Staple the stay pad to the #5 bow.
6. Install the folding top cover. Refer to **Folding Top Cover Replacement** .
7. Remove the protective cover from the stowage compartment lid.

FOLDING TOP SEAL COMPRESSION PANEL REPLACEMENT

Removal Procedure

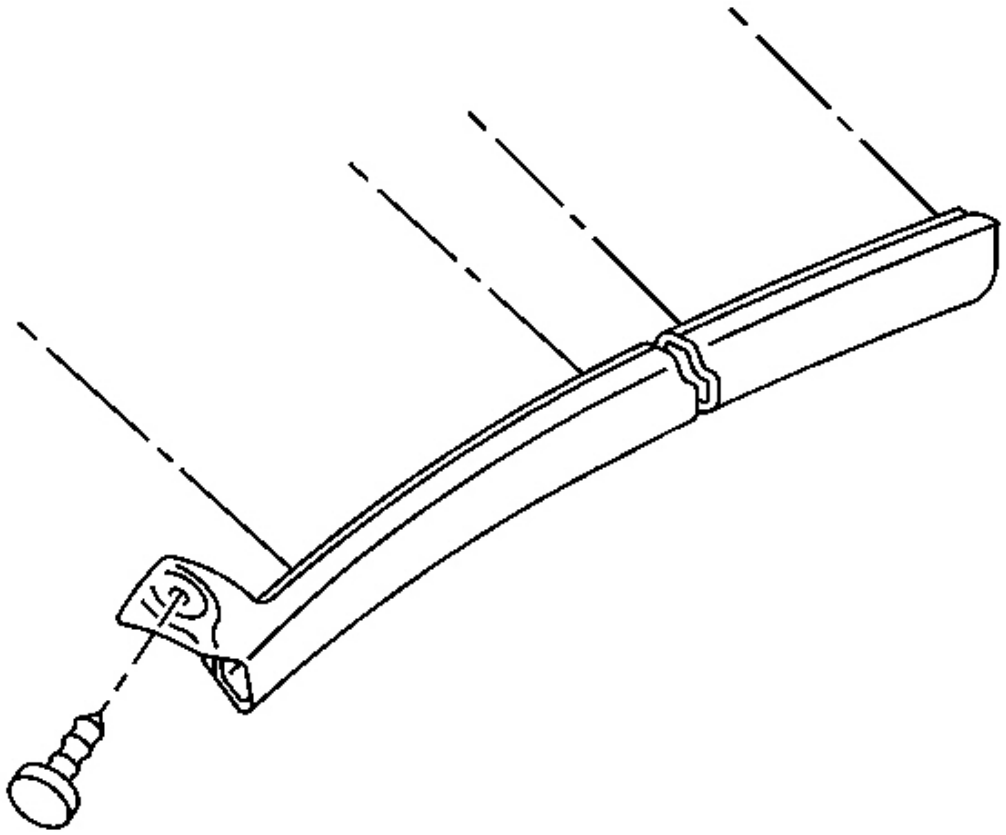

Fig. 151: Weatherstrip Screws At Right & Left Front Side Rail
Courtesy of GENERAL MOTORS CORP.

1. Remove the screws from the front side rail seal on the #1 bow.

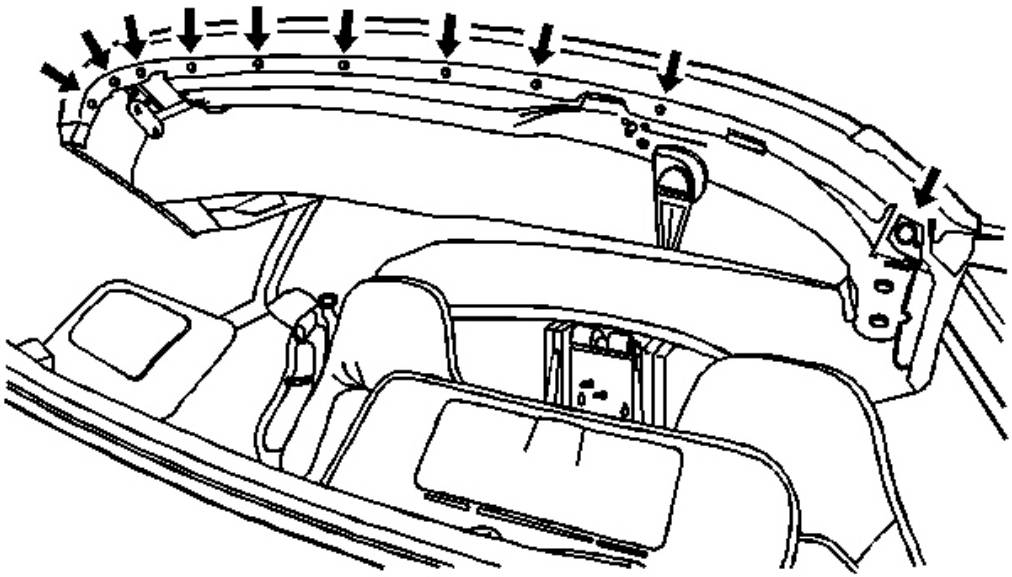

Fig. 152: Seal Compression Panel
Courtesy of GENERAL MOTORS CORP.

2. Remove the screws from the seal compression panel on the #1 bow.

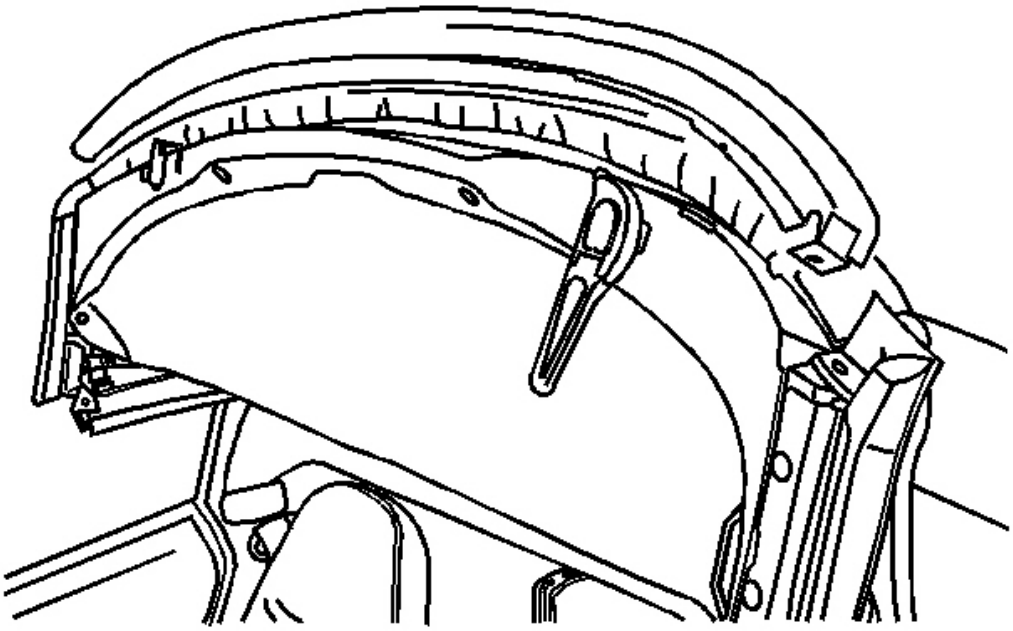

Fig. 153: Seal Compression Panel To Bow
Courtesy of GENERAL MOTORS CORP.

3. Remove the panel.

Installation Procedure

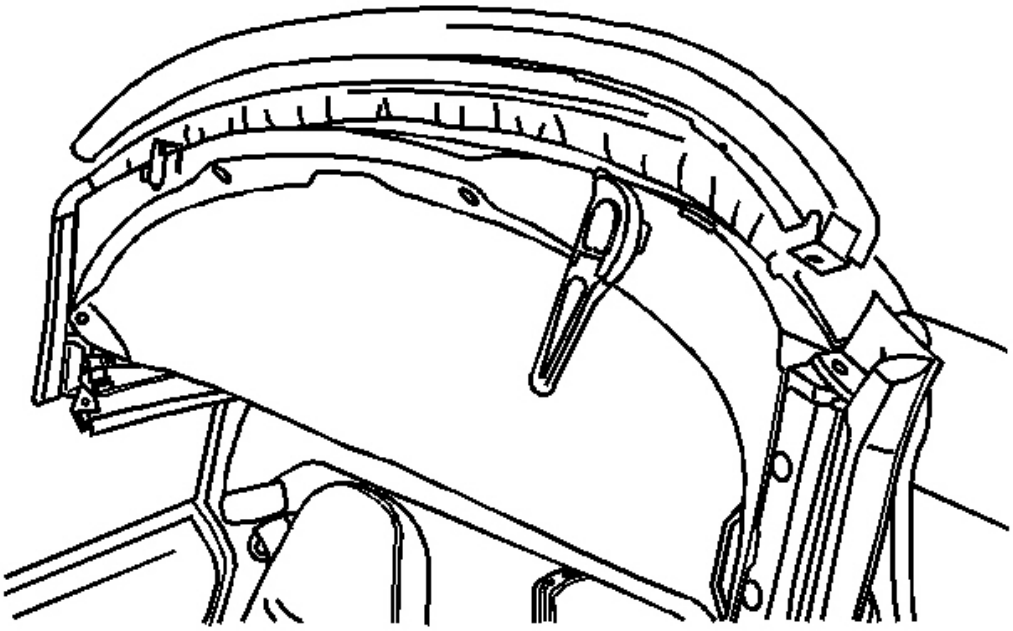

Fig. 154: Seal Compression Panel To Bow
Courtesy of GENERAL MOTORS CORP.

1. Position the seal compression panel to the #1 bow.

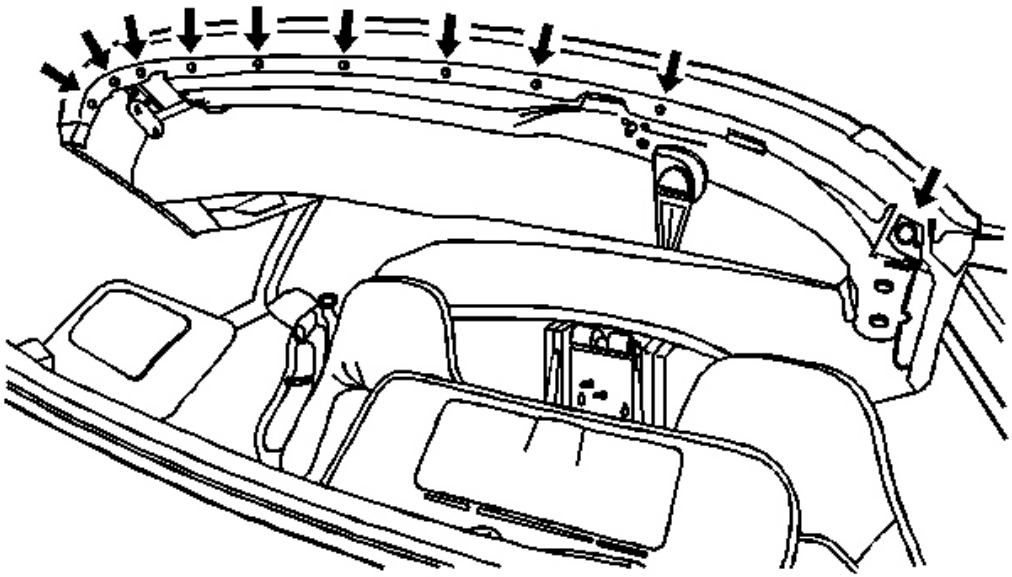

Fig. 155: Seal Compression Panel
Courtesy of GENERAL MOTORS CORP.

NOTE: Refer to Fastener Notice in Cautions and Notices.

2. Install the screws to the seal compression panel on the #1 bow.

   Tighten: Tighten the screws to 3 N.m (26 lb in).

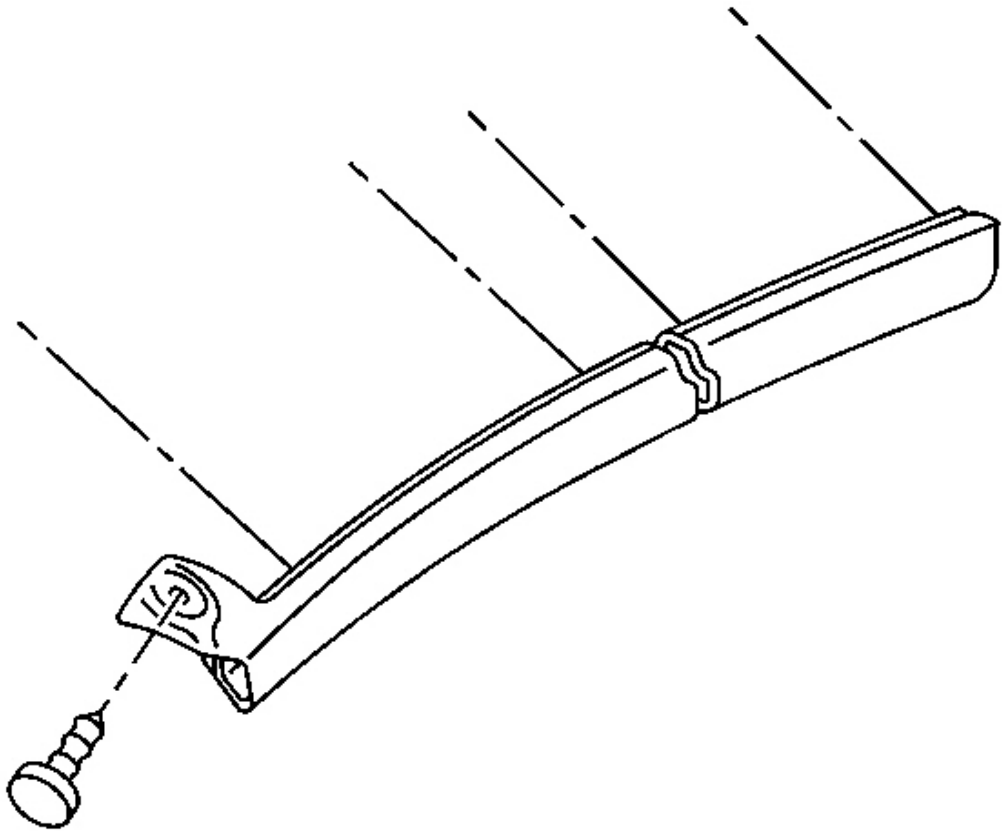

Fig. 156: Weatherstrip Screws At Right & Left Front Side Rail
Courtesy of GENERAL MOTORS CORP.

3. Install the screw to the front side rail seal on the #1 bow.

   Tighten: Tighten the screw to 2 N.m(18 lb in).

FOLDING TOP COVER SIDE TENSION CABLE REPLACEMENT

Removal Procedure

1. Remove the folding top from the vehicle. Refer to **Folding Top Replacement** .
2. Remove the weatherstrip and the retainer from the rear side rail. Refer to **Weatherstrip Retainer Replacement - Folding Top (Front and Center Side Rail)** or **Weatherstrip Retainer Replacement - Folding Top (Rear Side Rail)** .

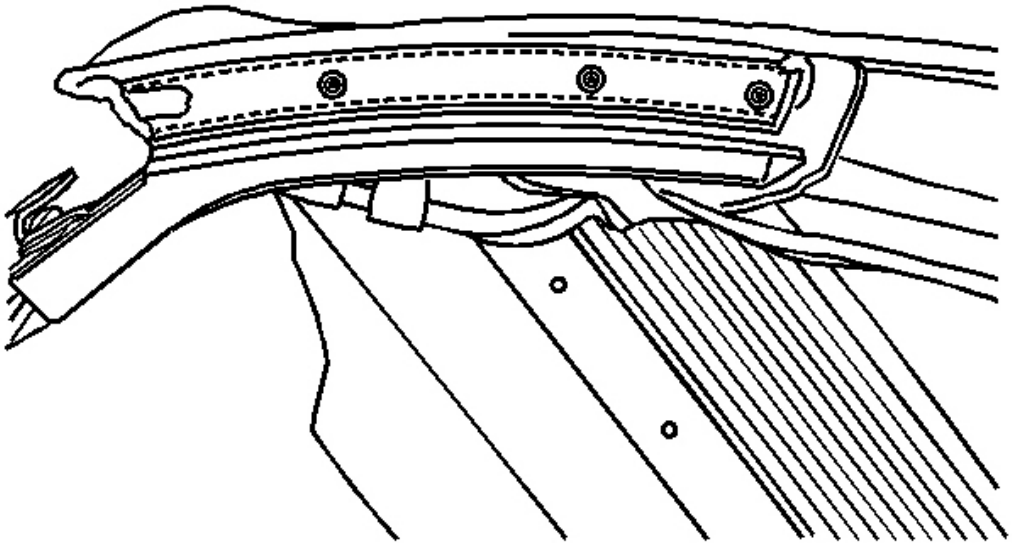

Fig. 157: Top Cover Rivet To Rear Side Rail
Courtesy of GENERAL MOTORS CORP.

3. Drill out the top cover flap rivets from the rear side rail.
4. Raise the top cover flap and drill out the tension cable rivet from the rear side rail.

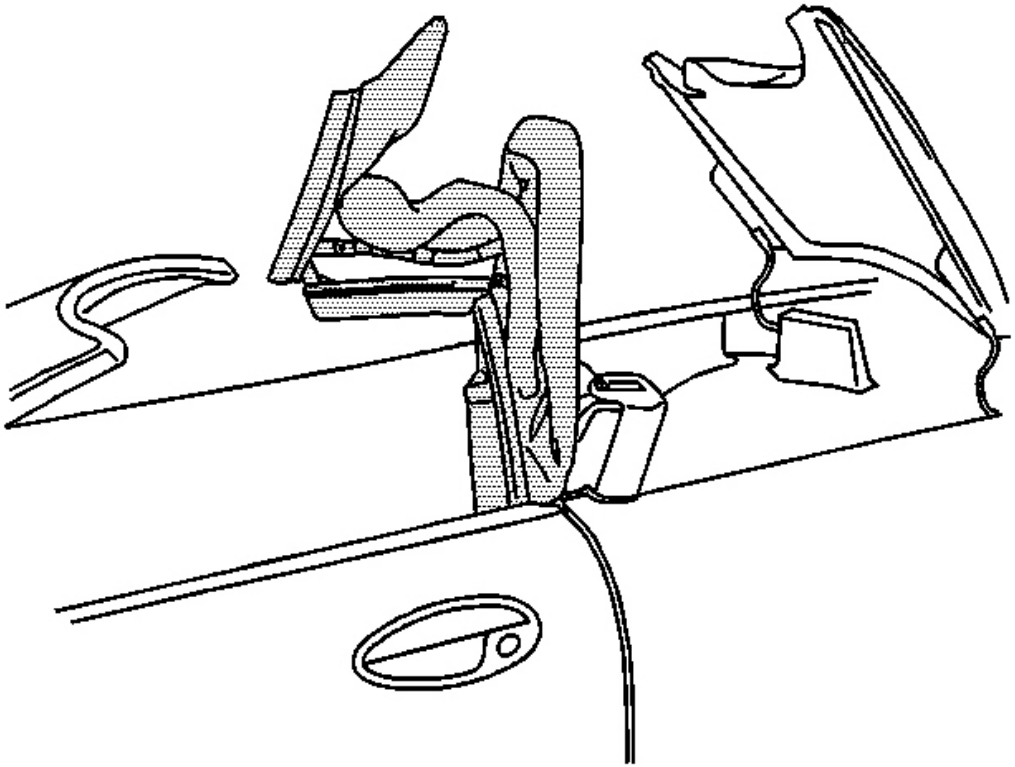

Fig. 158: Folding Top With The #1 Bow And The #5 Bow Up
Courtesy of GENERAL MOTORS CORP.

5. Position the top with the #1 bow and the #5 bow up.

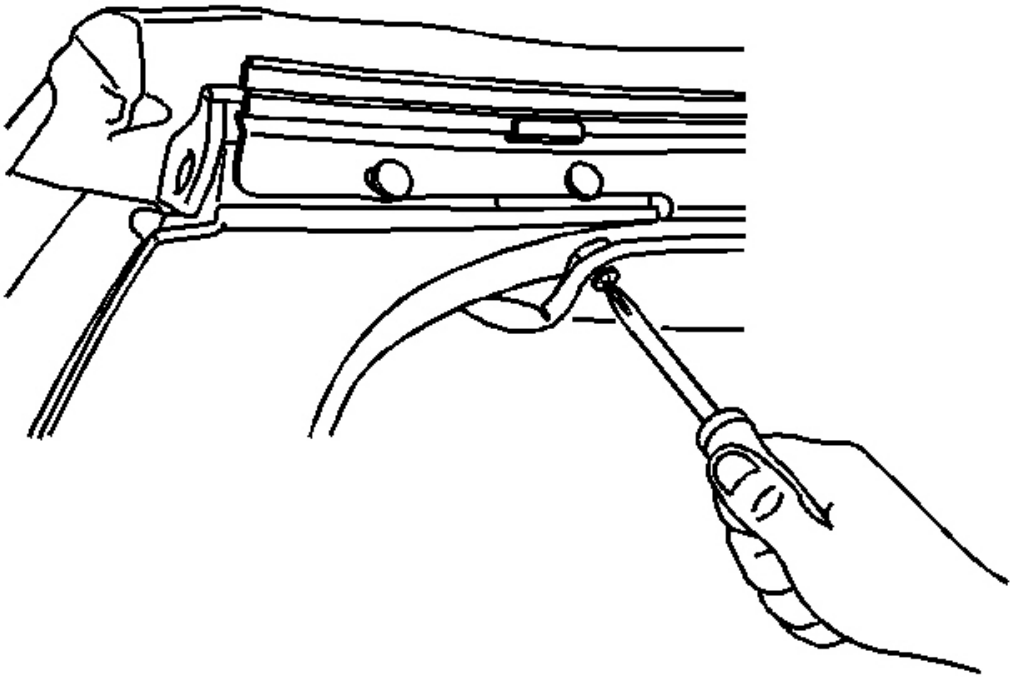

Fig. 159: Headliner Screws To #1 Bow
Courtesy of GENERAL MOTORS CORP.

6. Remove the headliner screw from the #1 bow.

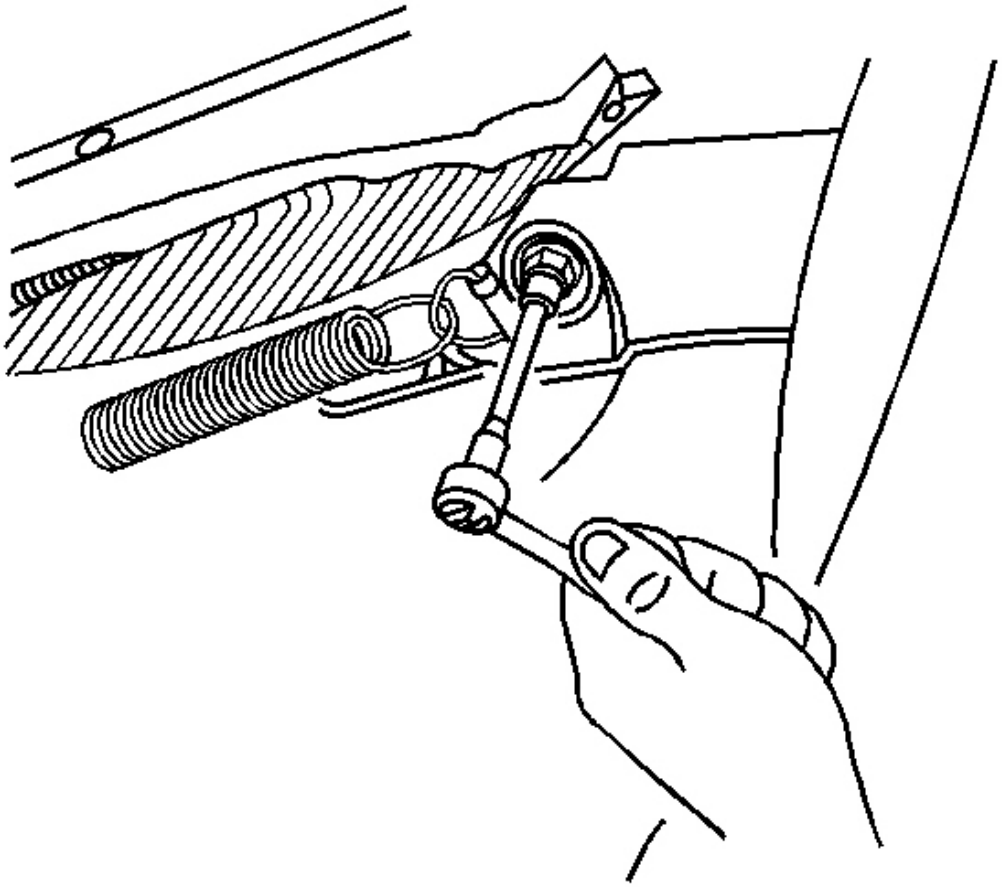

Fig. 160: Tension Cable Screw To Between Side Rail & Roof Bow
Courtesy of GENERAL MOTORS CORP.

7. Remove the screw from the tension cable spring end on the #1 bow.

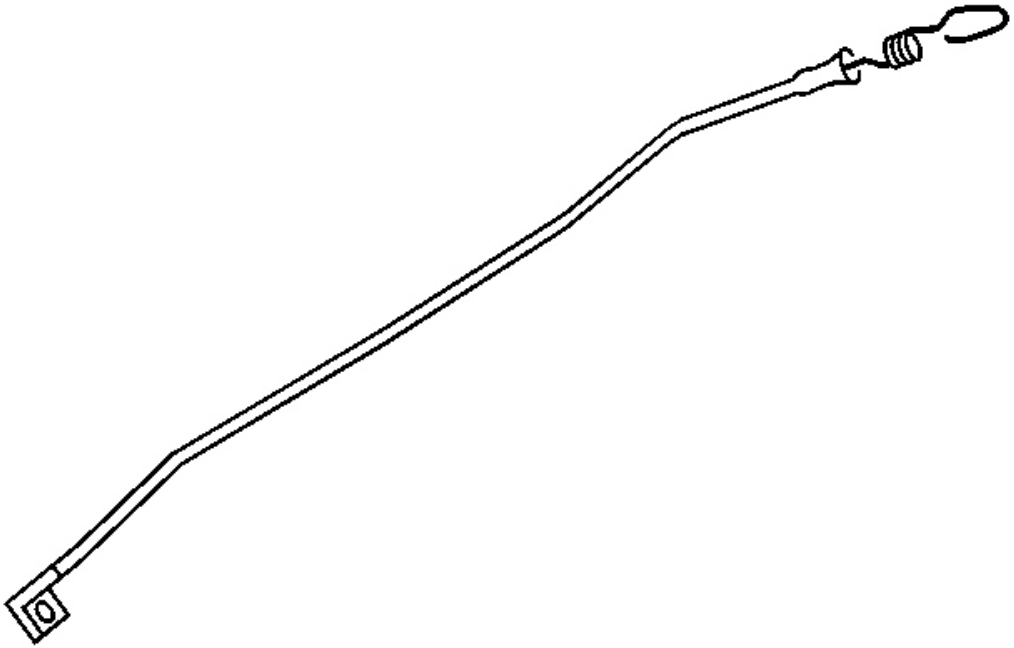

Fig. 161: Tension Cable To Wire
Courtesy of GENERAL MOTORS CORP.

8. Remove the spring from the end of the tension cable and attach approximately five feet of 16 gauge wire to aid in the installation.
9. From the rear of the top remove the tension cable, leaving the wire in the top pocket.
10. Disconnect the tension cable from the wire.

Installation Procedure

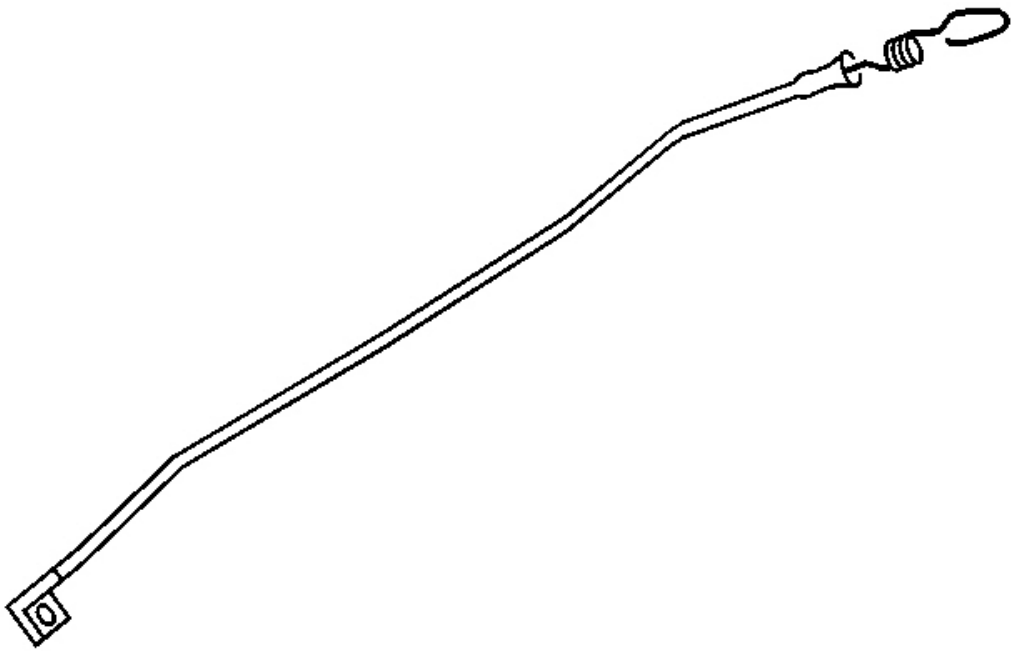

Fig. 162: Tension Cable To Wire
Courtesy of GENERAL MOTORS CORP.

1. Remove the spring, attaching the rear of the wire to the spring end of the cable.
2. Pull the wire forward until the cable is in the proper position. Remove the wire and reinstall the spring.

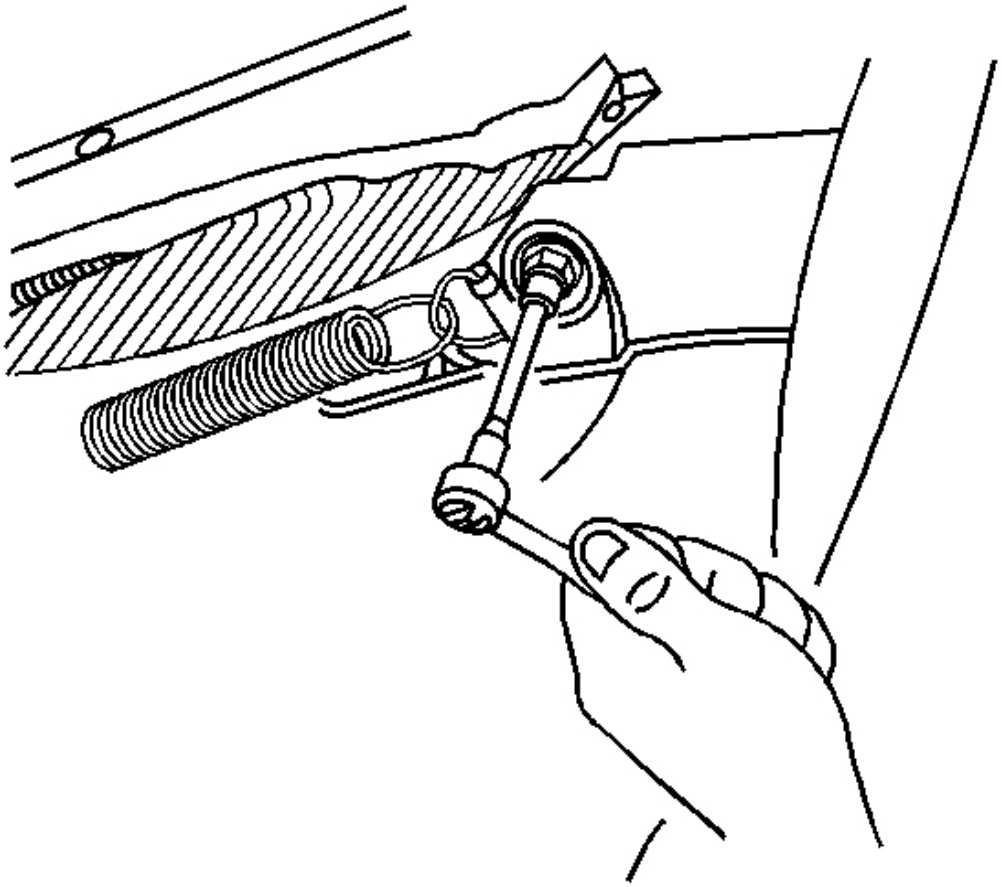

Fig. 163: Tension Cable Screw To Between Side Rail & Roof Bow
Courtesy of GENERAL MOTORS CORP.

NOTE: Refer to Fastener Notice in Cautions and Notices.

3. Install the screw to the tension cable spring end on the #1 bow.

   Tighten: Tighten the screw to 2 N.m (18 lb in).

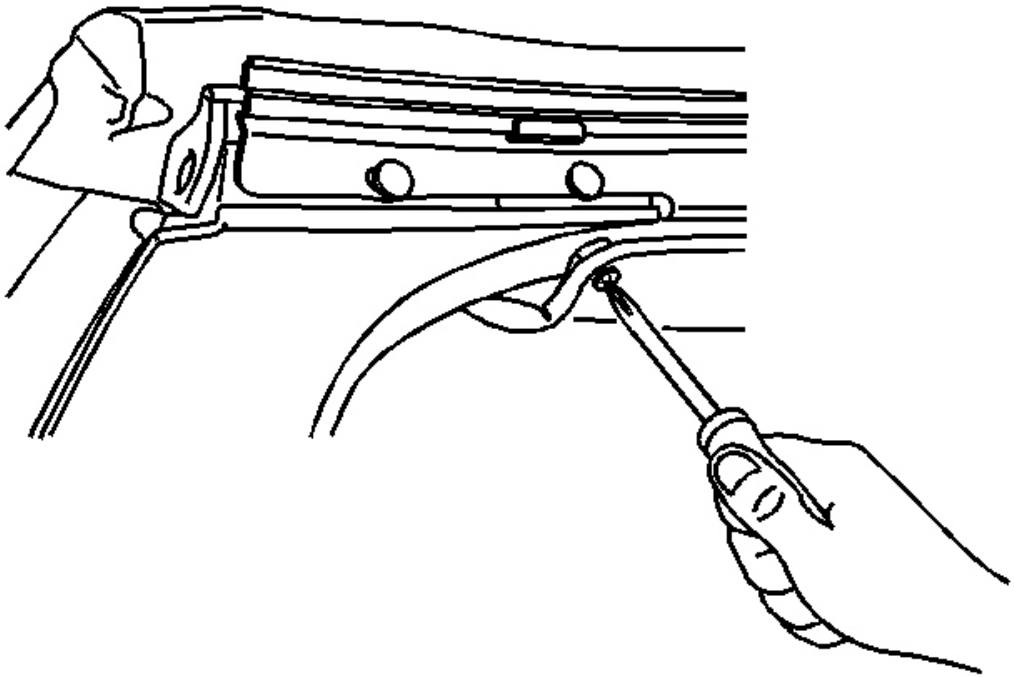

Fig. 164: Headliner Screws To #1 Bow
Courtesy of GENERAL MOTORS CORP.

4. Install the headliner screw to the #1 bow

   Tighten: Tighten the screw to 2 N.m (18 lb in).

5. Rivet the flag end of the tension cable to the back side of the rear side rail.
   1. Position the flag roll forward.
   2. Use a C rivet or a stainless steel pop rivet.
   3. With a ball peen hammer, tap the rivet head flush with the retainer.

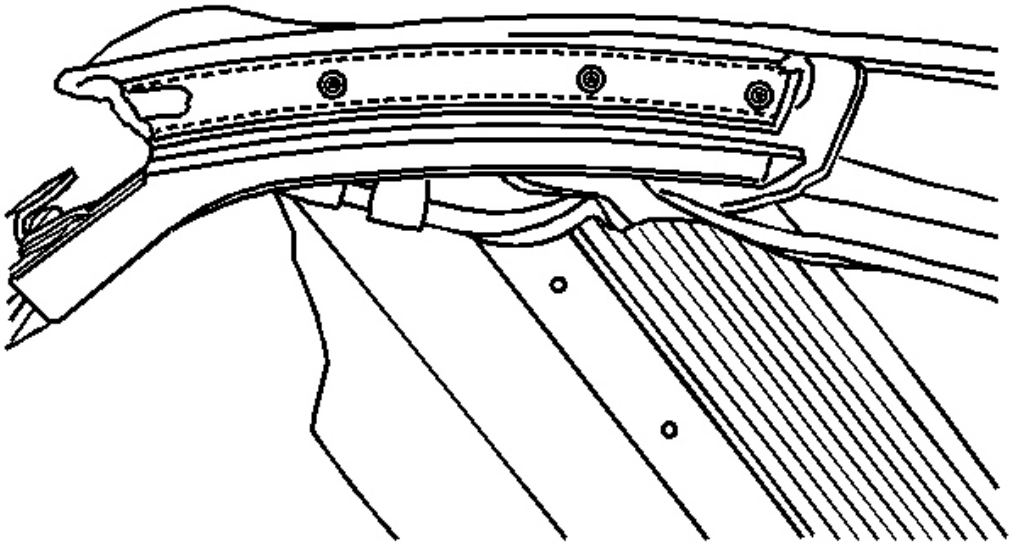

Fig. 165: Top Cover Rivet To Rear Side Rail
Courtesy of GENERAL MOTORS CORP.

6. Fold the top cover flap over the rear side rail and rivet place.
7. Install the rear side weatherstrip retainer and the weatherstrip to the rear side rail. Refer to **Weatherstrip Retainer Replacement - Folding Top (Front and Center Side Rail)** or **Weatherstrip Retainer Replacement - Folding Top (Rear Side Rail)** .
8. Install the folding top to the vehicle. Refer to **Folding Top Replacement** .

FOLDING TOP CLOCK SPRING REPLACEMENT

Removal Procedure

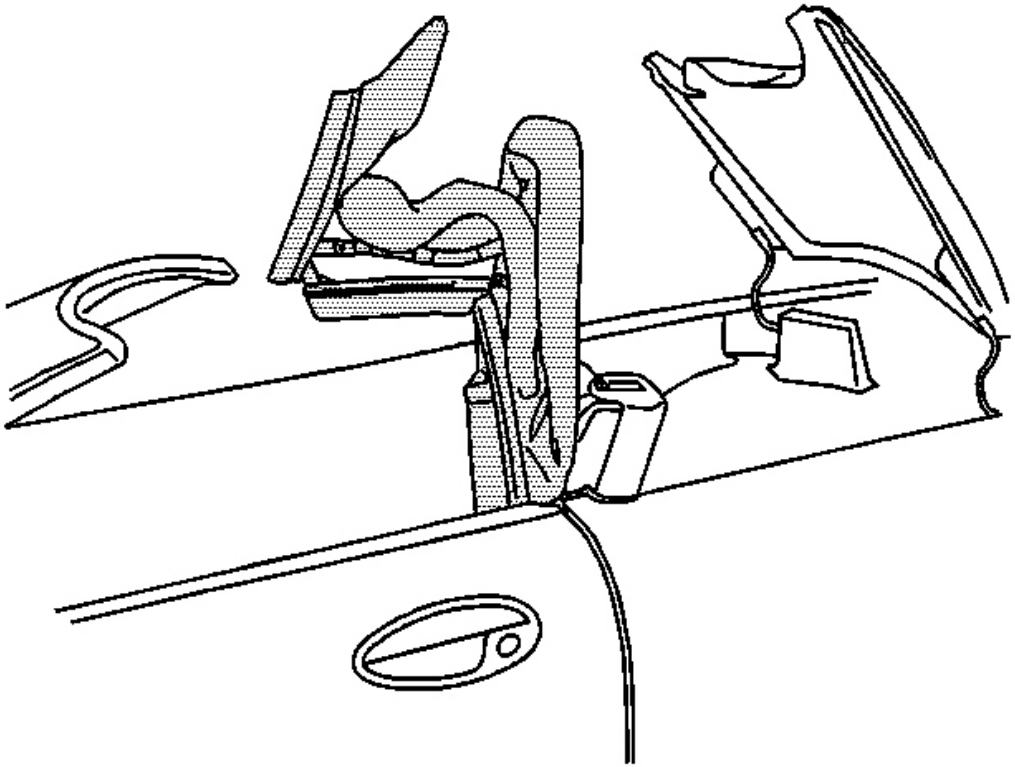

Fig. 166: Folding Top With The #1 Bow And The #5 Bow Up
Courtesy of GENERAL MOTORS CORP.

1. Position the top with the #1 bow and the #5 bow up, and open the stowage compartment.

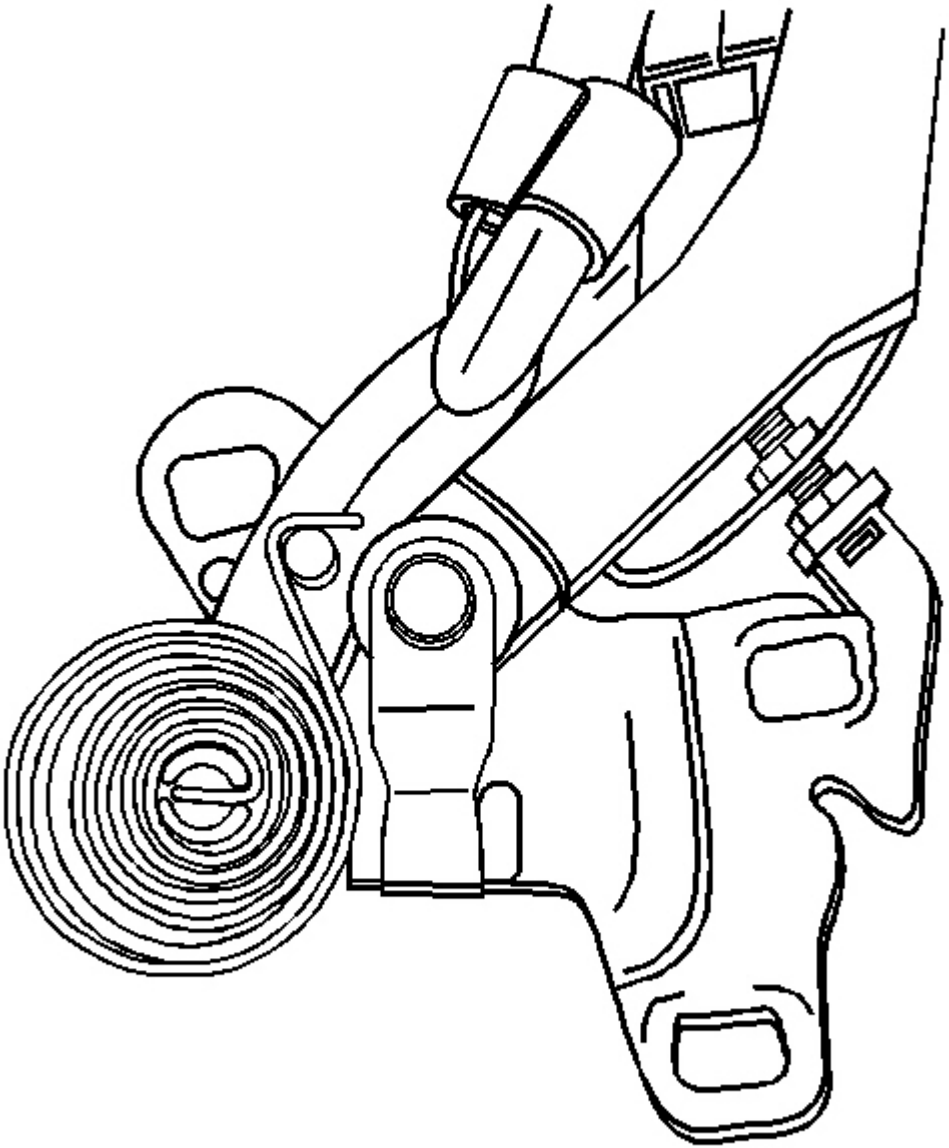

Fig. 167: Clock Spring At Spring End To Roof Link Pin
Courtesy of GENERAL MOTORS CORP.

2. Grasp the clock spring with vice grips or pliers, and remove the spring end from the roof link pin.
3. Remove the nut.
4. Remove the clock spring and the pin.

Installation Procedure

1. Install the flat washer, the bushing, and the gripper washer to the clock spring pin.

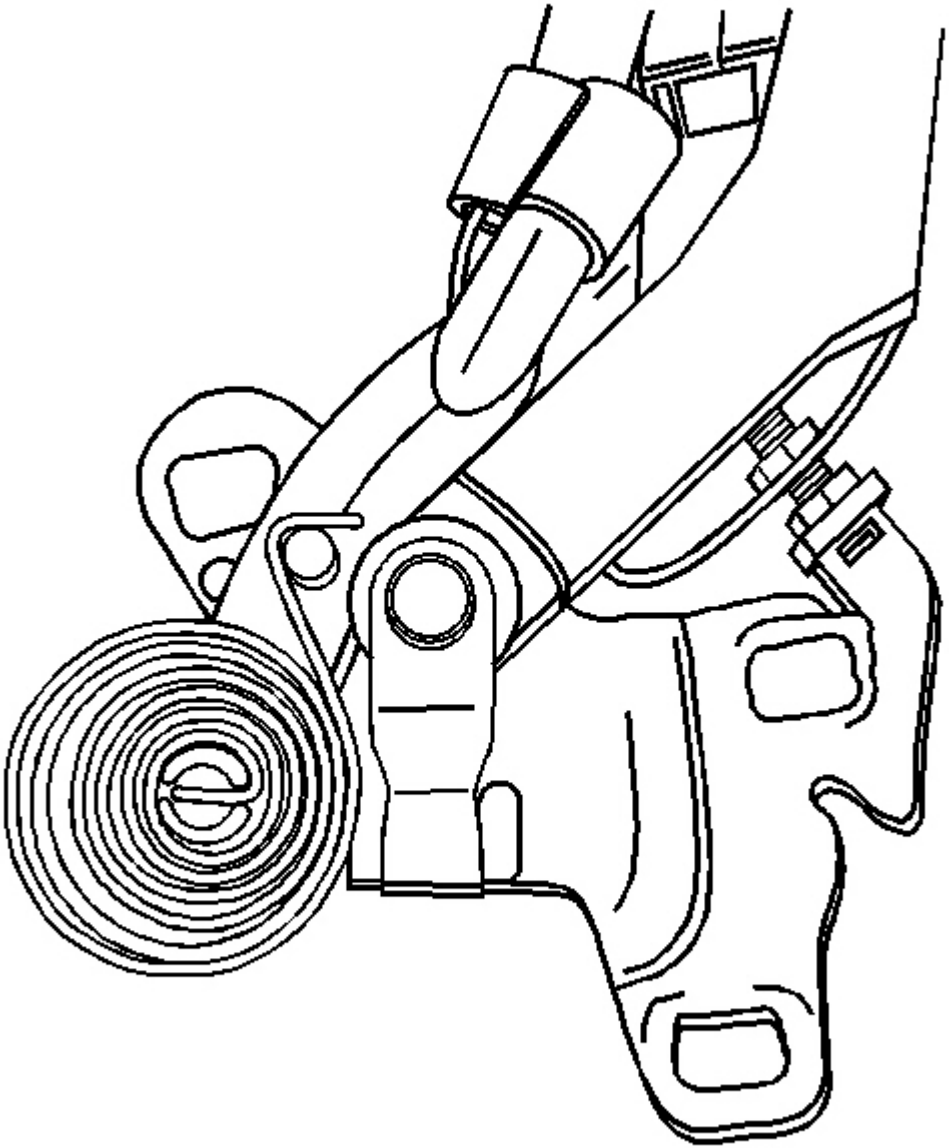

Fig. 168: Clock Spring At Spring End To Roof Link Pin
Courtesy of GENERAL MOTORS CORP.

2. Install the clock spring with pin to the arm.

NOTE: Refer to Fastener Notice in Cautions and Notices.

3. Install the clock spring nut.

   Tighten: Tighten the nut to 4 N.m (35 lb in).

4. Grasp the end of the clock spring with vice grips or pliers.
5. Wind the clock spring and insert the end of the spring into the roof link pin.
6. Reposition the folding top to the original position.

FOLDING TOP GLARE COVER REPLACEMENT

Removal Procedure

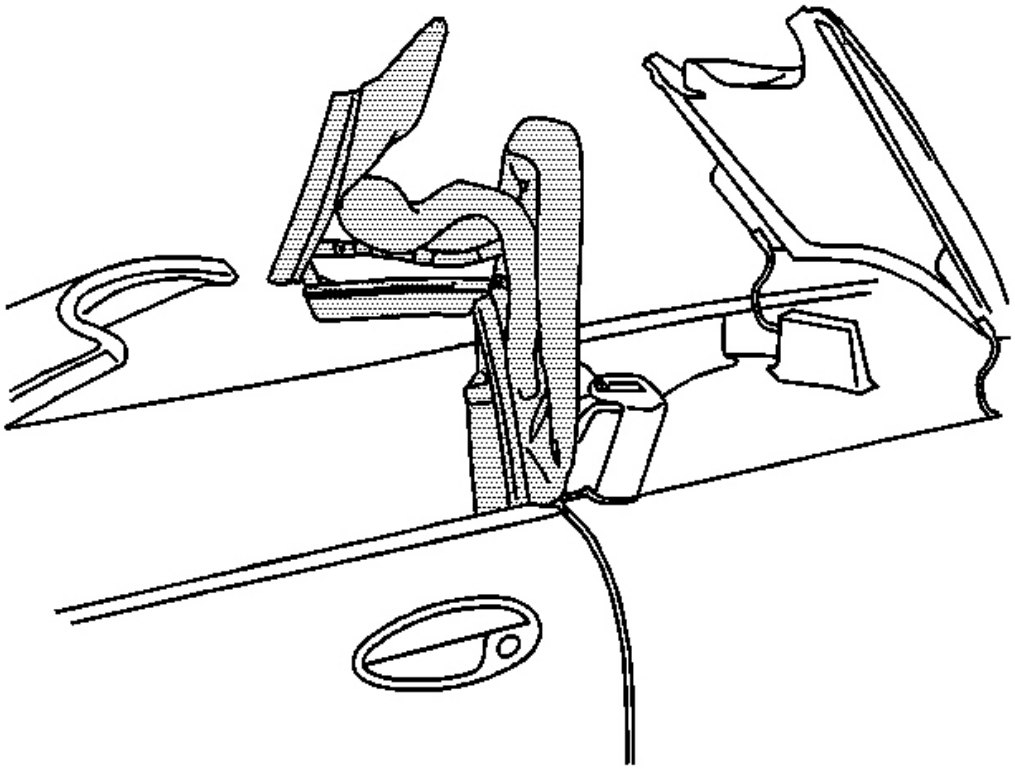

Fig. 169: Folding Top With The #1 Bow And The #5 Bow Up

Courtesy of GENERAL MOTORS CORP.

1. Position the folding top with the #1 bow and the #5 bow up, and open the stowage compartment.

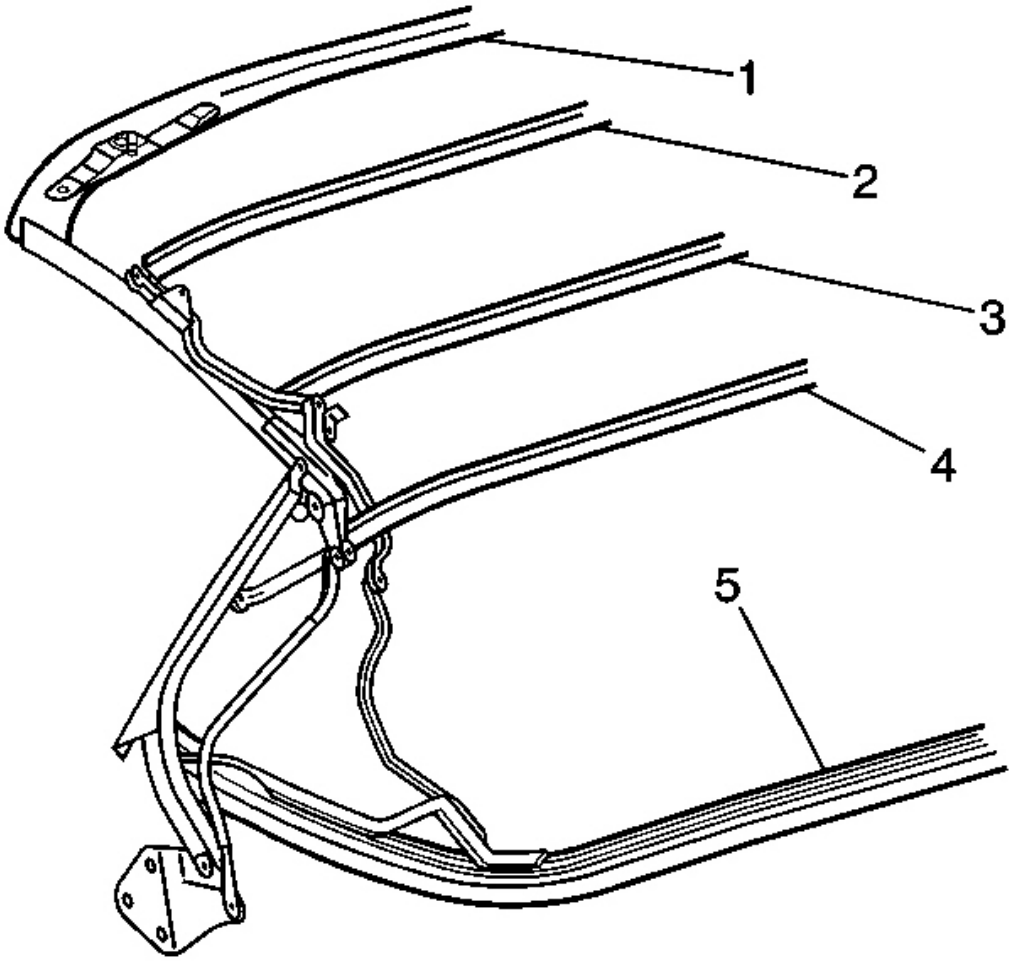

Fig. 170: Top Cover At Roof Bows
Courtesy of GENERAL MOTORS CORP.

2. Remove the glare cover screws at each end of the #5 bow (5).
3. Remove the elastic strap screws from the #5 bow.

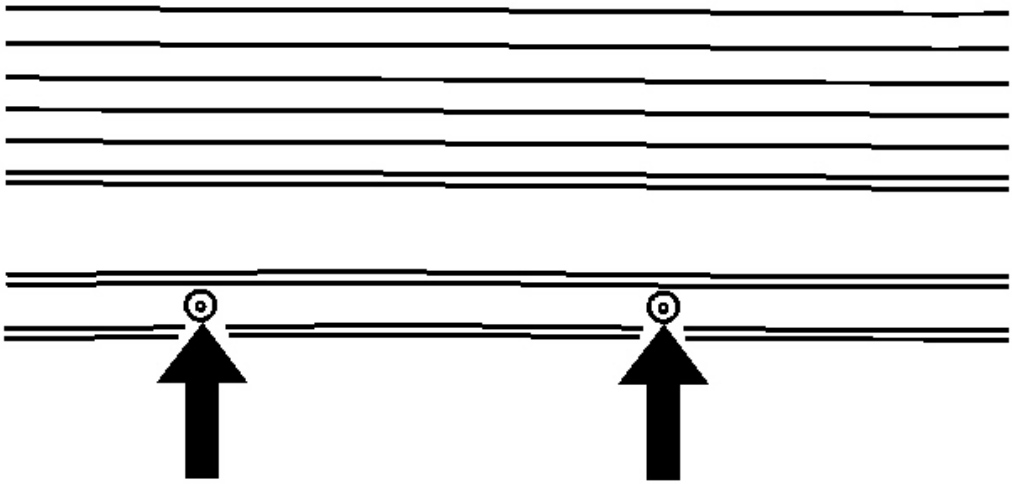

Fig. 171: Glare Cover Screws To #5 Bow
Courtesy of GENERAL MOTORS CORP.

4. Drill out the glare cover rivets from the #5 bow.

Installation Procedure

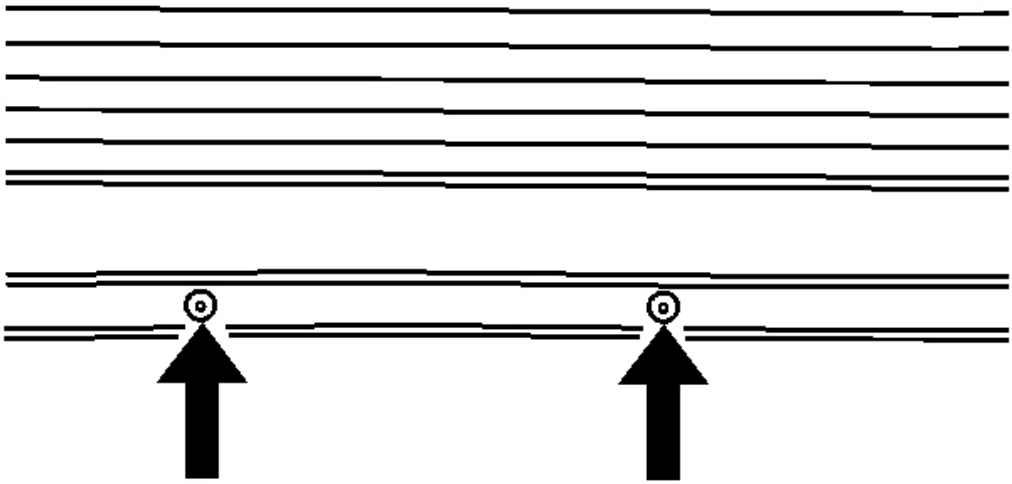

Fig. 172: Glare Cover Screws To #5 Bow
Courtesy of GENERAL MOTORS CORP.

1. Rivet the glare cover to the #5 bow.

   NOTE: Refer to Fastener Notice in Cautions and Notices.

2. Install the glare cover screws to the #5 bow.

   Tighten: Tighten the screws to 2 N.m (18 lb in).

3. Install the screws attaching the elastic straps to the #5 bow.

   Tighten: Tighten the screws to 2 N.m (18 lb in).

4. Close the stowage lid and latch the top.

FOLDING TOP FRONT AND CENTER RAIL REPLACEMENT

Removal Procedure

1. Remove the folding top and place the top upside down on a clean flat surface. Refer to **Folding Top Replacement** .
2. Remove the headliner screws from the rear side rail.
3. Remove the folding top front and center side rail retainers. Refer to **Weatherstrip Retainer**

Replacement - Folding Top (Front and Center Side Rail) or **Weatherstrip Retainer Replacement - Folding Top (Rear Side Rail)** .

4. Remove the seal compression panel from the #1 bow. Refer to **Folding Top Seal Compression Panel Replacement** .

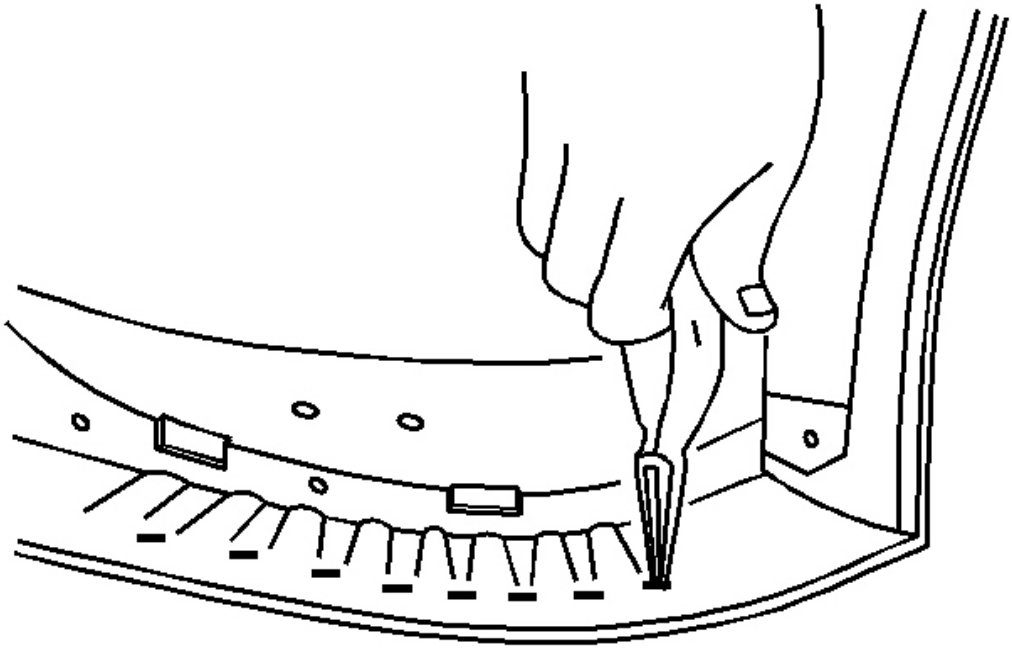

Fig. 173: Top Cover Staples To Bow
Courtesy of GENERAL MOTORS CORP.

5. Using a pair of needle-nosed pliers, remove the top cover staples from the #1 bow.
6. Peel back the top cover to expose the fabric flap on the tension cable bracket.

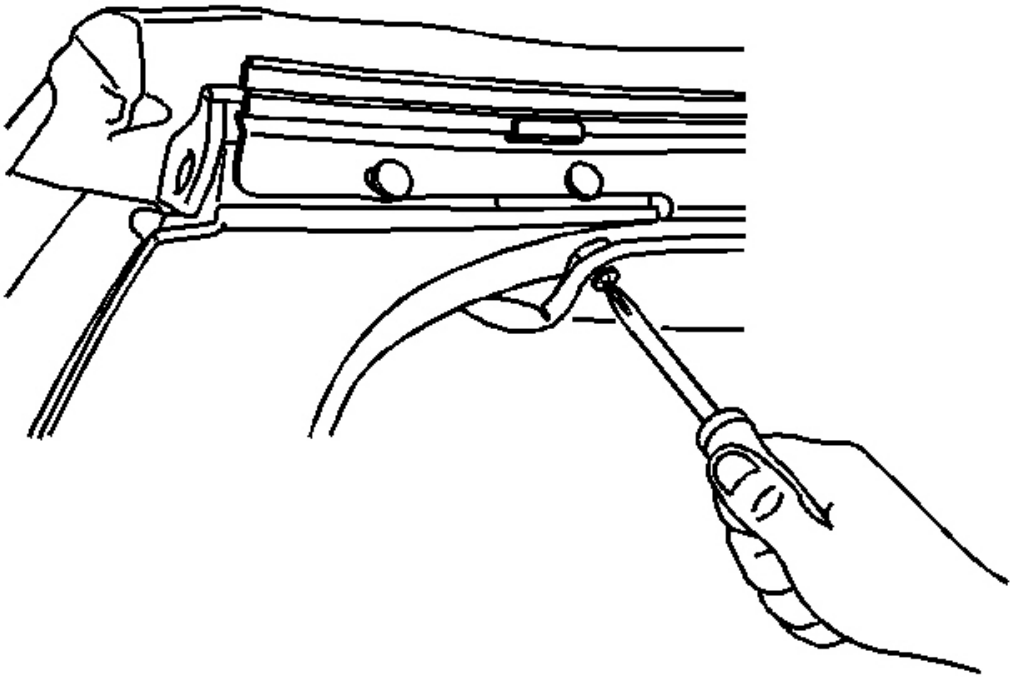

Fig. 174: Headliner Screws To #1 Bow
Courtesy of GENERAL MOTORS CORP.

7. Remove the headliner screws from the #1 bow.

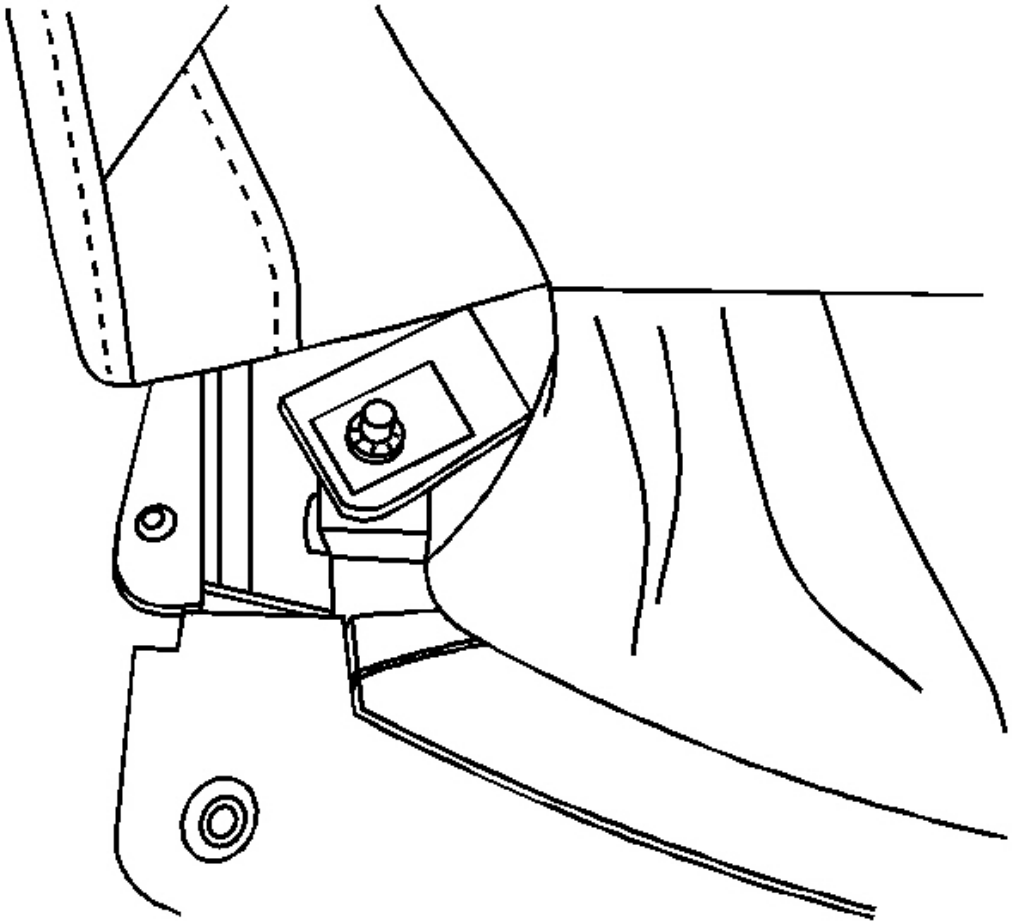

Fig. 175: Headliner Push-On Retainers To #1 Bow
Courtesy of GENERAL MOTORS CORP.

8. Remove the headliner push-on retainer from the #1 bow.

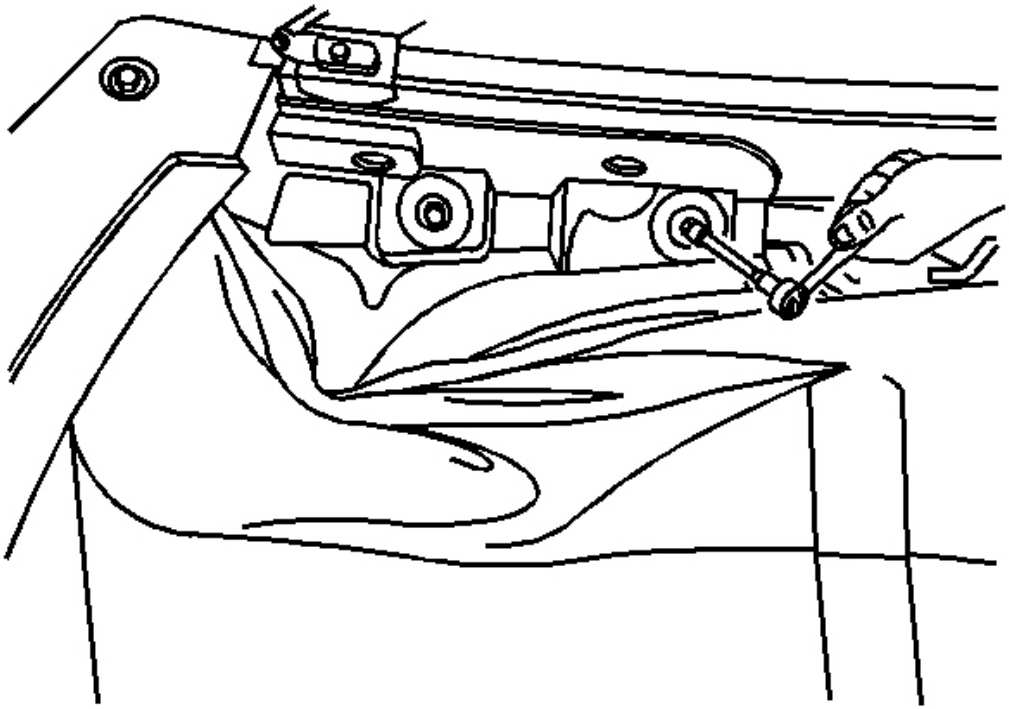

Fig. 176: #1 Bow Nuts To Front Side Rails
Courtesy of GENERAL MOTORS CORP.

9. Remove the nuts attaching the #1 bow to the front side rail.

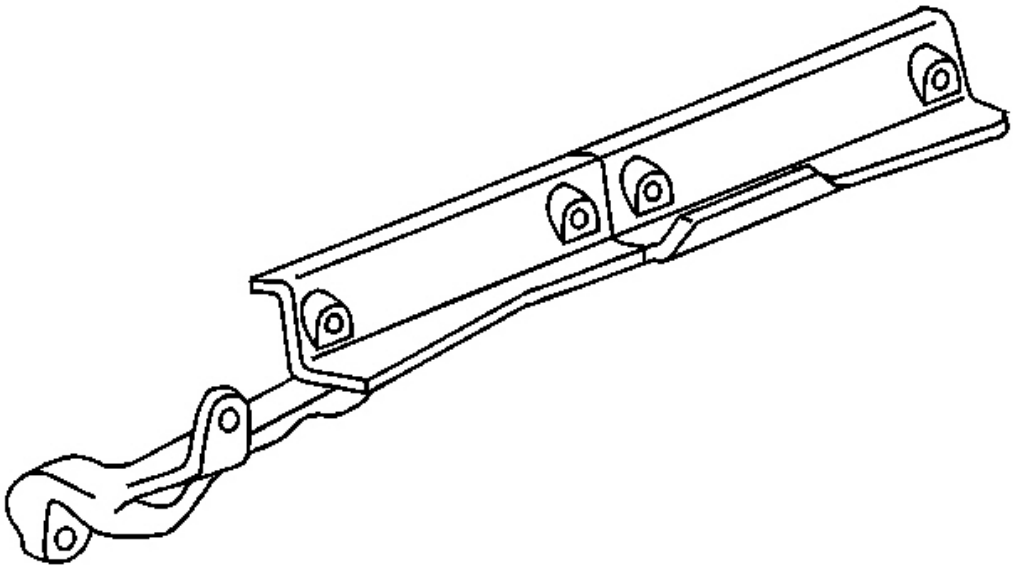

Fig. 177: Main Control Link Screw To Front Side Rail
Courtesy of GENERAL MOTORS CORP.

10. Remove the main control link screw from the front side rail.
11. Remove the main control link screw from the center side rail.
12. Remove the center rail screw from the rear side rail.
13. Remove the center rail screw from the balance link.
14. Remove the front and center rail assembly.

Installation Procedure

1. Install the front and center rail assembly.

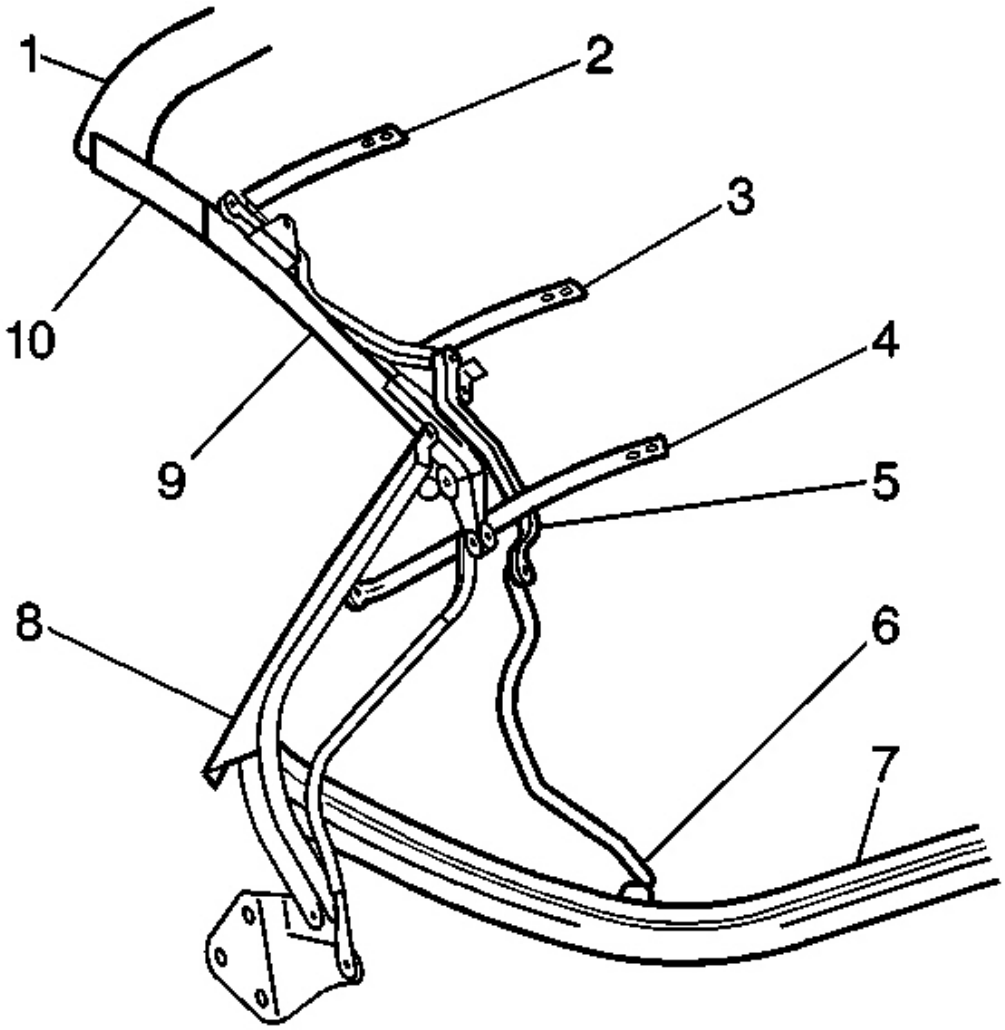

Fig. 178: #2, #3, #4 & #5 Bow To Main Control Link Bracket
Courtesy of GENERAL MOTORS CORP.

NOTE: Refer to Fastener Notice in Cautions and Notices.

2. Install the spacers and the screw attaching the center rail (9) to the rear side rail (8).

   Tighten: Tighten the screw to 19 N.m (14 lb ft).

3. Install the spacers and the screw attaching the center rail (9) to the balance link.

Tighten: Tighten the screw to 23 N.m (17 lb ft).

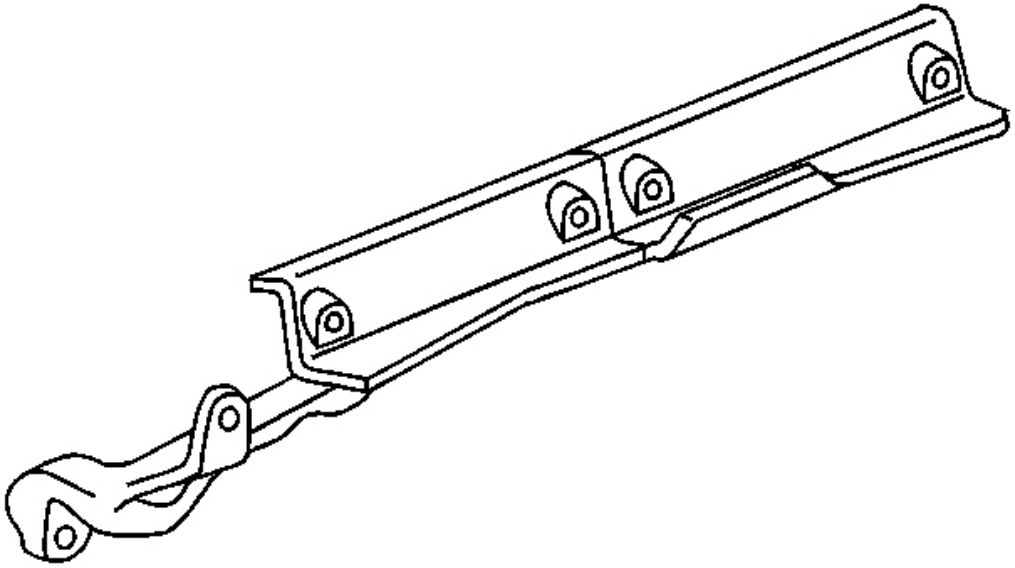

Fig. 179: Main Control Link Screw To Front Side Rail
Courtesy of GENERAL MOTORS CORP.

4. Install the spacers and the screw attaching the main control link to the front side rail.

   Tighten: Tighten the screw to 20 N.m (15 lb ft).

5. Install the spacers and the screw attaching the main control link to the center side rail.

   Tighten: Tighten the screw to 20 N.m (15 lb ft).

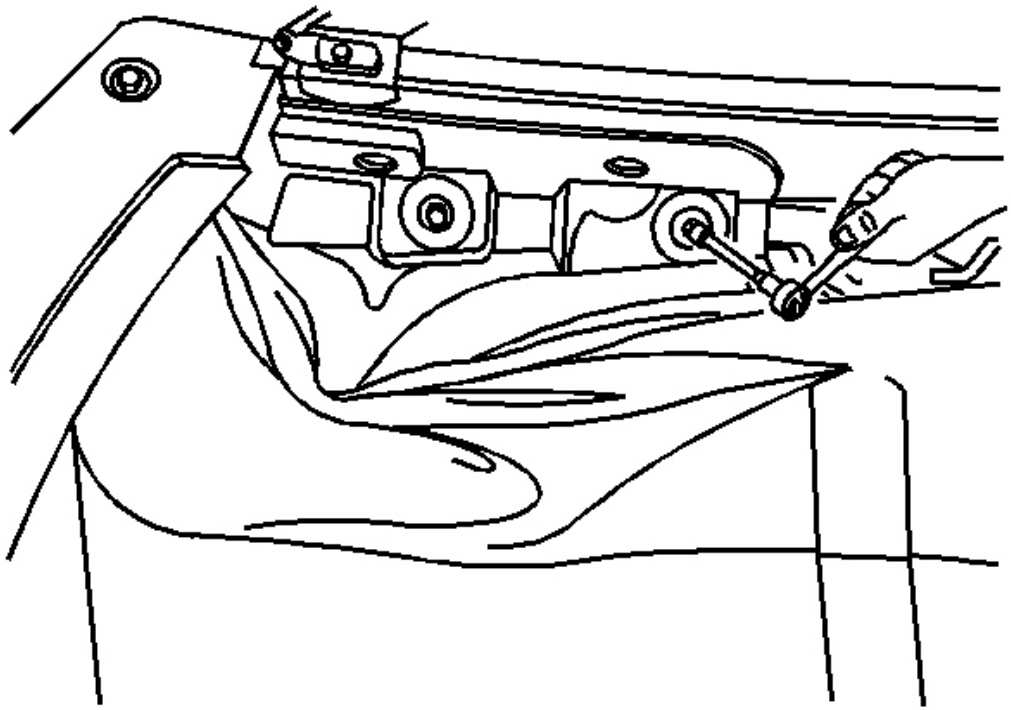

Fig. 180: #1 Bow Nuts To Front Side Rails
Courtesy of GENERAL MOTORS CORP.

6. Install the nuts attaching the #1 bow (1) to the front side rail.

   Tighten: Tighten the nuts to 14 N.m (10 lb ft).

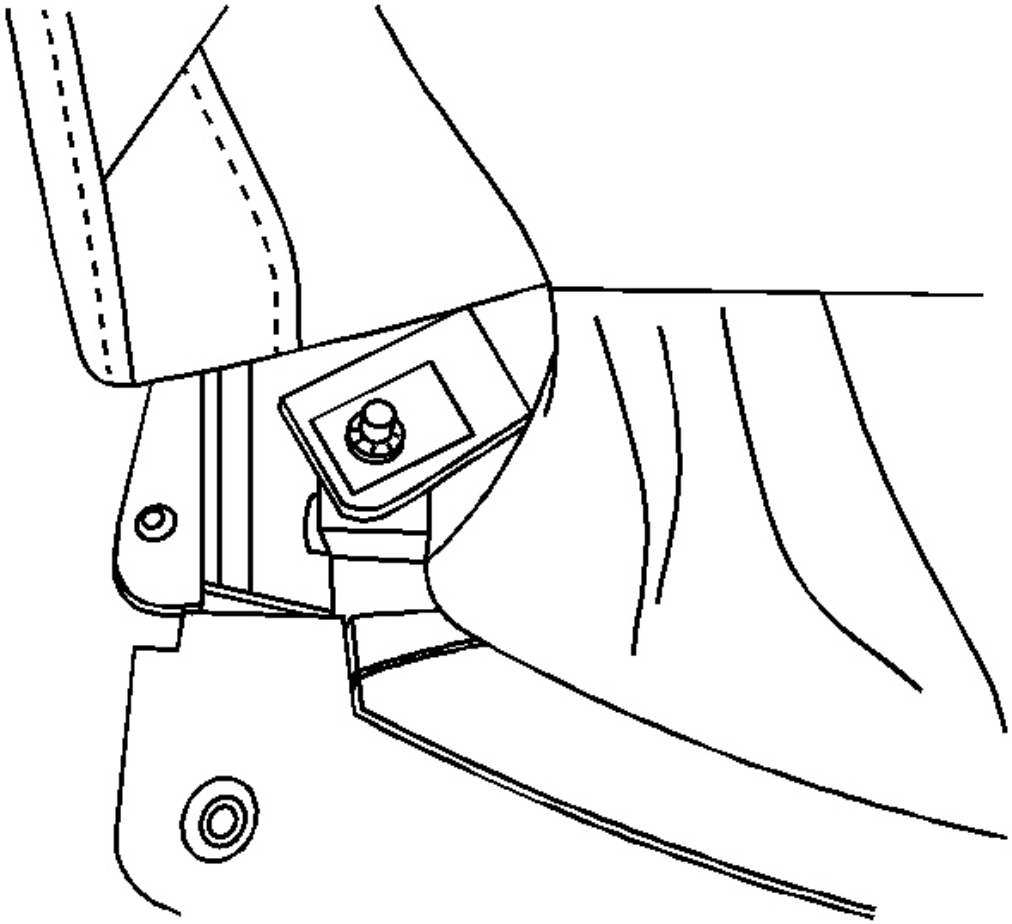

Fig. 181: Headliner Push-On Retainers To #1 Bow
Courtesy of GENERAL MOTORS CORP.

7. Install the headliner push-on retainers to the #1 bow.

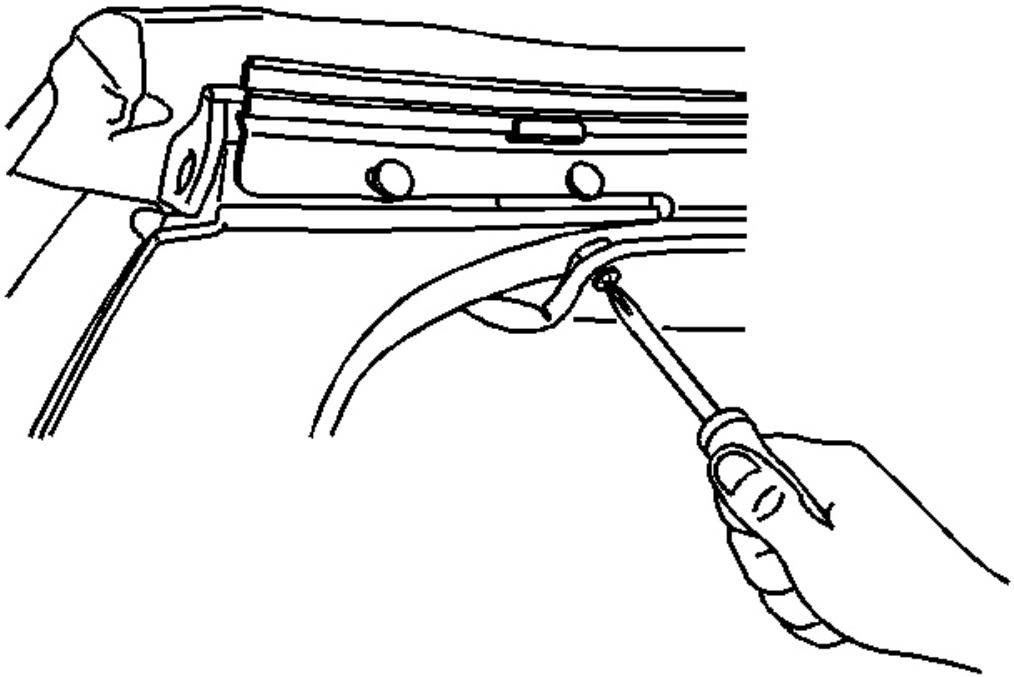

Fig. 182: Headliner Screws To #1 Bow
Courtesy of GENERAL MOTORS CORP.

8. Install the headliner screw to the #1 bow.

   Tighten: Tighten the headliner screw to 2 N.m(18 lb in).

9. With an assistant install the folding top to the vehicle. Refer to **Folding Top Replacement** .
10. Install the front and center side rail weatherstrip retainers. Refer to **Weatherstrip Retainer Replacement - Folding Top (Front and Center Side Rail)** or **Weatherstrip Retainer Replacement - Folding Top (Rear Side Rail)** Front and center side rail.
11. Before stapling the top cover to the #1 bow, refer to **Folding Top Cover Tension Adjustment - Front** .
12. Reposition the folding top to the original position.

FOLDING TOP MAIN CONTROL LINK REPLACEMENT

Removal Procedure

1. Remove the folding top and place the top upside down on a clean flat surface. Refer to **Folding Top Replacement** .

2. Remove the following components from the rear side rail.
    1. The headliner screws
    2. The glare cover elastic strap screws
    3. The headliner elastic strap screws

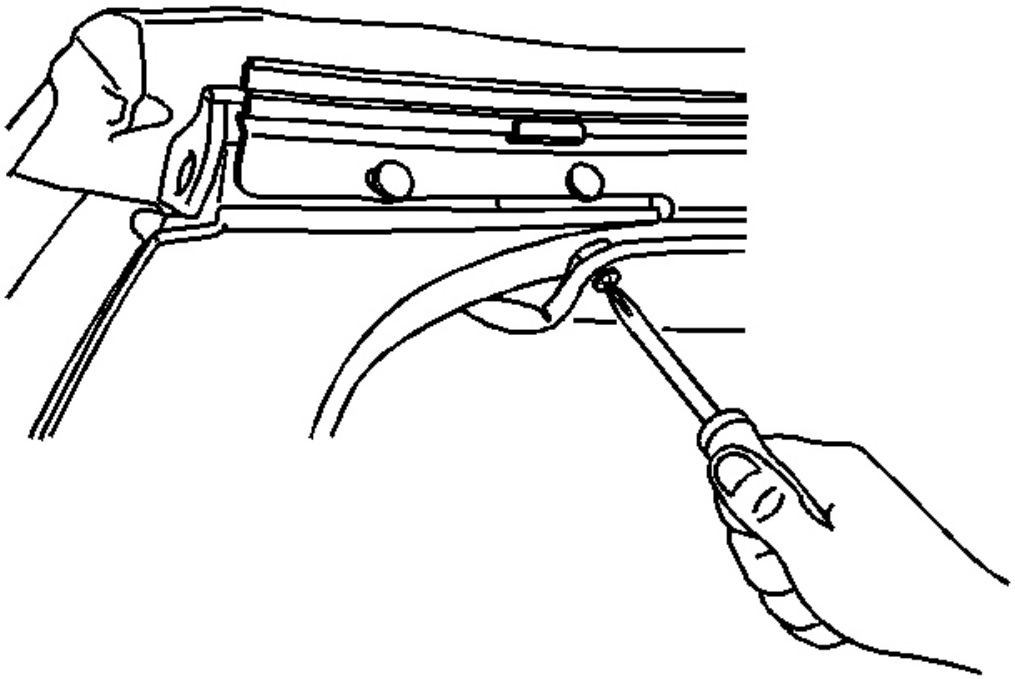

Fig. 183: Headliner Screws To #1 Bow
Courtesy of GENERAL MOTORS CORP.

3. Remove the headliner screw from the #1 bow.

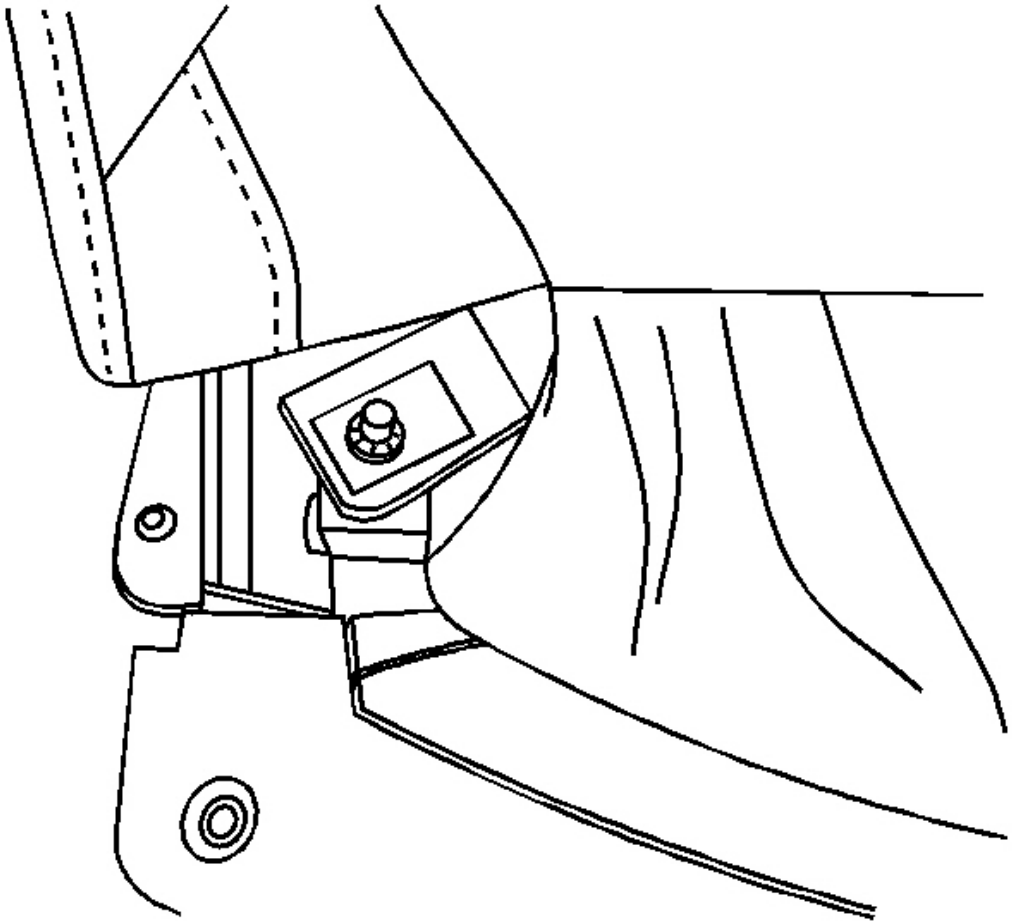

Fig. 184: Headliner Push-On Retainers To #1 Bow
Courtesy of GENERAL MOTORS CORP.

4. Remove the headlining push-on retainers from the #1 bow.

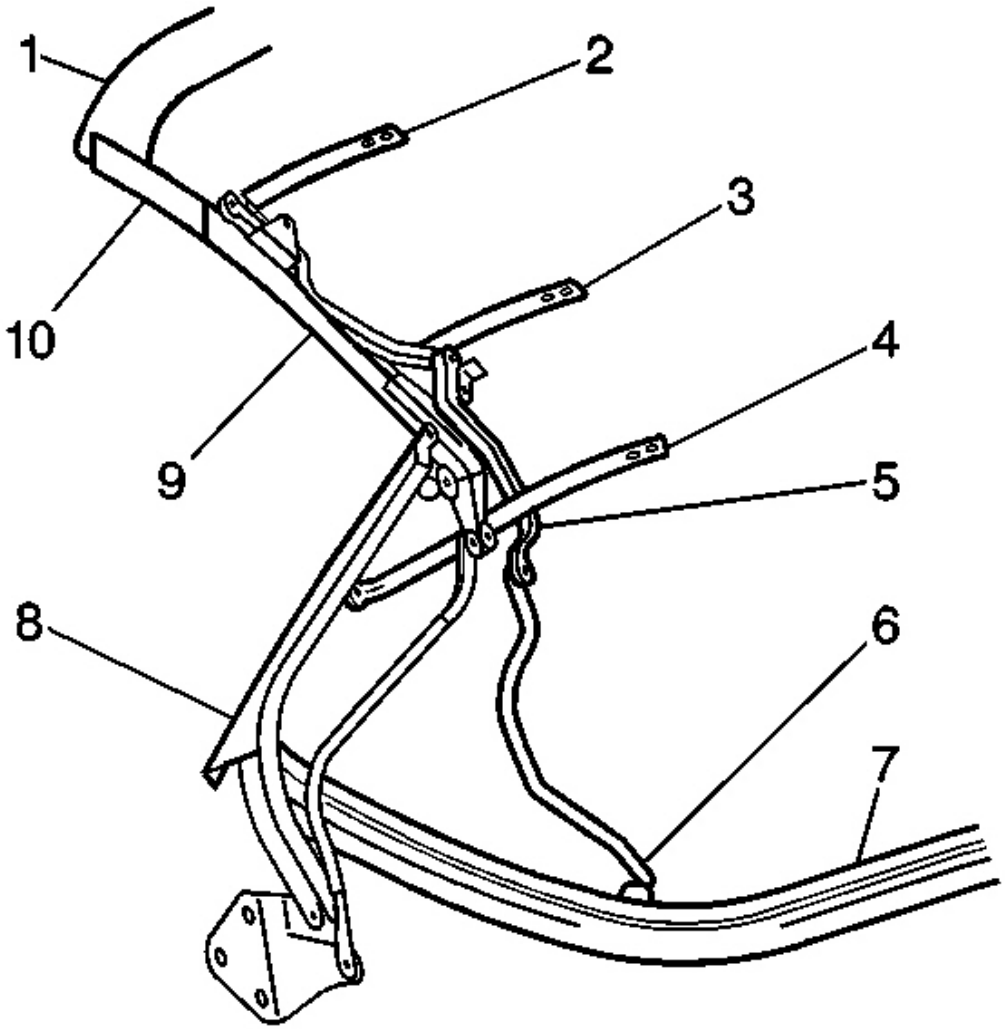

Fig. 185: #2, #3, #4 & #5 Bow To Main Control Link Bracket
Courtesy of GENERAL MOTORS CORP.

5. Remove the main control link bracket screws from the #2 bow (2).
6. Remove the main control link bracket screws from the #3 bow (3).
7. Remove the main control link bracket screws from the #4 bow (4).
8. Using a grease pencil mark the end position of the adjustable link rod as an aid in assembling a new part.
9. Remove the screw (6) from the end of the main control link rod on the #5 bow (7).
10. Remove the screw from the main control link on the center side rail.

11. Remove the screw from the main control link on the front side rail.

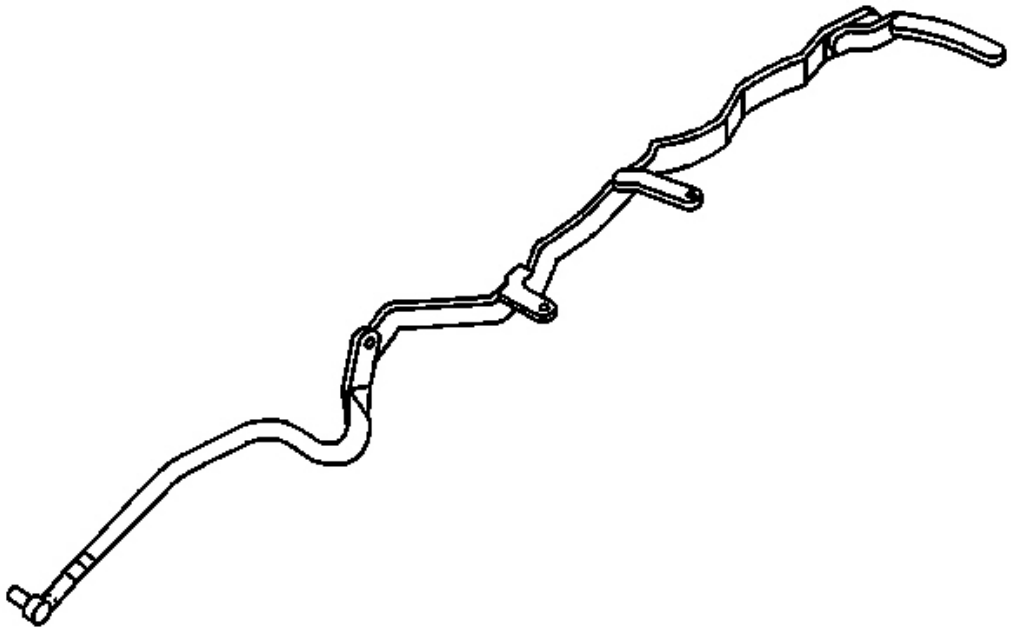

Fig. 186: Main Control Link
Courtesy of GENERAL MOTORS CORP.

12. Remove the main control link.

Installation Procedure

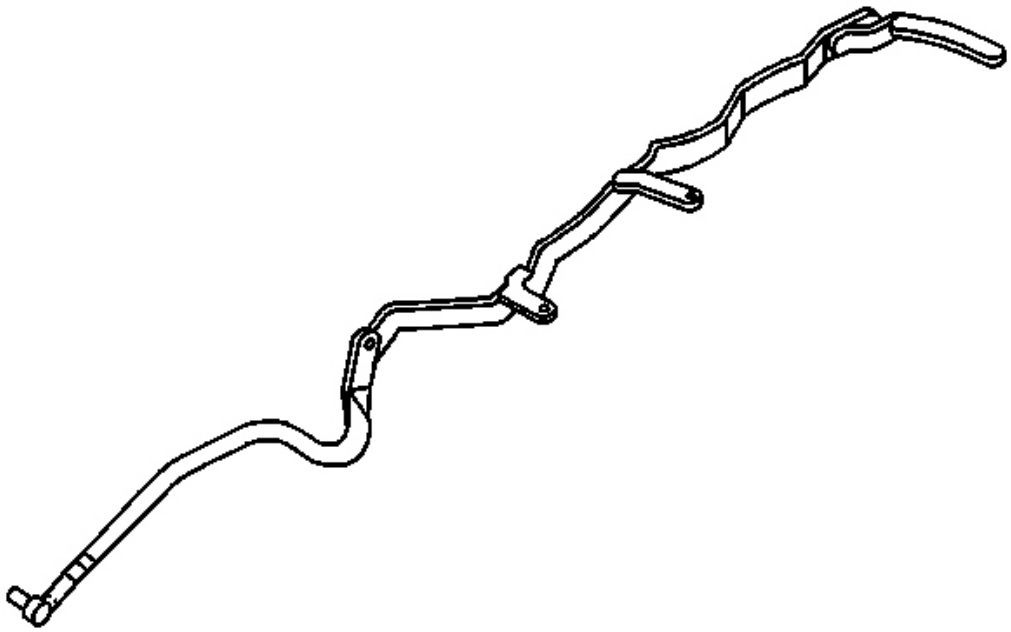

Fig. 187: Main Control Link
Courtesy of GENERAL MOTORS CORP.

1. Position the main control link to the top.

NOTE: **Refer to Fastener Notice in Cautions and Notices.**

2. Install the spacers and the screw attaching the main control link to the front side rail.

   Tighten: Tighten the screw to 20 N.m (15 lb ft).

3. Install the spacers and the screw attaching the main control link to the center side rail.

   Tighten: Tighten the screw to 20 N.m (15 lb ft).

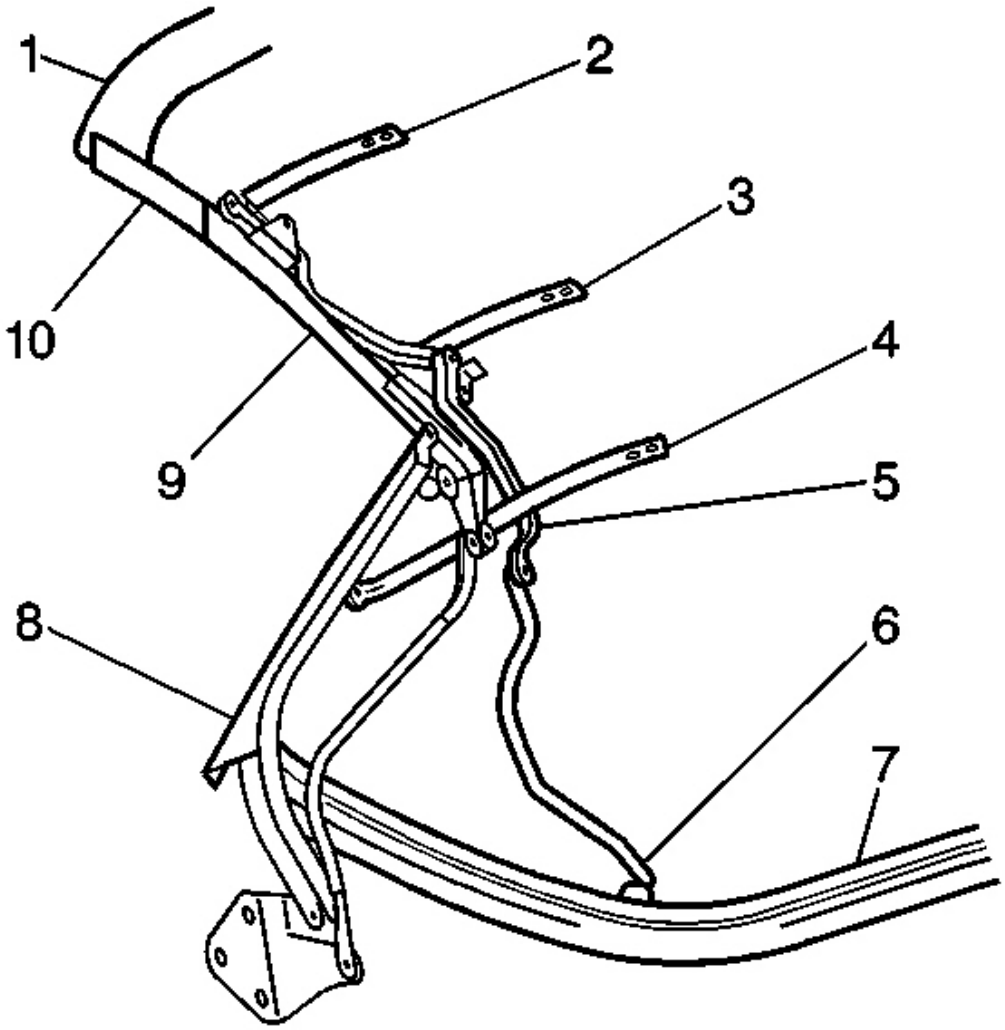

Fig. 188: #2, #3, #4 & #5 Bow To Main Control Link Bracket
Courtesy of GENERAL MOTORS CORP.

4. Adjust the end of the link adjuster (6) rod to match the marked position.
5. Install the end screw to the main control link rod on the #5 bow (7).

   Tighten: Tighten the screw to 15 N.m (11 lb ft).

6. Install the screws to the control link brackets on the #2, 3, and 4 roof bows.

   Tighten: Tighten the screws to 13 N.m (9 lb ft).

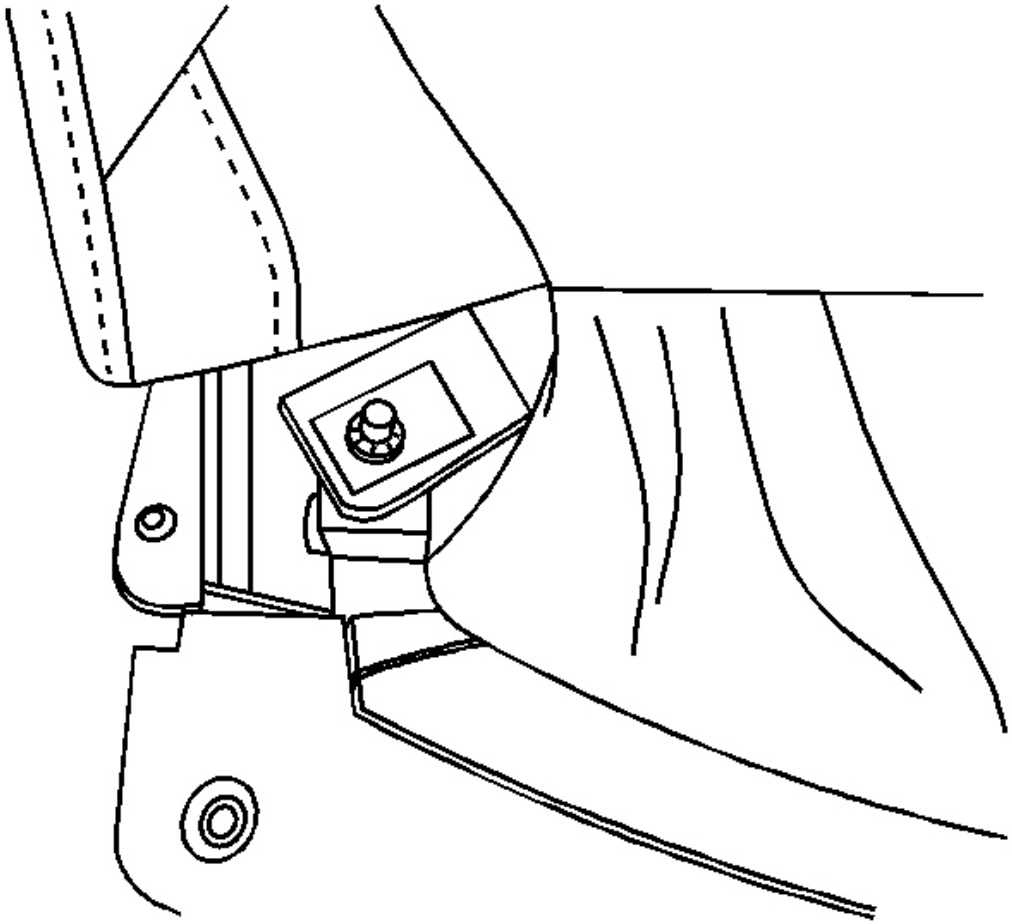

Fig. 189: Headliner Push-On Retainers To #1 Bow
Courtesy of GENERAL MOTORS CORP.

7. Install the headliner push-on retainers to the #1 bow.

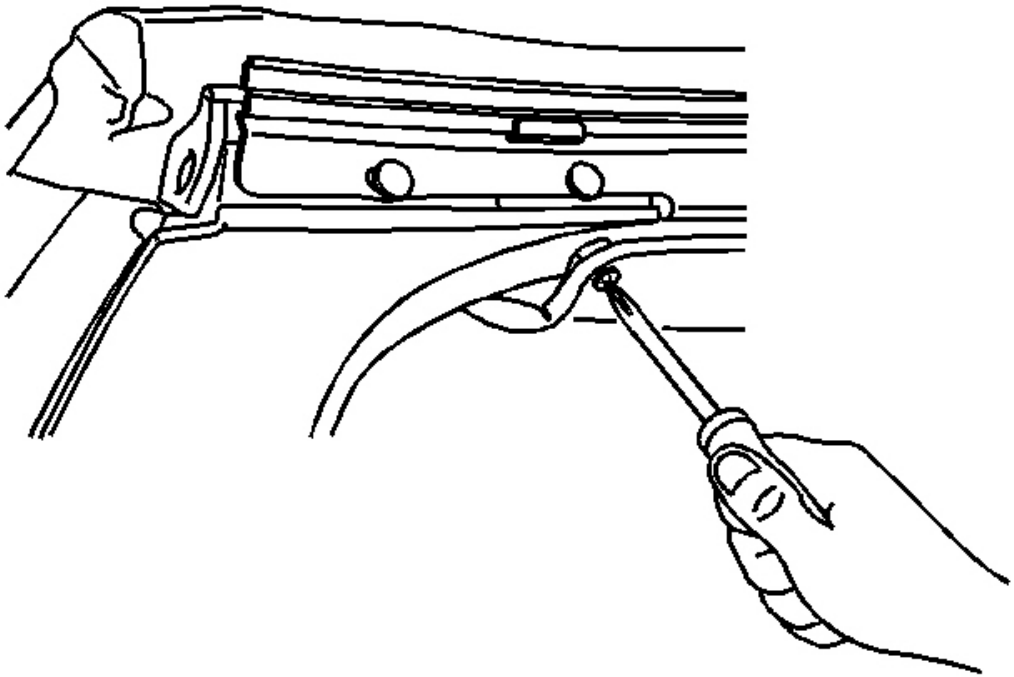

Fig. 190: Headliner Screws To #1 Bow
Courtesy of GENERAL MOTORS CORP.

8. Install the attaching the headliner screws to the #1 bow.

   Tighten: Tighten the screws to 2 N.m (18 lb in).

9. Install the glare cover to the #5 bow.

   Tighten: Tighten the screw to 2 N.m (18 lb in).

10. Install the headliner screw to the rear side rail.

    Tighten: Tighten the screw to 2 N.m (18 lb in).

11. Install the headliner elastic strap screw to the rear side rail.

    Tighten: Tighten the screw to 2 N.m (18 lb in).

12. Install the folding top. Refer to **Folding Top Replacement** .
13. Reposition the folding top to the original position.

FOLDING TOP STOWAGE COMPARTMENT LID REPLACEMENT

Removal Procedure

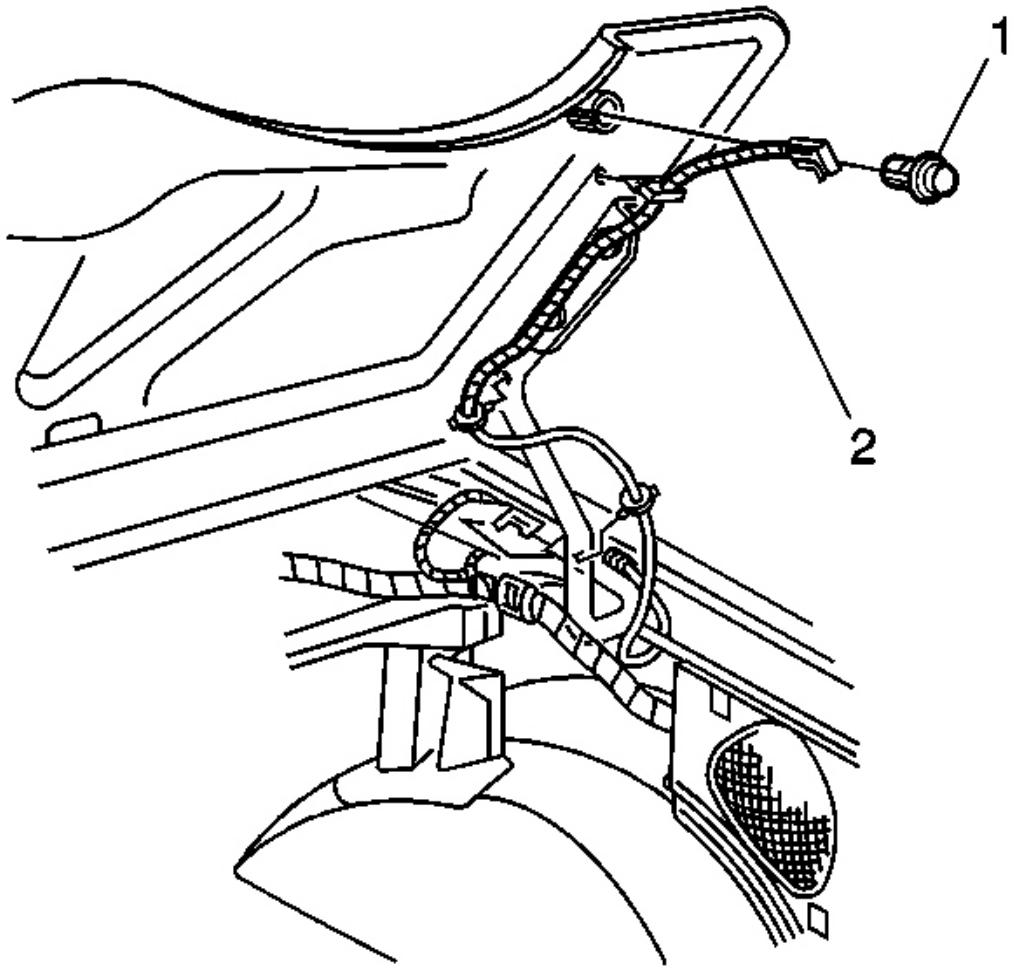

Fig. 191: Harness To Lid Release Switch
Courtesy of GENERAL MOTORS CORP.

1. Open and support the folding top stowage lid.
2. Remove the lid release switch (1) from the lid.

   Pry the switch loose with a flat bladed screwdriver.

3. Disconnect the harness (2) from the switch.

4. Remove the harness from the lid.
5. Using a grease pencil mark the location of the hinges on the lid to aid in installation.
6. Place a protective cover between the stowage lid and the rear compartment lid, and over the top of the quarter panels.

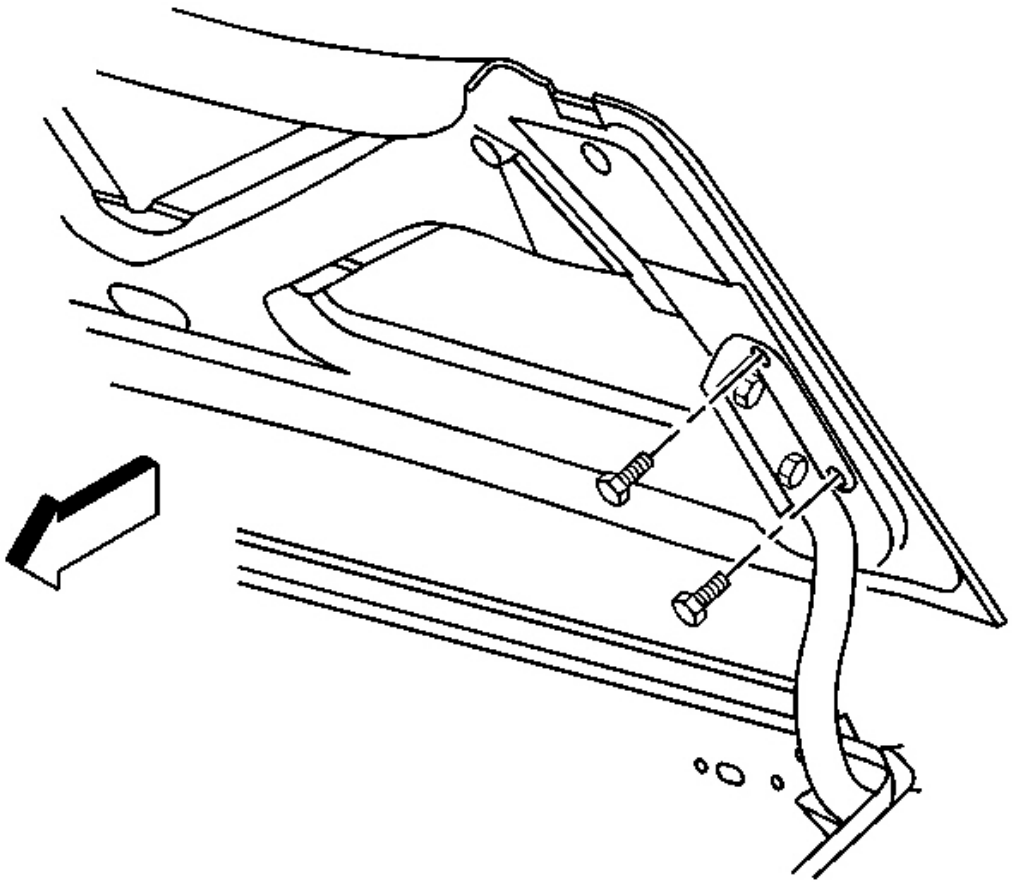

Fig. 192: Hinge Bolts To Stowage Compartment Lid
Courtesy of GENERAL MOTORS CORP.

7. With the aid of an assistant remove the hinge bolts from the stowage compartment lid.
8. With the aid of an assistant remove the stowage compartment lid.

Installation Procedure

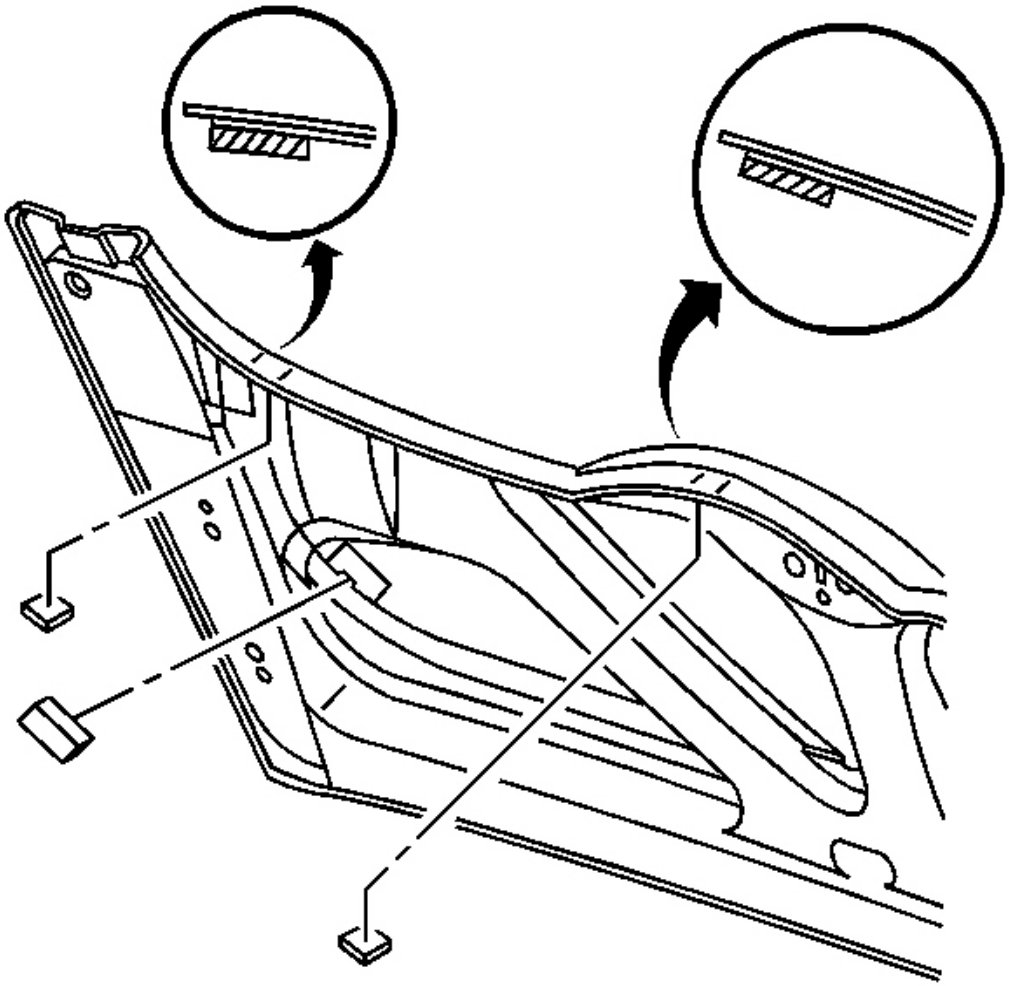

Fig. 193: Anti Rattle Insulators
Courtesy of GENERAL MOTORS CORP.

1. If required install the anti rattle insulators to a new lid as shown.
   - Install a 6 mm thick X 31 mm square (0.25 inch thick X 1.25 square) insulator to the inside of the flange at the center line of the lid to prevent the closed lid from contacting the extension panel.
   - Install a 12 mm thick X 44 mm square (0.5 inch thick X 1.75 square) insulator to the right and left underside of the lid 38 mm (1.5 inches) in from the raised area of the lid to prevent the closed lid from contacting the roof rail.
   - Install a 12 mm thick X 31 mm square (0.5 inch thick) X (1.25 square) insulator to the right and left undersides of the flange 127 mm (5 inches) in from the edge of the lid to prevent the closed lid from contacting the roof rail.

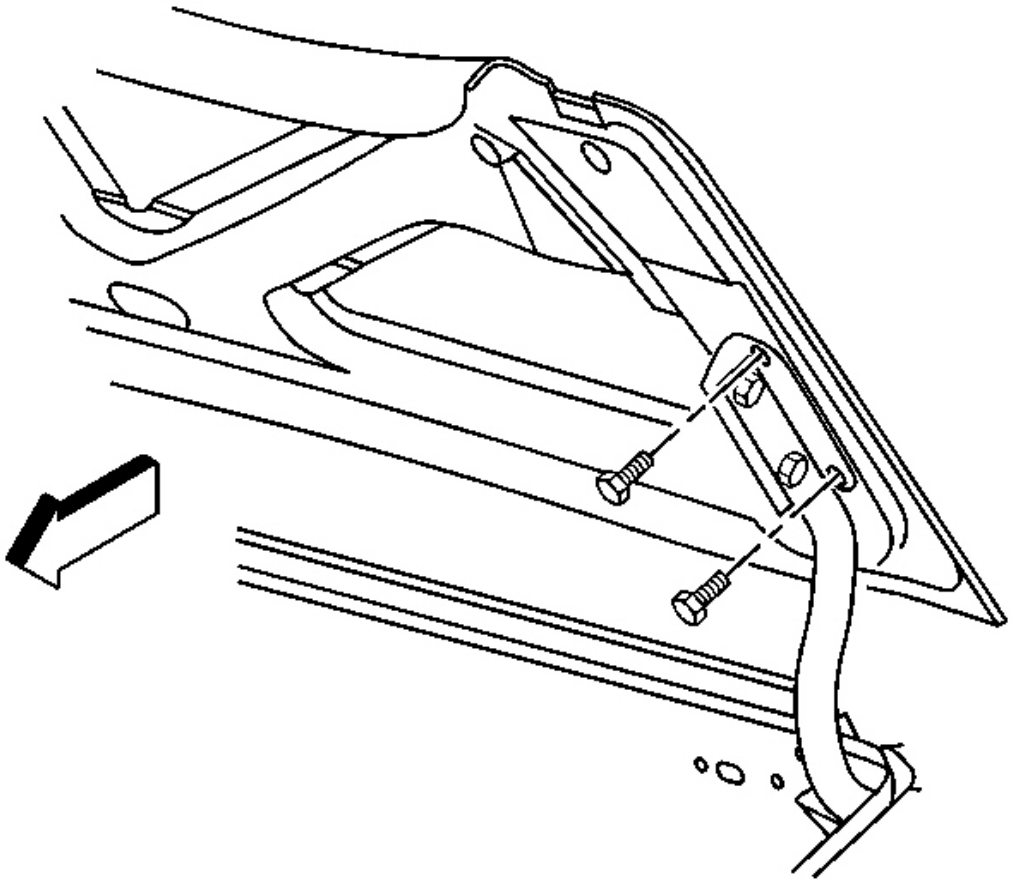

Fig. 194: Hinge Bolts To Stowage Compartment Lid
Courtesy of GENERAL MOTORS CORP.

2. With an assistant position the lid to the hinges, using the grease pencil marks as a reference.

NOTE: **Refer to Fastener Notice in Cautions and Notices.**

3. With an assistant install the bolts attaching the hinges to the stowage lid.

Tighten: Tighten the bolts to 25 N.m (18 lb ft).

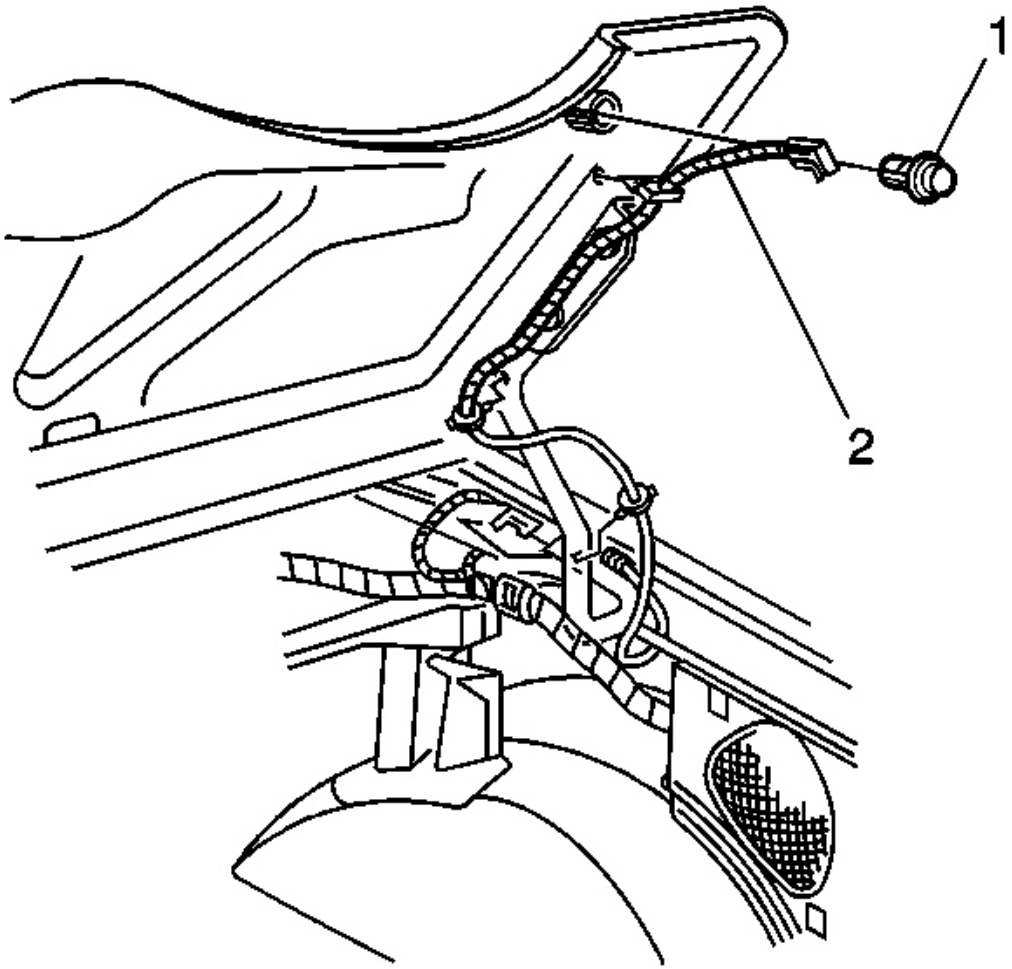

Fig. 195: Harness To Lid Release Switch
Courtesy of GENERAL MOTORS CORP.

4. Route the switch release harness through the lid and out through the switch opening boss, (left side).
5. Connect the harness (2) to the lid release switch (1).
6. Install the switch to the lid.
7. Align the harness to the slot in the lid boss and push in firmly on the switch until fully seated.
8. Install the wiring harness to the lid.
9. Remove the support and the protective cover.
10. Inspect the operation of the lid and adjust the rear center bumper to flush the stowage lid to the rear compartment lid.

FOLDING TOP STOWAGE COMPARTMENT LID HINGE REPLACE

Removal Procedure

IMPORTANT: The stowage lid and the rear compartment lid will contact if they are opened at the same time. Be sure that one lid is latched at all times.

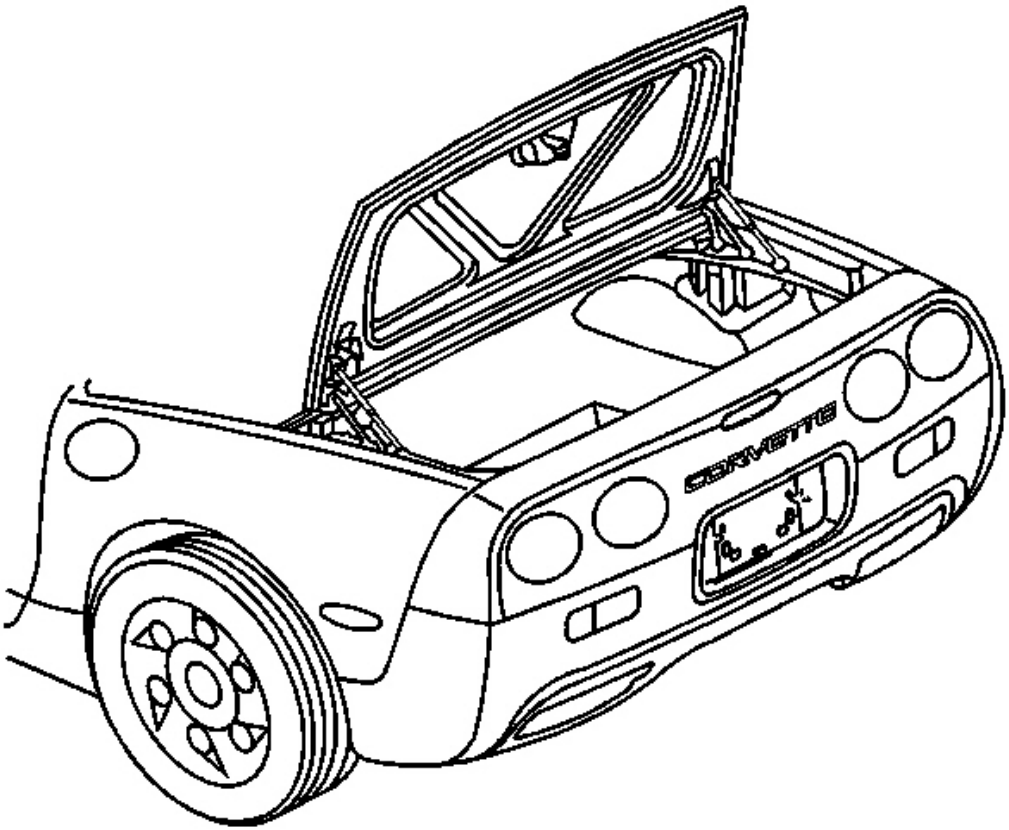

Fig. 196: Right & Left Folding Top Stowage Lid Struts To Rear Of Hinges
Courtesy of GENERAL MOTORS CORP.

1. Open the rear compartment.
2. Remove the rear nut attaching the folding top stowage lid hinge.
3. Disconnect the right and left folding top stowage lid struts from the rear of the hinges.
4. Close the rear compartment.

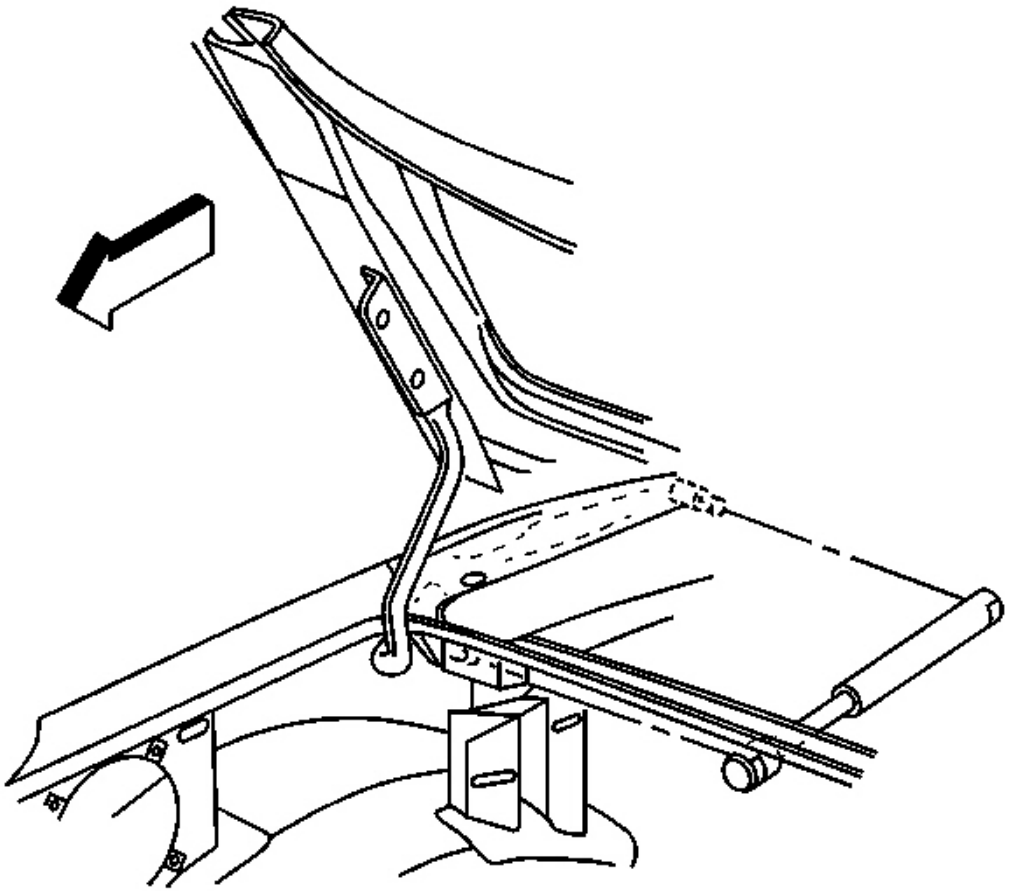

Fig. 197: Stowage Lid, Rear Compartment Lid & Over Top Of Quarter Panels
Courtesy of GENERAL MOTORS CORP.

5. Open the folding top stowage lid and support the lid.
6. Place a protective cover between the stowage lid and the rear compartment lid, and over the top of the quarter panels.
7. Using a grease pencil mark the location of the hinge on the lid to aid in installation.

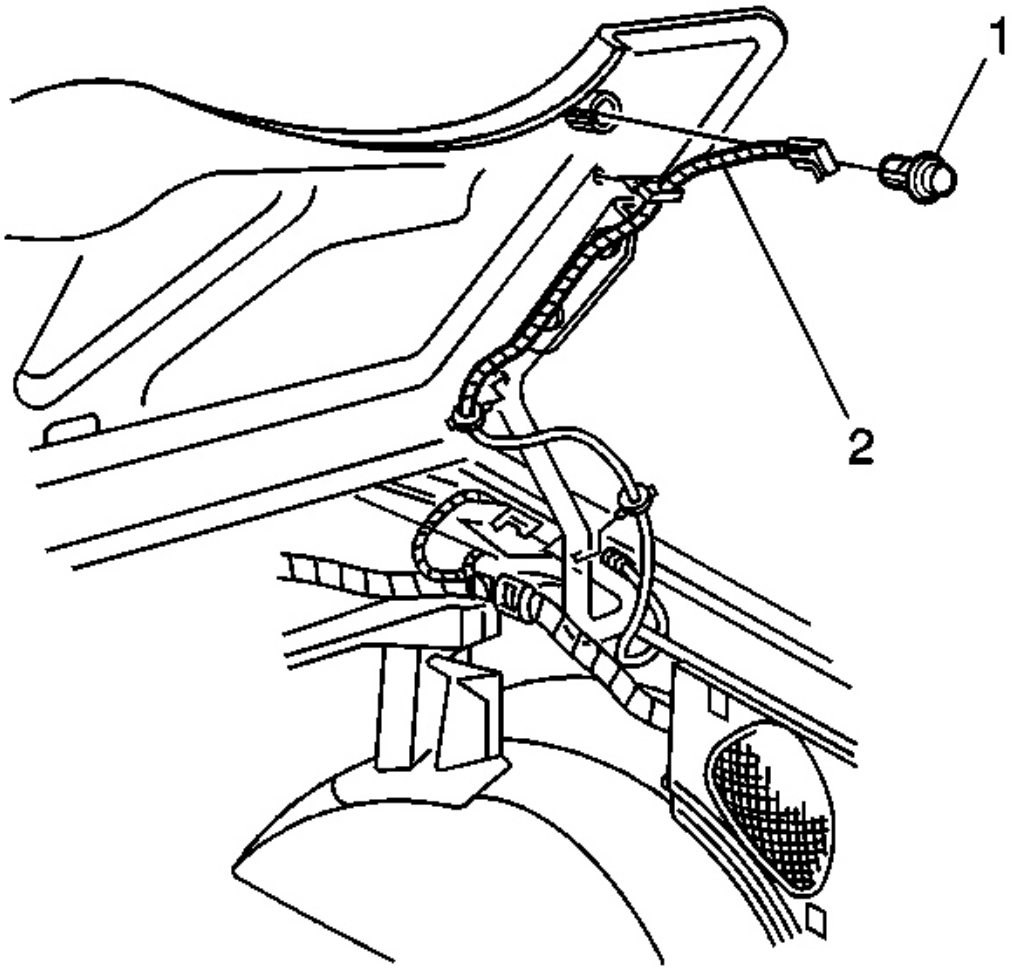

Fig. 198: Harness To Lid Release Switch
Courtesy of GENERAL MOTORS CORP.

8. Remove the lid release switch harness (2) from the hinge, (drivers side hinge removal).

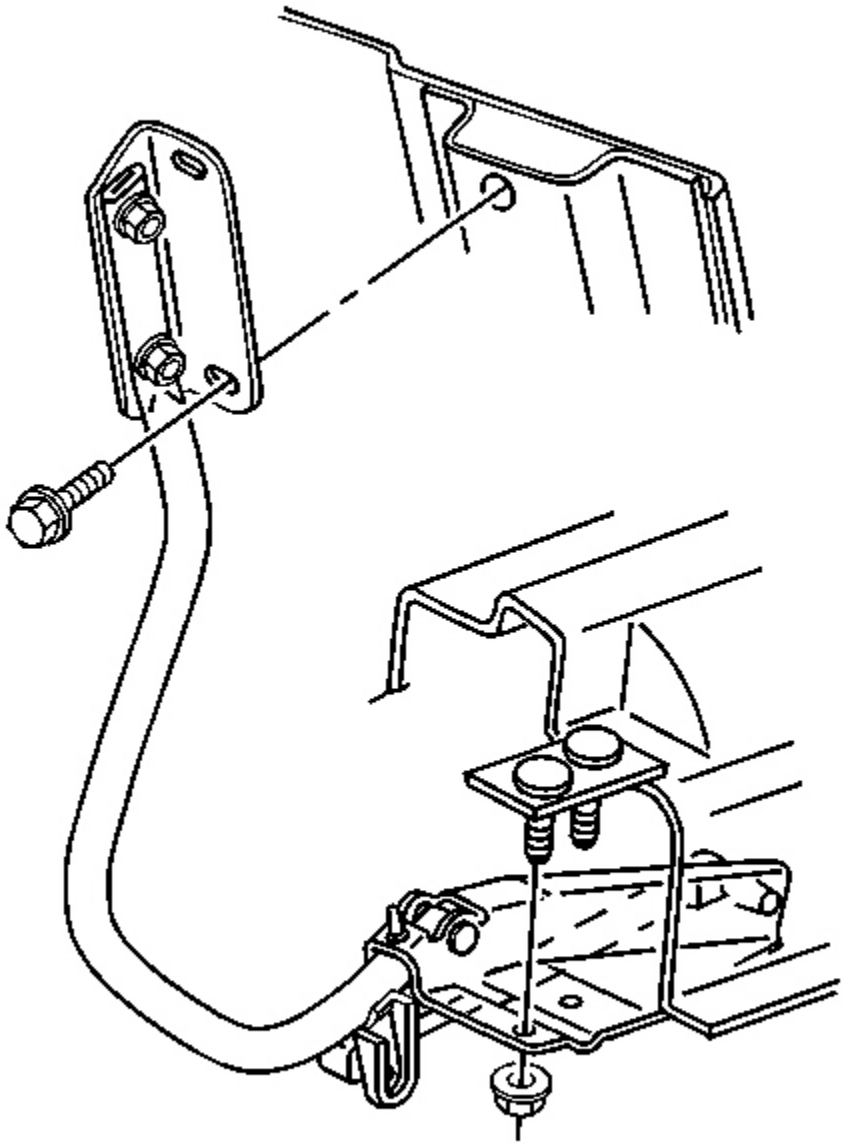

Fig. 199: Hinge Bolts To Lid
Courtesy of GENERAL MOTORS CORP.

9. Remove the nuts attaching the front of the hinge to the body.
10. Remove the hinge bolts from the lid.
11. Remove the hinge.

Installation Procedure

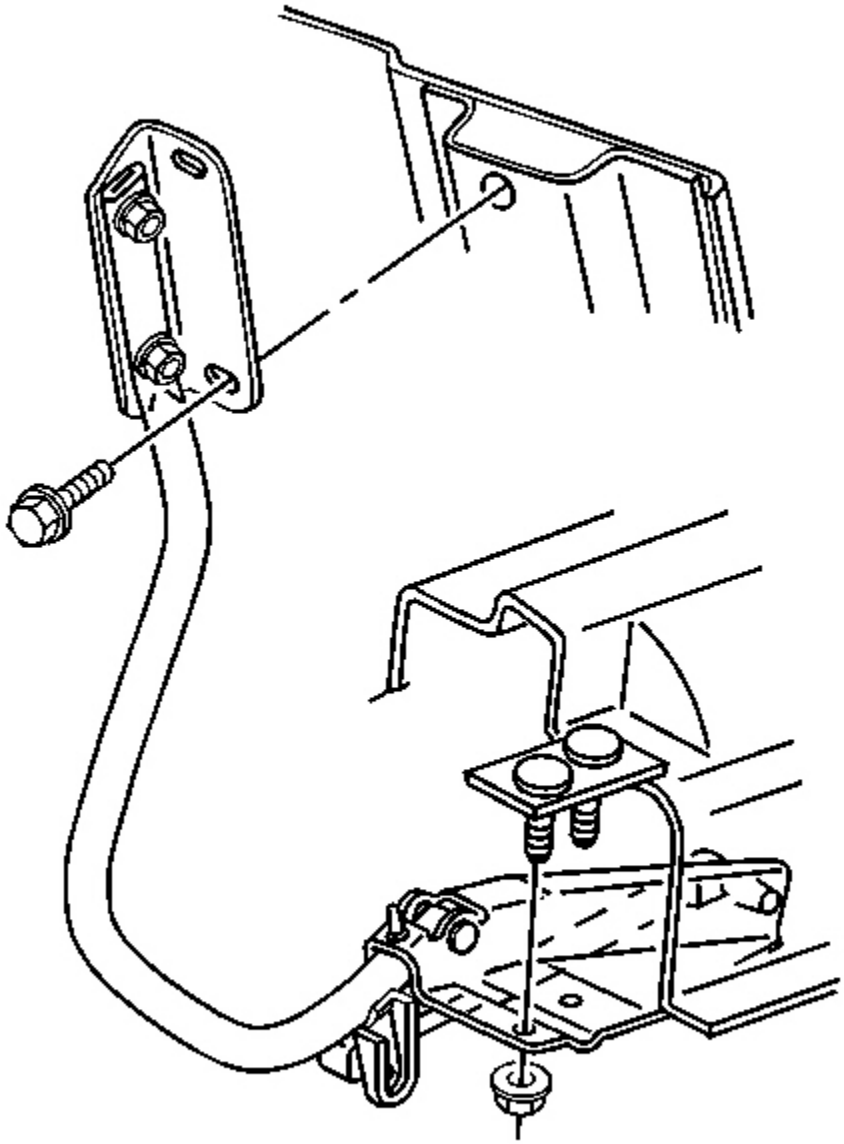

Fig. 200: Hinge Bolts To Lid
Courtesy of GENERAL MOTORS CORP.

1. Position the hinge to the stud plate on the body.

NOTE: **Refer to Fastener Notice in Cautions and Notices.**

2. Install the nut attaching the hinge to the front of the body stud plate.

   Tighten: Tighten the folding top stowage lid hinge to body nut to 32 N.m (23 lb ft).

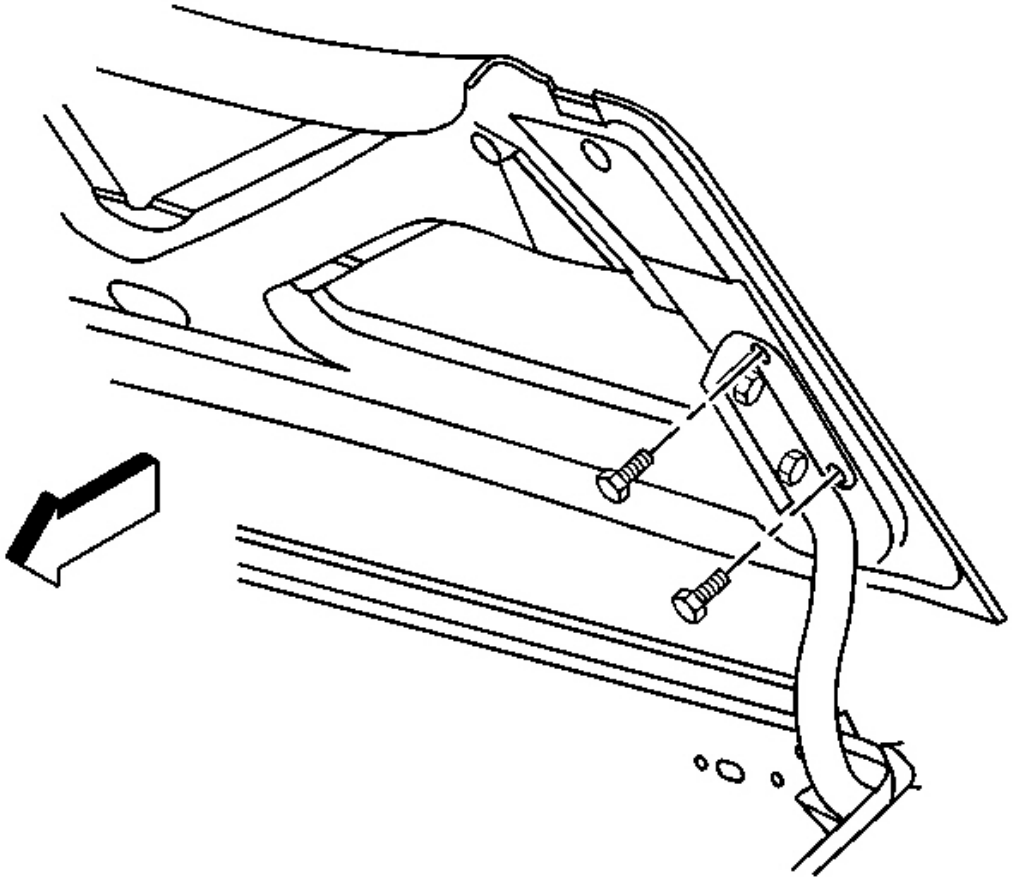

Fig. 201: Hinge Bolts To Stowage Compartment Lid
Courtesy of GENERAL MOTORS CORP.

3. Install the hinge bolts to the lid.

   Tighten: Tighten the folding top stowage lid hinge to lid bolts to 25 N.m (18 lb ft).

4. Install the strut to the front ball stud on the hinge.
5. Remove the protective covering and the temporary support.

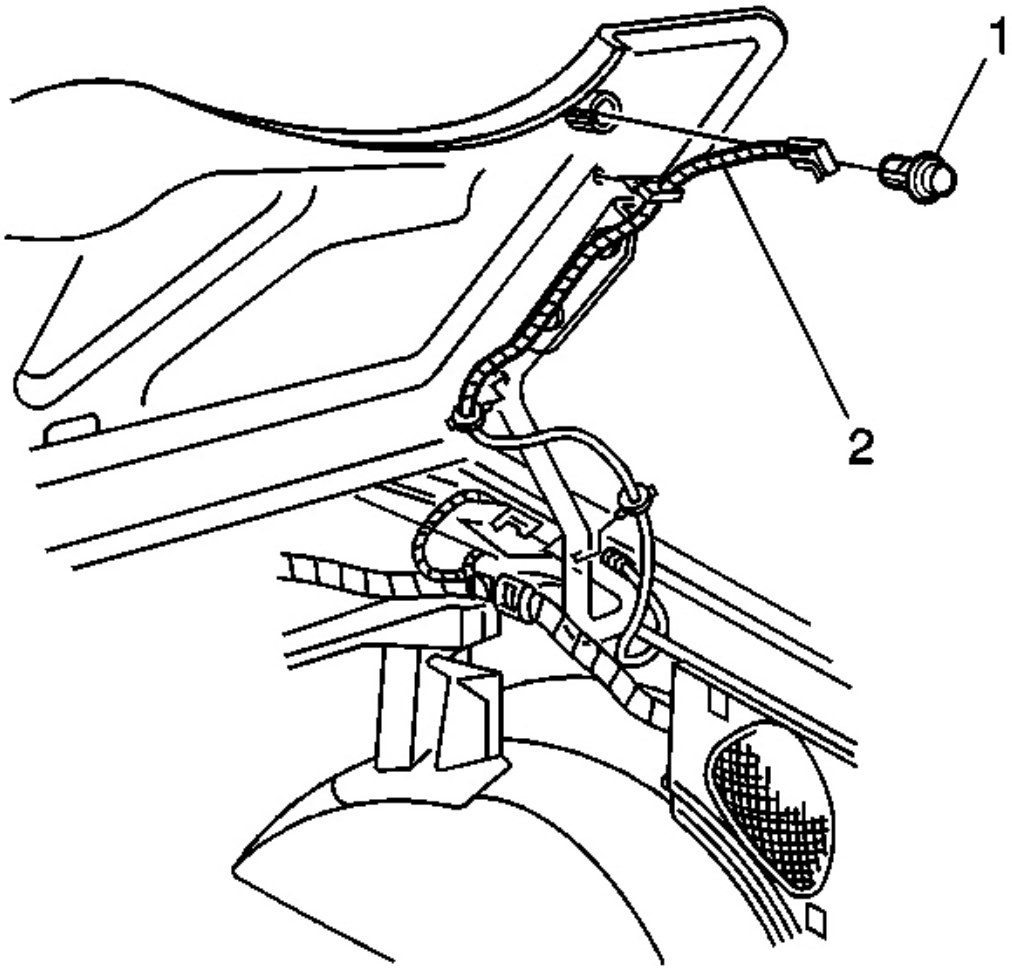

Fig. 202: Harness To Lid Release Switch
Courtesy of GENERAL MOTORS CORP.

6. Install the harness (2) to the hinge, (drivers side).
7. Lower and latch the folding top stowage lid.

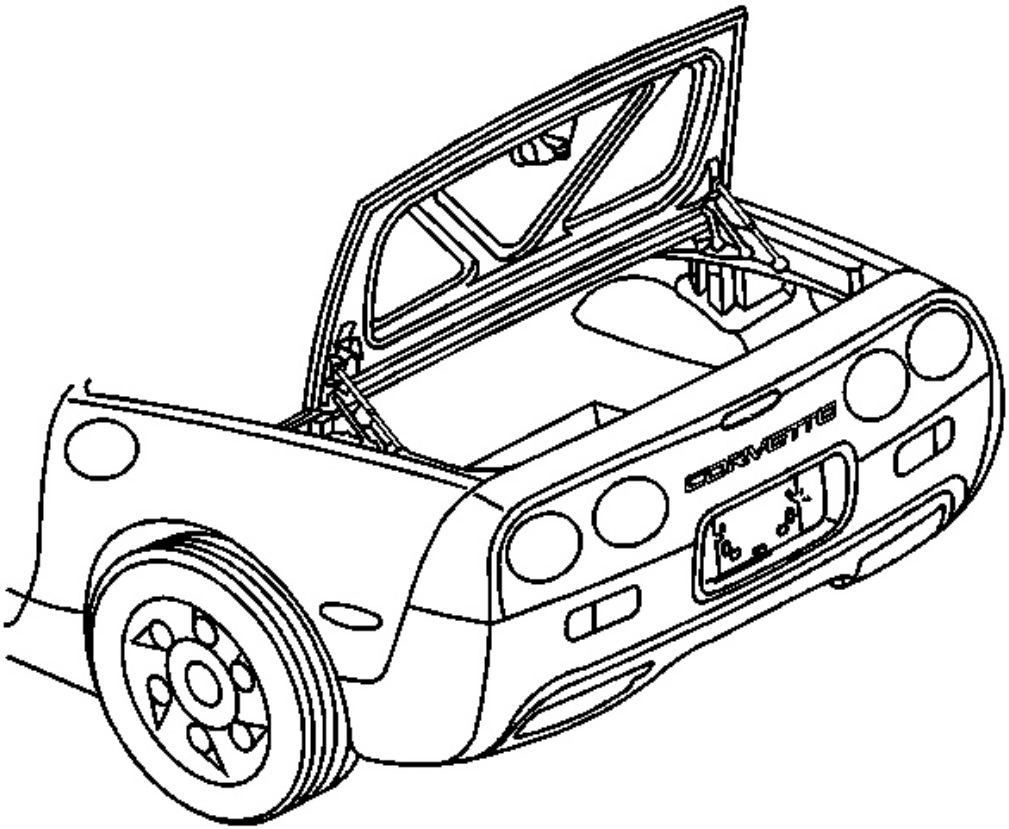

Fig. 203: Right & Left Folding Top Stowage Lid Struts To Rear Of Hinges
Courtesy of GENERAL MOTORS CORP.

8. Open the rear compartment.
9. Install the nut attaching the hinge to the rear of the body stud plate.

   Tighten: Tighten the folding top stowage lid hinge to body nut to 32 N.m (23 lb ft).

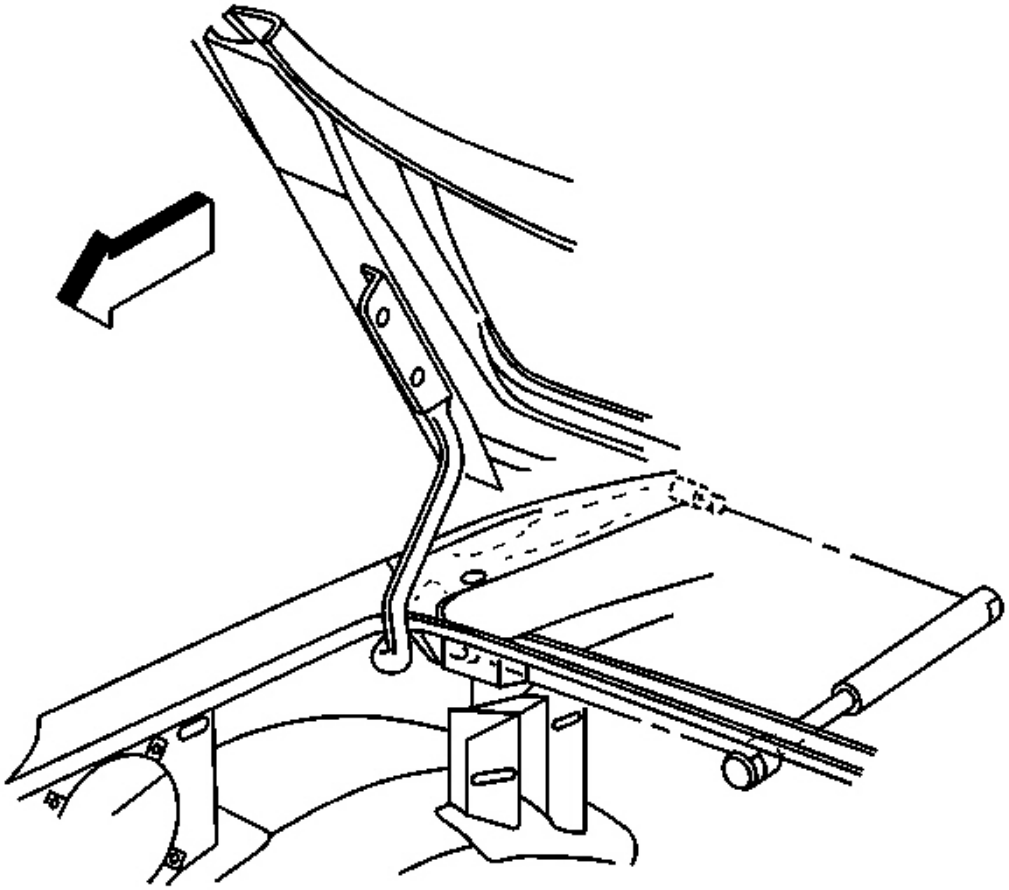

Fig. 204: Stowage Lid, Rear Compartment Lid & Over Top Of Quarter Panels
Courtesy of GENERAL MOTORS CORP.

10. Install the folding top stowage lid struts to the hinges.
11. Inspect the operation of the rear compartment lid.

FOLDING TOP STOWAGE COMPARTMENT LID STRUTS REPLACE

Removal Procedure

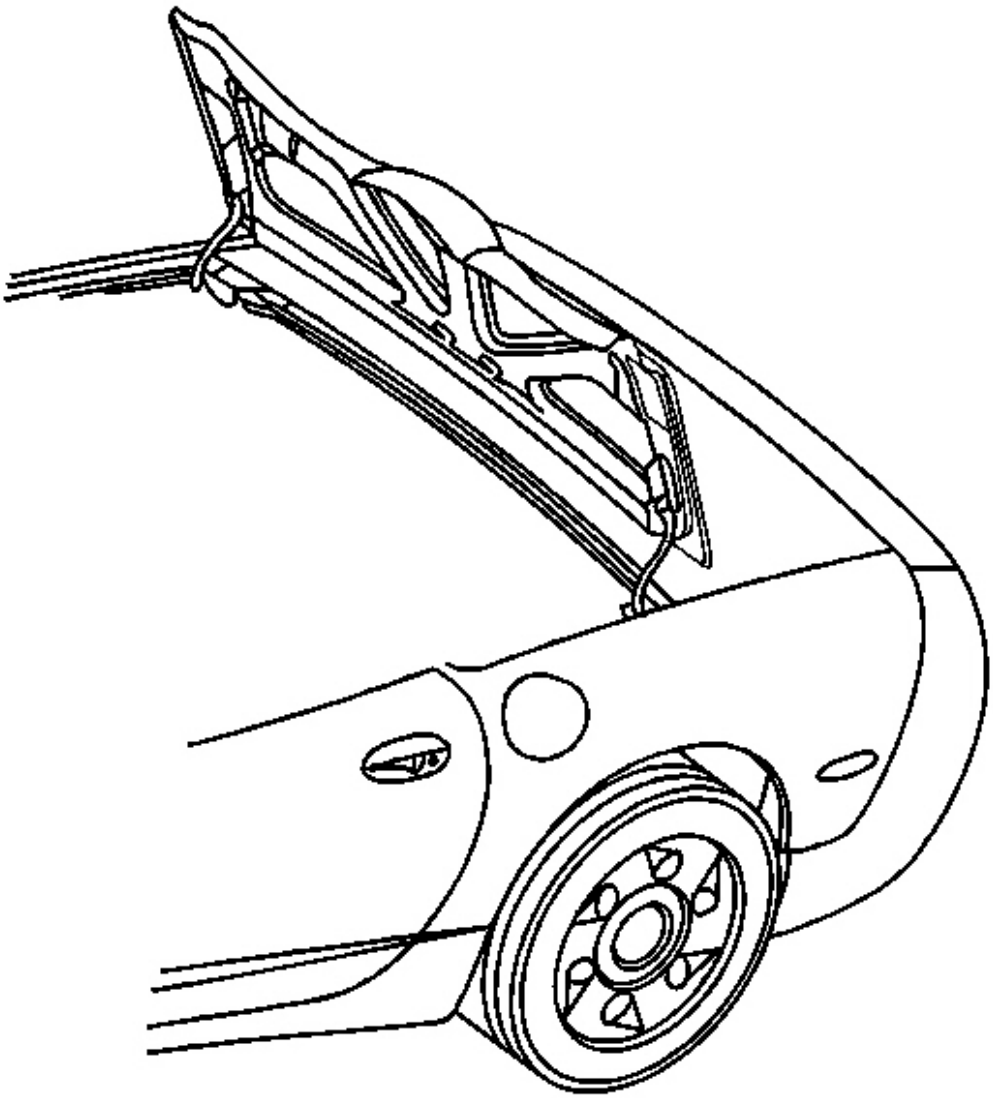

Fig. 205: Folding Top Stowage Compartment
Courtesy of GENERAL MOTORS CORP.

1. Open the folding top stowage compartment.

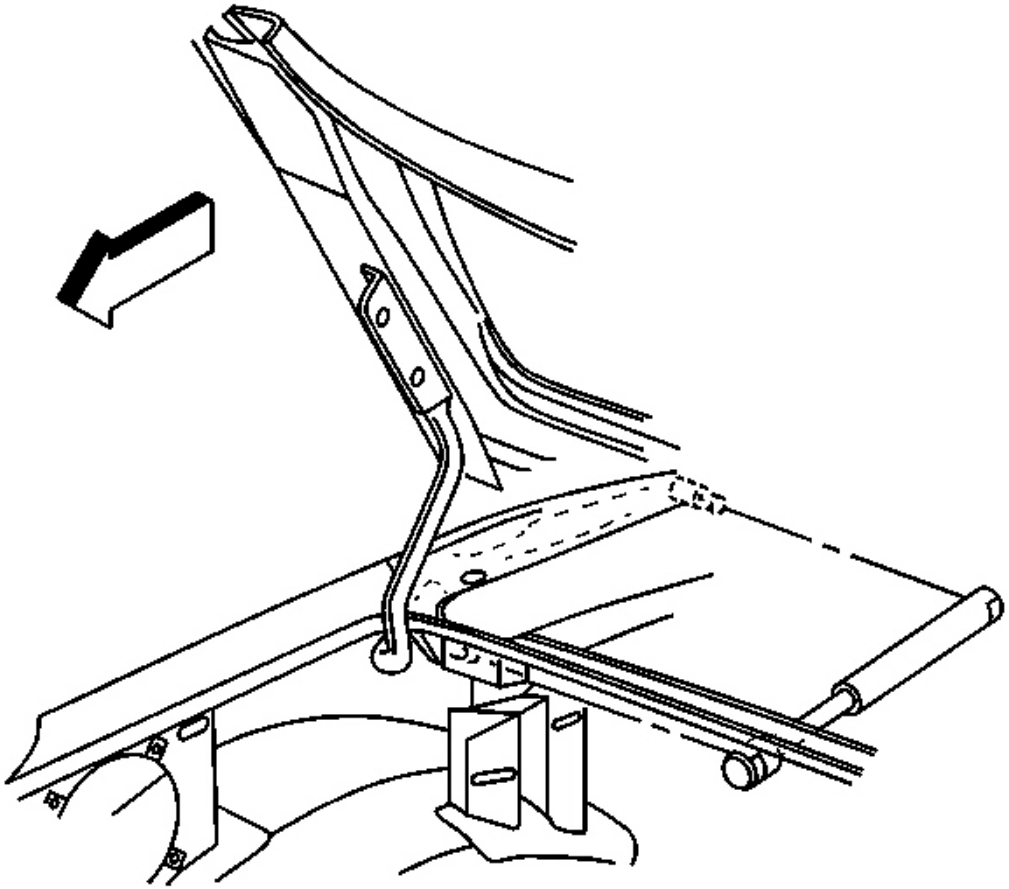

Fig. 206: Stowage Lid, Rear Compartment Lid & Over Top Of Quarter Panels
Courtesy of GENERAL MOTORS CORP.

2. Remove the forward end of the strut from the hinge ball stud.
3. Close the folding top stowage compartment lid.

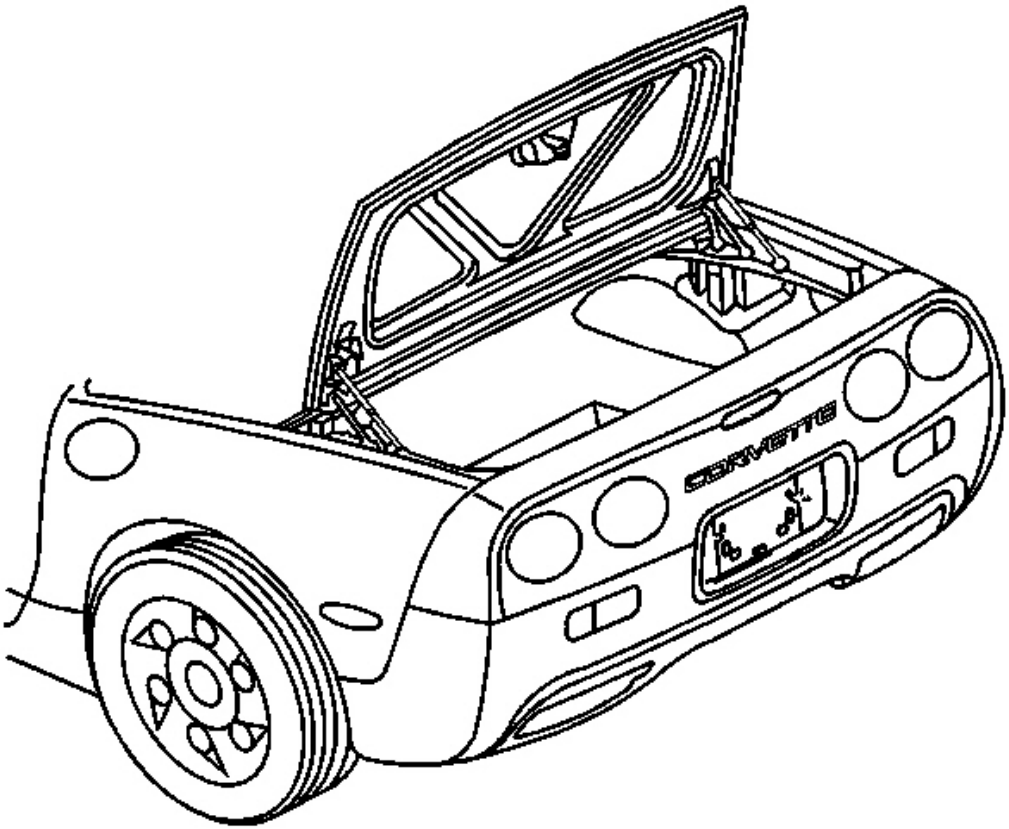

Fig. 207: Right & Left Folding Top Stowage Lid Struts To Rear Of Hinges
Courtesy of GENERAL MOTORS CORP.

4. Open the rear stowage compartment lid.
5. Remove the strut from the rear ball stud.

Installation Procedure

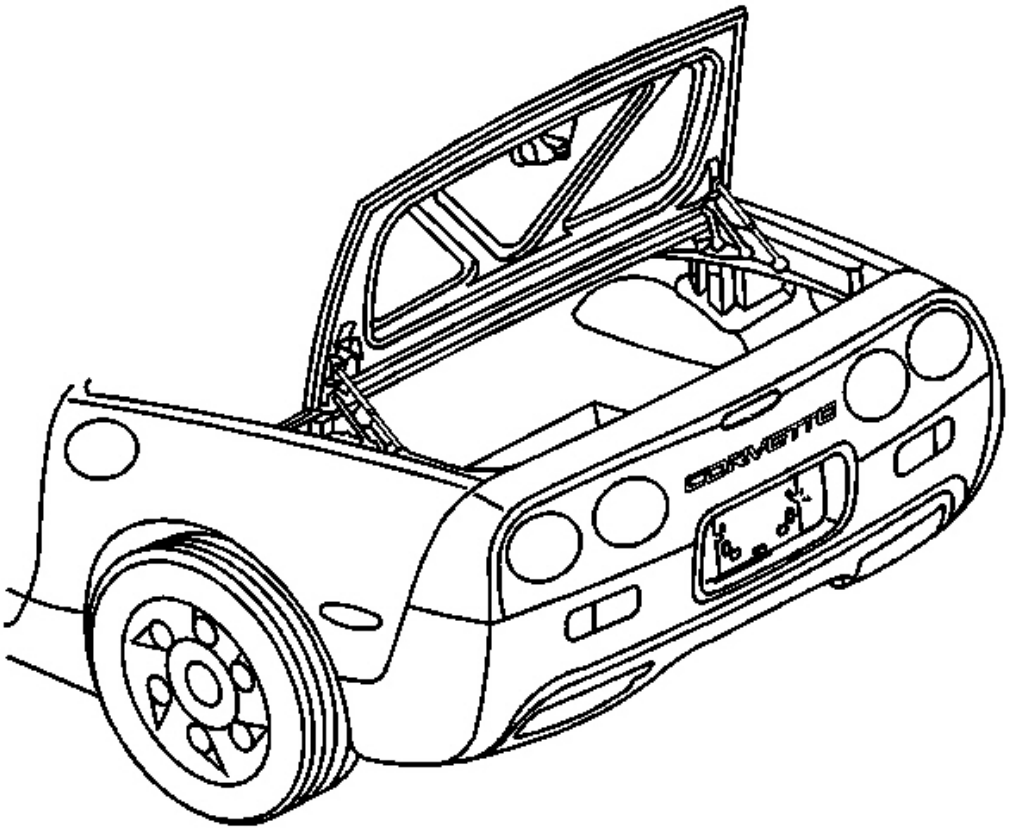

Fig. 208: Right & Left Folding Top Stowage Lid Struts To Rear Of Hinges
Courtesy of GENERAL MOTORS CORP.

1. Open the rear stowage compartment lid.

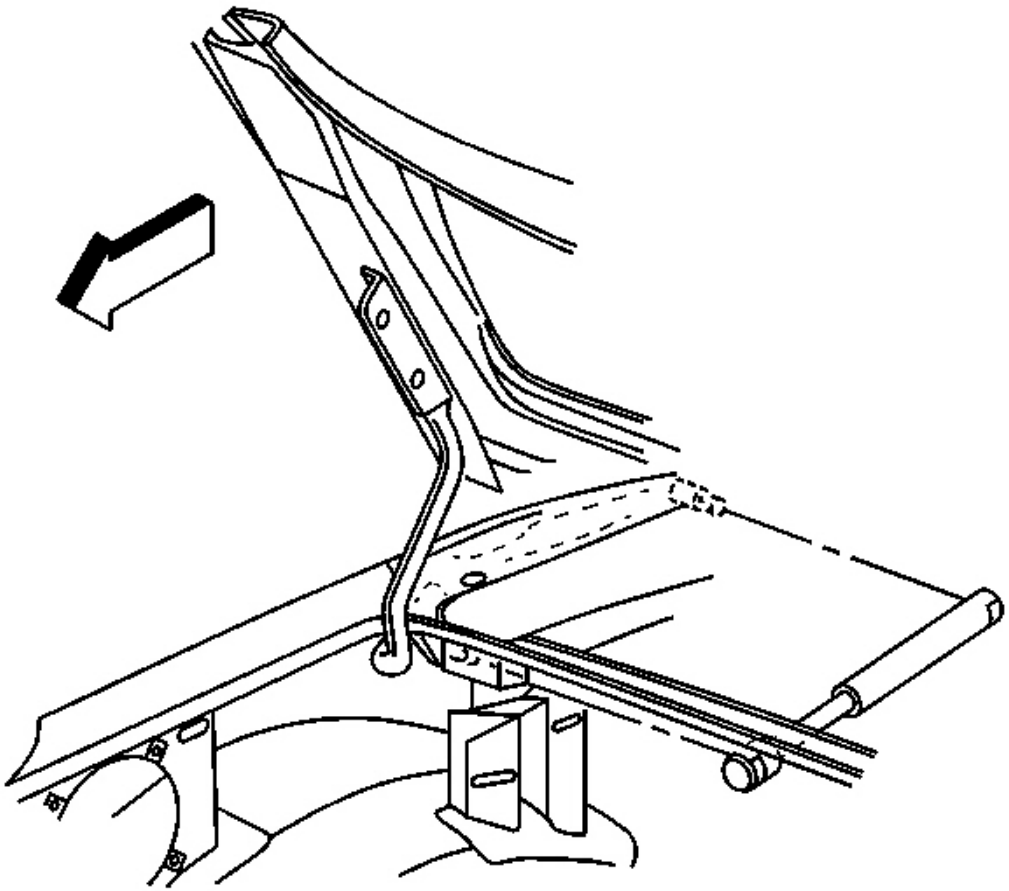

Fig. 209: Stowage Lid, Rear Compartment Lid & Over Top Of Quarter Panels
Courtesy of GENERAL MOTORS CORP.

2. Position the rod end of the strut through the access hole between the quarter panel and the support.
3. Install the strut to the rear ball stud.
4. Close the rear stowage compartment.

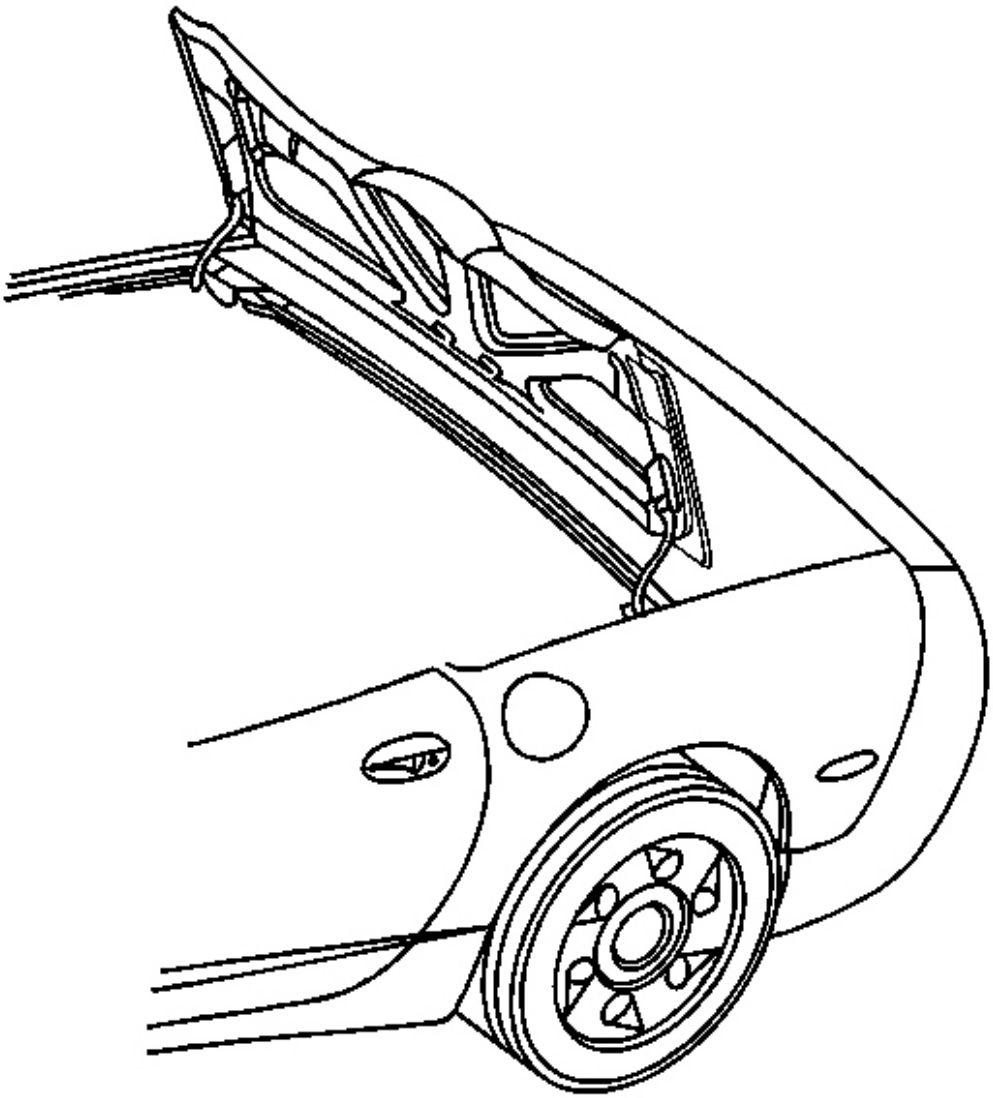

Fig. 210: Folding Top Stowage Compartment
Courtesy of GENERAL MOTORS CORP.

5. Open the folding top stowage compartment.
6. Install the rod end of the strut to the front of the hinge.
7. Close the folding top stowage compartment.

FOLDING TOP STOWAGE COMPARTMENT LID PROTECTOR

Removal Procedure

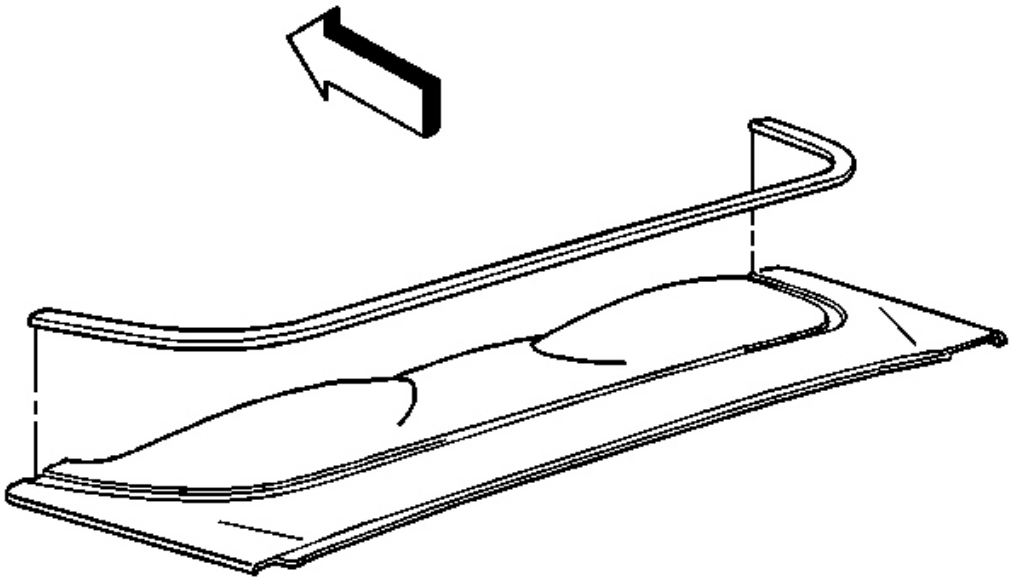

Fig. 211: Folding Top Stowage Compartment Lid Protector/Molding
Courtesy of GENERAL MOTORS CORP.

1. Using a heat gun heat the protector/molding to soften the adhesive.
2. Lift upward to remove the protector.
3. Remove all old adhesive from the lid depression by using 3M(tm) adhesive remover P/N 8984 or equivalent.
4. Clean the surface with a 50/50 mixture of isopropyl alcohol and water.
5. Dry the surface with a clean cloth.

Installation Procedure

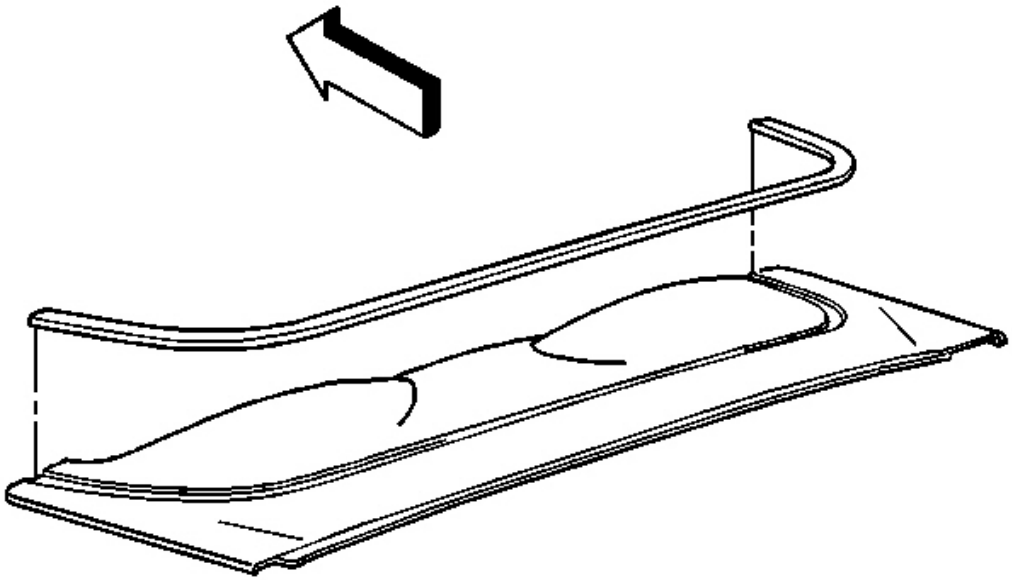

Fig. 212: Folding Top Stowage Compartment Lid Protector/Molding
Courtesy of GENERAL MOTORS CORP.

1. Using a heat gun preheat the adhesive on the new protector.
2. Peel the backing from the protector.
3. Position the protector inside the lid depression with the ends of the protector flush with the forward edge of the lid.
4. Press the protector firmly into the lid depression.

ROOF LIFT OFF PANEL FRONT LATCH HANDLE REPLACEMENT

Removal Procedure

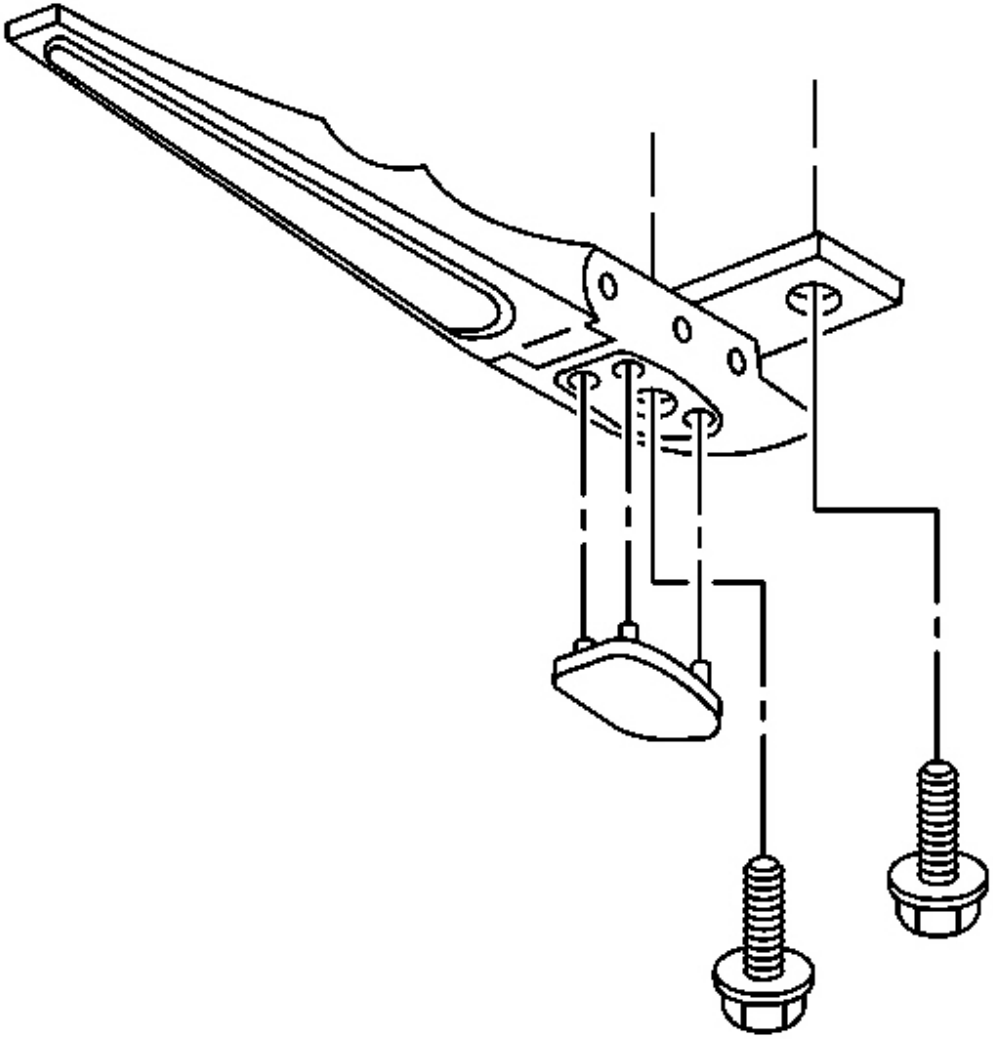

Fig. 213: Bolt & Latch Handle Assembly
Courtesy of GENERAL MOTORS CORP.

1. Mark the location of the latch.
2. Rotate the handle and remove the exposed bolt.
3. Remove the trim cover from the latch.
4. Rotate the handle aligning the hole in the handle with the bolt.
5. Remove the bolt and the latch handle assembly.

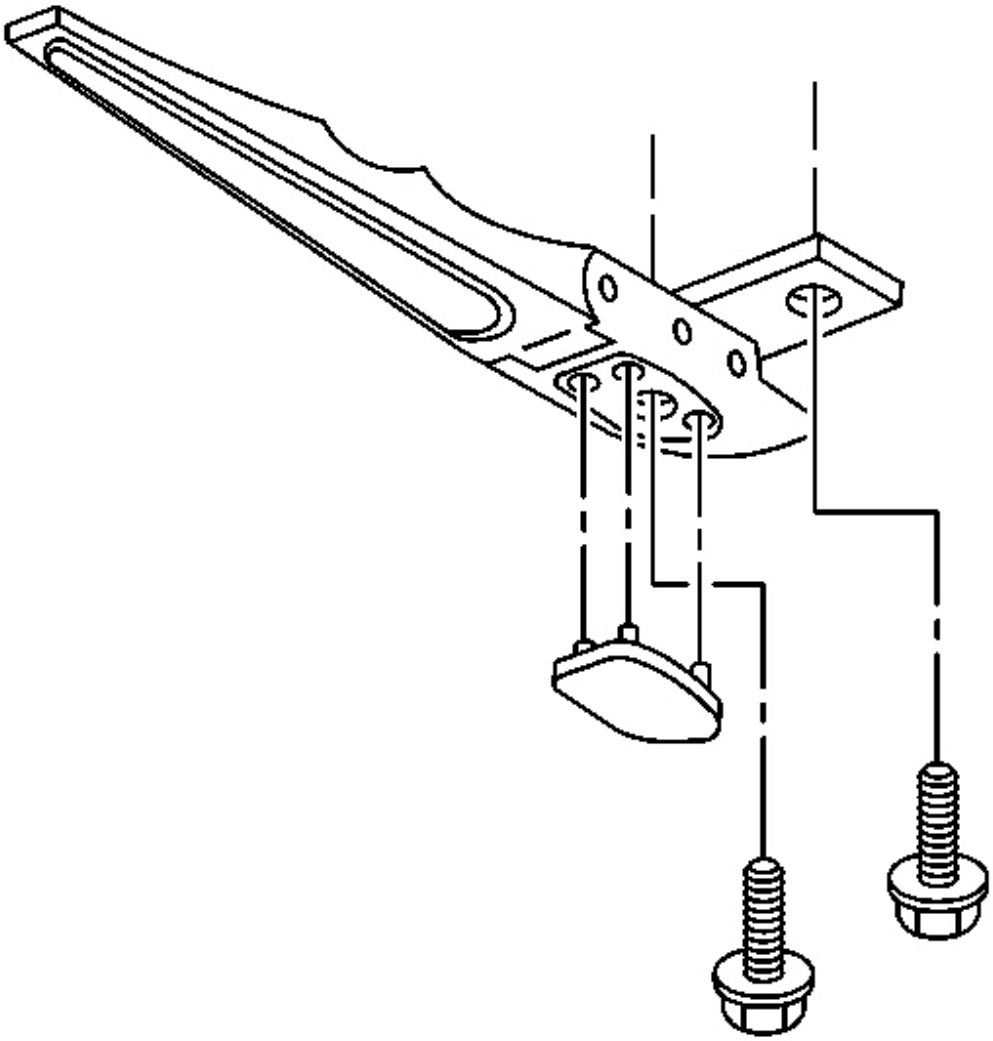

Fig. 214: Bolt & Latch Handle Assembly
Courtesy of GENERAL MOTORS CORP.

IMPORTANT: When installing a new latch leave the spacing collar on the latch handle to achieve a minimum of 2 mm (0.08 in) clearance to the striker.

1. Remove the latch handle trim cover if installed.

2. Apply removable thread locker GM P/N 12345382 Canadain P/N 10953489 to the latch mounting bolts.
3. Align the latch to the marks on the roof made before removing the latch.
4. Loosely install the latch handle to the roof.
5. Rotate the handle to access the inboard mounting bolt.
    - When installing a latch handle with a spacing collar installed apply forward pressure to the handle while tightening the mounting bolts.
    - If the spacing collar is not available, position the latch handle with a minimum of 2 mm (0.08 in) clearance to the latch.

NOTE: Refer to Fastener Notice in Cautions and Notices.

6. Install the inboard bolt.

   Tighten: Tighten the latch handle inboard bolt to 18 N.m (13 lb ft).

7. Rotate the handle.
8. Install the outboard bolt.

   Tighten: Tighten the latch handle outboard bolt to 18 N.m (13 lb ft).

9. Remove the spacing collar.
10. Completely engage the latch handle.
11. Position the trim cover to the latch handle and press until fully seated.

ROOF LIFT OFF PANEL REAR LATCH REPLACEMENT

Removal Procedure

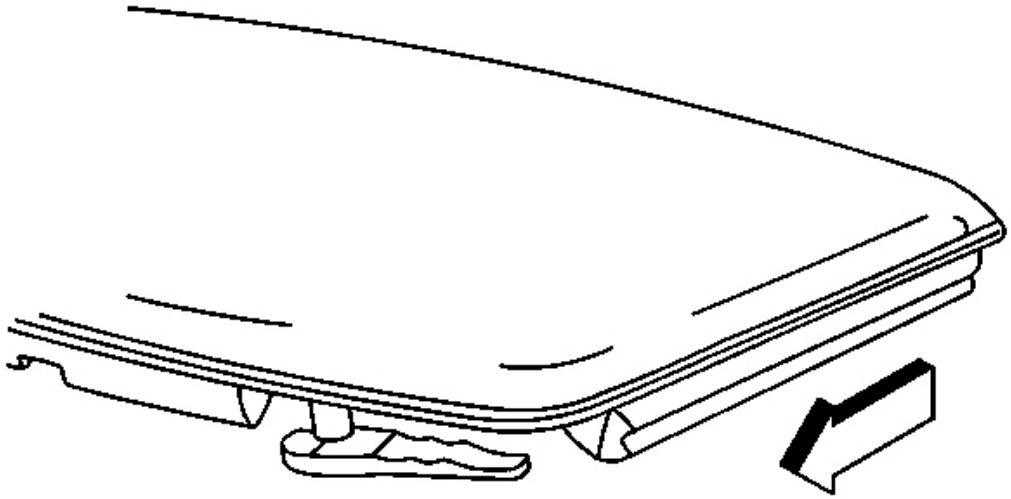

Fig. 215: Sunroof View
Courtesy of GENERAL MOTORS CORP.

1. Remove the roof lift off panel.

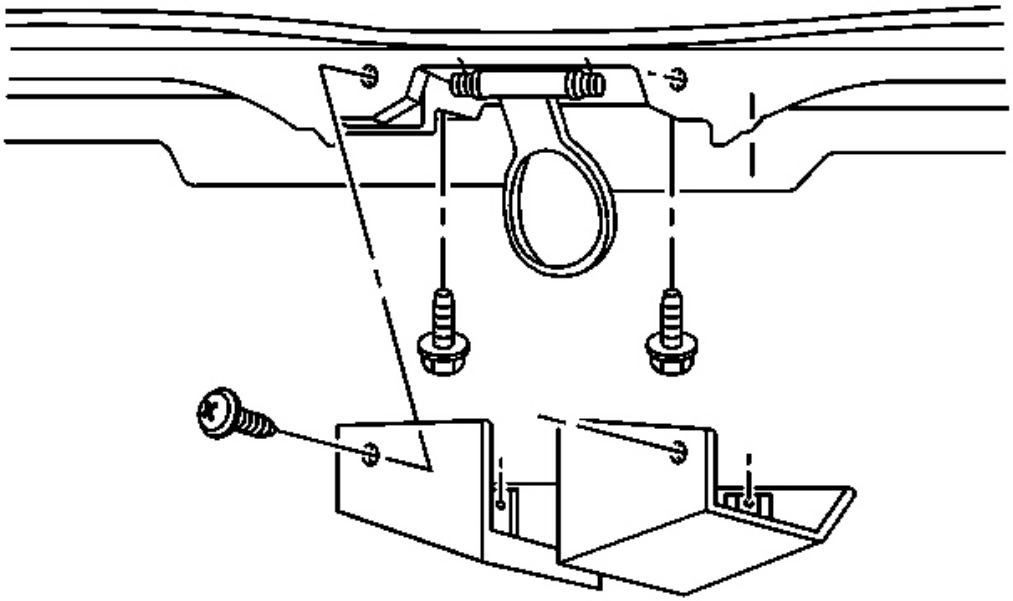

Fig. 216: Latch Cover To Roof Panel
Courtesy of GENERAL MOTORS CORP.

2. Remove the screws attaching the latch cover.
3. Remove the latch cover from the roof panel.

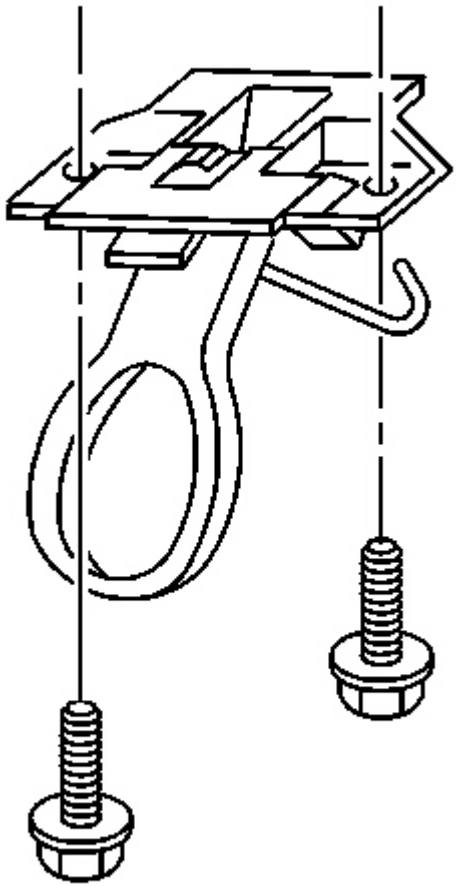

Fig. 217: Latch To Roof Panel
Courtesy of GENERAL MOTORS CORP.

4. Remove the bolts from the latch.
5. Remove the latch from the roof panel.

Installation Procedure

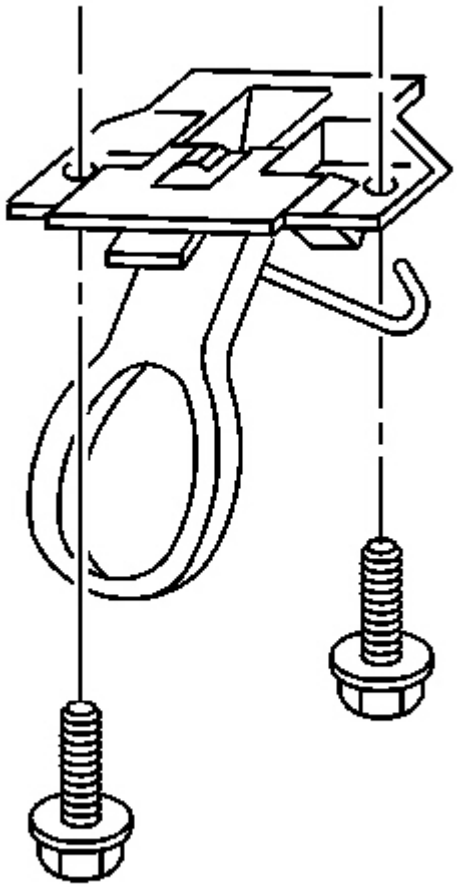

Fig. 218: Latch To Roof Panel
Courtesy of GENERAL MOTORS CORP.

1. Position the latch to the roof panel.

NOTE: **Refer to Fastener Notice in Cautions and Notices.**

2. Install the bolts to the latch.

Tighten: Tighten the roof rear latch bolts to 10 N.m (89 lb in).

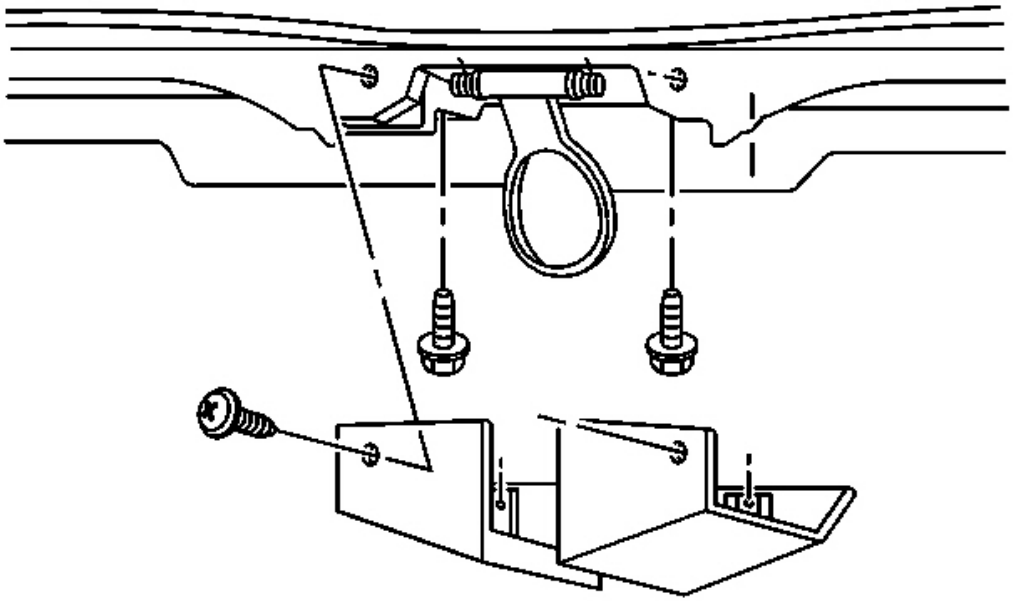

Fig. 219: Latch Cover To Roof Panel
Courtesy of GENERAL MOTORS CORP.

3. Install the latch cover and attaching screws.

   Tighten: Tighten the roof rear latch cover screws to 3 N.m (27 lb in).

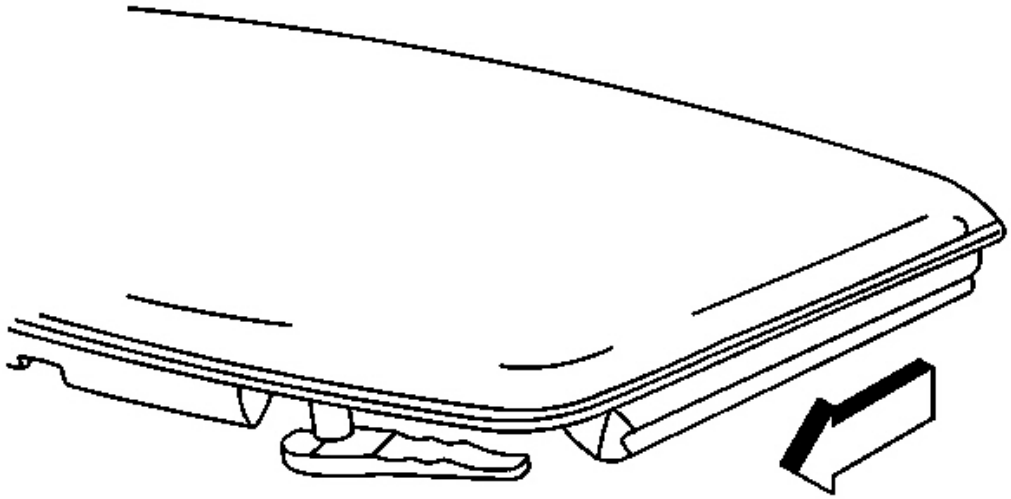

Fig. 220: Sunroof View
Courtesy of GENERAL MOTORS CORP.

4. Install the roof lift off panel.
5. Adjust if necessary. Refer to **Roof Lift Off Panel Adjustment** .

ROOF LIFT OFF PANEL REAR LOCATOR REPLACEMENT

Removal Procedure

1. Remove the rear roof bow center interior trim panel. Refer to **Trim Panel Replacement - Rear Roof Bow** in Interior Trim.

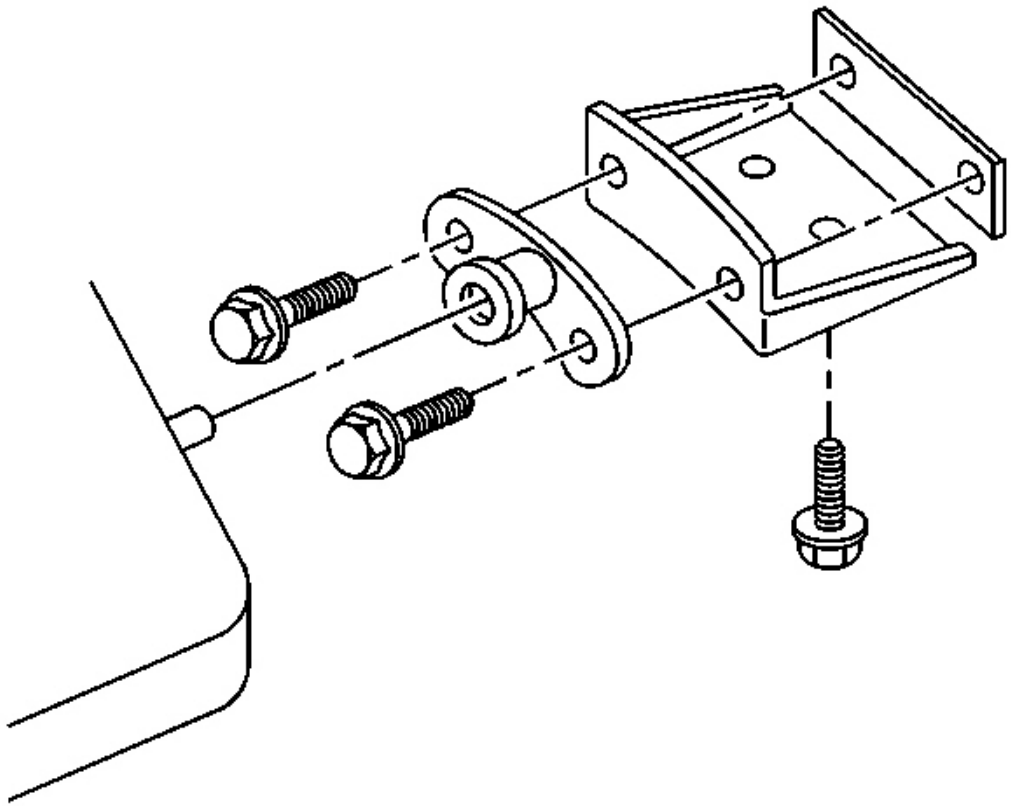

Fig. 221: Locator Bracket Mounting Bolts
Courtesy of GENERAL MOTORS CORP.

2. Mark the location of the locator bracket.
3. Remove the locator bracket mounting bolts.
4. Remove the locator and bracket.
5. Mark the location of the locator.
6. Remove the locator from the bracket.

Installation Procedure

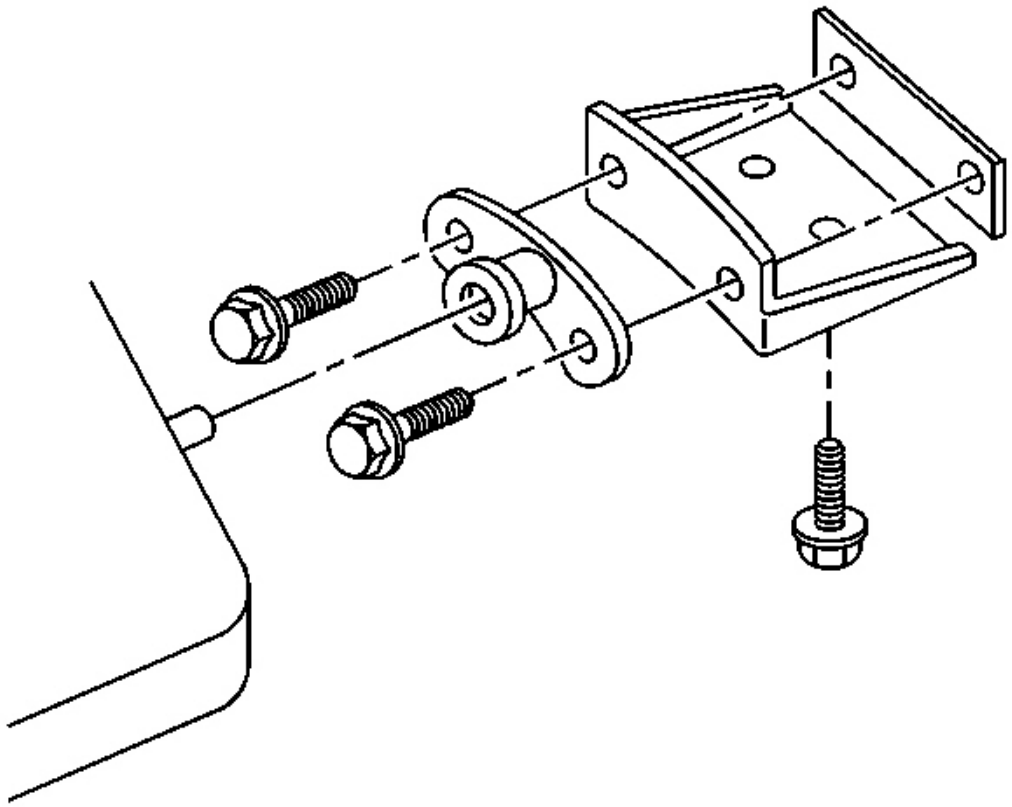

Fig. 222: Locator Bracket Mounting Bolts
Courtesy of GENERAL MOTORS CORP.

NOTE: Refer to Fastener Notice in Cautions and Notices.

1. Install the rear locator to the locator bracket.

   Tighten: Tighten the roof rear locator to locator bracket bolts to 10 N.m (89 lb in).

2. Install the bracket with the locator to the roof center bow.

   Tighten: Tighten the roof rear locator bracket bolts to 50 N.m (37 lb ft).

3. Check and adjust the roof panel as necessary. Refer to **Roof Lift Off Panel Adjustment** .
4. Install the roof bow center interior trim panel. Refer to **Trim Panel Replacement - Rear Roof Bow** in Interior trim.

ROOF LIFT OFF PANEL REAR LOCATOR PIN REPLACEMENT

Removal Procedure

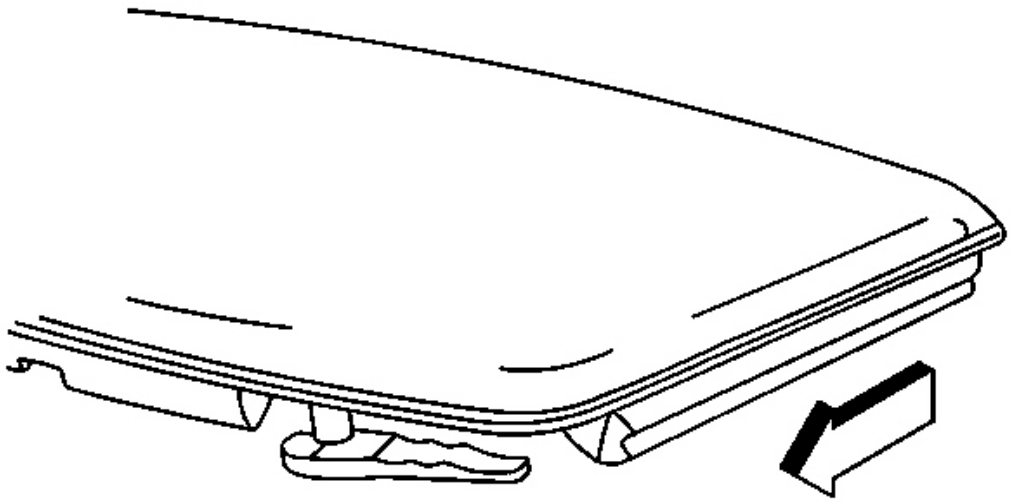

Fig. 223: Sunroof View
Courtesy of GENERAL MOTORS CORP.

1. Remove the roof lift off panel.

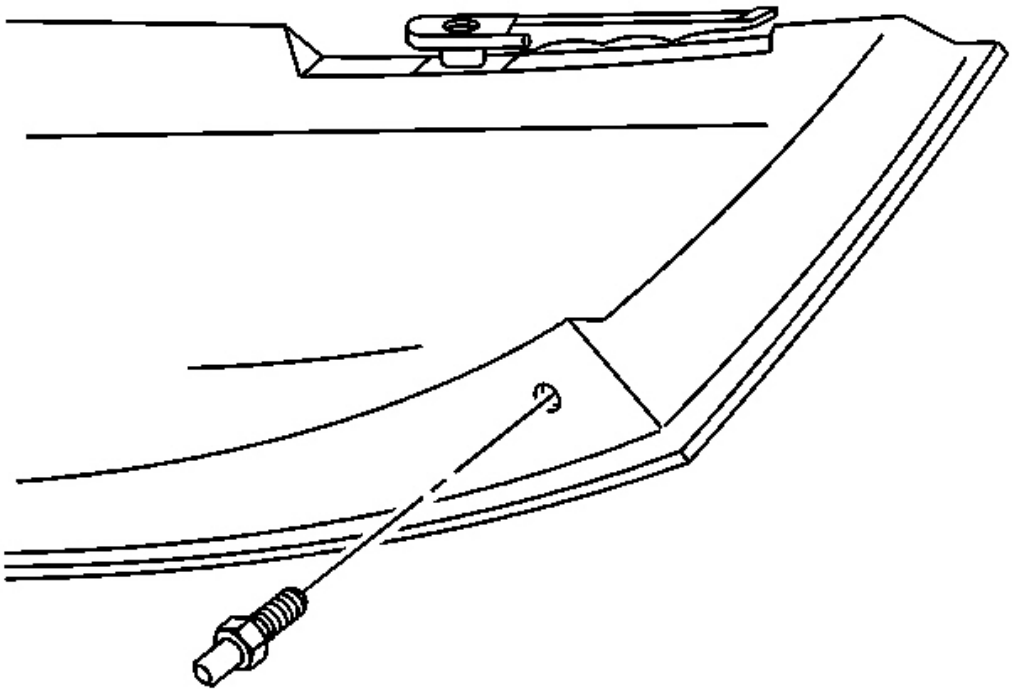

Fig. 224: Roof Panel Rear Locator Pin To Roof Panel
Courtesy of GENERAL MOTORS CORP.

2. Remove the roof panel rear locator pin from the roof panel.

Installation Procedure

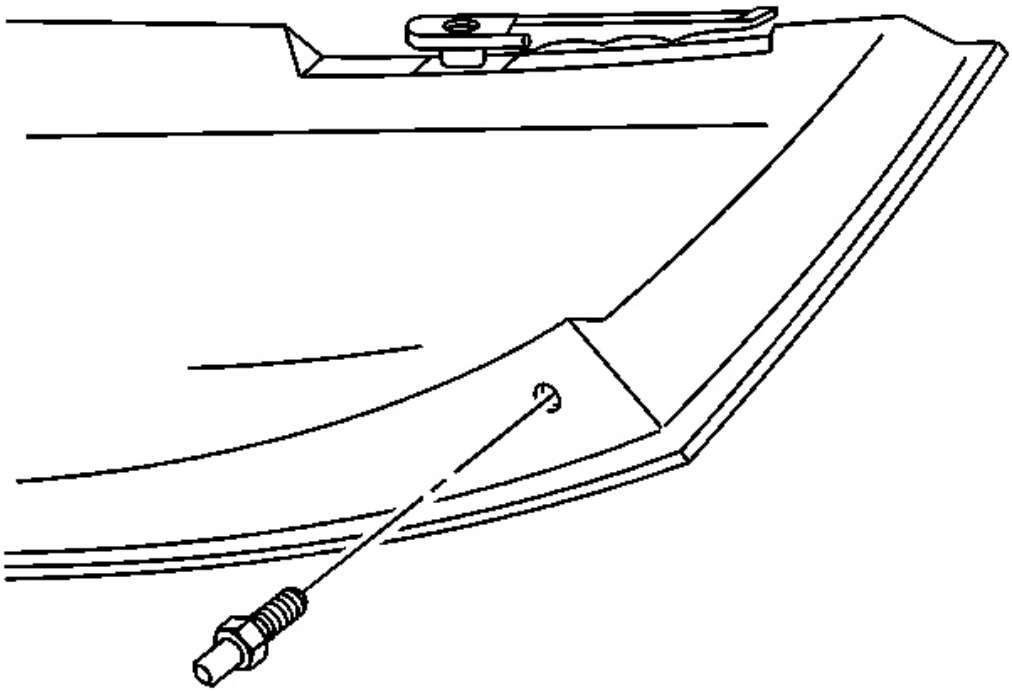

Fig. 225: Roof Panel Rear Locator Pin To Roof Panel
Courtesy of GENERAL MOTORS CORP.

NOTE: Refer to Fastener Notice in Cautions and Notices.

1. Install the rear roof panel locator pin.

   Tighten: Tighten the roof rear locator pin to 25 N.m (18 lb ft).

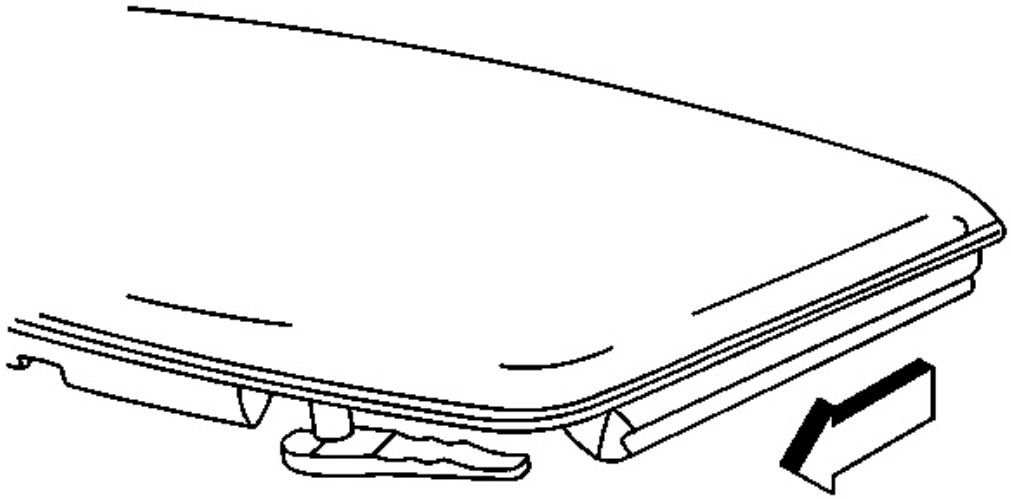

Fig. 226: Sunroof View
Courtesy of GENERAL MOTORS CORP.

2. Install the roof panel.

ROOF LIFT OFF PANEL REAR LATCH STRIKER REPLACEMENT

Removal Procedure

1. Remove the roof bow center interior trim panel. Refer to **Trim Panel Replacement - Rear Roof Bow** in Interior Trim.

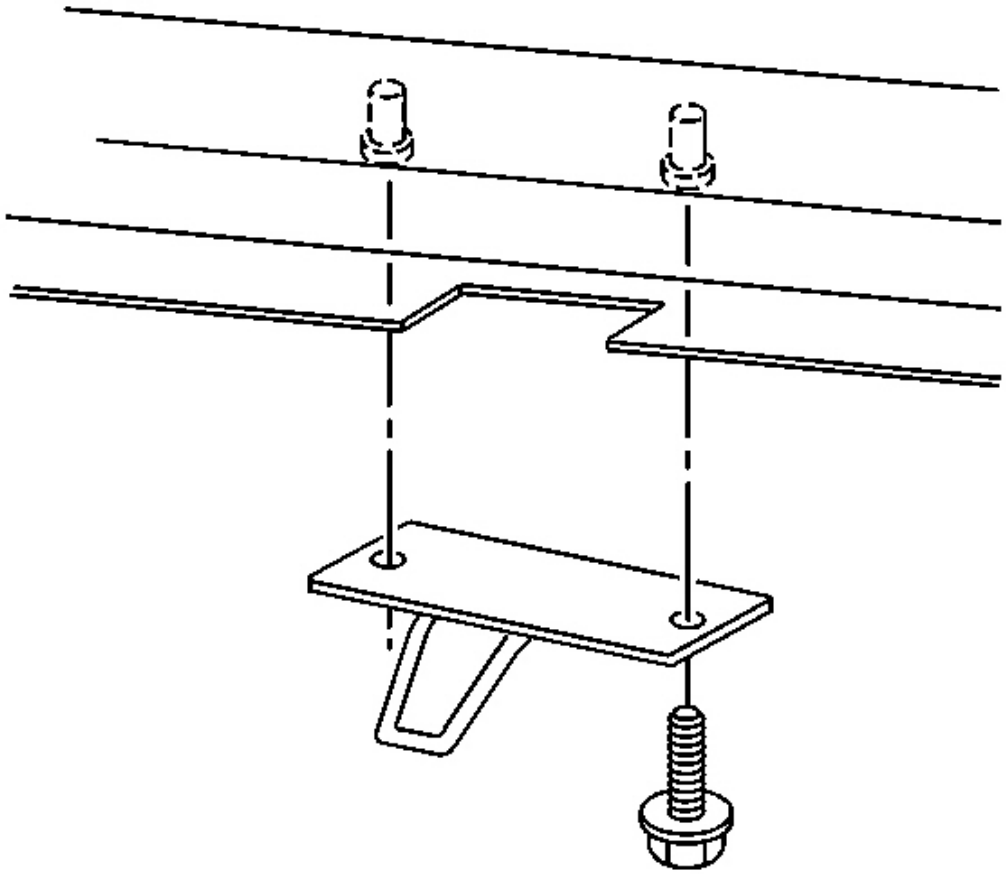

Fig. 227: Roof Bow Center Interior Trim Panel
Courtesy of GENERAL MOTORS CORP.

2. Mark the location of the striker.
3. Remove the bolts attaching the striker.
4. Remove the striker.

Installation Procedure

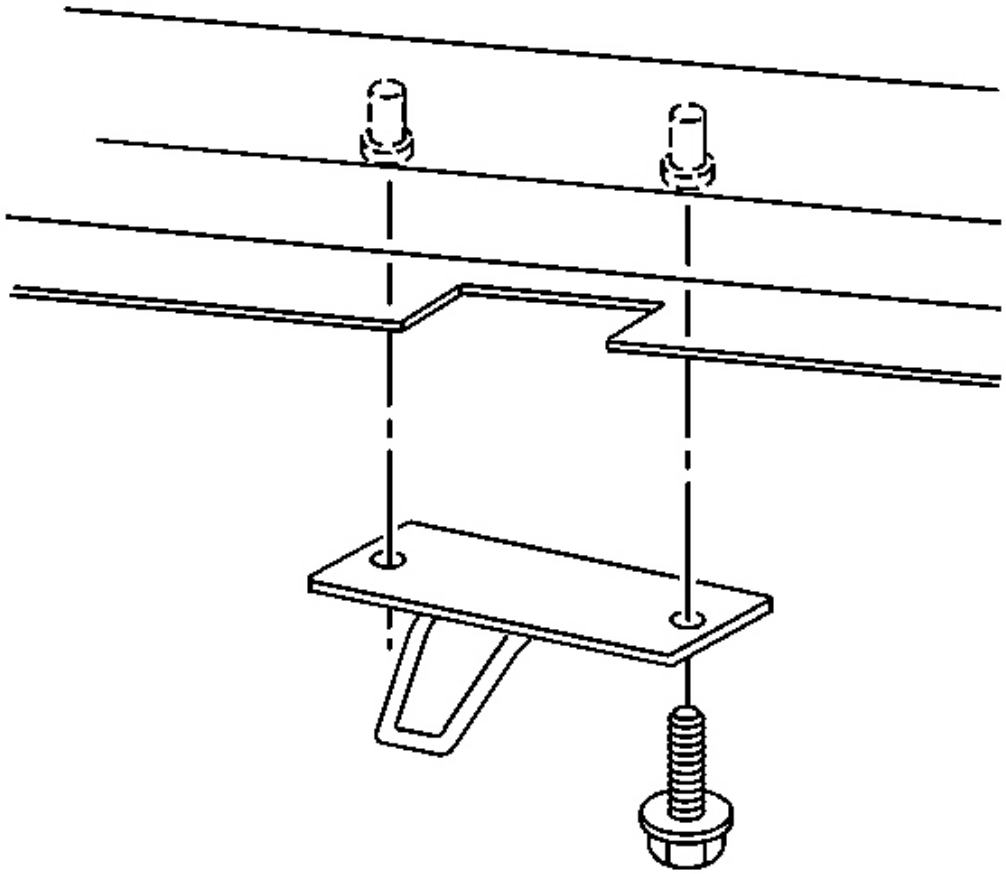

Fig. 228: Roof Bow Center Interior Trim Panel
Courtesy of GENERAL MOTORS CORP.

1. Position the striker to the marks made before removal.

   NOTE: Refer to Fastener Notice in Cautions and Notices.

2. Install the striker attaching bolts.

   Tighten: Tighten the roof rear latch striker bolts to 10 N.m (89 lb in).

3. Install the roof bow center interior trim panel. Refer to **Trim Panel Replacement - Rear Roof Bow** in Interior Trim.

ROOF LIFT OFF PANEL FRONT LATCH HANDLE STRIKER

Removal Procedure

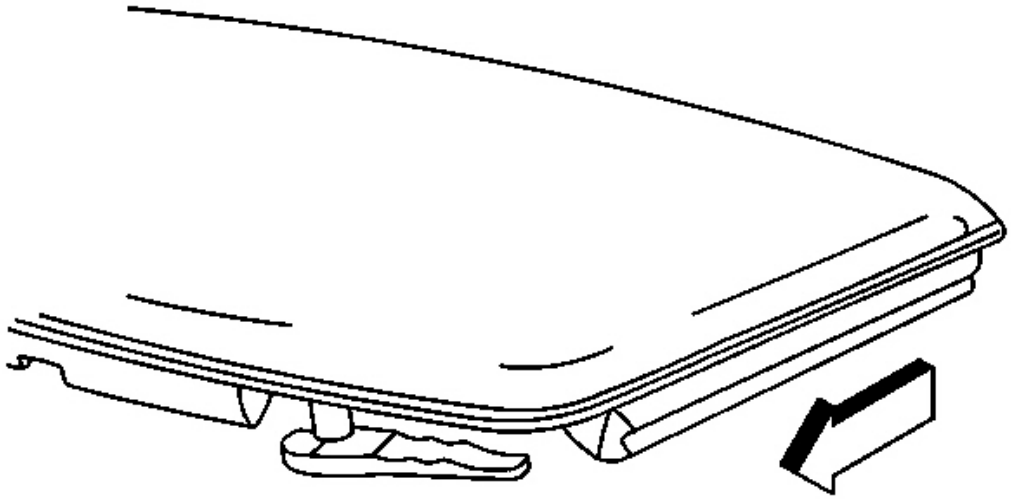

Fig. 229: Sunroof View
Courtesy of GENERAL MOTORS CORP.

1. Remove the roof panel.

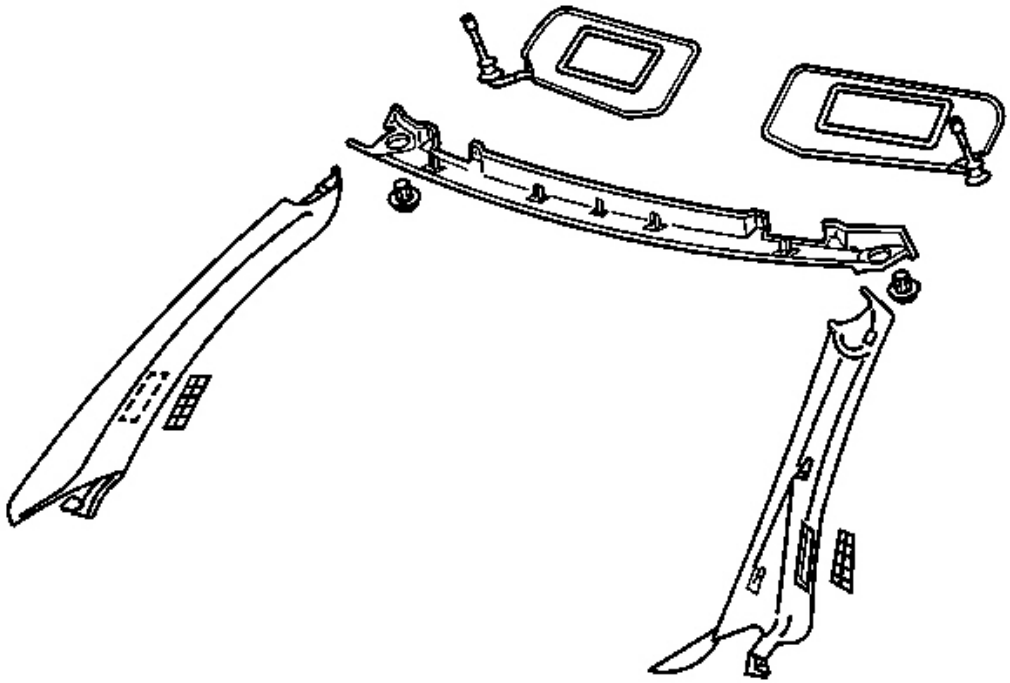

Fig. 230: Latch Cover To Roof Panel
Courtesy of GENERAL MOTORS CORP.

2. Remove the sunshade. Refer to **Sunshade Replacement** in Interior Trim.
3. Remove the side and upper garnish moldings. Refer to **Windshield Upper Garnish Molding Replacement** in Interior Trim.

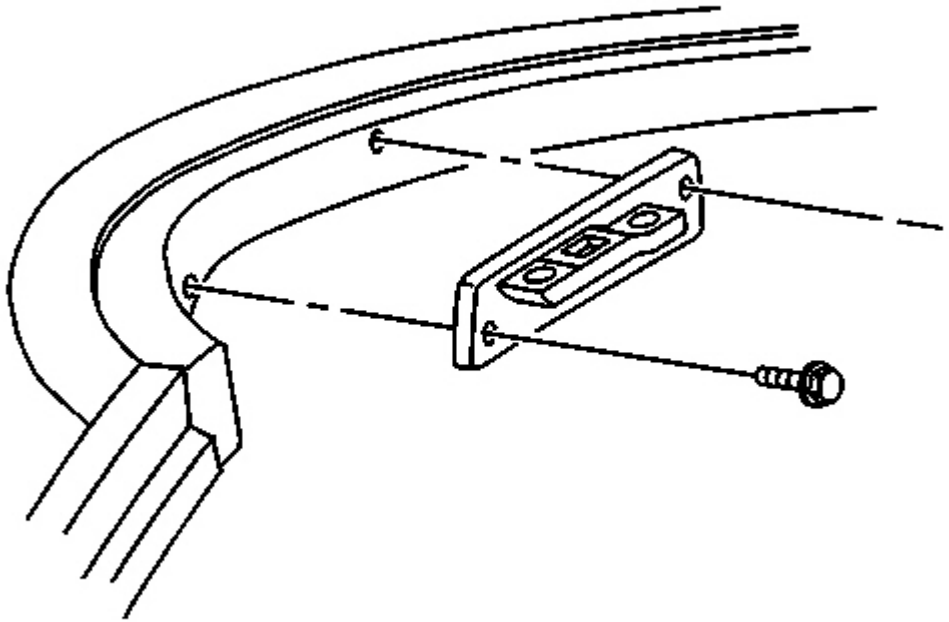

Fig. 231: Bolts At Striker
Courtesy of GENERAL MOTORS CORP.

4. Mark the location of the striker to aid in installation.
5. Remove the bolts attaching the striker.
6. Remove the striker.

Installation Procedure

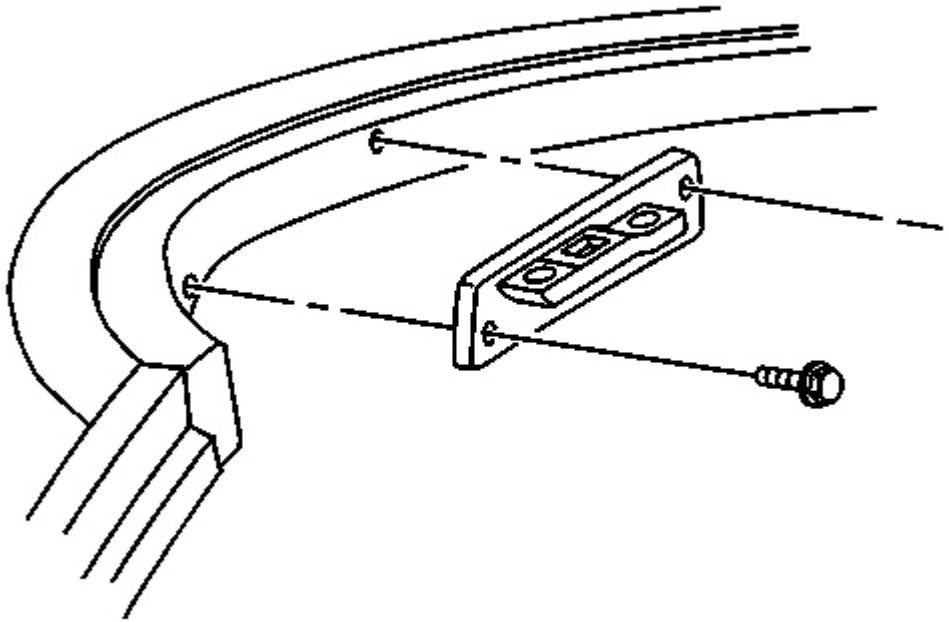

Fig. 232: Bolts At Striker
Courtesy of GENERAL MOTORS CORP.

1. Align the striker with the marks made before removal.

NOTE: **Refer to Fastener Notice in Cautions and Notices.**

2. Install the striker attaching bolts.

Tighten: Tighten the roof front latch handle striker bolts to 10 N.m (89 lb in).

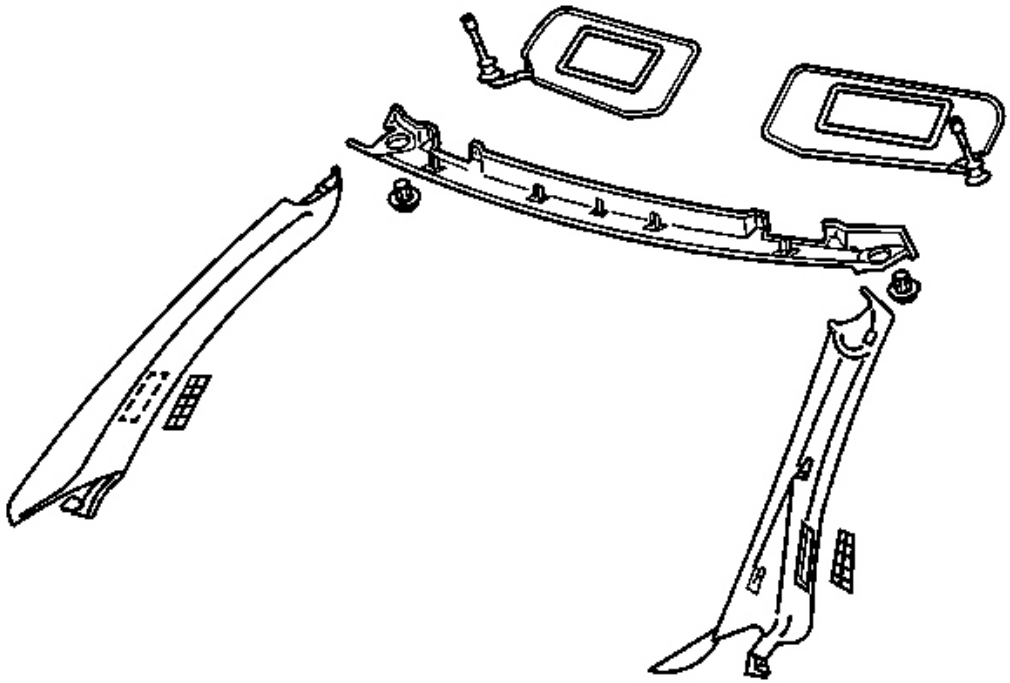

Fig. 233: Latch Cover To Roof Panel
Courtesy of GENERAL MOTORS CORP.

3. Install the upper and side garnish moldings. Refer to **Windshield Upper Garnish Molding Replacement** in Interior Trim.
4. Install the sunshade. Refer to **Sunshade Replacement** in Interior Trim.

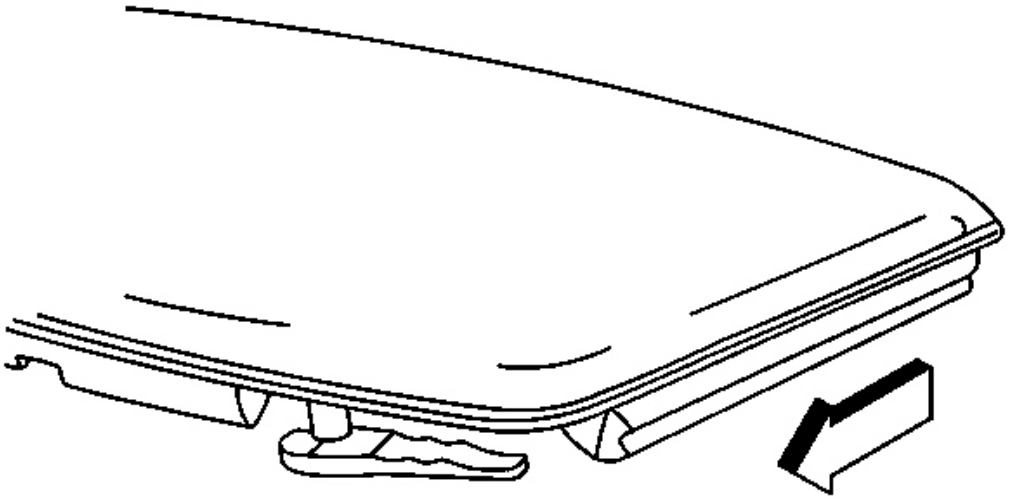

Fig. 234: Sunroof View
Courtesy of GENERAL MOTORS CORP.

5. Install the roof panel.
6. Adjust if necessary. Refer to **Roof Lift Off Panel Adjustment** .

ROOF LIFT OFF PANEL ADJUSTMENT

1. Perform one or more of the following five adjustment procedures to properly align the roof lift off panel.

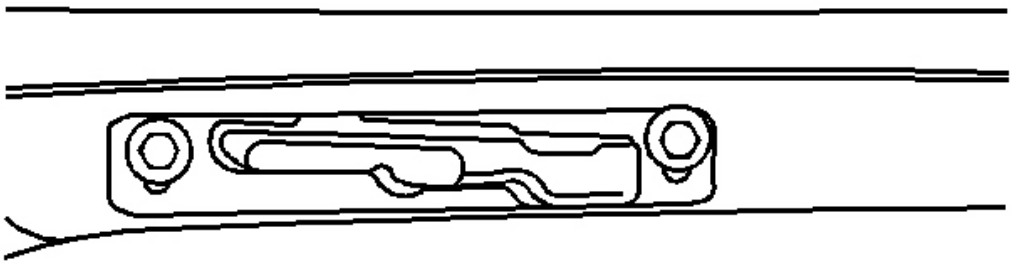

Fig. 235: Roof Front Latch Handle Striker Bolts

Courtesy of GENERAL MOTORS CORP.

2. To adjust the front striker for up down roof alignment perform the following steps:
3. Remove the windshield upper garnish molding. Refer to **Windshield Upper Garnish Molding Replacement** in Interior Trim.
    1. For major up down roof adjustment loosen the striker bolts and reposition the latch striker up or down.
    2. For minor up or down roof adjustment loosen the striker outboard bolt and slightly loosen the inboard bolt, pivot the striker on the inboard bolt in 2 mm (0.08 in) increments up or down.

    NOTE: Refer to Fastener Notice in Cautions and Notices.

    3. Tighten the striker bolts.

    Tighten: Tighten the roof front latch handle striker bolts to 10 N.m (89 lb in).

    4. When the striker is properly adjusted the handle will snap closed.
4. Install the windshield upper garnish molding. Refer to **Windshield Upper Garnish Molding Replacement** in Interior Trim.

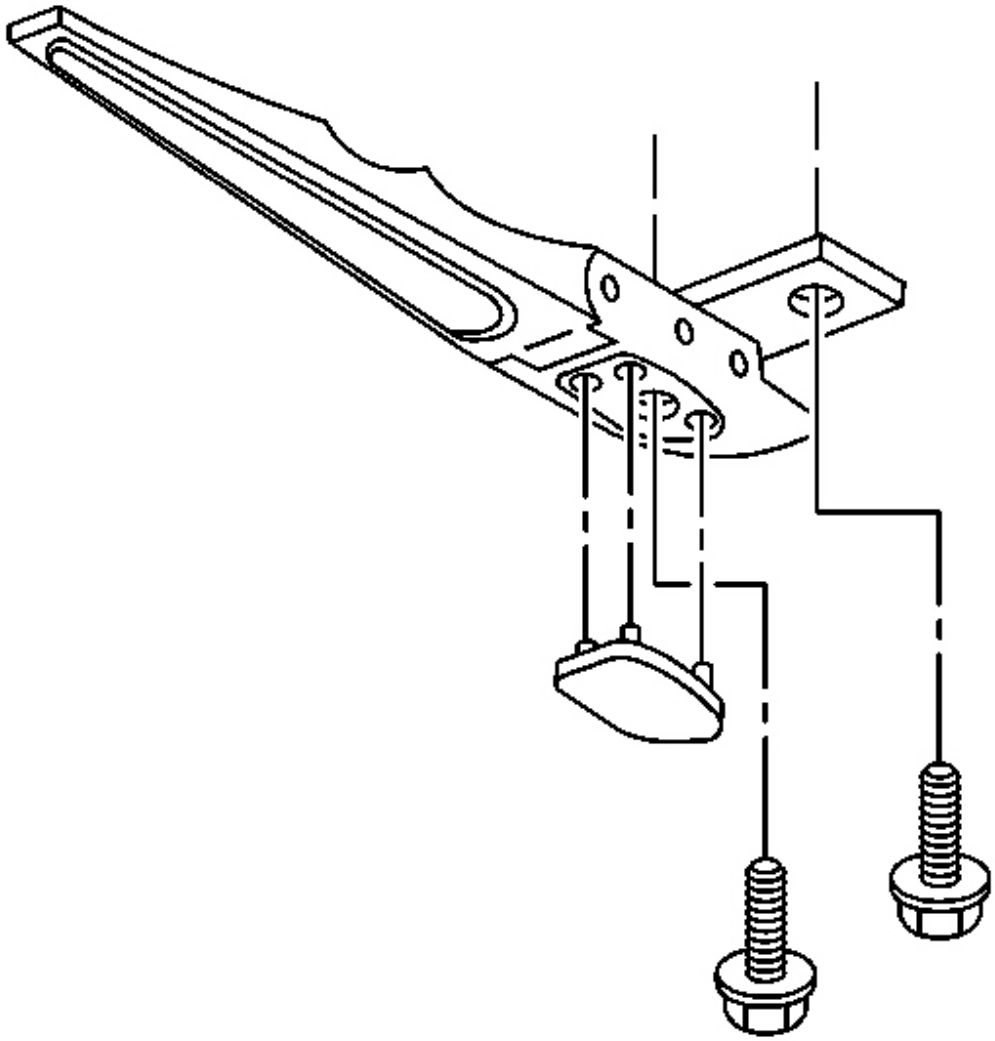

Fig. 236: Bolt & Latch Handle Assembly
Courtesy of GENERAL MOTORS CORP.

5. To adjust the front latch handle forward or rearward perform the following steps:
    1. Loosen the latch handle bolts.
    2. Position the latch handle forward or rearward. Maintain a minimum of 2 mm (0.08 in) clearance between latch handle and the latch striker to avoid squeaks and rattles.
    3. Assure the latch handle base is parallel to the striker to provide clearance to the sunshade mirror door.

4. Tighten the latch handle bolts.

   Tighten: Tighten the roof front latch handle bolts to 13 N.m (10 lb ft).

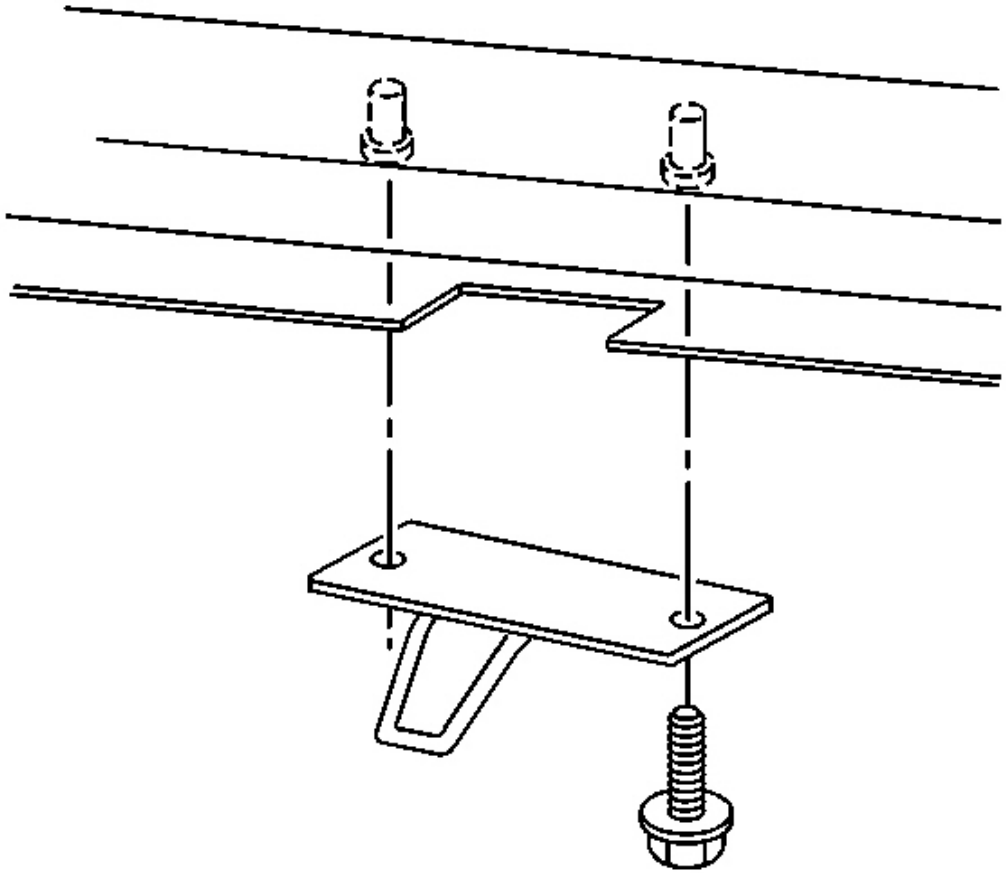

Fig. 237: Roof Bow Center Interior Trim Panel
Courtesy of GENERAL MOTORS CORP.

6. For major rear latch adjustment adjust the rear latch striker performing the following steps:
   1. Remove the roof lift off panel.
   2. Remove the roof bow center interior trim panel. Refer to **Trim Panel Replacement - Rear Roof Bow** in Interior Trim.
   3. Loosen the rear latch striker attaching bolts.
   4. Adjust the position of the latch striker forward or rearward for major adjustment.
   5. Tighten the striker attaching bolts.

Tighten: Tighten the roof rear striker bolts to 10 N.m (89 lb in).

6. Install the roof lift off panel.

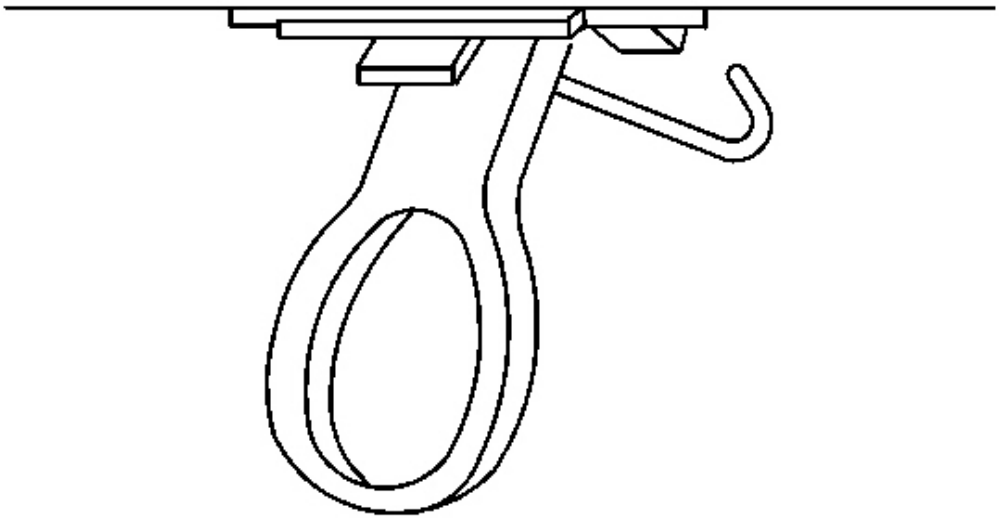

Fig. 238: Rear Latch
Courtesy of GENERAL MOTORS CORP.

7. For minor rear latch adjustment, adjust the latch handle hook one turn at a time to achieve moderate pressure to the latch as follows.
    1. Remove the roof lift off panel.
    2. Loosen the set screw locking the latch hook.
    3. Turn the hook in to tighten or out to loosen.
    4. Tighten the set screw.
    5. Install the roof panel.

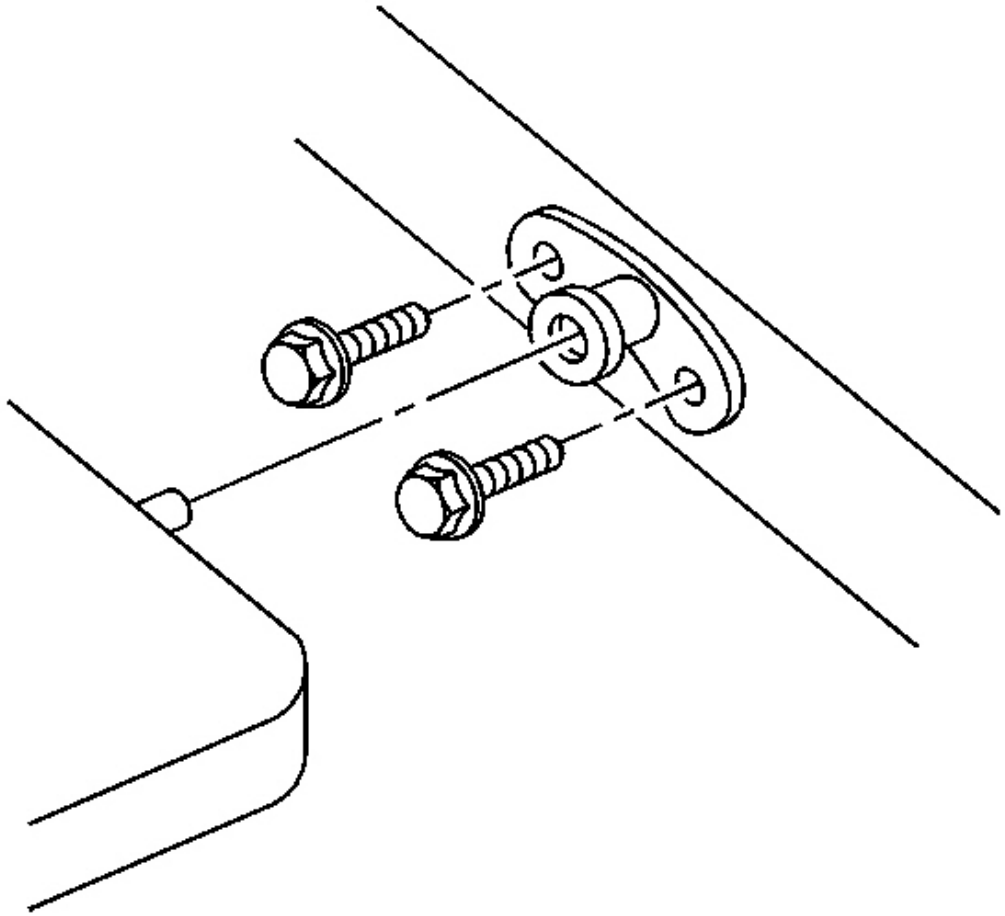

Fig. 239: Roof Rear Locator To Locator Bracket Bolts
Courtesy of GENERAL MOTORS CORP.

8. To adjust the rear locator perform the following steps:
    1. With the roof installed on the vehicle loosen the locator mounting bolts.
    2. Reposition the locator.
    3. Tighten the mounting bolts.

    Tighten: Tighten the roof rear locator to locator bracket bolts to 10 N.m (89 lb in).

ROOF LIFT OFF PANEL MOLDING REPLACEMENT

Removal Procedure

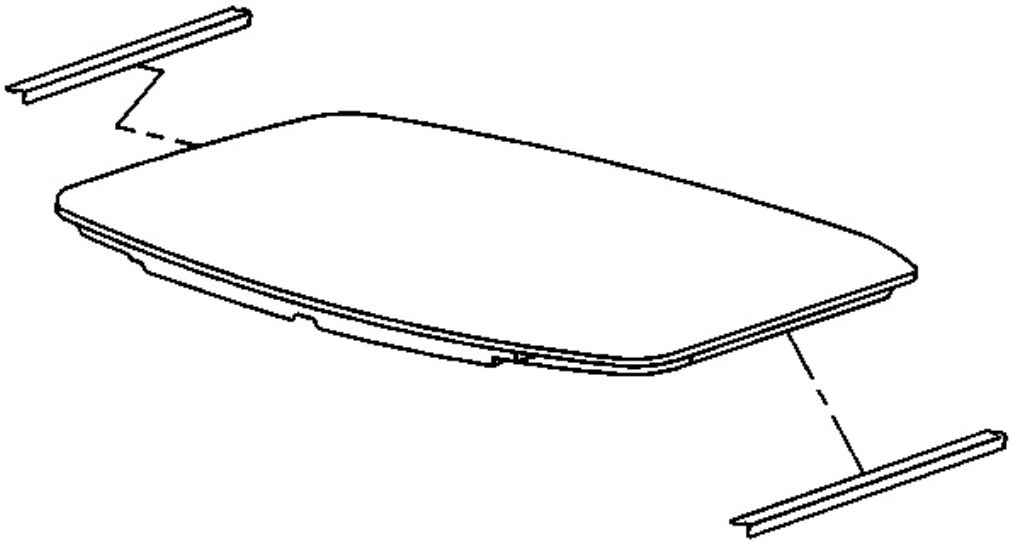

Fig. 240: Edge Roof Panel At Protect Panel
Courtesy of GENERAL MOTORS CORP.

1. Apply tape to the edge of the roof panel to protect the panel.
2. Remove the molding by placing a block of wood against the molding and tapping the block of wood with a hammer.

Installation Procedure

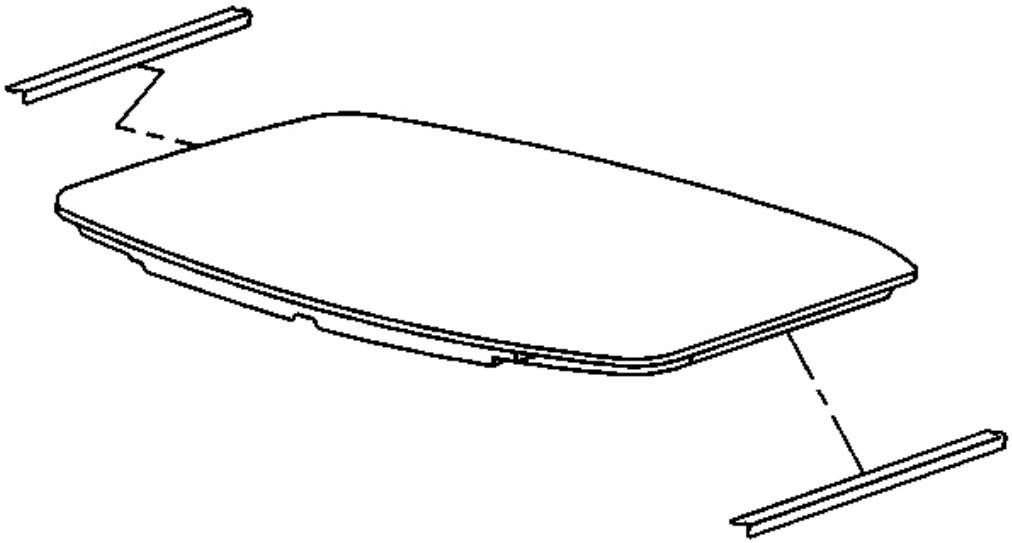

Fig. 241: Edge Roof Panel At Protect Panel
Courtesy of GENERAL MOTORS CORP.

1. Align the locator on the molding to the corresponding locator on the edge of the roof panel.
2. Install the molding by lightly tapping with a rubber mallet until fully seated.
3. Remove the protective tape from the roof panel.

WEATHERSTRIP REPLACEMENT - LIFT OFF PANEL

Removal Procedure

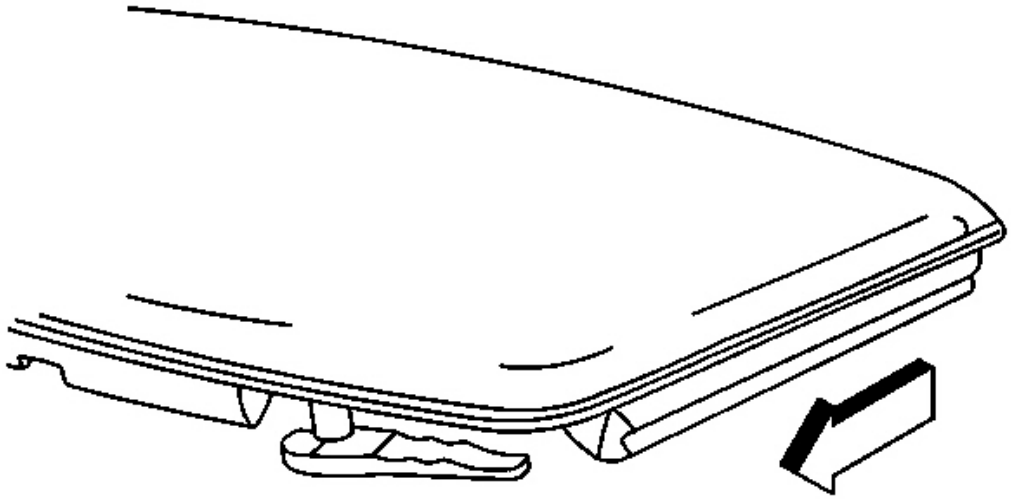

Fig. 242: Sunroof View
Courtesy of GENERAL MOTORS CORP.

1. Remove the roof lift off panel.

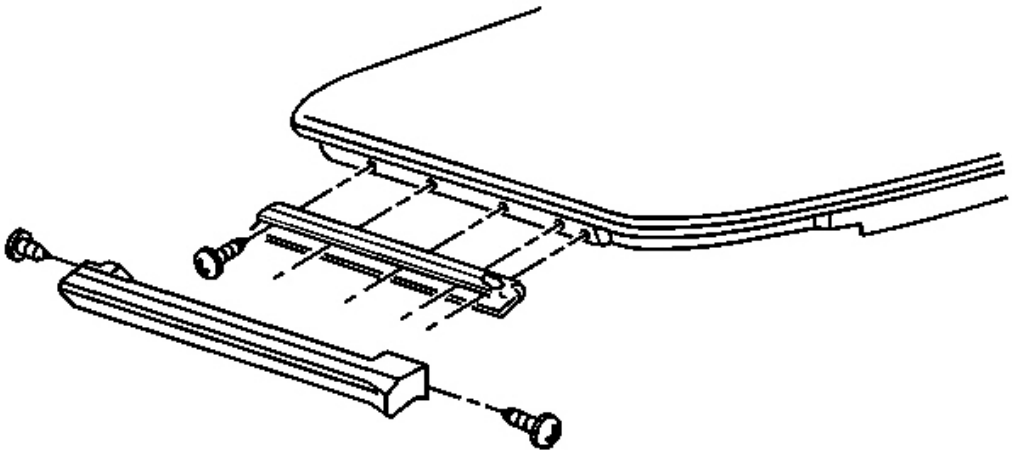

Fig. 243: Weatherstrip To Weatherstrip Retainer

Courtesy of GENERAL MOTORS CORP.

2. Remove the screws from the ends of the weatherstrip.
3. Remove the weatherstrip from the weatherstrip retainer.
4. Clean the surface with 3M(tm) adhesive remover P/N 8984 or equivalent.

Installation Procedure

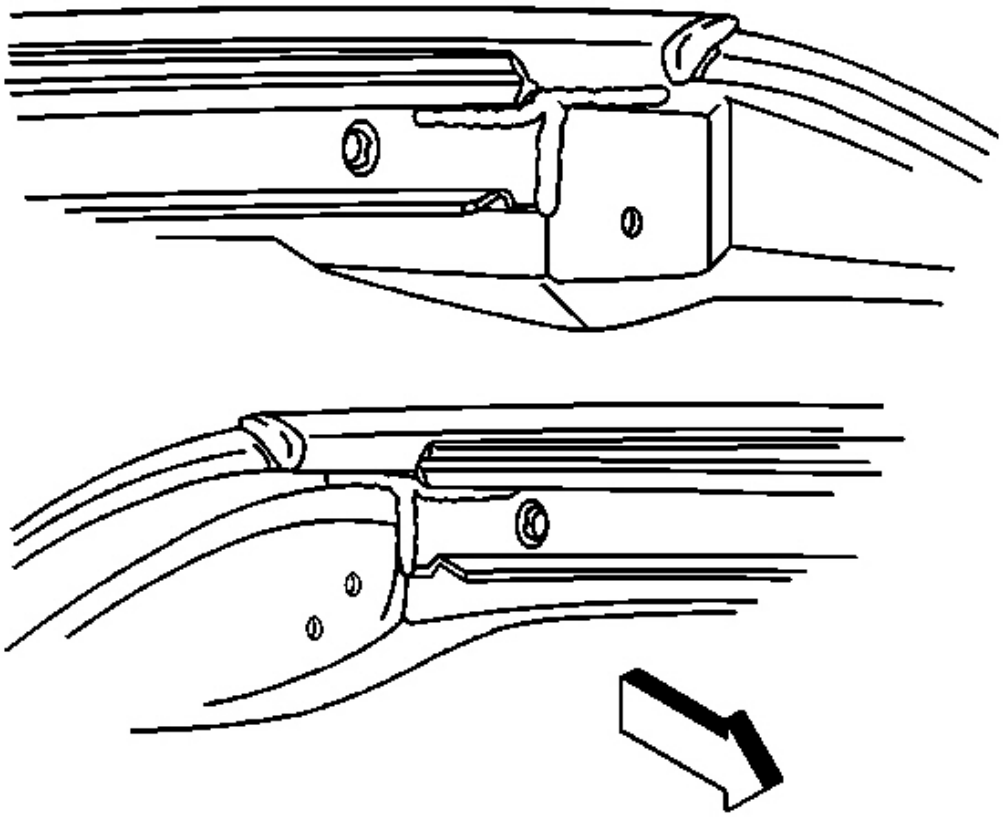

Fig. 244: Bead Sealer To Retainer & Roof
Courtesy of GENERAL MOTORS CORP.

1. Apply a 6.0 X 40 mm (0.25 X 1.5 in) bead of sealer GM P/N 12345739 Canadain P/N 10953541 to the front and rear corners of the retainer as shown in the illustration.
    - Apply the bead of sealer to the roof.
    - Apply the bead of sealer to the retainer.

- Apply the bead of sealer to the ends of the retainer.

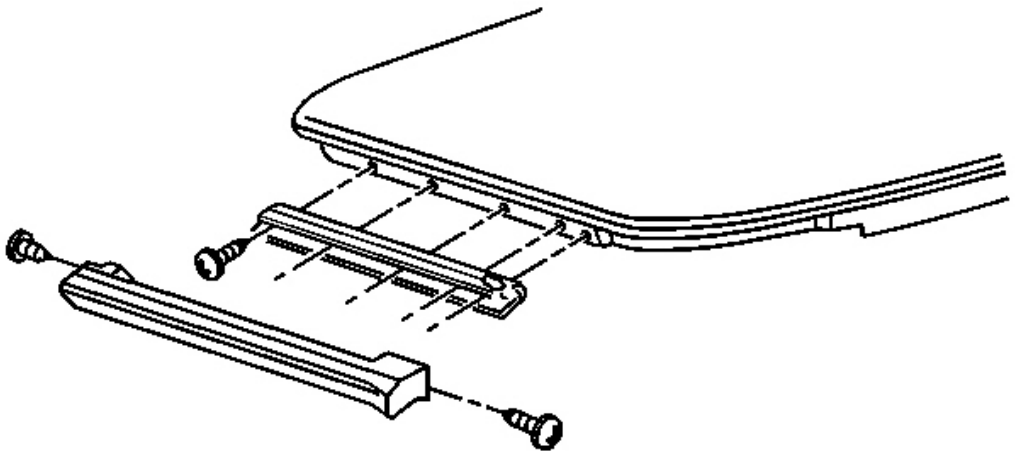

Fig. 245: Weatherstrip To Weatherstrip Retainer
Courtesy of GENERAL MOTORS CORP.

IMPORTANT: Do not touch the adhesive backing on the new weatherstrip.

2. Remove the protective backing from the foam tape on the ends of the new weatherstrip, or install two sided tape 3M(tm) P/N 06377 or equivalent to the ends of a reused weatherstrip.
3. Install the weatherstrip into the retainer using a nylon spatula or your fingers. Start at the forward edge and work rearward.

NOTE: Refer toFastener Notice in Cautions and Notices.

4. Install the screws at the ends of the weatherstrip. Hold the weatherstrip to prevent the weatherstrip from rotating.

   Tighten: Tighten the side weatherstrip screws to 3 N.m (27 lb in).

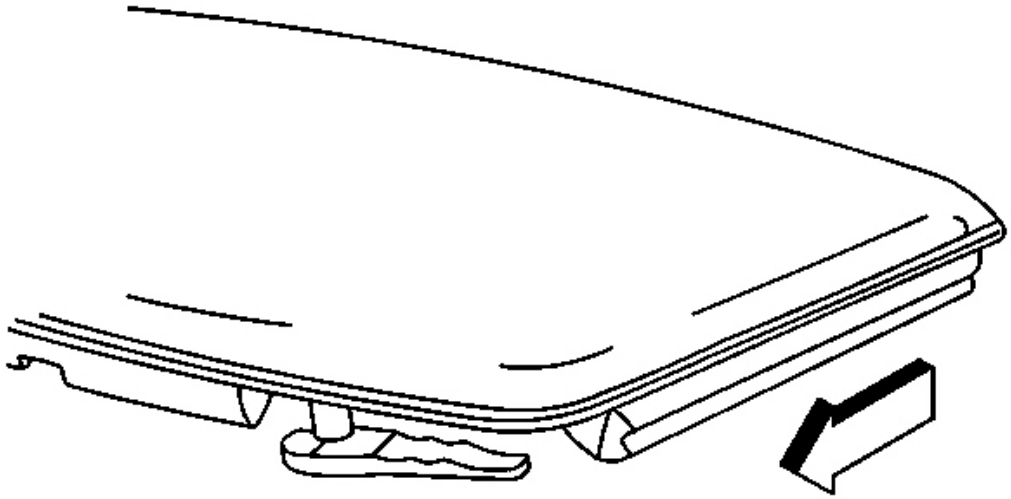

Fig. 246: Sunroof View
Courtesy of GENERAL MOTORS CORP.

5. Install the roof panel.

WEATHERSTRIP RETAINER REPLACEMENT - LIFT OFF PANEL

Removal Procedure

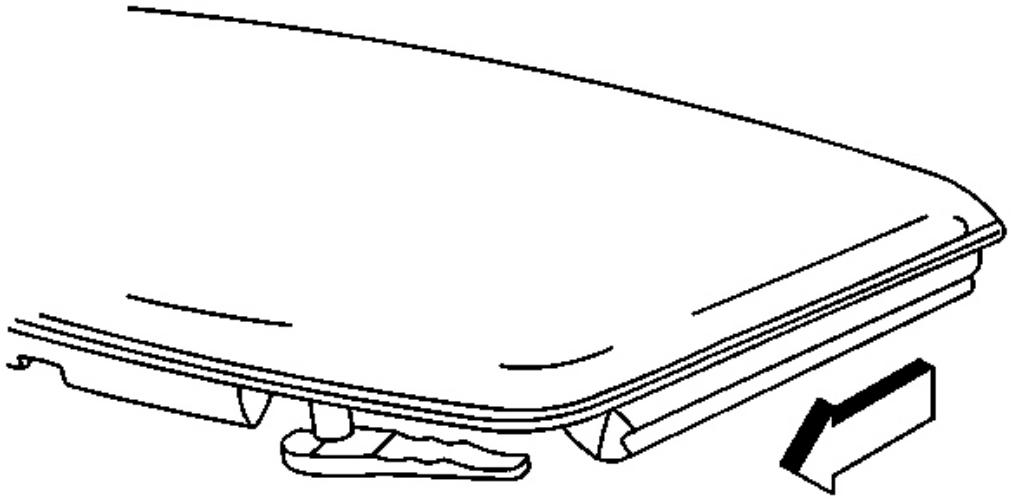

Fig. 247: Sunroof View
Courtesy of GENERAL MOTORS CORP.

1. Remove the roof panel.

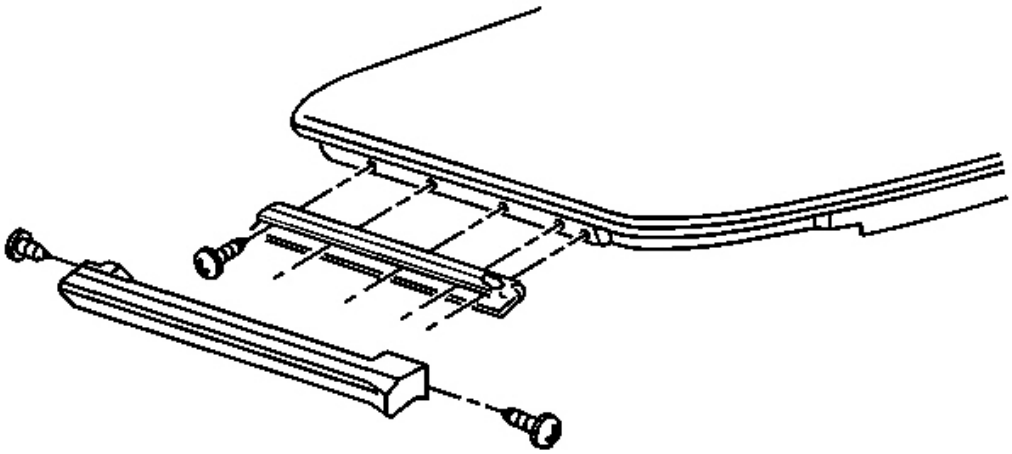

Fig. 248: Weatherstrip To Weatherstrip Retainer

Courtesy of GENERAL MOTORS CORP.

2. Remove the side weatherstrip. Refer to **Weatherstrip Replacement - Lift Off Panel** .
3. Mark the location of the retainer.
4. Remove the screws attaching the retainer.
5. Remove the retainer by pulling the retainer loose from the roof panel.
6. Clean the retainer and the roof panel contact surfaces using 3M(tm) adhesive remover P/N 8984 or equivalent.

Installation Procedure

IMPORTANT: A minimum of 2 mm (0.08 in) of foam sealing tape must extend beyond the edge of the retainer to prevent water leaks.

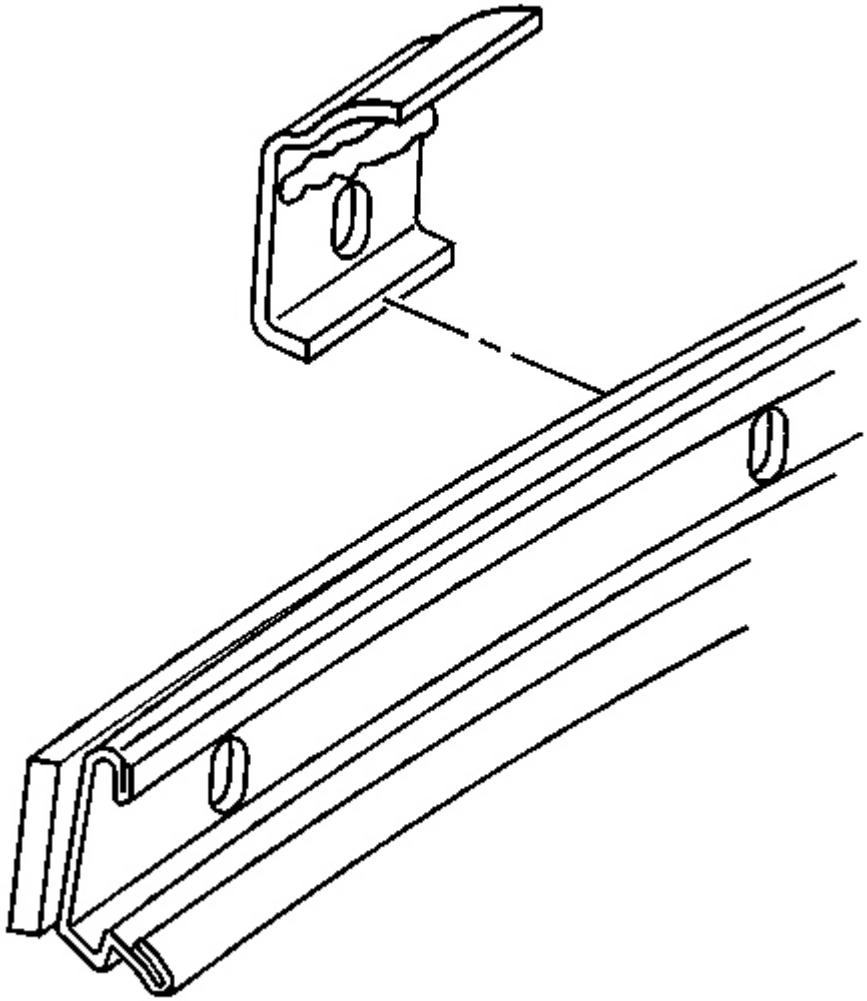

Fig. 249: Front Side At Blowout Clip To Front Side Retainer
Courtesy of GENERAL MOTORS CORP.

1. Apply foam sealing tape to a reusable retainer.
2. Apply a bead of sealer GM P/N 12345739 Canadain P/N 10953541 across the front of the window blow out clip above the screw hole as shown in the illustration.
3. Install the clip to the retainer aligning the clip to the front hole in the retainer.

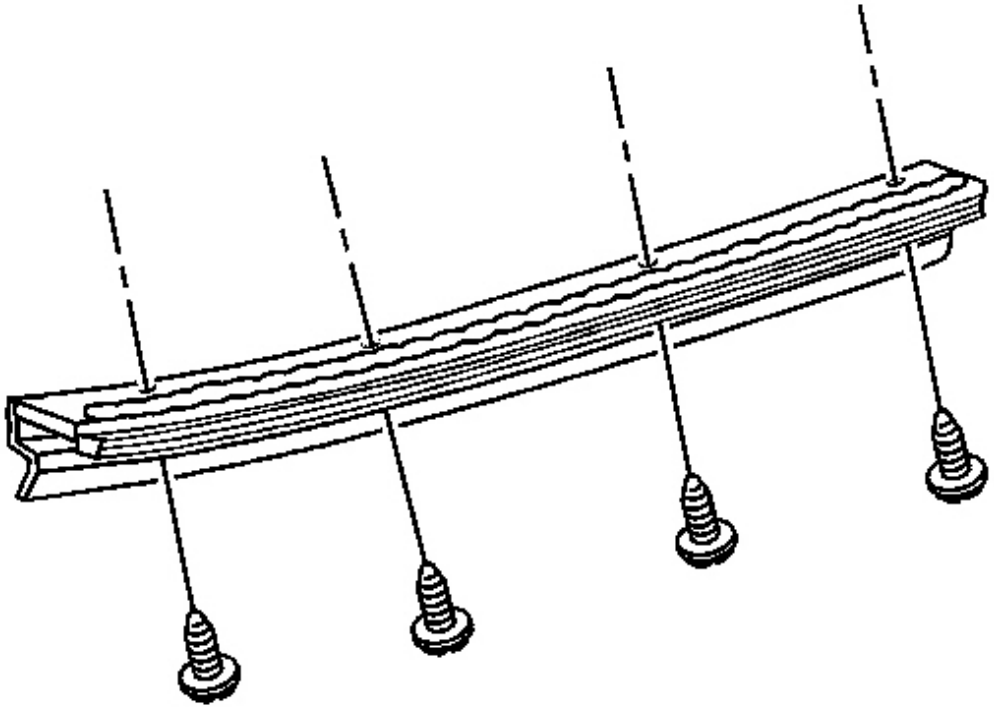

Fig. 250: Bead Sealer At Back Of Retainer Outside Of Screw
Courtesy of GENERAL MOTORS CORP.

4. Apply a bead of sealer GM P/N 12345739 Canadain P/N 10953541 across the full length of the back of the retainer outside the screw holes as shown in the illustration.
5. Position the retainer to the marks made before removal.

NOTE: Refer to Fastener Notice in Cautions and Notices.

6. Install the forward screw aligning the retainer fore and aft.

IMPORTANT: Stripped, broken, or improperly seated screws must be replaced or repaired to prevent water leaks.

7. Install the remaining screws.

Tighten: Tighten the side weatherstrip retainer screws to 3 N.m (27 lb in).

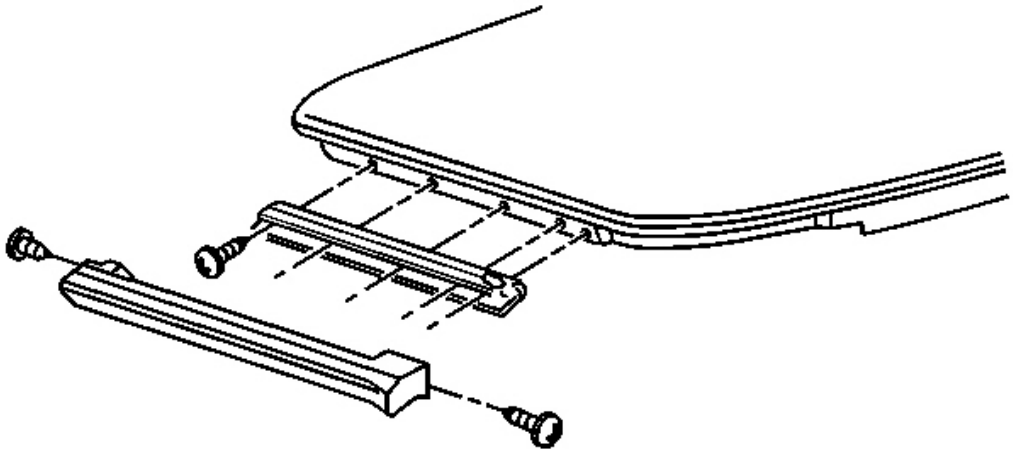

Fig. 251: Weatherstrip To Weatherstrip Retainer
Courtesy of GENERAL MOTORS CORP.

8. Apply a bead of sealer GM P/N 12345739 Canadain P/N 10953541 to the ends of the retainer and install the side weatherstrip. Refer to **Weatherstrip Replacement - Lift Off Panel** .
9. Install the roof panel.

DESCRIPTION AND OPERATION

LIFT OFF PANEL DESCRIPTION

There are 2 roof lift off panels available. One roof panel is composed of a see through polycarbonate and the other roof panel is composed of SMC plastic painted to match the body color. Either of the roof lift off panels can be stored in the rear cargo compartment. Special egg shaped brackets on the floor of the rear cargo area support the rear of the stored roof panel. Release pins on the rear lift window panel latches secure the front of the stored roof panel.