2003-06 HVAC

Climate Control - MDX

SPECIAL TOOLS

Ref. No.	Tool Number	Description	Qty
①	07SAZ-001000A	Backprobe Set	2

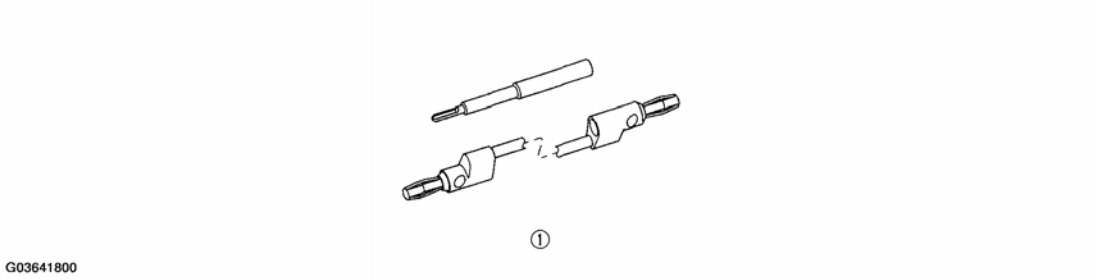

Fig. 1: Identifying Special Tools
Courtesy of AMERICAN HONDA MOTOR CO., INC.

COMPONENT LOCATION INDEX

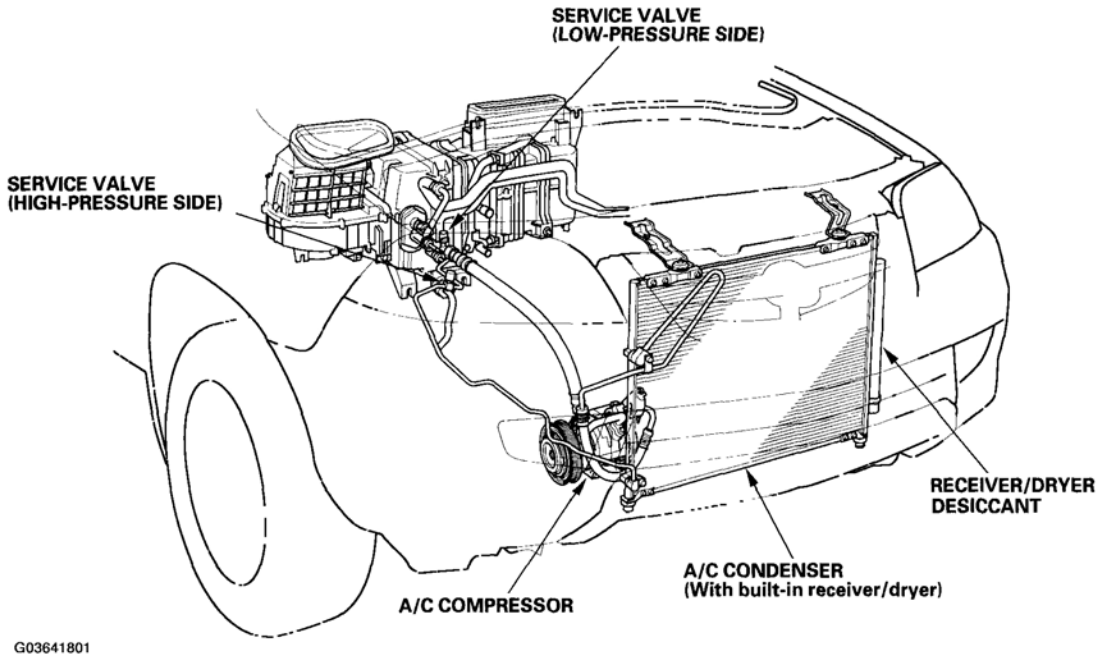

Fig. 2: Identifying Climate Control Component Location (1 Of 3)
Courtesy of AMERICAN HONDA MOTOR CO., INC.

cardiagn.com

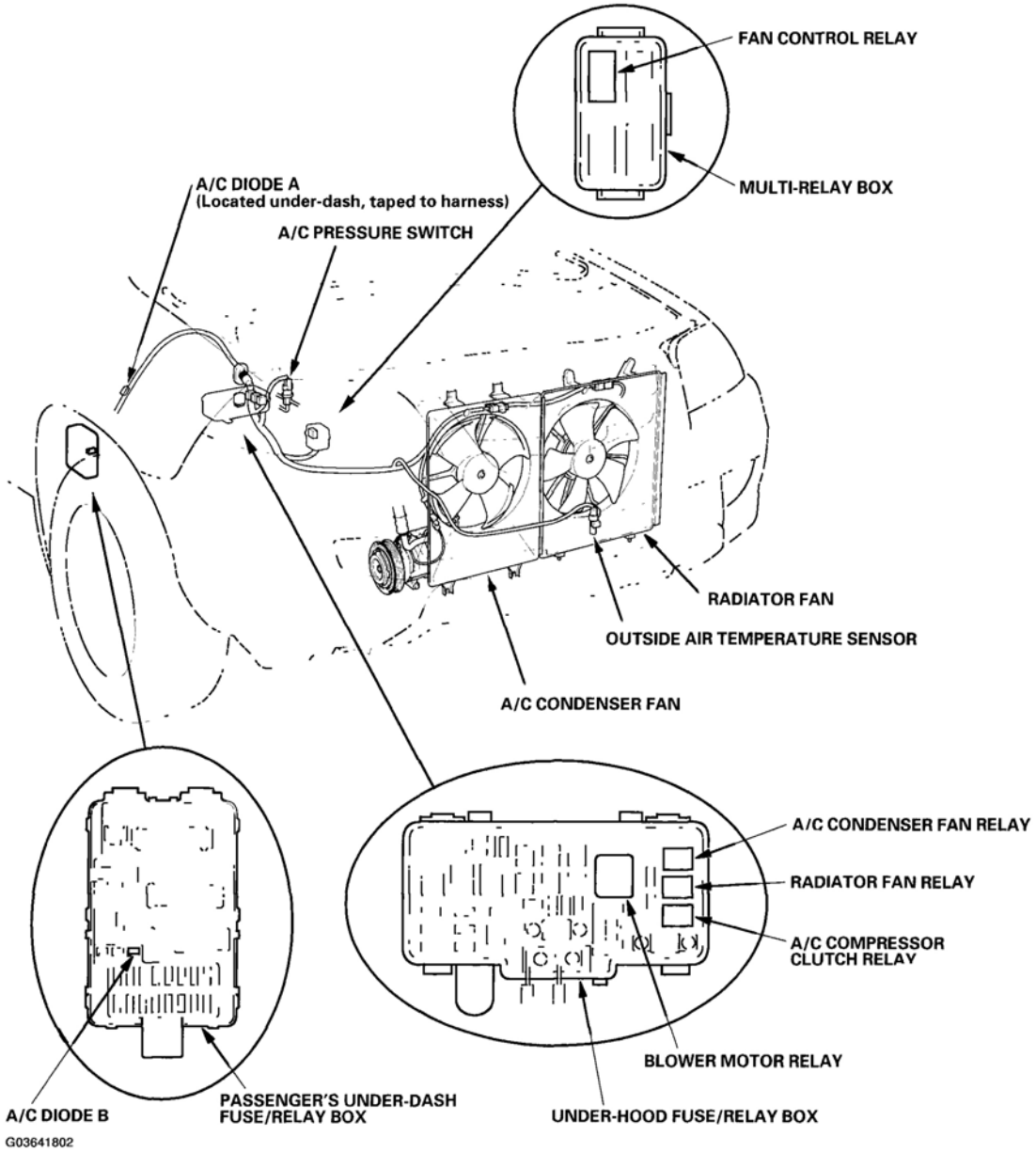

Fig. 3: Identifying Climate Control Component Location (2 Of 3)
Courtesy of AMERICAN HONDA MOTOR CO., INC.

cardiagn.com

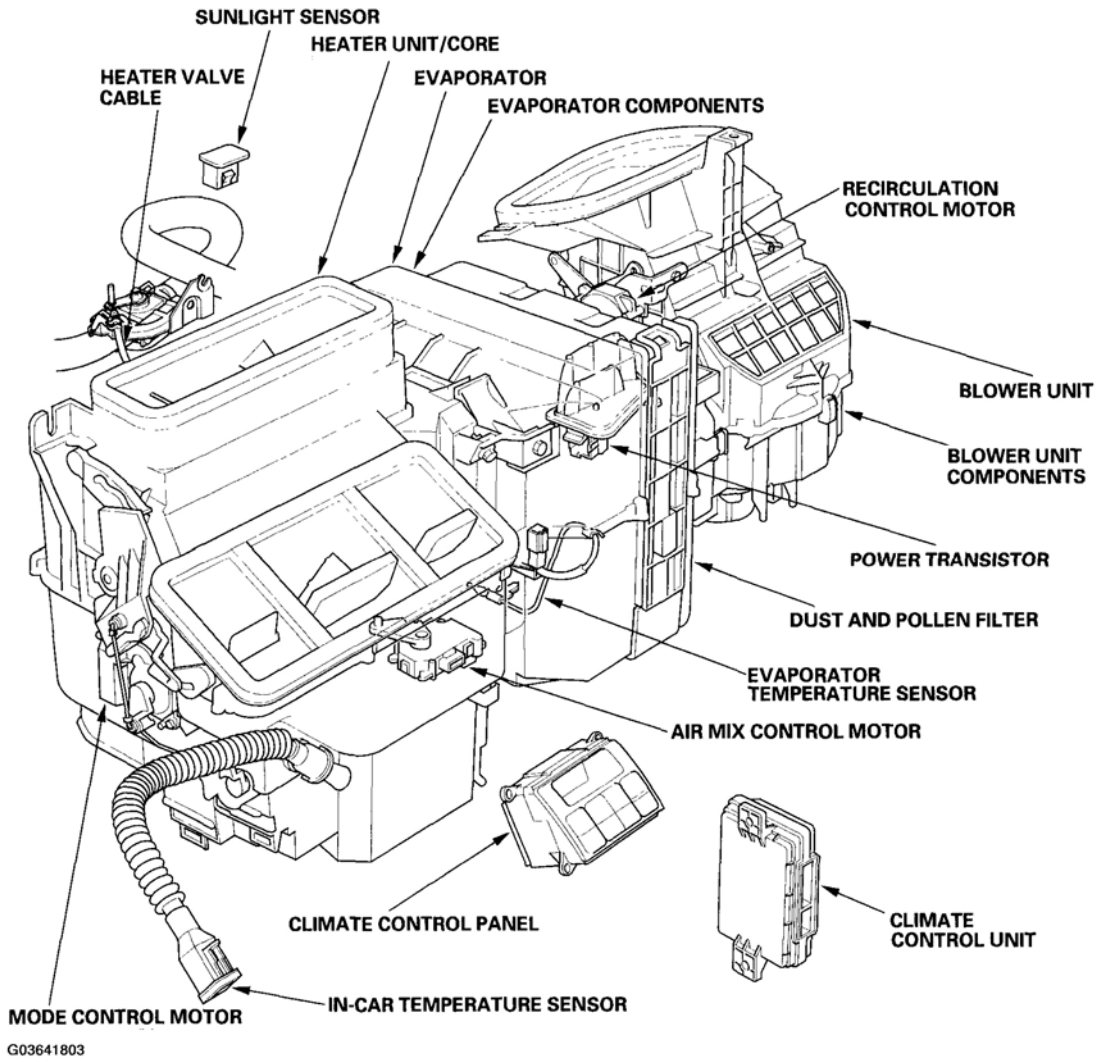

Fig. 4: Identifying Climate Control Component Location (3 Of 3)
Courtesy of AMERICAN HONDA MOTOR CO., INC.

A/C SERVICE TIPS AND PRECAUTIONS

WARNING:

- **Compressed air mixed with the R-134a forms a combustible vapor.**
- **The vapor can burn or explode causing serious injury.**
- **Never use compressed air to pressure test R-134a service equipment or vehicle air conditioning systems.**

CAUTION:

- **Air conditioning refrigerant or lubricant vapor can irritate your eyes, nose, or throat.**
- **Be careful when connecting service equipment.**

cardiagn.com

- **Do not breathe refrigerant or vapor.**

The air conditioning system uses HFC-134a (R-134a) refrigerant and polyalkyleneglycol (PAG) refrigerant oil, which are not compatible with CFC-12 (R-12) refrigerant and mineral oil. Do not use R-12 refrigerant or mineral oil in this system, and do not attempt to use R-12 servicing equipment; damage to the air conditioning system or your servicing equipment will result. Use only service equipment that is U.L.-listed and is certified to meet the requirements of SAE J2210 to remove R-134a from the air conditioning system.

If accidental system discharge occurs, ventilate work area before resuming service.

R-134a service equipment or vehicle air conditioning systems should not be pressure tested or leak tested with compressed air.

Additional health and safety information may be obtained from the refrigerant and lubricant manufacturers.

- Always disconnect the negative cable from the battery whenever replacing air conditioning parts.
- Keep moisture and dirt out of the system. When disconnecting any lines, plug or cap the fittings immediately; don't remove the caps or plugs until just before you reconnect each line.
- Before connecting any hose or line, apply a few drops of refrigerant oil to the O-ring.
- When tightening or loosening a fitting, use a second wrench to support the matching fitting.
- When discharging the system, use an R-134a refrigerant recovery/recycling/charging station; don't release refrigerant into the atmosphere.

A/C REFRIGERANT OIL REPLACEMENT

Recommended PAG oil: DENSO ND-OIL 8

P/N 38897-PR7-A01AH: 120 mL (4 fl-oz)

Add the recommended refrigerant oil in the amount listed if you replace any of the following parts.

- To avoid contamination, do not return the oil to the container once dispensed, and never mix it with other refrigerant oils.
- Immediately after using the oil, reinstall the cap on the container, and seal it to avoid moisture absorption.
- Do not spill the refrigerant oil on the vehicle; it may damage the paint; if it gets on the paint, wash it off immediately.

A/C condenser 35 mL (1 1/6 fl-oz)

Front evaporator 40 mL (1 1/3 fl-oz)

Rear evaporator 30 mL (1 fl-oz)

Line or hose 10 mL (1/3 fl-oz)

cardiagn.com

Leakage repair 25 mL (5/6 fl-oz)

A/C compressor For A/C compressor replacement, subtract the volume of oil drained from the removed A/C compressor from 180 mL (6 fl-oz), and drain the calculated volume of oil from the new A/C compressor: 180 mL (6 fl-oz) - Volume of removed A/C compressor = Volume to drain from new A/C compressor.

NOTE: **Even if no oil is drained from the removed A/C compressor, don't drain more than 50 mL (1 2/3 fl-oz) from the new A/C compressor.**

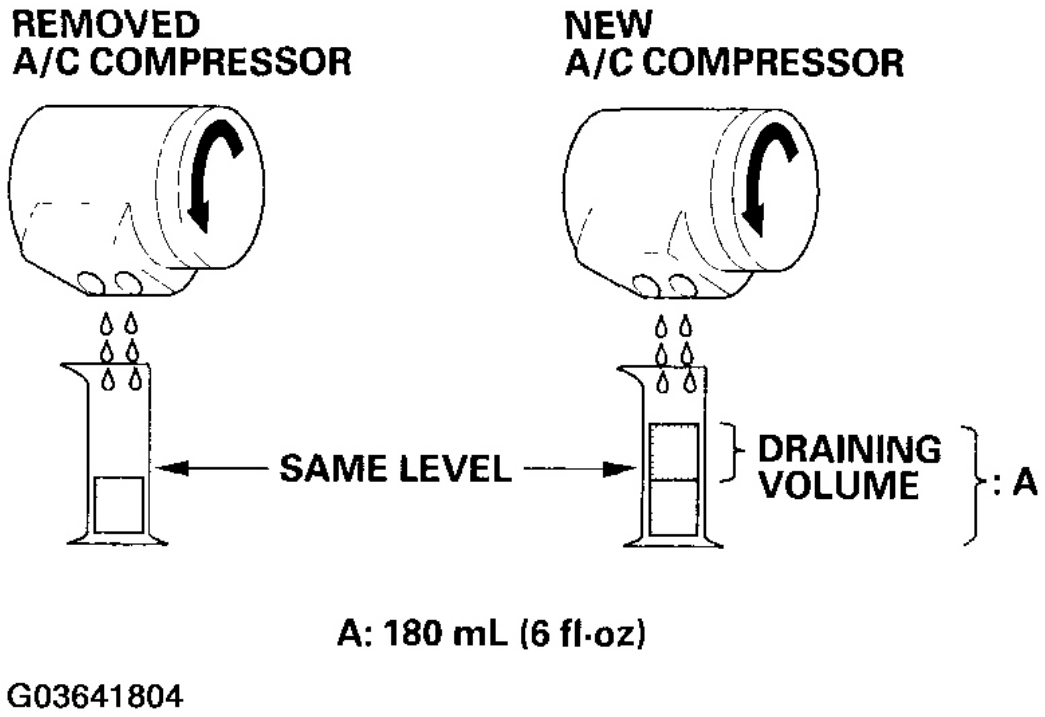

Fig. 5: Replacing A/C Refrigerant Oil
Courtesy of AMERICAN HONDA MOTOR CO., INC.

cardiagn.com

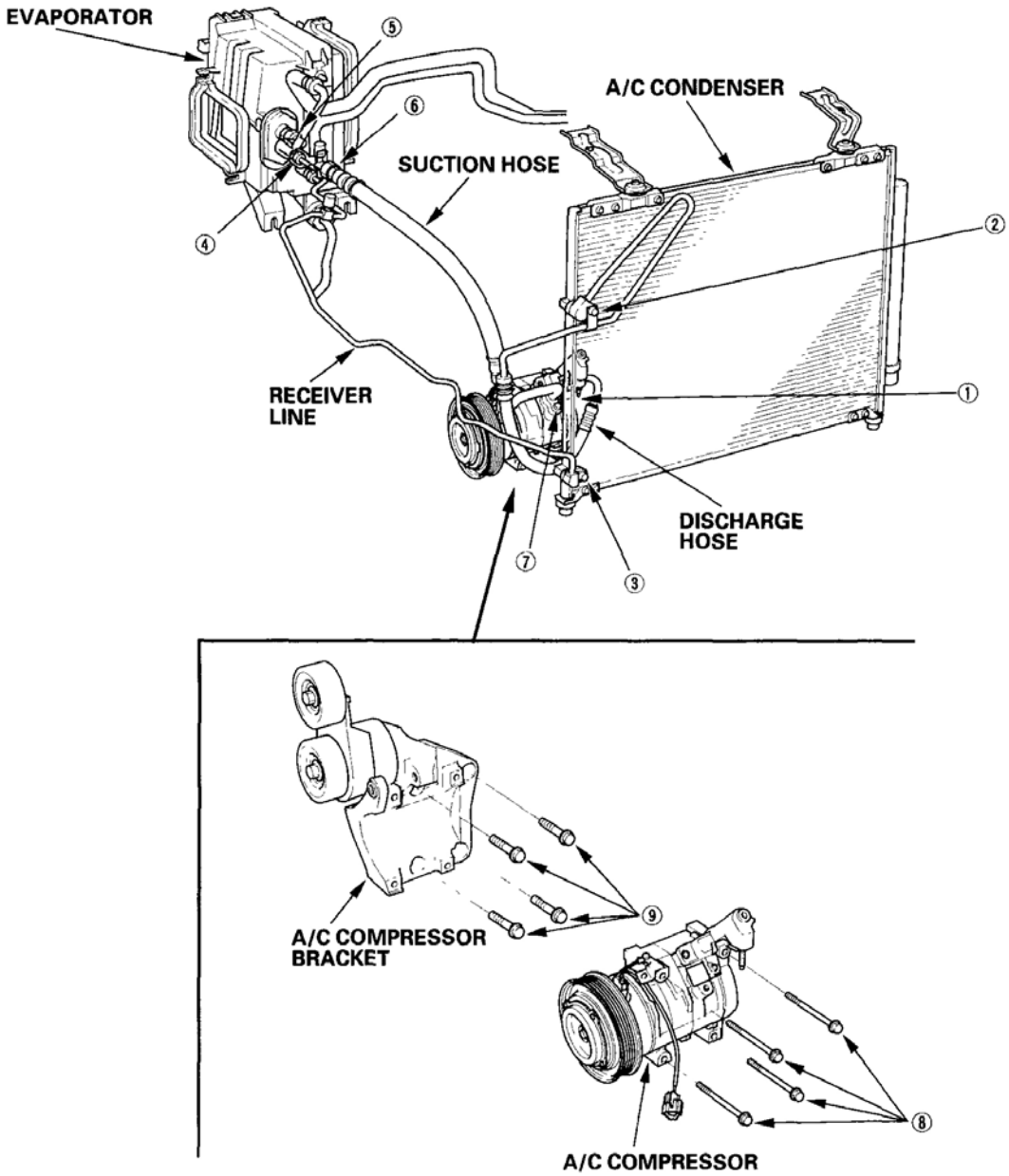

① Discharge hose to the A/C compressor (6 x 1.0 mm): 9.8 N·m (1.0 kgf·m, 7.2 lbf·ft)
② Discharge hose to the A/C condenser (6 x 1.0 mm): 9.8 N·m (1.0 kgf·m, 7.2 lbf·ft)
③ Receiver line to the A/C condenser (6 x 1.0 mm): 9.8 N·m (1.0 kgf·m, 7.2 lbf·ft)
④ Receiver line to the evaporator: 13 N·m (1.3 kgf·m, 9.4 lbf·ft)
⑤ Suction line to the evaporator: 31 N·m (3.2 kgf·m, 23 lbf·ft)
⑥ Suction hose to the suction line: 31 N·m (3.2 kgf·m, 23 lbf·ft)
⑦ Suction hose to the A/C compressor (6 x 1.0 mm): 9.8 N·m (1.0 kgf·m, 7.2 lbf·ft)
⑧ A/C compressor to the A/C compressor bracket (8 x 1.25 mm): 22 N·m (2.2 kgf·m, 16 lbf·ft)
⑨ A/C compressor bracket to the engine block (10 x 1.25 mm): 44 N·m (4.5 kgf·m, 33 lbf·ft)

G03641805

Fig. 6: Identifying A/C Compressor Components
Courtesy of AMERICAN HONDA MOTOR CO., INC.

cardiagn.com

GENERAL TROUBLESHOOTING INFORMATION

HOW TO RETRIEVE A DTC

The climate control unit has a self-diagnostic function. To run the self-diagnostic function, do the following:

1. Turn the ignition switch ON (II).
2. Press the AUTO button and then the OFF button.

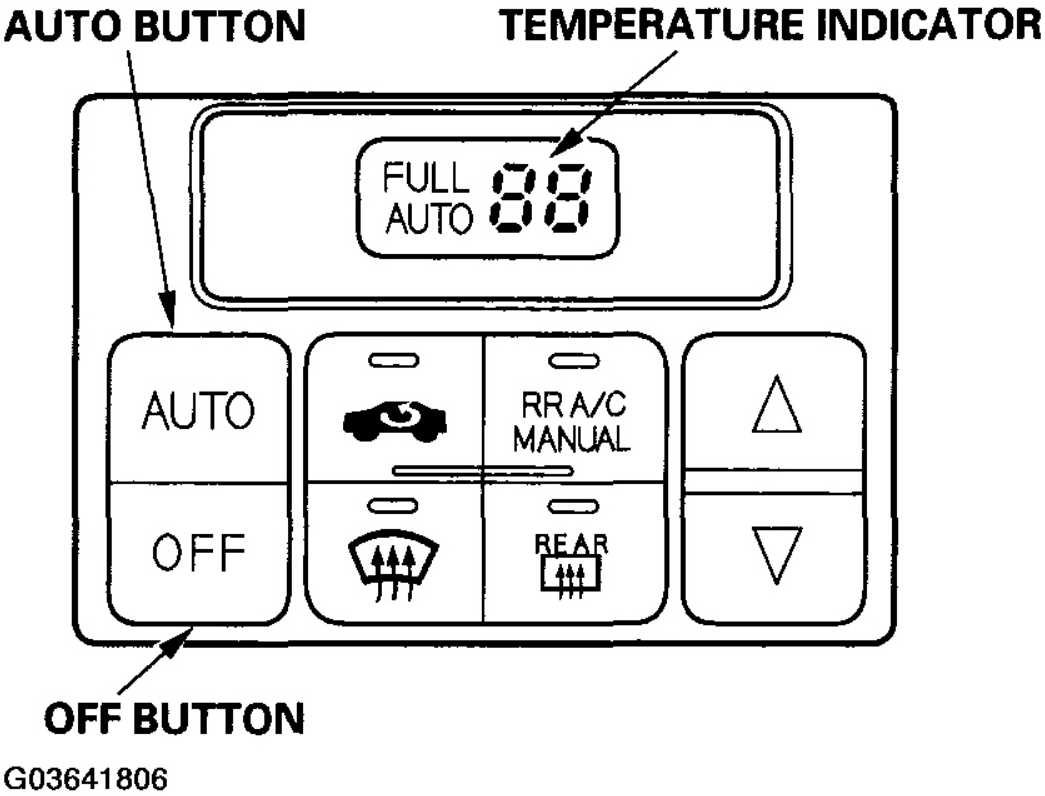

Fig. 7: Identifying AUTO And OFF Button
Courtesy of AMERICAN HONDA MOTOR CO., INC.

If there is any abnormality in the system, the temperature indicator will light up the segment (A through N) corresponding to the error. The temperature indicator will then alternate every second between displaying "88" (all segments lit) and the error code segment (A through N).

NOTE: **The system will only display the DTC when the AUTO and OFF buttons are pressed. If you release the buttons, the display will go blank. To return the display, simply press the AUTO then the OFF buttons again.**

cardiagn.com

To determine the meaning of the DTC, refer to the **DTC TROUBLESHOOTING INDEX** . If there is no abnormality, the segments will not light up.

NOTE: **If there are no DTCs detected (no opens or shorts in the climate control circuits or sensors), and the system is still not operating properly, check the sensor input to the climate control unit.**

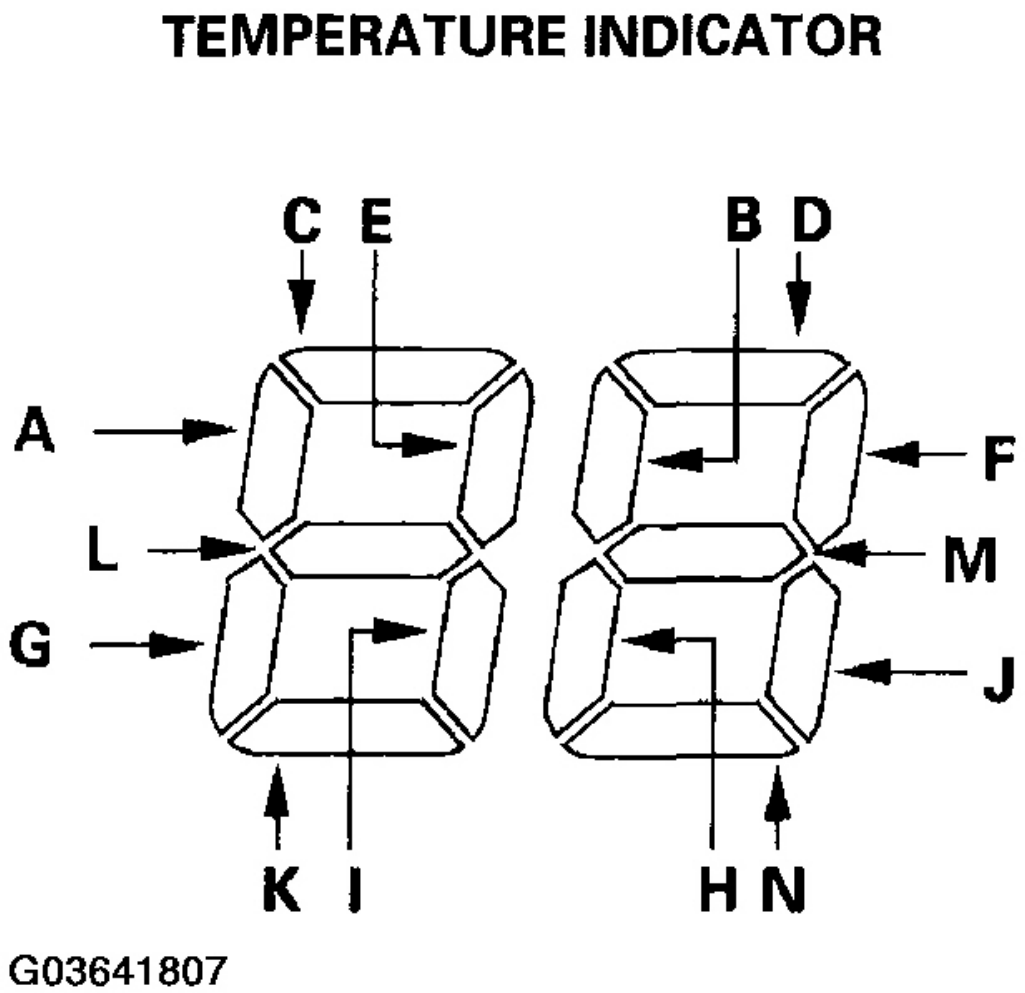

Fig. 8: Identifying Temperature Indicator Light Up Segment
Courtesy of AMERICAN HONDA MOTOR CO., INC.

Canceling the Self-diagnostic Function

cardiagn.com

3. Turn the ignition switch OFF to cancel the self-diagnostic function. After completing repair work, run the self-diagnostic function again to make sure that there are no other malfunctions.

DISPLAYING SENSOR INPUT AT THE CLIMATE CONTROL UNIT

The climate control unit has a mode that displays sensor inputs it receives. This mode shows you what the climate control unit is receiving from each of the sensors, one at a time, and it can help you determine if a sensor is faulty.

Check these items before using the display mode

1. Turn the ignition switch ON (II), and check the recirculation door function; press the recirculation button to switch from FRESH to RECIRC. The air volume and sound should change slightly.
2. Set the temperature control to the desired test temperature. When selecting the test temperatures, note these items:

   2003-04 models

   - 60 °F temperature setting will default to MAX COOL, VENT, and RECIRC.
   - 90 °F temperature setting will default to MAX HOT, FLOOR, and FRESH.
   - 61 through 89 °F settings will use the automatic climate control logic.

   2005 model

   - Lo temperature setting will default to MAX COOL, VENT, and RECIRC.
   - Hi temperature setting will default to MAX HOT, FLOOR, and FRESH.
   - 58 ° through 86 °F settings will use the automatic climate control logic.
3. Turn the ignition switch OFF.

To run the sensor input display mode, follow these steps

1. Turn the ignition switch OFF.
2. Press and hold both the AUTO and REC buttons, then start the engine.
3. After the engine starts, release the buttons. The climate control display will flash the sensor number and then the value for that sensor. Record the value displayed.
4. To advance to the next sensor, press the rear window defogger button.

SENSOR INPUT DISPLAY MODE

Sensor	Item	Displayed Value
1	In-car Temperature Sensor	°C
2	Ambient Temperature	°C
3	Solar Radiation Sensor Value: Dark = 00, Flashlight = 04, Cloudy = 10, Sunny = 65	$kcal/m^2$ .h

cardiagn.com

4	Engine Coolant Temperature	°C
5	Evaporator Outlet Air Temperature	°C
6	Air Mix Opening (Low value indicates cooler air distribution, higher value indicates warmer air distribution.)	% of opening
7	Vent Temperature Air Out (TAO)	°C
8	Vehicle Speed (Vehicle must be driven to display speed)	km/h

NOTE:

- **The sensor values will be displayed in degrees Celsius (°C) or an alphanumeric code. Use the chart to convert the value to degrees Fahrenheit (°F).**
- **If the sensor value displays "Er" this indicates there is an open or short in the circuit or sensor. Check for DTCs using the HDS (see GENERAL TROUBLESHOOTING INFORMATION) or refer to checking DTCs by DTC indication to check for DTCs .**
- **If necessary, compare the sensor input display to an alike, known-good vehicle under the same test conditions.**
- **If the sensor is out of the normal range, refer to the sensor test, or substitute the sensor with a known-good, and recheck.**

5. To cancel the sensor input display mode, press the AUTO button, or turn the ignition off.

CELSIUS TO FAHRENHEIT CONVERSION

°C	°F	°C	°F	°C	°F	°C	°F	°C	°F
0	32	10	50	20	68	30	86	40	104
1	34	11	52	21	70	31	88	41	106
2	36	12	54	22	72	32	90	42	108
3	37	13	55	23	73	33	91	43	109
4	39	14	57	24	75	34	93	44	111
5	41	15	59	25	77	35	95	45	113
6	43	16	61	26	79	36	97	46	115
7	45	17	63	27	81	37	99	47	117
8	46	18	64	28	82	38	100	48	118
9	48	19	66	29	84	39	102	49	120

CELSIUS TO FAHRENHEIT CONVERSION

°C	°F	°C	°F	°C	°F	°C	°F	°C	°F
50	122	60	140	70	158	80	176	90	194
51	124	61	142	71	160	81	178	91	196
52	126	62	144	72	162	82	180	92	198
53	127	63	145	73	163	83	181	93	199
54	128	64	147	74	165	84	183	94	201

cardiagn.com

55	131	65	149	75	167	85	185	95	203
56	133	66	151	76	169	86	187	96	205
57	135	67	152	77	170	87	188	97	207
58	136	68	154	78	172	88	190	98	208
59	139	69	158	79	174	89	192	99	210

ALPHANUMERIC CONVERSION

Display Reading (Alphanumeric)	°C	°F	%
A1 thru A9	-1 thru-9	30 thru 16	- 1 thru -9
B0 thru E9	-10 thru-19	14 thru-2	-10 thru-19
C0 thru C9	-20 thru-29	-4 thru -20	-20 thru -29
D0 thru D9	-30 thru -39	-22 thru -38	-30 thru -39
E0 thru E9	-40 thru -49	-40 thru-58	--
F0 thru F9	-50 thru -59	-58 thru -74	+ 100 thru+109

DTC TROUBLESHOOTING INDEX

To retrieve the DTC, you must run the self-diagnostic function (see **GENERAL TROUBLESHOOTING INFORMATION**). In the case of multiple problems, the respective indicator segments will come on. If indicator segments A, C, E, G, I, and L come on at the same time, there may be an open in the common ground wire of the sensors.

cardiagn.com

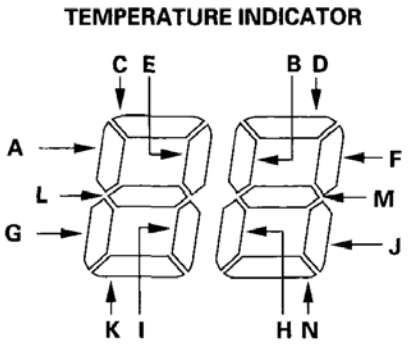

DTC (Temperature Indicator Segment)	Detection Item
A	An open in the in-car temperature sensor circuit
B	A short in the in-car temperature sensor circuit
C	An open in the outside air temperature sensor circuit
D	A short in the outside air temperature sensor circuit
E	An open in the sunlight sensor circuit
F	A short in the sunlight sensor circuit
G	An open in the evaporator temperature sensor circuit
H	A short in the evaporator temperature sensor circuit
I	An open in the air mix control motor circuit
J	A short in the air mix control motor circuit
K	A problem in the air mix control linkage, door, or motor
L	An open or short in the mode control motor circuit
M	A problem in the mode control linkage, doors, or motor
N	A problem in the blower motor circuit

G03641808

Fig. 9: Identifying Temperature Indicator Segments
Courtesy of AMERICAN HONDA MOTOR CO., INC.

SYMPTOM TROUBLESHOOTING INDEX

SYMPTOM TROUBLESHOOTING INDEX

Symptom	Diagnostic procedure	Also check for
Recirculation control doors do not change between Fresh and Recirculate	Recirculation control motor circuit troubleshooting (see **RECIRCULATION CONTROL MOTOR CIRCUIT TROUBLESHOOTING**)	• HVAC DTCs (see **GENERAL TROUBLESHOOTING INFORMATION**) • Cleanliness and tightness of all connectors.
The blower motor does not run immediately even though the engine is fully warmed up	**NOTE:** **The temperature control dial or button must be set between 64 °F (18°C) and 90°F (32°C) ECT Sensor circuit troubleshooting (see ECT**	• Powertrain DTCs (see **GENERAL TROUBLESHOOTING INFORMATION**) • Cleanliness and tightness of all

cardiagn.com

	SENSOR CIRCUIT TROUBLESHOOTING)	connectors
The climate control panel display does not work	Climate control panel circuit troubleshooting (see **CLIMATE CONTROL PANEL CIRCUIT TROUBLESHOOTING**)	• HVAC DTCs (see **GENERAL TROUBLESHOOTING INFORMATION**) • Cleanliness and tightness of all connectors
The manual switch does not work	Manual controls circuit troubleshooting (see **MANUAL CONTROLS CIRCUIT TROUBLESHOOTING**)	• HVAC DTCs (see **GENERAL TROUBLESHOOTING INFORMATION**) • Cleanliness and tightness of all connectors
Blower, heater controls, and A/C do not work	Climate control power and ground circuit troubleshooting (see **CLIMATE CONTROL POWER AND GROUND CIRCUIT TROUBLESHOOTING**)	• HVAC DTCs (see **GENERAL TROUBLESHOOTING INFORMATION**) • Blown fuse No. 3 (7.5 A) in the driver's underdash fuse/relay box • Poor ground at G401 • Cleanliness and tightness of all connectors
Both fans do not run at low speed with the A/C on	Radiator and A/C condenser fan low speed circuit troubleshooting (see **RADIATOR AND A/C CONDENSER FAN LOW SPEED CIRCUIT TROUBLESHOOTING**)	• HVAC DTCs (see **GENERAL TROUBLESHOOTING INFORMATION**) • Blown fuse No. 58 (30 A) in the under-food fuse/relay box, and No. 3 (7.5 A) in the driver's underdash fuse/relay box • Poor ground at G201 • Cleanliness and tightness of all connectors
Both fans do not run at high speed with the A/C on when the engine coolant temperature is below 206 °F (97 °C) and the refrigerant pressure is above 1,520 kPa (15.5 kgf/cm^2 , 220 psi)	Radiator and A/C condenser fan high speed circuit troubleshooting (see **RADIATOR AND A/C CONDENSER FAN HIGH SPEED CIRCUIT TROUBLESHOOTING**)	• HVAC DTCs (see **GENERAL TROUBLESHOOTING INFORMATION**) • Cleanliness and tightness of all connectors
The A/C compressor clutch does not engage (but both	A/C compressor clutch circuit troubleshooting (see **A/C COMPRESSOR CLUTCH**	• HVAC DTCs (see **GENERAL TROUBLESHOOTING**

cardiagn.com

fans run with the A/C on)	**CIRCUIT TROUBLESHOOTING**)	**INFORMATION**) • Blown fuse No. 59 (7.5 A) in the under-food fuse/relay box, and No. 3 (7.5 A) in the driver's underdash fuse/relay box • Cleanliness and tightness of all connectors
A/C system does not come on (both fans and the A/C compressor do not work); heater is OK	A/C pressure switch circuit troubleshooting (see **A/C PRESSURE SWITCH CIRCUIT TROUBLESHOOTING**)	• HVAC DTCs (see **GENERAL TROUBLESHOOTING INFORMATION**) • Cleanliness and tightness of all connectors

SYSTEM DESCRIPTION

The air conditioning system removes heat from the passenger compartment by circulating refrigerant through the system as shown.

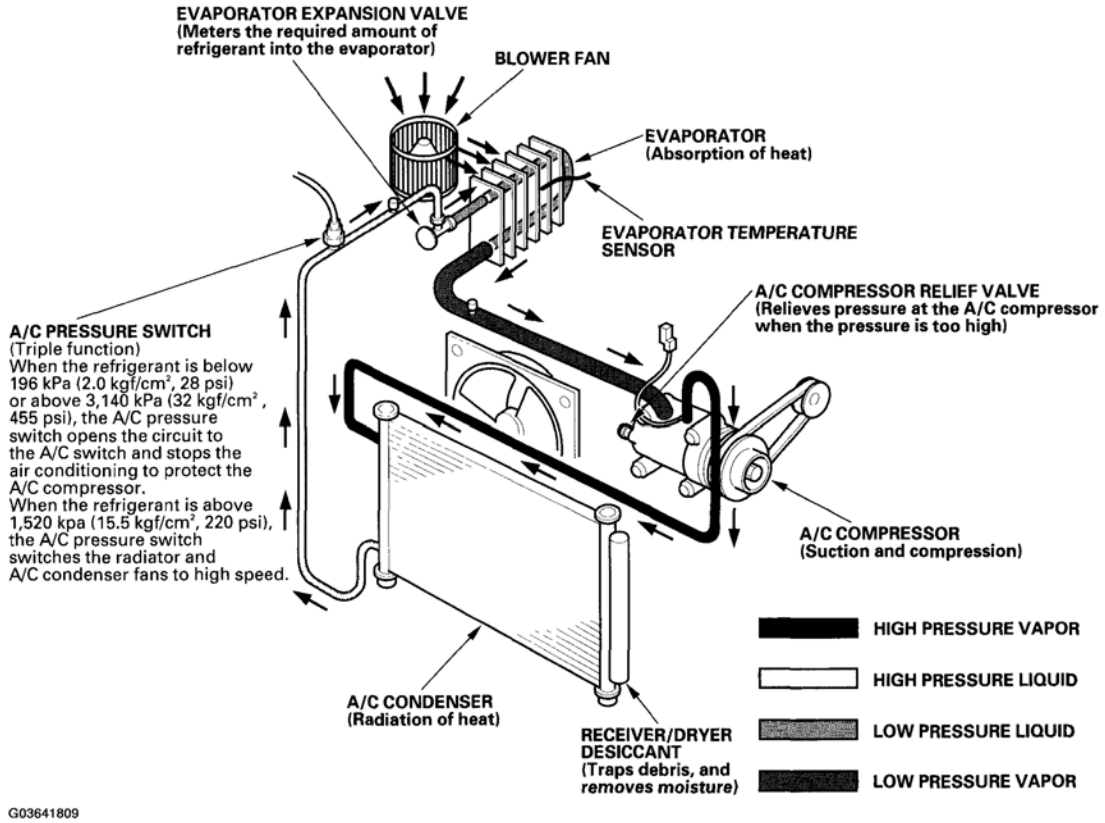

Fig. 10: Identifying Air Conditioning System Circulating Refrigerant Diagram
Courtesy of AMERICAN HONDA MOTOR CO., INC.

cardiagn.com

This vehicle uses HFC-134a (R-134a) refrigerant which does not contain chlorofluorocarbons. Pay attention to the following service items:

- Do not mix refrigerants CFC-12 (R-12) and HFC-134a (R-134a). They are not compatible.
- Use only the recommended polyalkyleneglycol (PAG) refrigerant oil (DENSO ND-OIL8) designed for the R-134a A/C compressor. Intermixing the recommended (PAG) refrigerant oil with any other refrigerant oil will result in A/C compressor failure.
- All A/C system parts (A/C compressor, discharge line, suction line, evaporator, A/C condenser, receiver/dryer, expansion valve, O-rings for joints) are designed for refrigerant R-134a. Do not exchange with R-12 parts.
- Use a halogen gas leak detector designed for refrigerant R-134a.
- R-12 and R-134a refrigerant servicing equipment are not interchangeable. Use only a recovery/recycling/charging station that is U.L.-listed and is certified to meet the requirements of SAEJ2210 to service the R-134a air conditioning systems.
- Always recover the refrigerant R-134a with an approved recovery/recycling/charging station before disconnecting any A/C fitting.

A/C PRESSURE SWITCH

The A/C pressure switch consists of a high-low pressure switch (A/C pressure switch A) and a middle pressure switch (A/C pressure switch B).

- High-Low pressure switch

  If the refrigerant pressure becomes too high (due to blockage or lack of airflow at the A/C condenser), or too low (due to leakage), the A/C pressure switch stops the A/C request a signal to the PCM and the A/C compressor stops operating.

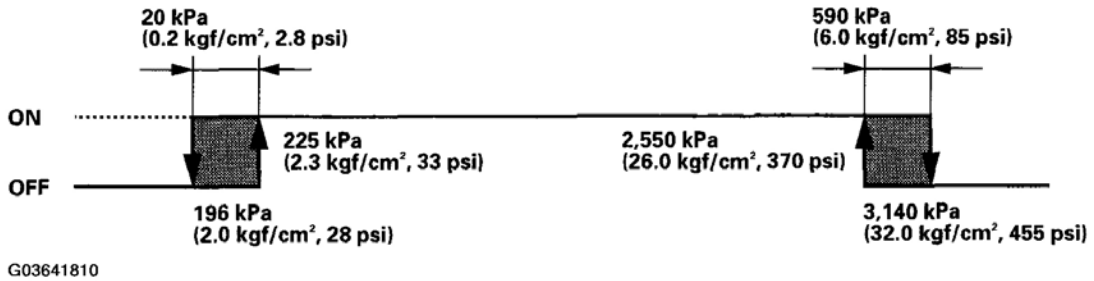

Fig. 11: Identifying High-Low Pressure Switch Dimensions
Courtesy of AMERICAN HONDA MOTOR CO., INC.

- Middle pressure switch

  If the refrigerant pressure goes above or below 1,520 kPa (15.5 kgf/cm^2 , 220 psi), the A/C pressure switch opens or closes to signal the PCM to change the speed of the A/C condenser fan and radiator fan

cardiagn.com

(high-low).

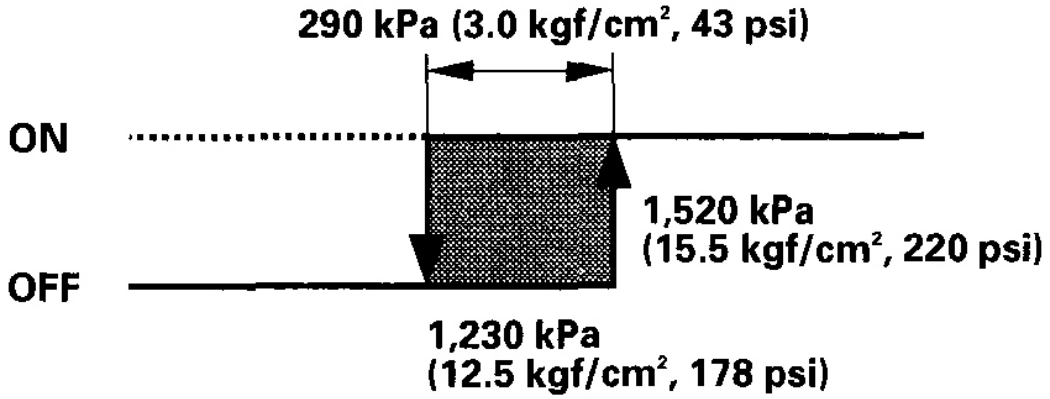

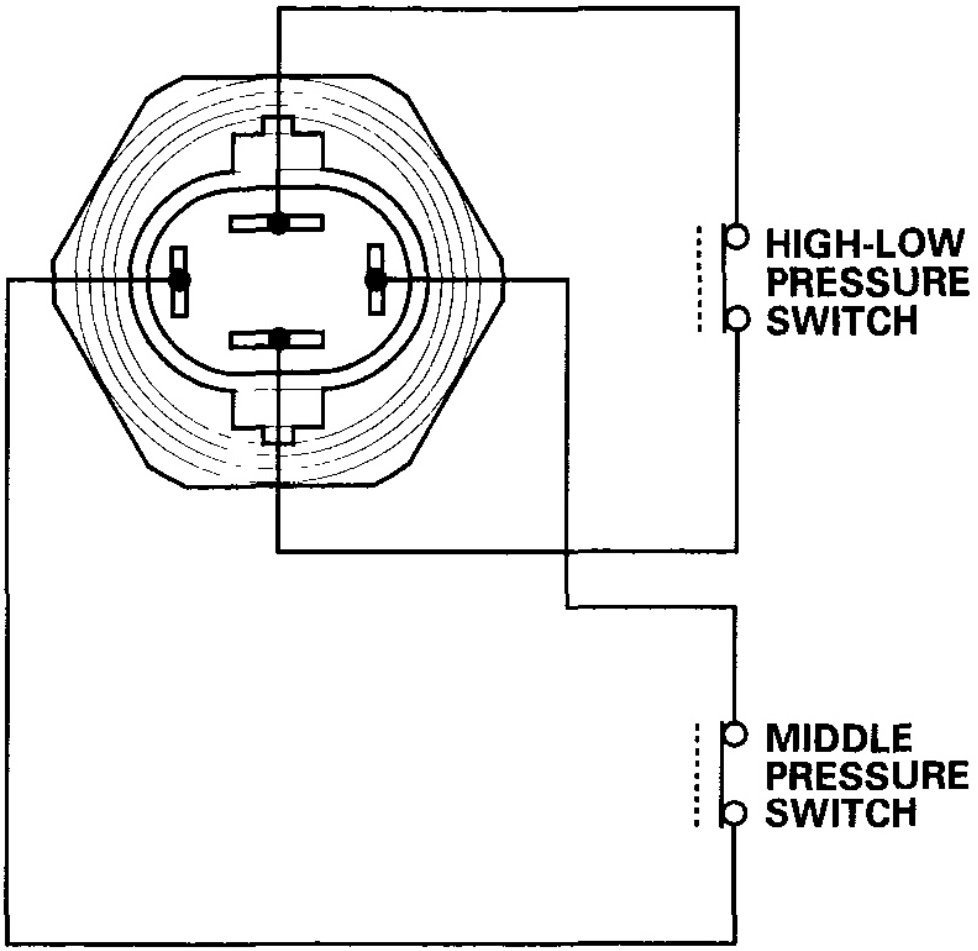

G03641811

cardiagn.com

Fig. 12: Identifying Middle Pressure Switch Dimensions
Courtesy of AMERICAN HONDA MOTOR CO., INC.

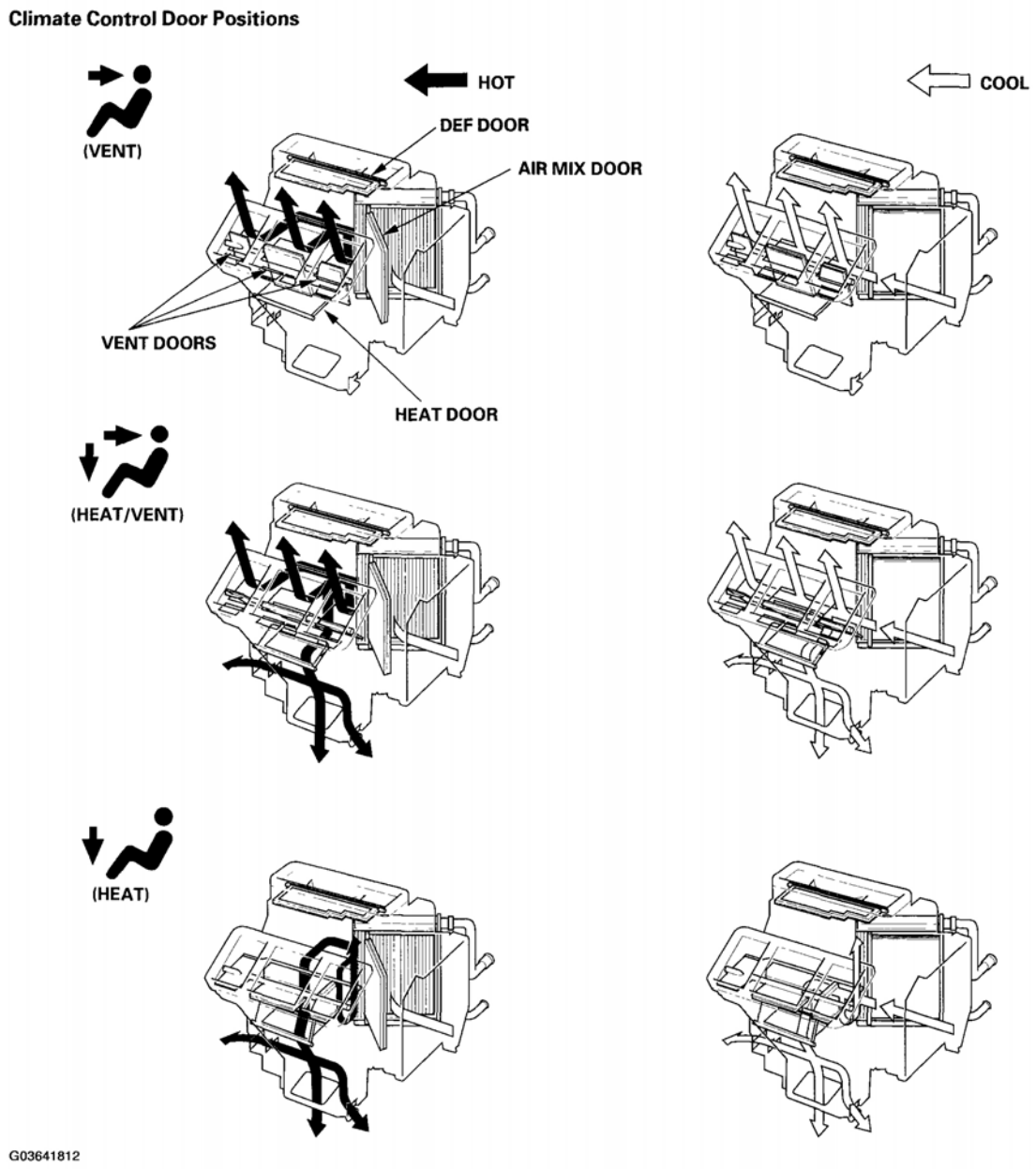

Fig. 13: Identifying Climate Control Door Positions (1 Of 2)
Courtesy of AMERICAN HONDA MOTOR CO., INC.

cardiagn.com

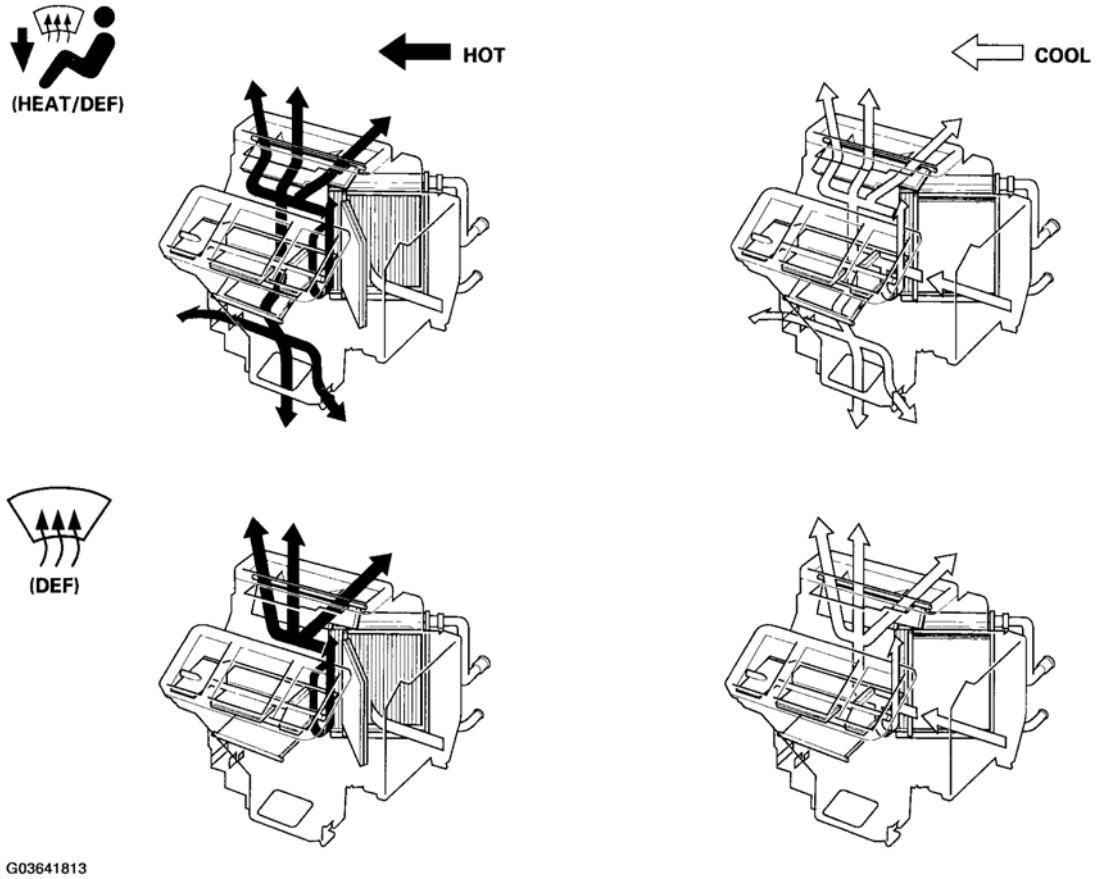

Fig. 14: Identifying Climate Control Door Positions (2 Of 2)
Courtesy of AMERICAN HONDA MOTOR CO., INC.

CLIMATE CONTROL UNIT INPUTS AND OUTPUTS

cardiagn.com

CLIMATE CONTROL UNIT CONNECTORS

CONNECTOR A (16P)

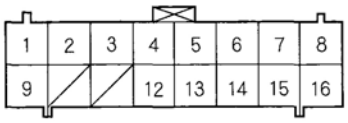

CONNECTOR B (26P)

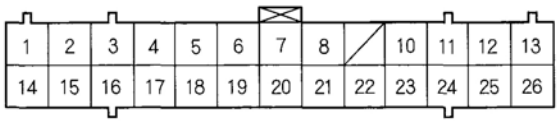

Wire side of female terminals

CONNECTOR A (□ on Circuit Diagram)

Cavity	Wire color	Signal	
1	ORN/WHT	REAR UNIT A/C BUS	OUTPUT
2	WHT/RED	PANEL DS0	OUTPUT
3	WHT/YEL	PANEL DS1	OUTPUT
4	LT BLU	PANEL D3	INPUT
5	WHT/BLK	PANEL D2	INPUT
6	WHT/BLU	PANEL D1	INPUT
7	BRN	PANEL D0	INPUT
8	RED/GRN	DISPLAY UNIT SO	INPUT
9	BRN/YEL	REAR WINDOW DEFOGGER RELAY	OUTPUT
10	——	——	——
11	——	——	——
12	YEL/GRN	PANEL LATCH	INPUT
13	YEL/WHT	PANEL DATA	INPUT
14	YEL/BLK	PANEL CLK1	INPUT
15	GRN/ORN	DISPLAY UNIT SI	OUTPUT
16	YEL/BLU	DISPLAY UNIT CLK2	INPUT

CONNECTOR B (○ on Circuit Diagram)

Cavity	Wire color	Signal	
1	YEL/GRN	SENSOR COMMON GROUND	OUTPUT
2	BLU/WHT	PCM (VSS)	INPUT
3	GRY	AIR MIX POTENTIAL +5 V	OUTPUT
4	RED/ORN	A/C PRESSURE SWITCH	OUTPUT
5	GRN/BLK	MODE 1	INPUT
6	GRN/YEL	MODE 2	INPUT
7	LT GRN/BLK	MODE 3	INPUT
8	BLU/GRN	MODE 4	INPUT
9	——	——	——
10	BLU/WHT	MODE VENT	OUTPUT
11	BLU/BLK	MODE DEF	OUTPUT
12	ORN/BLK	POWER TRANSISTOR CONTROL	OUTPUT
13	BLK/YEL	IG2 (Power)	INPUT
14	BLU/RED	BLOWER FEEDBACK	INPUT
15	BLK	GROUND (G401)	INPUT
16	BLK/WHT	PANEL GROUND	INPUT
17	YEL/RED	IN-CAR TEMPERATURE SENSOR	INPUT
18	BRN/WHT	OUTSIDE AIR TEMPERATURE SENSOR	INPUT
19	WHT/RED	SUNLIGHT SENSOR	INPUT
20	BRN	EVAPORATOR TEMPERATURE SENSOR	INPUT
21	PNK/BLK	AIR MIX POTENTIAL	INPUT
22	RED/WHT	ENGINE COOLANT TEMPERATURE (ECT) SENSOR	INPUT
23	GRN/RED	FRESH	OUTPUT
24	GRN/WHT	RECIRCULATE	OUTPUT
25	RED/YEL	AIR MIX HOT	OUTPUT
26	RED/WHT	AIR MIX COOL	OUTPUT

G03641814

Fig. 15: Identifying Climate Control Unit Connectors
Courtesy of AMERICAN HONDA MOTOR CO., INC.

CIRCUIT DIAGRAM

cardiagn.com

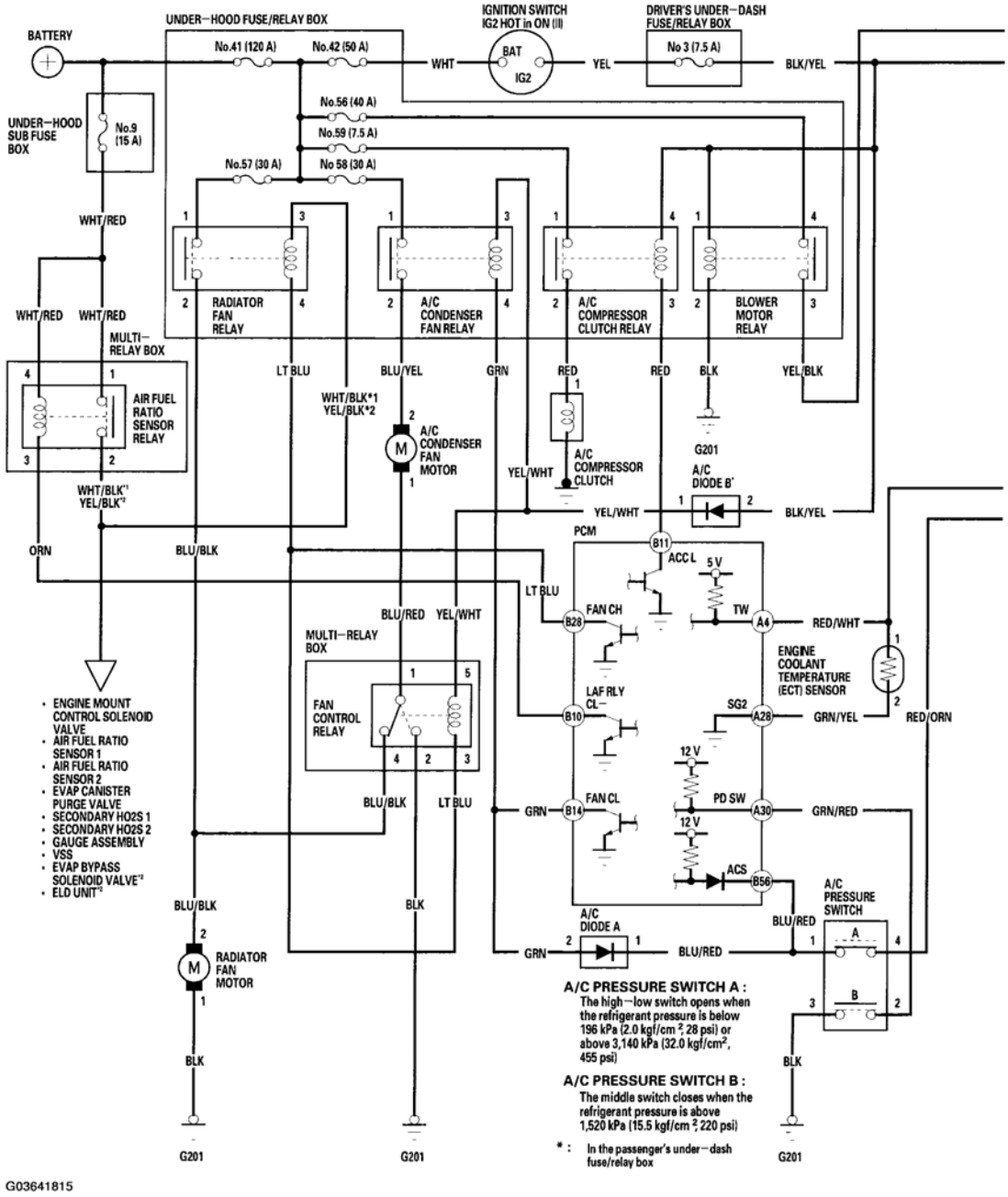

Fig. 16: Climate Control Circuit Diagram (1 Of 2)
Courtesy of AMERICAN HONDA MOTOR CO., INC.

cardiagn.com

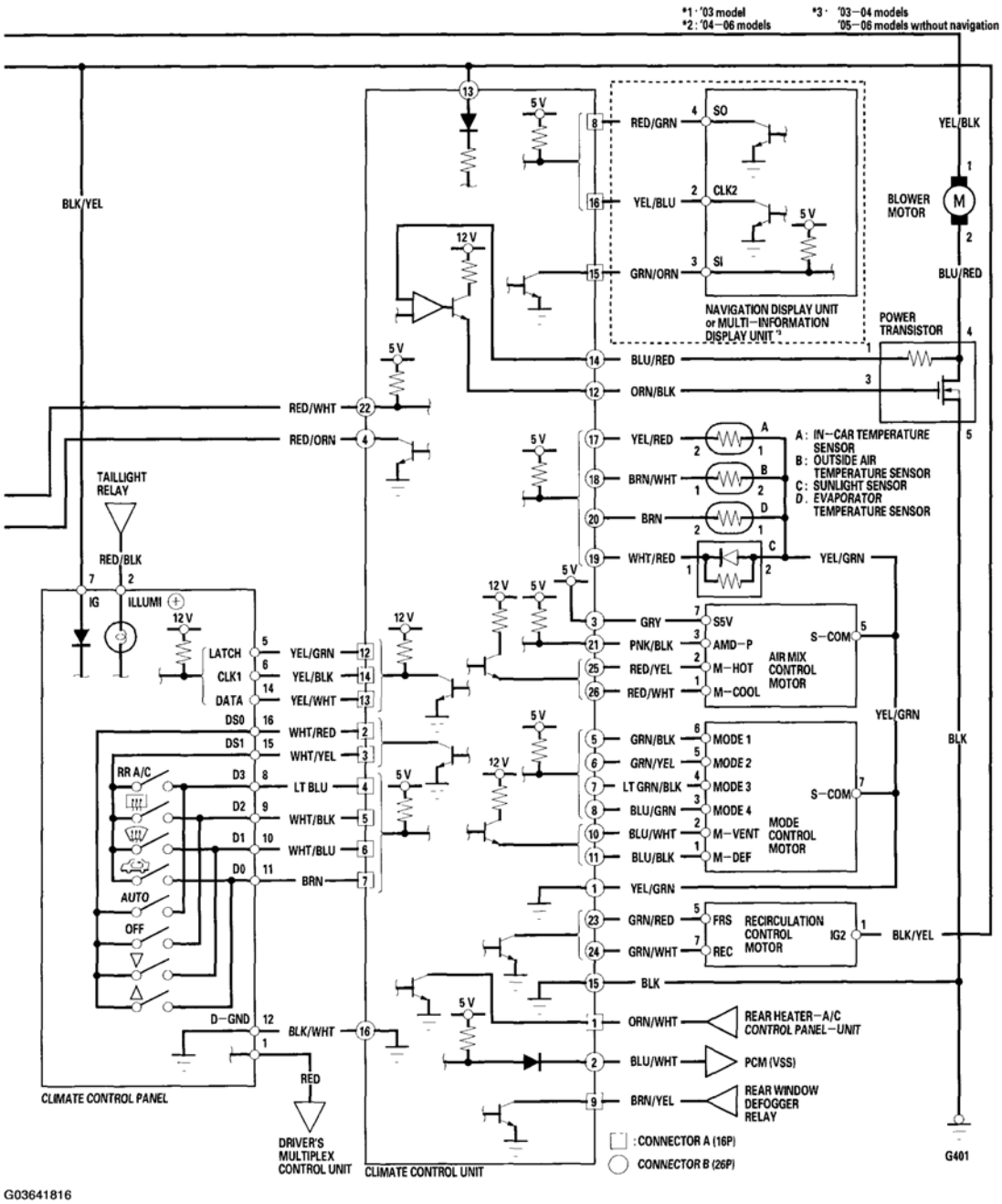

Fig. 17: Climate Control Circuit Diagram (2 Of 2)
Courtesy of AMERICAN HONDA MOTOR CO., INC.

DTC TROUBLESHOOTING

DTC INDICATOR A: AN OPEN IN THE IN-CAR TEMPERATURE SENSOR CIRCUIT

1. Remove the in-car temperature sensor (see **IN-CAR TEMPERATURE SENSOR TEST**) and test it

cardiagn.com

(see **IN-CAR TEMPERATURE SENSOR TEST**).

Does the in-car temperature sensor test OK?

YES - Go to step 2.

NO - Replace the in-car temperature sensor.

2. Disconnect climate control unit connector B (26P).
3. Check for continuity between the No. 17 terminal of climate control unit connector B (26P) and the No. 2 terminal of the in-car temperature sensor 2P connector.

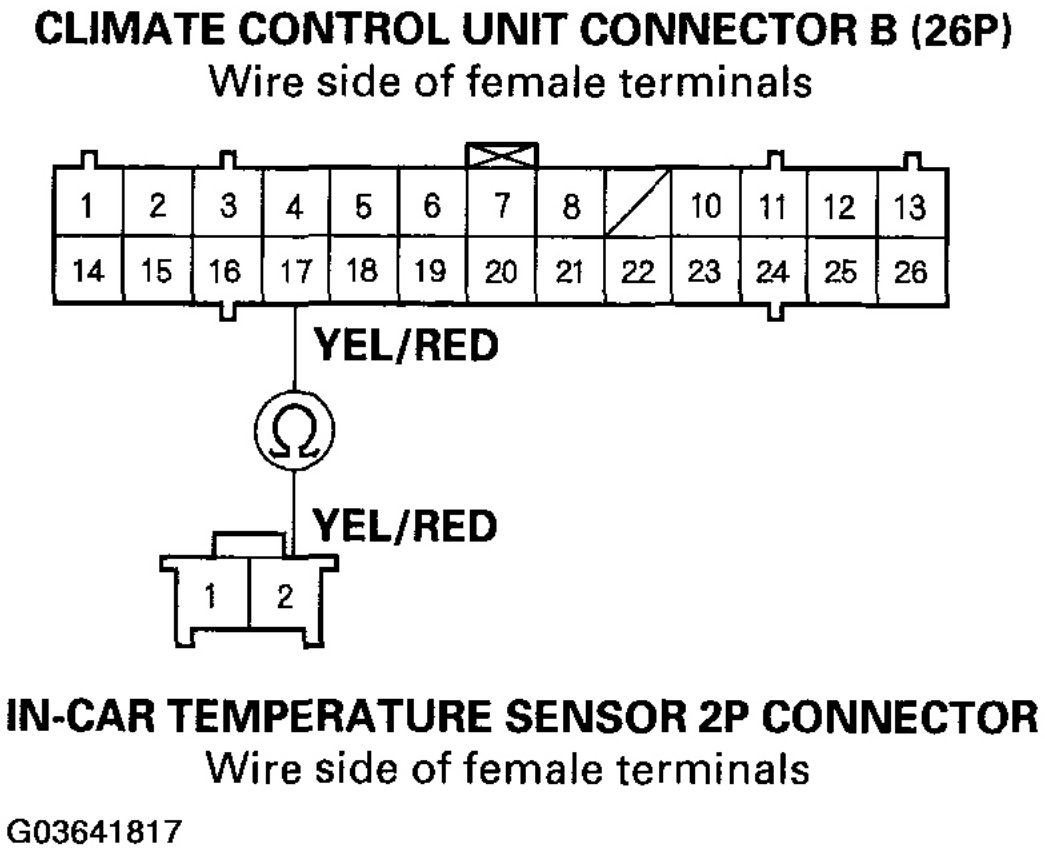

Fig. 18: Checking For Continuity Between No. 17 Terminal Of Climate Control Unit Connector B
Courtesy of AMERICAN HONDA MOTOR CO., INC.

Is there continuity?

YES - Go to step 4.

NO- Repair open in the wire between the climate control unit and the in-car temperature sensor.

cardiagn.com

4. Check for continuity between the No. 1 terminal of climate control unit connector B (26P) and the No. 1 terminal of the in-car temperature sensor 2P connector.

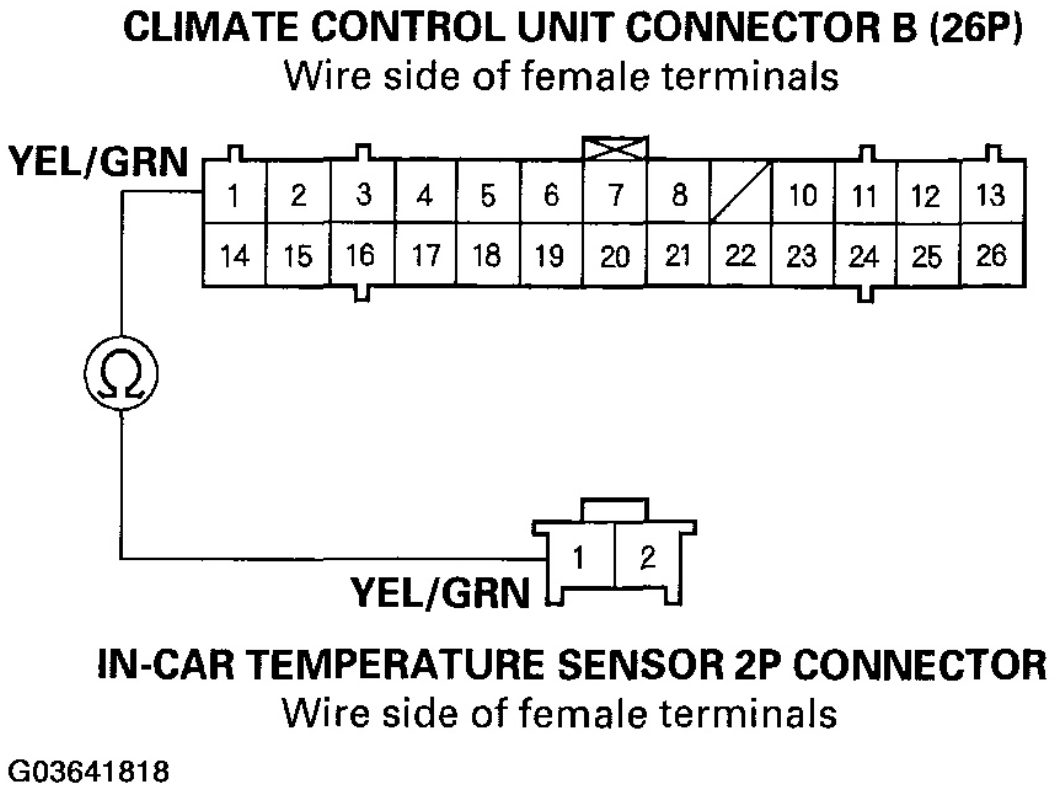

Fig. 19: Checking For Continuity Between No. 1 Terminal Of Climate Control Unit Connector B
Courtesy of AMERICAN HONDA MOTOR CO., INC.

Is there continuity?

YES - Check for loose wires or poor connections at climate control unit connector B (26P) and at the in-car temperature sensor 2P connector. If the connections are good, substitute a known-good climate control unit, and recheck. If the symptom/ indication goes away, replace the original climate control unit.

NO - Repair open in the wire between the climate control unit and the in-car temperature sensor.

DTC INDICATOR B: A SHORT IN THE IN-CAR TEMPERATURE SENSOR CIRCUIT

1. Remove the in-car temperature sensor (see **IN-CAR TEMPERATURE SENSOR TEST**).
2. Test the in-car temperature sensor (see **IN-CAR TEMPERATURE SENSOR TEST**).

cardiagn.com

Does the in-car temperature sensor test OK?

YES - Go to step 3.

NO - Replace the in-car temperature sensor.

3. Disconnect climate control unit connector B (26P).
4. Check for continuity between the No. 17 terminal of climate control unit connector B (26P) and body ground.

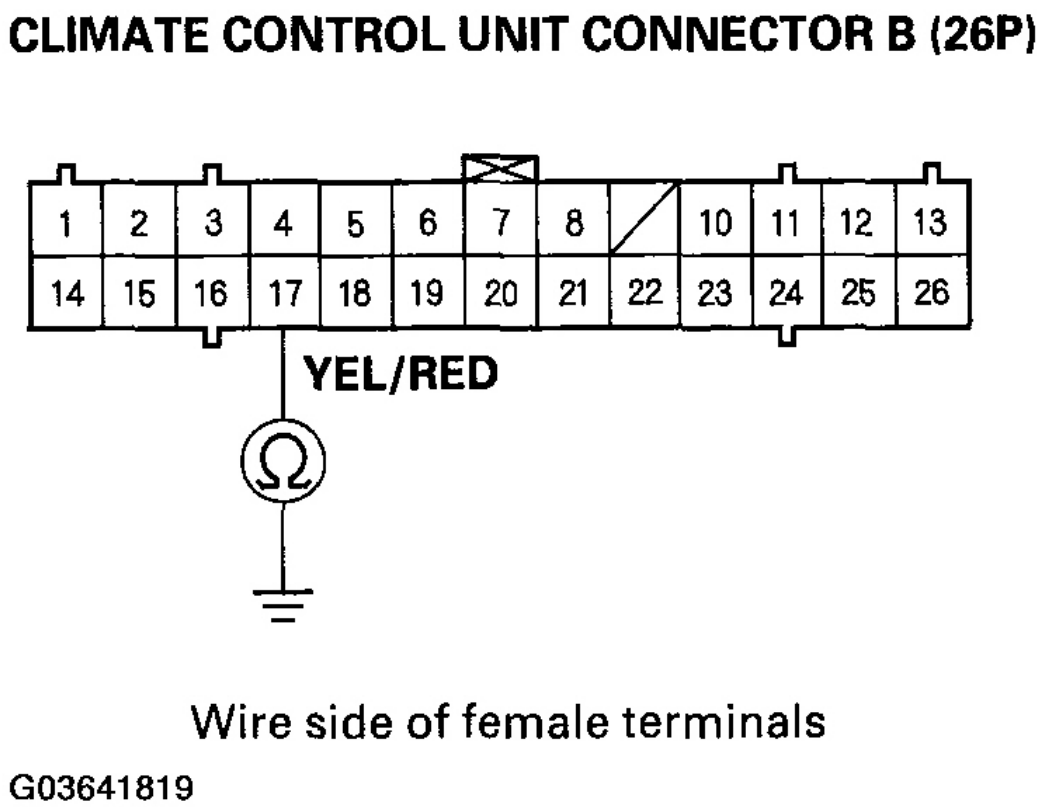

Fig. 20: Checking For Continuity Between No. 17 Terminal Of Climate Control Unit Connector B (26P) And Body Ground
Courtesy of AMERICAN HONDA MOTOR CO., INC.

Is there continuity?

YES - Repair short to body ground in the wire between the climate control unit and the in-car temperature sensor.

NO - Substitute a known-good climate control unit, and recheck. If the symptom/indication goes away, replace the original climate control unit.

cardiagn.com

DTC INDICATOR C: AN OPEN IN THE OUTSIDE AIR TEMPERATURE SENSOR CIRCUIT

1. Remove the outside air temperature sensor (see **OUTSIDE AIR TEMPERATURE SENSOR TEST**) and test it (see **OUTSIDE AIR TEMPERATURE SENSOR TEST**).

   Does the outside air temperature sensor test OK?

   YES - Go to step 2.

   NO - Replace the outside air temperature sensor.
2. Disconnect climate control unit connector B (26P).
3. Check for continuity between the No. 18 terminal of climate control unit connector B (26P) and the No. 1 terminal of the outside air temperature sensor 2P connector.

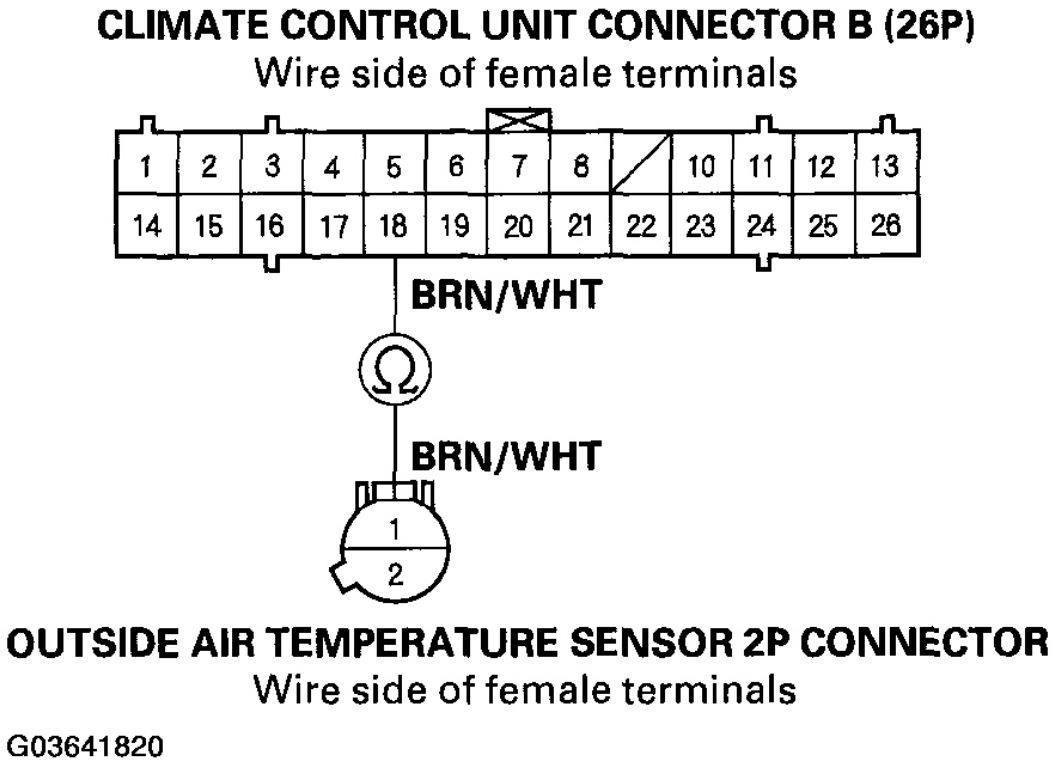

Fig. 21: Checking For Continuity Between No. 18 Terminal Of Climate Control Unit Connector B
Courtesy of AMERICAN HONDA MOTOR CO., INC.

Is there continuity?

YES - Go to step 4.

NO - Repair open in the wire between the climate control unit and the outside air temperature

cardiagn.com

sensor.

4. Check for continuity between the No. 1 terminal of climate control unit connector B (26P) and the No. 2 terminal of the outside air temperature sensor 2P connector.

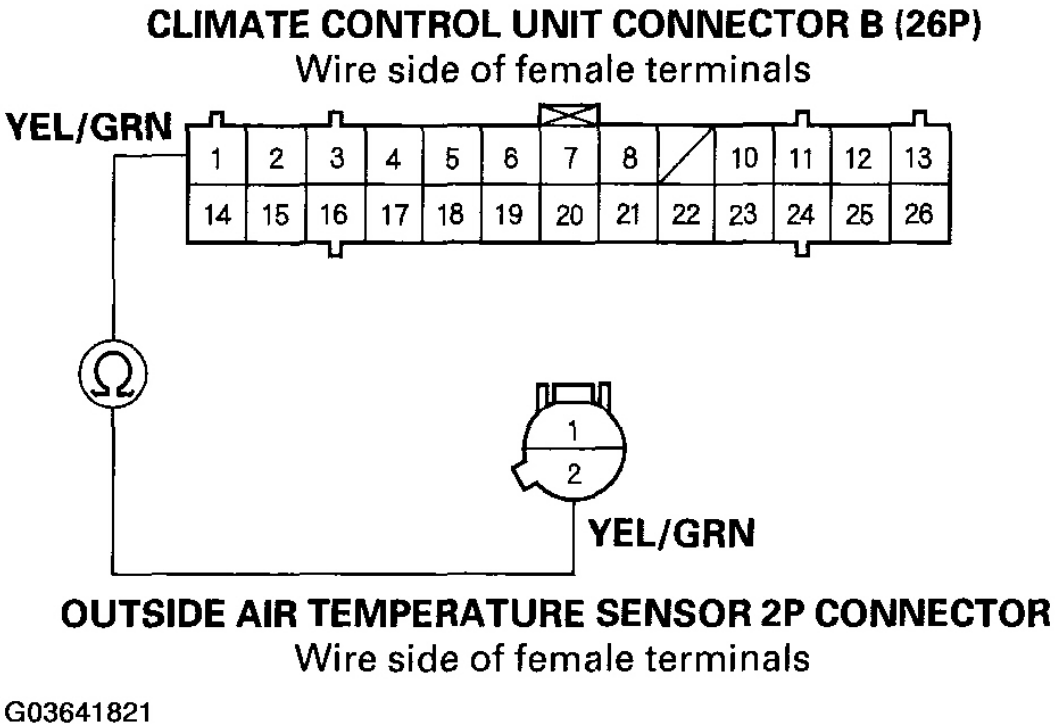

Fig. 22: Checking For Continuity Between No. 1 Terminal Of Climate Control Unit Connector B
Courtesy of AMERICAN HONDA MOTOR CO., INC.

Is there continuity?

YES - Check for loose wires or poor connections at climate control unit connector B (26P) and at the outside air temperature sensor 2P connector. If the connections are good, substitute a known-good climate control unit, and recheck. If the symptom/ indication goes away, replace the original climate control unit.

NO - Repair open in the wire between the climate control unit and the outside air temperature sensor.

DTC INDICATOR D: A SHORT IN THE OUTSIDE AIR TEMPERATURE SENSOR CIRCUIT

1. Remove the outside air temperature sensor (see **OUTSIDE AIR TEMPERATURE SENSOR TEST**).
2. Test the outside air temperature sensor (see **OUTSIDE AIR TEMPERATURE SENSOR TEST**).

cardiagn.com

Does the outside air temperature sensor test OK?

YES - Go to step 3.

NO - Replace the outside air temperature sensor.

3. Disconnect climate control unit connector B (26P).
4. Check for continuity between the No. 18 terminal of climate control unit connector B (26P) and body ground.

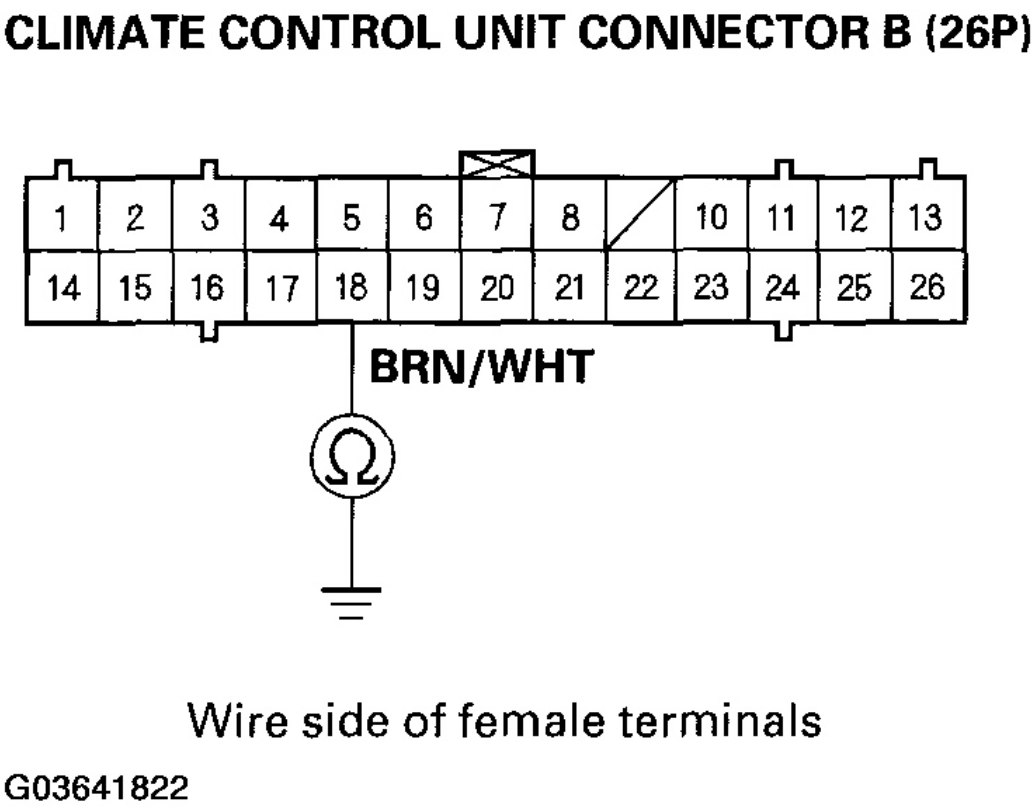

Fig. 23: Checking For Continuity Between No. 18 Terminal Of Climate Control Unit Connector B And Body Ground
Courtesy of AMERICAN HONDA MOTOR CO., INC.

Is there continuity?

YES - Repair short to body ground in the wire between the climate control unit and the outside air temperature sensor.

NO - Substitute a known-good climate control unit, and recheck. If the symptom/indication goes away, replace the original climate control unit.

cardiagn.com

DTC INDICATOR E: AN OPEN IN THE SUNLIGHT SENSOR CIRCUIT

1. Disconnect the sunlight sensor 2P connector.
2. Disconnect climate control unit connector B (26P).
3. Check for continuity between the No. 19 terminal of climate control unit connector B (26P) and the No. 1 terminal of the sunlight sensor 2P connector.

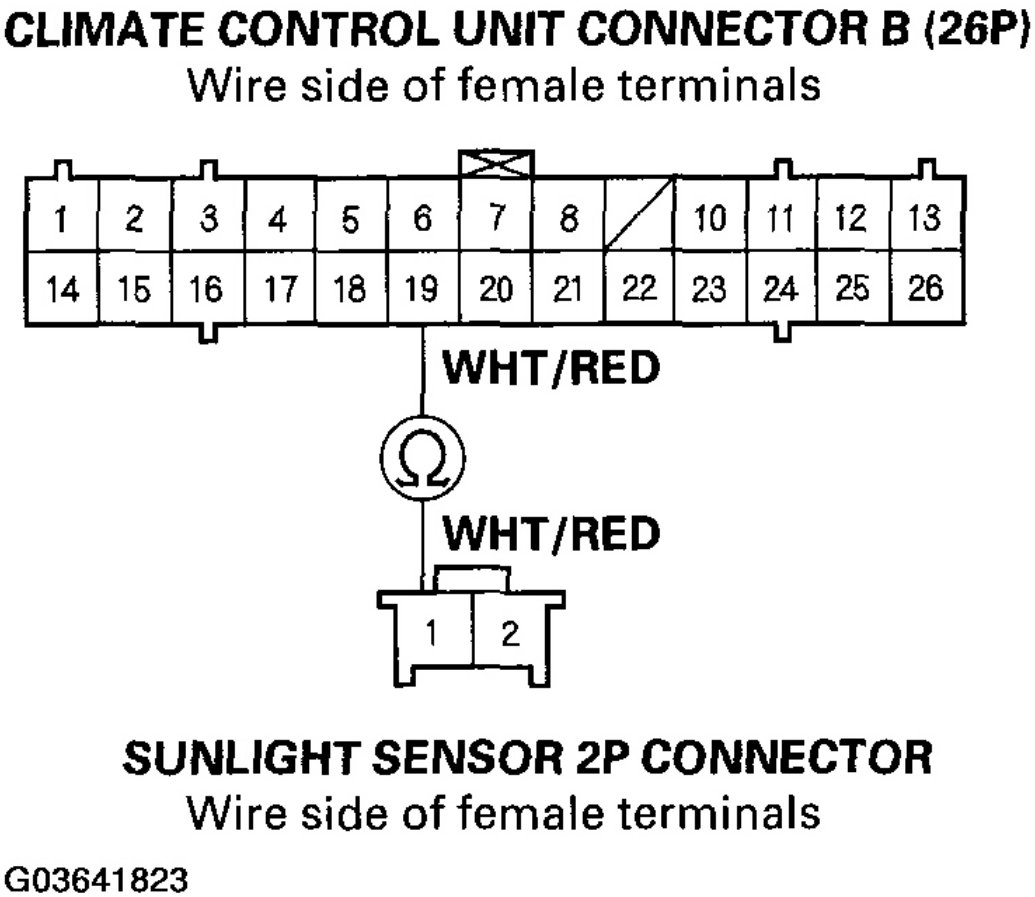

Fig. 24: Checking For Continuity Between No. 19 Terminal Of Climate Control Unit Connector B
Courtesy of AMERICAN HONDA MOTOR CO., INC.

Is there continuity?

YES - Go to step 4.

NO - Repair open in the wire between the climate control unit and the sunlight sensor.

4. Check for continuity between the No. 1 terminal of climate control unit connector B (26P) and the No. 2

cardiagn.com

terminal of the sunlight sensor 2P connector.

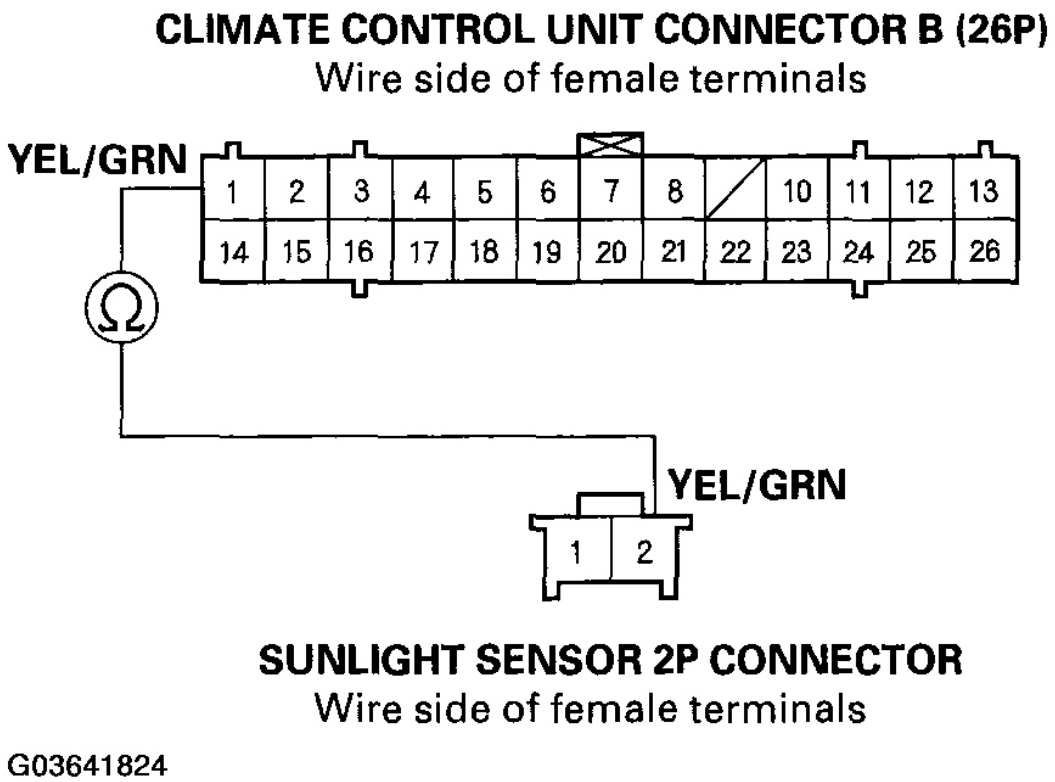

Fig. 25: Checking For Continuity Between No. 1 Terminal Of Climate Control Unit Connector B
Courtesy of AMERICAN HONDA MOTOR CO., INC.

Is there continuity?

YES - Go to step 5.

NO - Repair open in the wire between the climate control unit and the sunlight sensor.

5. Reconnect the sunlight sensor 2P connector.
6. Reconnect climate control unit connector B (26P).
7. Test the sunlight sensor (see **SUNLIGHT SENSOR TEST**).

Does the sunlight sensor test OK?

YES - Check for loose wires or poor connections at climate control unit connector B (26P) and at the sunlight sensor 2P connector. If the connections are good, substitute a known-good climate control unit, and recheck. If the symptom/indication goes away, replace the original climate control unit.

cardiagn.com

NO - Replace the sunlight sensor.

DTC INDICATOR F: A SHORT IN THE SUNLIGHT SENSOR CIRCUIT

1. Disconnect the sunlight sensor 2P connector.
2. Disconnect climate control unit connector B (26P).
3. Check for continuity between the No. 19 terminal of climate control unit connector B (26P) and body ground.

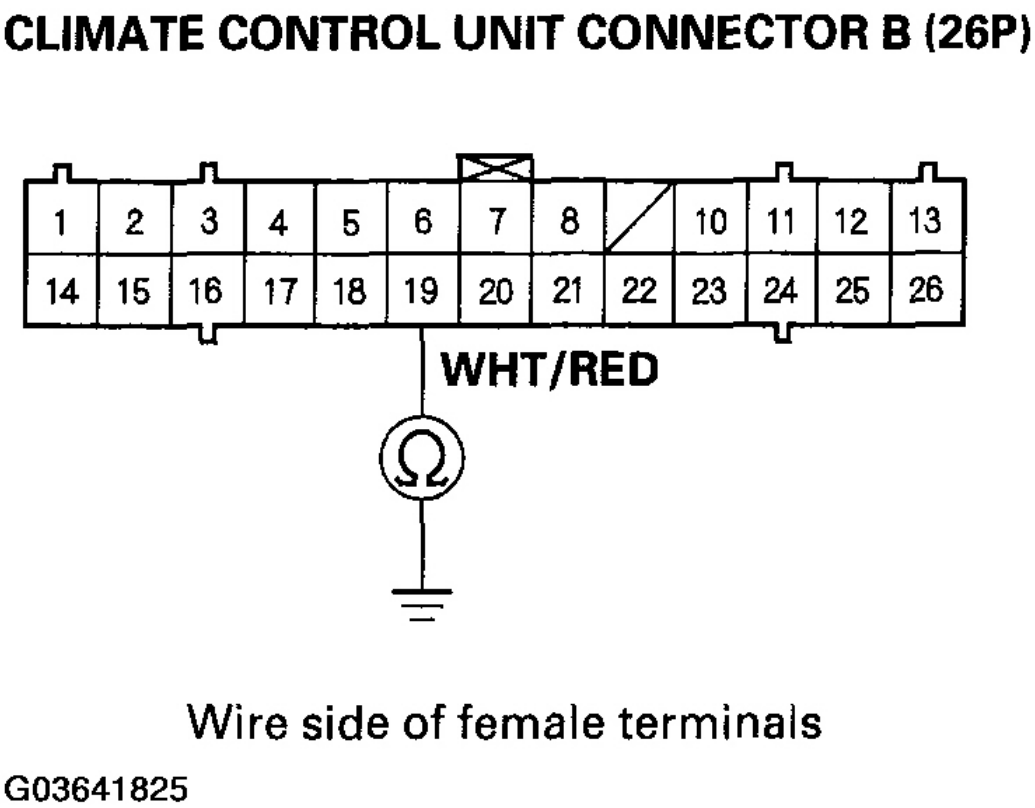

Fig. 26: Checking For Continuity Between No. 19 Terminal Of Climate Control Unit Connector B And Body Ground
Courtesy of AMERICAN HONDA MOTOR CO., INC.

Is there continuity?

YES - Repair short to body ground in the wire between the climate control unit and the sunlight sensor.

NO - Go to step 4.

cardiagn.com

4. Reconnect the sunlight sensor 2P connector.
5. Reconnect climate control unit connector B (26P).
6. Test the sunlight sensor (see **SUNLIGHT SENSOR TEST**).

Does the sunlight sensor test OK?

YES - Substitute a known-good climate control unit, and recheck. If the symptom/indication goes away, replace the original climate control unit.

NO - Replace the sunlight sensor.

DTC INDICATOR G: AN OPEN IN THE EVAPORATOR TEMPERATURE SENSOR CIRCUIT

1. Disconnect climate control unit connector B (26P).
2. Disconnect the evaporator temperature sensor 2P connector.
3. Check for continuity between the No. 20 terminal of climate control unit connector B (26P) and the No. 2 terminal of the evaporator temperature sensor 2P connector.

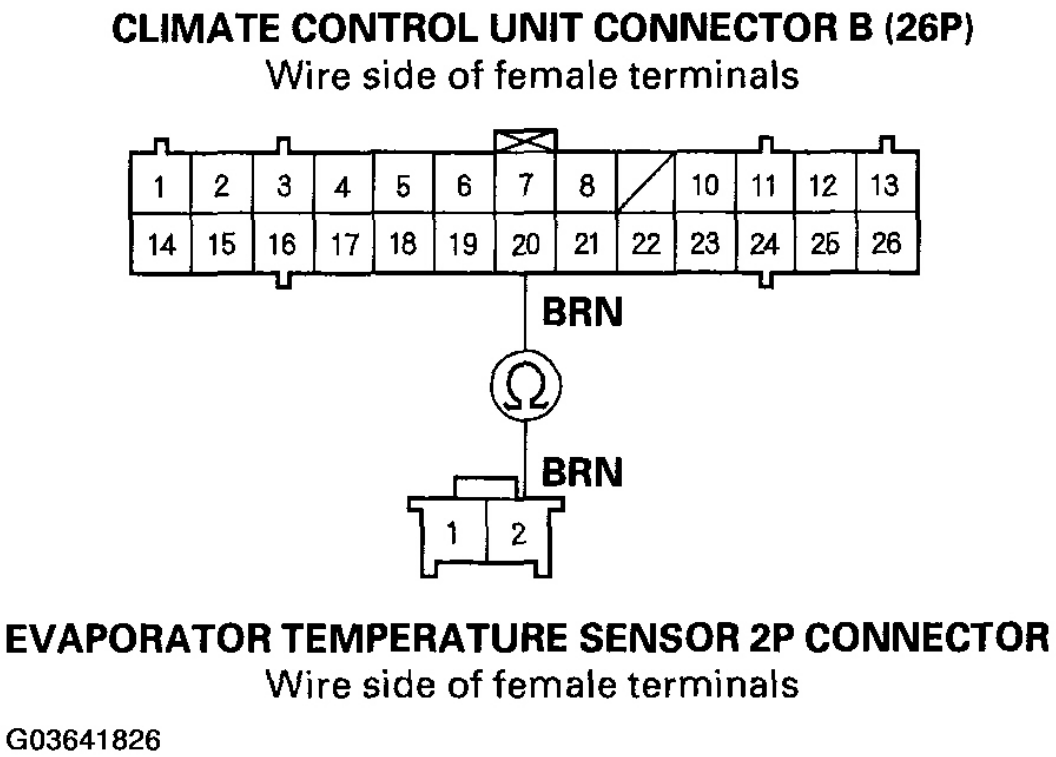

Fig. 27: Checking For Continuity Between No. 20 Terminal Of Climate Control Unit Connector B
Courtesy of AMERICAN HONDA MOTOR CO., INC.

cardiagn.com

Is there continuity?

YES - Go to step 4.

NO - Repair open in the wire between the climate control unit and the evaporator temperature sensor.

4. Check for continuity between the No. 1 terminal of climate control unit connector B (26P) and the No. 1 terminal of the evaporator temperature sensor 2P connector.

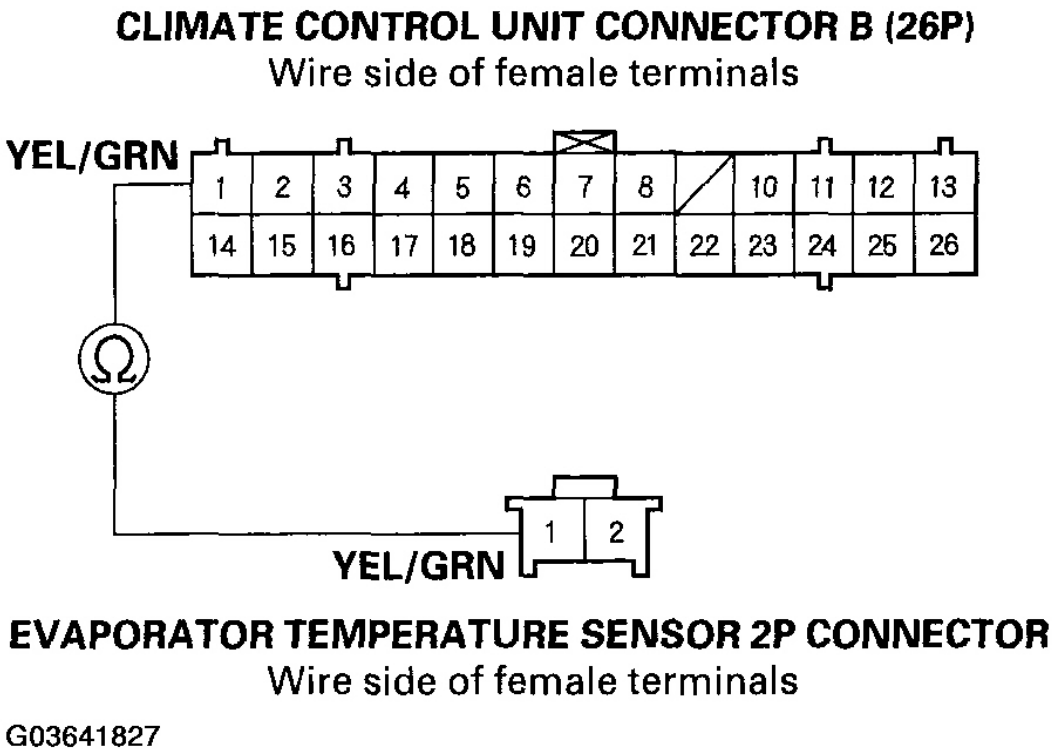

Fig. 28: Checking For Continuity Between No. 1 Terminal Of Climate Control Unit Connector B
Courtesy of AMERICAN HONDA MOTOR CO., INC.

Is there continuity?

YES - Go to step 5.

NO - Repair open in the wire between the climate control unit and the evaporator temperature sensor.

5. Reconnect climate control unit connector B (26P).
6. Connect a new evaporator temperature sensor to the evaporator temperature sensor 2P connector, then run the self-diagnostic (see **GENERAL TROUBLESHOOTING INFORMATION**).

cardiagn.com

Is DTC G indicated?

YES - Check for loose wires or poor connections at climate control unit connector B (26P) and at the evaporator temperature sensor 2P connector. If the connections are good, substitute a known-good climate control unit, and recheck. If the symptom/indication goes away, replace the original climate control unit.

NO - Replace the original evaporator temperature sensor.

DTC INDICATOR H: A SHORT IN THE EVAPORATOR TEMPERATURE SENSOR CIRCUIT

1. Disconnect the evaporator temperature sensor 2P connector.
2. Disconnect climate control unit connector B (26P).
3. Check for continuity between the No. 20 terminal of climate control unit connector B (26P) and body ground.

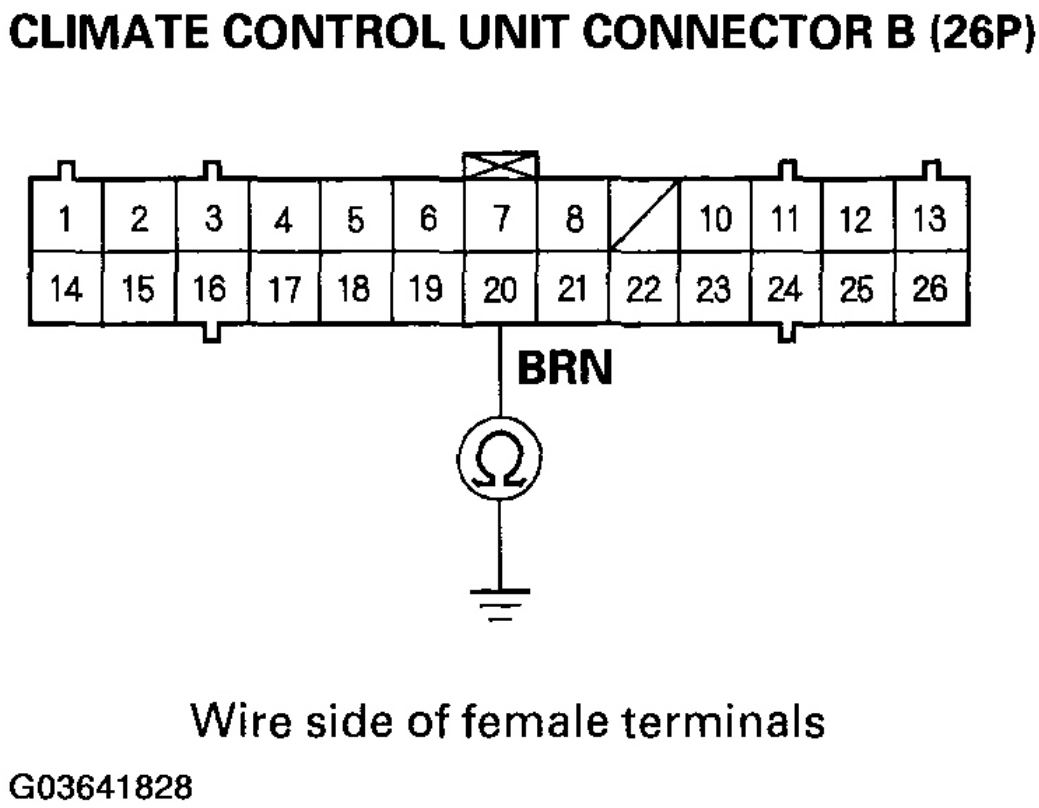

Fig. 29: Checking For Continuity Between No. 20 Terminal Of Climate Control Unit Connector B And Body Ground
Courtesy of AMERICAN HONDA MOTOR CO., INC.

cardiagn.com

Is there continuity?

YES - Repair short to body ground in the wire between the climate control unit and the evaporator temperature sensor.

NO - Go to step 4.

4. Reconnect climate control unit connector B (26P).
5. Connect a new evaporator temperature sensor to the evaporator temperature sensor 2P connector, then run the self-diagnostic (see **GENERAL TROUBLESHOOTING INFORMATION**).

Is DTC H indicated?

YES - Substitute a known-good climate control unit, and recheck. If the symptom/indication goes away, replace the original climate control unit.

NO - Replace the original evaporator temperature sensor.

DTC INDICATOR I: AN OPEN IN THE AIR MIX CONTROL MOTOR CIRCUIT

1. Test the air mix control motor (see **AIR MIX CONTROL MOTOR TEST**).

Does the air mix control motor test OK?

YES - Go to step 2.

NO - Replace the air mix control motor.

2. Disconnect the air mix control motor 7P connector.
3. Disconnect climate control unit connector B (26P).
4. Check for continuity between the following terminals of climate control unit connector B (26P) and the air mix control motor 7P connector.

AIR MIX CONTROL MOTOR 7P CONNECTOR TERMINALS REFERENCE

26P:	7P:
No. 1	No. 5
No. 3	No. 7
No. 21	No. 3
No. 25	No. 2
No. 26	No. 1

cardiagn.com

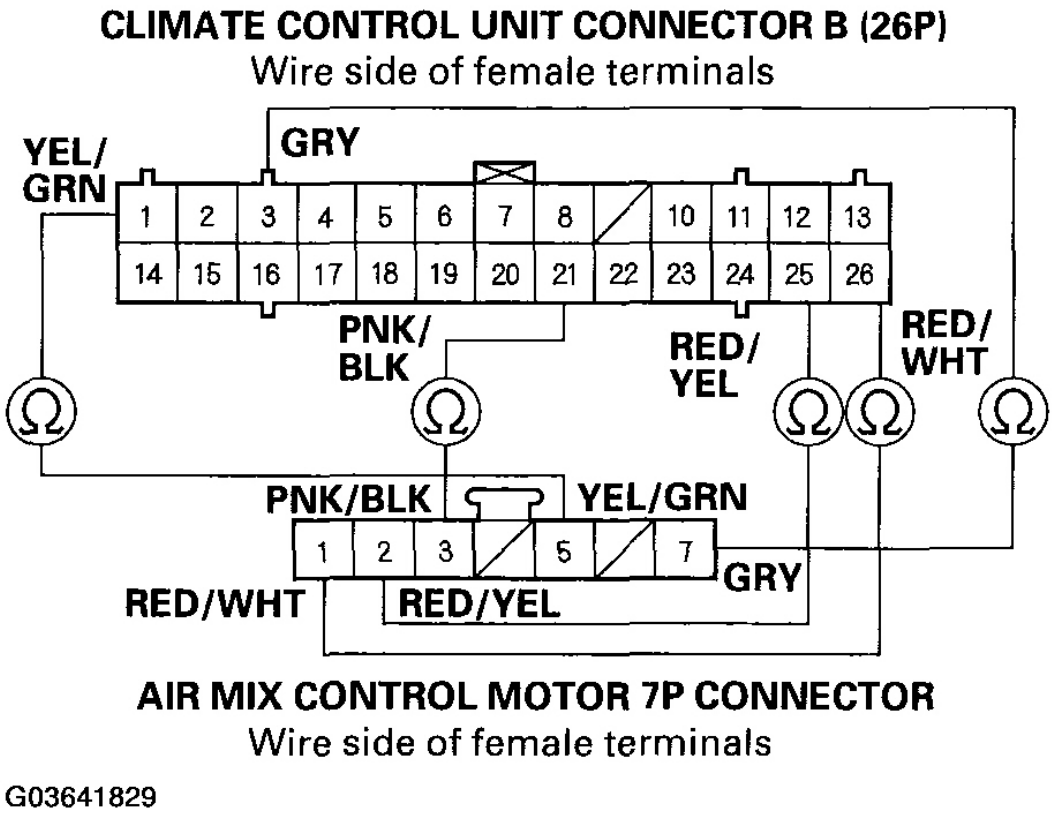

Fig. 30: Checking For Continuity Between Terminals Of Climate Control Unit Connector B
Courtesy of AMERICAN HONDA MOTOR CO., INC.

Is there continuity?

YES - Check for loose wires or poor connections at climate control unit connector B (26P) and at the air mix control motor 7P connector. If the connections are good, substitute a known-good climate control unit, and recheck. If the symptom/indication goes away, replace the original climate control unit.

NO - Repair any open in the wire(s) between the climate control unit and the air mix control motor.

DTC INDICATOR J: A SHORT IN THE AIR MIX CONTROL MOTOR CIRCUIT

1. Test the air mix control motor (see **AIR MIX CONTROL MOTOR TEST**).

Does the air mix control motor test OK?

YES - Go to step 2.

NO - Replace the air mix control motor.

cardiagn.com

2. Disconnect the air mix control motor 7P connector.
3. Disconnect climate control unit connector B (26P).
4. Check for continuity between body ground and climate control unit connector B (26P) terminals No. 1, 3, 21, 25, and 26 individually.

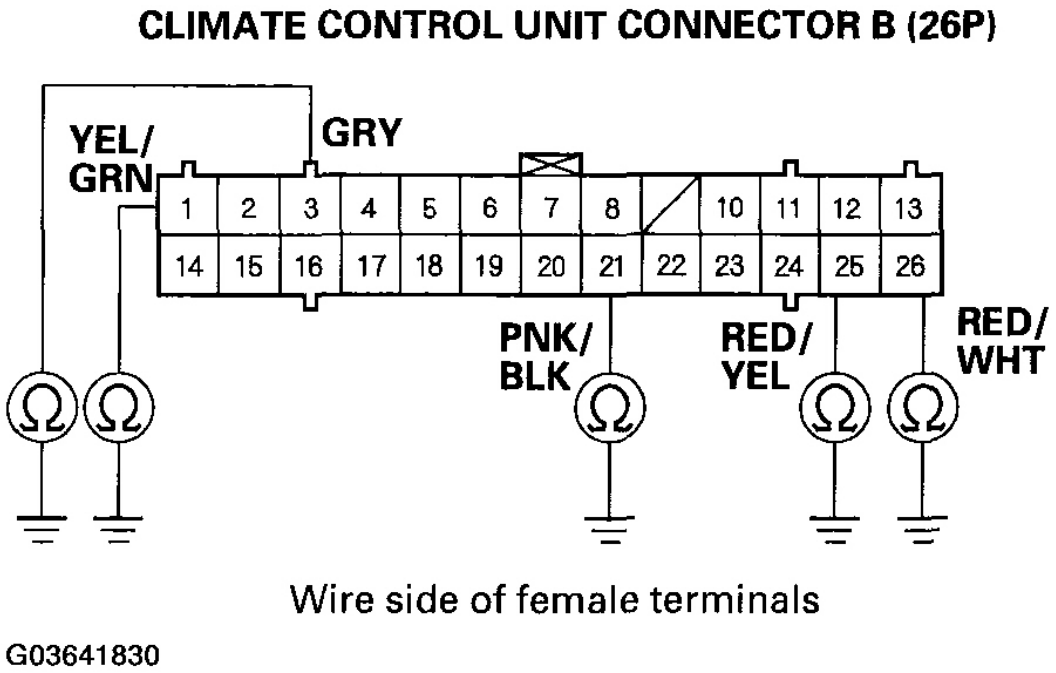

Fig. 31: Checking For Continuity Between Body Ground And Climate Control Unit Connector B
Courtesy of AMERICAN HONDA MOTOR CO., INC.

Is there continuity?

YES - Repair any short to body ground in the wire(s) between the climate control unit and the air mix control motor.

NO - Go to step 5.

5. Turn the ignition switch ON (II), and check the same terminals for voltage.

cardiagn.com

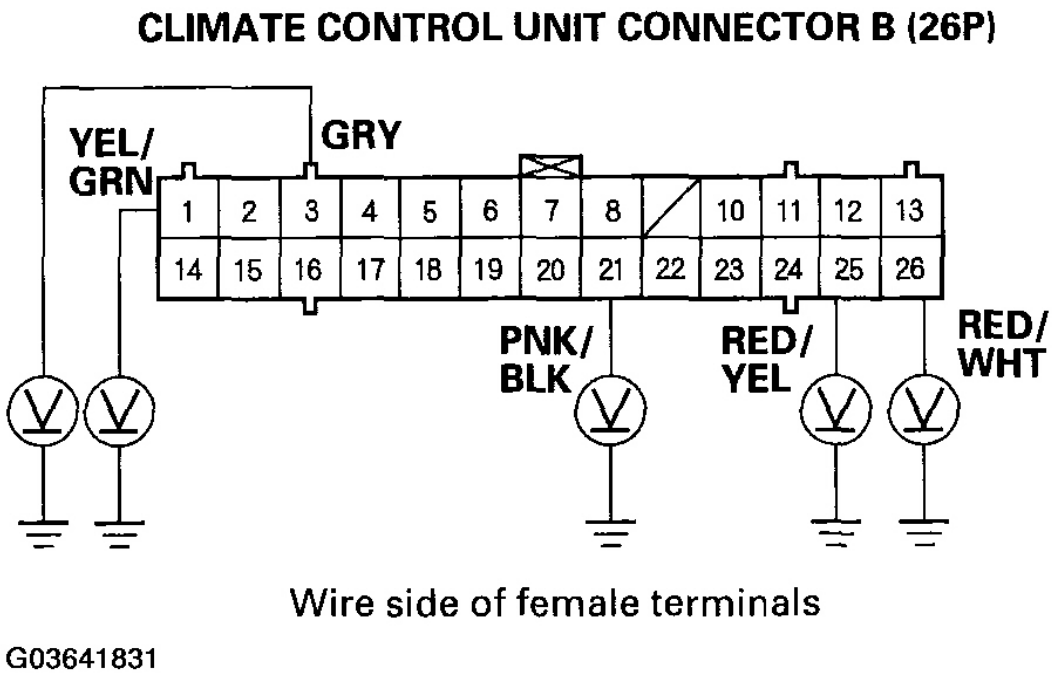

Fig. 32: Checking Terminals For Voltage
Courtesy of AMERICAN HONDA MOTOR CO., INC.

Is there any voltage?

YES - Repair any short to power in the wire(s) between the climate control unit and the air mix control motor. This short may also damage the climate control unit. Repair the short to power before replacing the climate control unit.

NO - Substitute a known-good climate control unit, and recheck. If the symptom/indication goes away, replace the original climate control unit.

DTC INDICATOR K: A PROBLEM IN THE AIR MIX CONTROL LINKAGE, DOOR, OR MOTOR

1. Test the air mix control motor (see **AIR MIX CONTROL MOTOR TEST**).

Does the air mix control motor test OK?

YES - Substitute a known-good climate control unit, and recheck. If the symptom/indication goes away, replace the original climate control unit.

NO - Replace the air mix control motor, or repair the linkage and door.

DTC INDICATOR L: AN OPEN OR SHORT IN THE MODE CONTROL MOTOR CIRCUIT

cardiagn.com

1. Test the mode control motor (see **MODE CONTROL MOTOR TEST**).

   Does the mode control motor test OK?

   YES - Go to step 2.

   NO - Replace the mode control motor.
2. Disconnect the mode control motor 7P connector.
3. Disconnect climate control unit connector B (26P).
4. Check for continuity between body ground and climate control unit connector B (26P) terminals No. 1, 5, 6, 7, 8, 10, and 11 individually.

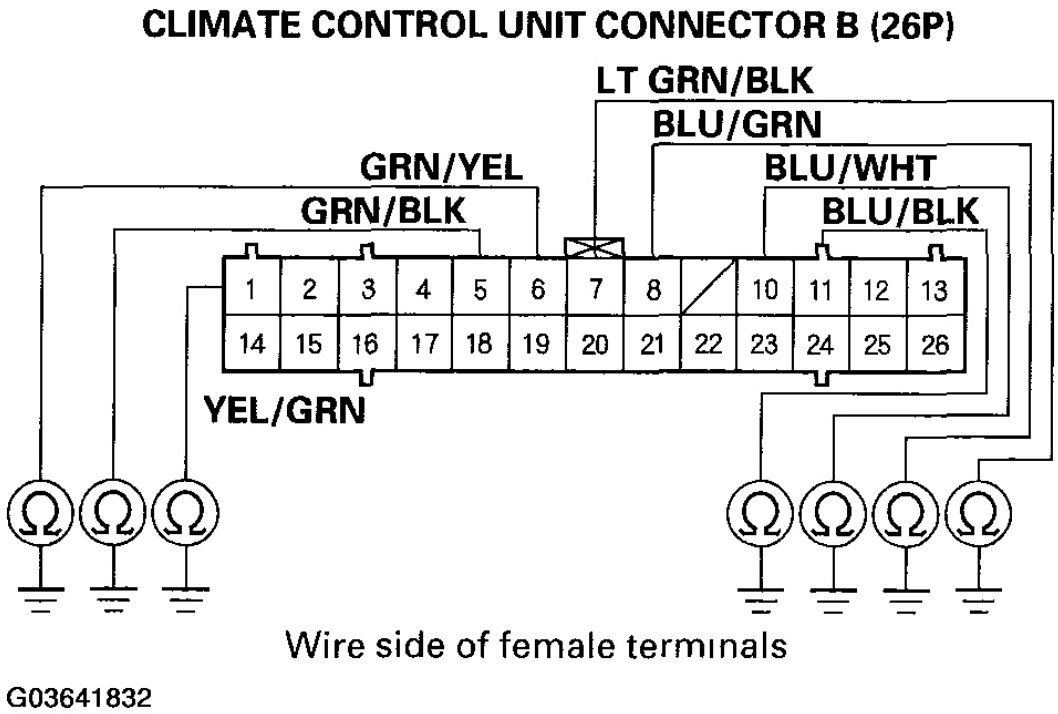

Fig. 33: Checking For Continuity Between Body Ground And Climate Control Unit Connector B (26P) Terminals No. 1, 5, 6, 7, 8, 10
Courtesy of AMERICAN HONDA MOTOR CO., INC.

Is there continuity?

YES - Repair any short to body ground in the wire(s) between the climate control unit and the mode control motor.

NO - Go to step 5.

5. Turn the ignition switch ON (II), and check the same terminals for voltage.

cardiagn.com

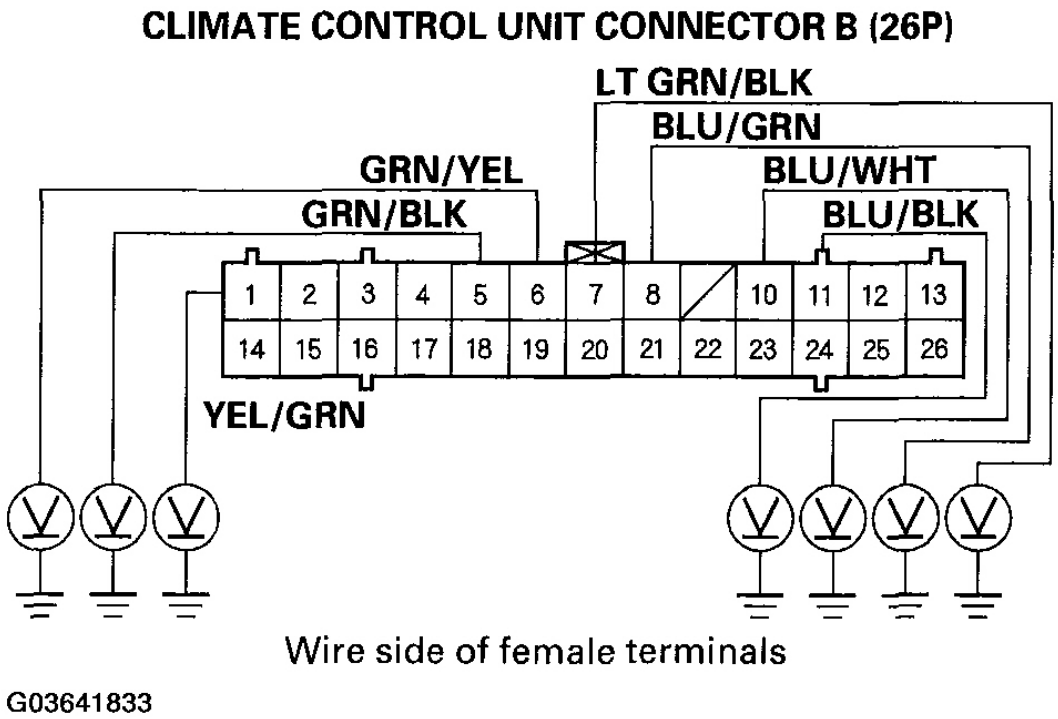

Fig. 34: Checking Terminals For Voltage
Courtesy of AMERICAN HONDA MOTOR CO., INC.

Is there any voltage?

YES - Repair any short to power in the wire(s) between the climate control unit and the mode control motor. This short may also damage the climate control unit. Repair the short to power before replacing the climate control unit.

NO - Go to step 6.

6. Turn the ignition switch OFF, and check for continuity between following terminals of climate control unit connector B (26P) and the mode control motor 7P connector.

TERMINALS REFERENCE

26P:	7P:
No. 1	No. 7
No. 5	No. 6
No. 6	No. 5
No. 7	No. 4
No. 8	No. 3
No. 10	No. 2
No. 11	No. 1

cardiagn.com

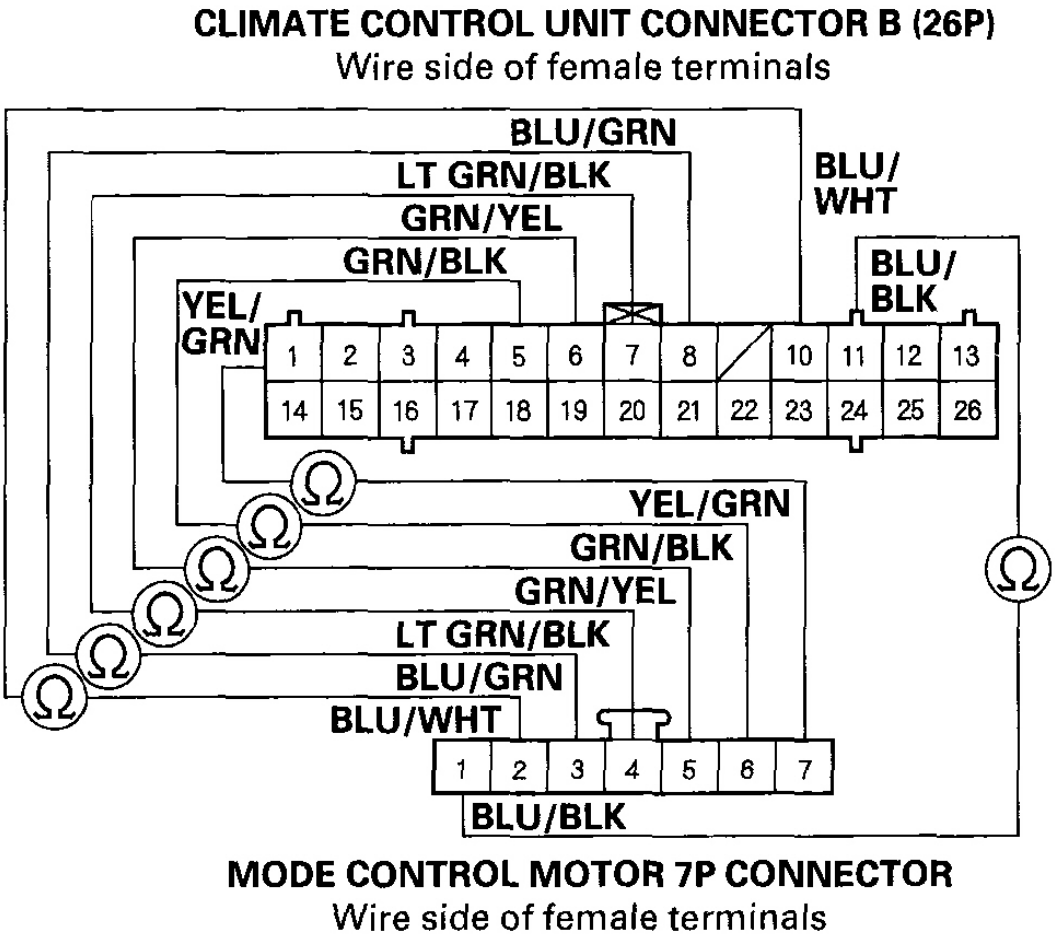

Fig. 35: Checking For Continuity Between Terminals Of Climate Control Unit Connector B
Courtesy of AMERICAN HONDA MOTOR CO., INC.

Is there continuity?

YES - Check for loose wires or poor connections at climate control unit connector B (26P) and at the mode control motor 7P connector. If the connections are good, substitute a known-good climate control unit, and recheck. If the symptom/indication goes away, replace the original climate control unit.

NO - Repair any open in the wire(s) between the climate control unit and the mode control motor.

DTC INDICATOR M: A PROBLEM IN THE MODE CONTROL LINKAGE, DOORS, OR MOTOR

1. Test the mode control motor (see **MODE CONTROL MOTOR TEST**).

cardiagn.com

Does the mode control motor test OK?

YES - Substitute a known-good climate control unit, and recheck. If the symptom/indication goes away, replace the original climate control unit.

NO - Replace the mode control motor, or repair the linkage and doors.

DTC INDICATOR N: A PROBLEM IN THE BLOWER MOTOR CIRCUIT

1. Check the No. 56 (40 A) fuse in the underhood fuse/relay box, and the No. 3 (7.5 A) fuse in the driver's underdash fuse/relay box.

   Are the fuses OK?

   YES - Go to step 2.

   NO - Replace the fuse(s), and recheck.
2. Connect the No. 2 terminal of the blower motor 2P connector to body ground with a jumper wire.

cardiagn.com

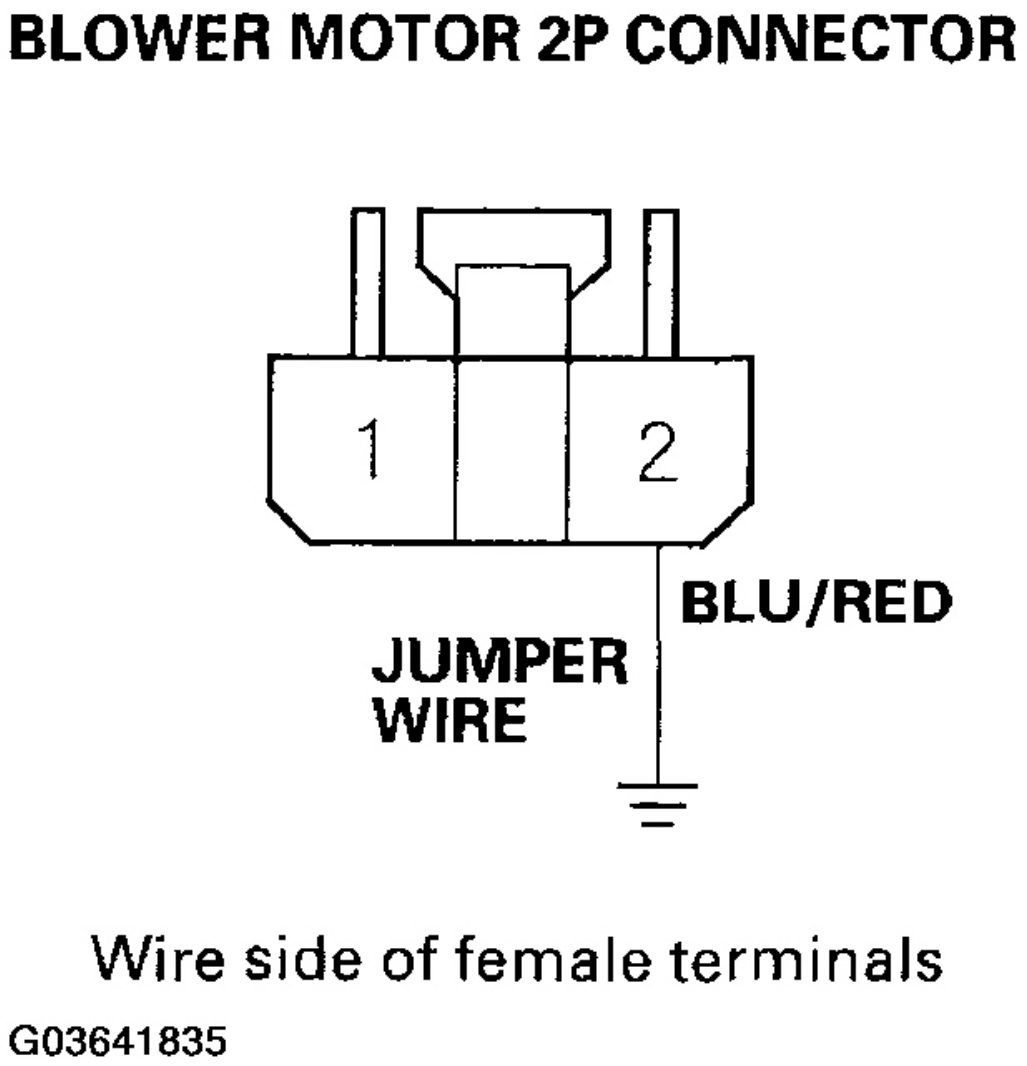

Fig. 36: Connecting No. 2 Terminal Of Blower Motor 2P Connector To Body Ground With Jumper Wire
Courtesy of AMERICAN HONDA MOTOR CO., INC.

3. Turn the ignition switch ON (II).

Does the blower motor run?

YES - Go to step 4.
NO - Go to step 17 .

cardiagn.com

4. Turn the ignition switch OFF.
5. Disconnect the jumper wire.
6. Disconnect the power transistor 5P connector.
7. Check for continuity between the No. 5 terminal of the power transistor 5P connector and body ground.

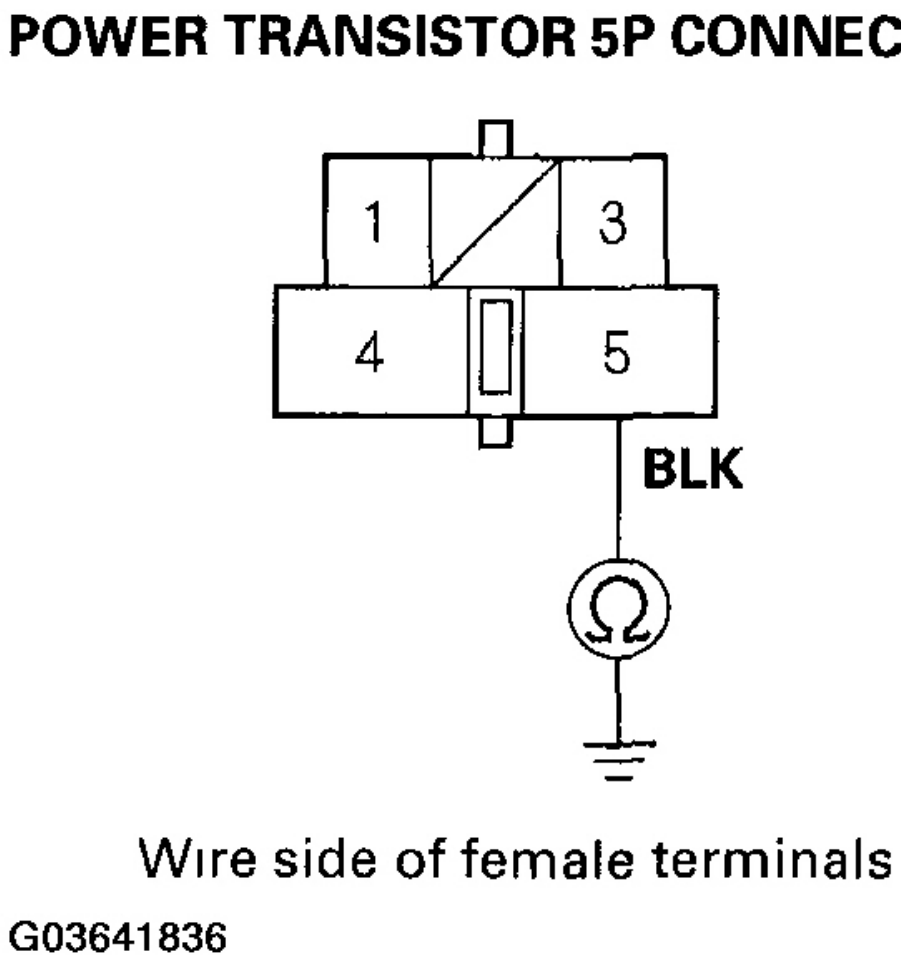

Fig. 37: Checking For Continuity Between No. 5 Terminal Of Power Transistor 5P Connector And Body Ground
Courtesy of AMERICAN HONDA MOTOR CO., INC.

Is there continuity?

YES - Go to step 8.

cardiagn.com

NO - Check for an open in the wire between the power transistor and body ground. If the wire is OK, check for poor ground at G401.

8. Connect the No. 4 and No. 5 terminals of the power transistor 5P connector with a jumper wire.

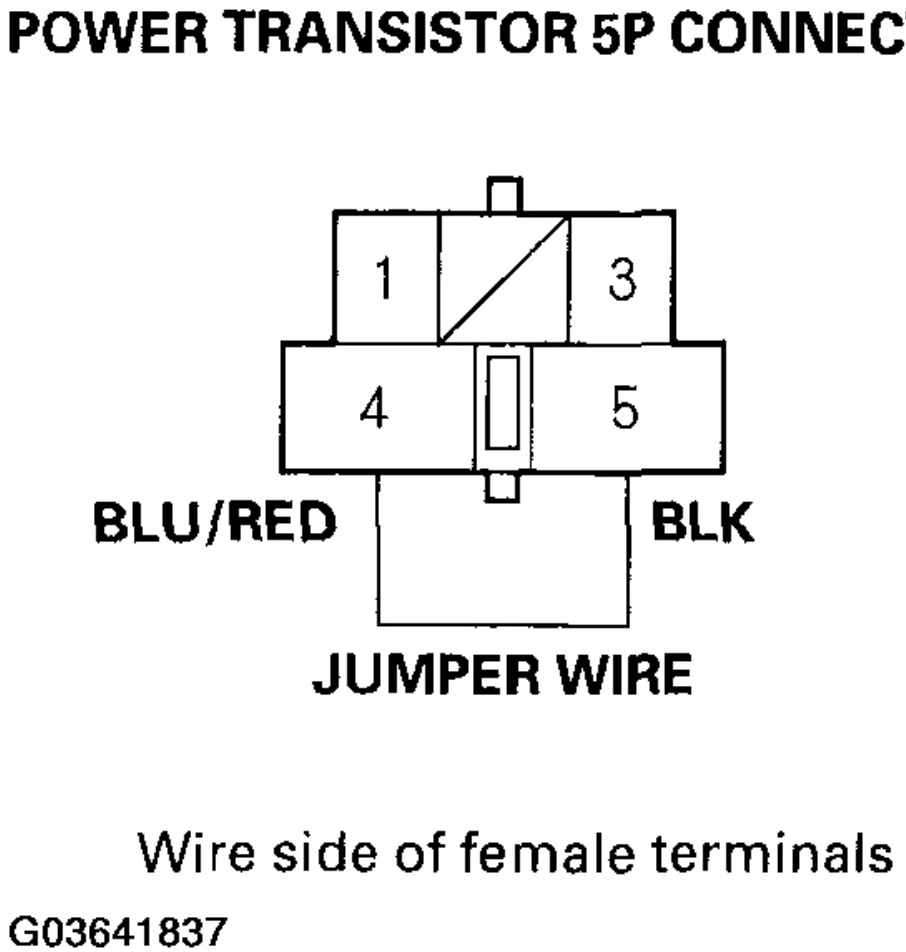

Fig. 38: Connecting No. 4 And No. 5 Terminals Of Power Transistor 5P Connector With Jumper Wire
Courtesy of AMERICAN HONDA MOTOR CO., INC.

9. Turn the ignition switch ON (II).

Does the blower motor run at high speed?

YES - Go to step 10.

cardiagn.com

NO - Repair open in the wire between the power transistor and the blower motor.

10. Turn the ignition switch OFF.
11. Disconnect the jumper wire.
12. Disconnect climate control unit connector B (26P).
13. Check for continuity between the No. 12 and No. 14 terminals of climate control unit connector B (26P) and body ground individually.

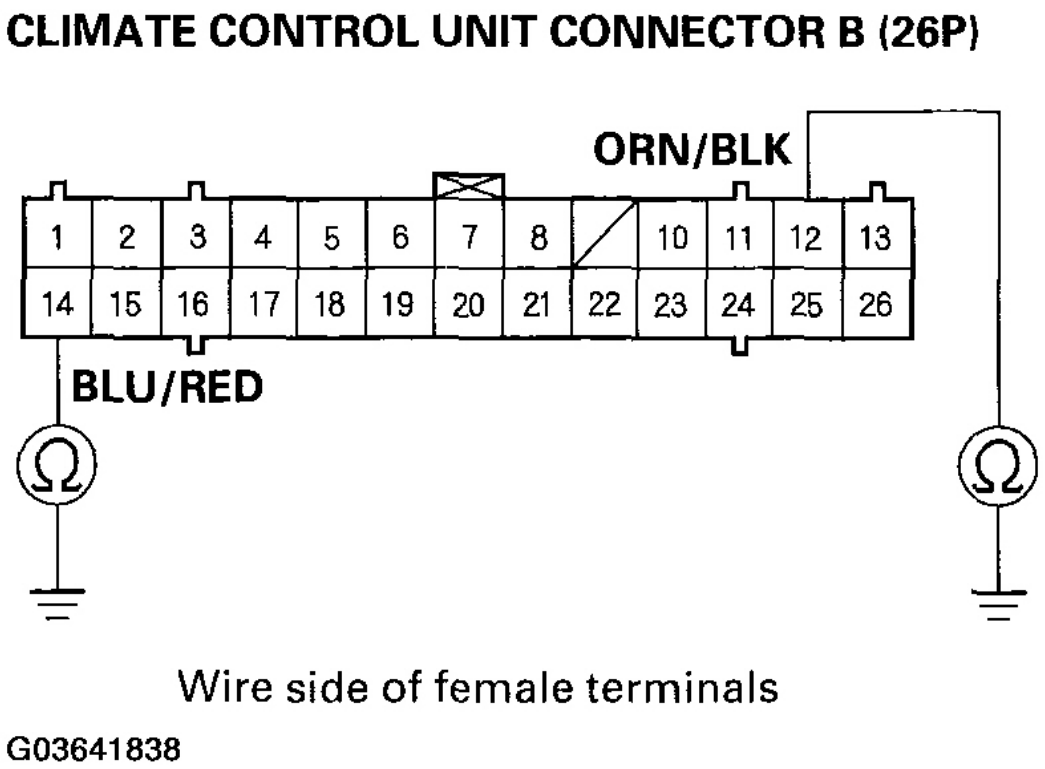

Fig. 39: Checking For Continuity Between No. 12 And No. 14 Terminals Of Climate Control Unit Connector B And Body Ground
Courtesy of AMERICAN HONDA MOTOR CO., INC.

Is there continuity?

YES - Repair any short to body ground in the wire(s) between the climate control unit and the power transistor.

NO - Go to step 14.

14. Check for continuity between the following terminals of climate control unit connector B (26P) and power transistor 5P connector.

cardiagn.com

TERMINALS REFERENCE

26P:	5P:
No. 12	No. 3
No. 14	No. 1

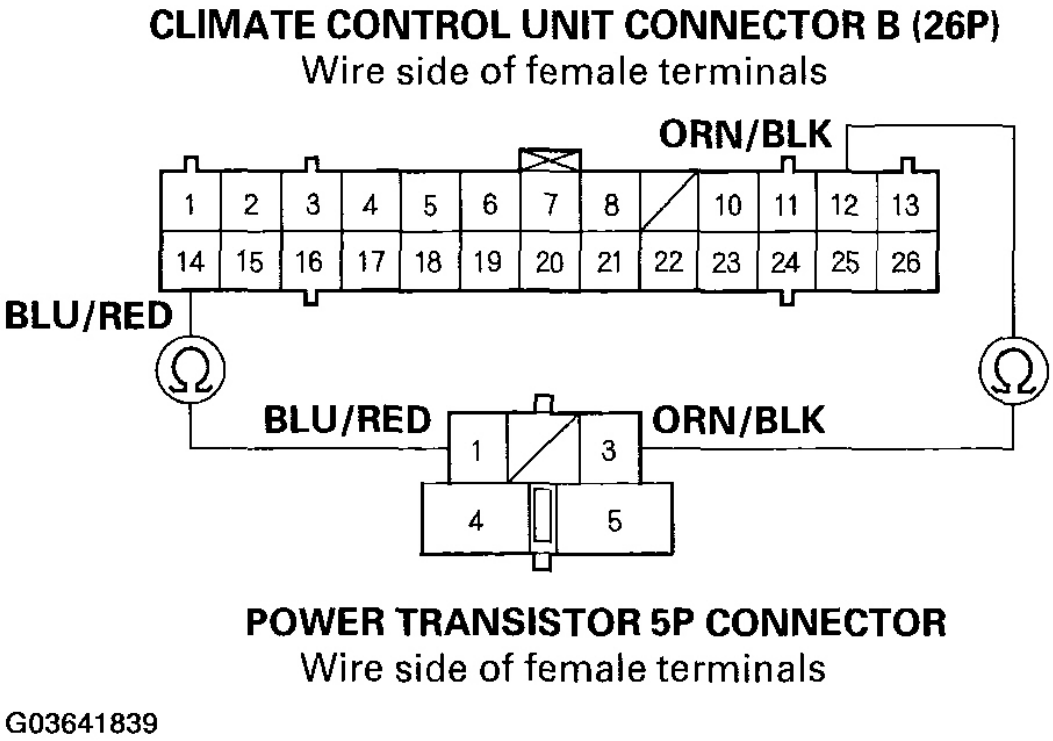

Fig. 40: Checking For Continuity Between Following Terminals Of Climate Control Unit Connector B And Power Transistor 5P Connector
Courtesy of AMERICAN HONDA MOTOR CO., INC.

Is there continuity?

YES - Go to step 15.

NO - Repair any open in the wire(s) between the climate control unit and the power transistor.

15. Reconnect climate control unit connector B (26P).
16. Test the power transistor (see **EVAPORATOR TEMPERATURE SENSOR TEST**).

Does the power transistor test OK?

YES - Check for loose wires or poor connections at climate control unit connector B (26P) and at the power transistor 5P connector. If the connections are good, substitute a known-good climate

cardiagn.com

control unit, and recheck. If the symptom/indication goes away, replace the original climate control unit.

NO - Replace the power transistor.

17. Disconnect the jumper wire.
18. Disconnect the blower motor 2P connector.
19. Measure the voltage between the No. 1 terminal of the blower motor 2P connector and body ground.

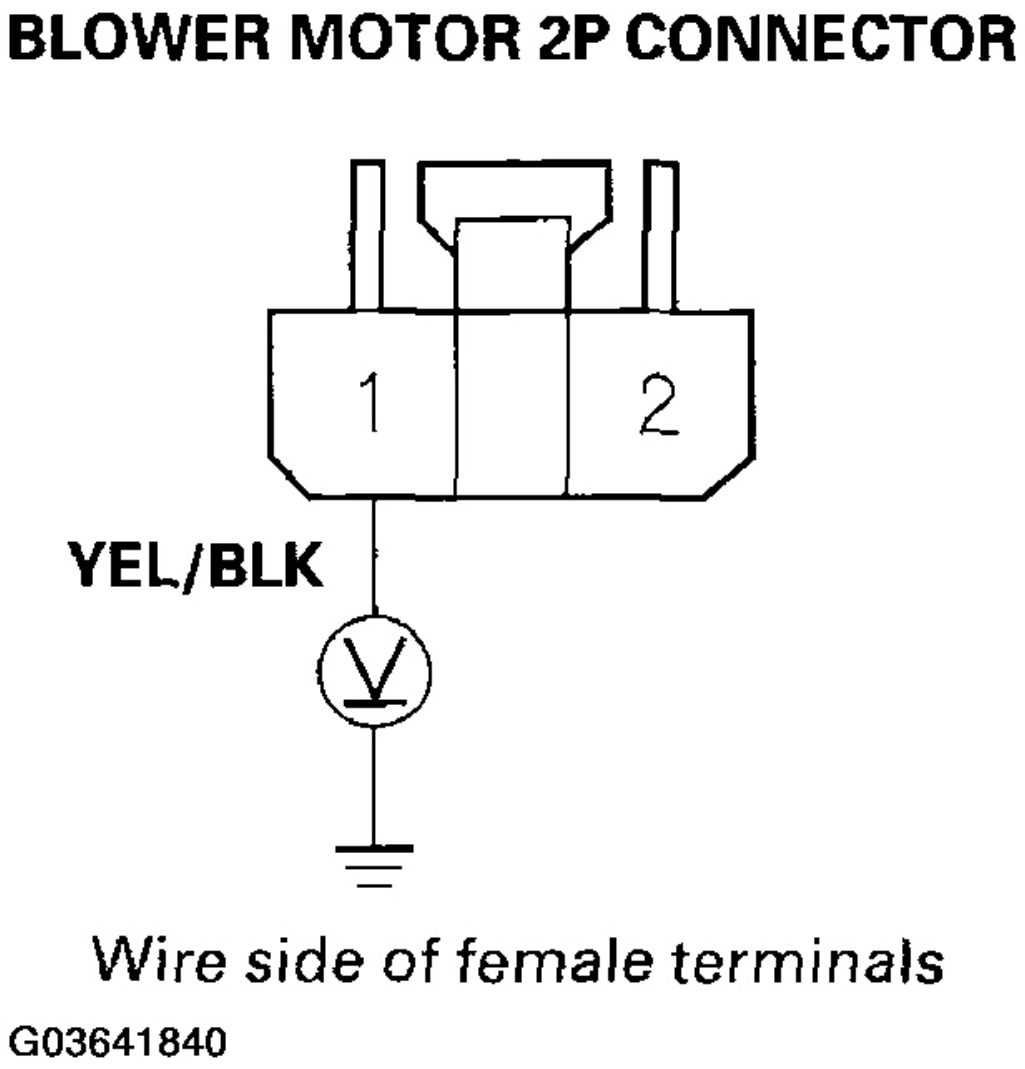

Fig. 41: Measuring Voltage Between No. 1 Terminal Of Blower Motor 2P Connector And Body Ground
Courtesy of AMERICAN HONDA MOTOR CO., INC.

cardiagn.com

Is there battery voltage?

YES - Replace the blower motor.

NO - Go to step 20.

20. Turn the ignition switch OFF.
21. Remove the blower motor relay from the underhood fuse/relay box, and test it (see **POWER RELAY TEST**).

Does the relay test OK?

YES - Go to step 22.

NO - Replace the blower motor relay.

22. Measure the voltage between the No. 4 terminal of the blower motor relay 4P socket and body ground.

cardiagn.com

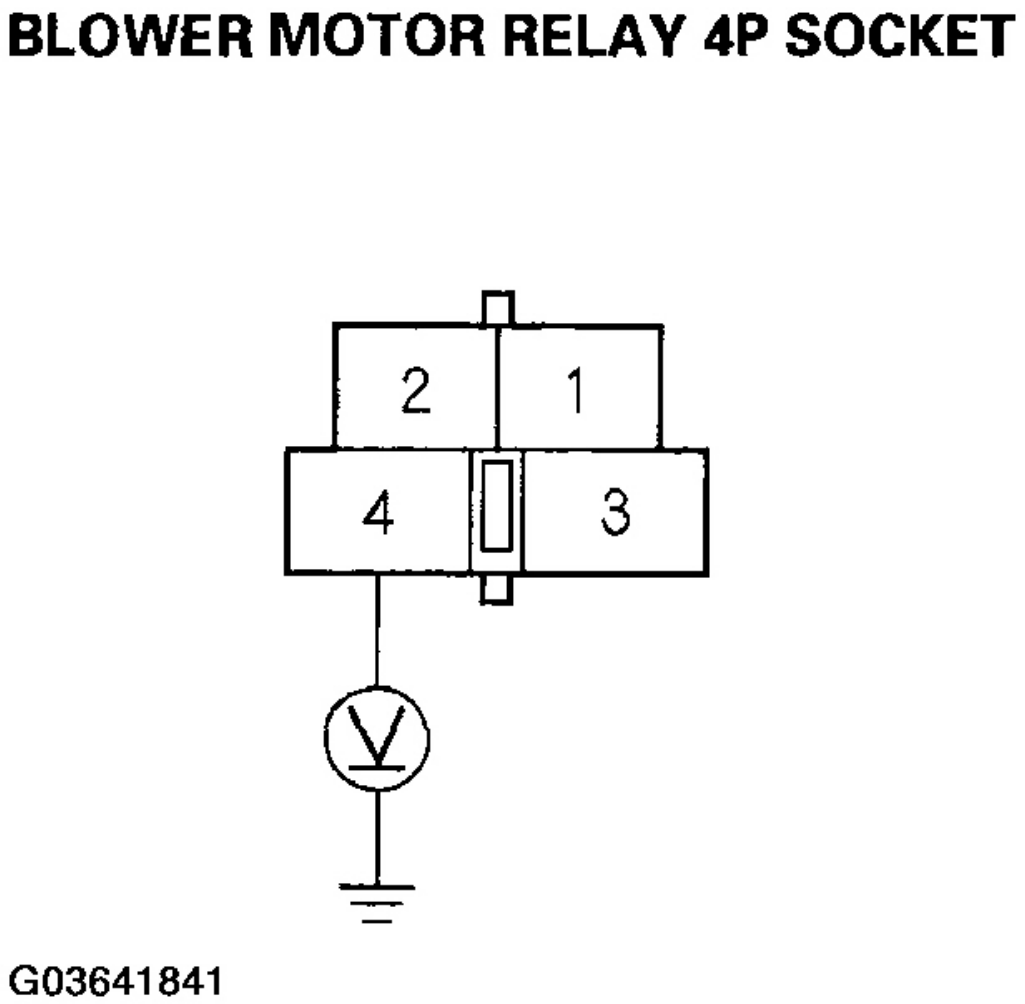

Fig. 42: Measuring Voltage Between No. 4 Terminal Of Blower Motor Relay 4P Socket And Body Ground
Courtesy of AMERICAN HONDA MOTOR CO., INC.

Is there battery voltage?

YES - Go to step 23.
NO - Replace the underhood fuse/relay box.

23. Turn the ignition switch ON (II).
24. Measure the voltage between the No.1 terminal of the blower motor relay 4P socket and body ground.

cardiagn.com

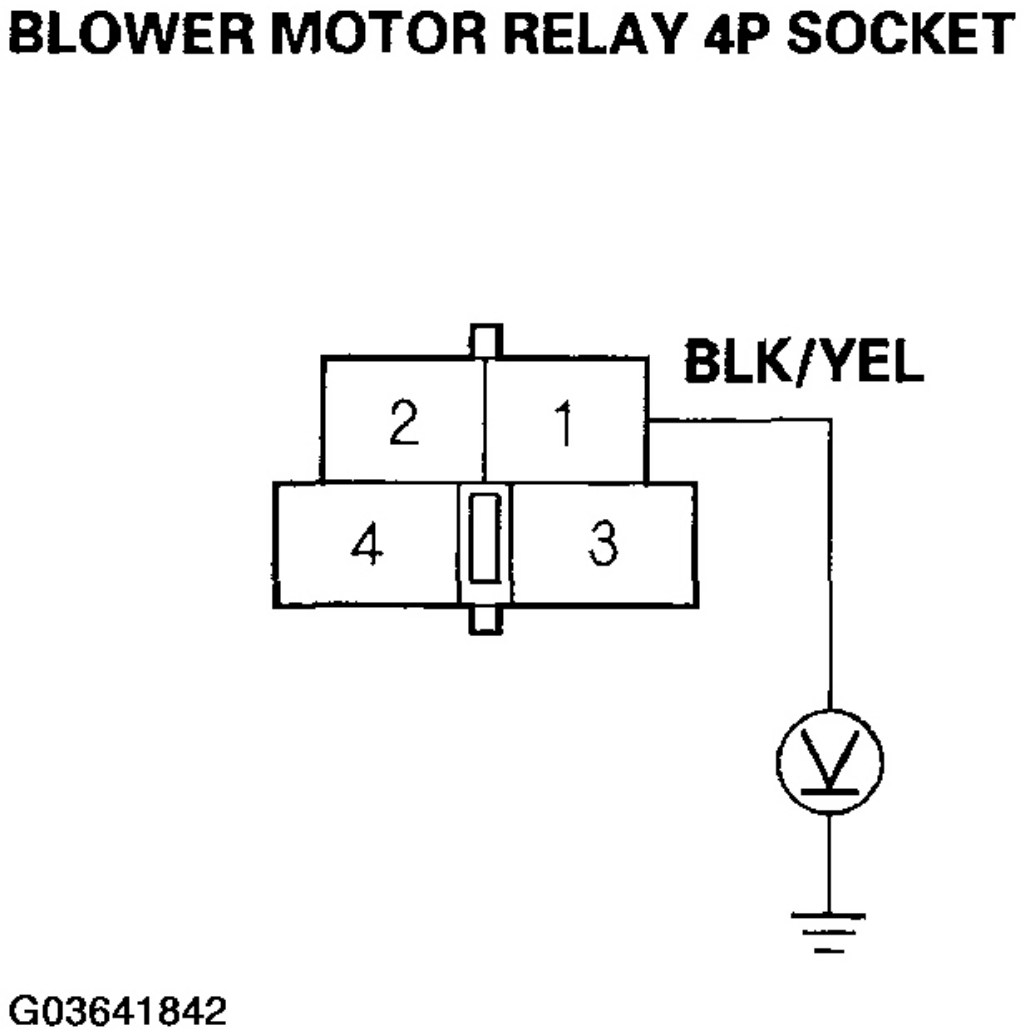

Fig. 43: Measuring Voltage Between No.1 Terminal Of Blower Motor Relay 4P Socket And Body Ground
Courtesy of AMERICAN HONDA MOTOR CO., INC.

Is there battery voltage?

YES - Go to step 25.

NO - Repair open in the wire between the No. 3 fuse in the driver's underdash fuse/relay box and the blower motor relay.

25. Turn the ignition switch OFF.
26. Check for continuity between the No. 2 terminal of the blower motor relay 4P socket and body ground.

cardiagn.com

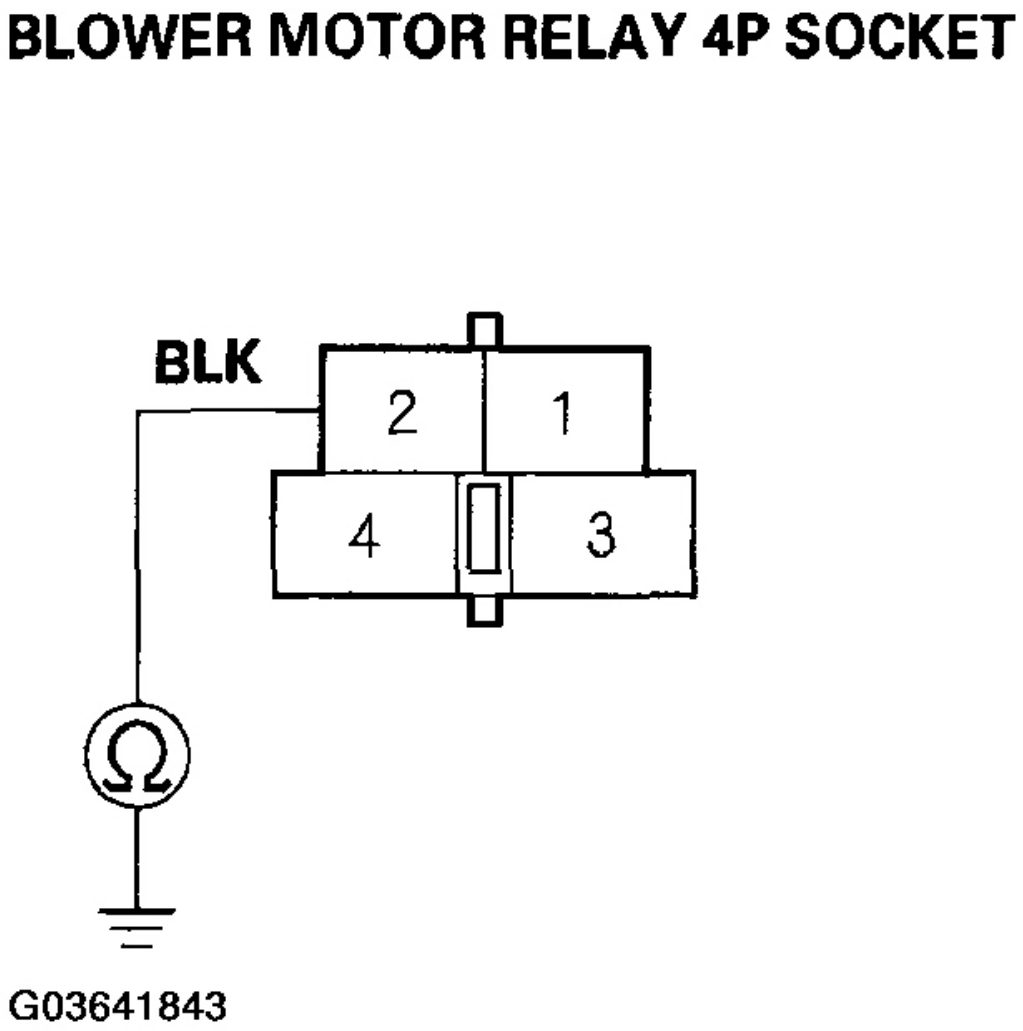

Fig. 44: Checking For Continuity Between No. 2 Terminal Of Blower Motor Relay 4P Socket And Body Ground
Courtesy of AMERICAN HONDA MOTOR CO., INC.

Is there continuity?

YES - Repair open in the YEL/BLK wire between the blower motor relay and the blower motor.

NO - Check for an open in the wire between the blower motor relay and body ground. If the wire is OK, check for poor ground at G201.

RECIRCULATION CONTROL MOTOR CIRCUIT TROUBLESHOOTING

cardiagn.com

1. Check the No. 3 (7.5 A) fuse in the driver's underdash fuse/relay box.

   Is the fuse OK?

   YES - Go to step 2.
   NO - Replace the fuse, and recheck.
2. Disconnect the recirculation control motor 7P connector.
3. Turn the ignition switch ON (II).
4. Measure the voltage between the No. 1 terminal of the recirculation control motor 7P connector and body ground.

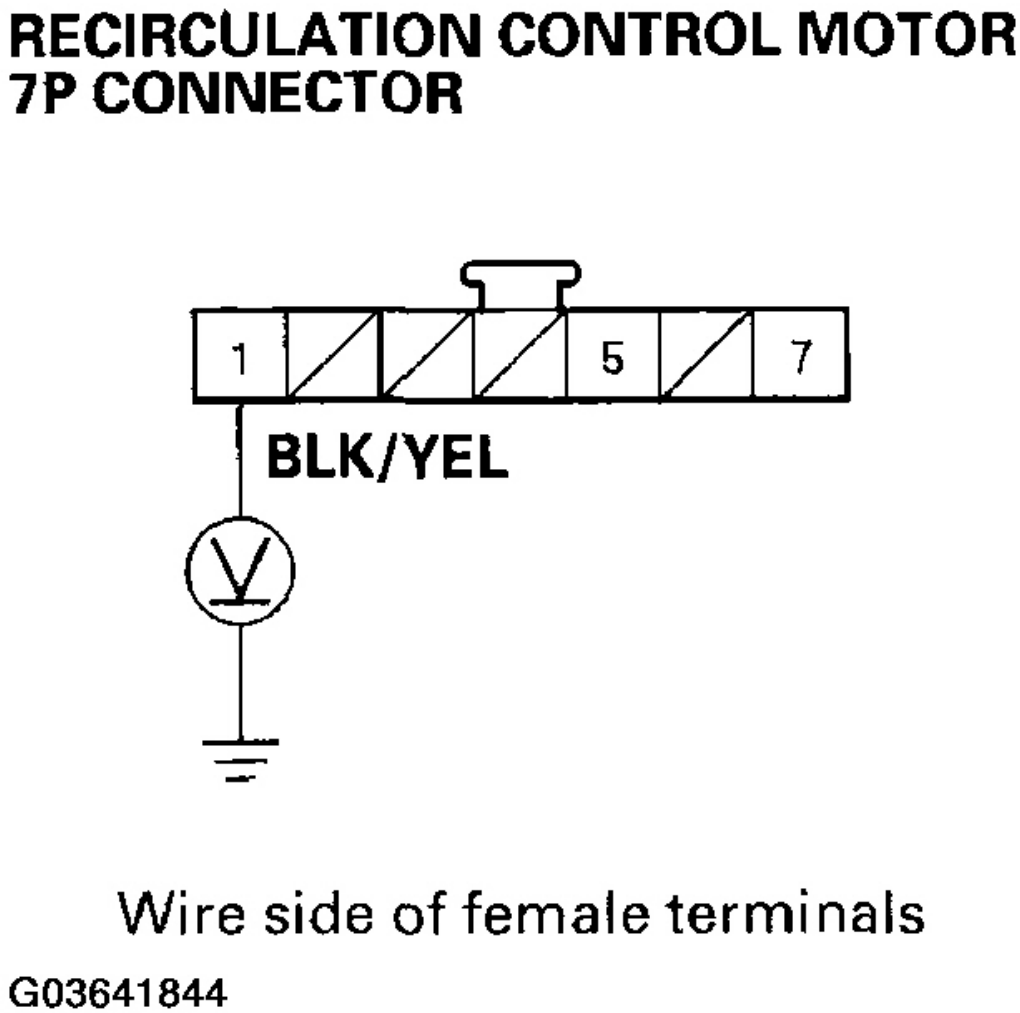

cardiagn.com

Fig. 45: Measuring Voltage Between No. 1 Terminal Of Recirculation Control Motor 7P Connector And Body Ground
Courtesy of AMERICAN HONDA MOTOR CO., INC.

Is there battery voltage?

YES - Go to step 5.

NO - Repair open in the wire between the No. 3 fuse in the driver's underdash fuse/relay box and the recirculation control motor.

5. Turn the ignition switch OFF.
6. Test the recirculation control motor (see **RECIRCULATION CONTROL MOTOR TEST**).

Does the recirculation control motor test OK?

YES - Go to step 7.

NO - Replace the recirculation control motor, or repair the recirculation control linkage or door.

7. Disconnect climate control unit connector B (26P).
8. Check for continuity between the No. 23 and No. 24 terminals of climate control unit connector B (26P) and body ground individually.

cardiagn.com

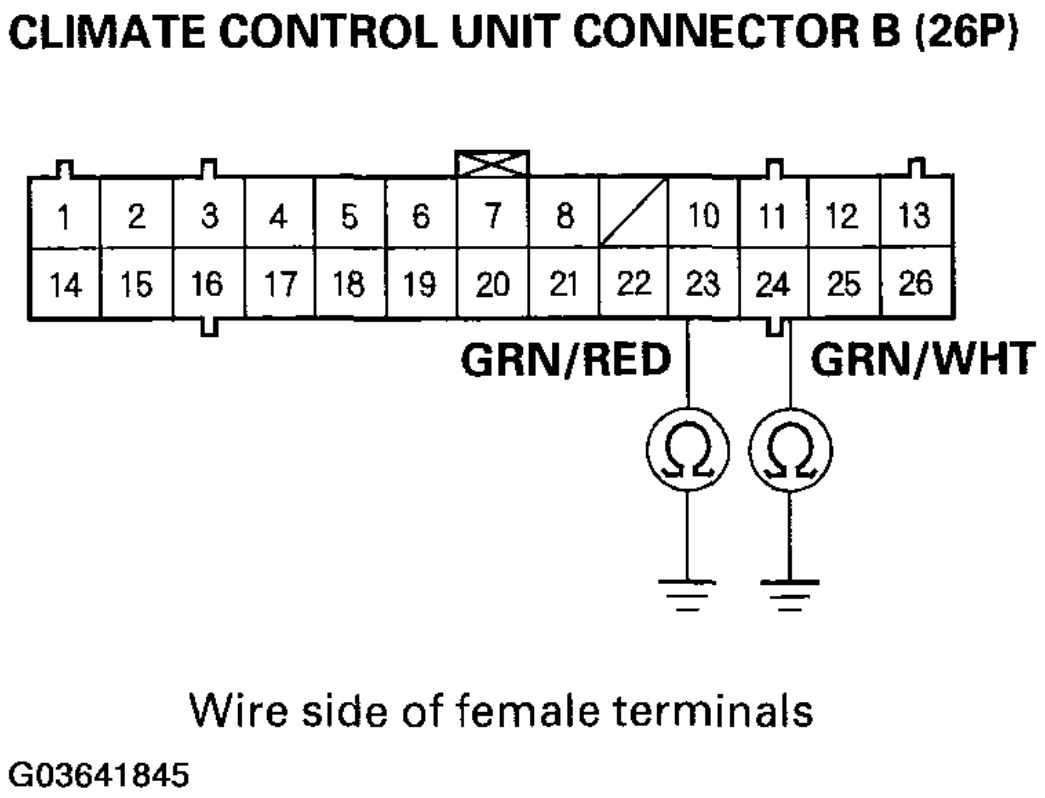

Fig. 46: Checking For Continuity Between No. 23 And No. 24 Terminals Of Climate Control Unit Connector B And Body Ground
Courtesy of AMERICAN HONDA MOTOR CO., INC.

Is there continuity?

YES - Repair any short to body ground in the wire(s) between the climate control unit and the recirculation control motor.

NO - Go to step 9.

9. Turn the ignition switch ON (II), and check the same wires for voltage.

cardiagn.com

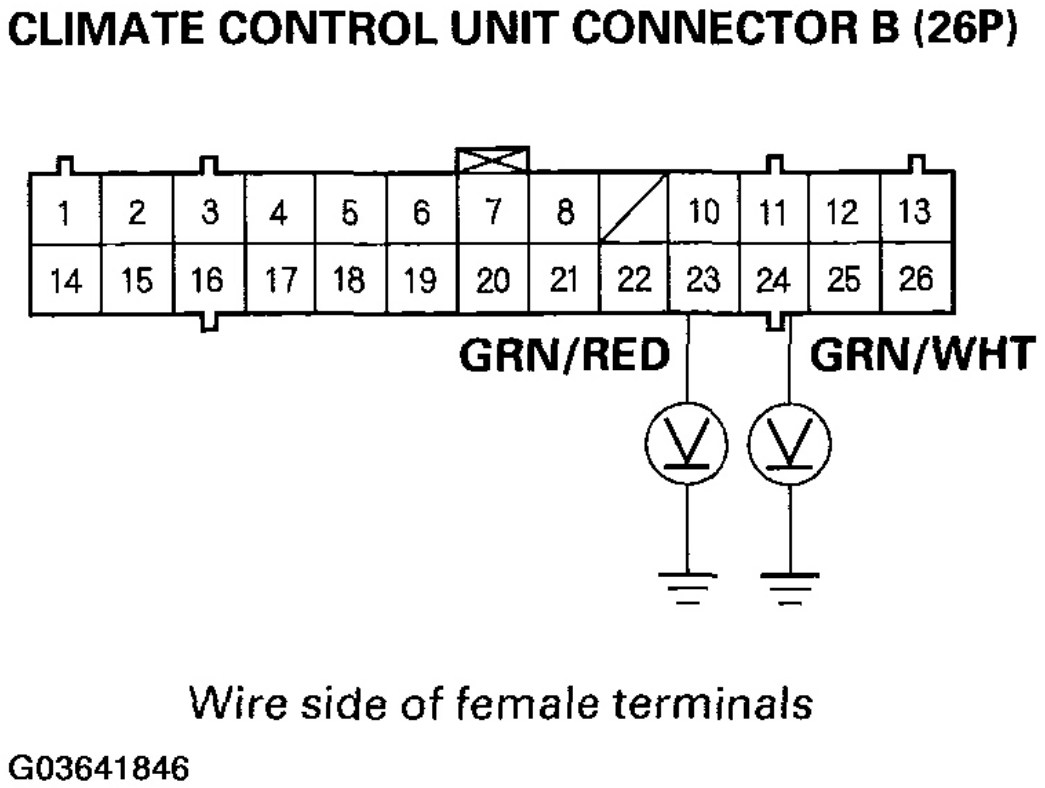

Fig. 47: Checking Wires For Voltage
Courtesy of AMERICAN HONDA MOTOR CO., INC.

Is there any voltage?

YES - Repair any short to power in the wire(s) between the climate control unit and the recirculation control motor. This short may also damage the climate control unit. Repair the short to power before replacing the climate control unit.

NO - Go to step 10.

10. Turn the ignition switch OFF.
11. Check for continuity between the following terminals of climate control unit connector B (26P) and the recirculation control motor 7P connector.

TERMINALS REFERENCE

26P:	7P:
No. 23	No. 5
No. 24	No. 7

cardiagn.com

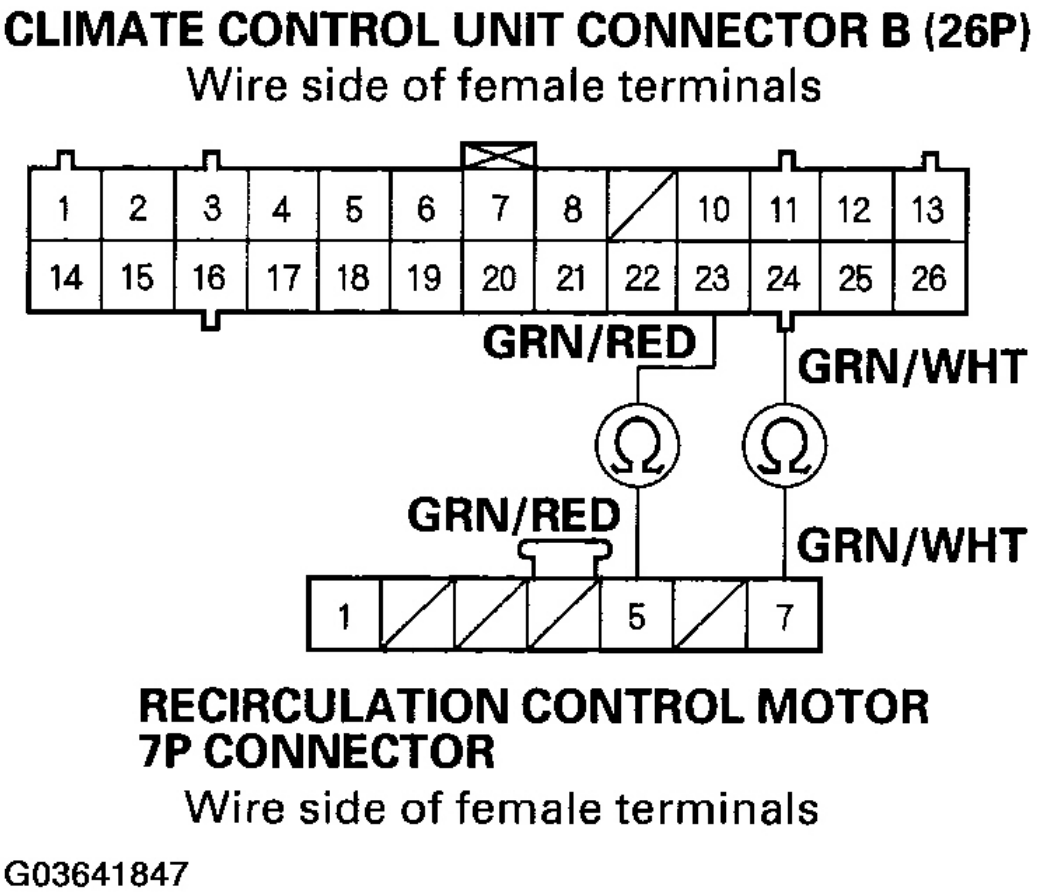

Fig. 48: Checking For Continuity Between Terminals Of Climate Control Unit Connector B And Recirculation Control Motor 7P Connector
Courtesy of AMERICAN HONDA MOTOR CO., INC.

Is there continuity?

YES - Check for loose wires or poor connections at climate control unit connector B (26P) and at recirculation control motor 7P connector. If the connections are good, substitute a known-good climate control unit, and recheck. If the symptom/indication goes away, replace the original climate control unit.

NO - Repair any open in the wire(s) between the climate control unit and the recirculation control motor.

ECT SENSOR CIRCUIT TROUBLESHOOTING

1. Check the malfunction indicator lamp (MIL).

cardiagn.com

Does the malfunction indicator lamp come on?

YES - Refer to the powertrain DTCs (see **GENERAL TROUBLESHOOTING INFORMATION**).

NO - Go to step 2.

2. Turn the ignition switch OFF.
3. Disconnect the ECT sensor 2P connector.
4. Disconnect climate control unit connector B (26P).
5. Turn the ignition switch ON (II).
6. Measure the voltage between the No. 22 terminal of climate control unit connector B (26P) and body ground.

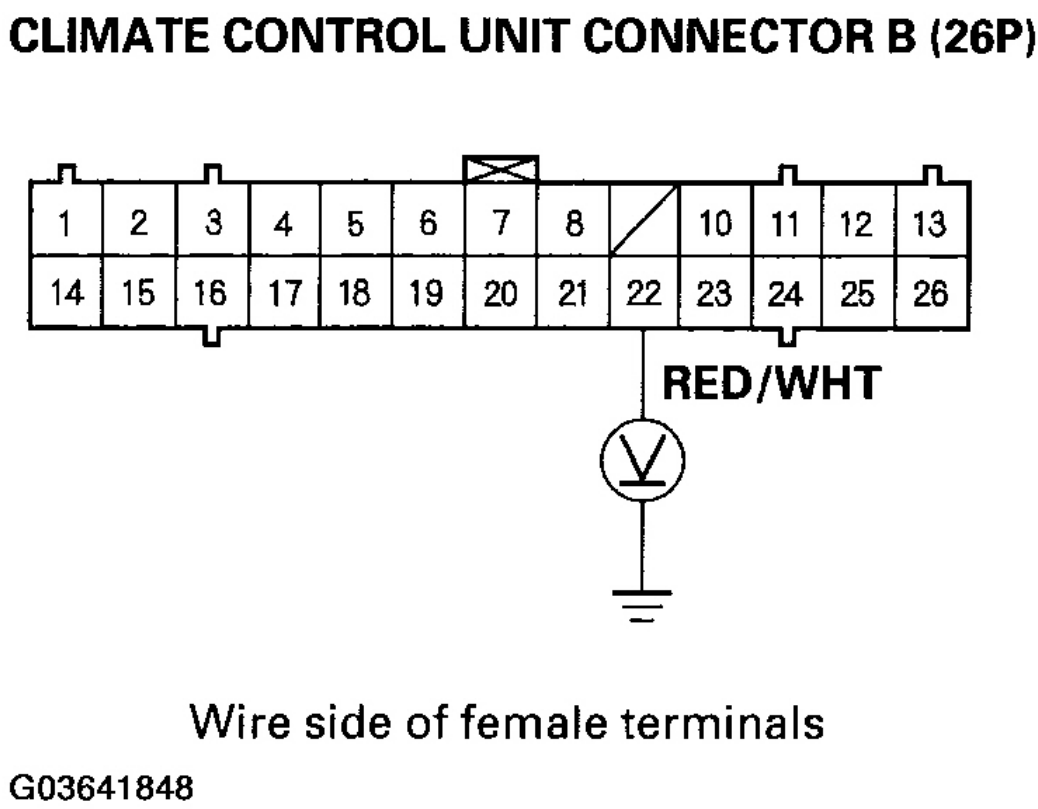

Fig. 49: Measuring Voltage Between No. 22 Terminal Of Climate Control Unit Connector B And Body Ground
Courtesy of AMERICAN HONDA MOTOR CO., INC.

Is there about 5 V?

cardiagn.com

YES - Check for loose wires or poor connections at climate control unit connector B (26P) and at the ECT sensor 2P connector. If the connections are good, substitute a known-good climate control unit, and recheck. If the symptom/indication goes away, replace the original climate control unit.

NO - Repair open in the wire between the climate control unit and the ECT sensor.

CLIMATE CONTROL PANEL CIRCUIT TROUBLESHOOTING

1. Check the No. 3 (7.5 A) fuse in the driver's underdash fuse/relay box.

   Is the fuse OK?

   YES - Go to step 2.

   NO - Replace the fuse and recheck.
2. Disconnect the climate control panel 16P connector.
3. Turn the ignition switch ON (II).
4. Measure the voltage between the No. 7 terminal of climate control panel 16P connector and body ground.

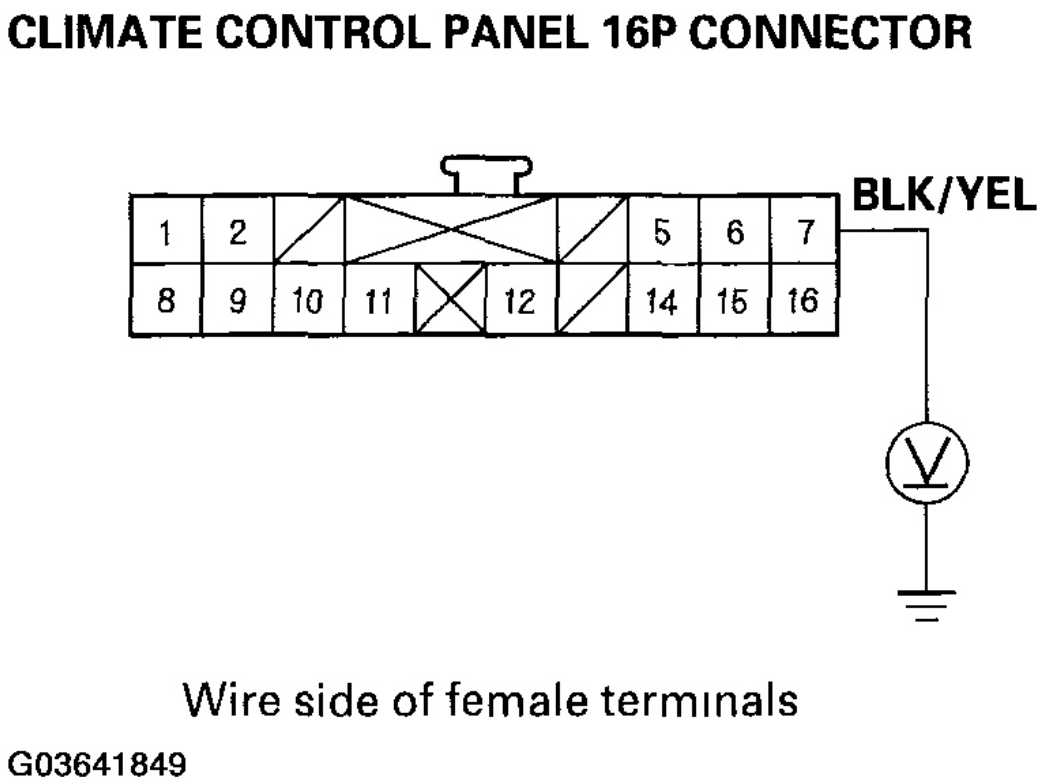

Fig. 50: Measuring Voltage Between No. 7 Terminal Of Climate Control Panel 16P Connector And

cardiagn.com

Body Ground
Courtesy of AMERICAN HONDA MOTOR CO., INC.

Is there battery voltage?

YES - Go to step 5.

NO - Repair open in the wire between the No. 3 fuse in the driver's underdash fuse/relay box and the climate control panel.

5. Turn the ignition switch OFF.
6. Disconnect climate control unit connectors A (16P) and B (26P).
7. Check for continuity between the following terminals of the climate control panel 16P connector and climate control unit connectors A (16P) and B (26P).

TERMINALS REFERENCE

PANEL 16P	UNIT 16P
No. 5	No. 12
No. 6	No. 14
No. 14	No. 13
PANEL 16P	UNIT 26P
No. 12	No. 16

cardiagn.com

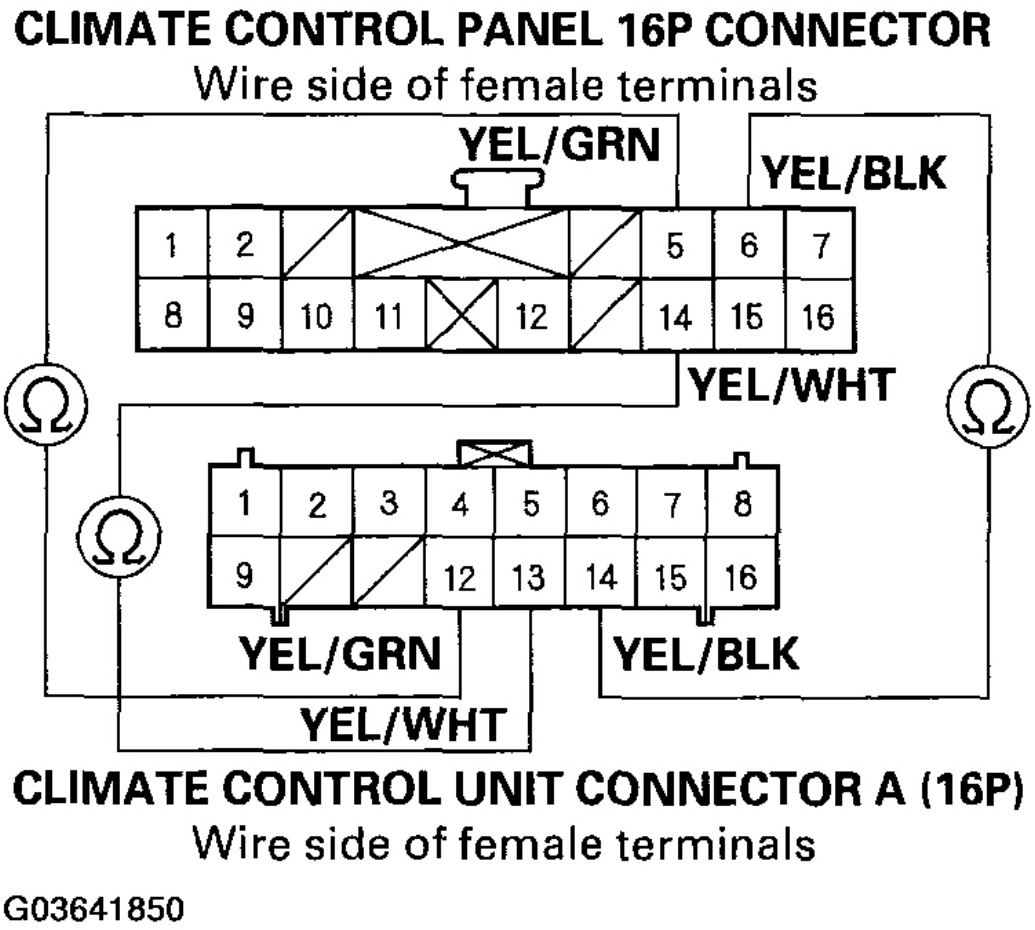

Fig. 51: Checking For Continuity Between Terminals Of Climate Control Panel 16P Connector
Courtesy of AMERICAN HONDA MOTOR CO., INC.

cardiagn.com

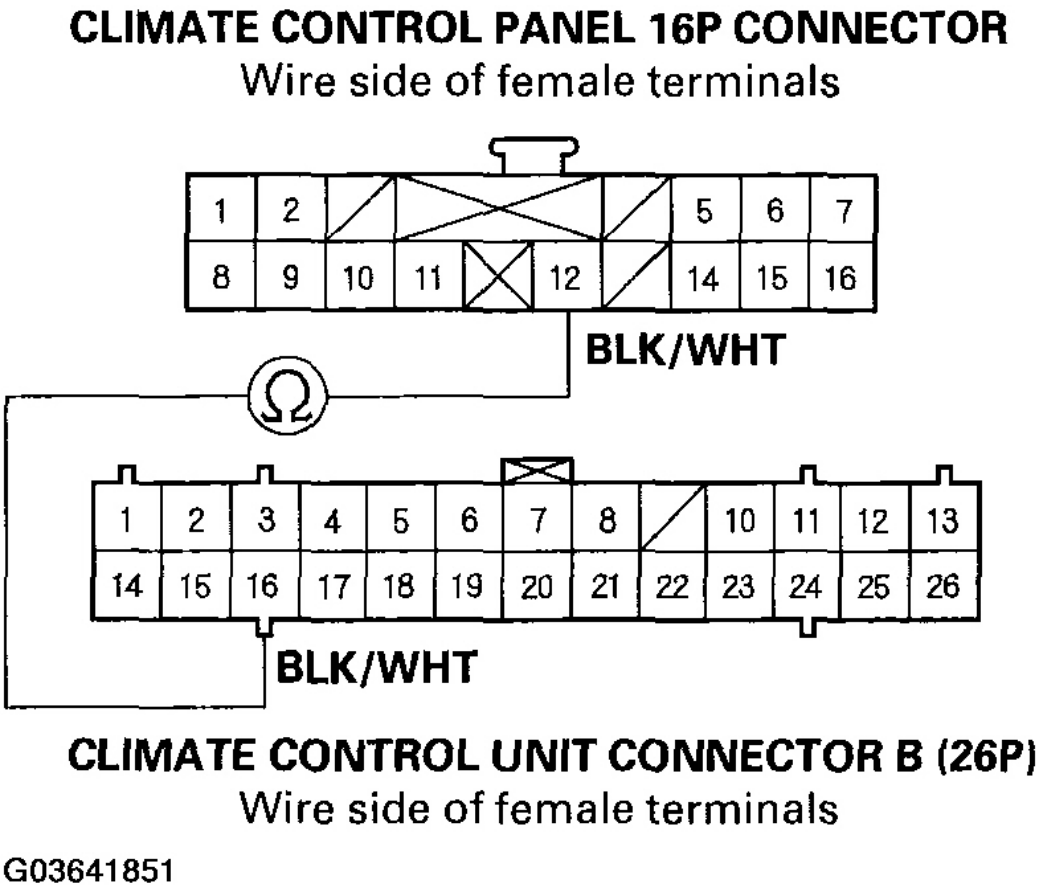

Fig. 52: Checking For Continuity Between Terminals Of Climate Control Unit Connectors A (16P) And B (26P)
Courtesy of AMERICAN HONDA MOTOR CO., INC.

Is there continuity?

YES - Go to step 8.

NO - Repair any open in the wire(s) between the climate control panel and climate control unit.

8. Check the continuity between the No. 5, 6, and 14 terminals of the climate control panel 16P connector and body ground individually.

cardiagn.com

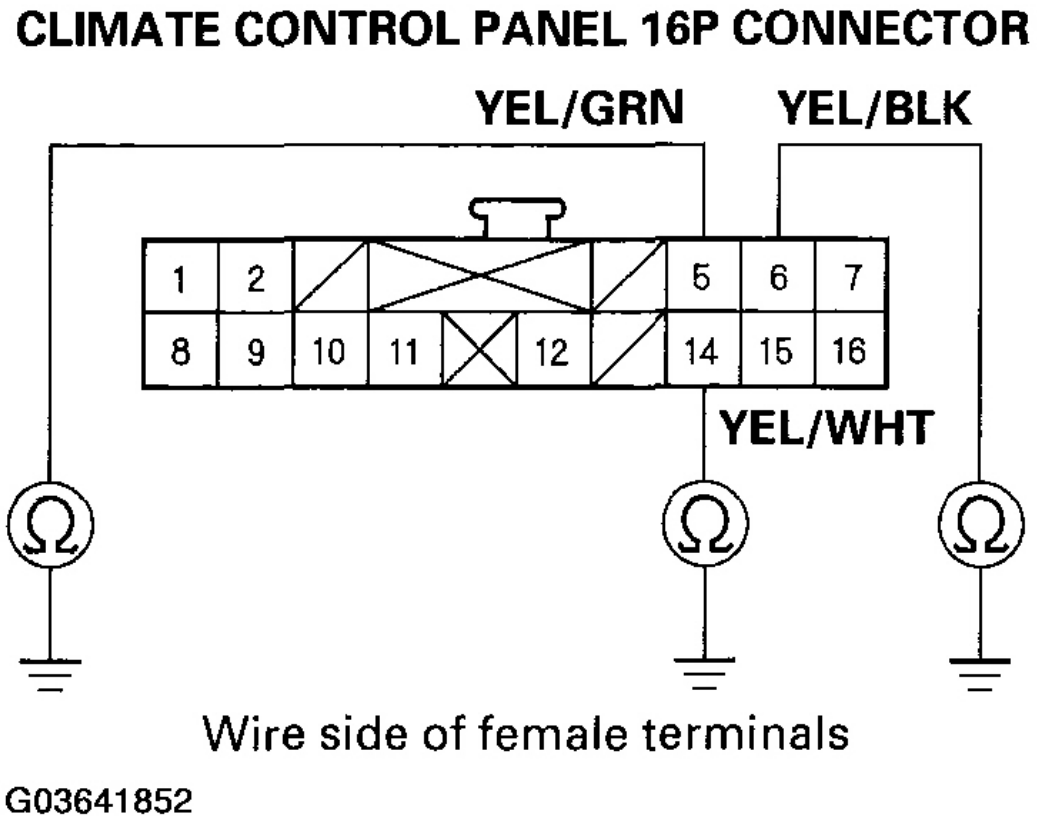

Fig. 53: Checking Continuity Between No. 5, 6, And 14 Terminals Of Climate Control Panel 16P Connector And Body Ground
Courtesy of AMERICAN HONDA MOTOR CO., INC.

Is there continuity?

YES - Repair any short to body ground in the wire(s) between the climate control panel and the climate control unit.

NO - Check for loose wires or poor connections at climate control unit connector A (16P) and B (26P) and at the climate control panel 16P connector. If the connections are good, substitute a known-good climate control panel, and recheck. If the symptom/indication is still present, substitute a known-good climate control unit, and recheck.

MANUAL CONTROLS CIRCUIT TROUBLESHOOTING

1. Disconnect navigation or multi-information display unit connector A (5P).
2. Disconnect climate control unit connector A (16P).

cardiagn.com

3. Check for continuity between the following terminals of climate control unit connector A (16P) and navigation or multi-information display unit connector A (5P).

TERMINALS REFERENCE

16P	5P
No. 8	No. 4
No. 15	No. 3
No. 16	No. 2

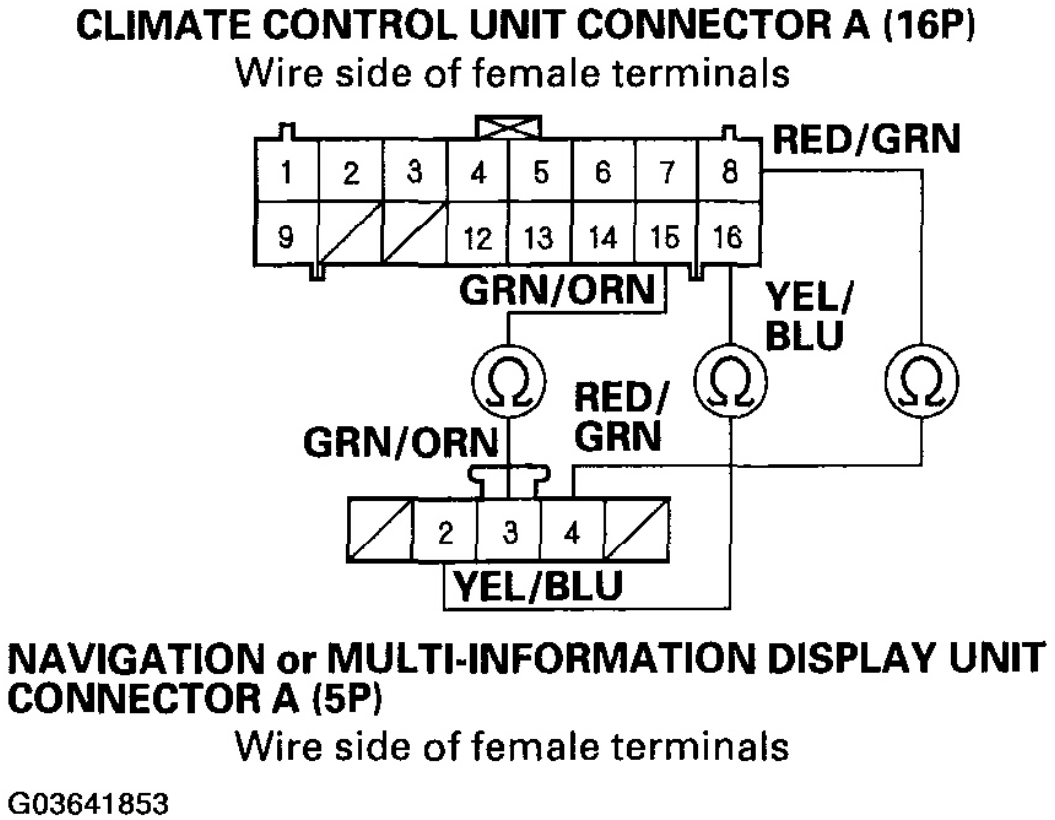

Fig. 54: Checking For Continuity Between Following Terminals Of Climate Control Unit Connector A And Navigation
Courtesy of AMERICAN HONDA MOTOR CO., INC.

Is there continuity?

YES - Go to step 4.

NO - Repair any open in the wire(s) between the climate control unit and the navigation or multi-information display unit.

cardiagn.com

4. Check for continuity between the body ground and climate control unit connector A (16P) terminals No. 8, 15, and 16 individually.

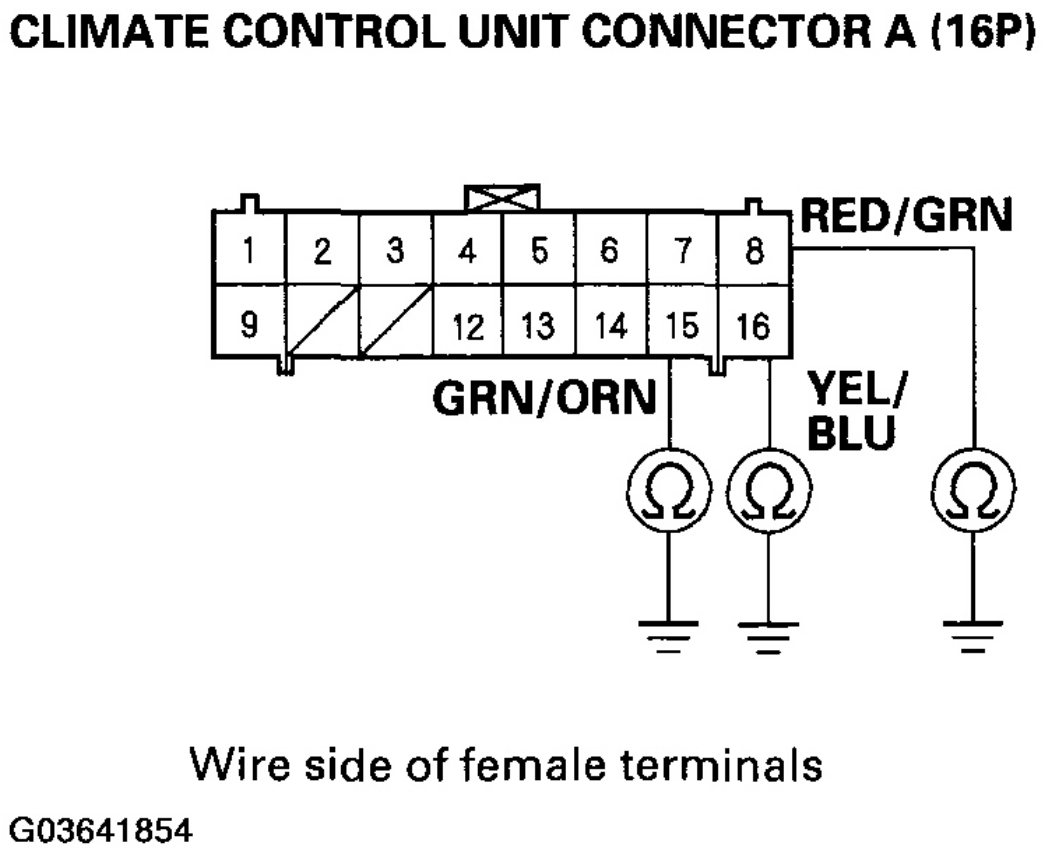

Fig. 55: Checking For Continuity Between Body Ground And Climate Control Unit Connector A Terminals No. 8, 15, And 16
Courtesy of AMERICAN HONDA MOTOR CO., INC.

Is there continuity?

YES - Repair any short to body ground in the wire(s) between the climate control unit and the navigation or multi-information display unit.

NO - Check for loose wires or poor connections at climate control unit connector A (16P) and at navigation or multi-information display unit connector A (5P). If the connections are good, substitute a known-good climate control unit, and recheck. If the problem still exists, replace the navigation or multi-information display unit.

CLIMATE CONTROL POWER AND GROUND CIRCUIT TROUBLESHOOTING

cardiagn.com

1. Check the No. 3 (7.5 A) fuse in the driver's underdash fuse/relay box.

   Is the fuse OK?

   YES - Go to step 2.

   NO - Replace the fuse, and recheck.
2. Disconnect climate control unit connector B (26P).
3. Turn the ignition switch ON (II).
4. Measure the voltage between the No. 13 terminal of climate control unit connector B (26P) and body ground.

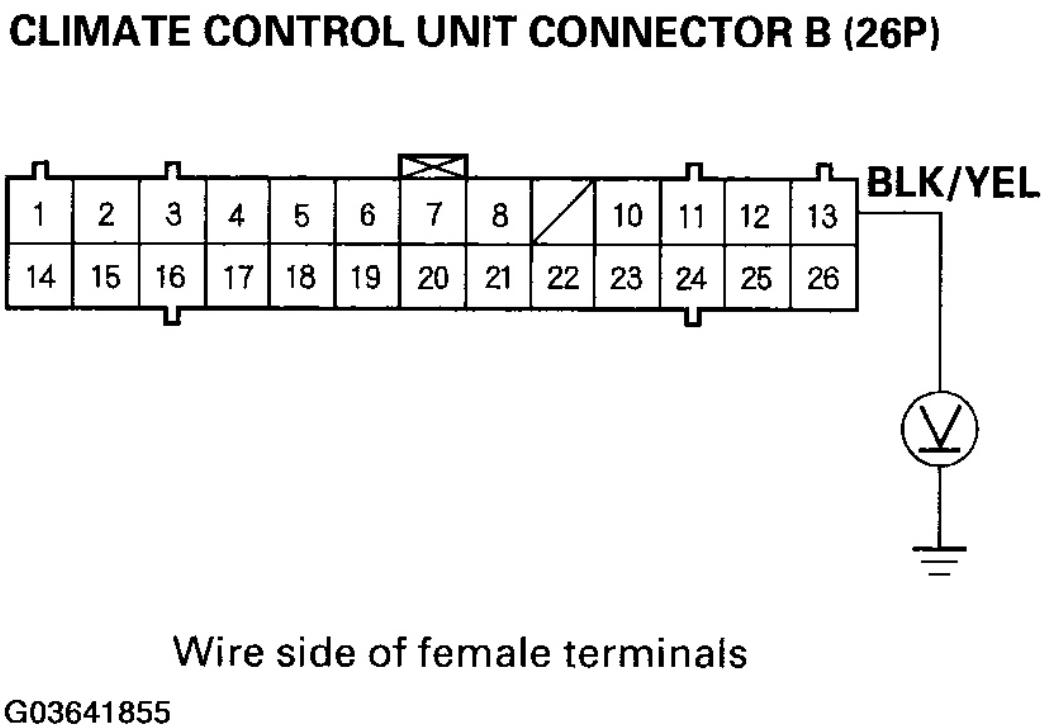

Fig. 56: Measuring Voltage Between No. 13 Terminal Of Climate Control Unit Connector B And Body Ground
Courtesy of AMERICAN HONDA MOTOR CO., INC.

Is there battery voltage?

YES - Go to step 5.

NO - Repair open in the wire between the No. 3 fuse in the driver's underdash fuse/relay box and the climate control unit.

cardiagn.com

5. Turn the ignition switch OFF.
6. Check for continuity between the No. 15 terminal of climate control unit connector B (26P) and body ground.

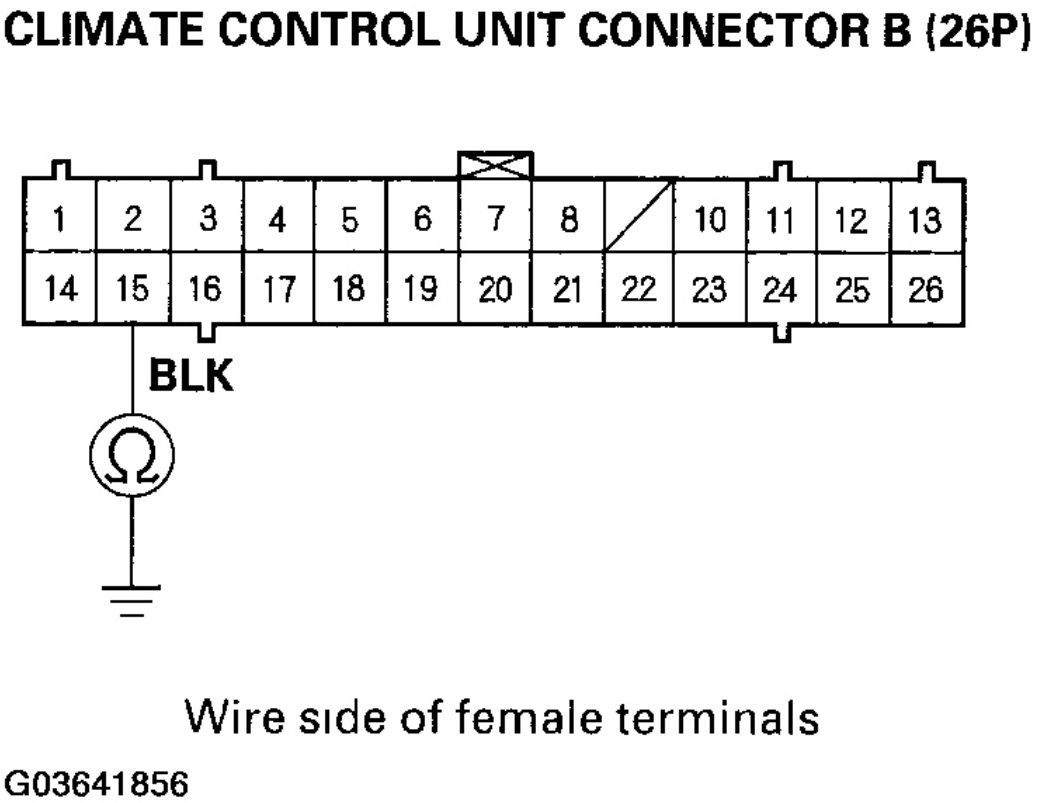

Fig. 57: Checking For Continuity Between No. 15 Terminal Of Climate Control Unit Connector B And Body Ground
Courtesy of AMERICAN HONDA MOTOR CO., INC.

Is there continuity?

YES - Check for loose wires or poor connections at climate control unit connector B (26P). If the connections are good, substitute a known-good climate control unit, and recheck. If the symptom/indication goes away, replace the original climate control unit.

NO - Check for an open in the wire between the climate control unit and body ground. If the wire is OK, check for poor ground at G401.

RADIATOR AND A/C CONDENSER FAN LOW SPEED CIRCUIT TROUBLESHOOTING

cardiagn.com

NOTE:

- **Do not use this troubleshooting procedure if the A/C compressor is inoperative, refer to the symptom troubleshooting.**
- **Before doing symptom troubleshooting, check for powertrain DTCs (see GENERAL TROUBLESHOOTING INFORMATION).**

1. Check the No. 58 (30 A) fuse in the underhood fuse/relay box, and the No. 3 (7.5 A) fuse in the driver's underdash fuse/relay box.

   Are the fuses OK?

   YES - Go to step 2.

   NO - Replace the fuse(s), and recheck.

2. Remove the A/C condenser fan relay from the underhood fuse/relay box, and test it (see **POWER RELAY TEST**).

   Does the relay test OK?

   YES - Go to step 3.

   NO - Replace the A/C condenser fan relay.

3. Measure the voltage between the No. 1 terminal of the A/C condenser fan relay 4P socket and body ground.

cardiagn.com

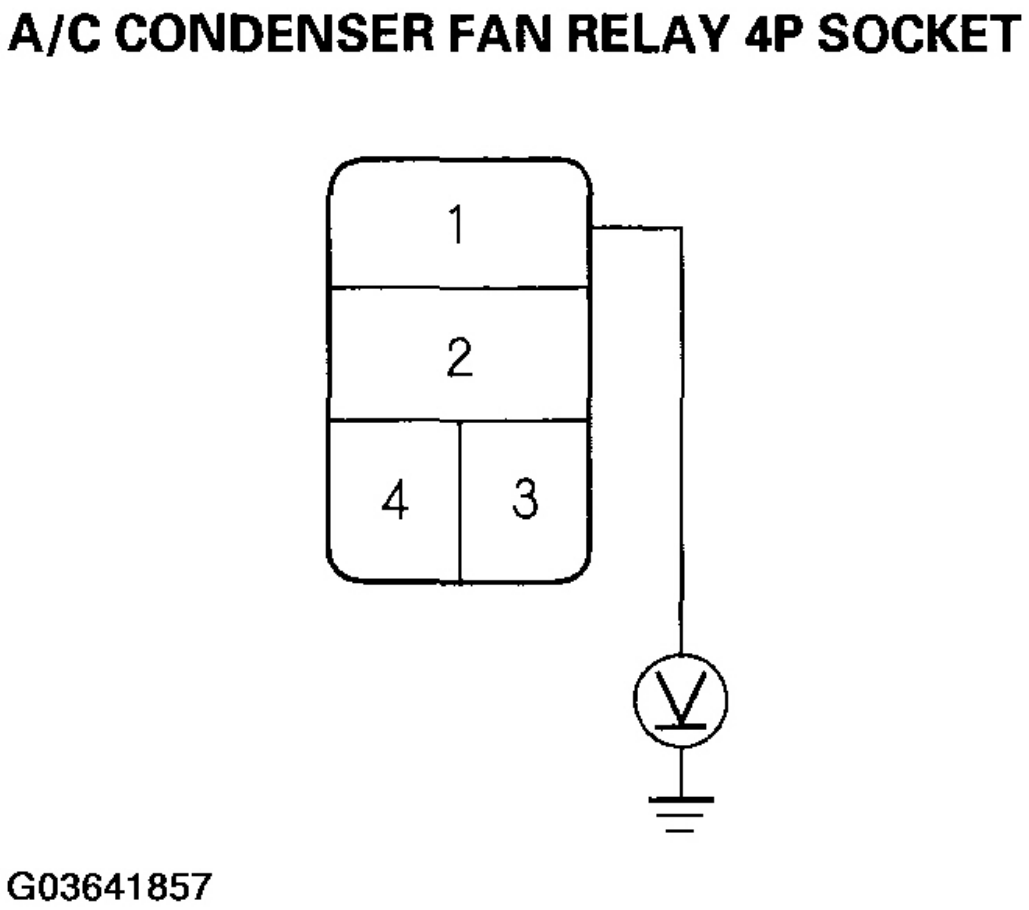

Fig. 58: Measuring Voltage Between No. 1 Terminal Of A/C Condenser Fan Relay 4P Socket And Body Ground
Courtesy of AMERICAN HONDA MOTOR CO., INC.

Is there battery voltage?

YES - Go to step 4.

NO - Replace the underhood fuse/relay box.

4. Connect the No. 1 and No. 2 terminals of the A/C condenser fan relay 4P socket with a jumper wire.

cardiagn.com

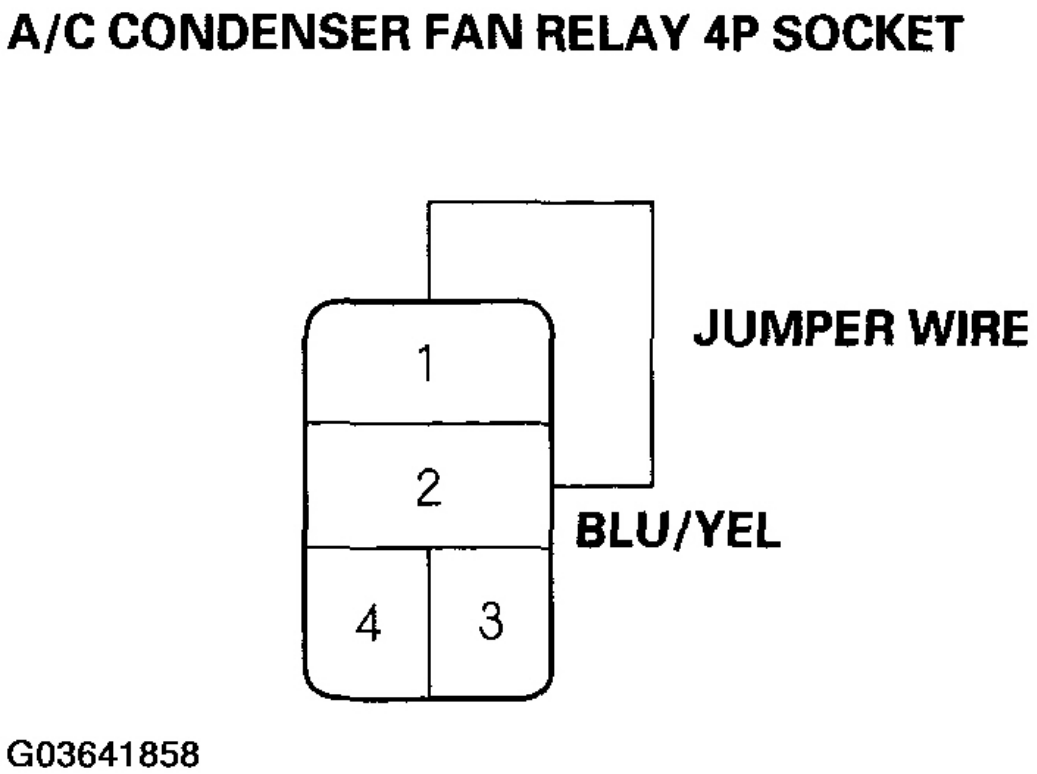

Fig. 59: Connecting No. 1 And No. 2 Terminals Of A/C Condenser Fan Relay 4P Socket With A Jumper Wire
Courtesy of AMERICAN HONDA MOTOR CO., INC.

Does the A/C condenser fan run?

YES - Go to step 5.
NO - Go to step 14 .

5. Disconnect the jumper wire.
6. Turn the ignition switch ON (II).
7. Measure the voltage between the No. 3 terminal of the A/C condenser fan relay 4P socket and body ground.

cardiagn.com

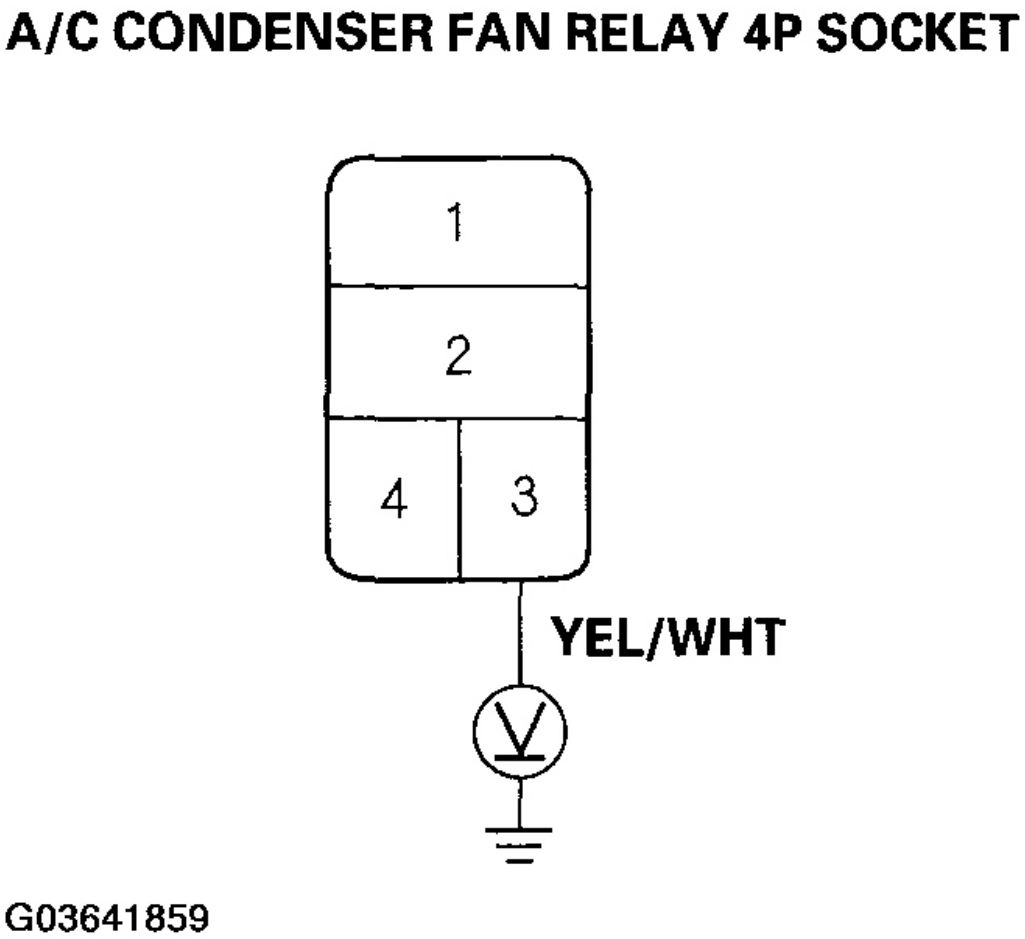

Fig. 60: Measuring Voltage Between No. 3 Terminal Of A/C Condenser Fan Relay 4P Socket And Body Ground
Courtesy of AMERICAN HONDA MOTOR CO., INC.

Is there battery voltage?

YES - Go to step 8.
NO - Go to step 32 .

8. Turn the ignition switch OFF.
9. Reinstall the A/C condenser fan relay.
10. Remove A/C diode A from the right side of the dashboard.
11. Check for current flow in both directions between the No. 1 and No. 2 terminals of A/C diode A.

cardiagn.com

A/C DIODE A

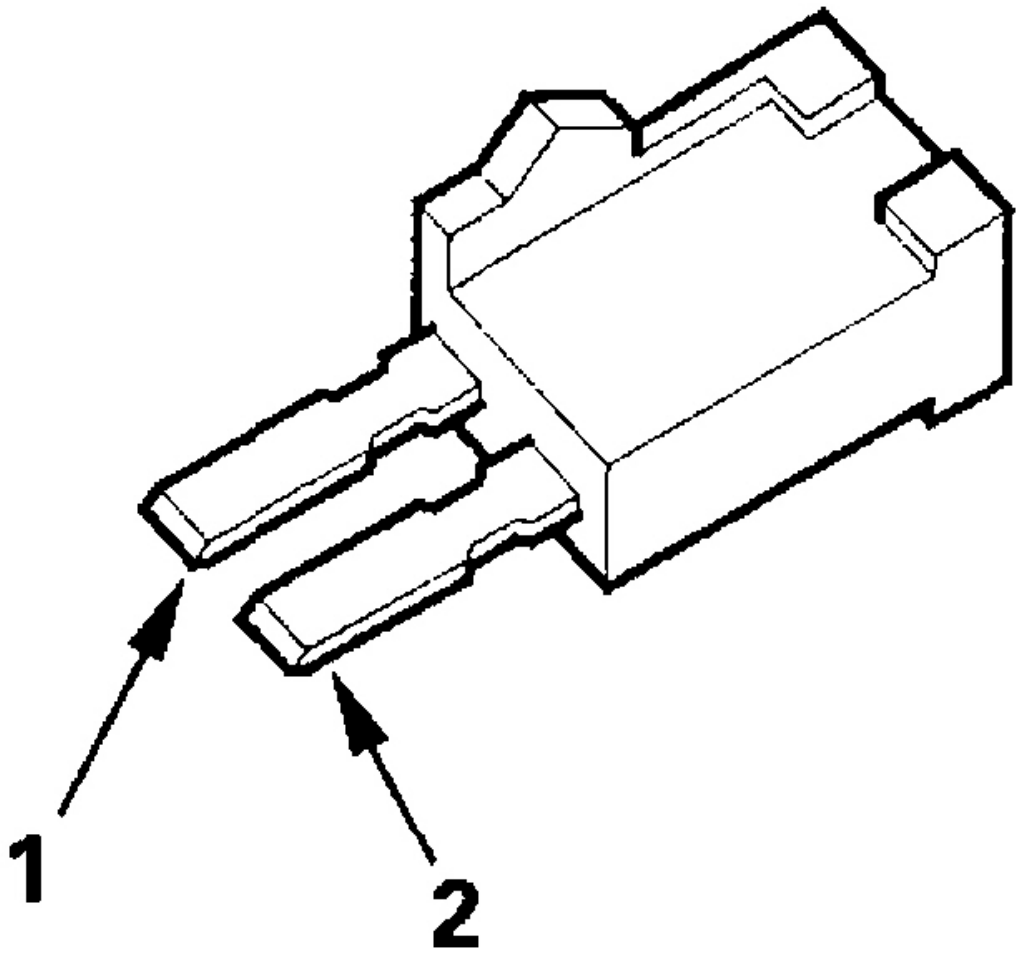

G03641860

cardiagn.com

Fig. 61: Checking For Current Flow In Both Directions Between No. 1 And No. 2 Terminals Of A/C Diode A
Courtesy of AMERICAN HONDA MOTOR CO., INC.

Is there current flow in only one direction?

YES - Go to step 12.

NO - Replace A/C diode A.

12. Turn the ignition switch ON (II).
13. Measure the voltage between the No. 2 terminal of A/C diode A 2P socket and body ground.

cardiagn.com

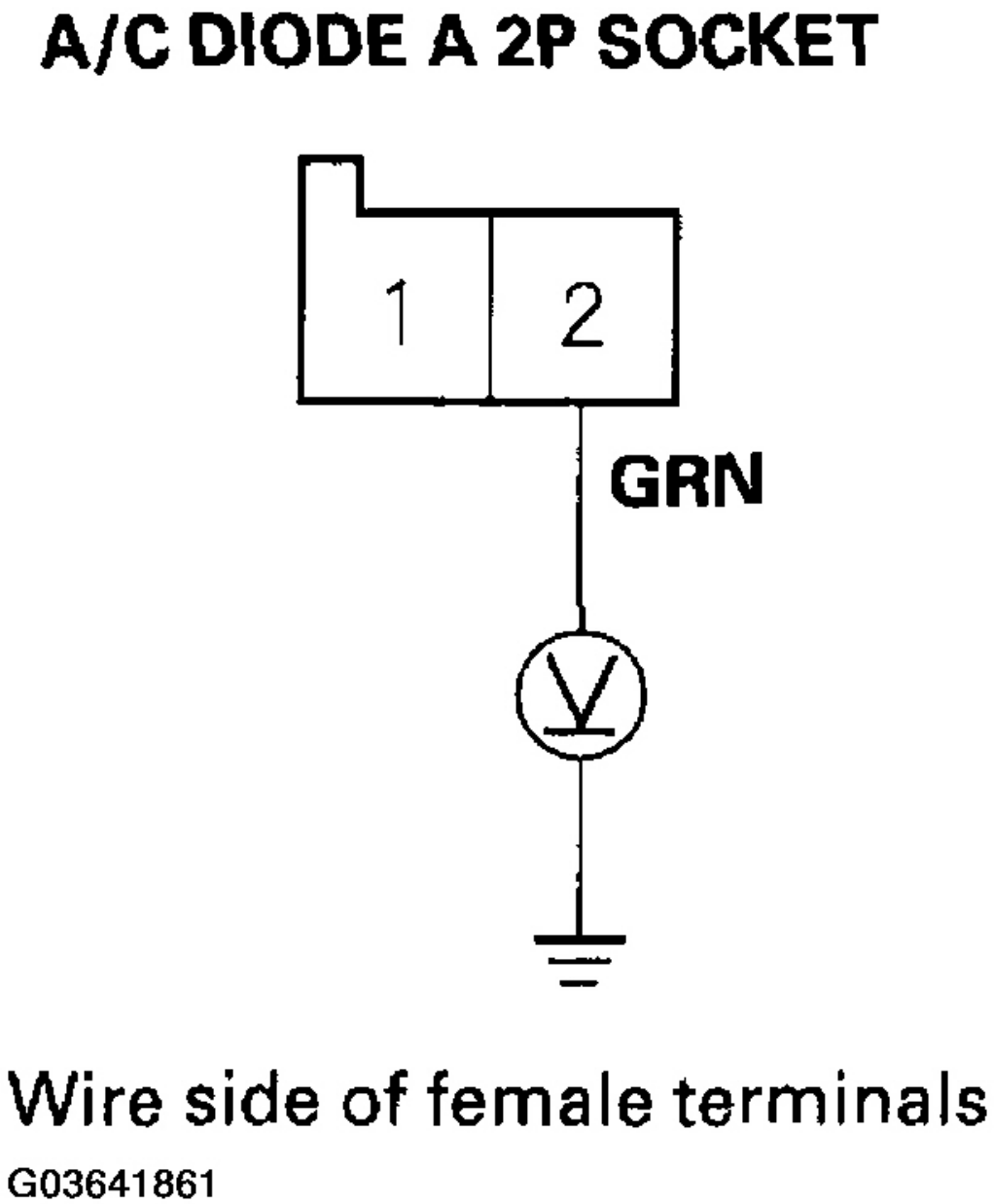

Fig. 62: Measuring Voltage Between No. 2 Terminal Of A/C Diode A 2P Socket And Body Ground
Courtesy of AMERICAN HONDA MOTOR CO., INC.

Is there battery voltage?

YES - Repair open in the wire between A/C diode A and the A/C pressure switch.

cardiagn.com

NO - Repair open in the wire between the A/C condenser fan relay and A/C diode A.

14. Disconnect the jumper wire.
15. Reinstall the A/C condenser fan relay.
16. Disconnect the A/C condenser fan 2P connector.
17. Turn the ignition switch ON (II), then turn the A/C and fan switches ON.
18. Measure the voltage between the No. 2 terminal of the A/C condenser fan 2P connector and body ground.

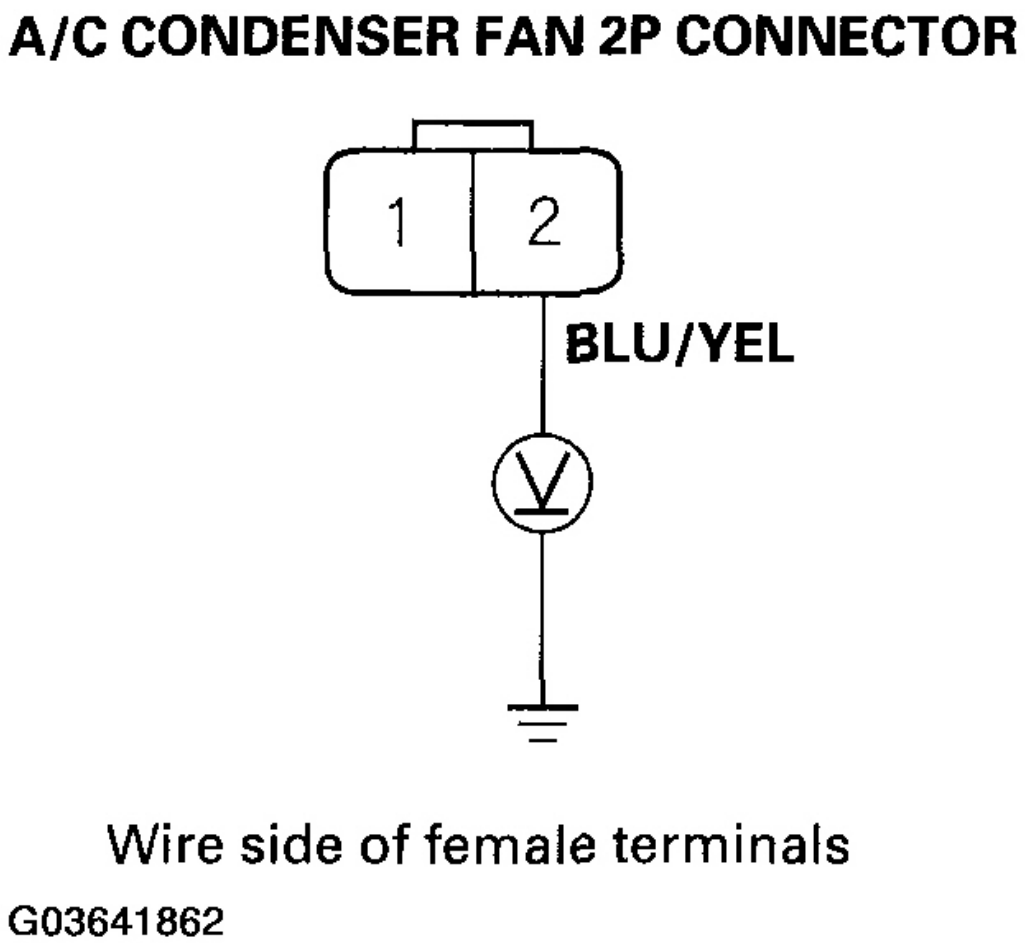

Fig. 63: Measuring Voltage Between No. 2 Terminal Of A/C Condenser Fan 2P Connector And Body Ground
Courtesy of AMERICAN HONDA MOTOR CO., INC.

Is there battery voltage?

cardiagn.com

YES - Go to step 19.

NO - Repair open in the wire between the A/C condenser fan relay and the A/C condenser fan.

19. Turn the A/C and fan switches OFF, then turn the ignition switch OFF.
20. Reconnect the A/C condenser fan 2P connector.
21. Connect the No.1 terminal of the A/C condenser fan 2P connector to body ground with jumper wire.

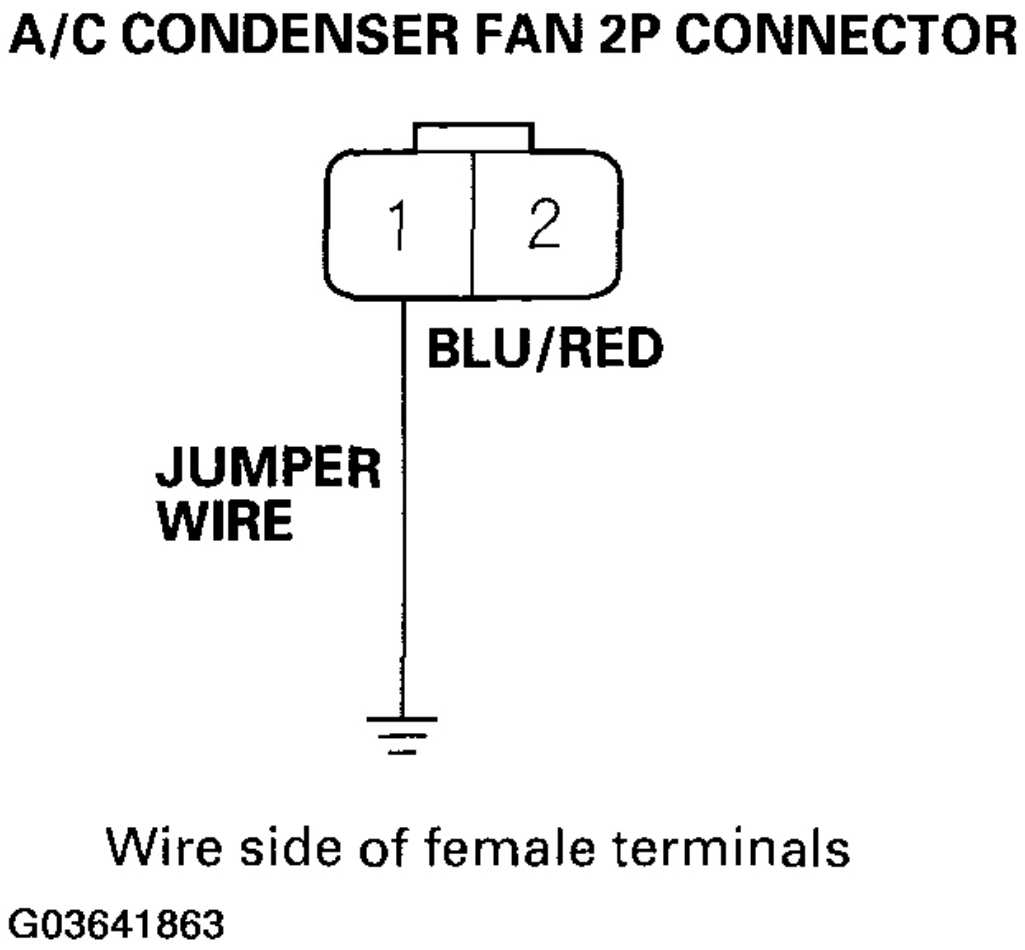

Fig. 64: Connecting No.1 Terminal Of A/C Condenser Fan 2P Connector To Body Ground With Jumper Wire
Courtesy of AMERICAN HONDA MOTOR CO., INC.

22. Turn the ignition switch ON (II), then turn the A/C and fan switches ON.

Does the A/C condenser fan run?

cardiagn.com

YES - Go to step 23.

NO - Replace the A/C condenser fan motor.

23. Turn the A/C and fan switches OFF, then turn the ignition switch OFF.
24. Disconnect the jumper wire.
25. Remove the fan control relay from the multi-relay box, and test it (see **POWER RELAY TEST**).

Does the relay test OK?

YES - Go to step 26.

NO - Replace the fan control relay.

26. Turn the ignition switch ON (II), then turn the A/C and fan switches ON.
27. Measure the voltage between the No. 1 terminal of the fan control relay 5P socket and body ground.

cardiagn.com

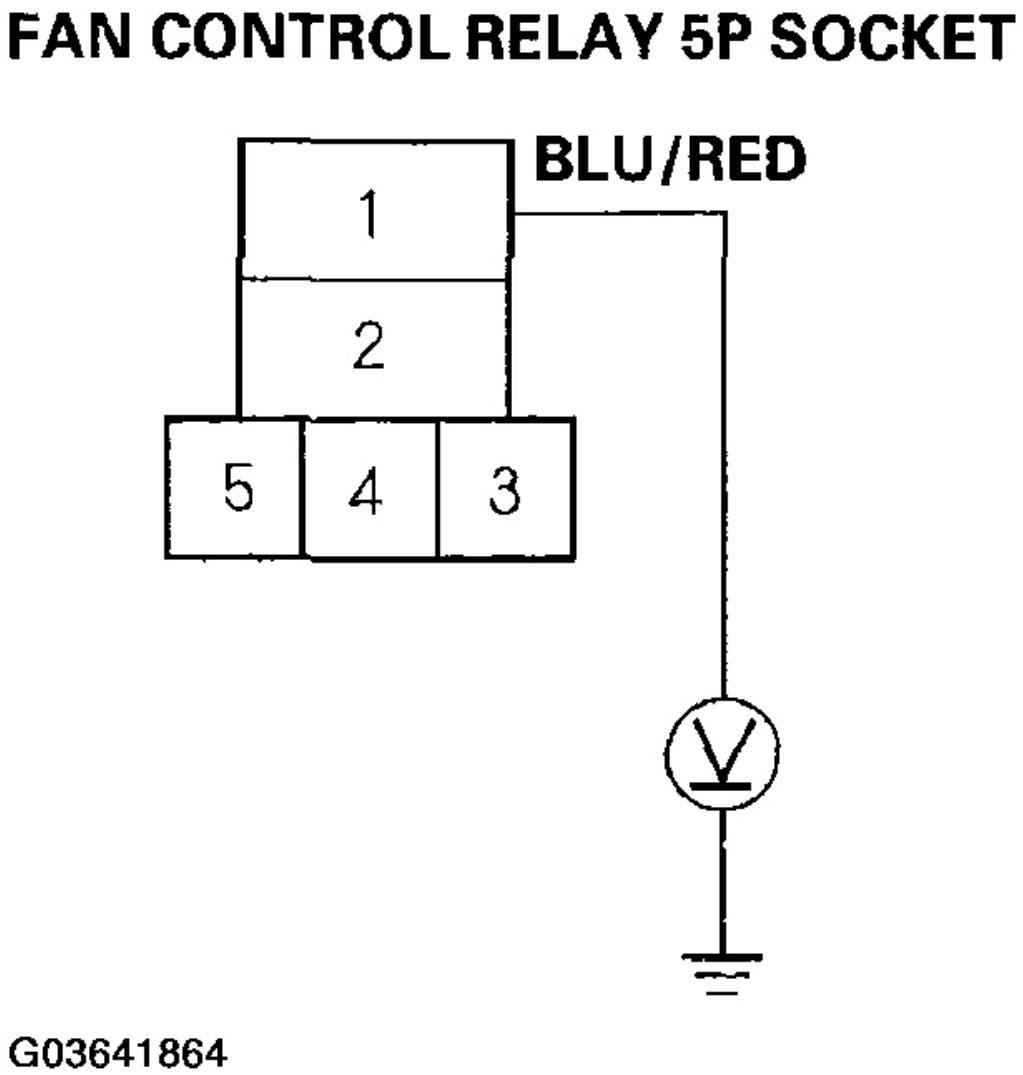

Fig. 65: Measuring Voltage Between No. 1 Terminal Of Fan Control Relay 5P Socket And Body Ground
Courtesy of AMERICAN HONDA MOTOR CO., INC.

Is there battery voltage?

YES - Go to step 28.

NO - Repair open in the wire between the A/C condenser fan and the fan control relay.

28. Turn the A/C and fan switches OFF, then turn the ignition switch OFF.
29. Disconnect the radiator fan 2P connector.

cardiagn.com

30. Check for continuity between the No. 4 terminal of the fan control relay 5P socket and the No. 2 terminal of the radiator fan 2P connector.

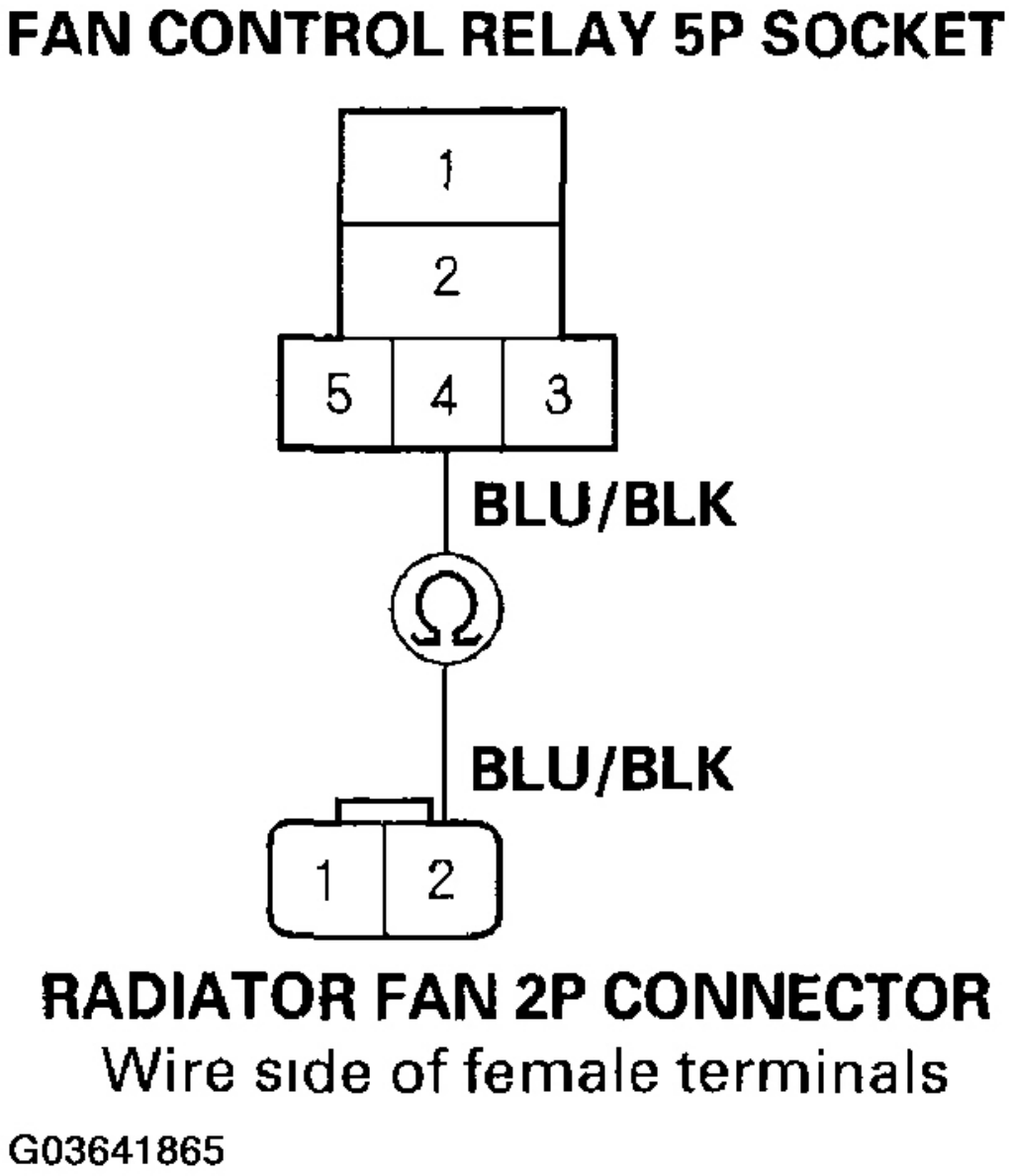

Fig. 66: Checking For Continuity Between No. 4 Terminal Of Fan Control Relay 5P Socket
Courtesy of AMERICAN HONDA MOTOR CO., INC.

Is there continuity?

cardiagn.com

YES - Go to step 31.

NO - Repair open in the wire between the fan control relay and the radiator fan.

31. Check for continuity between the No. 1 terminal of the radiator fan 2P connector and body ground.

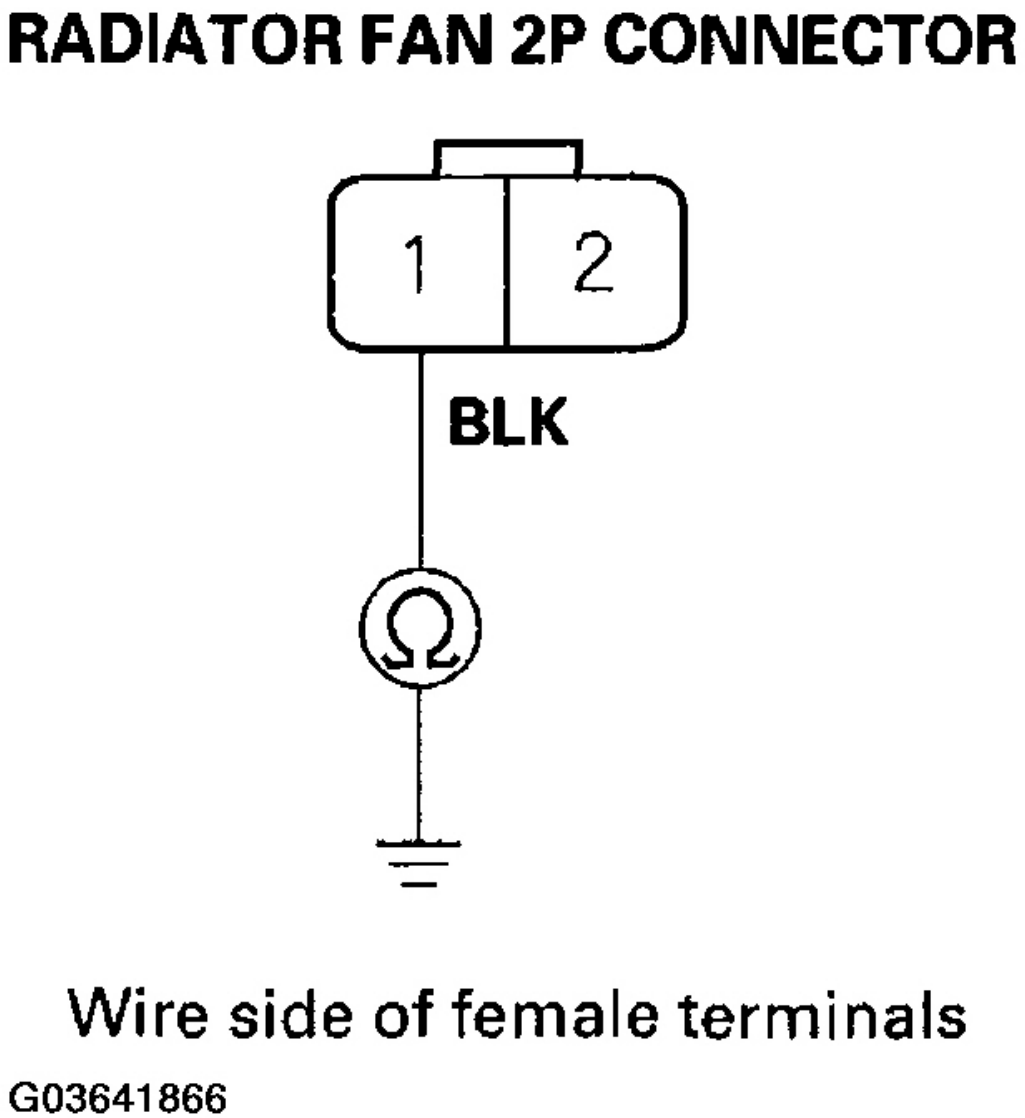

Fig. 67: Checking For Continuity Between No. 1 Terminal Of Radiator Fan 2P Connector And Body Ground
Courtesy of AMERICAN HONDA MOTOR CO., INC.

cardiagn.com

Is there continuity?

YES - Replace the radiator fan motor.

NO - Check for an open in the wire between the radiator fan and body ground. If the wire is OK, check for poor ground at G201.

32. Turn the ignition switch OFF.
33. Remove A/C diode B from the right side of the dashboard.
34. Check for current flow in both directions between the No. 1 and No. 2 terminals of A/C diode B.

cardiagn.com

A/C DIODE B

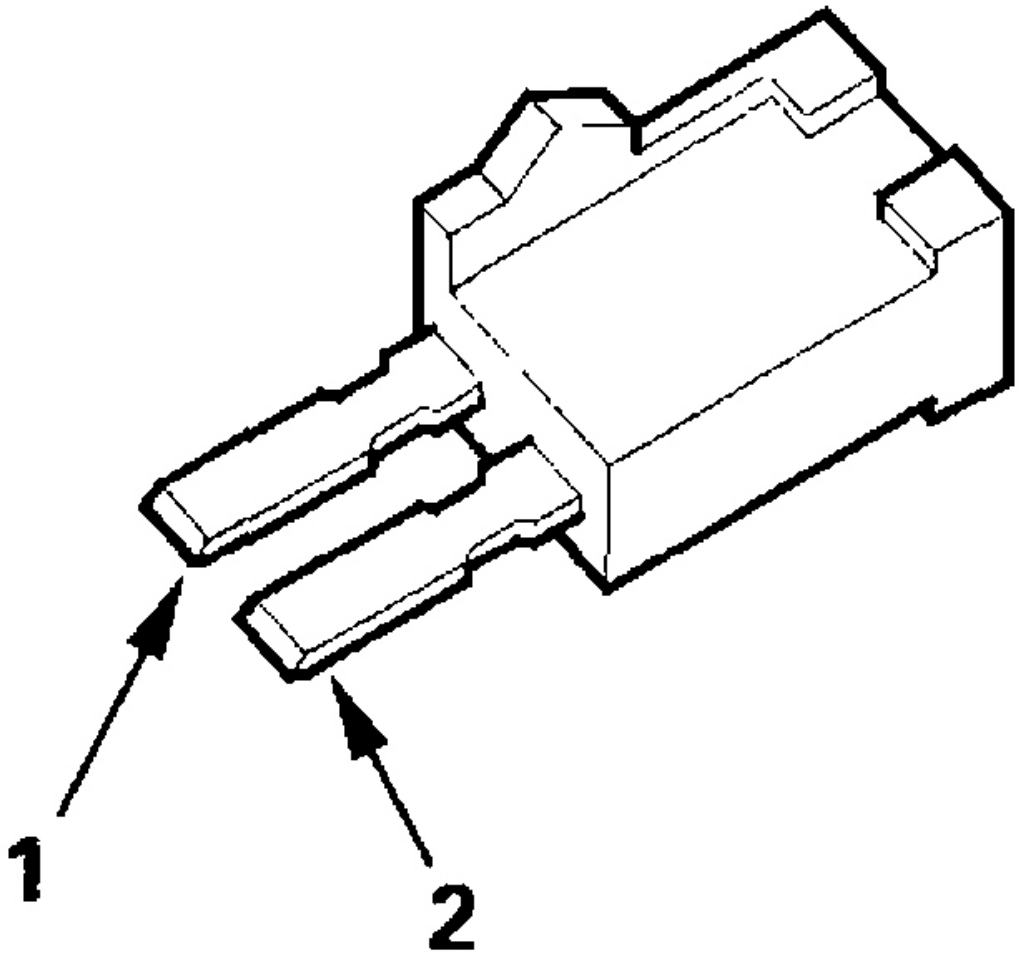

G03641867

cardiagn.com

Fig. 68: Checking For Current Flow In Both Directions Between No. 1 And No. 2 Terminals Of A/C Diode B
Courtesy of AMERICAN HONDA MOTOR CO., INC.

Is there current flow in only one direction?

YES - Go to step 35.

NO - Replace A/C diode B.

35. Turn the ignition switch ON (II).
36. Measure the voltage between the No. 2 terminal of A/C diode B 2P socket and body ground.

cardiagn.com

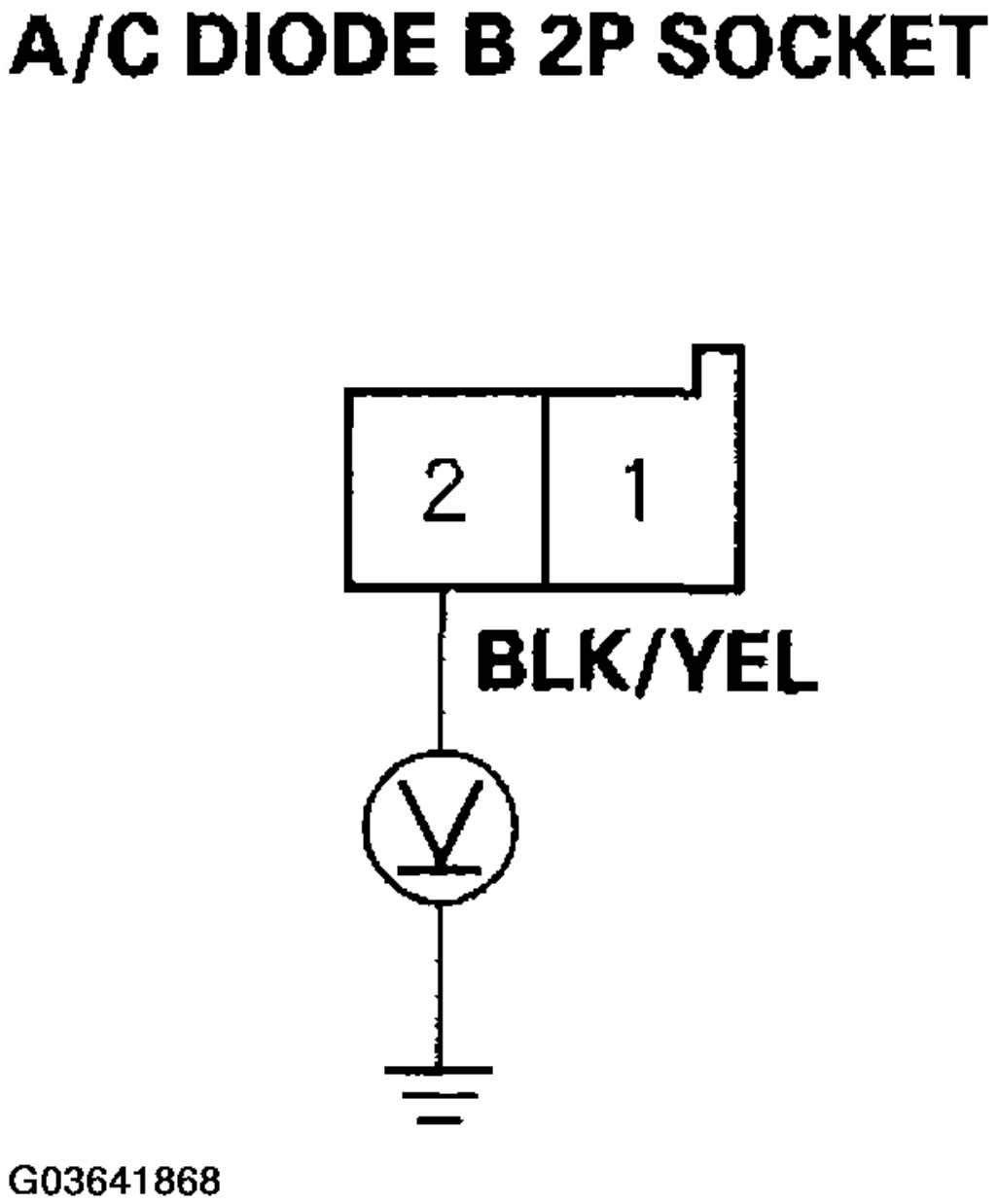

Fig. 69: Measuring Voltage Between No. 2 Terminal Of A/C Diode B 2P Socket And Body Ground
Courtesy of AMERICAN HONDA MOTOR CO., INC.

Is there battery voltage?

YES - Repair open in the wire between A/C diode B and the A/C condenser fan relay.

cardiagn.com

NO - Repair open in the wire between the No. 3 fuse in the driver's underdash fuse/relay box and A/C diode B.

RADIATOR AND A/C CONDENSER FAN HIGH SPEED CIRCUIT TROUBLESHOOTING

NOTE:

- **Do not use this troubleshooting procedure if only one fan is inoperative, or if the A/C compressor is inoperative, refer to the symptom troubleshooting.**
- **Before doing symptom troubleshooting, check for powertrain DTCs (see GENERAL TROUBLESHOOTING INFORMATION).**

1. Disconnect the A/C pressure switch 4P connector.
2. Turn the ignition switch ON (II).
3. Measure the voltage between the No. 2 terminal of the A/C pressure switch 4P connector and body ground.

cardiagn.com

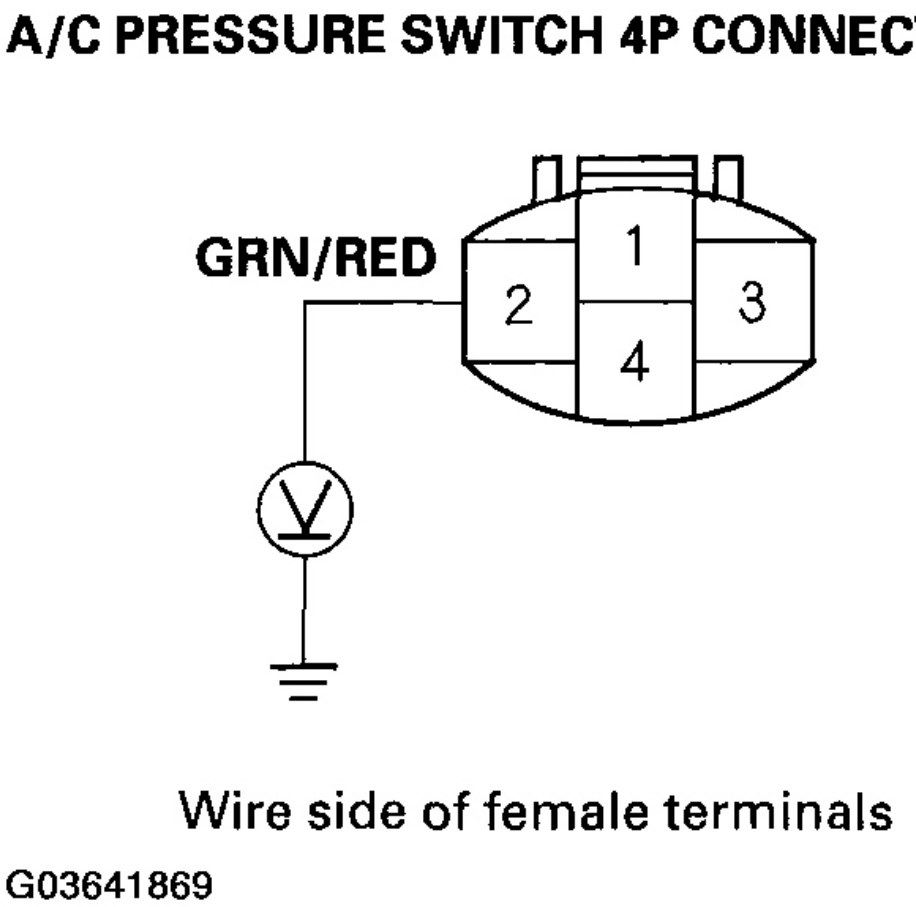

Fig. 70: Measuring Voltage Between No. 2 Terminal Of A/C Pressure Switch 4P Connector And Body Ground
Courtesy of AMERICAN HONDA MOTOR CO., INC.

Is there battery voltage?

YES - Go to step 4.

NO - Go to step 6 .

4. Turn the ignition switch OFF.
5. Check for continuity between the No. 3 terminal of the A/C pressure switch 4P connector and body ground.

cardiagn.com

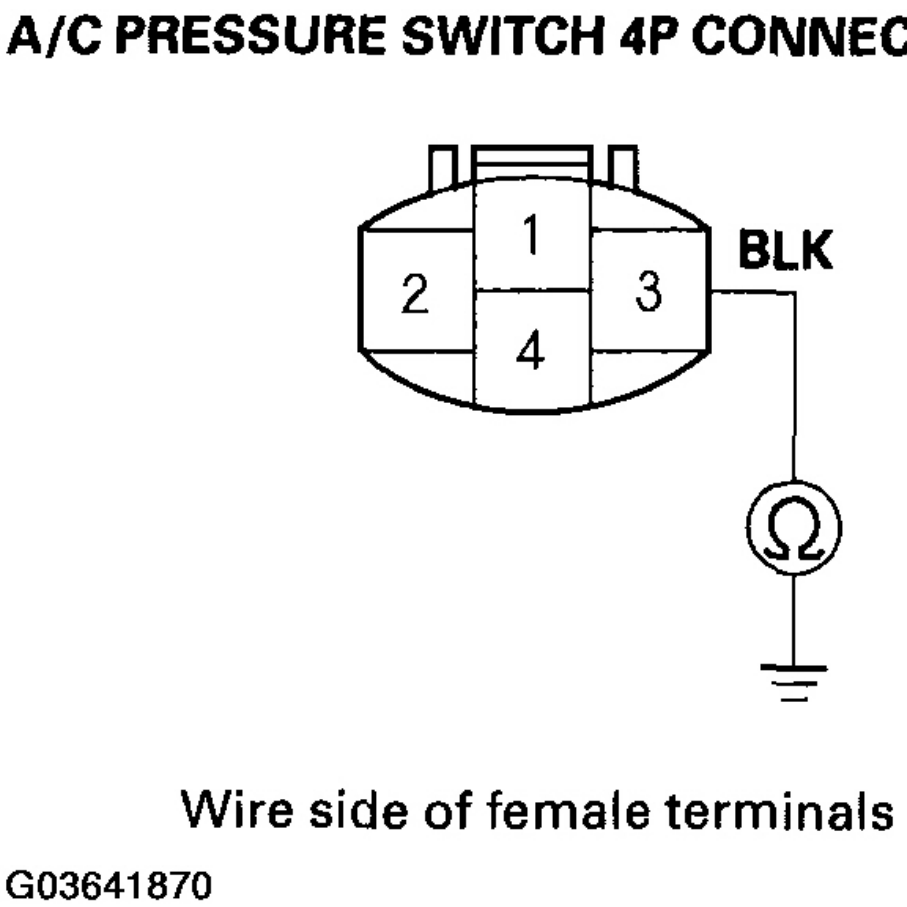

Fig. 71: Checking For Continuity Between No. 3 Terminal Of A/C Pressure Switch 4P Connector And Body Ground
Courtesy of AMERICAN HONDA MOTOR CO., INC.

Is there continuity?

YES - Replace the A/C pressure switch.

NO - Check for an open in the wire between the A/C pressure switch and body ground. If the wire is OK, check for poor ground at G201.

6. Jump the SCS line with the HDS.
7. Turn the ignition switch OFF.
8. Disconnect PCM connector A (73P).
9. Check for continuity between the No. 30 terminal of PCM connector A (73P) and the No. 2 terminal of the A/C pressure switch 4P connector.

cardiagn.com

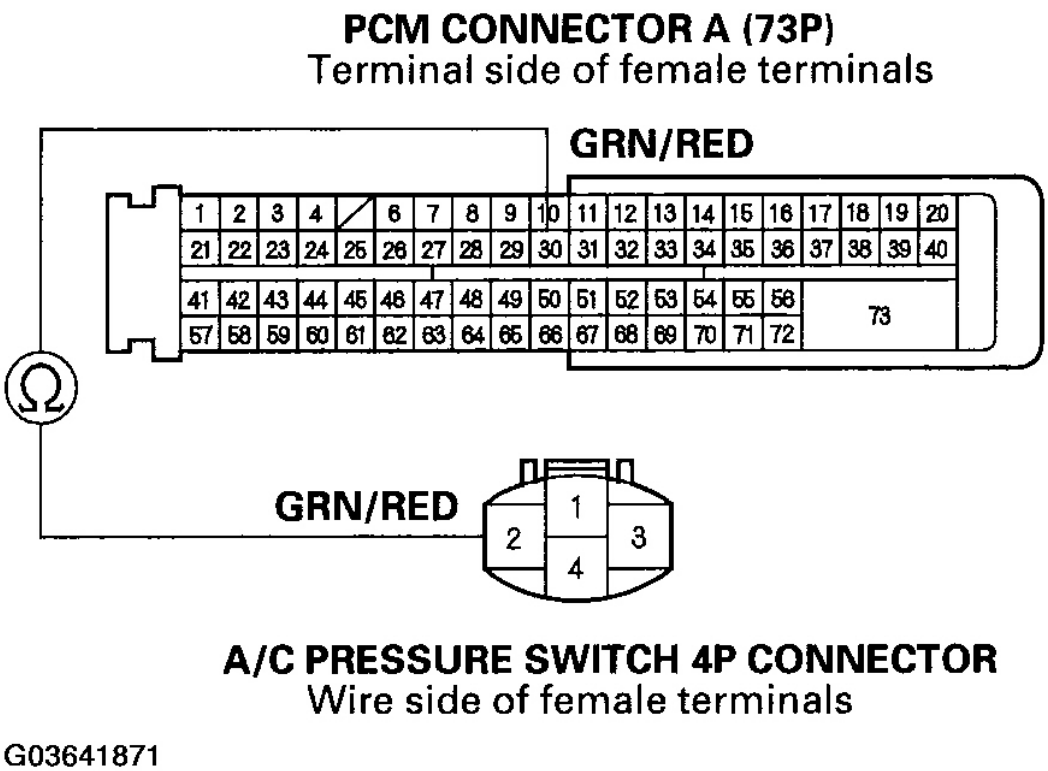

Fig. 72: Checking For Continuity Between No. 30 Terminal Of PCM Connector And No. 2 Terminal Of A/C Pressure Switch 4P Connector
Courtesy of AMERICAN HONDA MOTOR CO., INC.

Is there continuity?

YES - Replace the PCM.

NO - Repair open in the wire between the PCM and the A/C pressure switch.

A/C COMPRESSOR CLUTCH CIRCUIT TROUBLESHOOTING

NOTE:

- **Do not use this troubleshooting procedure if the fans are also inoperative. Refer to the symptom troubleshooting index.**
- **Before doing symptom troubleshooting, check for powertrain DTCs (see GENERAL TROUBLESHOOTING INFORMATION).**

1. Check the No. 59 (7.5 A) fuse in the underhood fuse/relay box, and the No. 3 (7.5 A) fuse in the driver's underdash fuse/relay box.

cardiagn.com

Are the fuses OK?

YES - Go to step 2.

NO - Replace the fuse(s), and recheck.

2. Check the engine coolant temperature, throttle position, and idle speed (use the HDS PGM-FI data list, if possible).

ENGINE COOLANT TEMPERATURE CHECK

ECT Sensor	144-169 °F (76-90 °C)
TP Sensor	About 0.5 V
RPM	More than 730

Are the coolant temperature, throttle position, and idle speed OK?

YES - Go to step 3.

NO - Troubleshoot and repair the cause of the high engine coolant temperature, low idle, or excessively high throttle position sensor reading.

3. Remove the A/C compressor clutch relay from the underhood fuse/relay box, and test it (see **POWER RELAY TEST**).

Is the relay OK?

YES - Go to step 4.

NO - Replace the A/C compressor clutch relay.

4. Measure the voltage between the No.1 terminal of the A/C compressor clutch relay 4P socket and body ground.

cardiagn.com

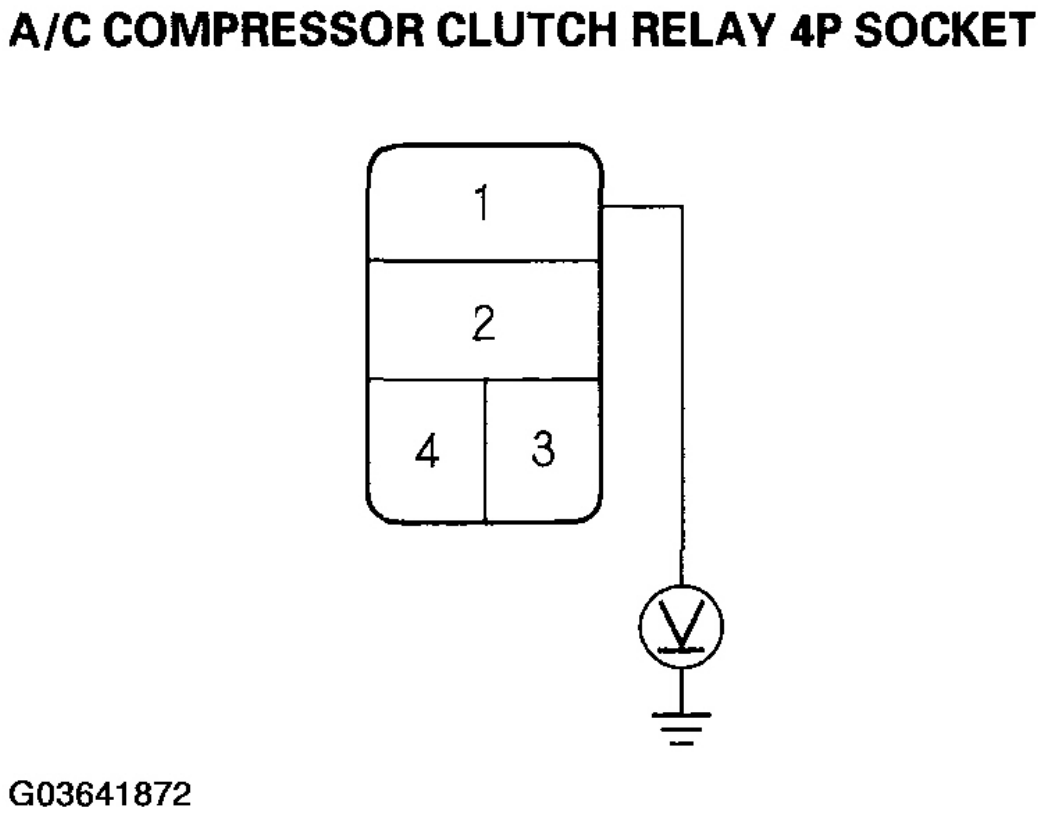

Fig. 73: Measuring Voltage Between No.1 Terminal Of A/C Compressor Clutch Relay 4P Socket And Body Ground
Courtesy of AMERICAN HONDA MOTOR CO., INC.

Is there battery voltage?

YES - Go to step 5.

NO - Replace the underhood fuse/relay box.

5. Connect the No. 1 and No. 2 terminals of the A/C compressor clutch relay 4P socket with a jumper wire.

cardiagn.com

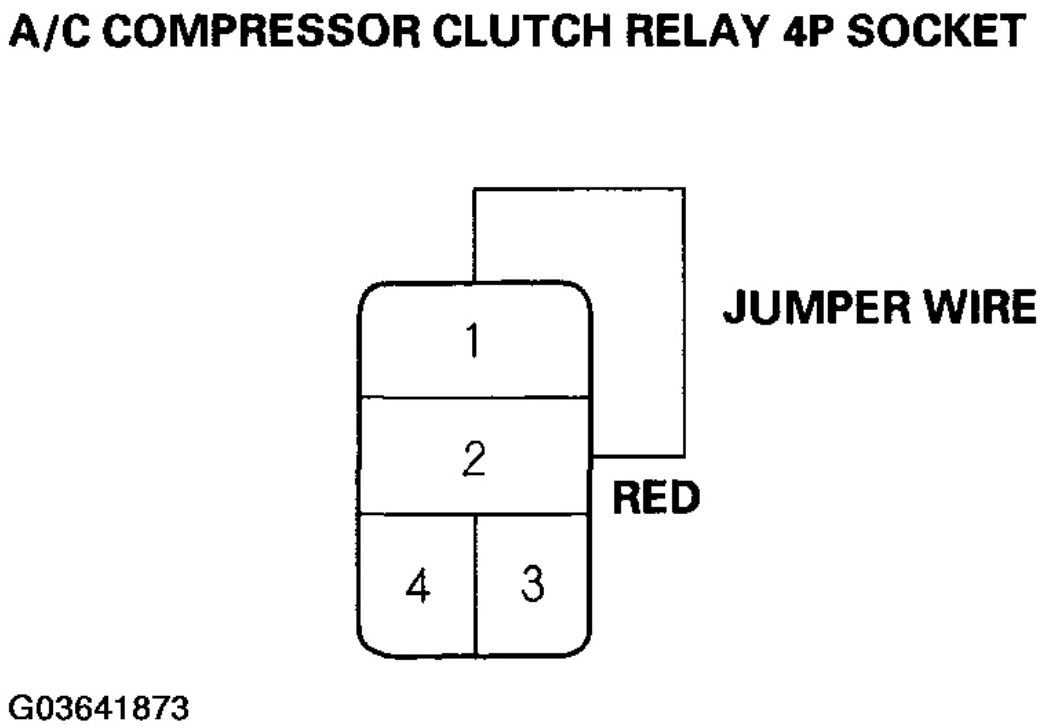

Fig. 74: Connecting No. 1 And No. 2 Terminals Of A/C Compressor Clutch Relay 4P Socket With Jumper Wire
Courtesy of AMERICAN HONDA MOTOR CO., INC.

Does the A/C compressor clutch click?

YES - Go to step 6.
NO - Go to step 19 .

6. Disconnect the jumper wire.
7. Turn the ignition switch ON (II).
8. Measure the voltage between the No. 4 terminal of the A/C compressor clutch relay 4P socket and body ground.

cardiagn.com

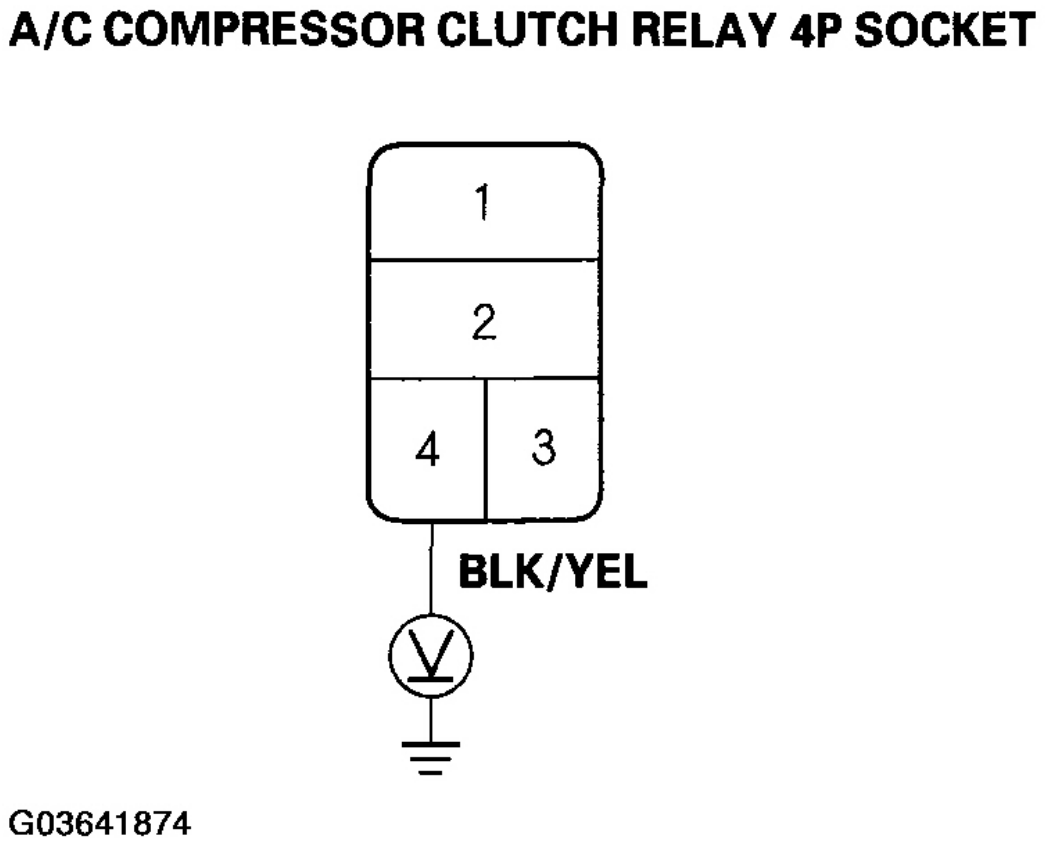

Fig. 75: Measuring Voltage Between No. 4 Terminal Of A/C Compressor Clutch Relay 4P Socket And Body Ground
Courtesy of AMERICAN HONDA MOTOR CO., INC.

Is there battery voltage?

YES - Go to step 9.

NO - Repair open in the wire between the No. 3 fuse in the driver's underdash fuse/relay box and the A/C compressor clutch relay.

9. Turn the ignition switch OFF.
10. Reinstall the A/C compressor clutch relay.
11. Make sure the A/C switch is OFF.
12. Jump the SCS line with the HDS.
13. Turn the ignition switch OFF.
14. Disconnect PCM connector B (56P).
15. Turn the ignition switch ON (II).

cardiagn.com

16. Measure the voltage between the No. 11 terminal of PCM connector B (56P) and body ground.

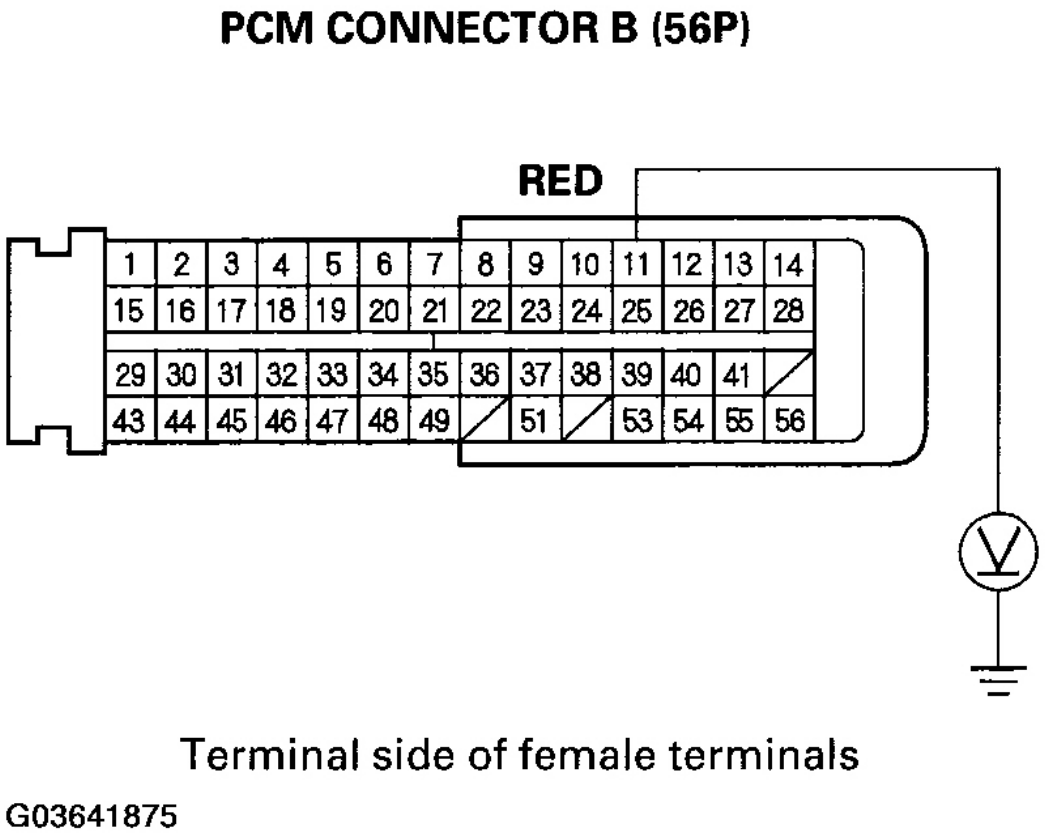

Fig. 76: Measuring Voltage Between No. 11 Terminal Of PCM Connector B (56P) And Body Ground
Courtesy of AMERICAN HONDA MOTOR CO., INC.

Is there battery voltage?

YES - Go to step 17.

NO - Repair open in the wire between the A/C compressor clutch relay and the PCM.

17. Disconnect the A/C pressure switch 4P connector.
18. Check for continuity between the No. 56 terminal of PCM connector B (56P) and No. 1 terminal of the A/C pressure switch 4P connector.

cardiagn.com

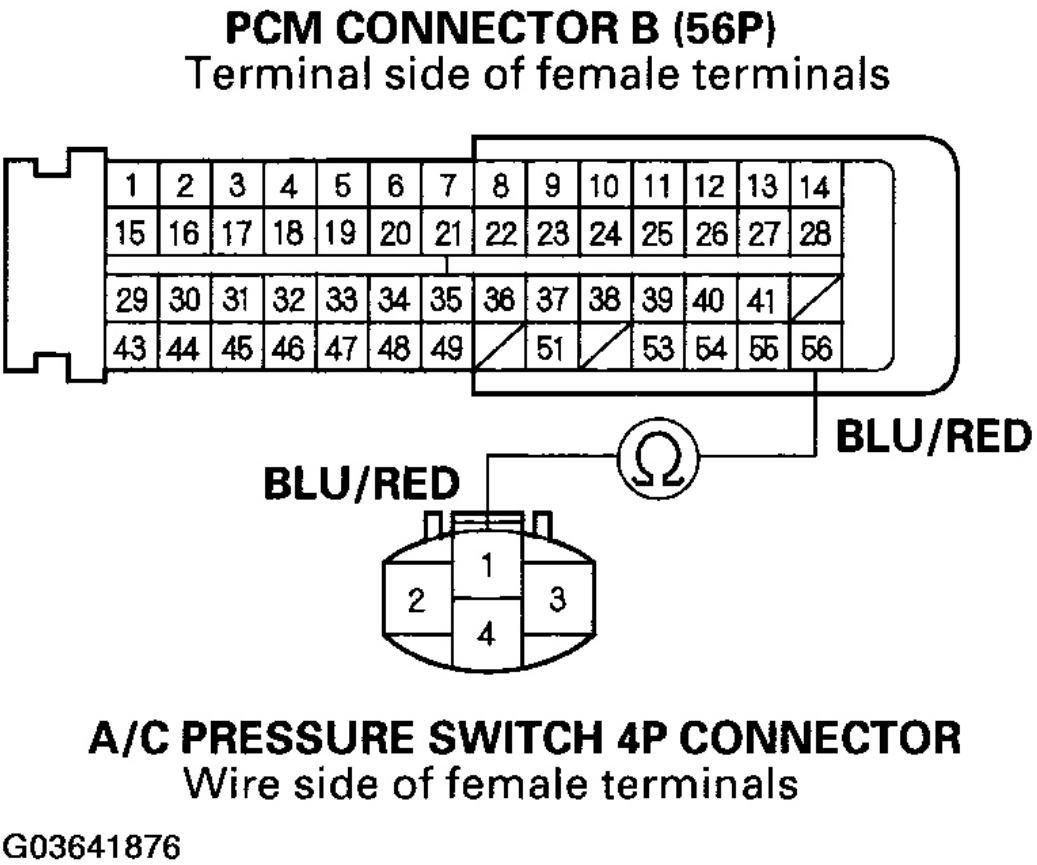

Fig. 77: Checking For Continuity Between No. 56 Terminal Of PCM Connector B
Courtesy of AMERICAN HONDA MOTOR CO., INC.

Is there continuity?

YES - Check for loose wires or poor connections at PCM connector B (56P). If the connections are good, substitute a known-good PCM, and recheck. If the symptom/indication goes away, replace the original PCM.

NO - Repair open in the wire between the PCM and the A/C pressure switch.

19. Disconnect the jumper wire.
20. Disconnect the A/C compressor clutch 1P connector.
21. Check for continuity between the No. 2 terminal of the A/C compressor clutch relay 4P socket and the No. 1 terminal of the A/C compressor clutch 1P connector.

cardiagn.com

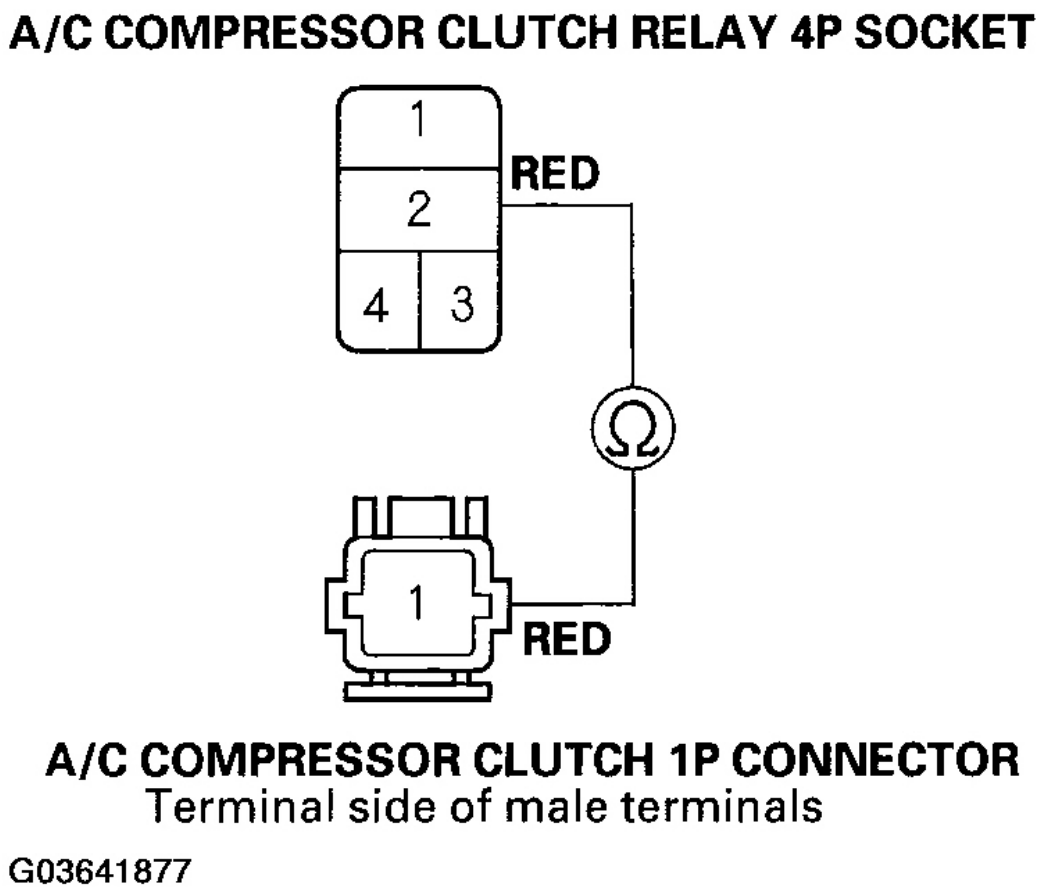

Fig. 78: Checking For Continuity Between No. 2 Terminal Of A/C Compressor Clutch Relay 4P Socket
Courtesy of AMERICAN HONDA MOTOR CO., INC.

Is there continuity?

YES - Check the A/C compressor clutch clearance and the A/C compressor clutch field coil (see **A/C COMPRESSOR CLUTCH CHECK**).

NO - Repair open in the wire between the A/C compressor clutch relay and the A/C compressor clutch.

A/C PRESSURE SWITCH CIRCUIT TROUBLESHOOTING

NOTE:

- **Do not use this troubleshooting procedure if the following items are operative; A/C condenser fan, radiator fan, A/C compressor, or if the heater is inoperative. Refer to the symptom troubleshooting index.**

cardiagn.com

- **Before doing symptom troubleshooting, check for powertrain DTCs (see GENERAL TROUBLESHOOTING INFORMATION).**

1. Disconnect the A/C pressure switch 4P connector.
2. Turn the ignition switch ON (II).
3. Measure the voltage between the No. 1 terminal of the A/C pressure switch 4P connector and body ground.

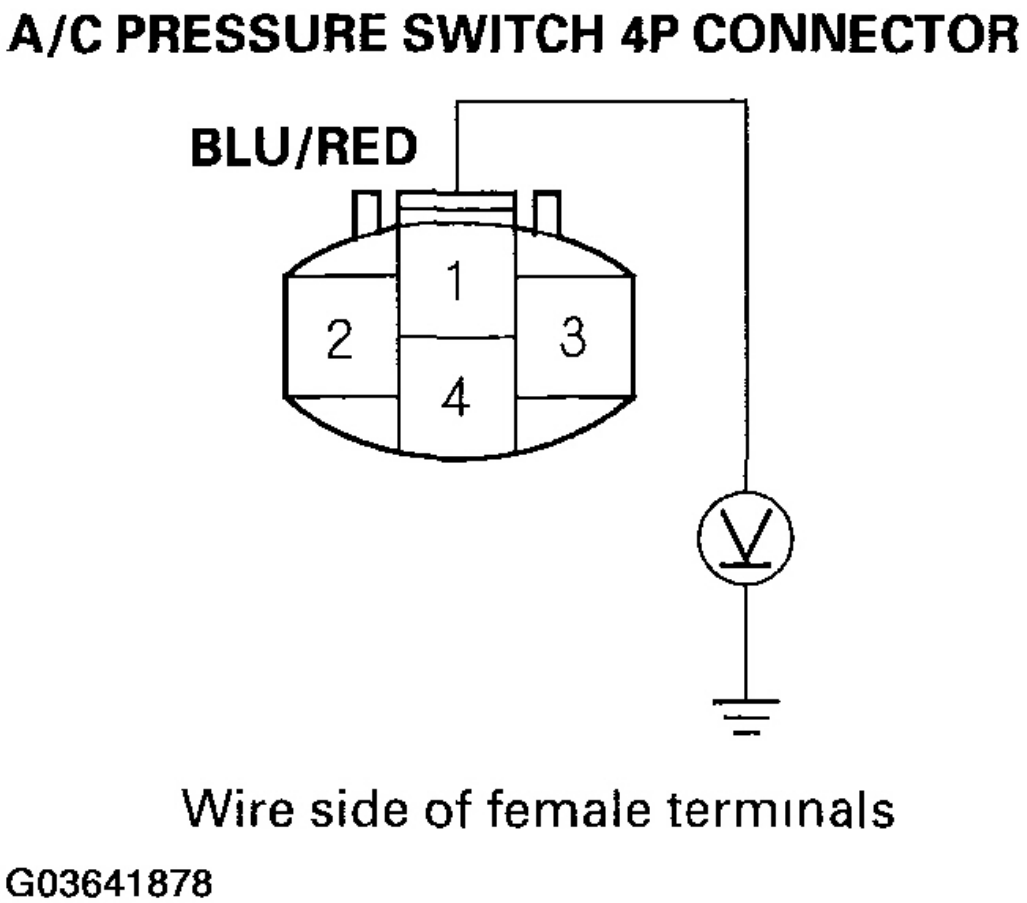

Fig. 79: Measuring Voltage Between No. 1 Terminal Of A/C Pressure Switch 4P Connector And Body Ground
Courtesy of AMERICAN HONDA MOTOR CO., INC.

Is there battery voltage?

cardiagn.com

YES - Go to step 4.

NO - Repair open in the wire between A/C diode A, the PCM, and the A/C pressure switch.

4. Turn the ignition switch OFF.
5. Check for continuity between the No. 1 and No. 4 terminals of the A/C pressure switch.

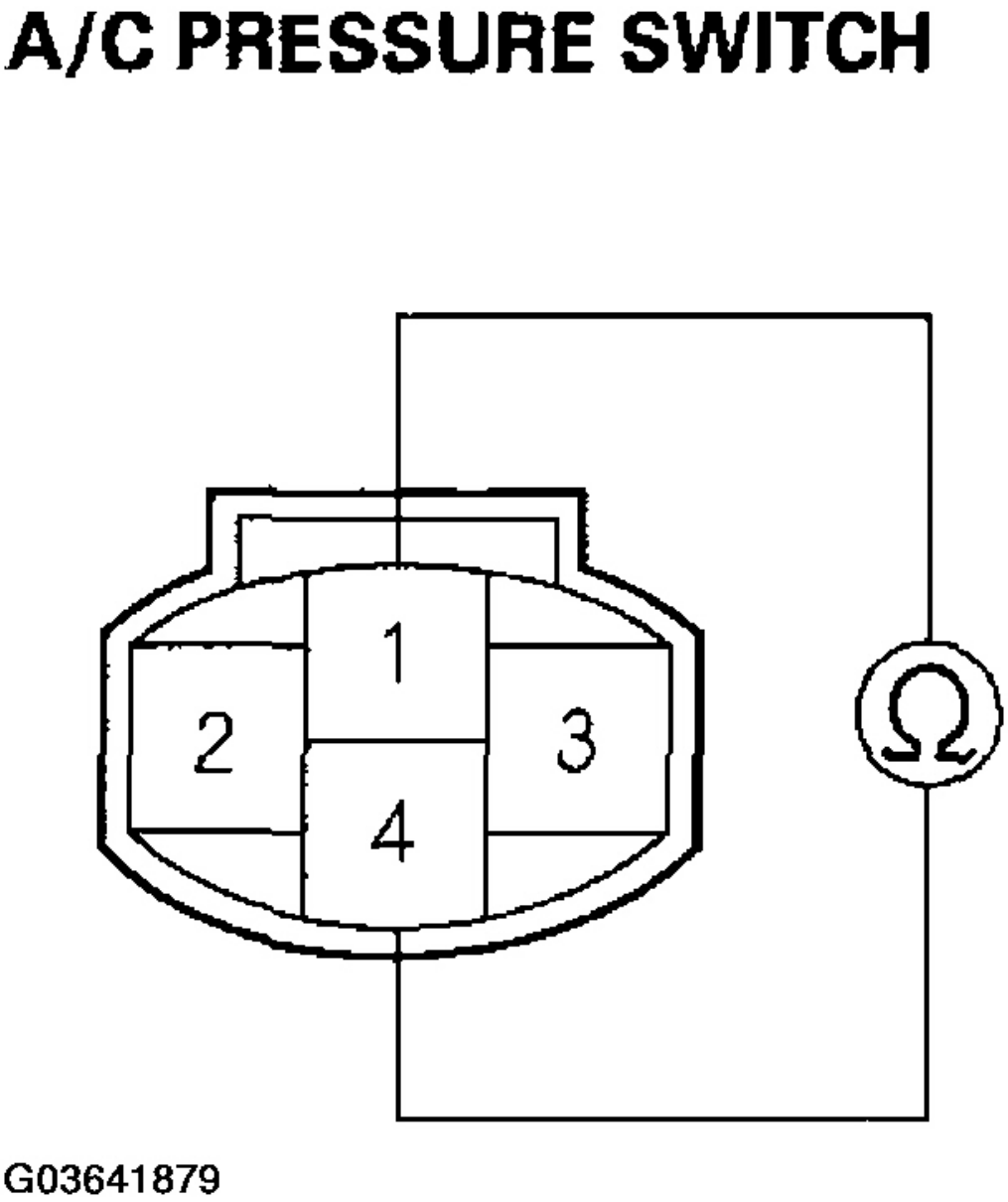

Fig. 80: Checking For Continuity Between No. 1 And No. 4 Terminals Of A/C Pressure Switch

cardiagn.com

Courtesy of AMERICAN HONDA MOTOR CO., INC.

Is there continuity?

YES - Go to step 6.

NO - Go to step 12 .

6. Reconnect the A/C pressure switch 4P connector.
7. Disconnect climate control unit connector B (26P).
8. Turn the ignition switch ON (II).
9. Measure the voltage between the No. 4 terminal of climate control unit connector B (26P) and body ground.

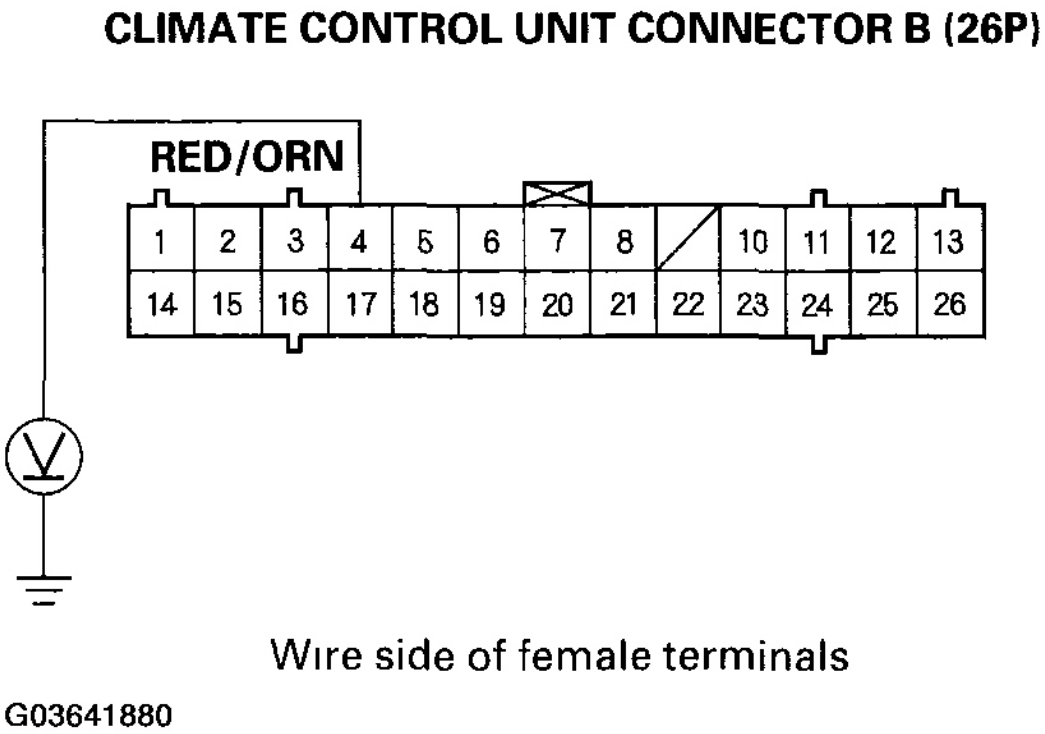

Fig. 81: Measuring Voltage Between No. 4 Terminal Of Climate Control Unit Connector B (26P) And Body Ground
Courtesy of AMERICAN HONDA MOTOR CO., INC.

Is there battery voltage?

YES - Go to step 10.

NO - Repair the open in the wire between the climate control unit and the A/C pressure switch.

cardiagn.com

10. Turn the ignition switch OFF.
11. Measure the resistance between the No. 1 and No. 20 terminals of the climate control unit connector B (26P).

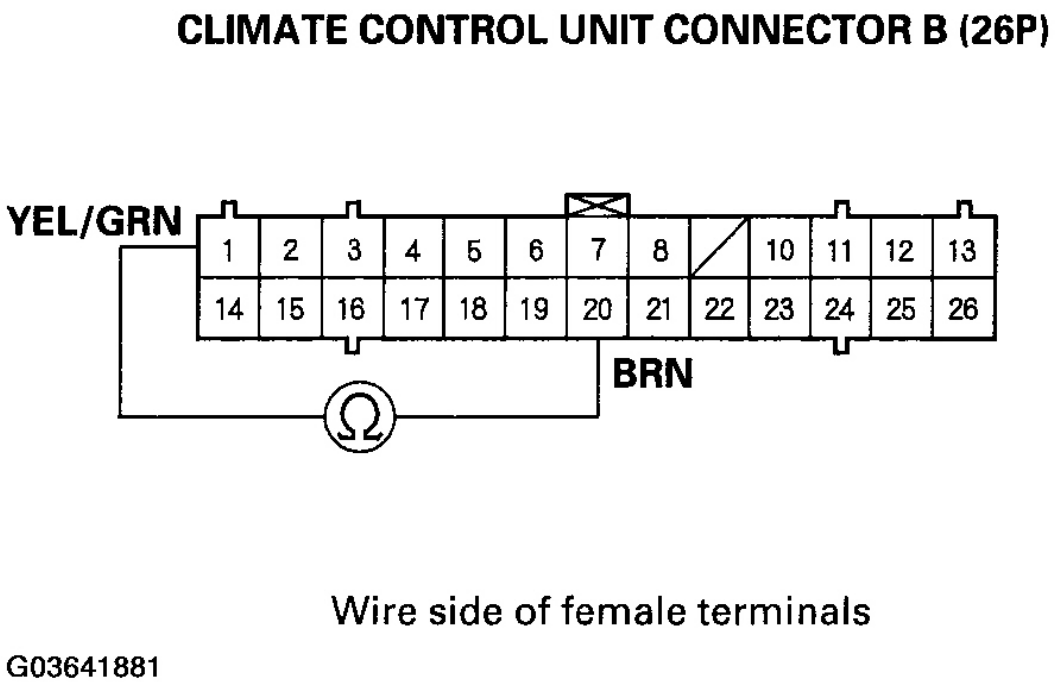

Fig. 82: Measuring Resistance Between No. 1 And No. 20 Terminals Of Climate Control Unit Connector B
Courtesy of AMERICAN HONDA MOTOR CO., INC.

Is the resistance less than 24 kohm ?

YES - Check for loose wire or poor connections at climate control unit connector B (26P) and at the A/C pressure switch 4P connector. If the connections are good, substitute a known-good climate control unit, and recheck. If the symptom/indication goes away, replace the original climate control unit.

NO - Test the evaporator temperature sensor (see **EVAPORATOR TEMPERATURE SENSOR TEST**).

12. Check for proper A/C system pressure.

Is the pressure within specifications?

YES - Replace the A/C pressure switch.

NO - Repair the A/C pressure problem.

cardiagn.com

IN-CAR TEMPERATURE SENSOR TEST

Check for a change in resistance by heating or cooling the sensor with a hair dryer.

Compare the resistance reading between the No. 1 and No. 2 terminals of the in-car temperature sensor with the specifications shown in the graph; the resistance should be within the specifications.

cardiagn.com

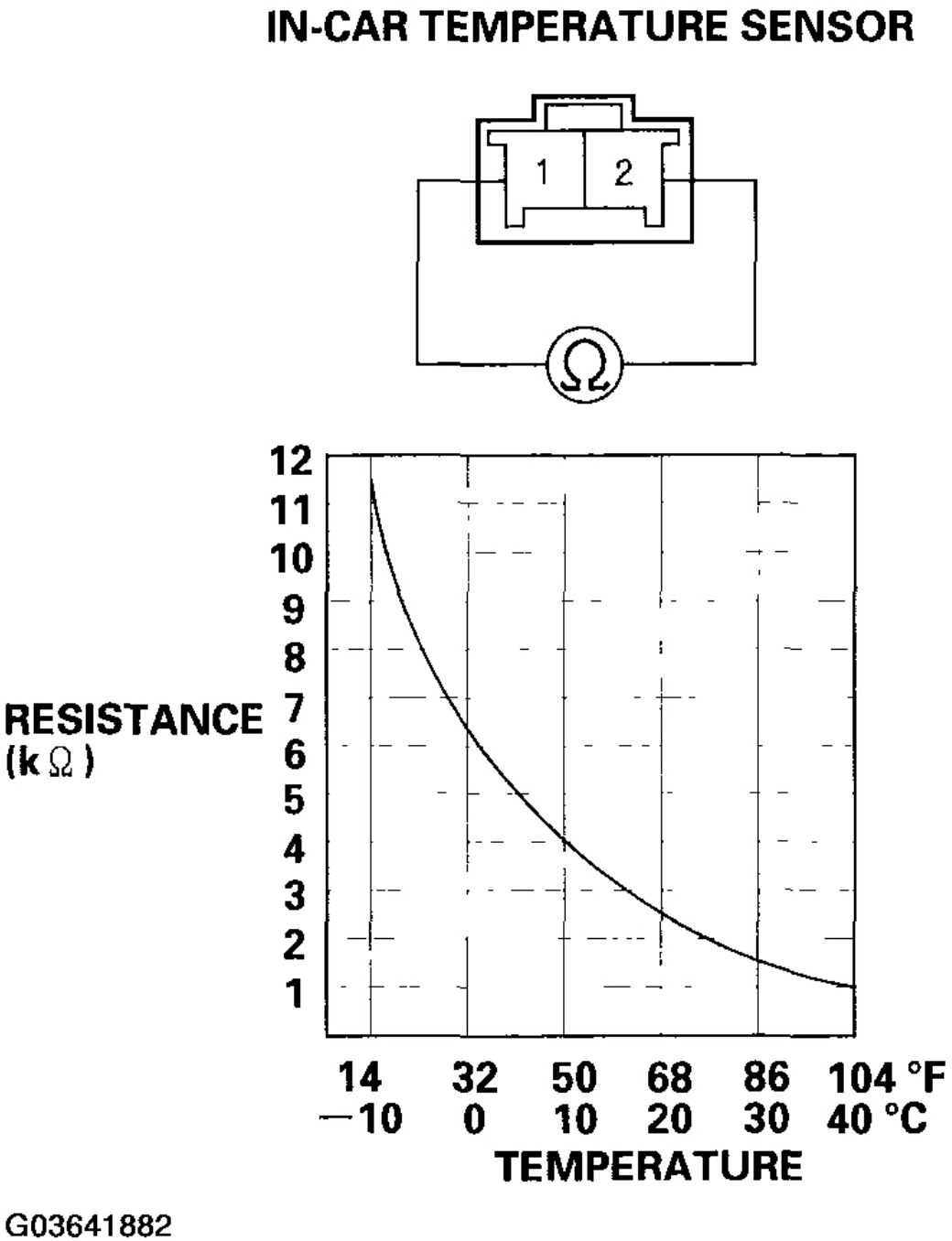

Fig. 83: Temperature Sensor Resistance Graph
Courtesy of AMERICAN HONDA MOTOR CO., INC.

cardiagn.com

IN-CAR TEMPERATURE SENSOR REPLACEMENT

1. Remove the driver's dashboard lower cover (see **DASHBOARD LOWER COVER REMOVAL/INSTALLATION**).
2. Remove the self-tapping screws and the in-car temperature sensor (A) from the driver's dashboard lower cover (B).

cardiagn.com

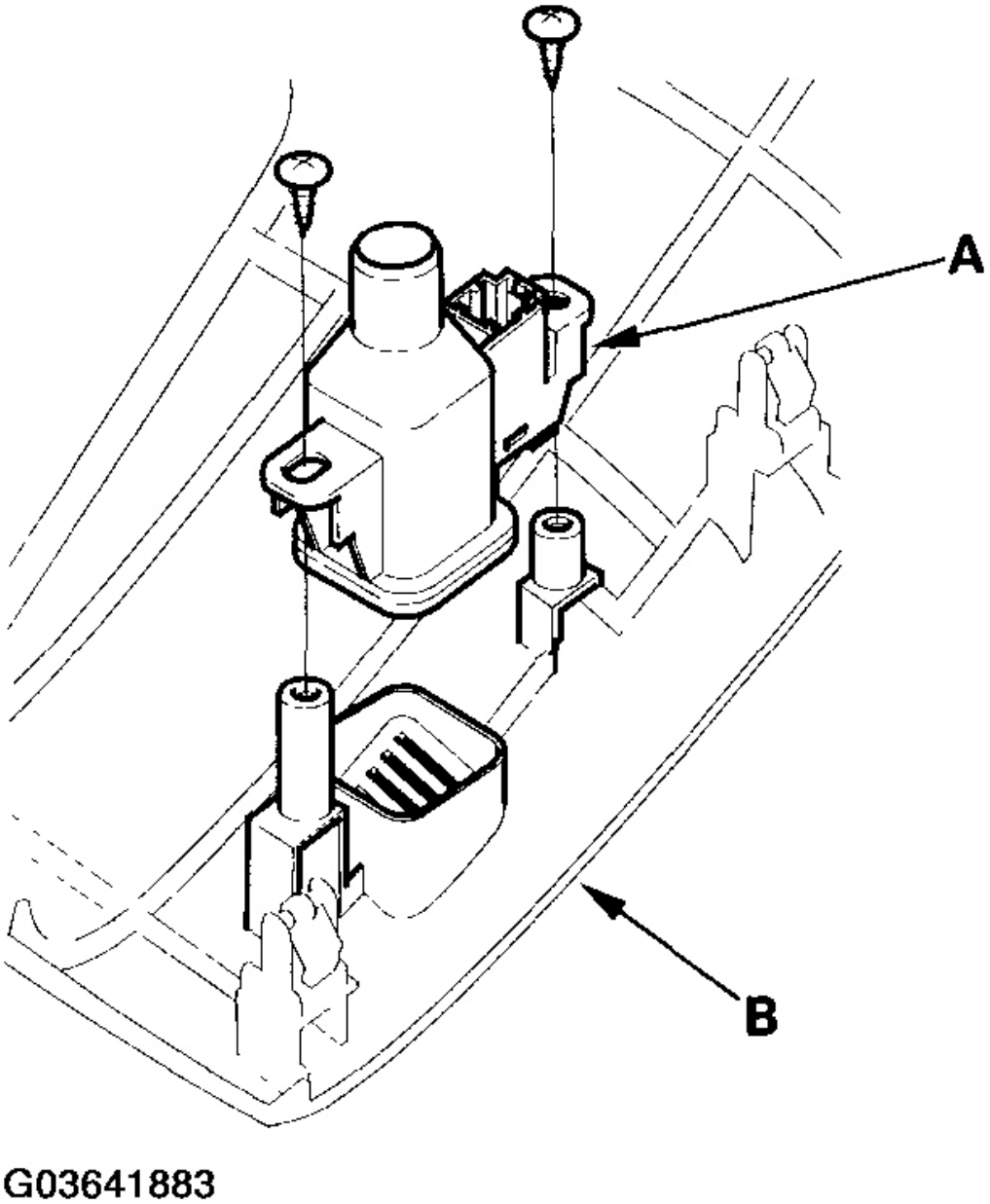

Fig. 84: Removing In-Car Temperature Sensor From Driver's Dashboard Lower Cover
Courtesy of AMERICAN HONDA MOTOR CO., INC.

3. Install the sensor in the reverse order of removal. Be sure to connect the air hose securely.

cardiagn.com

OUTSIDE AIR TEMPERATURE SENSOR TEST

Dip the sensor in ice water, and measure the resistance. Then pour warm water on the sensor, and check for a change in resistance.

Compare the resistance reading between the No. 1 and No. 2 terminals of the outside air temperature sensor with the specifications shown in the graph; the resistance should be within the specifications.

cardiagn.com

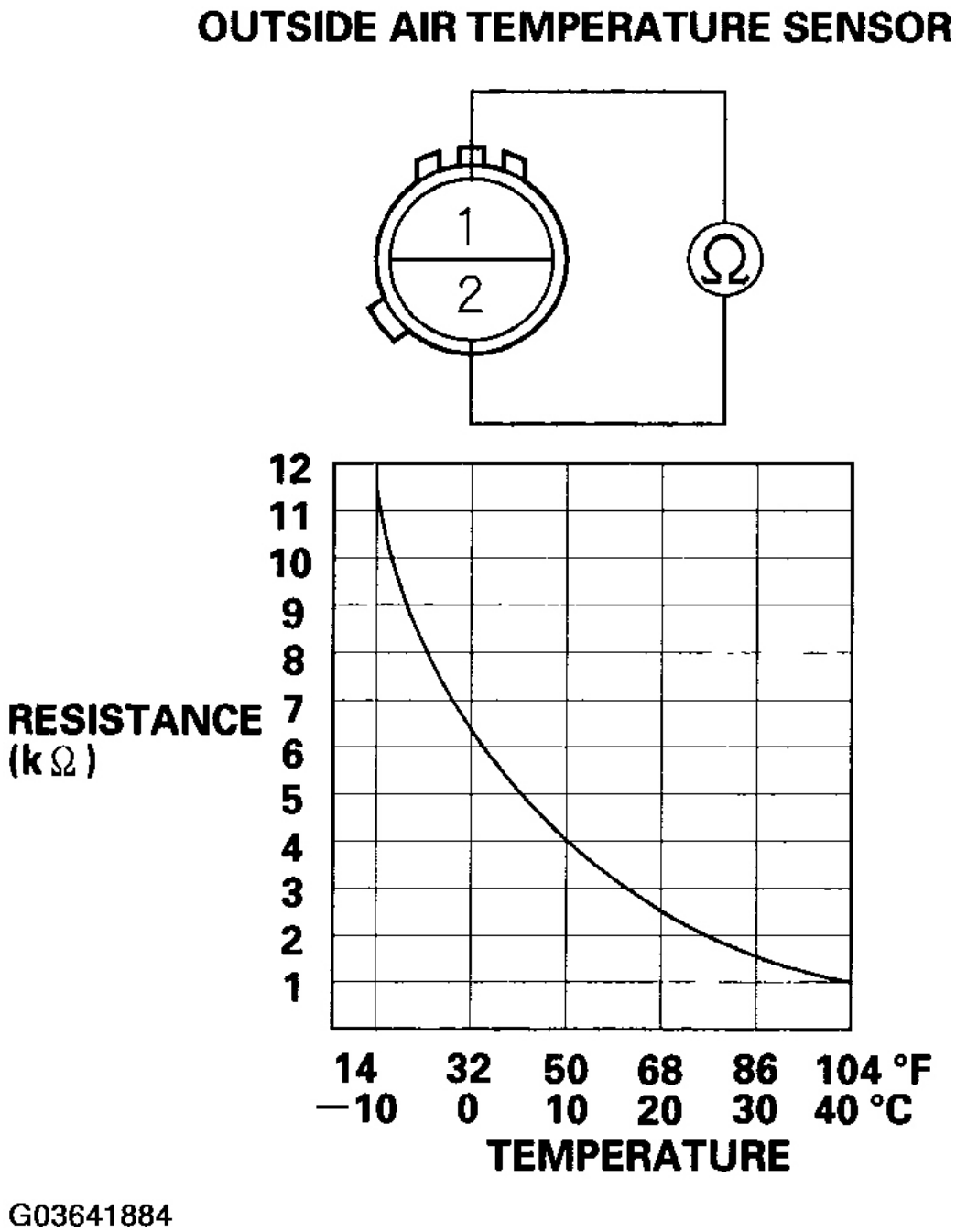

Fig. 85: Outside Air Temperature Sensor Graph
Courtesy of AMERICAN HONDA MOTOR CO., INC.

OUTSIDE AIR TEMPERATURE SENSOR REPLACEMENT

cardiagn.com

1. Lift the tab (A) to release the lock, and remove the outside air temperature sensor (B) from the back of the front bumper beam. Disconnect the 2P connector (C) from the outside air temperature sensor.

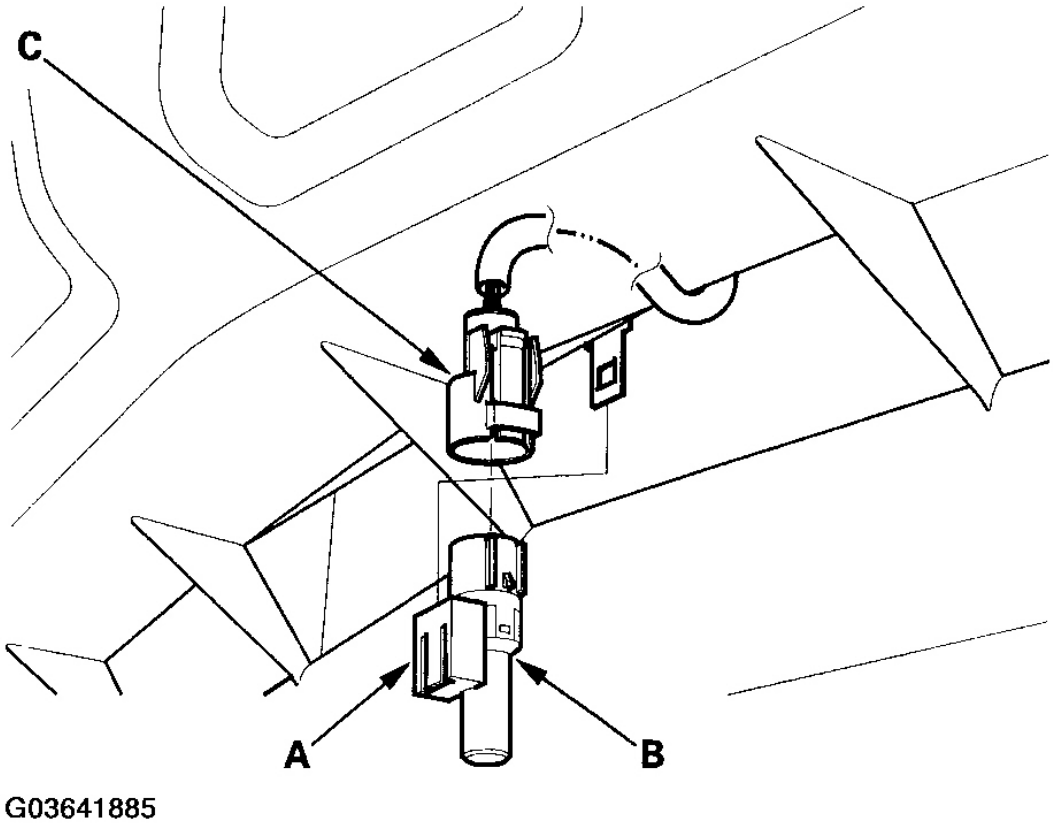

Fig. 86: Disconnecting 2P Connector From Outside Air Temperature Sensor
Courtesy of AMERICAN HONDA MOTOR CO., INC.

2. Install the sensor in the reverse order of removal.

SUNLIGHT SENSOR TEST

Turn the ignition switch ON (II). Measure the voltage between the terminals with the (+) probe on the No. 1 terminal and the (-) probe on the No. 2 terminal with the 2P connector connected. The voltage readings will not change under the light of a flashlight or a fluorescent lamp. Voltage should be:

- 3.6-3.7 V or more with the sensor out of direct sunlight.
- 3.3-3.5 V or less with the sensor in direct sunlight.

cardiagn.com

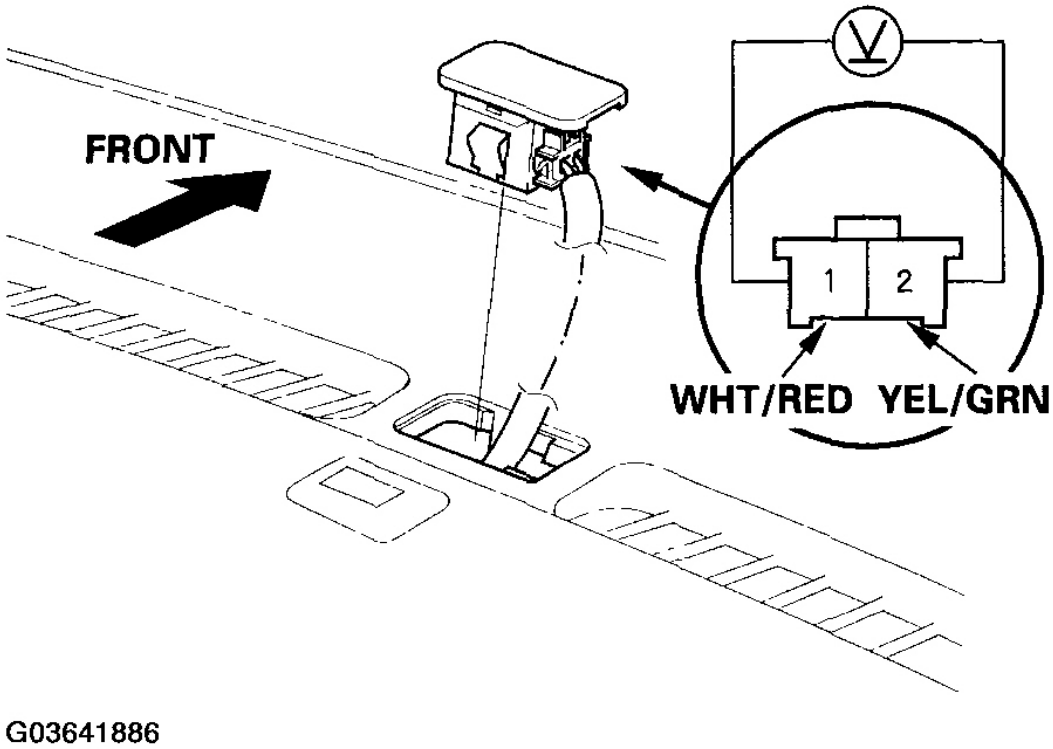

Fig. 87: Measuring Voltage Between Terminals
Courtesy of AMERICAN HONDA MOTOR CO., INC.

SUNLIGHT SENSOR REPLACEMENT

1. Remove the sunlight sensor from the dashboard, then disconnect the 2P connector. Be careful not to damage the sensor or the dashboard.

cardiagn.com

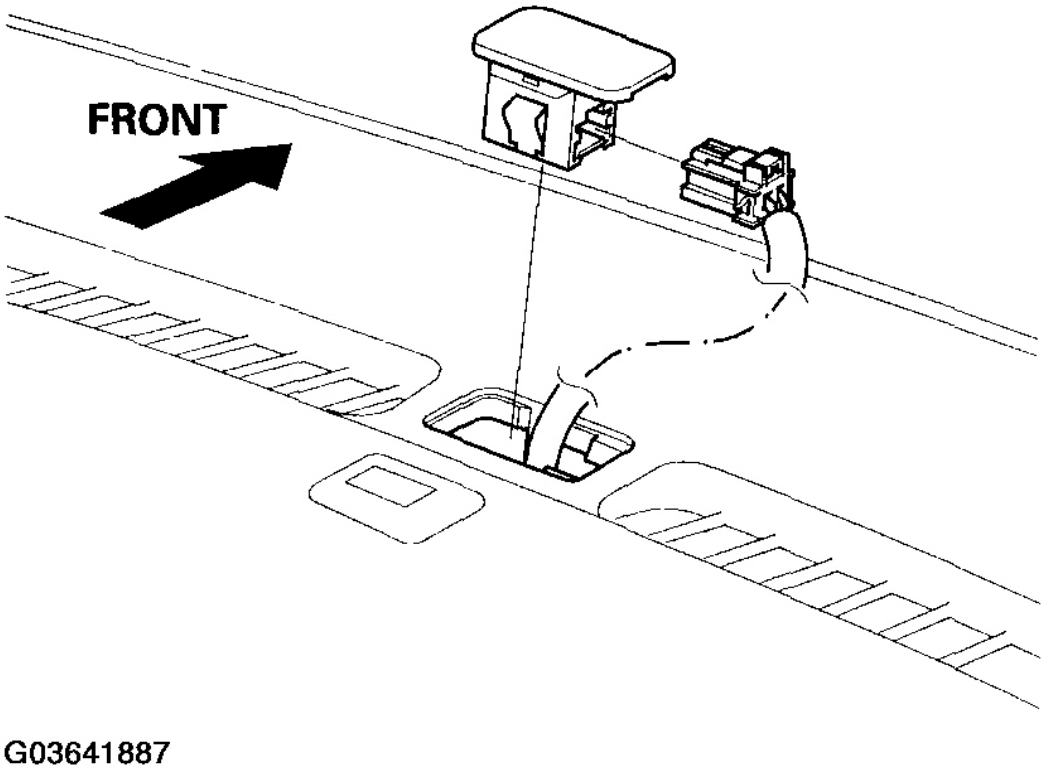

Fig. 88: Disconnecting Sunlight Sensor From Dashboard
Courtesy of AMERICAN HONDA MOTOR CO., INC.

2. Install the sensor in the reverse order of removal.

EVAPORATOR TEMPERATURE SENSOR TEST

1. Dip the sensor in ice water, and measure the resistance between its terminals.

cardiagn.com

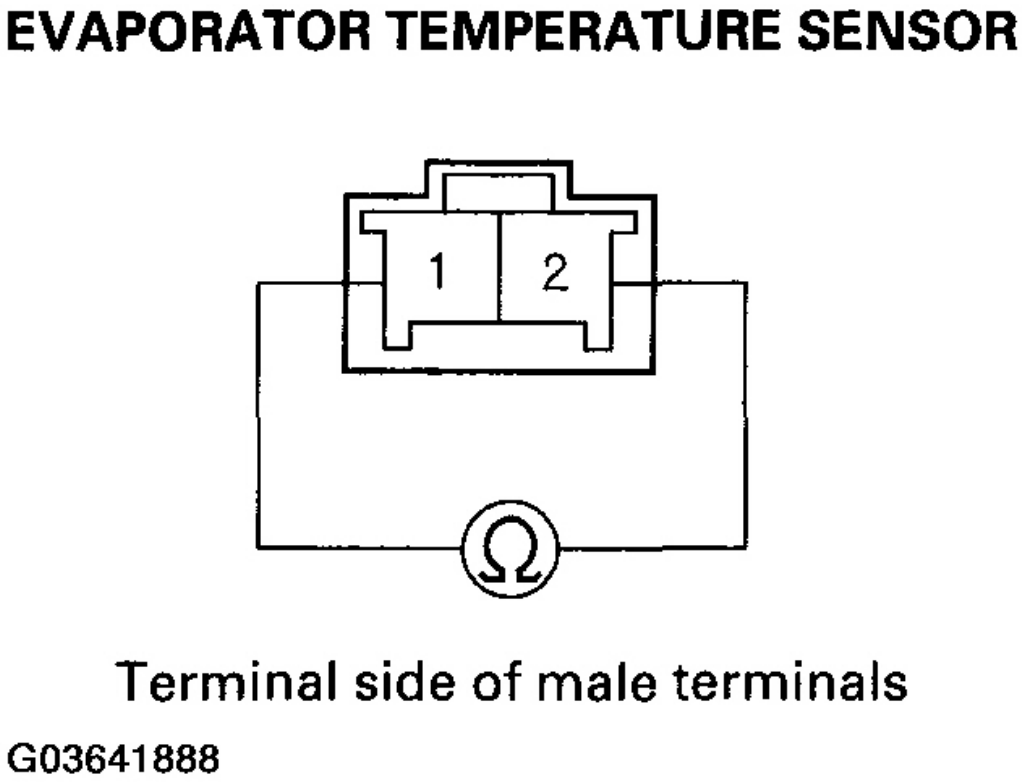

Fig. 89: Measuring Resistance Between Sensor Terminals
Courtesy of AMERICAN HONDA MOTOR CO., INC.

2. Then pour warm water on the sensor, and check for a change in resistance.
3. Compare the resistance readings with the specifications shown in the graph; the resistance should be within the specifications.

cardiagn.com

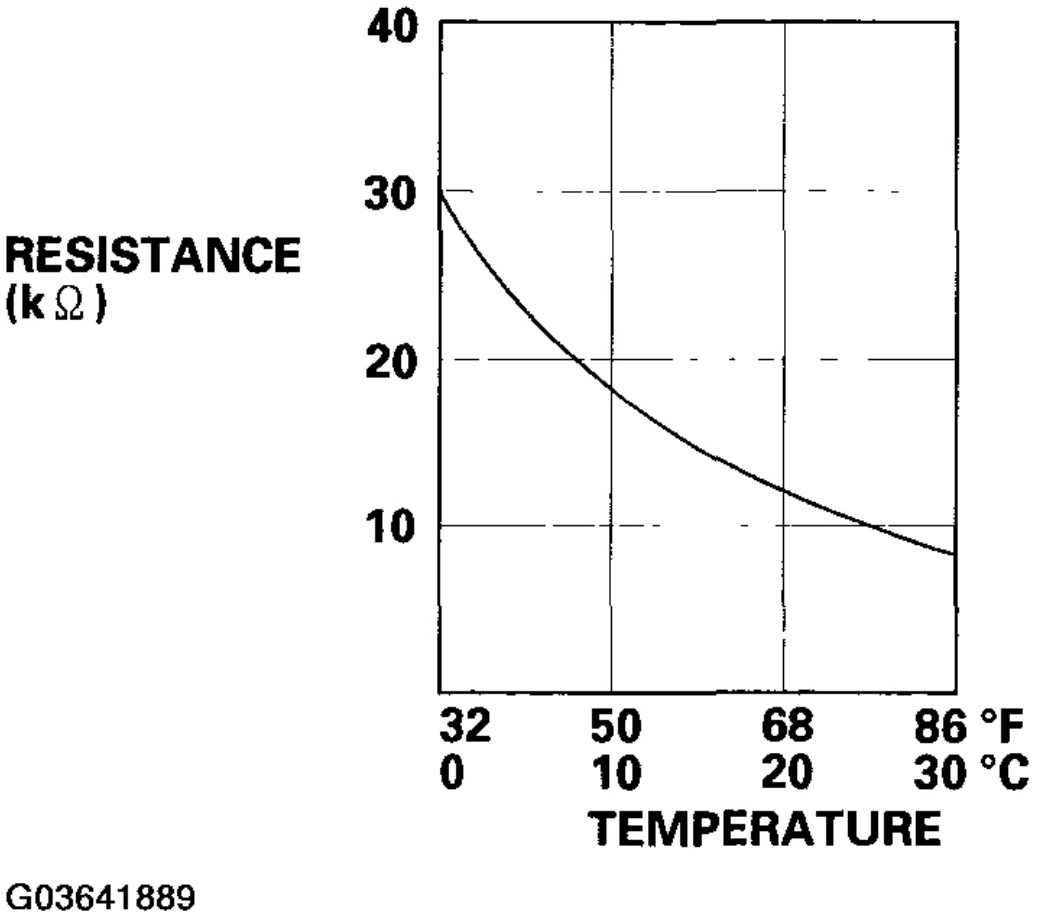

Fig. 90: Evaporator Temperature Sensor Resistance Graph
Courtesy of AMERICAN HONDA MOTOR CO., INC.

POWER TRANSISTOR TEST

1. Disconnect the 5P connector from the power transistor, located under the right side of dashboard near the blower motor.
2. Measure the resistance between the No. 1 and No. 4 terminals of the power transistor. It should be about 1.4-1.5 kohm.
   - If the resistance is within the specifications, go to step 3.
   - If the resistance is not within the specifications, replace the power transistor.

cardiagn.com

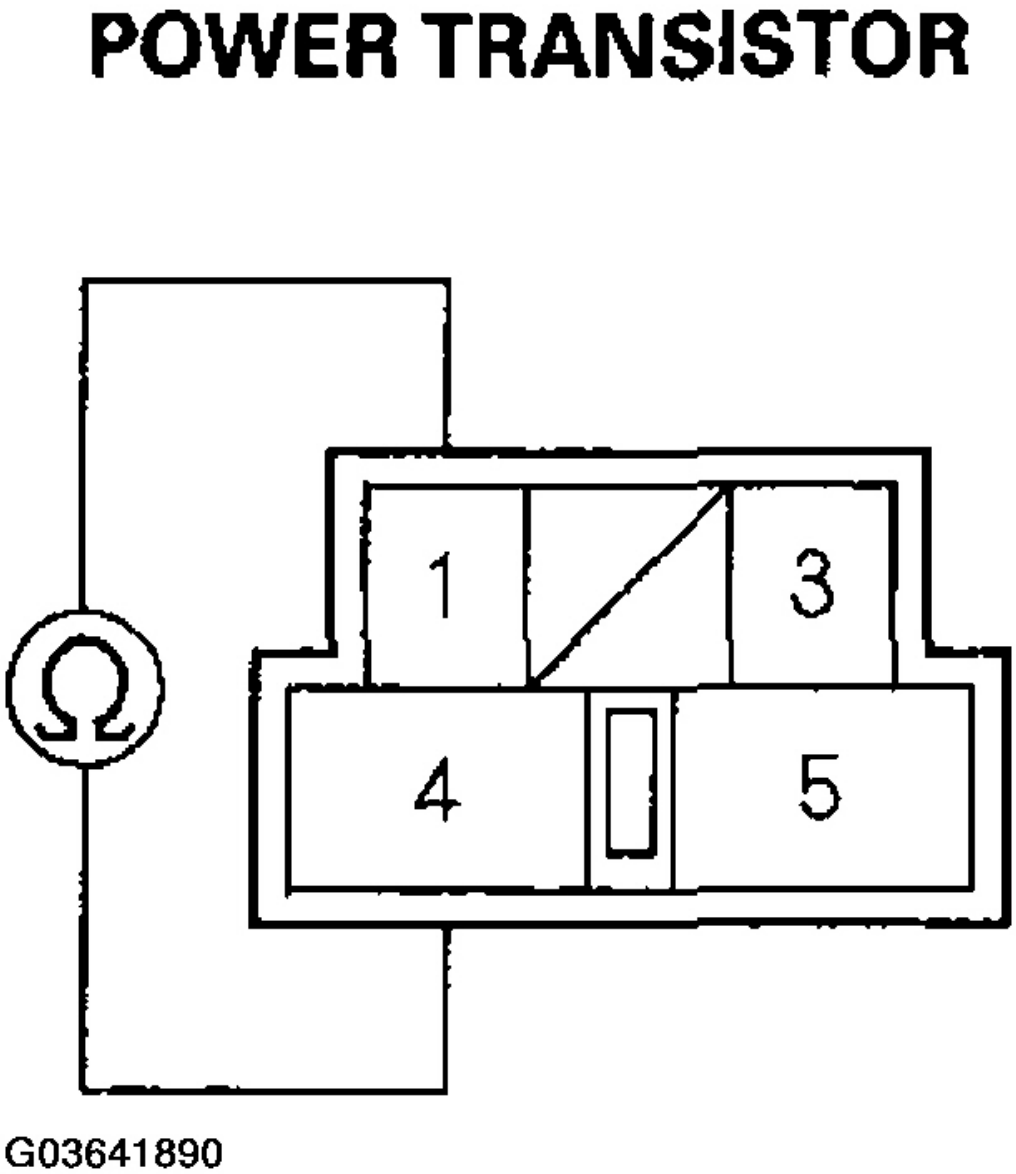

Fig. 91: Measuring Resistance Between No. 1 And No. 4 Terminals Of Power Transistor
Courtesy of AMERICAN HONDA MOTOR CO., INC.

3. Carefully release the lock tab on the No. 3 terminal (ORN/BLK) (A) in the 5P connector, then remove the terminal and insulate it from body ground.

cardiagn.com

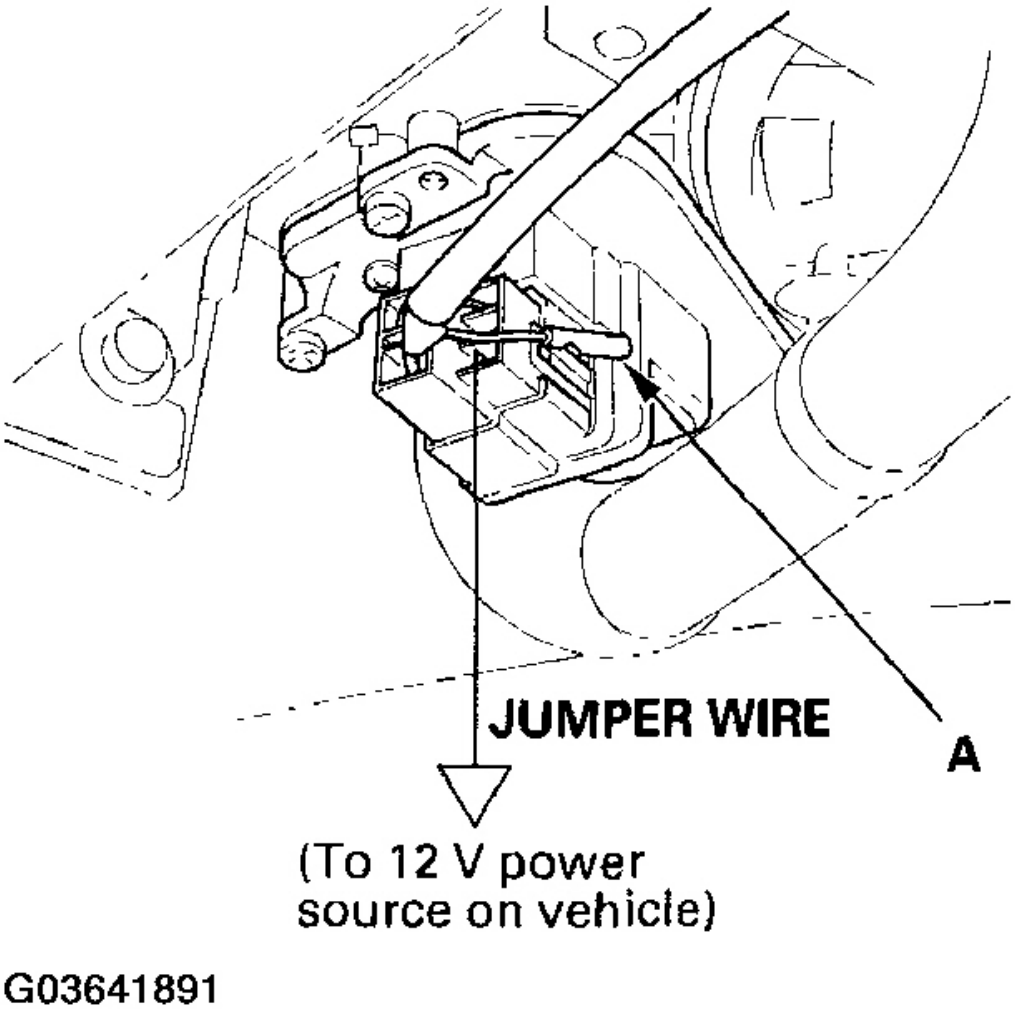

Fig. 92: Releasing Lock Tab On No. 3 Terminal (ORN/BLK) In 5P Connector
Courtesy of AMERICAN HONDA MOTOR CO., INC.

4. Reconnect the 5P connector to the power transistor.
5. Supply 12 V to the No. 3 cavity with a jumper wire.
6. Turn the ignition switch ON (II), and check that the blower motor runs.
   - If the blower motor does not run, replace the power transistor.
   - If the blower motor runs, the power transistor is OK.

AIR MIX CONTROL MOTOR TEST

cardiagn.com

1. Disconnect the 7P connector from the air mix control motor.

NOTE: **Incorrectly applying power and ground to the air mix control motor will damage it. Follow the instructions carefully.**

2. Connect battery power to the No. 1 terminal of the air mix control motor, and ground the No. 2 terminal; the air mix control motor should run, and stop at Max Cool. If it doesn't, reverse the connections; the air mix control motor should run, and stop at Max Hot.
3. If the air mix control motor did not run in step 2 , remove it, then check the air mix control linkage and door for smooth movement.
   - If the linkage and the door move smoothly, replace the air mix control motor.
   - If the linkage or the door sticks or binds, repair them as needed.
   - If the air mix control motor runs smoothly, go to step 4.

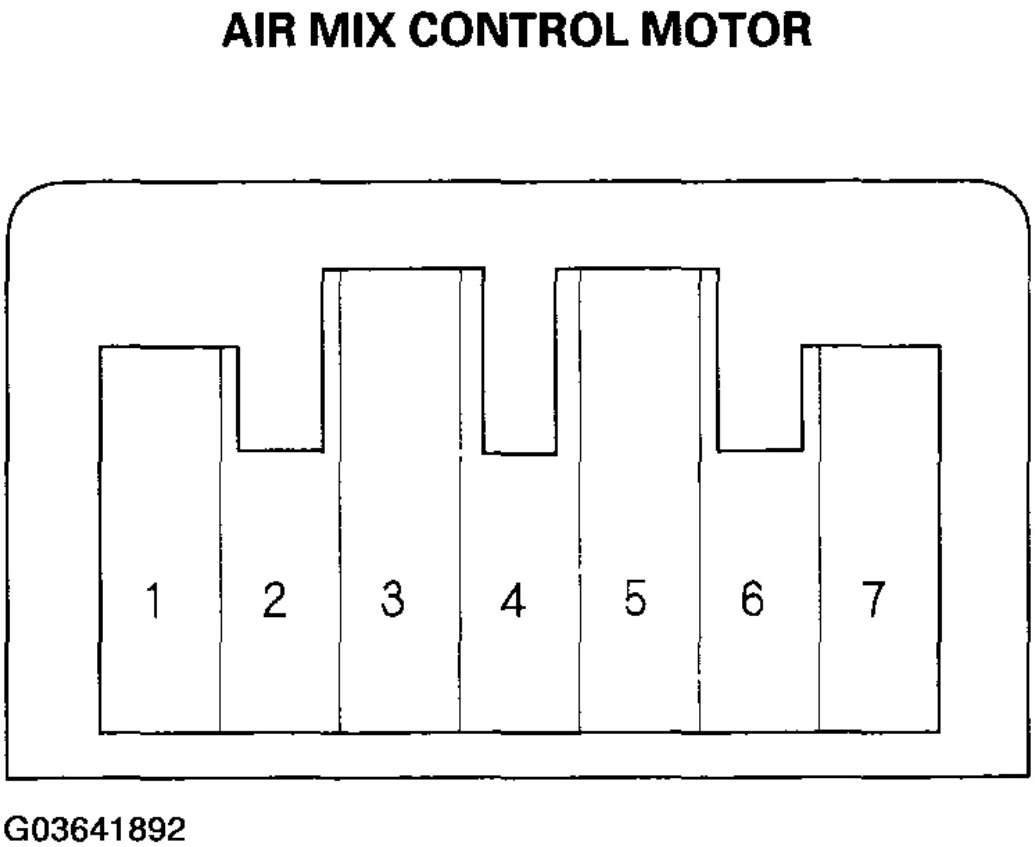

Fig. 93: Air Mix Control Motor Running Step
Courtesy of AMERICAN HONDA MOTOR CO., INC.

cardiagn.com

4. Measure the resistance between the No. 5 and No. 7 terminals. It should be between 4.2 to 7.8 k ohm.
5. Reconnect the air mix control motor 7P connector, then turn the ignition switch ON (II).
6. Using the backprobe set, measure the voltage between the No. 3 and No. 5 terminals.

   Max Cool-about 0.7 V

   Max Hot-about 4.2 V

7. If either the resistance or voltage readings are not as specified, replace the air mix control motor.

AIR MIX CONTROL MOTOR REPLACEMENT

1. Disconnect the 7P connector (A) from the air mix control motor (B). Remove the rod (C) of the air mix control motor from the air mix control linkage (D). Remove the self-tapping screws and the air mix control motor from the heater unit.

cardiagn.com

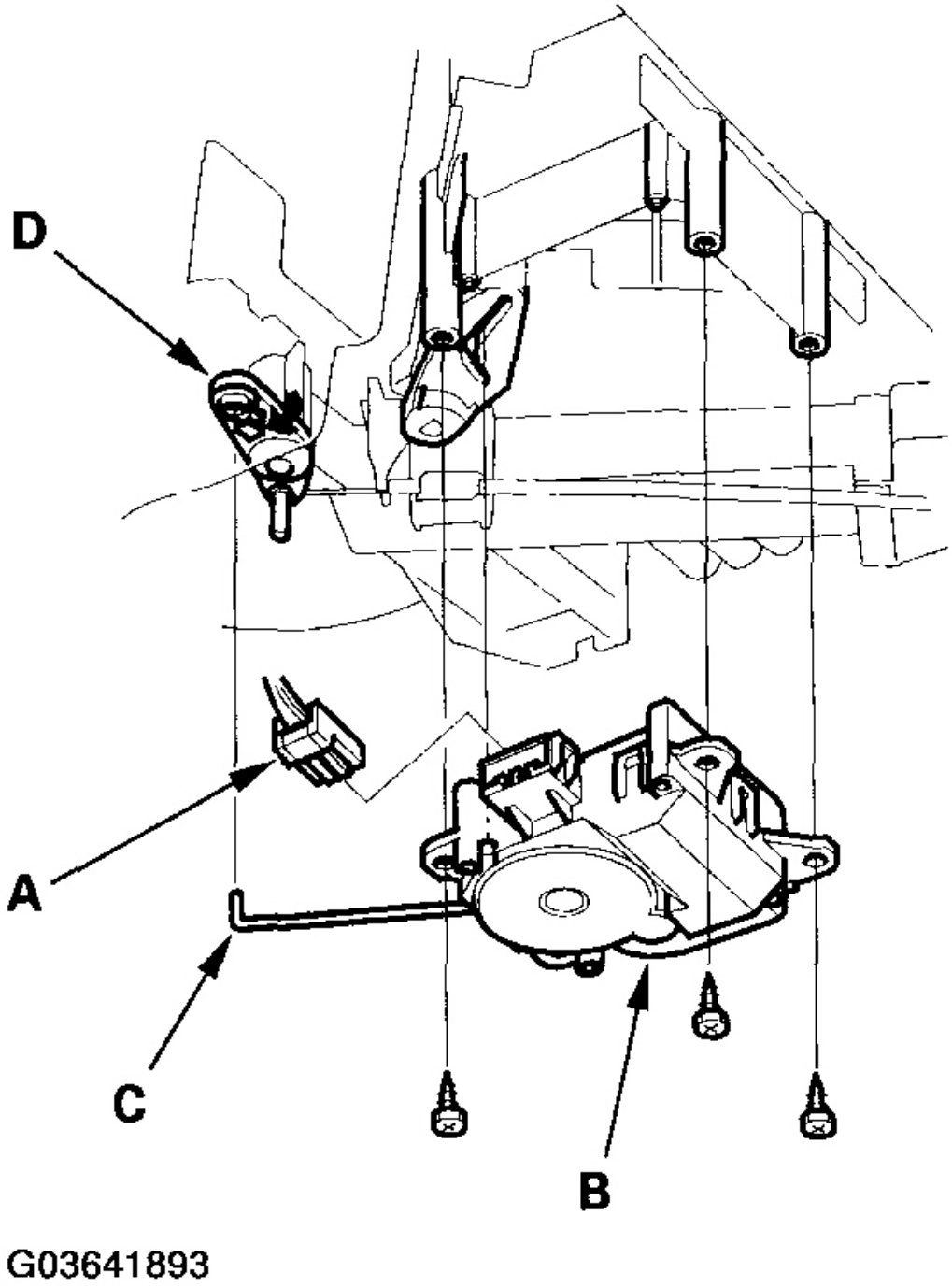

Fig. 94: Removing Self-Tapping Screws And Air Mix Control Motor From Heater Unit
Courtesy of AMERICAN HONDA MOTOR CO., INC.

cardiagn.com

2. Install the motor in the reverse order of removal. Make sure the rod is properly engaged with the linkage. After installation, make sure the motor runs smoothly.

MODE CONTROL MOTOR TEST

1. Disconnect the 7P connector from the mode control motor.

NOTE: Incorrectly applying power and ground to the mode control motor will damage it. Follow the instructions carefully.

2. Connect battery power to the No. 2 terminal of the mode control motor, and ground the No. 1 terminal; the mode control motor should run smoothly, and stop at Vent. If it doesn't, reverse the connections; the mode control motor should run smoothly, and stop at Defrost. When the mode control motor stops running, disconnect battery power immediately.

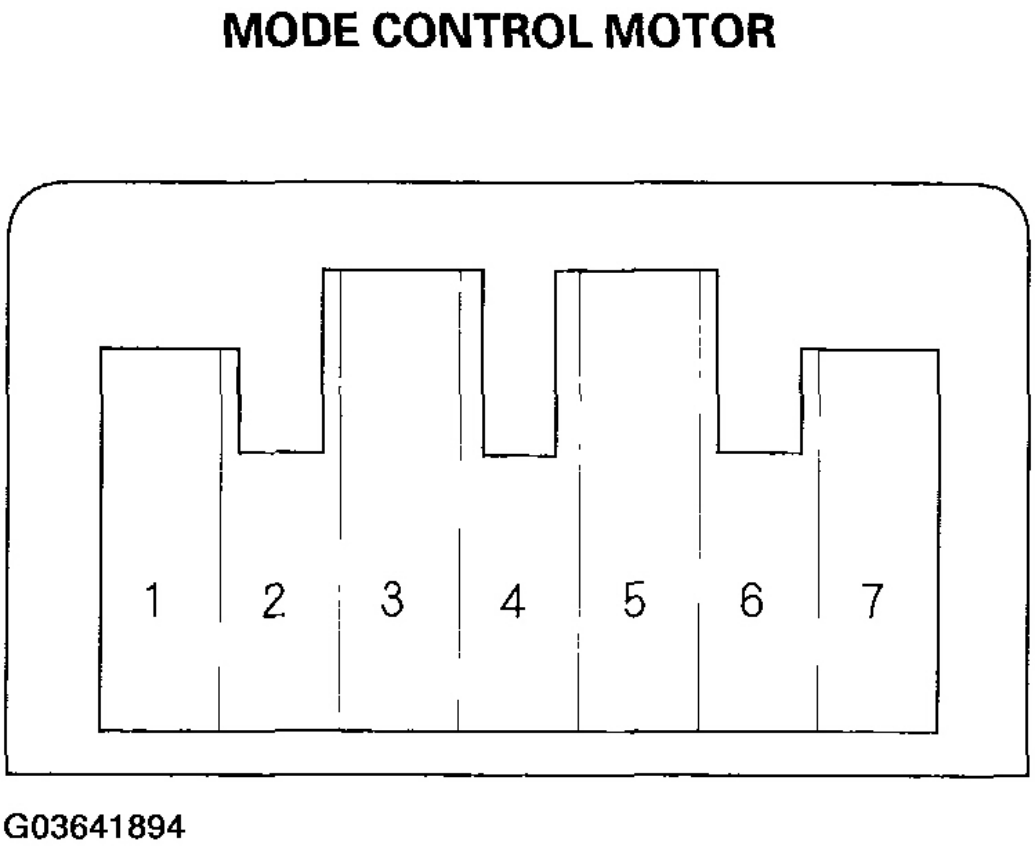

Fig. 95: Mode Control Motor Running Steps
Courtesy of AMERICAN HONDA MOTOR CO., INC.

cardiagn.com

3. If the mode control motor did not run in step 2 , remove it, then check the mode control linkage and doors for smooth movement.
   - If the linkage and doors move smoothly, replace the mode control motor.
   - If the linkage or doors stick or bind, repair them as needed.
   - If the mode control motor runs smoothly, go to step 4.
4. Use a digital multimeter with an output of 1 mA or less at the 20 kohm range. With the mode control motor running as in step 2 , check for continuity between the No. 3, 4, 5, and 6 terminals and the No. 7 terminal individually. There should be continuity for a moment at each terminal as the motor moves past the switch's terminal.
5. If there is no continuity for a moment at each terminal, replace the mode control motor.

MODE CONTROL MOTOR REPLACEMENT

1. Remove the wire harness clip (A), then disconnect the 7P connector (B) from the mode control motor (C). Remove the rods (D) of the mode control motor from the mode control linkage (E). Remove the self-tapping screws and the mode control motor from the heater unit.

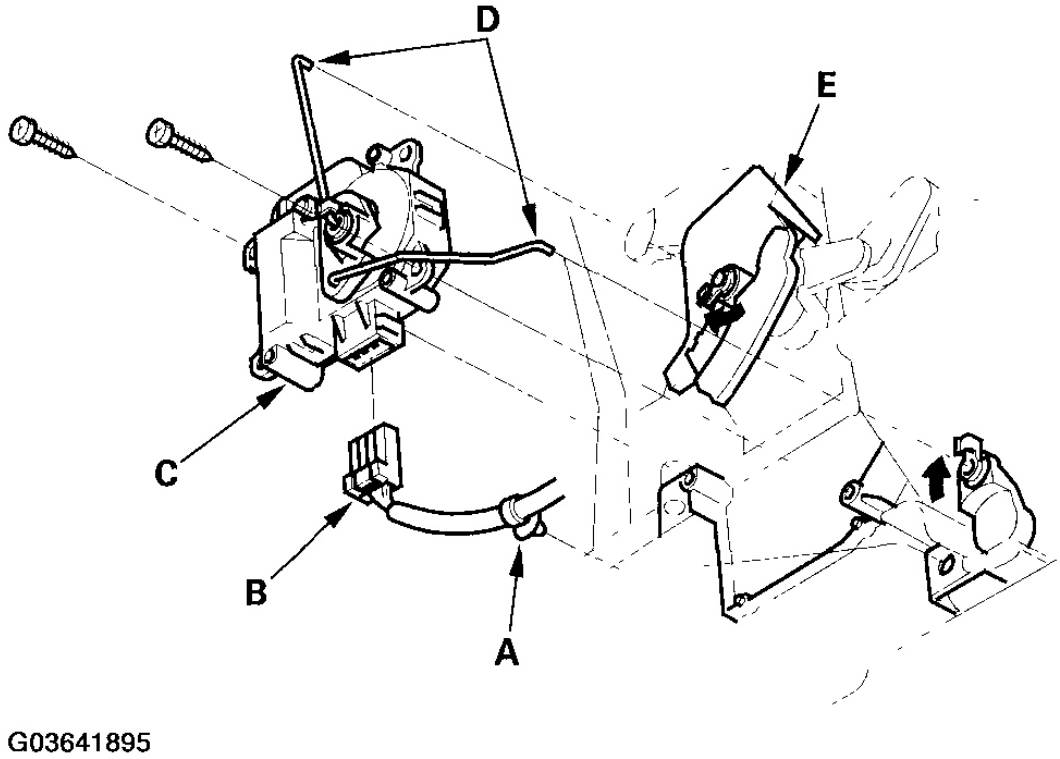

Fig. 96: Removing Self-Tapping Screws And Mode Control Motor From Heater Unit
Courtesy of AMERICAN HONDA MOTOR CO., INC.

cardiagn.com

2. Install the motor in the reverse order of removal. After installation, make sure the motor runs smoothly.

RECIRCULATION CONTROL MOTOR TEST

1. Disconnect the 7P connector from the recirculation control motor.

NOTE: **Incorrectly applying power and ground to the recirculation control motor will damage it. Follow the instructions carefully.**

2. Connect battery power to the No. 1 terminal of the recirculation control motor, and ground the No. 5 and No. 7 terminals; the recirculation control motor should run smoothly. To avoid damaging the recirculation control motor, do not reverse power and ground. Disconnect the No. 5 or No. 7 terminal from ground; the recirculation control motor should stop at Fresh (when the No. 7 terminal is disconnected) or Recirculate (when the No. 5 terminal is disconnected). Don't cycle the recirculation control motor for a long time.

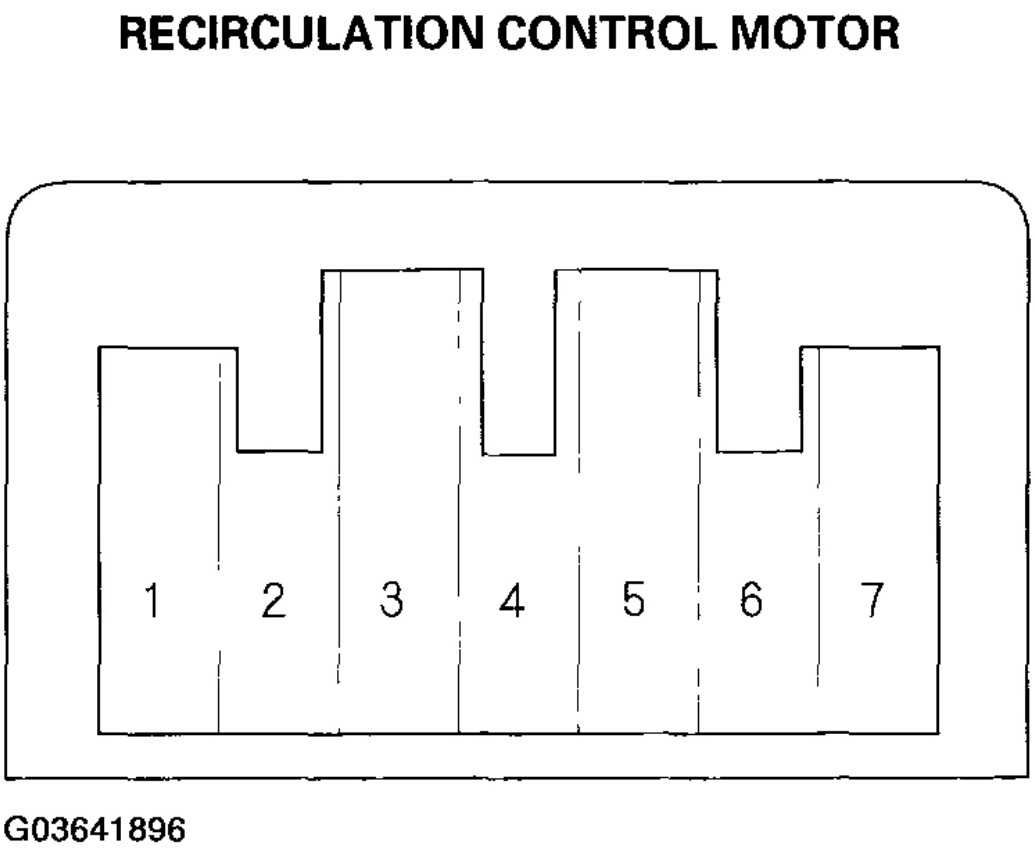

Fig. 97: Recirculation Control Motor Running Steps

cardiagn.com

Courtesy of AMERICAN HONDA MOTOR CO., INC.

3. If the recirculation control motor did not run in step 2 , remove it, then check the recirculation control linkage and doors for smooth movement.
   - If the linkage and doors move smoothly, replace the recirculation control motor.
   - If the linkage or doors stick or bind, repair them as needed.

RECIRCULATION CONTROL MOTOR REPLACEMENT

1. Remove the glove box (see **GLOVE BOX REMOVAL/INSTALLATION**).
2. Disconnect the wire harness connectors.

cardiagn.com

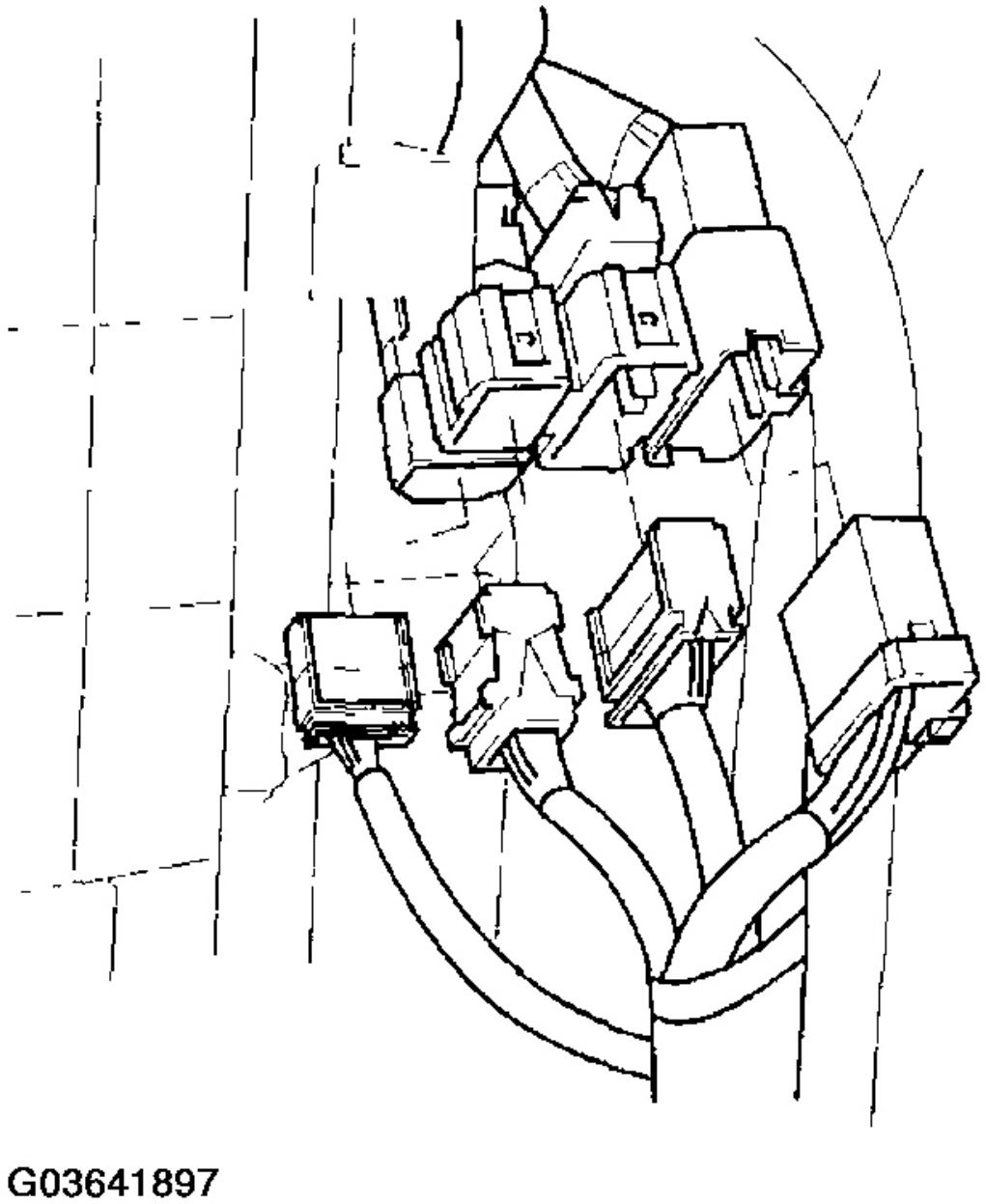

Fig. 98: Disconnecting Wire Harness Connectors
Courtesy of AMERICAN HONDA MOTOR CO., INC.

3. Disconnect the 7P connector (A) from the recirculation control motor (B). Remove the self-tapping screws and the recirculation control motor from the blower unit.

cardiagn.com

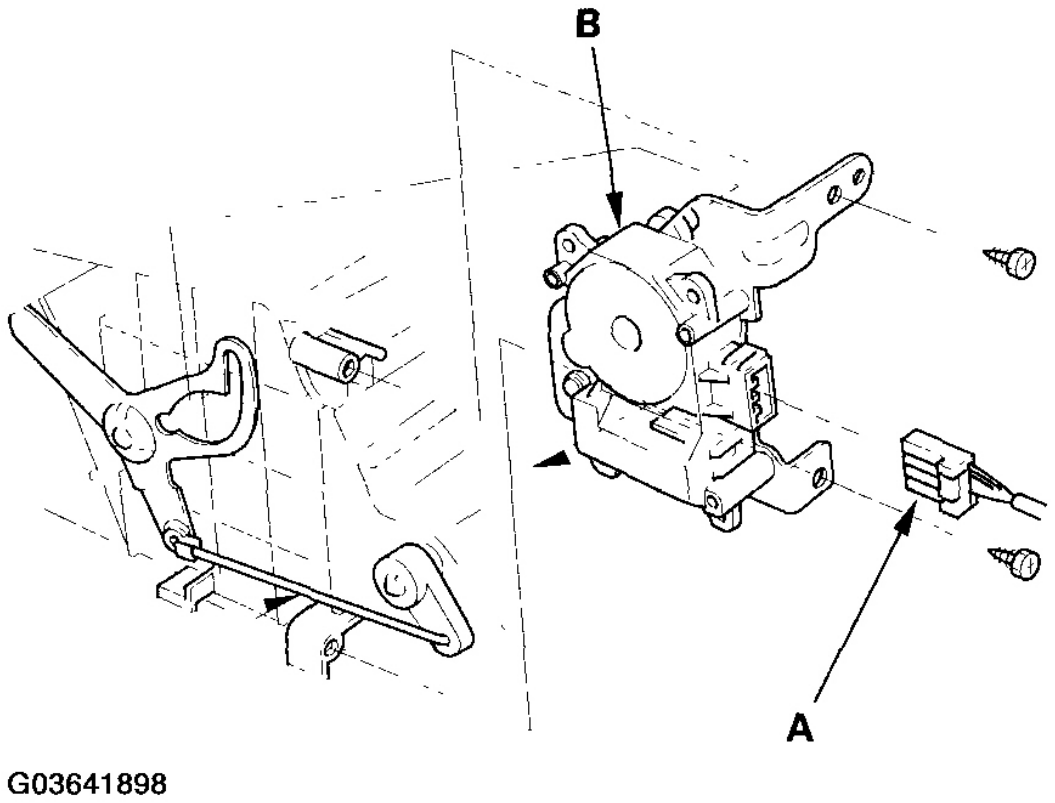

Fig. 99: Removing Self-Tapping Screws And Recirculation Control Motor From Blower Unit
Courtesy of AMERICAN HONDA MOTOR CO., INC.

4. Install the motor in the reverse order of removal. Make sure the pin on the motor is properly engaged with the linkage. After installation, make sure the motor runs smoothly.

CLIMATE CONTROL PANEL REMOVAL AND INSTALLATION

1. Remove the dashboard center panel (see **DASHBOARD CENTER PANEL REMOVAL/INSTALLATION**).
2. Remove the self-tapping screws and the climate control panel (A) from the center panel (B).

cardiagn.com

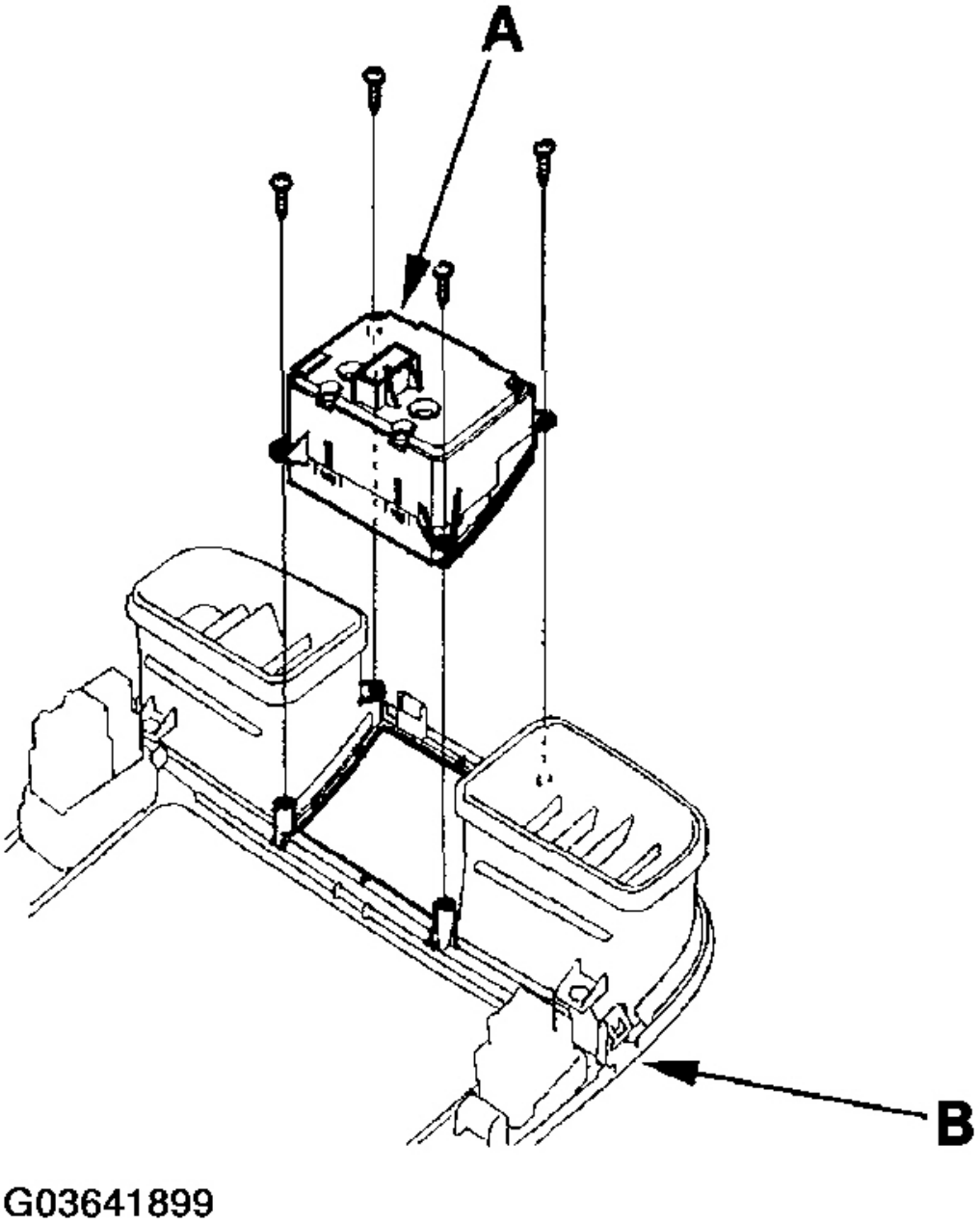

Fig. 100: Removing Climate Control Panel From Center Panel
Courtesy of AMERICAN HONDA MOTOR CO., INC.

3. Install the control panel in the reverse order of removal. After installation, operate the control panel controls to see if they work properly.

cardiagn.com

4. Run the self-diagnostic function to confirm that there are no problems in the system (see **GENERAL TROUBLESHOOTING INFORMATION**).

CLIMATE CONTROL UNIT REMOVAL AND INSTALLATION

1. Remove the center console (see **CENTER CONSOLE REMOVAL/INSTALLATION**).
2. Disconnect the connectors from the climate control unit, then remove the self-tapping screws and the climate control unit.

cardiagn.com

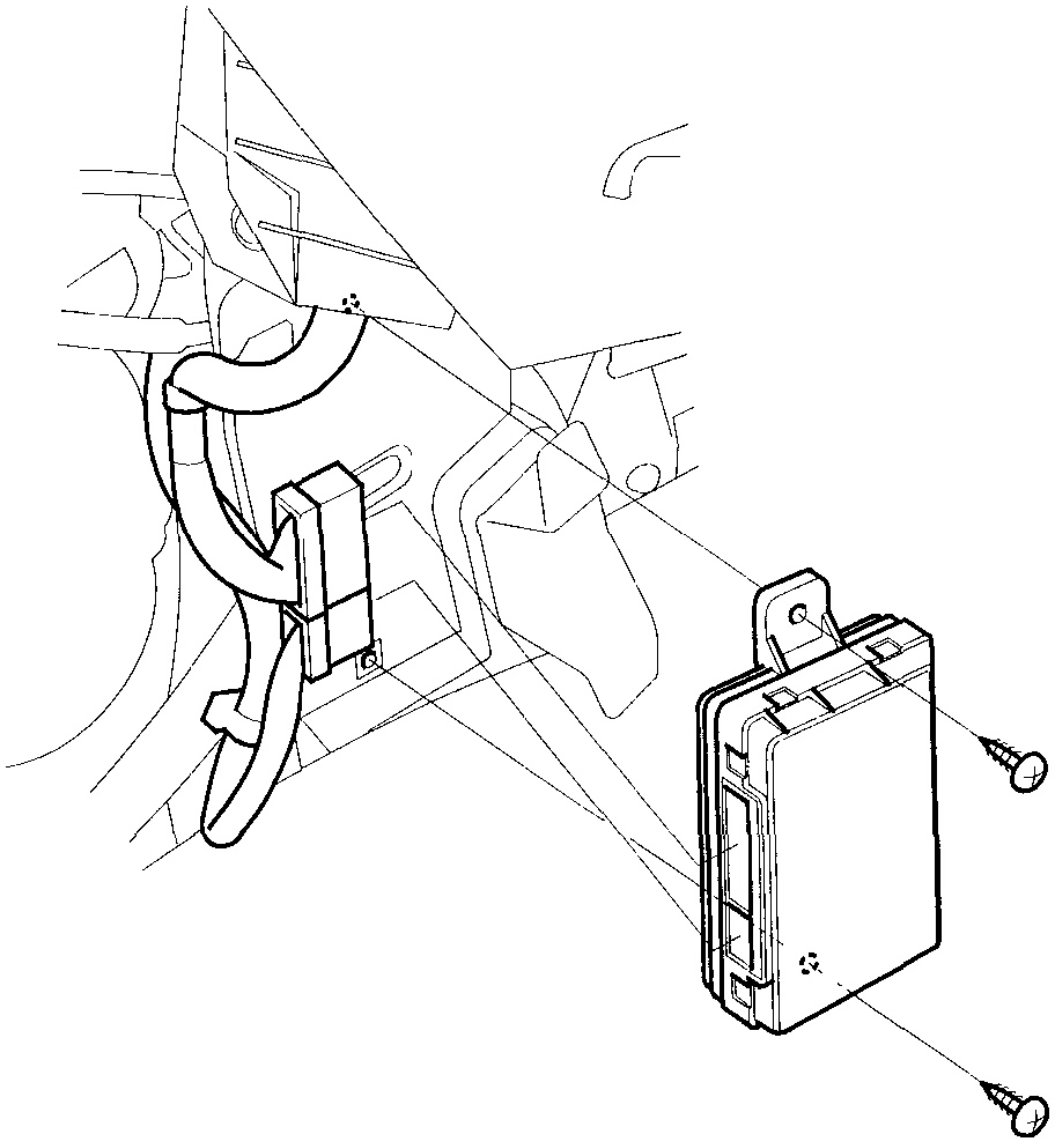

Fig. 101: Removing Climate Control Unit
Courtesy of AMERICAN HONDA MOTOR CO., INC.

3. Install the control unit in the reverse order of removal. After installation, operate the control panel controls to see if they work properly.
4. Run the self-diagnostic function to confirm that there are no problems in the system (see **GENERAL TROUBLESHOOTING INFORMATION**).

DUST AND POLLEN FILTER REPLACEMENT

cardiagn.com

The dust and pollen filter should be replaced every 30,000 miles (48,000 km) or 24 months, whichever comes first. Replace the filter more often if the airflow is less than usual, of if the vehicle is driven in areas that have high concentrations of soot from industry or diesel powered vehicles.

1. Remove the glove box (see **GLOVE BOX REMOVAL/INSTALLATION**).
2. If necessary, cut the plastic cross brace in the glove box opening with diagonal cutters in the area shown, and discard it.

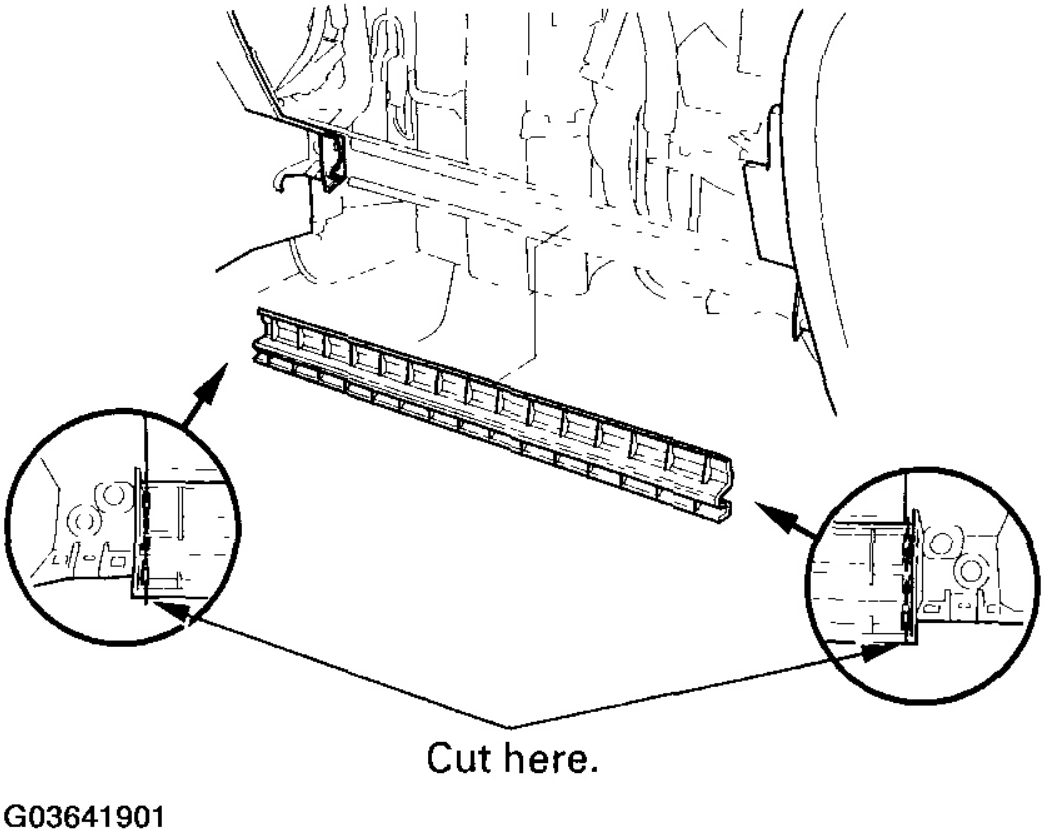

Fig. 102: Cutting Plastic Cross Brace In Glove Box Opening With Diagonal Cutters
Courtesy of AMERICAN HONDA MOTOR CO., INC.

3. Remove the bolts, the screws and the glove box frame.

cardiagn.com

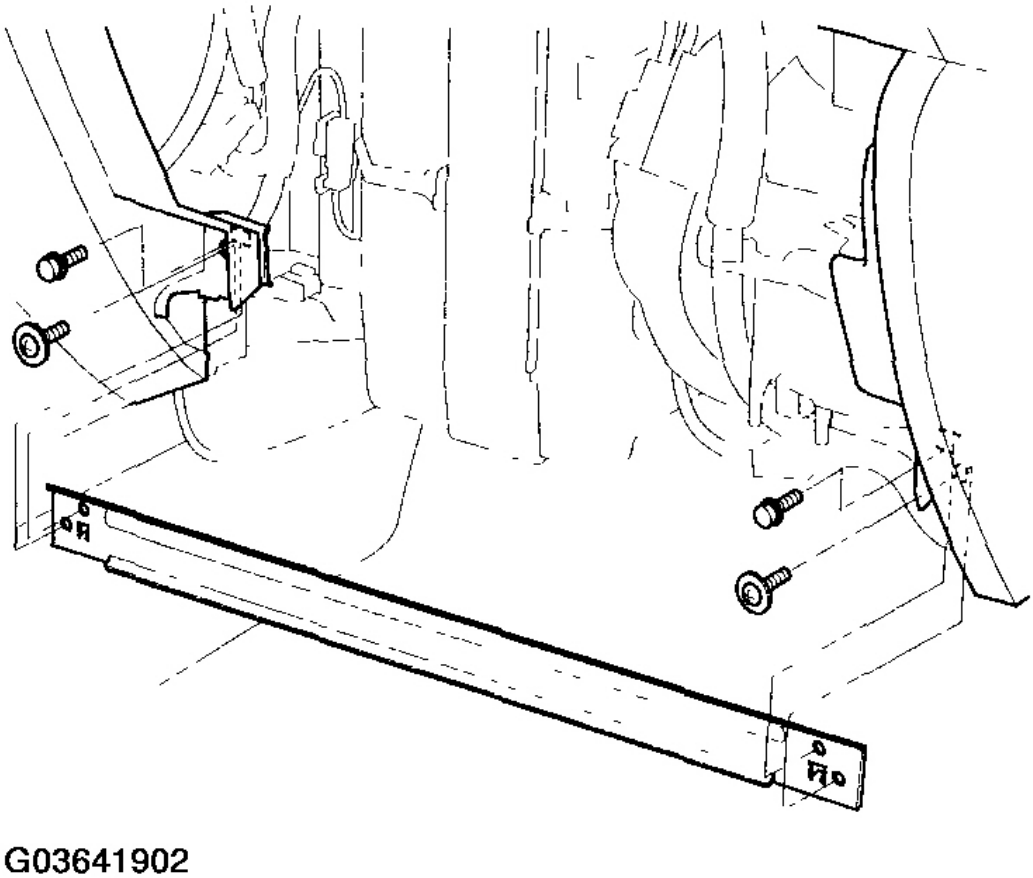

Fig. 103: Removing Glove Box Frame
Courtesy of AMERICAN HONDA MOTOR CO., INC.

4. Remove the filter lid (A) from the evaporator, then pull out the dust and pollen filter (B).

cardiagn.com

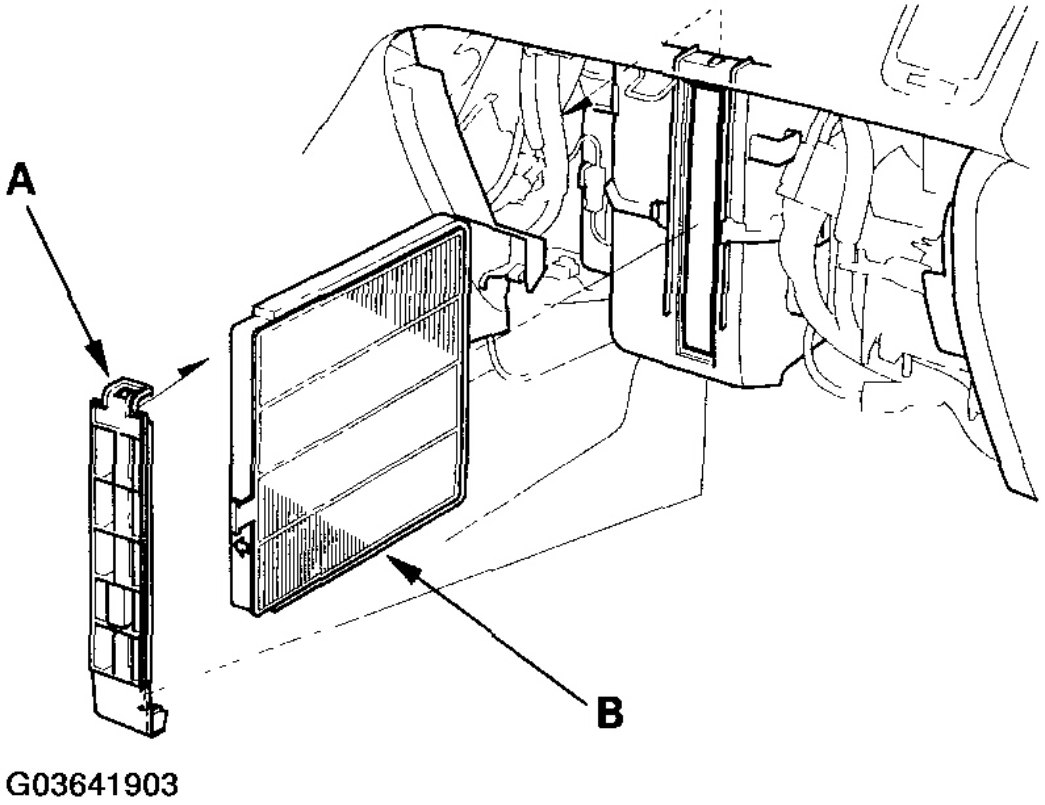

Fig. 104: Removing Filter Lid From Evaporator
Courtesy of AMERICAN HONDA MOTOR CO., INC.

5. Install the filter in the reverse order of removal. Make sure that there is no air leaking out of the evaporator.
6. Install the glove box frame and glove box in the reverse order of removal.

EVAPORATOR REMOVAL AND INSTALLATION

1. Recover the refrigerant with a recovery/recycling/ charging station (see **REFRIGERANT RECOVERY**).
2. Disconnect the suction line (A) and receiver line (B) from the evaporator. Remove the mounting nut. Plug or cap the lines immediately after disconnecting them to avoid moisture and dust contamination.

cardiagn.com

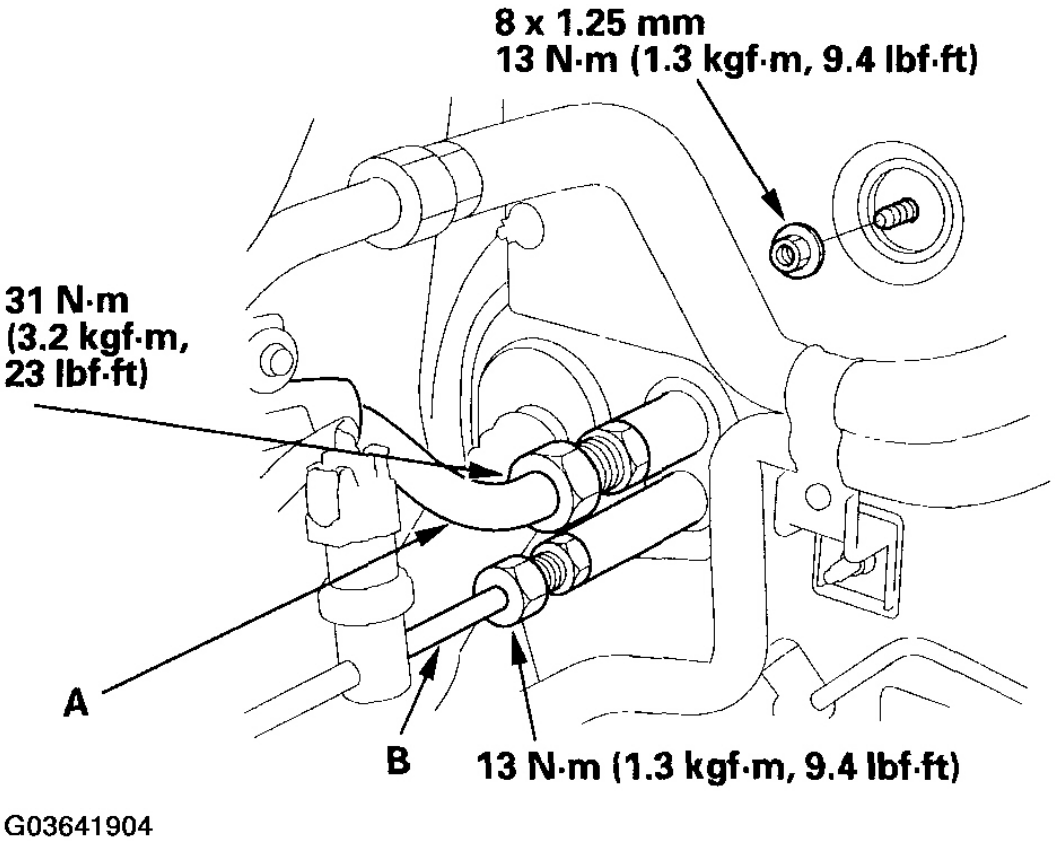

Fig. 105: Disconnecting Suction Line And Receiver Line From Evaporator
Courtesy of AMERICAN HONDA MOTOR CO., INC.

3. Remove the glove box (see **GLOVE BOX REMOVAL/INSTALLATION**).
4. If necessary, remove the plastic cross brace, then remove the glove box frame (see **DUST AND POLLEN FILTER REPLACEMENT**).
5. Disconnect the wire harness connectors.

cardiagn.com

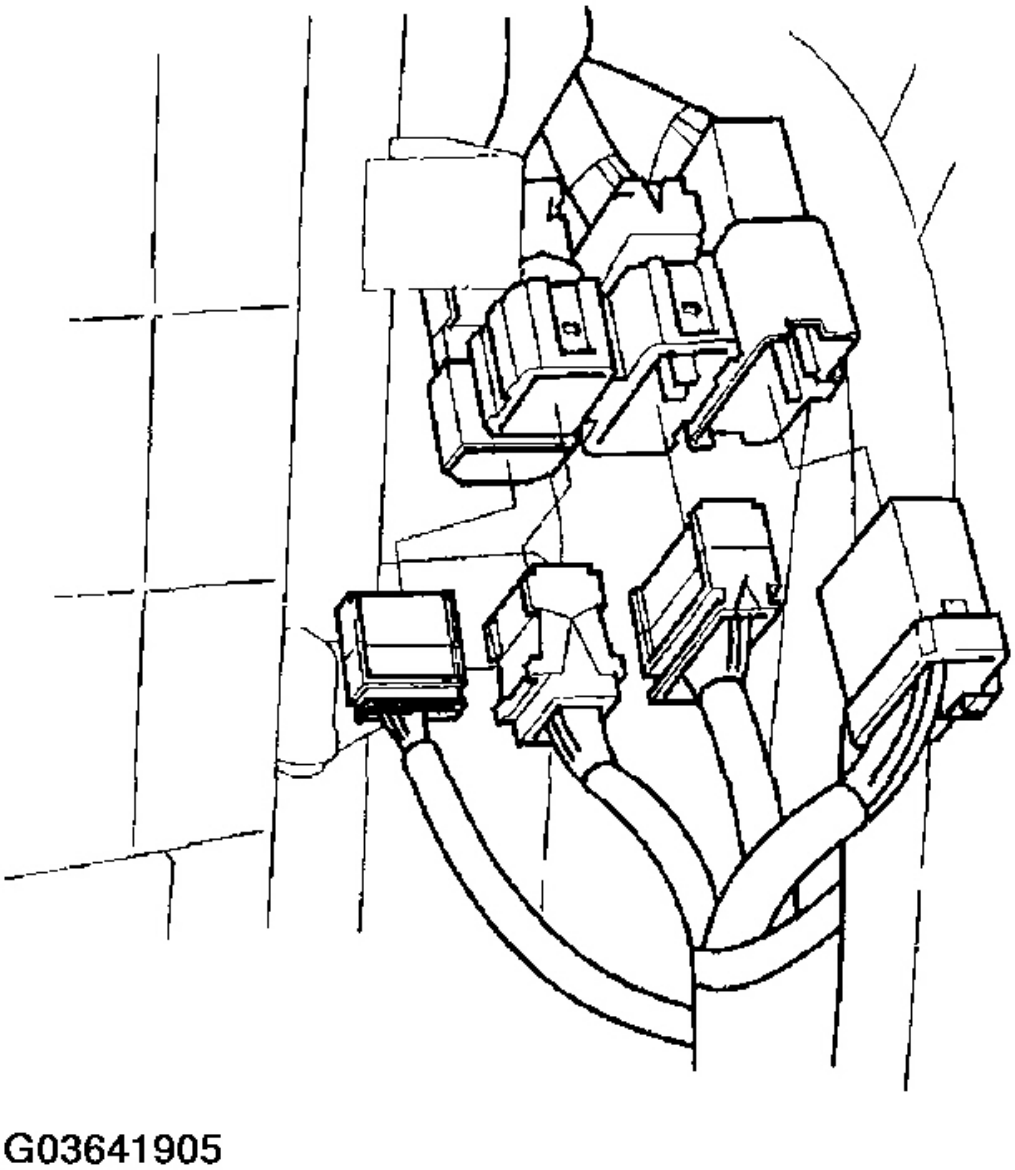

Fig. 106: Disconnecting Wire Harness Connectors
Courtesy of AMERICAN HONDA MOTOR CO., INC.

6. Disconnect the evaporator temperature sensor connector (A). Remove the self-tapping screws, the mounting nuts, the mounting bolts, the bracket (B) and the evaporator (C).

cardiagn.com

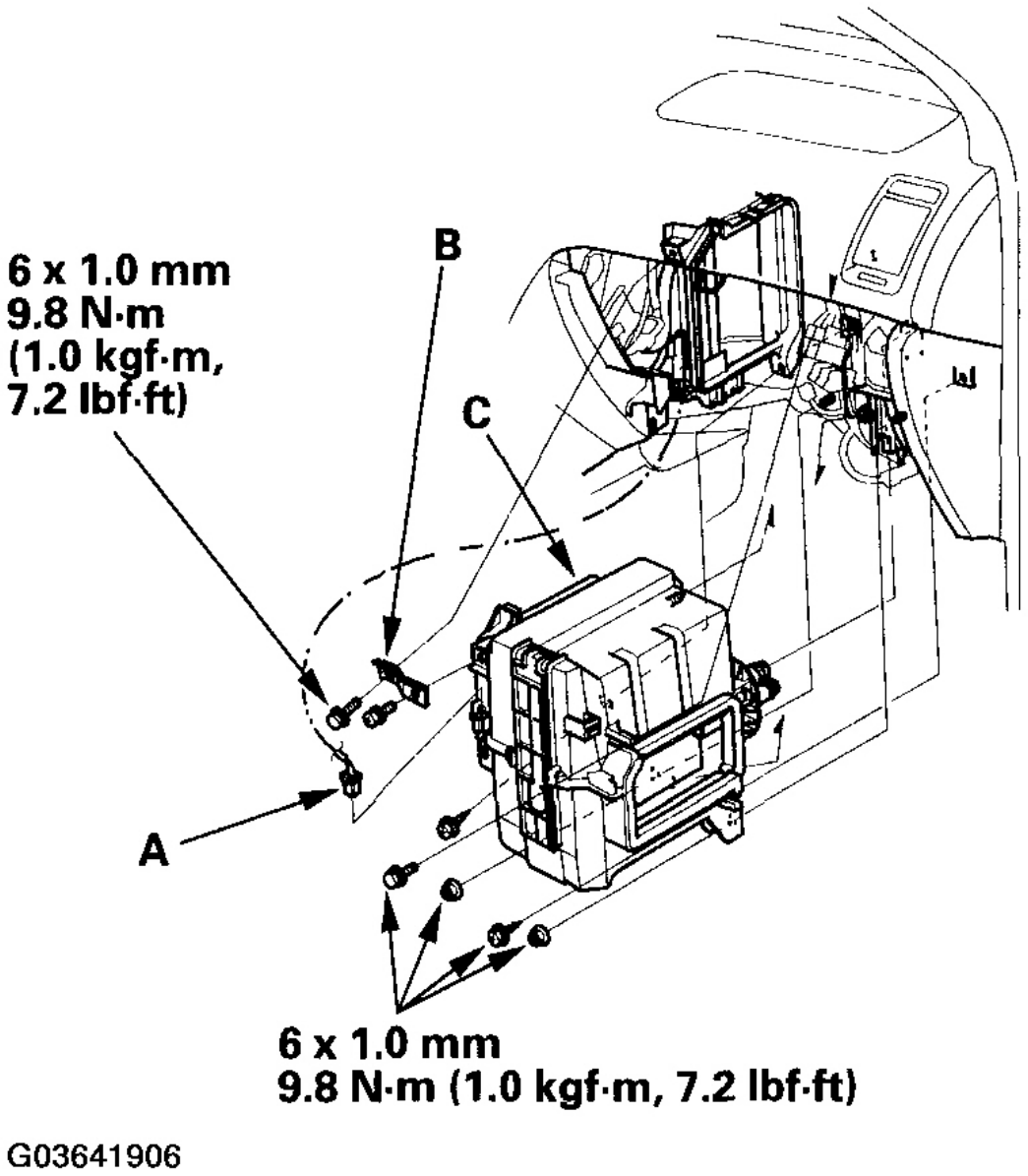

Fig. 107: Removing Self-Tapping Screws, Mounting Nuts, Mounting Bolts, Bracket And Evaporator
Courtesy of AMERICAN HONDA MOTOR CO., INC.

7. Install the evaporator in the reverse order of removal, and note these items:
   - If you're installing a new evaporator, add refrigerant oil (DENSO ND-OIL 8) (see **A/C SERVICE TIPS AND PRECAUTIONS**).
   - Replace the O-rings with new ones at each fitting, and apply a thin coat of refrigerant oil before

cardiagn.com

installing them. Be sure to use the correct O-rings for HFC-134a (R-134a) to avoid leakage.

- Immediately after using the oil, reinstall the cap on the container, and seal it to avoid moisture absorption.
- Do not spill the refrigerant oil on the vehicle; it may damage the paint; if the refrigerant oil contacts the paint, wash it off immediately.
- Make sure that there is no air leakage.
- Charge the system (see **SYSTEM CHARGING**).

EVAPORATOR COMPONENT REPLACEMENT

1. Remove the filter lid (A), then pull out the dust and pollen filter (B).

cardiagn.com

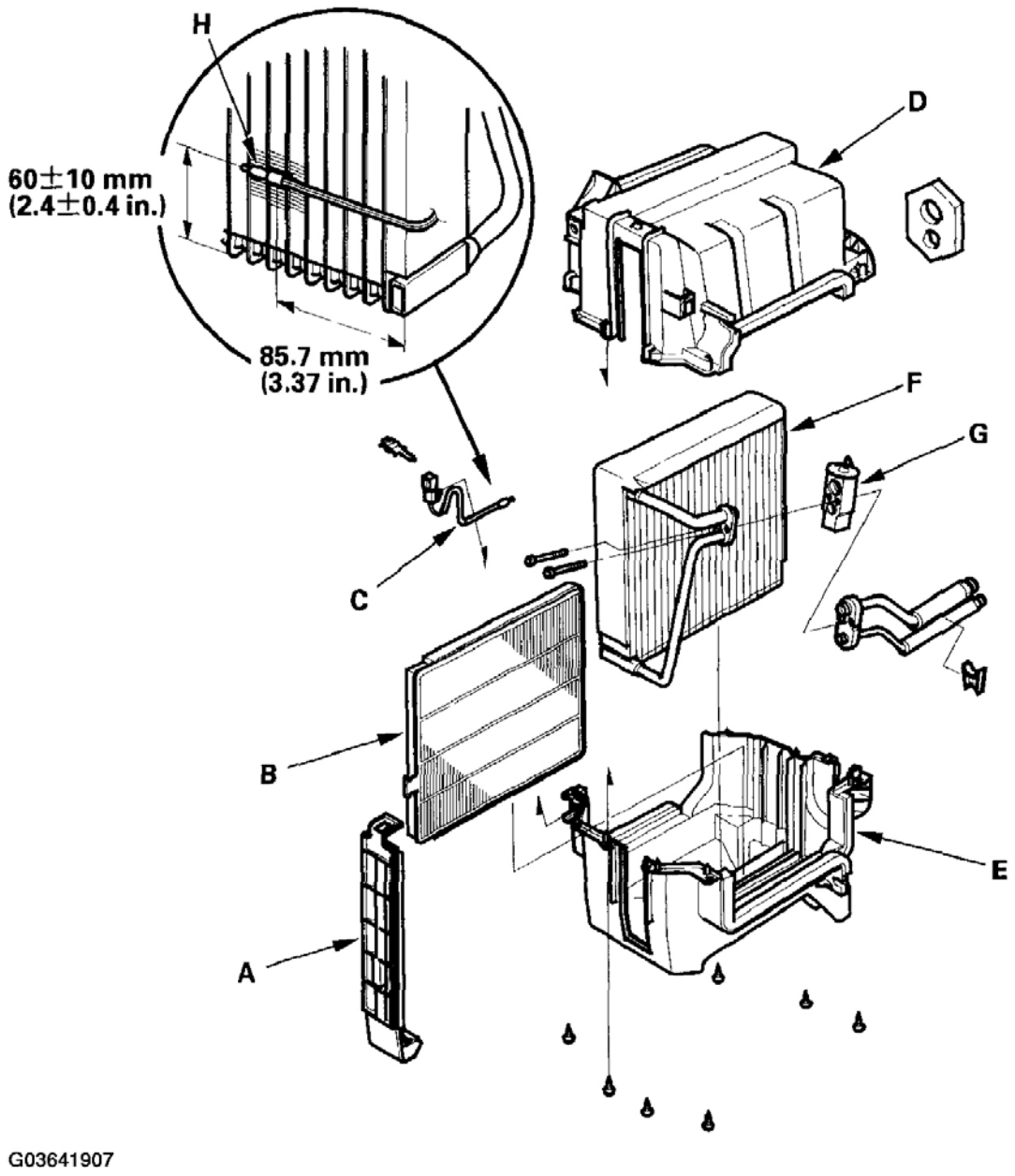

Fig. 108: Removing Evaporator Components
Courtesy of AMERICAN HONDA MOTOR CO., INC.

2. Pull out the evaporator temperature sensor (C) from the evaporator fins.
3. Remove the screws, carefully separate the upper housing (D) from the lower housing (E), then remove the evaporator core (F).
4. If necessary, remove the expansion valve (G).
5. Reassemble the evaporator in the reverse order of disassembly, and note these items:

cardiagn.com

- Reinstall the evaporator temperature sensor bulb (H) and clip in its original location.
- Replace all O-rings with new ones at each fitting and apply a thin coat of refrigerant oil before installing them. Be sure to use the correct O-rings for HFC-134a (R-134a) to avoid leakage.
- Immediately after using the oil, reinstall the cap on the container, and seal it to avoid moisture absorption.
- Make sure no air is leaking from the upper housing and the lower housing fitting.

BLOWER UNIT REMOVAL AND INSTALLATION

SRS components are located in this area. Review the SRS component locations for the appropriate year:

- '03 model (see **COMPONENT LOCATION INDEX**)
- '04-06 models (see **2004-2006 MODELS**)

Also review the precautions and procedures (see **PRECAUTIONS AND PROCEDURES**) in the SRS section before performing repairs or service.

1. Make sure you have the anti-theft codes for the radio and the navigation system, then write down the frequencies for the radio's preset buttons.
2. Disconnect the negative cable from the battery.
3. Remove the front passenger's airbag (see **FRONT PASSENGER'S AIRBAG REPLACEMENT**).
4. Remove the evaporator (see **EVAPORATOR REMOVAL AND INSTALLATION**).
5. Disconnect the connectors from the right engine compartment wire harnesses and the SRS main harness.

cardiagn.com

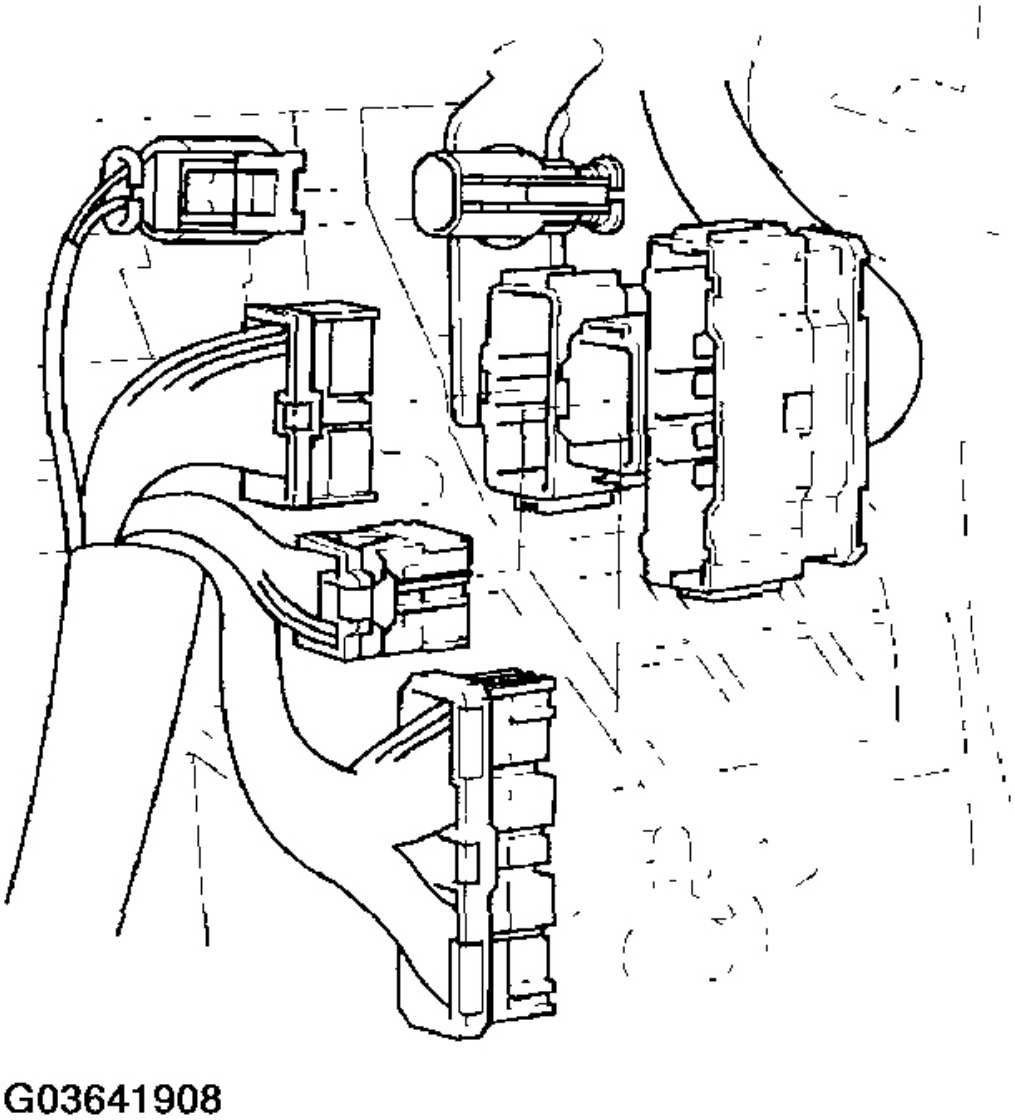

Fig. 109: Disconnecting Connectors From Right Engine Compartment Wire Harnesses And SRS Main Harness
Courtesy of AMERICAN HONDA MOTOR CO., INC.

6. Disconnect the connectors (A) from the blower motor, the power transistor, and the recirculation control motor, then remove the wire harness clips (B). Remove the mounting nuts, the mounting bolt and the blower unit (C).

cardiagn.com

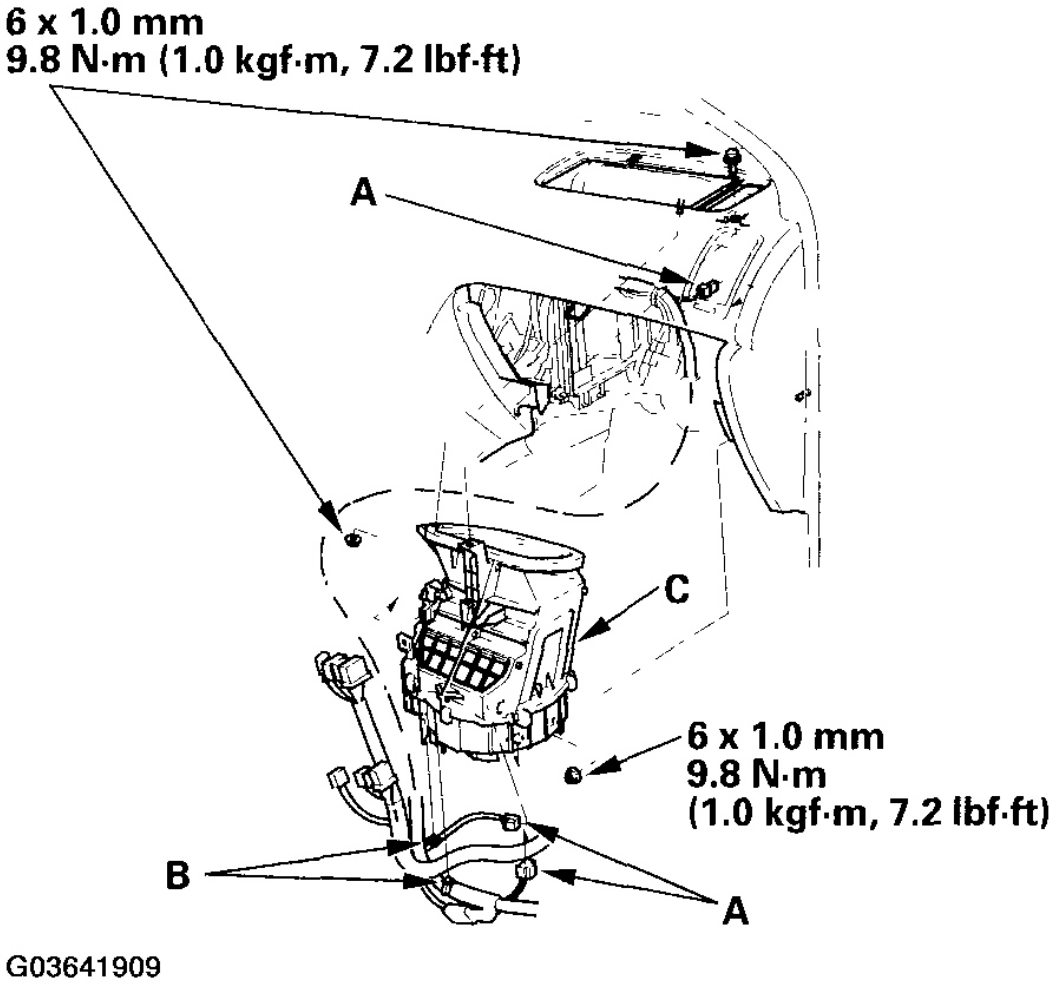

Fig. 110: Removing Mounting Nuts, Mounting Bolt And Blower Unit
Courtesy of AMERICAN HONDA MOTOR CO., INC.

7. Install the unit in the reverse order of removal, and note these items:
   - Make sure that there is no air leakage.
   - For evaporator and A/C-related information, refer to evaporator removal and installation (see **EVAPORATOR REMOVAL AND INSTALLATION**).
   - Do the PCM idle learn procedure (see **PCM IDLE LEARN PROCEDURE**).
   - Do the power window control unit resetting procedure (see **RESETTING THE POWER WINDOW CONTROL UNIT**).
   - Enter the anti-theft codes for the radio and the navigation system, then enter the customer's radio station presets.

cardiagn.com

BLOWER UNIT COMPONENT REPLACEMENT

Note these items when overhauling the blower unit:

- The recirculation control motor (A), the power transistor (B) and the blower motor (C) can be replaced without removing the blower unit.
- Before reassembly, make sure that the recirculation control linkage and doors move smoothly without binding.
- After reassembly, make sure the recirculation control motor runs smoothly (see **RECIRCULATION CONTROL MOTOR TEST**).

cardiagn.com

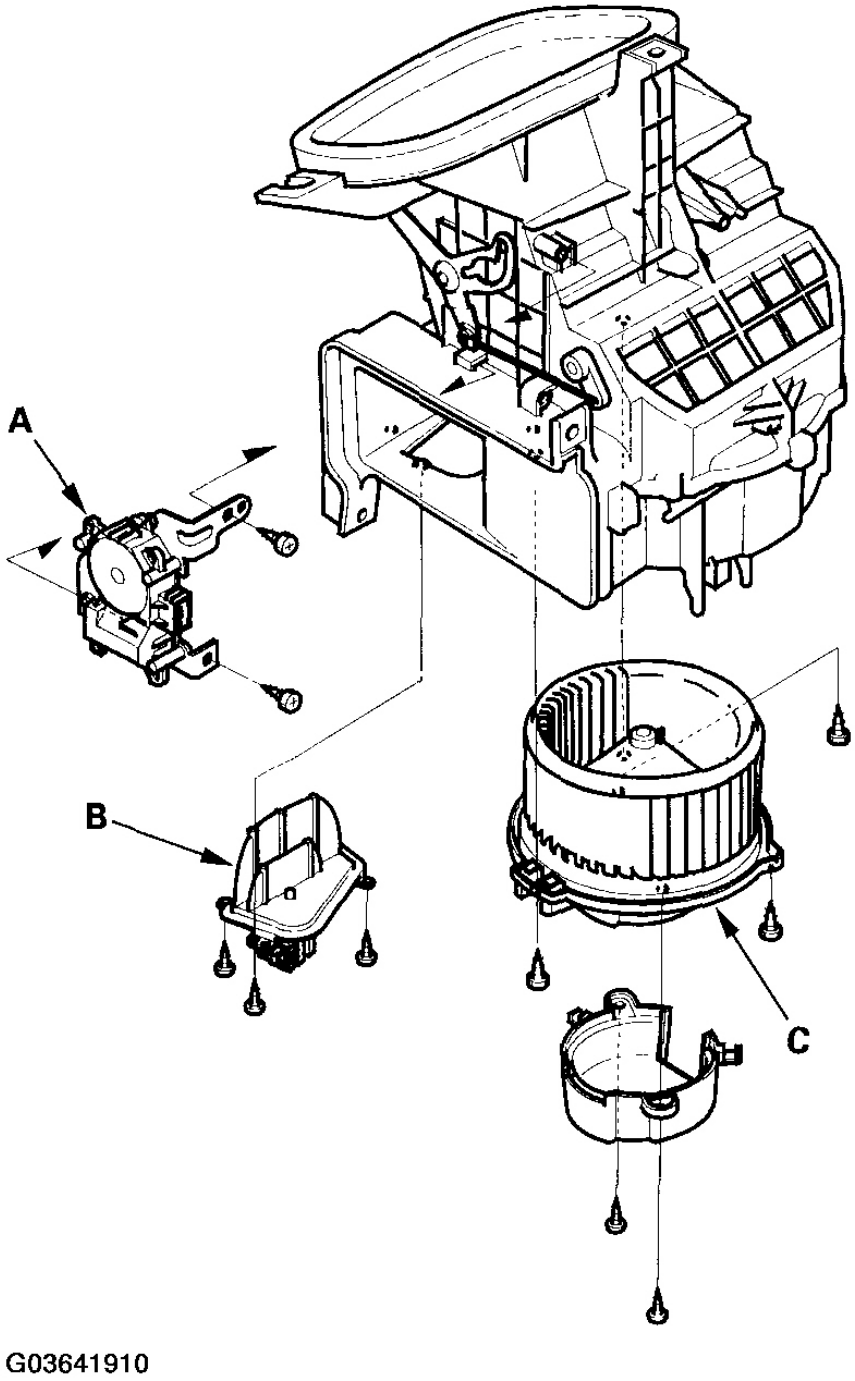

Fig. 111: Removing Blower Unit Components
Courtesy of AMERICAN HONDA MOTOR CO., INC.

HEATER UNIT/CORE REPLACEMENT

cardiagn.com

SRS components are located in this area. Review the SRS component locations for the appropriate year:

- '03 model (see **COMPONENT LOCATION INDEX**)
- '04-06 models (see **2004-2006 MODELS**)

Also review the precautions and procedures (see **PRECAUTIONS AND PROCEDURES**) in the SRS section before performing repairs or service.

1. Make sure you have the anti-theft codes for the radio and the navigation system, then write down the frequencies for the radio's preset buttons.
2. Disconnect the negative cable from the battery.
3. From under the hood, open the cable clamp (A), then disconnect the heater valve cable (B) from the heater valve arm (C). Turn the heater valve arm to the fully opened position as shown.

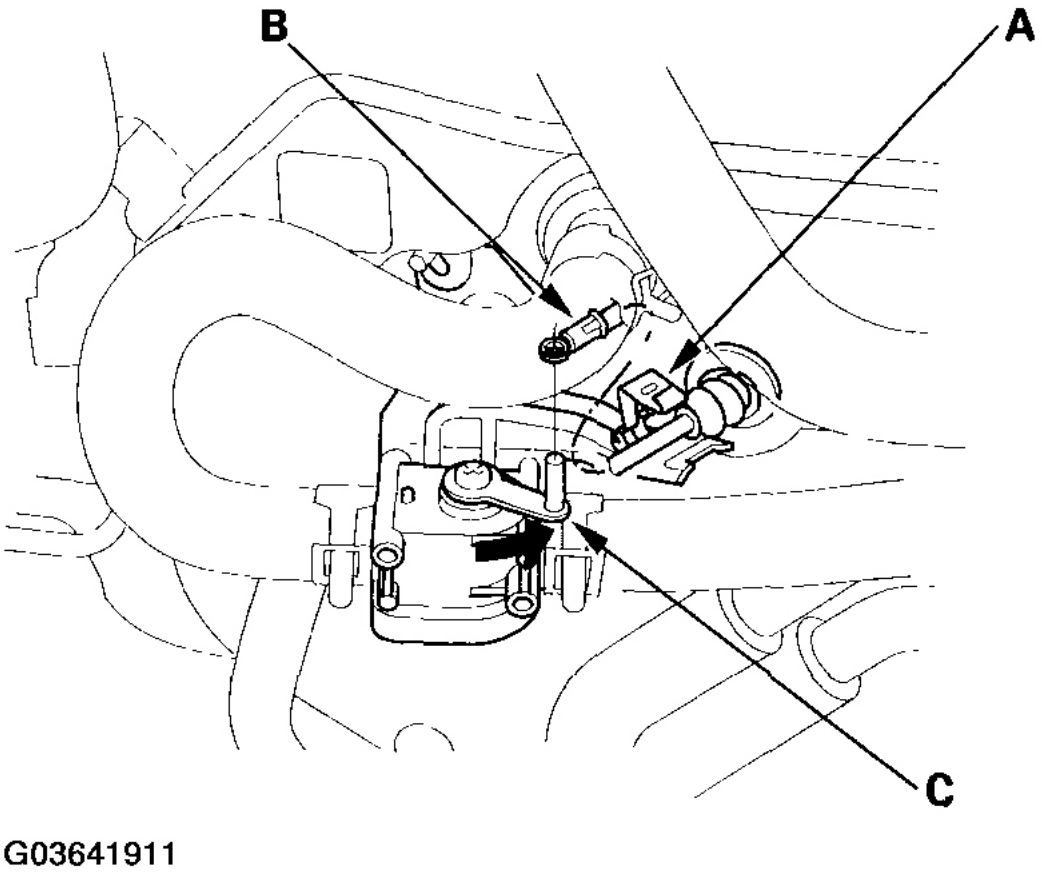

Fig. 112: Disconnecting Heater Valve Cable From Heater Valve Arm
Courtesy of AMERICAN HONDA MOTOR CO., INC.

cardiagn.com

4. When the engine is cool, drain the engine coolant from the radiator (see **COOLANT CHECK**).
5. Slide the hose clamps (A) back, then disconnect the inlet heater hose (B) and the outlet heater hose (C) from the heater unit. Engine coolant will run out when the hoses are disconnected; drain it into a clean drip pan. Be sure not to let coolant spill on the electrical parts or the painted surfaces. If any coolant spills, rinse it off immediately.

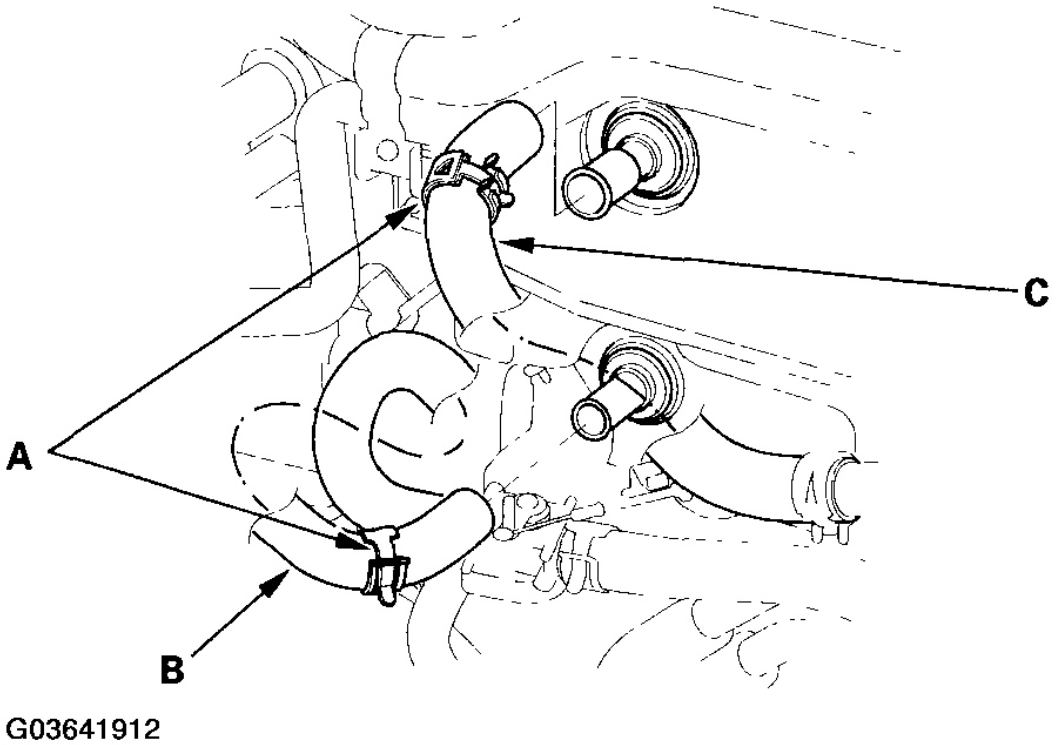

Fig. 113: Disconnecting Inlet Heater Hose And Outlet Heater Hose From Heater Unit
Courtesy of AMERICAN HONDA MOTOR CO., INC.

6. Remove the mounting nut from the heater unit. Take care not to damage or bend the fuel lines and the brake lines, etc.

cardiagn.com

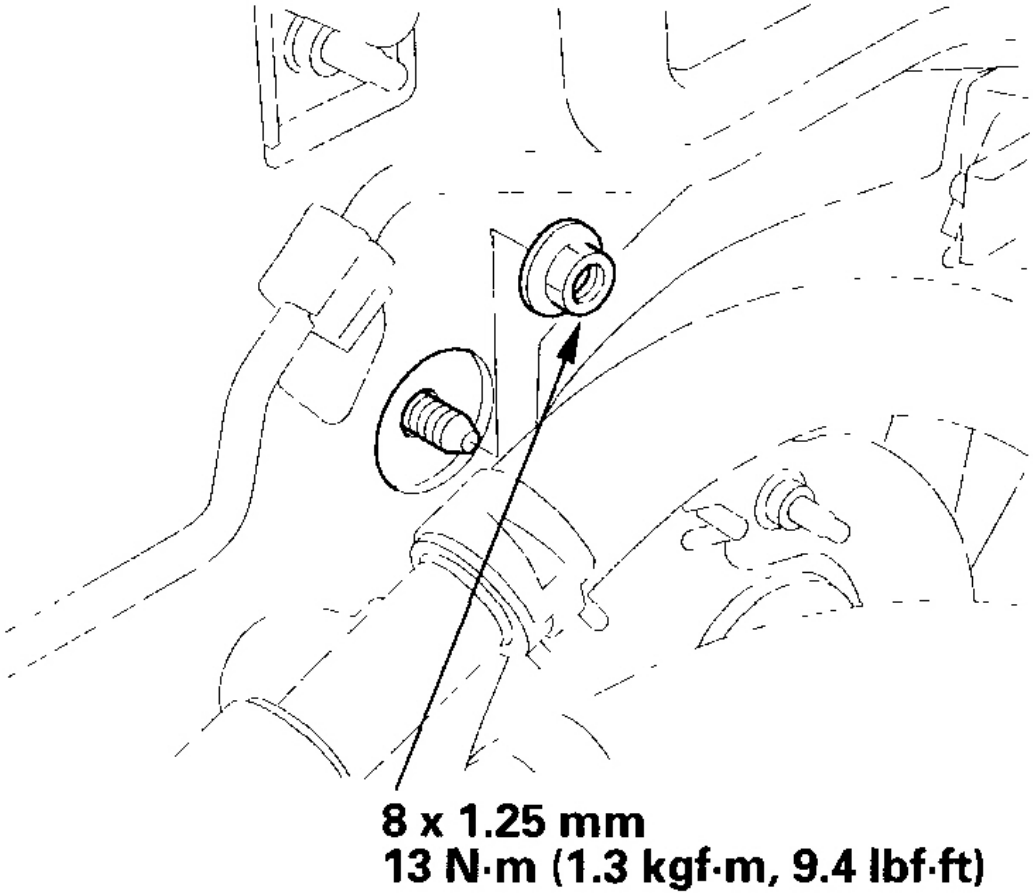

Fig. 114: Removing Mounting Nut From Heater Unit
Courtesy of AMERICAN HONDA MOTOR CO., INC.

7. Remove the dashboard (see **DASHBOARD/STEERING HANGER BEAM REMOVAL/INSTALLATION**).
8. Remove the evaporator (see **EVAPORATOR REMOVAL AND INSTALLATION**).
9. Remove the mounting bolts and the heater unit.

cardiagn.com

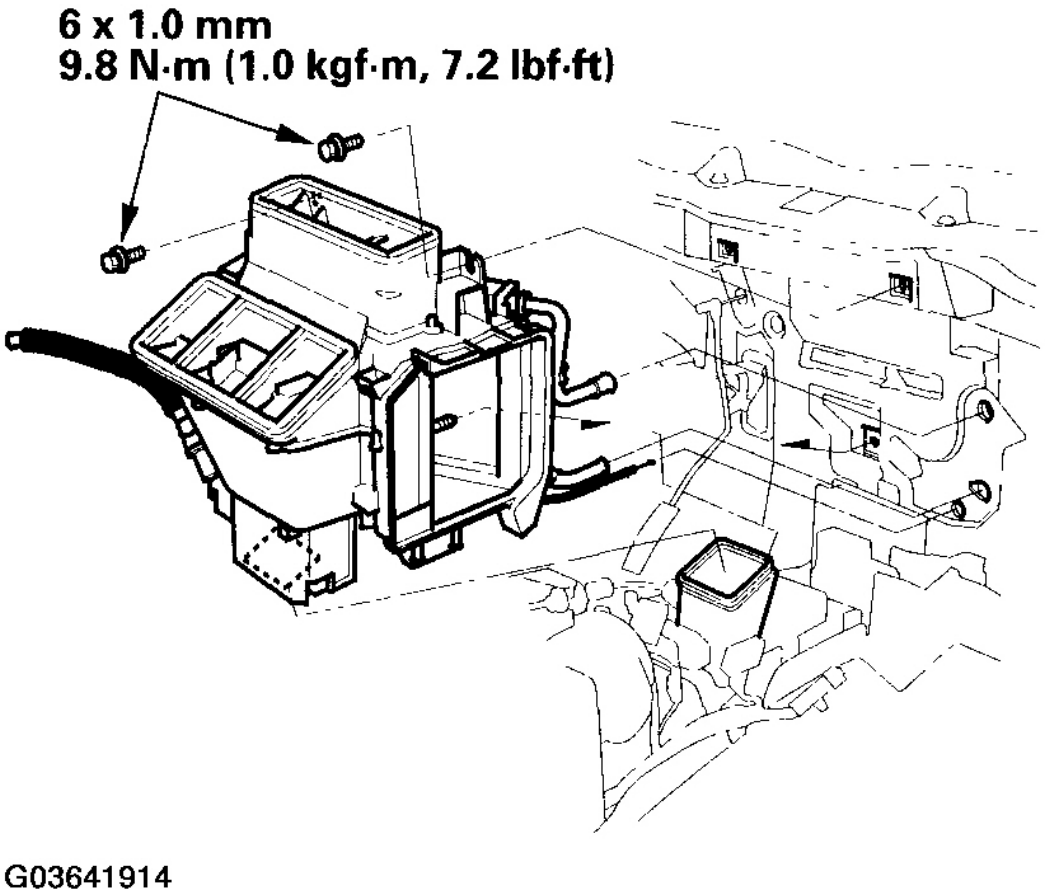

Fig. 115: Removing Mounting Bolts And Heater Unit
Courtesy of AMERICAN HONDA MOTOR CO., INC.

10. Remove the self-tapping screws and the clamp (A), then carefully pull out the heater core (B) so you don't bend the inlet and outlet pipes.

cardiagn.com

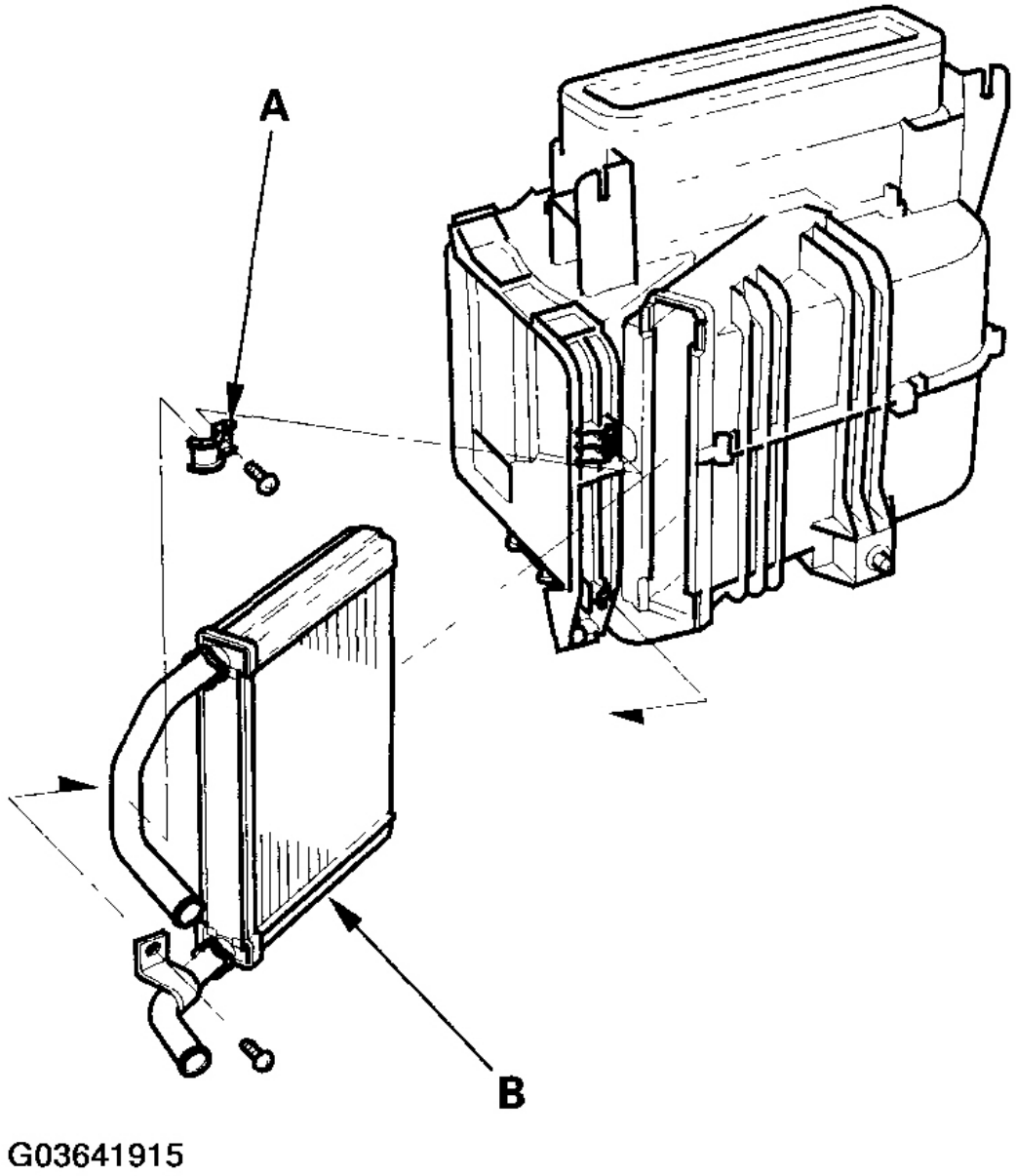

Fig. 116: Removing Self-Tapping Screws And Clamp
Courtesy of AMERICAN HONDA MOTOR CO., INC.

11. Install the heater core in the reverse order of removal.
12. Install the heater unit in the reverse order of removal, and note these items:
    - Do not interchange the inlet and outlet heater hoses, and install the hose clamps securely.
    - Refill the cooling system with engine coolant (see **COOLANT CHECK**).

cardiagn.com

- Adjust the heater valve cable (see **HEATER VALVE CABLE ADJUSTMENT**).
- Make sure that there is no coolant leakage.
- Make sure that there is no air leakage.
- For evaporator and A/C-related information, refer to evaporator removal and installation (see **EVAPORATOR REMOVAL AND INSTALLATION**).
- Do the PCM idle learn procedure (see **PCM IDLE LEARN PROCEDURE**).
- Do the power window control unit resetting procedure (see **RESETTING THE POWER WINDOW CONTROL UNIT**).
- Enter the anti-theft codes for the radio and the navigation system, then enter the customer's radio station presets.

HEATER VALVE CABLE ADJUSTMENT

1. From under the hood, open the cable clamp (A), then disconnect the heater valve cable (B) from the heater valve arm (C).

cardiagn.com

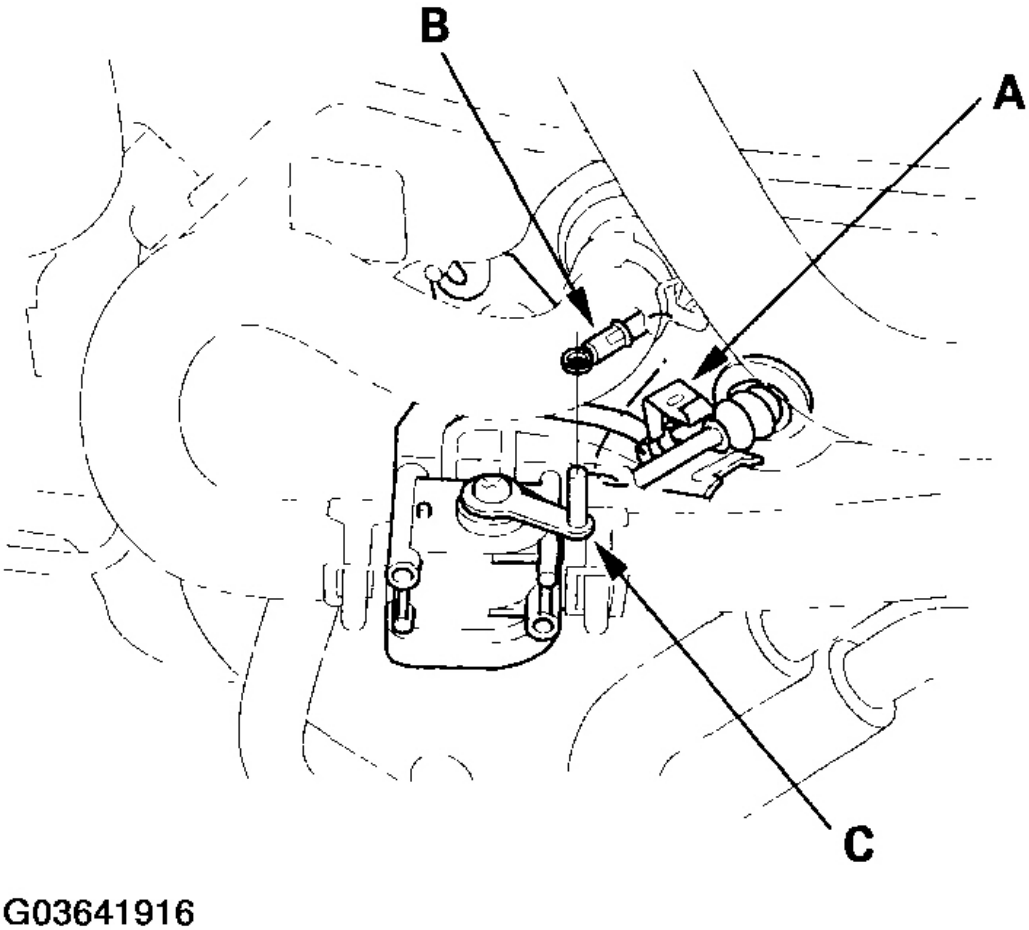

Fig. 117: Disconnecting Heater Valve Cable From Heater Valve Arm
Courtesy of AMERICAN HONDA MOTOR CO., INC.

2. From under the dash, disconnect the heater valve cable housing from the cable clamp (A), and disconnect the heater valve cable (B) from the air mix control linkage (C).

cardiagn.com

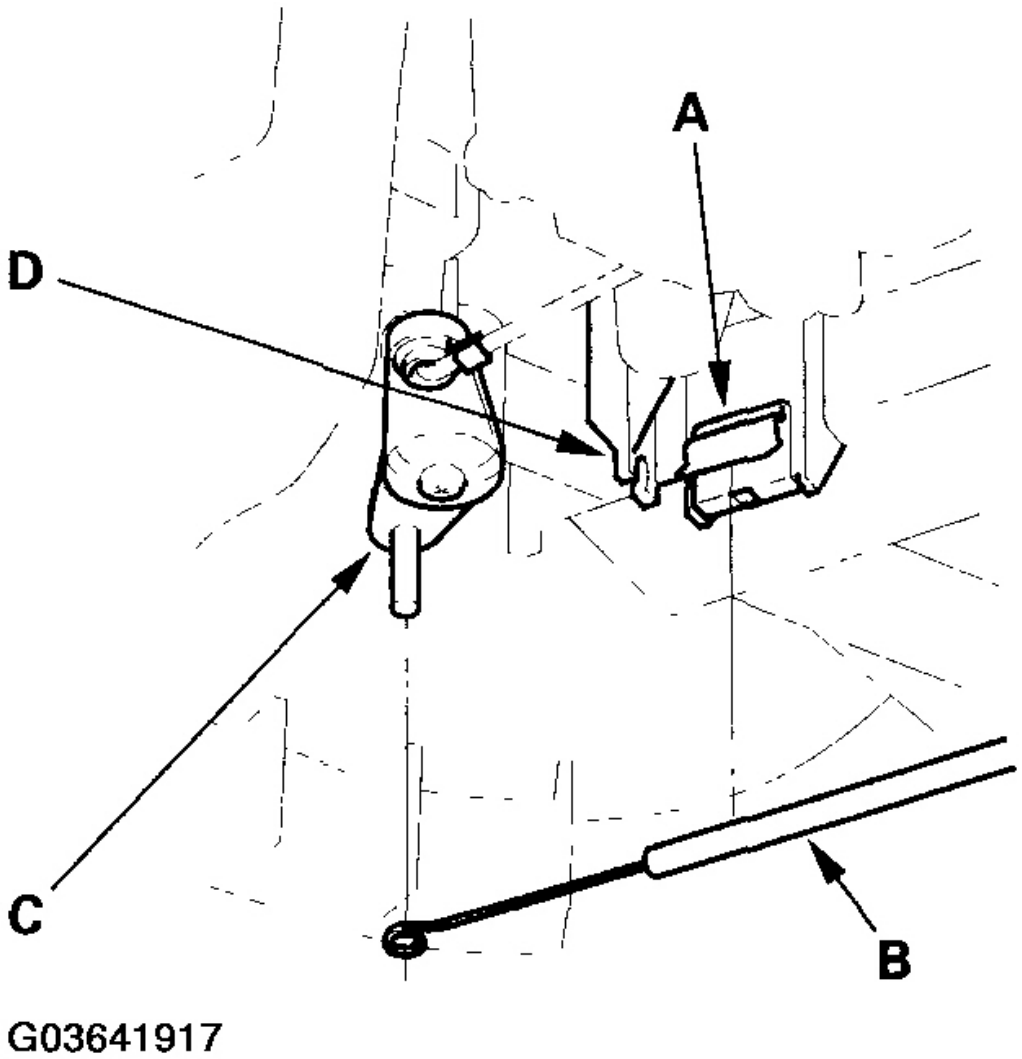

Fig. 118: Disconnecting Heater Valve Cable From Air Mix Control Linkage
Courtesy of AMERICAN HONDA MOTOR CO., INC.

3. Set the temperature control button to Max Cool with the ignition switch ON (II).
4. Attach the heater valve cable (B) to the air mix control linkage (C) as shown in step 2 . Hold the end of the heater valve cable housing against the stop (D), then snap the heater valve cable housing into the cable clamp (A).
5. From under the hood, turn the heater valve arm (A) to the fully closed position as shown, and hold it. Attach the heater valve cable (B) to the heater valve arm, and gently pull on the heater valve cable housing to take up any slack, then install the heater valve cable housing into the cable clamp (C).

cardiagn.com

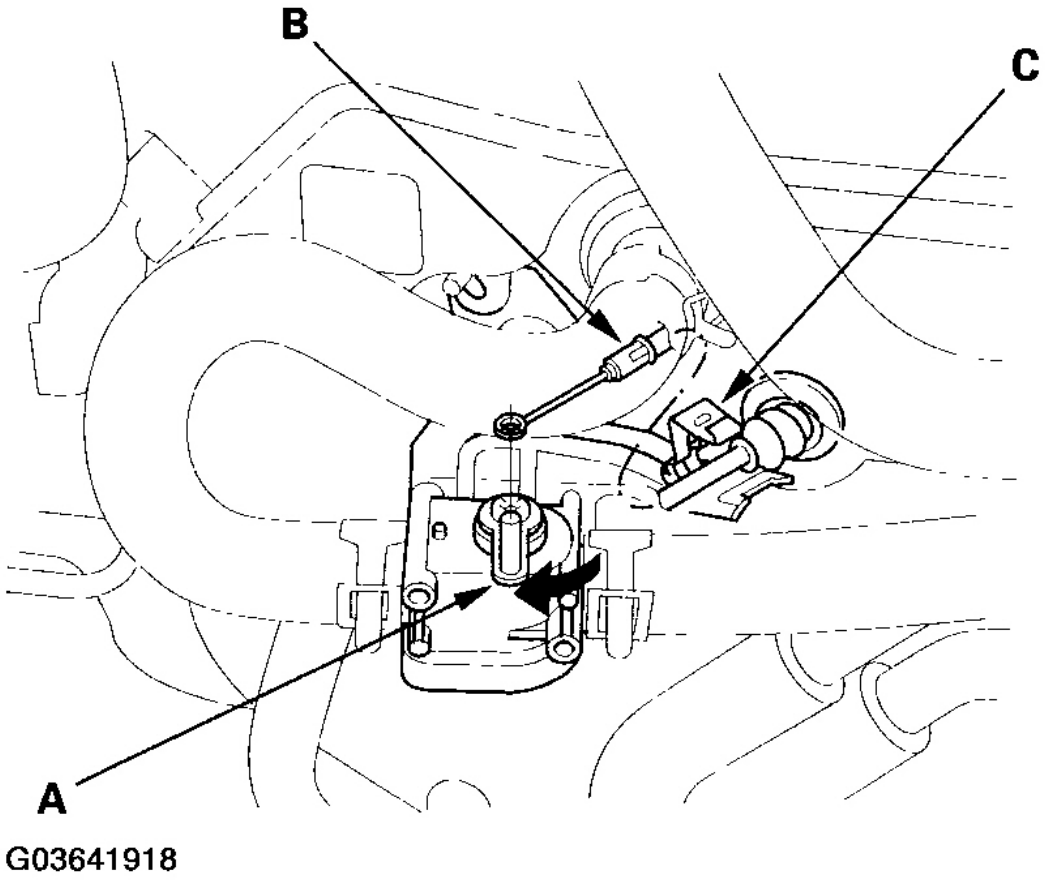

Fig. 119: Installing Heater Valve Cable Housing Into Cable Clamp
Courtesy of AMERICAN HONDA MOTOR CO., INC.

A/C COMPRESSOR REPLACEMENT

1. If the A/C compressor is marginally operable, run the engine at idle speed, and let the air conditioning work for a few minutes, then shut the engine off.
2. Make sure you have the anti-theft codes for the radio and the navigation system, then write down the frequencies for the radio's preset buttons.
3. Disconnect the negative cable from the battery.
4. Recover the refrigerant with a recovery/recycling/ charging station (see **REFRIGERANT RECOVERY**).
5. Remove the alternator (see **ALTERNATOR REMOVAL AND INSTALLATION**).
6. Remove the A/C compressor clutch connector (A) from the A/C condenser fan shroud (B), then disconnect the connector. Disconnect the A/C condenser fan connector (C), then remove the wire harness clips (D) from the A/C condenser fan shroud. Loosen the lower mounting bolts, then remove the upper

cardiagn.com

mounting bolts and the A/C condenser fan shroud. Be careful not to damage the radiator fins when removing the A/C condenser fan shroud.

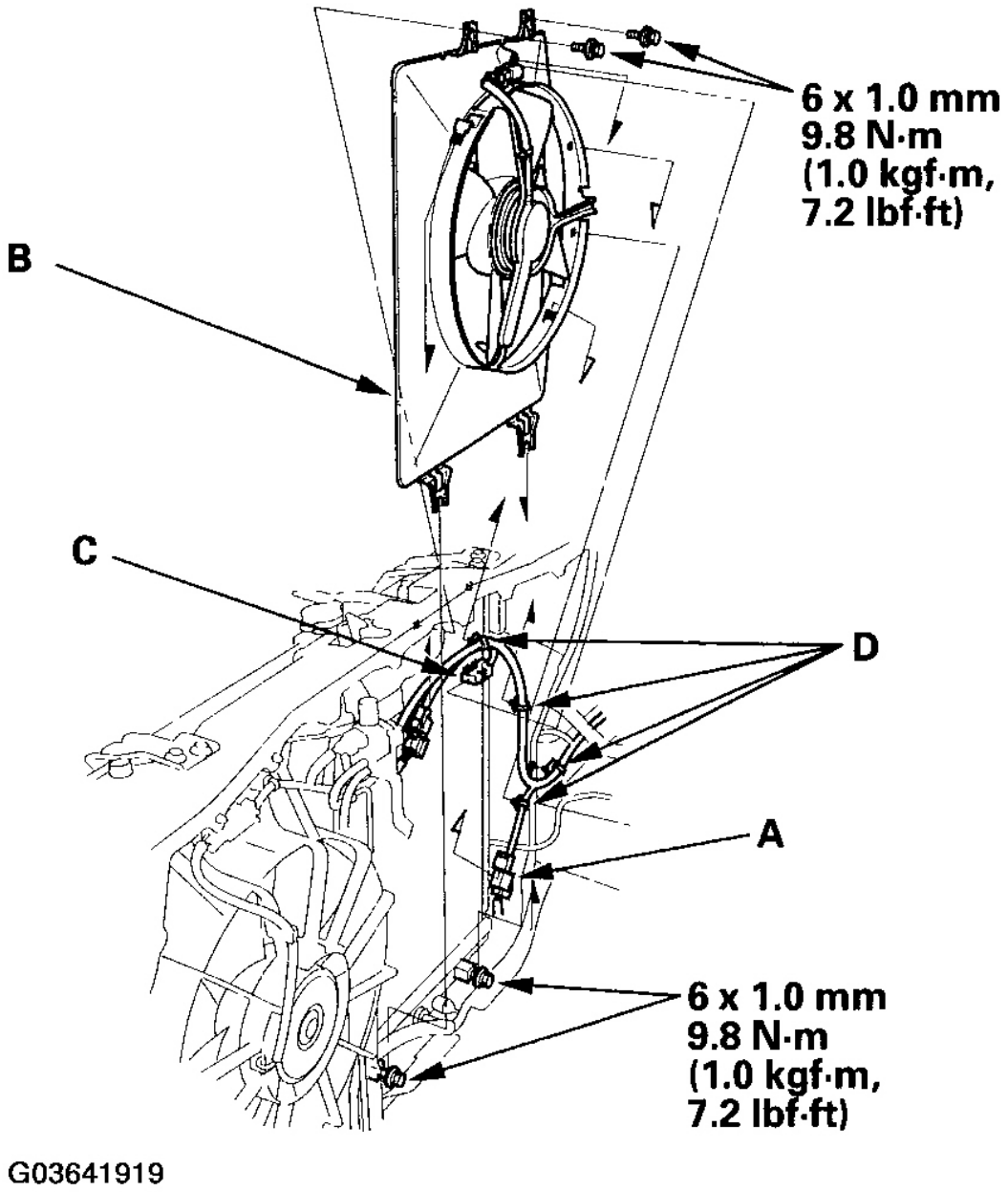

Fig. 120: Removing Upper Mounting Bolts And A/C Condenser Fan Shroud
Courtesy of AMERICAN HONDA MOTOR CO., INC.

7. Disconnect the A/C compressor clutch connector (A) remove the bolt and the nut, then disconnect the

cardiagn.com

suction line (B) and discharge line (C) from the A/C compressor. Plug or cap the lines immediately after disconnecting them to avoid moisture and dust contamination.

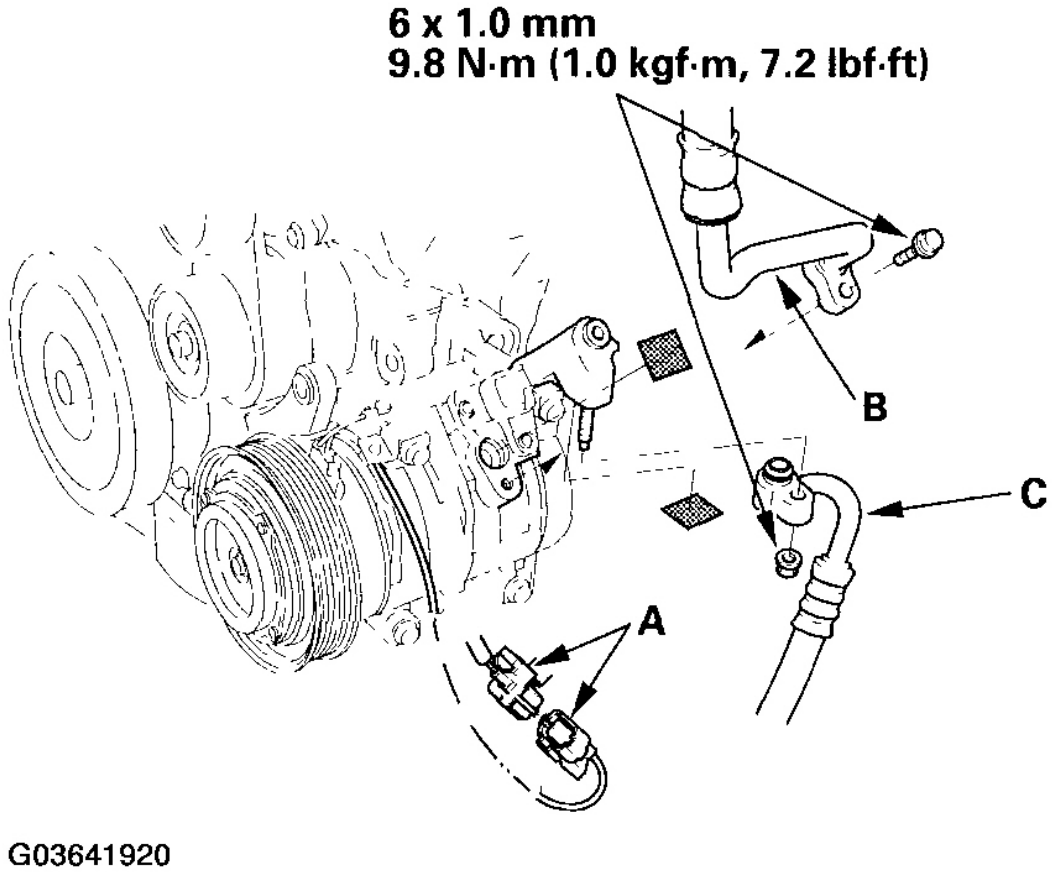

Fig. 121: Disconnecting Suction Line And Discharge Line From A/C Compressor
Courtesy of AMERICAN HONDA MOTOR CO., INC.

8. Remove the mounting bolts and the A/C compressor. Be careful not to damage the radiator fins when removing the A/C compressor.

cardiagn.com

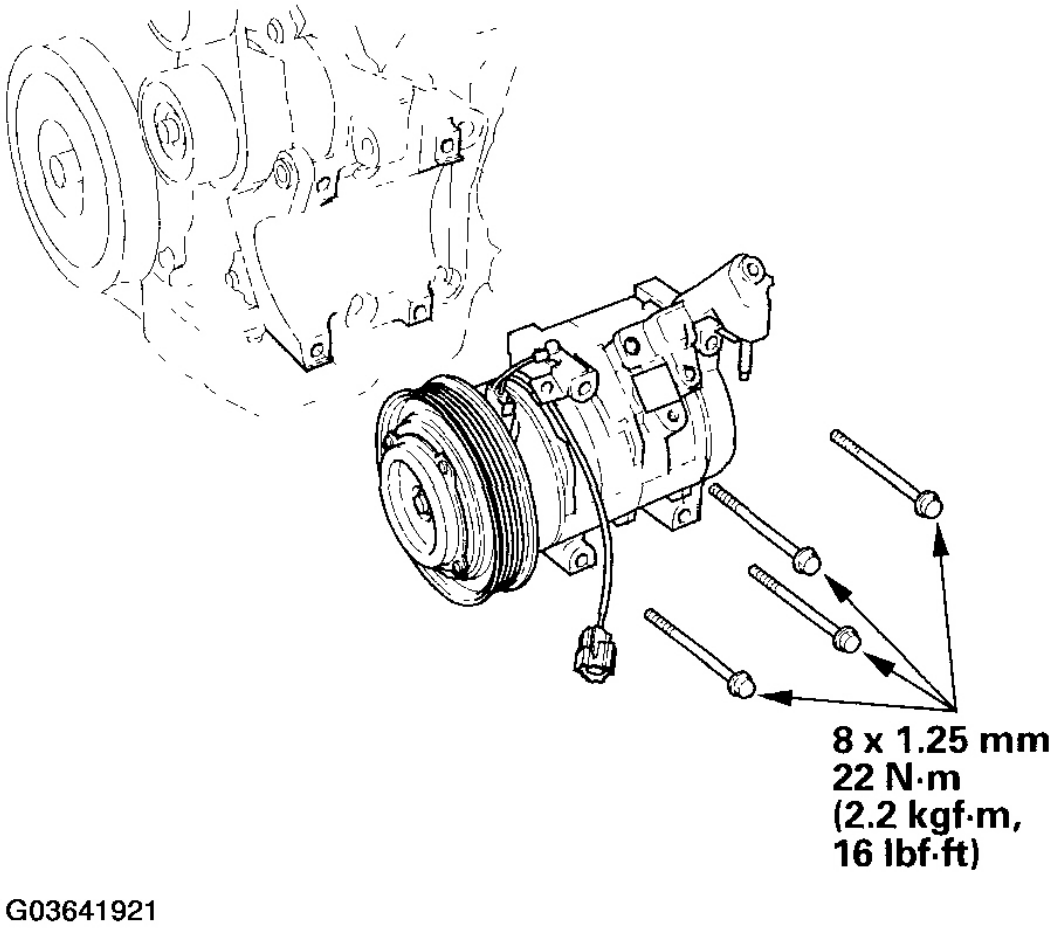

Fig. 122: Removing Mounting Bolts And A/C Compressor
Courtesy of AMERICAN HONDA MOTOR CO., INC.

9. Install the A/C compressor in the reverse order of removal, and note these items:
   - If you're installing a new A/C compressor, you must calculate the amount of refrigerant oil to be removed from it (see **A/C REFRIGERANT OIL REPLACEMENT**).
   - Replace the O-rings with new ones at each fitting, and apply a thin coat of refrigerant oil before installing them. Be sure to use the correct O-rings for HFC-134a (R-134a) to avoid leakage.
   - Use refrigerant oil (DENSO ND-OIL 8) for HFC-134a DENSO piston type A/C compressor only.
   - To avoid contamination, do not return the oil to the container once dispensed, and never mix it with other refrigerant oils.
   - Immediately after using the oil, reinstall the cap on the container, and seal it to avoid moisture absorption.
   - Do not spill the refrigerant oil on the vehicle; it may damage the paint; if the refrigerant oil contacts the paint, wash it off immediately.

cardiagn.com

- Be careful not to damage the radiator fins when installing the A/C compressor or the A/C condenser fan shroud.
- Charge the system (see **SYSTEM CHARGING**).
- Do the PCM idle learn procedure (see **PCM IDLE LEARN PROCEDURE**).
- Reset the power window control unit (see **RESETTING THE POWER WINDOW CONTROL UNIT**).
- Enter the anti-theft codes for the radio, and the navigation system then enter the customer's radio station presets.

A/C COMPRESSOR CLUTCH CHECK

1. Check the pressure plate for discoloration, peeling, or other damage. If there is damage, replace the clutch set (see **A/C COMPRESSOR CLUTCH OVERHAUL**).
2. Check the pulley bearing play and drag by rotating the pulley by hand. Replace the clutch set with a new one if it is noisy or has excessive play/drag (see **A/C COMPRESSOR CLUTCH OVERHAUL**).

cardiagn.com

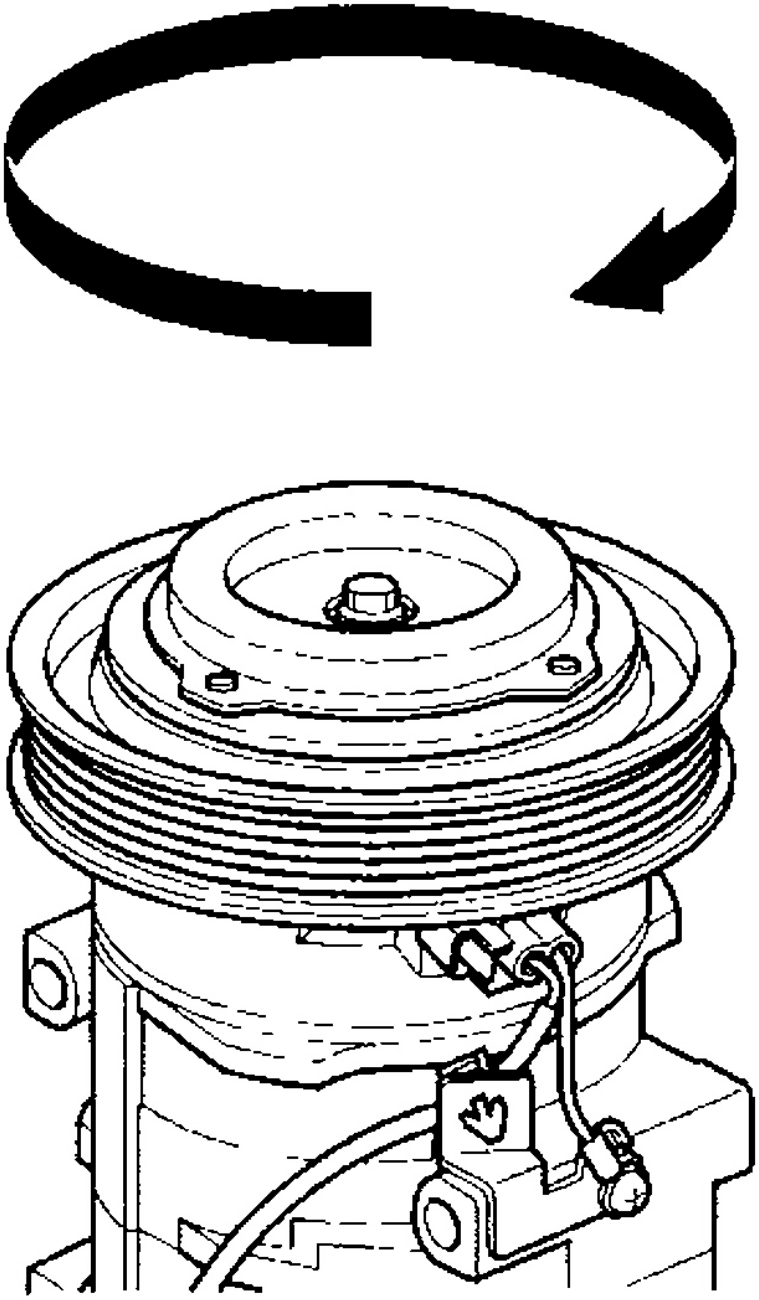

Fig. 123: Checking Pulley Bearing Play
Courtesy of AMERICAN HONDA MOTOR CO., INC.

3. Measure the clearance between the pulley (A) and the pressure plate (B) all the way around. If the

cardiagn.com

clearance is not within specifies limits, remove the pressure plate (see **A/C COMPRESSOR CLUTCH OVERHAUL**) and add or remove shims as needed to increase or decrease clearance.

Clearance: 0.35-0.60 mm (0.014-0.024 in.)

NOTE: The shims are available in three thicknesses: 0.1 mm, 0.3 mm, and 0.5 mm.

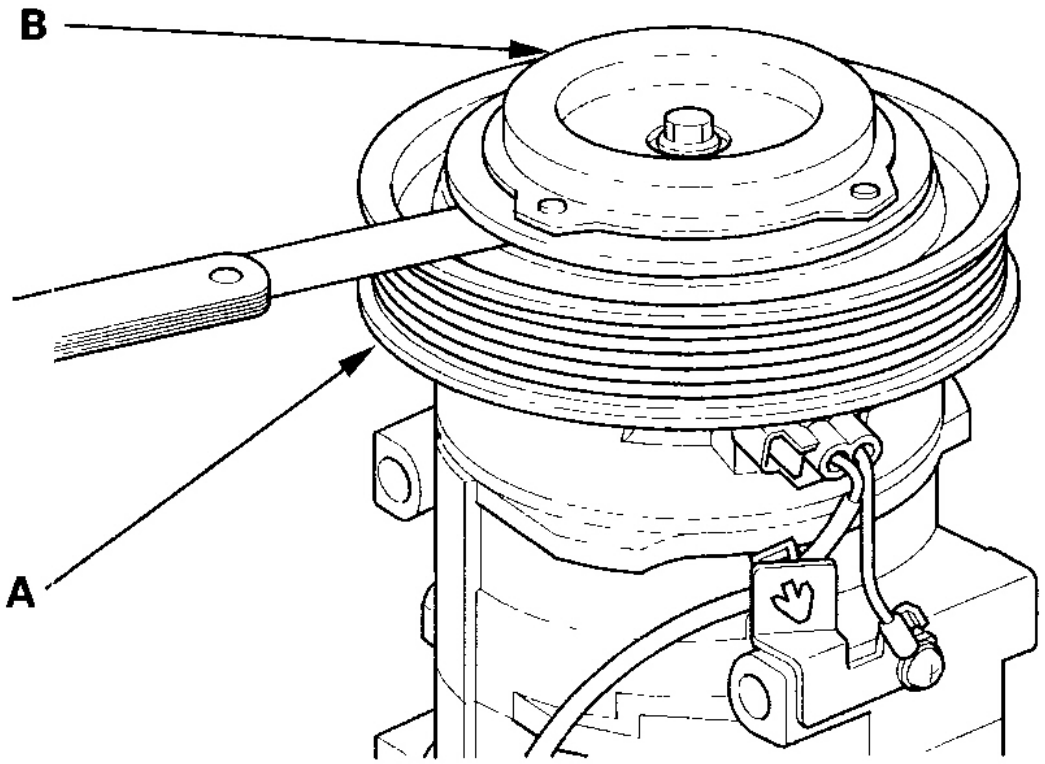

Fig. 124: Measuring Clearance Between Pulley And Pressure Plate
Courtesy of AMERICAN HONDA MOTOR CO., INC.

4. Check the resistance of the field coil. If resistance is not within specifications, replace the field coil (see **A/C COMPRESSOR CLUTCH OVERHAUL**).

   Field Coil Resistance: 3.9-4.3 ohm at 68 °F (20 °C)

cardiagn.com

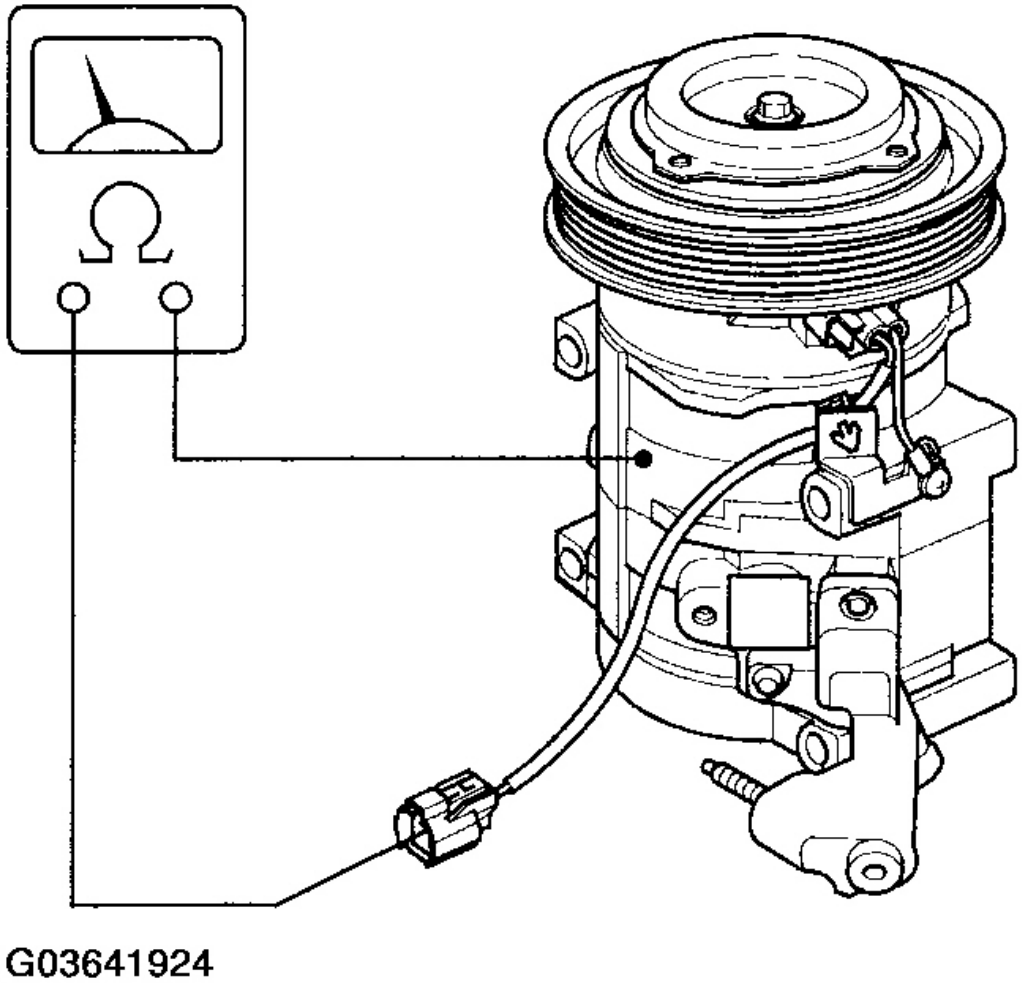

Fig. 125: Checking Resistance Of Field Coil
Courtesy of AMERICAN HONDA MOTOR CO., INC.

A/C COMPRESSOR CLUTCH OVERHAUL

Special Tools Required

A/C clutch holder, Robinair 10204 or Kent-Moore J37872, or Honda Tool and Equipment KMT-J33939, commercially available

1. Remove the center bolt (A) while holding the pressure plate with a commercially available A/C clutch holder (B).

cardiagn.com

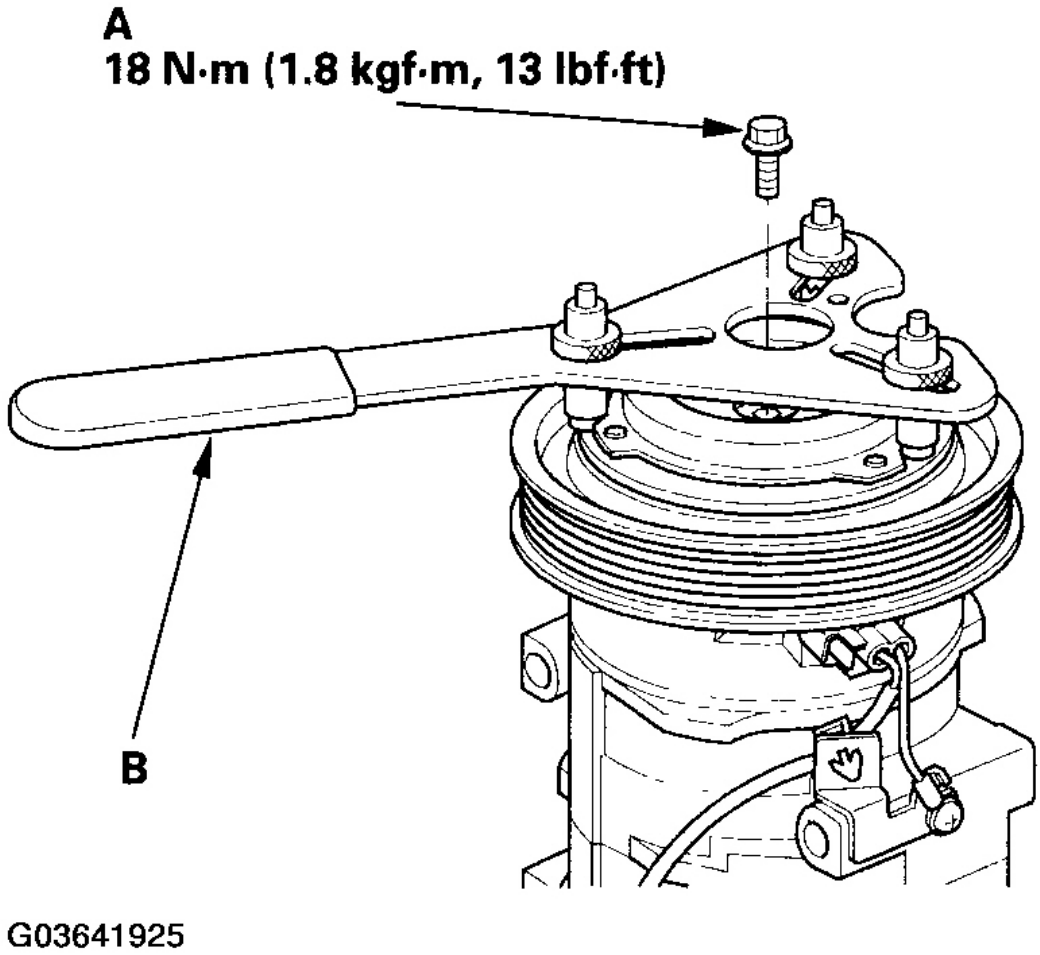

Fig. 126: Removing Center Bolt
Courtesy of AMERICAN HONDA MOTOR CO., INC.

2. Remove the pressure plate (A) and shim(s) (B), taking care not to lose the shim(s). If the clutch needs adjustment, increase or decrease the number and thickness of shims as necessary, then reinstall the pressure plate, and recheck its clearance (see **A/C COMPRESSOR CLUTCH CHECK**).

NOTE: The shims are available in three thicknesses: 0.1 mm, 0.3 mm, and 0.5 mm.

cardiagn.com

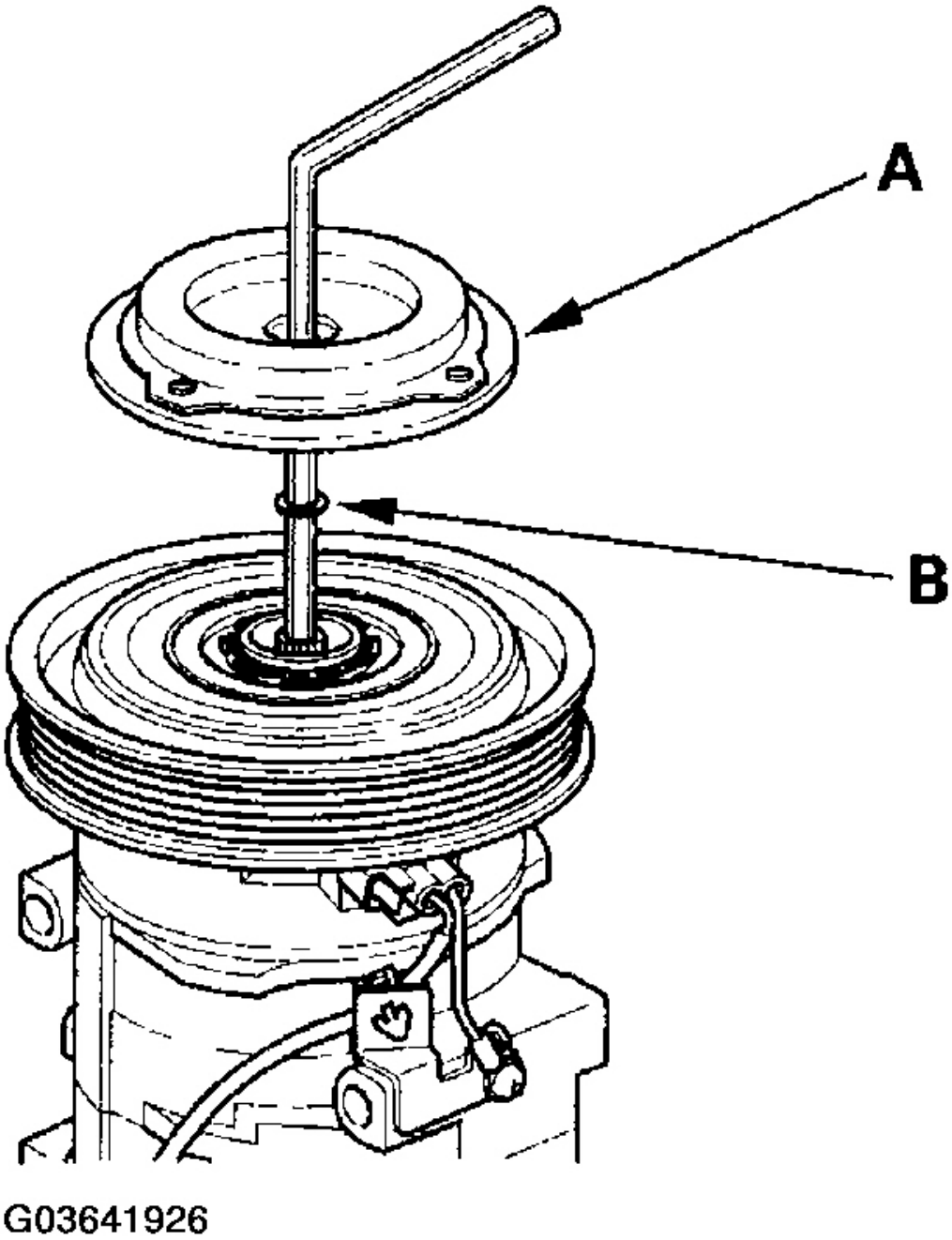

Fig. 127: Removing Pressure Plate And Shim
Courtesy of AMERICAN HONDA MOTOR CO., INC.

cardiagn.com

3. If you are replacing the field coil, remove the snap ring (A) with snap ring pliers, then remove the pulley (B). Be careful not to damage the pulley or the A/C compressor.

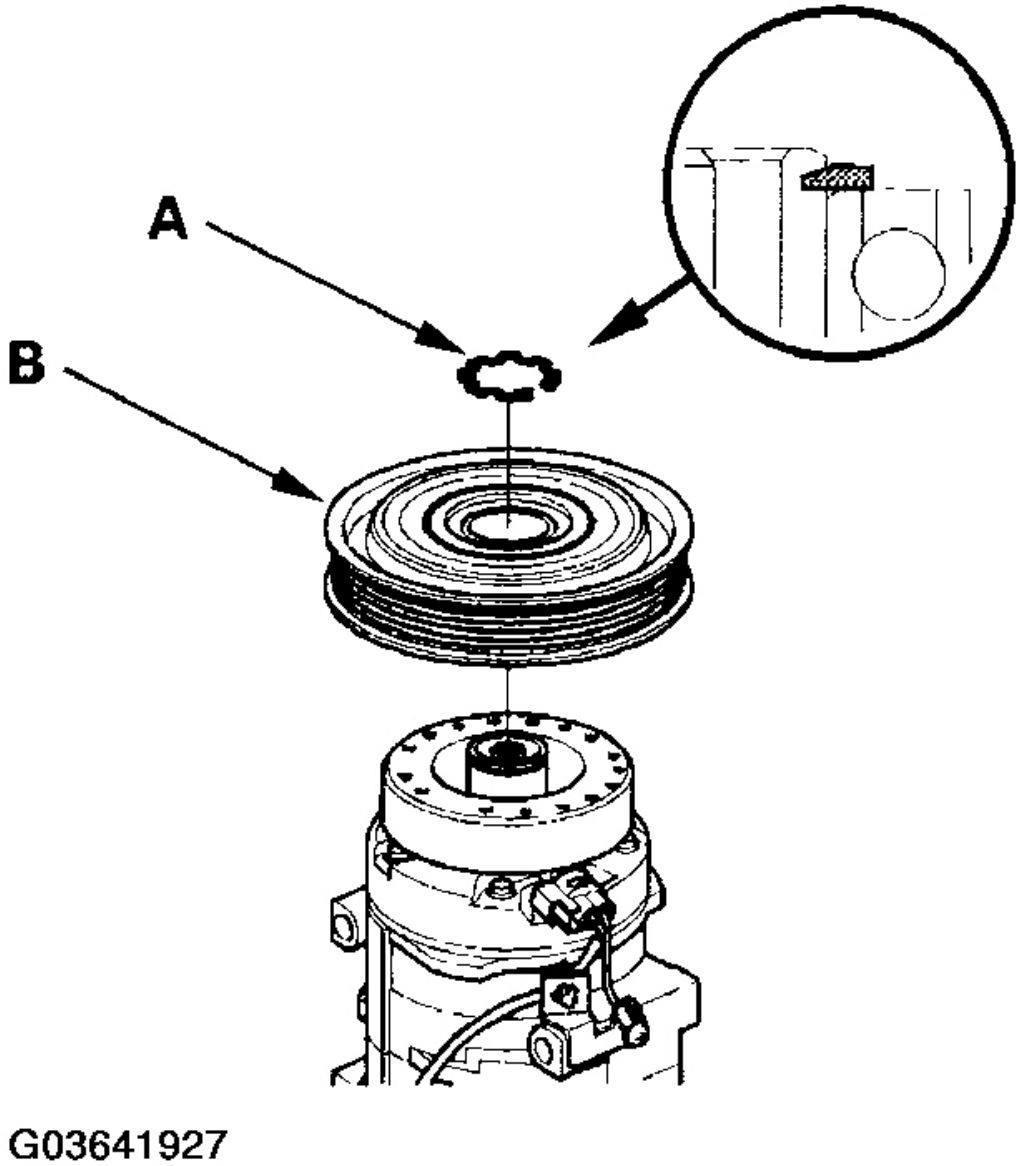

Fig. 128: Removing Pulley
Courtesy of AMERICAN HONDA MOTOR CO., INC.

4. Remove the screw from the field coil ground terminal (A). Remove the wire harness clip (B) from the

cardiagn.com

holder (C), then disconnect the field coil connector (D). Remove the snap ring (E) with snap ring pliers, then remove the field coil (F). Be careful not to damage the field coil or the A/C compressor.

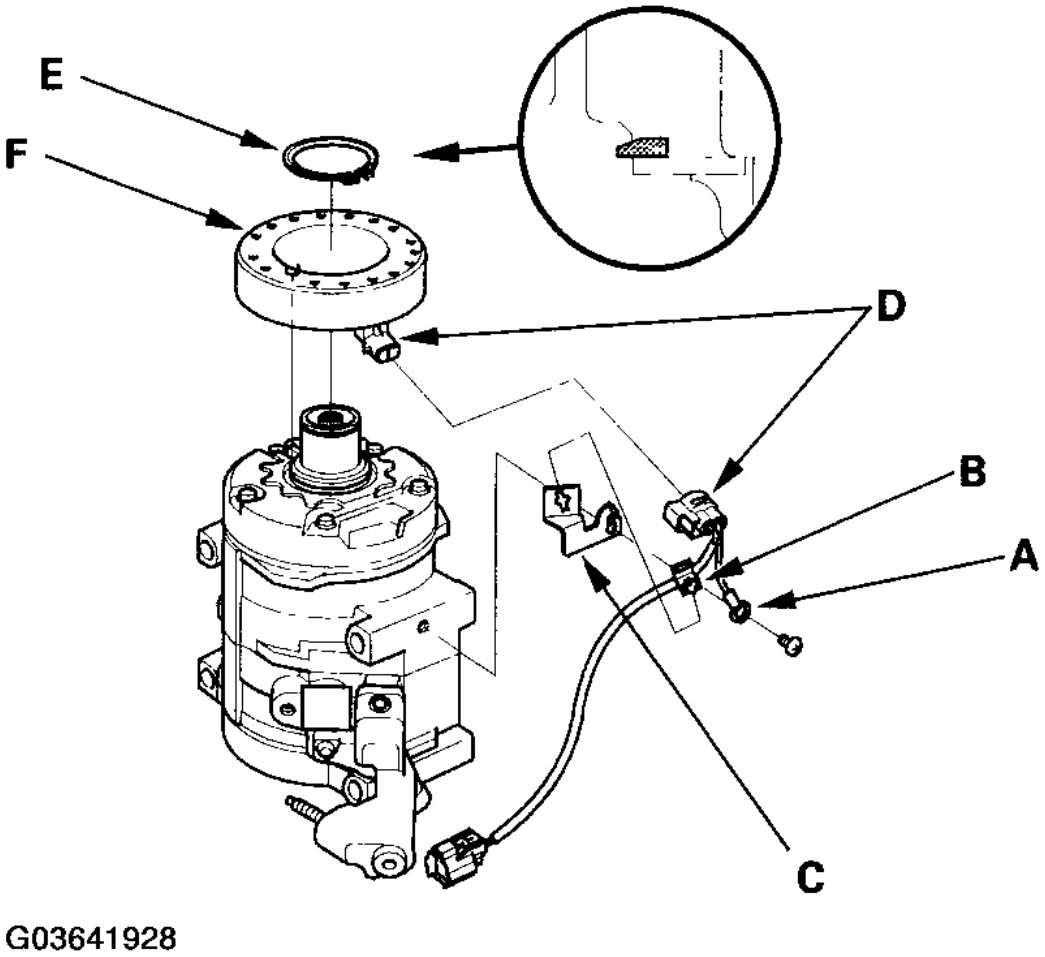

Fig. 129: Removing Field Coil
Courtesy of AMERICAN HONDA MOTOR CO., INC.

5. Reassemble the clutch in the reverse order of disassembly, and note these items:
   - Install the field coil with the wire side facing down, and align the boss on the field coil with the hole in the A/C compressor.
   - Clean the pulley and A/C compressor sliding surfaces with contact cleaner or other non-petroleum solvent.
   - Install new snap rings, note the installation direction, and make sure they are fully seated in the groove.
   - Make sure that the pulley turns smoothly after it's reassembled.

cardiagn.com

- Route and clamp the wires properly or they can be damaged by the pulley.

A/C COMPRESSOR RELIEF VALVE REPLACEMENT

1. Recover the refrigerant with a recovery/recycling/ charging station (see **REFRIGERANT RECOVERY**).
2. Remove the relief valve (A) and the O-ring (B). Plug the opening to keep foreign matter from entering the system and the A/C compressor oil from running out.

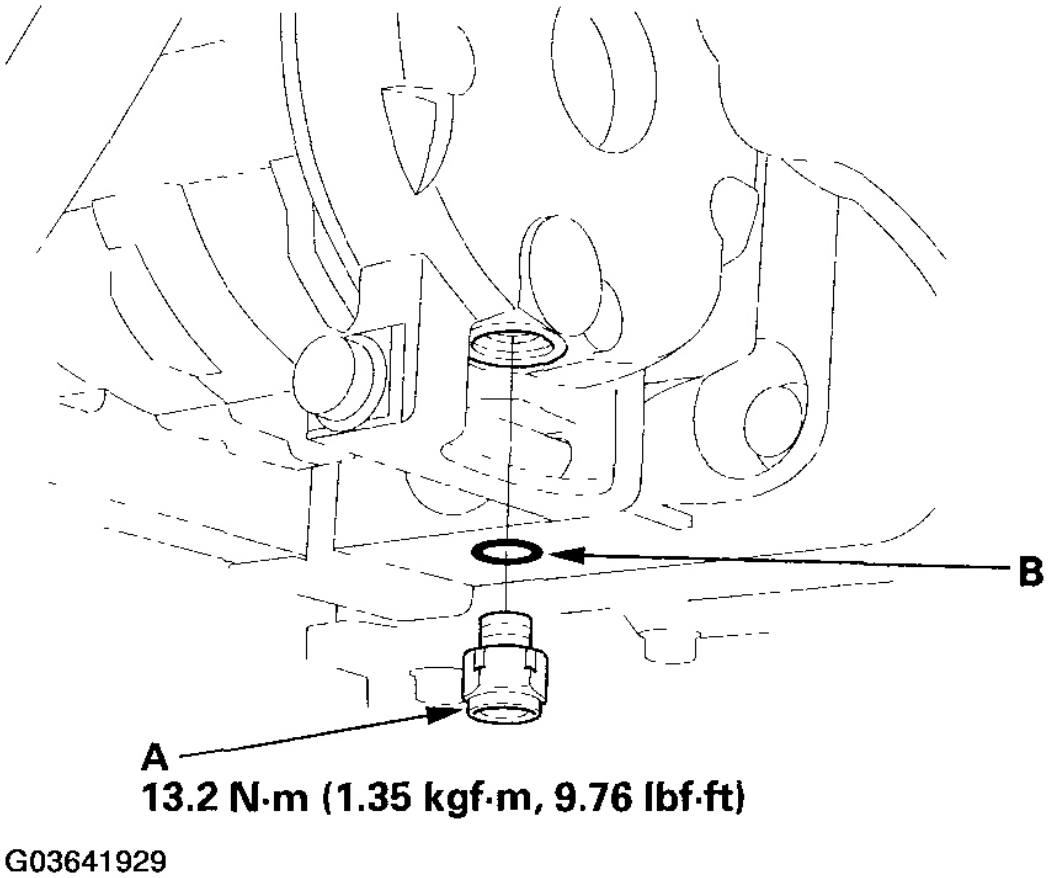

Fig. 130: Removing Relief Valve And O-Ring
Courtesy of AMERICAN HONDA MOTOR CO., INC.

3. Clean the mating surfaces.
4. Replace the O-ring with a new one at the relief valve, and apply a thin coat of refrigerant oil before installing it.
5. Remove the plug, and install and tighten the relief valve.

cardiagn.com

6. Charge the system (see **SYSTEM CHARGING**).

A/C CONDENSER REPLACEMENT

1. Recover the refrigerant with a recovery/recycling/charging station (see **REFRIGERANT RECOVERY**).
2. Remove the front bulkhead cover (see **FRONT BULKHEAD COVER REPLACEMENT**) and the hood latch (see **HOOD RELEASE HANDLE REPLACEMENT**).
3. Remove the clips (A), then remove the bolts and the radiator upper mount brackets (B).

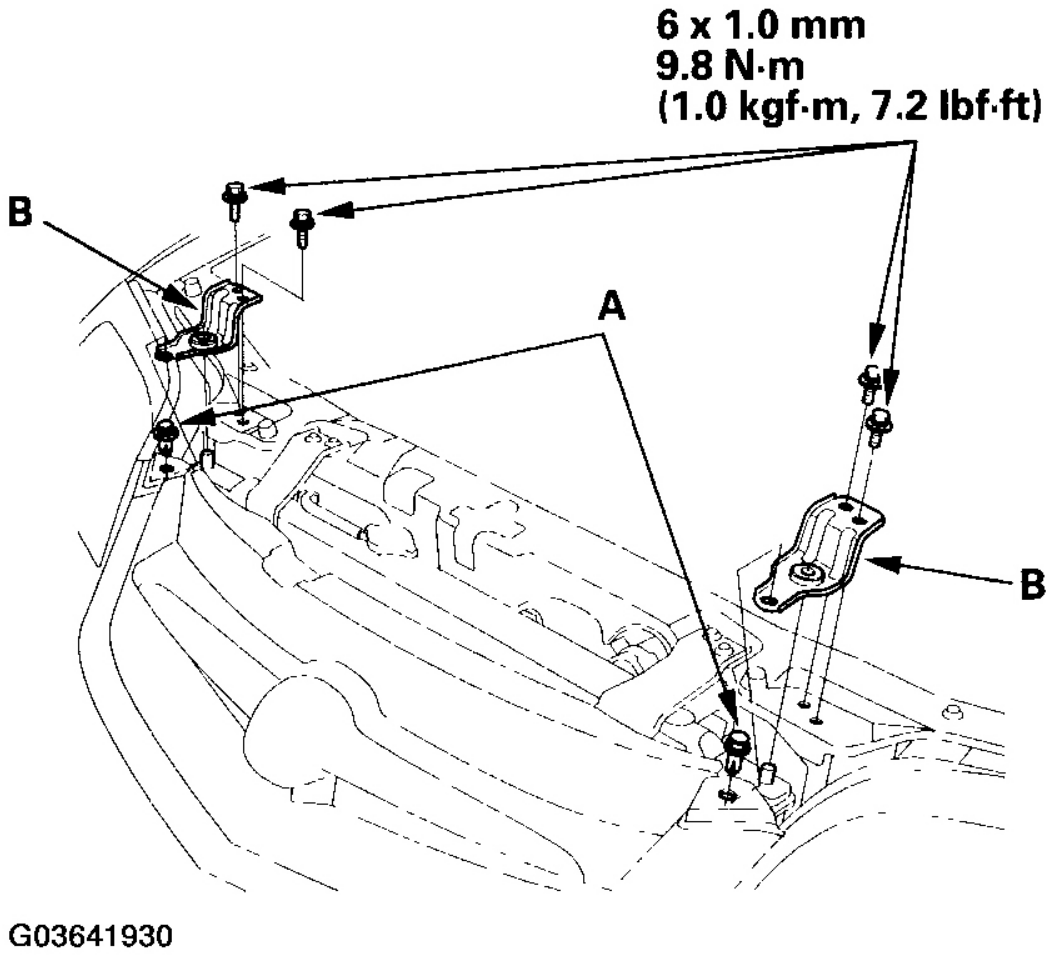

Fig. 131: Removing Bolts And Radiator Upper Mount Brackets
Courtesy of AMERICAN HONDA MOTOR CO., INC.

4. Remove the bolts, then disconnect the discharge line (A) and receiver line (B) from the A/C condenser.

cardiagn.com

Plug or cap the lines immediately after disconnecting them to avoid moisture and dust contamination.

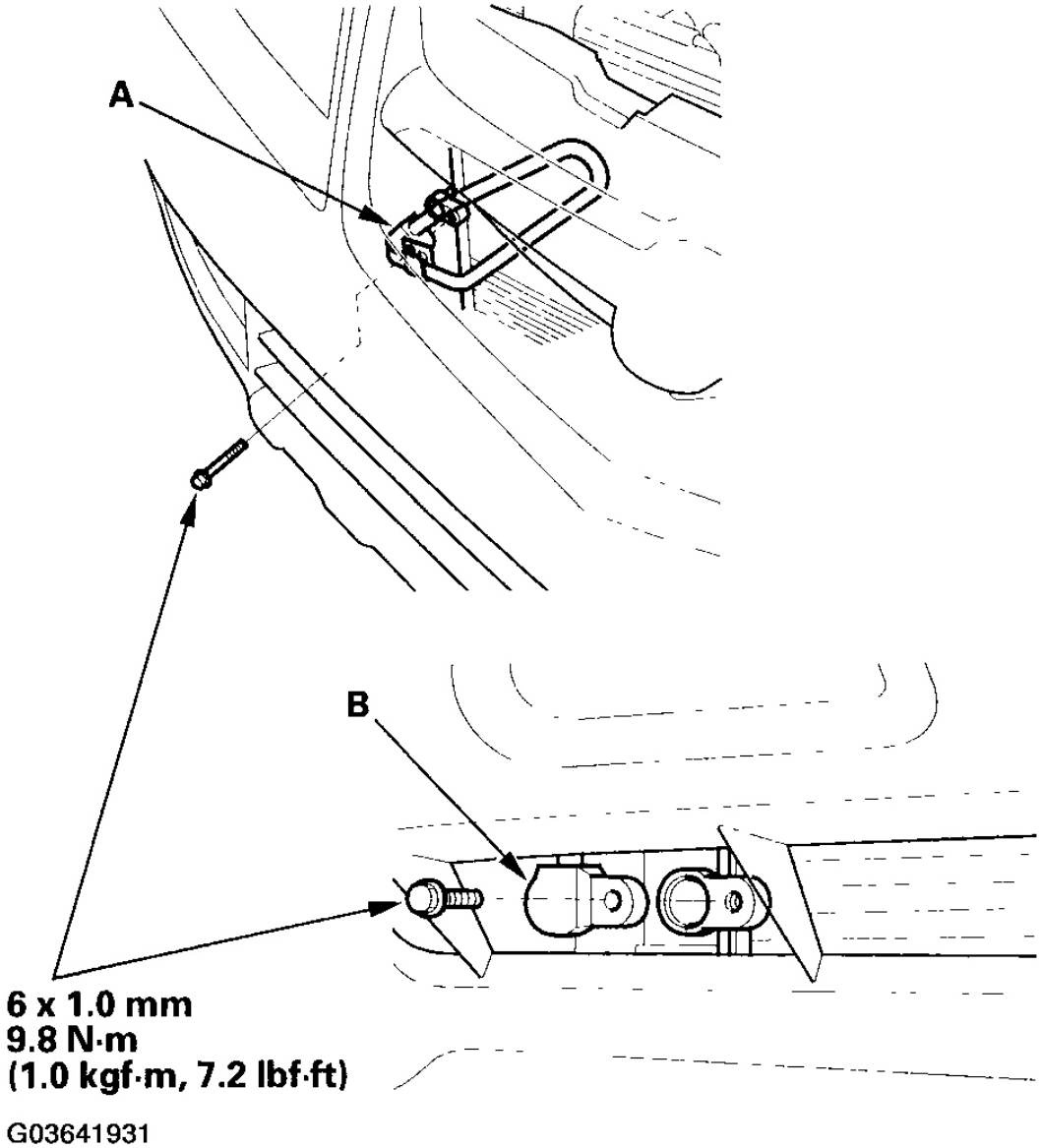

Fig. 132: Disconnecting Discharge Line And Receiver Line From A/C Condenser
Courtesy of AMERICAN HONDA MOTOR CO., INC.

5. Remove the bolts, then remove the A/C condenser by lifting it up. Be careful not to damage the radiator and A/C condenser fins when removing the A/C condenser.

cardiagn.com

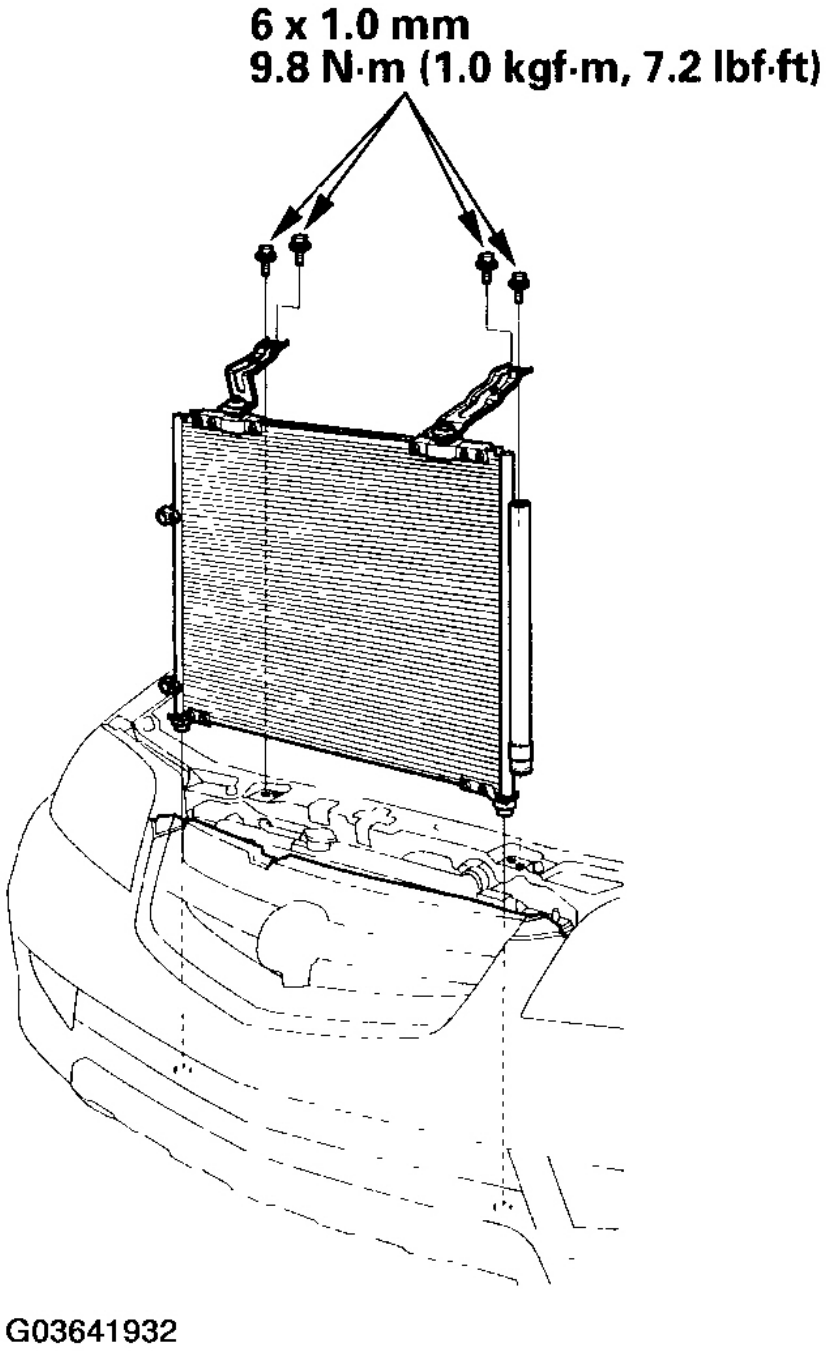

Fig. 133: Removing A/C Condenser
Courtesy of AMERICAN HONDA MOTOR CO., INC.

6. Install the A/C condenser in the reverse order of removal, and note these items:

cardiagn.com

- If you're installing a new A/C condenser, add refrigerant oil (DENSO ND-OIL 8) (see **A/C SERVICE TIPS AND PRECAUTIONS**).
- Replace the O-rings with new ones at each fitting, and apply a thin coat of refrigerant oil before installing them. Be sure to use the correct O-rings for HFC-134a (R-134a) to avoid leakage.
- Immediately after using the oil, reinstall the cap on the container, and seal it to avoid moisture absorption.
- Do not spill the refrigerant oil on the vehicle; it may damage the paint; if the refrigerant oil contacts the paint, wash it off immediately.
- Be careful not to damage the radiator or the A/C condenser fins when installing the A/C condenser.
- Charge the system (see **SYSTEM CHARGING**).

RECEIVER/DRYER DESICCANT REPLACEMENT

1. Remove the A/C condenser (see **A/C CONDENSER REPLACEMENT**).
2. Remove the cap (A) from the bottom of the A/C condenser, then remove the O-rings (B), the filter (C) and the desiccant (D).

cardiagn.com

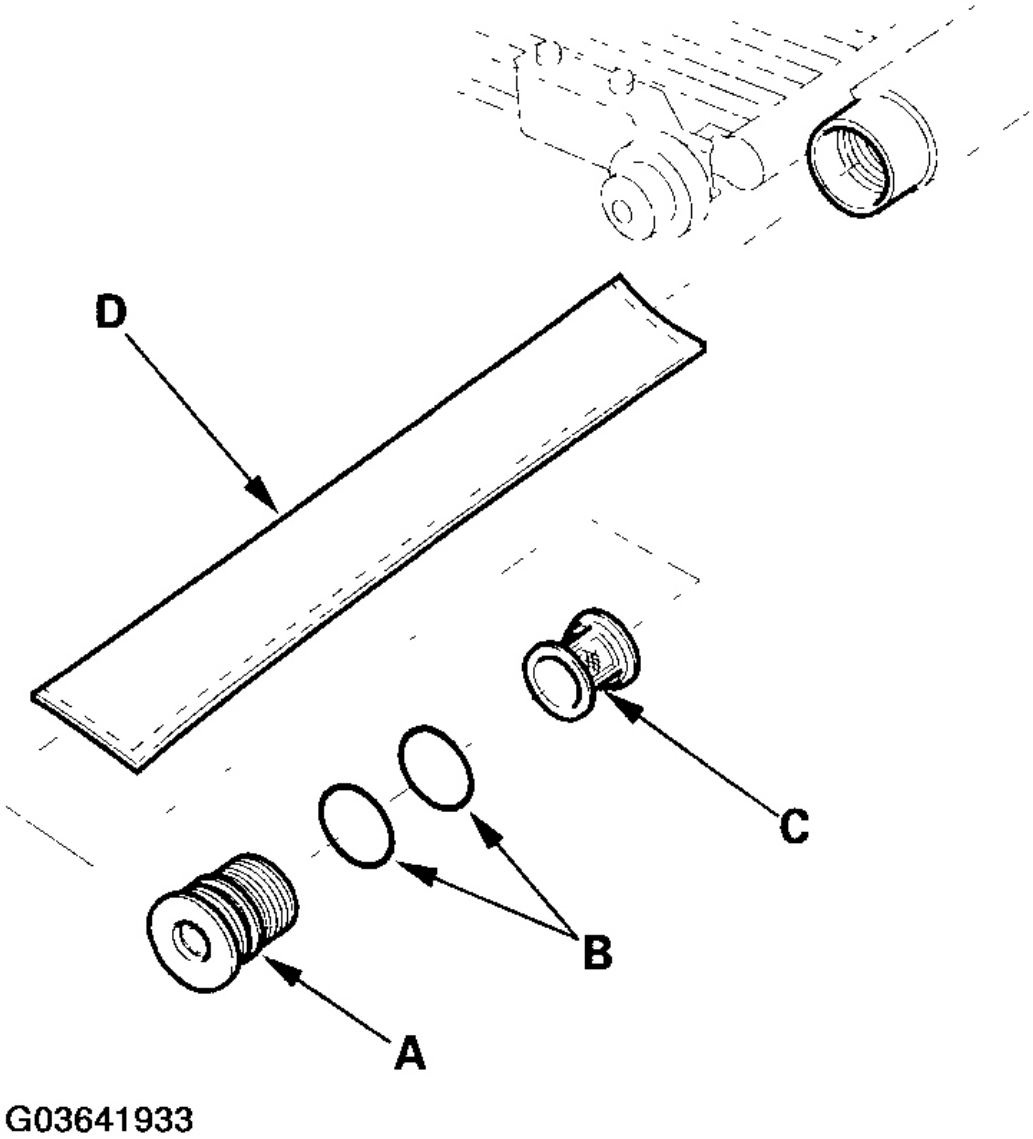

Fig. 134: Removing O-Rings, Filter And Desiccant
Courtesy of AMERICAN HONDA MOTOR CO., INC.

3. Install the desiccant in the reverse order of removal, and note these items:

   Replace the O-rings with new ones, and apply a thin coat of refrigerant oil (DENSO ND-OIL 8) before installing them. Be sure to use the correct O-rings for HFC-134a (R-134a) to avoid leakage.

REFRIGERANT RECOVERY

cardiagn.com

CAUTION:

- **Air conditioning refrigerant or lubricant vapor can irritate your eyes, nose, or throat.**
- **Be careful when connecting service equipment.**
- **Do not breathe refrigerant or vapor.**

Use only service equipment that is U.L.-listed and is certified to meet the requirements of SAE J2210 to remove HFC-134a (R-134a) from the air conditioning system.

If accidental system discharge occurs, ventilate work area before resuming service.

Additional health and safety information may be obtained from the refrigerant and lubricant manufacturers.

1. Connect an R-134a refrigerant recovery/recycling/ charging station (A) to the high-pressure service port (B) and the low-pressure service port (C), as shown, following the equipment manufacturer's instructions.

cardiagn.com

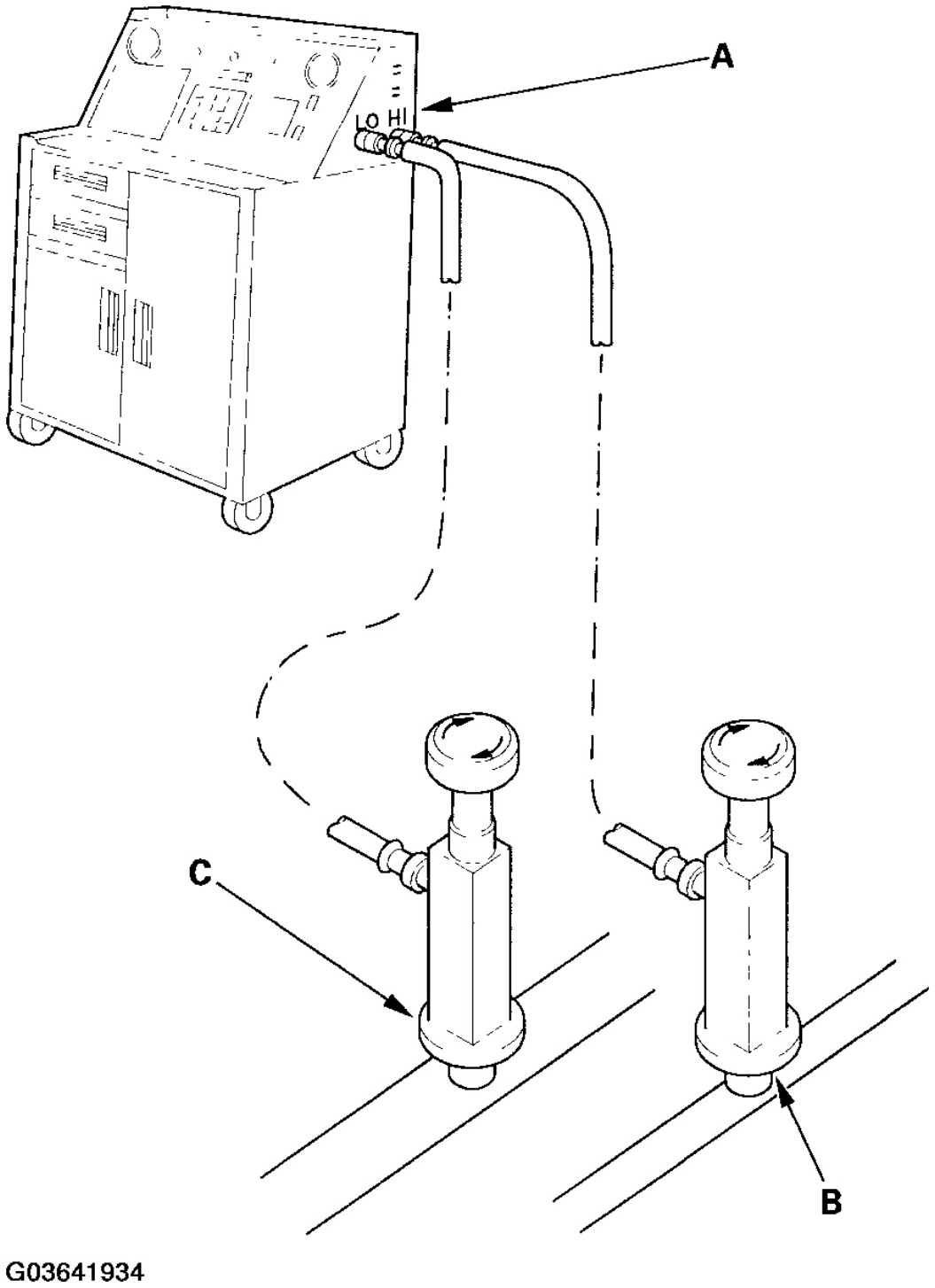

Fig. 135: Connecting An R-134A Refrigerant Recovery/Recycling/ Charging Station To High-Pressure Service Port

cardiagn.com

Courtesy of AMERICAN HONDA MOTOR CO., INC.

2. Measure the amount of refrigerant oil removed from the A/C system after the recovery process is completed. Be sure to put the same amount of new refrigerant oil back into the A/C system before charging.

SYSTEM EVACUATION

CAUTION:

- **Air conditioning refrigerant or lubricant vapor can irritate your eyes, nose, or throat.**
- **Be careful when connecting service equipment.**
- **Do not breathe refrigerant or vapor.**

Use only service equipment that is U.L.-listed and is certified to meet the requirements of SAE J2210 to remove HFC-134a (R-134a) from the air conditioning system.

If accidental system discharge occurs, ventilate work area before resuming service.

Additional health and safety information may be obtained from the refrigerant and lubricant manufacturers.

1. When an A/C System has been opened to the atmosphere, such as during installation or repair, it must be evacuated using an R-134a refrigerant recovery/recycling/charging station. If the system has been open for several days, the receiver/dryer should be replaced, and the system should be evacuated for several hours.
2. Connect an R-134a refrigerant recovery/recycling/ charging station (A) to the high-pressure service port (B) and the low-pressure service port (C), as shown, following the equipment manufacturer's instructions. Evacuate the system.

cardiagn.com

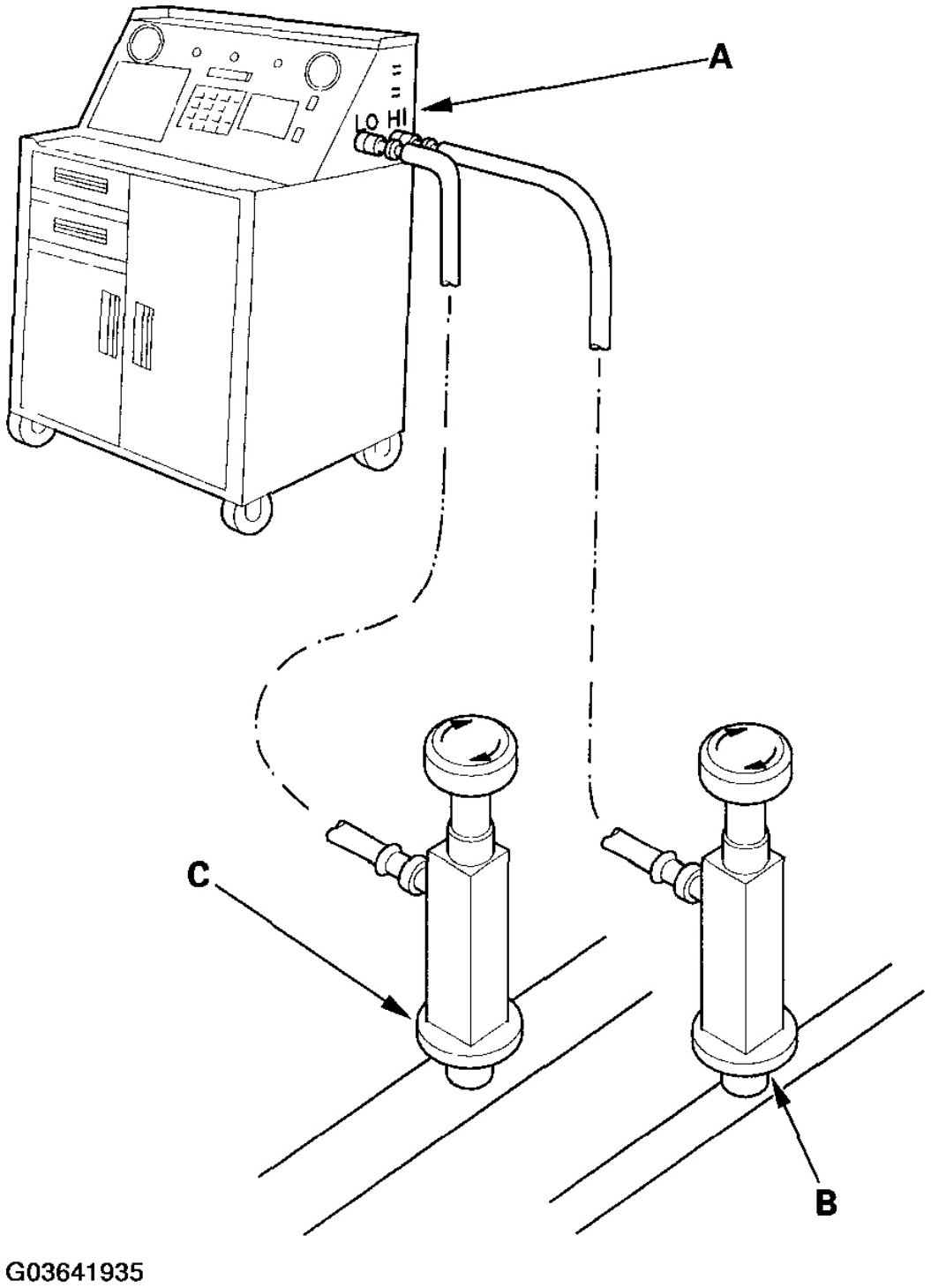

Fig. 136: Connecting R-134A Refrigerant Recovery/Recycling/ Charging Station To High-Pressure Service Port

cardiagn.com

Courtesy of AMERICAN HONDA MOTOR CO., INC.

3. If the low-pressure does not reach more than 93.3 kPa (700 mmHg, 27.6 in.Hg) in 15 minutes, there is probably a leak in the system. Partially charge the system, and check for leaks (see step 3).

SYSTEM CHARGING

CAUTION:

- **Air conditioning refrigerant or lubricant vapor can irritate your eyes, nose, or throat.**
- **Be careful when connecting service equipment.**
- **Do not breathe refrigerant or vapor.**

Use only service equipment that is U.L.-listed and is certified to meet the requirements of SAE J2210 to remove HFC-134a (R-134a) from the air conditioning system.

If accidental system discharge occurs, ventilate work area before resuming service.

Additional health and safety information may be obtained from the refrigerant and lubricant manufacturers.

1. Connect an R-134a refrigerant recovery/recycling/ charging station (A) to the high-pressure service port (B) and the low-pressure service port (C), as shown, following the equipment manufacturer's instructions.

cardiagn.com

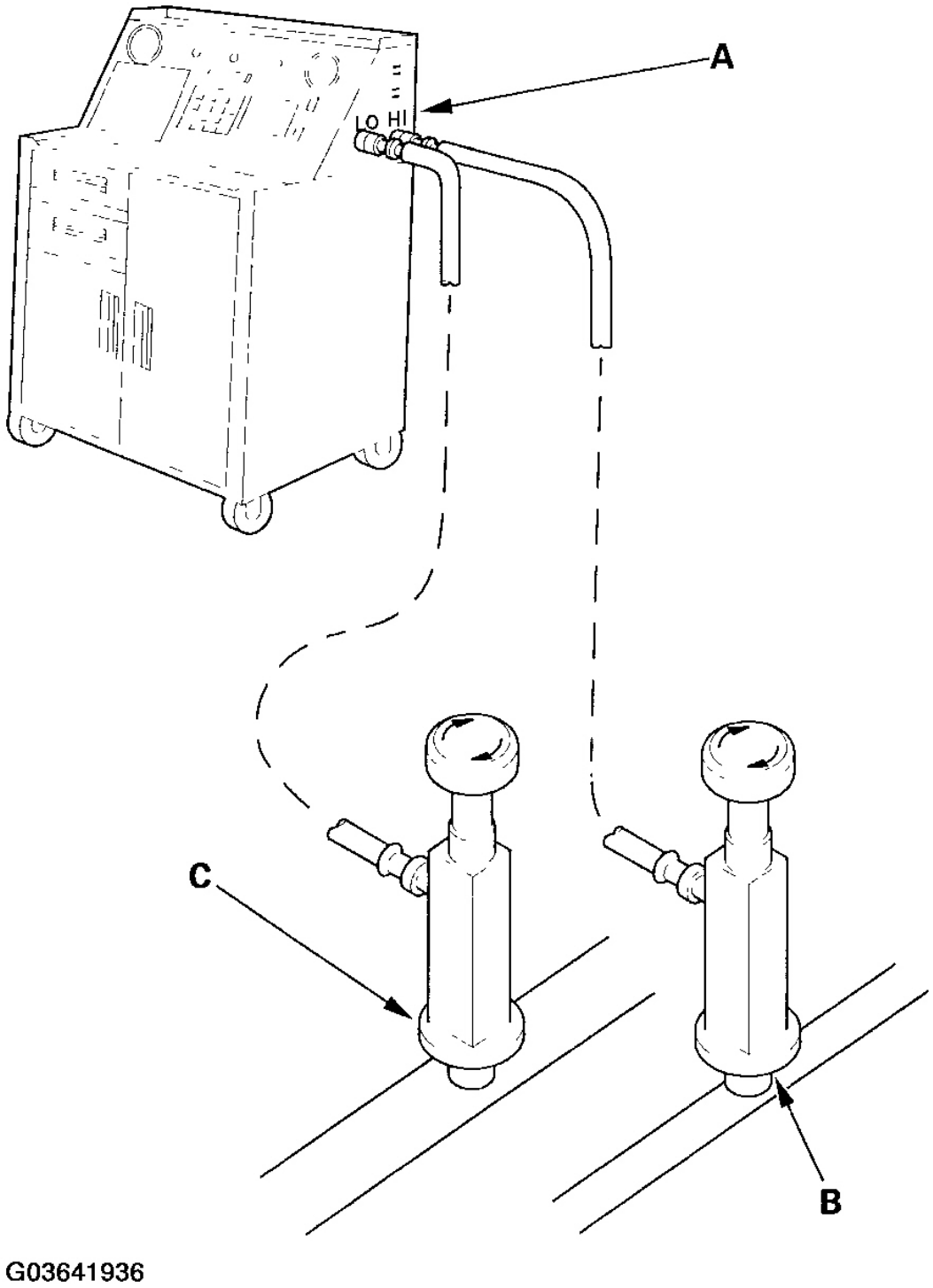

Fig. 137: Connecting R-134A Refrigerant Recovery/Recycling/ Charging Station To High-Pressure Service Port

cardiagn.com

Courtesy of AMERICAN HONDA MOTOR CO., INC.

2. Evacuate the system (see **SYSTEM EVACUATION**).
3. Add the same amount of new refrigerant oil to the system that was removed during recovery. Use only DENSO ND-OIL 8 refrigerant oil.
4. Charge the system with the specified amount of R-134a refrigerant. Do not overcharge the system; the A/C compressor will be damaged.

   Select the appropriate units of measure for your refrigerant charging station.

   Refrigerant Capacity:

   700 to 750 g

   0.70 to 0.75 kg

   1.5 to 1.7 lbs

   24.7 to 26.5 oz

5. Check for refrigerant leaks (see **REFRIGERANT LEAK TEST**).
6. Check for system performance (see **A/C SYSTEM TEST**).

REFRIGERANT LEAK TEST

Special Tools Required

Leak detector, Honda Tool and Equipment YGK-H-10PM commercially available

WARNING:

- **Compressed air mixed with the R-134a forms a combustible vapor.**
- **The vapor can burn or explode causing serious injury.**
- **Never use compressed air to pressure test R-134a service equipment or vehicle air conditioning systems.**

CAUTION:

- **Air conditioning refrigerant or lubricant vapor can irritate your eyes, nose, or throat.**
- **Be careful when connecting service equipment.**
- **Do not breathe refrigerant or vapor.**

Use only service equipment that is U.L.-listed and is certified to meet the requirements of SAE J2210 to remove HFC-134a (R-134a) from the air conditioning system.

If accidental system discharge occurs, ventilate work area before resuming service.

cardiagn.com

Additional health and safety information may be obtained from the refrigerant and lubricant manufacturers.

1. Connect an R-134a refrigerant recovery/recycling/ charging station (A) to the high-pressure service port (B) and the low-pressure service port (C), as shown, following the equipment manufacturer's instructions.

cardiagn.com

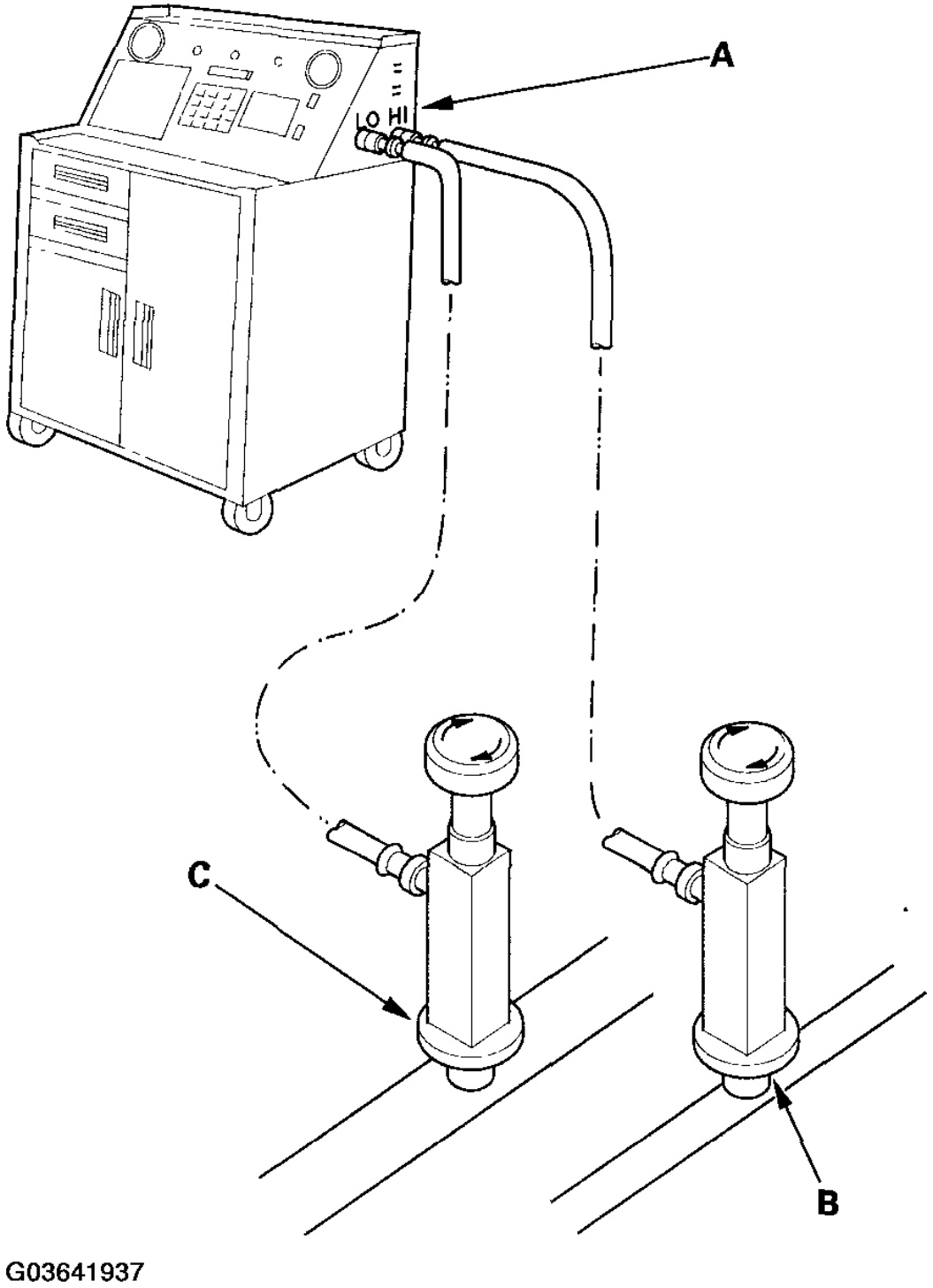

Fig. 138: Connecting R-134A Refrigerant Recovery/Recycling/ Charging Station To High-Pressure Service Port

cardiagn.com

Courtesy of AMERICAN HONDA MOTOR CO., INC.

2. Open high pressure valve to charge the system to the specified capacity, then close the supply valve, and disconnect the charging station fittings.

   Select the appropriate units of measure for your refrigerant charging station.

   Refrigerant Capacity:

   700 to 750 g

   0.70 to 0.75 kg

   1.5 to 1.7 lbs

   24.7 to 26.5 oz

3. Check the system for leaks using an R-134a refrigerant leak detector with an accuracy of 14 g (0.5 oz) per year or better.
4. If you find leaks that require the system to be opened (to repair or replace hoses, fittings, etc.), recover the system.
5. After checking and repairing leaks, the system must be evacuated.

A/C SYSTEM TEST

PERFORMANCE TEST

WARNING:

- **Compressed air mixed with the R-134a forms a combustible vapor.**
- **The vapor can burn or explode causing serious injury.**
- **Never use compressed air to pressure test R-134a service equipment or vehicle air conditioning systems.**

CAUTION:

- **Air conditioning refrigerant or lubricant vapor can irritate your eyes, nose, or throat.**
- **Be careful when connecting service equipment.**
- **Do not breathe refrigerant or vapor.**

The performance test will help determine if the air conditioner system is operating within specifications.

Use only service equipment that is U.L.-listed and is certified to meet the requirements of SAE J2210 to remove HFC-134a (R-134a) from the air conditioning system.

If accidental system discharge occurs, ventilate work area before resuming service.

cardiagn.com

R-134a service equipment or vehicle air conditioning systems should not be pressure tested or leak tested with compressed air.

Additional health and safety information may be obtained from the refrigerant and lubricant manufacturers.

1. Connect an R-134a refrigerant recovery/recycling/ charging station (A) to the high-pressure service port (B) and the low-pressure service port (C), as shown, following the equipment manufacturer's instructions.
2. Determine the relative humidity and air temperature.
3. Remove the glove box stops (see **GLOVE BOX REMOVAL/INSTALLATION**) and let the glove box hang down.
4. Insert a thermometer (A) in the center vent.

cardiagn.com

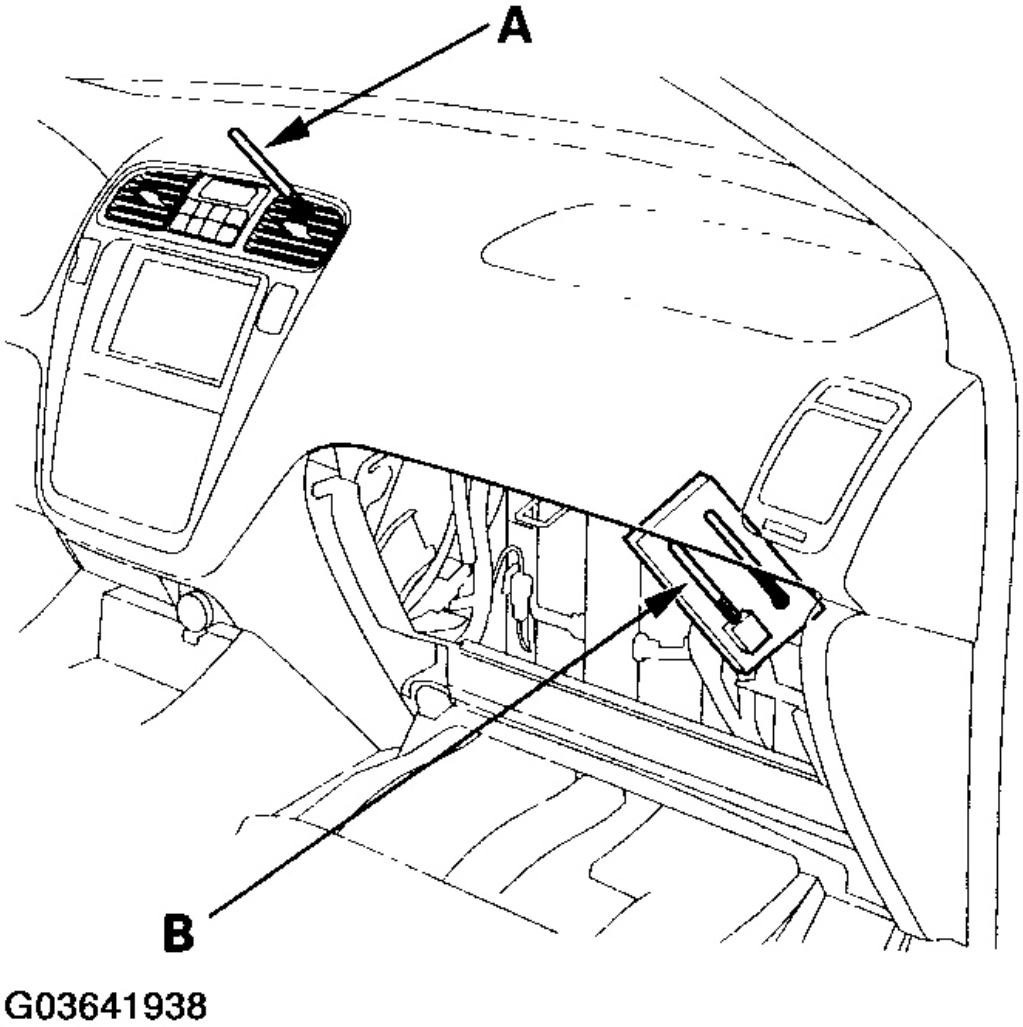

Fig. 139: Inserting Thermometer In Center Vent
Courtesy of AMERICAN HONDA MOTOR CO., INC.

5. Place a thermometer (B) near the blower unit.
6. Test conditions:
   - Avoid direct sunlight.
   - Open hood.
   - Open front doors.
   - Set the temperature control button to Max Cool, the mode control switch to Vent and the recirculation control switch to Recirculate.
   - Turn the A/C switch on and the fan switch to Max.

cardiagn.com

- Run the engine at 1,500 RPM.
- No driver or passengers in vehicle.

7. After running the air conditioning for 10 minutes under the above test conditions, read the delivery temperature from the thermometer in the dash vent, the intake temperature near the blower unit, and the high and low system pressure from the A/C gauges.
8. To complete the charts:
   - Mark the delivery temperature along the vertical line.
   - Mark the intake temperature (ambient air temperature) along the bottom line.
   - Draw a line straight up from the air temperature to the humidity.
   - Mark a point 10% above and 10% below the humidity level.
   - From each point, draw a horizontal line across the delivery temperature.
   - The delivery temperature should fall between the two lines.
   - Complete the low-side pressure test and high-side pressure test in the same way.
   - Any measurements outside the line may indicate the need for further inspection.

   Example: Intake temperature (dry): 86 °F (30 °C) Humidity level 70 %

   Intake temperature (wet): 77.9 °F (25.5 °C)

   Intake pressure: 304 kPa (3.1 kgf/cm^2) (44.1 psi)

   Delivery temperature: 68.9 °F (20.5 °C)

   Delivery pressure: 2,010 kPa (20.5 kgf/cm^2) (291.6 psi)

   Results: Within normal range

cardiagn.com

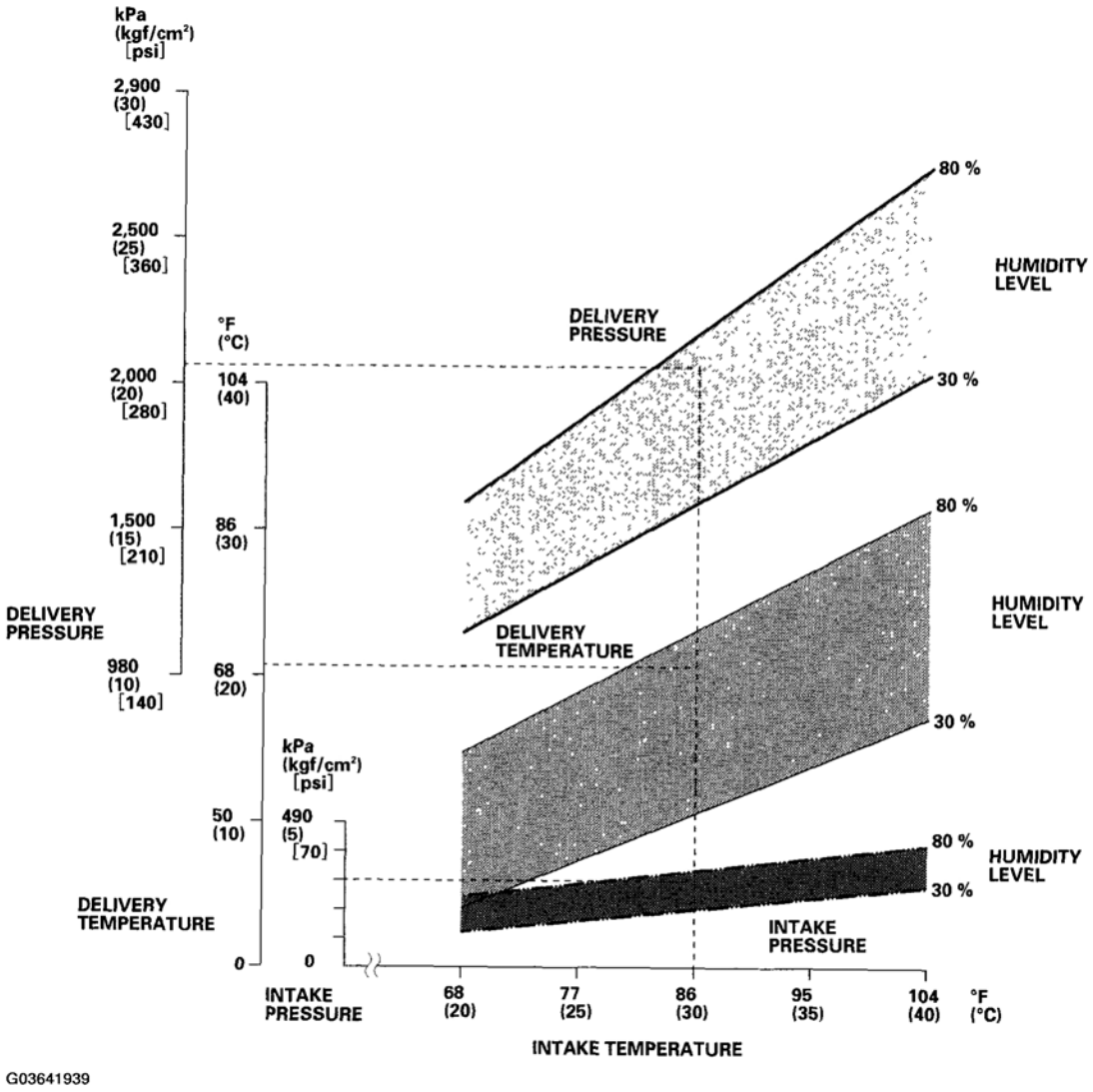

Fig. 140: A\C System Testing Chart
Courtesy of AMERICAN HONDA MOTOR CO., INC.

Pressure Test

PROBABLE CAUSE

Test results	Related symptoms	Probable cause	Remedy
Discharge (high) pressure abnormally high	After stopping A/C compressor, pressure drops to about 196 kPa (2.0 kgf/cm^2 , 28 psi) quickly, and then falls gradually.	Air in system	Recover, evacuate (see **SYSTEM EVACUATION**) and recharge with specified amount (see **SYSTEM CHARGING**).

cardiagn.com

	Reduced or no airflow through A/C condenser	• Clogged A/C condenser or radiator fins • A/C condenser or radiator fan not working properly	• Clean. • Check voltage and fan RPM. • Check fan direction.
	Line to A/C condenser is excessively hot.	Restricted flow of refrigerant in system	Restricted lines
Discharge pressure abnormally low	High and low-pressures are balanced soon after stopping A/C compressor. Low side is higher than normal.	• Faulty A/C compressor discharge valve • Faulty A/C compressor seal	Replace the A/C compressor.
	Outlet of expansion valve is not frosted, low-pressure gauge indicates vacuum.	• Faulty expansion valve • Moisture in system	• Replace. • Recover, evacuate, and recharge with specified amount.
Suction (low) pressure abnormally low	Expansion valve is not frosted, and low-pressure line is not cold. Low-pressure gauge indicates vacuum.	• Frozen expansion valve (Moisture in system) • Faulty expansion valve	• Recover, evacuate, and recharge with specified amount. • Replace the expansion valve.
	Discharge temperature is low, and the airflow from vents is restricted.	Frozen evaporator	Run the fan with A/C compressor off, then check evaporator temperature sensor.
	Expansion valve is frosted.	Clogged expansion valve	Clean or replace.
Suction pressure abnormally high	Low-pressure hose and check joint are cooler than the temperature around evaporator.	Expansion valve open too long	Repair or replace.
	Suction pressure is lowered when A/C condenser is cooled by water.	Excessive refrigerant in system	Recover, evacuate, and recharge with specified amount.
	High and low-pressures are equalized as soon as the A/C compressor is stopped, and both gauges fluctuate while running.	• Faulty gasket • Faulty high-pressure valve • Foreign particle stuck in high-pressure valve	Replace the A/C compressor.
Suction and discharge	Reduced airflow through A/C condenser	• Clogged A/C	• Clean.

cardiagn.com

pressures abnormally high		condenser or radiator fins • A/C condenser or radiator fan not working properly	• Check voltage and fan RPM. • Check fan direction.
Suction and discharge pressures abnormally low	Low-pressure hose and metal end areas are cooler than evaporator.	Clogged or kinked low-pressure hose parts	Repair or replace.
	Temperature around expansion valve is too low compared with that around receiver/dryer.	Clogged high-pressure line	Repair or replace.
Refrigerant leaks	A/C compressor clutch is dirty.	A/C compressor shaft seal leaking	Replace the A/C compressor.
	A/C compressor bolt(s) are dirty.	Leaking around bolt(s)	Tighten bolt(s) or replace A/C compressor.
	A/C compressor gasket is wet with oil.	Gasket leaking	Replace the A/C compressor.
	A/C fitting is dirty.	Leaking O-ring	Clean A/C fitting and replace O-ring.

cardiagn.com