Manual Transaxle (M5GF2)

GENERAL

MANUAL TRANSAXLE SYSTEM
- MANUAL TRANSAXLE
- MANUAL TRANSAXLE SHIFT CONTROL SYSTEM

TRANSFER CASE ASSEMBLY
- TRANSFER CASE
- TRANSFER DRIVE GEAR
- HYPOID GEAR
- PINION SHAFT AND CASE
- COUPLING ASSEMBLY

GENERAL

SPECIFICATION ED0183A6

Engine type		μ 2.7
Manual transaxle type		M5GF2
Gear ratio	1st	3.273
	2nd	1.794
	3rd	1.552
	4th	1.176
	5th	0.974
	Reverse	3.416
Final gear ratio		4.333
T/M oil capacity(ℓ)※		1.9 liter (2.0077US qt, 1.6718mp qt)

※ The quantity in the chart above is for the reference. The actual filling quantity of the automatic transaxle fluid must be set according to 'INSPECTION' or 'REPLACEMENT' procedure of the automatic transaxle fluid.

Recommended transaxle oil			SAE75W/85 or API GL-4
Check & Replenishment			Every one year or every 100,000km
Replacement	Private use	Normal use	No service required
		Severe use(※)	Every 100,000 Km
	Business use		

※ Severe use(marked '※') is defined as:

1. Driving on rough road(bumpy road, gravel road, snowy road, unpaved road etc.).
2. Driving on mountain road, ascent/descent.
3. Repetition of short distance driving.
4. More than 50% operation in heavy city traffic during hot weather above 32°C(89.6°F).
5. Police car, Taxi, Commercial type operation or trailer towing, etc.

TIGHTENING TORQUE

Item	Nm	kgf.m	lb-ft
Oil drain plug	30~35	3.0~3.5	21.7~25.3
Oil filler plug	30~35	3.0~3.5	21.7~25.3
Back up lamp switch	30~35	3.0~3.5	21.7~25.3
Control shaft assembly	10~12	1.0~1.2	7.2~8.7
Select lever	43~55	4.3~5.5	31.1~39.8
Shift link assembly	43~55	4.3~5.5	31.1~39.8
Transaxle mounting bracket assembly	65~85	6.5~8.5	47.0~61.5
Transaxle and enging mounting bolt	65~85	6.5~8.5	47.0~61.5

SERVICE STANDARD

Item	Specification [mm(inch)]
Differential end play	0.15T-0.20T (0.0059T~0.0079T)
Input shaft end play	0.05T-0 (0.0020T~0)
1st output shaft end play	0.05T-0.10T (0.0020T~0.0039T)
2nd output shaft end play	0.05T-0.10T (0.0020T~0.0039T)
1st gear end play	0.135T-0.435T (0.0053T~0.0171T)
2nd gear end play	0.230T-0.430T (0.0091T~0.0169T)
3rd gear end play	0.142T-0.472T (0.0056T~0.0186T)
4th gear end play	0.230T-0.430T (0.0091T~0.0169T)
5th gear end play	0.125T-0.305T (0.0049T~0.0120T)
Reverse gear end play	0.135T-0.345T (0.0053T~0.0136T)

LUBRICANTS E71A8BF7

Item	Lubricant	Quantity
Transaxle input shaft splin	CASMOLY L9508	0.2 gr.
Transaxle case gasket	LOCTITE 587	As required
Concentric slave cylinder assembly	KLUBER 9R100	As reguired

SPECIL TOOLS E43B86CA

Item (Number & Name)	Illustration	Use
09452-21200 Oil seal installer	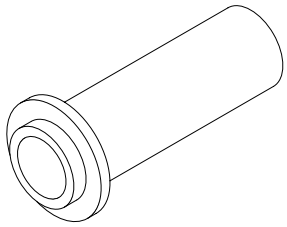 AMJF002A	Oil seal installation
09200-38001 Engine supporting fisture	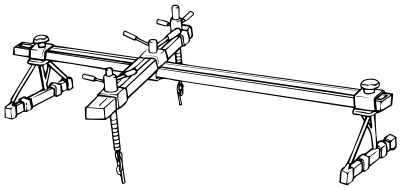 AMJF002B	Removal and installation of transaxle
09455-32200 Oil seal puller	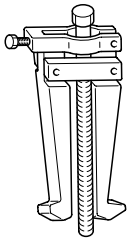 UMQG010A	Removal of oil seal
09455-21000 Bearing & gear puller	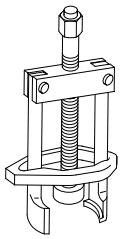 UMQG010B	Removal of taper roller bearing
09432-33200 Plate	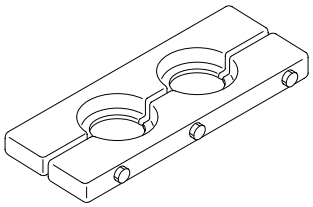 D3233200	Removal of oil seal

Item (Number & Name)	Illustration	Use
09478-26100 Backing plate remover	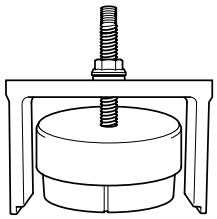 EKJD506Z	Removal of 4WD coupling backing plate
09478-26000 Flange oil seal installer	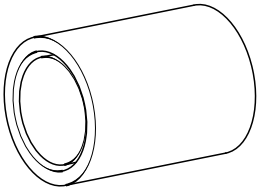 EKJA006A	Installation of 4WD coupling flange oil seal

MANUAL TRANSAXLE SYSTEM

SERVICE ADJUSTMENT PROCEDURE EC3FEB20

TRANSMISSION OIL INSPECTION AND REPLACEMENT

1. After parking the vehicle on a plain, stop the engine.
2. After removing the oil filler plug and washer, inspect the manual transaxle fluid condition and quantity.
3. If the manual transaxle fluid is contaminated, drain it out by removing the oil drain plug.
4. Tighten the new oil drain plug and feed manual transaxle fluid to a proper level.

TORQUE:
29.4~34.4 Nm(3.0~3.5kgf.m, 21.7~25.3lb-ft)
Oil type: SAE75W/85
Oil quantity:
1.9 liter(2.0077 US qt, 1.6718 lmp qt)

5. Retighten the oil filler plug with a new washer.

TORQUE:
29.4~34.4 Nm(3.0~3.5kgf.m, 21.7~25.3lb-ft)

BACK UP LAMP SWITCH INSPECTION

1. Disconnect the back up lamp switch connector(A).

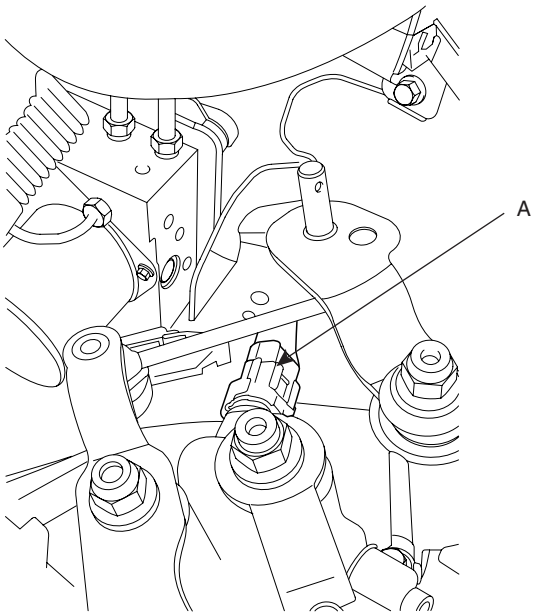

KMRE009E

2. Inspect the continuity of the switch. When the shift lever is located in reverse range, it should be applied an electric current.
3. Replace the back up lamp switch, if necessary.

TORQUE:
29.4~34.4 Nm(3.0~3.5kgf.m, 21.7~25.3lb-ft)

MANUAL TRANSAXLE

COMPONENTS E3ECD674

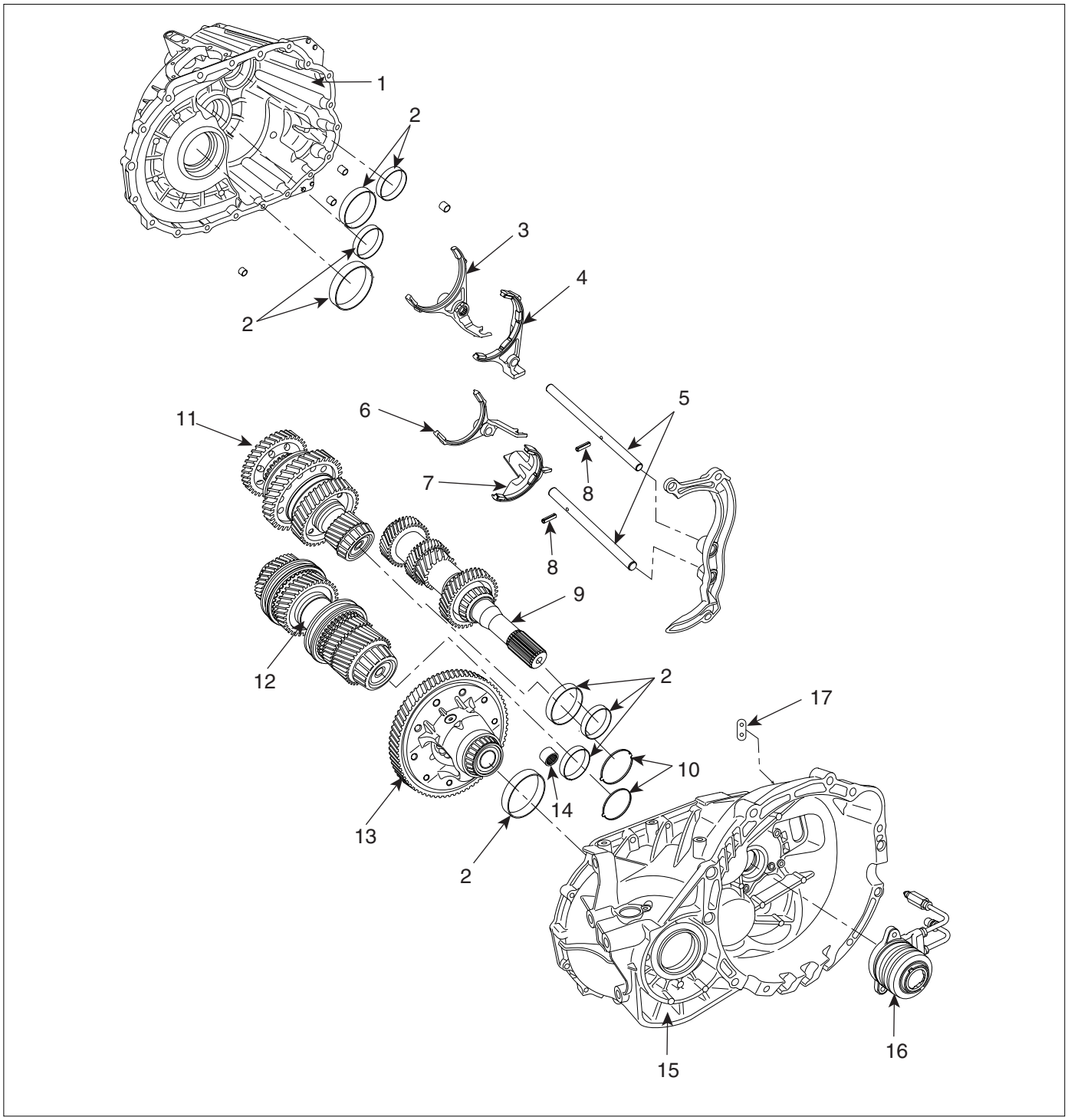

1. Transaxle case
2. Taper roller bearing outer race
3. 1st/2nd shift fork
4. Reverse shift fork
5. Shift rail
6. 3rd/4th shift fork
7. 5th/6th shift fork
8. Spring pin
9. Input shaft
10. Oil guide
11. 1st output shaft
12. 2nd output shaft
13. Differential assembly
14. Needle bearing
15. Clutch housing
16. Concentric slave cylinder assembly
17. Boot

EMRE006A

REMOVAL E1C16812

CAUTION

- ***Use a cover not to damage the vehicle surface.***
- ***Disconnect connectors carefully not to be damaged.***

NOTE

- *Mark wires or hoses for identification not to be confused.*

1. Remove the inter cooler assembly and the engine cover.(See 'EM' group).

2. Remove the battery (A).

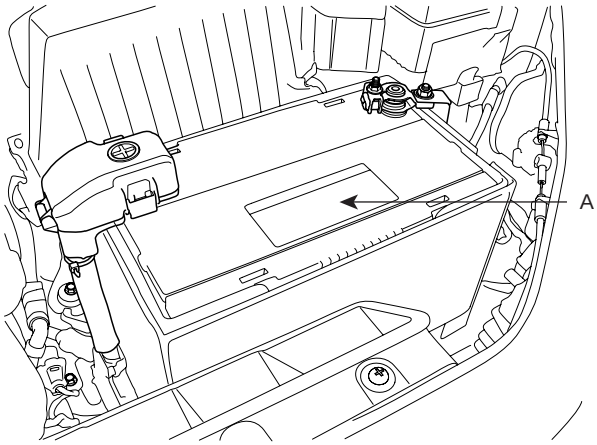

SCMMT6001D

3. Disconnect the AFS connector (A).

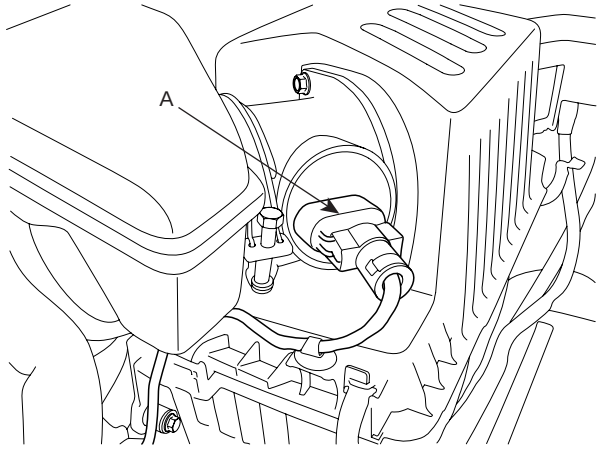

SCMMT6001L

4. Remove the air cleaner hose(B) and loosen the clamp bolt(A).

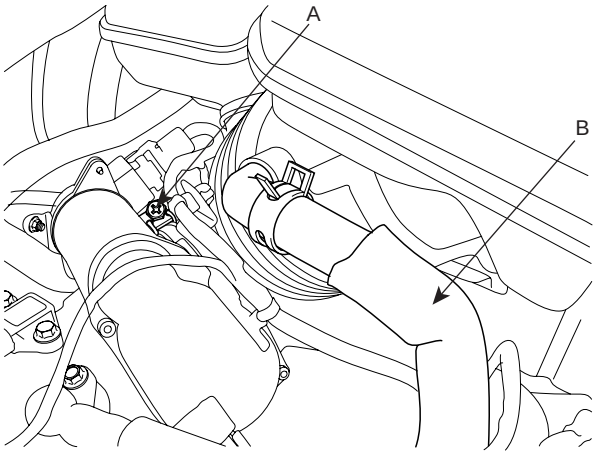

SCMMT6017L

5. Remove the air cleaner upper cover(B) by removing the clips(A).

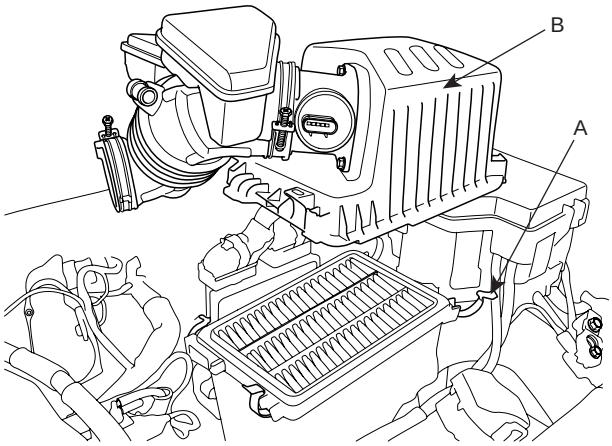

SCMAT6004D

6. Remove the air cleaner assembly (B) by removing the two mounting bolts(A).

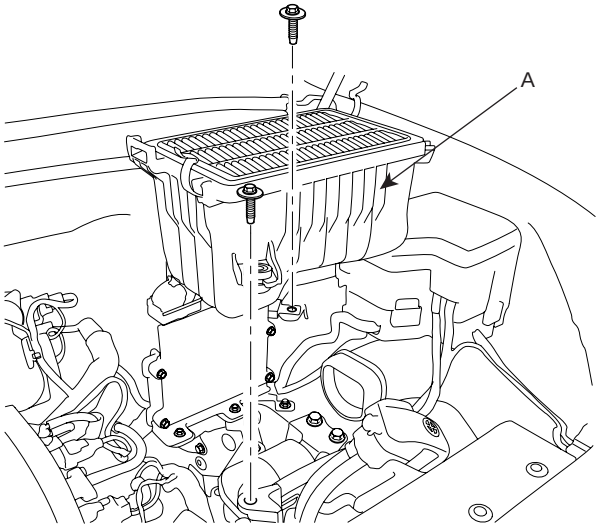

SCMAT6005D

7. Remove the battery tray (B) by removing the four mounting bolts (A).

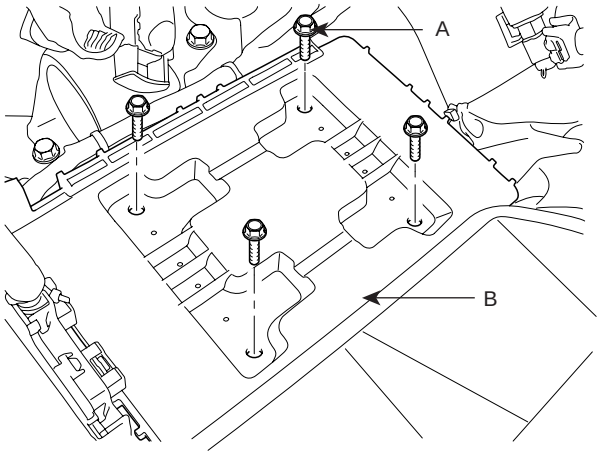

SCMMT6005D

8. Remove the ground wire (A) from the transaxle case.

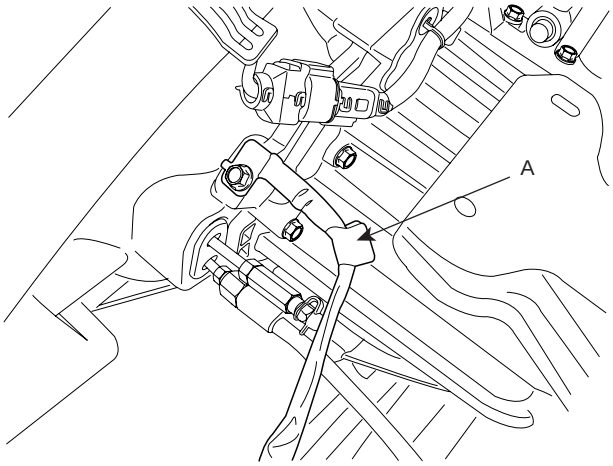

SCMMT6003L

9. Disconnect the vehicle speed sensor connector (A) and the back up lamp switch(B).

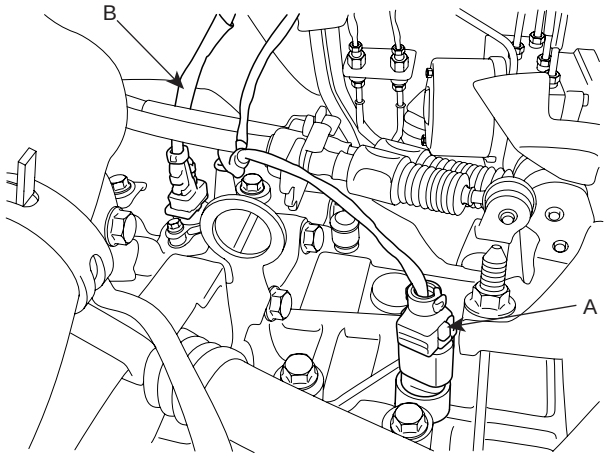

AMLF012A

10. Remove the control cable assemblies(A) by removing the snap pins(B) and clips(C).

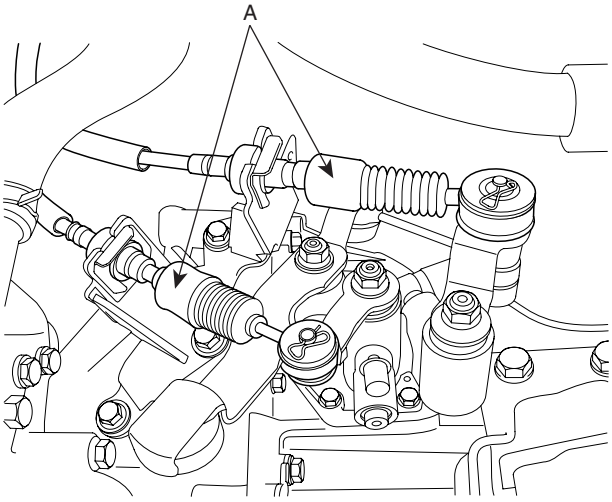

KMRE009D

11. Remove C.S.C (Concentric Slave Cylinder) tube(A) which is being clamped by loosening the nut(B).

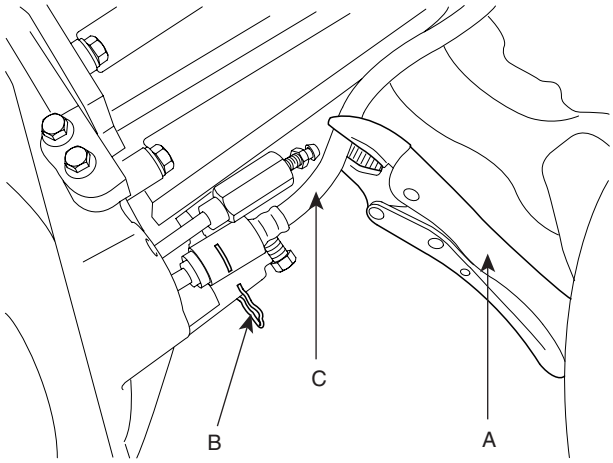

KMRE009F

12. Remove the four mounting bolts of upper part of the transaxle.

13. Support the engine and transaxle by using the special tool (09200-38001).

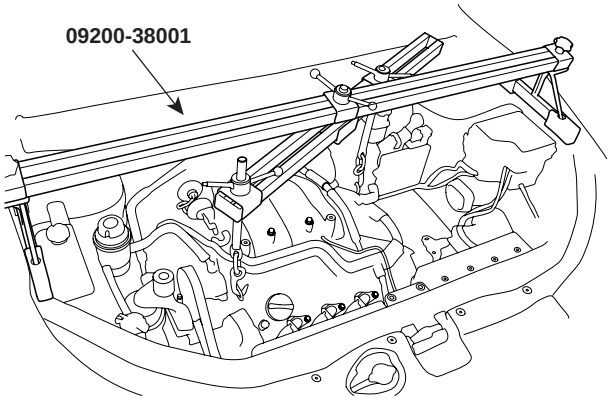

SCMMT6004L

14. Remove the transaxle insulator bracket (B) by removing the bolts (A).

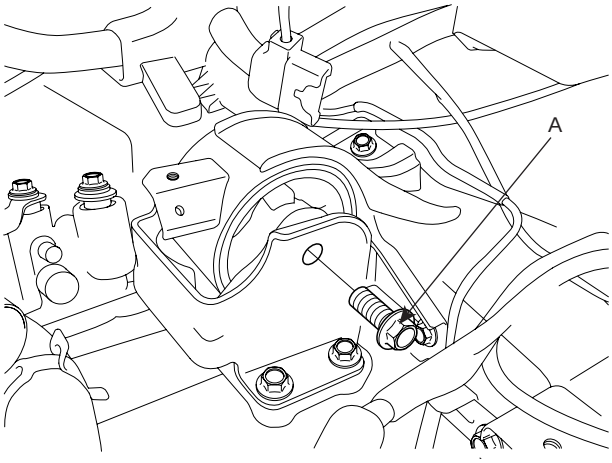

KMRE009W

15. Remove the front wheels and tires. (see SS group)

16. Lift up the vehicle.

17. Remove the steering column joint bolt. (see ST group).

18. Remove the under cover(A).

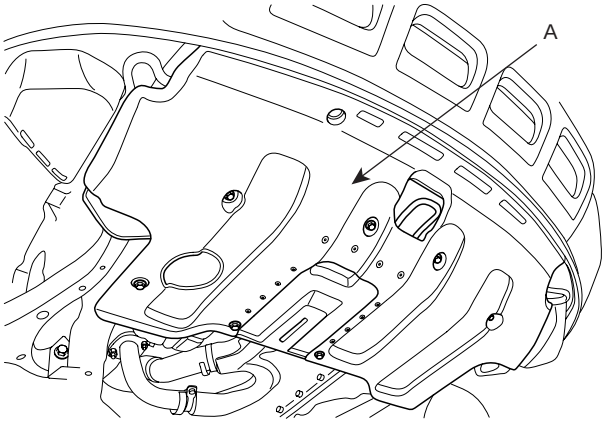

SCMMT6026L

19. Drain power steering oil through the return tube. (see ST group)

20. Disconnect the power steering pressure hose (A) from the power steering oil pump.

21. Drain the tranaxle fluid through the drain plug.

22. Disconnect the lower arm, the tie rod end ball joint, the stabilizer bar link from the front knuckle. (see SS group)

23. Remove the roll stopper mounting bolts.

24. Remove the mounting bolts from the sub frame by supporting the sub frame with a jack. (see SS group)

25. Remove the drive shafts from the transaxle. (see DS group)

26. Disconnect the starter motor connector and remove the starter motor. (see EE group)

27. In case of 4WD, remove the transfer case assembly.(See 'Transfer case' removal).

28. Remove the mounting bolts of lower part of the transaxle, and the left side cover and remove the transaxle assembly by supporting it with a jack.

INSTALLATION E3C9C32E

Installation is in the reverse order of removal.
Perform the following :

- Adjust the shift cable.
- Refill the transaxle with fluid.
- Refill the radiator with engine coolant.
- Bleed air from the cooling system with the heater valve open.
- Clean the battery posts and cable terminals with sandpaper, assemble them, and apply grease to prevent corrosion.

1. Lowering the vehicle or lifting up a jack, install the transaxle assembly.

2. Tighten the transaxle under mounting bolts.

TORQUE:
65~85 Nm(6.5~8.5 kgf.m, 47.0~61.5 lb-ft)

3. Install the starter motor and connect the starter motor connector. (see EE group)

4. In case of 4WD, install the transfer case assembly.(See 'Transfer case' installation)

5. Install the drive shafts to the transaxle. (See "DS" group)

6. Install the transaxle insulator (B) and mounting bracket (C) by tightening the bolts (A).

TORQUE:
60~80 Nm (6~8 kgf.m, 43.6~58.2 lb-ft)

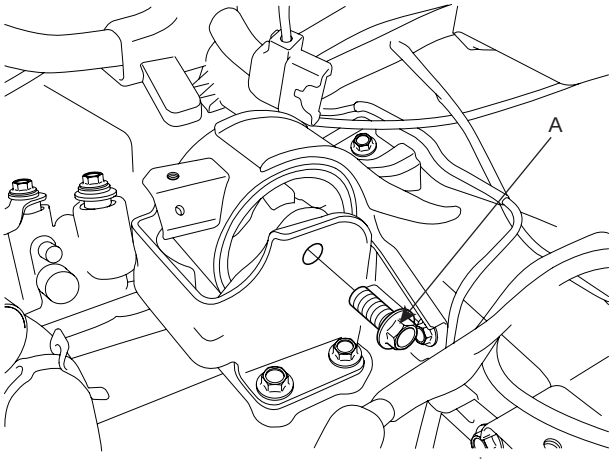

KMRE009W

7. Install the sub frame. (see SS group)

TORQUE:
60~80 Nm(6.0~8.0 kgf.m, 65.1~79.5 lb-ft)

8. Connect the power steering return hose. (see ST group)

9. Connect the lower arm, the rod end ball joint, the stabilizer bar link to the front knuckle.(see SS group)

10. Install the steering column joint bolt.(See ST group).

11. Install the C.S.C (Cincentric Slave Cylinder) tube(A) by tightening the nut(B).

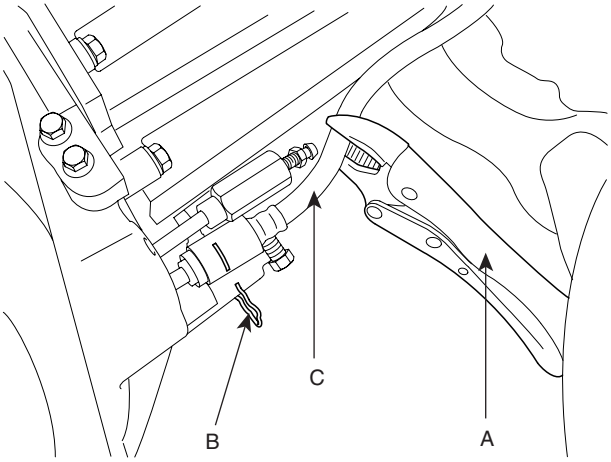

KMRE009F

12. Refill transaxle oil through the inlet hole(A).

TORQUE:
30~35 Nm(3.0~3.5 kgf.m, 21.8~25.4 lb-ft)

13. Install the under cover(A).

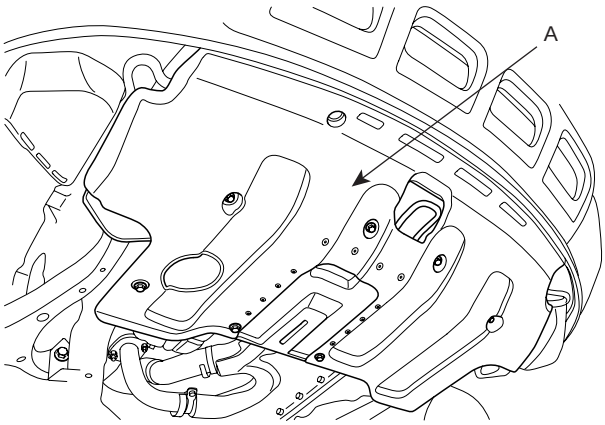

SCMMT6026L

14. Install the front wheels and tires. (see SS group)

15. Tighten the transaxle mounting bolts and remove the SST (09200-38001) holding the engine and transaxle assembly.

TORQUE:
65~85Nm(6.5~8.5kgf.m, 47.0~61.5 lb-ft)

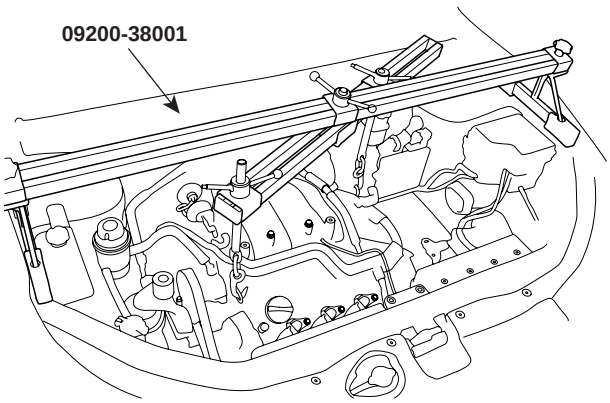

SCMMT6005L

16. Connect the power steering pressure hose (A) to the power steering oil pump.

17. Install the control cable assemblies(A) by tightening the clips (C) and snap pins (B).

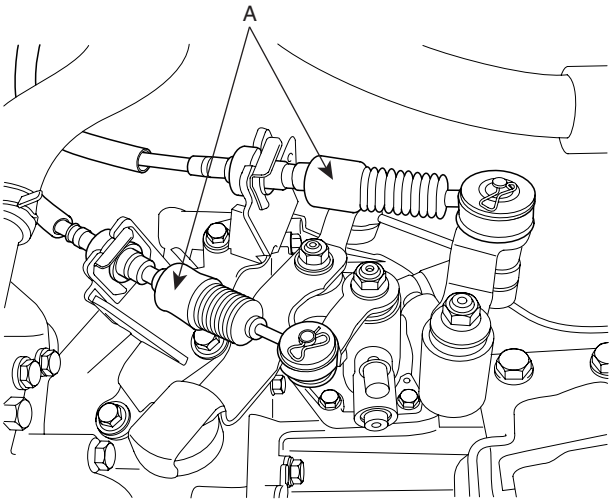

KMRE009D

18. Install the vehicle speed sensor connector (A).

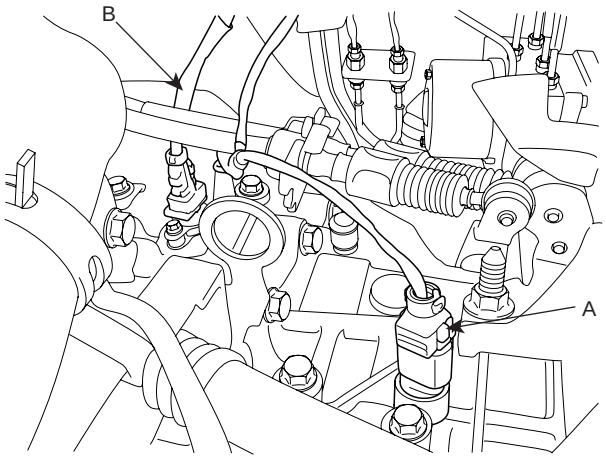

AMLF012A

19. Install the ground wire (A) from the transaxle case.

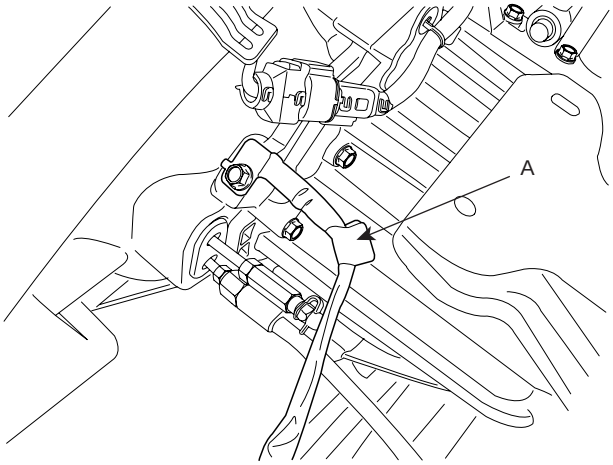

SCMMT6003L

20. Install the battery tray (B) by removing the four mounting bolts (A).

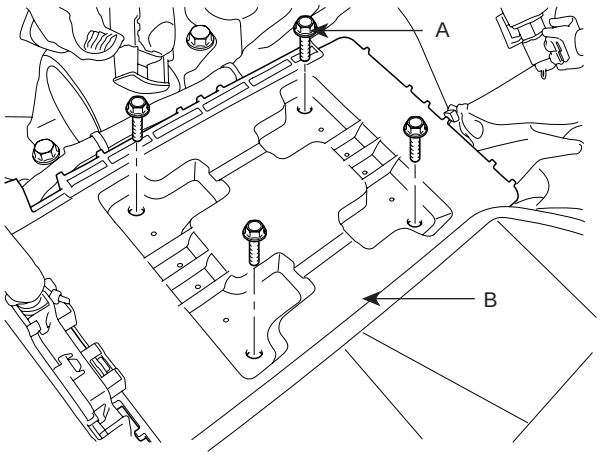

SCMMT6005D

21. Install the air cleaner assembly (B) by tightening the two mounting bolts(A).

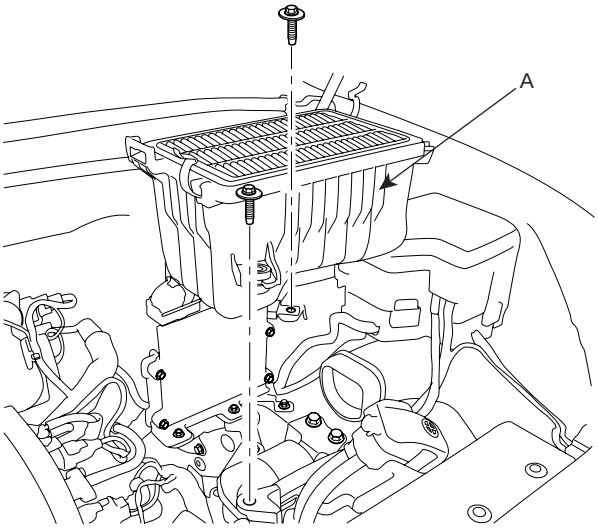

SCMAT6005D

22. Install the air cleaner upper cover (A).

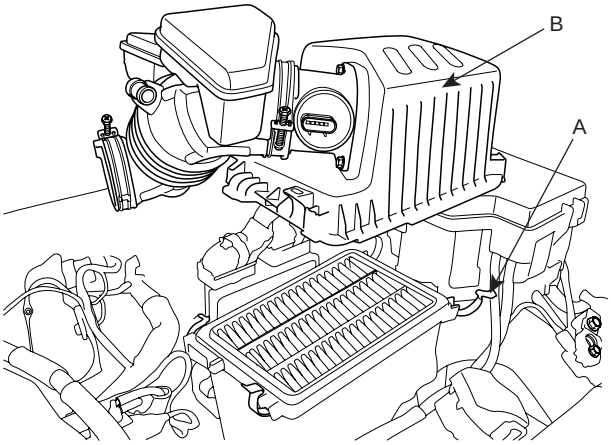

SCMAT6004D

23. Install the air cleaner hose(B) and tighten the clamp bolt(A).

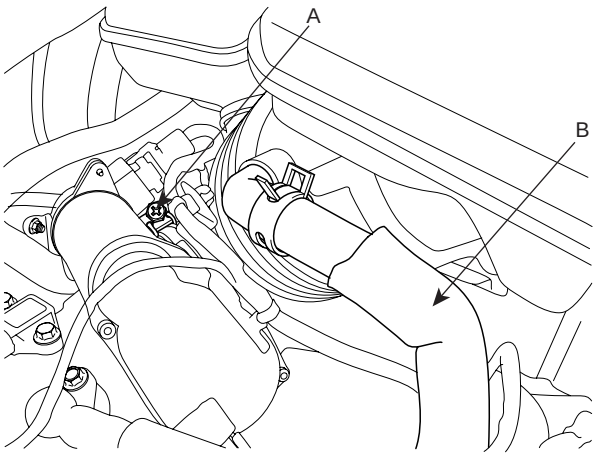

SCMMT6020L

24. Connect the AFS connector (A).

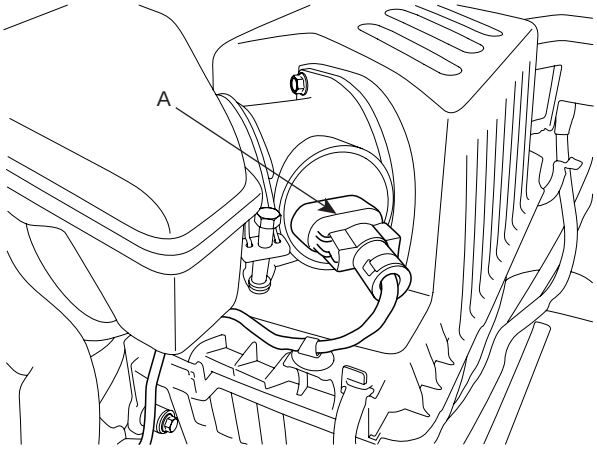

SCMMT6009L

25. Install the battery (A).

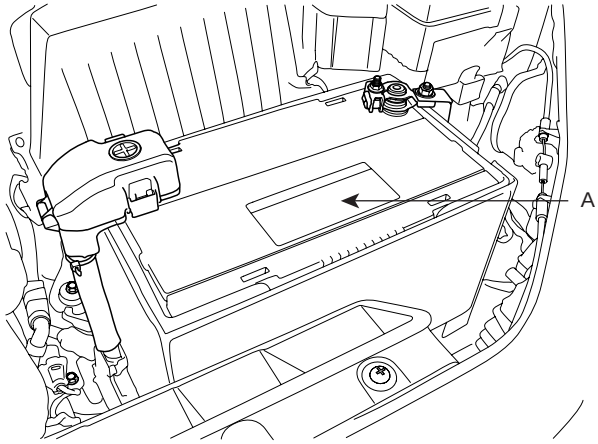

SCMMT6001D

26. Refill the power steering fluid.(See 'ST' group)

CAUTION

Bleed air in the system, after installing the inter cooler assembly and the engine cover.

27. Install the engine cover and the inter cooler assembly.(See 'EM' group)

MANUAL TRANSAXLE SHIFT CONTROL SYSTEM

COMPONENTS(1) E154A40E

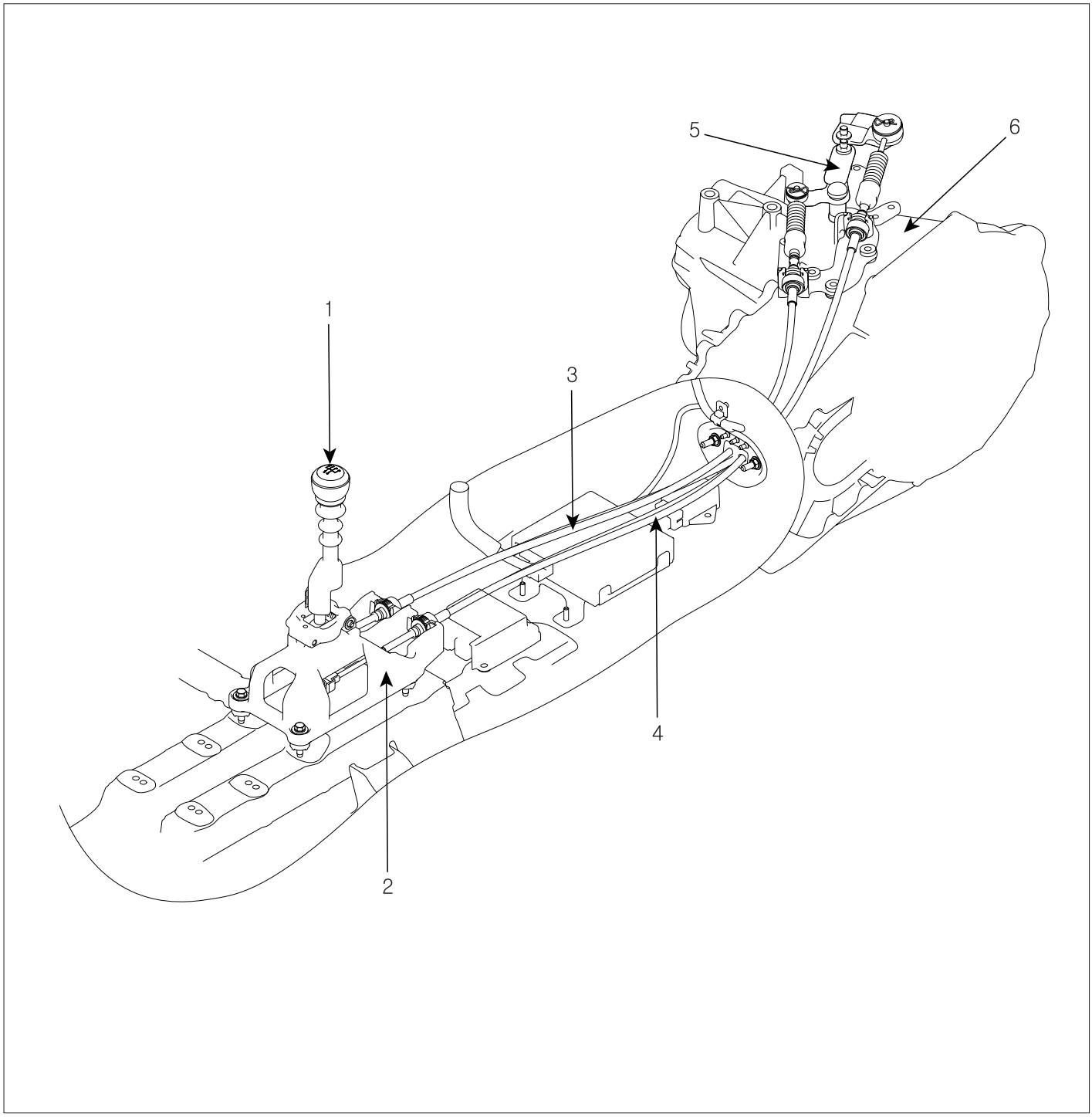

1. Shift lever knob
2. Shift lever assembly
3. Select cable assembly
4. Shift cable assembly
5. Shift lever assembly(MT side)
6. Manual transaxle assembly

SCMMT6600L

COMPONENTS(2)

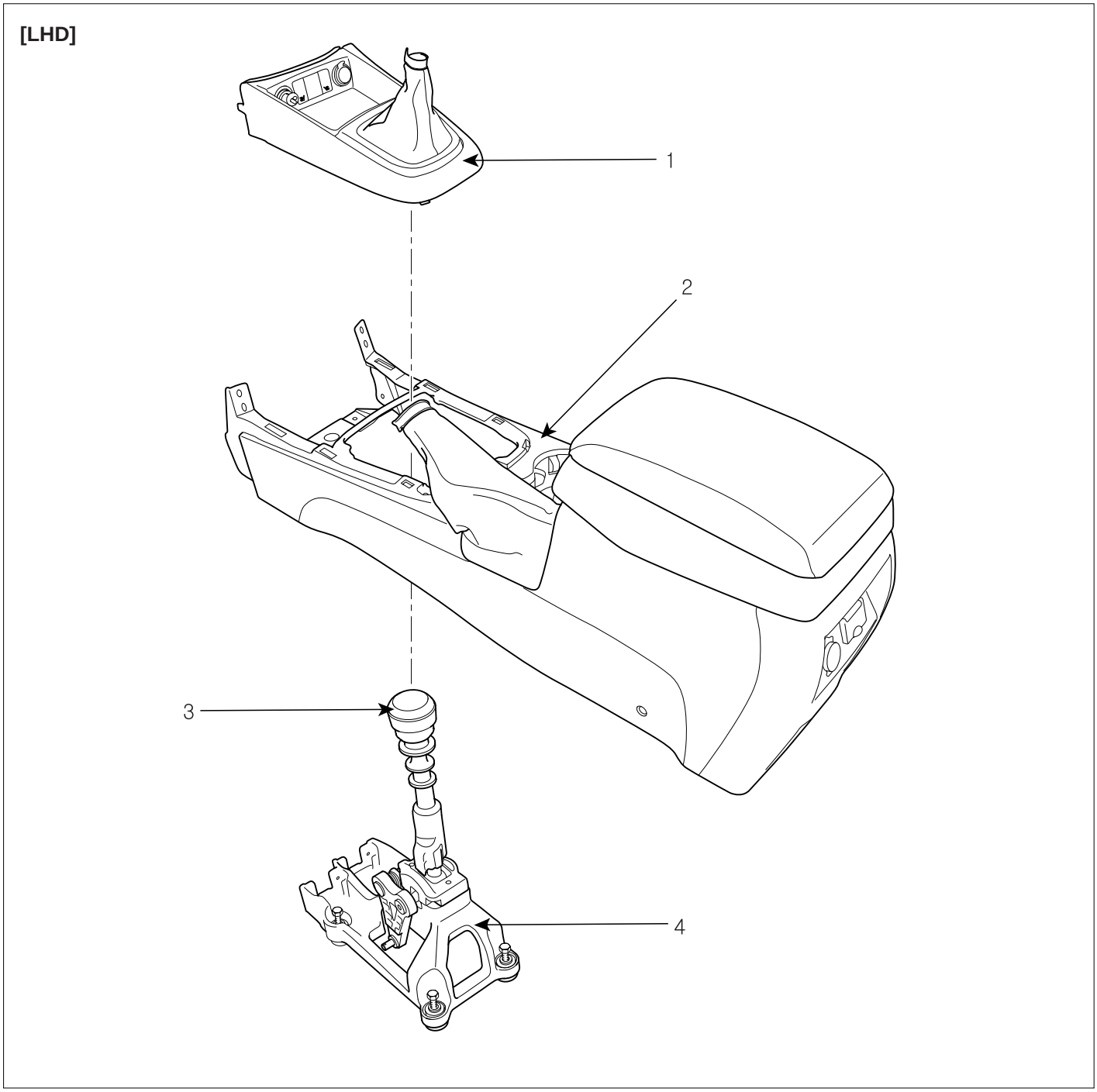

1. Console upper cover
2. Center console
3. Shift lever knob
4. Shift lever assembly

SCMMT6601L

[RHD]

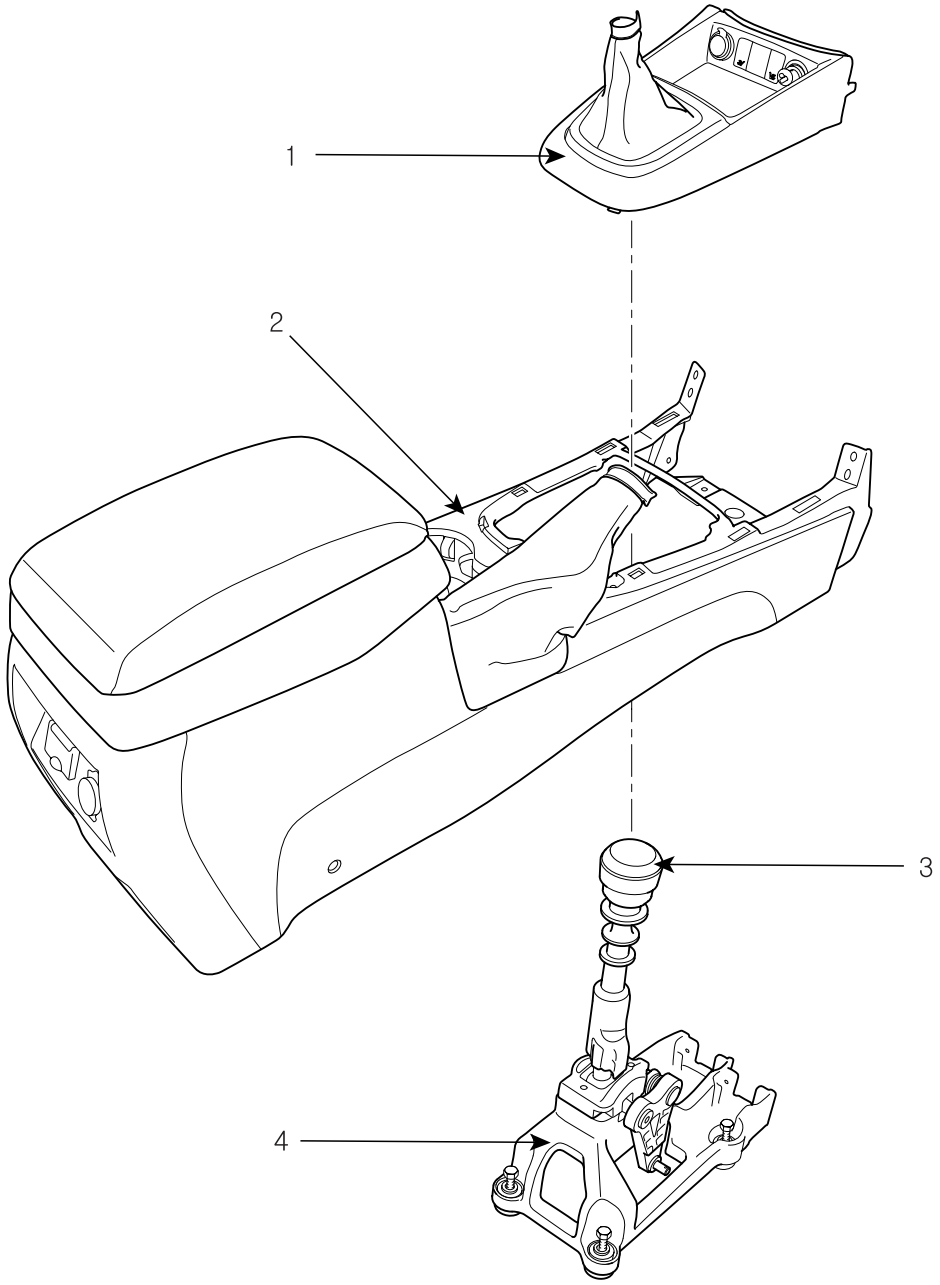

1. Console upper cover
2. Center console
3. Shift lever knob
4. Shift lever assembly

SCMMT6602L

REMOVAL E2DD20BB

1. Remove the upper cover(A) from the center console.
   [LHD]

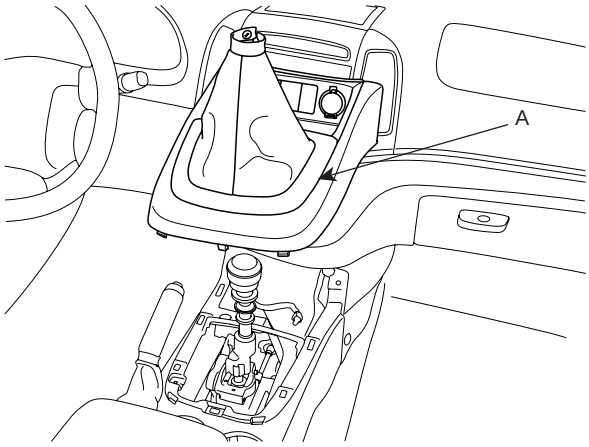

SCMMT6028D

   [RHD]

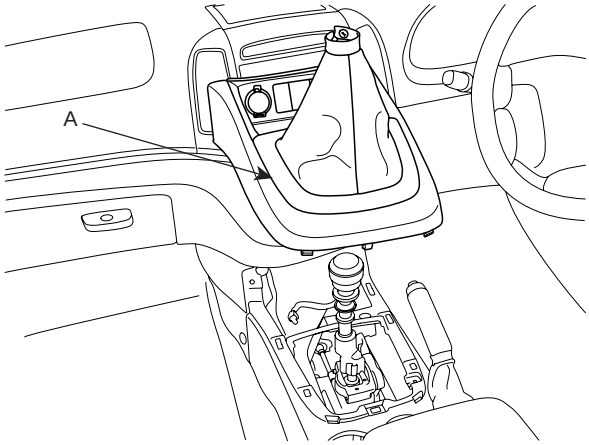

SCMMT6028R

2. Remove the center console.(see BD group)
   [LHD]

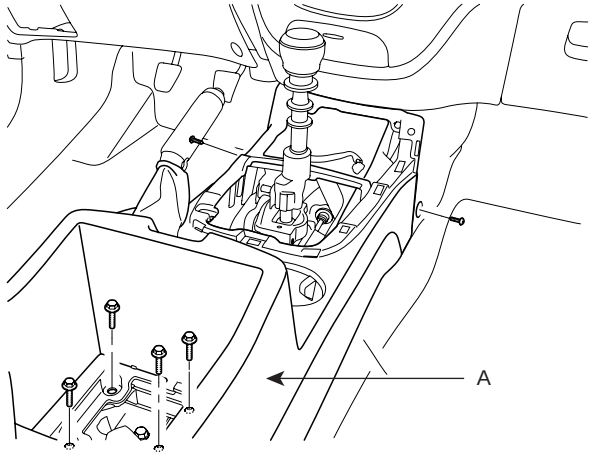

SCMMT6029D

   [RHD]

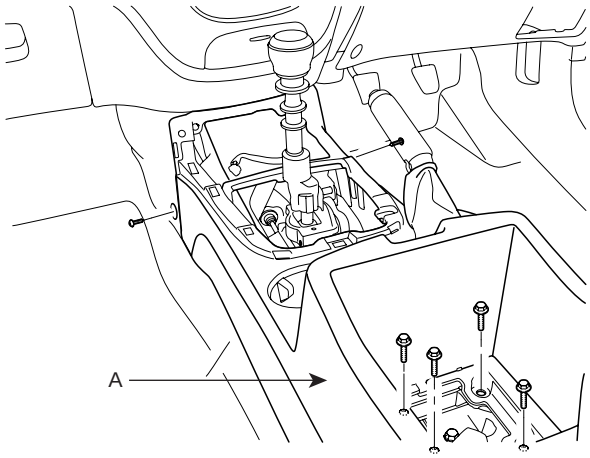

SCMMT6029R

3. Remove the snap pin(A) from the select cable and the clips(B).

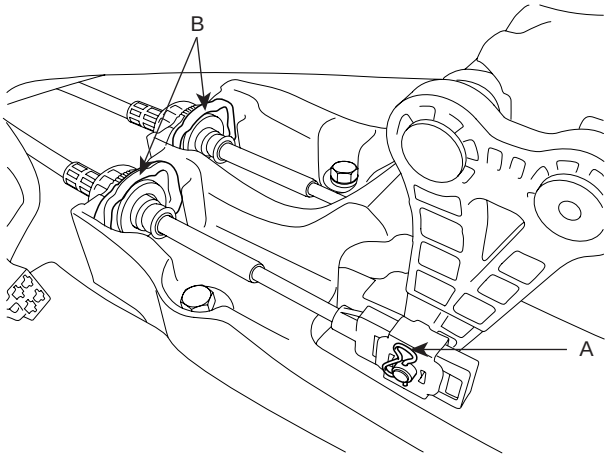

SCMMT6030D

4. Remove the clip(A) from the shift cable.

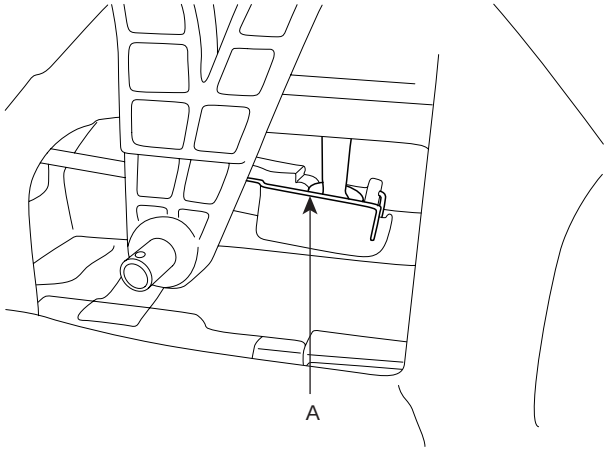

SCMMT6031D

5. Remove the shift lever assembly(A).

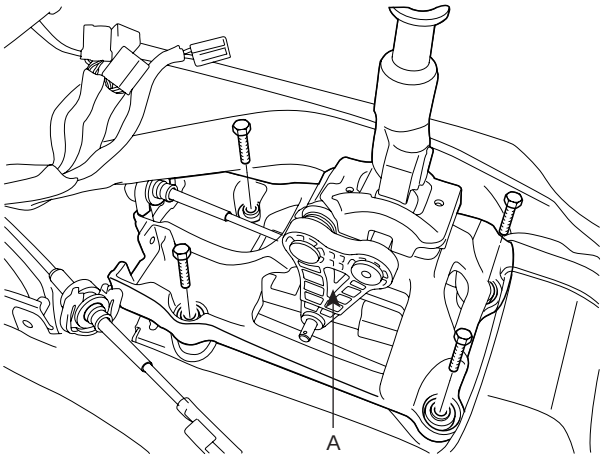

SCMMT6032D

6. Remove the retainer(A) and the nuts(B).

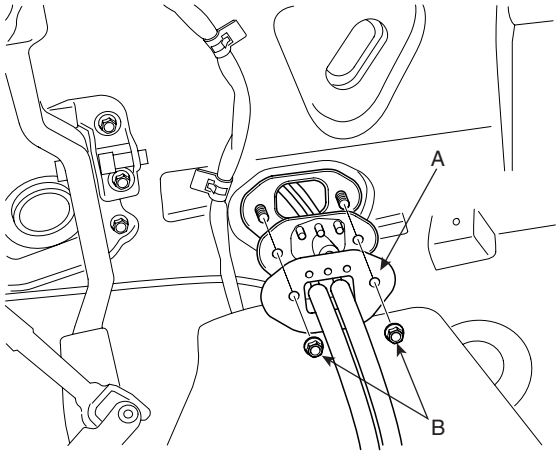

AMJF500A

7. Remove the cable assembly from the transaxle.(see Transaxle removal)

8. Remove the select and shift cable assemblies.

INSPECTION E9EE6C5E

1. Check the select cable for proper operation and for damage.

2. Check the shift cable for proper operation and for damage.

3. Check the boots for damage.

4. Check the boots for wear abrasion sticking, restricted movement or damage.

5. Check for the weak or damaged spring.

INSTALLATION E4EF81B3

1. Install the cable assembly placing the select and shift lever in neutral position.(see to Transaxle installation)

2. Install the retainer(A) and nuts(B).

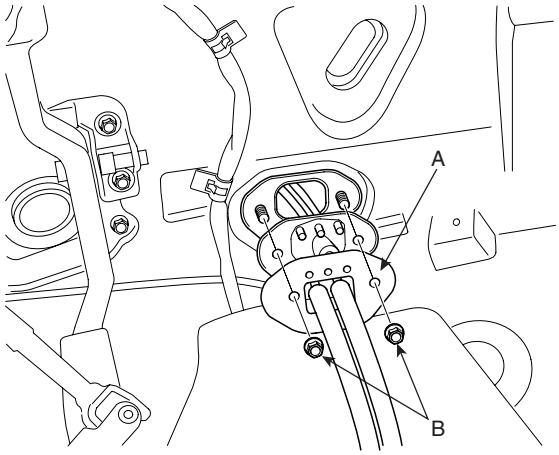

AMJF500A

3. Install the shift lever assembly(A).

TORQUE : 9~14Nm(0.9~1.4kgf.m, 6~9.5Ib-ft)

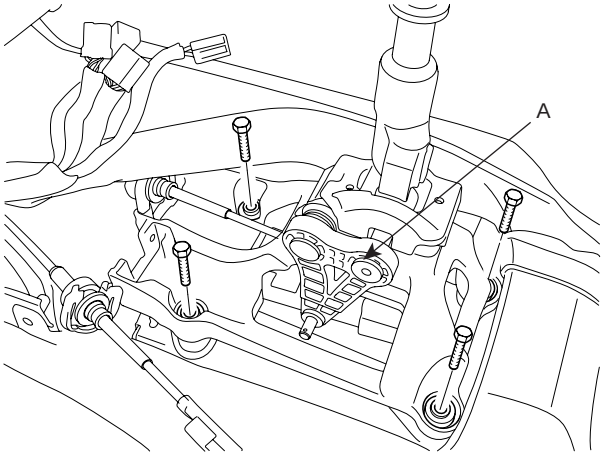

SCMMT6061D

4. Install the clip(A) connecting the shift cable and the shift lever.

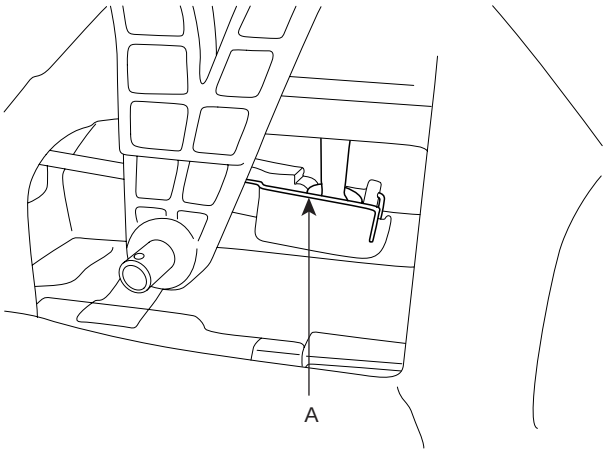

SCMMT6031D

5. Move the slide clip(B) of guide member(A) in the direction as shown in the illustration.

NOTE

Adjust the slide clip fit into the select lever moving the slide clip in the direction.

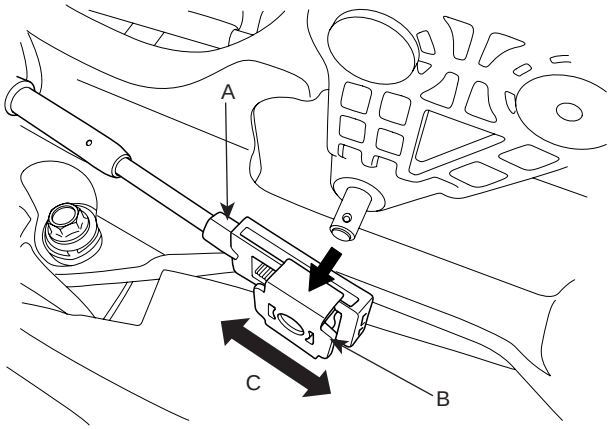

AMLF005A

6. Install the guide member(A) of the select cable(B).

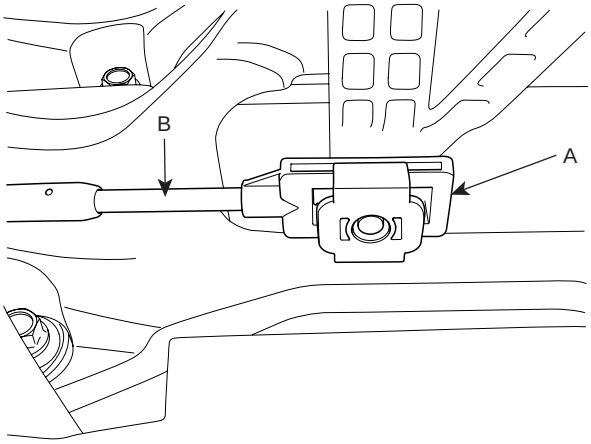

AMLF006A

7. Adjust the slide clip(B) to fit it into the select lever pin(A) and install the snap pin(C).

NOTE

Insert the slide clip in the direction as shown in the illustration.

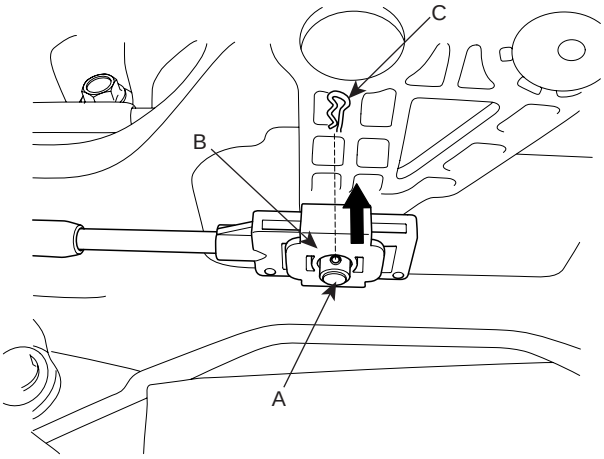

AMLF007A

8. Install the center console(A).
   [LHD]

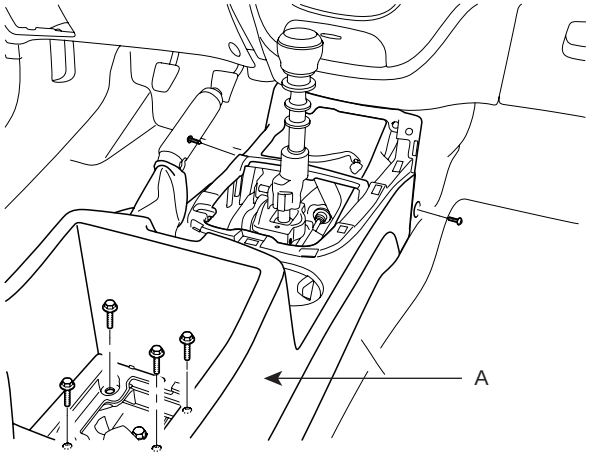

SCMMT6029D

[RHD]

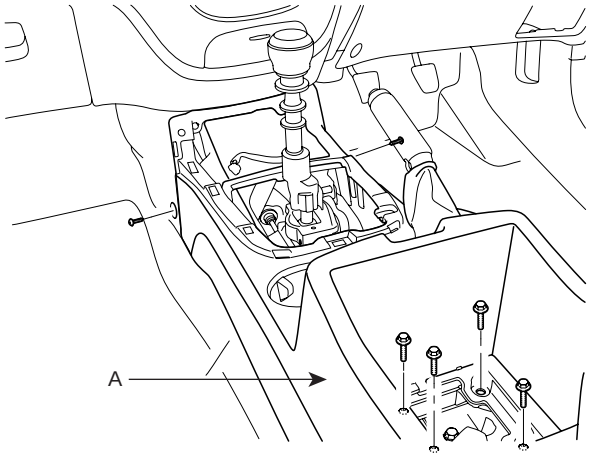

SCMMT6029R

9. Install the upper cover(A) to the center conole.
   [LHD]

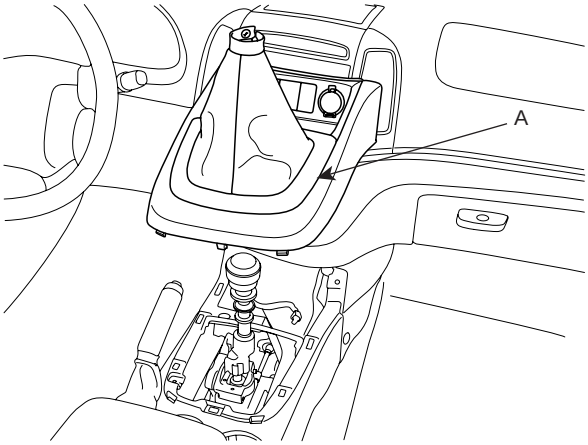

SCMMT6028D

[RHD]

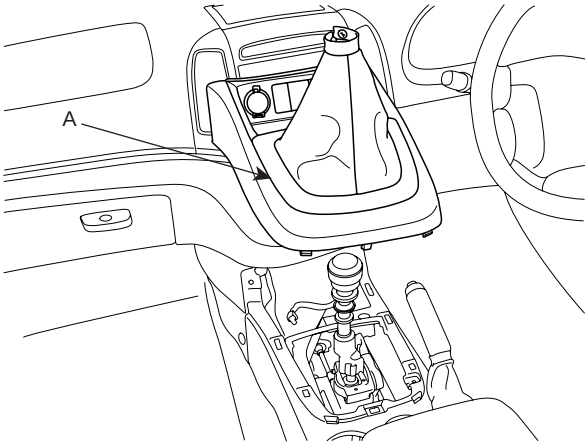

SCMMT6028R

TRANSFER CASE ASSEMBLY

POWER FLOW MECHANISM E2A1A036

- Normal driving situation: 2WD base driving
- 4WD driving in driving situations (rapid activation, cornering etc.)

1. Input the information from each sensor in vehicle
   - Input torque (Throttle position sensor)
   - Cornering situation (Steering angle sensor)
   - Vehicle speed and different wheel speed front & rear (Wheel speed sensor)
   - Braking situation (Brake signal and ABS signal)
2. Distributed the required driving force after 4WD ECU operates.
3. EMC (Electric Magnetic Clutch) operates the primary clutch.

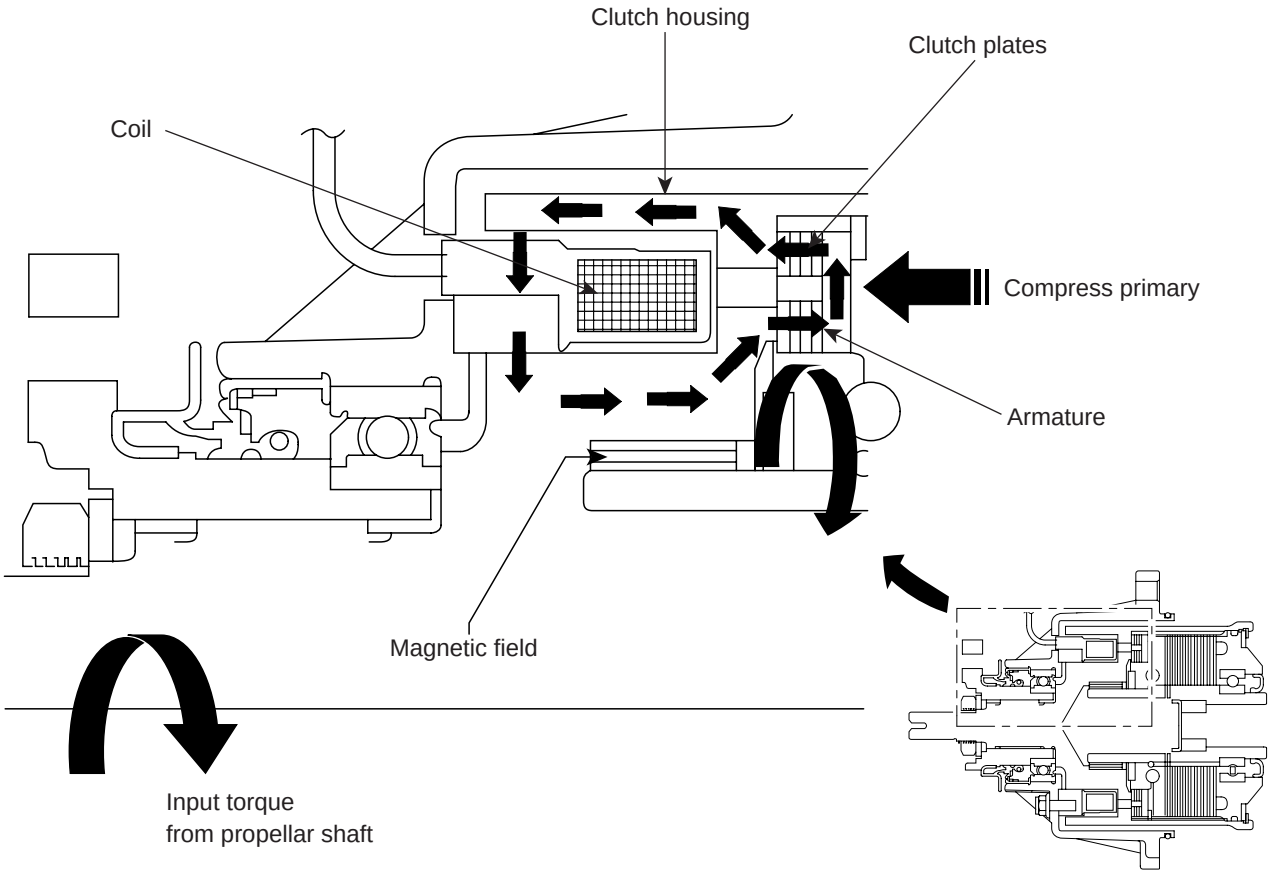

EKQE003C

4. Control the cam's opening gap by operation of primary clutch.

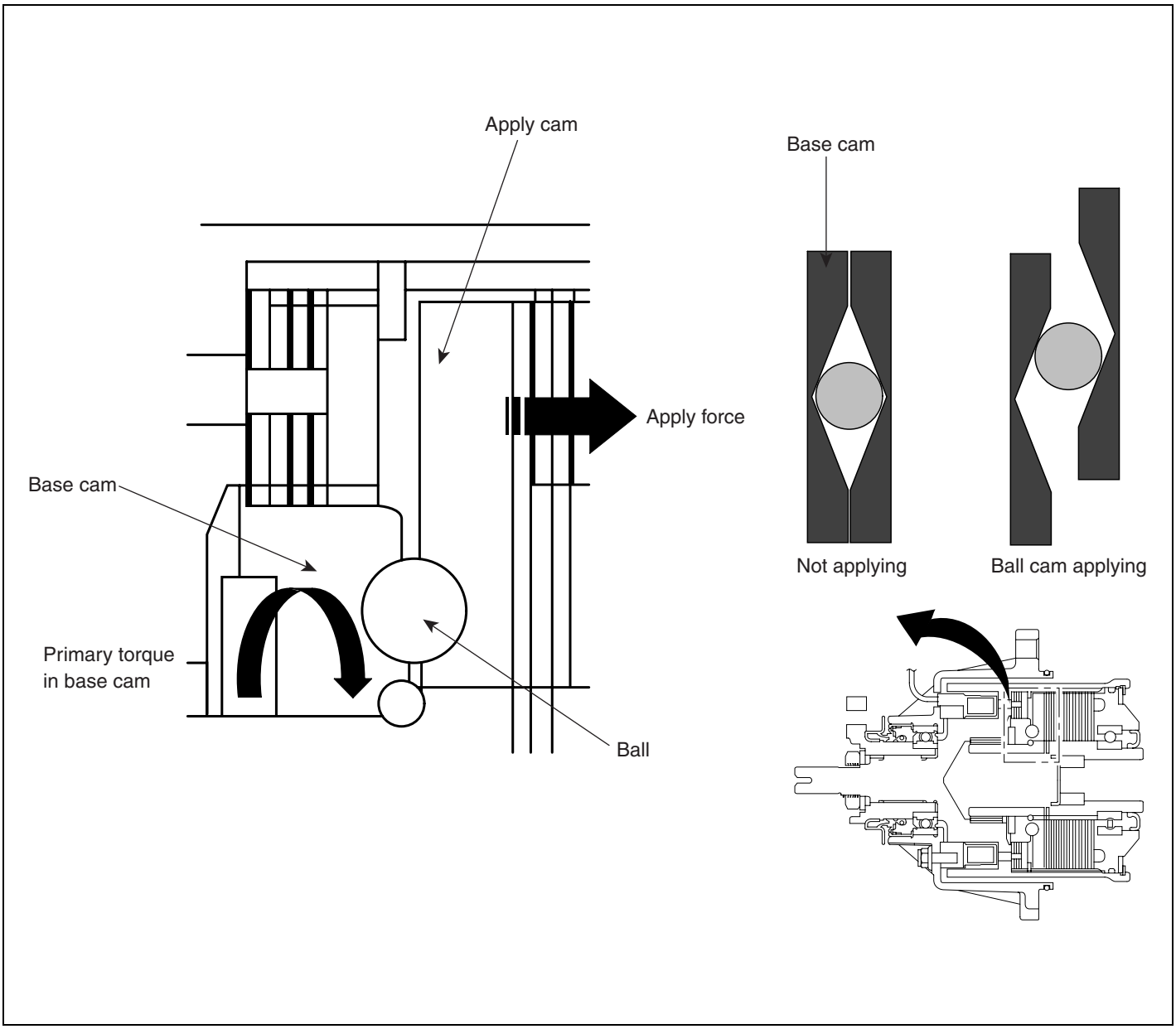

EKQE004C

5. Control the slip of inner & outer plate.
   Control variably the driving force distribution to optimize front & rear driving force.

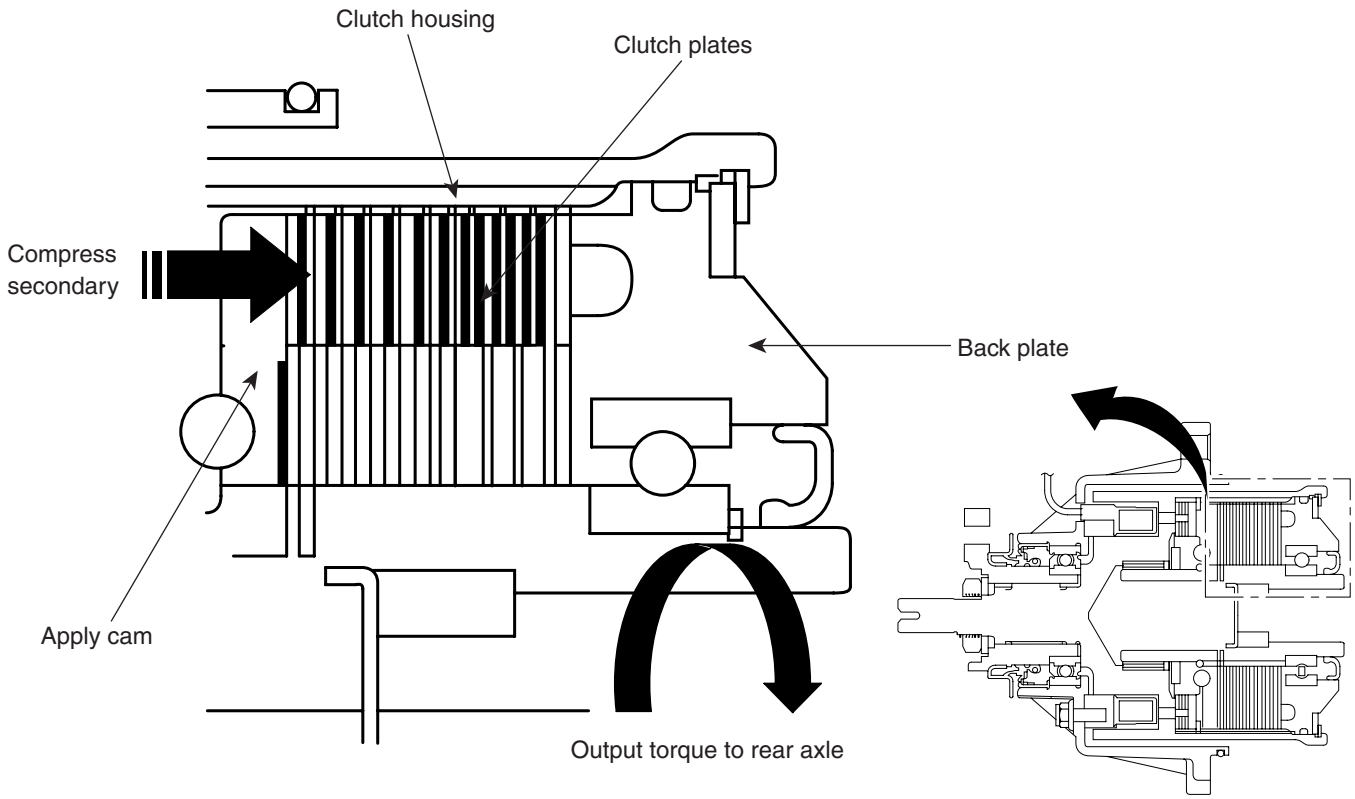

EKQE005C

SYSTEM SCHEMATICS E3DEDDB2

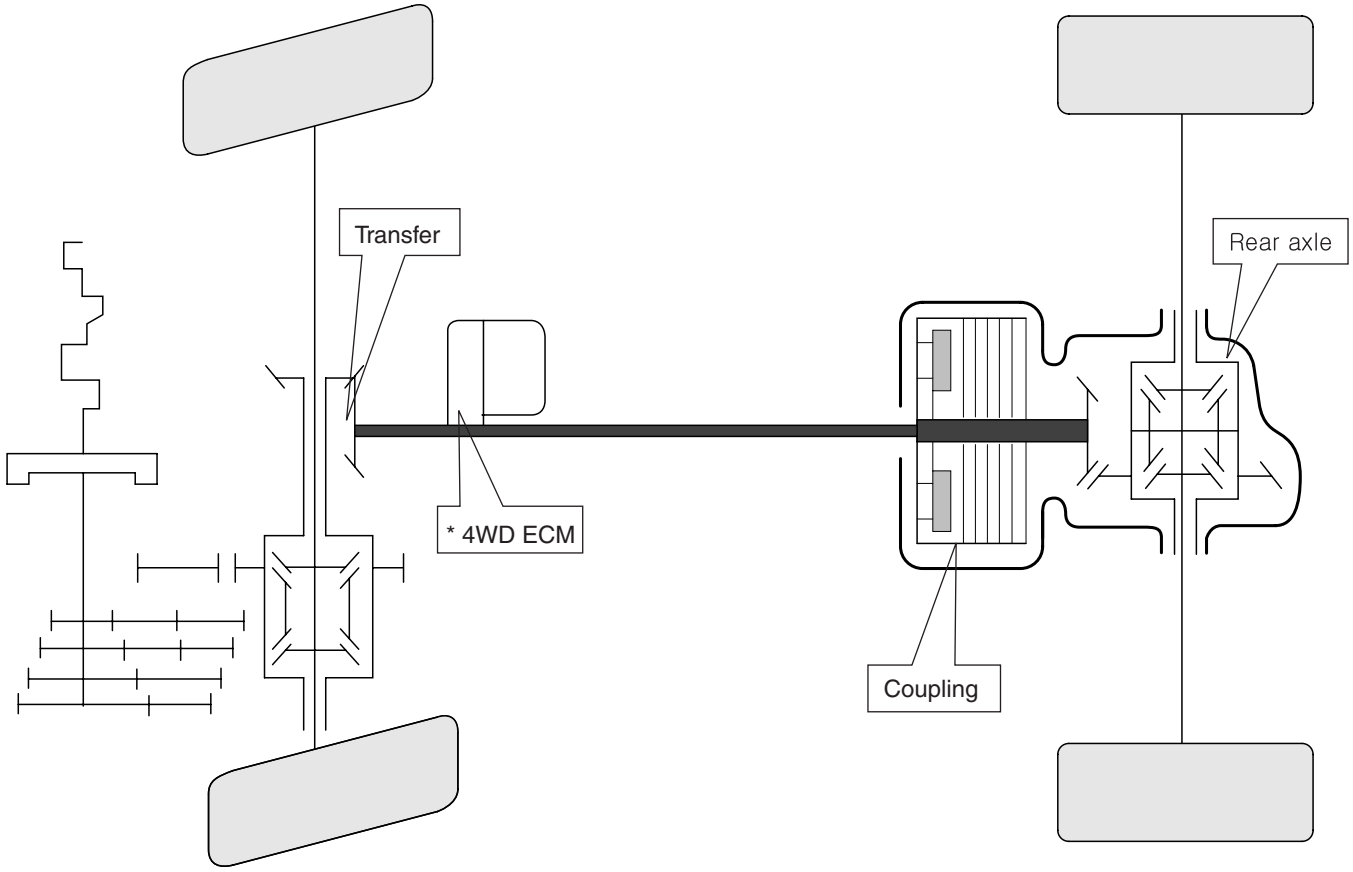

* 4WD ECM is located under a select lever bracket

EKQE001C

CONTROL ALGORITHM FLOW CHART

The base control algorithm of the ITM ECM is defined by the following flowchart:

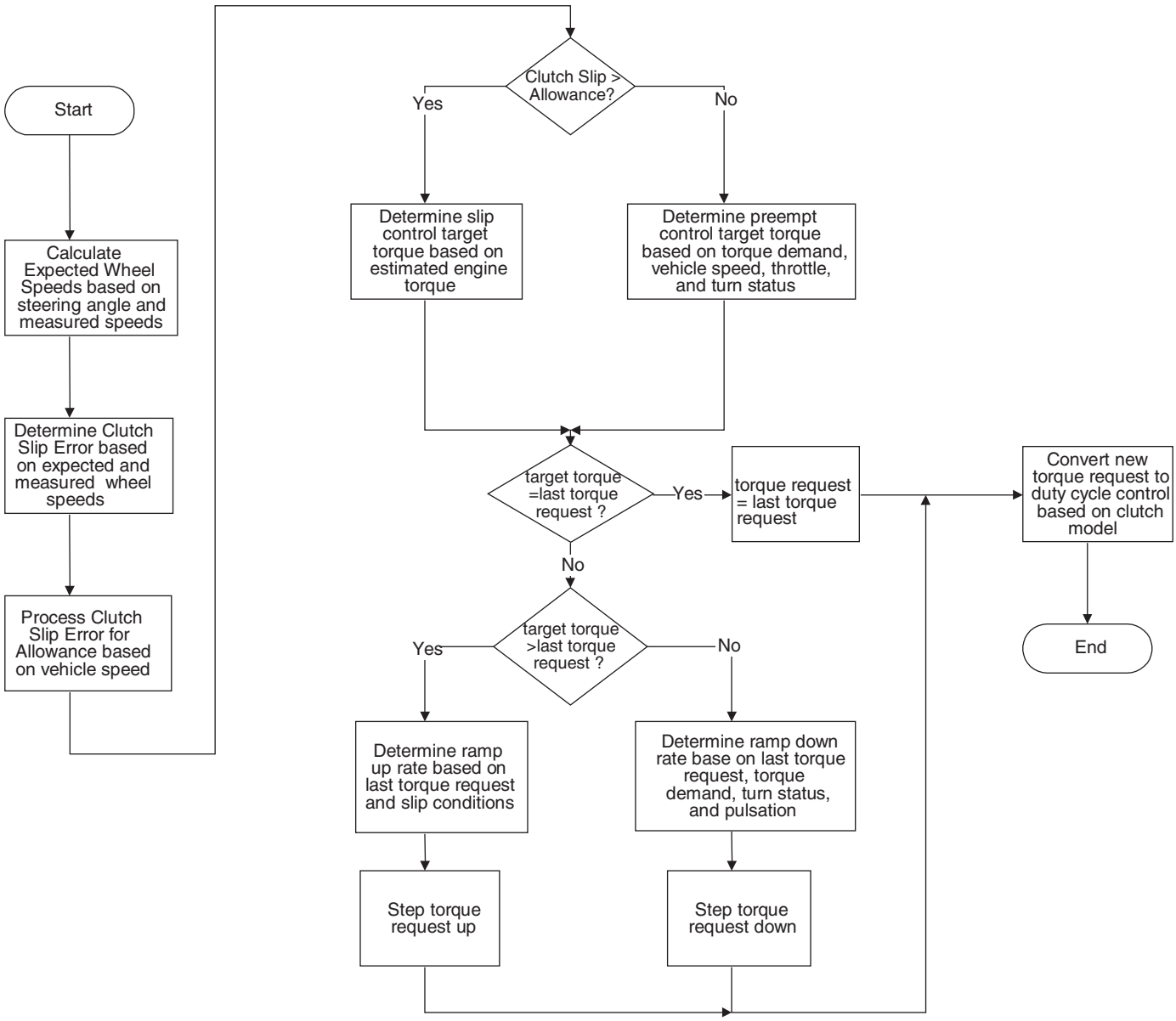

ELQE214A

LOCK MODE DESCRIPTION

- Based on a driver request for lock mode, the system will supply a fixed torque to the ITM-I clutch.
- When the vehicle exceeds 30KPH the system will begin to disable lock mode by ramping down the ITM clutch torque. When the vehicle exceeds 40 KPH the ITM clutch is reduced to its minimum torque value. Lock mode is re-enabled following the same speed-to-torque map.
- Lock mode is activated based on part number.

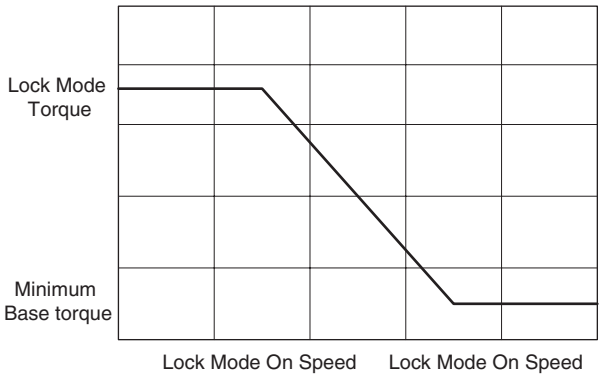

ELQE501I

- Lock mode will override all other system requests except for during an ABS event. During an ABS event the ITM clutch is turned off.
- If there is a speed sensor signal fault, the speeds are no longer considered reliable and lock mode will be disabled.

DTC TROUBLESHOOTING EB8E3D51

4WD ECM DTC INDEX

DTC No.	DESCRIPTION	4WD MIL	REMARK
P0120	TPS LOSS OF SIGNAL	Whenever the DTCs relevant to 4WD ECM are set, 4WD MIL(*) will blink.	MT-29
P1717	STEER 1 INPUT SIGNAL		MT-33
P1718	STEER 3 IN PUT SIGNAL		MT-40
P1719	STEER N INPUT SIGNAL		MT-44
P1728	EMC-OPEN/SHORT TO BATTERY		MT-48
P1745	ECU INVALID PART NUMBER		MT-54
P1750	FRONT LEFT SPEED SENSOR(FL)-With ESP, ABS		MT-57
P1751	FRONT RIGHT SPEED SENSOR(FR)-With ESP, ABS		MT-57
P1752	REAR LEFT SPEED SENSOR(RL)-With ESP, ABS		MT-57
P1753	REAR RIGHT SPEED SENSOR(RR)-With ESP, ABS		MT-57
P1769	TIRE SIZE FAULT		MT-61
P1770	ECU LOCK MODE THERMAL PROTECT		MT-63
P1771	ECU SHUTDOWN THERMAL PROTECT		MT-63
P1780	INVALIID ENGINE SIZE		MT-66
U0001	CAN BUS OFF		MT-68
U0100	CAN MI-COM OR CIRCUIT MAL		MT-72
U0101	TCU-ITM CAN COMM. LINE		MT-73
U0121	ABS-ITM CAN COMM. LINE		MT-74
U0122	ESP-ITM CAN COMM. LINE		MT-75
U0126	SAS-ITM CAN COMM. LINE		MT-76

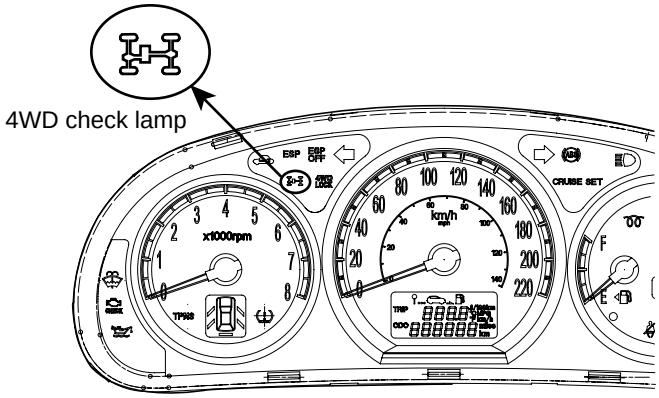

SCMMT6024L

4WD ECM PIN DESCRIPITION

C258

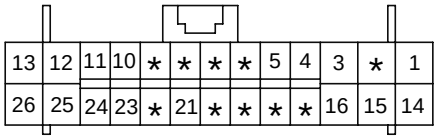

SCMMT6012L

Terminal Number	Description	Remark
1	EMC OUTPUT	
2	STEERING REFERANCEE - 5V	W/O ESP
3	STEERING *2	W/O ESP
4	STEERING *1	W/O ESP
5	-	
6	DIAGNOSTIC LAMP	
7	-	
8	-	
9	-	
10	-	
11	4 WHEEL DRIVE INDICATOR	
12	IGNITION INPUT	
13	K-LINE	
14	EMC RTN	
15	STEERING REFERANCE RTN	W/O ESP
16	STEERING REFERANCE C	W/O ESP
17	LOCK SWITCH INPUT	
18	-	
19	-	
20	-	
21	-	
22	CAN HIGH	
23	CAN LOW	
24	ECU GROUND	
25	-	
26	BATTERY INPUT	

DTC P0120 THROTTLE/PEDAL POSITION SENSOR/SWITCH "A" CIRCUIT (GASOLINE) / ACCELERATOR POSITION SENSOR 1-GENERAL ERROR (DIESEL)

COMPONENT LOCATION ED441AB4

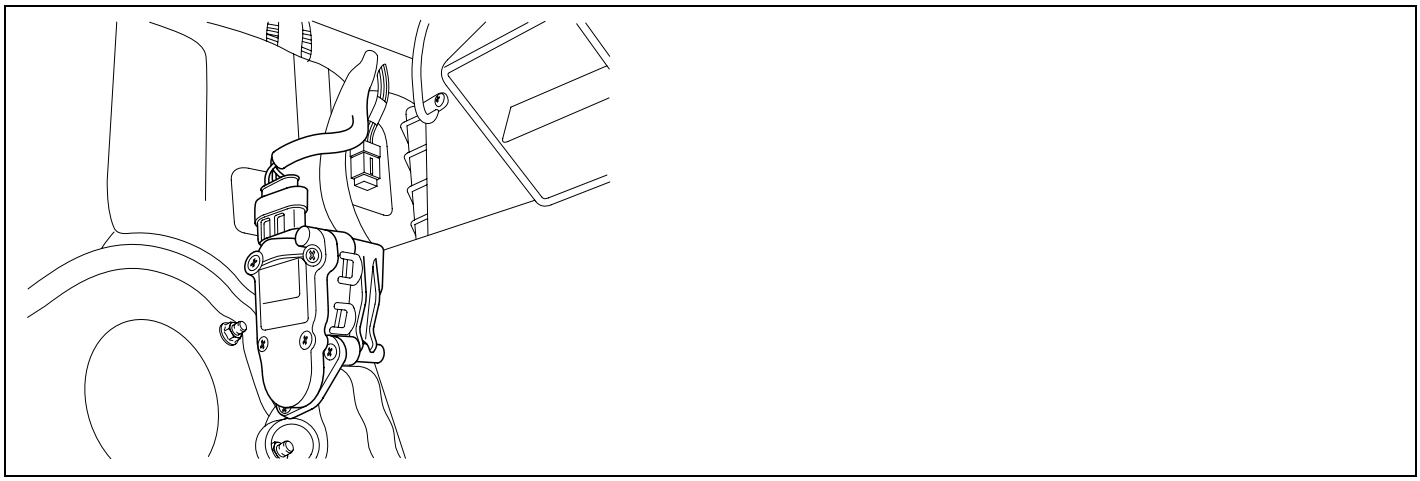

SCMMT6200L

GENERAL DESCRIPTION EA846609

TPS(or APS) signal which is used for judging driver's intention is received from engine ECU through CAN line.
This signal is a criteria signal to determind amount of torque distribution at front/rear wheel with steering angle sensor, wheel speed sensor, break signal.

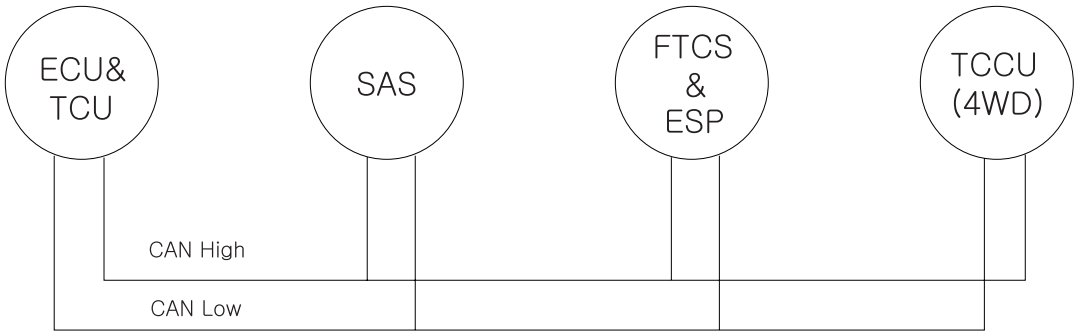

SCMMT6201L

DTC DESCRIPTION E6107AF4

This code related to communication line between ECU and TCCU is set when CAN signal from ECU can't received for more than 1sec or ECU internal error occur.
If failure is detected TCCU prohibits the ITM control and cuts the current to control coil.

DTC DETECTING CONDITION EB0BF0AC

Item	Detecting Condition	Possible Cause
DTC Strategy	• Loss of signal out of range	• ECM,TCCU connector looseness and poor terminal to wire connection • CAN HIGH/LOW circuit open/short • APS(TPS) faulty • Faulty ECM • Faulty TCCU
Enable Conditions	• Message present 1.0 sec self clearing	
Threshold Value	• A fault code of FFH from the C.A.N. Bus, Signal lost for 1 sec. Fault code stored in memory	
Diagnosticn Time	• 1 sec	
MIL on condition	• 0.5 Sec	
Fail Safe	• TPS=0 ITM Controller will not re-act to pre-empt. Pre-empt=0. The ECU will not send current to the clutch coil	

SIGNAL WAVEFORM & DATA E6A8A621

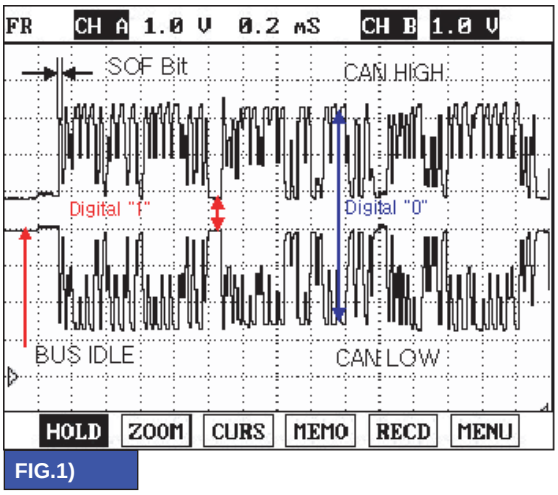

FIG.1) CAN Signal : high & low

SCMMT6202L

TERMINAL AND CONNECTOR INSPECTION EF0D1B03

1. Many malfunctions in the electrical system are caused by poor harness and terminals. Faults can also be caused by interference from other electrical systems, and mechanical or chemical damage.

2. Thoroughly check connectors for looseness, poor connection, bending, corrosion, contamination, deterioration,or damage.

3. Has a problem been found?

YES

▶ Repair as necessary and go to "Verification of Vehicle Repair" procedure.

NO

▶ Go to " CAN Signal Inspection " procedure.

CAN SIGNAL INSPECTION EBD92ADA

1. Ignition ON, Engine : ON.
2. TCCU connector : Connect.
3. Monitor signal waveform between terminal 4, 5 of TCCU harness connector and chassis ground.
4. Shift to N Range.

Specification : Signal Waveform & Data

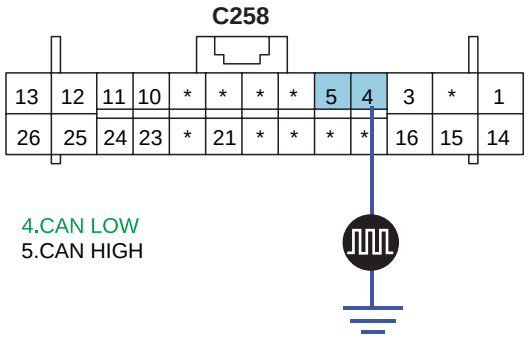

SCMMT6203L

CAUTION

The above value is only for reference.
The actual value may differ from it according to various engine condition.

5. Is CAN Signal display near the specified value?

YES

▶ Fault is intermittent caused by poor contact in the sensor's and/or TCCU's connector or was repaired and TCCU memory was not cleared.Thoroughly check connectors for looseness, poor connection, bending, corrosion, contamination, deterioration, or damage. Repair or replace as necessary and then go to "Verification of Vehicle Repair" procedure.

NO

▶ Go to " CAN comm. Line Inspection " procedure.

CAN COMM. LINE INSPECTION E1ADC5FF

1. IG "OFF" & ENG "OFF"
2. TCCU connector : Disconnect.
3. Measure resistance between terminal "4" of the TCCU harness connector and terminal "5" of the TCCU harness connector.

Specification : Approx. 60Ω

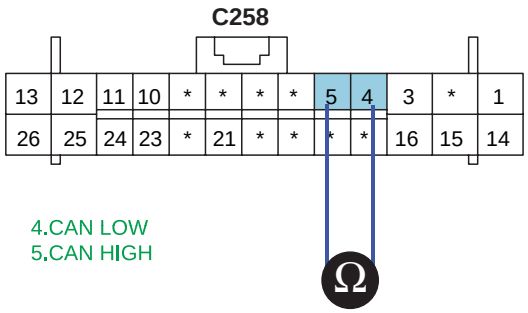

SCMMT6204L

CAUTION

The above value is only for reference.
The actual value may differ from it according to various engine condition.

4. Is resistance display near the specified value?

YES

▶ Fault is intermittent caused by open or short in CAN signal harnessor was repaired and TCCU memory was not cleared. Go to the applicable troubleshooting procedure.

NO

▶ Check for open/short in CAN comunication line of TCCU circuit.
▶ Check for the signal or component of Engine control module.
▶ Repair as necessary and then go to "Verification of Vehicle Repair" procedure.

VERIFICATION OF VEHICLE REPAIR E822CE08

1. Connect scan tool and select "Diagnostic Trouble Codes(DTCs)" mode.

2. Using scantool, Clear DTC.

3. Operate the vehicle within DTC Enable conditions in General information.

4. Are any DTCs present ?

YES

▶ Go to the applicable troubleshooting procedure.

NO

▶ System is performing to specification at this time.

DTC P1717 STEER 1 INPUT SIGNAL

COMPONENT LOCATION E4F433AA

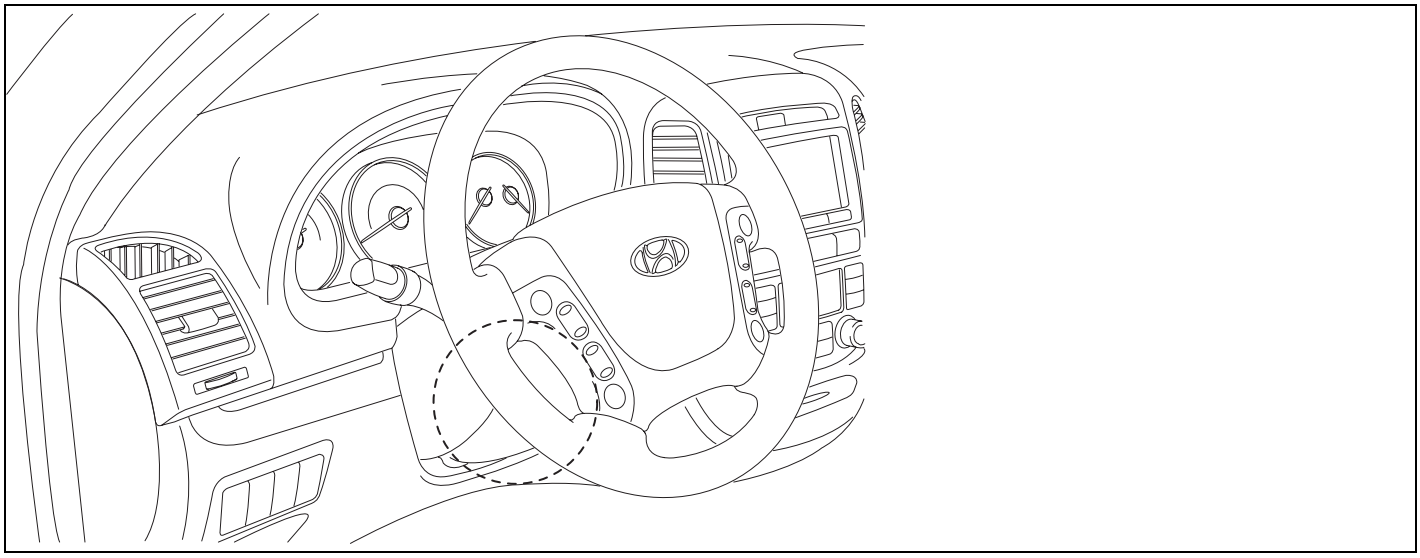

SCMMT6205L

GENERAL DESCRIPTION EFE432CF

Steering Wheel Angle Sensor installed in steering wheel prevents a state of TCB(Tight Corner Braking) by sensing the rotating direction & straight driving of vehicle and is used for EMC duty control. In case of ESP system applied, 4WD ECU receives this signal through CAN line. If it is not the case, 4WD ECU receives this signal from Steering Wheel Angle Sensor directly.
※ TCB (Tight Corner Braking) : TCB is that the vehicle makes an abnormal noise and hesistation when the vehicle turns left / right fully with low speed at a paved road.

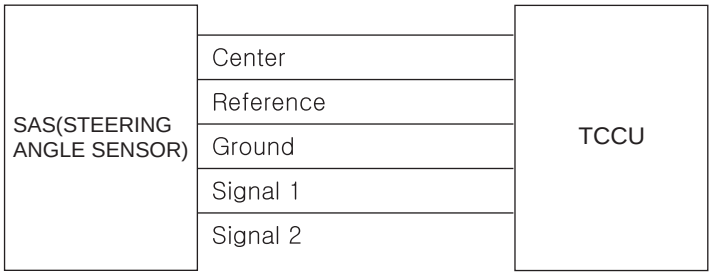

SCMMT6206L

DTC DESCRIPTION E07482E9

This code related to Steering Angle Sensor Signal(#1) is set when voltage of signal is above 4.5V or loss of signal is occurred for more than 1sec. In case of ESP system applied, this code is set when can bus off or ecu enternal error is occurred.
If failure is detected TCCU prohibits the ITM control and cuts the current to control coil.

DTC DETECTING CONDITION EAF2258A

Item	Detecting Condition	Possible Cause
DTC Strategy	• Loss of signal out of range	• Steering angle sensor,TCCU connector looseness and poor terminal to wire connection. • Steering angle sensor circuit open/short • Faulty Steering angle sensor • Faulty TCCU
Enable Conditions	• V < 4.5 for 1.0 sec self clearing	
Threshold Value	• Out of Range signal: Voltage > = 4.5vdc for greater than one (1) second	
Diagnostic Time	• 1 sec	
MIL on condition	• 0.5 Sec	
Fail Safe	• Steering Wheel Sensor input=0. The ECU will not send current to the clutch coil	

SIGNAL WAVEFORM & DATA E2B0FABE

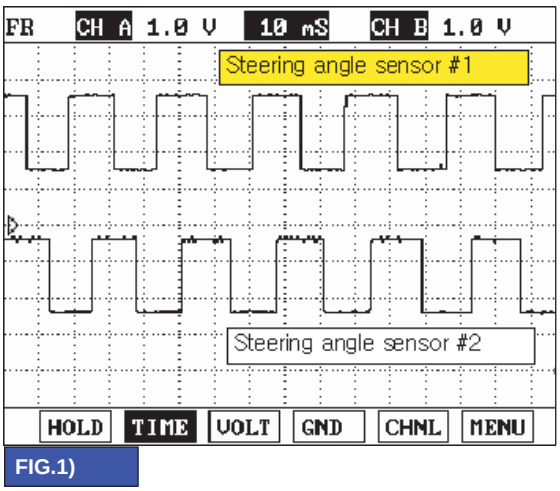

FIG.1) Steering Wheel Angle Sensor #1,#2

SCMMT6207L

TERMINAL AND CONNECTOR INSPECTION E32B0EAC

1. Many malfunctions in the electrical system are caused by poor harness and terminals. Faults can also be caused by interference from other electrical systems, and mechanical or chemical damage.

2. Thoroughly check connectors for looseness, poor connection, bending, corrosion, contamination, deterioration,or damage.

3. Has a problem been found?

YES

▶ Repair as necessary and go to "Verification of Vehicle Repair" procedure.

NO

▶ Go to " Steering angle sensor #1 Signal Inspection " procedure.

STEERING ANGLE SENSOR #1 SIGNAL INSPECTION E1F7D6DC

1. Ignition ON, Engine : ON.
2. Connect TCCU, Steering angle sensor connector.
3. Monitor signal waveform between terminal 3 of Steering angle sensor harness connector and chassis ground.
4. Turn steering Wheel to the right or left.

Specification : Signal Waveform & Data

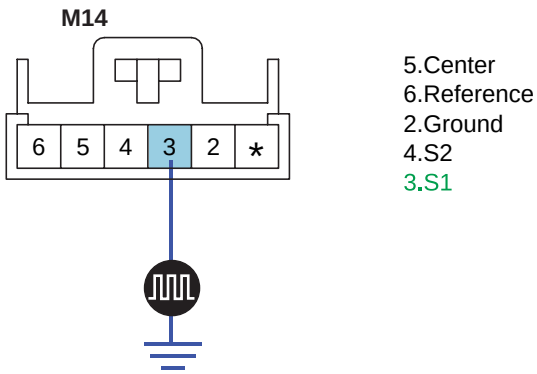

SCMMT6208L

CAUTION

The above value is only for reference.
The actual value may differ from it according to various engine condition.

5. Is Steering angle sensor #1 Signal display near the specified value?

YES

▶ Fault is intermittent caused by poor contact in the sensor's and/or TCCU's connector or was repaired and TCCU memory was not cleared. Thoroughly check connectors for looseness, poor connection, bending, corrosion, contamination, deterioration, or damage. Repair or replace as necessary and then go to "Verification of Vehicle Repair" procedure.

NO

▶ Go to " Steering angle sensor Reference voltage inspection " procedure.

STEERING ANGLE SENSOR REFERENCE VOLTAGE INSPECTION EEA70C9E

1. Ignition "ON",Engine "OFF".
2. TCCU, Steering angle sensor connector : Connect.
3. Measure voltage between terminal 6 of Steering angle sensor harness connector and chassis ground.

Specification : Approx. 5V

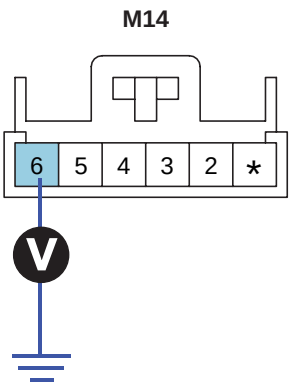

5.Center
6.Reference
2.Ground
4.S2
3.S1

SCMMT6209L

CAUTION

The above value is only for reference.
The actual value may differ from it according to various engine condition.

4. Is voltage display near the specified value?

YES

▶ Go to " Steering angle sensor ground harness open circuit inspection " procedure.

NO

▶ Check for Steering angle sensor Reference harness.
▶ Repair as necessary and then go to "Verification of Vehicle Repair" procedure.

STEERING ANGLE SENSOR GROUND HARNESS OPEN CIRCUIT INSPECTION E8D94F1B

1. Ignition OFF, Engine "OFF".

2. TCCU, Steering angle sensor connector : Connect.

3. Measure resistance between terminal 2 of Steering angle sensor harness connector and chassis ground.

Specification : 1Ω below

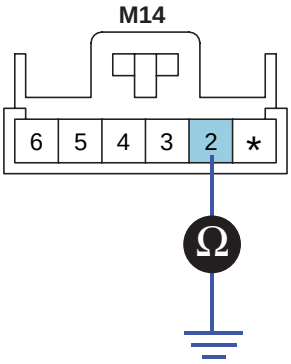

5.Center
6.Reference
2.Ground
4.S2
3.S1

SCMMT6210L

CAUTION

The above value is only for reference.
The actual value may differ from it according to various engine condition.

4. Is resistance display near the specified value?

YES

▶ Go to " Steering angle sensor #1 ,short to signal line ground Inspection " procedure.

NO

▶ Check for open circuit of Steering angle sensor ground harness.
▶ Repair as necessary and then go to "Verification of Vehicle Repair" procedure.

SIGNAL CITCUIT INSPECTION EA133810

STEERING ANGLE SENSOR #1 ,SHORT TO SIGNAL LINE GROUND INSPECTION

1. Ignition OFF, Engine "OFF".

2. TCCU, Steering angle sensor connector : Disconnect.

3. Measure resistance between terminal 3 of Steering angle sensor harness connector and chassis ground.

Specification : ∝ Ω

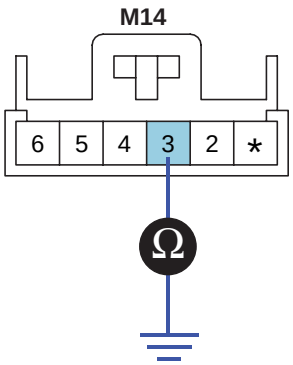

5.Center
6.Reference
2.Ground
4.S2
3.S1

SCMMT6211L

CAUTION

The above value is only for reference.
The actual value may differ from it according to various engine condition.

4. Is resistance display near the specified value?

YES

▶ Go to " Steering angle sensor #1 signal line open Inspection " procedure.

NO

▶ Check for short to ground circuit of Steering angle sensor #1Signal circuit.
▶ Repair as necessary and then go to "Verification of Vehicle Repair" procedure.

STEERING ANGLE SENSOR #1 SIGNAL LINE OPEN INSPECTION

1. Ignition OFF, Engine "OFF".
2. TCCU, Steering angle sensor connector : Disconnect.
3. Measure resistance between terminal 3 of Steering angle sensor harness connector and terminal 23 of TCCU harness connector.

Specification : 1Ω

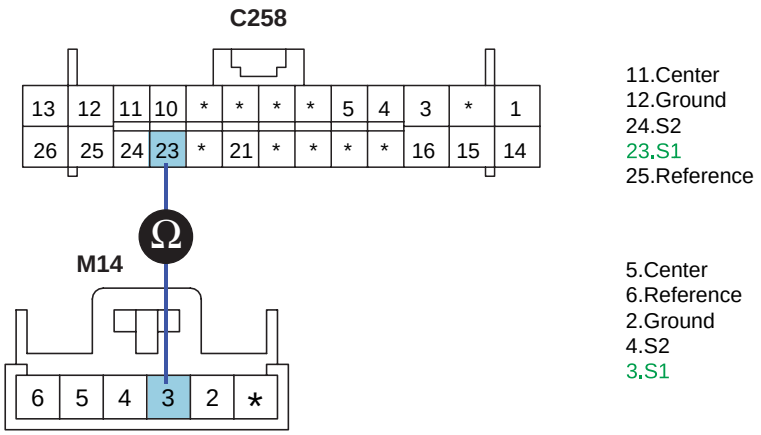

SCMMT6212L

CAUTION

The above value is only for reference.
The actual value may differ from it according to various engine condition.

4. Is resistance display near the specified value?

YES

- ▶ Substitute with a known-good TCCU or Steering angle sensor and check for proper operation.
- ▶ If the problem is corrected, replace TCCU and then go to "Verification of Vehicle Repair" procedure.

NO

- ▶ Check for open circuit of Steering angle sensor #1 Signal circuit.
- ▶ Repair as necessary and then go to "Verification of Vehicle Repair" procedure.

VERIFICATION OF VEHICLE REPAIR EB22A662

1. Connect scan tool and select "Diagnostic Trouble Codes(DTCs)" mode.
2. Using scantool, Clear DTC.
3. Operate the vehicle within DTC Enable conditions in General information.
4. Are any DTCs present ?

YES

▶ Go to the applicable troubleshooting procedure.

NO

▶ System is performing to specification at this time.

DTC P1718 STEER 2 INPUT SIGNAL

COMPONENT LOCATION EC78ED86

Refer to DTC P1717.

GENERAL DESCRIPTION E2DC7841

Refer to DTC P1717.

DTC DESCRIPTION EDE7BFFA

This code related to Steering Angle Sensor Signal(#2) is set when voltage of signal is above 4.5V or loss of signal is occurred for more than 1sec. In case of ESP system applied, this code is set when can bus off or ecu enternal error is occurred.
If failure is detected TCCU prohibits the ITM control and cuts the current to control coil.

DTC DETECTING CONDITION E7C94F60

Item	Detecting Condition	Possible Cause
DTC Strategy	• Loss of signal out of range	• Steering angle sensor,TCCU connector looseness and poor terminal to wire connection. • Steering angle sensor circuit open/short • Faulty Steering angle sensor • Faulty TCCU
Enable Conditions	• V < 4.5 for 1.0 sec self clearing	
Threshold Value	• Out of Range signal: Voltage > = 4.5vdc for greater than one (1) second	
Diagnostic Time	• 1 sec	
MIL on condition	• 0.5 Sec	
Fail Safe	• Steering Wheel Sensor input=0. The ECU will not send current to the clutch coil	

SIGNAL WAVEFORM & DATA EAC4AD16

Refer to DTC P1717.

TERMINAL AND CONNECTOR INSPECTION E6EEAC30

Refer to DTC P1717.

STEERING ANGLE SENSOR #2 SIGNAL INSPECTION E14B5B9F

1. Ignition ON, Engine : ON.
2. Connect TCCU, Steering angle sensor connector.
3. Monitor signal waveform between terminal 4 of Steering angle sensor harness connector and chassis ground.
4. Turn steering Wheel to the right or left.

Specification : Signal Waveform & Data

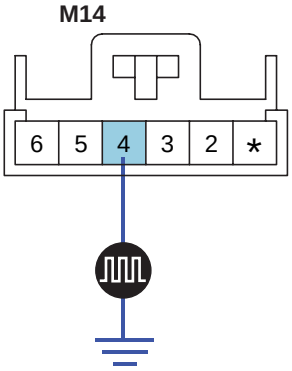

5.Center
6.Reference
2.Ground
4.S2
3.S1

SCMMT6213L

CAUTION

The above value is only for reference.
The actual value may differ from it according to various engine condition.

5. Is Steering angle sensor #2 Signal display near the specified value?

YES

▶ Fault is intermittent caused by poor contact in the sensor's and/or TCCU's connector or was repaired and TCCU memory was not cleared.Thoroughly check connectors for looseness, poor connection, bending, corrosion, contamination, deterioration, or damage. Repair or replace as necessary and then go to "Verification of Vehicle Repair" procedure.

NO

▶ Go to " Steering angle sensor Reference voltage inspection " procedure.

STEERING ANGLE SENSOR REFERENCE VOLTAGE INSPECTION EDC8105E

Refer to DTC P1717.

STEERING ANGLE SENSOR GROUND HARNESS OPEN CIRCUIT INSPECTION E8D94F2B

Refer to DTC P1717.

SIGNAL CIRCUIT INSPECTION ED758FEB

STEERING ANGLE SENSOR #2 ,SHORT TO SIGNAL LINE GROUND INSPECTION

1. Ignition OFF, Engine "OFF".
2. TCCU, Steering angle sensor connector : Disconnect.
3. Measure resistance between terminal 4 of Steering angle sensor harness connector and chassis ground.

Specification : ∝ Ω

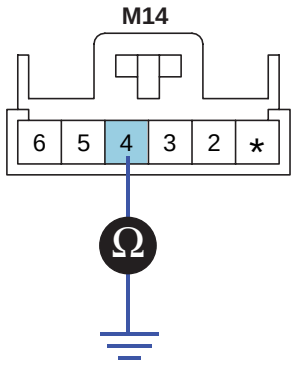

5.Center
6.Reference
2.Ground
4.S2
3.S1

SCMMT6214L

CAUTION

The above value is only for reference.
The actual value may differ from it according to various engine condition.

4. Is resistance display near the specified value?

YES

▶ Go to " Steering angle sensor #2, signal line open inspection " procedure.

NO

▶ Check for ground to short circuit of Steering angle sensor #2 Signal circuit.
▶ Repair as necessary and then go to "Verification of Vehicle Repair" procedure.

STEERING ANGLE SENSOR #2, SIGNAL LINE OPEN INSPECTION

1. Ignition OFF, Engine "OFF".

2. TCCU, Steering angle sensor connector : Disconnect.

3. Measure resistance between terminal 4 of Steering angle sensor harness connector and terminal 24 of TCCU harness connector.

Specification : 1Ω below

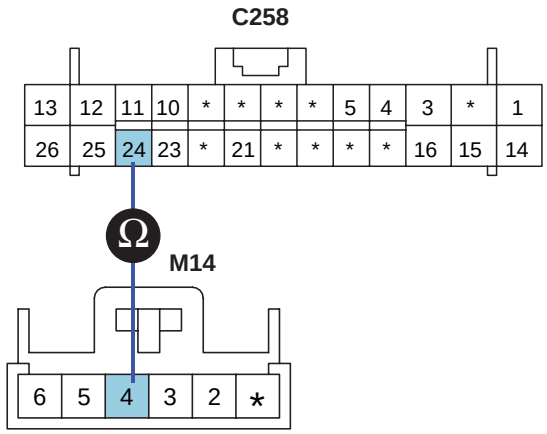

11.Center
12.Ground
24.S2
23.S1
25.Reference

5.Center
6.Reference
2.Ground
4.S2
3.S1

SCMMT6215L

CAUTION

The above value is only for reference.
The actual value may differ from it according to various engine condition.

4. Is resistance display near the specified value?

YES

- ▶ Substitute with a known-good TCCU or Steering angle sensor and check for proper operation.
- ▶ If the problem is corrected, replace TCCU and then go to "Verification of Vehicle Repair" procedure.

NO

- ▶ Check for open circuit of Steering angle sensor #2 Signal circuit.
- ▶ Repair as necessary and then go to "Verification of Vehicle Repair" procedure.

VERIFICATION OF VEHICLE REPAIR ED2F3124

Refer to DTC P1717.

DTC P1719 STEER N INPUT SIGNAL

COMPONENT LOCATION E7CACB5A

Refer to DTC P1717.

GENERAL DESCRIPTION ED3C0CD0

Refer to DTC P1717.

DTC DESCRIPTION E67918ED

This code related to Steering Angle Sensor Signal(#N) is set when voltage of signal is above 4.5V or loss of signal is occurred for more than 1sec. In case of ESP system applied, this code is set when can bus off or ecu enternal error is occurred.
If failure is detected TCCU prohibits the ITM control and cuts the current to control coil.

DTC DETECTING CONDITION E2DBF1B8

Item	Detecting Condition	Possible Cause
DTC Strategy	• Loss of signal out of range	• Steering angle sensor,TCCU connector looseness and poor terminal to wire connection. • Steering angle sensor circuit open/short • Faulty Steering angle sensor • Faulty TCCU
Enable Conditions	• V < 4.5 for 1.0 sec self clearing	
Threshold Value	• Out of Range signal: Voltage > = 4.5vdc for greater than one (1) second	
Diagnostic Time	• 1 sec	
MIL on condition	• 0.5 Sec	
Fail Safe	• Steering Wheel Sensor input=0. The ECU will not send current to the clutch coil	

SIGNAL WAVEFORM & DATA EA80BF3A

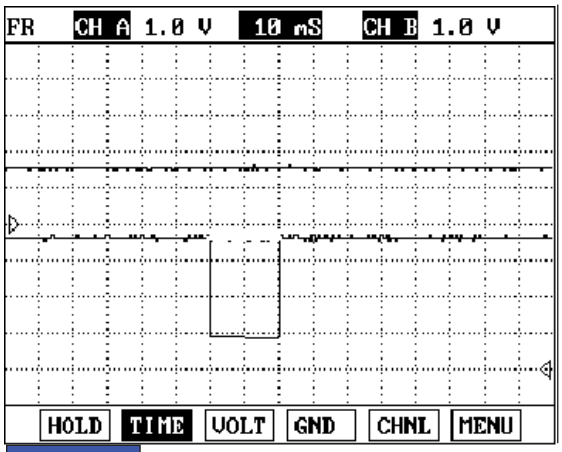

FIG.1)

FIG.1) Steering Wheel Angle Sensor #Neutral

TERMINAL AND CONNECTOR INSPECTION EF0BAACF

Refer to DTC P1717.

STEERING ANGLE NEUTRAL SIGNAL INSPECTION E8D2E24E

1. Ignition ON, Engine : ON.
2. Connect TCCU, Steering angle sensor connector.
3. Monitor signal waveform between terminal 5 of Steering angle sensor harness connector and chassis ground.
4. Turn steering Wheel to the right or left.

Specification : Signal Waveform & Data

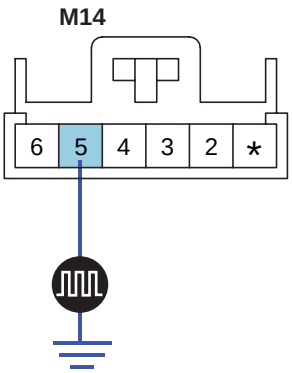

5.Center
6.Reference
2.Ground
4.S2
3.S1

SCMMT6217L

CAUTION

The above value is only for reference.
The actual value may differ from it according to various engine condition.

5. Is Steering angle Neutral Signal display near the specified value?

YES

▶ Fault is intermittent caused by poor contact in the sensor's and/or TCCU's connector or was repaired and TCCU memory was not cleared.Thoroughly check connectors for looseness, poor connection, bending, corrosion, contamination, deterioration, or damage. Repair or replace as necessary and then go to "Verification of Vehicle Repair" procedure.

NO

▶ Go to " Steering angle sensor Reference voltage inspection " procedure.

STEERING ANGLE SENSOR REFERENCE VOLTAGE INSPECTION E4ADA3BF

Refer to DTC P1717.

STEERING ANGLE SENSOR GROUND HARNESS OPEN CIRCUIT INSPECTION E18CBABF

Refer to DTC P1717.

SIGNAL CIRCUIT INSPECTION EAFC5079

STEERING ANGLE NEUTRAL SIGNAL ,SHORT TO SIGNAL LINE GROUND INSPECTION

1. Ignition OFF, Engine "OFF".

2. TCCU, Steering angle sensor connector : Disconnect.

3. Measure resistance between terminal 5 of Steering angle sensor harness connector and chassis ground.

Specification : ∝ Ω

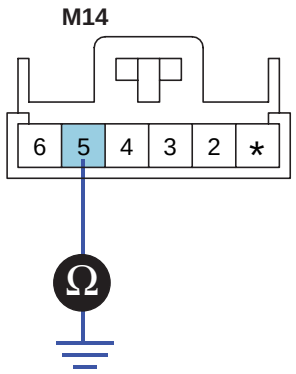

5.Center
6.Reference
2.Ground
4.S2
3.S1

SCMMT6218L

CAUTION

The above value is only for reference.
The actual value may differ from it according to various engine condition.

4. Is resistance display near the specified value?

YES

▶ Go to " Steering angle Neutral Signal open Inspection " procedure.

NO

▶ Check for ground to short circuit of Steering angle Neutral Signal circuit.
▶ Repair as necessary and then go to "Verification of Vehicle Repair" procedure.

STEERING ANGLE NEUTRAL SIGNAL OPEN INSPECTION

1. Ignition OFF, Engine "OFF".

2. TCCU, Steering angle sensor connector : Disconnect.

3. Measure resistance between terminal 3 of Steering angle sensor harness connector and terminal 23 of TCCU harness connector.

Specification : 1Ω below

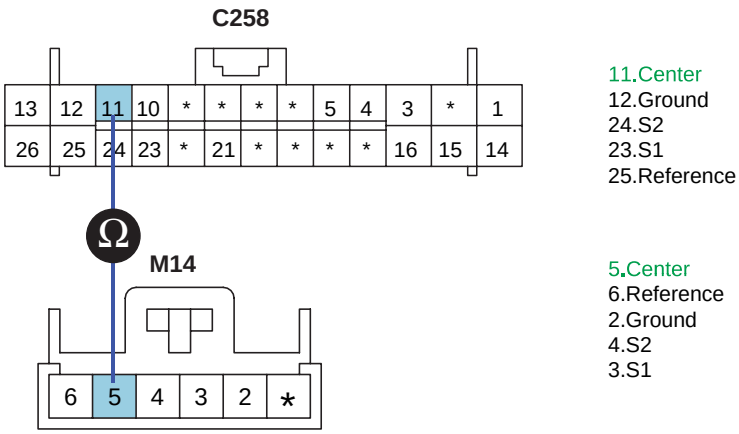

SCMMT6219L

CAUTION

The above value is only for reference.
The actual value may differ from it according to various engine condition.

4. Is resistance display near the specified value?

YES

- Substitute with a known-good TCCU or Steering angle sensor and check for proper operation.
- If the problem is corrected, replace TCCU and then go to "Verification of Vehicle Repair" procedure.

NO

- Check for open circuit of Steering angle sensor Neutral Signal circuit.
- Repair as necessary and then go to "Verification of Vehicle Repair" procedure.

VERIFICATION OF VEHICLE REPAIR E7C1536E

Refer to DTC P1717.

DTC P1728 EMC-OPEN/SHORT TO BATTERY

COMPONENT LOCATION EB2DAF9D

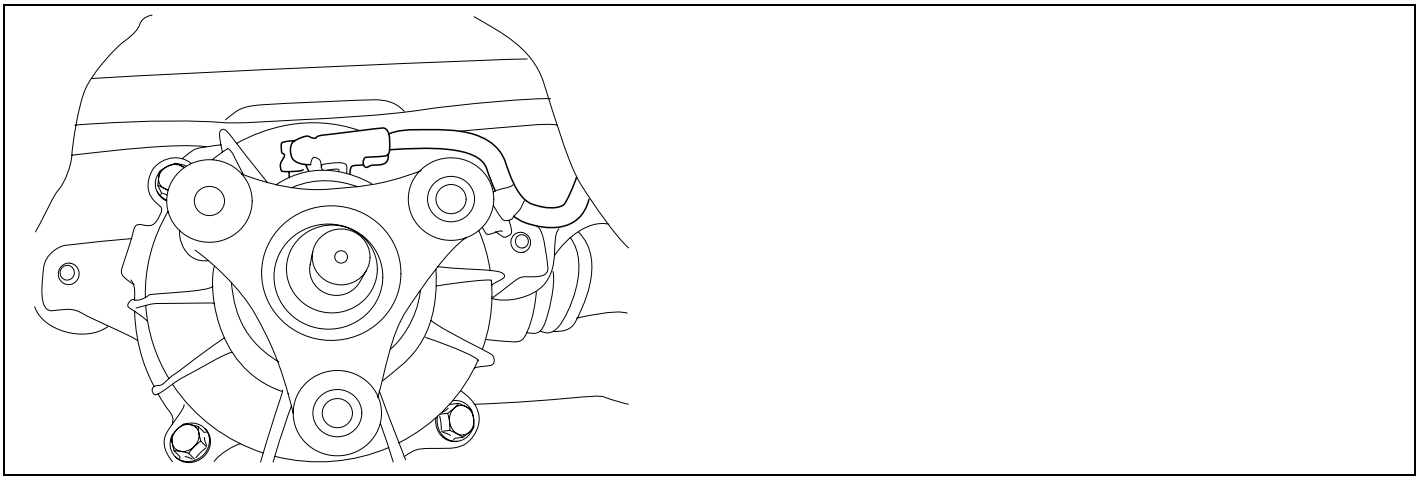

SCMMT6220L

GENERAL DESCRIPTION E6AC1A4E

Vehicle uses 2WD(2 wheel drive) for driving at normal speed, but sometimes it uses 4WD (4 wheel drive) accordign to driving condition.
(cornering or acceleration)
EMC(Electric Magnetic Clutch) distributes proper torque to front wheel by controling amount of current inside EMC coil.
That time power pressing the multi plate clutch by apply cam is changed by a rate of EMC duty. after multi plate clutch start slip the force for acceletion at front/rear wheel is controlled at a range of 100:0 ~ 50 : 50.
ITM system has 4WD-LOCK function that can make driving force to 50:50 by compulsion according to driver's intention.

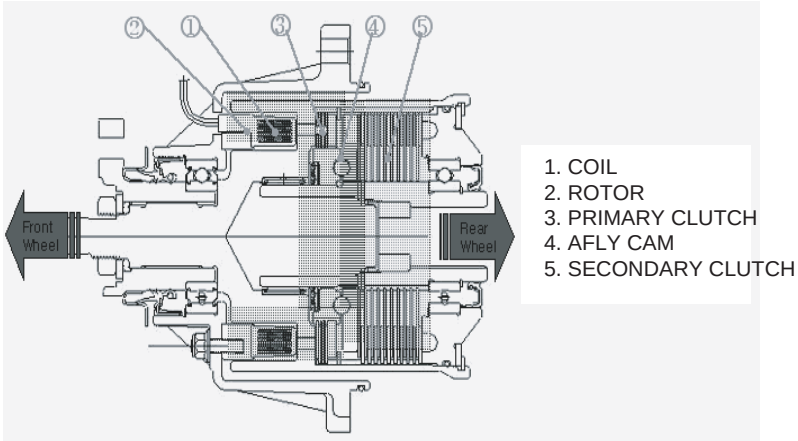

SCMMT6221L

DTC DESCRIPTION ECD9BB2F

This DTC code is related to the EMC and is set If control harness has an open or short to battery source.
If failure is detected TCCU prohibits the ITM control and vehicle is controlled with 2WD by intercepting EMC current.

DTC DETECTING CONDITION EFE07CFD

Item	Detecting Condition	Possible Cause
DTC Strategy	• Short/ Open to Battery	• Power supply malfunction • EMC,TCCU connector looseness and poor terminal to wire connection • EMC circuit open or short to battery • Faulty EMC motor • Faulty TCCU
Enable Conditions	• Ignition cycle required	
Threshold Value	• 25 occurrences in a row mature	
Diagnostic Time	• 1 sec	
MIL on condition	• 0.5 Sec	
Fail Safe	• EMC Error will turn ITM off. The ECU will not send current to the clutch coil	

SIGNAL WAVEFORM & DATA E1DC70C7

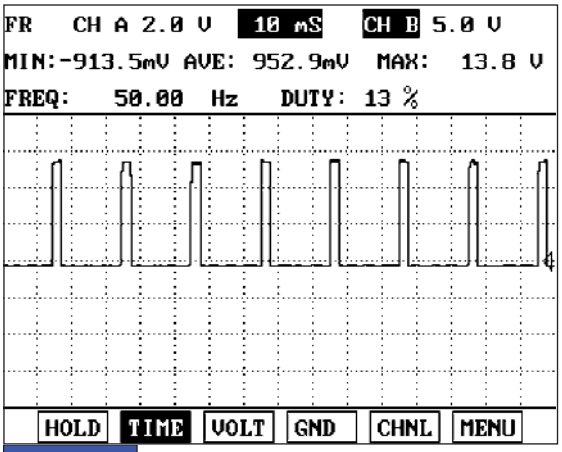

FIG.1)

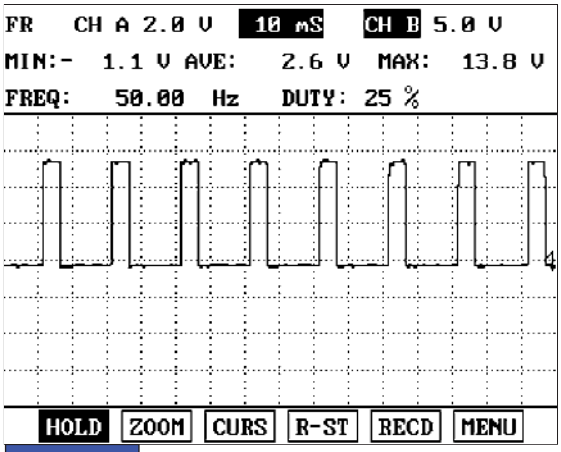

FIG.2)

FIG.1) EMC Signal : Idling .
FIG.2) EMC Signal : Throttle Valve Open .

SCMMT6222L

TERMINAL AND CONNECTOR INSPECTION E4F1CEBD

1. Many malfunctions in the electrical system are caused by poor harness and terminals. Faults can also be caused by interference from other electrical systems, and mechanical or chemical damage.

2. Thoroughly check connectors for looseness, poor connection, bending, corrosion, contamination, deterioration,or damage.

3. Has a problem been found?

YES

▶ Repair as necessary and go to "Verification of Vehicle Repair" procedure.

NO

▶ Go to " EMC Signal Inspection " procedure.

EMC SIGNAL INSPECTION E5D2F7F5

1. Ignition ON, Engine : ON.
2. TCCU, EMC connector : Connect.
3. Monitor signal waveform between terminal 1 of EMC harness connector and chassis ground.
4. Shift to N Range.

Specification : Signal Waveform & Data

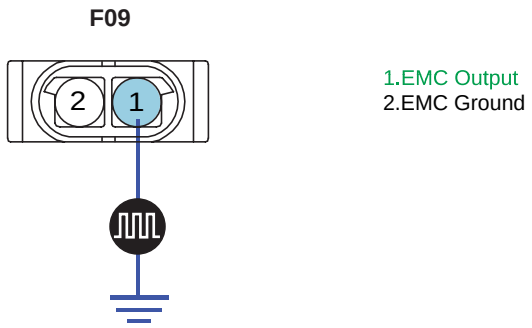

SCMMT6223L

CAUTION

The above value is only for reference.
The actual value may differ from it according to various engine condition.

5. Is EMC Signal display near the specified value?

YES

▶ Fault is intermittent caused by poor contact in the sensor's and/or TCCU's connector or was repaired and TCCU memory was not cleared.Thoroughly check connectors for looseness, poor connection, bending, corrosion, contamination, deterioration, or damage. Repair or replace as necessary and then go to "Verification of Vehicle Repair" procedure.

NO

▶ Go to " EMC wiring battery short Inspection " procedure.

EMC WIRING BATTERY SHORT INSPECTION EB741C81

1. IG "OFF" & ENG "OFF".
2. Electric Magnet Valve Clutch,TCCU connector : Disconnect.
3. IG "ON.
4. Measure voltage between terminal 1 of EMC harness connector and chassis ground.

Specification : 0 V

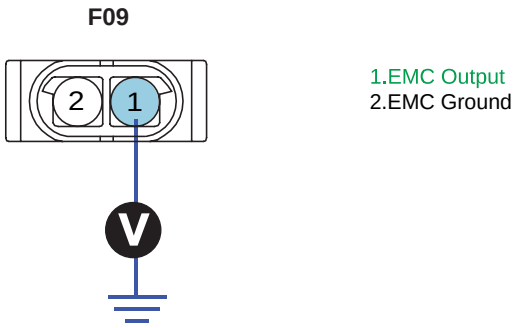

SCMMT6224L

CAUTION

The above value is only for reference.
The actual value may differ from it according to various engine condition.

5. Is voltage display near the specified value?

YES

▶ Go to " EMC harness open Inspection " procedure.

NO

▶ Check for short to battery in EMC harness.
▶ Repair as necessary and then go to "Verification of Vehicle Repair" procedure.

EMC HARNESS OPEN INSPECTION E03FBE34

1. Ignition OFF, Engine "OFF".

2. Electric Magnet Valve Clutch, TCCU connector : Disconnect.

3. Measure resistance between terminal 1 or 2 of Electric Magnet Valve Clutch harness connector and terminal 26 or 13 of TCCU harness connector.

Specification : 1Ω below

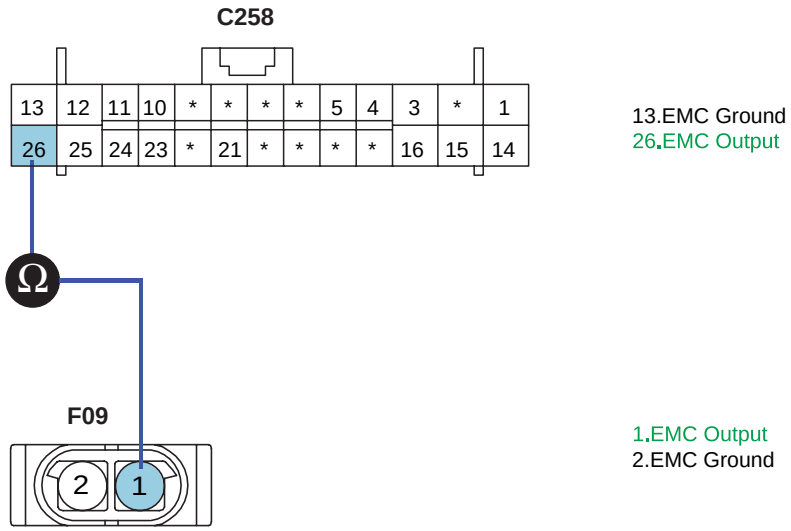

SCMMT6225L

CAUTION

The above value is only for reference.
The actual value may differ from it according to various engine condition.

4. Is resistance display near the specified value?

YES

▶ Go to " Component inspection " procedure.

NO

▶ Check for open in EMC harness.
▶ Repair as necessary and then go to "Verification of Vehicle Repair" procedure.

COMPONENT INSPECTION E65DEC1E

1. IG "OFF" & ENG "OFF".

2. EMC connector : Disconnect.

3. Measure the resistance(Component side) between terminals "1" and "2" of the "Electric Magnet Valve Clutch".

Specification : Approx. 1.8 ~ 2.2 Ω

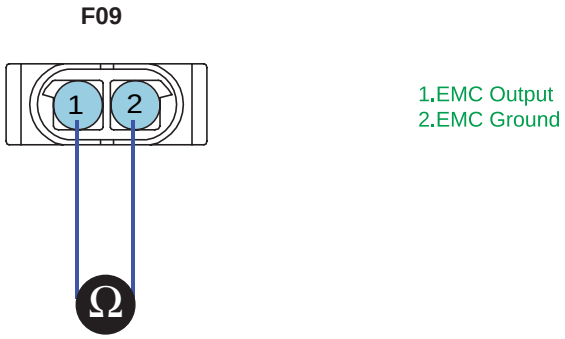

SCMMT6226L

4. Is resistance display near the specified value?

YES

▶ Substitute with a known-good "TCCU" and check for proper operation. If the problem is corrected, replace "TCCU" and then go to "Verification of Vehicle Repair" procedure.

NO

▶ Substitute with a known-good "EMC coil" and check for proper operation. If the problem is corrected, replace "EMC coil" and then go to "Verification of Vehicle Repair" procedure.

VERIFICATION OF VEHICLE REPAIR EB61469D

1. Connect scan tool and select "Diagnostic Trouble Codes(DTCs)" mode.
2. Using scantool, Clear DTC.
3. Operate the vehicle within DTC Enable conditions in General information.
4. Are any DTCs present ?

YES

▶ Go to the applicable troubleshooting procedure.

NO

▶ System is performing to specification at this time.

DTC P1745 ECU INVALID PART NUMBER

COMPONENT LOCATION EED8DCAA

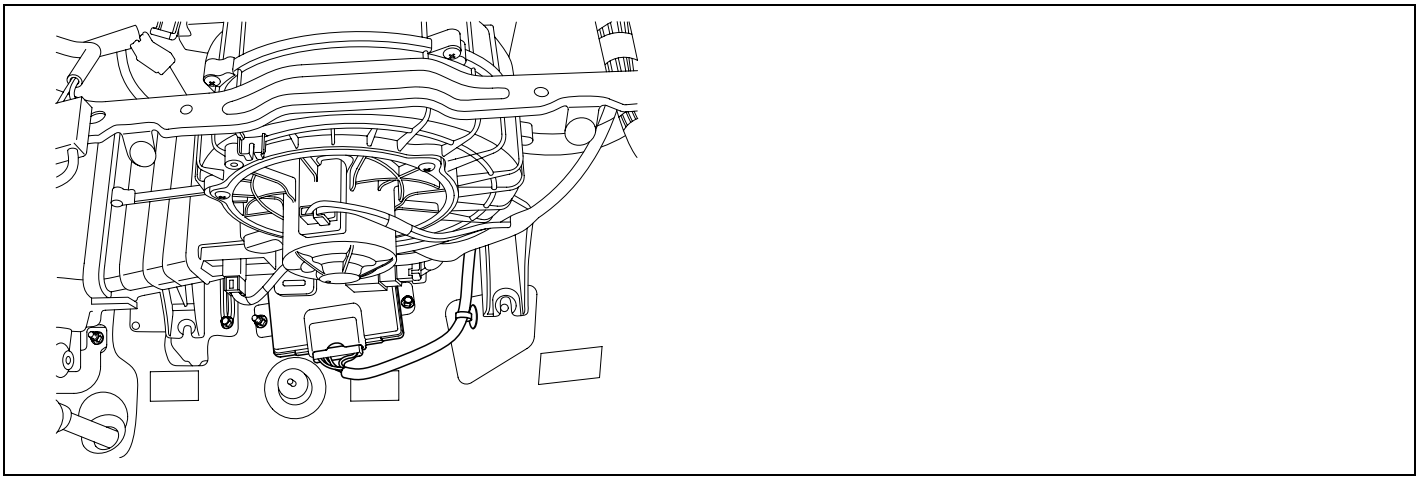

SCMMT6227L

GENERAL DESCRIPTION EFA7B80A

Many control units is applied to the vehicle due to vehicle to be electronic control type and these perform many controls by receiving signals from sensors. So the common use of each sensors and the need of comunizing informations became a prominent figure. CAN comunication method is used at power train (ABS, trnasmission, engine, ECS etc) control of vehicle because it withstands eletronical external noise by spark and can high-speed comunication. Though CAN communication, ECM and TCM hold engin RPM, APS, step of trensmission, decreasing of torque in common and perform the active control.

CAN:Engine Data (TPS,RPM...)	CAN: Engine Data (TPS,RPM...) ABS Data (4Wheel Signals, ABS/TCS Active data...)	CAN: Engine Data (TPS,RPM...) ESP Data (Steering Angle Sensor 4Wheel Signals, ABS/TCS Active data...)
NON-ABS →	ABS/TCS →	ESP

SCMMT6228L

DTC DESCRIPTION E1FF3DAB

This DTC is set when inappropriate 4WD-ECU(TCCU) is detected.
If failure is detected TCCU prohibits the ITM control.

DTC DETECTING CONDITION E193DCCA

Item	Detecting Condition	Possible Cause
DTC Strategy	• Invalid part number	• Part Number • Faulty TCCU
Enable Conditions	• Ignition cycle required	
Threshold Value	• 1 occurrence will mature	
Diagnostic Time	• 1.0 Sec	
MIL on condition	• 0.5 Sec	
Fail Safe	• Clutch will not react correctly as vehicle inputs are not defined	

MONITOR DTC STATUS E36A9876

1. Connect scantool to Data Link Connector(DLC).
2. Warm up the engine to normal operating temperature.
3. Monitor DTC(Diagnostics Trouble Code) on the scantool.

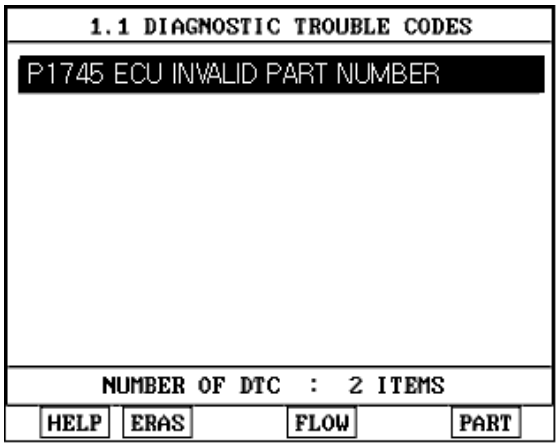

SCMMT6229L

4. Is the same DTC displayed again?

YES

▶ Check if equipped option(ABS/TCS, ESP) and part number is qualified specification Repair or replace as necessary and go to "Verification of vehicle Repair" procedure.

NO

▶ Fault is intermittent caused by poor contact in the sensor’s and/or TCCU’s connector or was repaired and TCCU memory was not cleared. Thoroughly check connectors for looseness, poor connection, bending, corrosion, contamination, deterioration, or damage. Repair or replace as necessary and go to "Verification of vehicle Repair" procedure.

VERIFICATION OF VEHICLE REPAIR EC67C92F

1. Connect scan tool and select "Diagnostic Trouble Codes(DTCs)" mode.
2. Using scantool, Clear DTC.

3. Operate the vehicle within DTC Enable conditions in General information.

4. Are any DTCs present ?

YES

▶ Go to the applicable troubleshooting procedure.

NO

▶ System is performing to specification at this time.

DTC P1750 FRONT LEFT SPEED SENSOR(FL)-WITH ESP, ABS
DTC P1751 FRONT RIGHT SPEED SENSOR(FR)-WITH ESP, ABS
DTC P1752 REAR LEFT SPEED SENSOR(RL)-WITH ESP, ABS
DTC P1753 REAR RIGHT SPEED SENSOR(RR)-WITH ESP, ABS

COMPONENT LOCATION ECA43AE8

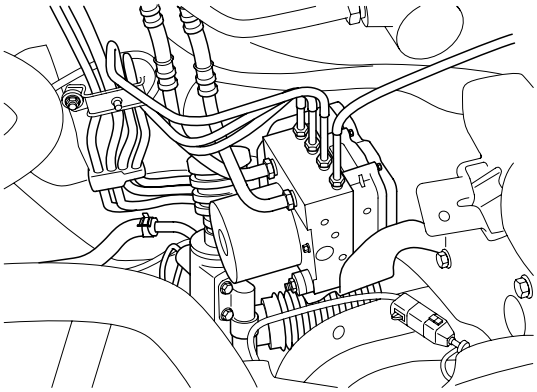

SCMMT6251L

GENERAL DESCRIPTION E991A797

Wheel Speed Sensor senses vehicle speed and difference between front and rear wheel speed.
Opreation for getting Rotating Speeds of front/rear wheel can be got from deviding wheel speed sensor Rotating Speeds of front/rear by 2.
In case of ESP(or FTCS) system applied 4WD ECU receives this signal through CAN line, If it is not the case 4WD ECU receives this signal directly by using PWM communication line.
The wheel speed sensor is the essential component the ITM ECU uses to determine how to distribute driving force to front / rear wheel with steering angle sensor signal and TPS, brake signal.

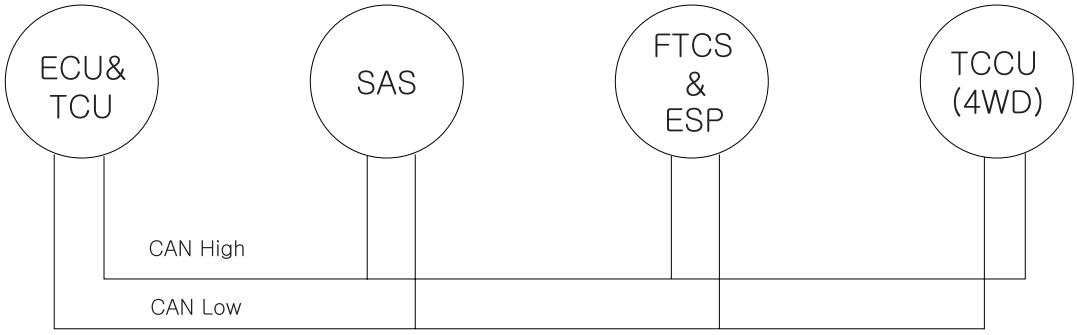

SCMMT6201L

DTC DESCRIPTION EF7E6A55

This code related to communication line between ECU and TCCU is set when CAN signal from ECU can’t received for more than 1sec or ECU internal error occur.
If failure is detected TCCU prohibits the ITM control and cuts the current to control coil.

DTC DETECTING CONDITION EAC96709

Item	Detecting Condition	Possible Cause
DTC Strategy	Loss of signal	• ABS MODULE,TCCU connector looseness and poor terminal to wire connection • Wheel sensor comm line circuit open/short • Faulty Wheel sensor • Faulty ABS MODULE • Faulty TCCU
Enable Conditions	• Message present 1.0 sec self clearing	
Threshold Value	• Measure individual wheel, if speed difference is 30kph for 30 seconds fault code will be set.ignition cycle reset	
Diagnostic Time	• 1 sec	
MIL on condition	• 0.5 Sec	
Fail Safe	• Speed sensor error will turn ITM off. ITM will not have output	

SIGNAL WAVEFORM & DATA EA69653C

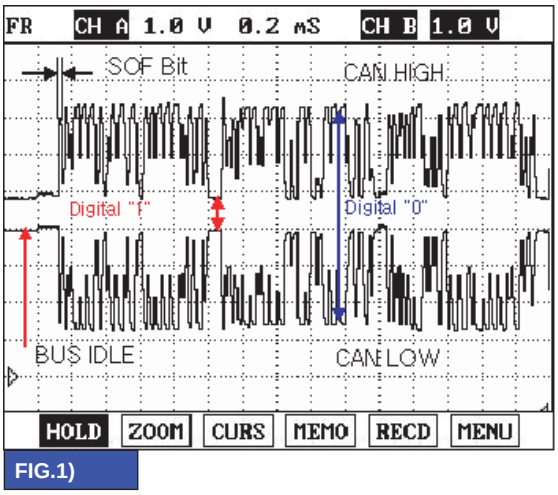

FIG.1) CAN Signal : high & low

SCMMT6202L

TERMINAL AND CONNECTOR INSPECTION EAF40840

1. Many malfunctions in the electrical system are caused by poor harness and terminals. Faults can also be caused by interference from other electrical systems, and mechanical or chemical damage.

2. Thoroughly check connectors for looseness, poor connection, bending, corrosion, contamination, deterioration,or damage.

3. Has a problem been found?

YES

▶ Repair as necessary and go to "Verification of Vehicle Repair" procedure.

NO

▶ Go to " CAN Signal Inspection " procedure.

CAN SIGNAL INSPECTION EECE4F12

1. Ignition ON, Engine : ON.
2. TCCU connector : Connect.
3. Monitor signal waveform between terminal 4, 5 of TCCU harness connector and chassis ground.
4. Start and drive vehicle in gear and maintain vehicle speed approx. 10km/h or less(6mph or less).

Specification : Signal Waveform & Data

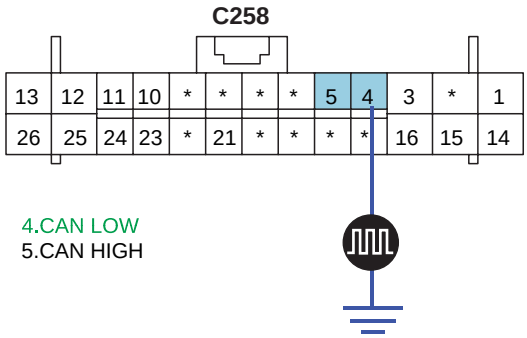

SCMMT6203L

CAUTION

The above value is only for reference.
The actual value may differ from it according to various engine condition.

5. Is CAN(FLSS)comm. Line Signal display near the specified value?

YES

▶ Fault is intermittent caused by poor contact in the sensor's and/or TCCU's connector or was repaired and TCCU memory was not cleared.Thoroughly check connectors for looseness, poor connection, bending, corrosion, contamination, deterioration, or damage. Repair or replace as necessary and then go to "Verification of Vehicle Repair" procedure.

NO

▶ Go to " CAN comm. Line Inspection " procedure.

CAN COMM. LINE INSPECTION E3A1FC87

1. IG "OFF" & ENG "OFF"
2. TCCU connector : Disconnect.
3. Measure resistance between terminal "4" of the TCCU harness connector and terminal "5" of the TCCU harness connector.

Specification : Approx. 60Ω

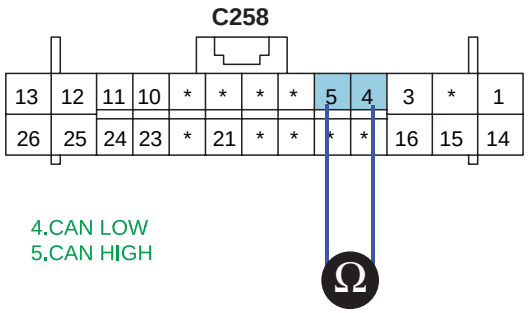

SCMMT6204L

CAUTION

The above value is only for reference.
The actual value may differ from it according to various engine condition.

4. Is resistance display near the specified value?

YES

▶ Fault is intermittent caused by open or short in CAN signal harnessor was repaired and TCCU memory was not cleared. Go to the applicable troubleshooting procedure.

NO

▶ Check for open/short in CAN comunication line of TCCU circuit.
▶ Check for the signal or component of ESP(ABS control module).
▶ Repair as necessary and then go to "Verification of Vehicle Repair" procedure.

VERIFICATION OF VEHICLE REPAIR EEC10AB2

1. Connect scan tool and select "Diagnostic Trouble Codes(DTCs)" mode.

2. Using scantool, Clear DTC.

3. Operate the vehicle within DTC Enable conditions in General information.

4. Are any DTCs present ?

YES

▶ Go to the applicable troubleshooting procedure.

NO

▶ System is performing to specification at this time.

DTC P1769 TIRE SIZE FAULT

GENERAL DESCRIPTION EFD10536

ITM(InterActive Torque Management) system can detect the tire size fault by calculating each wheel speed, if the tire size equipped at the vehicle is 10% bigger than normal tire.
Wheel Speed Sensor senses vehicle speed and difference between front and rear wheel speed.
Opreation for getting Rotating Speeds of front/rear wheel can be got from deviding wheel speed sensor Rotating Speeds of front/rear by 2

DTC DESCRIPTION E8EDED27

This code is set, if ITM-ECU detect tha the tire size is 10% bigger than normal tire by calculating each wheel speed.
When the failure is set there is no signal in the warning lamp, just ITM-ECU sets and stores this code.

DTC DETECTING CONDITION E64DBDBB

Item	Detecting Condition	Possible Cause
DTC Strategy	• A tire is estimated to have a tire size 10% more that the base tire size	• TIRE SIZE (OEM:235/60R18) • Faulty TCCU
Enable Conditions	• Message present 1.0 sec self clearing	
Threshold Value	• Estimated tire size has been detected and has matured for 1 second	
Diagnostic Time	• 1.0 Sec	
MIL on condition		
Fail Safe	• Active fault is set, but lamp is not turned on	

MONITOR DTC STATUS E69ABB1F

1. Connect scantool to Data Link Connector(DLC).

2. Warm up the engine to normal operating temperature.

3. Monitor DTC(Diagnostics Trouble Code) on the scantool.

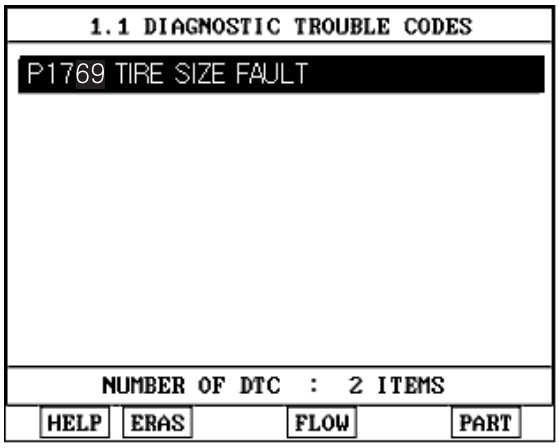

SCMMT6232L

4. Is the same DTC displayed again?

YES

▶ Check part number and tire size.
▶ Repair or replace as necessary and go to "Verification of vehicle Repair" procedure.

NO

▶ Fault is intermittent caused by poor contact in the sensor’s and/or TCCU’s connector or was repaired and TCCU memory was not cleared. Thoroughly check connectors for looseness, poor connection, bending, corrosion, contamination, deterioration, or damage. Repair or replace asnecessary and go to "Verification of vehicle Repair" procedure .

VERIFICATION OF VEHICLE REPAIR E66FC18C

1. Connect scan tool and select "Diagnostic Trouble Codes(DTCs)" mode.
2. Using scantool, Clear DTC.
3. Operate the vehicle within DTC Enable conditions in General information.
4. Are any DTCs present ?

YES

▶ Go to the applicable troubleshooting procedure.

NO

▶ System is performing to specification at this time.

DTC P1770 ECU LOCK MODE THERMAL PROTECT
DTC P1771 ECU SHUTDOWN THERMAL PROTECT

COMPONENT LOCATION EEBCAF5E

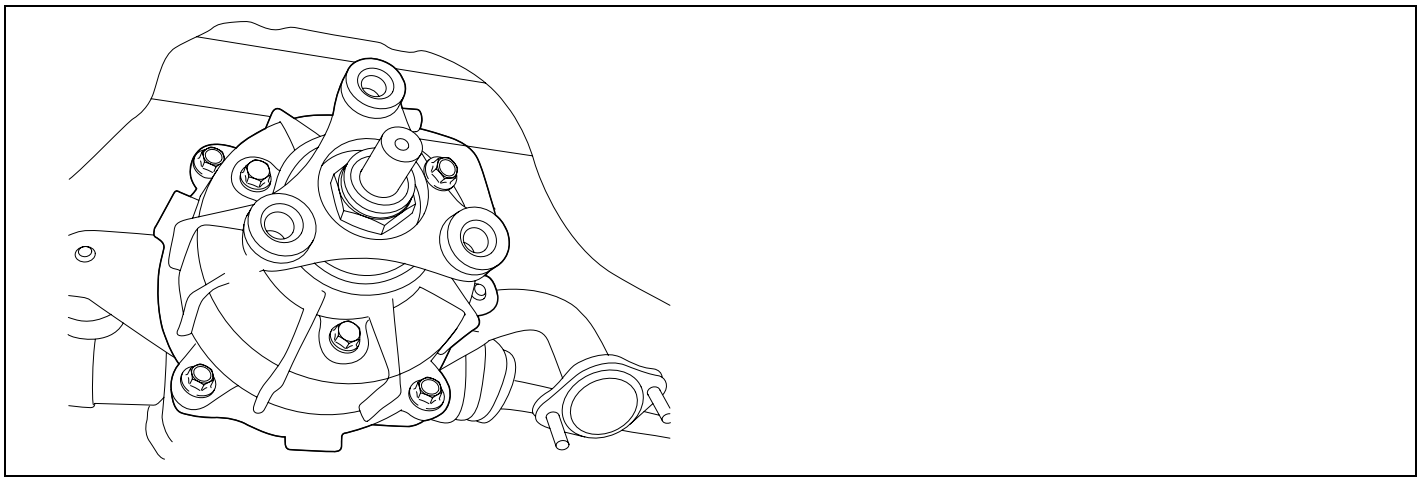

SCMMT6233L

GENERAL DESCRIPTION E09AAC8E

Vehicle uses 2WD(2 wheel drive) for driving at normal speed, but sometimes it uses 4WD (4 wheel drive) accordign to driving condition.
(cornering or acceleration)
EMC(Electric Magnetic Clutch) distributes proper torque to front wheel by controling amount of current inside EMC coil.
That time power pressing the multi plate clutch by apply cam is changed by a rate of EMC duty. after multi plate clutch start slip the force for acceletion at front/rear wheel is controlled at a range of 100:0 ~ 50 : 50.
ITM system has 4WD-LOCK function that can make driving force to 50:50 by compulsion according to driver's intention.

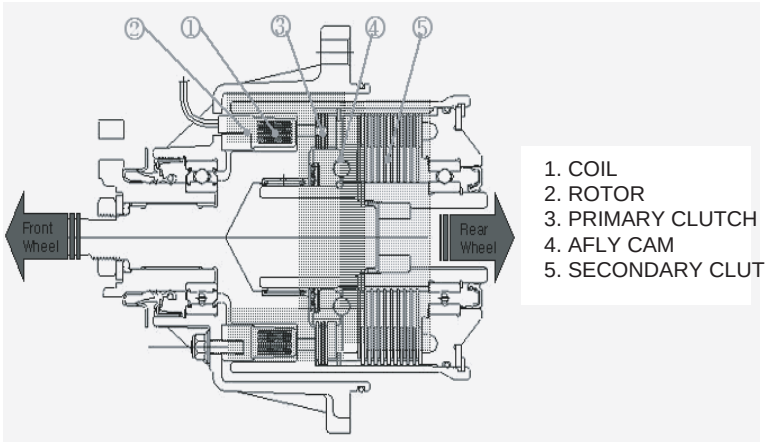

SCMMT6221L

DTC DESCRIPTION EBB8DBC2

When the failure is set there is no signal in the warning lamp, just ITM-ECU sets and stores this code.
If the ITM-ECU decides that the clutch(EMC) and oil are over-heated (above specified value) for more than 1s.
When the failure is set there is no signal in the warning lamp, just ITM-ECU sets and stores this code.

DTC DETECTING CONDITION E0EB96FA

Item	Detecting Condition	Possible Cause
DTC Strategy	• EMC lock mode plate and oil temp thresholds exceeded	• Faulty SWITCH(4WD-LOCK) • Faulty EMC • Faulty TCCU
Enable Conditions	• Message present 1.0 sec self clearing	
Threshold Value	• Thresholds exceeded for 1 second	
Diagnostic Time	• 1 sec	
MIL on condition		
Fail Safe	• ECU will go into lock mode, Lock mode indicator on	

MONITOR DTC STATUS E1EECCC7

1. Connect scantool to Data Link Connector(DLC).
2. Warm up the engine to normal operating temperature.
3. Monitor DTC(Diagnostics Trouble Code) on the scantool.

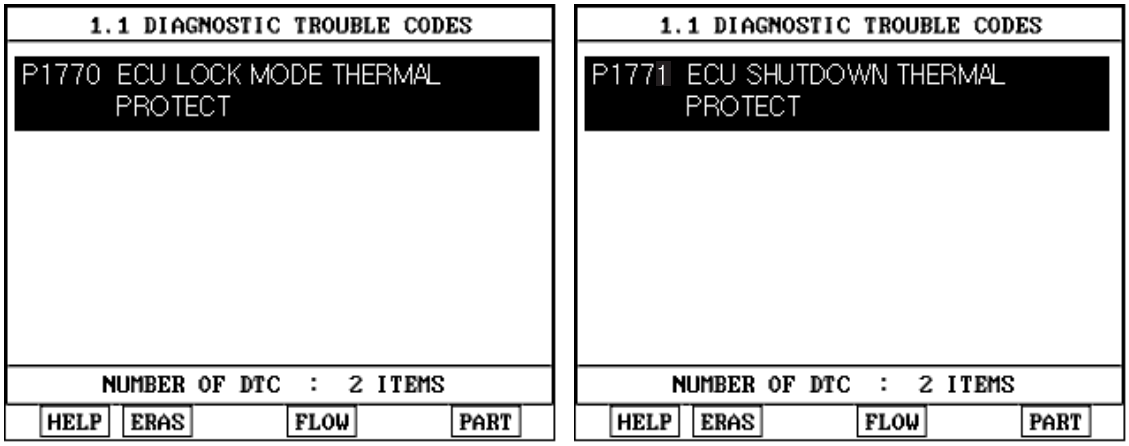

SCMMT6253L

4. Is the same DTC displayed again?

YES

▶ Check EMC, switch (4WD LOCK) condition.
▶ Repair or replace as necessary and go to "Verification of vehicle Repair" procedure.

NO

▶ Fault is intermittent caused by poor contact in the sensor’s and/or TCCU’s connector or was repaired and TCCU memory was not cleared. Thoroughly check connectors for looseness, poor connection, bending, corrosion, contamination, deterioration, or damage. Repair or replace asnecessary and go to "Verification of vehicle Repair" procedure.

VERIFICATION OF VEHICLE REPAIR EDD5D9A4

1. Connect scan tool and select "Diagnostic Trouble Codes(DTCs)" mode.
2. Using scantool, Clear DTC.
3. Operate the vehicle within DTC Enable conditions in General information.
4. Are any DTCs present ?

YES

▶ Go to the applicable troubleshooting procedure.

NO

▶ System is performing to specification at this time.

DTC P1780 TORQUE CONTROL SIGNAL FAILURE

GENERAL DESCRIPTION EC0D21BA

Many control units is applied to the vehicle due to vehicle to be electronic control type and these perform many controls by receiving signals from sensors. So the common use of each sensors and the need of comunizing informations became a prominent figure. CAN comunication method is used at power train (ABS, trnasmission, engine, ECS etc) control of vehicle because it withstands eletronical external noise by spark and can high-speed comunication. Though CAN communication, ECM and TCM hold engin RPM, APS, step of trensmission, decreasing of torque in common and perform the active control.

DTC DESCRIPTION EC77CBDC

This code is set, if ITM-ECU detects invailid engine information like engine displacement, torque.
If failure is detected TCCU prohibits the ITM control and cuts the current to control coil.

DTC DETECTING CONDITION E3FAAEF6

Item	Detecting Condition	Possible Cause
DTC Strategy	• Invalid Engine size received	• Invalid Engine size received
Enable Conditions	• Message present 1.0 sec self clearing	
Threshold Value	• Invalid engine size received for greater than 1 second, and a fault will be set	
Diagnostic Time	• 1 sec	
MIL on condition	• 0.5 Sec	
Fail Safe	• Engine size set to zero, ECU will not send current to the clutch coil	

MONITOR DTC STATUS E4A702B4

1. Connect scantool to Data Link Connector(DLC).
2. Warm up the engine to normal operating temperature.
3. Monitor DTC(Diagnostics Trouble Code) on the scantool.

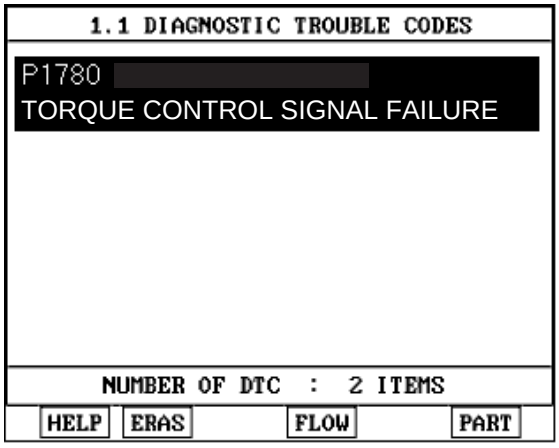

SCMMT6237L

4. Is the same DTC displayed again?

YES

▶ Check engine information.
▶ Repair or replace as necessary and go to "Verification of vehicle Repair" procedure.

NO

▶ Fault is intermittent caused by poor contact in the sensor’s and/or TCCU’s connector or was repaired and TCCU memory was not cleared. Thoroughly check connectors for looseness, poor connection, bending, corrosion, contamination, deterioration, or damage. Repair or replace asnecessary and go to "Verification of vehicle Repair" procedure.

VERIFICATION OF VEHICLE REPAIR EBF42BE2

1. Connect scan tool and select "Diagnostic Trouble Codes(DTCs)" mode.
2. Using scantool, Clear DTC.
3. Operate the vehicle within DTC Enable conditions in General information.
4. Are any DTCs present ?

YES

▶ Go to the applicable troubleshooting procedure.

NO

▶ System is performing to specification at this time.

DTC U0001 CAN COMMUNICATION MALFUNCTION

COMPONENT LOCATION E4802A94

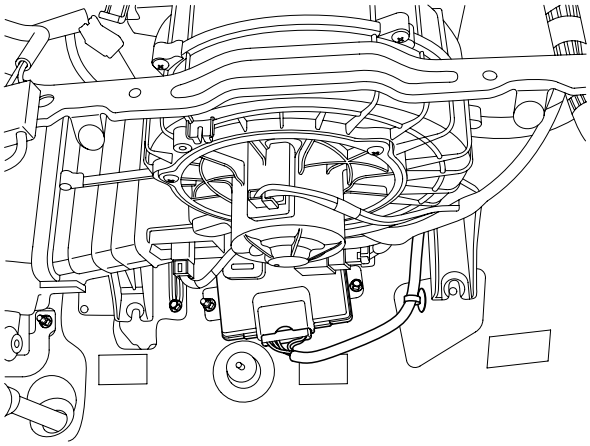

SCMMT6238L

GENERAL DESCRIPTION E44A6ABE

CAN communication is a parallel circuit to interchange information among each units. CAN communication can share much information with units more faster and more efficiently by using specified language.
CAN-High line is twisted with CAN-Low line as a purpose in preventing from a noise.
ITM-ECU performs active control by sharing signals of engine RPM, APS, shift position, torque reduction.

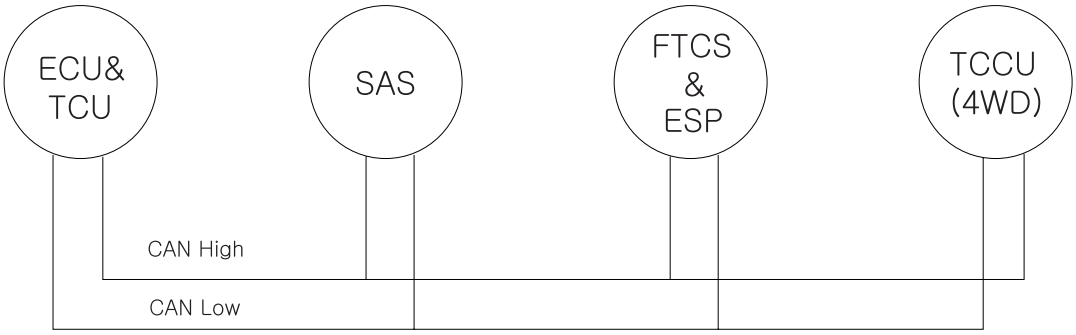

SCMMT6201L

DTC DESCRIPTION EECAE073

This code related to communication line between ECU(PCU, ABS, ESP) and TCCU is set when CAN signal from ECU can’t received for more than 1sec or ECU internal error occur.
If failure is detected TCCU prohibits the ITM control and cuts the current to control coil.

DTC DETECTING CONDITION E201F760

Item	Detecting Condition	Possible Cause
DTC Strategy	• CAN Transmit error/loss of comm..	• CAN HIGH/LOW circuit open/short • Faulty CAN MODULE
Enable Conditions	• Message present 1.0 sec self clearing	
Threshold Value	• CAN Transmit counter exceeds 255 will reset CAN module	
Diagnostic Time	• 1 sec	
MIL on condition	• 0.5 Sec	
Fail Safe	• TPS=0 ITM Controller will not re-act to pre-empt. Pre-empt=0. The ECU will not send current to the clutch coil	

SIGNAL WAVEFORM & DATA EA6C1D0B

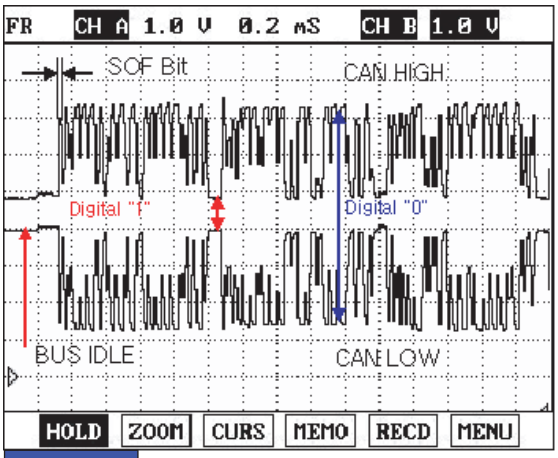

FIG.1)

FIG.1) CAN Signal : high & low

SCMMT6202L

TERMINAL AND CONNECTOR INSPECTION E2D01AD7

1. Many malfunctions in the electrical system are caused by poor harness and terminals. Faults can also be caused by interference from other electrical systems, and mechanical or chemical damage.

2. Thoroughly check connectors for looseness, poor connection, bending, corrosion, contamination, deterioration,or damage.

3. Has a problem been found?

YES

▶ Repair as necessary and go to "Verification of Vehicle Repair" procedure.

NO

▶ Go to " CAN Signal Inspection " procedure.

CAN COMM. LINE INSPECTION EE333DD6

1. Ignition ON, Engine : ON.
2. TCCU connector : Connect.
3. Monitor signal waveform between terminal 4, 5 of TCCU harness connector and chassis ground.
4. Shift to N Range.

Specification : Signal Waveform & Data

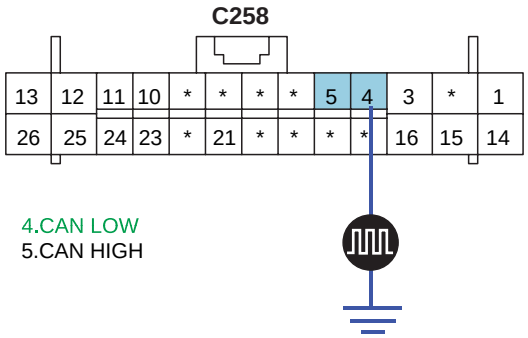

SCMMT6203L

CAUTION

The above value is only for reference.
The actual value may differ from it according to various engine condition.

5. Is CAN Signal display near the specified value?

YES

▶ Fault is intermittent caused by poor contact in the sensor's and/or TCCU's connector or was repaired and TCCU memory was not cleared.Thoroughly check connectors for looseness, poor connection, bending, corrosion, contamination, deterioration, or damage. Repair or replace as necessary and then go to "Verification of Vehicle Repair" procedure.

NO

▶ Go to " CAN comm. Line Inspection " procedure.

CAN COMM. LINE INSPECTION EDBBE2F5

1. IG "OFF" & ENG "OFF"
2. TCCU connector : Disconnect.
3. Measure resistance between terminal "4" of the TCCU harness connector and terminal "5" of the TCCU harness connector.

Specification : Approx. 60Ω

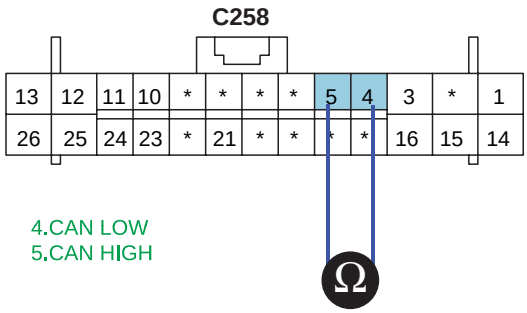

SCMMT6204L

CAUTION

The above value is only for reference.
The actual value may differ from it according to various engine condition.

4. Is resistance display near the specified value?

YES

▶ Fault is intermittent caused by open or short in CAN signal harnessor was repaired and TCCU memory was not cleared. Go to the applicable troubleshooting procedure.

NO

▶ Check for open/short in CAN comunication line of TCCU circuit.
▶ Check for the signal or component of Engine control module.
▶ Repair as necessary and then go to "Verification of Vehicle Repair" procedure.

VERIFICATION OF VEHICLE REPAIR E1A9C7BA

1. Connect scan tool and select "Diagnostic Trouble Codes(DTCs)" mode.

2. Using scantool, Clear DTC.

3. Operate the vehicle within DTC Enable conditions in General information.

4. Are any DTCs present ?

YES

▶ Go to the applicable troubleshooting procedure.

NO

▶ System is performing to specification at this time.

DTC U0100 CAN MI-COM OR CIRCUIT MAL.

COMPONENT LOCATION E0C48A9A

Refer to DTC U0001.

GENERAL DESCRIPTION EF2C406E

Refer to DTC U0001.

DTC DESCRIPTION E5DAC2B5

Refer to DTC U0001.

DTC DETECTING CONDITION E1D8BD4B

Item	Detecting Condition	Possible Cause
DTC Strategy	• ECU-ITM communication line or ECU side malfunction	• CAN HIGH/LOW circuit open/short • Faulty CAN MODULE
Enable Conditions	• Message present 1.0 sec self clearing	
Threshold Value	• Loss of EMS1 or EMS2 message for greater than 1 second, and a fault will be set	
Diagnostic Time	• 1 sec	
MIL on condition	• 0.5 Sec	
Fail Safe	• ECU will not react to Engine speed or torque. ECU will not send current to the clutch coil	

SIGNAL WAVEFORM & DATA E1CD9DB4

Refer to DTC U0001.

TERMINAL AND CONNECTOR INSPECTION E59B59F7

Refer to DTC U0001.

CAN COMM. LINE INSPECTION EF5EDCF7

Refer to DTC U0001.

SIGNAL CIRCUIT INSPECTION E086FF9D

Refer to DTC U0001.

VERIFICATION OF VEHICLE REPAIR EF6FD225

Refer to DTC U0001.

DTC U0101 SERIAL COMMUNICATION PROBLEM WITH TCU (TIMEOUT)

COMPONENT LOCATION E43D32B9

Refer to DTC U0001.

GENERAL DESCRIPTION E1BE0D4E

Refer to DTC U0001.

DTC DESCRIPTION EEDC0F62

Refer to DTC U0001.

DTC DETECTING CONDITION E4F4CC75

Item	Detecting Condition	Possible Cause
DTC Strategy	• TCU-ITM communication line or ECU side malfunction. (A/T only)	• CAN HIGH/LOW circuit open/short • Faulty TCU • Faulty TCCU
Enable Conditions	• Message present 1.0 sec self clearing	
Threshold Value	• Loss of TCU1 message for greater than 1 second, and a fault will be set. This fault applies to an automatic transmission only	
Diagnostic Time	• 1 sec	
MIL on condition	• 0.5 Sec	
Fail Safe	• Trans gear set to first, engine torque set to zero, ECU will not send current to the clutch coil	

SIGNAL WAVEFORM & DATA E837FFC1

Refer to DTC U0001.

TERMINAL AND CONNECTOR INSPECTION E0D72C99

Refer to DTC U0001.

CAN COMM. LINE INSPECTION EE92706C

Refer to DTC U0001.

CAN COMM. LINE INSPECTION EAFF0DAD

Refer to DTC U0001.

VERIFICATION OF VEHICLE REPAIR E8FD6BFE

Refer to DTC U0001.

DTC U0121 ABS-ITM CAN COMM. LINE

COMPONENT LOCATION EF99EAF9

Refer to DTC U0001.

GENERAL DESCRIPTION EE8BDFF2

Refer to DTC U0001.

DTC DESCRIPTION E020A53D

Refer to DTC U0001.

DTC DETECTING CONDITION ECC1E571

Item	Detecting Condition	Possible Cause
DTC Strategy	• ABS-ITM Communication Line, or ECU side malfunction	• CAN HIGH/LOW circuit open/short • Faulty ABS/ESP • Faulty TCCU
Enable Conditions	• Message present 1.0 sec self clearing	
Threshold Value	• Loss of the 4D0H message for greater than 1 second	
Diagnostic Time	• 1 sec	
MIL on condition	• 0.5 Sec	
Fail Safe	• Fault code stored in memory, and ABS/ESP strategy deactivated	

SIGNAL WAVEFORM & DATA E9AD7FBA

Refer to DTC U0001.

TERMINAL AND CONNECTOR INSPECTION E8BD2069

Refer to DTC U0001.

CAN SIGNAL INSPECTION ED3A75F7

Refer to DTC U0001.

SIGNAL CIRCUIT INSPECTION EE087EE6

Refer to DTC U0001.

VERIFICATION OF VEHICLE REPAIR ED5BEFB0

Refer to DTC U0001.

DTC U0122 ECM-TCS CAN ERROR

COMPONENT LOCATION ED4BD0B6

Refer to DTC U0001.

GENERAL DESCRIPTION ECF706BF

Refer to DTC U0001.

DTC DESCRIPTION E19C04E0

Refer to DTC U0001.

DTC DETECTING CONDITION E8C4D43D

Item	Detecting Condition	Possible Cause
DTC Strategy	• ESP-ITM Communication Line, or ECU side malfunction	• CAN HIGH/LOW circuit open/short • Faulty ABS/ESP • Faulty TCCU
Enable Conditions	• Message present 1.0 sec self clearing	
Threshold Value	• Loss of the Wheel Speed sensor signals for greater than one (1) second, and a fault will be set	
Diagnostic Time	• 1 sec	
MIL on condition	• 0.5 Sec	
Fail Safe	• See Speed Sensors	

SIGNAL WAVEFORM & DATA E6C97CDF

Refer to DTC U0001.

TERMINAL AND CONNECTOR INSPECTION EBB081A5

Refer to DTC U0001.

CAN SIGNAL INSPECTION EAD6B84C

Refer to DTC U0001.

CAN COMM. LINE INSPECTION EC91CE9A

Refer to DTC U0001.

VERIFICATION OF VEHICLE REPAIR E5E1AF1E

Refer to DTC U0001.

DTC U0126 SAS-ITM CAN COMM. LINE

COMPONENT LOCATION E5648EBD

Refer to DTC U0001.

GENERAL DESCRIPTION E3336C2E

Refer to DTC U0001.

DTC DESCRIPTION EC1EEAB6

Refer to DTC U0001.

DTC DETECTING CONDITION E7F8EF16

Item	Detecting Condition	Possible Cause
DTC Strategy	• SAS-ITM Communication Line, or ECU side malfunction	• CAN HIGH/LOW circuit open/short • Faulty SAS(ESP only) • Faulty TCCU
Enable Conditions	• Message present 1.0 sec self clearing	
Threshold Value	• Loss of the Wheel Speed sensor signals for greater than one (1) second, and a fault will be set	
Diagnostic Time	• 1 sec	
MIL on condition	• 0.5 Sec	
Fail Safe	• See Speed Sensors	

SIGNAL WAVEFORM & DATA ED8FBCCA

Refer to DTC U0001.

TERMINAL AND CONNECTOR INSPECTION EB05A52D

Refer to DTC U0001.

WAVEFORM INSPECTI E52C587A

Refer to DTC U0001.

SIGNAL CIRCUIT INSPECTION EFEFCEA0

Refer to DTC U0001.

VERIFICATION OF VEHICLE REPAIR EBCAE600

Refer to DTC U0001.

TRANSFER CASE

COMPONENTS E5DB3362

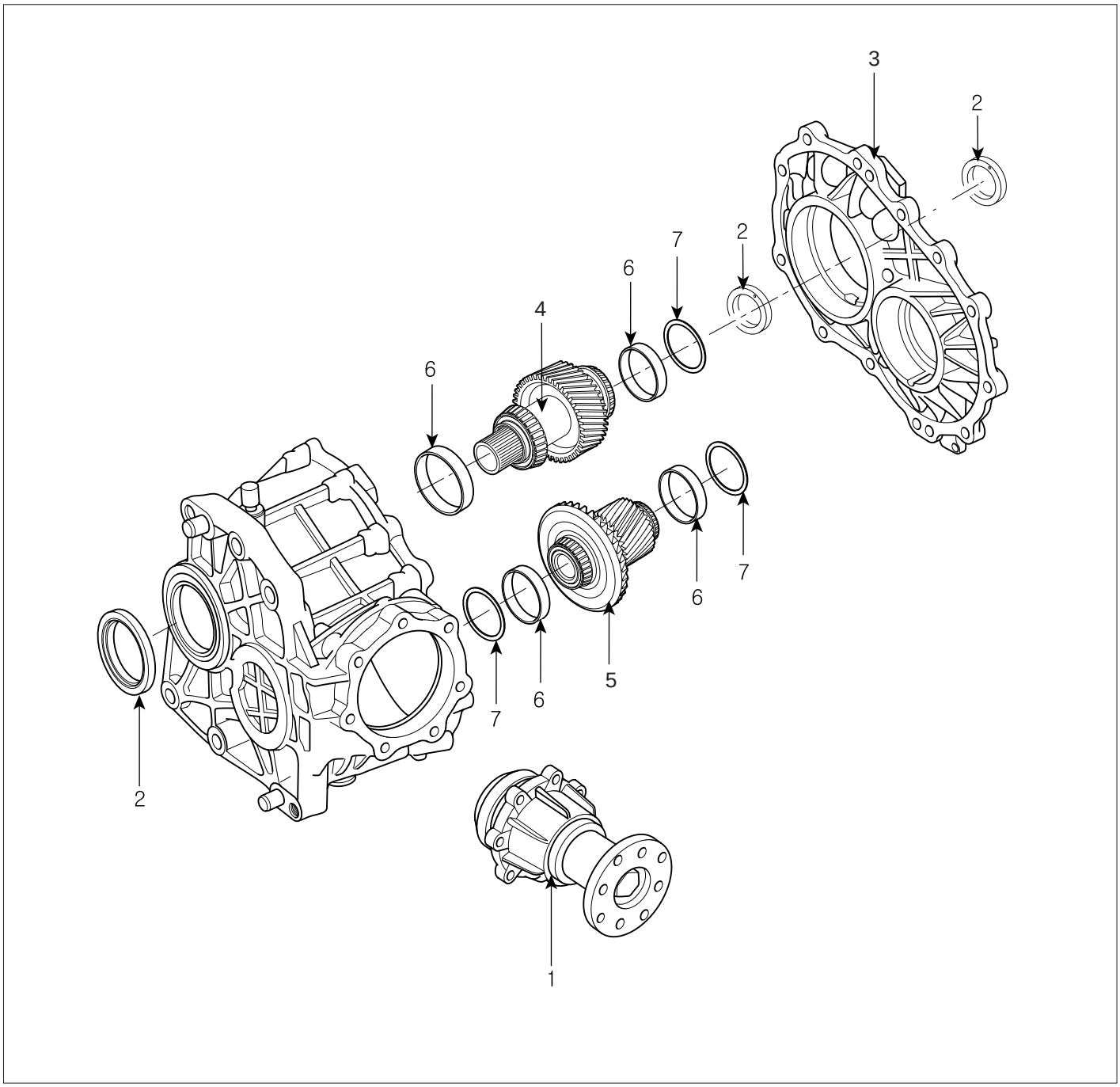

1. Pinion assembly
2. Oil seal
3. Transfer cover
4. Transfer drive gear assembly
5. Hypoid gear shaft assembly
6. Bearing outer race
7. Spacer

SCMMT6021L

INSPECTION E046DF3C

CHECK FOR TRANSFER OIL

1. Check and replenish the transfer oil every 40,000km(24,855 miles).

REPLACEMENT E6E243DF

TRANSFER OIL REPLACEMENT.

1. Replace the oil every 100,000km(62,137miles) in a general condition and every 40,000km(24,854miles) in severe usage conditions.

   NOTE

   1. Severe usage (marked '') is defined as*
   a. Frequent driving on rough road (Bumpy road, gravel road, snowy road, unpaved road . Etc.)
   b. Frequent driving on mountain road, ascent/descent.
   c. Police, taxi, commercial type operation or trailer towing. Etc.)

   2. Transfer & diff carrier lubricants should be changed anytime transfer & diff carrier have been submerged in water

REMOVAL EE0686D7

[DIESEL 2.2L]

1. Remove the battery (-) terminal.
2. Lift up the vehicle.
3. Remove the propellar shaft (see 'DS' group-'PROPELLAR SHAFT')
4. Remove the front muffler(see EM group).
5. Remove the RH driveshaft (see 'DS' group-'DRIVESHAFT').
6. Loosen the oil drain plug(A) and drain the fluid.

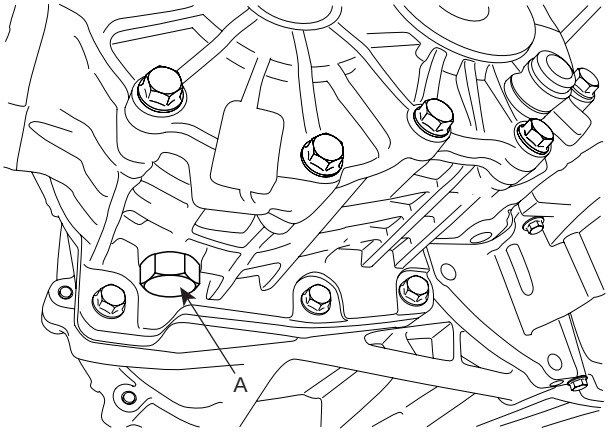

SCMMT6062D

7. After draining, re-tighten the oil drain plug.

TORQUE : 40~60 Nm (4~6 kgf.m, 28.9~43.4 lb-ft)

8. Remove the bracket mounting bolts(A-4ea).

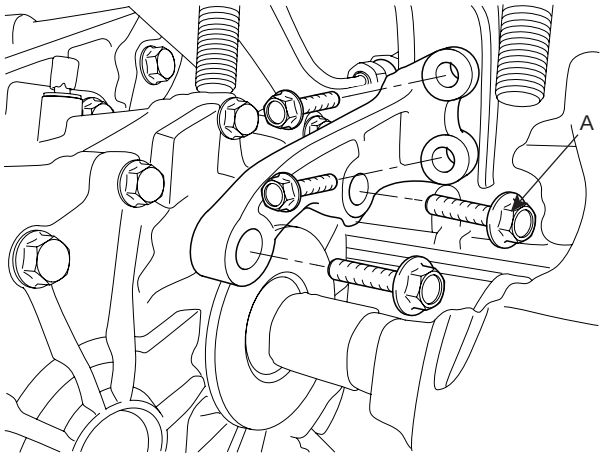

SCMMT6030L

9. Remove the transfer case assembly by removing the mounting bolts(A-6ea).

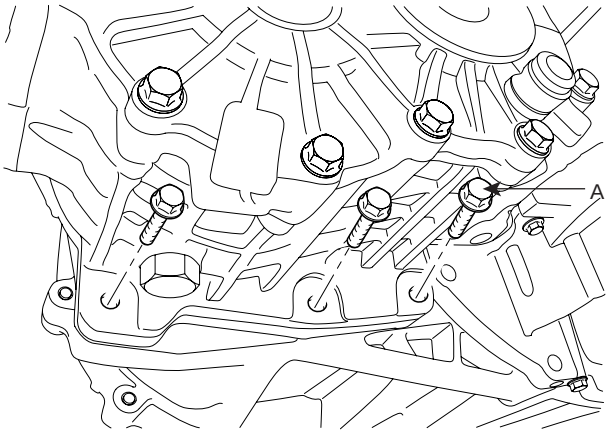

SCMMT6029L

[GASOLINE 2.7L]

NOTE

1. The repair of the transfer assembly requires a special skill and furthermore an improper adjustment of the spacers may cause a severe noise and durability issue.
2. Hypoid gear set is manufactured and controlled as a pair. Any replacement of the part is to be done as a pair, hypoid gear shaft assembly (47308-39200) and pinion shaft (47311-39000).

1. Remove the battery negative (-) cable.

2. Disconnect the oxygen sensor connector(A,B) and remove the oxygen sensor connector bracket. (Engine room right side).

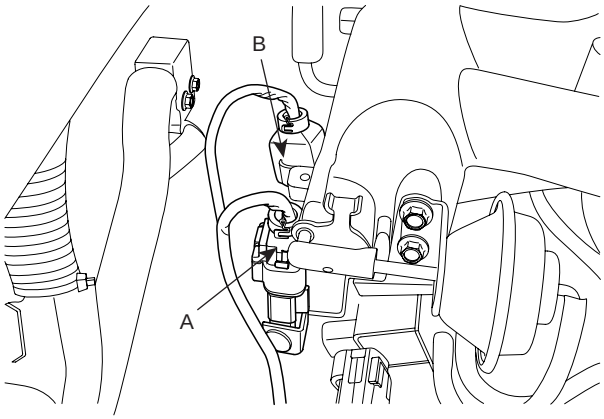

SCMMT6025L

3. Remove the wheel and tire (Right side).

4. Remove the engine side cover(A) (Right side).

5. Remove the drive shaft(A) from the transfer.(see DS group)

6. Remove the front exhaust pipe assembly(A).

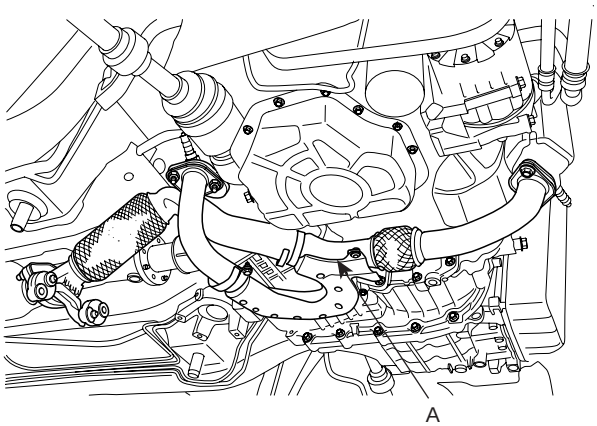

SCMMT6022L

7. Drain the transfer oil through drain plug hole.

8. Remove the pinion case mounting bolts(A-4ea).

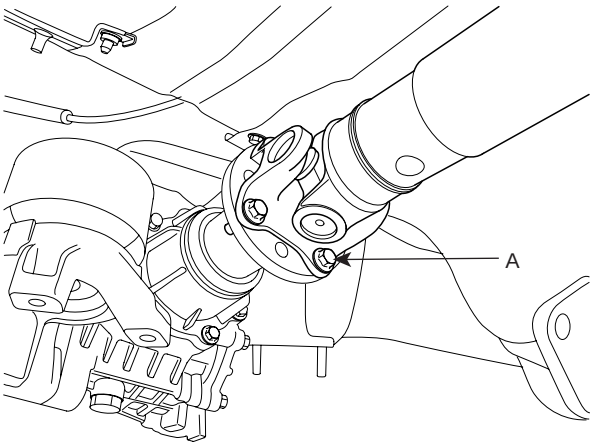

SCMMT6027L

9. Remove the heat protector(A) using a hexagonal socket.

NOTE

To remove the heat protector mounting bolt easily, before removing the heat protector mounting bolts(3EA), apply the mounting bolt with "WD-40 stops squeaks".

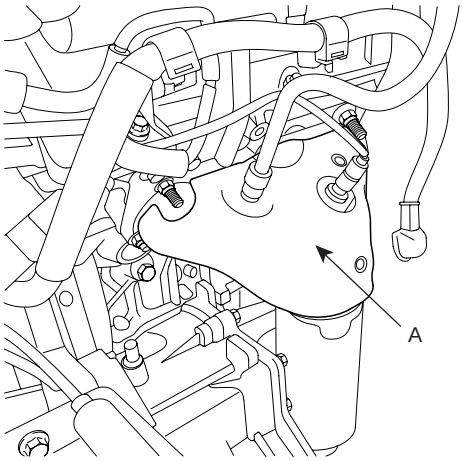

UMQG002K

10. Lift up the vehicle.

11. Remove the exhaust manifold mounting nuts(7EA).

NOTE

To remove the exhaust manifold mounting nut easily, before removing the exhaust manifold mounting nuts(7EA), apply the mounting nuts with "WD-40 stops squeaks".

12. Remove the transfer mounting bracket(A).

13. Remove the transfer mounting bolts(4EA).

14. Using a flat head screw driver, remove the transfer from the transaxle by moving the driver to left and right directions.

DISASSEMBLY E1E594D1

1. Drain the transfer oil through drain plug hole.

2. Remove the pinion assembly mounting bolts (7EA) and then remove the pinion assembly(A).

   NOTE

   This assembly can be removed with a propella shaft assembly in 'REMOVAL' step.

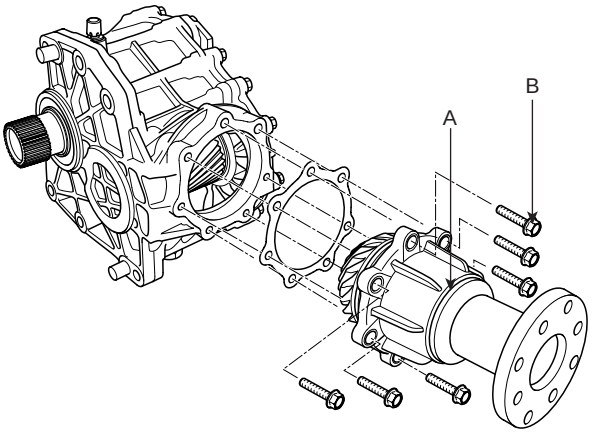

SCMMT6070D

3. Remove the dust cover(A).

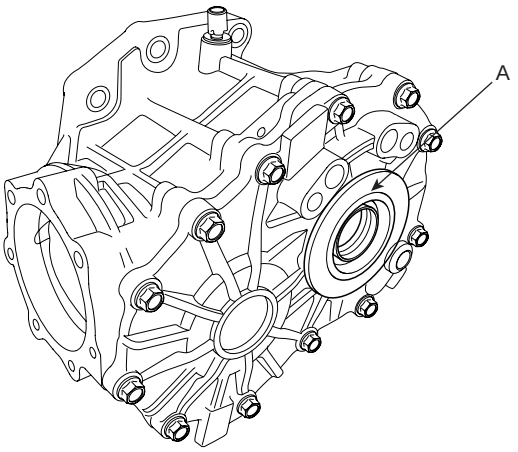

SCMMT6071D

4. Remove the transfer cover(A).

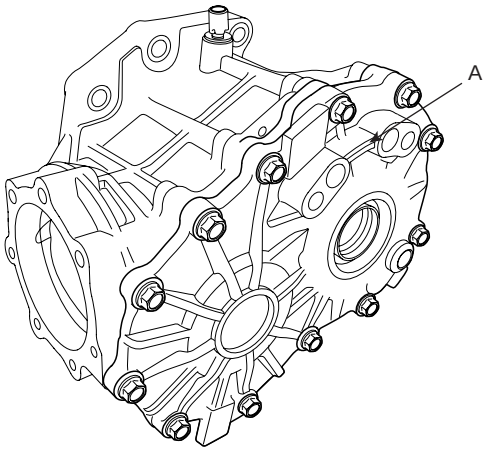

SCMMT6077D

5. Remove the transfer drive gear assembly(A) and the hypoid gear shaft assembly(B) from the trasfer housing.

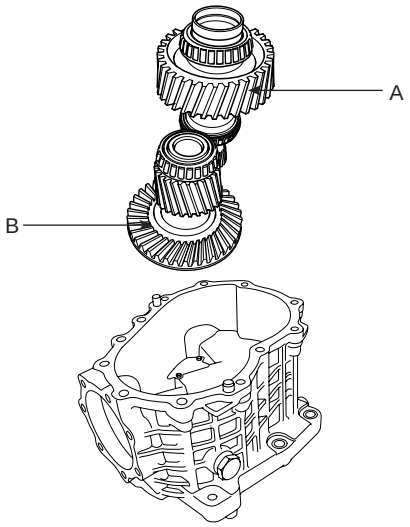

SCMMT6072D

6. Remove the oil seal(A)(47452-39000, transfer drive gear left hand side).

   NOTE

   When reassembling the transfer, be sure to always replace the oil seal(47452-39000) with new part.

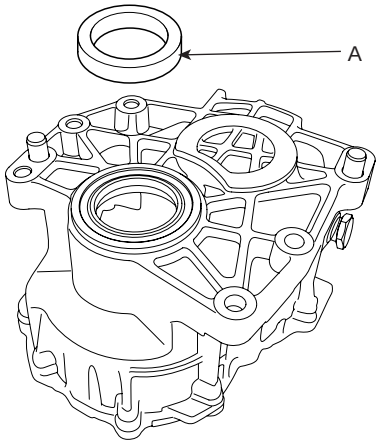

SCMMT6073D

7. Remove the oil seal(47352-39300) inside the transfer cover.

8. Using a sliding hammer, remove the taper roller bearing outer races(C) from the transfer cover(A) and housing(B).

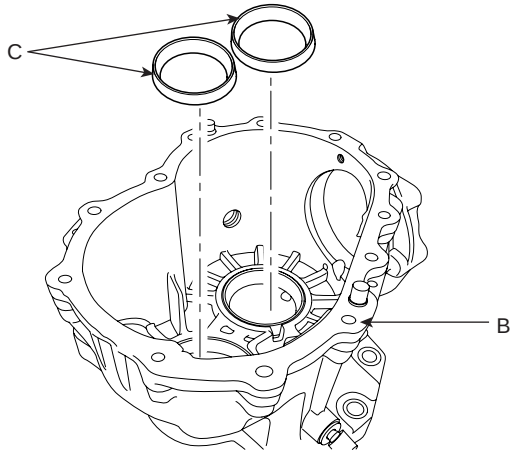

SCMMT6074D

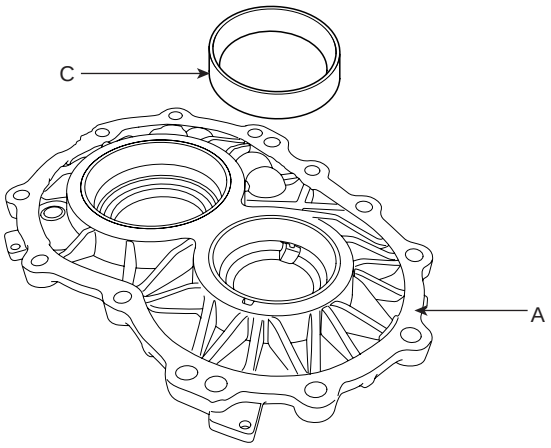

SCMMT6075D

9. Remove the oil seal(A) from the transfer cover.

NOTE

When reassembling the transfer, be sure to always replace the oil seal(47350-39300) with new part.

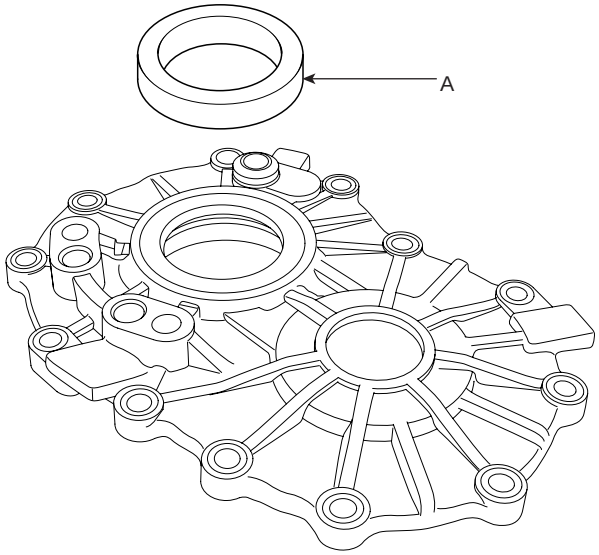

SCMMT6076D

REASSEMBLY E6E29444

NOTE

1. *Clean all parts except the taper roller bearings. Be careful about the direction of seals.*
2. *Oil bearings with hypoid gear oil API GL5.*
3. *Smear involute splines all covering with high pressure grease "Klueber microlube GNY202".*
4. *Measuring temperature: 20°±5°C.*
5. *O-ring has to be dipped into hypoid gear oil API GL5. Allow excess oil to drain.*
6. *Contact surface of the transfer housing to be coated with "SEALANT 732" or equivalent (silicon type sealing agent) prior to mounting. Coating thickness: 0.1mm MIN. Prior to coating, mating surfaces must be clean and free from oil and grease.*
7. *Transfer oil specification : Hypoid gear oil "API GL5, SAE 75W/90 SHELL SPIRAX EQUIVA-LENT". Filled up to lower filler plug thread level(Approx. 0.8L)*
8. *The hypoid gear set must be managed as a pair. Whenever installing or replacing a hypoid gear shaft assembly(47339-39300) or a pinion shaft(47311-39300). Make sure to install or replace as a pair.*
9. *In reassembling, refer to the two figures below.*

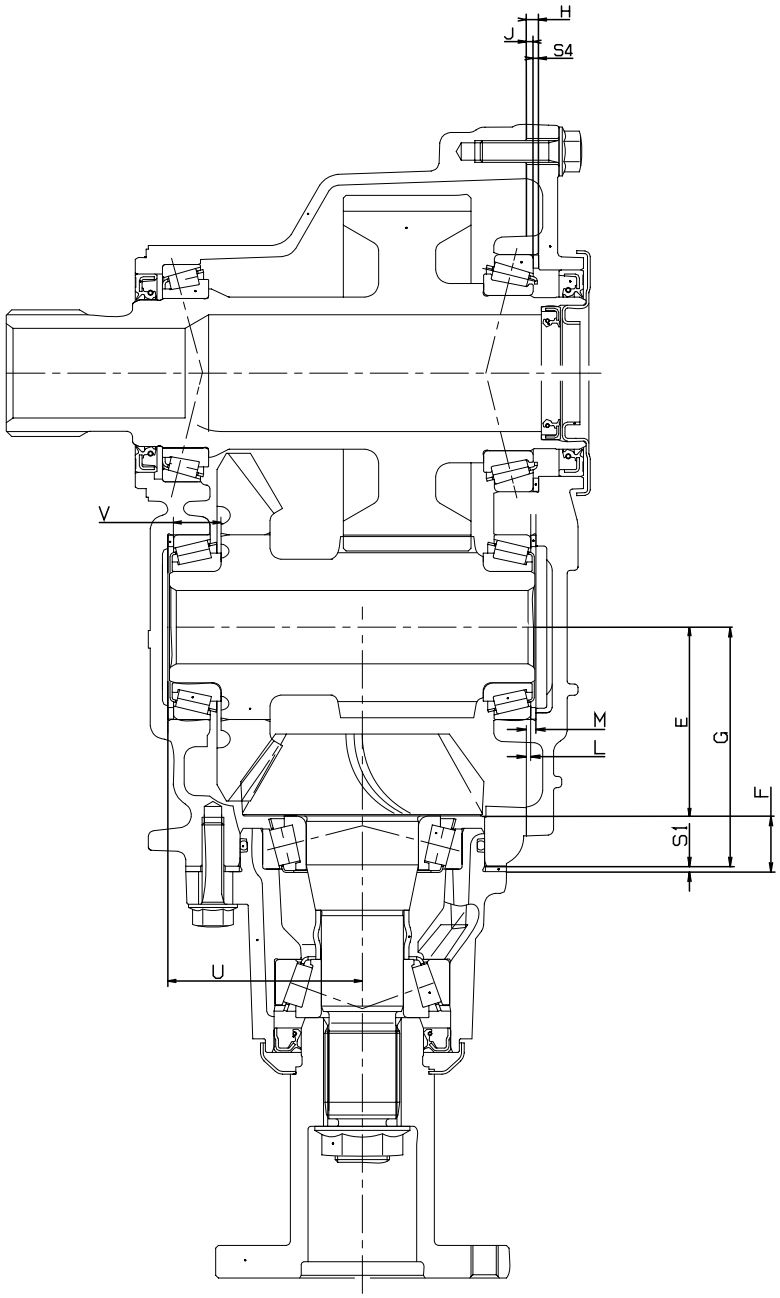

SCMMT6042D

1. Install the transfer drive gear with the taper roller bearings(47366-39000 and 47465-39000) into transfer housing.

2. Applying the preload(100 to 200N) to bearings, measure the dimension J.

3. Measure the dimension H on transfer cover(47314-39200).

4. Select the spacer thickness from the chart below. Thickness S4= H-J+K. (K: Bearing preload = 0.07 to 0.11mm.)

Corresponding preload torque(measured without seals) : 120 to 180Ncm.

PART NUMBER	SPACER THICKNESS (mm)
47383-39152	1.520-1.539
47383-39154	1.540-1.559
47383-39156	1.560-1.579
47383-39158	1.580-1.599
47383-39160	1.600-1.619

PART NUMBER	SPACER THICKNESS (mm)
47383-39162	1.620-1.639
47383-39164	1.640-1.659
47383-39166	1.660-1.679
47383-39168	1.680-1.699
47383-39170	1.700-1.719
47383-39172	1.720-1.739
47383-39174	1.740-1.759
47383-39176	1.760-1.779
47383-39178	1.780-1.779
47383-39180	1.800-1.819
47383-39182	1.820-1.839
47383-39185	1.85-1.88
47383-39189	1.89-1.92
47383-39193	1.93-1.96
47383-39197	1.97-2.00
47383-39201	2.01-2.04
47383-39205	2.05-2.08
47383-39209	2.09-2.12
47383-39213	2.13-2.16
47383-39217	2.17-2.20
47383-39221	2.21-2.24
47383-39225	2.25-2.28
47383-39229	2.29-2.32
47383-39233	2.33-2.36

5. Reassemble the selected spacer above.

6. Measure the dimension U and V.
   U…. Finished dimension of transfer housing.
   V…. Distance from back of the hypoid gear to bearing measured under 100 to 200N preload.

7. Select the spacer thickness from the chart below. Thickness S2=U-(V + mounting distance 52.0 mm).

PART NUMBER	SPACER THICKNESS(mm)
47384-39130	1.300-1.319
47384-39132	1.320-1.339
47384-39134	1.340-1.359
47384-39136	1.360-1.379
47384-39138	1.380-1.399
47384-39140	1.400-1.419

PART NUMBER	SPACER THICKNESS(mm)
47384-39142	1.420-1.439
47384-39144	1.440-1.459
47384-39146	1.460-1.479
47384-39148	1.480-1.499
47384-39150	1.500-1.519
47384-39152	1.520-1.539
47384-39154	1.540-1.559
47384-39156	1.560-1.579
47384-39158	1.580-1.599
47384-39160	1.600-1.619
47384-39162	1.620-1.639
47384-39164	1.640-1.659
47384-39166	1.660-1.679
47384-39168	1.680-1.699
47384-39170	1.700-1.719
47384-39172	1.720-1.739
47384-39174	1.740-1.759
47384-39176	1.760-1.779
47384-39178	1.780-1.799
47384-39180	1.800-1.819
47384-39182	1.820-1.839
47384-39184	1.840-1.859
47384-39186	1.860-1.879
47384-39188	1.880-1.899
47384-39190	1.900-1.919
47384-39192	1.920-1.939
47384-39194	1.940-1.959
47384-39196	1.960-1.979
47384-39198	1.980-1.999
47384-39200	2.000-2.019
47384-39202	2.020-2.039
47384-39204	2.040-2.059
47384-39206	2.060-2.079
47384-39208	2.080-2.099
47384-39210	2.100-2.119
47384-39212	2.120-2.139
47384-39214	2.140-2.159
47384-39216	2.160-2.179

PART NUMBER	SPACER THICKNESS(mm)
47384-39218	2.180-2.199
47384-39220	2.200-2.219
47384-39222	2.220-2.239
47384-39224	2.240-2.259
47384-39226	2.260-2.279
47384-39228	2.280-2.299
47384-39230	2.300-2.319
47384-39232	2.320-2.339
47384-39234	2.34-2.37
47384-39238	2.38-2.41
47384-39242	2.42-2.45
47384-39246	2.46-2.49
47384-39250	2.50-2.53

8. Install the spacer selected above, the taper roller bearings and the hypoid gear shaft assembly (47339-39300). And preload the assembly without the spacer(Hypoid gear shaft assembly-Transfer cover side) with 100 to 200N.

9. Measure the dimension L after 10 rotations.

10. Measure the dimension M on transfer cover (47314-39300).

11. Select the spacer thickness from the chart above in the step 7. Thickness S3=M-L+(0.09 to 0.12mm) preload.

12. Install the spacer selected above.

13. Install the taper roller bearing outer races to the transfer housing and cover.

14. Install a new oil seal(A) in the transfer housing.

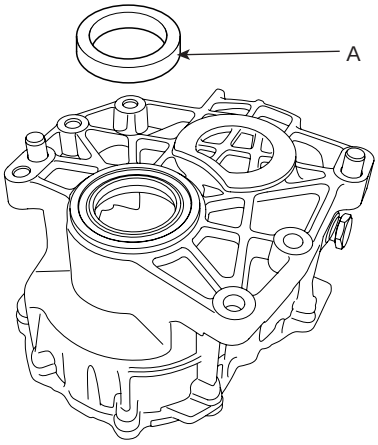

SCMMT6073D

15. Install the hypoid gear shaft assembly(A) and the transfer drive gear assembly(B) in the transfer housing.

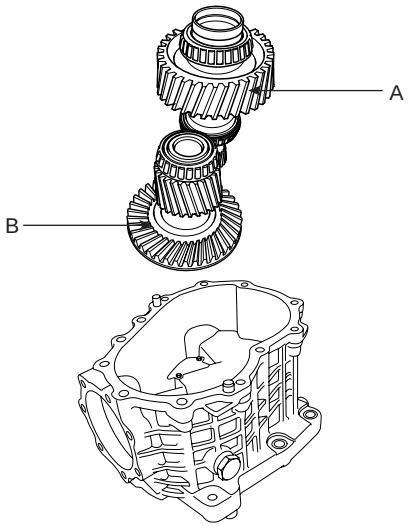

SCMMT6072D

16. Measure the dimension F.
F…. Assembled dimension of pinion assembly.
G…. Finished dimension of transfer housing.(=88.0mm)
E…. Mounting distance(=69.500 ± deviation).

17. Select the spacer thickness from the chart below. Thickness S1=E+F-G

NOTE

If it is not possible to reach the exact mounting distance, select the next thinner spacer S1.

PART NUMBER	SPACER THICKNESS(mm)
47385-39125	1.25-1.28
47385-39129	1.29-1.32
47385-39133	1.33-1.36
47385-39137	1.37-1.40
47385-39141	1.41-1.44
47385-39145	1.45-1.48
47385-39149	1.49-1.52
47385-39153	1.53-1.56
47385-39157	1.57-1.60
47385-39161	1.61-1.64
47385-39165	1.65-1.68
47385-39169	1.69-1.72
47385-39172	1.720-1.739
47385-39174	1.740-1.759

PART NUMBER	SPACER THICKNESS(mm)
47385-39176	1.760-1.779
47385-39178	1.780-1.799
47385-39180	1.800-1.819
47385-39182	1.820-1.839
47385-39184	1.840-1.859
47385-39186	1.860-1.879
47385-39188	1.880-1.899
47385-39190	1.900-1.919
47385-39192	1.920-1.939
47385-39194	1.940-1.959
47385-39196	1.960-1.979
47385-39198	1.980-1.999
47385-39200	2.000-2.019
47385-39202	2.020-2.039
47385-39204	2.040-2.059
47385-39206	2.060-2.079

PART NUMBER	SPACER THICKNESS(mm)
47385-39208	2.080-2.099
47385-39210	2.100-2.119
47385-39213	2.13-2.16
47385-39217	2.17-2.20
47385-39221	2.21-2.24
47385-39225	2.25-2.28
47385-39229	2.29-2.32
47385-39233	2.33-2.36

18. Install the pinion assembly with the selected spacer above and measure the circumference backlash on pinion.
(Measuring diameter, backlash and permissible deviations for measurement on pinion, see table below).
If the result is out of permissible range, change the spacer thickness S2, then start again with the step 8~12).

TIPS FOR SPACER ADJUSTMENT FOR HYPOID GEAR BACKLASH AND CONTACT PATTERN

ITEM	SYMPTOM	REMEDY
Backlash	When more than the standard value (0.16 ~ 0.21mm)	Adjust backlash by installing the spacer S1 using a thinner one and gradually installing a thicker one.
	When less than the standard value (0.16 ~0.21mm)	Adjust backlash by installing the spacer S1 using a thicker one and gradually installing a thinner one.

ITEM	SYMPTOM	REMEDY
Hypoid gear tooth contacy pattern	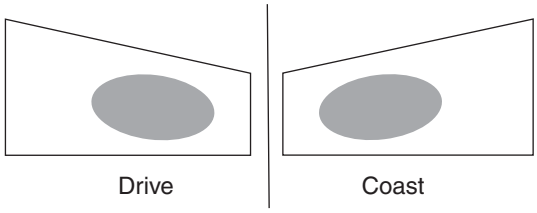 UMQG004D	• Normal state • Standard tooth pattern - Both drive and coast surfaces are in center in lateral direction and slightly incline to TOE side in vertical direction • If the pattern deviates from the standard, adjust it by following procedure
	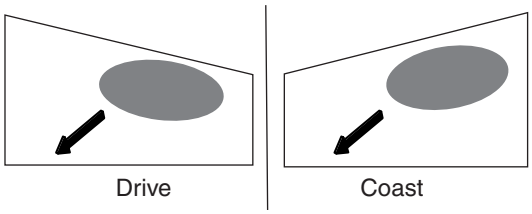 UMQG004E	• Abnormal state • The dirve surface inclines to TOE and TOP and the coast surface inclines to HEEL and TOP The tooth contact pattern can be moved to the arrow direction by installing the spacer S2 using a thinner one and gradually installing a thicker one.

19. Remove the pinion assembly. With the spacer S3 and transfer cover mounted, combined preload torque for the hypoid gear shaft assembly and transfer gear (measured on transfer gear) should be 2.7 to 3.8Nm. The spacer S3 has to be changed, if the preload torque is not within the permissible range.

20. Tighten the pinion assembly mounting bolts (B-7EA) to install the pinion assembly(A).

TORQUE: 37~40 Nm(3.7~4.0 kgf.m, 14.5~21.7 lb-ft)

NOTE

1. Before installing the pinion assembly, check the pinion O-ring and apply the oil to the O-ring.
2. To make the installation of the pinion to the transfer easier, tap the pinion using a plastic hammer after aligning the bolt holes.

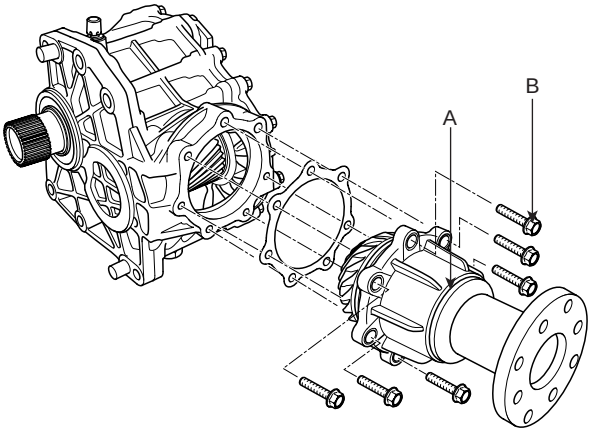

SCMMT6070D

INSTALLATION E5F331AD

[DIESEL 2.2L]

1. Installation is in reverse order of removal.

CAUTION

Must use a new O-ring(47354-39300) which is placed between the transaxle and the transfer case.

2. Remove the filler plug(A).

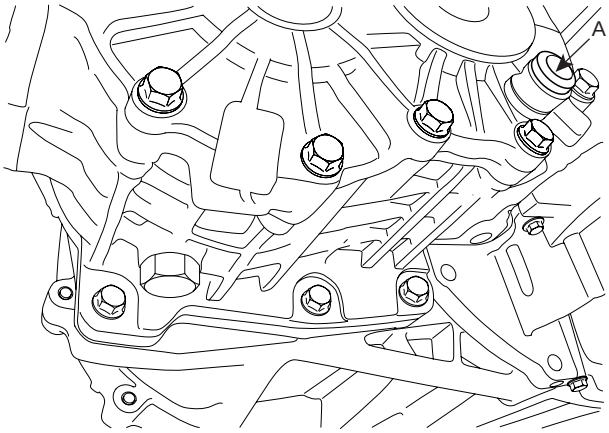

SCMMT6063D

3. Refill the specification to the specified quantity.

Specification : API GL-5, SAE 75w/90 Quantity : Approx 0.8L

[GASOLINE 2.7L]

1. Install the transfer assembly to the transaxle.

NOTE

To install the transfer easily, install it by moving the pinion left and right directions, and slightly rotating the inner drive shaft of transfer assembly.

2. Install the transfer mounting bolts(4EA).

TORQUE: 62~67 Nm(6.2~6.7 kgf.m, 44.8~48.5 lb-ft)

3. Install the transfer mounting bracket.

TORQUE: 47~51 Nm(4.7~5.1 kgf.m, 34.0~36.9 lb-ft) - 2EA 24~28 Nm(2.4~2.8 kgf.m, 17.4~20.3 lb-ft) - 2EA

4. Tighten the exhaust manifold mounting nuts(7EA).

TORQUE:
30~35 Nm(3.0~3.5 kgf.m, 21.7~25.3 lb-ft)

5. Tighten the heat protector(A) mounting nuts(3EA).

TORQUE:
11.8~14.7 Nm(1.2~1.5 kgf.m, 8.7~10.8 lb-ft)

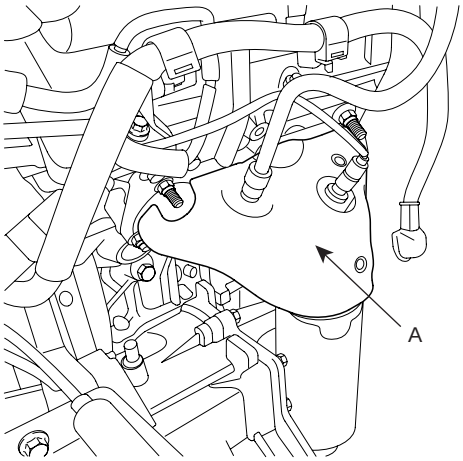

UMQG002K

6. Tighten the pinion case mounting bolts(6EA).

TORQUE:
37~40 Nm(3.7~4.0 kgf.m, 14.5~21.7 lb-ft)

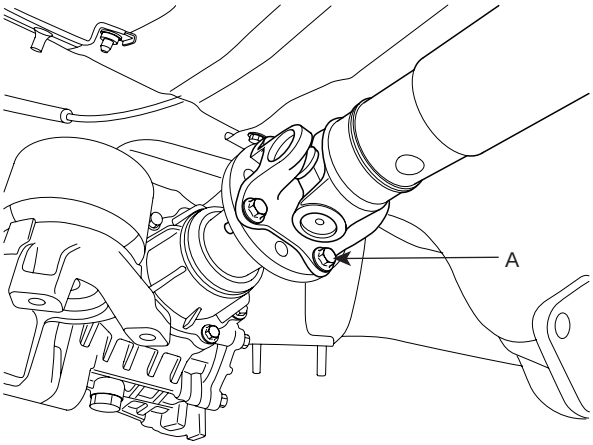

SCMMT6027L

7. Refill the transfer oil through the filler plug.

8. Install the front exhaust pipe assembly(A).

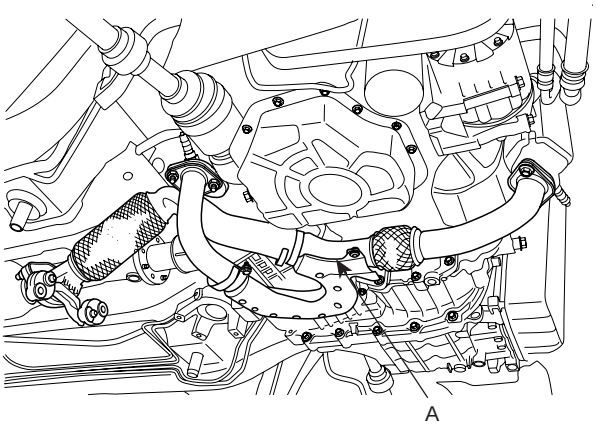

SCMMT6022L

9. Install the drive shaft(RH) to the transfer assembly, lower arm ball joint mounting and steering bar tie rod ball joint.

10. Lower the vehicle down.

11. Install the engine side cover (RH) and the wheel and tire(RH).

12. Install the oxygen sensor connector bracket and connect the oxygen sensor connector(A,B). (Engine room right side).

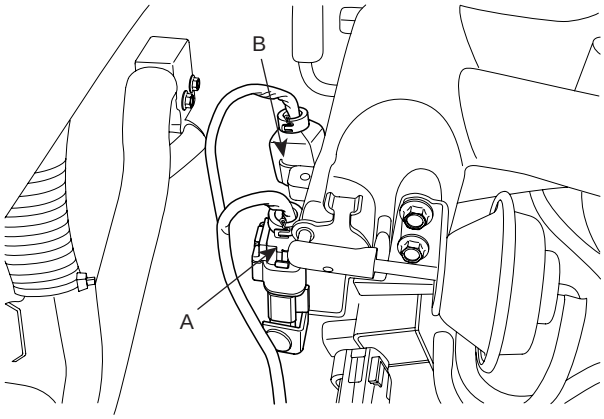

SCMMT6025L

13. Connect the battery negative (-) cable.

TRANSFER DRIVE GEAR

COMPONENTS EA0B2C67

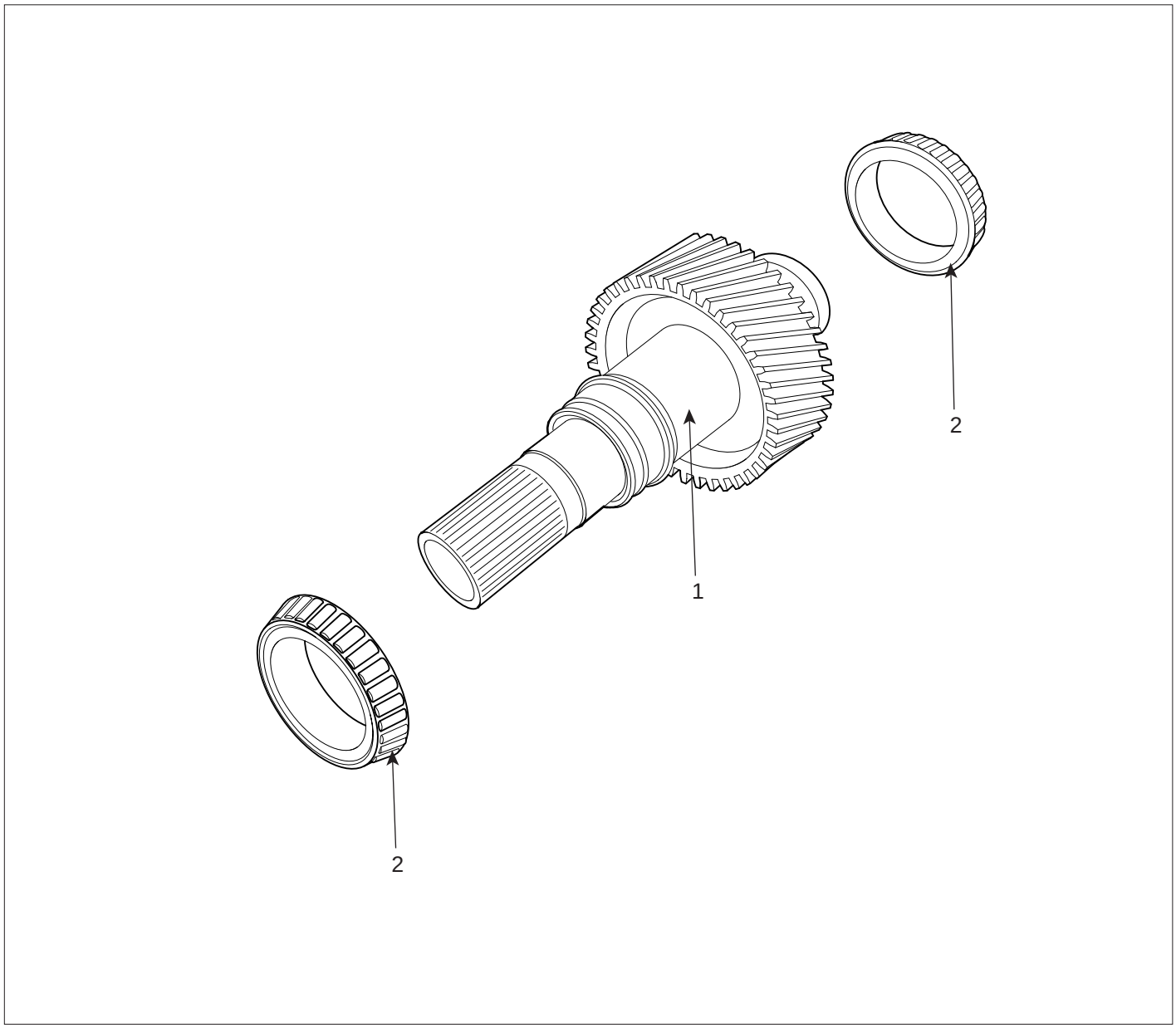

1. Transfer drive gear
2. Taper roller bearing

SCMMT6013L

DISASSEMBLY EECF47C9

1. Remove the oil seal(A) from the transfer drive gear.

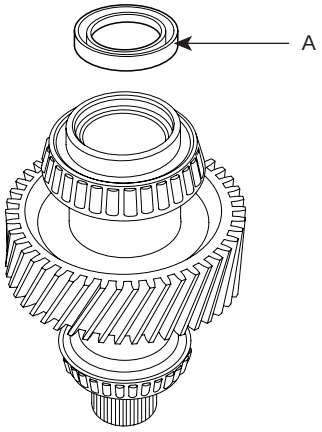

UMQG006B

2. Using the SST(09455-21000), remove the taper roller bearings(A) from the both sides of the transfer drive gear assembly.

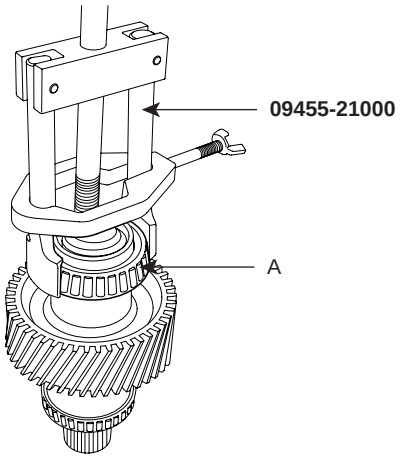

UMQG006C

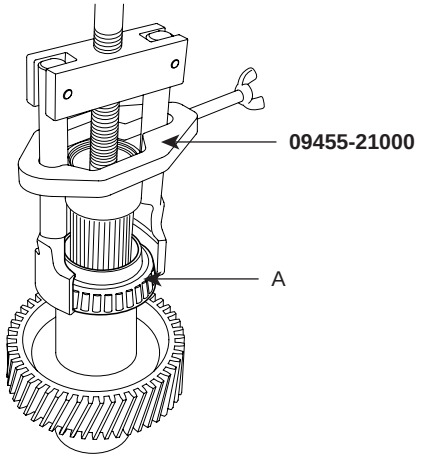

UMQG006D

REASSEMBLY E07549D3

1. Using a press machine, install the taper roller bearings(A) to the transfer drive gear.

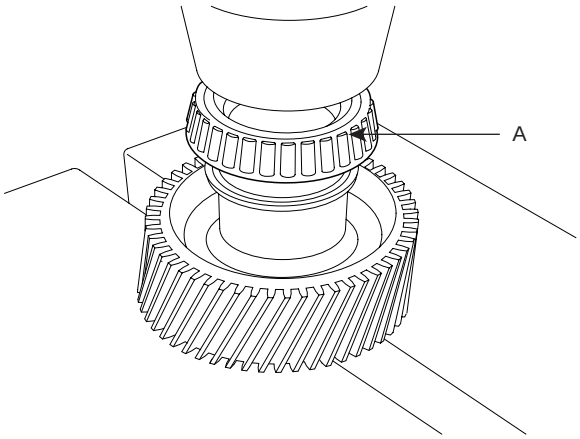

UMQG006F

HYPOID GEAR

COMPONENTS EDEC1CEB

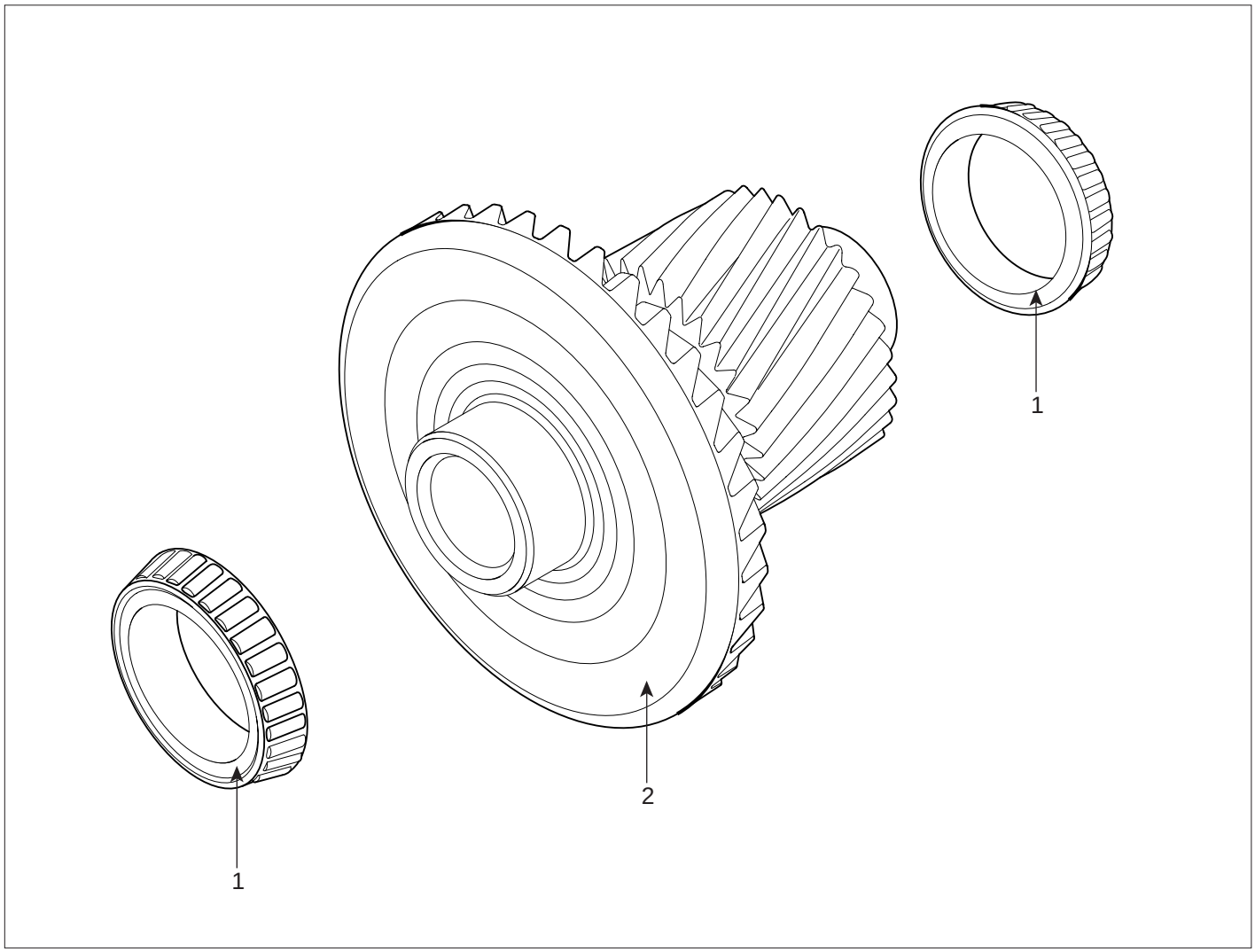

1. Taper roller bearing
2. Hypoid gear

UMQG007A

DISASSEMBLY E8DD87F3

1. Using the SST(09455-21000), remove the taper roller bearing(A) from the hypoid gear shaft assembly.

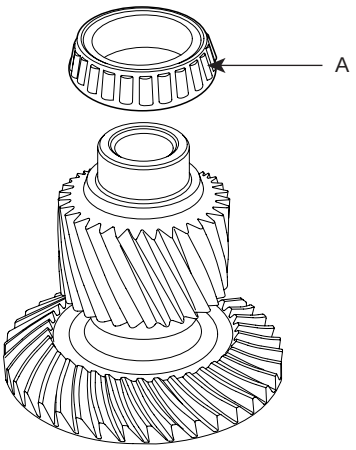

UMQG007C

2. Using the SST(09455-21000), remove the other taper roller bearing(A) from the hypoid gear shaft assembly.

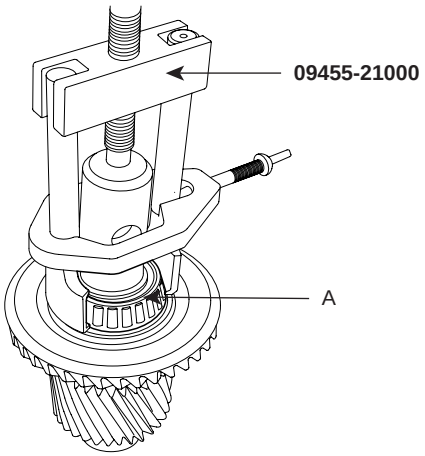

UMQG007D

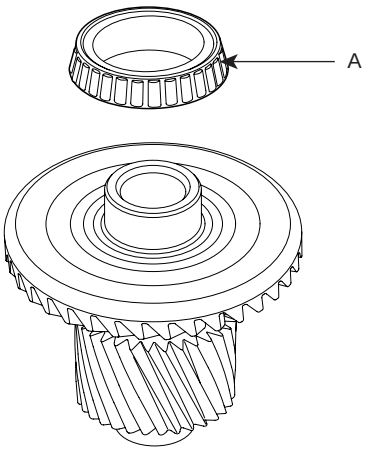

UMQG007E

REASSEMBLY EE2B9974

1. Using a press machine, install the taper roller bearings(A) to the hypoid gear shaft assembly.

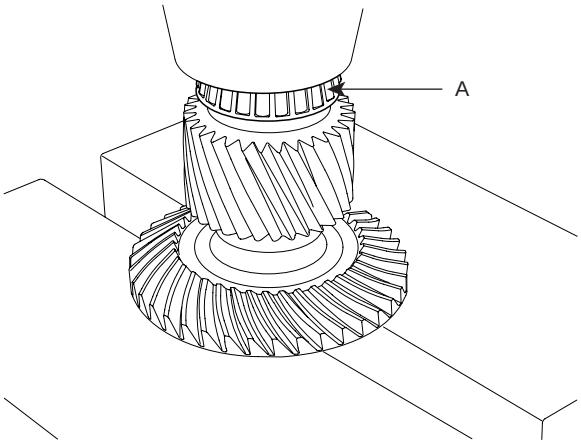

UMQG007F

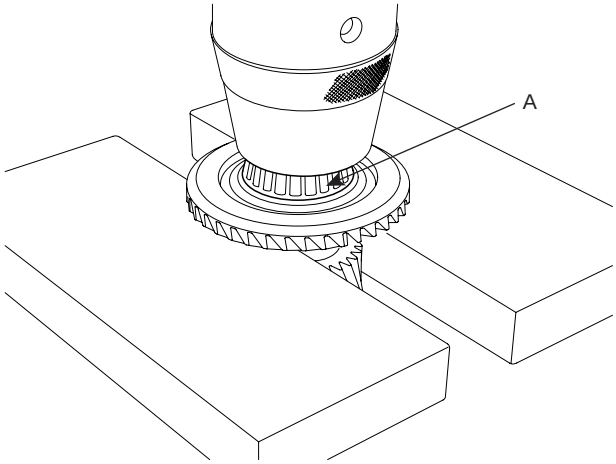

UMQG007G

PINION SHAFT AND CASE

COMPONENTS E3FABF07

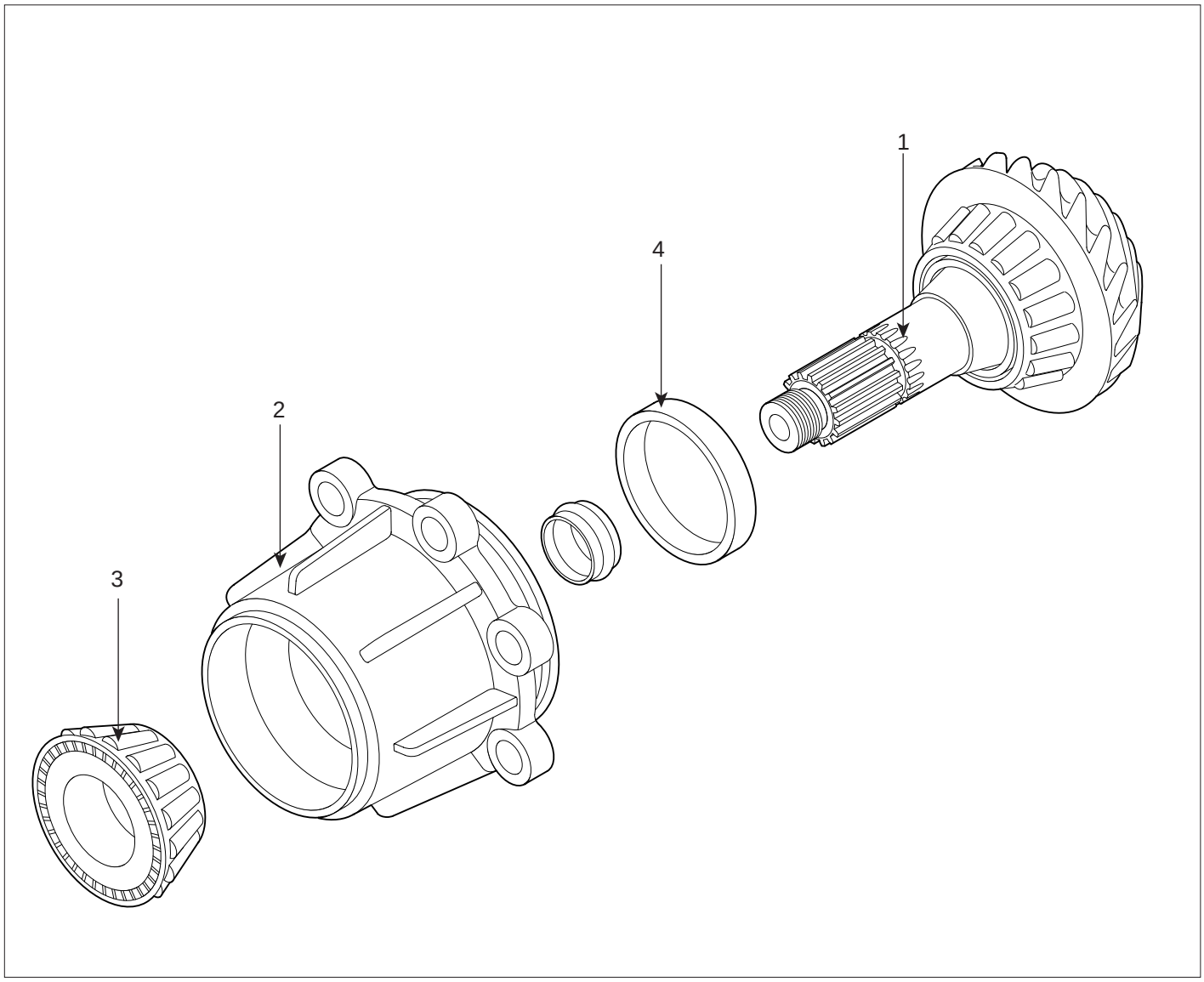

1. Pinion shaft
2. Pinion case
3. Taper roller bearing
4. Taper roller bearing outer race

UMQG005A

DISASSEMBLY E4671E56

1. Remove the O-ring(A) from the pinion shaft and case assembly.

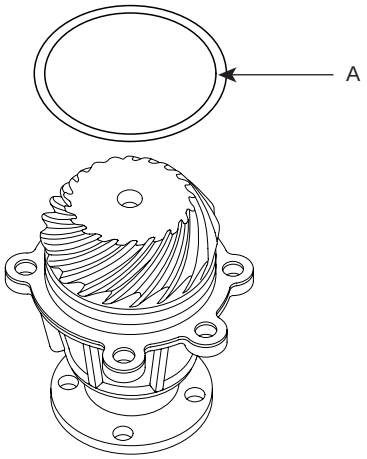

UMQG005B

2. Remove the spacer(A).

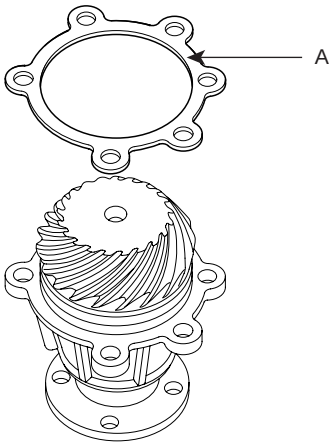

UMQG005C

3. Loosen the HEX lock nut(A).

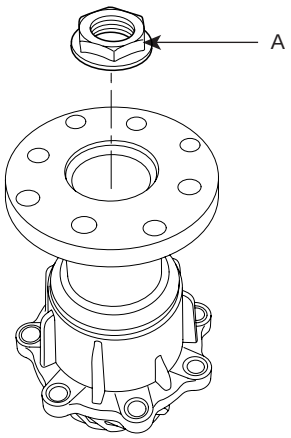

SCMMT6080D

4. Remove the rear flange assembly(A).

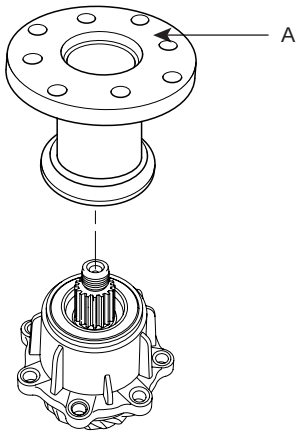

SCMMT6081D

5. Using the SST(09455-32200), remove the oil seal(A) from the pinion case.

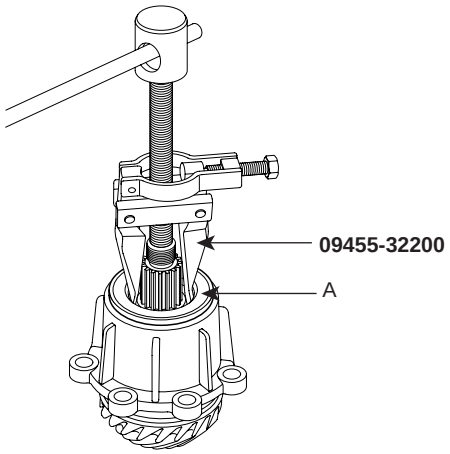

UMQG005F

6. Using a press machine, remove the pinion shaft(A) from the pinion case(B).

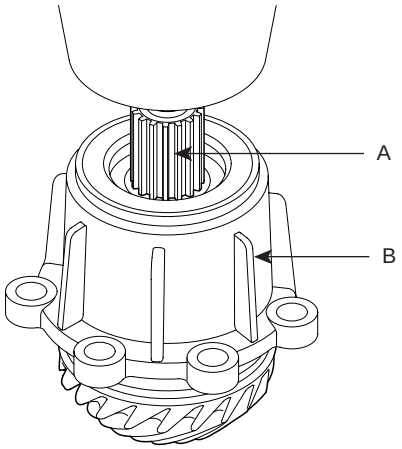

UMQG005G

7. Take out the taper roller bearing(A) from the pinion case(B).

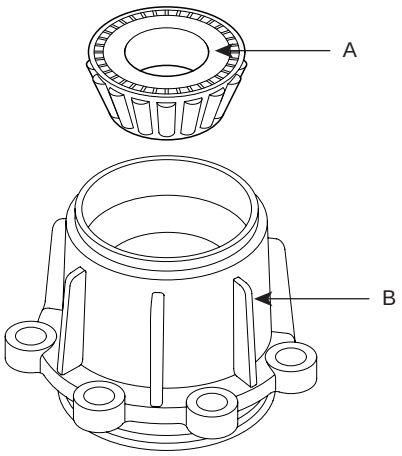

UMQG005H

8. Using a sliding hammer(A), remove the taper roller bearing outer race(B) from the pinion case(C).

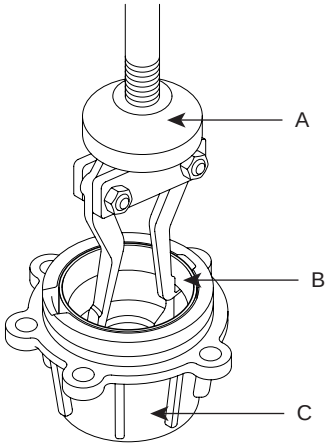

UMQG005I

REASSEMBLY E546DB0B

1. Assemble the taper roller bearing outer races.

2. Using a press machine, install the taper roller bearing(C) and the pinion shaft(A) in the pinion case(B).

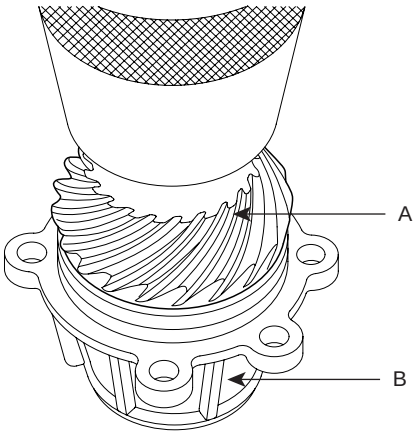

UMQG005J

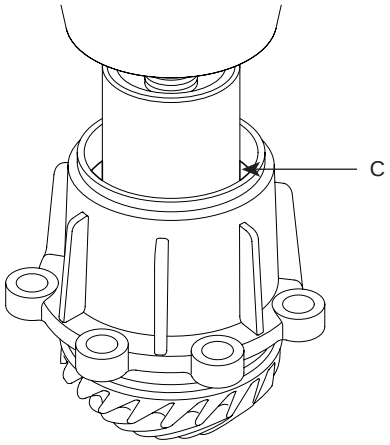

UMQG005K

3. Install the oil seal and the rear flange assembly as shown below and screw down the hex lock nut(A) until an axial clearance B of 0.25mm to 0.75mm between pinion and pinion case results.

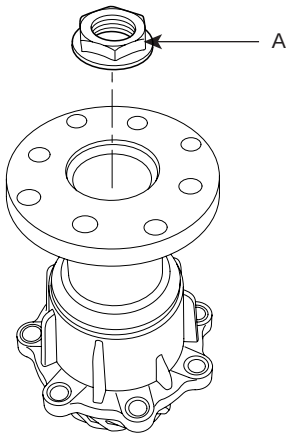

SCMMT6080D

1) Measurement of B
   - Apply an additional 200N tension load F1 to the pinion head according to arrangement Y. Rotate the pinion 10 times and measure dimension C.
   - Apply a 200N load F2 to the rear flange. Rotate the pinion 10 times and measure dimension D.
     B=C-D

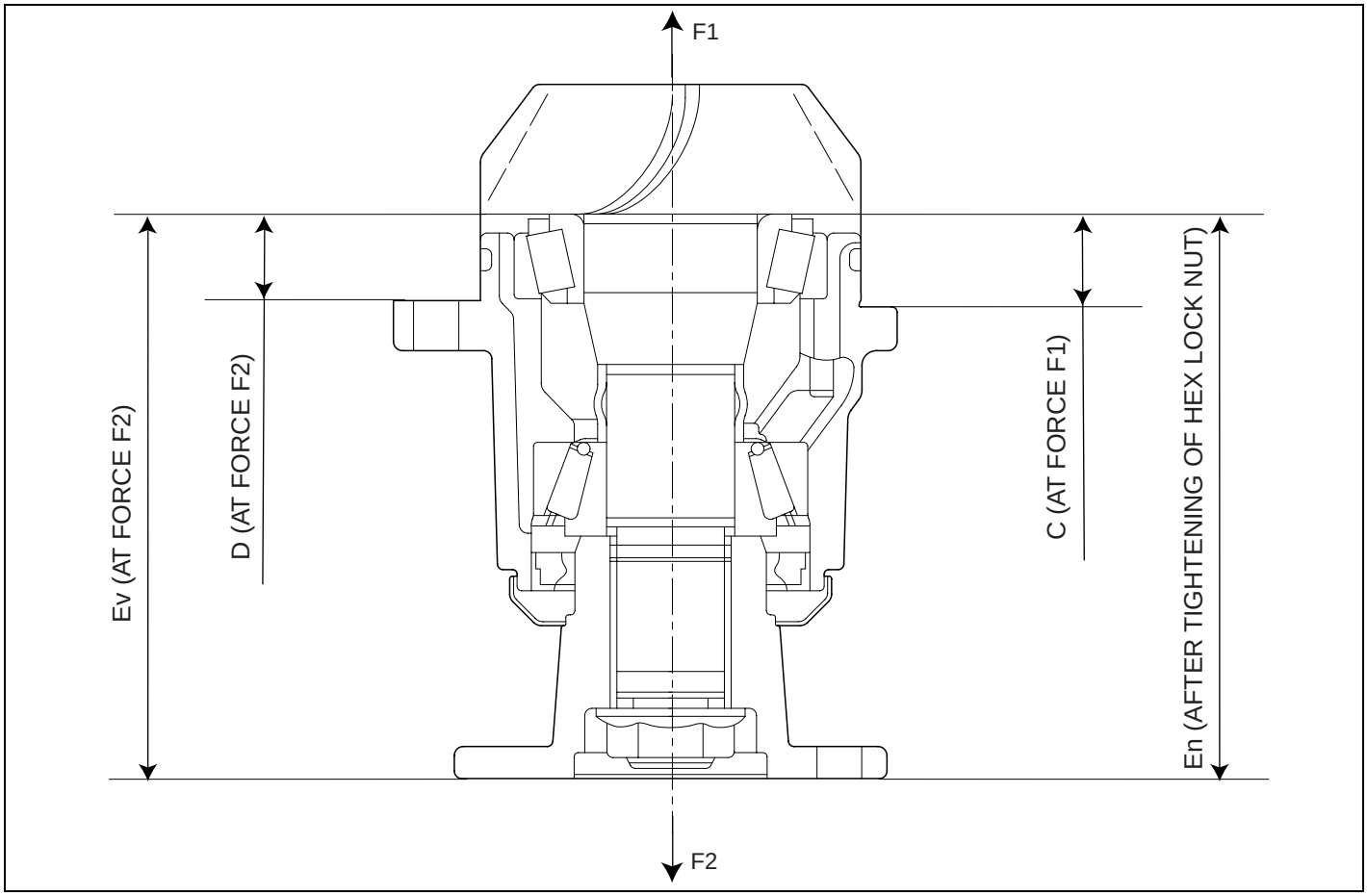

UMQG005L

2) Measure dimension Ev.

3) Tighten HEX lock nut.

4) Measure the drag torque of the pinion assembly. Target is 180-210Ncm. To achieve the target preload torque, it is permissible to gradually increase the tightening torque.

CAUTION

If the permissible preload torque of 210Ncm is exceeded, it is not allowed to loosen Hex lock nut. Disassemble the whole pinion assembly. Replace the collapsible spacer and repeat the mounting procedure.

5) Measure dimension En.

6) Check preload. A preload torque of 180 to 210 Ncm corresponds to a bearing preload of 0.12 to 0.16mm.
   Ev-En-B=0.12 to 0.16mm

CAUTION

Twice use of collapsible spacer is not permitted(Permanent deformation).

4. Assemble the O-ring and select the proper spacer later when reassembling the transfer case.

COUPLING ASSEMBLY

COMPONENTS EC967608

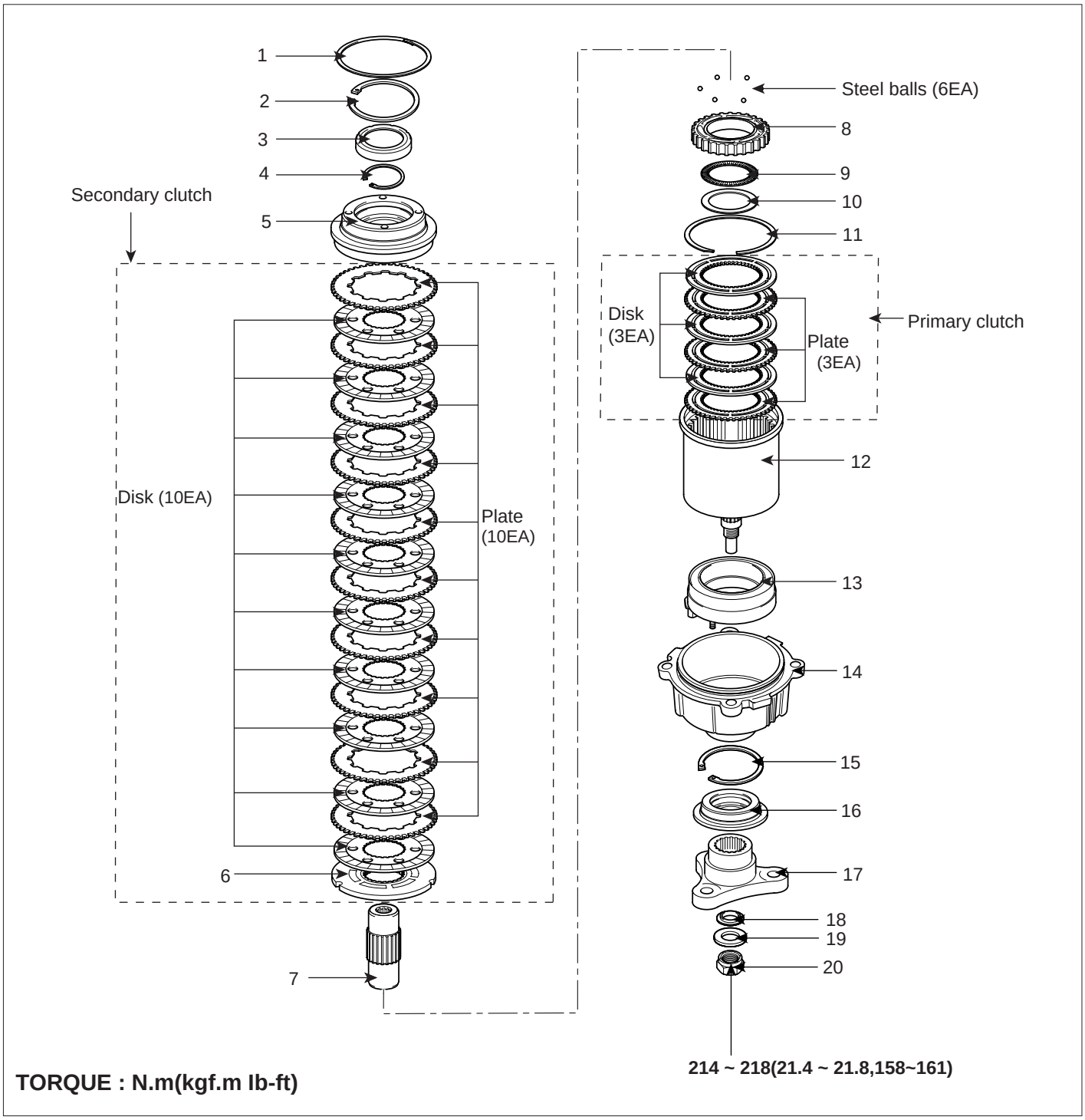

1. Wave spring
2. Snap ring
3. Oil seal
4. Snap ring
5. Back plate
6. Armature
7. Input shaft
8. Base cam
9. Thrust washer
10. Thrust race
11. Snap ring
12. Clutch housing
13. Electric magnetic
14. Coupling case
15. Sanp ring
16. Oil seal
17. Flange
18. Oil seal
19. Spacer
20. Nut

SCMMT6015L

REMOVAL E1DE3520

1. Remove the 4WD coupling bolts (A-3EA) mounted to the rear propellar shaft(B).

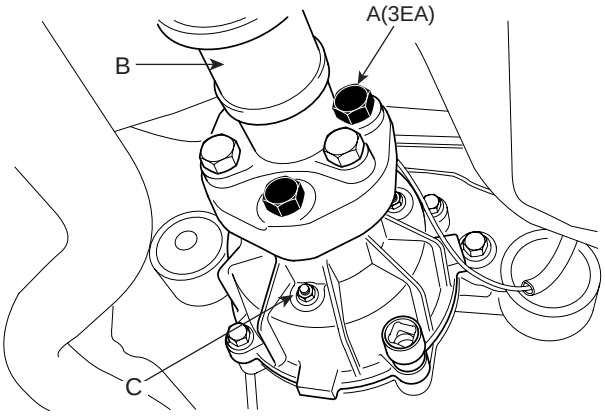

KKQE007C

2. Using a flat tool(A), separate the propellar shaft(C) from 4WD coupling(B).

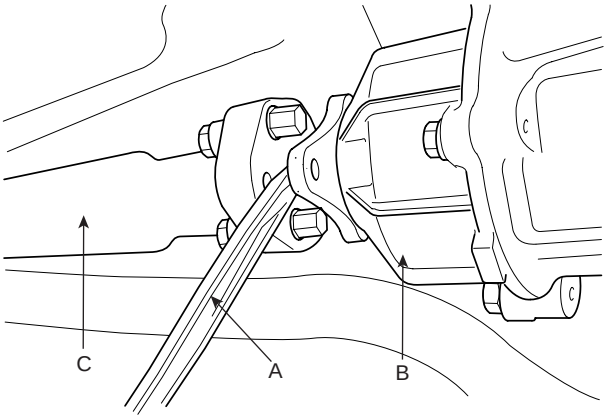

KKQE008C

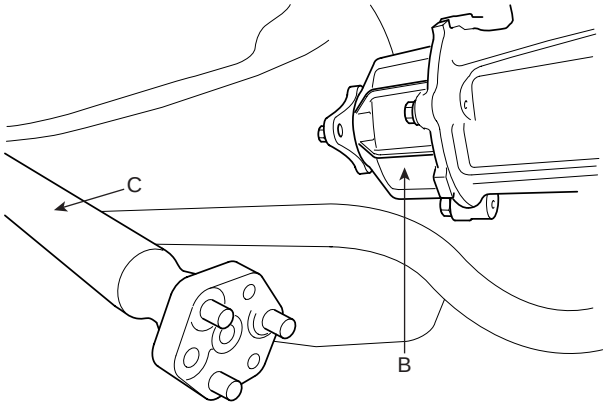

KKQE009C

3. Remove the rear axle (B-Differential carrier) bolts mounted to the 4WD coupling(A) by a socket(C).

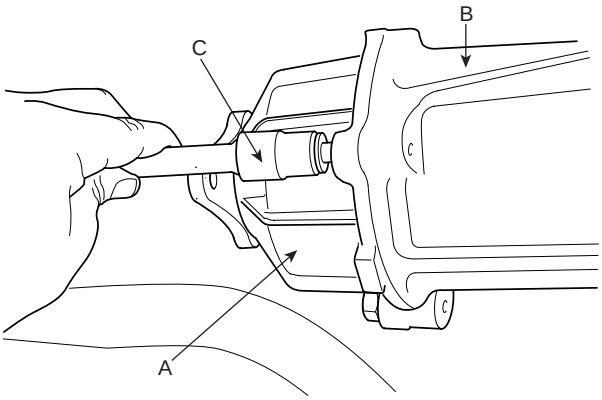

KKQE010C

4. Remove the electric magnetic clutch connector(A).

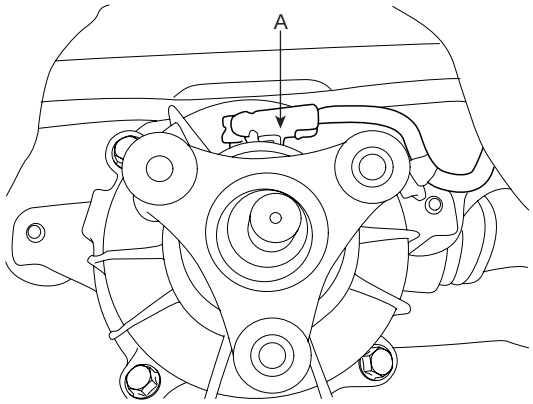

SCMMT6016L

5. Remove the 4WD coupling assembly mounting bolts(A-4ea).

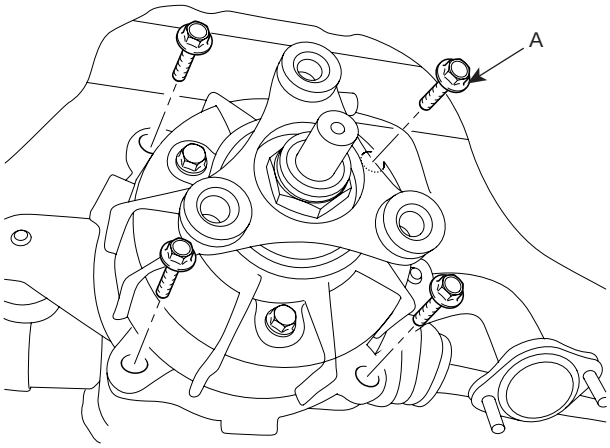

SCMMT6064D

6. Using a flat tool(A), separate the 4WD coupling assembly(B) from the rear differential carrier(C).

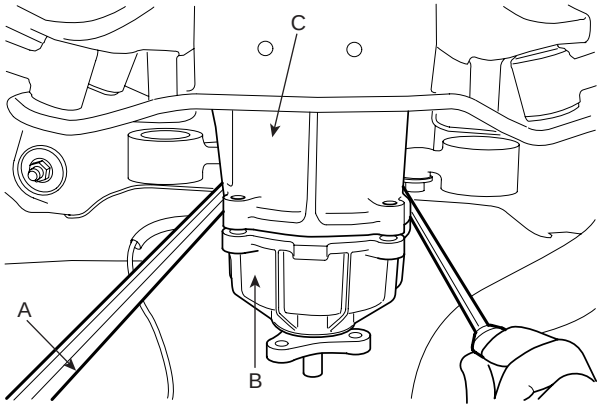

KKQE012C

7. Remove the 4WD coupling assembly(A).

DISASSEMBLY E50DFC6F

1. Remove the coupling(A) flange(B) mounting nut(C).

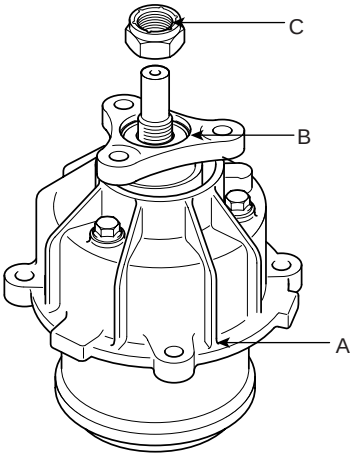

KKQE014C

2. Remove the flange spacer(A).

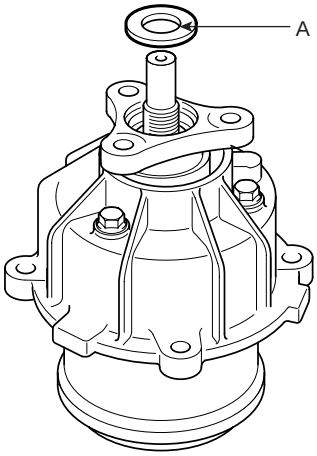

KKQE015C

3. Remove the coupling flange oil seal(A).

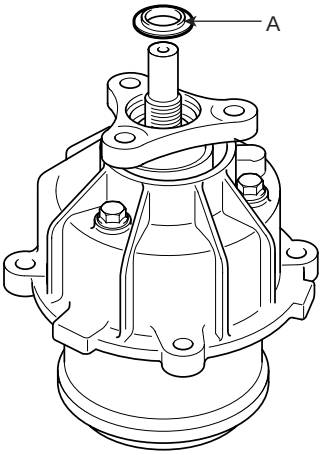

KKQE016C

4. Using a general tool, 3-way puller(A), remove the flange assembly(B) from the coupling(C).

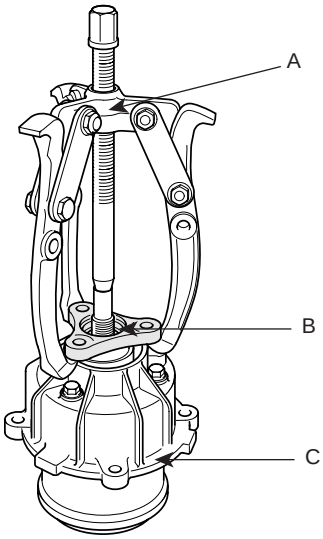

EKQE017C

5. Remove the flange oil seal(A) using special tool (09432-33200).

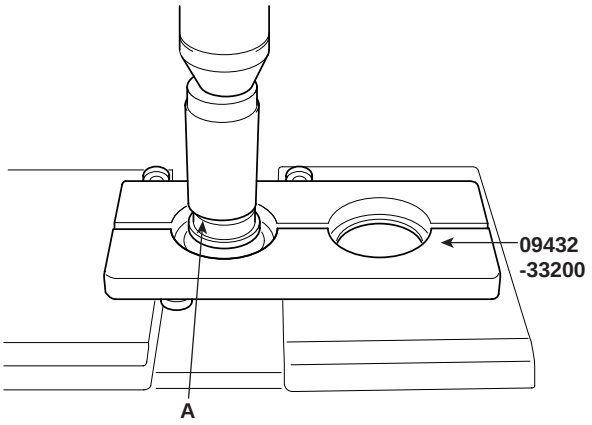

EKQE018C

6. Remove the coupling case assembly(A).

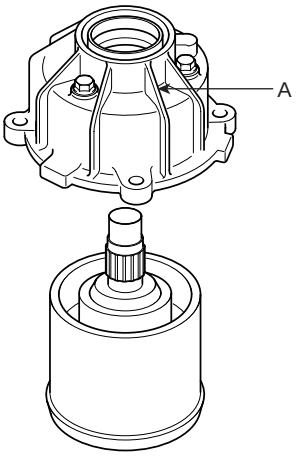

KKQE019C

1) Remove the coupling case oil seal(A)

NOTE

Insert the (-) driver between the oil seal and the clutch housing, then remove the oil seal

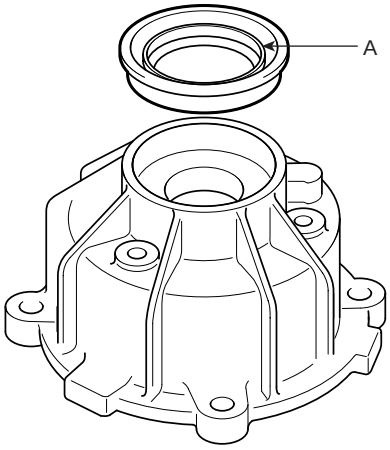

KKQE020C

2) Remove the snap ring.

3) Remove the Electric Magnetic clutch(B) mounting nuts (A-3EA).

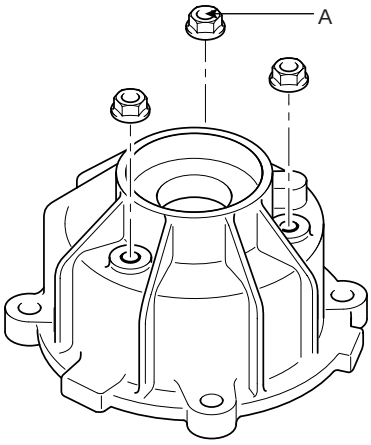

KKQE021C

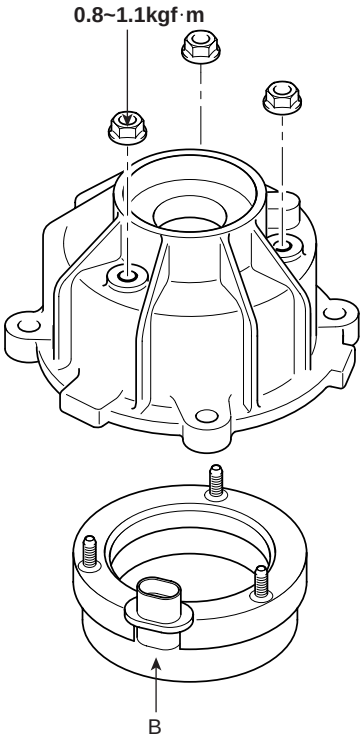

KKQE022C

7. Remove the wave spring(B) for fixing the back plate(A) and the secondary clutch assembly.

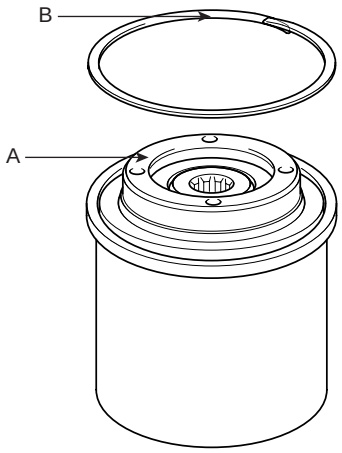

KKQE023C

8. Remove the snap ring(A).

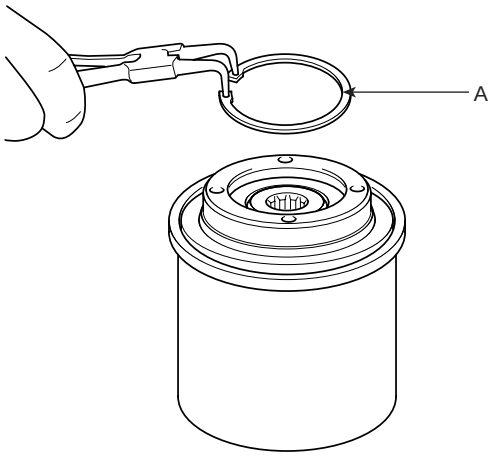

KKQE024C

9. After removing the oil seal, remove the snap ring(A).

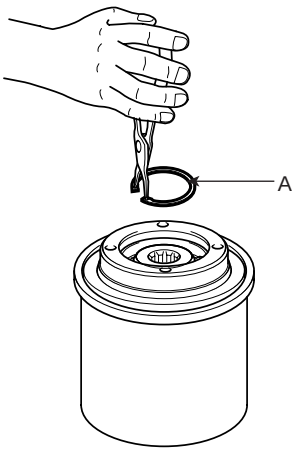

KKQE025C

10. Remove the back plate and the secondary clutch(A) assembly simultaneously using special tool (09478-26100).

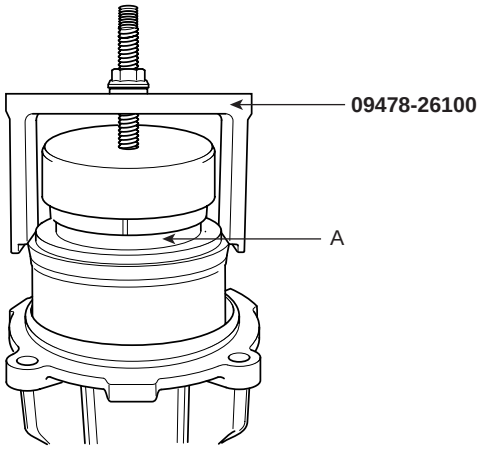

KKQE026C

1) Separate the back plate(A) from the input shaft.

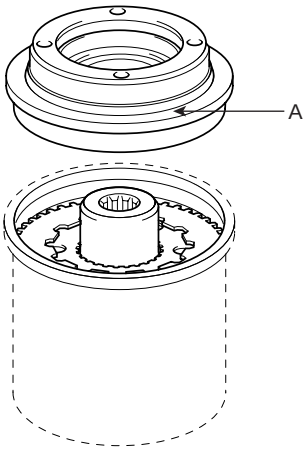

KKQE027C

2) Remove the plates (A-10EA) and the discs (B-10EA).

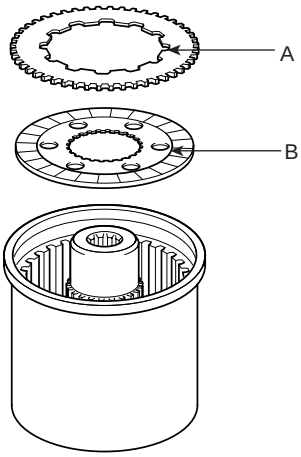

KKQE028C

3) Remove the armature(A).

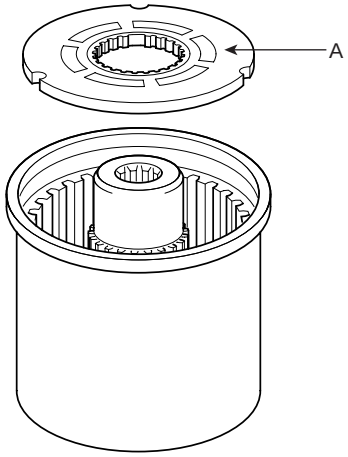

KKQE029C

4) Remove the input shaft(A).

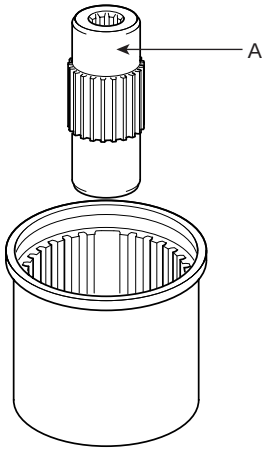

KKQE030C

11. Remove the steel balls (A-6EA) on the base cam.

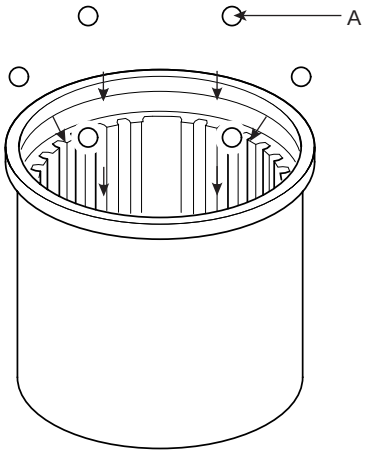

KKQE031C

12. Remove the base cam(A).

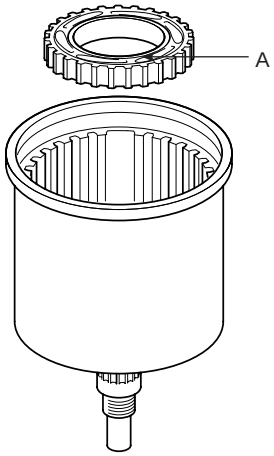

KKQE032C

13. Remove the thrust washer(A).

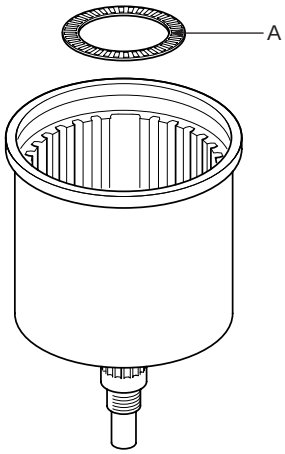

KKQE033C

14. Remove the thrust race.

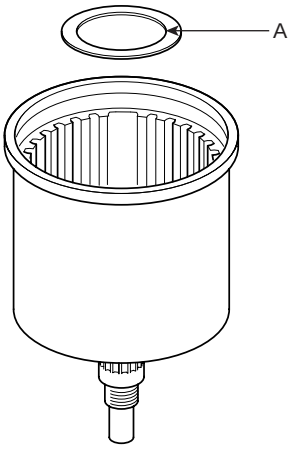

KKQE034C

15. Remove the snap ring(A).

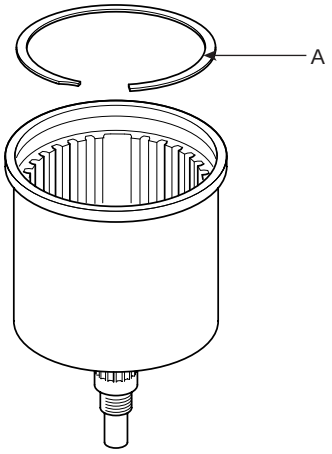

KKQE035C

16. Remove the disk(A) of the primary clutch.

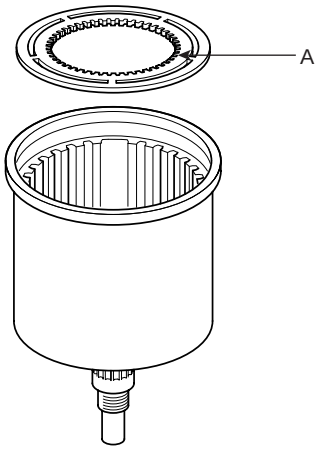

KKQE036C

17. Remove the plate(A) of the primary clutch.

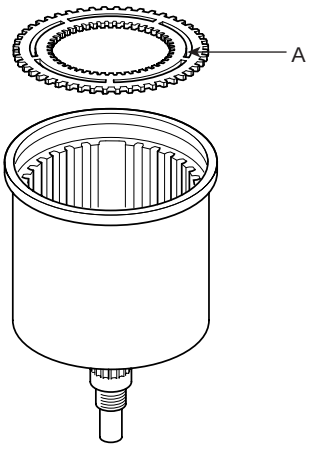

KKQE037C

NOTE

Additionally remove each 2EA discs and plates alternately.

REASSEMBLY EBAA23A8

1. When reassembling the back plate oil seal(A), reassemble it using a suitable tool(B).

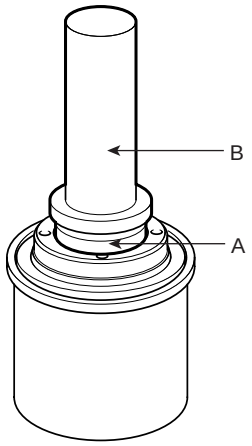

KKQE038C

2. In case of the coupling case oil seal(A), too, reassemble it using a suitable tool(B).

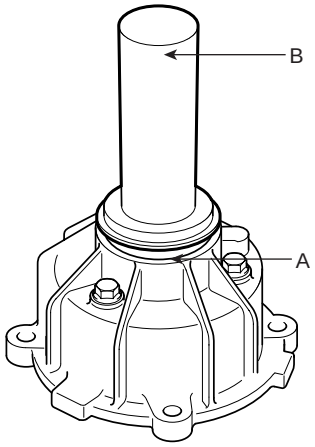

KKQE039C

3. When reassembling the 4WD coupling assembly and the flange(A), too, reassemble them using a suitable tool(B).

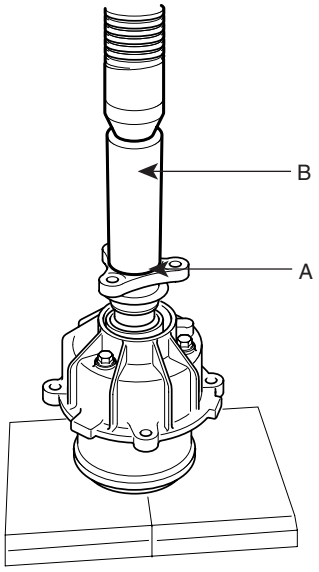

EKQE040C

4. Install the flange(A) oil seal(B) using special tool(09478-26000).

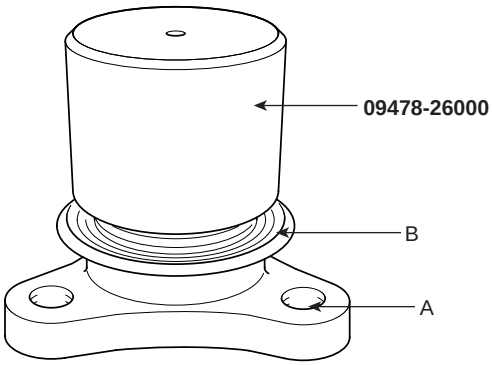

KKQE041C

INSTALLATION E0B9AE32

Installation is the reverse of the removal.