SPECIFICATIONS

FASTENER TIGHTENING SPECIFICATIONS

Fastener Tightening Specifications

Application	Specification	
	Metric	English
Accessory Drive Belt Idler Pulley Bolt	50 N.m	37 lb ft
Accessory Drive Belt Tensioner Bolt	50 N.m	37 lb ft
Air Conditioning (A/C) Compressor and Condenser Hose Bolt	27 N.m	20 lb ft
A/C Drive Belt Idler Pulley Bolt	50 N.m	37 lb ft
A/C Drive Belt Tensioner Bolt	25 N.m	18 lb ft
Air Injection Reaction (AIR) Pipe-to-Exhaust Manifold Bolts	20 N.m	15 lb ft
AIR Right Side Pipe Bracket-to-Cylinder Head Bolt	20 N.m	15 lb ft
Automatic Transmission Fluid Cooler Line Clamp Bolt - at Oil Pan	12 N.m	106 lb in
Automatic Transmission Fluid Cooler Line Clamp Bolt - at Right Transmission Cover	2.2 N.m	19 lb in
Automatic Transmission Fluid Cooler Pipe	25 N.m	18 lb ft
Camshaft Retainer Bolts	25 N.m	18 lb ft
Camshaft Sensor Bolt	25 N.m	18 lb ft
Camshaft Sprocket Bolts	35 N.m	26 lb ft
Connecting Rod Bolts - First Pass	20 N.m	15 lb ft
Connecting Rod Bolts - Final Pass	75 degrees	
Coolant Temperature Gage Sensor	20 N.m	15 lb ft
Crankshaft Balancer Bolt - Installation Pass-to Ensure the Balancer is Completely Installed	330 N.m	240 lb ft
Crankshaft Balancer Bolt - First Pass - Install a NEW Bolt After the Installation Pass and Tighten as Described in the First and Final Passes	50 N.m	37 lb ft
Crankshaft Balancer Bolt - Final Pass	140 degrees	
Crankshaft Bearing Cap Bolts - Inner Bolts - First Pass in Sequence	20 N.m	15 lb ft
Crankshaft Bearing Cap Bolts - Inner Bolts - Final Pass in Sequence	80 degrees	
Crankshaft Bearing Cap Side Bolts	25 N.m	18 lb ft
Crankshaft Bearing Cap Studs - Outer Studs - First Pass in Sequence	20 N.m	15 lb ft
Crankshaft Bearing Cap Studs - Outer Studs - Final Pass in Sequence	53 degrees	
Crankshaft Oil Deflector Nuts	25 N.m	18 lb ft
Crankshaft Position Sensor Bolt	25 N.m	18 lb ft
Crossmember Nut	110	81 lb ft

cardiagn.com

	N.m	
Cylinder Head Bolts - First Design - First Pass all M11 Bolts in Sequence	30 N.m	22 lb ft
Cylinder Head Bolts - First Design - Second Pass all M11 Bolts in Sequence	90 degrees	
Cylinder Head Bolts - First Design - Final Pass all M11 Bolts in Sequence - Excluding the Medium Length Bolts at the Front and Rear of Each Cylinder Head	90 degrees	
Cylinder Head Bolts - First Design - Final Pass M11 Medium Length Bolts at the Front and Rear of Each Cylinder Head	50 degrees	
Cylinder Head Bolts - Second Design - First Pass all M11 Bolts in Sequence	30 N.m	22 lb ft
Cylinder Head Bolts - Second Design - Second Pass all M11 Bolts in Sequence	90 degrees	
Cylinder Head Bolts - Second Design - Final Pass all M11 Bolts in Sequence	70 degrees	
Cylinder Head Bolts - M8 Inner Bolts in Sequence	30 N.m	22 lb ft
Cylinder Head Coolant Plug	20 N.m	15 lb ft
Cylinder Head Core Hole Plug	20 N.m	15 lb ft
Driveline Close-Out Panel Bolt	12 N.m	106 lb in
Driveline Support Bolt	50 N.m	37 lb ft
Driveline Support Plug	50 N.m	37 lb ft
Engine Block Coolant Drain Plugs	60 N.m	44 lb ft
Engine Block Heater	40 N.m	30 lb ft
Engine Block Oil Gallery Plugs	60 N.m	44 lb ft
Engine Coolant Air Bleed Pipe and Cover Bolts and Studs	12 N.m	106 lb in
Engine Flywheel Bolts - First Pass	20 N.m	15 lb ft
Engine Flywheel Bolts - Second Pass	50 N.m	37 lb ft
Engine Flywheel Bolts - Final Pass	100 N.m	74 lb ft
Engine Flywheel Hub Collar Bolt - Automatic Transmission	130 N.m	96 lb ft
Engine Front Cover Bolts	25 N.m	18 lb ft
Engine Mount Bracket Bolt	50 N.m	37 lb ft
Engine Mount Nut	65 N.m	48 lb ft
Engine Mount-to-Engine Mount Bracket Nut	65 N.m	48 lb ft
Engine Oil Filter	30 N.m	22 lb ft
Engine Rear Cover Bolts	25 N.m	18 lb ft
Engine Service Lift Bracket M8 Bolt	25 N.m	18 lb ft
Engine Service Lift Bracket M10 Bolts	50 N.m	37 lb ft
Engine Valley Cover Baffle Cover Bolts - LS6	5 N.m	44 lb in
Engine Valley Cover Bolts	25 N.m	18 lb ft
Engine Wiring Harness Generator Lead Nut	13 N.m	115 lb in
Engine Wiring Harness Ground Strap Bolt	32 N.m	24 lb ft
Exhaust Manifold Bolts - First Pass	15 N.m	11 lb ft

cardiagn.com

Exhaust Manifold Bolts - Final Pass	25 N.m	18 lb ft
Exhaust Manifold Heat Shield Bolts	9 N.m	80 lb in
Flywheel Housing Bolt	50 N.m	37 lb ft
Fuel Injection Fuel Rail Bolts	10 N.m	89 lb in
Generator Bracket Bolt	50 N.m	37 lb ft
Ignition Coil Bracket-to-Valve Rocker Arm Cover Bolts	12 N.m	106 lb in
Ignition Coil-to-Bracket Bolts	12 N.m	106 lb in
Intake Manifold Bolts - First Pass in Sequence	5 N.m	44 lb in
Intake Manifold Bolts - Final Pass in Sequence	10 N.m	89 lb in
Intermediate Steering Shaft Bolt	48 N.m	35 lb ft
Knock Sensors	20 N.m	15 lb ft
Oil Filter	30 N.m	22 lb ft
Oil Filter Fitting	55 N.m	40 lb ft
Oil Level Indicator Tube Bolt	16 N.m	12 lb ft
Oil Level Sensor	13 N.m	115 lb in
Oil Pan Closeout Cover Bolt - Left Side	12 N.m	106 lb in
Oil Pan Closeout Cover Bolt - Right Side	12 N.m	106 lb in
Oil Pan Cover Bolts	12 N.m	106 lb in
Oil Pan Drain Plug	25 N.m	18 lb ft
Oil Pan - Lower - Bolts	12 N.m	106 lb in
Oil Pan M8 Bolts - Oil Pan-to-Engine Block and Oil Pan-to-Front Cover	25 N.m	18 lb ft
Oil Pan M6 Bolts - Oil Pan-to-Rear Cover	12 N.m	106 lb in
Oil Pressure Sensor	20 N.m	15 lb ft
Oil Pump Cover Bolts	12 N.m	106 lb in
Oil Pump Relief Valve Plug	12 N.m	106 lb in
Oil Pump Screen Nuts	25 N.m	18 lb ft
Oil Pump Screen-to-Oil Pump Bolt	12 N.m	106 lb in
Oil Pump-to-Engine Block Bolts	25 N.m	18 lb ft
Oil Temperature Sensor	20 N.m	15 lb ft
Power Steering Pump Bolt	25 N.m	18 lb ft
Propeller Shaft Hub Collar Bolt	125	92 lb ft

cardiagn.com

	N.m	
Spark Plugs - Cylinder Heads - New	20 N.m	15 lb ft
Spark Plugs - all Subsequent Installations	15 N.m	11 lb ft
Steering Knuckle Nut - First Pass	20 N.m	15 lb ft
Steering Knuckle Nut - Second Pass	50 degrees	
Steering Knuckle Nut - Final Pass	55 N.m	41 lb ft
Throttle Body Bolts	12 N.m	106 lb in
Timing Chain Guide Bolts	35 N.m	26 lb ft
Transmission Cover Bolt	12 N.m	106 lb in
Transmission Wiring Harness Bracket Bolt	50 N.m	37 lb ft
Transmission Wiring Harness Clip Bolt - near the Harness Ground	32 N.m	23 lb ft
Transmission Wiring Harness Clip Bolt - near the Oil Pan	25 N.m	18 lb ft
Valve Lifter Guide Bolts	12 N.m	106 lb in
Valve Rocker Arm Bolts	30 N.m	22 lb ft
Valve Rocker Arm Cover Bolts	12 N.m	106 lb in
Water Inlet Housing Bolts	15 N.m	11 lb ft
Water Pump Bolts - First Pass	15 N.m	11 lb ft
Water Pump Bolts - Final Pass	30 N.m	22 lb ft
Water Pump Cover Bolts	15 N.m	11 lb ft

ENGINE MECHANICAL SPECIFICATIONS (LS1)

Engine Mechanical Specifications (LS1)

Application	Specification	
	Metric	**English**
General		
• Engine Type	V 8	
• Displacement	5.7L - 5665 cc	346 CID
• RPO	LS1	
• VIN	G	
• Bore	99.0 -99.018 mm	3.897-3.898 in
• Stroke	92.0 mm	3.622 in
• Compression Ratio	10.1 :1	
• Firing Order	1-8-7-2-6-5-4-3	
• Spark Plug Gap	1.016 mm	0.04 in

cardiagn.com

Block		
• Camshaft Bearing Bore 1 and 5 Diameter - First Design	59.08-59.13 mm	2.325-2.327 in
• Camshaft Bearing Bore 2 and 4 Diameter - First Design	58.83-58.88 mm	2.316-2.318 in
• Camshaft Bearing Bore 3 Diameter - First Design	58.58-58.63 mm	2.306-2.308 in
• Camshaft Bearing Bore 1 and 5 Diameter - Second Design	59.58-59.63 mm	2.345-2.347 in
• Camshaft Bearing Bore 2 and 4 Diameter - Second Design	59.08-59.13 mm	2.325-2.327 in
• Camshaft Bearing Bore 3 Diameter - Second Design	58.58-58.63 mm	2.306-2.308 in
• Crankshaft Main Bearing Bore Diameter	69.871-69.889 mm	2.75-2.751 in
• Crankshaft Main Bearing Bore Out-of-Round	0.005 mm	0.0002 in
• Cylinder Bore Diameter	99.0-99.018 mm	3.897-3.898 in
• Cylinder Bore Taper - Thrust Side	0.018 mm	0.0007 in
• Cylinder Head Deck Height - Measuring from the Centerline of Crankshaft to the Deck Face	234.57-234.82 mm	9.235-9.245 in
• Cylinder Head Deck Surface Flatness - Measured Within a 152.4 mm (6.0 in) Area	0.08 mm	0.003 in
• Cylinder Head Deck Surface Flatness - Measuring the Overall Length of the Block Deck	0.22 mm	0.008 in
• Valve Lifter Bore Diameter	21.417-21.443 mm	0.843-0.844 in
Camshaft		
• Camshaft End Play	0.025-0.305 mm	0.001-0.012 in
• Camshaft Journal Diameter	54.99-55.04 mm	2.164-2.166 in
• Camshaft Journal Out-of-Round	0.025 mm	0.001 in
• Camshaft Lobe Lift - Exhaust	7.13 mm	0.281 in
• Camshaft Lobe Lift - Intake	6.96 mm	0.274 in
• Camshaft Runout - Measured at the Intermediate Journals	0.05 mm	0.002 in
Connecting Rod		
• Connecting Rod Bearing Clearance - Production	0.023-0.065 mm	0.0009-0.0025 in
• Connecting Rod Bearing Clearance - Service	0.023-0.076 mm	0.0009-0.003 in
• Connecting Rod Bore Diameter - Bearing End	56.505-56.525 mm	2.224-2.225 in
• Connecting Rod Bore Out-of-Round - Bearing End - Production	0.006 mm	0.00023 in
• Connecting Rod Bore Out-of-Round - Bearing End -		

cardiagn.com

Service	0.006 mm	0.00023 in
• Connecting Rod Side Clearance	0.11-0.51 mm	0.00433-0.02 in
Crankshaft		
• Connecting Rod Journal Diameter - Production	53.318-53.338 mm	2.0991-2.0999 in
• Connecting Rod Journal Diameter - Service	53.308 mm	2.0987 in
• Connecting Rod Journal Out-of-Round - Production	0.005 mm	0.0002 in
• Connecting Rod Journal Out-of-Round - Service	0.01 mm	0.0004 in
• Connecting Rod Journal Taper - Maximum for 1/2 of Journal Length - Production	0.005 mm	0.0002 in
• Connecting Rod Journal Taper - Maximum for 1/2 of Journal Length - Service	0.02 mm	0.00078 in
• Crankshaft End Play	0.04-0.2 mm	0.0015-0.0078 in
• Crankshaft Main Bearing Clearance - Production	0.021-0.052 mm	0.0008-0.0021 in
• Crankshaft Main Bearing Clearance - Service	0.02-0.065 mm	0.0008-0.0025 in
• Crankshaft Main Journal Diameter - Production	64.993-65.007 mm	2.558-2.559 in
• Crankshaft Main Journal Diameter - Service	64.993 mm	2.558 in
• Crankshaft Main Journal Out-of-Round - Production	0.003 mm	0.000118 in
• Crankshaft Main Journal Out-of-Round - Service	0.008 mm	0.0003 in
• Crankshaft Main Journal Taper - Production	0.01 mm	0.0004 in
• Crankshaft Main Journal Taper - Service	0.02 mm	0.00078 in
• Crankshaft Rear Flange Runout	0.05 mm	0.002 in
• Crankshaft Reluctor Ring Runout - Measured 1.0 mm (0.04 in) Below Tooth Diameter	0.7 mm	0.028 in
• Crankshaft Thrust Surface - Production	26.14-26.22 mm	1.029-1.0315 in
• Crankshaft Thrust Surface - Service	26.22 mm	1.0315 in
• Crankshaft Thrust Surface Runout	0.025 mm	0.001 in
Cylinder Head		
• Cylinder Head Height/Thickness - Measured from the Cylinder Head Deck to the Valve Rocker Arm Cover Seal Surface	120.2 mm	4.732 in
• Surface Flatness - Block Deck - Measured Within a 152.4 mm (6.0 in) Area	0.08 mm	0.003 in
• Surface Flatness - Block Deck - Measuring the Overall Length of the Cylinder Head	0.1 mm	0.004 in

cardiagn.com

• Surface Flatness - Exhaust Manifold Deck	0.22 mm	0.008 in
• Surface Flatness - Intake Manifold Deck	0.22 mm	0.008 in
Intake Manifold		
• Surface Flatness - Measured at Gasket Sealing Surfaces	0.5 mm	0.02 in
Lubrication System		
• Oil Capacity - with Filter	6.151 Liters	6.5 Quarts
• Oil Capacity - without Filter	5.678 Liters	6.0 Quarts
• Oil Pressure - Minimum - Hot	41 kPa at 1,000 engine RPM 124 kPa at 2,000 engine RPM 165 kPa at 4,000 engine RPM	6 psig at 1,000 engine RPM 18 psig at 2,000 engine RPM 24 psig at 4,000 engine RPM
Oil Pan		
• Front Cover Alignment - at Oil Pan Surface	0.0-0.5 mm	0.0-0.02 in
• Rear Cover Alignment - at Oil Pan Surface	0.0-0.5 mm	0.0-0.02 in
• Oil Pan Alignment - to Rear of Engine Block at Transmission Bellhousing Mounting Surface	0.0-0.25 mm	0.0-0.01 in
Piston Rings		
• Piston Ring End Gap - First Compression Ring - Measured in Cylinder Bore - Production	0.23-0.44 mm	0.009-0.017 in
• Piston Ring End Gap - First Compression Ring - Measured in Cylinder Bore - Service	0.23-0.5 mm	0.009-0.0196 in
• Piston Ring End Gap - Second Compression Ring - Measured in Cylinder Bore - Production	0.44-0.7 mm	0.017-0.027 in
• Piston Ring End Gap - Second Compression Ring - Measured in Cylinder Bore - Service	0.44-0.76 mm	0.0173-0.03 in
• Piston Ring End Gap - Oil Control Ring - Measured in Cylinder Bore - Production	0.18-0.75 mm	0.007-0.029 in
• Piston Ring End Gap - Oil Control Ring - Measured in Cylinder Bore - Service	0.18-0.81 mm	0.007-0.032 in
• Piston Ring to Groove Clearance - First Compression Ring - Production	0.04-0.086 mm	0.00157-0.0033 in
• Piston Ring to Groove Clearance - First Compression Ring - Service	0.04-0.068 mm	0.00157-0.0033 in
• Piston Ring to Groove Clearance - Second Compression Ring - Production	0.05-0.088 mm	0.002-0.0034 in
• Piston Ring to Groove Clearance - Second Compression Ring - Service	0.05-0.088 mm	0.002-0.0034 in

cardiagn.com

• Piston Ring to Groove Clearance - Oil Control Ring - Production	-0.008 to +0.176 mm	-0.0003 to +0.0069 in
• Piston Ring to Groove Clearance - Oil Control Ring - Service	-0.008 to +0.176 mm	-0.0003 to +0.0069 in
Pistons and Pins		
• Piston - Piston Diameter- Non Coated Skirt - at Size Point	98.969-98.987 mm	3.8964-3.8997 in
• Piston - Piston Diameter- Measured Over Skirt Coating	98.984-99.027 mm	3.897-3.899 in
• Piston - Piston to Bore Clearance - Non Coated Skirt - Production	0.013-0.049 mm	0.0005-0.0019 in
• Piston - Piston to Bore Clearance - Non Coated Skirt - Service	0.013-0.074 mm	0.0005-0.0029 in
• Piston - Piston to Bore Clearance - Coated Skirt - Production	-0.027 to +0.029 mm	-0.001 to +0.0011 in
• Piston - Piston to Bore Clearance - Coating Worn Off - Service Limit	0.074 mm	0.0029 in
• Pin - First Design Press Fit Pin Fit in Connecting Rod Bore	0.02-0.043 mm - Interference	0.00078-0.00169 in - Interference
• Pin - First Design Press Fit Pin Clearance to Piston Pin Bore - Production	0.01-0.02 mm	0.0004-0.00078 in
• Pin - First Design Press Fit Pin Clearance to Piston Pin Bore - Service	0.01-0.022 mm	0.0004-0.00086 in
• Pin - First Design Press Fit Pin Diameter	23.997-24.0 mm	0.9447-0.9448 in
• Pin - Second Design Full Floating Pin Fit in Connecting Rod Bore - Production	0.007-0.02 mm	0.00027-0.00078 in
• Pin - Second Design Full Floating Pin Fit in Connecting Rod Bore - Service	0.007-0.022 mm	0.00027-0.00086 in
• Pin - Second Design Full Floating Pin Clearance to Piston Pin Bore - Production	0.002-0.01 mm	0.00008-0.0004 in
• Pin - Second Design Full Floating Pin Clearance to Piston Pin Bore - Service	0.002-0.015 mm	0.00008-0.0006 in
• Pin - Second Design Full Floating Pin Diameter	23.952-23.955 mm	0.943-0.943 in
Valve System		
• Valves - Valve Face Angle	45 degrees	
• Valves - Valve Face Width	1.25 mm	0.05 in
• Valves - Valve Lash	Net Lash - No Adjustment	

cardiagn.com

• Valves - Valve Lift - Intake	11.79 mm	0.464 in
• Valves - Valve Lift - Exhaust	12.16 mm	0.479 in
• Valves - Valve Seat Angle	46 degrees	
• Valves - Valve Seat Runout	0.05 mm	0.002 in
• Valves - Valve Seat Width - Exhaust	1.78 mm	0.07 in
• Valves - Valve Seat Width - Intake	1.02 mm	0.04 in
• Valves - Valve Stem Diameter- Production	7.955-7.976 mm	0.313-0.314 in
• Valves - Valve Stem Diameter- Service	7.96 mm	0.314 in
• Valves - Valve Stem-to-Guide Clearance - Production - Intake	0.025-0.066 mm	0.001-0.0026 in
• Valves - Valve Stem-to-Guide Clearance - Service - Intake	0.093 mm	0.0037 in
• Valves - Valve Stem-to-Guide Clearance - Production - Exhaust	0.025-0.066 mm	0.001-0.0026 in
• Valves - Valve Stem-to-Guide Clearance - Service - Exhaust	0.093 mm	0.0037 in
• Rocker Arms - Valve Rocker Arm Ratio	1.70:1	
• Valve Springs - Valve Spring Free Length	52.9 mm	2.08 in
• Valve Springs - Valve Spring Installed Height	45.75 mm	1.8 in
• Valve Springs - Valve Spring Load - Closed	340 N at 45.75 mm	76 lb at 1.8 in
• Valve Springs - Valve Spring Load - Open	980 N at 33.55 mm	220 lb at 1.32 in

ENGINE MECHANICAL SPECIFICATIONS (LS6)

Engine Mechanical Specifications (LS6)

Application	Specification	
	Metric	**English**
General		
• Engine Type	V 8	
• Displacement	5.7 L - 5665 cc	346 CID
• RPO	LS6	
• VIN	S	
• Bore	99.0-99.018 mm	3.897-3.898 in
• Stroke	92.0 mm	3.622 in
	10.5:1	

cardiagn.com

• Compression Ratio		
• Firing Order	1-8-7-2-6-5-4-3	
• Spark Plug Gap	1.016 mm	0.04 in
Block		
• Camshaft Bearing Bore 1 and 5 Diameter - First Design	59.08-59.13 mm	2.325-2.327 in
• Camshaft Bearing Bore 2 and 4 Diameter - First Design	58.83-58.88 mm	2.316-2.318 in
• Camshaft Bearing Bore 3 Diameter - First Design	58.58-58.63 mm	2.306-2.308 in
• Camshaft Bearing Bore 1 and 5 Diameter - Second Design	59.58-59.63 mm	2.345-2.347 in
• Camshaft Bearing Bore 2 and 4 Diameter - Second Design	59.08-59.13 mm	2.325-2.327 in
• Camshaft Bearing Bore 3 Diameter - Second Design	58.58-58.63 mm	2.306-2.308 in
• Crankshaft Main Bearing Bore Diameter	69.871-69.889 mm	2.75-2.751 in
• Crankshaft Main Bearing Bore Out-of-Round	0.005 mm	0.0002 in
• Cylinder Bore Diameter	99.0-99.018 mm	3.897-3.898 in
• Cylinder Bore Taper - Thrust Side	0.018 mm	0.0007 in
• Cylinder Head Deck Height - Measuring from the Centerline of Crankshaft to the Deck Face	234.57-234.82 mm	9.235-9.245 in
• Cylinder Head Deck Surface Flatness - Measured Within a 152.4 mm (6.0 in) Area	0.08 mm	0.003 in
• Cylinder Head Deck Surface Flatness - Measuring the Overall Length of the Block Deck	0.22 mm	0.008 in
• Valve Lifter Bore Diameter	21.417-21.443 mm	0.843-0.844 in
Camshaft		
• Camshaft End Play	0.025-0.305 mm	0.001-0.012 in
• Camshaft Journal Diameter	54.99-55.04 mm	2.164-2.166 in
• Camshaft Journal Out-of-Round	0.025 mm	0.001 in
• Camshaft Lobe Lift - Exhaust	8.19 mm	0.322 in
• Camshaft Lobe Lift - Intake	8.24 mm	0.324 in
• Camshaft Runout - Measured at the Intermediate Journals	0.05 mm	0.002 in
Connecting Rod		
• Connecting Rod Bearing Clearance - Production	0.023-0.065 mm	0.0009-0.0025 in
• Connecting Rod Bearing Clearance - Service	0.023-0.076 mm	0.0009-0.003 in
	56.505-56.525	2.224-2.225 in

cardiagn.com

• Connecting Rod Bore Diameter - Bearing End	mm	
• Connecting Rod Bore Out-of-Round - Bearing End	0.006 mm	0.00023 in
• Connecting Rod Bore Out-of-Round - Bearing End - Service	0.006 mm	0.00023 in
• Connecting Rod Side Clearance	0.11-0.51 mm	0.00433-0.02 in
Crankshaft		
• Connecting Rod Journal Diameter - Production	53.318-53.338 mm	2.0991-2.0999 in
• Connecting Rod Journal Diameter - Service	53.308 mm	2.0987 in
• Connecting Rod Journal Out-of-Round - Production	0.005 mm	0.0002 in
• Connecting Rod Journal Out-of-Round - Service	0.01 mm	0.0004 in
• Connecting Rod Journal Taper - Maximum for 1/2 of Journal Length - Production	0.005 mm	0.0002 in
• Connecting Rod Journal Taper - Maximum for 1/2 of Journal Length - Service	0.02 mm	0.00078 in
• Crankshaft End Play	0.04-0.2 mm	0.0015-0.0078 in
• Crankshaft Main Bearing Clearance - Production	0.02-0.052 mm	0.0008-0.0021 in
• Crankshaft Main Bearing Clearance - Service	0.02-0.065 mm	0.0008-0.0025 in
• Crankshaft Main Journal Diameter - Production	64.992-65.008 mm	2.558-2.559 in
• Crankshaft Main Journal Diameter - Service	64.992 mm	2.558 in
• Crankshaft Main Journal Out-of-Round - Production	0.003 mm	0.000118 in
• Crankshaft Main Journal Out-of-Round - Service	0.008 mm	0.0003 in
• Crankshaft Main Journal Taper - Production	0.01 mm	0.0004 in
• Crankshaft Main Journal Taper - Service	0.02 mm	0.00078 in
• Crankshaft Rear Flange Runout	0.05 mm	0.002 in
• Crankshaft Reluctor Ring Runout - Measured 1.0 mm (0.04 in) Below Tooth Diameter	0.7 mm	0.028 in
• Crankshaft Thrust Surface - Production	26.14-26.22 mm	1.029-1.0315 in
• Crankshaft Thrust Surface - Service	26.22 mm	1.0315 in
• Crankshaft Thrust Surface Runout	0.025 mm	0.001 in
Cylinder Head		
• Cylinder Head Height/Thickness - Measured from the Cylinder Head Deck to the Valve Rocker Arm Cover Seal Surface	120.2 mm	4.732 in
• Surface Flatness - Block Deck - Measured Within a 152.4	0.08 mm	0.003 in

cardiagn.com

mm (6.0 in) Area		
• Surface Flatness - Block Deck - Measuring the Overall Length of the Cylinder Head	0.1 mm	0.004 in
• Surface Flatness - Exhaust Manifold Deck	0.22 mm	0.008 in
• Surface Flatness - Intake Manifold Deck	0.22 mm	0.008 in
Intake Manifold		
• Surface Flatness - Measured at Gasket Sealing Surfaces	0.5 mm	0.02 in
Lubrication System		
• Oil Capacity - with Filter	6.151 Liters	6.5 Quarts
• Oil Capacity - without Filter	5.678 Liters	6.0 Quarts
• Oil Pressure - Minimum - Hot	41 kPa at 1,000 engine RPM 124 kPa at 2,000 engine RPM 165 kPa at 4,000 engine RPM	6 psig at 1,000 engine RPM 18 psig at 2,000 engine RPM 24 psig at 4,000 engine RPM
Oil Pan		
• Front Cover Alignment - at Oil Pan Surface	0.0-0.5 mm	0.0-0.02 in
• Rear Cover Alignment - at Oil Pan Surface	0.0-0.5 mm	0.0-0.02 in
• Oil Pan Alignment - to Rear of Engine Block at Transmission Bellhousing Mounting Surface	0.0-0.25 mm	0.0-0.01 in
Piston Rings		
• Piston Ring End Gap - First Compression Ring - Measured in Cylinder Bore - Production	0.23-0.44 mm	0.009-0.017 in
• Piston Ring End Gap - First Compression Ring - Measured in Cylinder Bore	0.23-0.5 mm	0.009-0.0196 in
• Piston Ring End Gap - Second Compression Ring - Measured in Cylinder Bore - Production	0.44-0.7 mm	0.017-0.027 in
• Piston Ring End Gap - Second Compression Ring - Measured in Cylinder Bore	0.44-0.76 mm	0.0173-0.03 in
• Piston Ring End Gap - Oil Control Ring - Measured in Cylinder Bore - Production	0.18-0.75 mm	0.007-0.029 in
• Piston Ring End Gap - Oil Control Ring - Measured in Cylinder Bore - Service	0.18-0.81 mm	0.007-0.032 in
• Piston Ring to Groove Clearance - First Compression Ring - Production	0.04-0.086 mm	0.00157-0.0033 in
• Piston Ring to Groove Clearance - First Compression Ring - Service	0.04-0.068 mm	0.00157-0.0033 in

cardiagn.com

• Piston Ring to Groove Clearance - Second Compression Ring - Production	0.05-0.088 mm	0.002-0.0034 in
• Piston Ring to Groove Clearance - Second Compression Ring - Service	0.05-0.088 mm	0.002-0.0034 in
• Piston Ring to Groove Clearance - Oil Control Ring - Production	-0.008 to +0.0176 mm	-0.0003 to +0.0069 in
• Piston Ring to Groove Clearance - Oil Control Ring - Service	-0.008 to +0.0176 mm	-0.0003 to +0.0069 in
Pistons and Pins		
• Piston - Piston Diameter - Non Coated Skirt - at Size Point	98.969-98.987 mm	3.8964-3.8997 in
• Piston - Piston Diameter - Measured Over Skirt Coating	98.984-99.027 mm	3.897-3.899 in
• Piston - Piston to Bore Clearance - Non Coated Skirt - Production	0.013-0.049 mm	0.0005-0.0019 in
• Piston - Piston to Bore Clearance - Non Coated Skirt - Service	0.013-0.074 mm	0.0005-0.0029 in
• Piston - Piston to Bore Clearance - Coated Skirt - Production	-0.027 to +0.029 mm	-0.001 to +0.0011 in
• Piston - Piston to Bore Clearance - Coating Worn Off - Service Limit	0.074 mm	0.0029 in
• Pin - First Design Press Fit Pin Fit in Connecting Rod Bore	0.02-0.043 mm - Interference	0.00078-0.00169 in - Interference
• Pin - First Design Press Fit Pin Clearance to Piston Pin Bore - Production	0.01-0.02 mm	0.0004-0.00078 in
• Pin - First Design Press Fit Pin Clearance to Piston Pin Bore - Service	0.01-0.022 mm	0.0004-0.00086 in
• Pin - First Design Press Fit Pin Diameter	23.997-24.0 mm	0.9447-0.9448 in
• Pin - Second Design Full Floating Pin Fit in Connecting Rod Bore - Production	0.007-0.02 mm	0.00027-0.00078 in
• Pin - Second Design Full Floating Pin Fit in Connecting Rod Bore - Service	0.007-0.022 mm	0.00027-0.00086 in
• Pin - Second Design Full Floating Pin Clearance to Piston Pin Bore - Production	0.002-0.01 mm	0.00008-0.0004 in
• Pin - Second Design Full Floating Pin Clearance to Piston Pin Bore - Service	0.002-0.015 mm	0.00008-0.0006 in
• Pin - Second Design Full Floating Pin Diameter	23.952-23.955 mm	0.943-0.943 in
Valve System		

cardiagn.com

• Valves - Valve Face Angle	45 degrees	
• Valves - Valve Face Width	1.25 mm	0.05 in
• Valves - Valve Lash	Net Lash - No Adjustment	
• Valves - Valve Lift - Intake	14.02 mm	0.552 in
• Valves - Valve Lift - Exhaust	13.92 mm	0.548 in
• Valves - Valve Seat Angle	46 degrees	
• Valves - Valve Seat Runout	0.05 mm	0.002 in
• Valves - Valve Seat Width - Exhaust	1.78 mm	0.07 in
• Valves - Valve Seat Width - Intake	1.02 mm	0.04 in
• Valves - Valve Stem Diameter - Production	7.955-7.976 mm	0.313-0.314 in
• Valves - Valve Stem Diameter - Service	7.96 mm	0.314 in
• Valves - Valve Stem-to-Guide Clearance - Production - Intake	0.025-0.066 mm	0.001-0.0026 in
• Valves - Valve Stem-to-Guide Clearance - Service - Intake	0.093 mm	0.0037 in
• Valves - Valve Stem-to-Guide Clearance - Production - Exhaust	0.025-0.066 mm	0.001-0.0026 in
• Valves - Valve Stem-to-Guide Clearance - Service - Exhaust	0.093 mm	0.0037 in
• Valve Rocker Arm - Valve Rocker Arm Ratio	1.70:1	
• Valve Springs - Valve Spring Free Length	53.4 mm	2.1 in
• Valve Springs - Valve Spring Installed Height	45.75 mm	1.8 in
• Valve Springs - Valve Spring Load - Closed	400 N at 45.75 mm	90 lb at 1.8 in
• Valve Springs - Valve Spring Load- Open	1310 N at 31.75 mm	294 lb at 1.25 in

SEALERS, ADHESIVES, AND LUBRICANTS

Sealers, Adhesives, and Lubricants

Application	Type of Material	GM Part Number	
		United States	Canada
Coolant Sensor Threads	Sealant	12346004	10953480
Cylinder Head Core Hole Plugs	Threadlock	12345382	10953489
Cylinder Head Expansion Plugs	Threadlock	12345382	10953489
Engine Block Front Oil Gallery Plug	Threadlock	12345382	10953489
Engine Block Plug Sealing Washers	Sealant	12346004	10953480

cardiagn.com

Engine Flywheel Bolt Threads	Threadlock	12345382	10953489
Engine Oil	5W-30 Synthetic Oil	12345885	10953468
Engine Oil Supplement	Fluorescent Dye	12345795	10953470
Exhaust Manifold Bolt Threads	Threadlock	12345493	10953488
Fuel Rail Bolt Threads	Threadlock	12345382	10953489
Ignition Coil and Bracket Assembly Bolts	Threadlock	12345382	10953489
Intake Manifold Bolt Threads	Threadlock	12345382	10953489
Oil Pan Surface at Front and Rear Covers	Sealant	12378190	-
Oil Pressure Sensor Threads	Sealant	12346004	10953480
Thread Repair Component Cleaner	Cleaner	12346139	10953463
Thread Repair Component Cleaner	Cleaner	12377981	10953463
Thread Repair Cutting Oil	Lubricant	1052864	992881

THREAD REPAIR SPECIFICATIONS

Engine Block - Front View

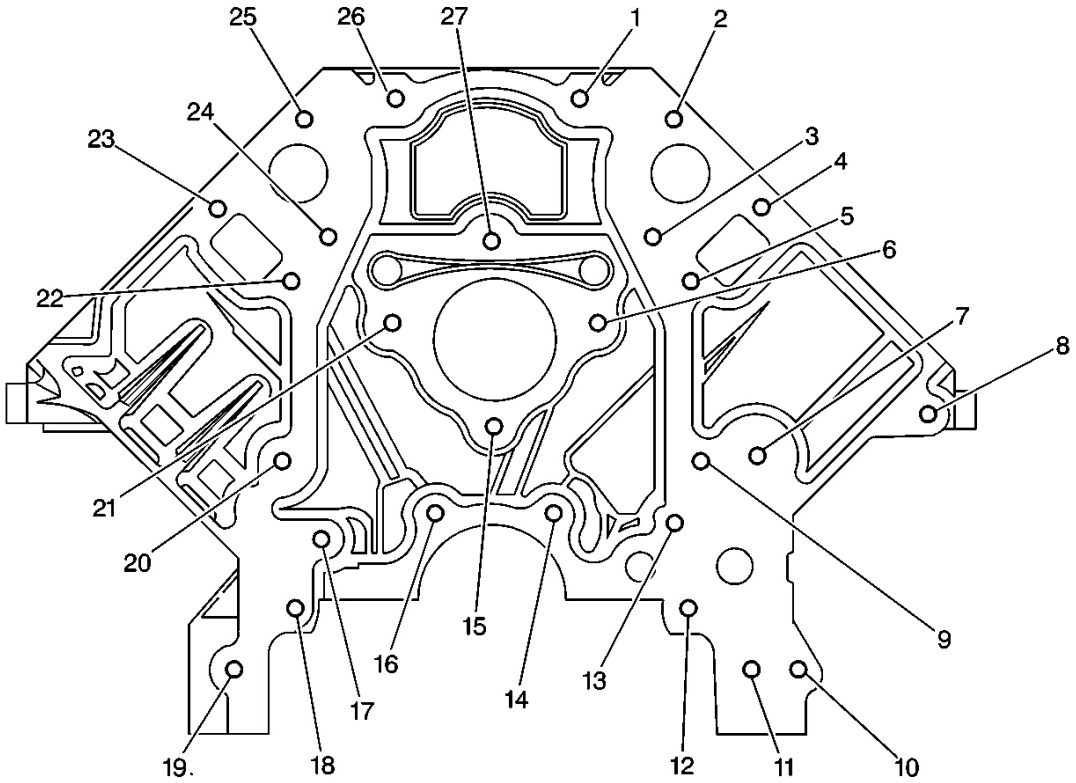

Fig. 1: Engine Block Bolt Holes Component View - Front View
Courtesy of GENERAL MOTORS CORP.

cardiagn.com

Engine Block - Front View

Hole	Thread Size	Insert	Drill	Counterbore Tool	Tap	Driver	Drill Depth - Maximum mm (in)	Tap Depth - Maximum mm (in)
1-6	M8 x 1.25	J 42385-210	J 42385-206	J 42385-207	J 42385-208	J 42385-209	22.5 (0.885)	17.5 (0.688)
7	M10 x 1.5	J 42385-215	J 42385-211	J 42385-212	J 42385-213	J 42385-214	25.0 (0.984)	19.5 (0.767)
8	M10 x 1.5	J 42385-215	J 42385-211	J 42385-212	J 42385-213	J 42385-214	32.5 (1.28)	25.0 (0.984)
9	M8 x 1.25	J 42385-210	J 42385-206	J 42385-207	J 42385-208	J 42385-209	22.5 (0.885)	17.5 (0.688)
10	M10 x 1.5	J 42385-215	J 42385-211	J 42385-212	J 42385-213	J 42385-214	Thru	Thru
11-13	M8 x 1.25	J 42385-210	J 42385-206	J 42385-207	J 42385-208	J 42385-209	22.5 (0.885)	17.5 (0.688)
14	M8 x 1.25	J 42385-210	J 42385-206	J 42385-207	J 42385-208	J 42385-209	Thru	18.0 (0.708)
15	M8 x 1.25	J 42385-210	J 42385-206	J 42385-207	J 42385-208	J 42385-209	22.5 (0.885)	17.5 (0.688)
16	M8 x 1.25	J 42385-210	J 42385-206	J 42385-207	J 42385-208	J 42385-209	Thru	18.0 (0.708)
17-27	M8 x 1.25	J 42385-210	J 42385-206	J 42385-207	J 42385-208	J 42385-209	22.5 (0.885)	17.5 (0.688)

Engine Block - Rear View

cardiagn.com

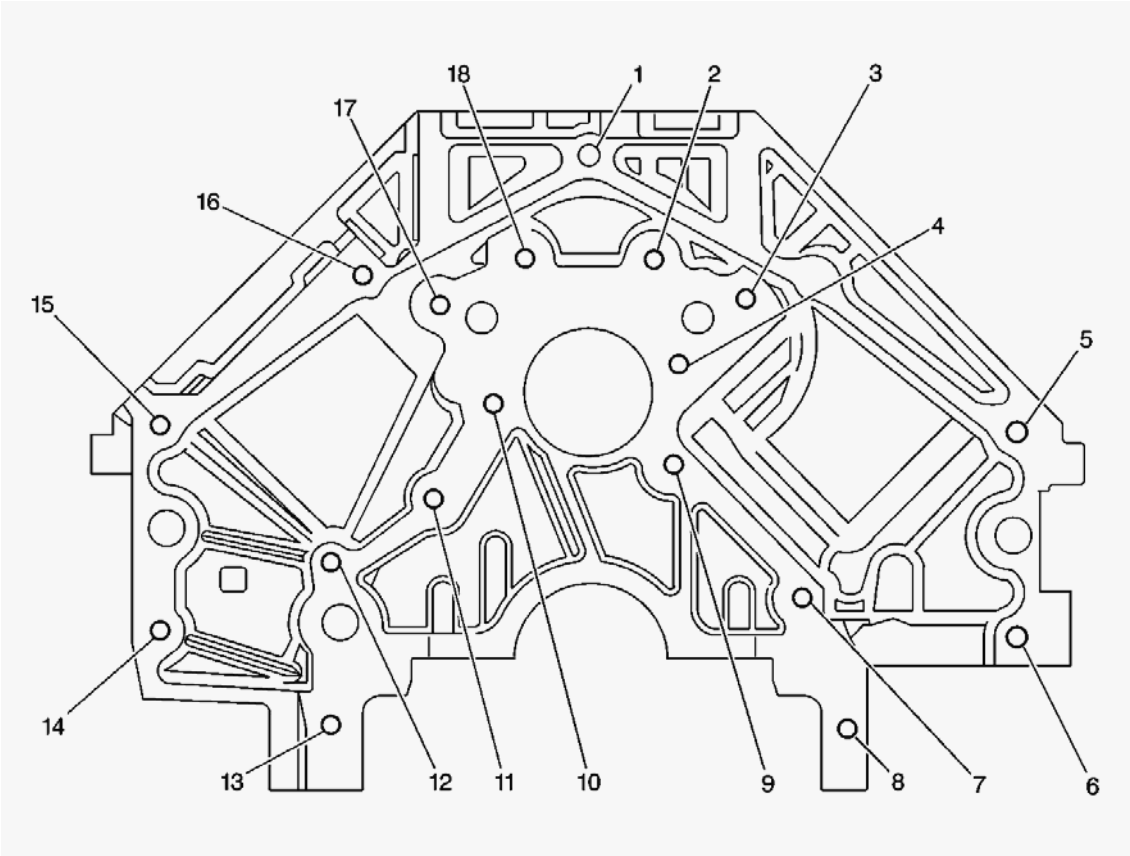

Fig. 2: Engine Block Bolt Holes Component View - Rear View
Courtesy of GENERAL MOTORS CORP.

Engine Block - Rear View

Hole	Thread Size	Insert	Drill	Counterbore Tool	Tap	Driver	Drill Depth - Maximum mm (in)	Tap Depth - Maximum mm (in)
1	M10 x 1.5	J 42385-215	J 42385-211	J 42385-212	J 42385-213	J 42385-214	27.0 (1.06)	21.5 (0.846)
2-4	M8 x 1.25	J 42385-210	J 42385-206	J 42385-207	J 42385-208	J 42385-209	22.5 (0.885)	17.5 (0.688)
5-6	M10 x 1.5	J 42385-215	J 42385-211	J 42385-212	J 42385-213	J 42385-214	27.0 (1.06)	21.5 (0.846)
7-13	M8 x 1.25	J 42385-210	J 42385-206	J 42385-207	J 42385-208	J 42385-209	22.5 (0.885)	17.5 (0.688)
14-16	M10 x 1.5	J 42385-215	J 42385-211	J 42385-212	J 42385-213	J 42385-214	27.0 (1.06)	21.5 (0.846)

cardiagn.com

17-18	M8 x 1.25	J 42385-210	J 42385-206	J 42385-207	J 42385-208	J 42385-209	22.5 (0.885)	17.5 (0.688)

Engine Block - Left Side View

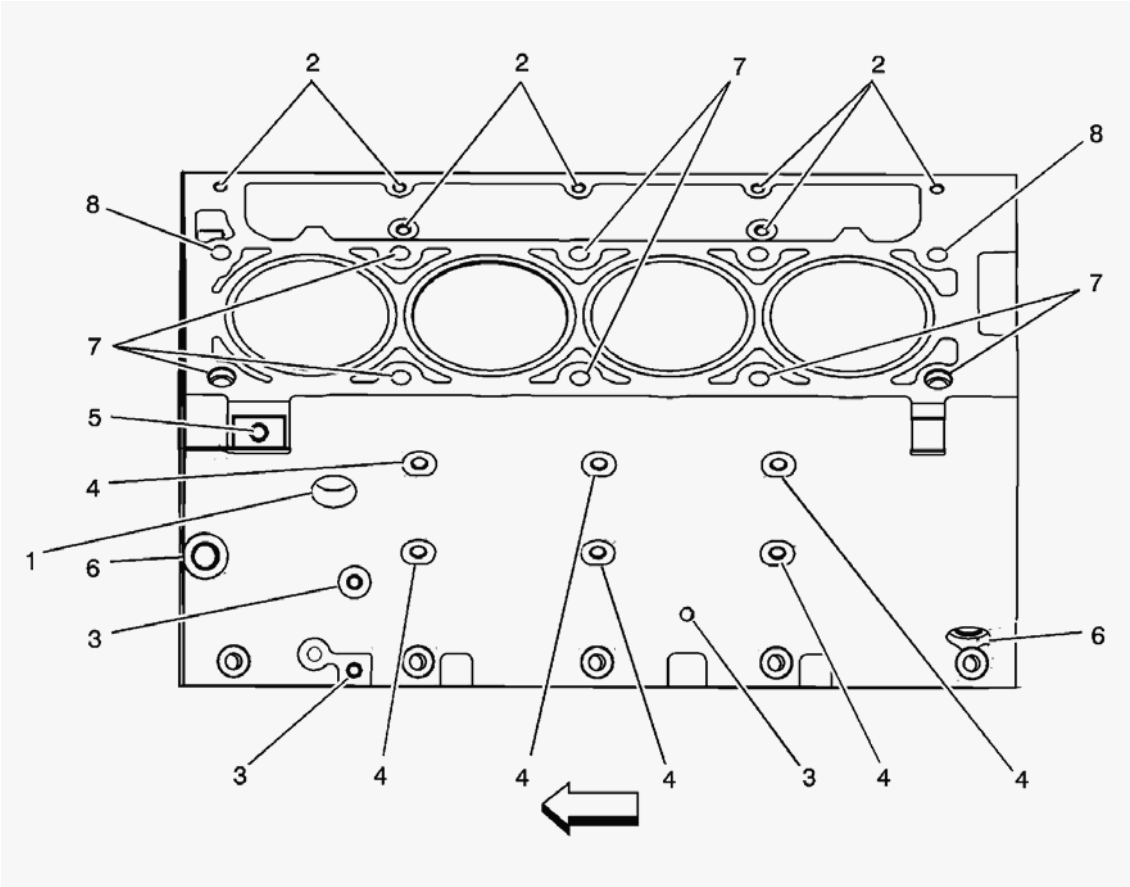

Fig. 3: Engine Block Bolt Holes Component View - Left Side View
Courtesy of GENERAL MOTORS CORP.

Engine Block - Left Side View

Hole	Thread Size	Insert	Drill	Counterbore Tool	Tap	Driver	Drill Depth - Maximum mm (in)	Tap Depth - Maximum mm (in)
J 42385								
1	M28 x 1.25	N/A	N/A	N/A	N/A	N/A	N/A	N/A
2	M8 x 1.25	210	206	207	208	209	28.5 (1.122)	23.0 (0.905)
3	M8 x 1.25	210	206	207	208	209	21.5 (0.846)	16.0 (0.629)
4	M10 x 1.25	215	211	212	213	214	29.0 (1.141)	23.0 (0.905)
5	M10 x 1.5	215	211	212	213	214	27.0 (1.062)	21.5 (0.846)
6	M16 x 1.5	N/A	N/A	N/A	N/A	N/A	N/A	N/A

cardiagn.com

7	M11 x 2.0 First Design	108	105	N/A	106	107	124.0 (4.88)	115.0 (4.52)
7	M11 x 2.0 Second Design	108	105	N/A	106	107	69.0 (2.72)	60.0 (2.36)
8	M11 x 2.0	108	105	N/A	106	107	69.0 (2.72)	60.0 (2.36)

- Bolt holes 7, second design, and 8 have a 30 mm (1.18 in) counterbore included in the 69.0 mm (2.72 in) drill depth. Use sleeve J 42385-315 with the drill and tap.
- Bolt holes 7, first design, have a 85 mm (3.34 in) counterbore included in the 124.0 mm (4.88 in) drill depth.

Engine Block - Right Side View

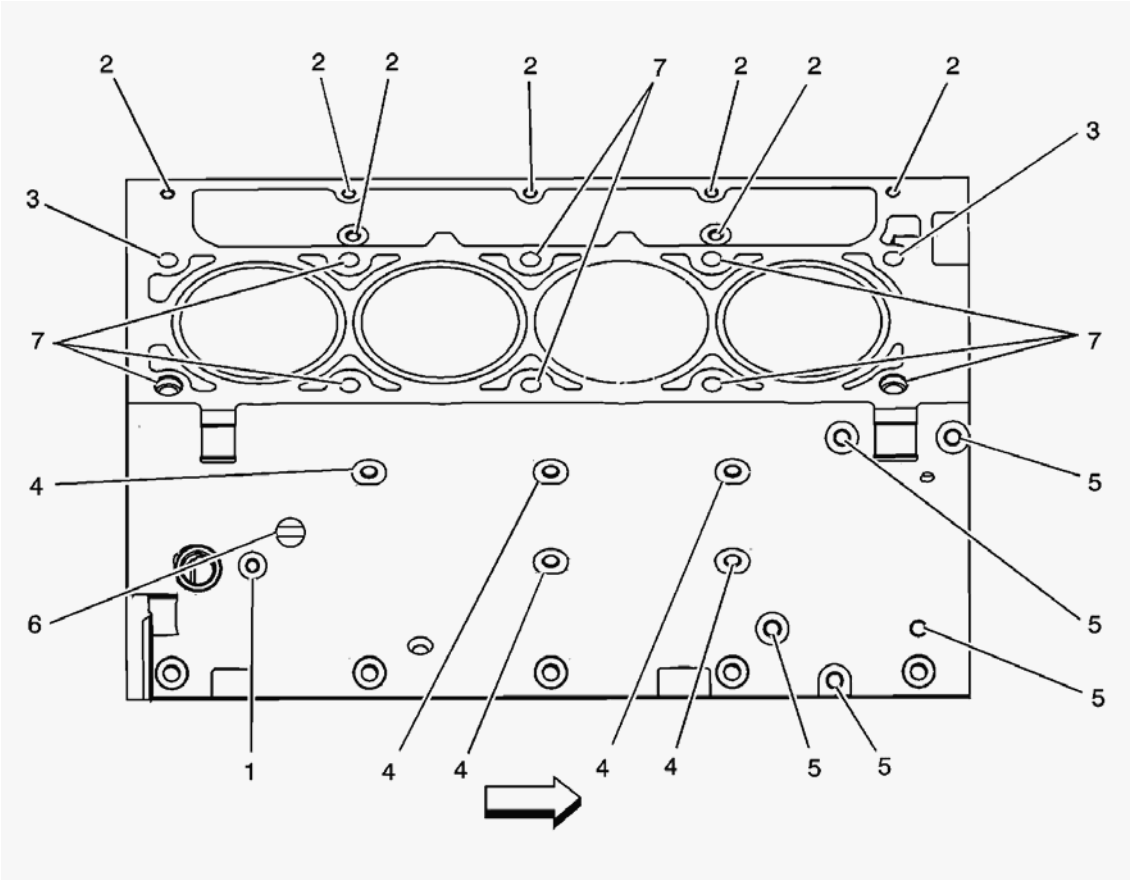

Fig. 4: Engine Block Bolt Holes Component View - Right Side View
Courtesy of GENERAL MOTORS CORP.

Engine Block - Right Side View

Hole	Thread Size	Insert	Drill	Counterbore Tool	Tap	Driver	Drill Depth - Maximum mm (in)	Tap Depth - Maximum mm (in)

cardiagn.com

J 42385								
1	M28 x 1.25	210	206	207	208	209	22.5 (0.885)	17.5 (0.688)
2	M8 x 1.25	210	206	207	208	209	26.5 (1.04)	19.0 (0.784)
3	M11 x 2.0	108	105	N/A	106	107	69.0 (2.72)	60.0 (2.36)
4	M10 x 1.25	215	211	212	213	214	29.0 (1.141)	23.0 (0.905)
5	M10 x 1.5	215	211	212	213	214	27.0 (1.062)	21.5 (0.846)
6	M16 x 1.5	N/A	N/A	N/A	N/A	N/A	N/A	N/A
7	M11 x 2.0 First Design	108	105	N/A	106	107	124.0 (4.88)	115.0 (4.52)
7	M11 x 2.0 Second Design	108	105	N/A	106	107	69.0 (2.72)	60.0 (2.36)

- Bolt holes 7, second design, and 3 have a 30 mm (1.18 in) counterbore included in the 69.0 mm (2.72 in) drill depth. Use sleeve J 42385-315 with the drill and tap.
- Bolt holes 7, first design, have a 85 mm (3.34 in) counterbore included in the 124.0 mm (4.88 in) drill depth.

Engine Block - Bottom View

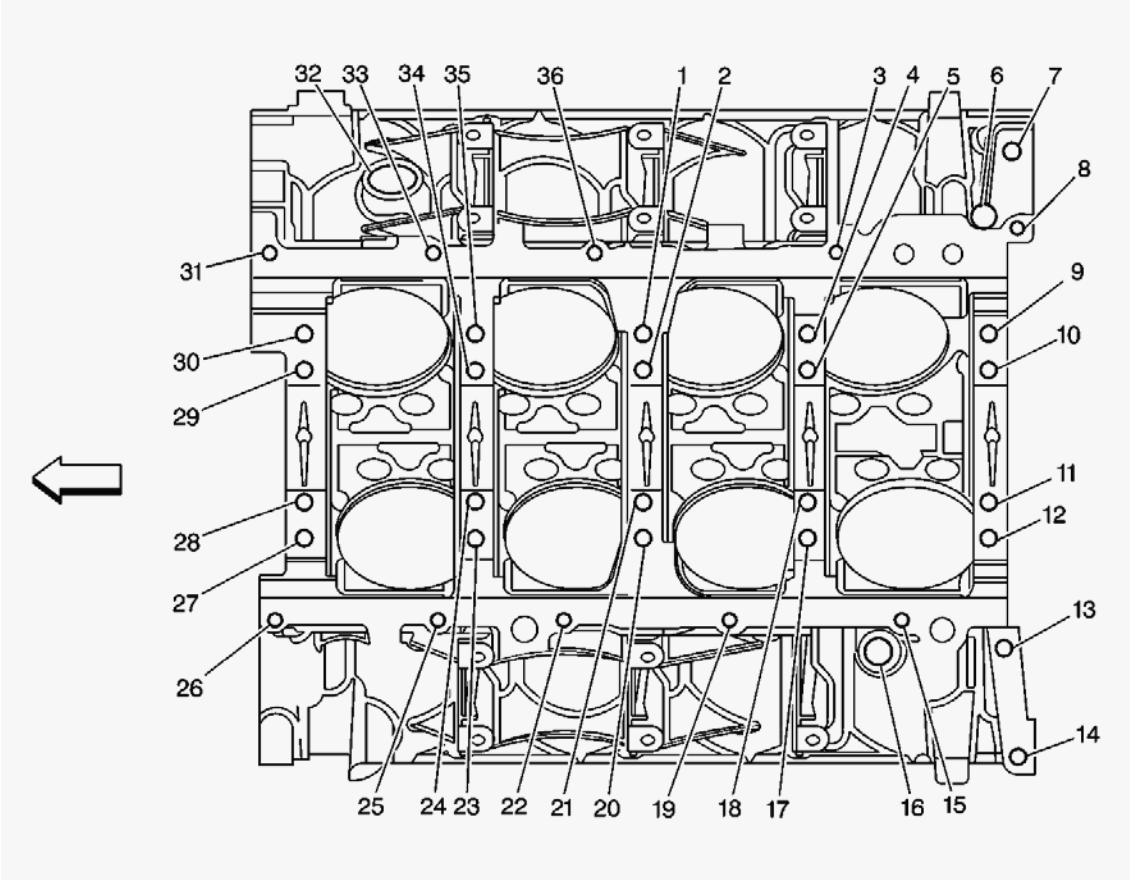

cardiagn.com

Fig. 5: Engine Block Bolt Holes Component View - Bottom View
Courtesy of GENERAL MOTORS CORP.

Engine Block - Bottom View

Hole	Thread Size	Insert	Drill	Counterbore Tool	Tap	Driver	Drill Depth - Maximum mm (in)	Tap Depth - Maximum mm (in)
1	M10 x 2.0	J 42385-104	J 42385-101	-	J 42385-102	J 42385-103	31.0 (1.22)	25.5 (1.0)
2	M10 x 2.0	J 42385-104	J 42385-101	-	J 42385-102	J 42385-103	53.5 (2.10)	44.0 (1.73)
3	M8 x 1.25	J 42385-210	J 42385-206	J 42385-207	J 42385-208	J 42385-209	22.5 (0.885)	17.5 (0.688)
4	M10 x 2.0	J 42385-104	J 42385-101	-	J 42385-102	J 42385-103	31.0 (1.22)	25.5 (1.0)
5	M10 x 2.0	J 42385-104	J 42385-101	-	J 42385-102	J 42385-103	53.5 (2.10)	44.0 (1.73)
6	M16 x 1.5	-	-	-	-	-	-	-
7	N/A	-	-	-	-	-	-	-
8	M8 x 1.25	J 42385-210	J 42385-206	J 42385-207	J 42385-208	J 42385-209	22.5 (0.885)	17.5 (0.688)
9	M10 x 2.0	J 42385-104	J 42385-101	-	J 42385-102	J 42385-103	31.0 (1.22)	25.5 (1.0)
10-11	M10 x 2.0	J 42385-104	J 42385-101	-	J 42385-102	J 42385-103	53.5 (2.10)	44.0 (1.73)
12	M10 x 2.0	J 42385-104	J 42385-101	-	J 42385-102	J 42385-103	31.0 (1.22)	25.5 (1.0)
13-14	M10 x 1.5	J 42385-215	J 42385-101	-	J 42385-213	J 42385-214	42.5 (1.67)	37.0 (1.45)
15	M8 x 1.25	J 42385-210	J 42385-206	J 42385-207	J 42385-208	J 42385-209	22.5 (0.885)	17.5 (0.688)
16	M16 x 1.5	-	-	-	-	-	-	-

cardiagn.com

17	M10 x 2.0	J 42385-104	J 42385-101	-	J 42385-102	J 42385-103	53.5 (2.10)	44.0 (1.73)
18	M10 x 2.0	J 42385-104	J 42385-101	-	J 42385-102	J 42385-103	31.0 (1.22)	25.5 (1.0)
19	M8 x 1.25	J 42385-210	J 42385-206	J 42385-207	J 42385-208	J 42385-209	22.5 (0.885)	17.5 (0.688)
20	M10 x 2.0	J 42385-104	J 42385-101	-	J 42385-102	J 42385-103	53.5 (2.10)	44.0 (1.73)
21	M10 x 2.0	J 42385-104	J 42385-101	-	J 42385-102	J 42385-103	31.0 (1.22)	25.5 (1.0)
22	M8 x 1.25	J 42385-210	J 42385-206	J 42385-207	J 42385-208	J 42385-209	22.5 (0.885)	17.5 (0.688)
23	M10 x 2.0	J 42385-104	J 42385-101	-	J 42385-102	J 42385-103	31.0 (1.22)	25.5 (1.0)
24	M10 x 2.0	J 42385-104	J 42385-101	-	J 42385-102	J 42385-103	53.5 (2.10)	44.0 (1.73)
25-26	M8 x 1.25	J 42385-210	J 42385-206	J 42385-207	J 42385-208	J 42385-209	22.5 (0.885)	17.5 (0.688)
27	M10 x 2.0	J 42385-104	J 42385-101	-	J 42385-102	J 42385-103	31.0 (1.22)	25.5 (1.0)
28-29	M10 x 2.0	J 42385-104	J 42385-101	-	J 42385-102	J 42385-103	53.5 (2.10)	44.0 (1.73)
30	M10 x 2.0	J 42385-104	J 42385-101	-	J 42385-102	J 42385-103	31.0 (1.22)	25.5 (1.0)
31	M8 x 1.25	J 42385-210	J 42385-206	J 42385-207	J 42385-208	J 42385-209	22.5 (0.885)	17.5 (0.688)
32	M28 x 1.25	-	-	-	-	-	-	-
33	M8 x 1.25	J 42385-210	J 42385-206	J 42385-207	J 42385-208	J 42385-209	22.5 (0.885)	17.5 (0.688)
		J	J		J	J		

cardiagn.com

34	M10 x 2.0	42385-104	42385-101	-	42385-102	42385-103	53.5 (2.10)	44.0 (1.73)
35	M10 x 2.0	J 42385-104	J 42385-101	-	J 42385-102	J 42385-103	31.0 (1.22)	25.5 (1.0)
36	M8 x 1.25	J 42385-210	J 42385-206	J 42385-207	J 42385-208	J 42385-209	22.5 (0.885)	17.5 (0.688)

- Bolt holes 2, 5, 10, 11, 18, 21, 24, 28, 29, and 34 have a 20.5 mm (0.807 in) counterbore included in the 53.5 mm (2.10 in) drill depth.
- Bolt holes 1, 4, 9, 12, 17, 20, 23, 27, 30, and 35 have a 1.5 mm (0.059 in) counterbore included in the 31.0 mm (1.22 in) drill depth. Use sleeve J 42385-316 with the drill and tap.
- Bolt holes 13 and 14 have a 11.5 mm (0.452 in) counterbore included in the 42.5 mm (1.67 in) drill depth. Use sleeve J 42385-311 with the drill and tap.

Engine Block - Top View

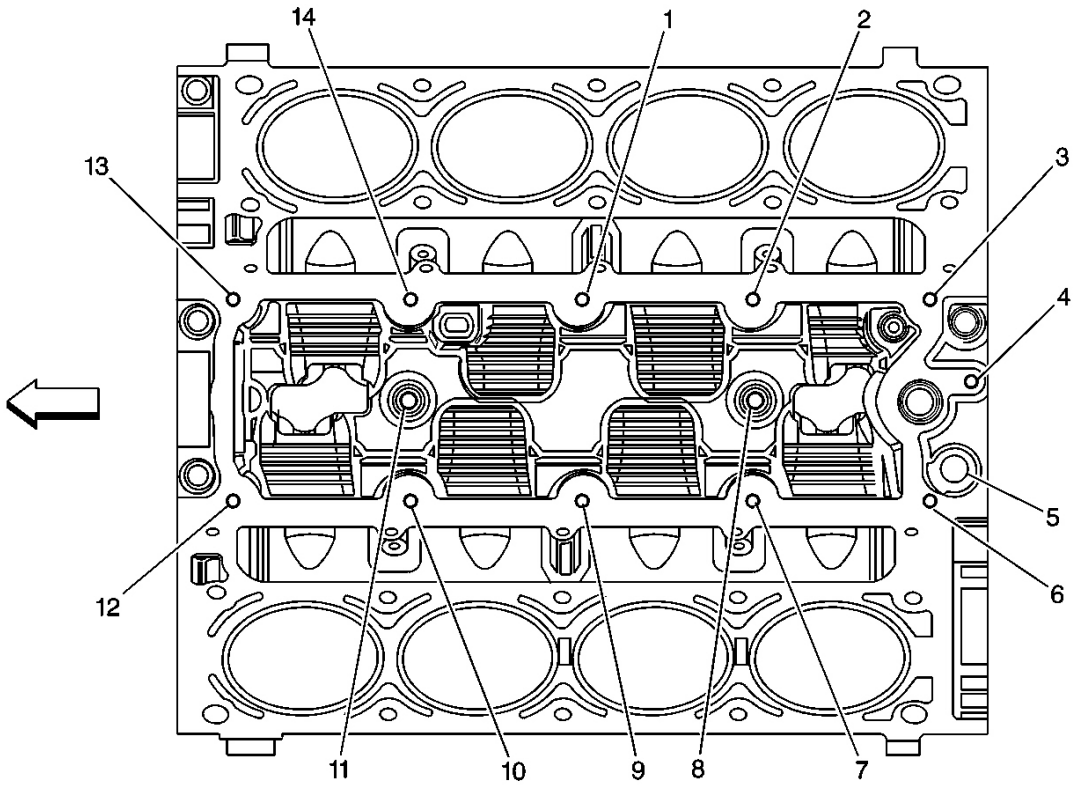

Fig. 6: Engine Block Bolt Holes Component View - Top View
Courtesy of GENERAL MOTORS CORP.

cardiagn.com

Engine Block - Top View

Hole	Thread Size	Insert	Drill	Counterbore Tool	Tap	Driver	Drill Depth - Maximum mm (in)	Tap Depth - Maximum mm (in)
1-4	M8 x 1.25	J 42385-210	J 42385-206	J 42385-207	J 42385-208	J 42385-209	26.5 (1.04)	19.0 (0.784)
5	M16 x 1.5	-	-	-	-	-	-	-
6-7	M8 x 1.25	J 42385-210	J 42385-206	J 42385-207	J 42385-208	J 42385-209	26.5 (1.04)	19.0 (0.784)
8	M10 x 1.5	J 42385-216	J 42385-211	J 42385-212	J 42385-213	J 42385-214	22.5 (0.885)	17.0 (0.669)
9-10	M8 x 1.25	J 42385-210	J 42385-206	J 42385-207	J 42385-208	J 42385-209	26.5 (1.04)	19.0 (0.784)
11	M10 x 1.5	J 42385-216	J 42385-211	J 42385-212	J 42385-213	J 42385-214	22.5 (0.885)	17.0 (0.669)
12-14	M8 x 1.25	J 42385-210	J 42385-206	J 42385-207	J 42385-208	J 42385-209	26.5 (1.04)	19.0 (0.784)

Cylinder Head - Top View

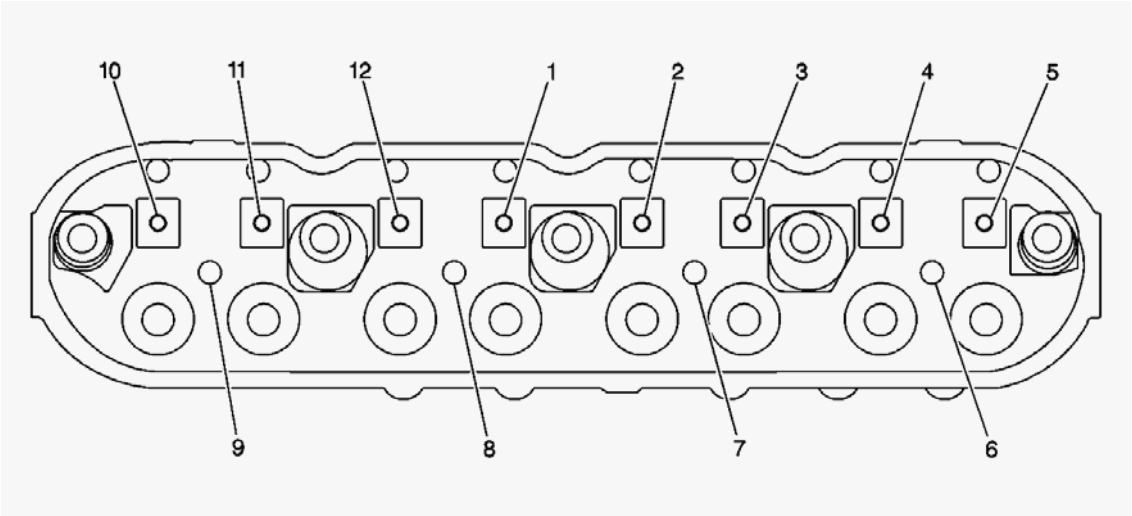

Fig. 7: Cylinder Head Bolt Holes Component View - Top View
Courtesy of GENERAL MOTORS CORP.

Cylinder Head - Top View

cardiagn.com

Hole	Thread Size	Insert	Drill	Counterbore Tool	Tap	Driver	Drill Depth - Maximum mm (in)	Tap Depth - Maximum mm (in)
1-5	M8 x 1.25	J 42385-210	J 42385-206	J 42385-207	J 42385-208	J 42385-209	26.5 (1.04)	19.0 (0.784)
6-9	M6 x 1.0	J 42385-205	J 42385-201	J 42385-202	J 42385-203	J 42385-204	20.05 (0.789)	16.05 (0.632)
10-12	M8 x 1.25	J 42385-210	J 42385-206	J 42385-207	J 42385-208	J 42385-209	26.5 (1.04)	19.0 (0.784)

Cylinder Head - End View

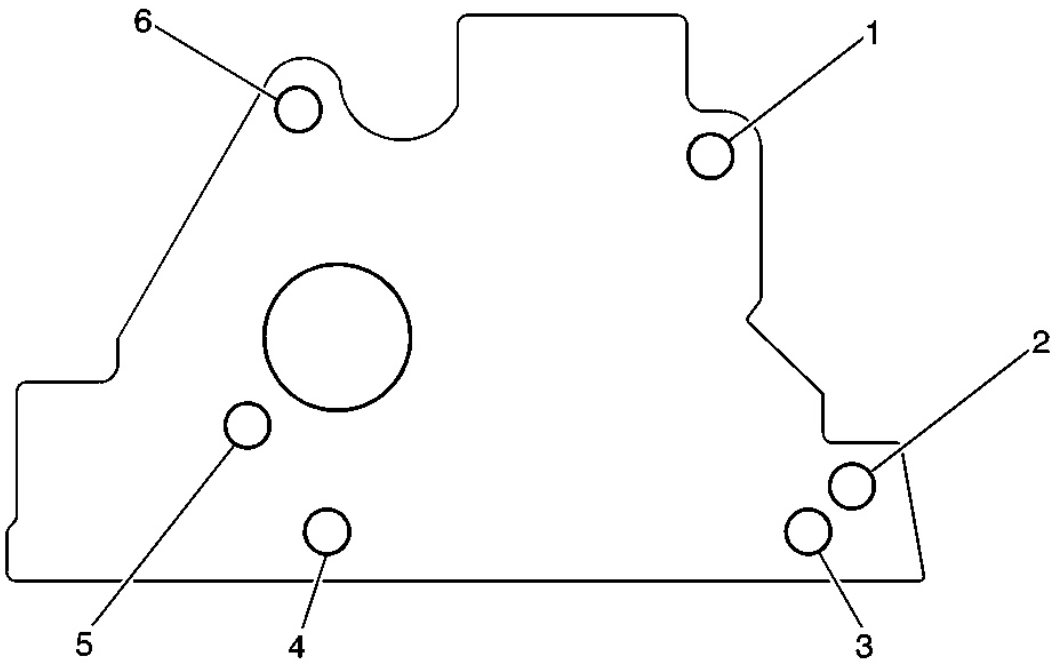

Fig. 8: Cylinder Head Bolt Holes Component View - End View
Courtesy of GENERAL MOTORS CORP.

Cylinder Head - End View

Hole	Thread Size	Insert	Drill	Counterbore Tool	Tap	Driver	Drill Depth - Maximum mm (in)	Tap Depth - Maximum mm (in)
		J	J		J	J		

cardiagn.com

1	M10 x 1.5	42385-215	42385-211	J 42385-212	42385-213	42385-214	28.0 (1.10)	20.0 (0.787)
2	-	N/A	-	-	-	-	-	-
3	M10 x 1.5	J 42385-215	J 42385-211	J 42385-212	J 42385-213	J 42385-214	28.0 (1.10)	20.0 (0.787)
4	N/A	-	-	-	-	-	-	-
5-6	M10 x 1.5	J 42385-215	J 42385-211	J 42385-212	J 42385-213	J 42385-214	28.0 (1.10)	20.0 (0.787)

Cylinder Head - Exhaust Manifold Deck View

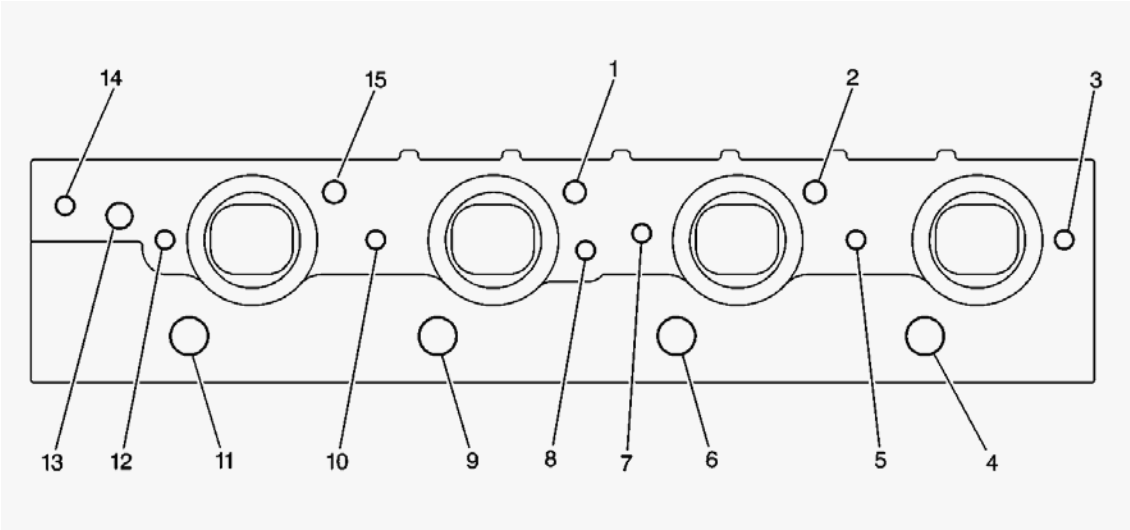

Fig. 9: Cylinder Head Bolt Holes Component View - Exhaust Manifold Deck View
Courtesy of GENERAL MOTORS CORP.

Cylinder Head - Exhaust Manifold Deck View

Hole	Thread Size	Insert	Drill	Counterbore Tool	Tap	Driver	Drill Depth - Maximum mm (in)	Tap Depth - Maximum mm (in)
1-2	M10 x 1.5	J 42385-215	J 42385-211	J 42385-212	J 42385-213	J 42385-214	28.0 (1.10)	20.0 (0.787)
3	M8 x 1.25	J 42385-210	J 42385-206	J 42385-207	J 42385-208	J 42385-209	21.0 (0.826)	16.0 (0.629)
4	M14 x 1.25	-	-	-	-	-	-	-
5	M8 x 1.25	J 42385-	J 42385-	J 42385-207	J 42385-	J 42385-	21.0 (0.826)	16.0 (0.629)

cardiagn.com

		210	206		208	209		
6	M14 x 1.25	-	-	-	-	-	-	-
7-8	M8 x 1.25	J 42385-210	J 42385-206	J 42385-207	J 42385-208	J 42385-209	21.0 (0.826)	16.0 (0.629)
9	M14 x 1.25	-	-	-	-	-	-	-
10	M8 x 1.25	J 42385-210	J 42385-206	J 42385-207	J 42385-208	J 42385-209	21.0 (0.826)	16.0 (0.629)
11	M14 x 1.25	-	-	-	-	-	-	-
12	M8 x 1.25	J 42385-210	J 42385-206	J 42385-207	J 42385-208	J 42385-209	21.0 (0.826)	16.0 (0.629)
13	M12 x 1.5	-	-	-	-	-	-	-
14-15	M10 x 1.5	J 42385-215	J 42385-211	J 42385-212	J 42385-213	J 42385-214	28.0 (1.10)	20.0 (0.787)

Cylinder Head - Intake Manifold Deck View

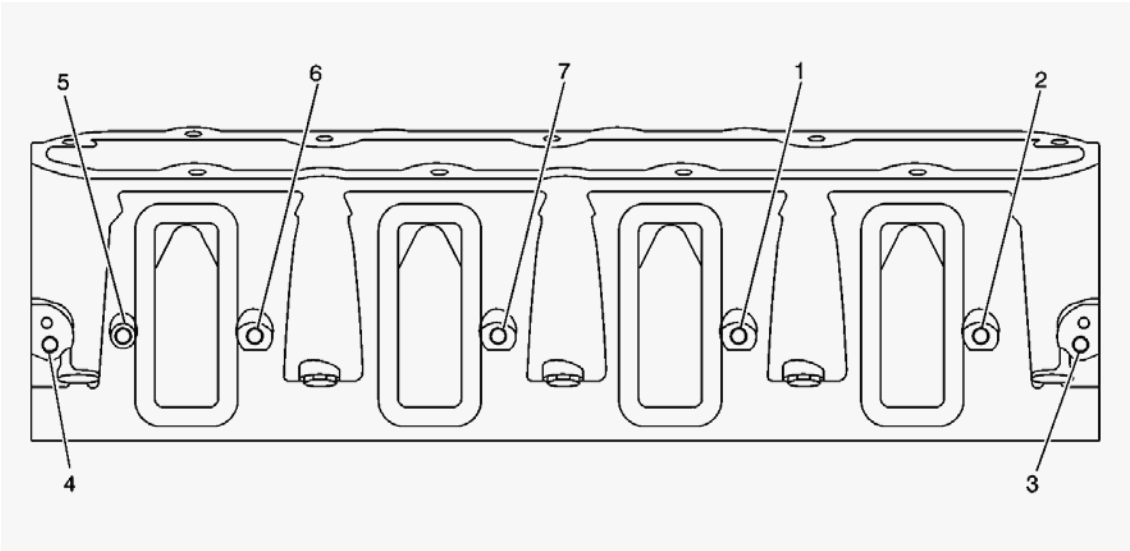

Fig. 10: Cylinder Head Bolt Holes Component View - Intake Manifold Deck View
Courtesy of GENERAL MOTORS CORP.

Cylinder Head - Intake Manifold Deck View

	Thread			Counterbore			Drill Depth - Maximum mm	Tap Depth - Maximum mm

cardiagn.com

Hole	Size	Insert	Drill	Tool	Tap	Driver	(in)	(in)
1-2	M6 x 1.0	J 42385-205	J 42385-201	J 42385-202	J 42385-203	J 42385-204	Thru	Thru
3-4	M6 x 1.0	J 42385-205	J 42385-201	J 42385-202	J 42385-203	J 42385-204	22.5 (0.885)	15.0 (0.688)
5-7	M6 x 1.0	J 42385-205	J 42385-201	J 42385-202	J 42385-203	J 42385-204	Thru	Thru

COMPONENT LOCATOR

DISASSEMBLED VIEWS

cardiagn.com

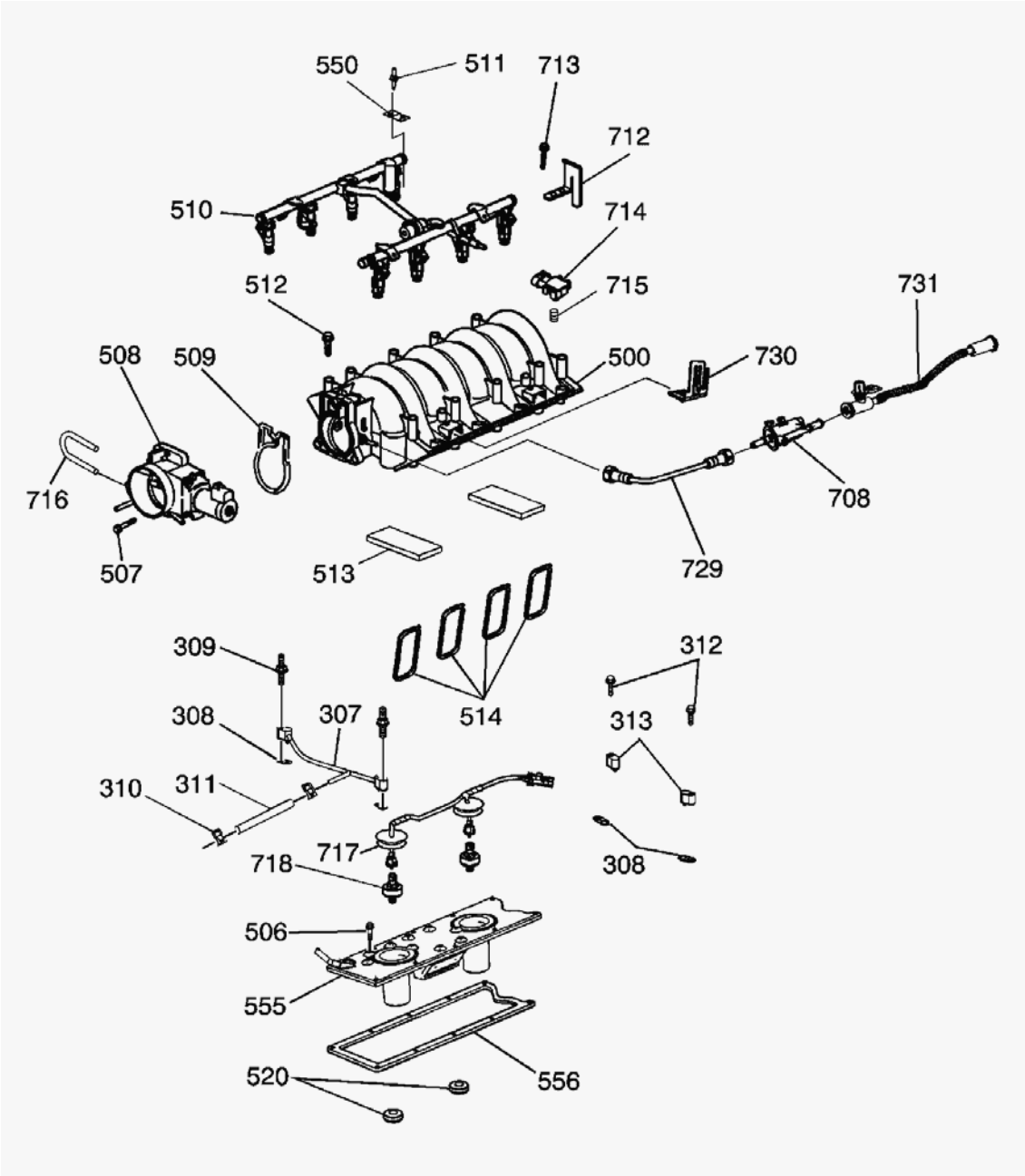

Fig. 11: Intake Manifold/Upper Engine Component View
Courtesy of GENERAL MOTORS CORP.

Callouts For Fig. 11

Callout	Component Name
307	Engine Coolant Air Bleed Pipe
308	Engine Coolant Air Bleed Pipe/Cover Gasket
308	Engine Coolant Air Bleed Pipe/Cover Gasket
309	Engine Coolant Air Bleed Pipe Stud
310	Engine Coolant Air Bleed Hose Clamp

cardiagn.com

311	Engine Coolant Air Bleed Hose
312	Engine Coolant Air Bleed Cover Bolt
313	Engine Coolant Air Bleed Cover
500	Intake Manifold
506	Valley Cover Bolt
507	Throttle Body Bolt
508	Throttle Body
509	Throttle Body Gasket
510	Fuel Rail with Injectors
511	Fuel Rail Bolt
512	Intake Manifold Bolt
513	Intake Manifold Insulator
514	Intake Manifold Gaskets
520	Knock Sensor Oil Seals
550	Fuel Rail Ground Strap
555	Valley Cover
556	Valley Cover Gasket
708	EVAP Purge Valve
712	Fuel Rail Stop Bracket
713	Intake Manifold Bolt
714	MAP Sensor
715	MAP Sensor Grommet
716	PCV Hose
717	Knock Sensor Wire Harness
718	Knock Sensor
729	EVAP Purge Valve Hose
730	EVAP Purge Valve Bracket
731	EVAP Purge Valve Hose

cardiagn.com

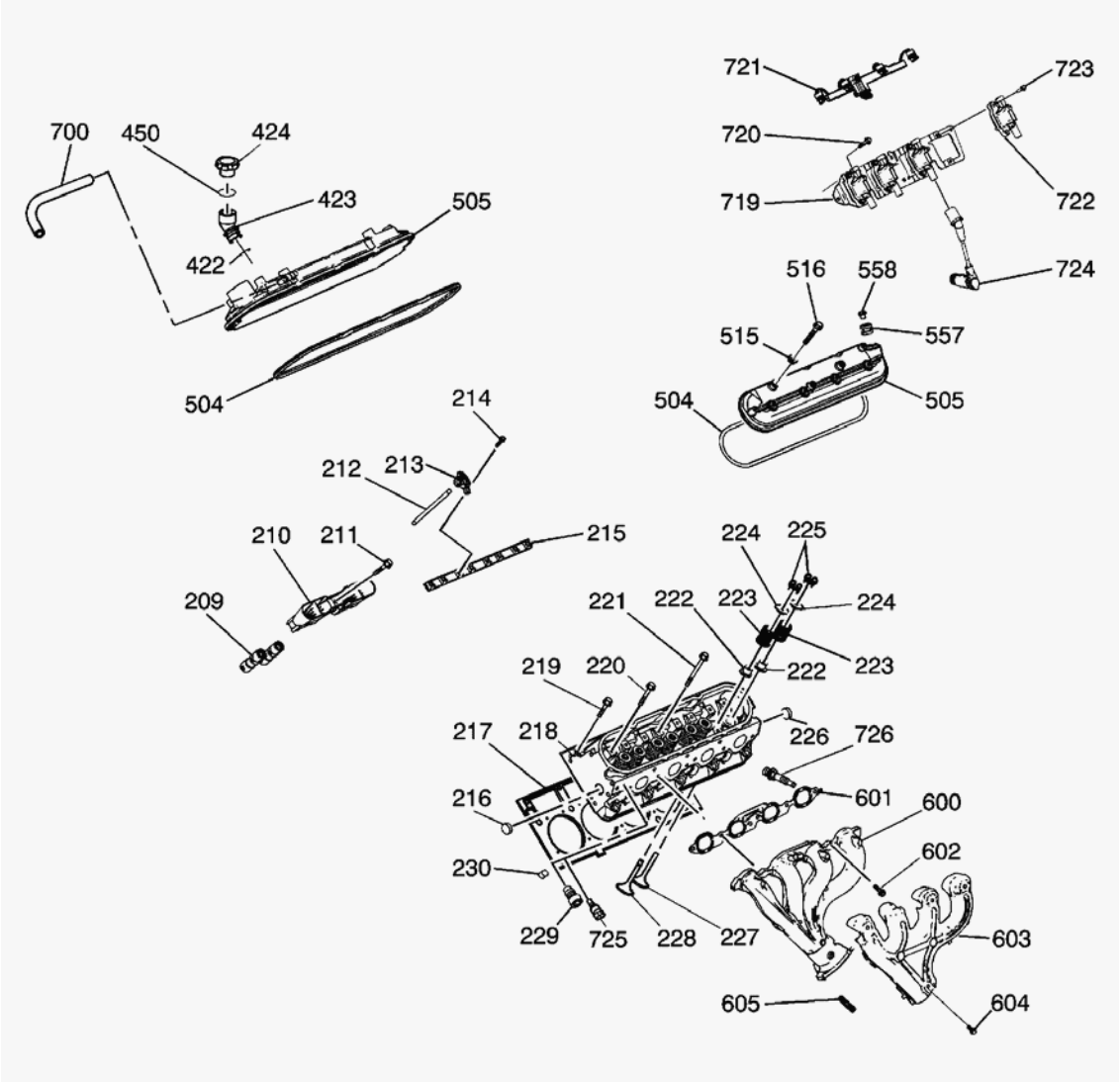

Fig. 12: Cylinder Head/Upper Engine Component View
Courtesy of GENERAL MOTORS CORP.

Callouts For Fig. 12

Callout	Component Name
209	Valve Lifter
210	Valve Lifter Guide
211	Valve Lifter Guide Bolt
212	Pushrod
213	Rocker Arm
214	Rocker Arm Bolt
215	Rocker Arm Pedestal
216	Expansion Plug
217	Cylinder Head Gasket

cardiagn.com

218	Cylinder Head
219	Cylinder Head Bolt - M8 Short
220	Cylinder Head Bolt - M11 Medium
221	Cylinder Head Bolt - M11 Long - First Design
222	Valve Stem Oil Seal and Shim
222	Valve Stem Oil Seal and Shim
223	Valve Spring
223	Valve Spring
224	Valve Spring Cap
224	Valve Spring Cap
225	Valve Stem Key
226	Expansion Plug
227	Intake Valve
228	Exhaust Valve
229	Cylinder Head Coolant Plug
230	Cylinder Head Locating Pin
422	Oil Fill Tube O-Ring
423	Oil Fill Tube
424	Oil Fill Cap
450	Oil Fill Cap O-Ring
504	Valve Cover Gasket
504	Valve Cover Gasket
505	Valve Cover
505	Valve Cover
515	Valve Cover Bolt Grommet
516	Valve Cover Bolt
557	Valve Cover Grommet
558	Valve Cover Grommet Plug
600	Exhaust Manifold
601	Exhaust Manifold Gasket
602	Exhaust Manifold Bolt
603	Exhaust Manifold Heat Shield
604	Exhaust Manifold Heat Shield Bolt
605	Takedown Pipe Stud
700	Fresh Air Hose
719	Ignition Coil and Bracket Assembly
720	Ignition Coil and Bracket Assembly Bolt
721	Ignition Coil Wire Harness
722	Ignition Coil
723	Ignition Coil Bolt
724	Spark Plug Wire

cardiagn.com

725	Coolant Temperature Sensor
726	Spark Plug

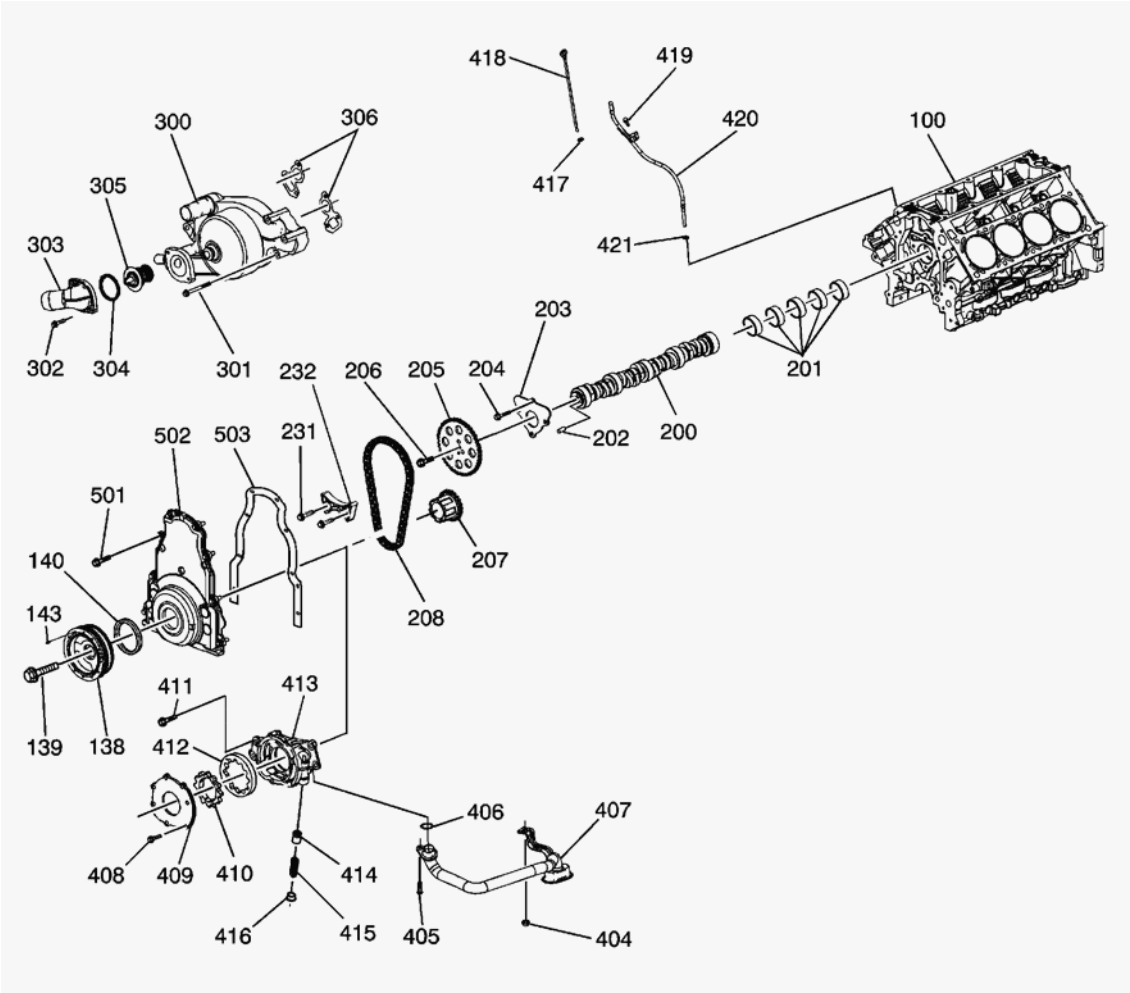

Fig. 13: Front Of Engine Component View
Courtesy of GENERAL MOTORS CORP.

Callouts For Fig. 13

Callout	Component Name
100	Engine Block
138	Crankshaft Balancer
139	Crankshaft Balancer Bolt
140	Crankshaft Front Oil Seal
143	Balance Weight - Manual Transmission
200	Camshaft
201	Camshaft Bearings
202	Camshaft Sprocket Locating Pin
203	Camshaft Retainer Plate

cardiagn.com

204	Camshaft Retainer Plate Bolt
205	Camshaft Sprocket
206	Camshaft Sprocket Bolt
207	Crankshaft Sprocket
208	Timing Chain
231	Timing Chain Guide Bolt
232	Timing Chain Guide
300	Water Pump
301	Water Pump Bolt
302	Thermostat Housing Bolt
303	Thermostat Housing
304	O-Ring
305	Thermostat
306	Water Pump Gaskets
404	Crankshaft Oil Deflector Nut
405	Oil Pump Screen Bolt
406	Oil Pump Screen O-Ring
407	Oil Pump Screen
408	Oil Pump Cover Bolt
409	Oil Pump Cover
410	Drive Gear
411	Oil Pump Bolt
412	Driven Gear
413	Oil Pump Assembly
414	Pressure Relief Valve
415	Pressure Relief Valve Spring
416	Plug
417	Oil Level Indicator O-Ring
418	Oil Level Indicator
419	Oil Level Indicator Tube Bolt
420	Oil Level Indicator Tube
421	Oil Level Indicator Tube O-Ring
501	Engine Front Cover Bolt
502	Engine Front Cover
503	Engine Front Cover Gasket

cardiagn.com

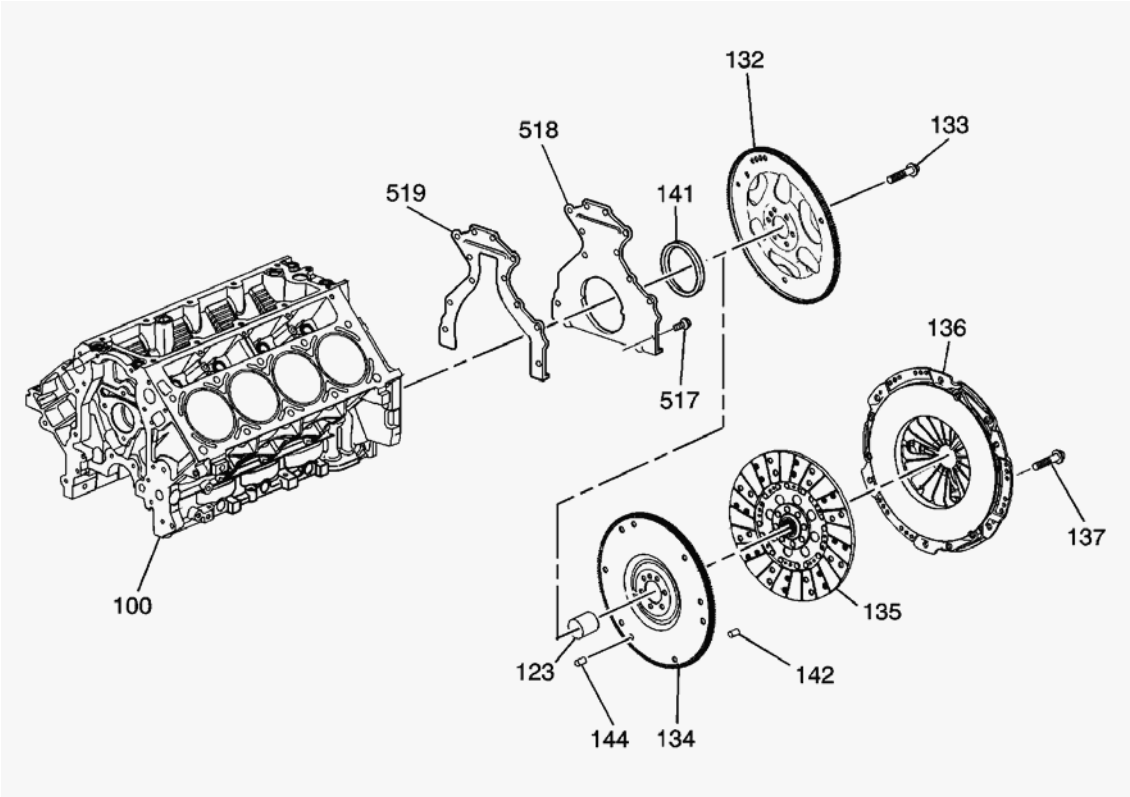

Fig. 14: Rear Of Engine Component View
Courtesy of GENERAL MOTORS CORP.

Callouts For Fig. 14

Callout	Component Name
100	Engine Block
123	Clutch Pilot Bearing - Manual Transmission
132	Flywheel - Automatic Transmission
133	Flywheel Bolt
134	Flywheel - Manual Transmission
135	Clutch Disc - Manual Transmission
136	Pressure Plate - Manual Transmission
137	Pressure Plate Bolt - Manual Transmission
141	Crankshaft Rear Oil Seal
142	Pressure Plate Locating Pin - Manual Transmission
144	Balance Weight - Manual Transmission
517	Rear Cover Bolt
518	Rear Cover
519	Rear Cover Gasket

cardiagn.com

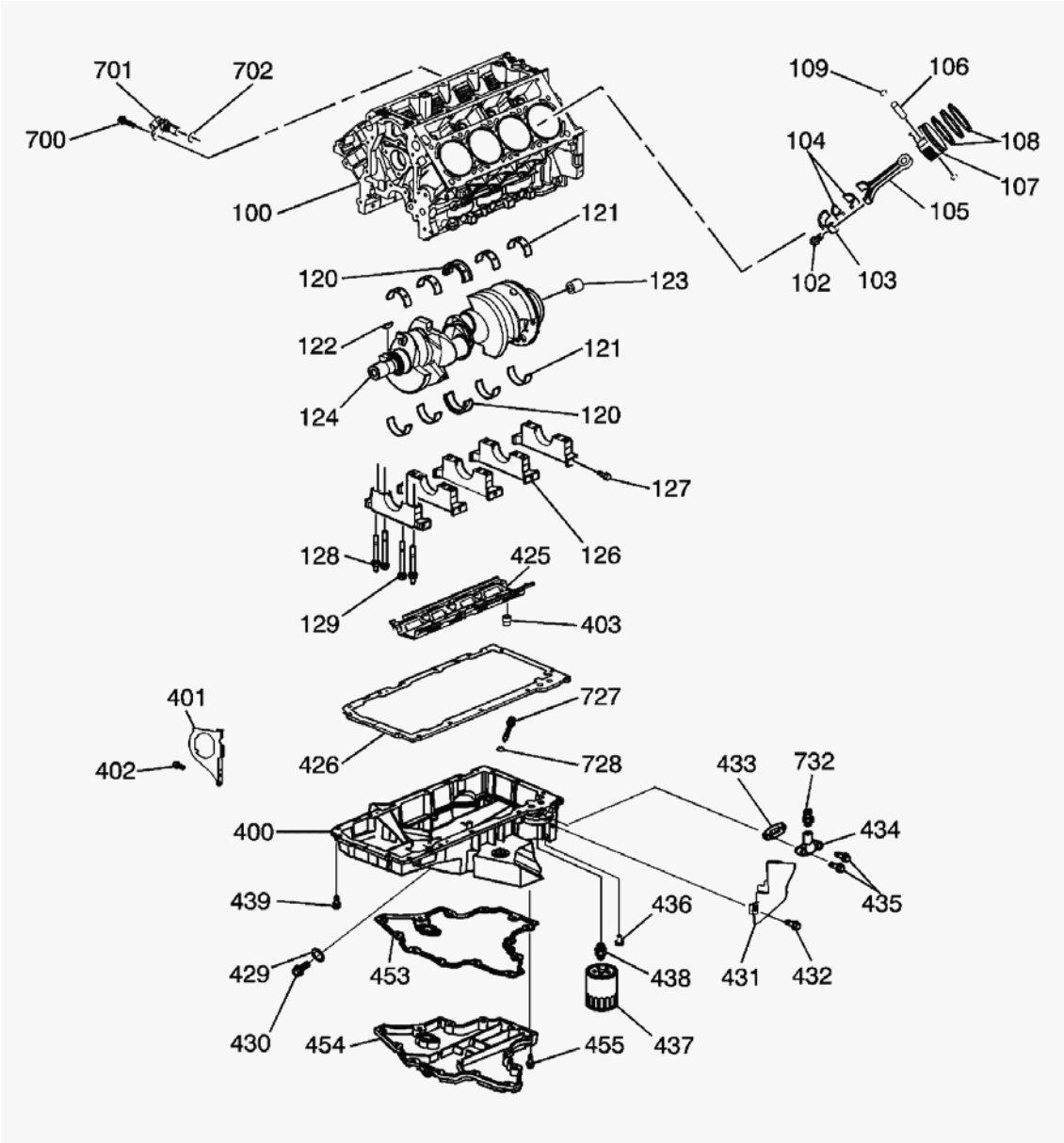

Fig. 15: Lower Engine Assembly Component View
Courtesy of GENERAL MOTORS CORP.

Callouts For Fig. 15

Callout	Component Name
100	Engine Block
102	Connecting Rod Bolt
103	Connecting Rod Cap
104	Connecting Rod Bearings
105	Connecting Rod
106	Piston Pin
107	Piston

cardiagn.com

108	Piston Rings
109	Piston Pin Clip - Second Design with Full Floating Pin
120	Crankshaft Thrust Bearing
120	Crankshaft Thrust Bearing
121	Crankshaft Main Bearing
121	Crankshaft Main Bearing
122	Crankshaft Sprocket Key
123	Clutch Pilot Bearing - Manual Transmission
124	Crankshaft
126	Bearing Cap
127	Bearing Cap Side Bolt
128	Bearing Cap Bolt/Stud
129	Bearing Cap Bolt
400	Oil Pan
401	Closeout Cover - Right
402	Closeout Cover Bolt - Right
403	Crankshaft Oil Deflector Nut
425	Crankshaft Oil Deflector
426	Oil Pan Gasket
429	Oil Pan Drain Plug O-Ring
430	Oil Pan Drain Plug
431	Closeout Cover - Left
432	Closeout Cover Bolt - Left
433	Oil Pan Cover Gasket
434	Oil Pan Cover
435	Oil Pan Cover Bolts
436	Oil Filter Bypass Valve
437	Oil Filter
438	Oil Filter Fitting
439	Oil Pan Bolt
453	Oil Pan Gasket - Lower
454	Oil Pan - Lower
455	Oil Pan Bolt - Lower
700	Crankshaft Position Sensor Bolt
701	Crankshaft Position Sensor
702	Crankshaft Position Sensor O-Ring
727	Oil Level Sensor
728	Oil Level Sensor O-Ring
732	Oil Temperature Sensor

cardiagn.com

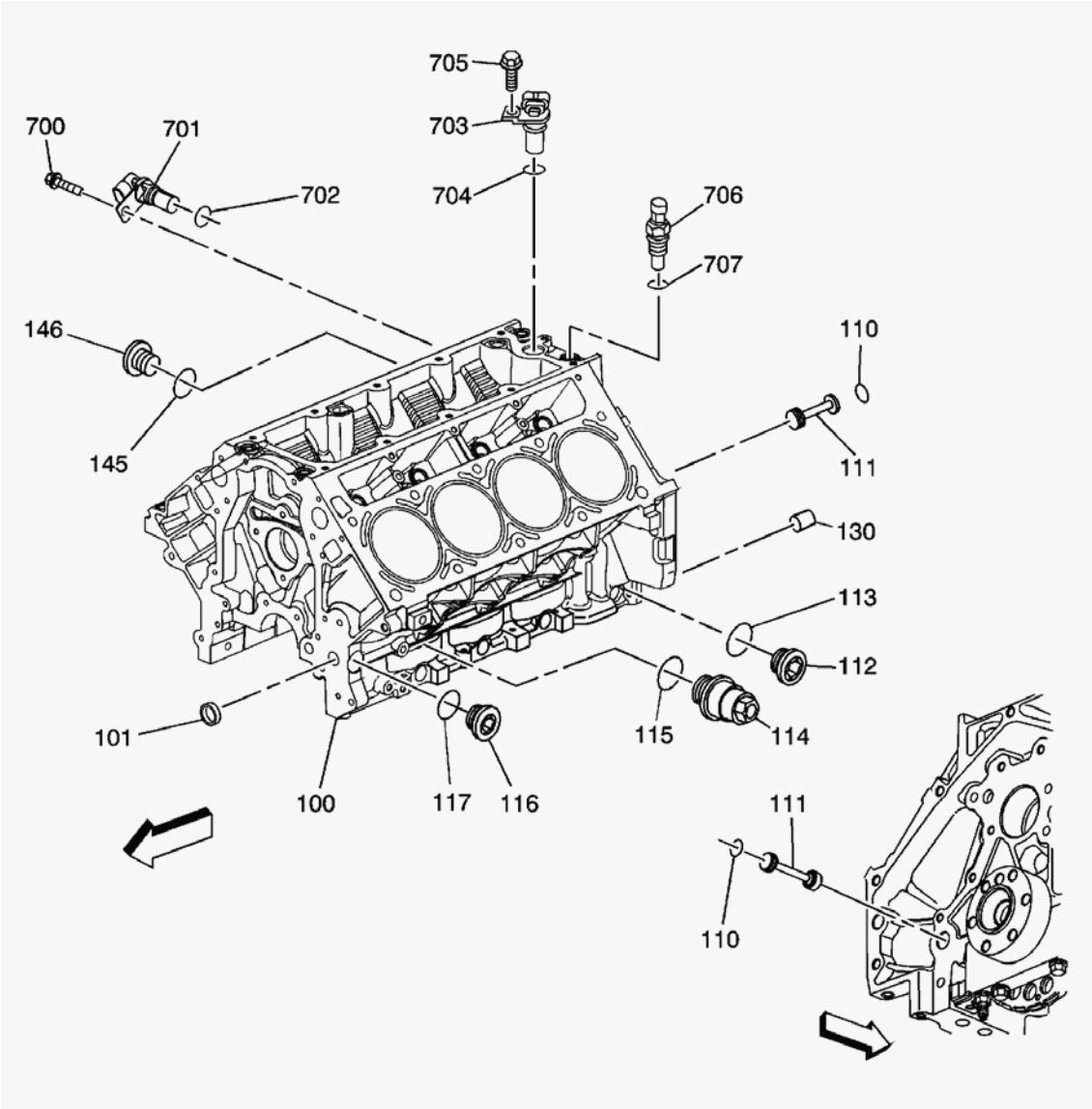

Fig. 16: Engine Block Plugs/Sensors Component View
Courtesy of GENERAL MOTORS CORP.

Callouts For Fig. 16

Callout	Component Name
100	Engine Block
101	Engine Block Front Oil Gallery Plug
110	Engine Block Rear Oil Gallery Plug O-Ring
110	Engine Block Rear Oil Gallery Plug O-Ring
111	Engine Block Rear Oil Gallery Plug
111	Engine Block Rear Oil Gallery Plug
112	Oil Gallery Plug
113	Oil Gallery Plug Washer

cardiagn.com

114	Coolant Heater
115	Coolant Heater Washer
116	Oil Gallery Plug
117	Oil Gallery Plug Washer
130	Transmission Housing Locating Pin
145	Coolant Drain Plug Washer - Right
146	Coolant Drain Plug - Right
700	Crankshaft Position Sensor Bolt
701	Crankshaft Position Sensor
702	Crankshaft Position Sensor O-Ring
703	Camshaft Position Sensor
704	Camshaft Position Sensor O-Ring
705	Camshaft Position Sensor Bolt
706	Oil Pressure Sensor
707	Oil Pressure Sensor Washer

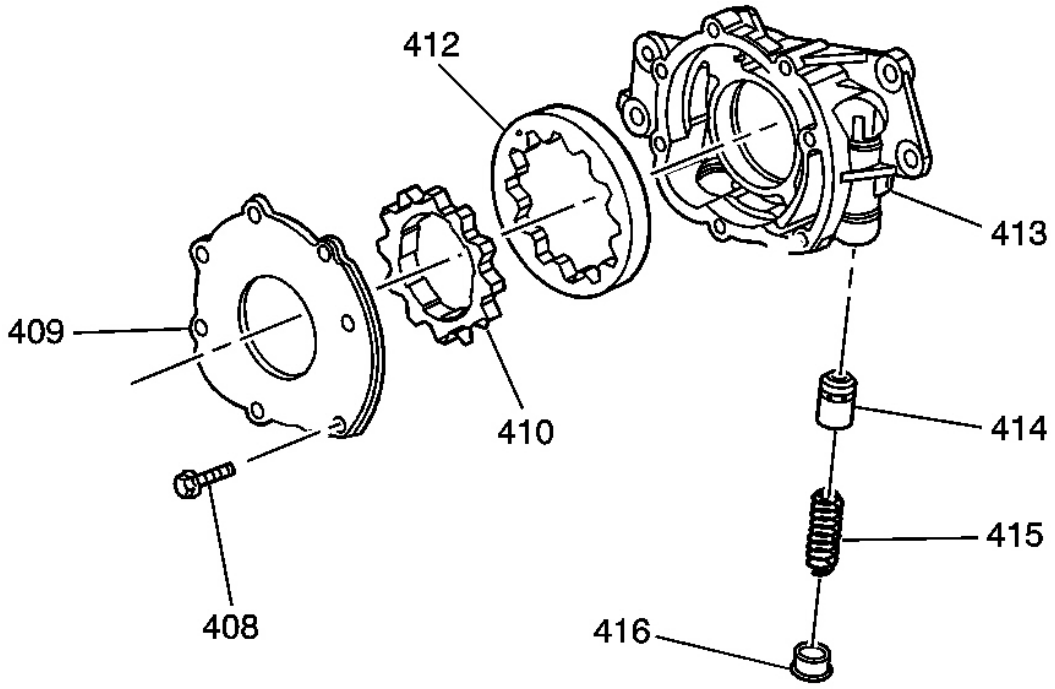

Fig. 17: Oil Pump Assembly Component View
Courtesy of GENERAL MOTORS CORP.

Callouts For Fig. 17

cardiagn.com

Callout	Component Name
408	Cover Bolt
409	Cover
410	Drive Gear
412	Driven Gear
413	Oil Pump
414	Pressure Relief Valve
415	Pressure Relief Valve Spring
416	Plug

ENGINE IDENTIFICATION

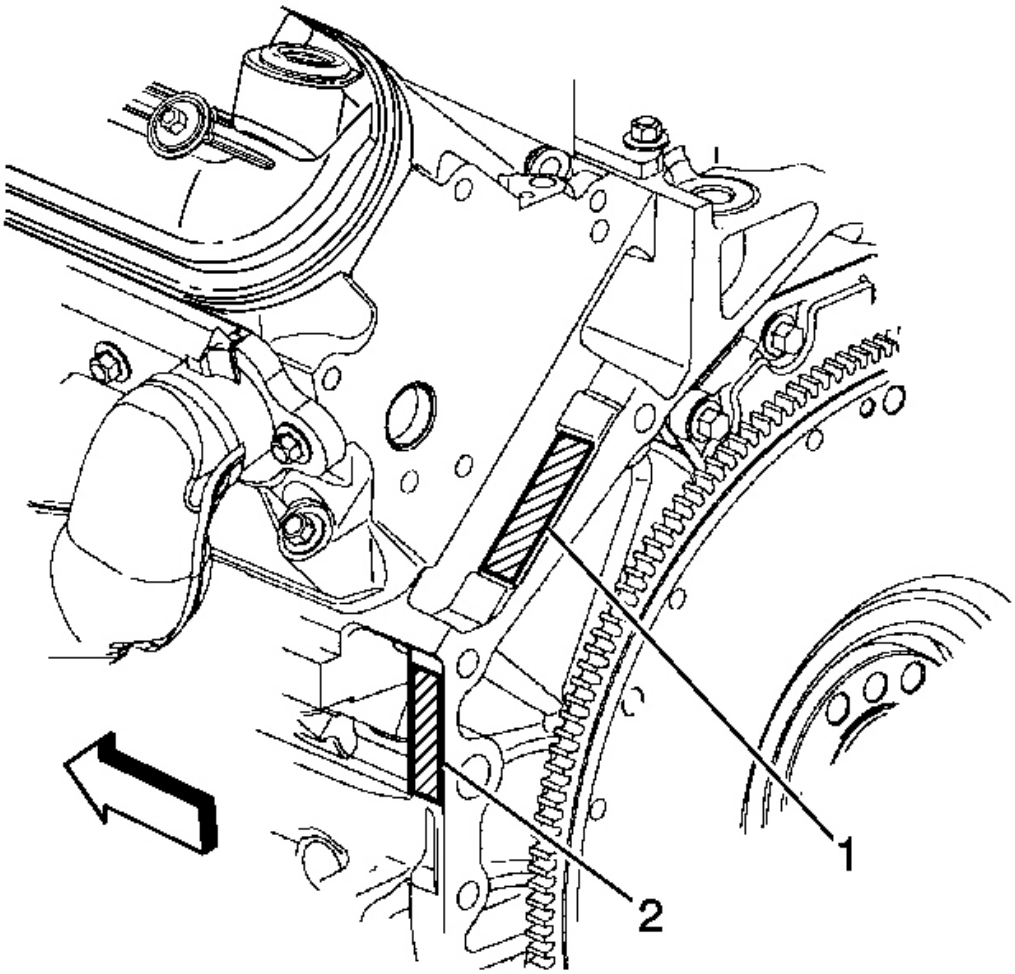

cardiagn.com

Fig. 18: Vehicle Identification Number (VIN) At Left Side Rear Of Engine Block
Courtesy of GENERAL MOTORS CORP.

The vehicle identification number (VIN) is located on the left side rear of the engine block (1 or 2) and is typically a nine digit number stamped or laser-etched onto the engine at the vehicle assembly plant.

- The first digit identifies the division.
- The second digit identifies the model year.
- The third digit identifies the assembly plant.
- The fourth through ninth digits are the last six digits of the VIN.

DIAGNOSTIC INFORMATION AND PROCEDURES

DIAGNOSTIC STARTING POINT - ENGINE MECHANICAL

Begin the system diagnosis by reviewing the **Disassembled Views** , **Engine Component Description** , **Lubrication Description** , **New Product Information** , and the **Drive Belt System Description** . Reviewing the description and operation information will help you determine the correct symptom diagnostic procedure when a malfunction exists. Reviewing the description and operation information will also help you determine if the condition described by the customer is normal operation. Refer to **Symptoms - Engine Mechanical** in order to identify the correct procedure for diagnosing the system and where the procedure is located.

SYMPTOMS - ENGINE MECHANICAL

Strategy Based Diagnostics

1. Perform the **Diagnostic System Check - Engine Controls** in Engine Controls - 5.7L before using the symptom tables, if applicable.
2. Review the system operations in order to familiarize yourself with the system functions. Refer to **Disassembled Views** , **Engine Component Description** , **Lubrication Description** , **New Product Information** , and **Drive Belt System Description** .

All diagnosis on a vehicle should follow a logical process. Strategy based diagnostics is a uniform approach for repairing all systems. The diagnostic flow may always be used in order to resolve a system condition. The diagnostic flow is the place to start when repairs are necessary. For a detailed explanation, refer to **Strategy Based Diagnosis** in General Information.

Visual/Physical Inspection

- Inspect for aftermarket devices which could affect the operation of the engine. Refer to **Checking Aftermarket Accessories** in Wiring Systems.
- Inspect the easily accessible or visible system components for obvious damage or conditions which could cause the symptom.
- Check for the correct oil level, proper oil viscosity, and correct filter application.
- Verify the exact operating conditions under which the concern exists. Note factors such as engine RPM,

cardiagn.com

ambient temperature, engine temperature, amount of engine warm-up time, and other specifics.
- Compare the engine sounds, if applicable, to a known good engine and make sure you are not trying to correct a normal condition.

Intermittent

Test the vehicle under the same conditions that the customer reported in order to verify the system is operating properly.

Symptom List

Refer to a symptom diagnostic procedure from the following list in order to diagnose the symptom:

- **Base Engine Misfire without Internal Engine Noises**
- **Base Engine Misfire with Abnormal Internal Lower Engine Noises**
- **Base Engine Misfire with Abnormal Valve Train Noise**
- **Base Engine Misfire with Coolant Consumption**
- **Base Engine Misfire with Excessive Oil Consumption**
- **Engine Compression Test**
- **Engine Noise on Start-Up, but Only Lasting a Few Seconds**
- **Upper Engine Noise, Regardless of Engine Speed**
- **Lower Engine Noise, Regardless of Engine Speed**
- **Engine Noise Under Load**
- **Engine Will Not Crank - Crankshaft Will Not Rotate**
- **Coolant in Combustion Chamber**
- **Coolant in Engine Oil**
- **Oil Consumption Diagnosis**
- **Oil Pressure Diagnosis and Testing**
- **Oil Leak Diagnosis**
- **Cylinder Leakage Test**
- **Drive Belt Chirping Diagnosis**
- **Drive Belt Squeal Diagnosis**
- **Drive Belt Whine Diagnosis**
- **Drive Belt Rumbling Diagnosis**
- **Drive Belt Vibration Diagnosis**
- **Drive Belt Falls Off Diagnosis**
- **Drive Belt Excessive Wear Diagnosis**
- **Drive Belt Tensioner Diagnosis**

BASE ENGINE MISFIRE WITHOUT INTERNAL ENGINE NOISES

cardiagn.com

Base Engine Misfire without Internal Engine Noises

Cause	Correction
Abnormalities, such as severe cracking, bumps, or missing areas in the accessory drive belt Abnormalities in the accessory drive system and/or components may cause engine RPM variations and lead to a misfire DTC. A misfire code may be present without an actual misfire condition.	Replace the drive belt. Refer to **Drive Belt Replacement - Accessory** .
Worn, damaged, or mis-aligned accessory drive components or excessive pulley runout - May lead to a misfire DTC. A misfire code may be present without an actual misfire condition.	Inspect the components, and repair or replace as required.
Loose or improperly installed engine flywheel or crankshaft balancer A misfire code may be present without an actual misfire condition.	Repair or replace the flywheel and/or balancer as required. Refer to **Engine Flywheel Replacement** or **Crankshaft Balancer Replacement** .
Restricted exhaust system A severe restriction in the exhaust flow can cause significant loss of engine performance and may set a DTC. Possible causes of restrictions include collapsed or dented pipes or plugged mufflers and/or catalytic converters.	Repair or replace as required.
Improperly installed or damaged vacuum hoses	Repair or replace as required.
Improper sealing between the intake manifold and cylinder heads or throttle body	Replace the intake manifold, gaskets, cylinder heads, and/or throttle body as required.
Improperly installed or damaged MAP sensor The sealing grommet of the MAP sensor should not be torn or damaged.	Repair or replace the MAP sensor as required.
Damage to the MAP sensor housing and/or seal	Replace the intake manifold.
Worn or loose rocker arms The rocker arm bearing end caps and/or needle bearings should be intact and in the proper position.	Replace the valve rocker arms as required.
Worn or bent pushrods	Replace the pushrods. Inspect the top of the pistons for valve contact. If the top of the piston shows valve contact, replace the piston and pin assembly.
Stuck valves Carbon buildup on the valve stem can cause the valve not to close properly.	Repair or replace as required.
Excessively worn or mis-aligned timing chain	Replace the timing chain and sprockets as required.
Worn camshaft lobes	Replace the camshaft and valve lifters.
Excessive oil pressure A lubrication system with excessive oil pressure may lead to	• Perform an oil pressure test. Refer to **Oil Pressure Diagnosis and**

cardiagn.com

excessive valve lifter pump-up and loss of compression.	**Testing** . • Repair or replace the oil pump as required.
Faulty cylinder head gaskets and/or cracking or other damage to the cylinder heads and engine block cooling system passages - Refer to **Diagnostic Starting Point - Engine Cooling** in Engine Cooling. Coolant consumption may or may not cause the engine to overheat.	• Inspect for spark plugs saturated by coolant. Refer to **Spark Plug Inspection** in Engine Controls - 5.7L. • Inspect the cylinder heads, engine block, and/or head gaskets. Refer to **Coolant in Combustion Chamber** . • Repair or replace as required.
Worn piston rings Oil consumption may or may not cause the engine to misfire.	• Inspect the spark plugs for oil deposits. Refer to **Spark Plug Inspection** in Engine Controls - 5.7L. • Inspect the cylinders for a loss of compression. Refer to **Engine Compression Test** . • Perform cylinder leak down and compression testing to identify the cause. Refer to **Cylinder Leakage Test** . • Repair or replace as required.
A damaged crankshaft reluctor wheel A damaged crankshaft reluctor wheel can result in different symptoms depending on the severity and location of the damage. • Systems with electronic communications - DIS or coil per cylinder - and severe reluctor ring damage may exhibit periodic loss of crankshaft position, stop delivering a signal, and then re-sync the crankshaft position. • Systems with electronic communication - DIS or coil per cylinder - and slight reluctor ring damage may exhibit no loss of crankshaft position and no misfire may occur. However, a P0300 DTC may be set. • Systems with mechanical communications, high voltage switch, and severe reluctor ring damage may cause additional pulses and effect fuel and spark delivery to the point of generating a P0300 DTC or P0336.	Replace the sensor and/or crankshaft as required.

BASE ENGINE MISFIRE WITH ABNORMAL INTERNAL LOWER ENGINE NOISES

cardiagn.com

Base Engine Misfire with Abnormal Internal Lower Engine Noises

Cause	Correction
Abnormalities, such as severe cracking, bumps or missing areas in the accessory drive belt Abnormalities in the accessory drive system and/or components may cause engine RPM variations, noises similar to a faulty lower engine and also lead to a misfire condition. A misfire code may be present without an actual misfire condition.	Replace the drive belt. Refer to **Drive Belt Replacement - Accessory** .
Worn, damaged, or mis-aligned accessory drive components or excessive pulley runout A misfire code may be present without an actual misfire condition.	Inspect the components, repair or replace as required.
Loose or improperly installed engine flywheel or crankshaft balancer A misfire code may be present without an actual misfire condition.	Repair or replace the flywheel and/or balancer as required. Refer to **Engine Flywheel Replacement** or **Crankshaft Balancer Replacement** .
Worn piston rings Oil consumption may or may not cause the engine to misfire.	• Inspect the spark plugs for oil deposits. Refer to **Spark Plug Inspection** in Engine Controls - 5.7L. • Inspect the cylinders for a loss of compression. Refer to **Engine Compression Test** . • Perform cylinder leak down and compression testing to determine the cause. Refer to **Cylinder Leakage Test** . • Repair or replace as required.
Worn crankshaft thrust bearings Severely worn thrust surfaces on the crankshaft and/or thrust bearing may permit fore and aft movement of the crankshaft and create a DTC without an actual misfire condition.	Replace the crankshaft and bearings as required.

BASE ENGINE MISFIRE WITH ABNORMAL VALVE TRAIN NOISE

Base Engine Misfire with Abnormal Valve Train Noise

Cause	Correction
Worn or loose rocker arms The rocker arm bearing end caps and/or needle bearings should be intact within the rocker arm assembly.	Replace the valve rocker arms as required.
Worn or bent pushrods	• Replace the pushrods. • Inspect the top of the pistons for valve contact. If

cardiagn.com

	the top of the piston shows valve contact, replace the piston and pin assembly.
Stuck valves Carbon buildup on the valve stem can cause the valve not to close properly.	Repair or replace as required.
Excessively worn or mis-aligned timing chain	Replace the timing chain and sprockets as required.
Worn camshaft lobes	Replace the camshaft and valve lifters.
Sticking lifters	Replace as required.

BASE ENGINE MISFIRE WITH COOLANT CONSUMPTION

Base Engine Misfire with Coolant Consumption

Cause	Correction
Faulty cylinder head gaskets and/or cracking or other damage to the cylinder heads and engine block cooling system passages - Refer to **Diagnostic Starting Point - Engine Cooling** in Engine Cooling. Coolant consumption may or may not cause the engine to overheat.	• Inspect for spark plugs saturated by coolant. Refer to **Spark Plug Inspection** in Engine Controls - 5.7L. • Perform a cylinder leak down test. Refer to **Cylinder Leakage Test** . • Inspect the cylinder heads and engine block for damage to the coolant passages and/or a faulty head gasket. Refer to **Coolant in Combustion Chamber** . • Repair or replace as required.

BASE ENGINE MISFIRE WITH EXCESSIVE OIL CONSUMPTION

Base Engine Misfire with Excessive Oil Consumption

Cause	Correction
Worn valves, valve guides and/or valve stem oil seals	• Inspect the spark plugs for oil deposits. Refer to **Spark Plug Inspection** in Engine Controls - 5.7L. • Repair or replace as required.
Worn piston rings Oil consumption may or may not cause the engine to misfire.	• Inspect the spark plugs for oil deposits. Refer to **Spark Plug Inspection** in Engine Controls - 5.7L. • Inspect the cylinders for a loss of compression. Refer to **Engine Compression Test** . • Perform cylinder leak down and compression testing to determine the cause. Refer to **Cylinder Leakage Test** . • Repair or replace as required.

ENGINE NOISE ON START-UP, BUT ONLY LASTING A FEW SECONDS

cardiagn.com

Engine Noise on Start-Up, but Only Lasting a Few Seconds

Cause	Correction
Incorrect oil filter without anti-drainback feature	Install the correct oil filter.
Incorrect oil viscosity	1. Drain the oil. 2. Install the correct viscosity oil.
High valve lifter leak down rate	Replace the lifters as required.
Worn crankshaft thrust bearing	1. Check the crankshaft end play. 2. Inspect the thrust bearing and crankshaft. 3. Repair or replace as required.
Damaged or faulty oil filter by-pass valve	• Inspect the oil filter by-pass valve for proper operation. • Repair or replace as required.

UPPER ENGINE NOISE, REGARDLESS OF ENGINE SPEED

Upper Engine Noise, Regardless of Engine Speed

Cause	Correction
Low oil pressure	• Perform an oil pressure test. Refer to **Oil Pressure Diagnosis and Testing** . • Repair or replace as required.
Loose and/or worn valve rocker arm attachments	• Inspect the valve rocker arm, bolt, and pedestal. • Repair or replace as required.
Worn or damaged valve rocker arm	• Inspect the rocker arm for wear or missing needle bearings. • Replace the valve rocker arms as required.
Bent or damaged push rod	Inspect the following components, and replace as required: • The valve rocker arm • The valve push rod • The valve lifter • The valve lifter guide • The piston Inspect the top of the pistons for valve contact. If the top of the piston shows valve contact, replace the piston and pin assembly.
Improper lubrication to the valve rocker arms	Inspect the following components, and repair or replace as required: • Restricted oil filter

cardiagn.com

	• The valve rocker arm • The valve push rod • The valve lifter • The oil filter bypass valve • The oil pump and pump screen • The engine block oil galleries
Broken valve spring	Replace the valve spring.
Loose or broken valve lifter guide	Repair or replace as required.
Worn or dirty valve lifters	Replace the valve lifters.
Stretched or broken timing chain and/or damaged sprocket teeth	Replace the timing chain and sprockets.
Worn engine camshaft lobes	• Inspect the engine camshaft lobes. • Replace the camshaft and valve lifters as required.
Worn valve guides or valve stems	Inspect the following components, and repair as required: • The valves • The valve guides
Stuck valves Carbon on the valve stem or valve seat may cause the valve to stay open.	Inspect the following components, and repair as required: • The valves • The valve guides

LOWER ENGINE NOISE, REGARDLESS OF ENGINE SPEED

Lower Engine Noise, Regardless of Engine Speed

Cause	Correction
Low oil pressure	• Perform an oil pressure test. Refer to **Oil Pressure Diagnosis and Testing** . • Repair or replace damaged components as required.
Worn accessory drive components Abnormalities, such as severe cracking, bumps or missing areas in the accessory drive belt and/or misalignment of system components.	• Inspect the accessory drive system. • Repair or replace as required.
Loose or damaged crankshaft balancer	• Inspect the crankshaft balancer. • Repair or replace as required.
Detonation or spark knock	Verify the correct operation of the ignition controls system. Refer to **Detonation/Spark Knock** in Engine Controls - 5.7L.
Loose torque converter bolts	• Inspect the torque converter bolts and

cardiagn.com

	flywheel. • Repair or replace as required.
Loose or damaged flywheel	Repair or replace the flywheel.
Oil pump screen loose, damaged or restricted	• Inspect the oil pump screen. • Repair or replace as required.
Excessive piston-to-cylinder bore clearance	• Inspect the piston and cylinder bore. • Repair as required.
Excessive piston pin-to-bore clearance	• Inspect the piston, pin, and connecting rod. • Replace the piston, and pin as an assembly, as required.
Excessive connecting rod bearing clearance	Inspect the following components, and repair as required: • The connecting rod bearings • The connecting rods • The crankshaft • The crankshaft journals
Excessive crankshaft bearing clearance	Inspect the following components, and repair as required: • The crankshaft bearings • The crankshaft journals
Incorrect piston, piston pin and connecting rod installation Pistons must be installed with the mark or dimple on the top of the piston facing the front of the engine. Piston pins must be centered in the connecting rod pin bore.	• Verify the pistons, piston pins and connecting rods are installed correctly. Refer to **Piston, Connecting Rod, and Bearing Installation** . • Repair as required.

ENGINE NOISE UNDER LOAD

Engine Noise Under Load

Cause	Correction
IMPORTANT: **A cold piston knock which disappears in 1.5 minutes should be considered acceptable. A cold engine knock usually disappears when the specific cylinder's secondary ignition circuit is grounded out during diagnosis.** **A low rumble/knocking may indicate a crankshaft or piston, lower engine concern.**	
Low oil pressure	• Perform an oil pressure test. Refer to **Oil Pressure Diagnosis and Testing** . • Repair or replace as required.

cardiagn.com

Detonation or spark knock	Verify the correct operation of the ignition controls. Refer to **Detonation/Spark Knock** in Engine Controls - 5.7L.
Loose torque converter bolts	• Inspect the torque converter bolts and flywheel. • Repair as required.
Cracked flywheel - automatic transmission	• Inspect the flywheel bolts and flywheel. • Repair as required.
Excessive connecting rod bearing clearance	Inspect the following components, and repair as required: • The connecting rod bearings • The connecting rods • The crankshaft
Excessive crankshaft bearing clearance	Inspect the following components, and repair as required: • The crankshaft bearings • The crankshaft journals • The cylinder block crankshaft bearing bore

ENGINE WILL NOT CRANK - CRANKSHAFT WILL NOT ROTATE

Engine Will Not Crank - Crankshaft Will Not Rotate

Cause	Correction
Seized accessory drive system component	1. Remove the accessory drive belts. 2. Confirm that the engine will rotate. Rotate the crankshaft by hand at the crankshaft balancer or flywheel location. 3. Repair or replace the components as required.
Seized driveline/propshaft assembly - Corvette automatic transmission application	1. Separate the engine flywheel from the input shaft of the propshaft. 2. Confirm that the engine will rotate. Rotate the crankshaft by hand at the crankshaft balancer or flywheel location. 3. Repair or replace the components as required.
Seized automatic transmission torque converter	1. Remove the torque converter-to-flywheel bolts. 2. Confirm that the engine will rotate. Rotate the crankshaft by hand at the crankshaft balancer or flywheel location. 3. Repair or replace the components as required.
Seized manual transmission	1. Disengage the clutch by depressing the clutch pedal. 2. Confirm that the engine will rotate. Rotate the crankshaft by hand at the crankshaft balancer or flywheel location. Refer to Transmission/Transaxle Unit Repair Manual.
Broken timing chain	

cardiagn.com

	• Inspect the timing chain and gears. • Repair or replace the components as required.
Seized timing chain or timing gears	• Inspect the timing chain and gears for foreign material or a seized chain. • Repair or replace the components as required.
Seized or broken camshaft	• Inspect the camshaft and the camshaft bearings. • Repair or replace the components as required.
Bent valve in the cylinder head	• Inspect the valves and the cylinder heads. • Repair or replace the components as required.
Seized oil pump	• Inspect the oil pump assembly. • Repair or replace as required.
Hydraulically locked cylinder • Coolant/antifreeze in the cylinder • Oil in the cylinder • Fuel in the cylinder	1. Remove the spark plugs and check for fluid in the cylinder. When rotating the engine with the spark plugs removed, the piston, on compression stroke, will push fluid from the combustion chamber. 2. Inspect for failed/broken head gaskets. Refer to **Coolant in Combustion Chamber** . 3. Inspect for a cracked engine block or cylinder head. 4. Inspect for a sticking fuel injector. 5. Repair or replace the components as required.
Material in the cylinder • Broken valve • Broken piston rings • Piston material • Foreign material	• Inspect the cylinder for damaged components and/or foreign materials. • Repair or replace the components as required.
Seized crankshaft or connecting rod bearings	• Inspect crankshaft and connecting rod bearings. • Repair or replace the components as required.
Bent or broken connecting rod	• Inspect the connecting rods. • Replace the piston, pin and connecting rod as an assembly, as required.
Broken crankshaft	• Inspect the crankshaft. • Repair or replace the components as required.

COOLANT IN COMBUSTION CHAMBER

Coolant in Combustion Chamber

Cause	Correction

cardiagn.com

DEFINITION: Excessive white smoke and/or coolant type odor coming from the exhaust pipe may indicate coolant in the combustion chamber. Low coolant levels, an inoperative cooling fan, or a faulty thermostat may lead to an "overtemperature" condition which may cause engine component damage.

1. A slower than normal cranking speed may indicate coolant entering the combustion chamber. Refer to **Engine Will Not Crank - Crankshaft Will Not Rotate** .
2. Remove the spark plugs and inspect for spark plugs saturated by coolant or coolant in the cylinder bore.
3. Inspect by performing a cylinder leak-down test. During this test, excessive air bubbles within the coolant may indicate a faulty gasket or damaged component.
4. Inspect by performing a cylinder compression test. Two cylinders "side-by-side" on the engine block, with low compression, may indicate a failed cylinder head gasket. Refer to **Engine Compression Test** .

Cracked intake manifold or failed gasket	Replace the components as required.
Faulty cylinder head gasket	Replace the head gasket and components as required. Refer to **Cylinder Head Cleaning and Inspection** , **Cylinder Head Replacement - Left** and **Cylinder Head Replacement - Right** .
Warped cylinder head	Machine the cylinder head to the proper flatness, if applicable and replace the cylinder head gasket. Refer to **Cylinder Head Cleaning and Inspection** .
Cracked cylinder head	Replace the cylinder head and gasket.
Cracked cylinder liner or engine block	Replace the components as required.
Cylinder head or engine block porosity	Replace the components as required.

COOLANT IN ENGINE OIL

Coolant in Engine Oil

Cause	Correction
DEFINITION: Foamy or discolored oil or an engine oil "overfill" condition may indicate coolant entering the engine crankcase. Low coolant levels, an inoperative cooling fan, or a faulty thermostat may lead to an "overtemperature" condition which may cause engine component damage. Contaminated engine oil and oil filter should be changed. 1. Inspect the oil for excessive foaming or an overfill condition. Oil diluted by coolant may not properly lubricate the crankshaft bearings and may lead to component damage. Refer to **Lower Engine Noise, Regardless of Engine Speed** . 2. Inspect by performing a cylinder leak-down test. During this test, excessive air bubbles within the cooling system may indicate a faulty gasket or damaged component. 3. Inspect by performing a cylinder compression test. Two cylinders "side-by-side" on the engine block with low compression may indicate a failed cylinder head gasket. Refer to **Engine**	

cardiagn.com

Compression Test .	
Faulty external engine oil cooler	Replace the components as required.
Faulty cylinder head gasket	Replace the head gasket and components as required. Refer to **Cylinder Head Cleaning and Inspection** , **Cylinder Head Replacement - Left** and **Cylinder Head Replacement - Right** .
Warped cylinder head	Machine the cylinder head to proper flatness, if applicable, and replace the cylinder head gasket. Refer to **Cylinder Head Cleaning and Inspection** .
Cracked cylinder head	Replace the cylinder head and gasket.
Cracked cylinder liner or engine block	Replace the components as required.
Cylinder head, block, or manifold porosity	Replace the components as required.

ENGINE COMPRESSION TEST

1. Charge the battery if the battery is not fully charged.
2. Disable the ignition system.
3. Disable the fuel injection system.
4. Remove all the spark plugs.
5. Turn the ignition to the ON position.
6. Depress the accelerator pedal to position the throttle plate wide open.
7. Start with the compression gauge at zero and crank the engine through four compression strokes, 4 puffs.
8. Check the compression for each cylinder. Record the readings.
9. If a cylinder has low compression, inject approximately 15 ml (1 tablespoon) of engine oil into the combustion chamber through the spark plug hole. Recheck the compression and record the reading.
10. The minimum compression in any one cylinder should not be less than 70 percent of the highest cylinder. No cylinder should read less than 690 kPa (100 psi). For example, if the highest pressure in any one cylinder is 1 035 kPa (150 psi), the lowest allowable pressure for any other cylinder would be 725 kPa (105 psi). (1 035 x 70% = 725) (150 x 70% = 105).
    - Normal - Compression builds up quickly and evenly to the specified compression for each cylinder.
    - Piston Rings Leaking - Compression is low on the first stroke. Then compression builds up with the following strokes but does not reach normal. Compression improves considerably when you add oil.
    - Valves Leaking - Compression is low on the first stroke. Compression usually does not build up on the following strokes. Compression does not improve much when you add oil.
    - If 2 adjacent cylinders have lower than normal compression, and injecting oil into the cylinders does not increase the compression, the cause may be a head gasket leaking between the cylinders.

ENGINE BALANCING

The 1997-2004 5.7L LS1/LS6 engine with crankshaft balancer is a balanced assembly. On manual transmission

cardiagn.com

applications, the flywheel, clutch, and pressure plate is also a balanced assembly. During the powertrain build process, balance weights may be added to the crankshaft balancer and/or flywheel as required.

In order to maintain engine/clutch assembly balance, it may be necessary to install or remove balance weights as detailed below:

Crankshaft Balancer

- Existing balancer onto existing engine:

  The balancer position must be marked prior to removal and installed to the original position. Refer to **Crankshaft Balancer Removal** .

- New balancer onto an existing engine:

  Install the same size balance weights into the new balancer in the same location as the old component. Refer to **Crankshaft Balancer Cleaning and Inspection** .

Engine Flywheel

IMPORTANT: The flywheel, clutch, and pressure plate are a balanced assembly and are not available as individual components. The pressure plate mounts or locates onto the flywheel via two dowel pins in the flywheel. If the pressure plate is not aligned properly onto the dowel pins and tightened down, the pins may bend and the plate may be incorrectly positioned which will effect component balance. Refer to Clutch Assembly Replacement .

- Existing flywheel, clutch, and pressure plate assembly onto the existing engine:

  Flywheel position must be marked prior to removal and installed to the original position. Refer to **Engine Flywheel Removal** .

- Existing flywheel, clutch, and pressure plate onto a new engine:

  Remove balance weights, if applicable from the flywheel.

- New flywheel, clutch, and pressure plate assembly onto an existing engine:

  Do not transfer or install balance weights.

- New flywheel, clutch, and pressure plate assembly onto a new engine:

  Do not install balance weights.

CYLINDER LEAKAGE TEST

cardiagn.com

Tools Required

J 35667-A Cylinder Head Leakdown Tester or equivalent. See **Special Tools and Equipment** .

CAUTION: Refer to Battery Disconnect Caution in Cautions and Notices.

IMPORTANT: A leakage test may be performed in order to measure cylinder/combustion chamber leakage. High cylinder leakage may indicate one or more of the following:

- **Worn or burnt valves**
- **Broken valve springs**
- **Stuck valve lifters**
- **Incorrect valve lash**
- **Damaged piston**
- **Worn piston rings**
- **Worn or scored cylinder bore**
- **Damaged cylinder head gasket**
- **Cracked or damaged cylinder head**
- **Cracked or damaged engine block**

1. Disconnect the battery ground negative cable.
2. Remove the spark plugs.
3. Rotate the crankshaft to place the piston in the cylinder being tested at top dead center (TDC) of the compression stroke.
4. Install the **J 35667-A** or equivalent. See **Special Tools and Equipment** .

IMPORTANT: It may be necessary to hold the crankshaft balancer bolt to prevent the crankshaft from rotating.

5. Apply shop air pressure to the **J 35667-A** and adjust according to the manufacturers instructions. See **Special Tools and Equipment** .
6. Record the cylinder leakage value. Cylinder leakage that exceeds 25 percent is considered excessive and may require component service. In excessive leakage situations, inspect for the following conditions:
   - Air leakage noise at the throttle body or air inlet hose that may indicate a worn or burnt intake valve or a broken valve spring.
   - Air leakage noise at the exhaust system tailpipe that may indicate a worn or burnt exhaust valve or a broken valve spring.
   - Air leakage noise from the crankcase, oil level indicator tube, or oil fill tube that may indicate worn piston rings, a damaged piston, a worn or scored cylinder bore, a damaged engine block or a

cardiagn.com

damaged cylinder head.

- Air bubbles in the cooling system may indicate a damaged cylinder head or a damaged cylinder head gasket.

7. Perform the leakage test on the remaining cylinders and record the values.

OIL CONSUMPTION DIAGNOSIS

Oil Consumption Diagnosis

Checks	Causes
DEFINITION: Excessive oil consumption, not due to leaks, is the use of 0.95 liters (1.0 qt) or more of engine oil within 2 414 kilometers (1,500 miles). The causes of excessive oil consumption may include the following conditions:	
Preliminary	• External oil leaks Refer to **Oil Leak Diagnosis** . • Incorrect oil level or improper reading of the oil level indicator With the vehicle on a level surface, run the engine for a few minutes, allow adequate drain down time of 2-3 minutes and check for the correct engine oil level. • Improper oil viscosity Refer to the vehicle owners manual and use the recommended SAE grade and viscosity for the prevailing temperatures. • Continuous high speed driving and/or severe usage • Crankcase ventilation system restrictions or malfunctioning components • Worn valve guides and/or valve stems • Worn or improperly installed valve stem oil seals • Piston rings broken, worn, not seated properly Allow adequate time for the rings to seat. Replace worn piston rings as necessary. • Piston and rings improperly installed or miss-fitted to the cylinder bore

OIL PRESSURE DIAGNOSIS AND TESTING

Tools Required

- **J 21867** Pressure Gage and Hose Assembly. See **Special Tools and Equipment** .
- J 42907 Oil Pressure Testing Tool

cardiagn.com

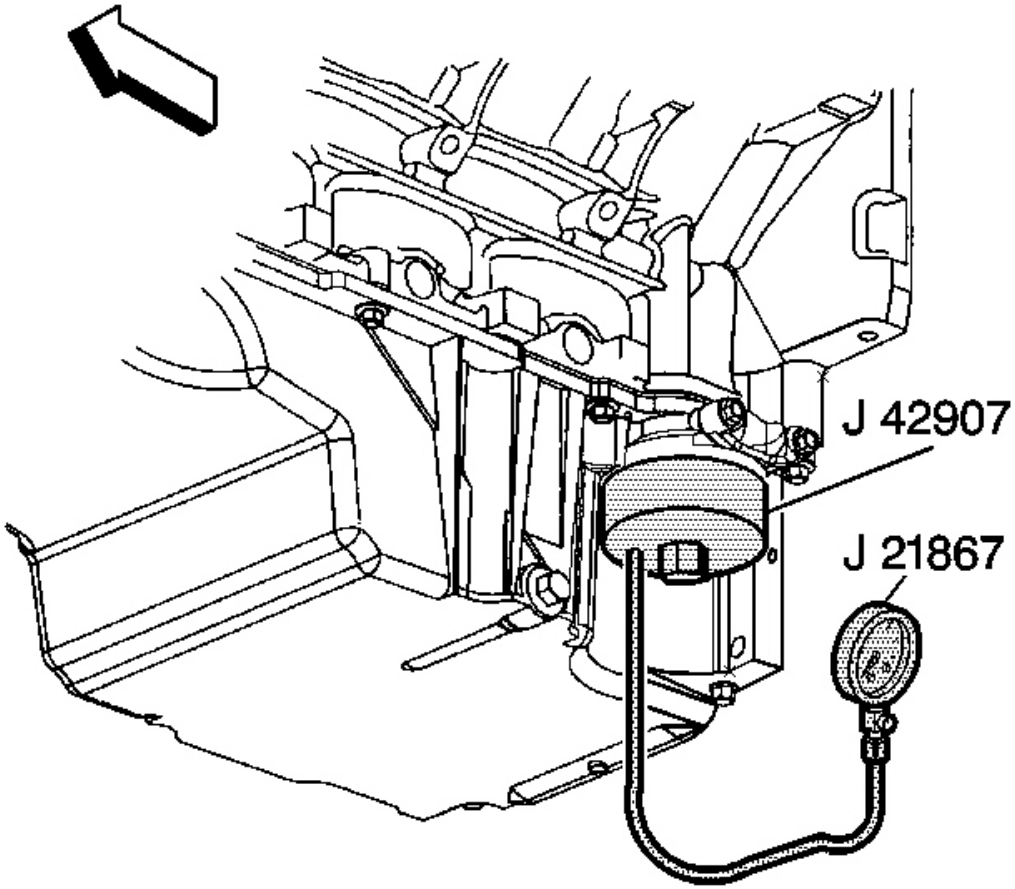

Fig. 19: J 42907, J 21867 & Engine
Courtesy of GENERAL MOTORS CORP.

1. With the vehicle on a level surface, run the vehicle for a few minutes, allow adequate drain down time of 2-3 minutes and measure the oil level.
2. If required, add the recommended grade engine oil and fill the crankcase until the oil level measures full on the oil level indicator.
3. Run the engine briefly, 10-15 seconds, and verify low or no oil pressure on the vehicle gauge or light.
4. Listen for a noisy valve train or a knocking noise.
5. Inspect for the following conditions:
   - Oil diluted by water or glycol - antifreeze
   - Foamy oil
6. Remove the oil filter and install the J 42907 .

cardiagn.com

7. Install **J 21867** or equivalent to the. See **Special Tools and Equipment** . J 42907 .
8. Run the engine and measure the engine oil pressure.
9. Compare the readings to **Engine Mechanical Specifications (LS1)** or **Engine Mechanical Specifications (LS6)** .
10. If the engine oil pressure is below specifications, inspect the engine for one or more of the following conditions:
    - Oil pump worn or dirty

      Refer to **Oil Pump Cleaning and Inspection** .

    - Oil pump-to-engine block bolts loose

      Refer to **Oil Pump, Pump Screen and Deflector Installation** .

    - Oil pump screen loose, plugged, or damaged
    - Oil pump screen O-ring seal missing or damaged
    - Malfunctioning oil pump pressure regulator valve
    - Excessive bearing clearance
    - Cracked, porous, or restricted oil galleries
    - Oil gallery plugs missing or incorrectly installed

      Refer to **Engine Block Plug Installation** .

    - Broken valve lifters

      Repair as necessary

11. If the oil pressure reading on the **J 21867** or equivalent is within specifications, inspect for the following conditions:
    - Plugged or incorrect oil filter and/or malfunctioning oil bypass valve
    - Malfunctioning oil pressure gage or sensor

      Repair as necessary.

OIL LEAK DIAGNOSIS

Oil Leak Diagnosis

Step	Action	Yes	No
IMPORTANT: **You can repair most fluid leaks by first visually locating the leak, repairing or replacing the component, or by resealing the gasket surface. Once the leak is identified, determine the cause of the leak. Repair the cause of the leak as well as the leak itself.**			

cardiagn.com

1	1. Operate the vehicle until it reaches normal operating temperature. 2. Park the vehicle on a level surface, over a large sheet of paper or other clean surface. 3. Wait 15 minutes. 4. Check for drippings. Are drippings present?	Go to **Step 2**	System OK
2	Can you identify the type of fluid and the approximate location of the leak?	Go to **Step 10**	Go to **Step 3**
3	1. Visually inspect the suspected area. Use a small mirror to assist in looking at hard to see areas. 2. Check for leaks at the following locations: • Sealing surfaces • Fittings • Cracked or damaged components Can you identify the type of fluid and the approximate location of the leak?	Go to **Step 10**	Go to **Step 4**
4	1. Completely clean the entire engine and surrounding components. 2. Operate the vehicle for several kilometers - miles at normal operating temperature and at varying speeds. 3. Park the vehicle on a level surface, over a large sheet of paper or other clean surface. 4. Wait 15 minutes. 5. Identify the type of fluid, and the approximate location of the leak. Can you identify the type of fluid and the approximate location of the leak?	Go to **Step 10**	Go to **Step 5**
5	1. Visually inspect the suspected area. Use a small mirror to assist in looking at hard to see areas. 2. Check for leaks at the following locations: • Sealing surfaces • Fittings • Cracked or damaged components Can you identify the type of fluid and the approximate location of the leak?	Go to **Step 10**	Go to **Step 6**
6	1. Completely clean the entire engine and surrounding components. 2. Apply an aerosol-type powder, baby powder, foot powder, etc., to the suspected area. 3. Operate the vehicle for several kilometers (miles) at normal operating temperature and at varying speeds.		

cardiagn.com

	4. Identify the type of fluid, and the approximate location of the leak, from the discolorations in the powder surface. Can you identify the type of fluid and the approximate location of the leak?	Go to **Step 10**	Go to **Step 7**
7	1. Visually inspect the suspected area. Use a small mirror to assist in looking at hard to see areas. 2. Check for leaks at the following locations: • Sealing surfaces • Fittings • Cracked or damaged components Can you identify the type of fluid and the approximate location of the leak?	Go to **Step 10**	Go to **Step 8**
8	Use **J 28428-E** High Intensity Black Light Kit in order to identify the type of fluid, and the approximate location of the leak. See **Special Tools and Equipment** . Refer to the manufacturer's instructions when using the tool. Can you identify the type of fluid and the approximate location of the leak?	Go to **Step 10**	Go to **Step 9**
9	1. Visually inspect the suspected area. Use a small mirror to assist in looking at hard to see areas. 2. Check for leaks at the following locations: • Sealing surfaces • Fittings • Cracked or damaged components Can you identify the type of fluid and the approximate location of the leak?	Go to **Step 10**	System OK
10	1. Inspect the engine for mechanical damage. Special attention should be shown to the following areas: • Higher than recommended fluid levels • Higher than recommended fluid pressures • Plugged or malfunctioning fluid filters or pressure bypass valves • Plugged or malfunctioning engine ventilation system • Improperly tightened or damaged fasteners • Cracked or porous components • Improper sealants or gaskets where required • Improper sealant or gasket installation • Damaged or worn gaskets or seals • Damaged or worn sealing surfaces 2. Inspect the engine for customer modifications. Is there mechanical damage, or customer modifications to the engine?	Go to **Step 11**	System OK
	Repair or replace all damaged or modified components.	Go to	System

cardiagn.com

11	Does the engine still leak oil?	**Step 1**	OK

CRANKCASE VENTILATION SYSTEM INSPECTION/DIAGNOSIS

Crankcase Ventilation System Inspection/Diagnosis

Concern	Action
External oil leak	Inspect for any of the following conditions: • Plugged positive crankcase ventilation (PCV) valve • Plugged or kinked PCV hose(s) • Damaged or incorrectly installed PCV valve or hose(s) • Excessive crankcase pressure
Rough Idle	Inspect for any of the following conditions: • Plugged PCV valve • Plugged or kinked PCV hose(s) • Leaking (damaged) PCV valve or hose(s)
Stalling or slow idle speed	Inspect for any of the following conditions: • Plugged PCV valve • Plugged or kinked PCV hose(s) • Leaking (damaged) PCV valve or hose(s)
High idle speed	Inspect for a leaking (damaged) PCV valve or hose(s)
Sludge in the engine	Inspect for any of the following conditions: • Plugged PCV valve • Plugged or kinked PCV hose(s)

DRIVE BELT CHIRPING DIAGNOSIS

Diagnostic Aids

The chirping noise may be intermittent due to moisture on the drive belt(s) or the accessory drive pulley(s). In order to duplicate the customer's concern, It may be necessary to spray a small amount of water onto the drive belt(s). If spraying water on the drive belt(s) duplicates the symptom, cleaning the accessory drive pulley(s) may be the most probable solution.

A loose or improper installation of a body or suspension component, or other item(s) on the vehicle may cause the chirping noise.

Test Description

The number(s) below refer to the step(s) in the diagnostic table.

cardiagn.com

2: The chirping noise may not be engine related. This step is to verify that the engine is making the noise. If the engine is not making the noise do not proceed further in this table.

3: The noise may be an internal engine noise. Remove the drive belt(s) and operate the engine for a few seconds, this will verify if the chirping noise is related to the drive belt(s) or not. With the drive belt(s) removed the water pump will not operate and the engine may overheat. Also diagnostic trouble codes (DTCs) may set when the engine is operated with the drive belt(s) removed.

4: Inspect the drive belt(s) for signs of pilling. Pilling is the small balls, pills, or strings in the drive belt grooves caused by the accumulation of rubber dust.

6: Misalignment of the accessory drive pulley(s) may be caused from improper mounting or incorrect installation of an accessory drive component, or the pulley may be bent inward or outward from a previous repair. Test for a misaligned pulley using a straight edge in the pulley grooves across 2 or 3 pulleys. If a misaligned pulley is found refer to that accessory drive component for the proper removal and installation procedure for that pulley.

10: Inspection of the fasteners can eliminate the possibility that a incorrect bolt, nut, spacer, or washer was installed.

12: Inspection the accessory drive pulley(s) should include inspecting for bends, dents or other damage to the pulley(s) that would prevent the drive belt(s) from seating properly in the pulley grooves or on the smooth surface of a pulley when the back side of the drive belt is used to drive the pulley.

14: Replacing the drive belt(s) when it is not damaged or there is not excessive pilling will only be a temporary repair.

Drive Belt Chirping Diagnosis

Step	Action	Yes	No
NOTE: **Refer to Belt Dressing Notice in Cautions and Notices.** DEFINITION: The following items are indications of chirping: • A high pitched noise that is heard once per revolution of the drive belt(s) or a accessory drive pulley. • Chirping may occur on cold damp startup conditions and will subside once the vehicle reaches normal operating temperature.			
1	Did you review the Symptoms - Engine Mechanical diagnostic information, and perform the necessary inspections?	Go to **Step 2**	Go to **Symptoms - Engine Mechanical**
2	Verify that there is a chirping noise. Does the engine make the chirping noise?	Go to **Step 3**	Go to Diagnostic Aids
3	1. Remove the drive belt. Refer to **Drive Belt Replacement - Accessory** or **Drive Belt Replacement - Air Conditioning** .		

cardiagn.com

	2. Operate the engine for no longer than 30 to 40 seconds. Does the chirping noise still exist?	Go to **Engine Noise on Start-Up, but Only Lasting a Few Seconds** , **Upper Engine Noise, Regardless of Engine Speed** , or **Lower Engine Noise, Regardless of Engine Speed**	Go to **Step 4**
4	Inspect for severe drive belt pilling exceeding 1/3 of the drive belt groove depth. Do the drive belt grooves have pilling?	Go to **Step 5**	Go to **Step 6**
5	Clean the accessory drive pulley(s) with a suitable wire brush. Were the accessory drive pulley(s) cleaned?	Go to **Step 14**	-
6	Inspect for a misaligned accessory drive pulley(s). Is there a misaligned accessory drive pulley(s)?	Go to **Step 7**	Go to **Step 8**
7	Replace and/or repair the misaligned accessory drive pulley(s). Were the misaligned accessory drive pulley(s) replaced and/or repaired?	Go to **Step 15**	-
8	Inspect for a bent or cracked accessory drive bracket(s). Did you find any bent or cracked accessory drive bracket(s)?	Go to **Step 9**	Go to **Step 10**
9	Replace the bent and/or cracked accessory drive bracket(s). Was the bent and/or cracked accessory drive bracket(s) replaced?	Go to **Step 15**	-
10	Inspect for incorrect, loose, and/or missing fasteners. Were there any incorrect, loose, and/or missing fasteners found?	Go to **Step 11**	Go to **Step 12**
11	1. Replace any incorrect and/or missing fasteners. 2. Tighten any loose fasteners. Refer to **Fastener Tightening Specifications** . Were the fasteners replaced and/or tightened?	Go to **Step 15**	-
12	Inspect for a bent accessory drive pulley(s). Was a bent accessory drive pulley(s) found?	Go to **Step 13**	Go to **Step 14**

cardiagn.com

13	Replace the bent accessory drive pulley (s). Was the bent accessory drive pulley(s) replaced?	Go to **Step 15**	-
14	Replace the drive belt(s). Refer to **Drive Belt Replacement - Accessory** or **Drive Belt Replacement - Air Conditioning** . Was the drive belt(s) replaced?	Go to **Step 15**	-
15	1. Clear any codes 2. Run the engine in order to verify the repair. Does the chirping noise still exist?	Go to **Step 3**	System OK

DRIVE BELT SQUEAL DIAGNOSIS

Diagnostic Aids

A loose or improper installation of a body, or suspension component, or other item(s) on the vehicle may cause the squeal noise.

If the noise is intermittent, verify that the accessory drive component(s) by varying their loads, making sure they are operating to their maximum capacity. An overcharged air conditioning (A/C) system, a power steering system restriction, or the incorrect fluid, or a failing generator are suggested items to inspect.

Test Description

The number(s) below refer to the step(s) in the diagnostic table.

2: The squeal may not be engine related. This step is to verify that the engine is making the noise. If the engine is not making the noise do not proceed further in this table.

3: The noise may be an internal engine noise. Remove the drive belt(s) and operate the engine for a few seconds, this will verify if the squealing noise is related to the drive belt(s) or an accessory drive component. With the drive belt(s) removed the water pump will not operate and the engine may overheat. Also diagnostic trouble codes (DTCs) may set when the engine is operated with the drive belt(s) removed.

4: This test is to verify that an accessory drive component(s) does not have a seized bearing. With the belt (s) removed, test the bearings in the accessory drive components for smooth operation. Also test the accessory drive component(s) with the engine operating by varying the load on the accessory drive component(s) to verify that the component(s) is operating properly.

5: This test is to verify that the drive belt(s) tensioner(s) is operating properly. If the drive belt(s) tensioner(s) is not operating properly, proper belt tension may not be achieved to keep the drive belt from slipping which could cause a belt squeal noise.

6: This test is to verify that the drive belt(s) is not too long, which would prevent the drive belt(s)

cardiagn.com

tensioner(s) from operating properly. Also if the incorrect length drive belt(s) was installed, it may not be routed correctly and may be turning an accessory drive component in the incorrect direction.

7: Misalignment of the accessory drive pulley(s) may be caused from improper mounting or incorrect installation of a accessory drive component, or the pulley is bent inward or outward from a previous repair. Test for a misaligned pulley using a straight edge in the pulley grooves across two or three pulleys. If a misaligned pulley is found, refer to that accessory drive component for the proper removal and installation procedure for that pulley.

8: Inspect the accessory drive pulley(s) to verify that they are the correct diameter or width. Using a known good vehicle, compare the pulley sizes.

Drive Belt Squeal Diagnosis

Step	Action	Yes	No
NOTE: **Refer to Belt Dressing Notice in Cautions and Notices.** DEFINITION: The following items are indications of drive belt squeal: • A loud screeching noise that is caused by a slipping drive belt(s) (this is unusual for a drive belt with multiple ribs) • The noise occurs when a heavy load is applied to the drive belt(s), such as an A/C compressor engagement, snapping the throttle, or slipping on a seized pulley, or a faulty accessory drive component.			
1	Did you review the Symptoms - Engine Mechanical diagnostic information, and perform the necessary inspections?	Go to **Step 2**	Go to **Symptoms - Engine Mechanical**
2	Verify that there is a squealing noise. Does the engine make the squeal noise?	Go to **Step 3**	Go to Diagnostic Aids
3	1. Remove the drive belt(s). Refer to **Drive Belt Replacement - Accessory** or **Drive Belt Replacement - Air Conditioning** . 2. Operate the engine for no longer than 30 to 40 seconds. Does the squealing noise still exist?	Go to **Engine Noise on Start-Up, but Only Lasting a Few Seconds** , **Upper Engine Noise, Regardless of Engine Speed** , or **Lower Engine Noise, Regardless of Engine Speed**	Go to **Step 4**
4	Inspect for a seized accessory drive component bearing or a faulty accessory drive component. Did you find and correct the condition?	Go to **Step 9**	Go to **Step 5**
5	Inspect the drive belt tensioner for proper operation. Refer to **Drive Belt Tensioner Diagnosis** .		

cardiagn.com

	Did you find and correct the condition?	Go to **Step 9**	Go to **Step 6**
6	Check for the correct length drive belt. Did you find and correct the condition?	Go to **Step 9**	Go to **Step 7**
7	Inspect for misaligned pulley. Did you find and correct the condition?	Go to **Step 9**	Go to **Step 8**
8	Inspect for an incorrect size pulley. Did you find and correct the condition?	Go to **Step 9**	-
9	1. Install the drive belt(s). Refer to **Drive Belt Replacement - Accessory** or **Drive Belt Replacement - Air Conditioning** . 2. Clear any codes. 3. Run the engine in order to verify the repair. Does the squealing noise still exist?	-	System OK

DRIVE BELT WHINE DIAGNOSIS

Diagnostic Aids

The drive belt(s) will not cause the whine.

If the whine is intermittent, verify that it is not the accessory drive component(s) by varying their loads, making sure they are operating to their maximum capacity. An overcharged air conditioning (A/C) system, a power steering system restriction, or the incorrect fluid, or a failing generator are suggested items to inspect.

Test Description

The number(s) below refer to the step(s) in the diagnostic table.

3: This test is to verify that the whine is being caused by the accessory drive component(s). Remove the drive belt(s) and operate the engine for a few second, this will verify if the whining noise is related to the accessory drive component. With the drive belt(s) removed the water pump will not operate and the engine may overheat. Also diagnostic trouble codes (DTCs) may set when the engine is operated with the drive belt(s) removed.

4: The inspection should include checking the drive belt tensioner and the drive belt idler pulley bearings. The drive belt(s) may have to be installed and the accessory drive components operated separately by varying their loads. Refer to the suspected accessory drive component for the proper removal and installation procedure.

Drive Belt Whine Diagnosis

Step	Action	Yes	No

cardiagn.com

NOTE:
Refer to Belt Dressing Notice in Cautions and Notices.

DEFINITION: A high pitched continuous noise that may be caused by an accessory drive component failed bearing.

1	Did you review the Symptoms - Engine Mechanical diagnostic information, and perform the necessary inspections?	Go to **Step 2**	Go to **Symptoms - Engine Mechanical**
2	Verify that there is a whining noise. Does the engine make the whining noise?	Go to **Step 3**	Go to Diagnostic Aids
3	1. Remove the drive belt(s). Refer to **Drive Belt Replacement - Accessory** or **Drive Belt Replacement - Air Conditioning** . 2. Operate the engine for no longer than 30 to 40 seconds. Does the whining noise still exist?	Go to **Engine Noise on Start-Up, but Only Lasting a Few Seconds** , **Upper Engine Noise, Regardless of Engine Speed** , or **Lower Engine Noise, Regardless of Engine Speed**	Go to **Step 4**
4	1. Inspect for a failed accessory drive component bearing. 2. Install the drive belt(s). Refer to **Drive Belt Replacement - Accessory** or **Drive Belt Replacement - Air Conditioning** . Did you find and correct the condition?	Go to **Step 5**	-
5	1. Clear any codes. 2. Run the engine in order to verify the repair. Does the whining still exist?	-	System OK

DRIVE BELT RUMBLING DIAGNOSIS

Diagnostic Aids

Vibration from the engine operating may cause a body component or another part of the vehicle to produce a rumbling noise.

The drive belt(s) may have a condition that can not be seen or felt. Sometimes replacing the drive belt(s) may be

cardiagn.com

the only repair for the symptom.

If after replacing the drive belt(s) and completing the diagnostic table, the noise is only heard with the drive belt (s) installed, there might be an accessory drive component failure. Varying the load on the accessory drive component(s) may aid in identifying which accessory drive component is causing the rumbling noise.

Test Description

The number(s) below refer to the step(s) in the diagnostic table.

2: This test is to verify that the symptom is present during diagnosing. Other vehicle components may cause a similar symptom.

3: This test is to verify that the drive belt(s) is causing the rumbling. Rumbling may be confused with an internal engine noise due to the similarity in the description. Remove only one drive belt at a time if the vehicle has multiple drive belts. Operate the engine for a few seconds, this will verify if the rumbling noise is related to the drive belt(s) or not. With the drive belt(s) removed the water pump will not operate and the engine may overheat. Also diagnostic trouble codes (DTCs) may set when the engine is operated with the drive belt(s) removed.

4: Inspect the drive belt(s) to ensure that the drive belt(s) is not the cause of the noise. Small cracks across the ribs of the drive belt(s) will not cause the noise. Belt separation is identified by the plys of the belt separating, this may be seen at the edge of the belt or felt as a lump in the belt.

5: Small amounts of pilling is a normal condition and acceptable. When the pilling is severe the drive belt (s) does not have a smooth surface for proper operation.

Drive Belt Rumbling Diagnosis

Step	Action	Yes	No
NOTE: **Refer to Belt Dressing Notice in Cautions and Notices.** DEFINITION: • A low pitch tapping, knocking, or thumping noise heard at or just above idle. • Heard once per revolution of the drive belt(s) or a pulley(s). • Rumbling may be caused from: ○ Pilling, the accumulation of rubber dust that forms small balls (pills) or strings in the drive belt(s) pulley groove ○ The separation of the drive belt(s) ○ A damaged drive belt(s)			
1	Did you review the Symptoms - Engine Mechanical diagnostic information, and perform the necessary inspections?	Go to **Step 2**	Go to **Symptoms - Engine Mechanical**
2	Verify that there is a rumbling noise. Does the engine make the rumbling		Go to Diagnostic

cardiagn.com

	noise?	Go to **Step 3**	Aids
3	1. Remove the drive belt(s). Refer to **Drive Belt Replacement - Accessory** or **Drive Belt Replacement - Air Conditioning** . 2. Operate the engine for no longer than 30 to 40 seconds. Does the rumbling noise still exist?	Go to **Engine Noise on Start-Up, but Only Lasting a Few Seconds** , **Upper Engine Noise, Regardless of Engine Speed** , or **Lower Engine Noise, Regardless of Engine Speed**	Go to **Step 4**
4	Inspect the drive belt(s) for damage, separation, or sections of missing ribs. Were any of these conditions found?	Go to **Step 7**	Go to **Step 5**
5	Inspect for severe pilling of more than 1/3 of the drive belt groove depth. Do the drive belt grooves have pilling?	Go to **Step 6**	Go to **Step 7**
6	1. Clean the drive belt pulleys using a suitable wire brush. 2. Reinstall the drive belt. Refer to **Drive Belt Replacement - Accessory** or **Drive Belt Replacement - Air Conditioning** . Did you complete the repair?	Go to **Step 8**	Go to **Step 7**
7	Install a new drive belt. Refer to **Drive Belt Replacement - Accessory** or **Drive Belt Replacement - Air Conditioning** . Did you complete the replacement?	Go to **Step 8**	-
8	1. Clear any codes. 2. Run the engine in order to verify the repair. Does the rumbling noise still exist?	-	System OK

DRIVE BELT VIBRATION DIAGNOSIS

Diagnostic Aids

The accessory drive components may have an affect on engine vibration. An overcharged air conditioning (A/C) system, a power steering system restriction, or the incorrect fluid, or an extra load placed on the generator are suggested items to inspect. To help identify an intermittent or an improper condition, vary the loads on the accessory drive components.

cardiagn.com

Test Description

The number(s) below refer to the steps) in the diagnostic table.

2: This test is to verify that the vibration is present during diagnosing. Other vehicle components may cause a similar symptom such as the exhaust system, or the drivetrain.

3: This test is to verify that the drive belt(s) or accessory drive components may be causing the vibration. Remove the drive belt(s) and operate the engine for a few seconds, this will verify if the vibration is related to the drive belt(s) or not. With the drive belt(s) removed the water pump will not operate and the engine may overheat. Also diagnostic trouble codes (DTCs) may set when the engine is operated with the drive belt (s) removed.

4: The drive belt(s) may cause a vibration. While the drive belt(s) is removed this is the best time to inspect the condition of the drive belt(s).

6: Inspection of the fasteners can eliminate the possibility that a incorrect bolt, nut, spacer, or washer was installed.

8: This step should only be performed if the fan is driven by the drive belt. Inspect the engine cooling fan for bent, twisted, loose, or cracked blades. Inspect the fan clutch for smooth operation. Inspect for a bent fan shaft or a bent mounting flange.

9: Inspect the water pump drive shaft for being bent. Also inspect the water pump bearings for smooth operation and excessive play. Compare the water pump with a known, good water pump.

10: Accessory drive component brackets that are bent, cracked, or loose may put an extra strain on that accessory component causing it to vibrate.

Drive Belt Vibration Diagnosis

Step	Action	Yes	No
NOTE: **Refer to Belt Dressing Notice in Cautions and Notices.** DEFINITION: The following items are indications of drive belt vibration: • The vibration is engine-speed related. • The vibration may be sensitive to accessory load.			
1	Did you review the Symptoms - Engine Mechanical diagnostic information, and perform the necessary inspections?	Go to **Step 2**	Go to **Symptoms - Engine Mechanical**
2	Verify that the vibration is engine related. Does the engine make the vibration?	Go to **Step 3**	Go to Diagnostic Aids
3	1. Remove the drive belt (s). Refer to **Drive Belt Replacement - Accessory** or **Drive Belt Replacement - Air Conditioning** . 2. Operate the engine for no longer than 30 to 40 seconds.	Go to **Vibration Analysis - Engine** in Vibration	

cardiagn.com

	Does the engine still make the vibration?	Diagnosis and Correction	Go to **Step 4**
4	Inspect the drive belt(s) for wear, damage, debris build-up and missing drive belt ribs. Were any of these conditions found?	Go to **Step 5**	Go to **Step 6**
5	Install a new drive belt. Refer to **Drive Belt Replacement - Accessory** or **Drive Belt Replacement - Air Conditioning** . Did you complete the replacement?	Go to **Step 11**	-
6	Inspect for incorrect, loose or missing fasteners. Were any of these conditions found?	Go to **Step 7**	Go to **Step 8**
7	1. Replace the incorrect or missing fasteners. 2. Tighten any loose fasteners. Refer to **Fastener Tightening Specifications** . Were the fasteners replaced and/or tightened?	Go to **Step 11**	-
8	Inspect for damaged fan blades or a bent fan clutch shaft. Did you find and correct the condition?	Go to **Step 11**	Go to **Step 9**
9	Inspect for a bent water pump drive shaft. Did you find and correct the condition?	Go to **Step 11**	Go to **Step 10**
10	Inspect for a bent or cracked accessory drive bracket(s). Did you find and correct the condition?	Go to **Step 11**	-
11	1. Clear any codes. 2. Run the engine in order to verify the repair. Does the vibration still exist?	-	System OK

cardiagn.com

DRIVE BELT FALLS OFF DIAGNOSIS

Diagnostic Aids

If the drive belt(s) repeatedly falls off the accessory drive pulley(s), this may be caused by pulley misalignment.

An extra load that is quickly applied or released by an accessory drive component may also cause the drive belt (s) to fall off. Verify that the accessory drive component(s) are operate properly.

If the drive belt(s) is the incorrect length, the drive belt tensioner(s) may not maintain the proper tension on the drive belt(s).

Test Description

The number(s) below refer to the step(s) in the diagnostic table.

2: This inspection is to verify the condition of the drive belt(s). Damage may have occurred to the drive belt(s) when the drive belt(s) fell off the pulley. Inspect the drive belt(s) for cuts, tears, sections of ribs missing, or damaged belt plys.

4: Misalignment of the accessory drive pulley(s) may be caused from improper mounting or incorrect installation of a accessory drive component, or the pulley may bent inward or outward from a previous repair. Test for a misaligned pulley using a straight edge in the pulley grooves across 2 or 3 pulleys. If a misaligned pulley is found, refer to that accessory drive component for the proper removal and installation procedure of that pulley.

5: Inspection of the accessory drive pulley(s) should include inspecting for bends, dents or other damage that would prevent the drive belt from seating properly in the pulley grooves or on the smooth surface of a pulley when the back side of the drive belt(s) is used to drive the pulley.

6: Accessory drive component brackets that are bent or cracked will also cause the drive belt(s) to fall off.

7: Inspection of the fasteners can eliminate the possibility that a incorrect bolt, nut, spacer, or washer was installed. Missing, loose, or incorrect fasteners may cause pulley misalignment from the accessory drive bracket(s) moving under load. Over tightening the fasteners may cause misalignment of the accessory component bracket(s).

Drive Belt Falls Off Diagnosis

Step	Action	Yes	No
NOTE: **Refer to Belt Dressing Notice in Cautions and Notices.** DEFINITION: The drive belt(s) falls off the pulleys or may not ride correctly on the pulleys.			
1	Did you review the Symptoms - Engine Mechanical diagnostic information, and perform the necessary inspections?	Go to **Step 2**	Go to **Symptoms - Engine Mechanical**
2	Inspect for a damaged drive belt(s). Was a damaged drive belt(s) found?	Go to **Step 3**	Go to **Step 4**
3	Install a new drive belt. Refer to **Drive Belt Replacement - Accessory** or **Drive Belt Replacement - Air Conditioning** . Does the drive belt(s) continue to fall off?	Go to **Step 4**	System OK
4	Inspect for a misaligned accessory drive pulley(s). Did you find and correct the condition?	Go to **Step 12**	Go to **Step 5**
5	Inspect for a bent or dented accessory drive pulley(s). Did you find and correct the condition?	Go to **Step 12**	Go to **Step 6**
6	Inspect for a bent or a cracked accessory drive bracket(s). Did you find and correct the condition?	Go to **Step 12**	Go to **Step 7**
7	Inspect for incorrect, loose or missing fasteners. Were there any incorrect, loose and/or missing fasteners?	Go to **Step 8**	Go to **Step 9**
8	1. Replace any incorrect and/or missing fasteners. 2. Tighten any loose fasteners. Refer to **Fastener Tightening Specifications** . Does the drive belt continue to fall off?	Go to **Step 9**	System OK

cardiagn.com

9	Test the drive belt tensioner for correction operation. Refer to **Drive Belt Tensioner Diagnosis** . Does the drive belt tensioner operate correctly?	Go to **Step 11**	Go to **Step 10**
10	Replace the drive belt tensioner. Refer to **Drive Belt Replacement - Accessory** or **Drive Belt Replacement - Air Conditioning** . Does the drive belt continue to fall off?	Go to **Step 11**	System OK
11	Inspect for a failed drive belt idler(s) and drive belt tensioner pulley(s) bearings. Did you find and repair the condition?	Go to **Step 12**	-
12	Run the engine in order to verify the repair. Does the drive belt still fall off?	-	System OK

DRIVE BELT EXCESSIVE WEAR DIAGNOSIS

Diagnostic Aids

Excessive wear on a drive belt(s) is usually caused by incorrect installation or the wrong drive belt(s) for the application.

Minor misalignment of the drive belt pulleys will not cause excessive wear, but will probably cause the drive belt(s) to make a noise or to fall off the pulley(s).

Excessive misalignment of the drive belt pulleys will cause excessive wear and may also make the drive belt(s) fall off the pulley(s).

Test Description

The number(s) below refer to the step number(s) on the diagnostic table.

2: The inspection is to verify that the drive belt(s) is correctly installed over all of the drive belt pulleys. Wear on the drive belt(s) may be caused by mis-positioning the drive belt(s) by one groove on a pulley.

3: The installation of a drive belt that is to wide or to narrow will cause wear on the drive belt(s). The drive belt ribs should match all of the grooves on the pulleys.

4: This inspection is to verify the drive belt(s) is not contacting any parts of the engine or body while the engine is operating. There should be sufficient clearance when the drive belt accessory drive components load varies. The drive belt(s) should not come in contact with an engine or a body component when snapping the throttle.

Drive Belt Excessive Wear Diagnosis

Step	Action	Yes	No
NOTE: **Refer to Belt Dressing Notice in Cautions and Notices.** DEFINITION: Wear at the outside ribs of the drive belt(s) due to an incorrectly installed drive belt(s).			

cardiagn.com

1	Did you review the Symptoms - Engine Mechanical diagnostic information and perform the necessary inspections?	Go to **Step 2**	Go to **Symptoms - Engine Mechanical**
2	Inspect the drive belt(s) for the proper installation. Refer to **Drive Belt Replacement - Accessory** or **Drive Belt Replacement - Air Conditioning** . Did you find this condition?	Go to **Step 5**	Go to **Step 3**
3	Inspect for the proper drive belt. Did you find this condition?	Go to **Step 5**	Go to **Step 4**
4	Inspect for the drive belt rubbing against a bracket, hose, or wiring harness. Did you find and repair the condition?	Go to **Step 6**	Go to Diagnostic Aids
5	Replace the drive belt. Refer to **Drive Belt Replacement - Accessory** or **Drive Belt Replacement - Air Conditioning** . Did you complete the replacement?	Go to **Step 6**	-
6	Run the engine in order to verify the repair. Is there still excessive drive belt wear?	-	System OK

DRIVE BELT TENSIONER DIAGNOSIS

NOTE: **Allowing the drive belt tensioner to snap into the free position may result in damage to the tensioner.**

IMPORTANT: **When the engine is operating, the belt tensioner arm will move. Do not replace the belt tensioner because of movement in the belt tensioner arm.**

1. Remove the drive belt. Refer to **Drive Belt Replacement - Accessory** or **Drive Belt Replacement - Air Conditioning** .
2. Position a hex-head socket on the belt tensioner pulley bolt.
3. Move the belt tensioner through its full travel.
   - The movement should feel smooth.
   - There should be no binding.
   - The belt tensioner should return freely.
4. If any binding is observed, replace the drive belt tensioner. Refer to **Drive Belt Tensioner Replacement - Accessory** or **Drive Belt Tensioner Replacement - Air Conditioning** .
5. Install the drive belt. Refer to **Drive Belt Replacement - Accessory** or **Drive Belt Replacement - Air Conditioning** .

DESCRIPTION AND OPERATION

CRANKCASE VENTILATION SYSTEM DESCRIPTION

A closed crankcase ventilation system is used in order to provide a more complete scavenging of crankcase vapors. Fresh air from the throttle body is supplied to the crankcase, mixed with the blow-by vapors and then

cardiagn.com

passed through a crankcase ventilation valve and into the intake manifold. The primary component in the positive crankcase ventilation (PCV) system is the PCV valve, the valve meters the flow of blow-by vapors at a certain rate depending on manifold vacuum. To maintain idle quality, the PCV valve restricts the vapor flow when manifold vacuum is high. If abnormal operating conditions arise, the PCV system is designed to allow excessive amounts of blow-by vapors to back flow through the crankcase vent tube and into the engine air inlet to be consumed be normal combustion. The engine ventilation system was developed to minimize oil consumption and ensure that oil ingestion could not occur during vehicle limit handling maneuvers.

LS1 Engine

On the LS1 engine, filtered fresh air is routed from up stream of the throttle blade to the front of the right valve rocker arm cover through a formed rubber hose. To reduce the potential of oil pullover into the throttle bore area due to back flow of the ventilation system; the fitting in the right side rocker cover is shielded from the rocker arms and their oil spray. Blow-by vapors are routed from the rear of both rocker covers, through molded nylon lines to a tee fitting located on the centerline of the engine at the rear of the intake manifold. From there, a single nylon line carries the vapors through an externally mounted, horizontal PCV valve and enters the intake manifold behind the throttle body.

The dual draw PCV system was developed to meet the limited handling maneuver requirements. During sustained passively lateral accelerations, the outboard cover may fill with oil. The dual draw system passively switches, allowing the PCV valve to draw on the rocker cover with the least resistance. This results in the system drawing on the air filled, or inboard rocker cover and eliminates oil pullover due to drawing on the oil filled outboard rocker cover.

The PCV valve is connected to the PCV valve pipe. The PCV valve pipe is attached to the coolant air bleed pipe by a cable with an integral fastener. This cable transfers heat to the PCV valve to eliminate condensation build-up in the PCV system. This also aids in eliminating throttle body icing.

LS6 Engine

The LS6 engine utilizes an integral PCV system. The PCV system is moved into the engine's valley. The valley cover has composite oil separating baffles and PCV plumbing incorporated. The filtered fresh air is routed from up stream of the throttle blade to the front of the right valve rocker arm cover through a formed rubber hose. To reduce the potential of oil pullover into the throttle bore area due to back flow of the ventilation system; the fitting in the right side rocker cover is shielded from the rocker arms and their oil spray. Blow-by vapors are routed from the valley cover, through a formed rubber hose that carries the vapors through an externally mounted, horizontal PCV valve and enters the intake manifold behind the throttle body.

DRIVE BELT SYSTEM DESCRIPTION

-

The drive belt system consists of the following components:

- The drive belt
- The drive belt tensioner
- The drive belt idler pulley

cardiagn.com

- The crankshaft balancer pulley
- The accessory drive component mounting brackets
- The accessory drive components
    - The power steering pump, if belt driven
    - The generator
    - The A/C compressor, if equipped
    - The engine cooling fan, if belt driven
    - The water pump, if belt driven
    - The vacuum pump, if equipped
    - The air compressor, if equipped

The drive belt system may use 1 belt or 2 belts. The drive belt is thin so that it can bend backwards and has several ribs to match the grooves in the pulleys. There also may be a V-belt style belt used to drive certain accessory drive components. The drive belts are made of different types of rubbers - chloroprene or EPDM - and have different layers or plys containing either fiber cloth or cords for reinforcement.

Both sides of the drive belt may be used to drive the different accessory drive components. When the back side of the drive belt is used to drive a pulley, the pulley is smooth.

The drive belt is pulled by the crankshaft balancer pulley across the accessory drive component pulleys. The spring loaded drive belt tensioner keeps constant tension on the drive belt to prevent the drive belt from slipping. The drive belt tensioner arm will move when loads are applied to the drive belt by the accessory drive components and the crankshaft.

The drive belt system may have an idler pulley, which is used to add wrap to the adjacent pulleys. Some systems use an idler pulley in place of an accessory drive component when the vehicle is not equipped with the accessory.

ENGINE COMPONENT DESCRIPTION

LS1/LS6 Engine

cardiagn.com

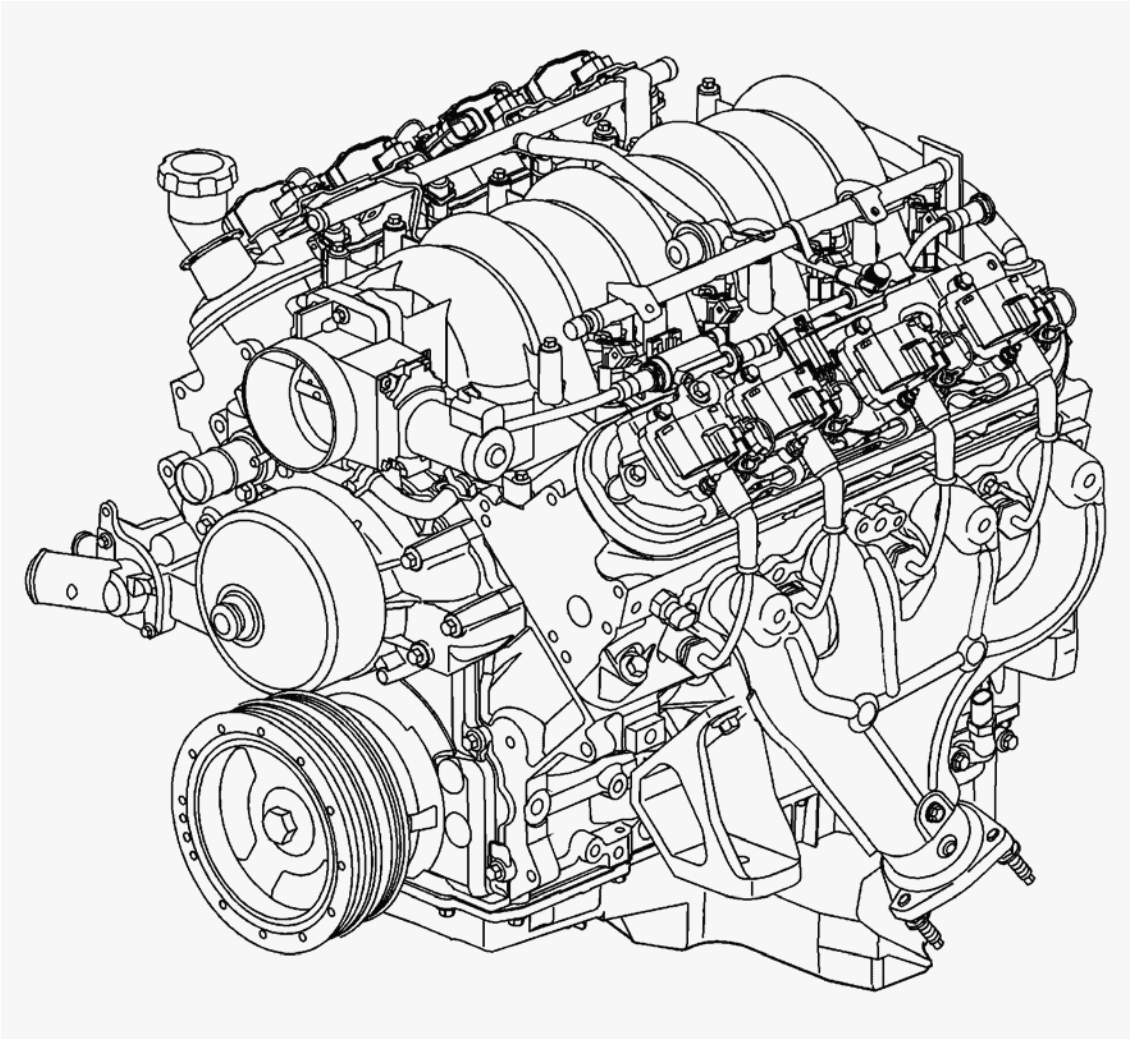

Fig. 20: 5.7 Liter V8 Engine
Courtesy of GENERAL MOTORS CORP.

The 5.7 Liter V8 engine is identified as RPO LS1 (VIN G) and RPO LS6 (VIN S).

Camshaft and Drive System

A billet steel 1-piece camshaft is supported by 5 bearings pressed into the engine block. The camshaft has a machined camshaft sensor reluctor ring incorporated between the fourth and fifth bearing journals. The camshaft timing sprocket is mounted to the front of the camshaft and is driven by the crankshaft sprocket through the camshaft timing chain. The crankshaft sprocket is splined and drives the oil pump driven gear. A retaining plate mounted to the front of the engine block maintains camshaft location.

Crankshaft

The crankshaft is cast nodular iron. The crankshaft is supported by 5 crankshaft bearings. The bearings are retained by crankshaft bearing caps which are machined with the engine block for the proper alignment and clearance. The crankshaft journals are undercut and rolled. The center main journal is the thrust journal. A

cardiagn.com

crankshaft position reluctor ring is mounted at the rear of the crankshaft. The reluctor ring is not serviceable separately.

Cylinder Heads

The cylinder head assemblies are cast aluminum and have pressed in place powdered metal valve guides and valve seats. Passages for the vapor ventilation system are at the front of each cylinder head. There are no exhaust gas passages within the cylinder head. Valve rocker arm covers are retained to the cylinder head by 4 center mounted rocker arm cover bolts.

Engine Block

The engine block is a cam-in-block deep skirt 90 degree V configuration with 5 crankshaft bearing caps. The engine block is aluminum with cast in place iron cylinder bore liners. The 5 crankshaft bearing caps each have 4 vertical M10 and 2 horizontal M8 mounting bolts. The camshaft is supported by 5 camshaft bearings pressed into the block. First design engine blocks have different drill and tap depths using both medium length 100 mm (3.94 in) and long 155 mm (6.1 in) M11 cylinder head bolts. Second design engine blocks use only the medium length 100 mm (3.94 in) bolt with a common drill and tap depth.

Exhaust Manifolds

The exhaust manifolds are a 1-piece cast iron design. The exhaust manifolds direct exhaust gasses from the combustion chambers to the exhaust system. Each manifold has a single inlet for the air injection reaction (AIR) system and an externally mounted heat shield retained by bolts.

Intake Manifold

The IAFM or integrated air fuel module is a one piece composite design that incorporates metal threaded inserts for mounting the fuel rail and throttle body. The intake manifold is sealed to the cylinder heads by eight separate nonreusable silicone sealing gaskets which press into the grooves of the intake housing. The drive by wire throttle body assembly bolts to the front of the intake manifold. The throttle body is sealed to the intake manifold by a one piece push in place silicone gasket. The fuel rail assembly with eight separate fuel injectors is retained to the intake by four bolts. The injectors are seated in their individual manifold bores with O-ring seals to provide sealing. A fuel rail stop bracket is retained at the rear of the left fuel rail by the intake manifold mounting bolts. A snap fit manifold absolute pressure (MAP) sensor housing is mounted at the rear of the manifold and sealed by an O-ring seal. The MAP sensor is installed and retained to the MAP sensor housing. There are no coolant passages within the intake manifold.

Oil Pan

The structural 2-piece oil pan assembly has cast aluminum upper and lower halves. Incorporated into the upper oil pan design is the oil filter mounting boss, oil level sensor mounting bore, and a non-removable oil pan baffle. The oil pan cover, oil temperature sensor, and oil level sensor mount to the sides of the upper oil pan. Incorporated into the lower oil pan design is the drain plug opening and internal oil control ribbing. A nylon carrier with a silicone bead type gasket provides sealing between the upper and lower halves of the oil pan assembly. The alignment of the structural oil pan assembly to the rear of the engine block and transmission housing is critical.

cardiagn.com

Piston and Connecting Rod Assemblies

The pistons are cast aluminum. The pistons use 2 compression rings and a 3-piece oil control ring assembly. The piston is a low friction, lightweight design with a barrel shaped skirt. All applications use pistons with graphite-coated skirts. The piston pins are chromium steel. First design applications use a piston pin that is floating fit to the piston and press fit to the connecting rod. Second design applications use a pin that is full-floating to both the piston and connecting rod. The connecting rods are powdered metal. The connecting rods are fractured at the connecting rod journal and then machined for the proper clearance. The first design piston, pin, and connecting rod are to be serviced as an assembly.

Valve Rocker Arm Cover Assemblies

The valve rocker arm covers are cast aluminum and use a pre-molded silicone gasket for sealing. Mounted to each rocker cover is an ignition coil and bracket assembly. Incorporated into the right cover is the oil fill tube, the positive crankcase ventilation (PCV) system passage, and the engine fresh air passage.

Valve Train

Motion is transmitted from the camshaft through the hydraulic roller valve lifters and tubular pushrods to the roller type rocker arms. The valve lifter guides position and retain the valve lifters. The valve rocker arms for each bank of cylinders are mounted on pedestals or pivot supports. Each rocker arm is retained on the pivot support and cylinder head by a bolt. Valve lash is net build. For the LS6 application, both the intake and exhaust valves are of a hollow stem design. The exhaust valve stem is sodium filled for improved cooling.

NEW PRODUCT INFORMATION

The purpose of New Product Information is to highlight or indicate important product changes from the previous model year.

Changes may include one or more of the following items:

- Torque values and/or fastener tightening strategies
- Changed engine specifications
- New sealants and/or adhesives
- Disassembly and assembly procedure revisions
- Engine mechanical diagnostic procedure revisions
- New special tools required
- A component comparison from the previous year

Torque Values and/or Fastener Tightening Strategies

- All fasteners and threaded holes on the LS1/LS6 engines utilize metric threads.
- Cylinder head, connecting rod, crankshaft balancer, and main bearing cap bolts now apply a torque angle tightening strategy.
- First design engine blocks cylinder head bolts have different torque/angle specifications using both

cardiagn.com

medium length 100 mm (3.94 in) and long 155 mm (6.1 in) M11 cylinder head bolts. Second design engine blocks use only the medium length 100 mm (3.94 in) bolt with a common torque/angle specification.

- Certain fasteners should not be used again. Bolts, studs, or other fasteners that must be replaced will be called out in the specific service procedure.

New Sealants and/or Adhesives

Canadian SPO part numbers have been added. Refer to **Sealers, Adhesives, and Lubricants** .

Disassembly and Assembly Procedure Revisions

- The piston, pin, and connecting rod are to be serviced as an assembly.
- Newer design pistons have a graphite coated piston skirt. The coated skirt outside diameter (OD) may be slightly larger than the cylinder bore inside diameter (ID) and the piston assembly may have a slight interference fit to the cylinder bore during initial installation.

Engine Mechanical Diagnostic Procedure Revisions

All diagnosis on a vehicle should follow a logical process. Strategy based diagnostics is a uniform approach for repairing all systems. The diagnostic flow may always be used in order to resolve a system condition. The diagnostic flow is the place to start when repairs are necessary. For a detailed explanation, refer to **Diagnostic Starting Point - Engine Mechanical** .

New Special Tools Required

Angle Meter **J 45059** has been developed to provide technicians with a convenient method to tighten bolts that require the torque angle tightening strategy. See **Special Tools and Equipment** .

A Component Comparison from the Previous Year

- A timing chain guide has been added to the valve train system. The nylon chain guide is retained to the front of the engine block by two bolts.
- The positive crankcase ventilation (PCV) system is now incorporated into the engine valley cover for both LS1 and LS6 applications.
- The first design piston, pin, and connecting rod are to be serviced as an assembly.
- First design applications use a piston pin that is floating fit to piston and press fit to the connecting rod. Second design applications use a piston pin that is full-floating to both the piston and connecting rod.

LUBRICATION DESCRIPTION

Lubrication Flow Schematic

cardiagn.com

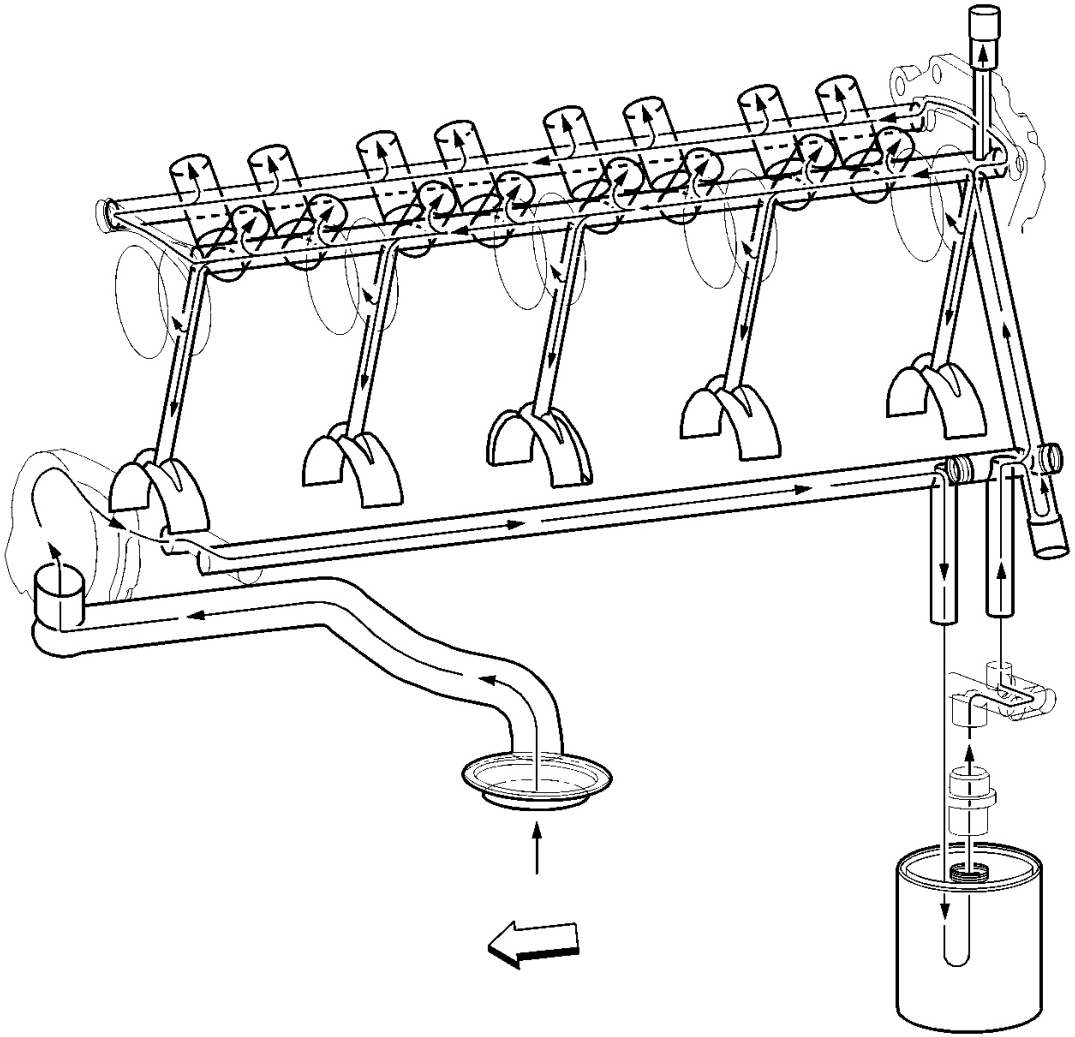

Fig. 21: Lubrication Flow Schematic
Courtesy of GENERAL MOTORS CORP.

Engine lubrication is supplied by a gerotor type oil pump assembly. The pump is mounted on the front of the engine block and driven directly by the crankshaft sprocket. The pump gears rotate and draw oil from the oil pan sump through a pick-up screen and pipe. The oil is pressurized as it passes through the pump and is sent through the engine block oil galleries. Contained within the oil pump assembly is a pressure relief valve that maintains oil pressure within a specified range. Pressurized oil is directed through the lower gallery to the full flow oil filter where harmful contaminants are removed. A bypass valve is incorporated into the oil pan which will permit oil flow in the event the filter becomes restricted. At the rear of the block, oil is then directed to the upper main oil galleries which are drilled just above the camshaft assembly. From there oil is then directed to the crankshaft and camshaft bearings. Oil that has entered the upper main oil galleries also pressurizes the valve lifter assemblies and is then pumped through the pushrods to lubricate the valve rocker arms and valve stems. Oil returning to the pan is directed by the crankshaft oil deflector. Oil temperature - Corvette only, pressure, and crankcase level are each monitored by individual sensors.

cardiagn.com

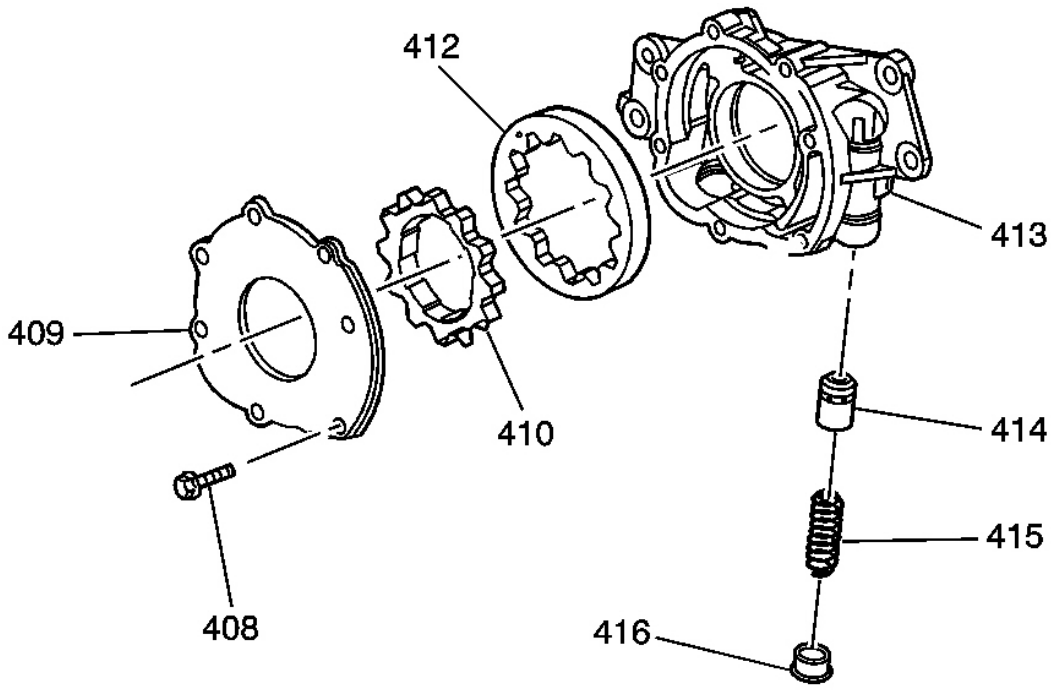

Fig. 22: Oil Pump Assembly Schematic
Courtesy of GENERAL MOTORS CORP.

Callouts For Fig. 848

Callout	Component Name
408	Cover Bolt
409	Cover
410	Drive Gear
412	Driven Gear
413	Oil Pump
414	Pressure Relief Valve
415	Pressure Relief Valve Spring
416	Plug

CLEANLINESS AND CARE

- Throughout this section, it should be understood that proper cleaning and protection of machined surfaces and friction areas is part of the repair procedure. This is considered standard shop practice even if not specifically stated.
- When any internal engine parts are serviced, care and cleanliness is important.
- When components are removed for service, they should be marked, organized or retained in a specific

cardiagn.com

order for reassembly.

Refer to **Separating Parts** .

- At the time of installation, components should be installed in the same location and with the same mating surface as when removed.
- An automobile engine is a combination of many machined, honed, polished and lapped surfaces with tolerances that are measured in millimeters or thousandths of an inch. These surfaces should be covered or protected to avoid component damage.
- A liberal coating of clean engine oil should be applied to friction areas during assembly.
- Proper lubrication will protect and lubricate friction surfaces during initial operation.

SEPARATING PARTS

IMPORTANT:

- **Disassembly of the piston, press fit design piston pin, and connecting rod may create scoring or damage to the piston pin and piston pin bore. If the piston, pin, and connecting rod have been disassembled, replace the components as an assembly.**
- **Many internal engine components will develop specific wear patterns on their friction surfaces.**
- **When disassembling the engine, internal components MUST be separated, marked, or organized in a way to ensure installation to their original location and position.**

Separate, mark, or organize the following components:

- Piston and the piston pin
- Piston to the specific cylinder bore
- Piston rings to the piston
- Connecting rod to the crankshaft journal
- Connecting rod to the bearing cap

  A paint stick or etching/engraving type tool are recommended. Stamping the connecting rod or cap near the bearing bore may affect component geometry.

- Crankshaft main and connecting rod bearings
- Camshaft and valve lifters
- Valve lifters, lifter guides, pushrods and rocker arm assemblies
- Valve to the valve guide
- Valve spring and shim to the cylinder head location
- Engine block main bearing cap location and direction
- Oil pump drive and driven gears

cardiagn.com

REPLACING ENGINE GASKETS

Tools Required

J 28410 Gasket Remover. See **Special Tools and Equipment** .

Gasket Use and Applying Sealants

- Do not use any gasket again unless specified.
- Gaskets that can be used again are identified in the service procedure.
- Do not apply sealant to any gasket or sealing surface unless called out in the service information.

Separating Components

- Use a rubber mallet to separate components.
- Bump the part sideways to loosen the components.
- Bumping should be done at bends or reinforced areas to prevent distortion of parts.

Cleaning Gasket Surfaces

- Remove all gasket and sealing material from the part using the **J 28410** or equivalent. See **Special Tools and Equipment** .
- Care must be used to avoid gouging or scraping the sealing surfaces.
- Do not use any other method or technique to remove sealant or gasket material from a part.
- Do not use abrasive pads, sand paper, or power tools to clean the gasket surfaces.
    - These methods of cleaning can cause damage to the component sealing surfaces.
    - Abrasive pads also produce a fine grit that the oil filter cannot remove from the oil.
    - This grit is abrasive and has been known to cause internal engine damage.

Assembling Components

NOTE: Refer to Sealant Notice in Cautions and Notices.

- When assembling components, use only the sealant specified or equivalent in the service procedure.
- Sealing surfaces should be clean and free of debris or oil.
- Specific components such as crankshaft oil seals or valve stem oil seals may require lubrication during assembly.
- Components requiring lubrication will be identified in the service procedure.
- When applying sealant to a component, apply the amount specified in the service procedure.
- Do not allow the sealant to enter into any blind threaded holes, as it may prevent the bolt from clamping properly or cause component damage when tightened.
- Tighten bolts to specifications. Do not overtighten.

cardiagn.com

USE OF ROOM TEMPERATURE VULCANIZING (RTV) AND ANAEROBIC SEALER

Pipe Joint Compound

IMPORTANT: 3 types of sealer are commonly used in engines. These are room temperature vulcanizing (RTV) sealer, anaerobic gasket eliminator sealer, and pipe joint compound. The correct sealer and amount must be used in the proper location to prevent oil leaks. DO NOT interchange the 3 types of sealers. Use only the specific sealer or the equivalent as recommended in the service procedure.

- Pipe joint compound is a pliable sealer that does not completely harden. This type sealer is used where 2 non-rigid parts, such as the oil pan and the engine block, are assembled together.
- Do not use pipe joint compound in areas where extreme temperatures are expected. These areas include exhaust manifold, head gasket, or other surfaces where gasket eliminator is specified.
- Follow all safety recommendations and directions that are on the container.

To remove the sealant or the gasket material, refer to **Replacing Engine Gaskets** .

NOTE: Refer to Sealant Notice in Cautions and Notices.

- Apply the pipe joint compound to a clean surface. Use a bead size or quantity as specified in the procedure. Run the bead to the inside of any bolt holes.
- Apply a continuous bead of pipe joint compound to one sealing surface. Sealing surfaces to be resealed must be clean and dry.
- Tighten the bolts to specifications. Do not overtighten.

RTV Sealer

- RTV sealant hardens when exposed to air. This type sealer is used where 2 non-rigid parts, such as the intake manifold and the engine block, are assembled together.
- Do not use RTV sealant in areas where extreme temperatures are expected. These areas include exhaust manifold, head gasket, or other surfaces where a gasket eliminator is specified.
- Follow all safety recommendations and directions that are on the container.

To remove the sealant or the gasket material, refer to **Replacing Engine Gaskets** .

NOTE: Refer to Sealant Notice in Cautions and Notices.

- Apply RTV to a clean surface. Use a bead size as specified in the procedure. Run the bead to the inside of any bolt holes.
- Assemble components while RTV is still wet, within 3 minutes. Do not wait for RTV to skin over.
- Tighten bolts to specifications. Do not overtighten.

Anaerobic Sealer

cardiagn.com

- Anaerobic gasket eliminator hardens in the absence of air. This type sealer is used where 2 rigid parts, such as castings, are assembled together. When 2 rigid parts are disassembled and no sealer or gasket is readily noticeable, the parts were probably assembled using a gasket eliminator.
- Follow all safety recommendations and directions that are on the container.

  To remove the sealant or the gasket material, refer to **Replacing Engine Gaskets** .

- Apply a continuous bead of gasket eliminator to one flange. Surfaces to be resealed must be clean and dry.
- Spread the sealer evenly with your finger to get a uniform coating on the sealing surface.

  NOTE: Refer to Sealant Notice in Cautions and Notices.

  IMPORTANT: Anaerobic sealed joints that are partially torqued and allowed to cure more than five minutes may result in incorrect shimming and sealing of the joint.

- Tighten bolts to specifications. Do not overtighten.
- After properly tightening the fasteners, remove the excess sealer from the outside of the joint.

TOOLS AND EQUIPMENT

Special tools are listed and illustrated throughout this section with a complete listing at the end of the section. These tools, or their equivalents, are specially designed to quickly and safely accomplish the operations for which they are intended. The use of these special tools will also minimize possible damage to engine components. Some precision measuring tools are required for inspection of certain critical components. Torque wrenches and a torque angle meter are necessary for the proper tightening of various fasteners.

To properly service the engine assembly, the following items should be readily available:

- Approved eye protection and safety gloves
- A clean, well lit, work area
- A suitable parts cleaning tank
- A compressed air supply
- Trays or storage containers to keep parts and fasteners organized
- An adequate set of hand tools
- Approved engine repair stand
- An approved engine lifting device that will adequately support the weight of the components

SPECIAL TOOLS AND EQUIPMENT

SPECIAL TOOLS

cardiagn.com

Special Tools

Illustration	Tool Number/Description
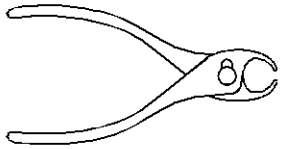	J 3049-A Valve Lifter Remover
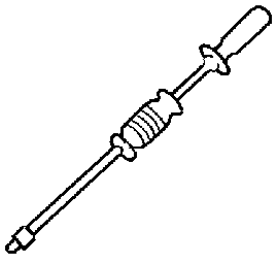	J 6125-1B Slide Hammer
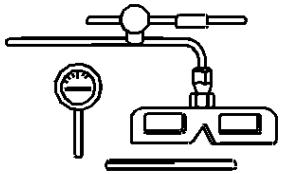	J 7872 Magnetic Base Dial Indicator Set
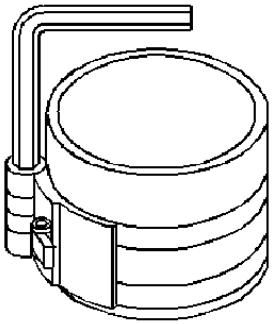	J 8037 Piston Ring Compressor

cardiagn.com

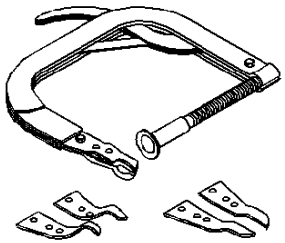	J 8062 Valve Spring Compressor
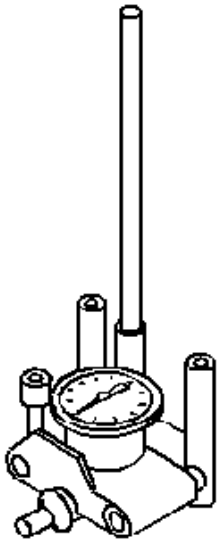	J 8087 Cylinder Bore Gage
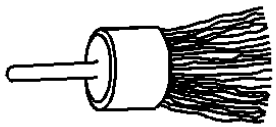	J 8089 Carbon Removing Brush
	J 8433-1 Puller Bar

cardiagn.com

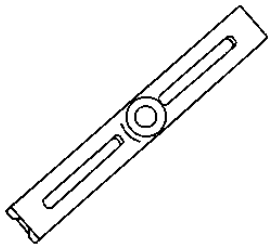	
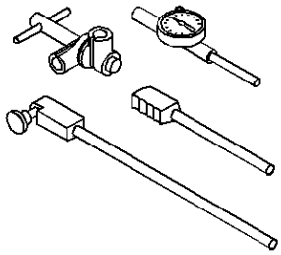	J 8520 Cam Lobe Lift Indicator
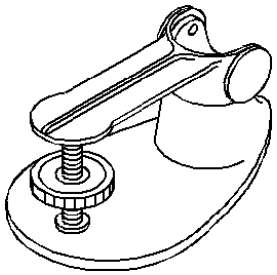	J 9666 Valve Spring Tester
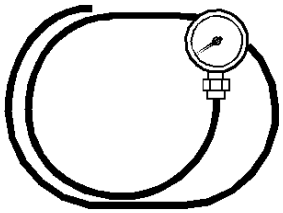	J 21867 Pressure Gage

cardiagn.com

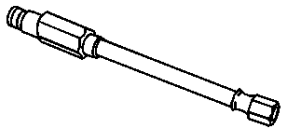	J 22794 Spark Plug Port Adapter
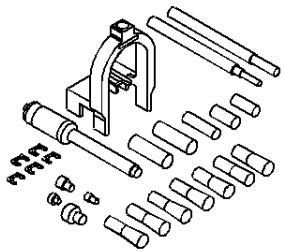	J 24086-C Piston Pin Remover/Installer Set
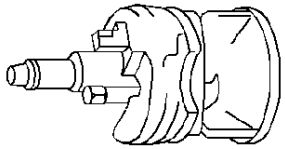	J 24270 Cylinder Bore Ridge Reamer
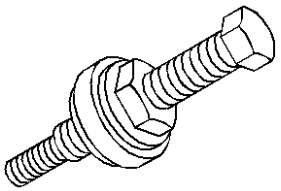	J 25033-C Power Steering Pump Pulley Installer
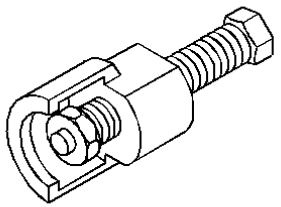	J 25034-C Power Steering Pump Pulley Remover

cardiagn.com

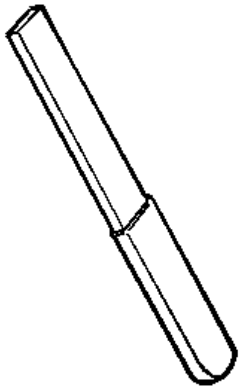	J 28410 Gasket Remover
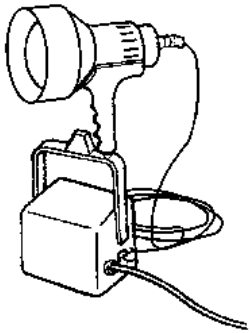	J 28428-E Leak Detector Kit
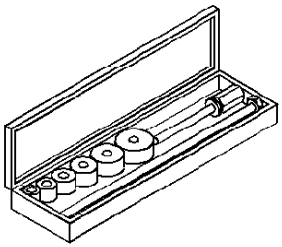	J 33049 Camshaft Bearing Service Set

cardiagn.com

	J 35667-A Cylinder Leakdown Tester
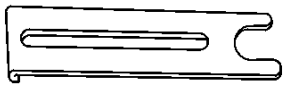	J 36221 Hydraulic Clutch Line Separator
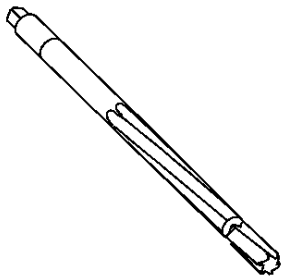	J 37378-1 Valve Guide Reamer
	J 38606 Valve Spring Compressor - Head On-Vehicle

cardiagn.com

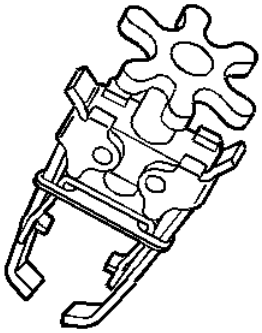	
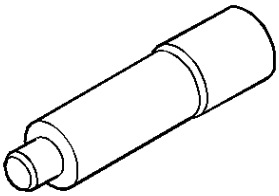	J 38836 Pilot Bushing Installer/Clutch
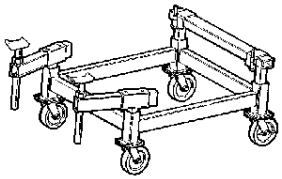	J 39580 Engine Support Table
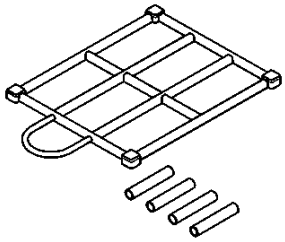	J 39580-500 Engine Support Table Top

cardiagn.com

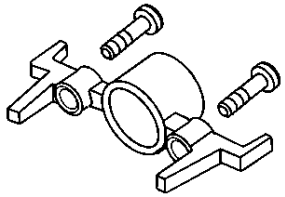	J 41476 Front and Rear Cover Alignment - at Crankshaft Seal Area
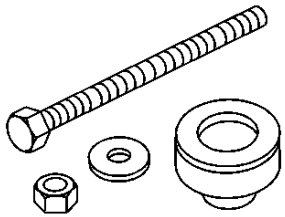	J 41478 Crankshaft Front Oil Seal Installer
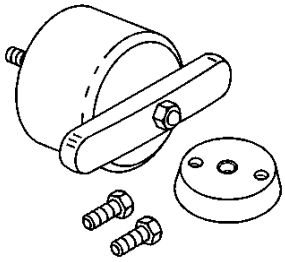	J 41479 Crankshaft Rear Oil Seal Installer
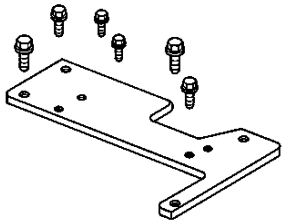	J 41480 Front and Rear Cover Alignment - at Oil Pan Surface
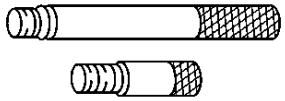	J 41556 Connecting Rod Guide

cardiagn.com

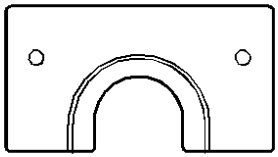	J 41558 Crankshaft Sprocket Remover
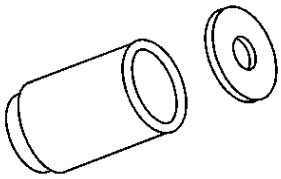	J 41665 Crankshaft Balancer and Sprocket Installer
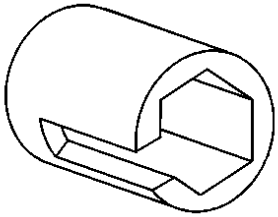	J 41712 Oil Pressure Switch Socket
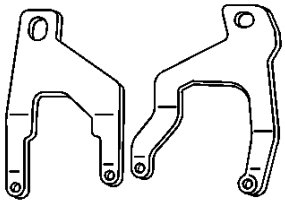	J 41798 Engine Lifting Brackets
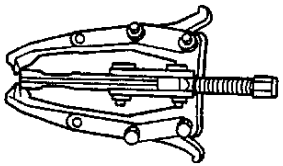	J 41816 Crankshaft Balancer Remover

cardiagn.com

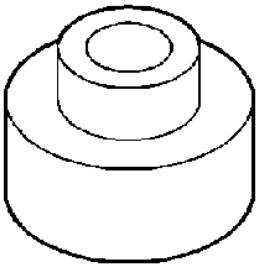	J 41816-2 Crankshaft End Protector
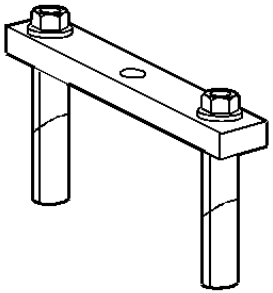	J 41818 Crankshaft Bearing Cap Remover
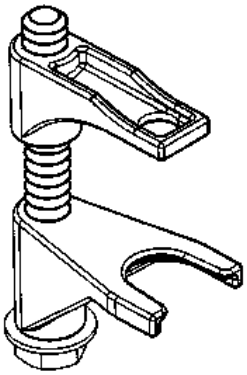	J 42188 Ball Joint Separator
	J 42203 Driveline Support

cardiagn.com

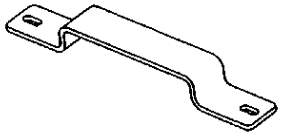	
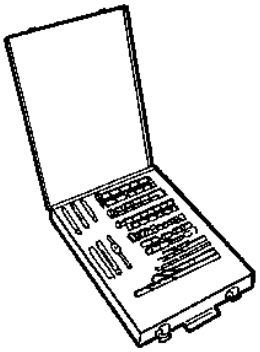	J 42385-100 Head/Main Bolt Thread Repair Kit
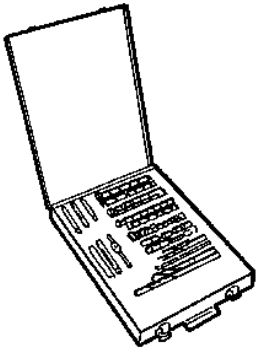	J 42385-200 Common Thread Repair Kit
	J 42385-300 Fixtures and Hardware Kit

cardiagn.com

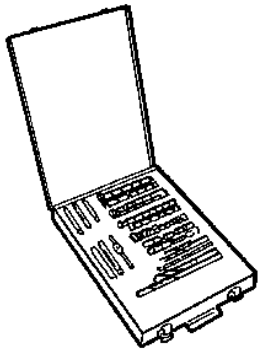	
	J 42386-A Flywheel Holding Tool
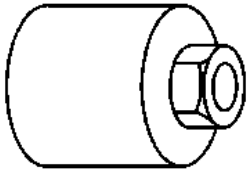	J 42907 Oil Pressure Testing Tool
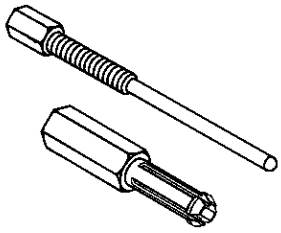	J 43276 Clutch Pilot Bearing Remover

cardiagn.com

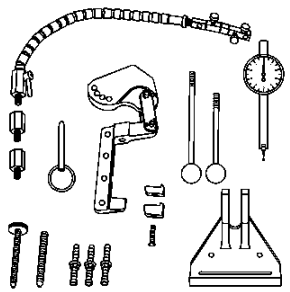	J 43690 Rod Bearing Checking Tool
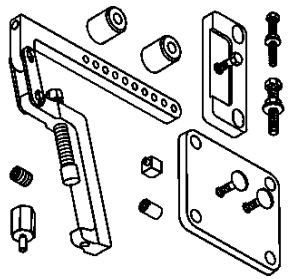	J 43690-100 Rod Bearing Checking Tool - Adapter Kit
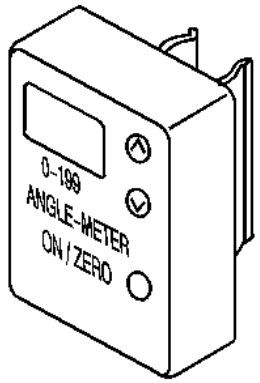	J 45059 Angle Meter

cardiagn.com

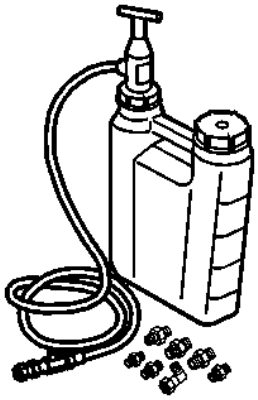	J 45299 Engine Preluber

cardiagn.com

REPAIR INSTRUCTIONS

DRIVE BELT REPLACEMENT - ACCESSORY

Removal Procedure

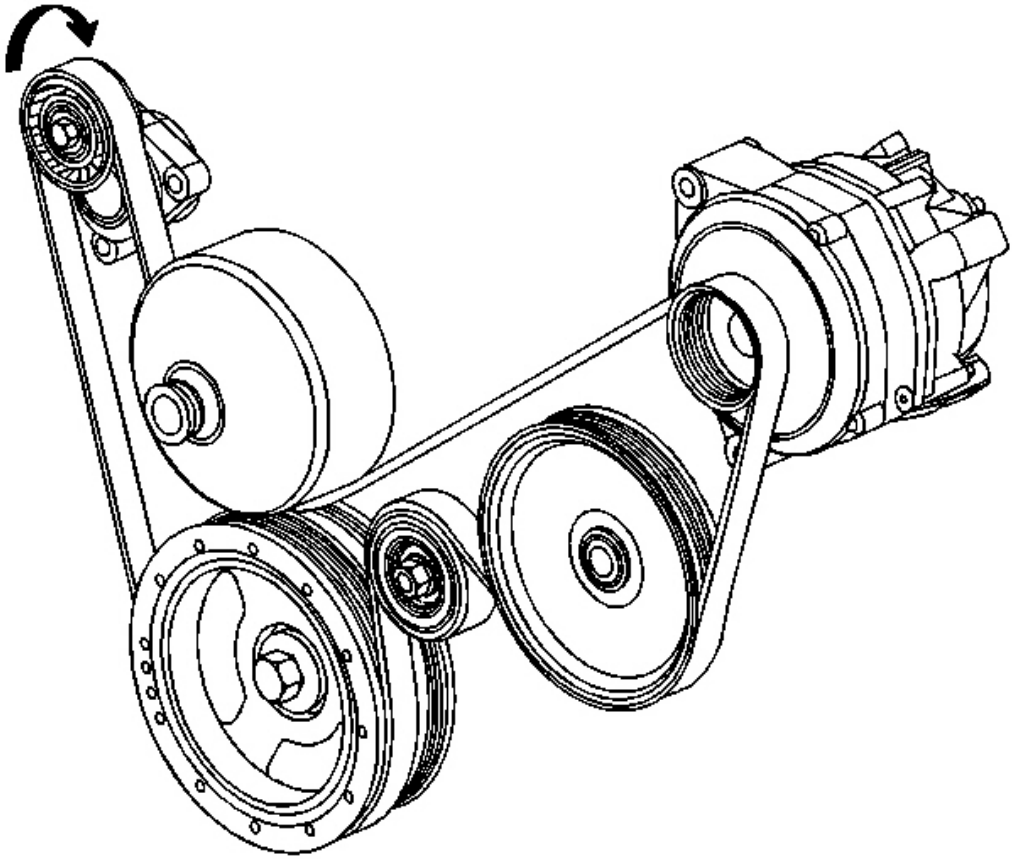

Fig. 1: Accessory Drive Belt
Courtesy of GENERAL MOTORS CORP.

1. Remove the air intake duct, if necessary. Refer to **Air Cleaner Assembly Replacement** in Engine Controls - 5.7 L.

cardiagn.com

2. Install a breaker bar with hex-head socket to the drive belt tensioner bolt.
3. Rotate the drive belt tensioner clockwise in order to relieve tension on the accessory drive belt.
4. Remove the accessory drive belt from the pulleys and tensioner.
5. Slowly release tension on the drive belt tensioner.
6. Remove the breaker bar and socket from the drive belt tensioner bolt.
7. Clean and inspect the drive belt surfaces of all the pulleys.

Installation Procedure

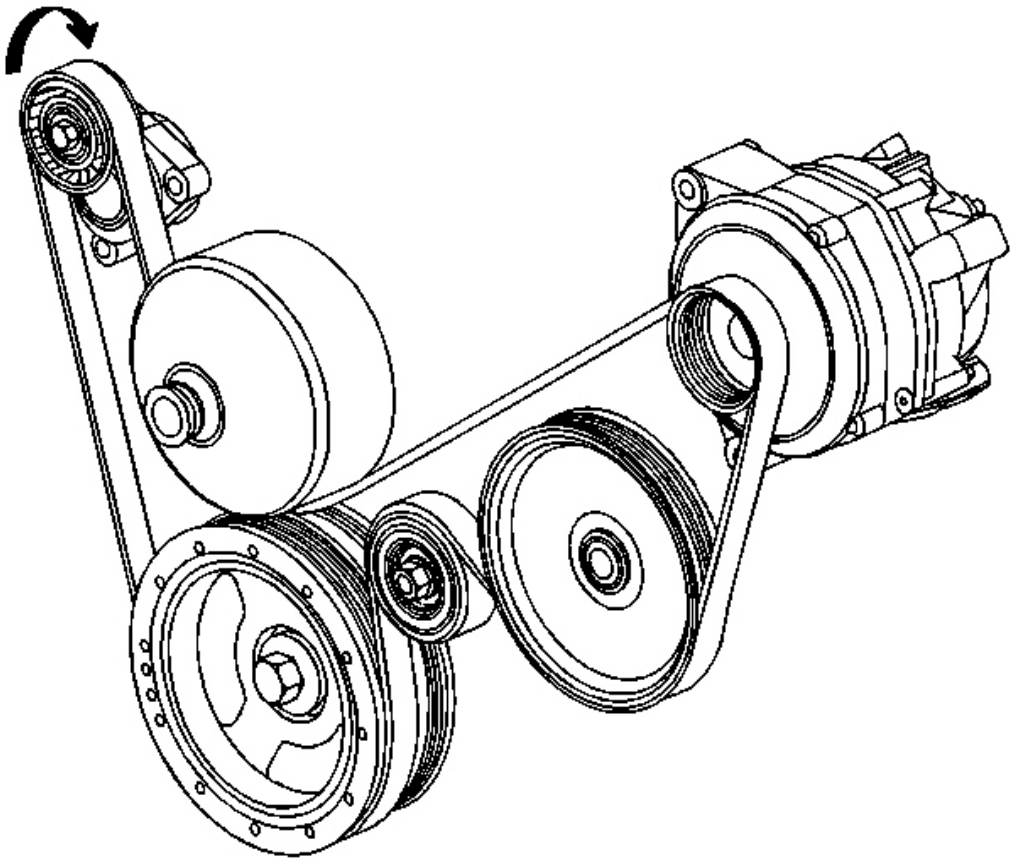

Fig. 2: Accessory Drive Belt
Courtesy of GENERAL MOTORS CORP.

1. Route the accessory drive belt around all the pulleys except the water pump pulley and tensioner.
2. Install a breaker bar with hex-head socket to the drive belt tensioner bolt.

cardiagn.com

3. Rotate the drive belt tensioner clockwise in order to relieve tension on the drive belt tensioner.
4. Install the accessory drive belt under the water pump pulley.
5. Install the accessory drive belt onto the drive belt tensioner.
6. Slowly release the tension.
7. Remove the breaker bar and socket from the drive belt tensioner bolt.
8. Install the air intake duct, if necessary. Refer to **Air Cleaner Assembly Replacement** in Engine Controls - 5.7 L.
9. Inspect the accessory drive belt for correct alignment.

DRIVE BELT REPLACEMENT - AIR CONDITIONING

Removal Procedure

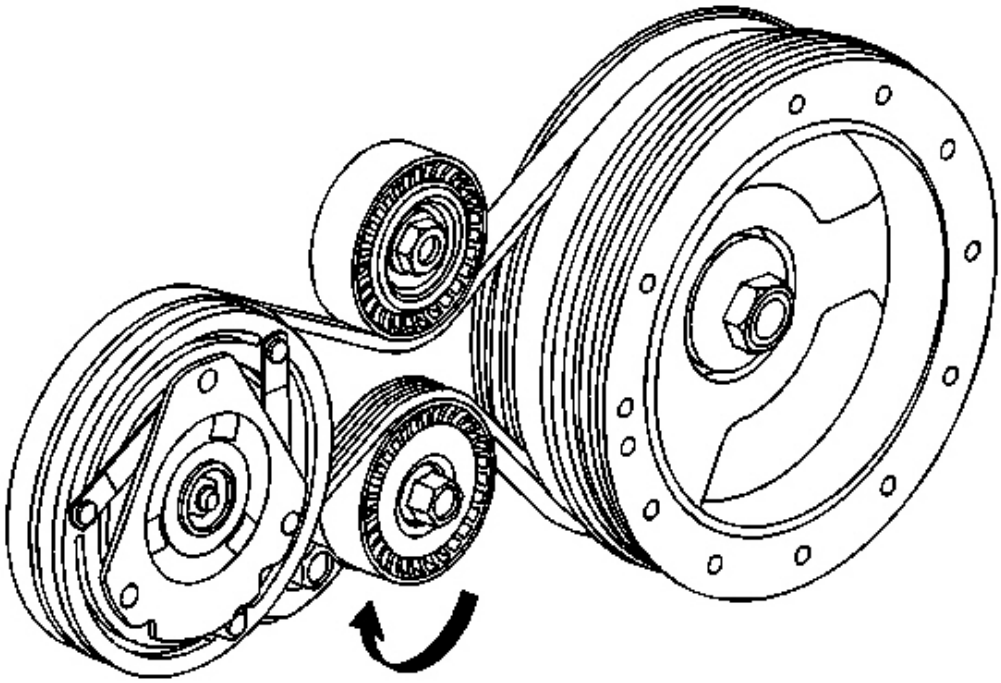

Fig. 3: Accessory Drive Belt & Breaker Bar
Courtesy of GENERAL MOTORS CORP.

1. Remove the accessory drive belt. Refer to **Drive Belt Replacement - Accessory** .
2. Install a breaker bar with hex-head socket to the air conditioning (A/C) drive belt tensioner bolt.

cardiagn.com

3. Rotate the A/C drive belt tensioner clockwise in order to relieve tension on the drive belt.
4. Remove the A/C drive belt from the pulleys.
5. Slowly release tension on the A/C drive belt tensioner.
6. Remove the breaker bar and socket from the A/C drive belt tensioner bolt.
7. Clean and inspect the drive belt surfaces of the pulleys.

Installation Procedure

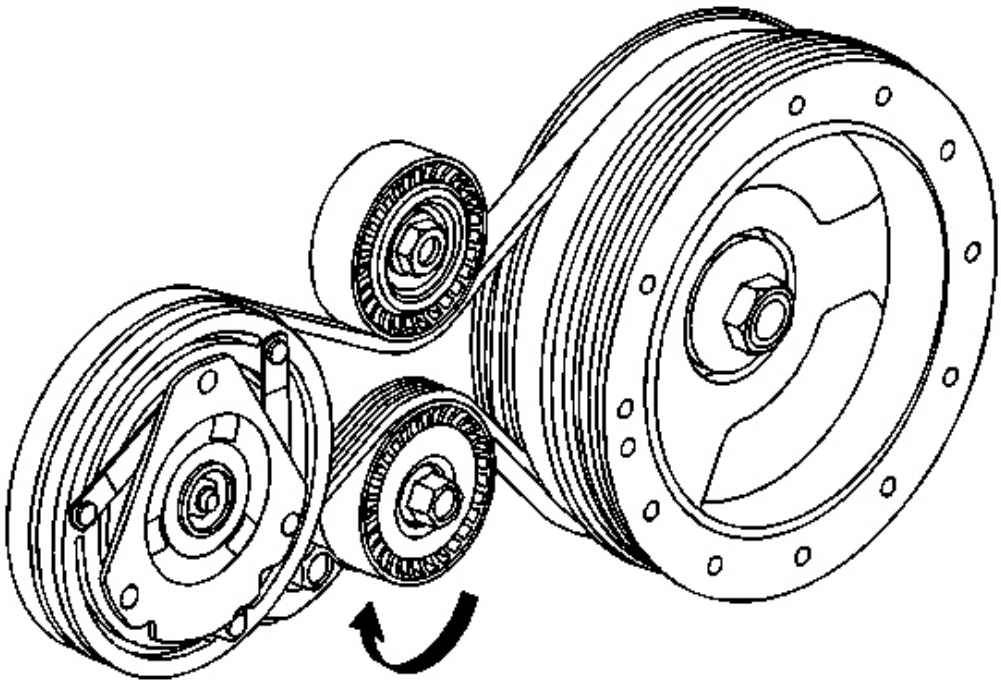

Fig. 4: Accessory Drive Belt & Breaker Bar
Courtesy of GENERAL MOTORS CORP.

1. Install the A/C drive belt around the crankshaft balancer.
2. Install a breaker bar with hex-head socket to the A/C drive belt tensioner bolt.
3. Rotate the A/C drive belt tensioner clockwise in order to relieve tension on drive belt tensioner.
4. Install the A/C drive belt under the idler pulley.
5. Install the A/C drive belt over the A/C compressor pulley.
6. Slowly release tension on the A/C belt tensioner.

cardiagn.com

7. Remove the breaker bar and socket from the A/C drive belt tensioner bolt.
8. Inspect the A/C drive belt for correct alignment.
9. Install the accessory drive belt. Refer to **Drive Belt Replacement - Accessory** .

DRIVE BELT IDLER PULLEY REPLACEMENT - ACCESSORY

Removal Procedure

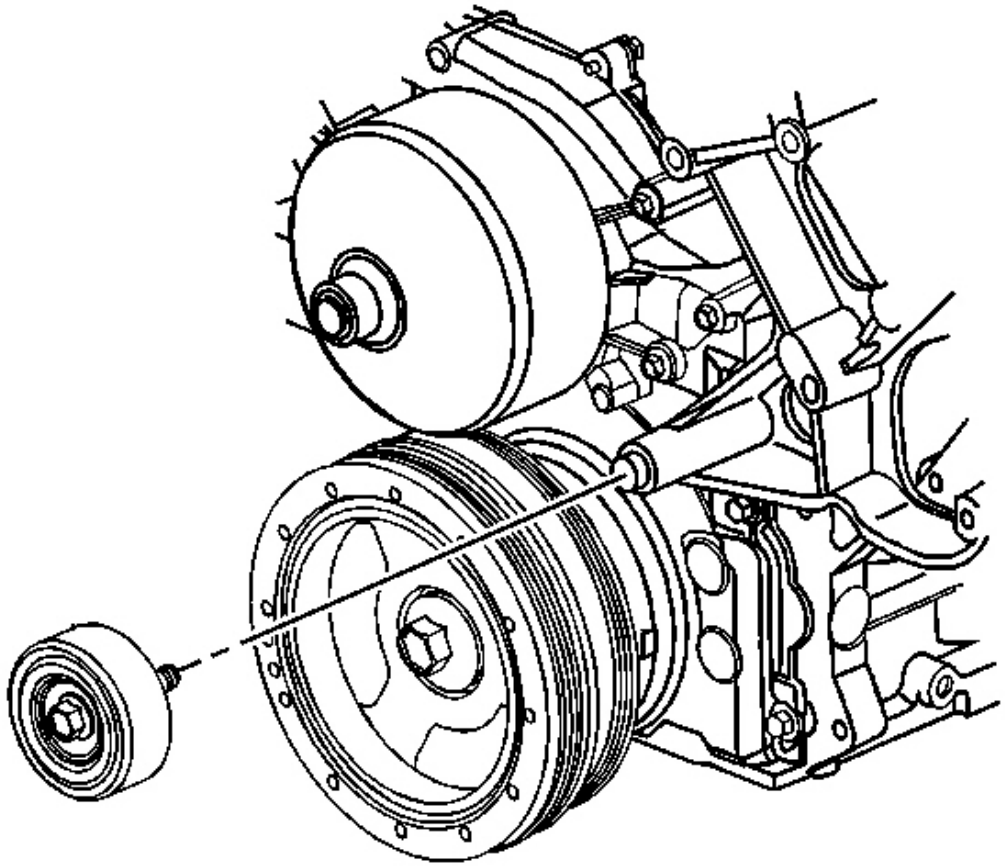

Fig. 5: Accessory Drive Belt Idler Pulley Bolt
Courtesy of GENERAL MOTORS CORP.

1. Loosen the accessory drive belt idler pulley bolt.
2. Remove the accessory drive belt. Refer to **Drive Belt Replacement - Accessory** .
3. Remove the accessory drive belt idler pulley.

cardiagn.com

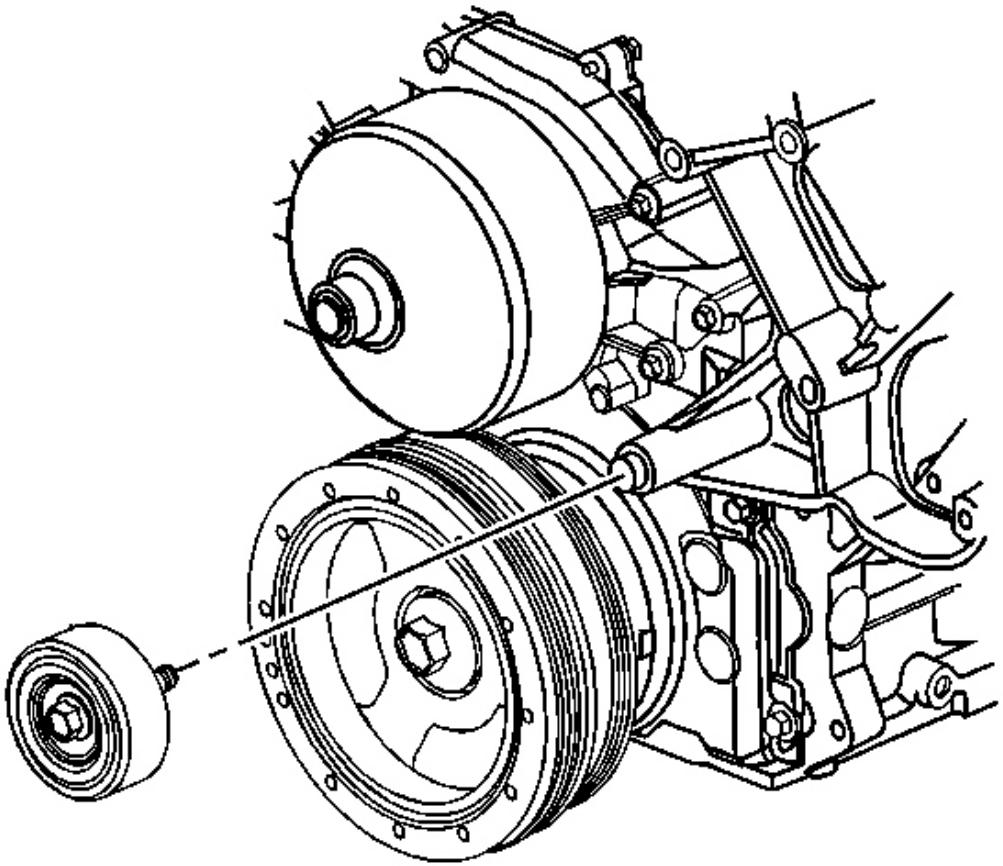

Fig. 6: Accessory Drive Belt Idler Pulley Bolt
Courtesy of GENERAL MOTORS CORP.

IMPORTANT: Ensure that the idler pulley and dust shield are fully seated against the shoulder on the bracket before tightening the bolt.

1. Install the accessory drive belt idler pulley bolt until snug.
2. Install the accessory drive belt. Refer to **Drive Belt Replacement - Accessory** .

CAUTION: Refer to Battery Disconnect Caution in Cautions and Notices.

cardiagn.com

3. Tighten the accessory drive belt idler pulley bolt.

   Tighten: Tighten the accessory drive belt idler pulley bolt to 50 N.m (37 lb ft).

DRIVE BELT IDLER PULLEY REPLACEMENT - AIR CONDITIONING

Removal Procedure

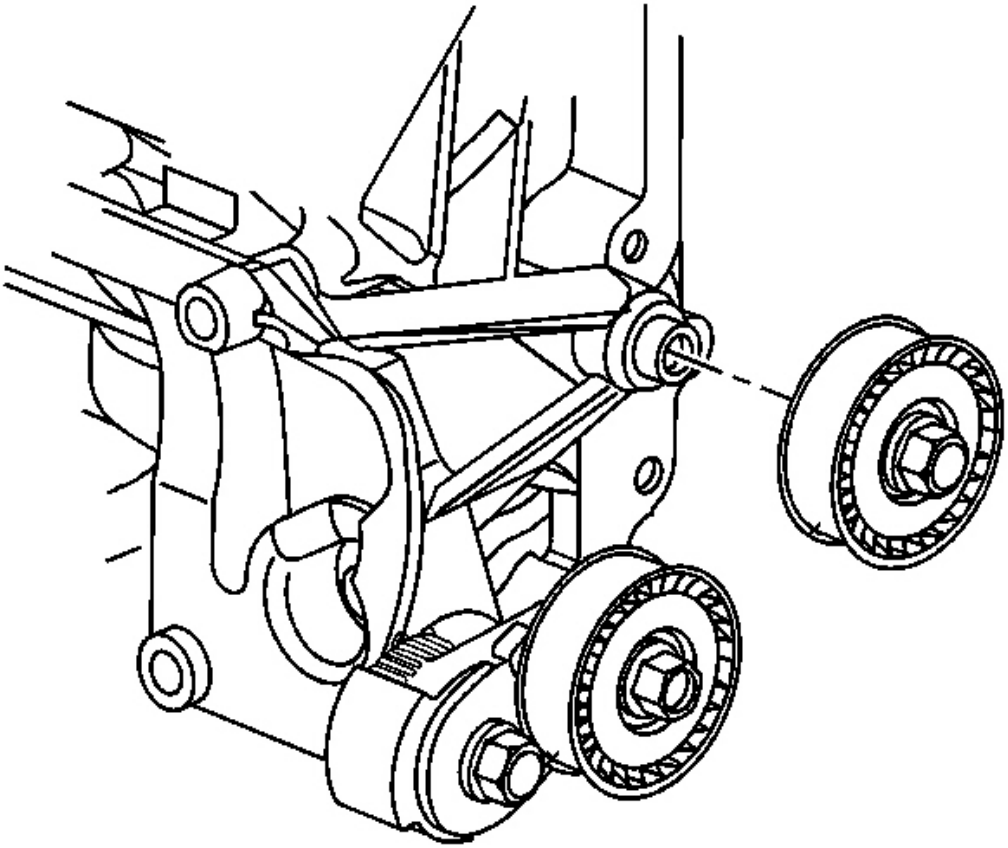

Fig. 7: A/C Drive Belt Idler Pulley
Courtesy of GENERAL MOTORS CORP.

1. Loosen the air conditioning (A/C) drive belt idler pulley bolt.
2. Remove the A/C drive belt. Refer to **Drive Belt Replacement - Air Conditioning** .
3. Remove the A/C drive belt idler pulley.

cardiagn.com

Installation Procedure

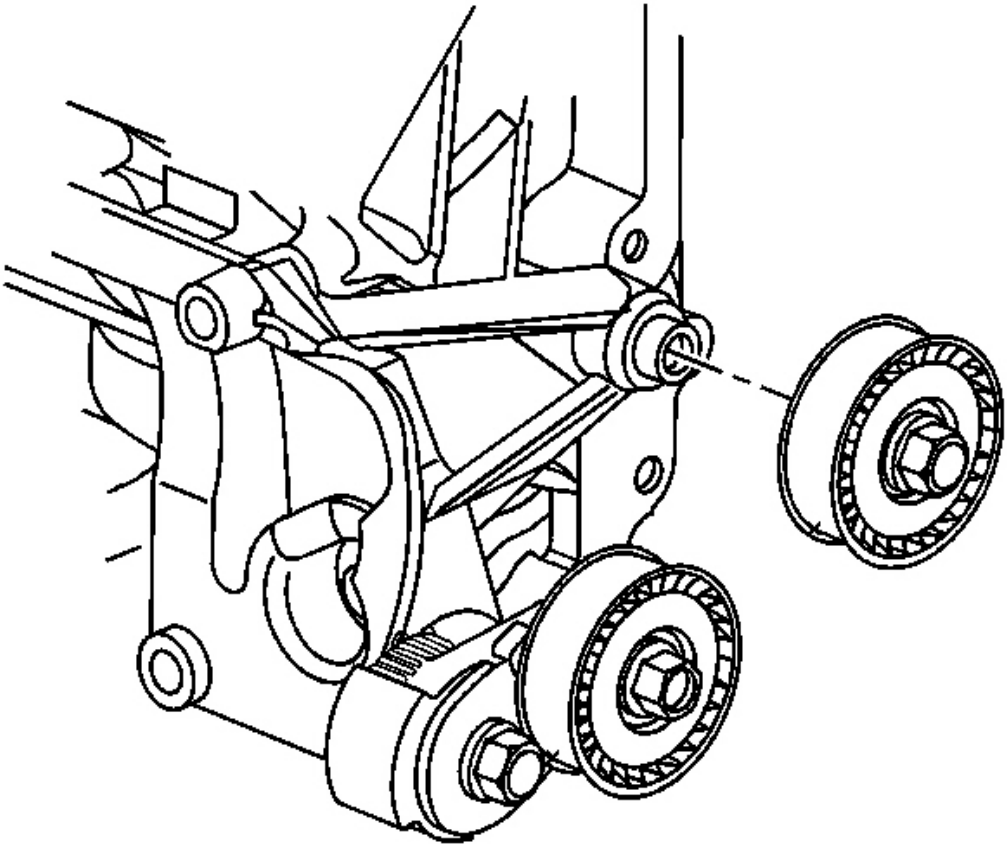

Fig. 8: A/C Drive Belt Idler Pulley
Courtesy of GENERAL MOTORS CORP.

1. Install the idler pulley bolt.
2. Install the A/C drive belt idler pulley bolt until snug.

IMPORTANT: Ensure that the idler pulley is fully seated against the shoulder on the bracket before tightening the bolt.

3. Install the A/C drive belt. Refer to **Drive Belt Replacement - Air Conditioning** .

NOTE: Refer to Fastener Notice in Cautions and Notices.

cardiagn.com

4. Tighten the A/C drive belt idler pulley bolt.

   Tighten: Tighten the A/C drive belt idler pulley bolt to 50 N.m (37 lb ft).

DRIVE BELT TENSIONER REPLACEMENT - ACCESSORY

Removal Procedure

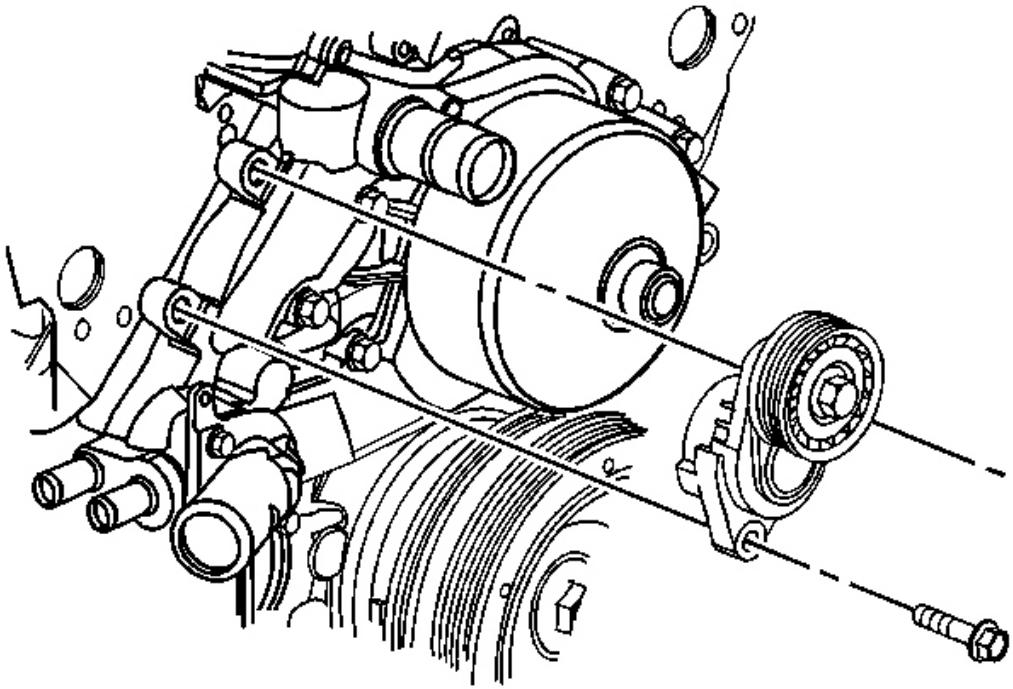

Fig. 9: Accessory Drive Belt Tensioner & Bolts
Courtesy of GENERAL MOTORS CORP.

1. Remove the accessory drive belt. Refer to **Drive Belt Replacement - Accessory** .
2. Remove the accessory drive belt tensioner bolts.
3. Remove the accessory drive belt tensioner.

Installation Procedure

cardiagn.com

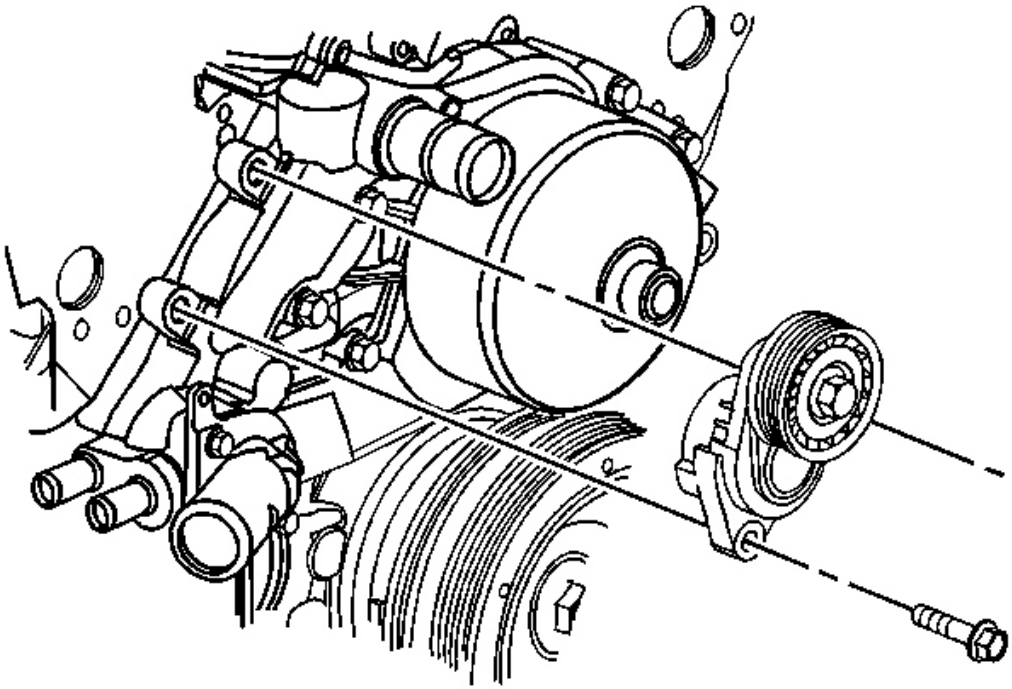

Fig. 10: Accessory Drive Belt Tensioner & Bolts
Courtesy of GENERAL MOTORS CORP.

NOTE: Refer to Fastener Notice in Cautions and Notices.

1. Install the accessory drive belt tensioner.
2. Install the accessory drive belt tensioner bolts.

   Tighten: Tighten the accessory drive belt tensioner bolts to 50 N.m (37 lb ft) starting with the lower bolt first.

3. Install the accessory drive belt. Refer to **Drive Belt Replacement - Accessory** .

DRIVE BELT TENSIONER REPLACEMENT - AIR CONDITIONING

Removal Procedure

cardiagn.com

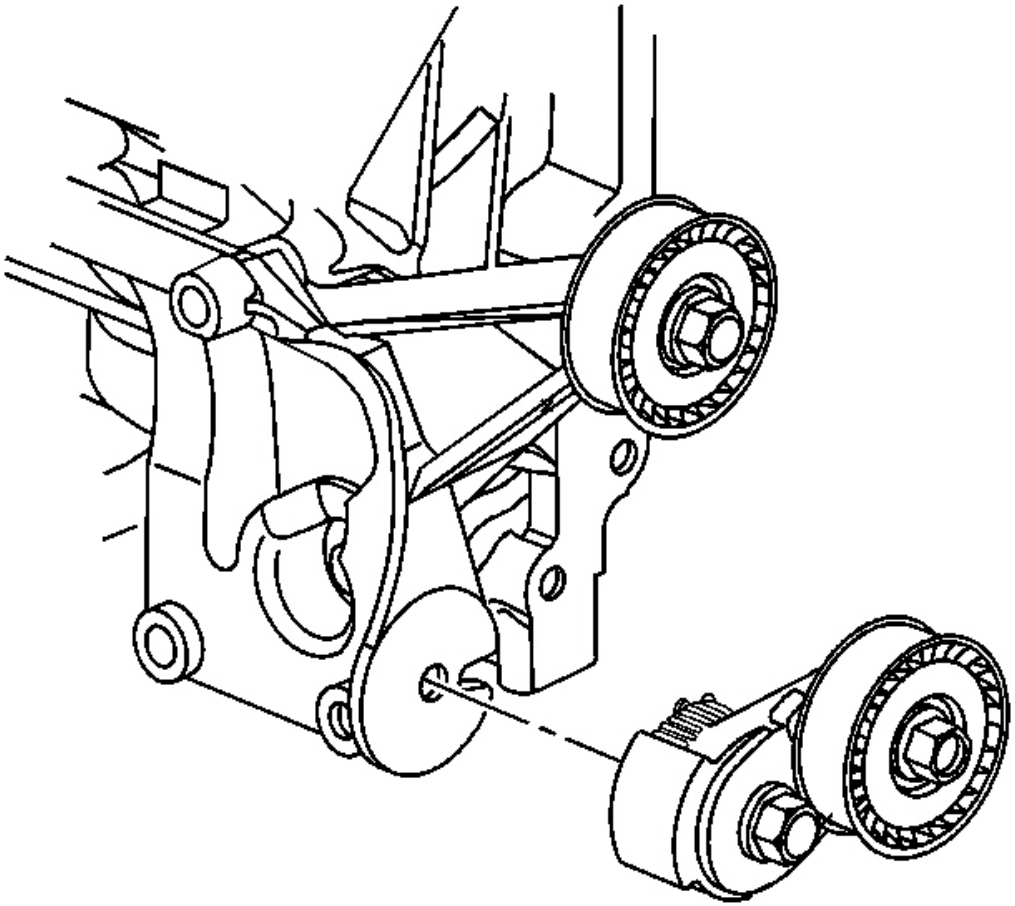

Fig. 11: A/C Drive Belt Tensioner
Courtesy of GENERAL MOTORS CORP.

1. Remove the air conditioning (A/C) drive belt. Refer to **Drive Belt Replacement - Air Conditioning** .
2. Raise and suitably support the vehicle. Refer to **Lifting and Jacking the Vehicle** in General Information.
3. Loosen the A/C drive belt tensioner bolt.
4. Remove the A/C drive belt tensioner.

Installation Procedure

cardiagn.com

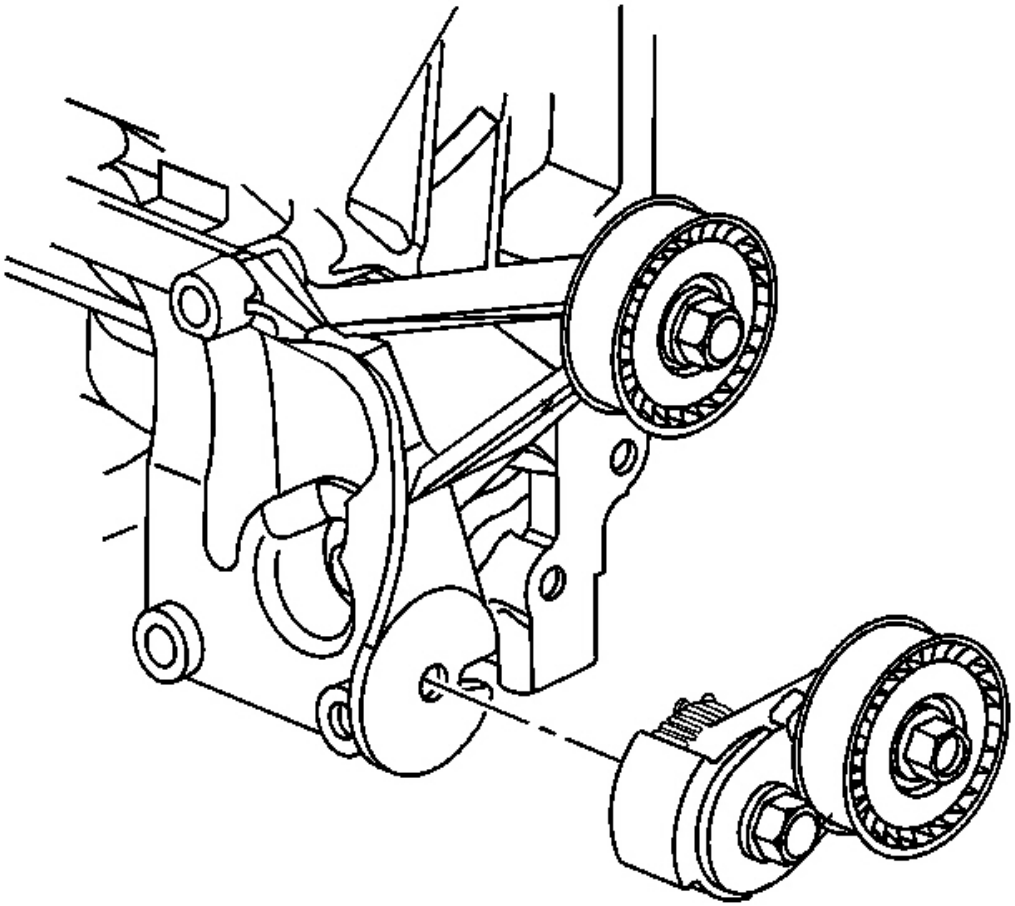

Fig. 12: A/C Drive Belt Tensioner
Courtesy of GENERAL MOTORS CORP.

1. Install the A/C drive belt tensioner.

NOTE: **Refer to Fastener Notice in Cautions and Notices.**

2. Tighten the A/C drive belt tensioner bolt.

   Tighten: Tighten the A/C drive belt tensioner bolt to 50 N.m (37 lb ft).

3. Lower the vehicle.
4. Install the A/C drive belt. Refer to **Drive Belt Replacement - Air Conditioning** .

cardiagn.com

ENGINE MOUNT INSPECTION

NOTE: **Broken or deteriorated mounts can cause misalignment and destruction of certain drive train components. When a single mount breaks, the remaining mounts are subjected to abnormally high stresses.**

NOTE: **When raising or supporting the engine for any reason, do not use a jack under the oil pan, any sheet metal, or the crankshaft pulley. Due to the small clearance between the oil pan and the oil pump screw, jacking against the oil pan may cause the pan to be bent against the pump screw. This will result in a damaged oil pickup unit.**

1. Measure the engine movement at the engine mount in order to check for damage to the rubber portions of the mount.
    1. Apply the park brake.
    2. Start the engine.
    3. Firmly apply and hold the primary brakes.
    4. Have an assistant stand to the side of the vehicle in order to observe for engine movement.
    5. Slightly load the engine shifting from drive to reverse a few times.
    6. If the engine moves more than 24 mm (0.945 in) from the at rest position, in either direction, check for loose engine mount or engine mount bracket attachments.
2. If the engine mount and engine mount bracket bolt torque is at specifications, check the condition of the engine mount.
3. Replace the engine mount if any of the following conditions exist:
    - Heat check cracks cover the rubber cushion surface.
    - The rubber cushion is separated from the metal plate of the mount.
    - There is a split through the rubber cushion.

ENGINE MOUNT BRACKET REPLACEMENT - LEFT

Removal Procedure

cardiagn.com

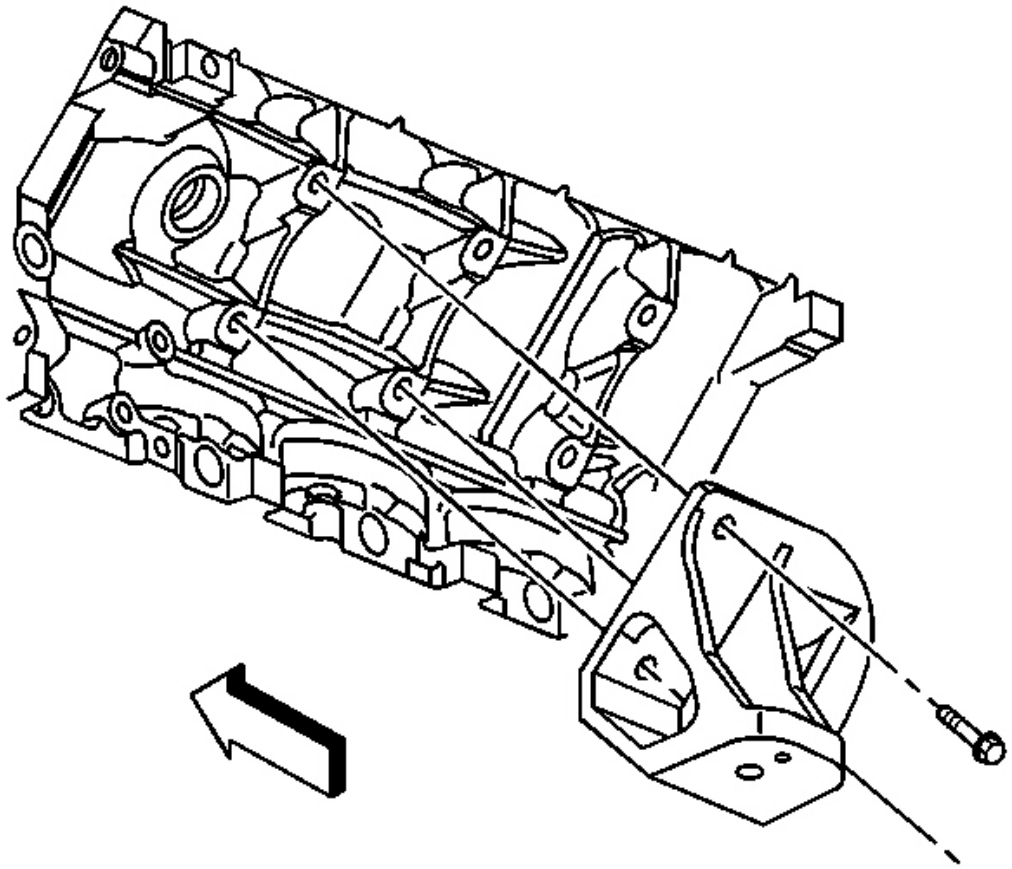

Fig. 13: Left Engine Mount Bracket & Bolts
Courtesy of GENERAL MOTORS CORP.

1. Remove the left engine mount. Refer to **Engine Mount Replacement - Left** .
2. Remove the engine mount bracket bolts.
3. Remove the engine mount bracket.

Installation Procedure

cardiagn.com

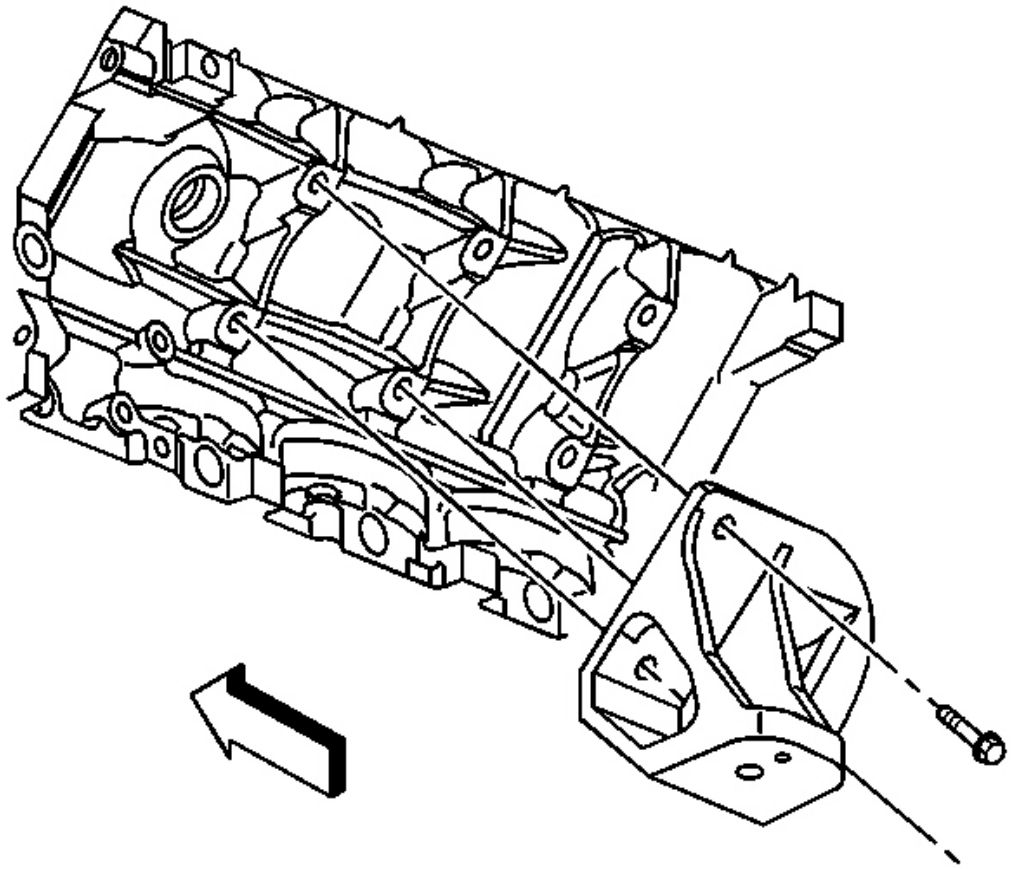

Fig. 14: Left Engine Mount Bracket & Bolts
Courtesy of GENERAL MOTORS CORP.

NOTE: Refer to Fastener Notice in Cautions and Notices.

1. Install the engine mount bracket.
2. Install the engine mount bracket bolts.

   Tighten: Tighten the engine mount bracket bolts to 50 N.m (37 lb ft).

3. Install the left engine mount. Refer to **Engine Mount Replacement - Left** .

ENGINE MOUNT BRACKET REPLACEMENT - RIGHT

Removal Procedure

cardiagn.com

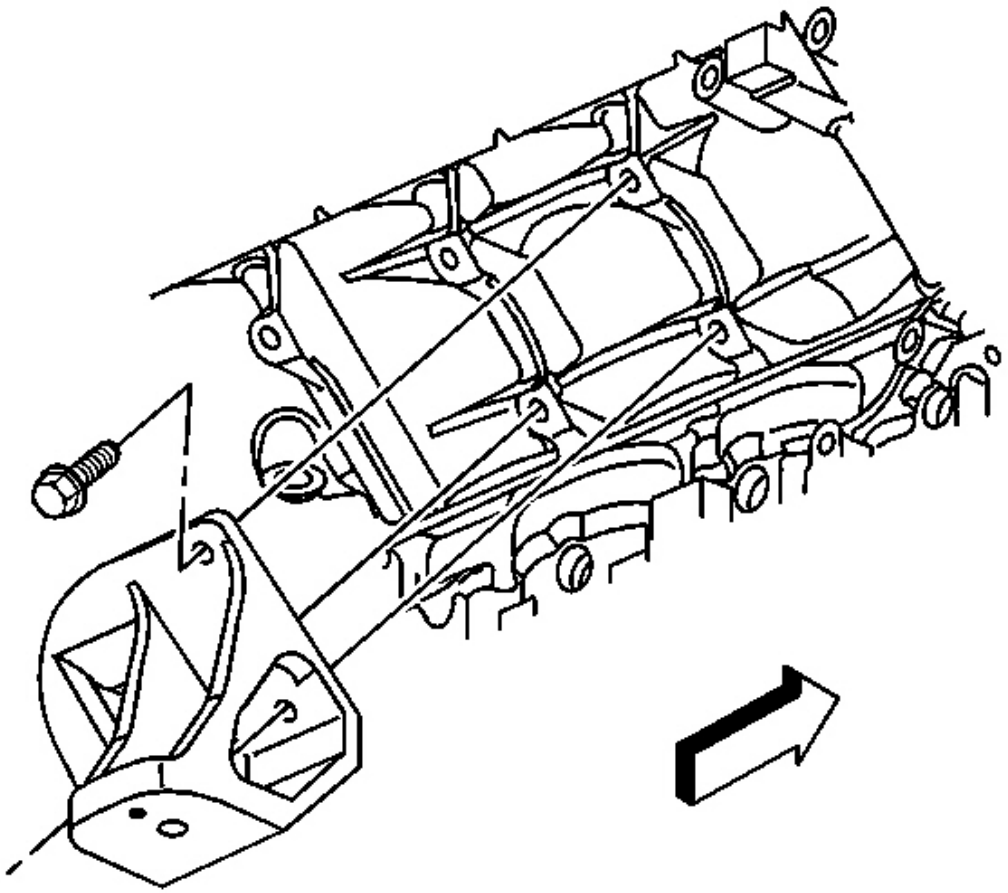

Fig. 15: Right Engine Mount Bracket & Bolts
Courtesy of GENERAL MOTORS CORP.

1. Remove the right engine mount. Refer to **Engine Mount Replacement - Right** .
2. Remove the engine mount bracket bolts.
3. Remove the engine mount bracket.

Installation Procedure

cardiagn.com

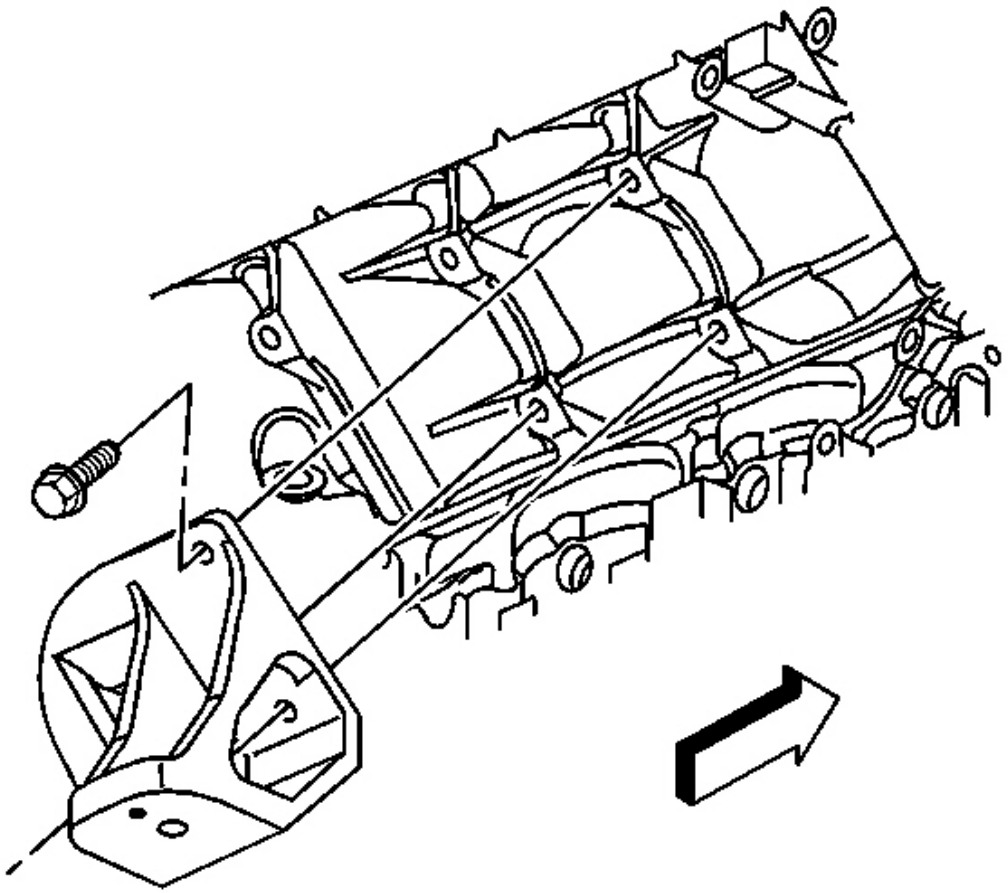

Fig. 16: Right Engine Mount Bracket & Bolts
Courtesy of GENERAL MOTORS CORP.

NOTE: Refer to Fastener Notice in Cautions and Notices.

1. Install the engine mount bracket.
2. Install the engine mount bracket bolts.

   Tighten: Tighten the engine mount bracket bolts to 50 N.m (37 lb ft).

3. Install the right engine mount. Refer to **Engine Mount Replacement - Right** .

ENGINE MOUNT REPLACEMENT - LEFT

cardiagn.com

Removal Procedure

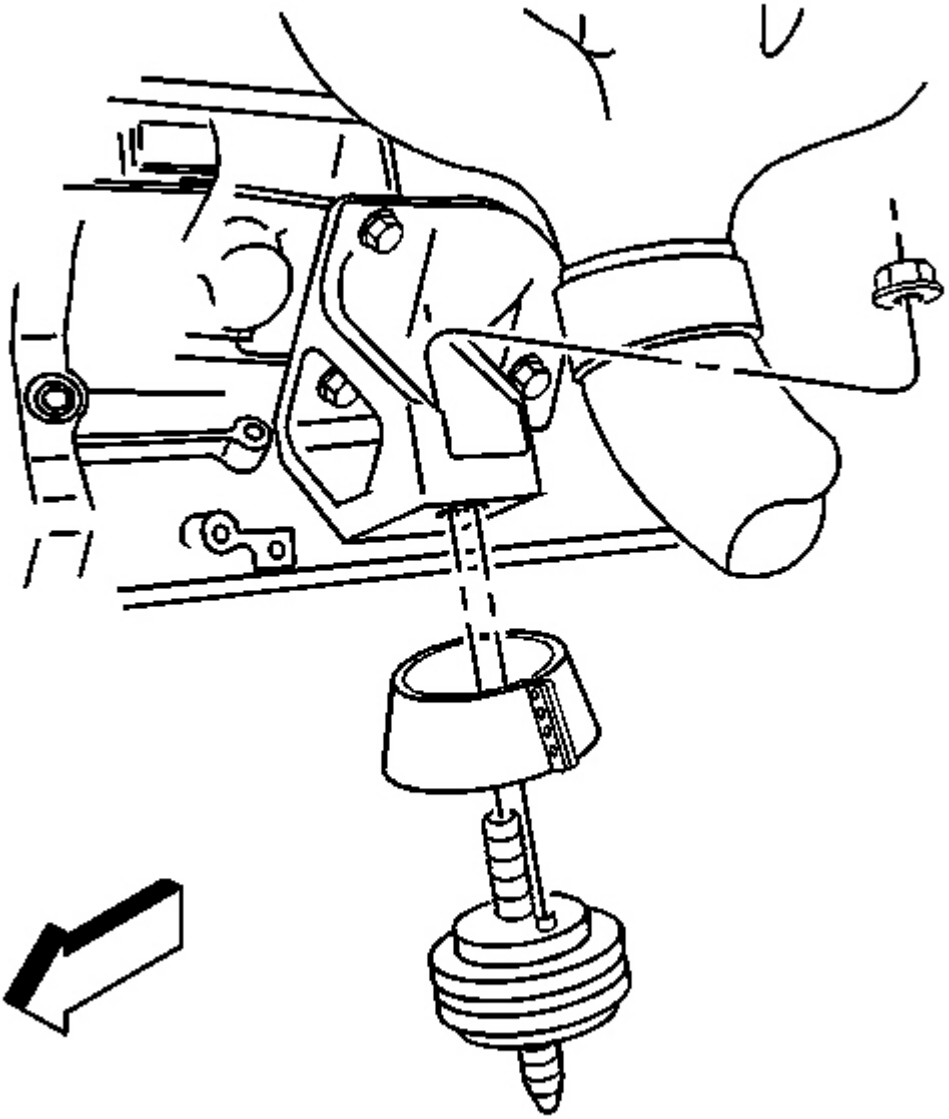

Fig. 17: Engine Mount-To-Engine Mount Bracket & Nuts
Courtesy of GENERAL MOTORS CORP.

1. Remove the front suspension crossmember. Refer to **Crossmember Replacement - Front Suspension** in Front Suspension.

cardiagn.com

2. Remove the engine mount-to-engine mount bracket nut.
3. Remove the engine mount.
4. Remove the engine mount heat shield from the engine mount, if necessary.

Installation Procedure

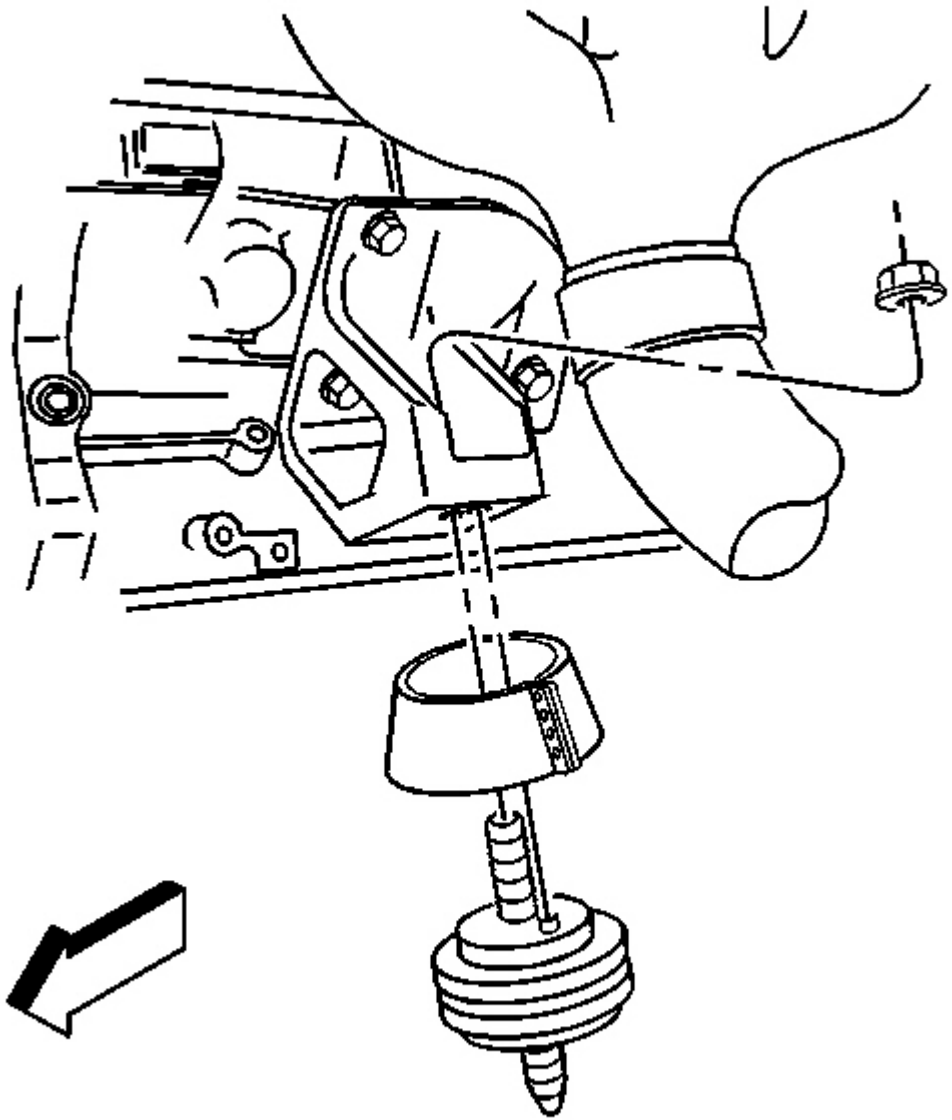

Fig. 18: Engine Mount-To-Engine Mount Bracket & Nuts

cardiagn.com

Courtesy of GENERAL MOTORS CORP.

1. Install the engine mount heat shield to the engine mount, if necessary.
2. Install the engine mount.

NOTE: Refer to Fastener Notice in Cautions and Notices.

3. Install the engine mount-to-engine mount bracket nut.

   Tighten: Tighten the nut to 65 N.m (48 lb ft).

4. Install the front suspension crossmember. Refer to **Crossmember Replacement - Front Suspension** in Front Suspension.

ENGINE MOUNT REPLACEMENT - RIGHT

Removal Procedure

cardiagn.com

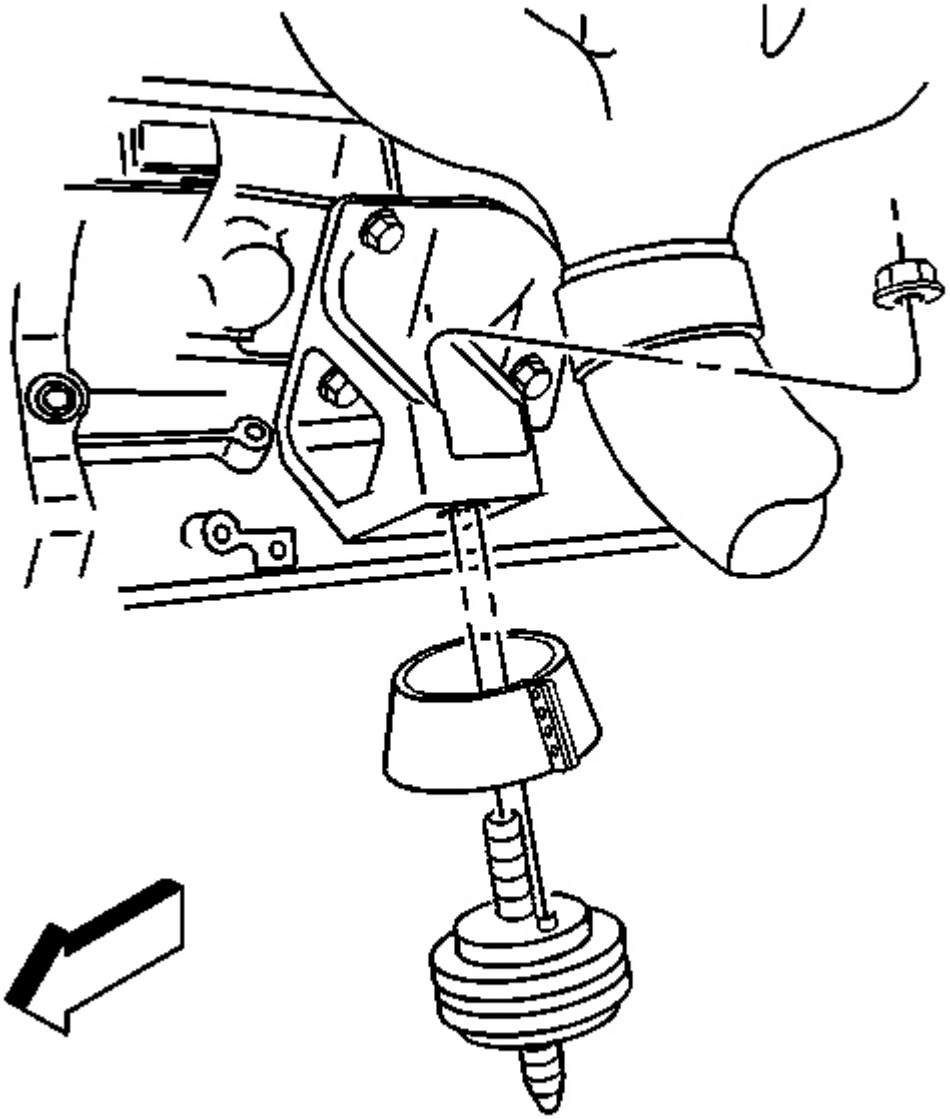

Fig. 19: Engine Mount-To-Engine Mount Bracket & Nuts
Courtesy of GENERAL MOTORS CORP.

1. Remove the front suspension crossmember. Refer to **Crossmember Replacement - Front Suspension** in Front Suspension.
2. Remove the engine mount-to-engine mount bracket nut.
3. Remove the engine mount (left side shown, right side similar).

cardiagn.com

4. Remove the engine mount heat shield from the engine mount, if necessary.

Installation Procedure

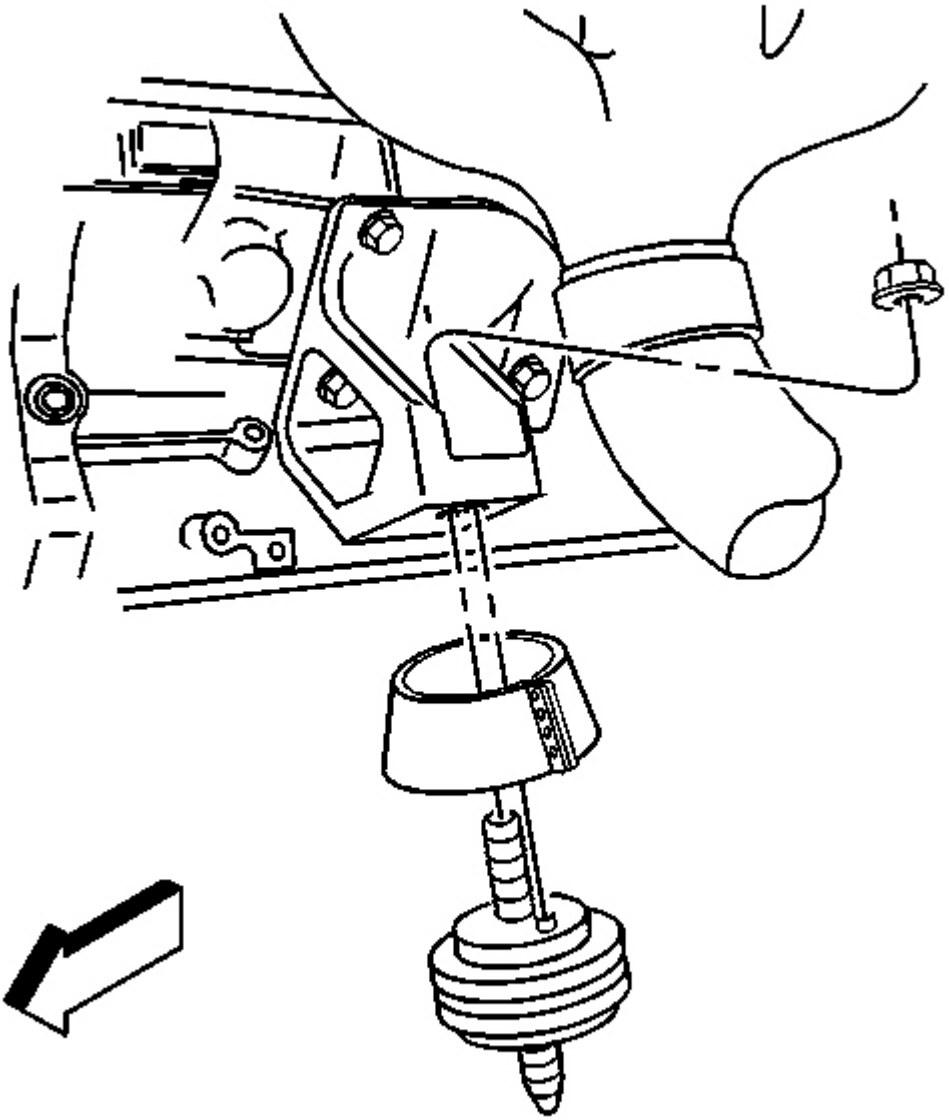

Fig. 20: Engine Mount-To-Engine Mount Bracket & Nuts
Courtesy of GENERAL MOTORS CORP.

cardiagn.com

1. Install the engine mount heat shield to the engine mount, if necessary.

IMPORTANT: When installing the engine mount be sure to have the locating dowel in the correct position.

NOTE: Refer to Fastener Notice in Cautions and Notices.

2. Install the engine mount (left side shown, right side similar).
3. Install the engine mount-to-engine mount bracket nut.

   Tighten: Tighten the engine mount-to-engine mount bracket nut to 65 N.m (48 lb ft).

4. Install the front suspension crossmember. Refer to **Crossmember Replacement - Front Suspension** in Front Suspension.

POSITIVE CRANKCASE VENTILATION (PCV) VALVE REPLACEMENT (LS1 ENGINE)

Removal Procedure

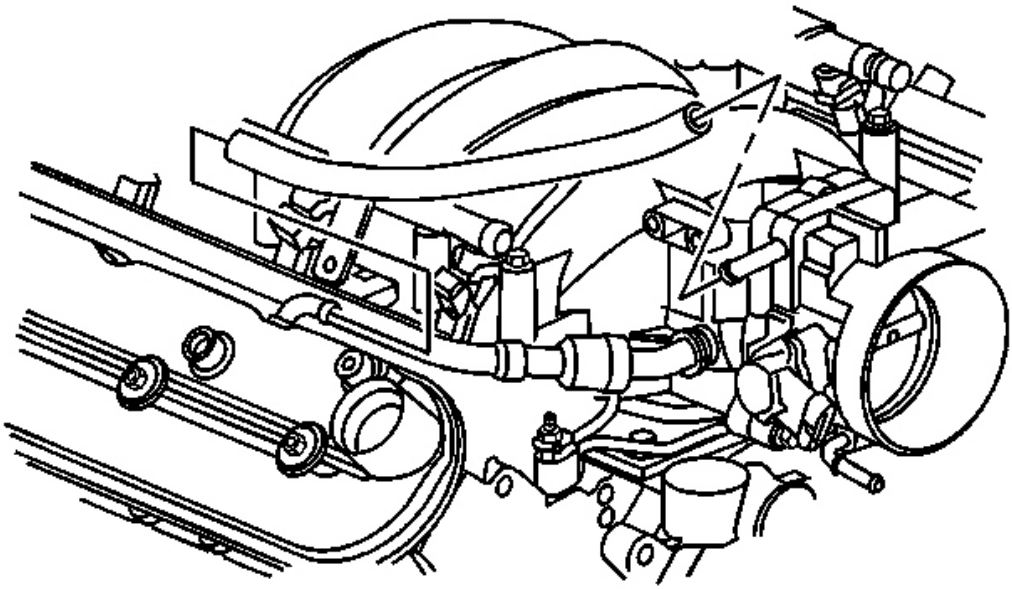

Fig. 21: PCV Tube & Rocker Arm Cover
Courtesy of GENERAL MOTORS CORP.

cardiagn.com

1. Remove the positive crankcase ventilation (PCV) tube from the right rocker arm cover and intake manifold, if necessary.

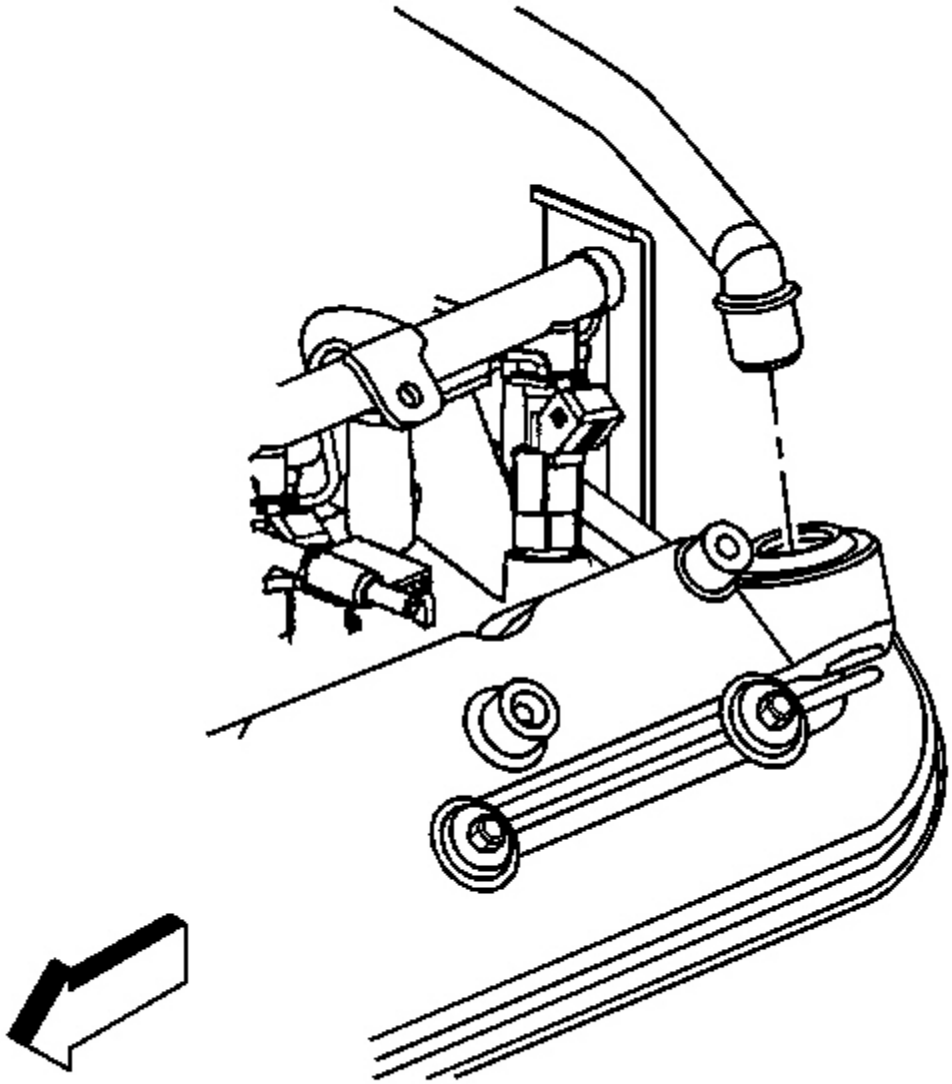

Fig. 22: Left Rocker Arm Cover & PCV Valve Pipe
Courtesy of GENERAL MOTORS CORP.

2. Remove the PCV valve pipe from the left rocker arm cover.

cardiagn.com

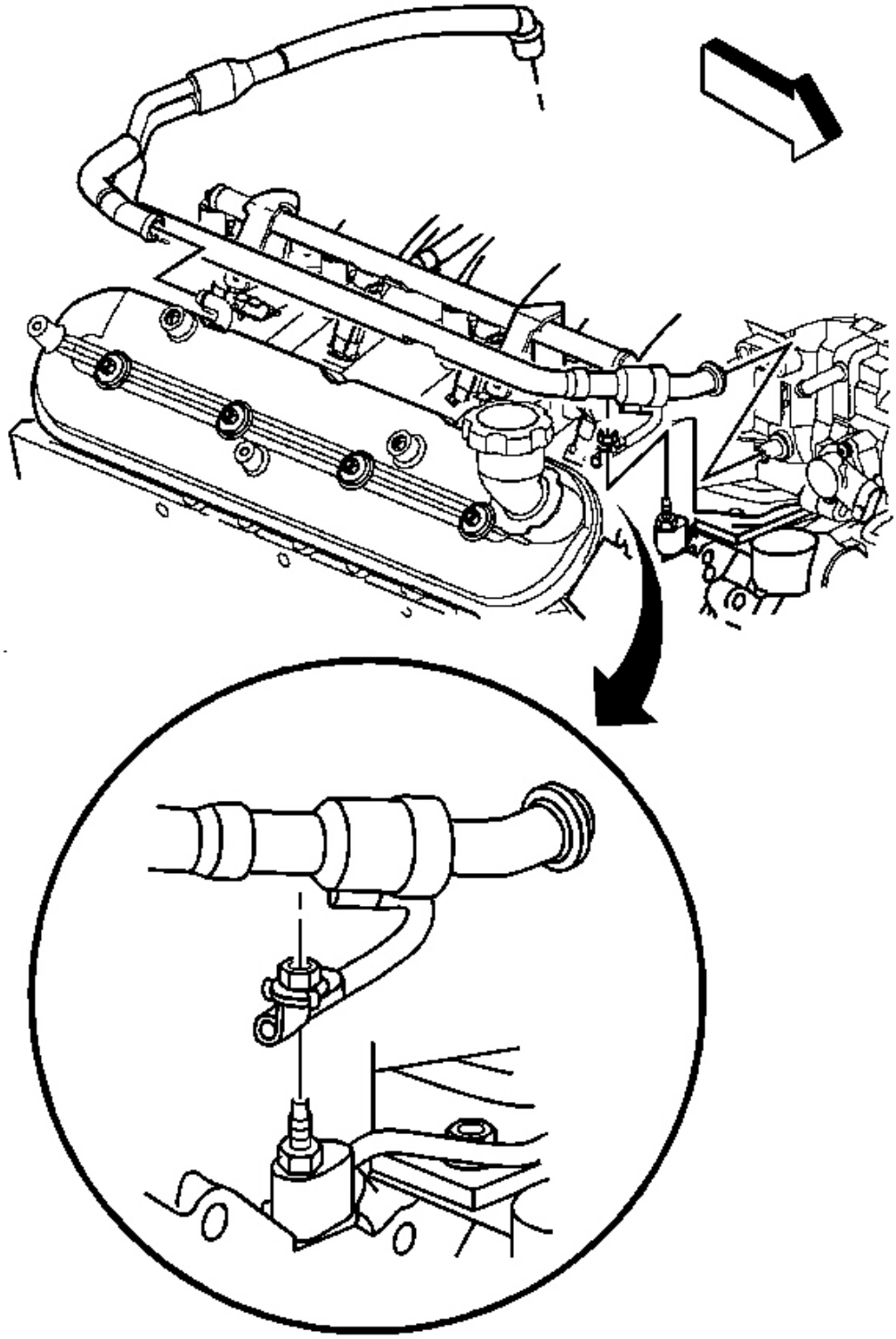

cardiagn.com

Fig. 23: Right Rocker Arm Cover & PCV Valve Pipe
Courtesy of GENERAL MOTORS CORP.

3. Remove the PCV valve pipe strap nut.
4. Remove the PCV valve pipe from the right rocker arm cover and intake manifold.
5. Remove the PCV valve from the valve pipe.

Installation Procedure

cardiagn.com

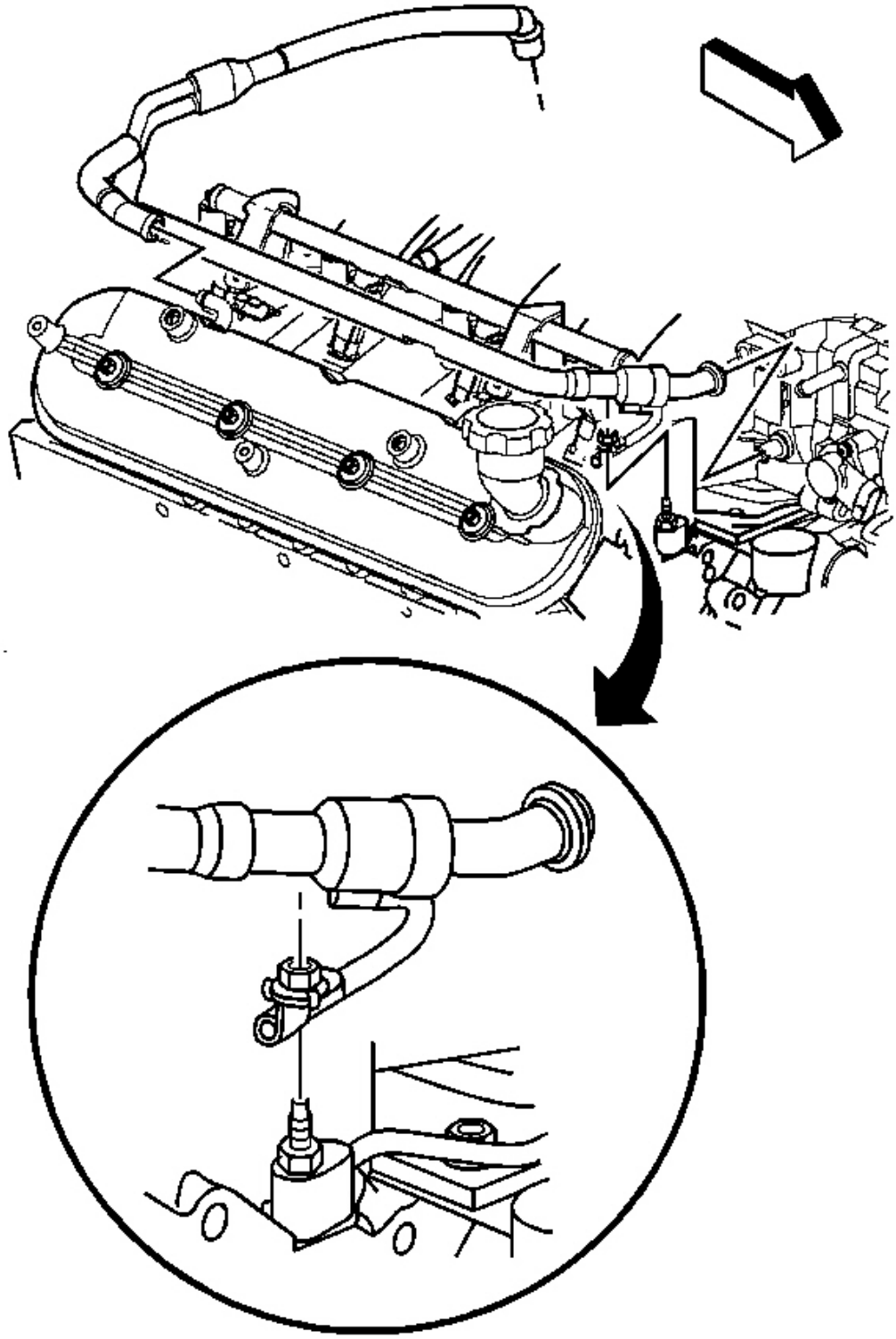

cardiagn.com

Fig. 24: Right Rocker Arm Cover & PCV Valve Pipe
Courtesy of GENERAL MOTORS CORP.

1. Install the PCV valve to the valve pipe.
2. Install the PCV valve pipe to the right rocker arm cover and intake manifold.

NOTE: Refer to Fastener Notice in Cautions and Notices.

3. Install the PCV valve pipe strap nut.

   Tighten: Tighten the PCV valve pipe strap nut to 12 N.m (106 lb in).

cardiagn.com

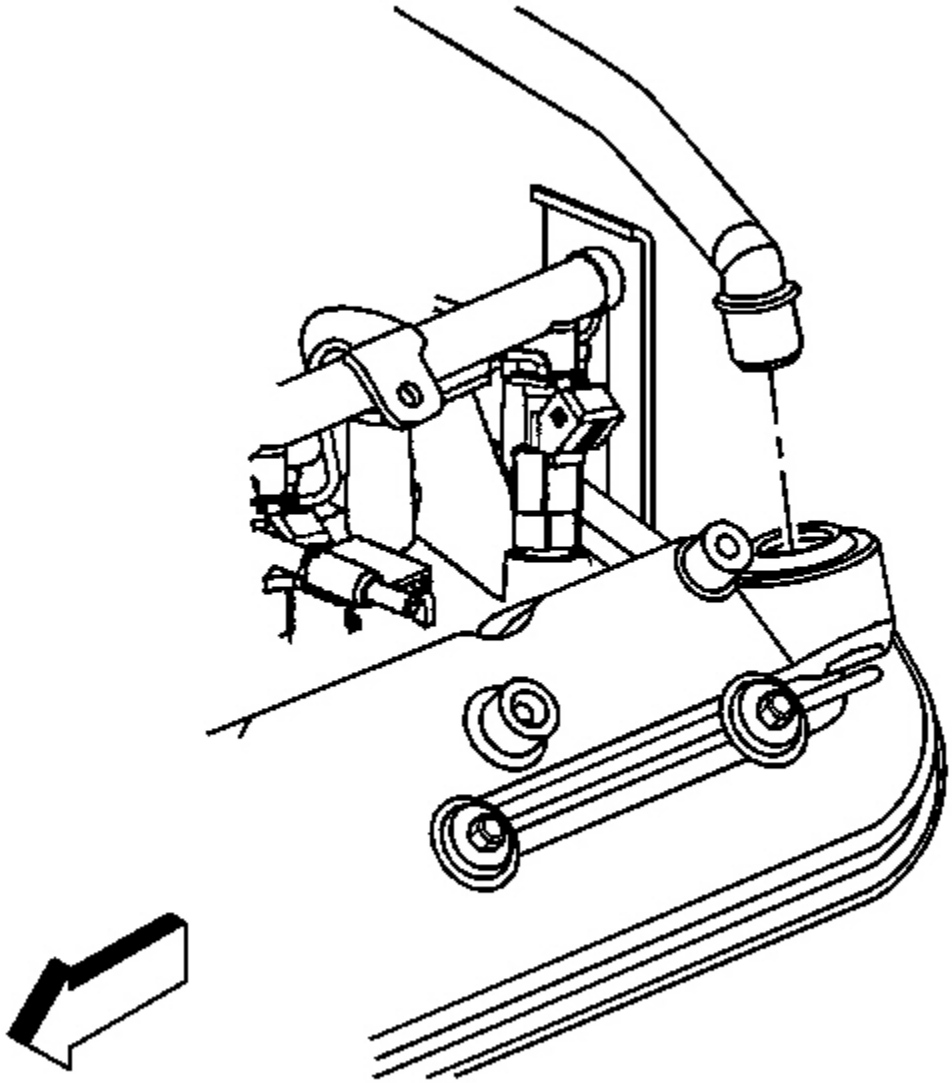

Fig. 25: Left Rocker Arm Cover & PCV Valve Pipe
Courtesy of GENERAL MOTORS CORP.

4. Install the PCV valve pipe to the left rocker arm cover.

cardiagn.com

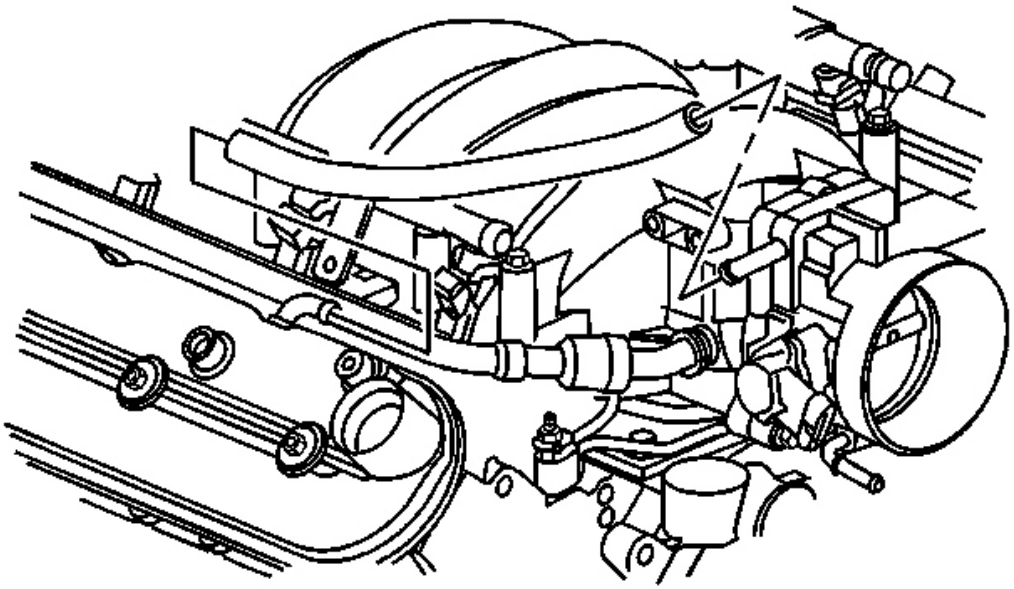

Fig. 26: PCV Tube & Rocker Arm Cover
Courtesy of GENERAL MOTORS CORP.

5. Install the PCV tube to the right rocker arm cover and intake manifold, if necessary.

POSITIVE CRANKCASE VENTILATION (PCV) VALVE REPLACEMENT (LS6 ENGINE)

Removal Procedure

cardiagn.com

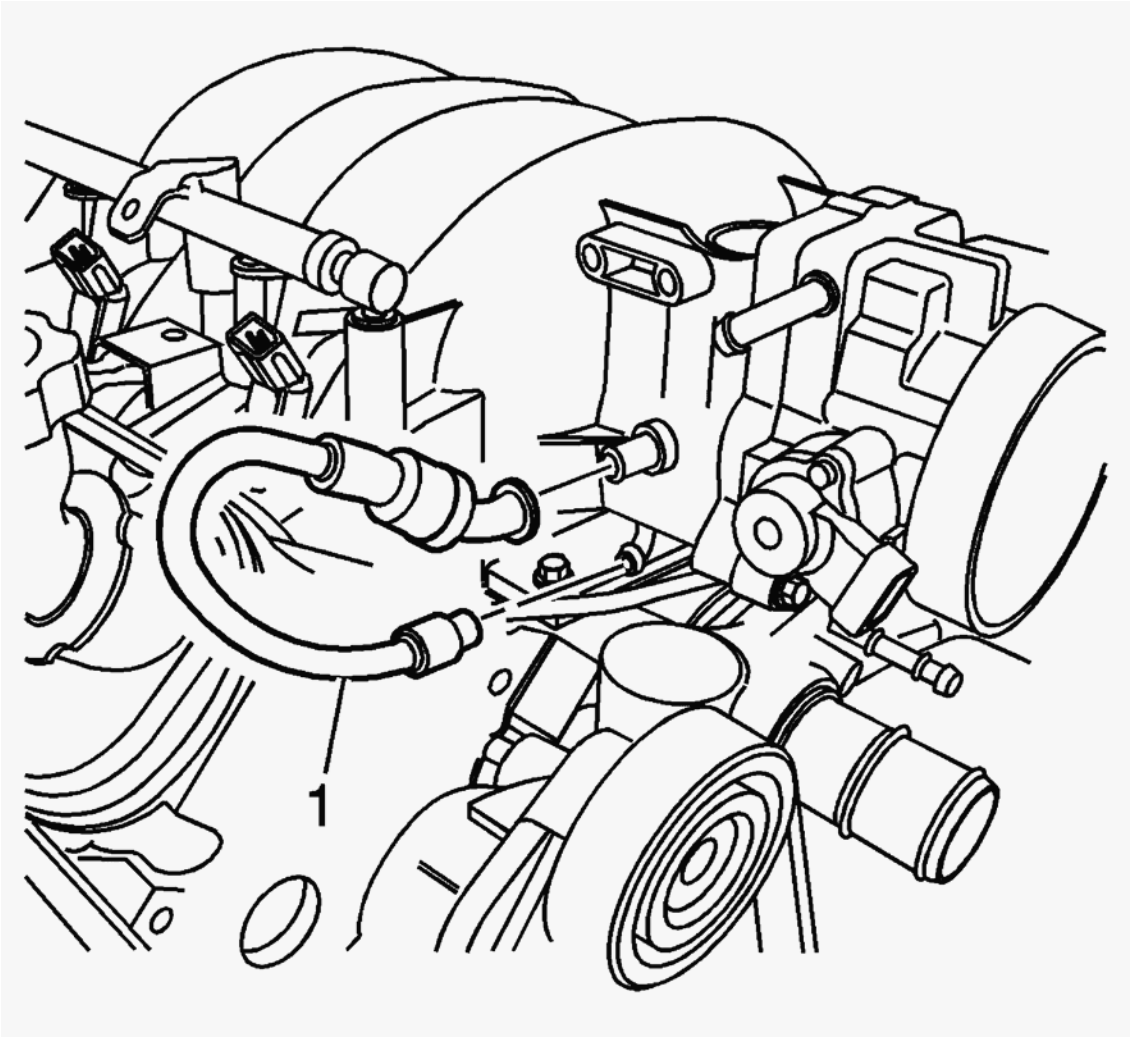

Fig. 27: PCV Valve Hose
Courtesy of GENERAL MOTORS CORP.

1. Remove the positive crankcase ventilation (PCV) valve hose (1) from the intake manifold.
2. Remove the positive crankcase ventilation (PCV) valve hose (1) from the valley cover.
3. Remove the PCV valve from the valve hose.

Installation Procedure

cardiagn.com

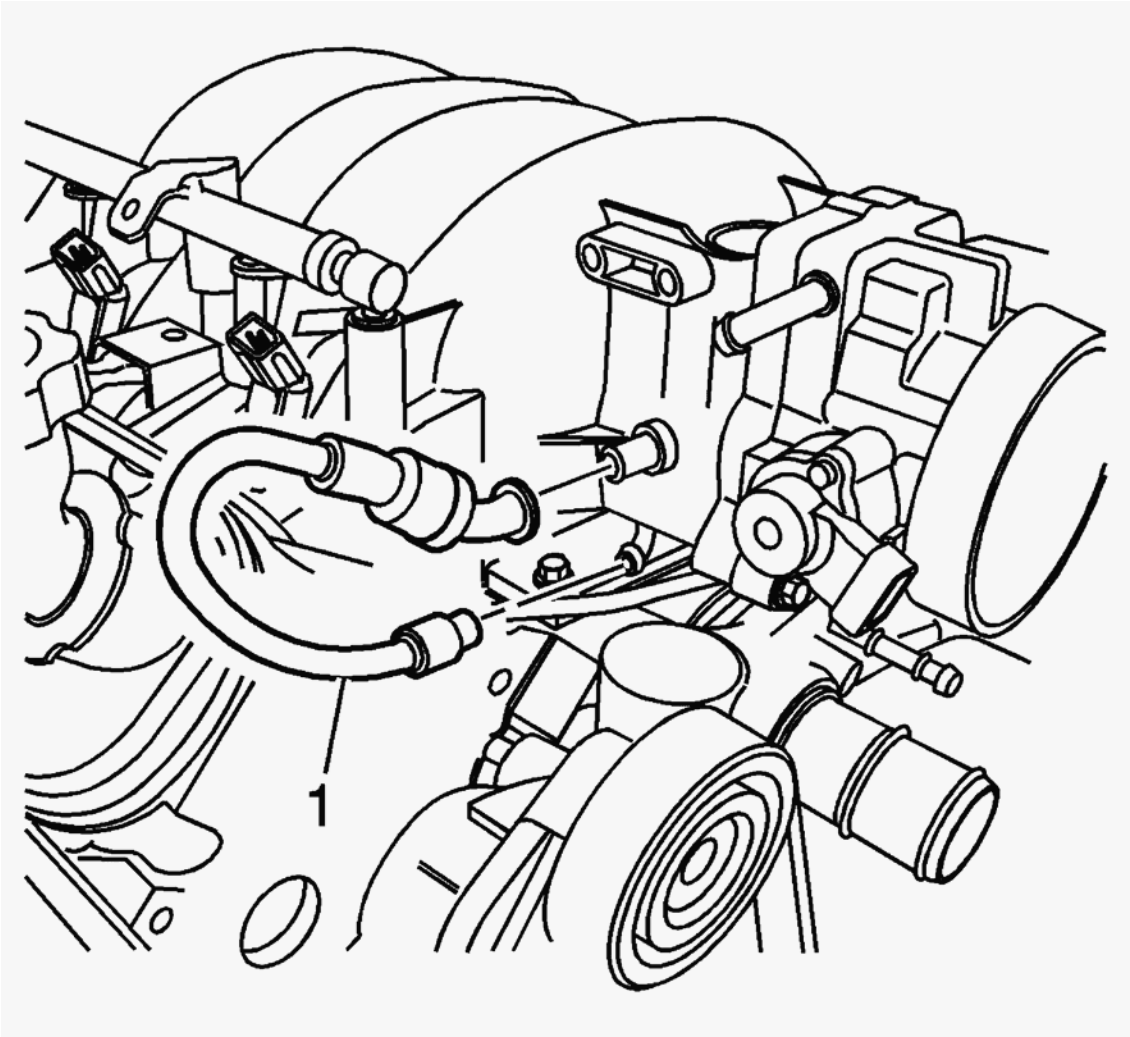

Fig. 28: PCV Valve Hose
Courtesy of GENERAL MOTORS CORP.

1. Install the PCV valve to the valve hose.
2. Install the PCV valve hose (1) to the valley cover.
3. Install the PCV valve hose (1) to the intake manifold.

CRANKCASE VENTILATION HOSES/PIPES REPLACEMENT

Removal Procedure

cardiagn.com

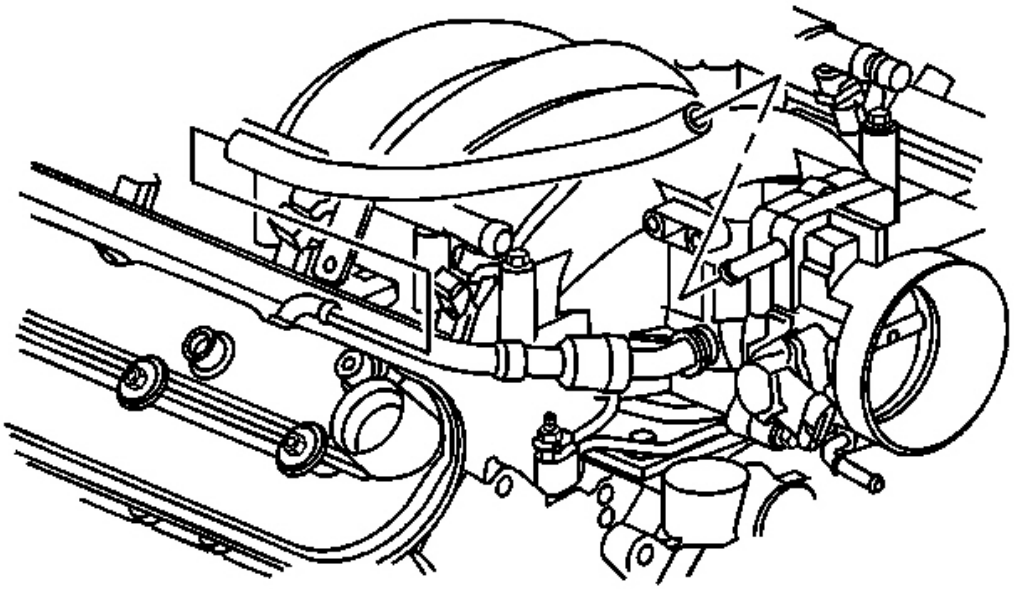

Fig. 29: PCV Tube & Rocker Arm Cover
Courtesy of GENERAL MOTORS CORP.

1. Remove the throttle position (TP) sensor harness clip from the positive crankcase ventilation (PCV) tube.
2. Remove the PCV tube from the right rocker arm cover and throttle body, if necessary.

cardiagn.com

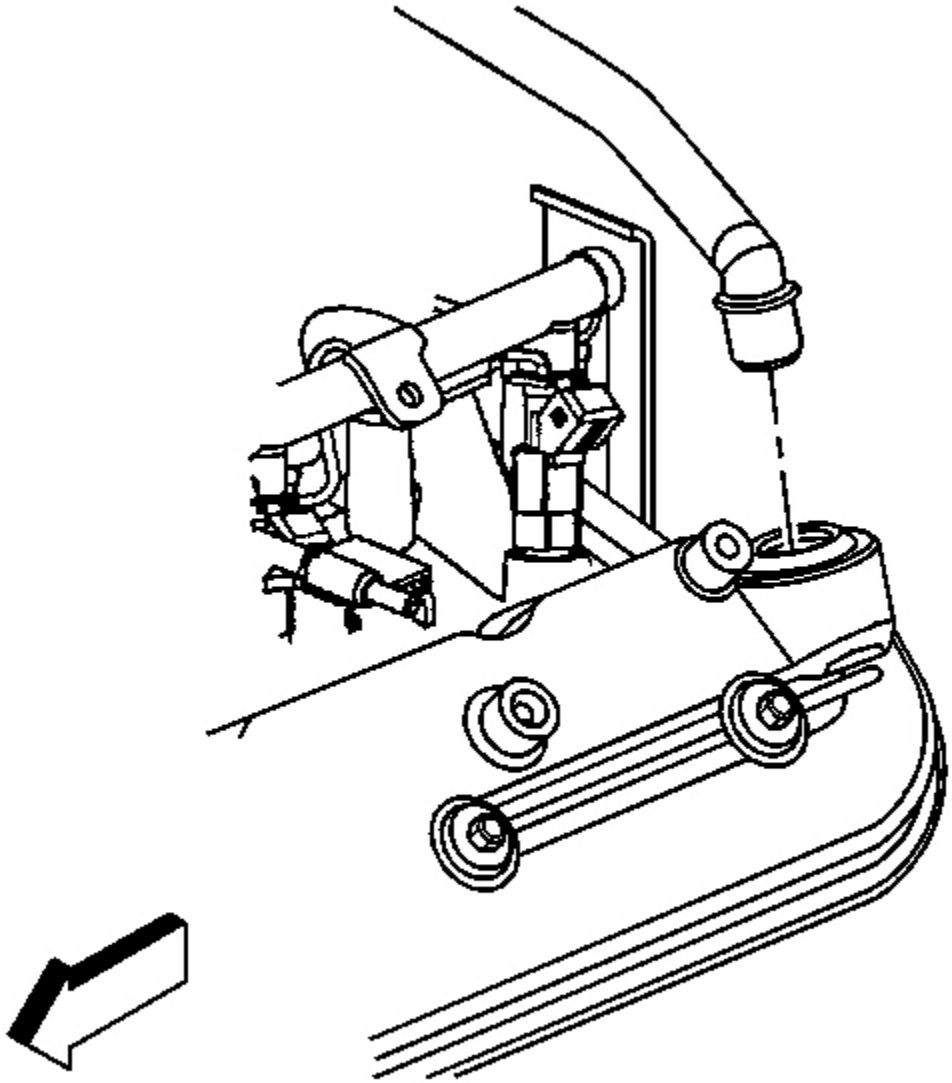

Fig. 30: Left Rocker Arm Cover & PCV Valve Pipe
Courtesy of GENERAL MOTORS CORP.

3. If equipped with the regular production option (RPO) LS1 engine, remove the PCV valve pipe from the left rocker arm cover.

cardiagn.com

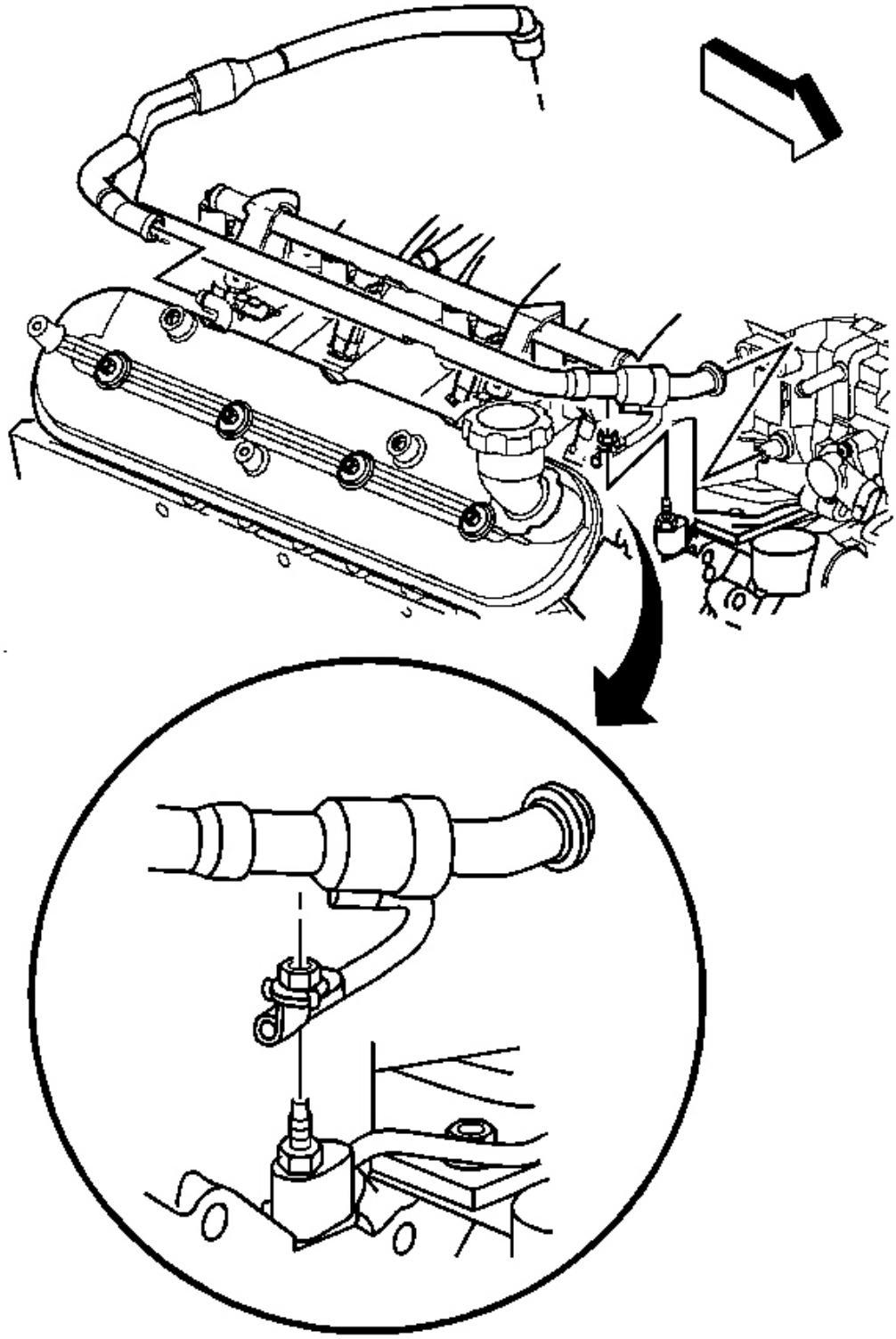

cardiagn.com

Fig. 31: Right Rocker Arm Cover & PCV Valve Pipe
Courtesy of GENERAL MOTORS CORP.

4. If equipped with the RPO LS1 engine, remove the PCV valve pipe strap nut.
5. Remove the PCV valve pipe from the right rocker arm cover and intake manifold.
6. If replacing the PCV valve pipe, remove the PCV valve from the pipe.

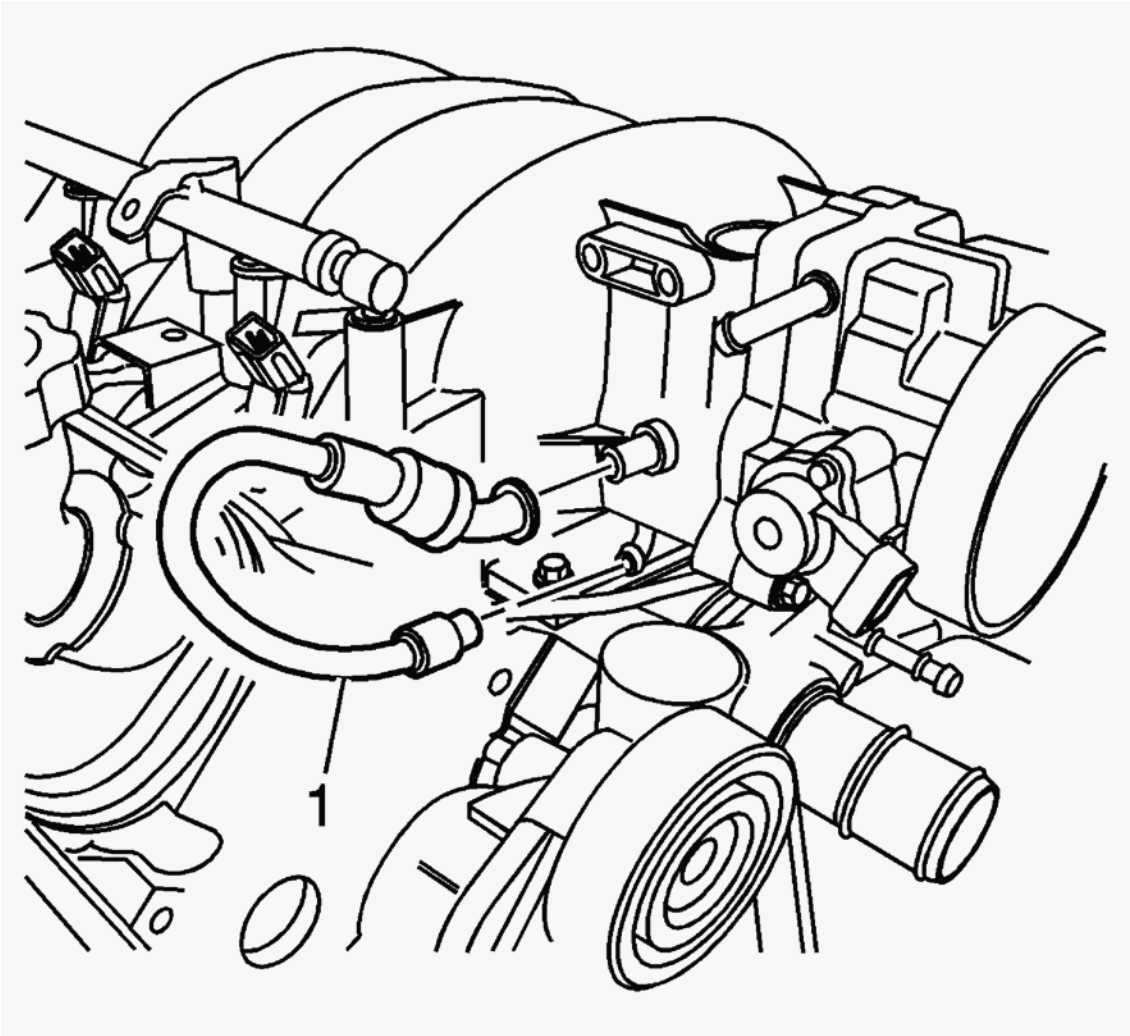

Fig. 32: PCV Valve Hose
Courtesy of GENERAL MOTORS CORP.

7. If equipped with the RPO LS6 engine, remove the PCV valve hose (1) from the valley cover and intake manifold.
8. If replacing the PCV valve hose, remove the PCV valve from the hose.

Installation Procedure

cardiagn.com

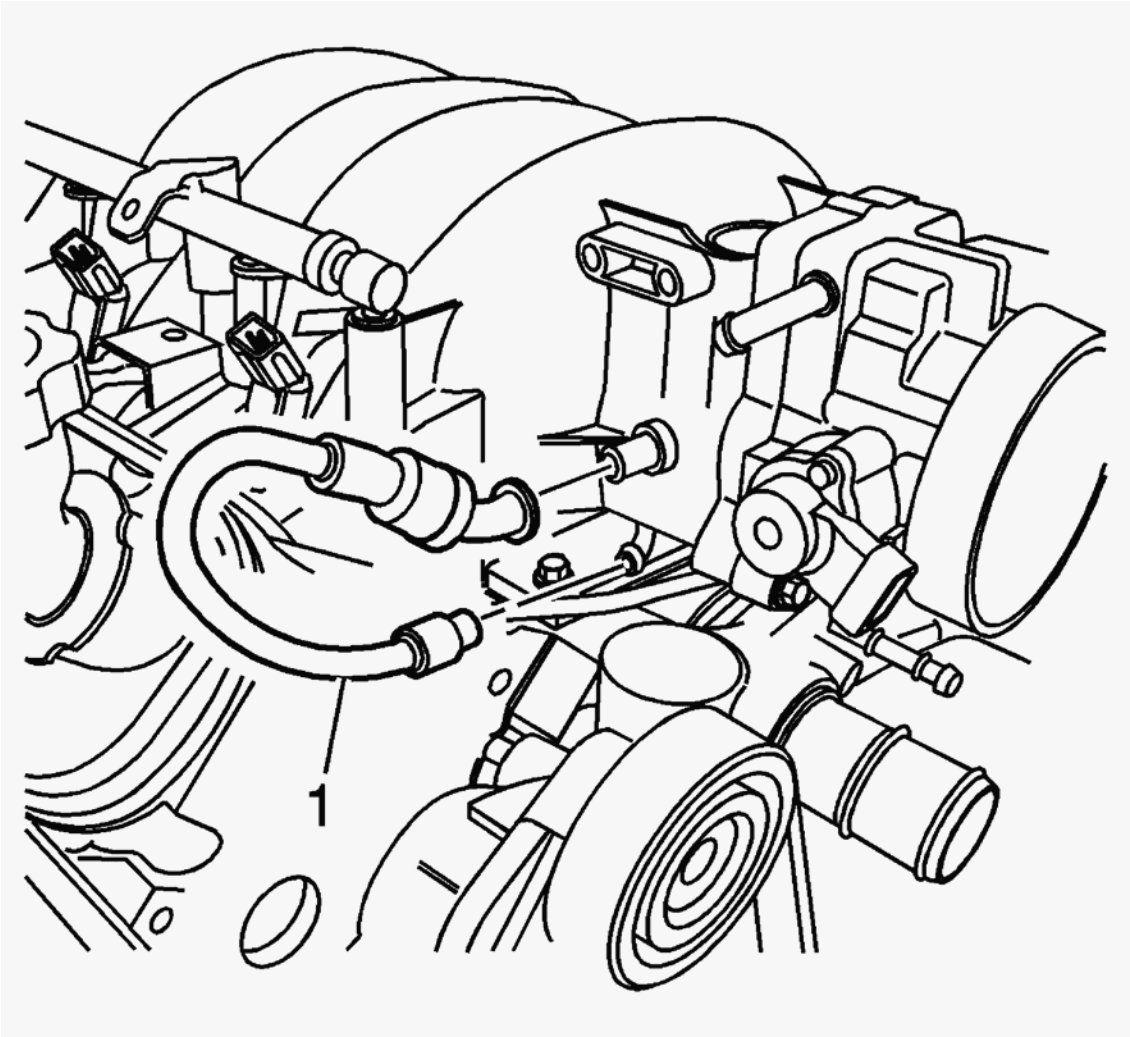

Fig. 33: PCV Valve Hose
Courtesy of GENERAL MOTORS CORP.

1. If equipped with the RPO LS6 engine, install the PCV valve to the hose, if necessary.
2. Install the PCV valve hose (1) to the valley cover and intake manifold.

cardiagn.com

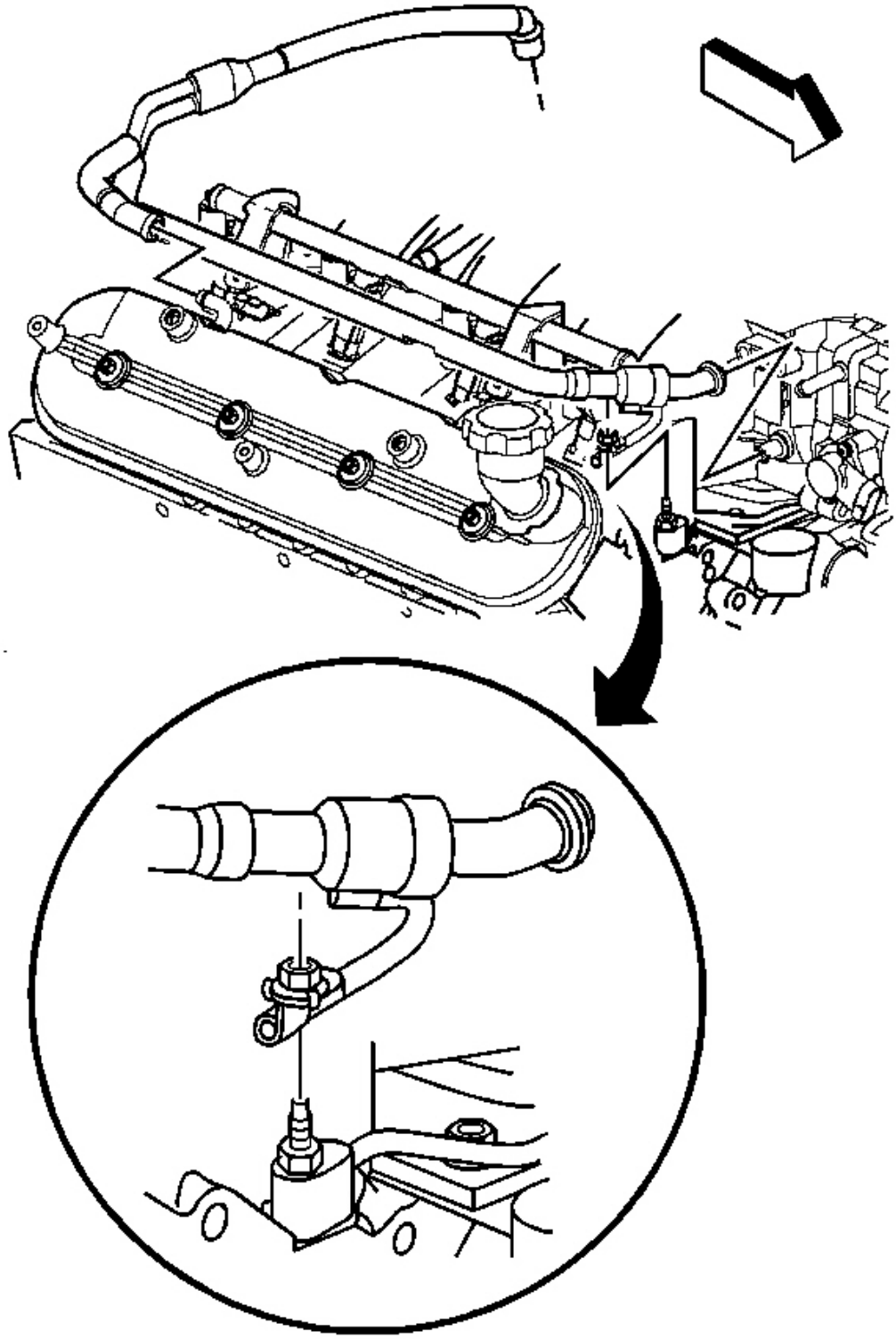

cardiagn.com

Fig. 34: Right Rocker Arm Cover & PCV Valve Pipe
Courtesy of GENERAL MOTORS CORP.

3. If equipped with the RPO LS1 engine, install the PCV valve to the valve pipe, if necessary.
4. Install the PCV valve pipe to the right rocker arm cover and intake manifold.

NOTE: **Refer to Fastener Notice in Cautions and Notices.**

5. Install the PCV valve pipe strap nut

   Tighten: Tighten the PCV strap nut to 12 N.m (106 lb in).

cardiagn.com

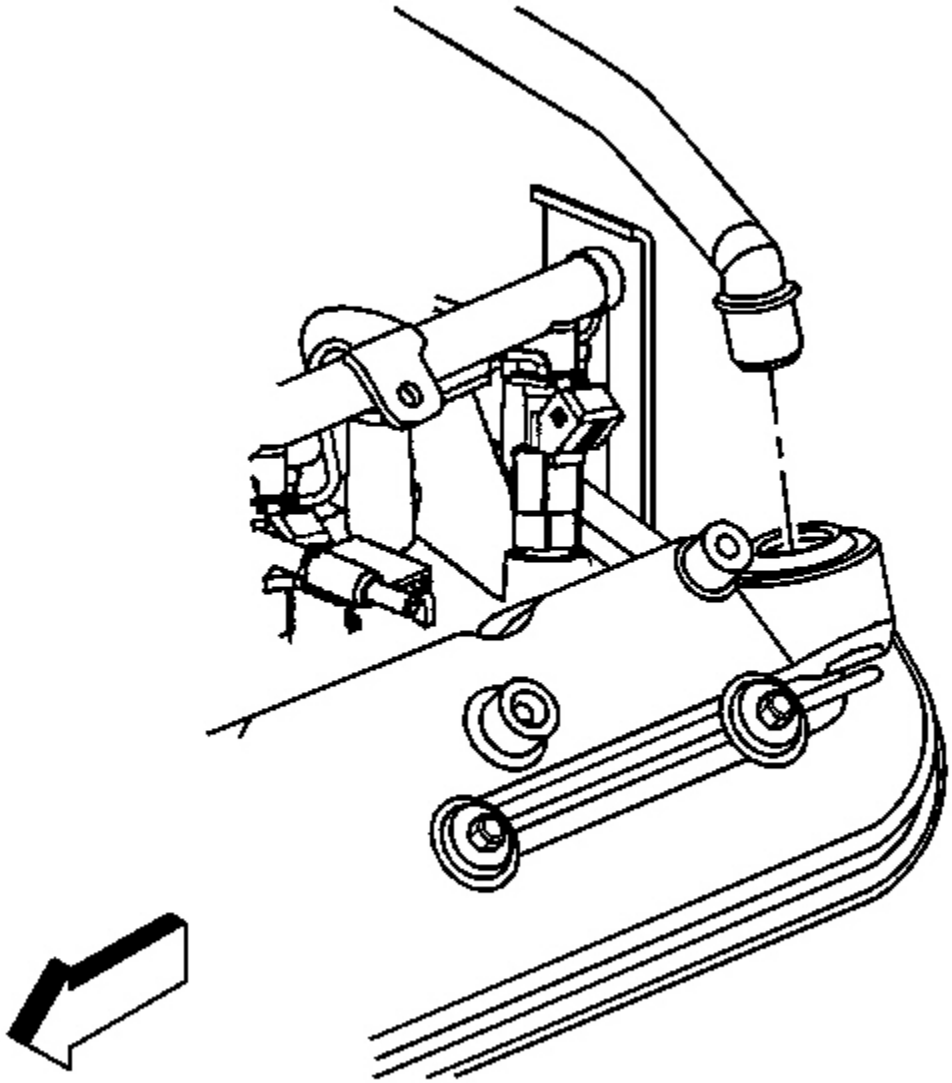

Fig. 35: Left Rocker Arm Cover & PCV Valve Pipe
Courtesy of GENERAL MOTORS CORP.

6. If equipped with the RPO LS1 engine, install the PCV valve pipe to the left rocker arm cover.

cardiagn.com

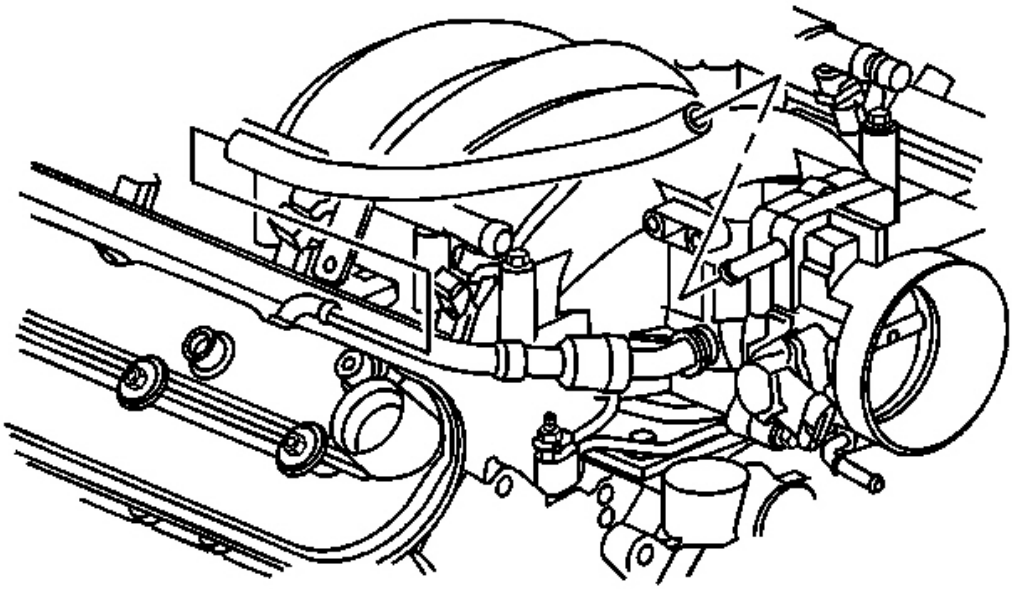

Fig. 36: PCV Tube & Rocker Arm Cover
Courtesy of GENERAL MOTORS CORP.

7. Install the PCV tube to the right rocker arm cover and throttle body, in necessary.
8. Install the TP sensor harness clip to the PCV tube.

INTAKE MANIFOLD REPLACEMENT

Removal Procedure

IMPORTANT: The intake manifold, throttle body, fuel injection rail, and injectors may be removed as an assembly. If not servicing the individual components, remove the manifold as a complete assembly.

cardiagn.com

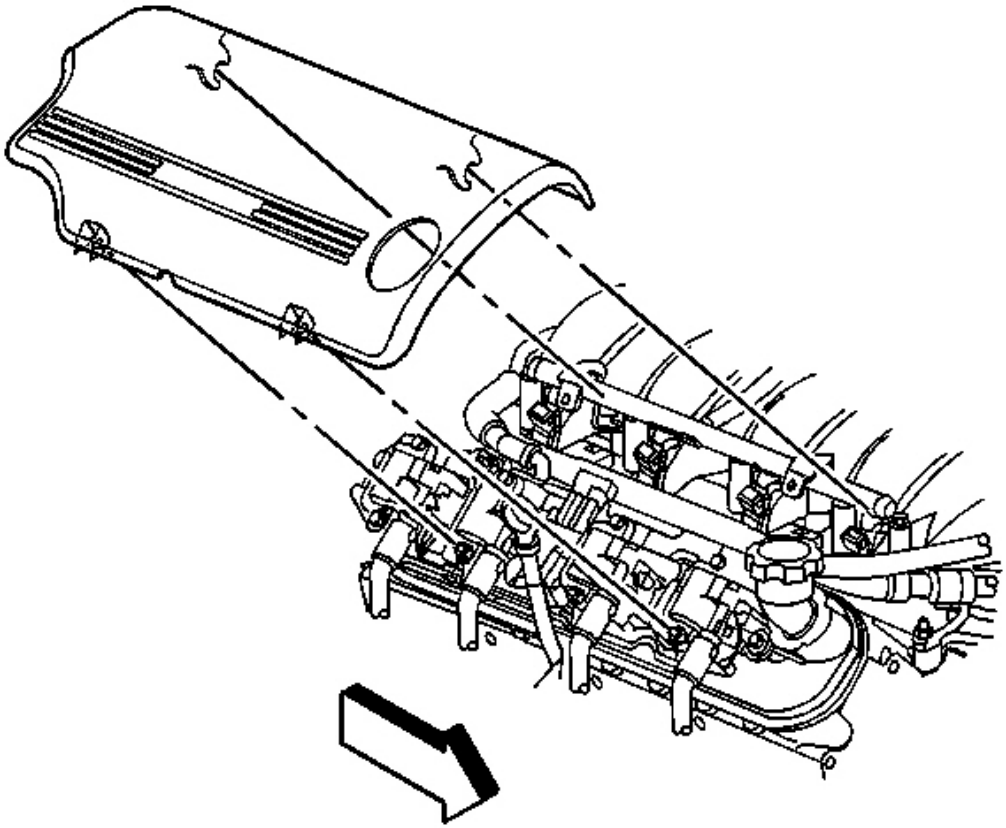

Fig. 37: Right Fuel Injection Rail Cover
Courtesy of GENERAL MOTORS CORP.

1. Drain the cooling system. Refer to **Draining and Filling Cooling System** in Engine Cooling.
2. If replacing the intake manifold, perform the following:
   - Remove the throttle body. Refer to **Throttle Body Assembly Replacement** in Engine Controls - 5.7 L.
   - Remove the fuel injectors. Refer to **Fuel Injector Replacement** in Engine Controls - 5.7 L.
3. Remove the right fuel rail cover.

cardiagn.com

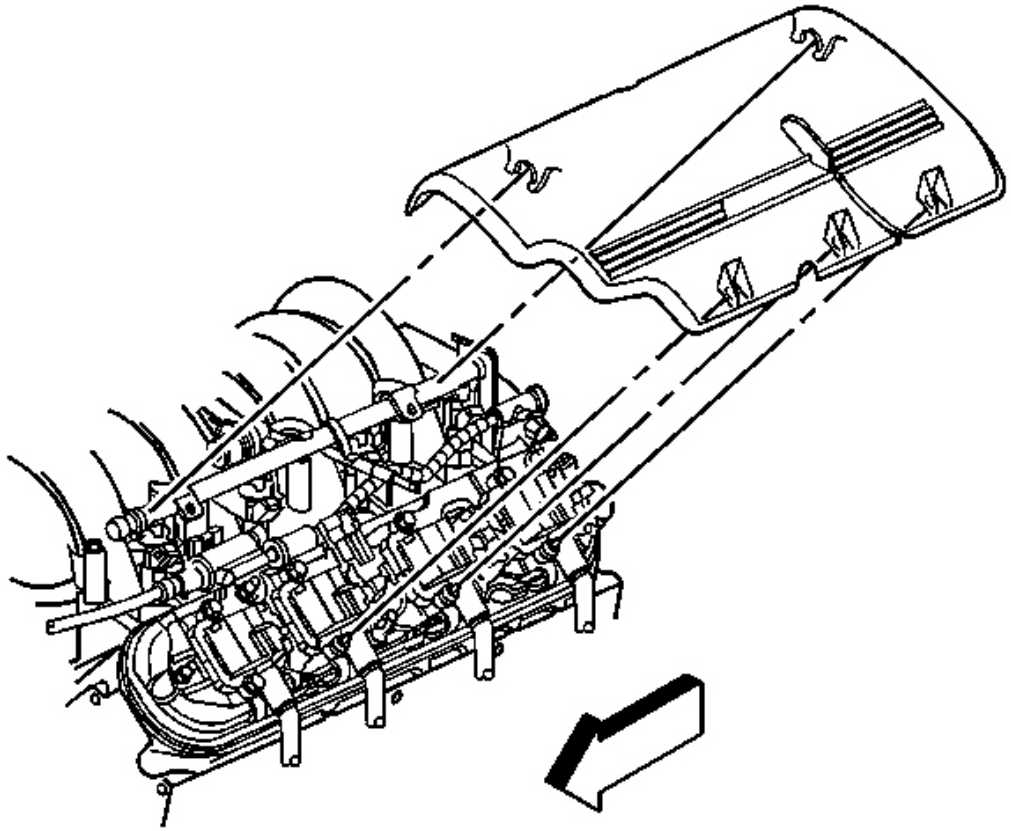

Fig. 38: Left Fuel Rail Cover
Courtesy of GENERAL MOTORS CORP.

4. Remove the left fuel rail cover.

cardiagn.com

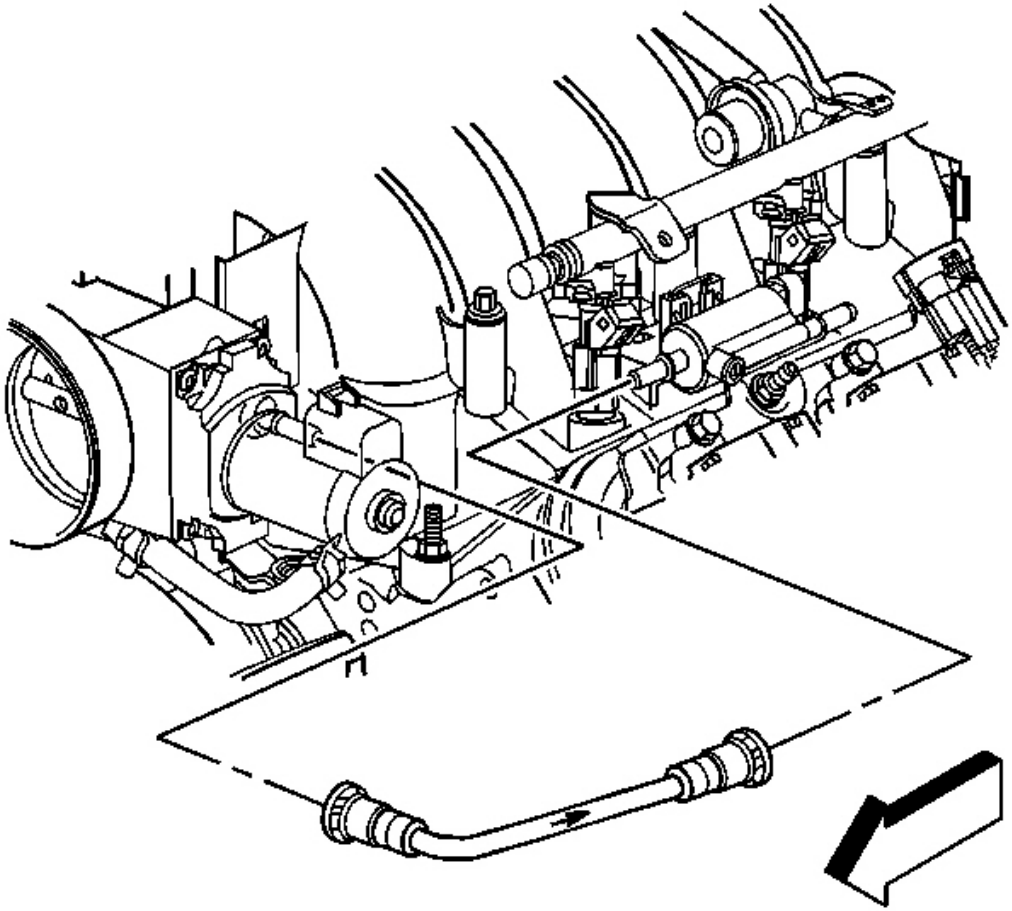

Fig. 39: EVAP Canister Purge Tube
Courtesy of GENERAL MOTORS CORP.

5. Remove the fuel feed hose. Refer to **Fuel Hose/Pipes Replacement - Engine Compartment** in Engine Controls - 5.7 L.
6. Disconnect the evaporative emission (EVAP) canister purge tube from the intake manifold.
7. Disconnect the EVAP canister purge tube from the EVAP canister purge solenoid valve.
8. Remove the EVAP canister purge tube.

cardiagn.com

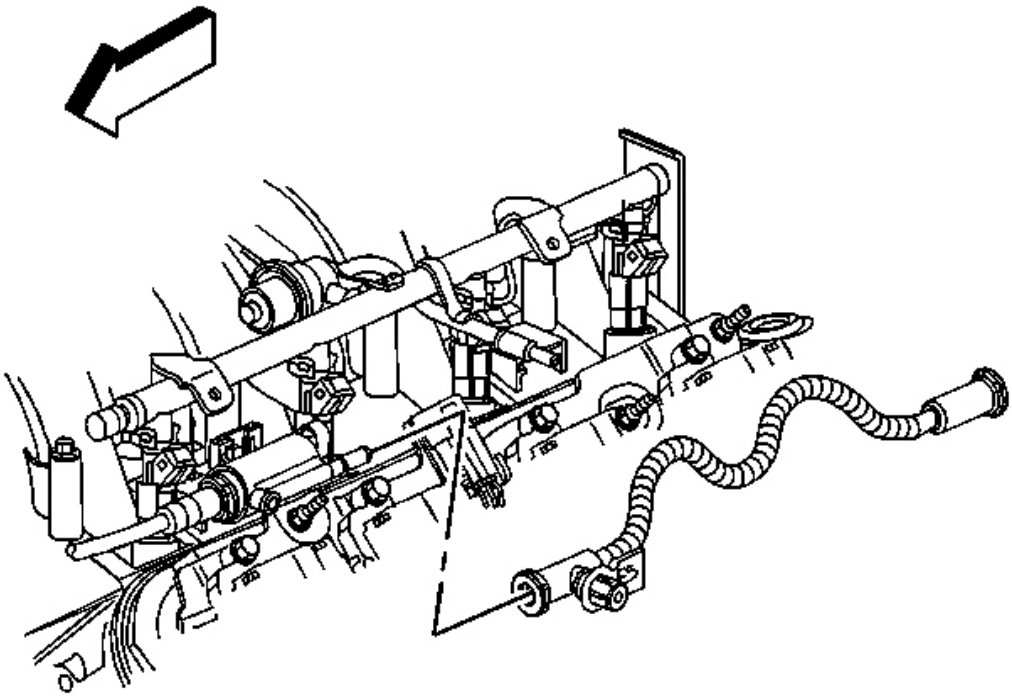

Fig. 40: Fuel Feed Pipe
Courtesy of GENERAL MOTORS CORP.

9. Disconnect the EVAP canister purge tube from the EVAP canister purge solenoid valve.
10. Disconnect the EVAP canister purge tube from the fuel feed pipe.
11. Remove the EVAP canister purge tube.

cardiagn.com

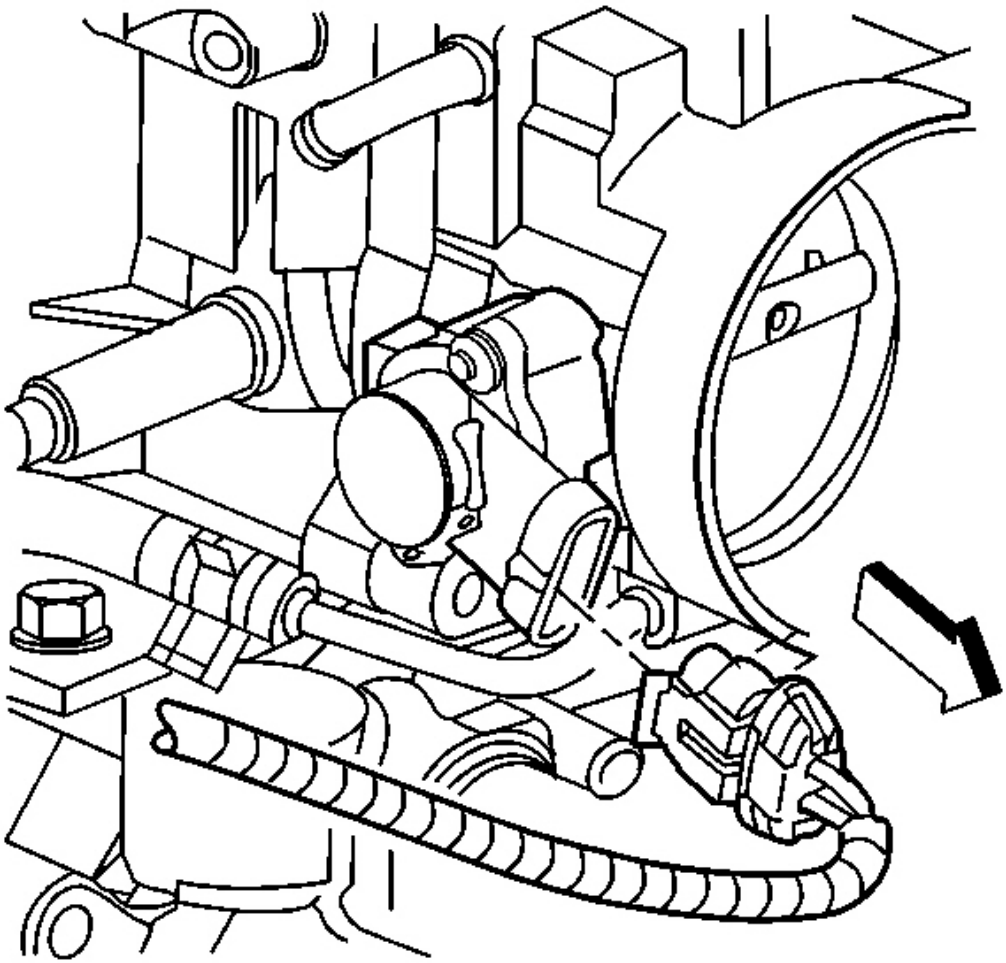

Fig. 41: TP Sensor Electrical Connector
Courtesy of GENERAL MOTORS CORP.

12. Disconnect the throttle position (TP) sensor electrical connector.
13. Remove the coolant air bleed hose. Refer to **Coolant Air Bleed Hose Replacement** in Engine Cooling.

cardiagn.com

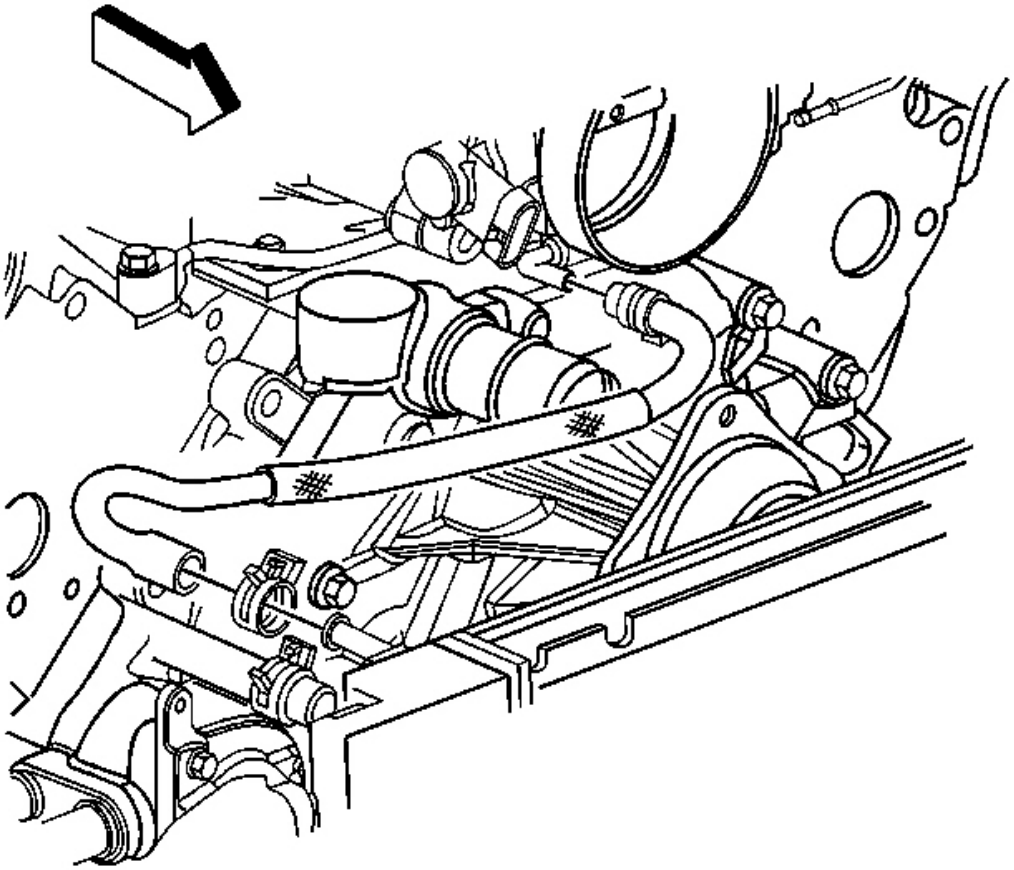

Fig. 42: Throttle Body Heater Outlet Hose & Clamp
Courtesy of GENERAL MOTORS CORP.

14. Reposition the throttle body heater outlet hose clamp at the throttle body.
15. Remove the throttle body heater outlet hose from the throttle body.
16. Remove the throttle body heater outlet hose.

cardiagn.com

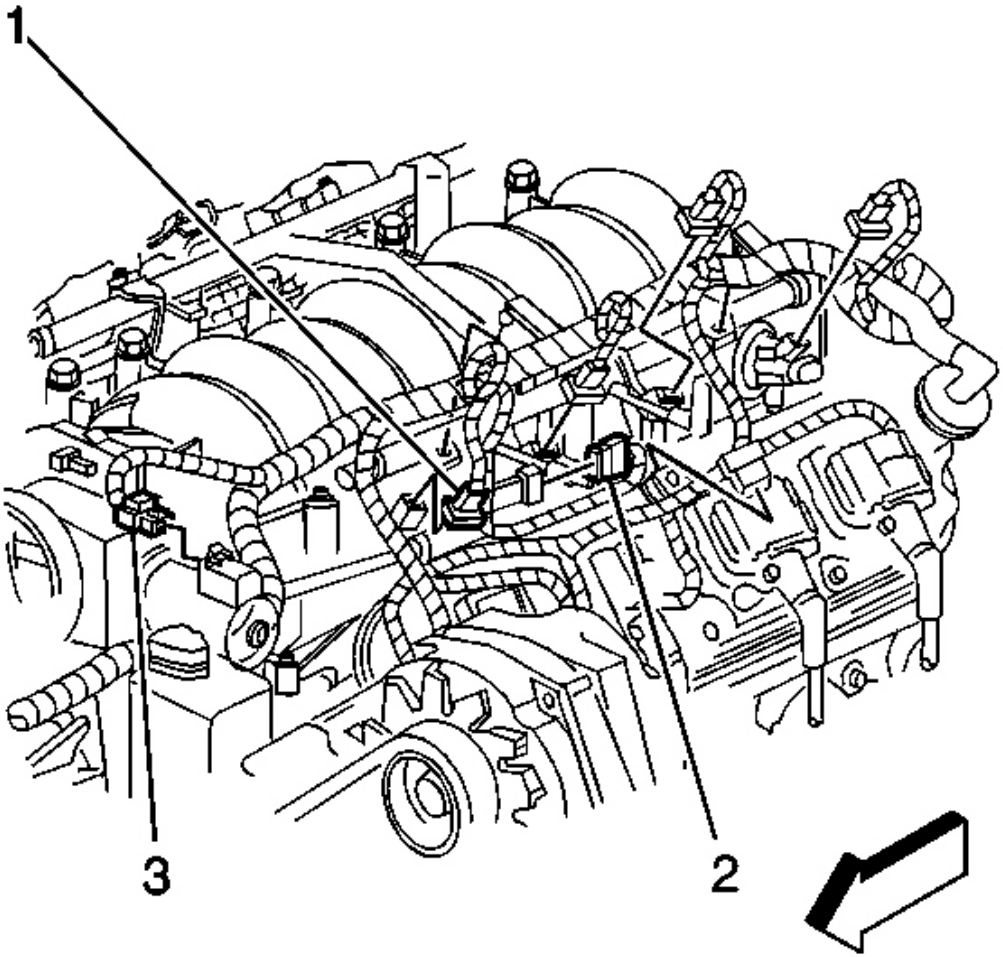

Fig. 43: Electrical Connectors
Courtesy of GENERAL MOTORS CORP.

17. Disconnect all the fuel injector electrical connectors (1).
18. Disconnect the EVAP canister purge solenoid valve electrical connector (2).
19. Disconnect the electronic throttle control (ETC) electrical connector (3).

cardiagn.com

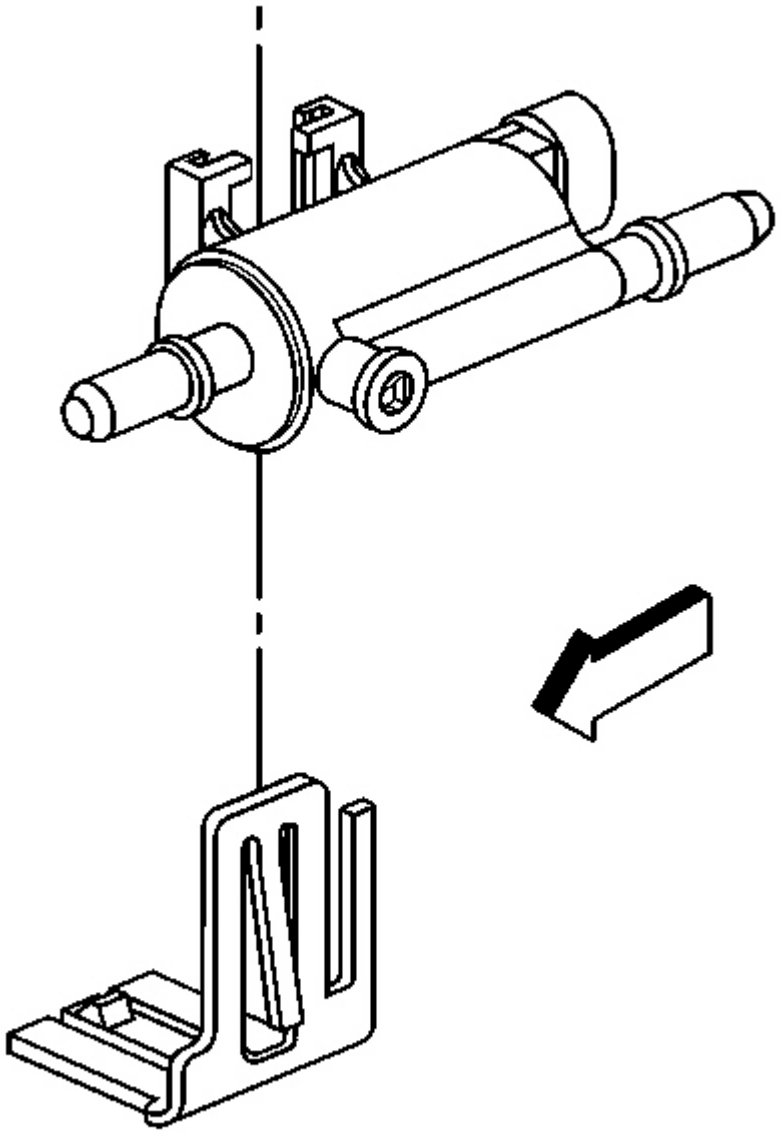

Fig. 44: EVAP Canister Purge Solenoid Valve & Bracket
Courtesy of GENERAL MOTORS CORP.

20. Remove the EVAP canister purge solenoid valve from the bracket.
21. Disconnect the harness clips at the fuel rails.
22. Reposition the intake manifold branches of the wiring harness.

cardiagn.com

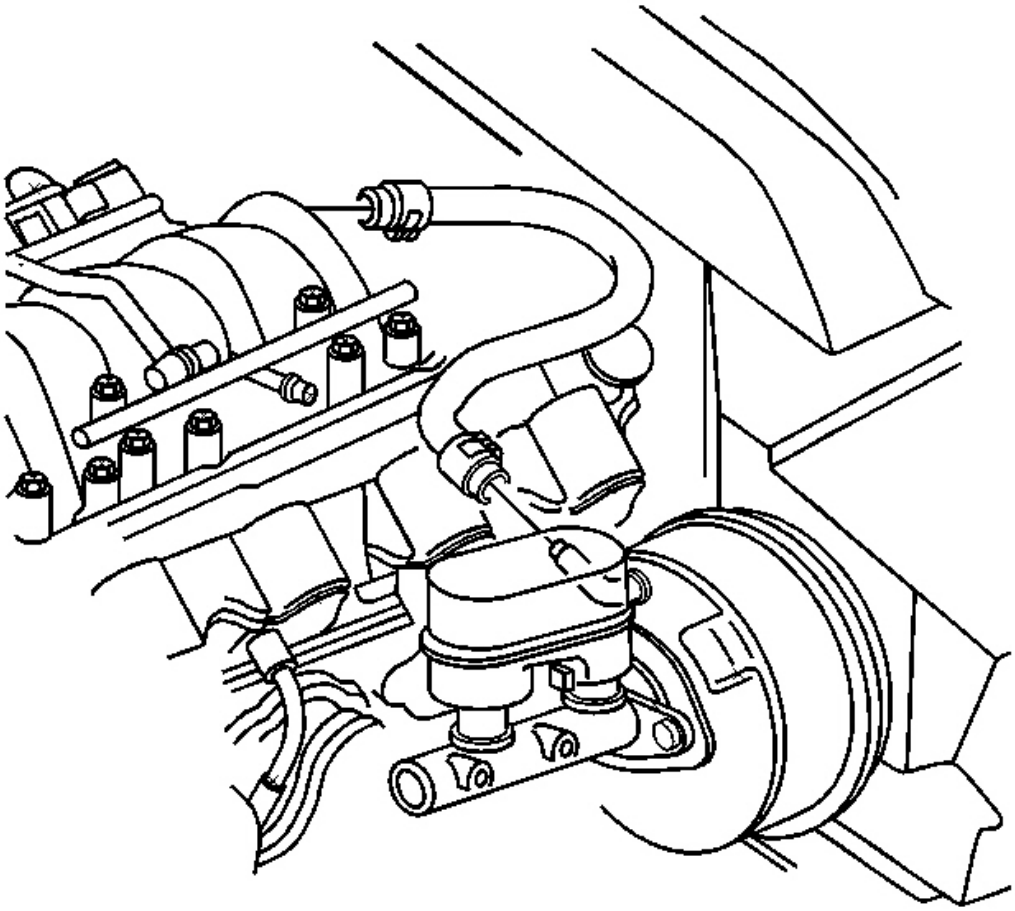

Fig. 45: Vacuum Booster Hose
Courtesy of GENERAL MOTORS CORP.

23. Disconnect the power brake booster vacuum hose at the booster.

cardiagn.com

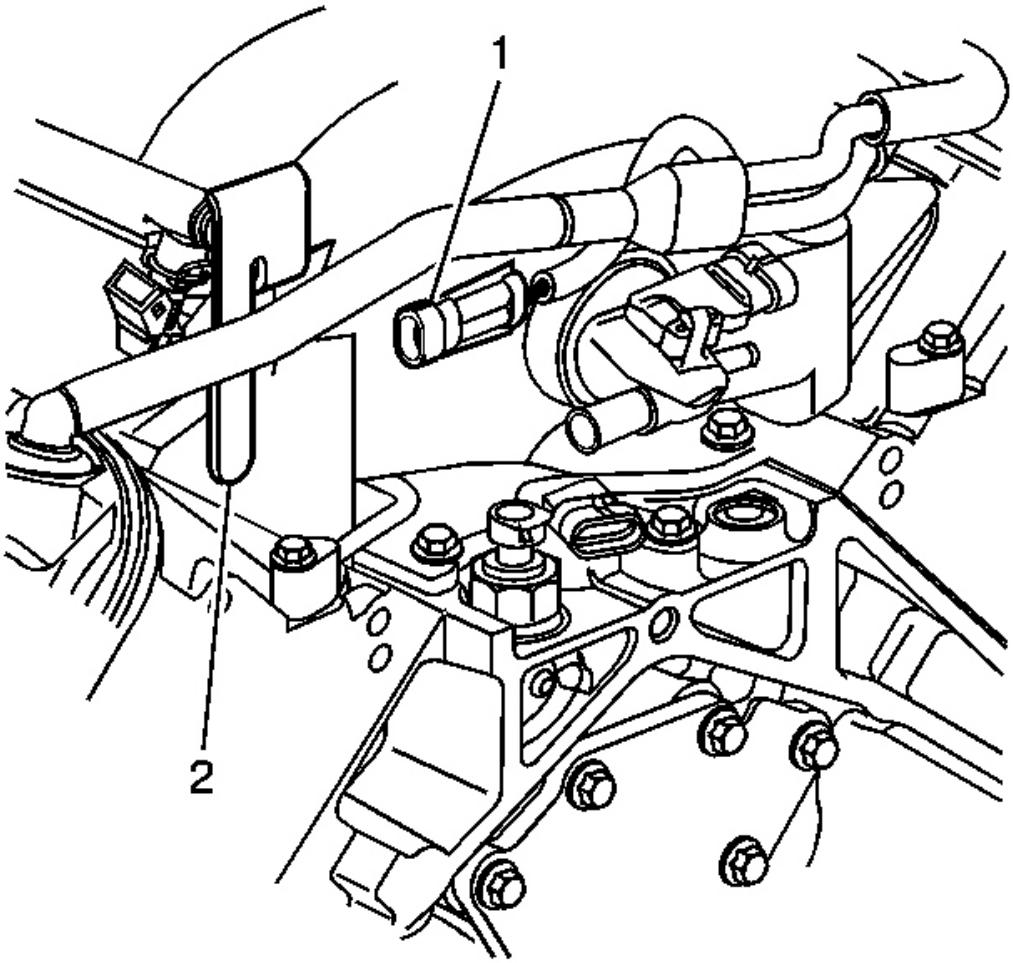

Fig. 46: Knock Sensor Wire Harness Clip & Fuel Rail Stop Bracket
Courtesy of GENERAL MOTORS CORP.

24. Remove the knock sensor wire harness (1) clip from the fuel rail stop bracket (2).

cardiagn.com

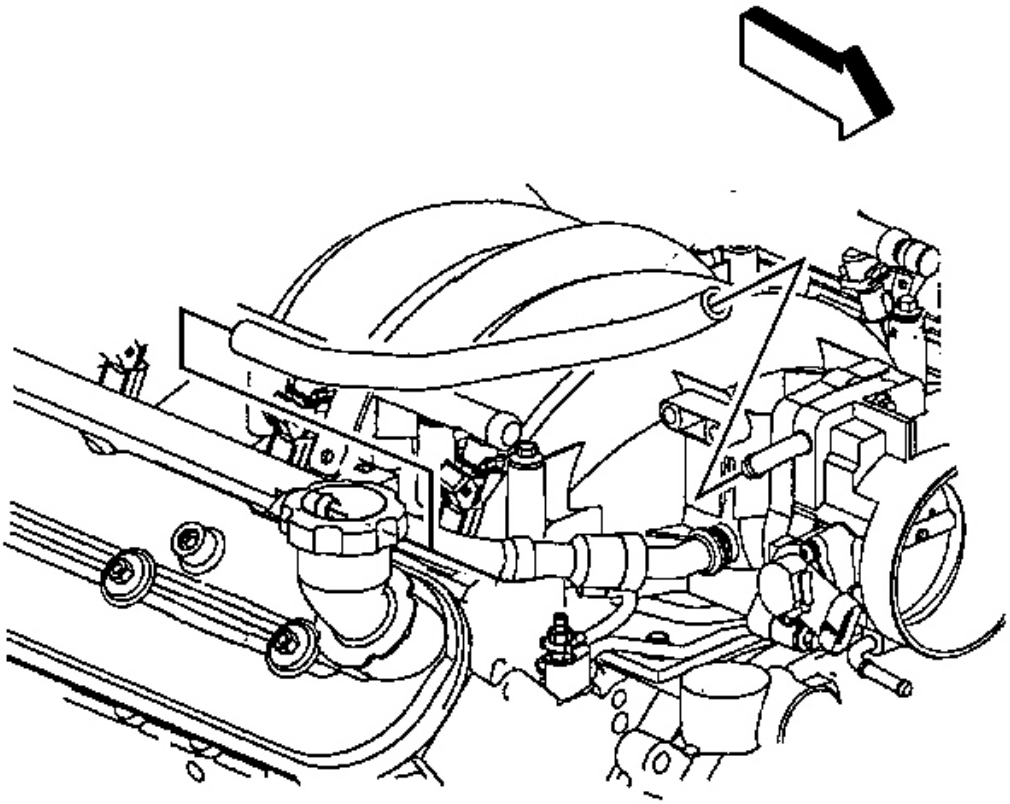

Fig. 47: TP Sensor Harness Clip & PCV Tube
Courtesy of GENERAL MOTORS CORP.

25. Remove the TP sensor harness clip from the positive crankcase ventilation (PCV) tube.
26. Remove the PCV tube from the right rocker arm cover and throttle body.

cardiagn.com

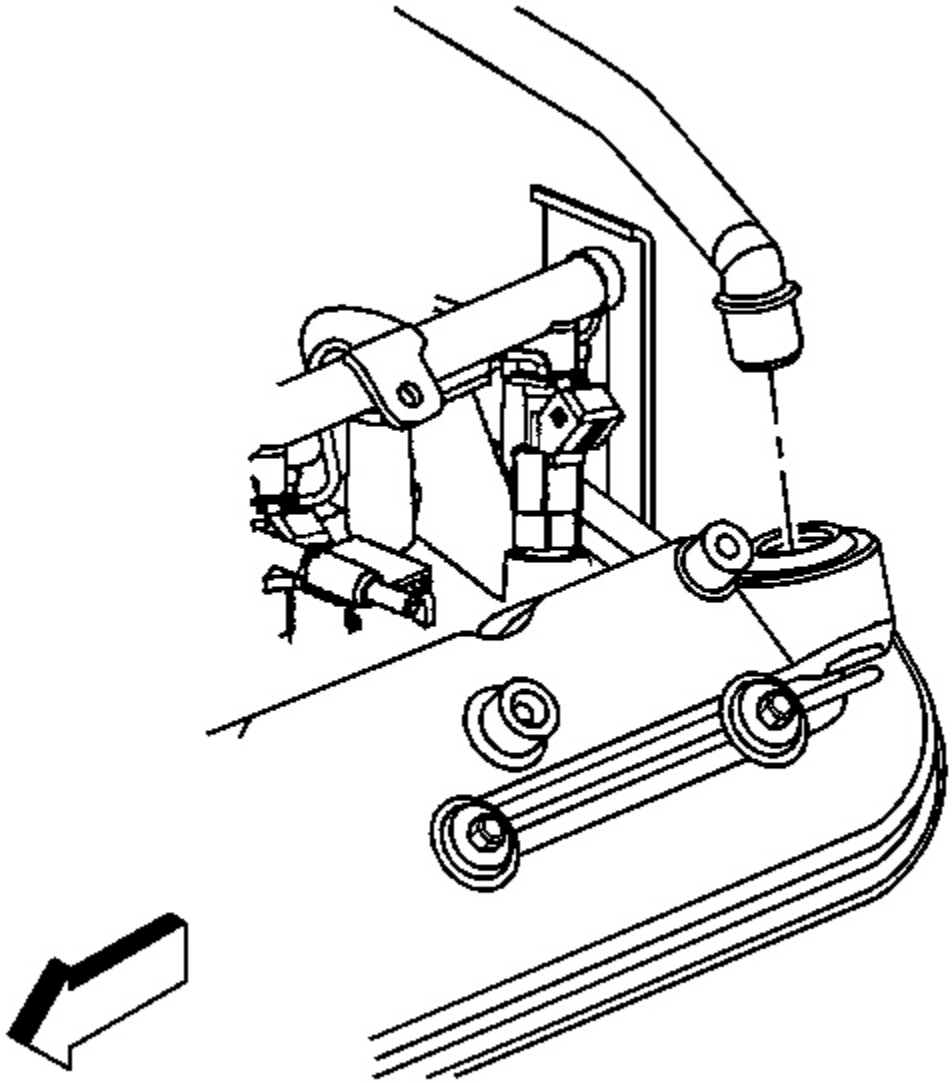

Fig. 48: Left Rocker Arm Cover & PCV Valve Pipe
Courtesy of GENERAL MOTORS CORP.

27. If equipped with the regular production option (RPO) LS1 engine, remove the PCV valve pipe from the left rocker arm cover.

cardiagn.com

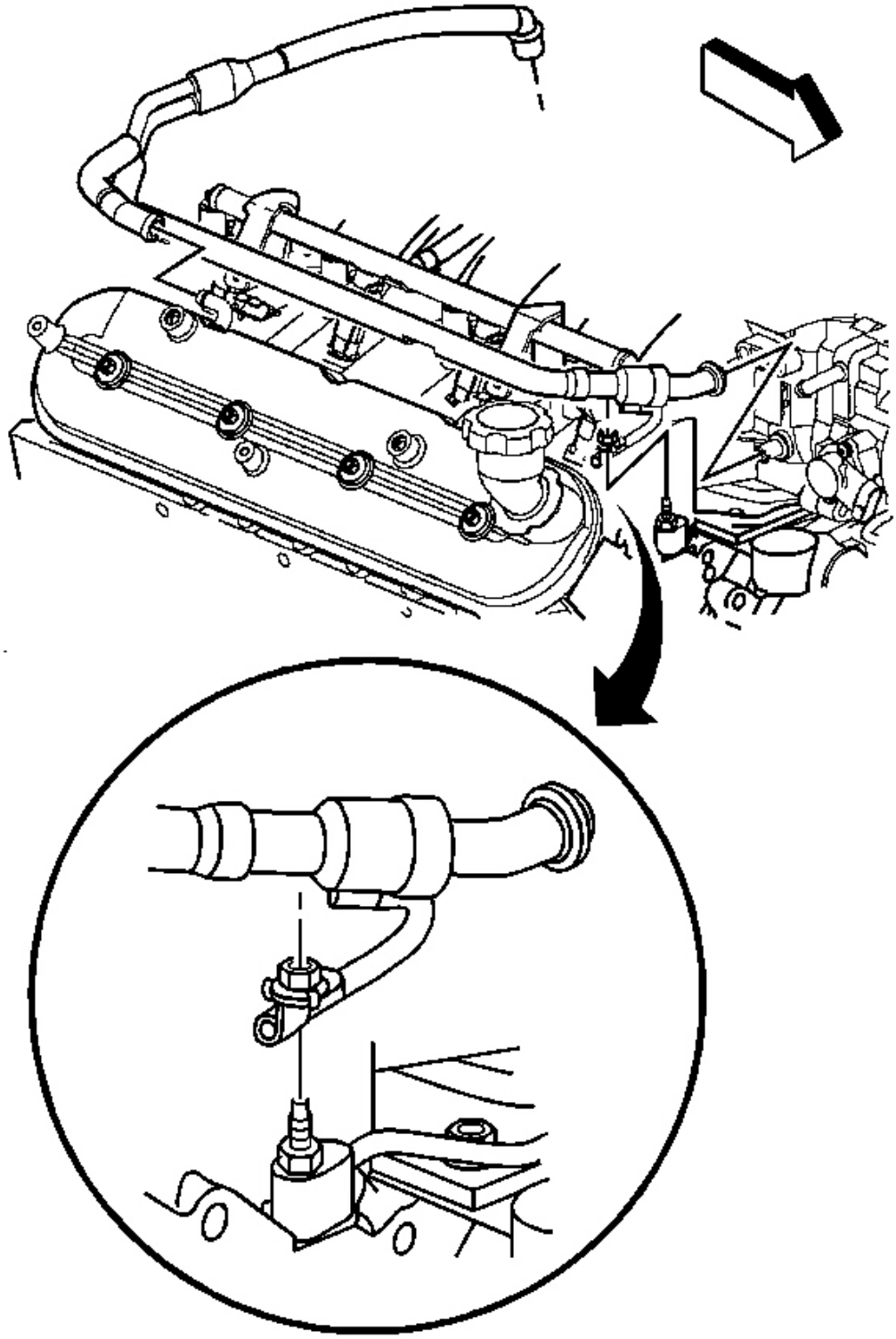

cardiagn.com

Fig. 49: Right Rocker Arm Cover & PCV Valve Pipe
Courtesy of GENERAL MOTORS CORP.

28. If equipped with the RPO LS1 engine, remove the PCV valve pipe strap nut.
29. Remove the PCV valve pipe from the right rocker arm cover and intake manifold.

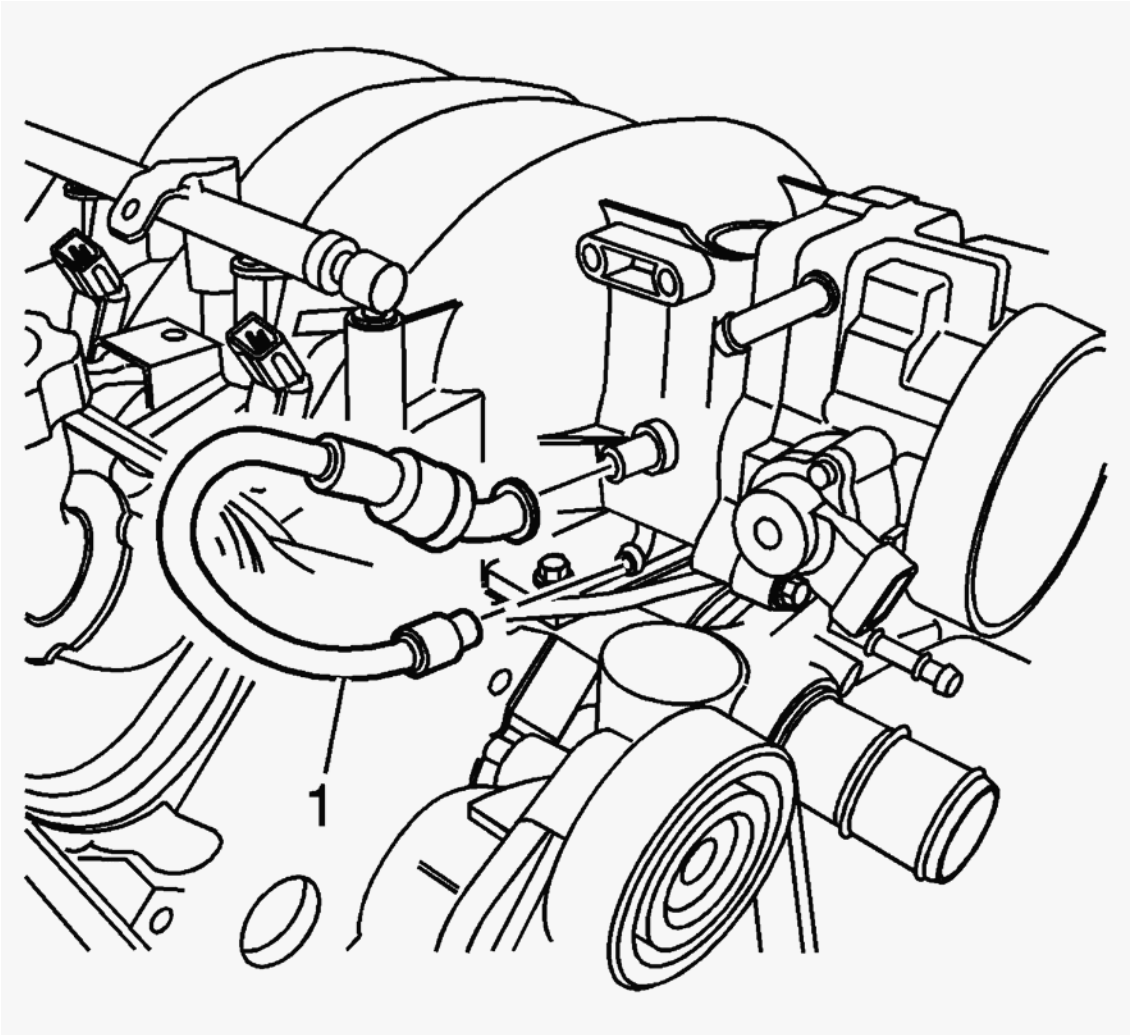

Fig. 50: PCV Valve Hose
Courtesy of GENERAL MOTORS CORP.

30. If equipped with the RPO LS6 engine, remove the PCV valve hose (1) from the valley cover and intake manifold.

cardiagn.com

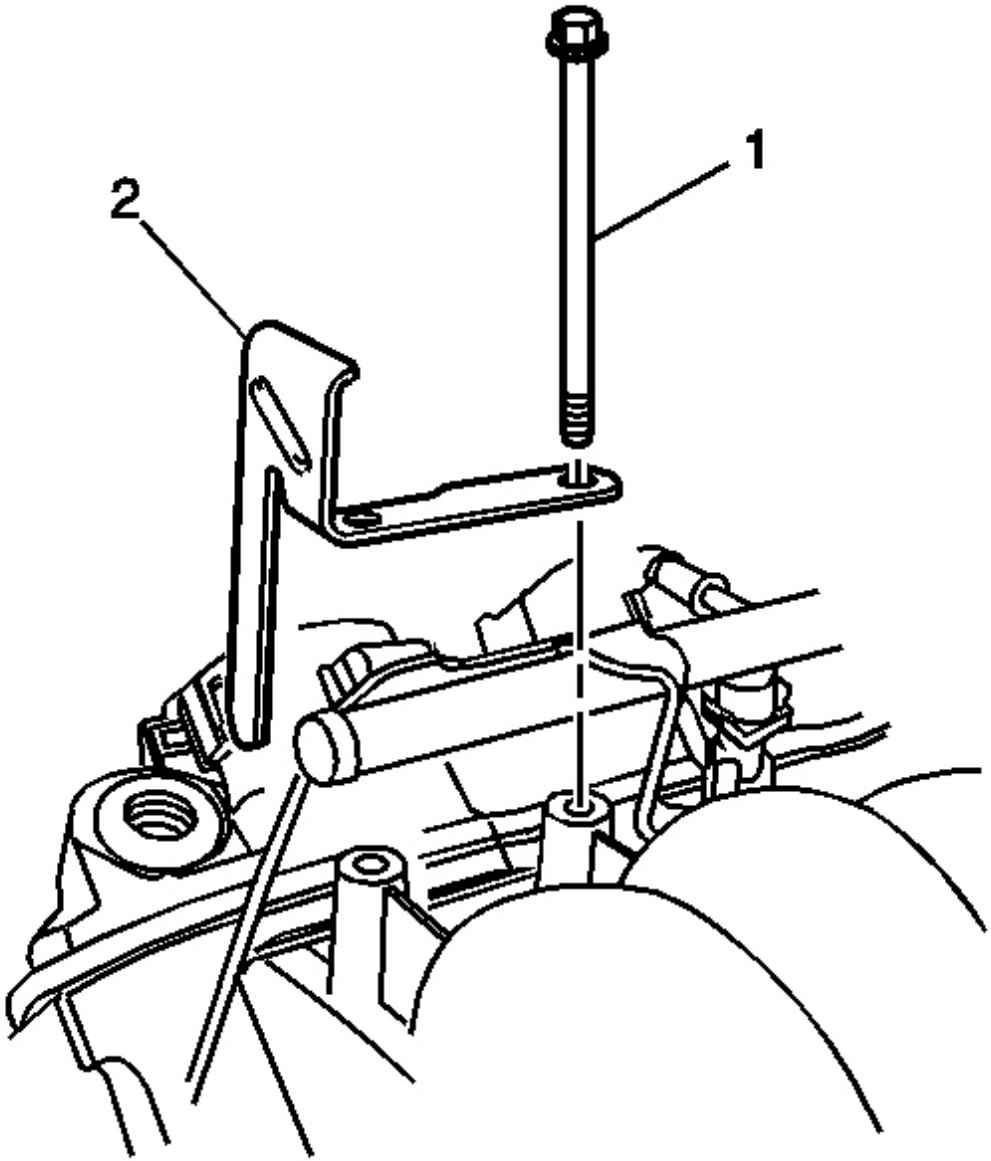

Fig. 51: Intake Manifold Bolts & Fuel Rail Stop Bracket
Courtesy of GENERAL MOTORS CORP.

31. Remove the intake manifold bolts (1) and fuel rail stop bracket (2).
32. Position the intake manifold forward.

cardiagn.com

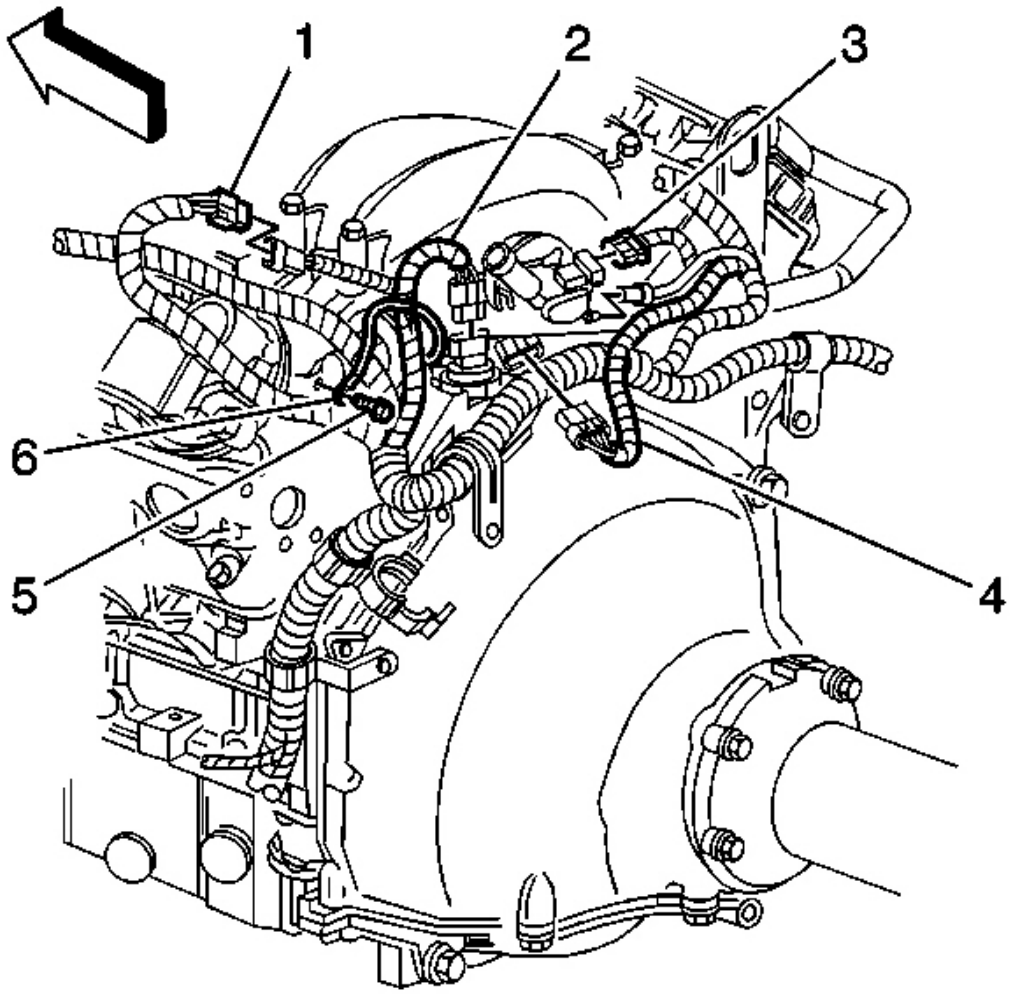

Fig. 52: MAP Sensor Vacuum Hose & MAP Sensor Electrical Connector
Courtesy of GENERAL MOTORS CORP.

33. Disconnect the manifold absolute pressure (MAP) sensor vacuum hose.
34. Disconnect the MAP sensor (3) electrical connector.

cardiagn.com

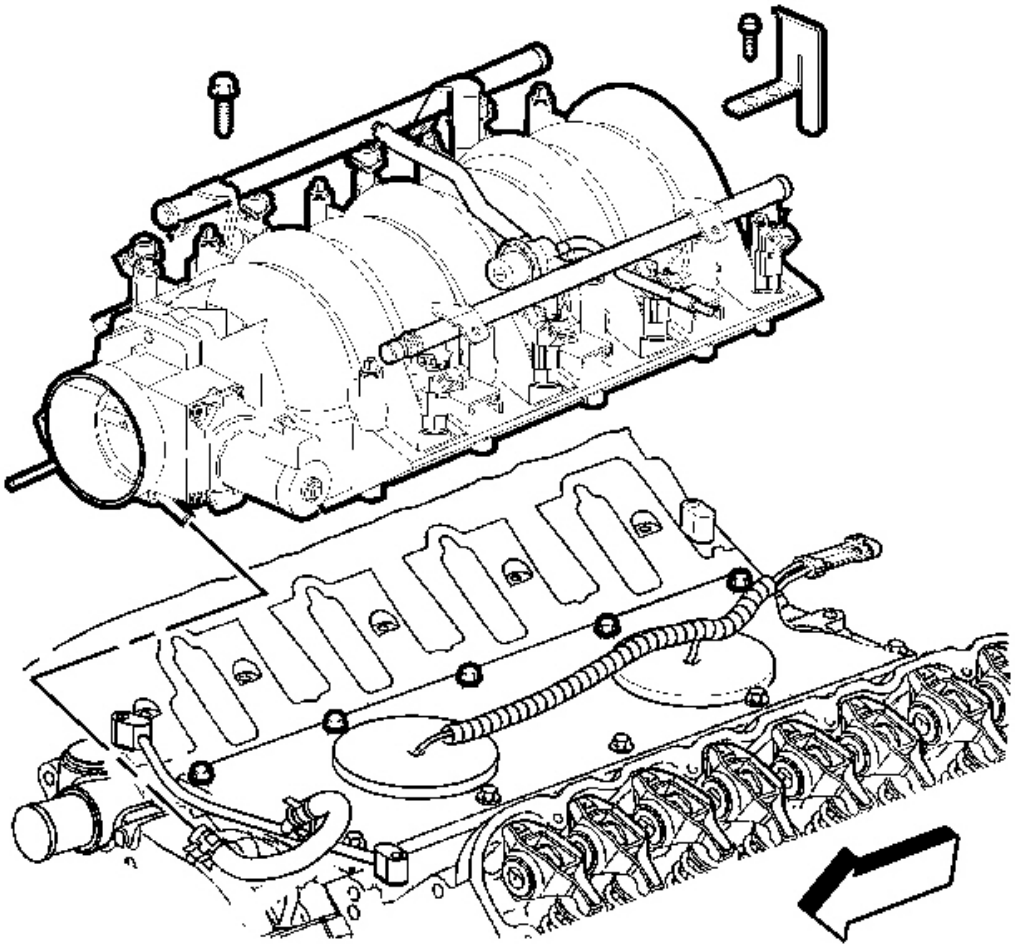

Fig. 53: Intake Manifold
Courtesy of GENERAL MOTORS CORP.

35. Remove the intake manifold.

cardiagn.com

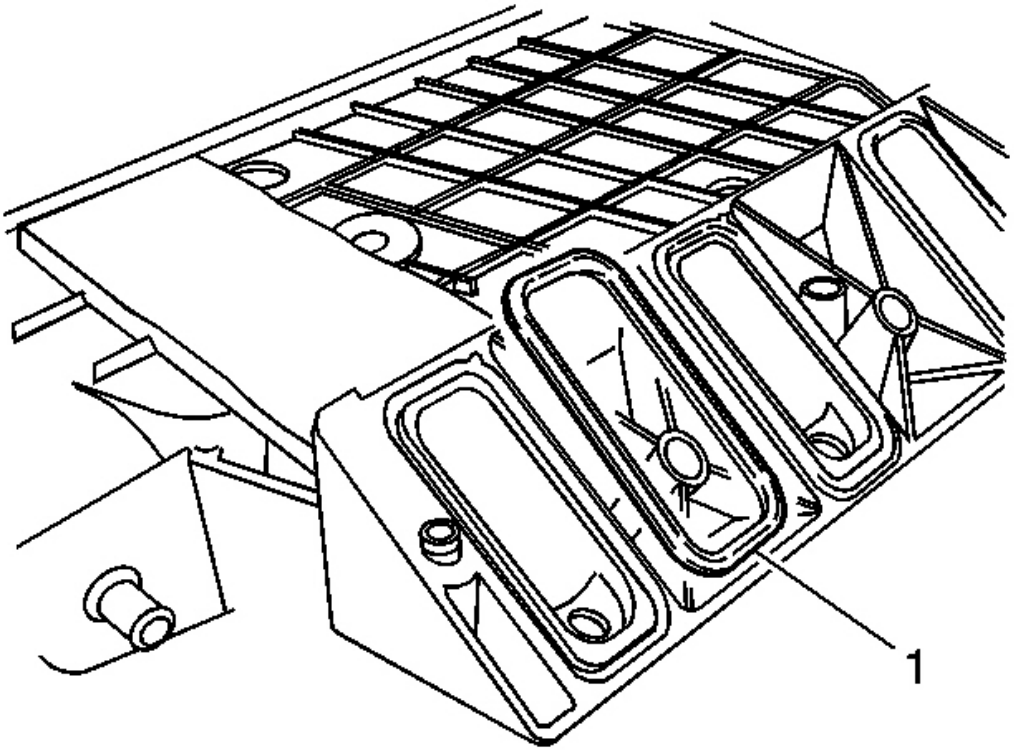

Fig. 54: Intake Manifold Gaskets
Courtesy of GENERAL MOTORS CORP.

36. Remove the intake manifold gaskets (1). Discard the old gaskets.
37. Clean and inspect the intake manifold. Refer to **Intake Manifold Cleaning and Inspection** .

Installation Procedure

IMPORTANT: DO NOT reuse the intake manifold gaskets. Install NEW intake manifold gaskets.

cardiagn.com

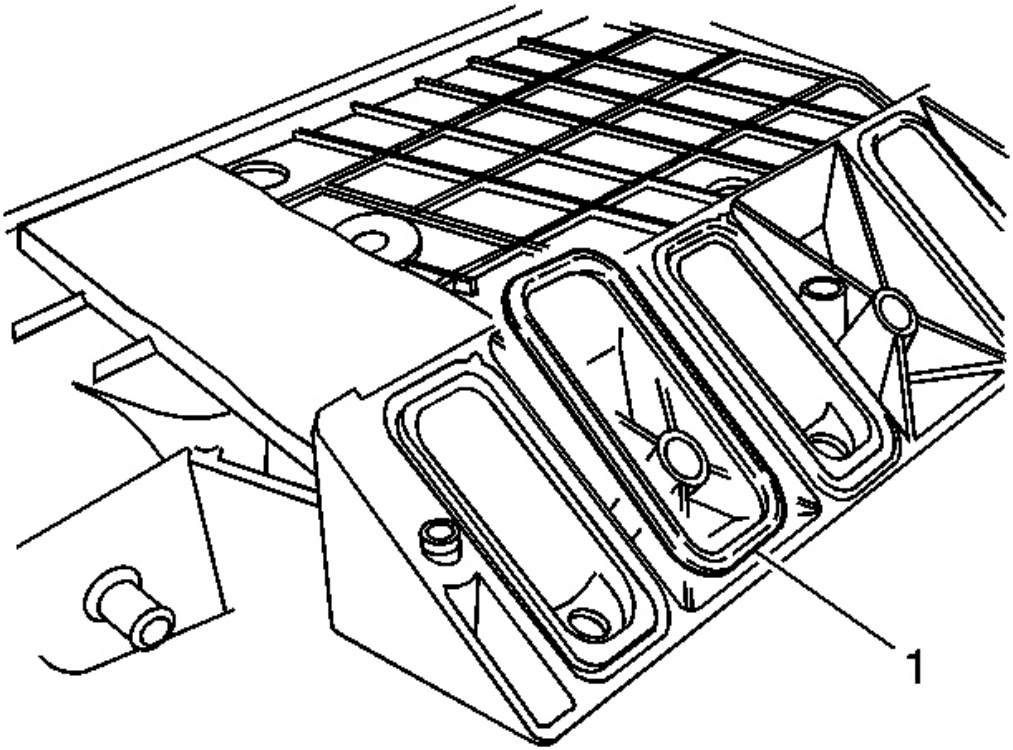

Fig. 55: Intake Manifold Gaskets
Courtesy of GENERAL MOTORS CORP.

1. Install NEW intake manifold gaskets (1) to the manifold.

cardiagn.com

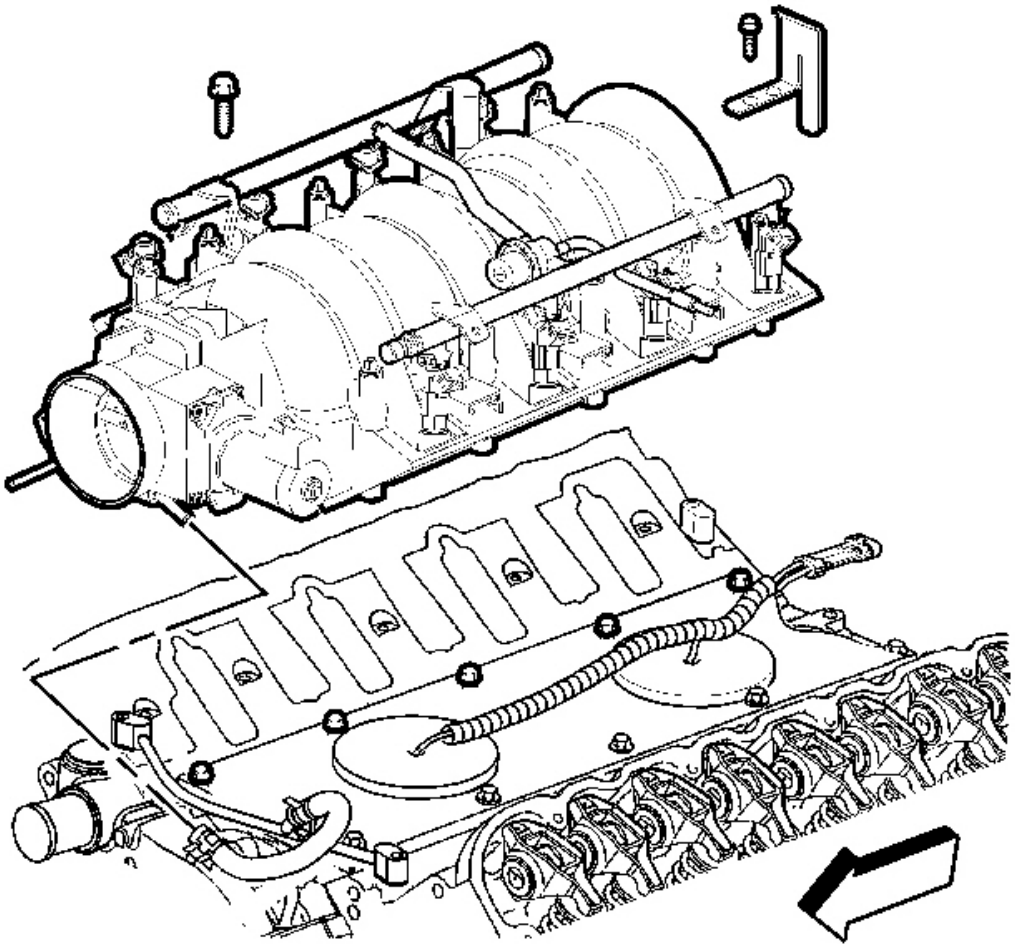

Fig. 56: Intake Manifold
Courtesy of GENERAL MOTORS CORP.

2. Install intake manifold.
3. Position the intake manifold forward.

cardiagn.com

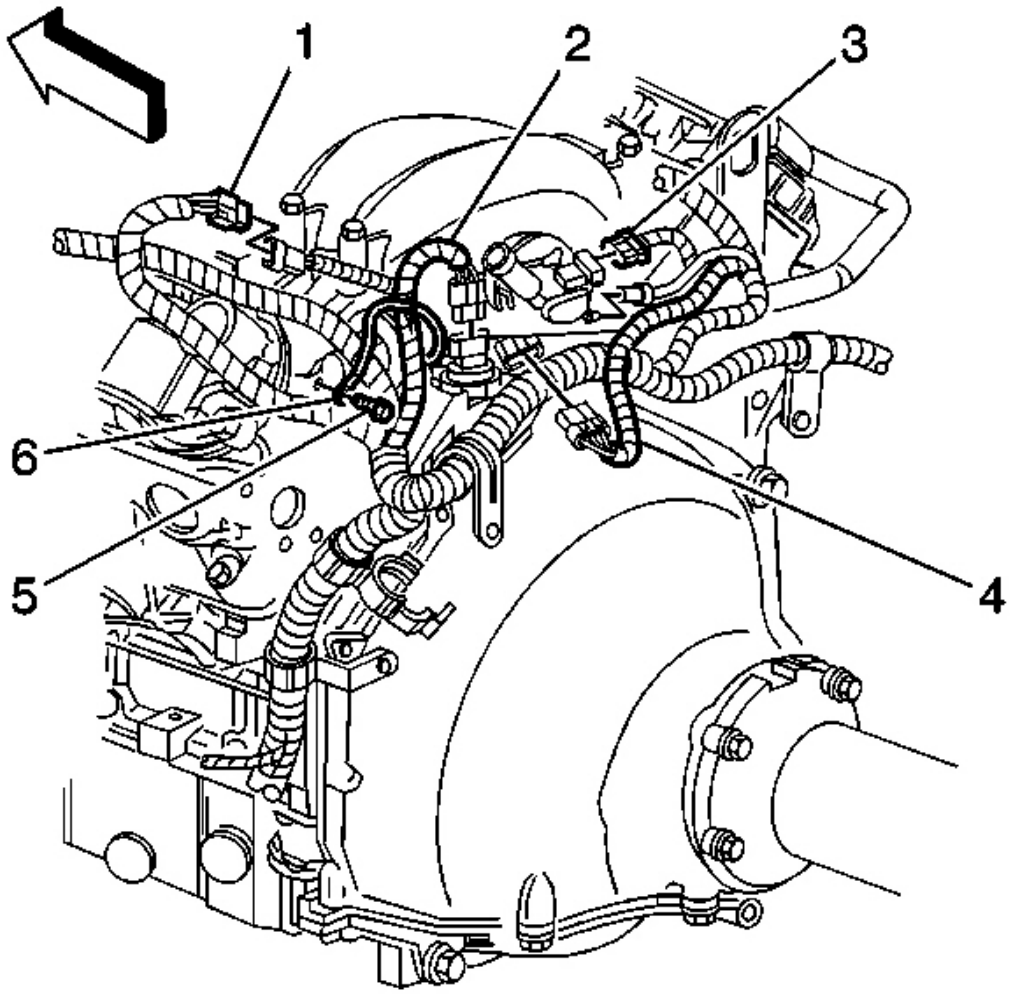

Fig. 57: MAP Sensor Vacuum Hose & MAP Sensor Electrical Connector
Courtesy of GENERAL MOTORS CORP.

4. Connect the MAP sensor vacuum hose.
5. Connect the MAP sensor (3) electrical connector.
6. Position the intake manifold into place.

cardiagn.com

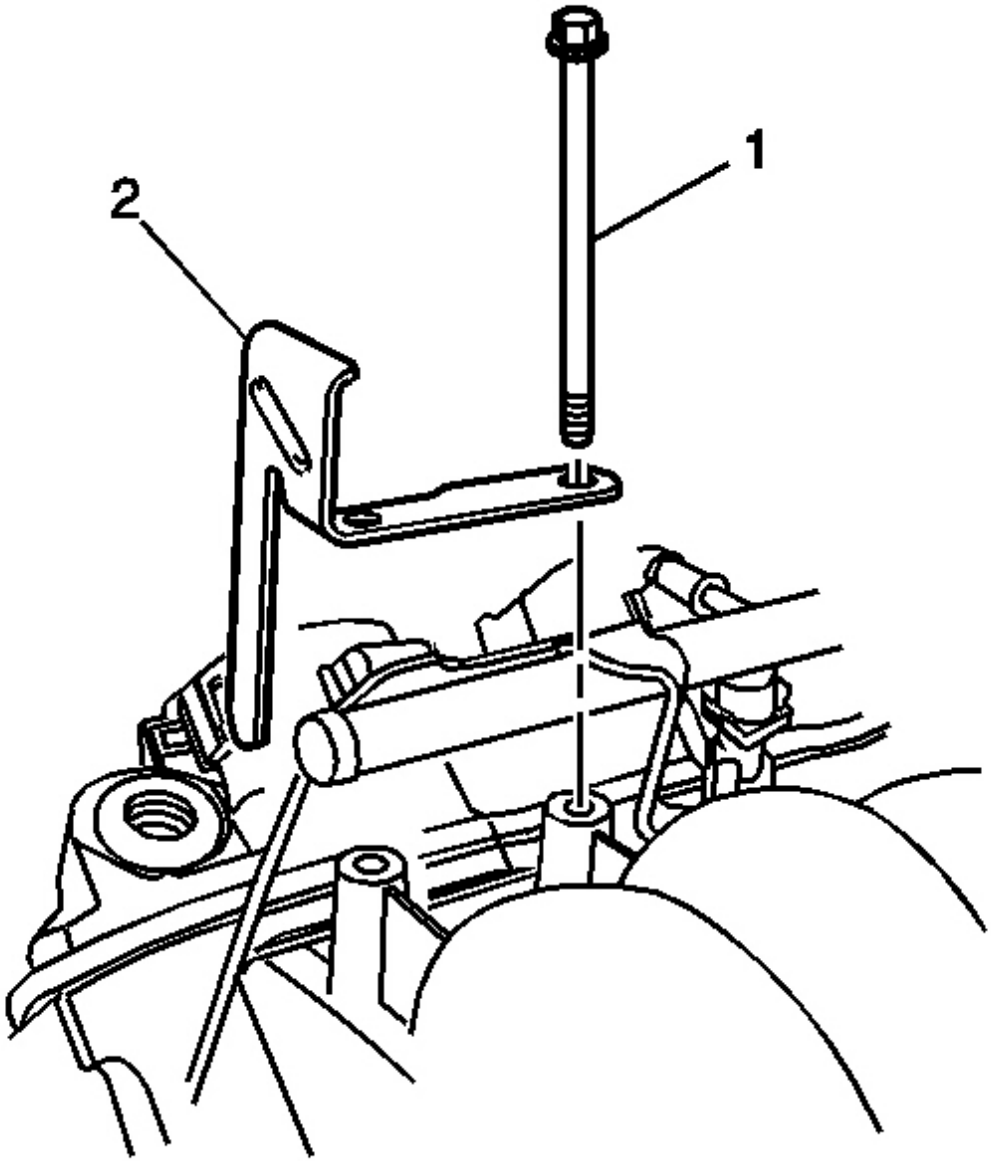

Fig. 58: Intake Manifold Bolts & Fuel Rail Stop Bracket
Courtesy of GENERAL MOTORS CORP.

CAUTION: The fuel rail stop bracket must be installed onto the engine assembly. The stop bracket serves as a protective shield for the fuel rail in the event of a vehicle frontal crash. If the fuel rail stop bracket

cardiagn.com

is not installed and the vehicle is involved in a frontal crash, fuel could be sprayed possibly causing a fire and personal injury from burns.

7. Apply threadlock GM P/N 12345382 (Canadian P/N 10953489), or equivalent to the threads of the intake manifold bolts (1).
8. Install the fuel rail stop bracket (2).
9. Install the intake manifold bolts (1).

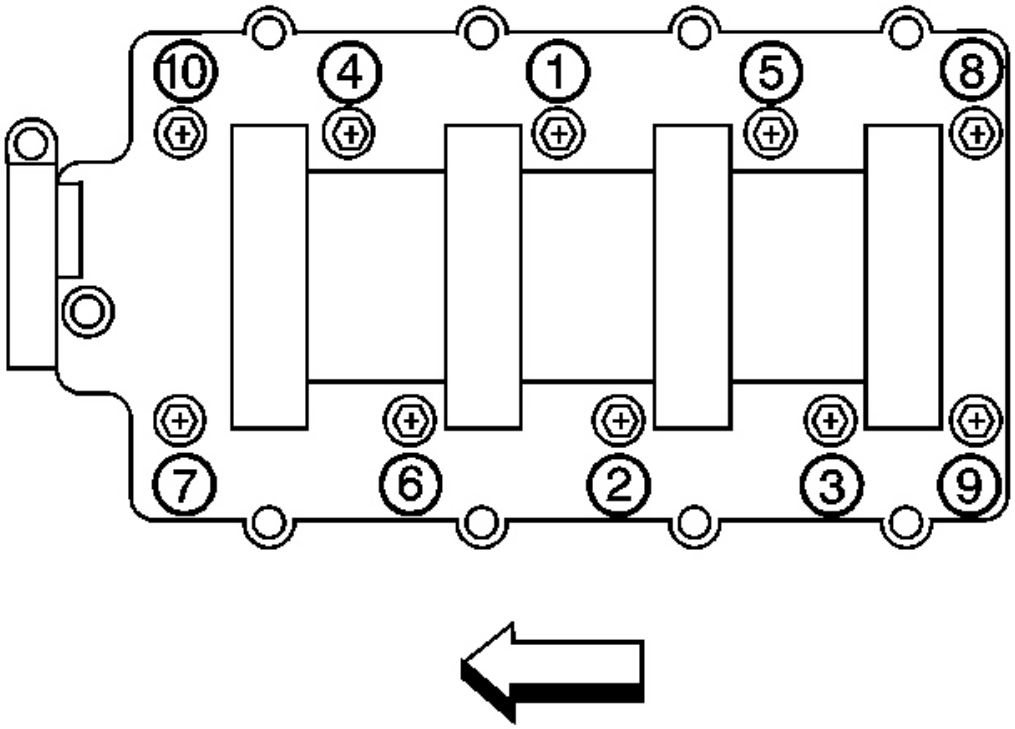

Fig. 59: Intake Manifold Bolt Tightening Sequence
Courtesy of GENERAL MOTORS CORP.

NOTE: Refer to Fastener Notice in Cautions and Notices.

10. Tighten the intake manifold bolts.

Tighten:

1. Tighten the intake manifold bolts a first pass in sequence to 5 N.m (44 lb in).

cardiagn.com

2. Tighten the intake manifold bolts a final pass in sequence to 10 N.m (89 lb in).

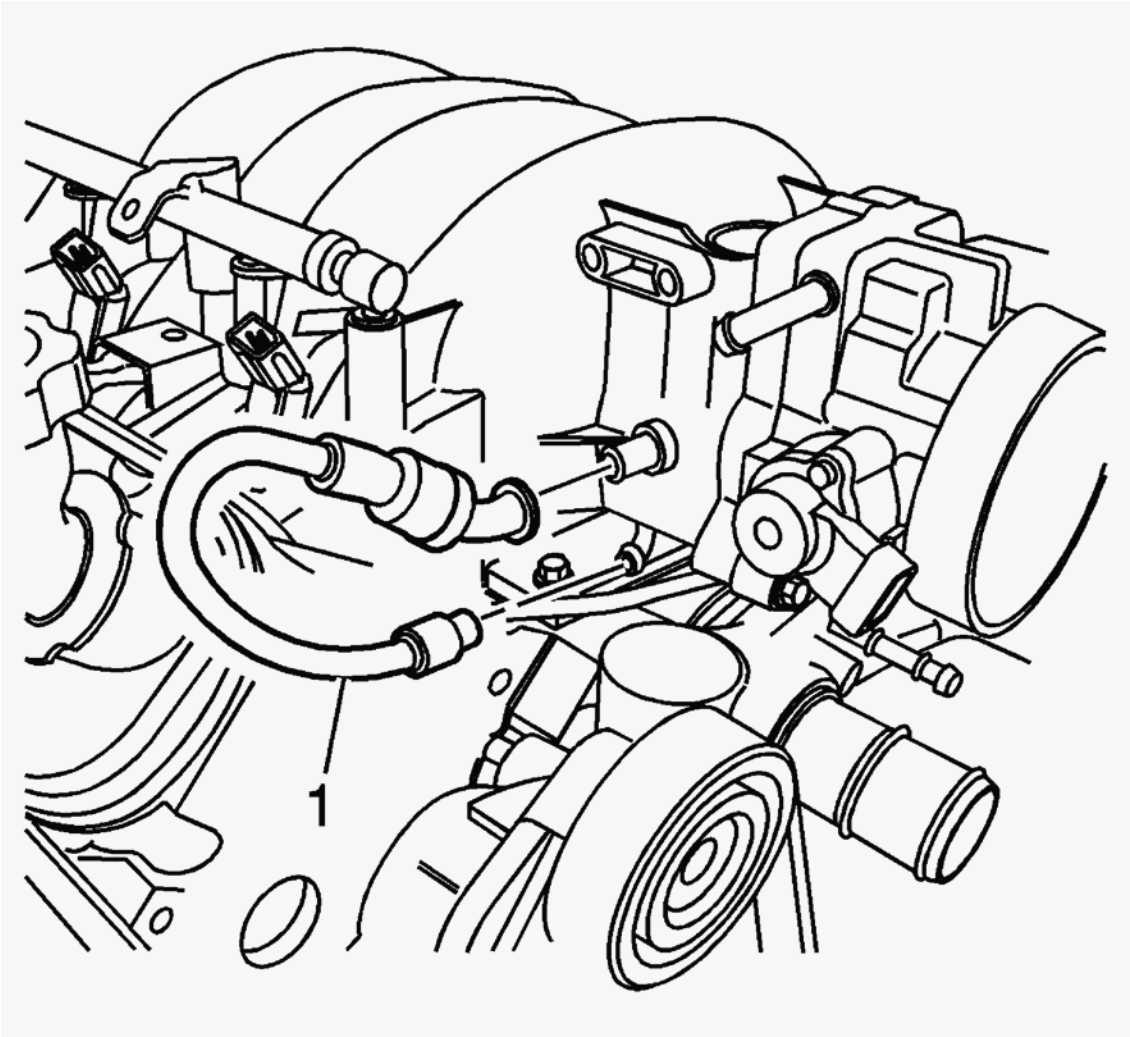

Fig. 60: PCV Valve Hose
Courtesy of GENERAL MOTORS CORP.

11. If equipped with the RPO LS6 engine, install the PCV valve hose (1) to the valley cover and intake manifold.

cardiagn.com

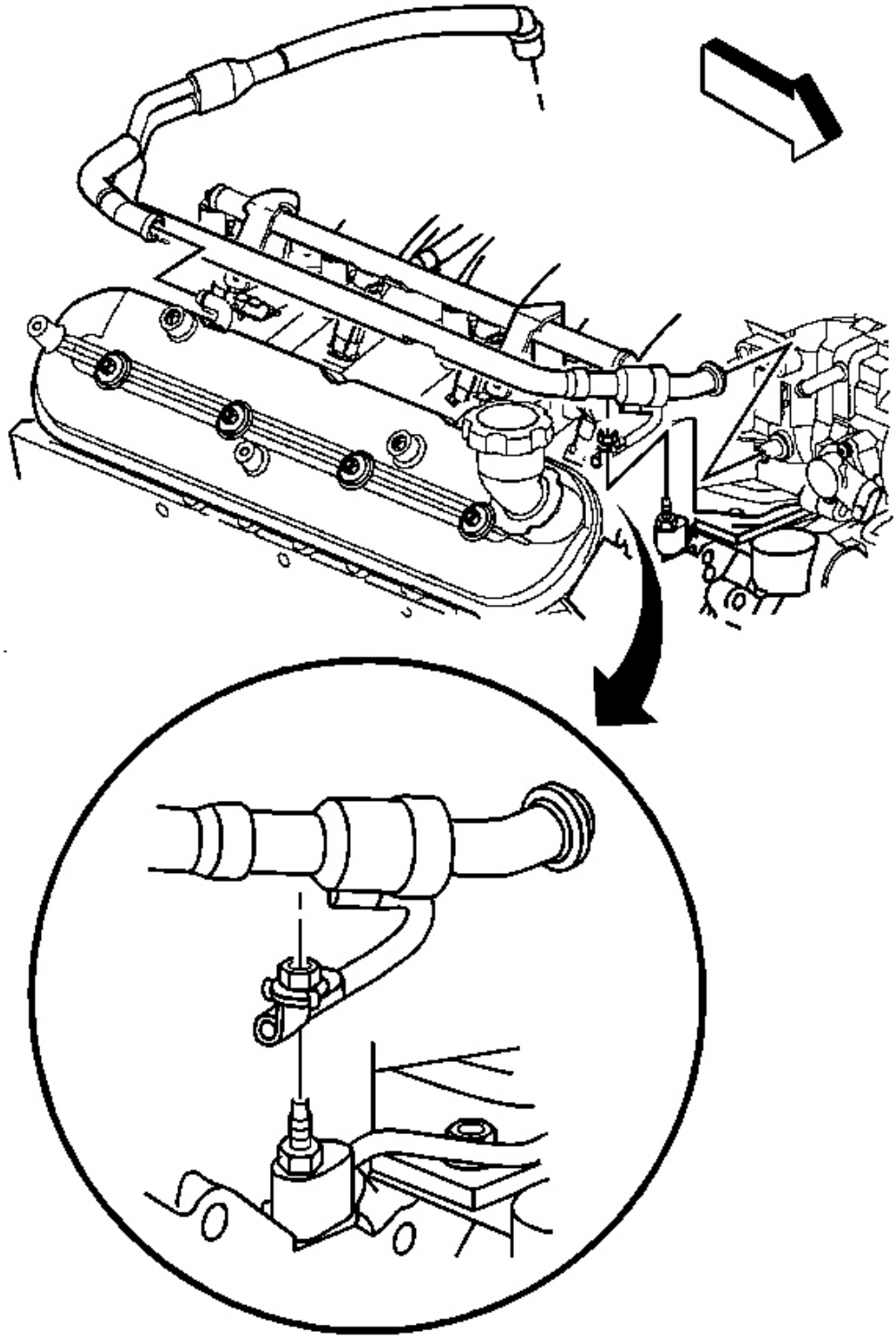

cardiagn.com

Fig. 61: Right Rocker Arm Cover & PCV Valve Pipe
Courtesy of GENERAL MOTORS CORP.

12. If equipped with the RPO LS1 engine, install the PCV valve pipe to the right valve rocker arm cover and intake manifold.
13. Install the PCV pipe strap nut.

    Tighten: Tighten the PCV pipe strap nut to 12 N.m (106 lb in).

cardiagn.com

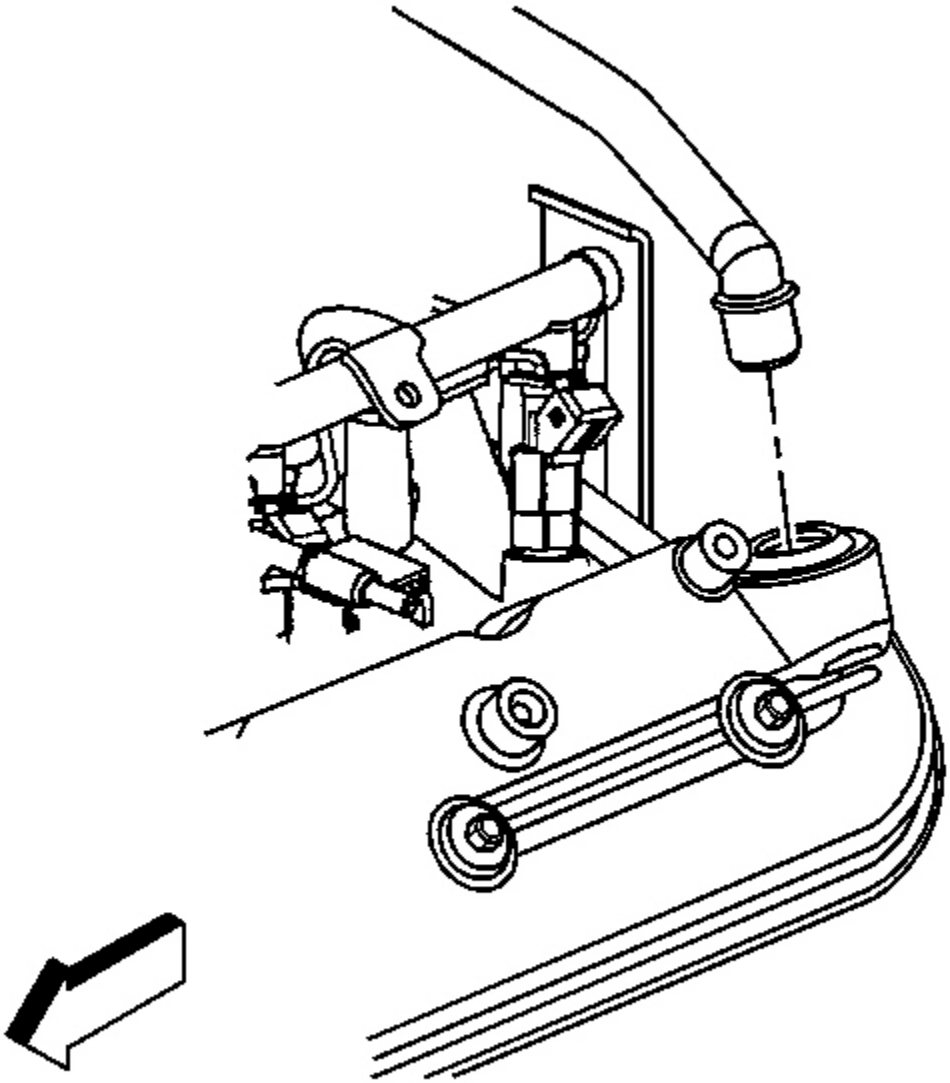

Fig. 62: Left Rocker Arm Cover & PCV Valve Pipe
Courtesy of GENERAL MOTORS CORP.

14. If equipped with the RPO LS1 engine, install the PCV valve pipe to the left rocker arm cover.

cardiagn.com

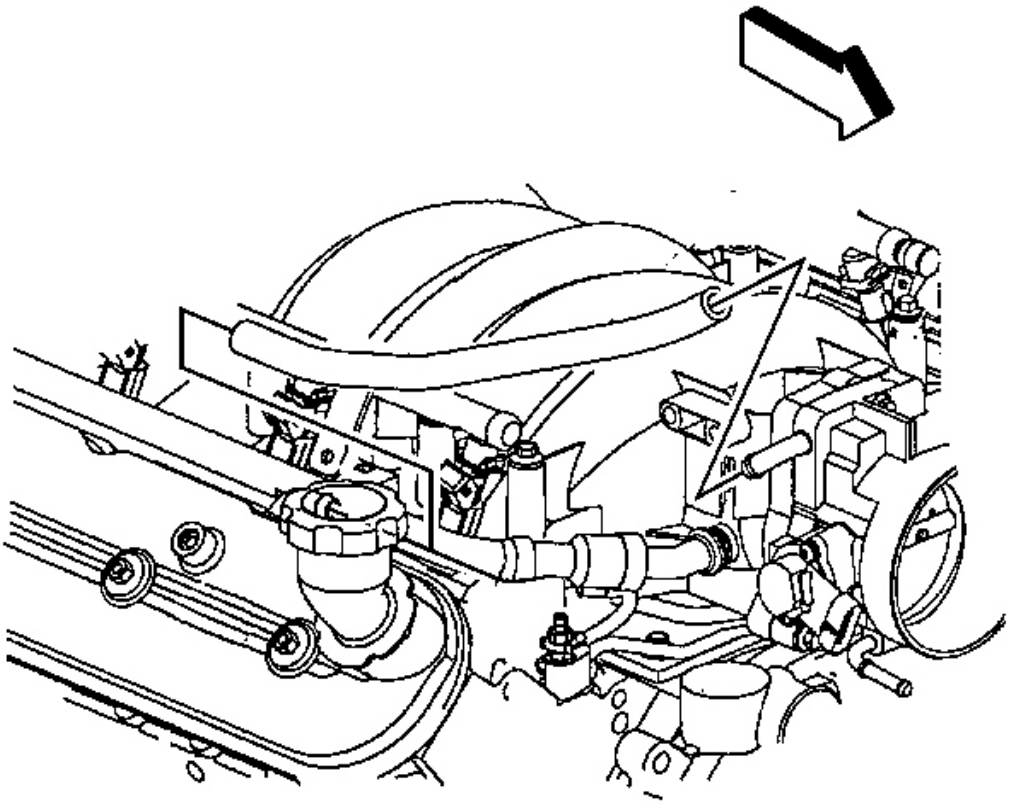

Fig. 63: TP Sensor Harness Clip & PCV Tube
Courtesy of GENERAL MOTORS CORP.

15. Install the PCV tube to the right rocker arm cover.
16. Install the TP sensor harness clip to the PCV tube.

cardiagn.com

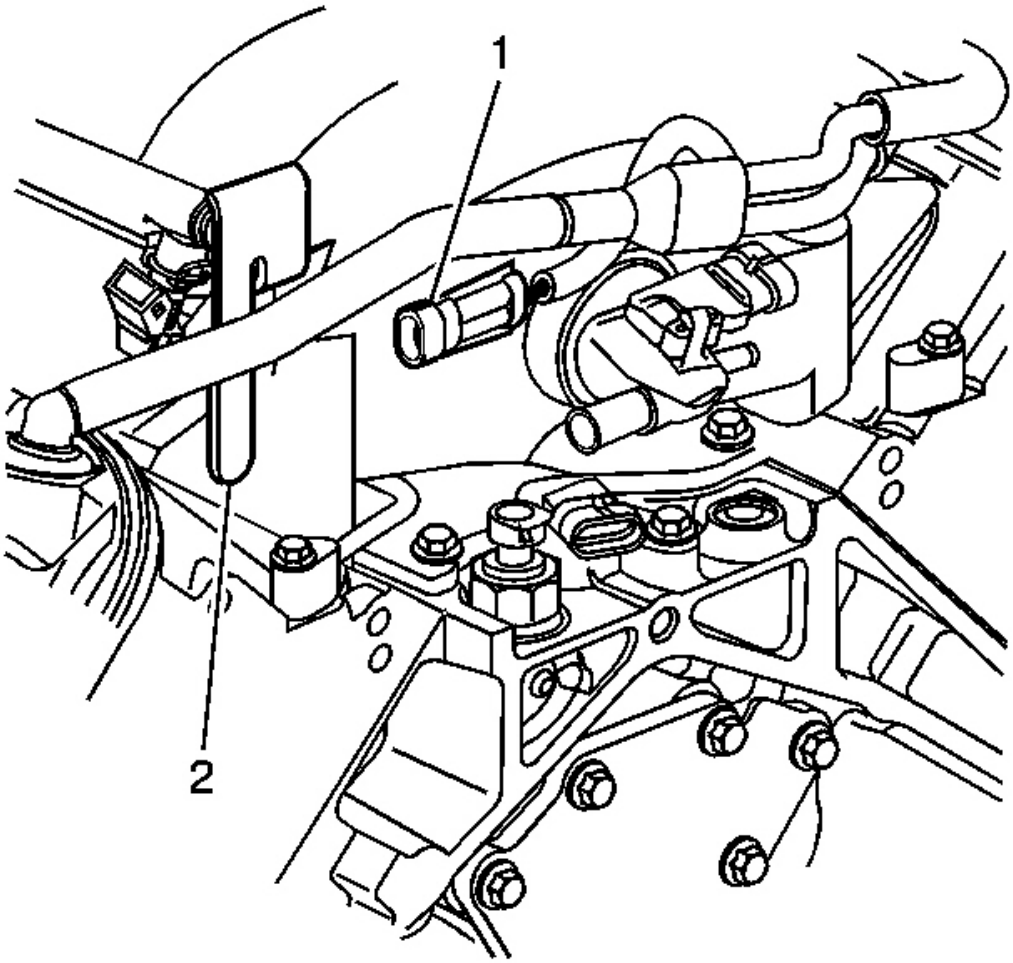

Fig. 64: Knock Sensor Wire Harness Clip & Fuel Rail Stop Bracket
Courtesy of GENERAL MOTORS CORP.

17. Install the knock sensor wire harness (1) to the fuel rail stop bracket (2).

cardiagn.com

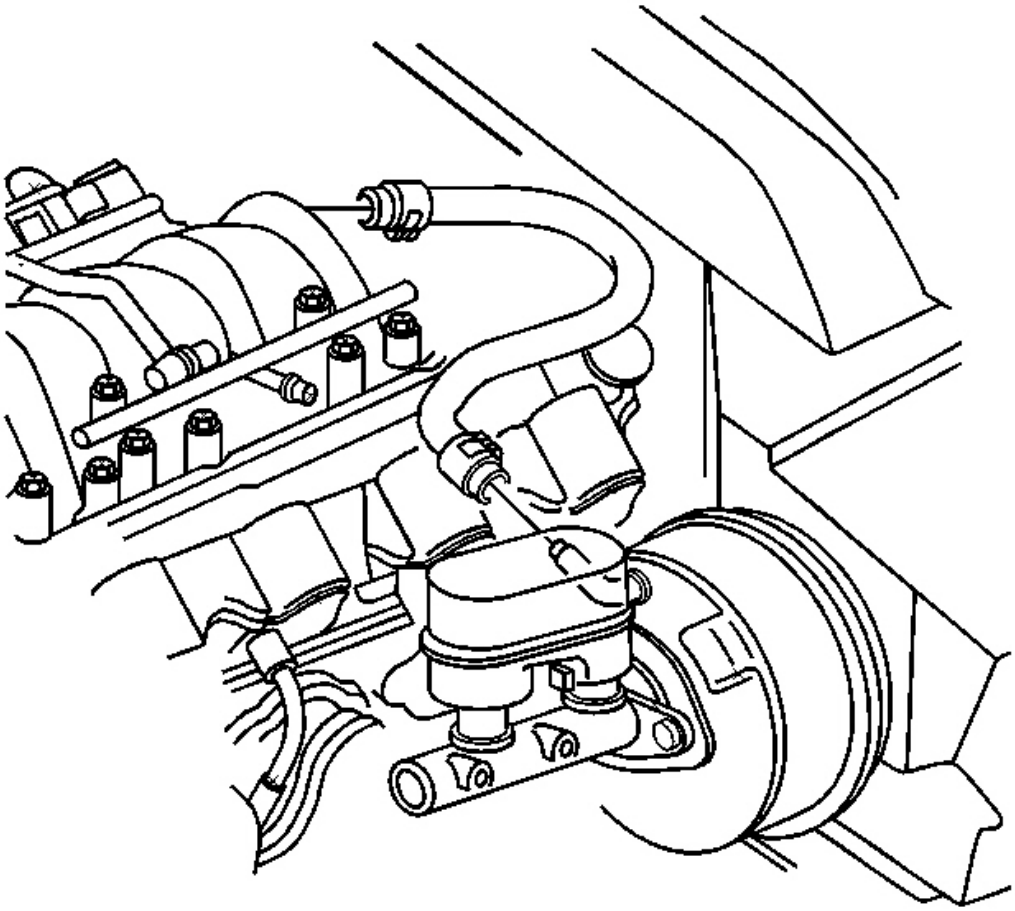

Fig. 65: Vacuum Booster Hose
Courtesy of GENERAL MOTORS CORP.

18. Connect the power brake booster vacuum hose to the booster.

cardiagn.com

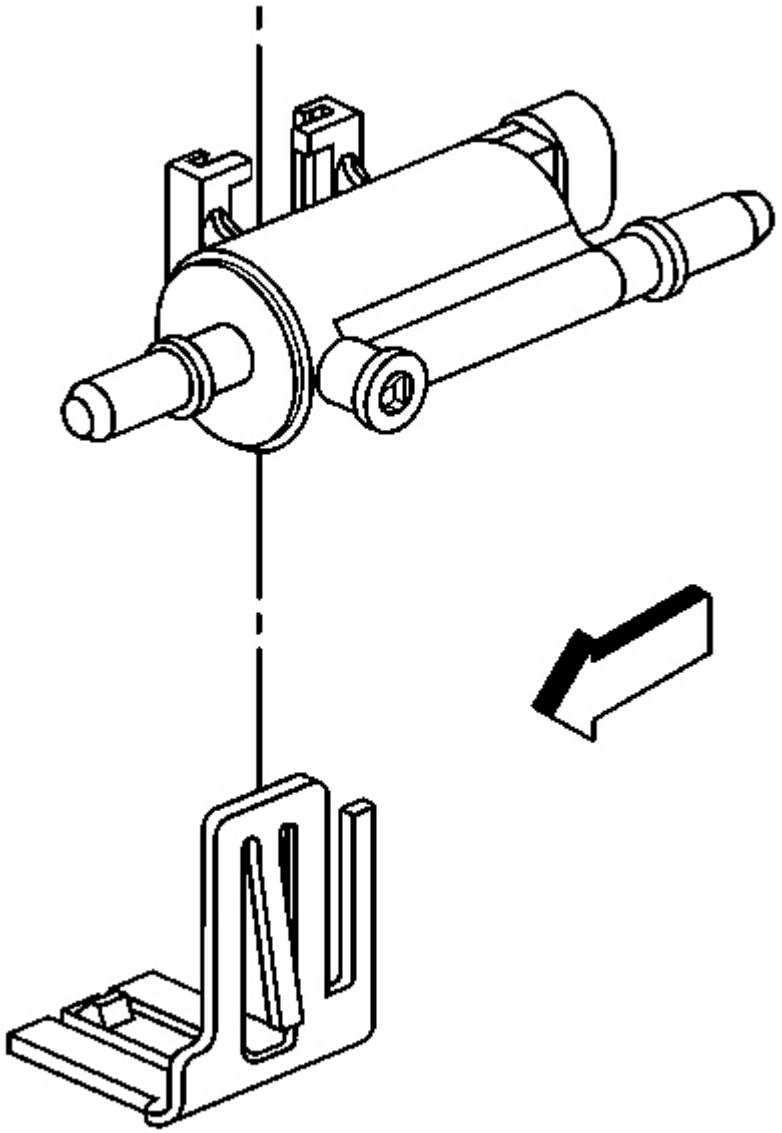

Fig. 66: EVAP Canister Purge Solenoid Valve & Bracket
Courtesy of GENERAL MOTORS CORP.

19. Position the intake manifold branches of the wiring harness.
20. Connect the harness clips at the fuel rails.
21. Install the EVAP canister purge solenoid valve from the bracket.

cardiagn.com

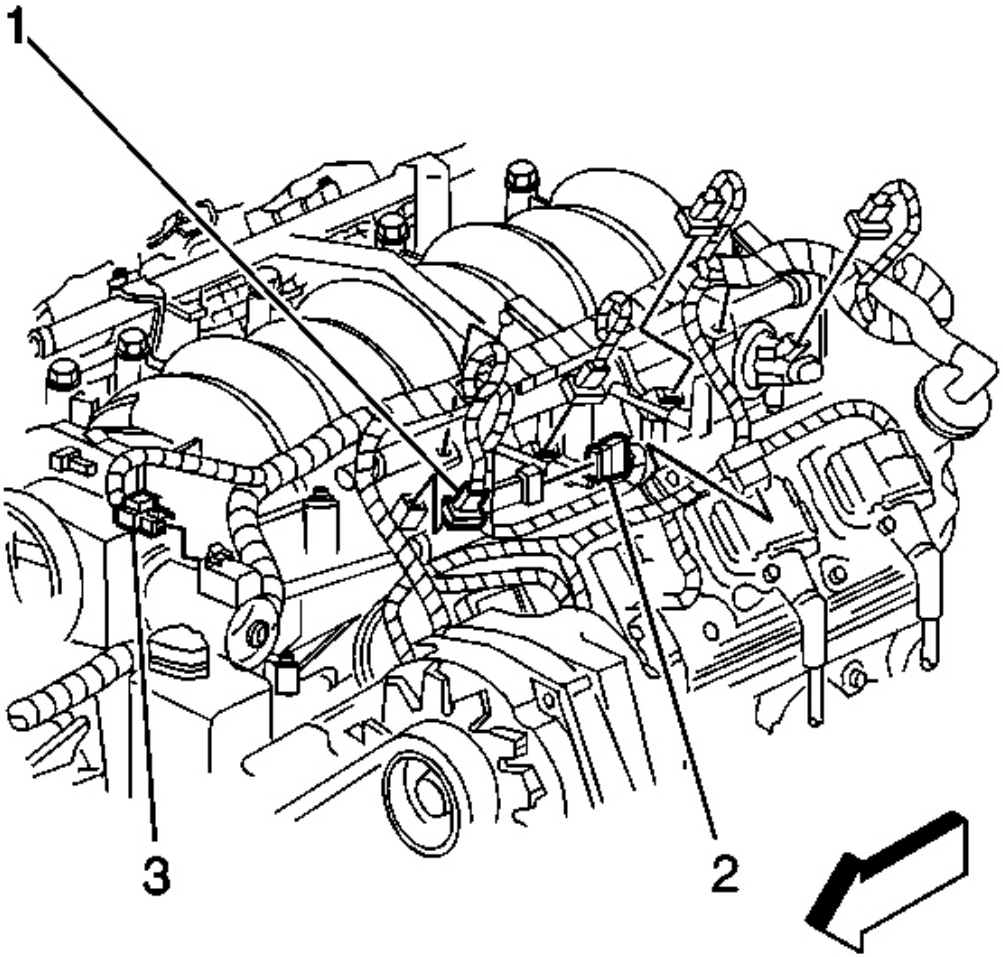

Fig. 67: Electrical Connectors
Courtesy of GENERAL MOTORS CORP.

22. Connect the ETC electrical connector (3).
23. Connect the EVAP canister purge solenoid valve electrical connector (2).
24. Connect all the fuel injector electrical connectors (1).

cardiagn.com

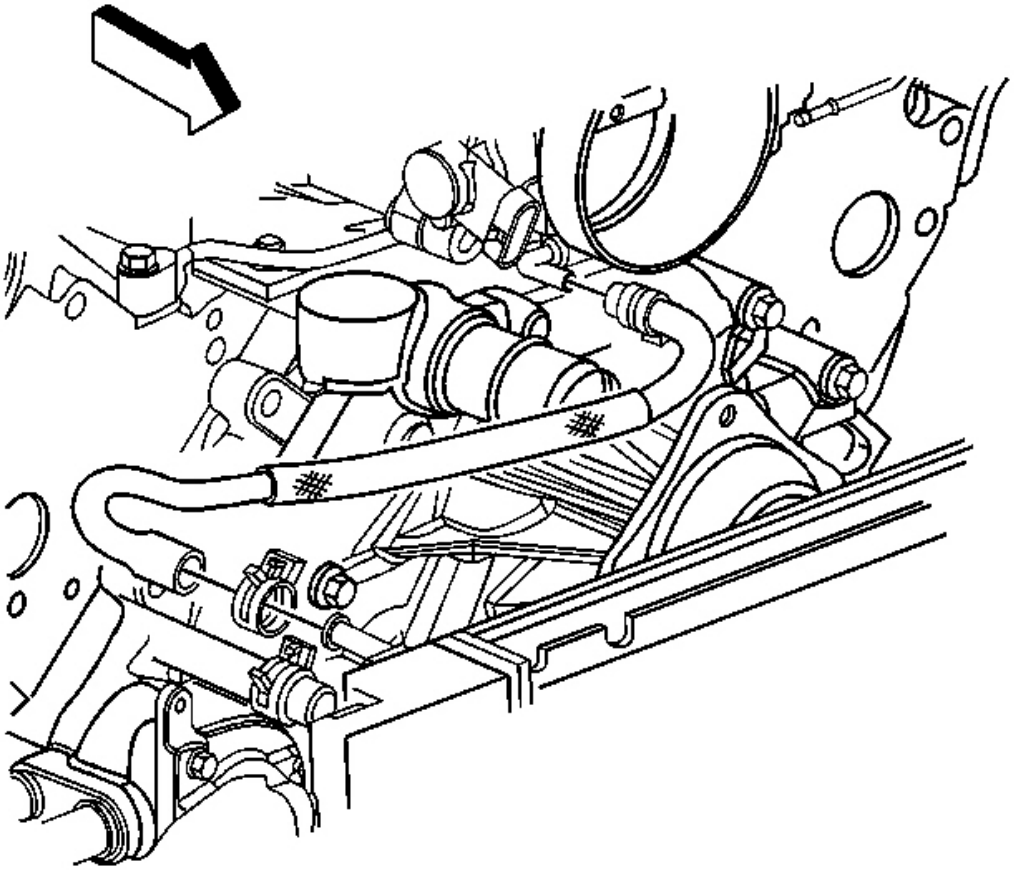

Fig. 68: Throttle Body Heater Outlet Hose & Clamp
Courtesy of GENERAL MOTORS CORP.

25. Install the throttle body heater outlet hose.
26. Install the throttle body heater outlet hose to the throttle body.
27. Position the throttle body heater outlet hose clamp at the throttle body.
28. Install the coolant air bleed hose. Refer to **Coolant Air Bleed Hose Replacement** in Engine Cooling.

cardiagn.com

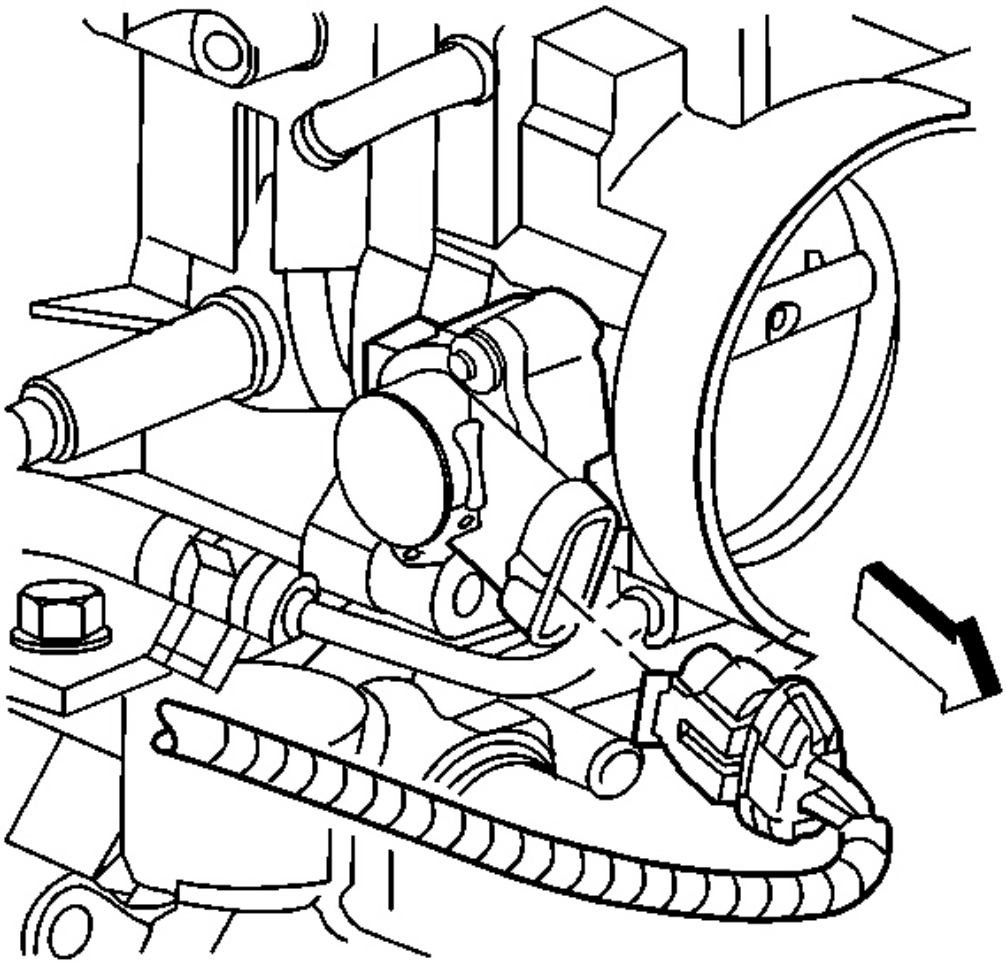

Fig. 69: TP Sensor Electrical Connector
Courtesy of GENERAL MOTORS CORP.

29. Connect the TP sensor electrical connector.

cardiagn.com

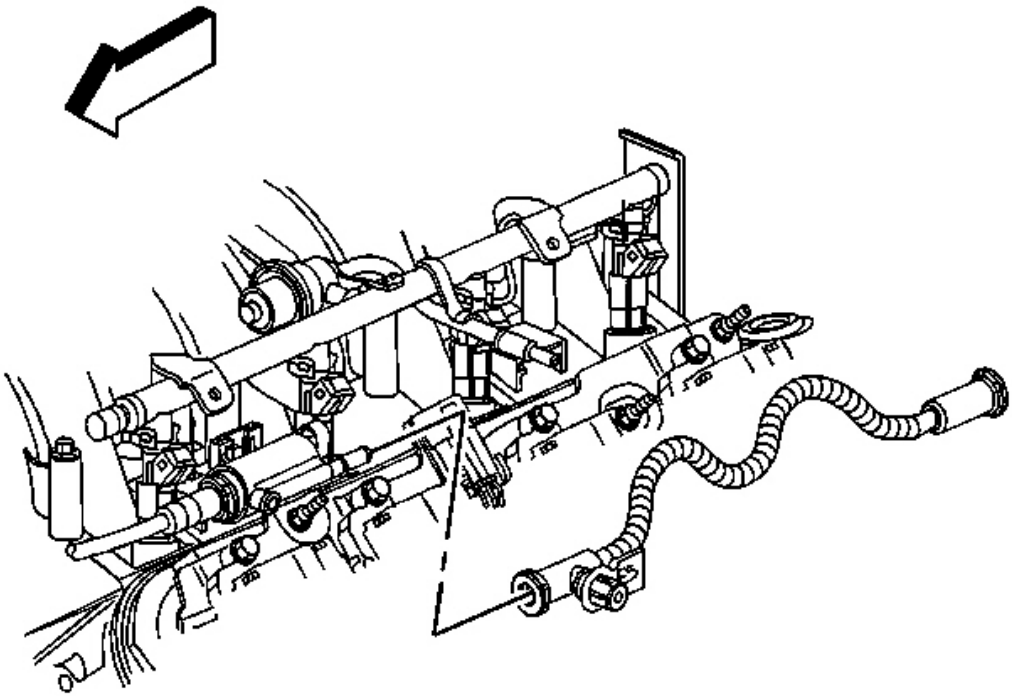

Fig. 70: Fuel Feed Pipe
Courtesy of GENERAL MOTORS CORP.

30. Install the EVAP canister purge tube.
31. Connect the EVAP canister purge tube to the fuel feed pipe.
32. Connect the EVAP canister purge tube to the EVAP canister purge solenoid valve.

cardiagn.com

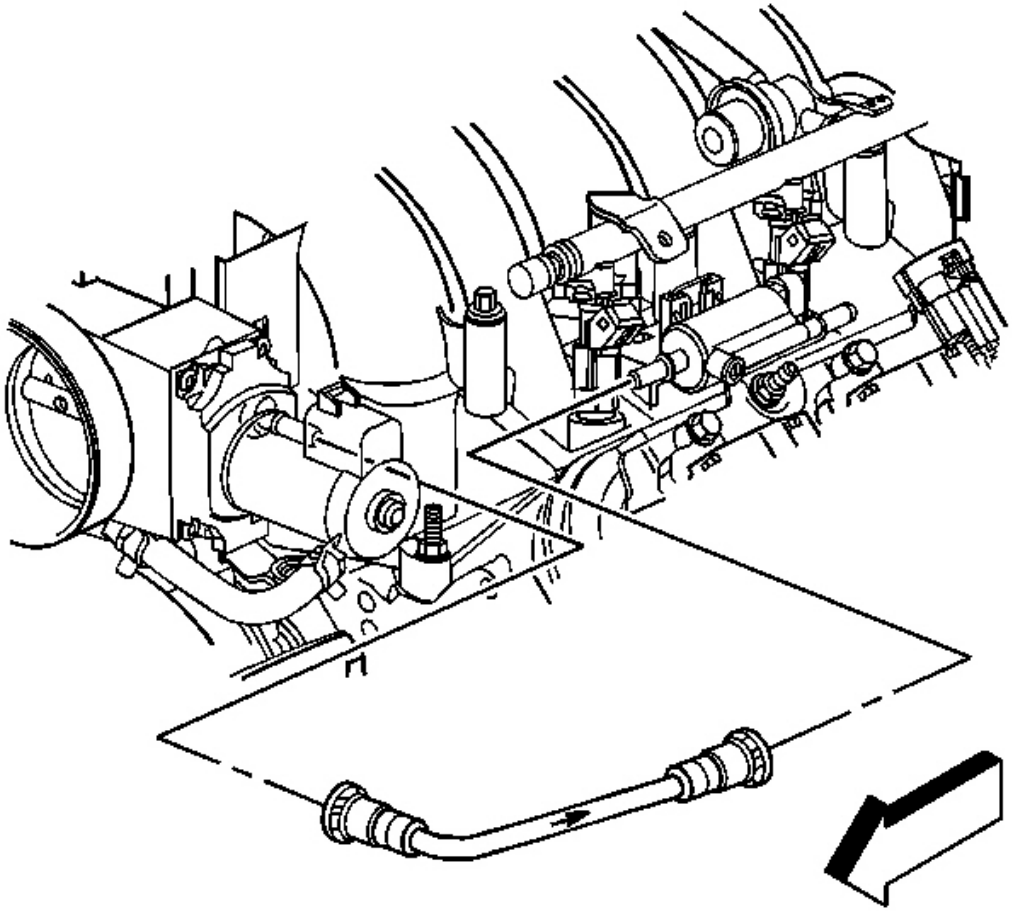

Fig. 71: EVAP Canister Purge Tube
Courtesy of GENERAL MOTORS CORP.

33. Install the EVAP canister purge tube.
34. Connect the EVAP canister purge tube to the EVAP canister purge solenoid valve.
35. Connect the EVAP canister purge tube to the intake manifold.
36. Install the fuel feed hose. Refer to **Fuel Hose/Pipes Replacement - Engine Compartment** in Engine Controls - 5.7 L.

cardiagn.com

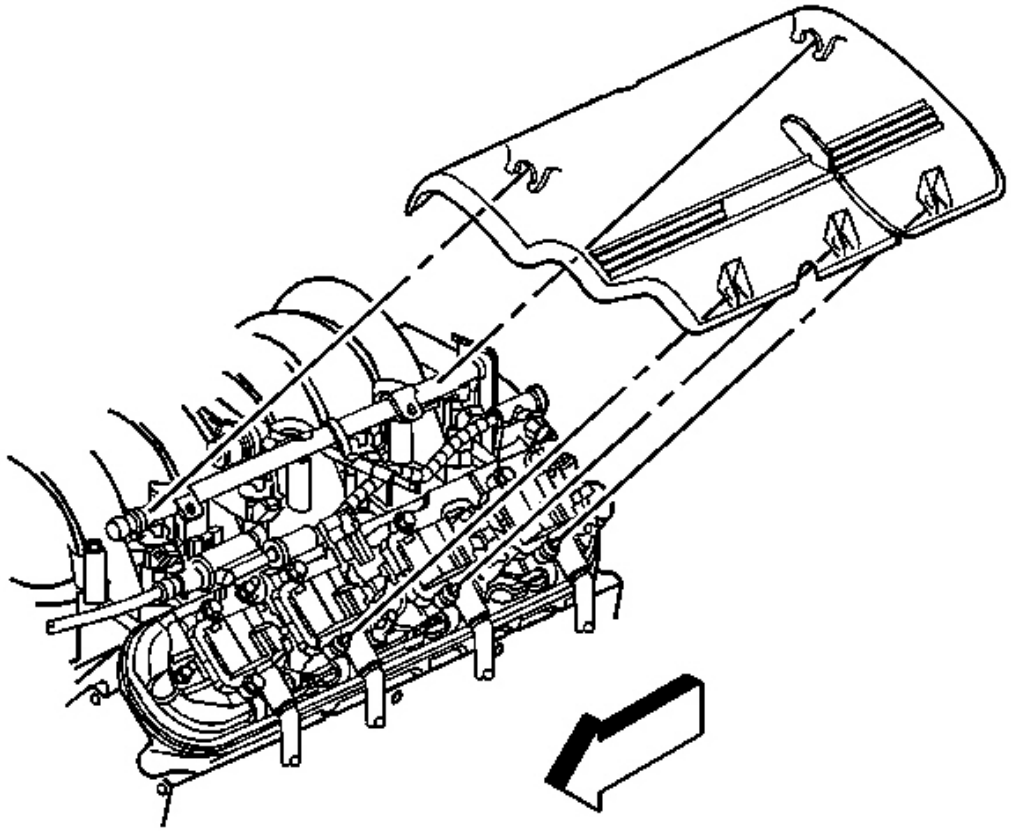

Fig. 72: Left Fuel Rail Cover
Courtesy of GENERAL MOTORS CORP.

37. Install the left fuel rail cover.

cardiagn.com

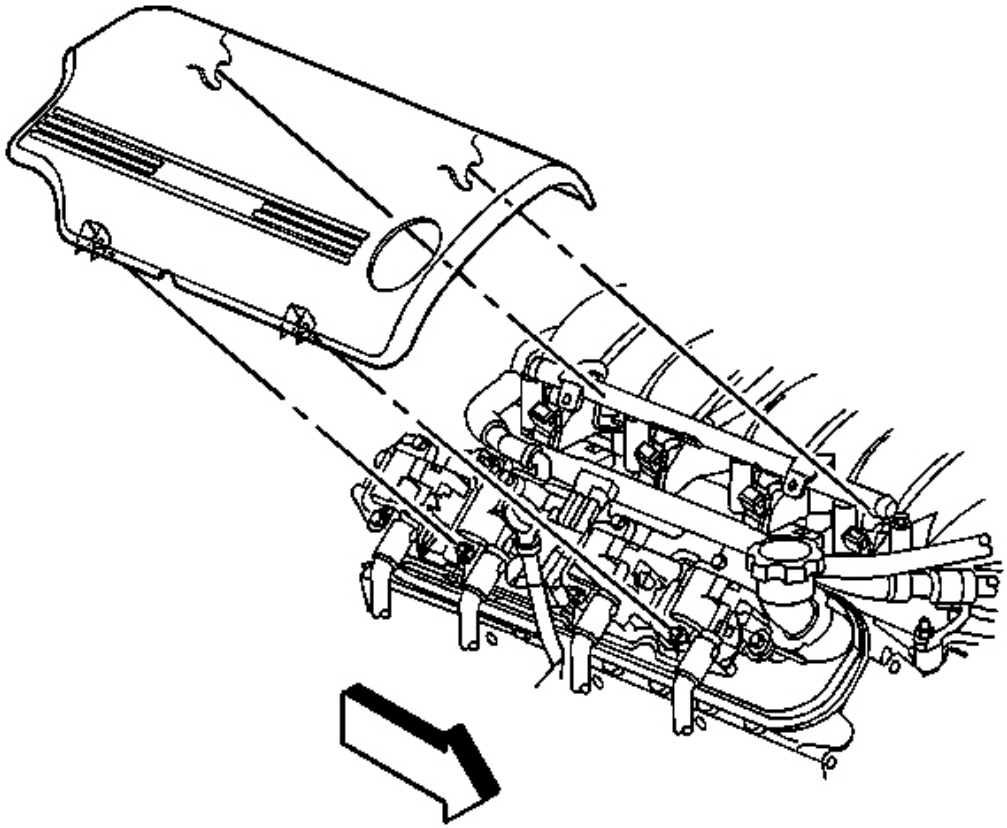

Fig. 73: Right Fuel Injection Rail Cover
Courtesy of GENERAL MOTORS CORP.

38. Install the right fuel rail cover.
39. If replacing the intake manifold, perform the following:
    - Install the throttle body. Refer to **Throttle Body Assembly Replacement** in Engine Controls - 5.7 L.
    - Install the fuel injectors. Refer to **Fuel Injector Replacement** in Engine Controls - 5.7 L.
40. Fill the cooling system. Refer to **Draining and Filling Cooling System** in Engine Cooling.

ENGINE VALLEY COVER REPLACEMENT

Removal Procedure

cardiagn.com

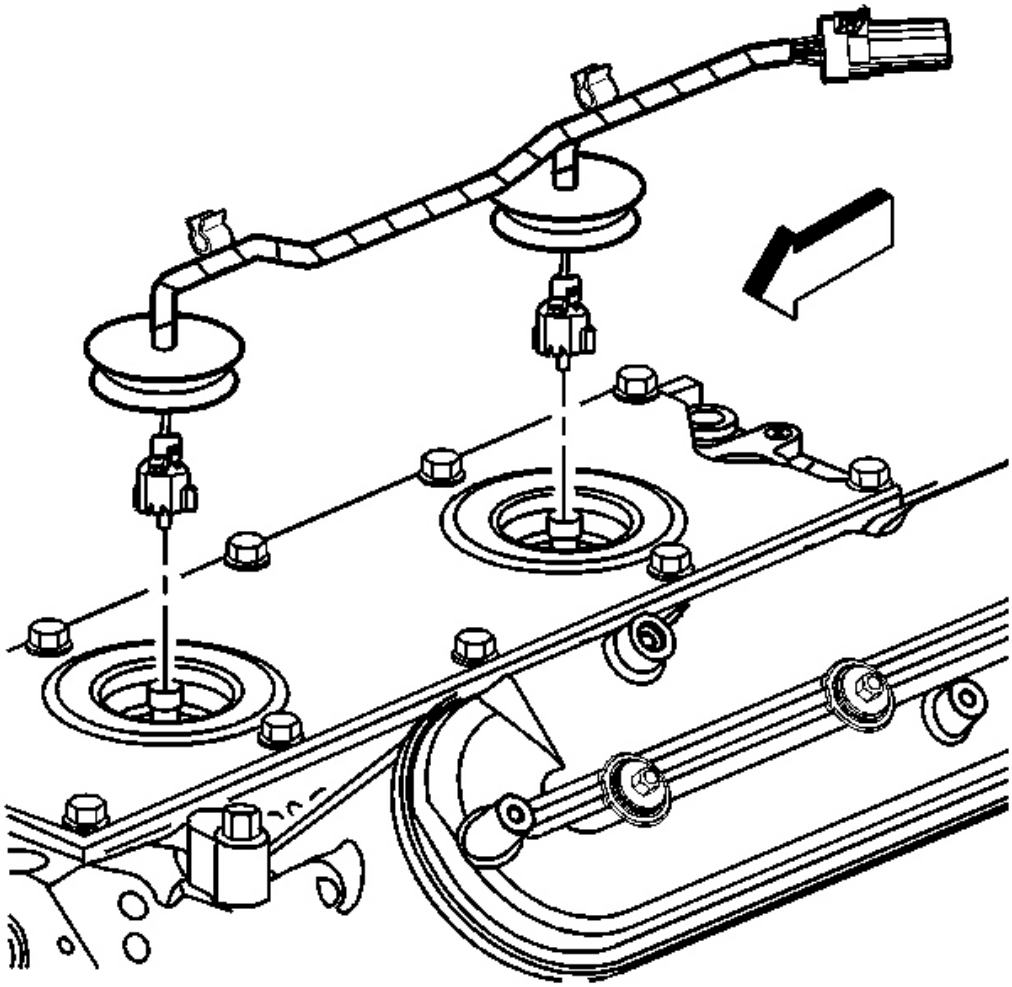

Fig. 74: View Of Knock Sensor Wire Harness
Courtesy of GENERAL MOTORS CORP.

1. Remove the intake manifold. Refer to **Intake Manifold Replacement** .
2. Gently pry up the rubber grommets.
3. Disconnect the knock sensor wire harness electrical connectors.

cardiagn.com

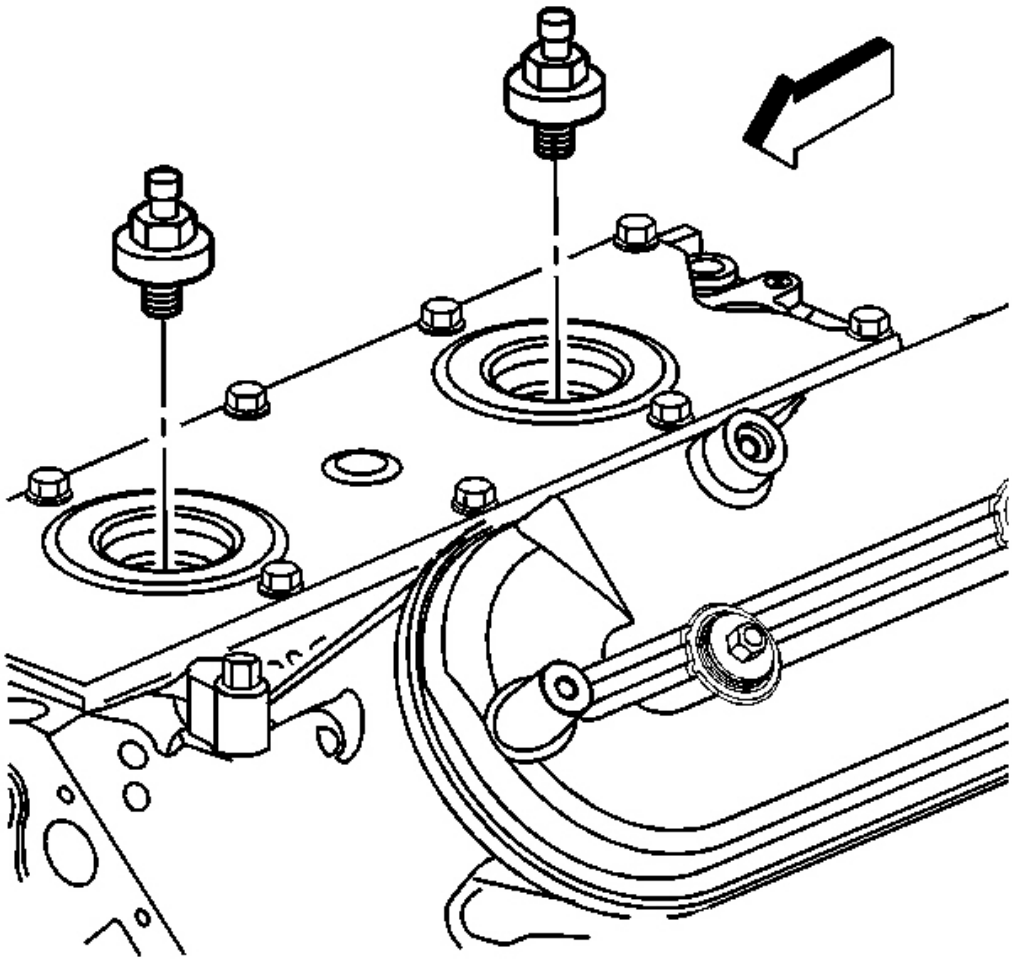

Fig. 75: View Of Knock Sensors
Courtesy of GENERAL MOTORS CORP.

4. Remove the knock sensors.

cardiagn.com

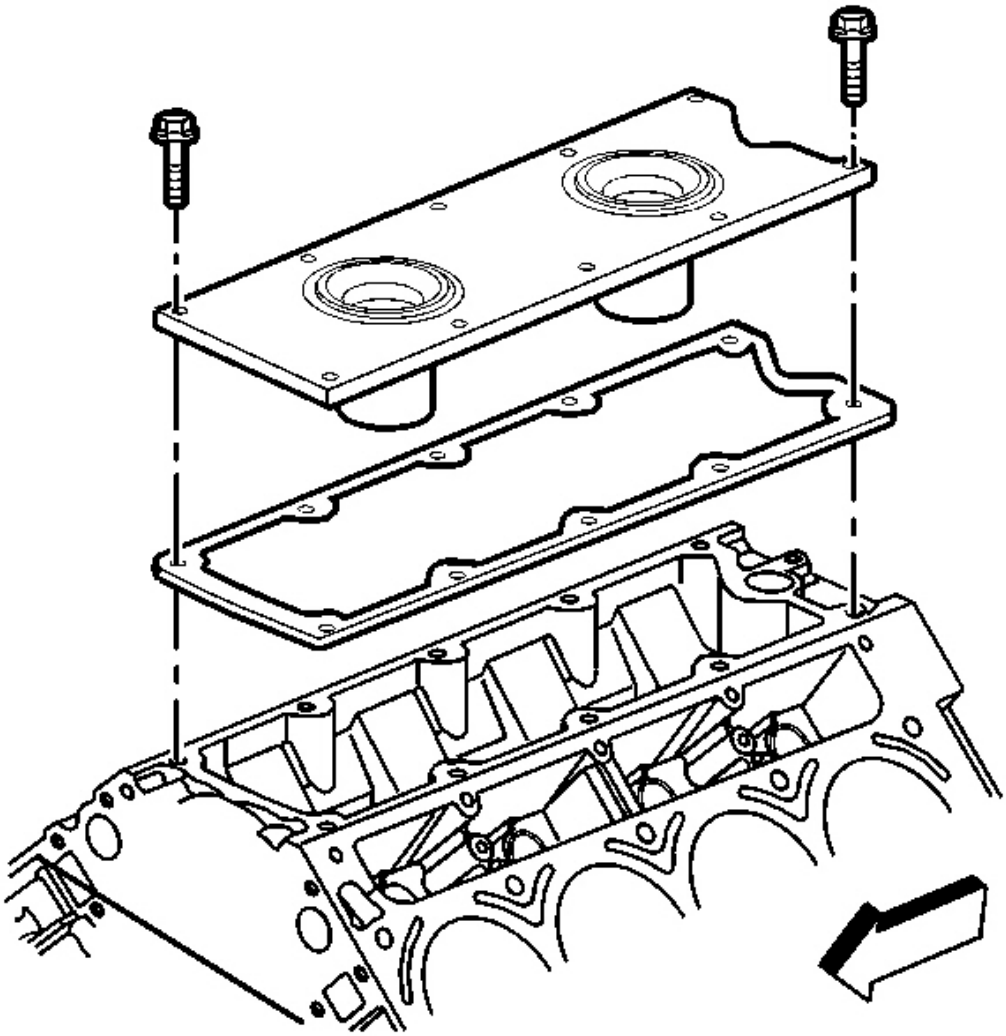

Fig. 76: View Of Engine Valley Cover, Gasket & LS1 Engine
Courtesy of GENERAL MOTORS CORP.

5. If equipped with the 5.7 L, regular production option (RPO) LS1 engine, remove the engine valley cover bolts.

cardiagn.com

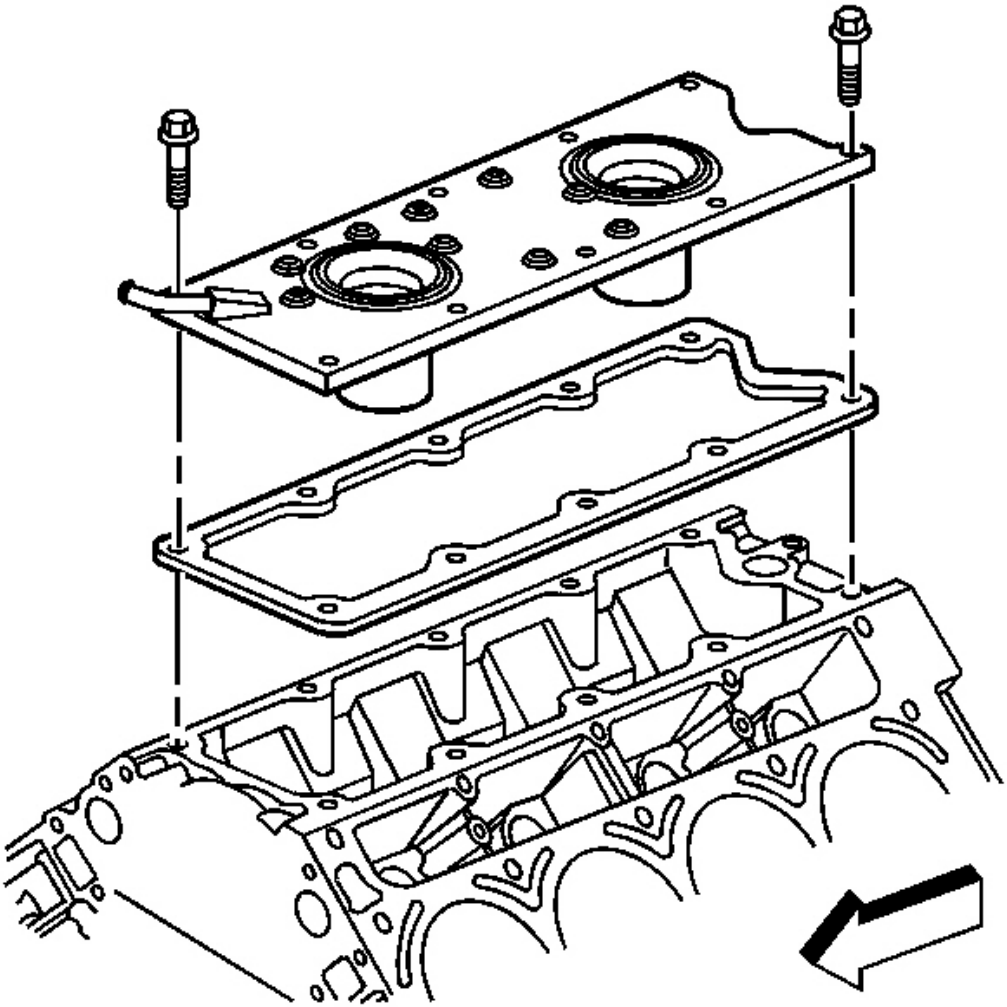

Fig. 77: Engine Valley Cover, Gasket, Bolts & LS6 Engine
Courtesy of GENERAL MOTORS CORP.

6. If equipped with the 5.7 L, RPO LS6 engine, remove the engine valley cover bolts.
7. Remove the engine valley cover and gasket.
8. Discard the engine valley cover gasket.

cardiagn.com

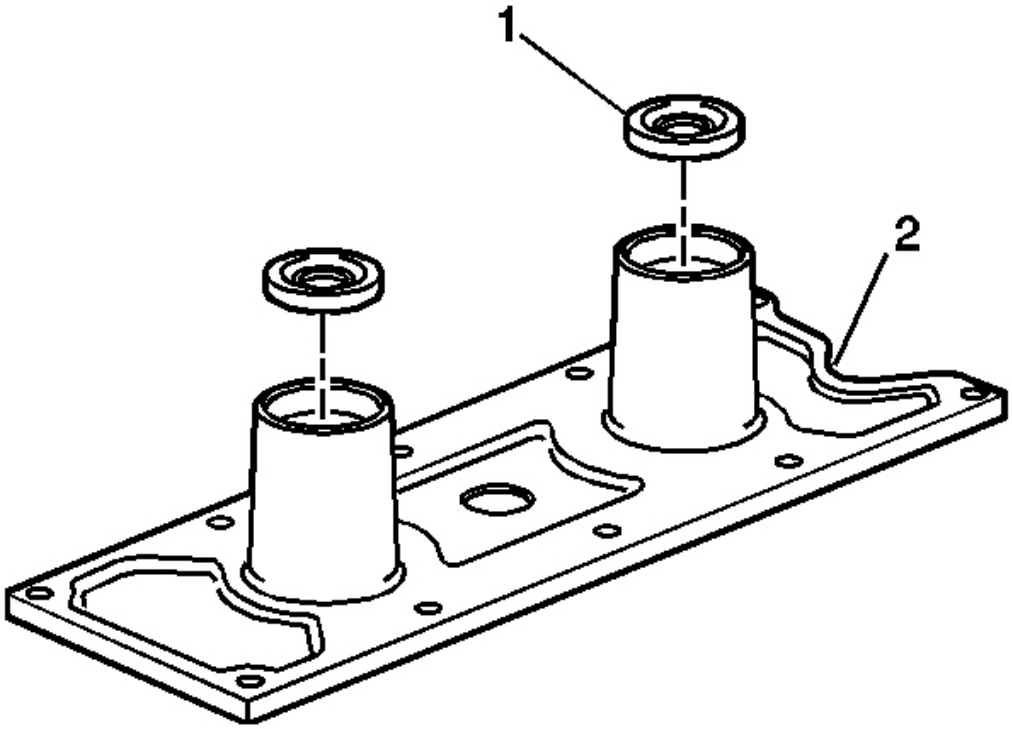

Fig. 78: View Of Knock Sensor Oil Seals & Cover
Courtesy of GENERAL MOTORS CORP.

9. Remove the knock sensor oil seals (1) from the cover (2).
10. Clean and inspect the engine valley cover. Refer to **Engine Valley Cover Cleaning and Inspection** .

Installation Procedure

IMPORTANT: All gasket surfaces should be free of oil or other foreign material during assembly.

cardiagn.com

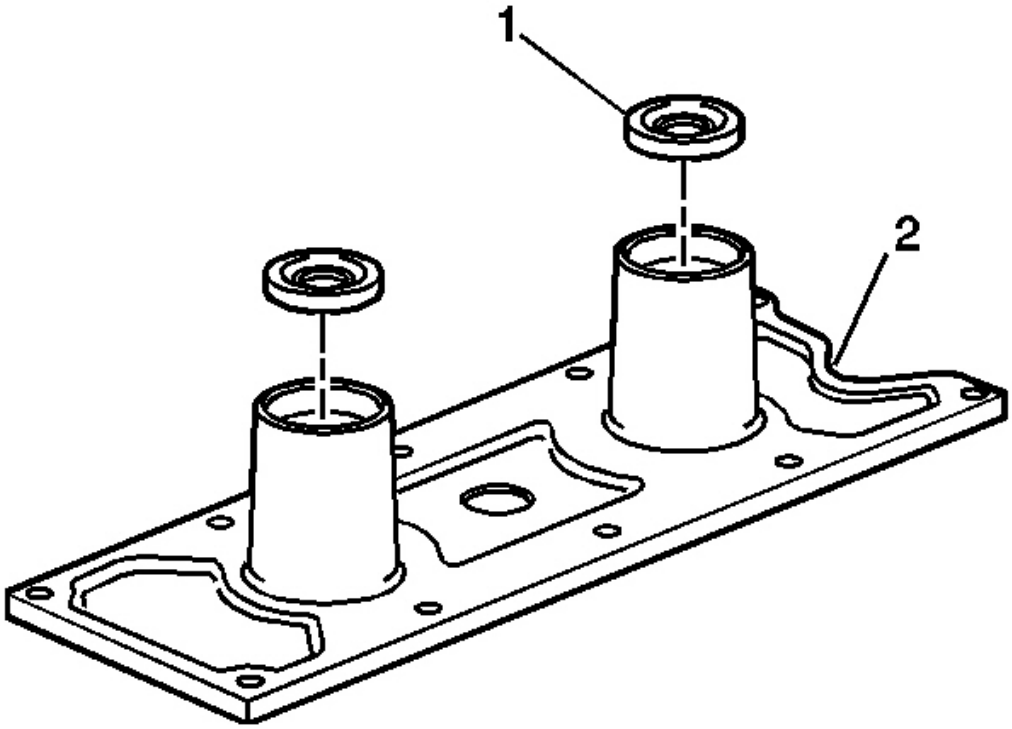

Fig. 79: View Of Knock Sensor Oil Seals & Cover
Courtesy of GENERAL MOTORS CORP.

1. Install NEW knock sensor oil seals (1) into the valley cover (2).

   Lubricate the seal surfaces with clean engine oil.

cardiagn.com

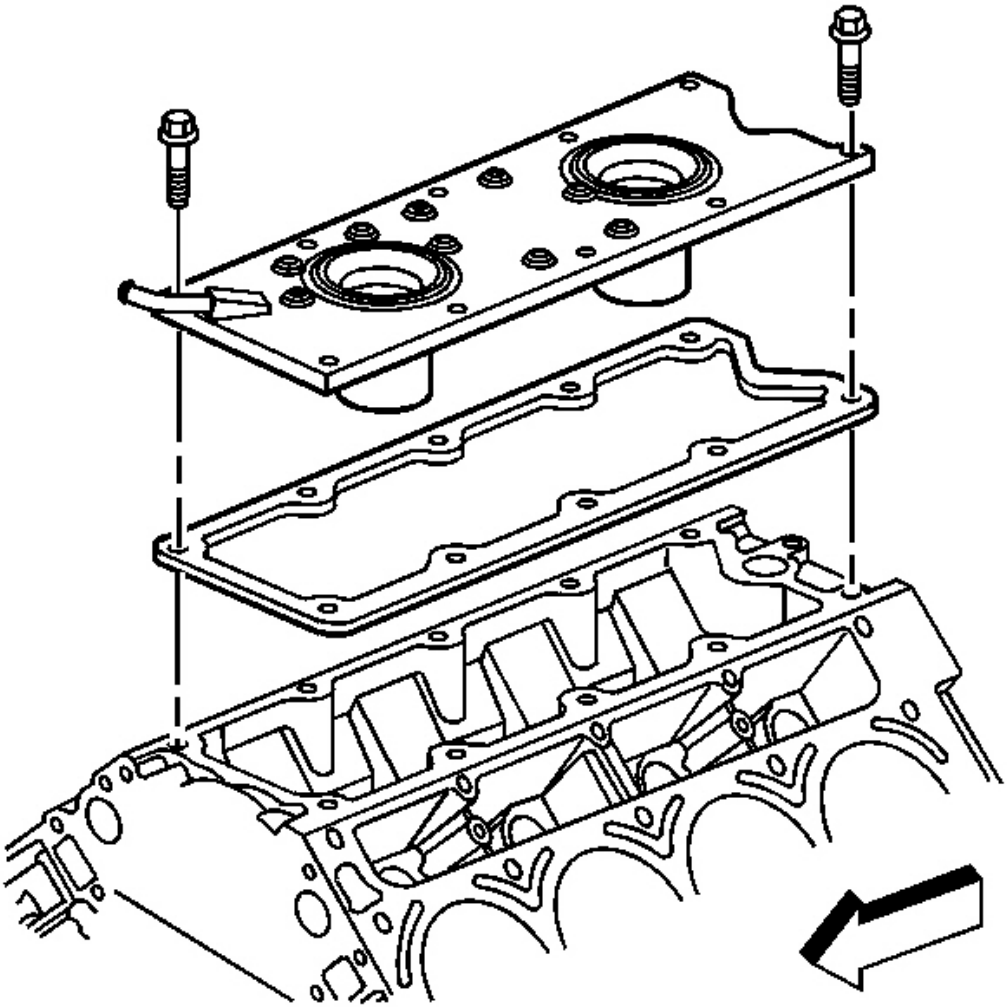

Fig. 80: Engine Valley Cover, Gasket, Bolts & LS6 Engine
Courtesy of GENERAL MOTORS CORP.

2. If equipped with the 5.7 L, RPO LS6 engine, install the engine valley cover and a NEW gasket.

cardiagn.com

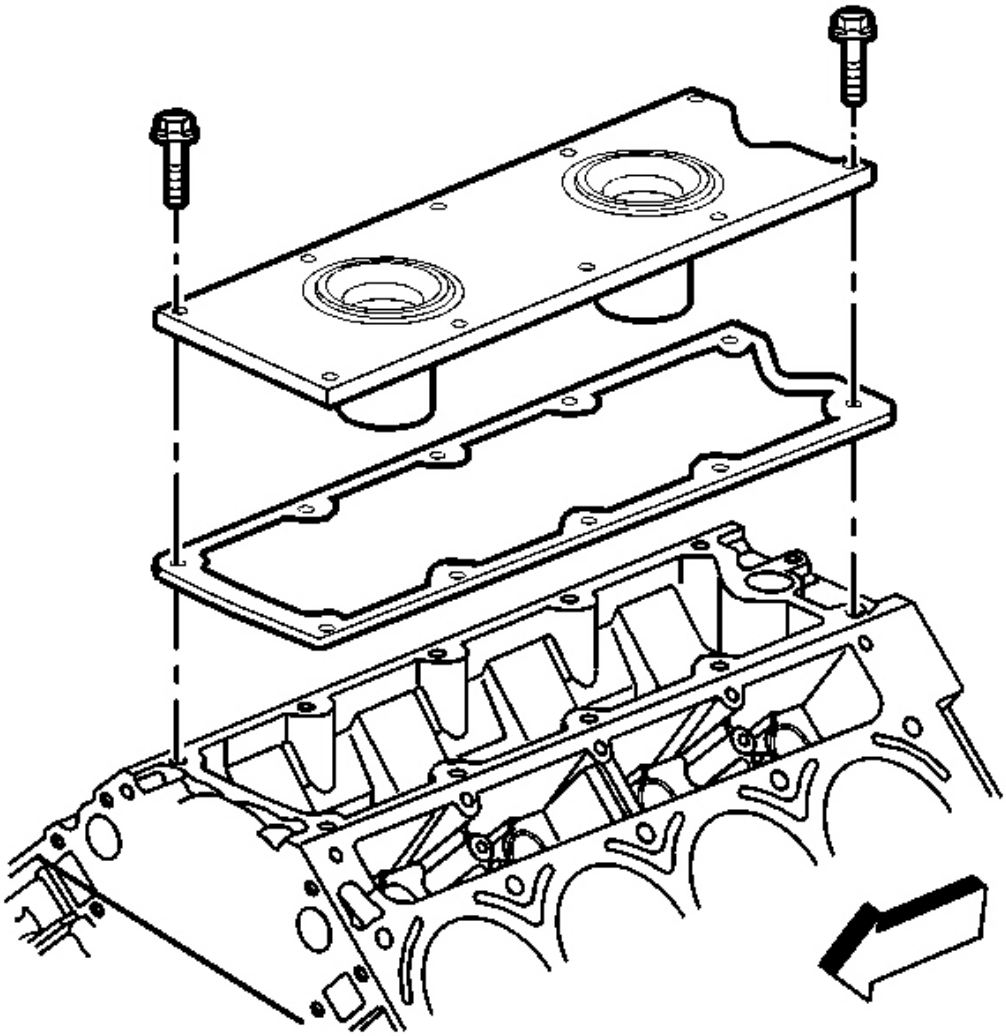

Fig. 81: View Of Engine Valley Cover, Gasket & LS1 Engine
Courtesy of GENERAL MOTORS CORP.

NOTE: Refer to Fastener Notice in Cautions and Notices.

3. If equipped with the 5.7 L, RPO LS1 engine, install the engine valley cover and NEW gasket.
4. Install the engine valley cover bolts.

Tighten: Tighten the engine valley cover bolts to 25 N.m (18 lb ft).

cardiagn.com

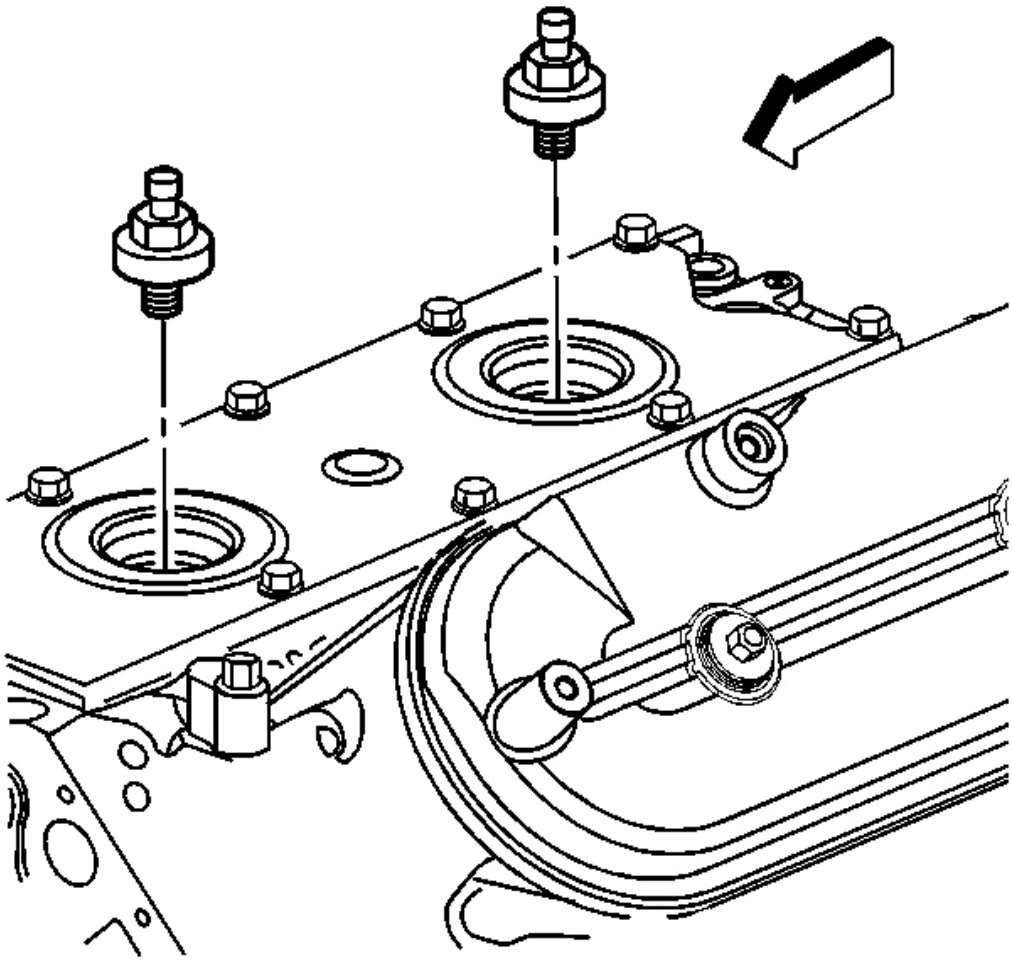

Fig. 82: View Of Knock Sensors
Courtesy of GENERAL MOTORS CORP.

5. Install the knock sensors.

   Tighten: Tighten the knock sensors to 20 N.m (15 lb ft).

cardiagn.com

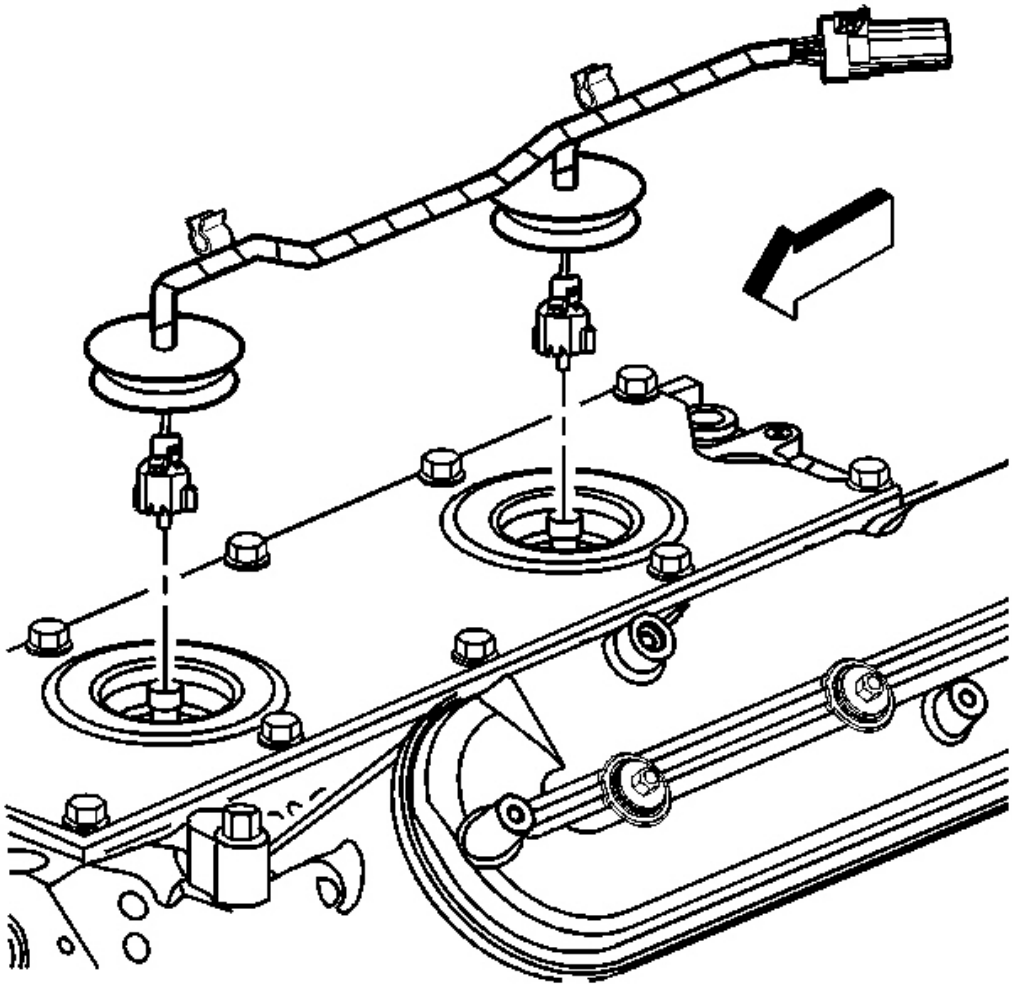

Fig. 83: View Of Knock Sensor Wire Harness
Courtesy of GENERAL MOTORS CORP.

6. Connect the knock sensor wire harness electrical connectors.
7. Install the rubber grommets into the valley cover.
8. Install the intake manifold. Refer to **Intake Manifold Replacement** .

VALVE ROCKER ARM COVER REPLACEMENT - LEFT

Removal Procedure

cardiagn.com

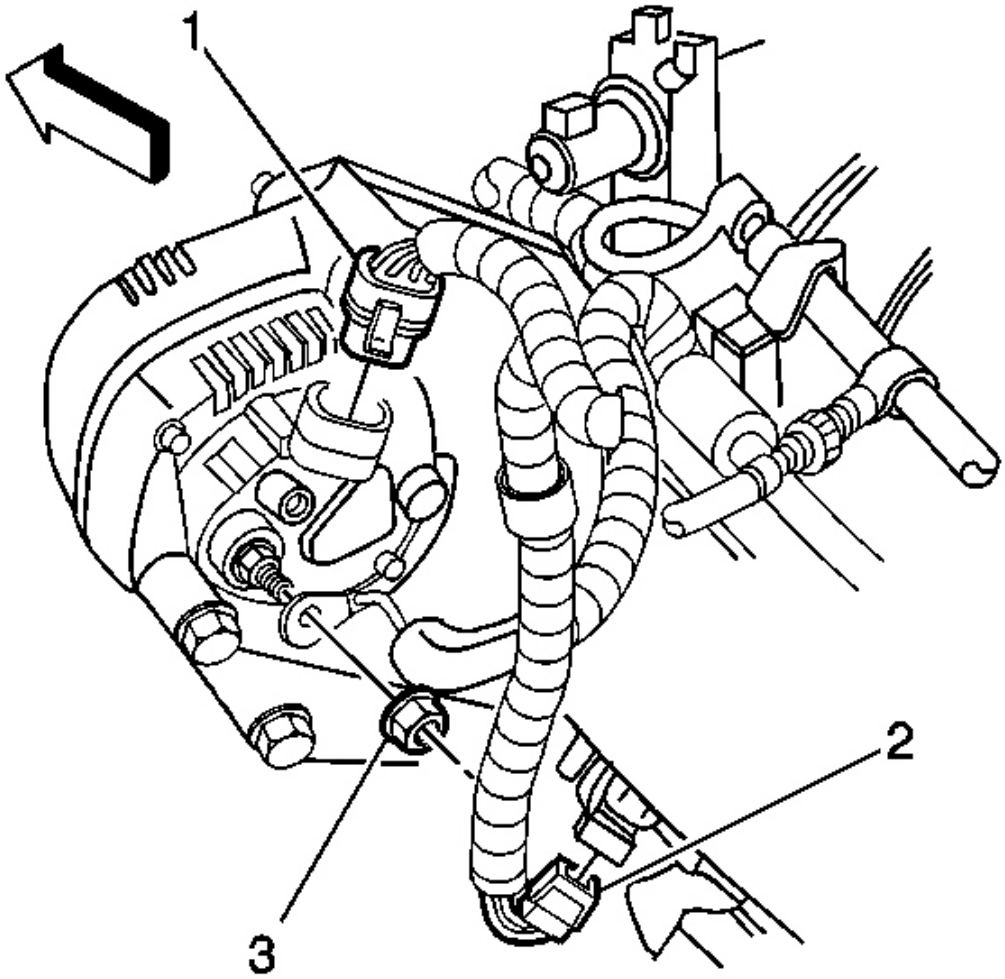

Fig. 84: Engine Wiring Harness Generator Lead Nut & Generator Electrical Connector
Courtesy of GENERAL MOTORS CORP.

1. Remove the fuel feed hose. Refer to **Fuel Hose/Pipes Replacement - Engine Compartment** in Engine Controls - 5.7 L.
2. Disconnect the generator electrical connector (1).
3. Remove the engine wiring harness generator lead nut (3) and lead.

cardiagn.com

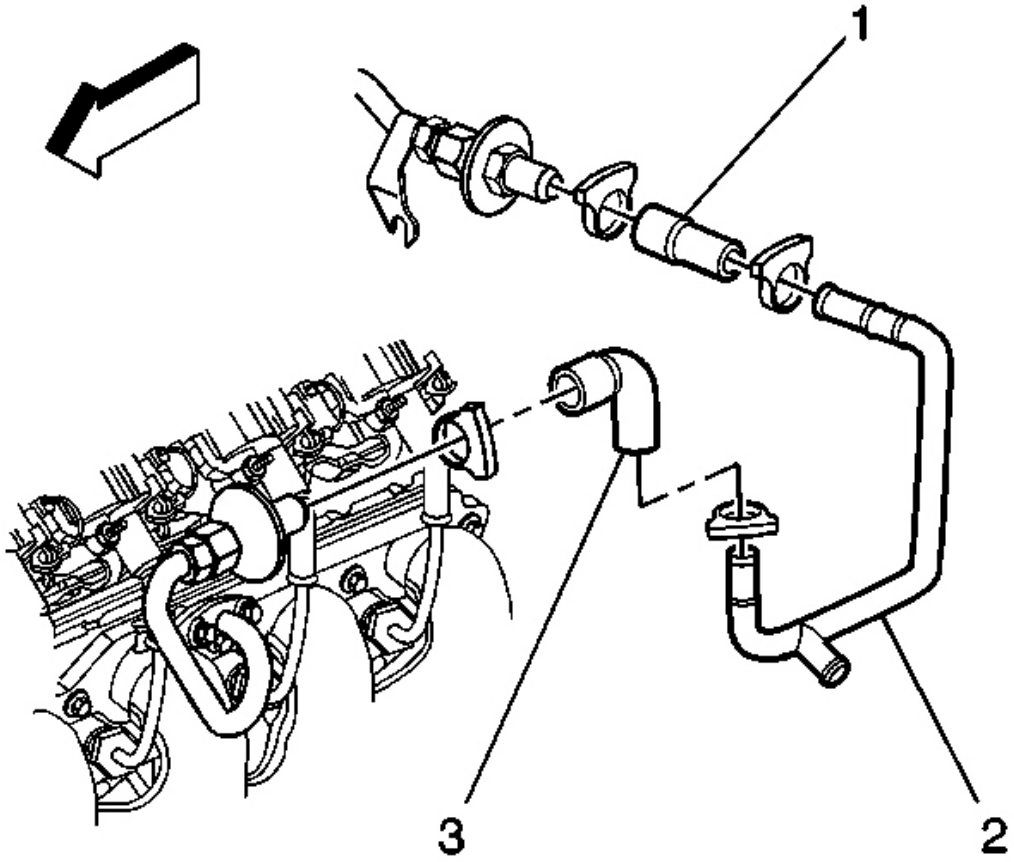

Fig. 85: AIR Hose Clamp & Check Valve
Courtesy of GENERAL MOTORS CORP.

4. Remove the secondary air injection (AIR) hose clamp.
5. Disconnect the AIR hose (3) from the check valve.

cardiagn.com

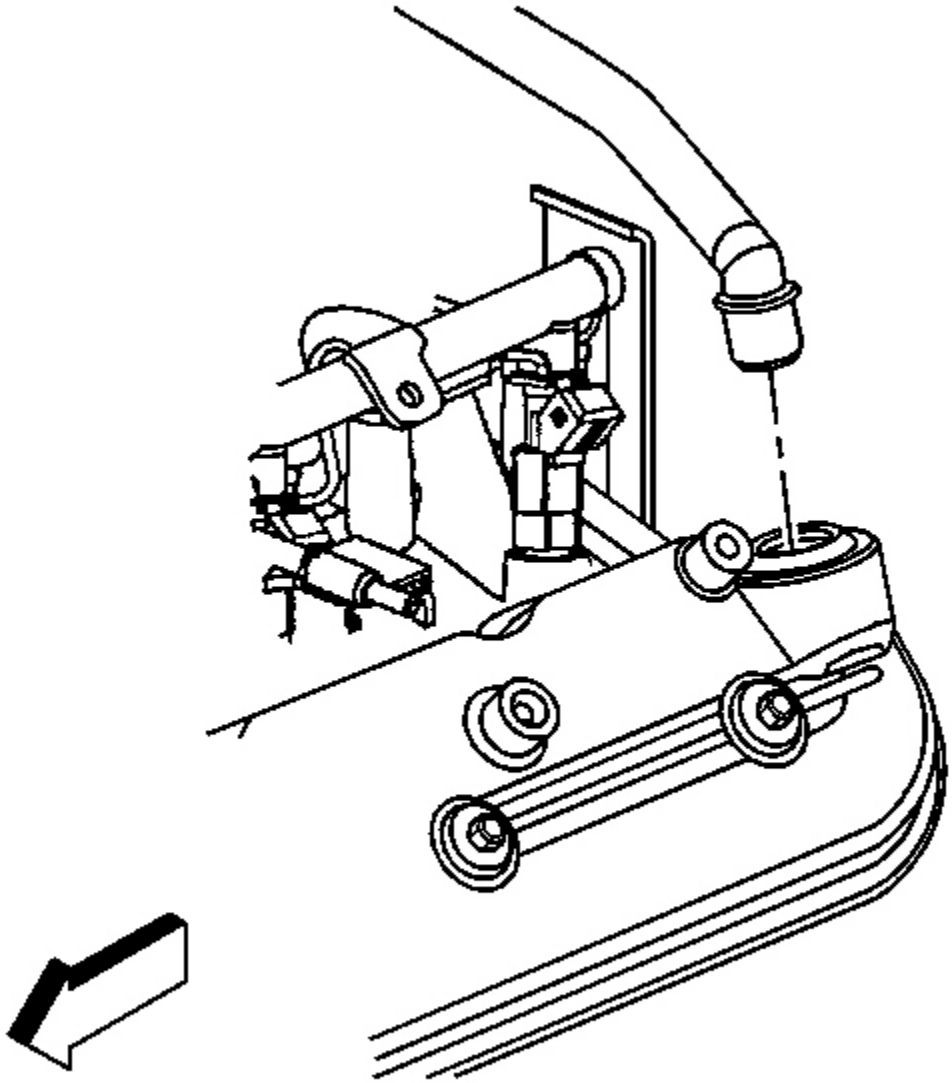

Fig. 86: Left Rocker Arm Cover & PCV Valve Pipe
Courtesy of GENERAL MOTORS CORP.

6. If equipped with the regular production option (RPO) LS1 engine, remove the positive crankcase ventilation (PCV) valve pipe from the left rocker cover.

cardiagn.com

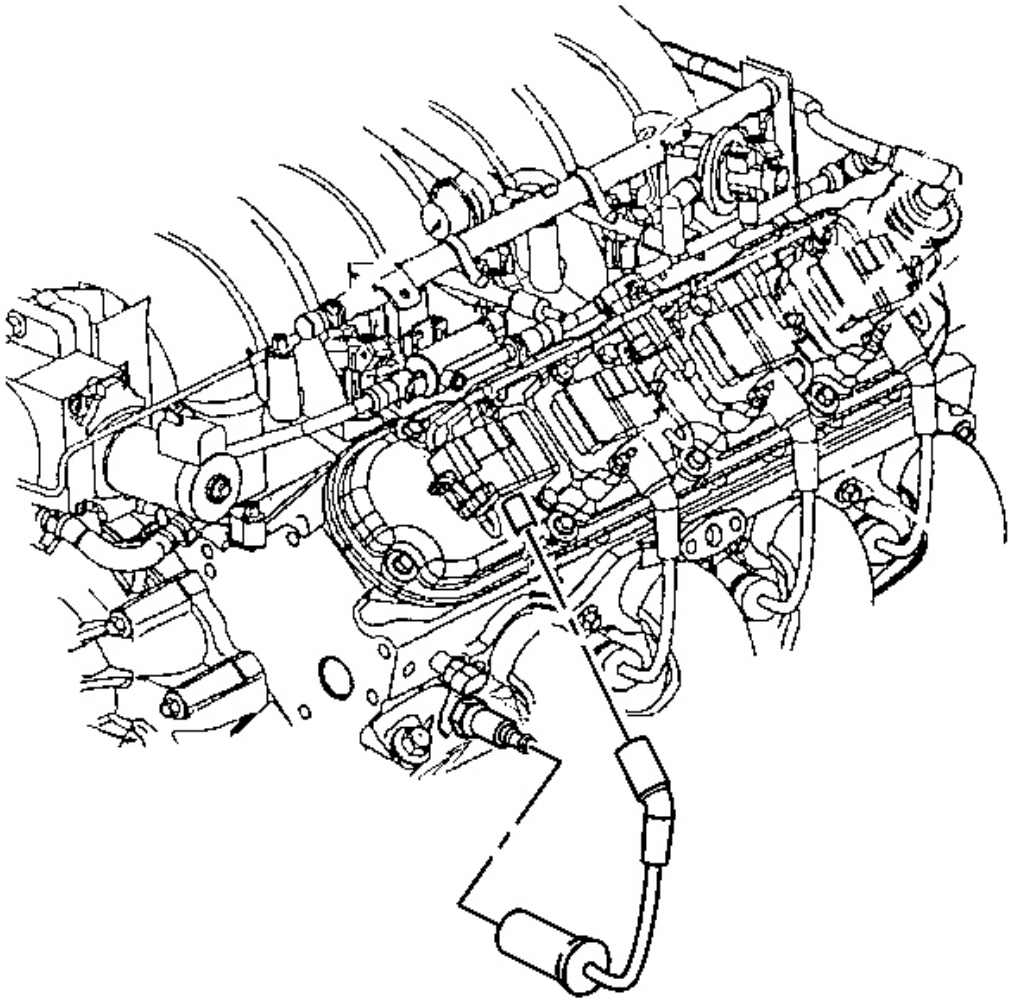

Fig. 87: Spark Plug Wire
Courtesy of GENERAL MOTORS CORP.

7. Disconnect the spark plug wires from the ignition coils.
    - Twist the spark plug wire boot 1/2 turn.
    - Pull only on the boot in order to remove the wire from the ignition coil.
8. Disconnect the ignition coil wire harness main electrical connector.

cardiagn.com

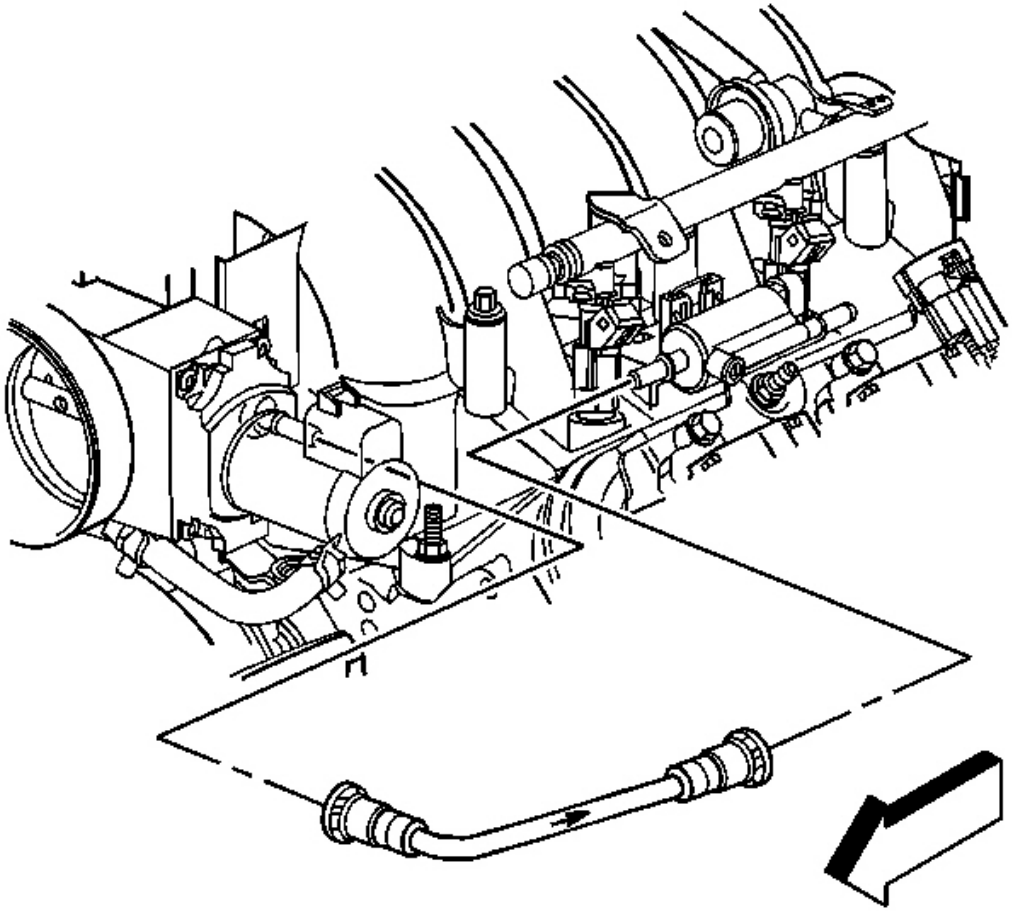

Fig. 88: EVAP Canister Purge Tube
Courtesy of GENERAL MOTORS CORP.

9. Remove the evaporative emission (EVAP) canister purge tube from the intake manifold.
10. Remove the EVAP canister purge tube from the EVAP canister purge solenoid valve.
11. Remove the EVAP canister purge tube.

cardiagn.com

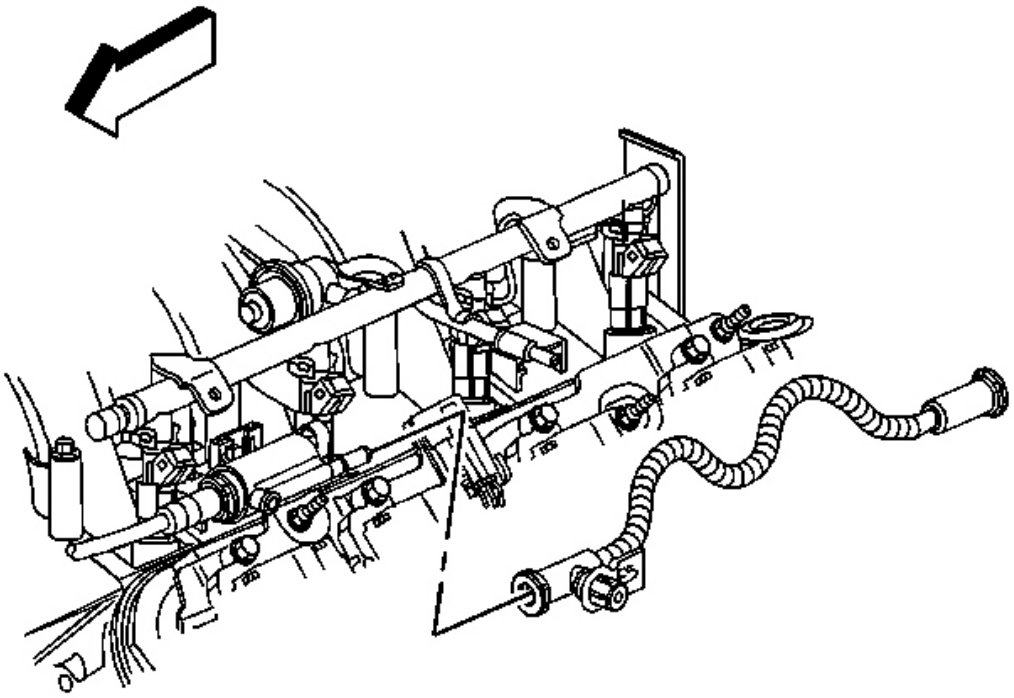

Fig. 89: Fuel Feed Pipe
Courtesy of GENERAL MOTORS CORP.

12. Disconnect the EVAP canister purge tube from the EVAP canister purge solenoid valve.
13. Disconnect the EVAP canister purge tube from the fuel feed pipe.
14. Remove the EVAP canister purge tube.

cardiagn.com

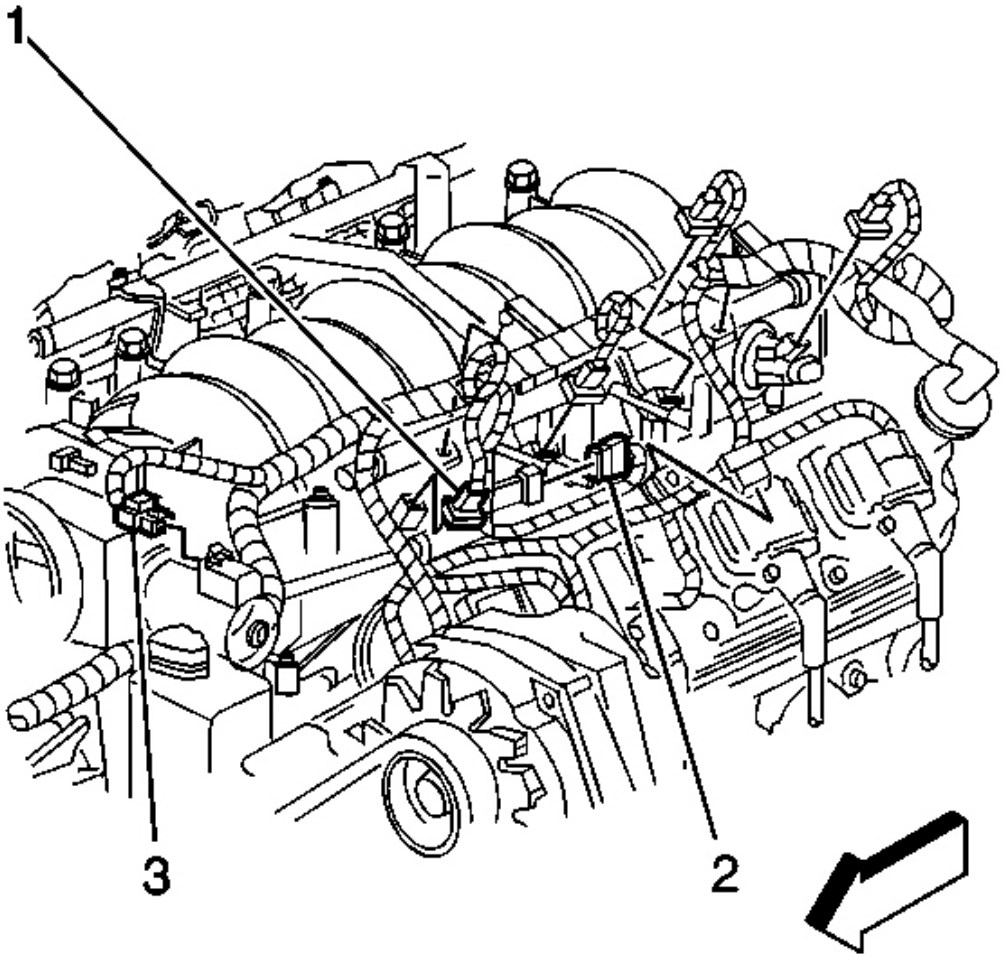

Fig. 90: Electrical Connectors
Courtesy of GENERAL MOTORS CORP.

15. Disconnect the EVAP canister purge solenoid valve electrical connector (2).

cardiagn.com

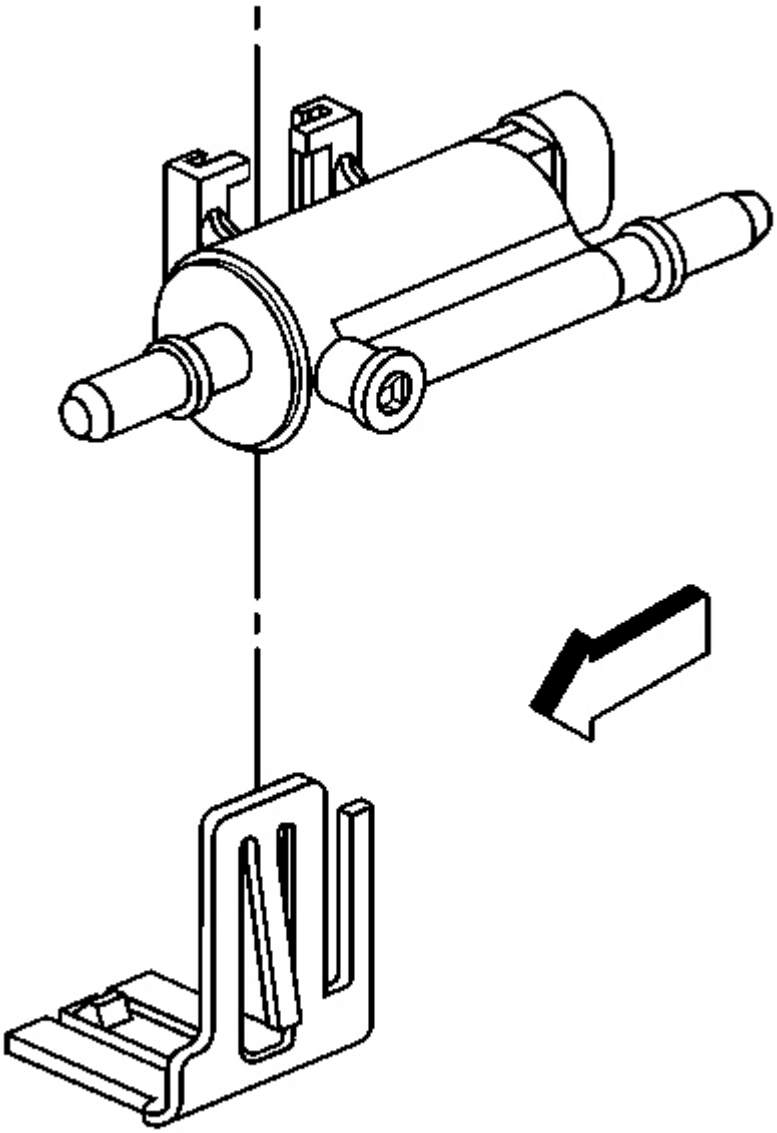

Fig. 91: EVAP Canister Purge Solenoid Valve & Bracket
Courtesy of GENERAL MOTORS CORP.

16. Remove the EVAP canister purge solenoid valve from the bracket.

cardiagn.com

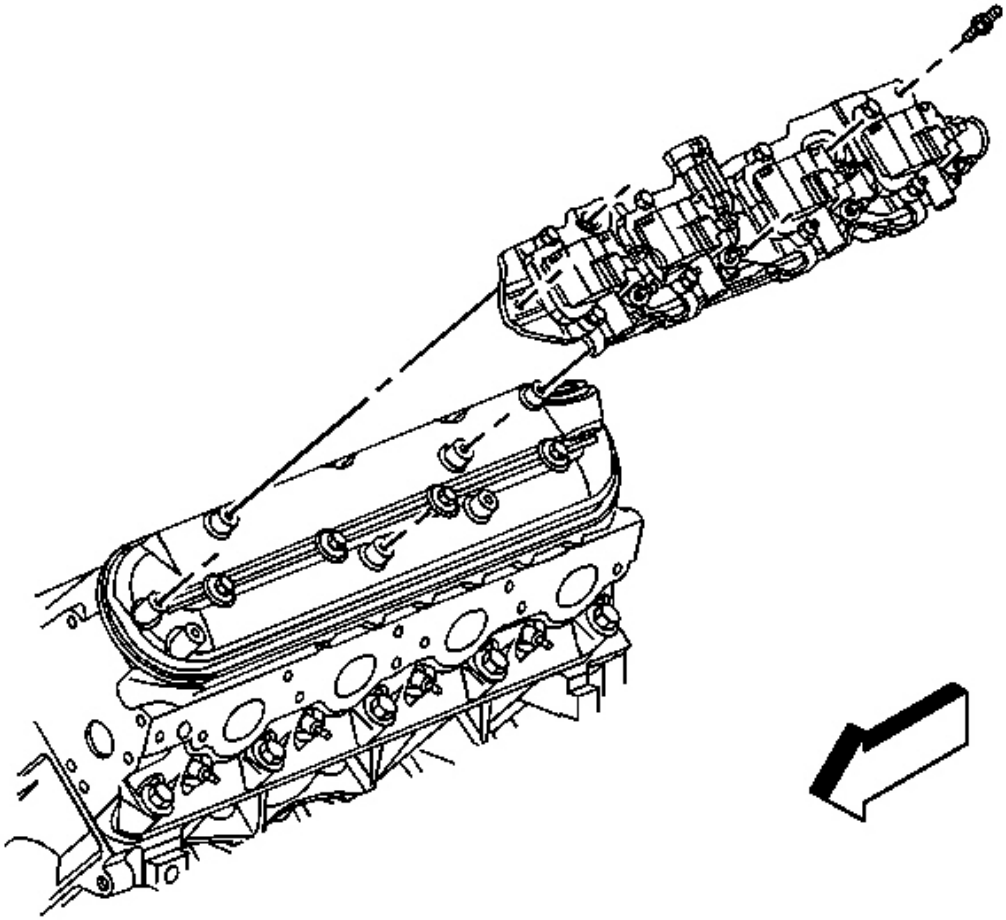

Fig. 92: Ignition Coil Bracket & Studs
Courtesy of GENERAL MOTORS CORP.

17. Remove the ignition coil bracket studs.
18. Remove the ignition coil bracket.

cardiagn.com

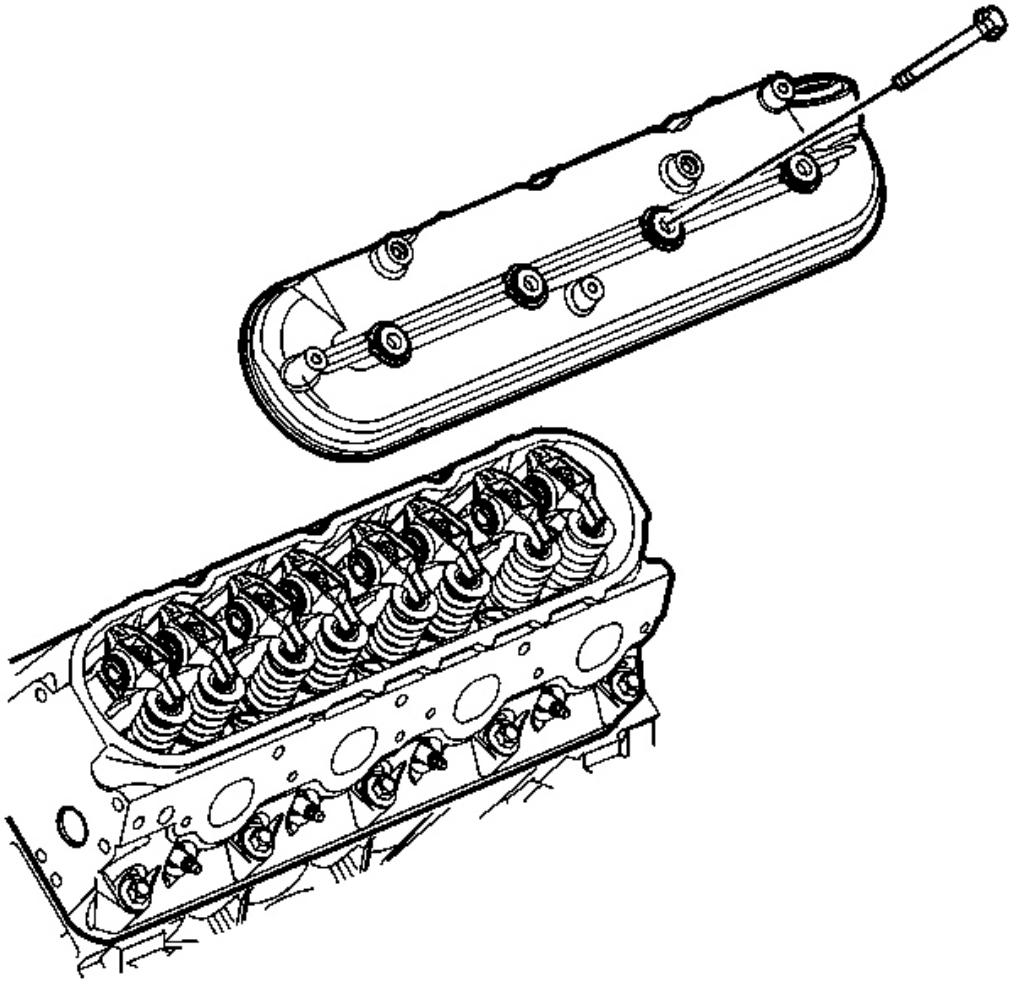

Fig. 93: Valve Rocker Arm Cover & Bolts
Courtesy of GENERAL MOTORS CORP.

19. Loosen the valve rocker arm cover bolts.
20. Remove the valve rocker cover.

cardiagn.com

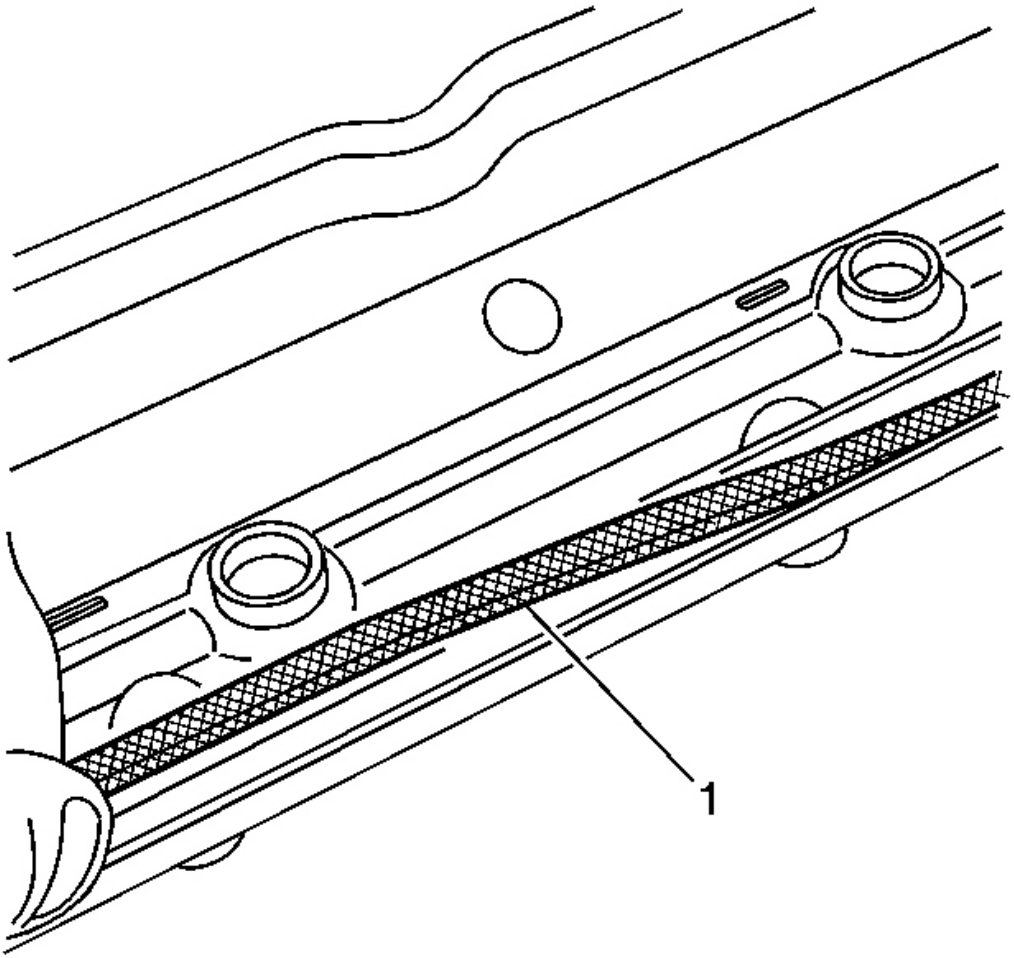

Fig. 94: Rocker Arm Cover & Gasket
Courtesy of GENERAL MOTORS CORP.

21. Remove the gasket (1) from the rocker cover. Discard the OLD gasket.
22. Clean and inspect the rocker arm cover. Refer to **Valve Rocker Arm Cover Cleaning and Inspection** .

Installation Procedure

IMPORTANT:

- **All gasket surfaces should be free of oil and other foreign material during assembly.**
- **DO NOT reuse the valve rocker arm cover gasket.**
- **The valve rocker arm cover bolt grommets may be reused.**

cardiagn.com

- **If the PCV valve grommet has been removed from the rocker arm, install a NEW grommet during assembly.**

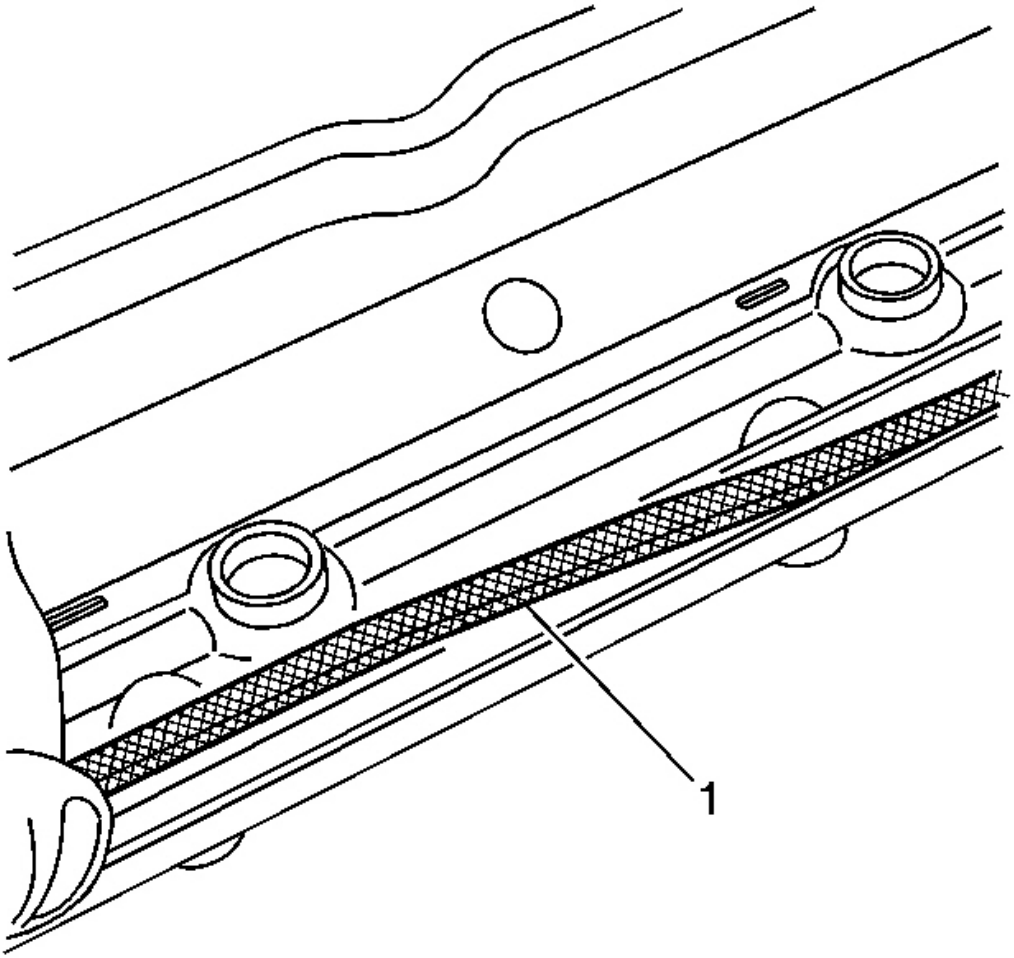

Fig. 95: Rocker Arm Cover & Gasket
Courtesy of GENERAL MOTORS CORP.

1. Install a NEW rocker cover gasket (1) into the valve rocker cover lip.

cardiagn.com

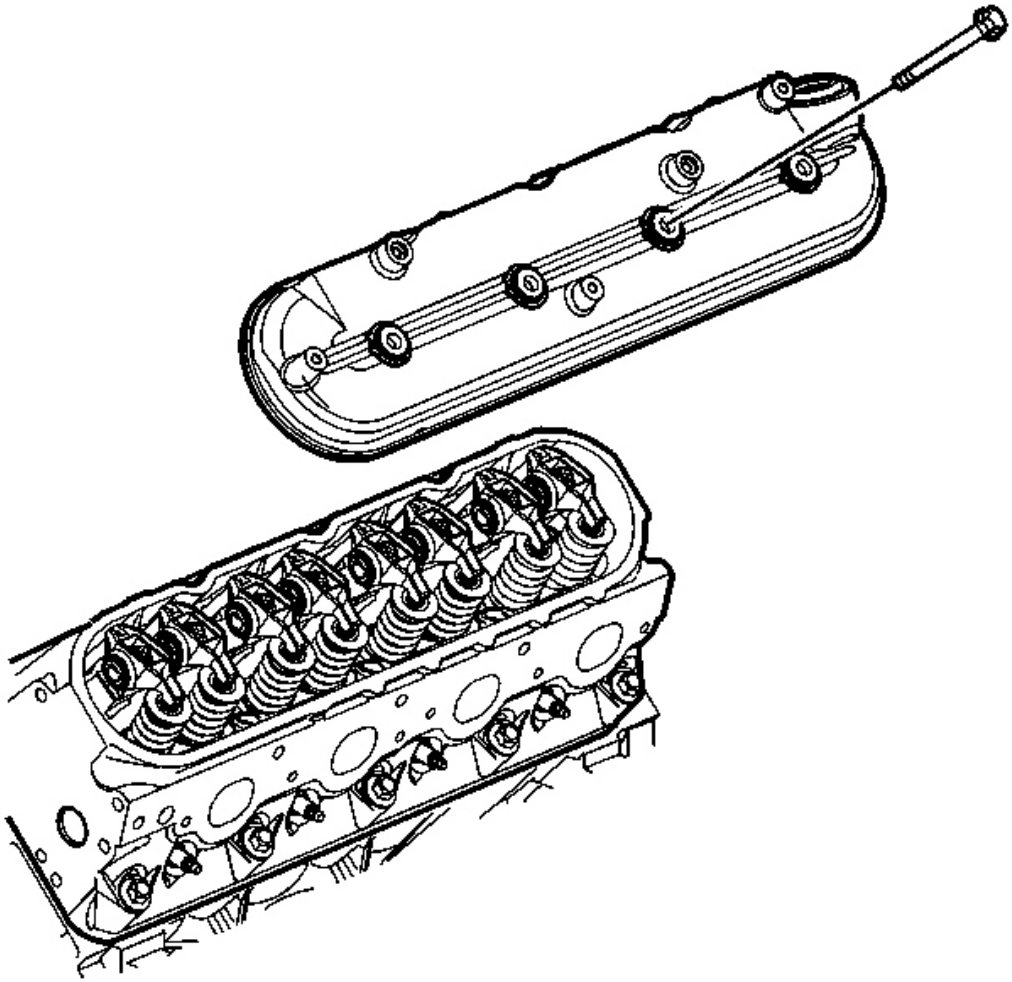

Fig. 96: Valve Rocker Arm Cover & Bolts
Courtesy of GENERAL MOTORS CORP.

NOTE: Refer to Fastener Notice in Cautions and Notices.

2. Install the valve rocker arm cover.
3. Tighten the valve rocker cover bolts.

Tighten: Tighten the valve rocker arm cover bolts to 12 N.m (106 lb in).

cardiagn.com

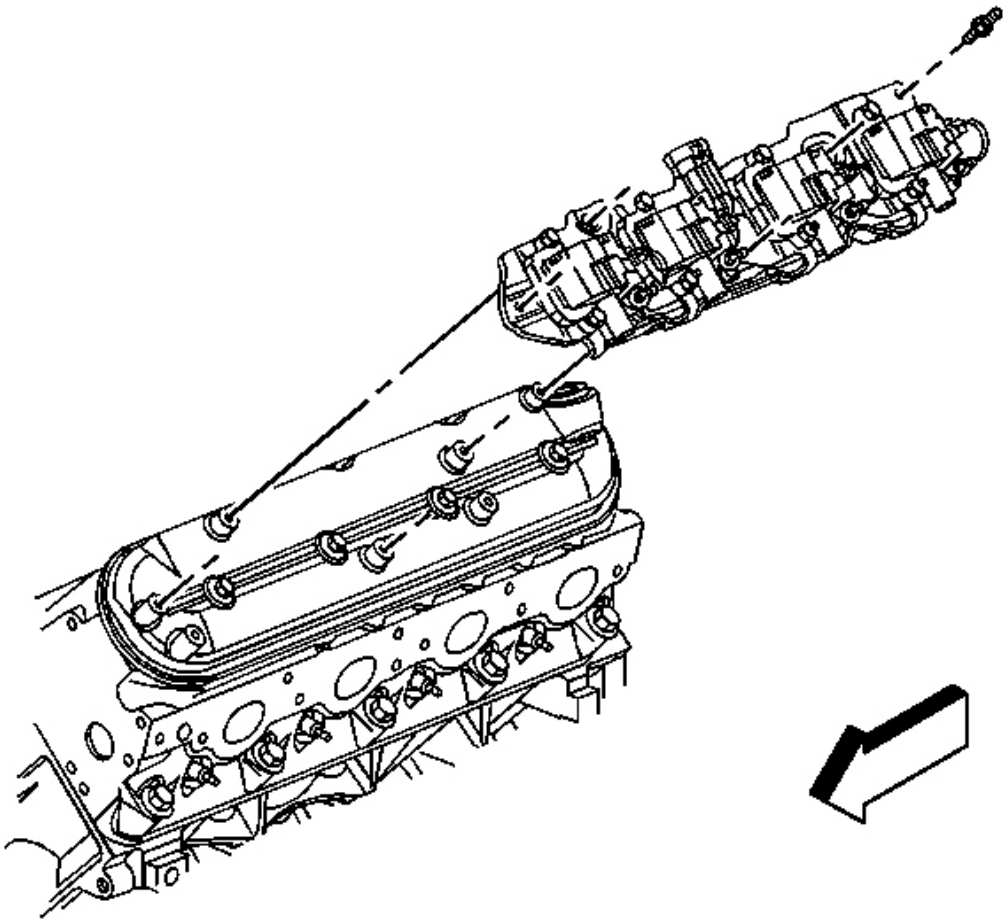

Fig. 97: Ignition Coil Bracket & Studs
Courtesy of GENERAL MOTORS CORP.

4. Install the ignition coil bracket.
5. Apply threadlock GM P/N 12345382 (Canadian P/N 10953489), or equivalent to the threads of the ignition coil bracket studs.
6. Install the ignition coil bracket studs.

Tighten: Tighten the ignition coil bracket studs to 12 N.m (106 lb in).

cardiagn.com

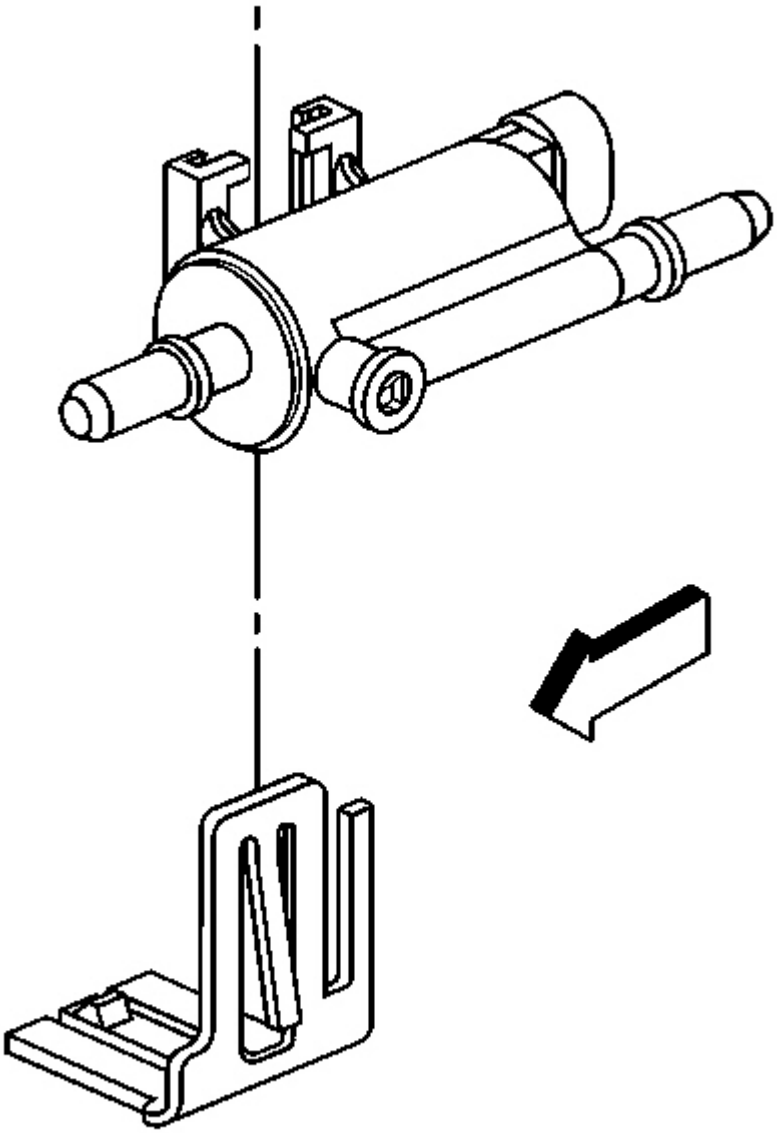

Fig. 98: EVAP Canister Purge Solenoid Valve & Bracket
Courtesy of GENERAL MOTORS CORP.

7. Remove the EVAP canister purge solenoid valve from the bracket.

cardiagn.com

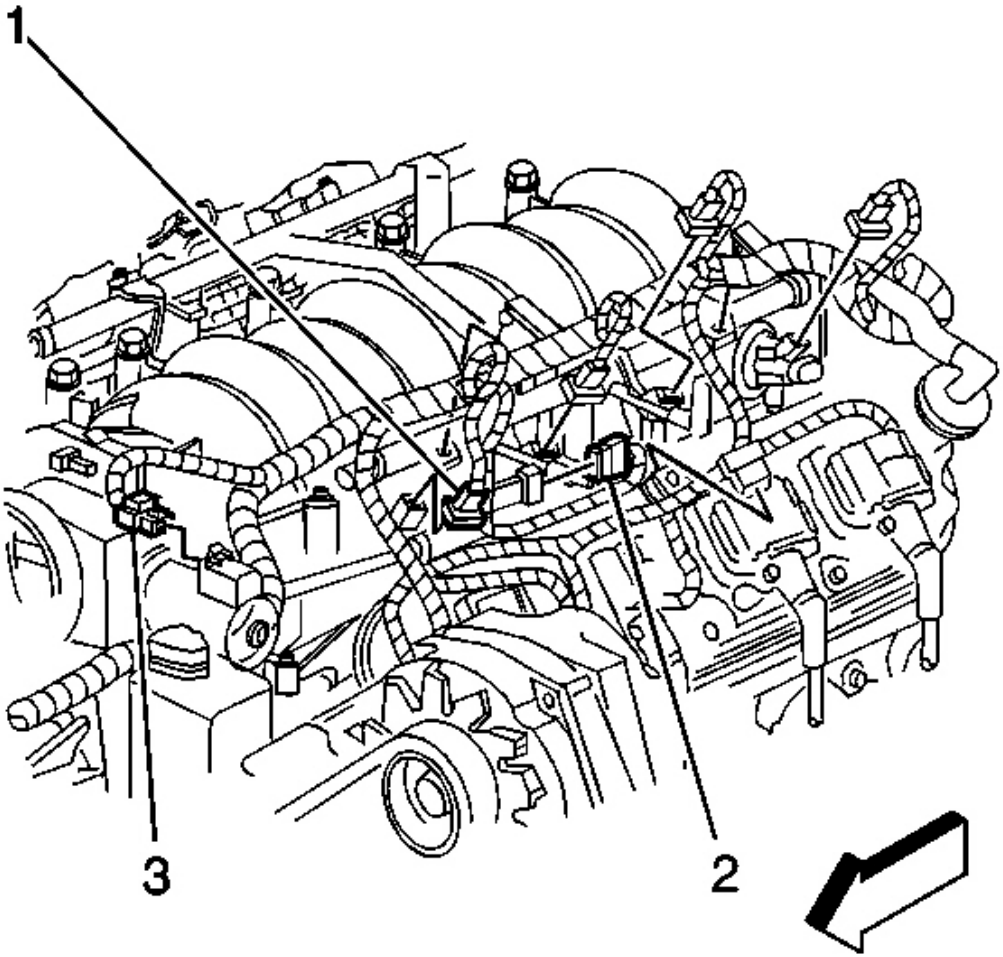

Fig. 99: Electrical Connectors
Courtesy of GENERAL MOTORS CORP.

8. Connect the EVAP canister purge solenoid valve electrical connector (2).

cardiagn.com

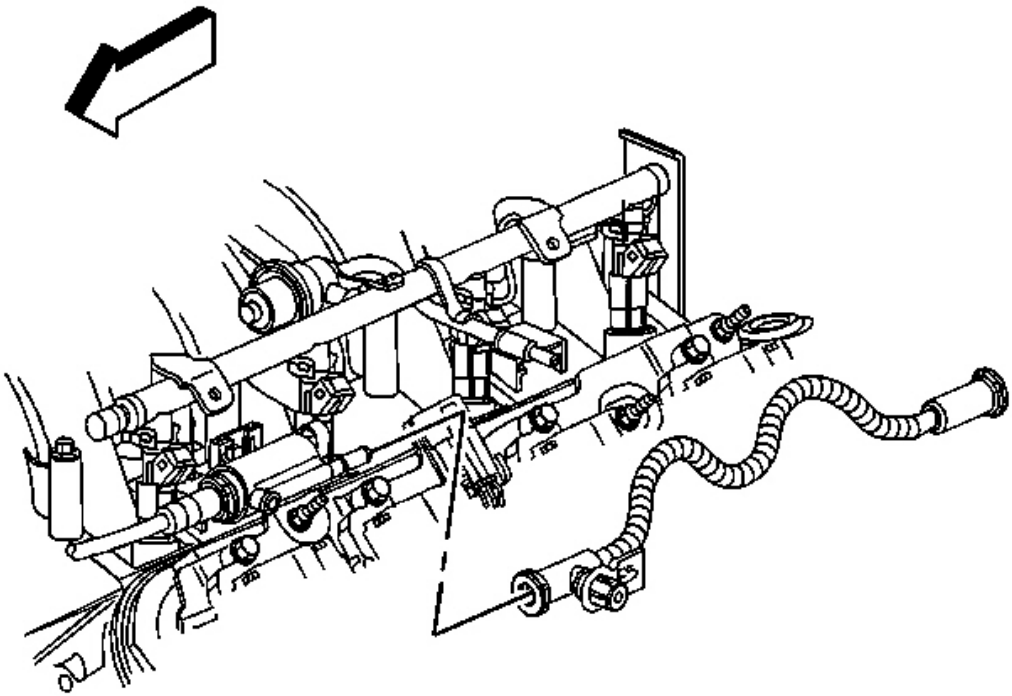

Fig. 100: Fuel Feed Pipe
Courtesy of GENERAL MOTORS CORP.

9. Disconnect the EVAP canister purge tube from the EVAP canister purge solenoid valve.
10. Disconnect the EVAP canister purge tube from the fuel feed pipe.
11. Remove the EVAP canister purge tube.

cardiagn.com

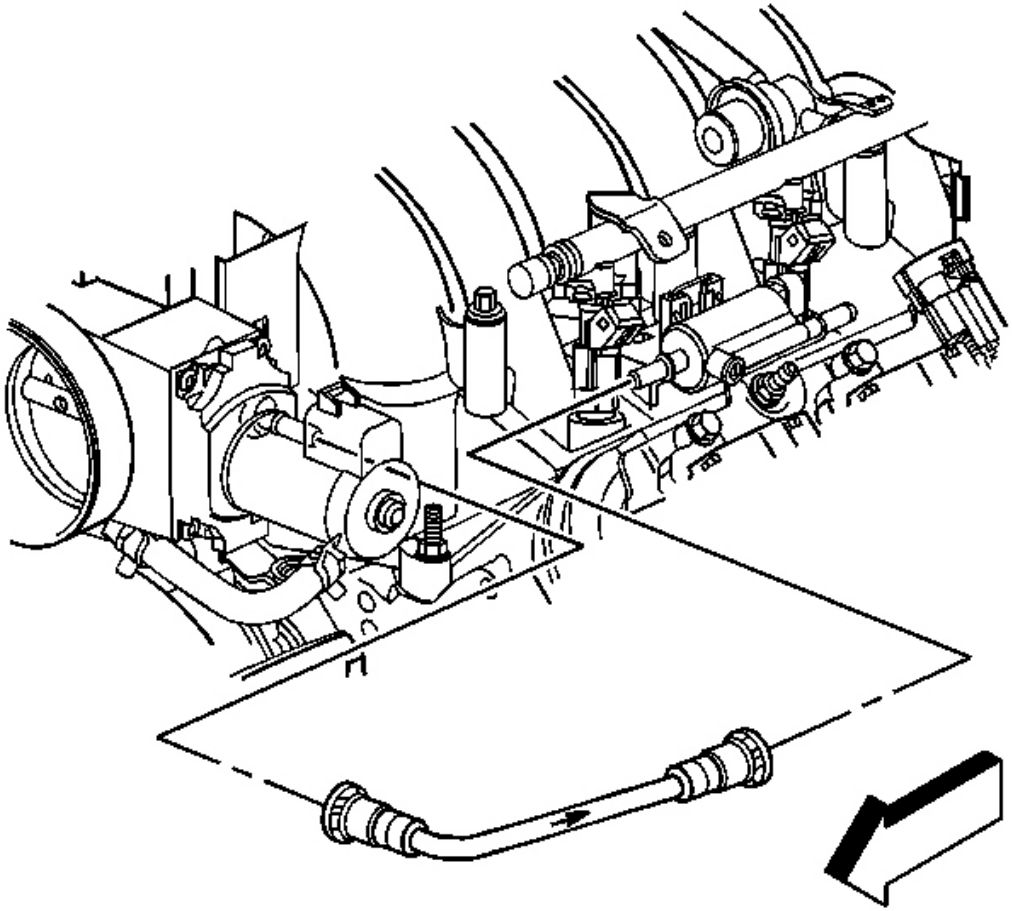

Fig. 101: EVAP Canister Purge Tube
Courtesy of GENERAL MOTORS CORP.

12. Remove the EVAP canister purge tube from the intake manifold.
13. Remove the EVAP canister purge tube from the EVAP canister purge solenoid valve.
14. Remove the EVAP canister purge tube.

cardiagn.com

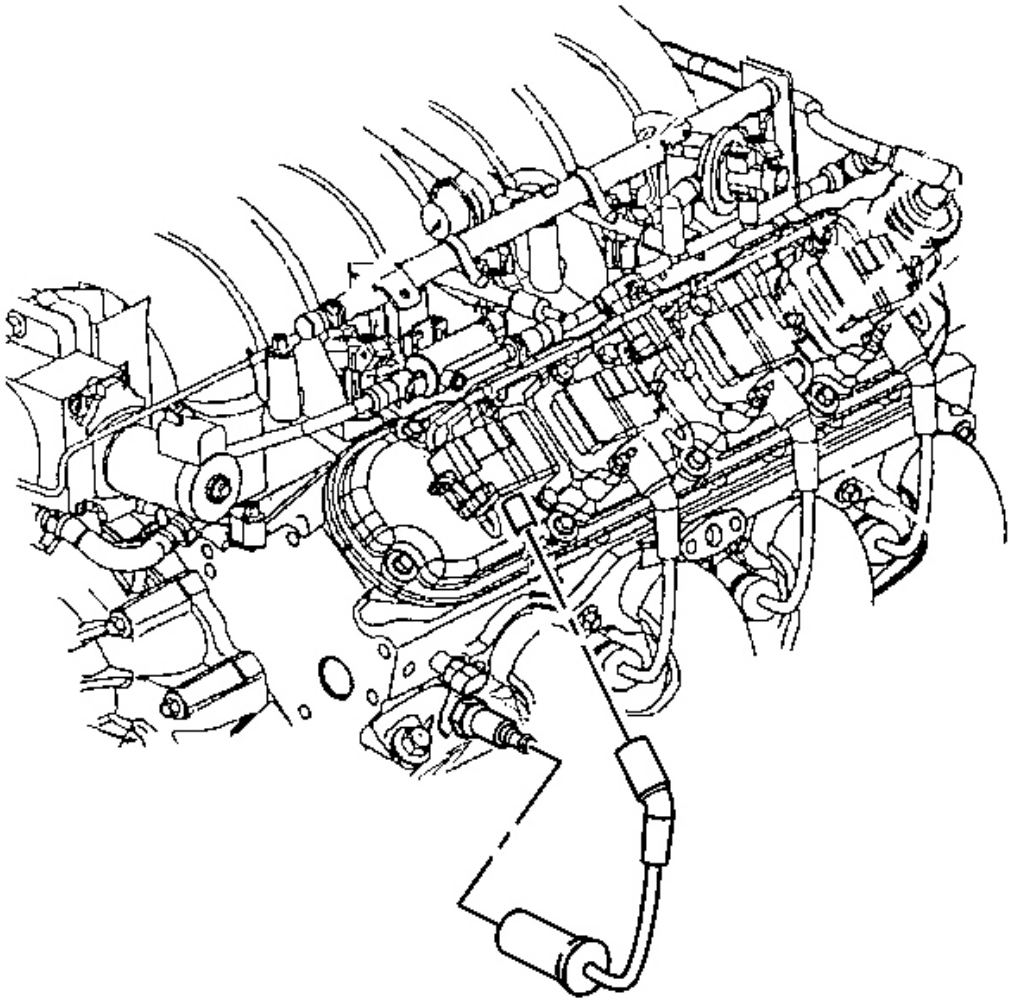

Fig. 102: Spark Plug Wire
Courtesy of GENERAL MOTORS CORP.

15. Connect the ignition coil wire harness main electrical connector.
16. Install the spark plug wires to the ignition coils.

cardiagn.com

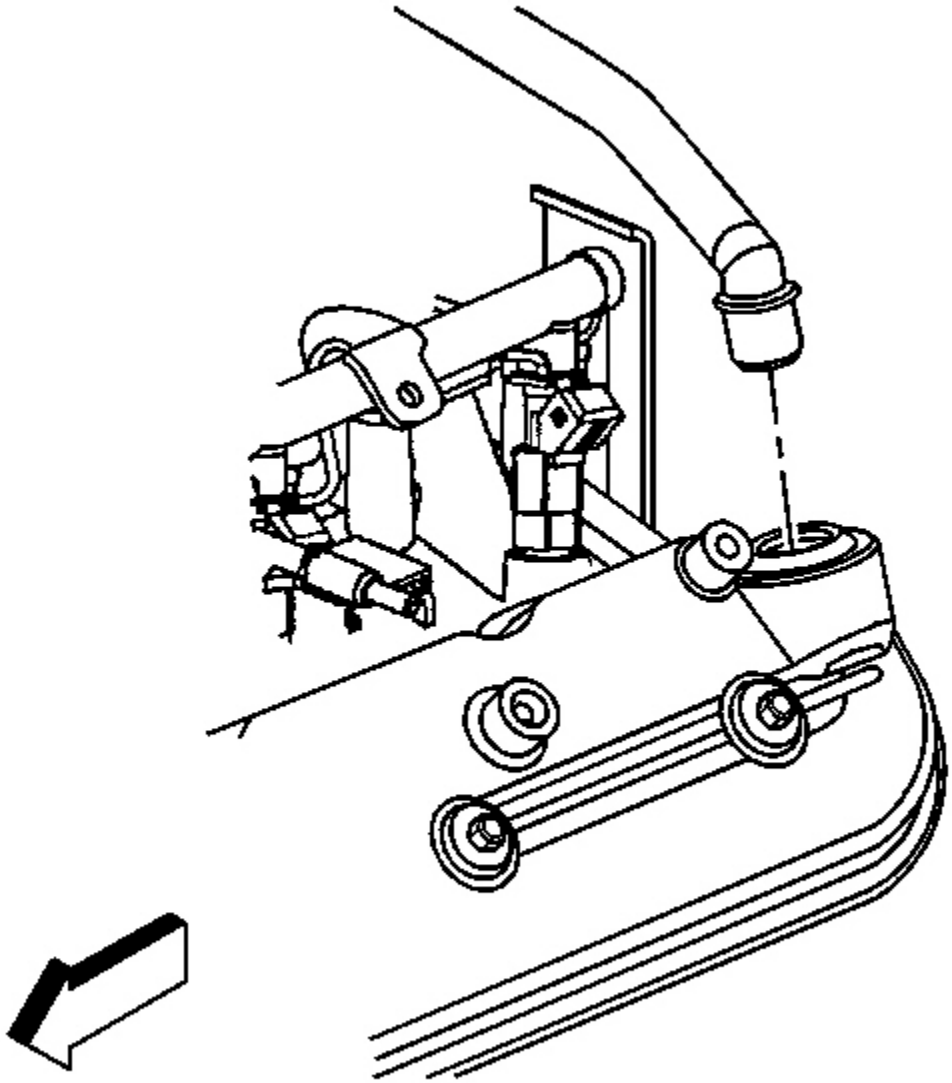

Fig. 103: Left Rocker Arm Cover & PCV Valve Pipe
Courtesy of GENERAL MOTORS CORP.

17. If equipped with the RPO LS1 engine, install the PCV valve pipe to the left rocker cover.

cardiagn.com

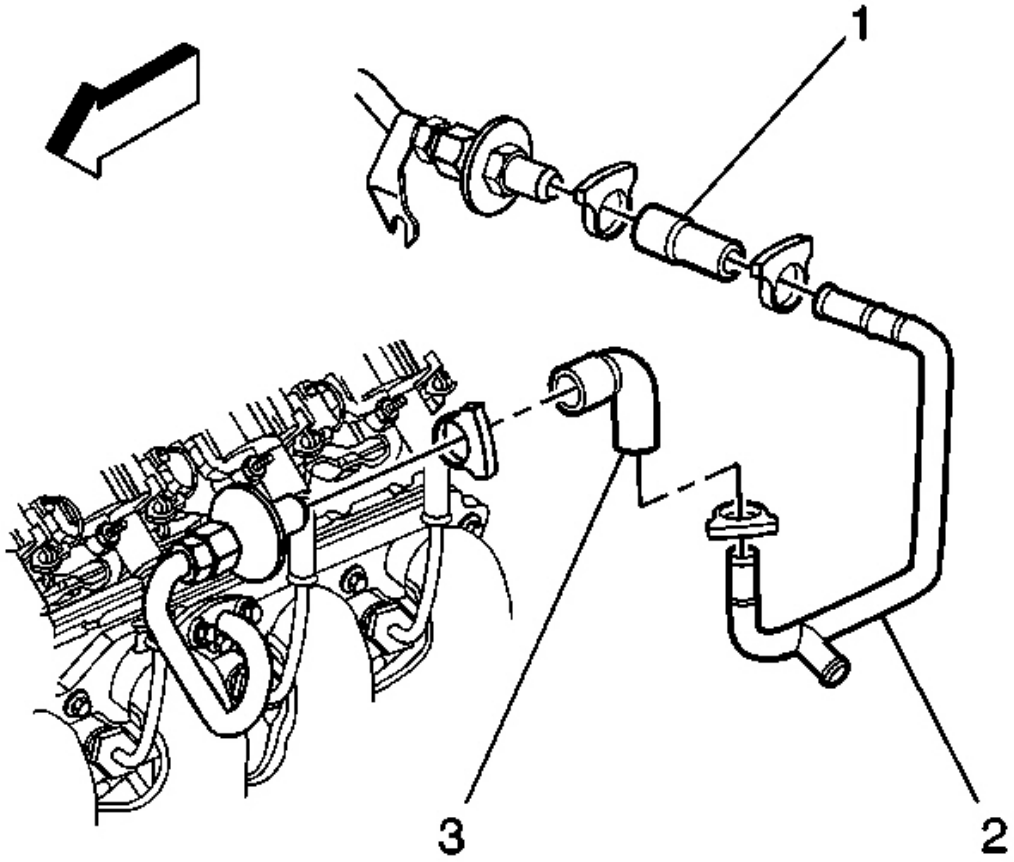

Fig. 104: AIR Hose Clamp & Check Valve
Courtesy of GENERAL MOTORS CORP.

18. Connect the AIR hose (3) to the check valve.
19. Install the AIR hose clamp.

cardiagn.com

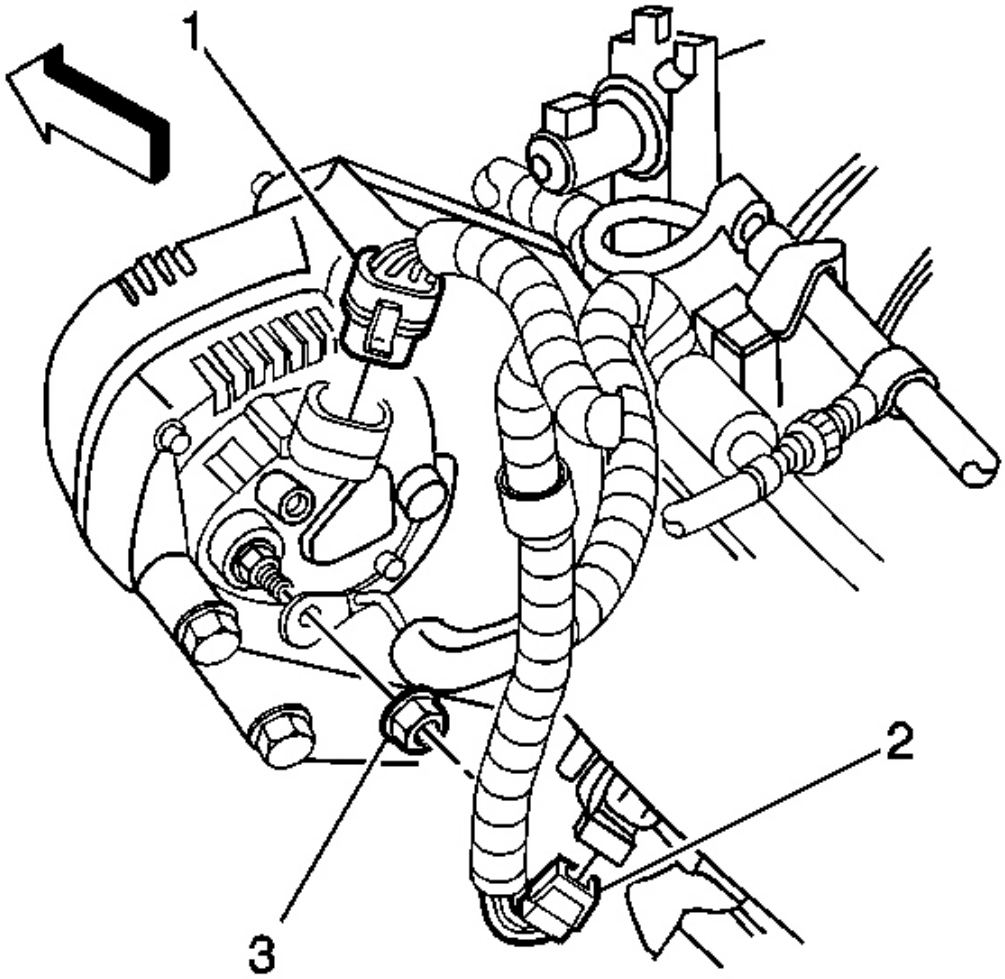

Fig. 105: Engine Wiring Harness Generator Lead Nut & Generator Electrical Connector
Courtesy of GENERAL MOTORS CORP.

20. Connect the generator electrical connector (1).
21. Install the engine wiring harness generator lead and nut (3).

    Tighten: Tighten the engine wiring harness generator lead nut to 13 N.m (115 lb in).

22. Install the fuel feed hose. Refer to **Fuel Hose/Pipes Replacement - Engine Compartment** in Engine Controls - 5.7 L.

VALVE ROCKER ARM COVER REPLACEMENT - RIGHT

cardiagn.com

Removal Procedure

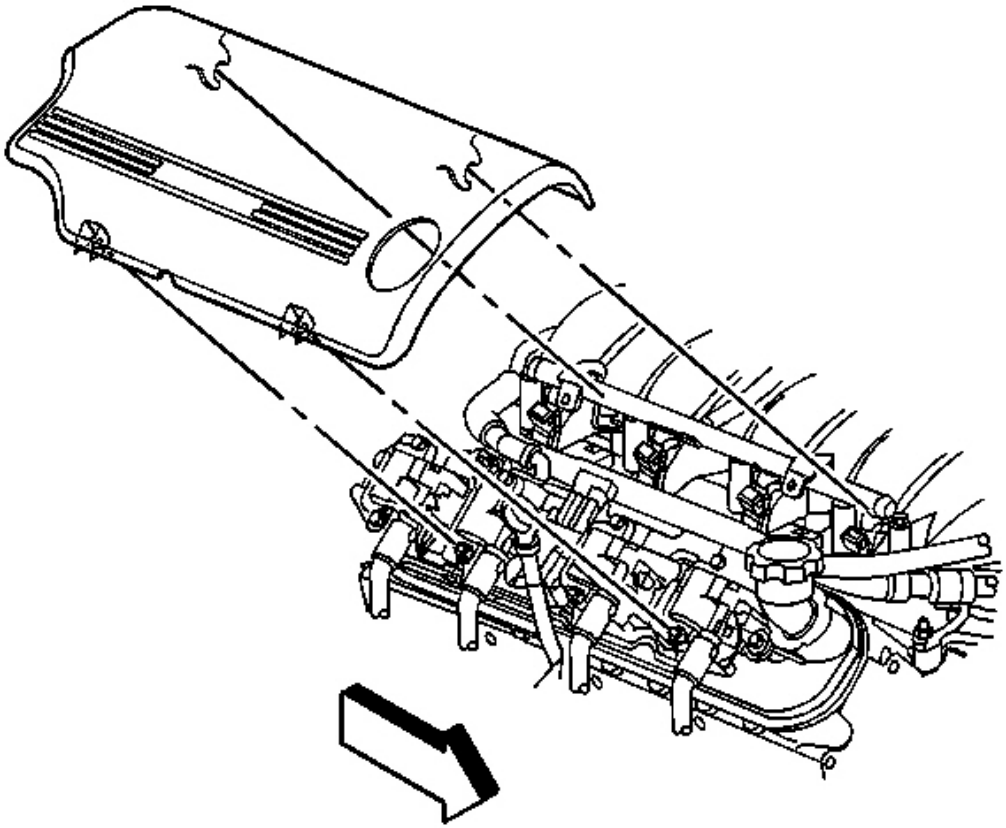

Fig. 106: Right Fuel Injection Rail Cover
Courtesy of GENERAL MOTORS CORP.

1. Remove the right fuel rail cover.

cardiagn.com

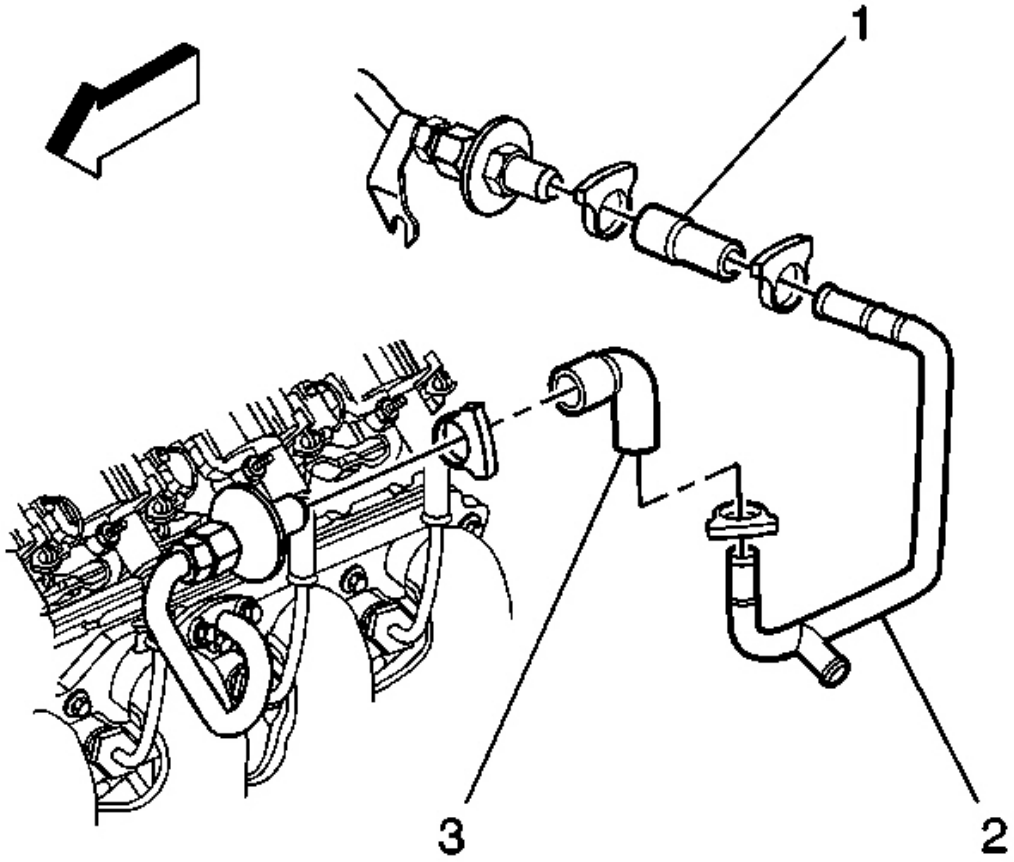

Fig. 107: AIR Hose Clamp & Check Valve
Courtesy of GENERAL MOTORS CORP.

2. Remove the secondary air injection (AIR) hose clamp.
3. Remove the AIR hose (1) from the check valve.

cardiagn.com

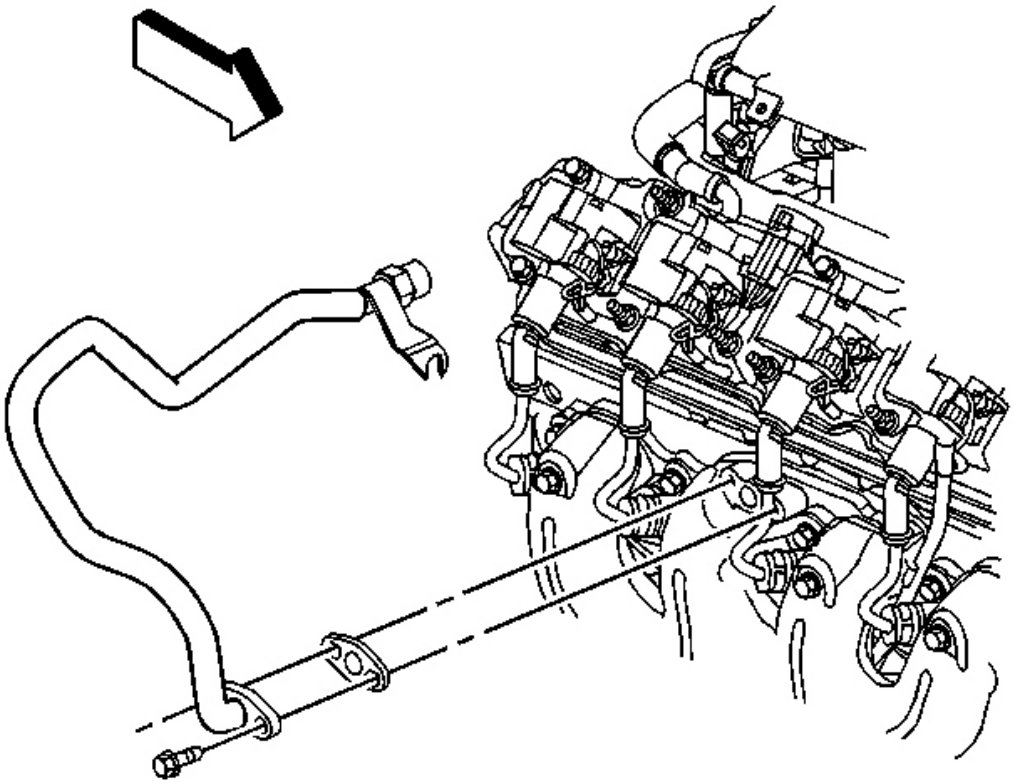

Fig. 108: AIR Pipe & Bolts
Courtesy of GENERAL MOTORS CORP.

4. Remove the AIR pipe bolts at the exhaust manifold.

cardiagn.com

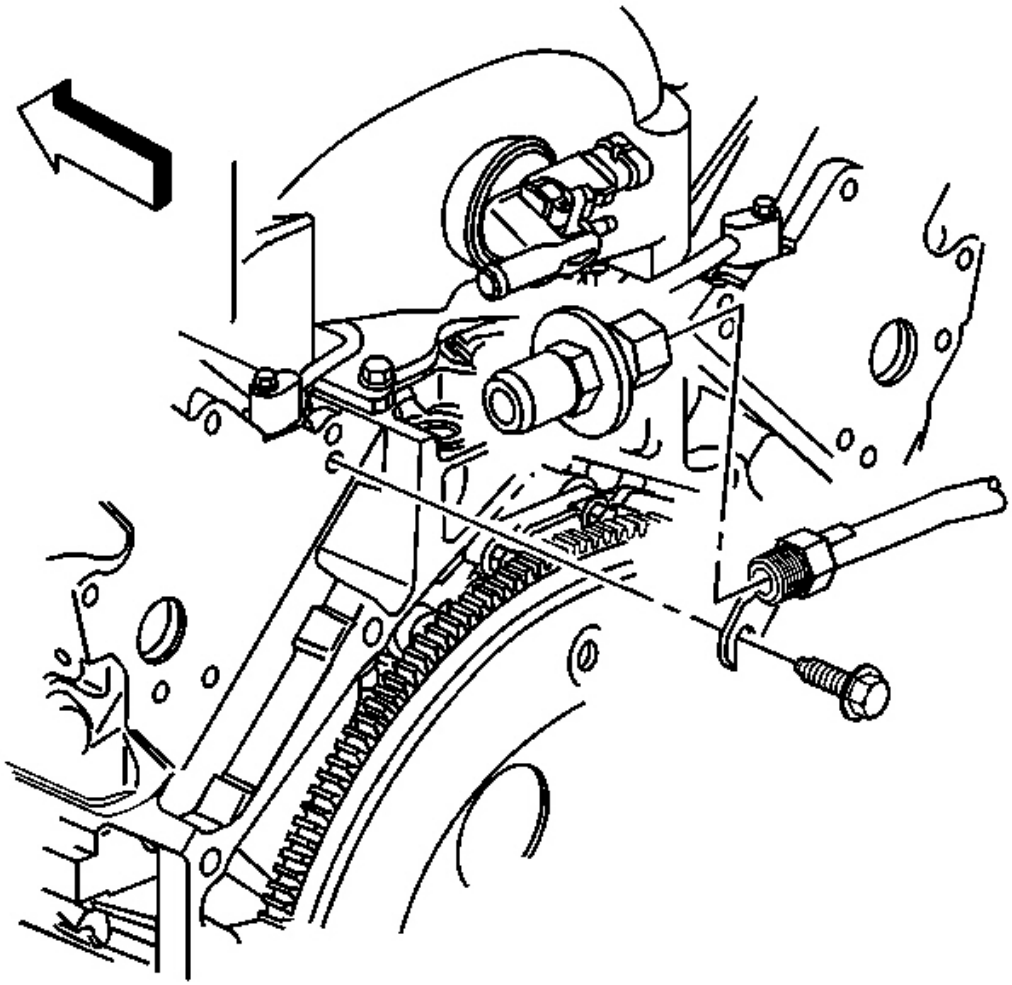

Fig. 109: AIR Pipe Gasket, Exhaust Manifold & Bolts
Courtesy of GENERAL MOTORS CORP.

5. Loosen, DO NOT remove the AIR pipe bolt at the rear of the left cylinder head.
6. Slide the AIR pipe up and out from behind the bolt.
7. Reposition the AIR pipe.
8. Remove the AIR pipe gasket from the exhaust manifold.

cardiagn.com

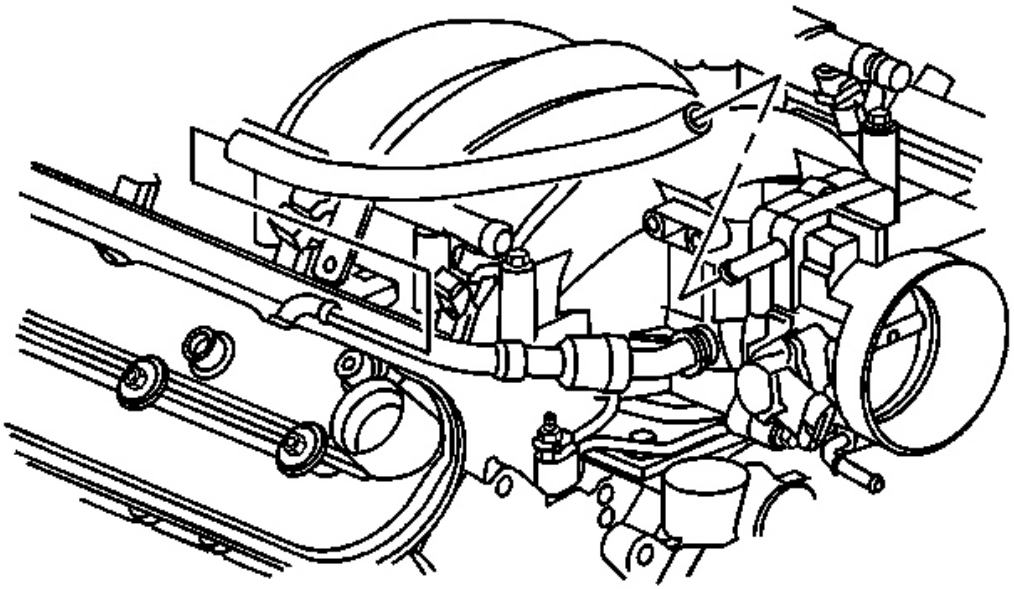

Fig. 110: PCV Tube & Rocker Arm Cover
Courtesy of GENERAL MOTORS CORP.

9. Remove the throttle position (TP) sensor harness clip from the positive crankcase ventilation (PCV) tube.
10. Remove the PCV tube from the throttle body and rocker arm cover.

cardiagn.com

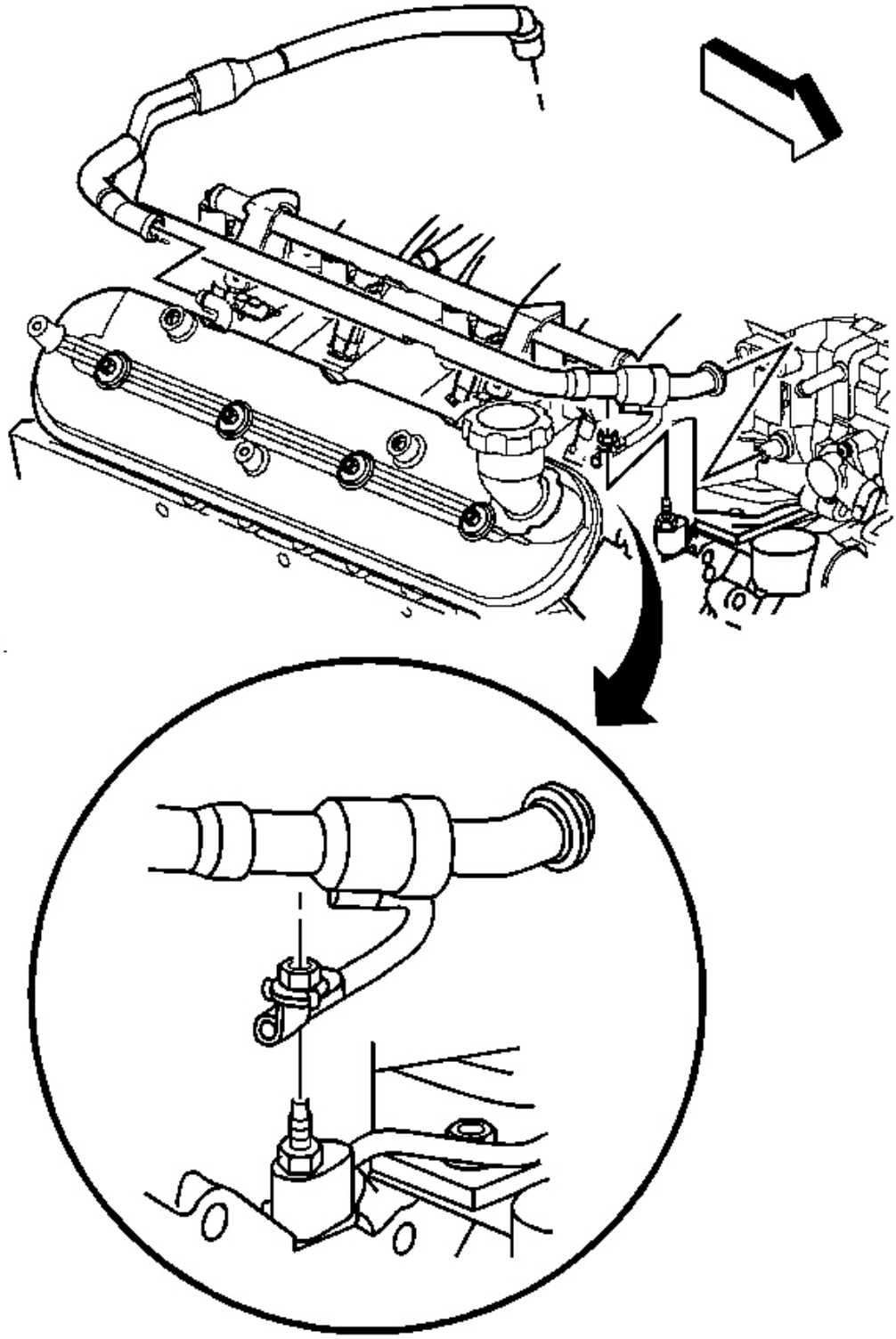

cardiagn.com

Fig. 111: Right Rocker Arm Cover & PCV Valve Pipe
Courtesy of GENERAL MOTORS CORP.

11. If equipped with the regular production option (RPO) LS1 engine, remove the PCV valve pipe strap nut.
12. Remove the PCV valve pipe from the right rocker arm cover and intake manifold.

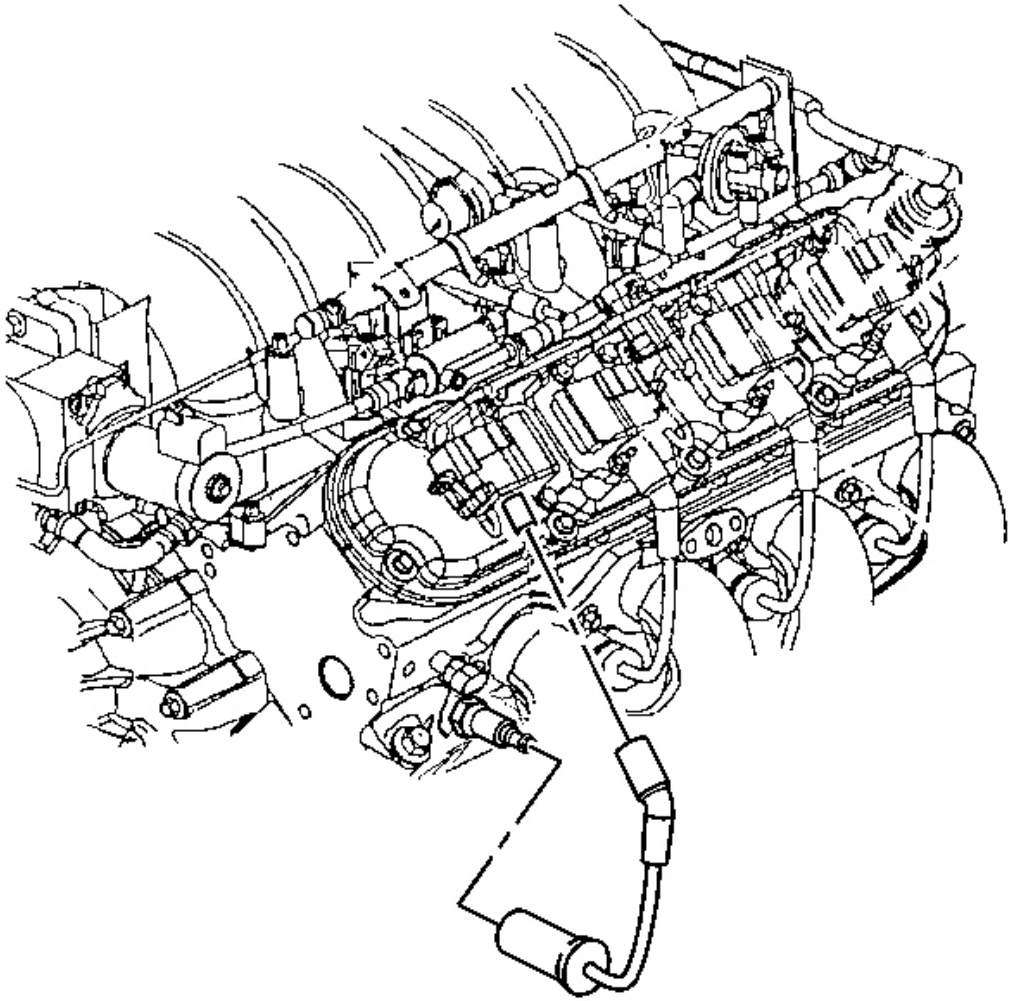

Fig. 112: Spark Plug Wire
Courtesy of GENERAL MOTORS CORP.

13. Disconnect the spark plug wires from the ignition coils.
    - Twist the spark plug wire boot 1/2 turn.

cardiagn.com

- Pull only on the boot in order to remove the wire from the ignition coil.

14. Disconnect the ignition coil wire harness main electrical connector.

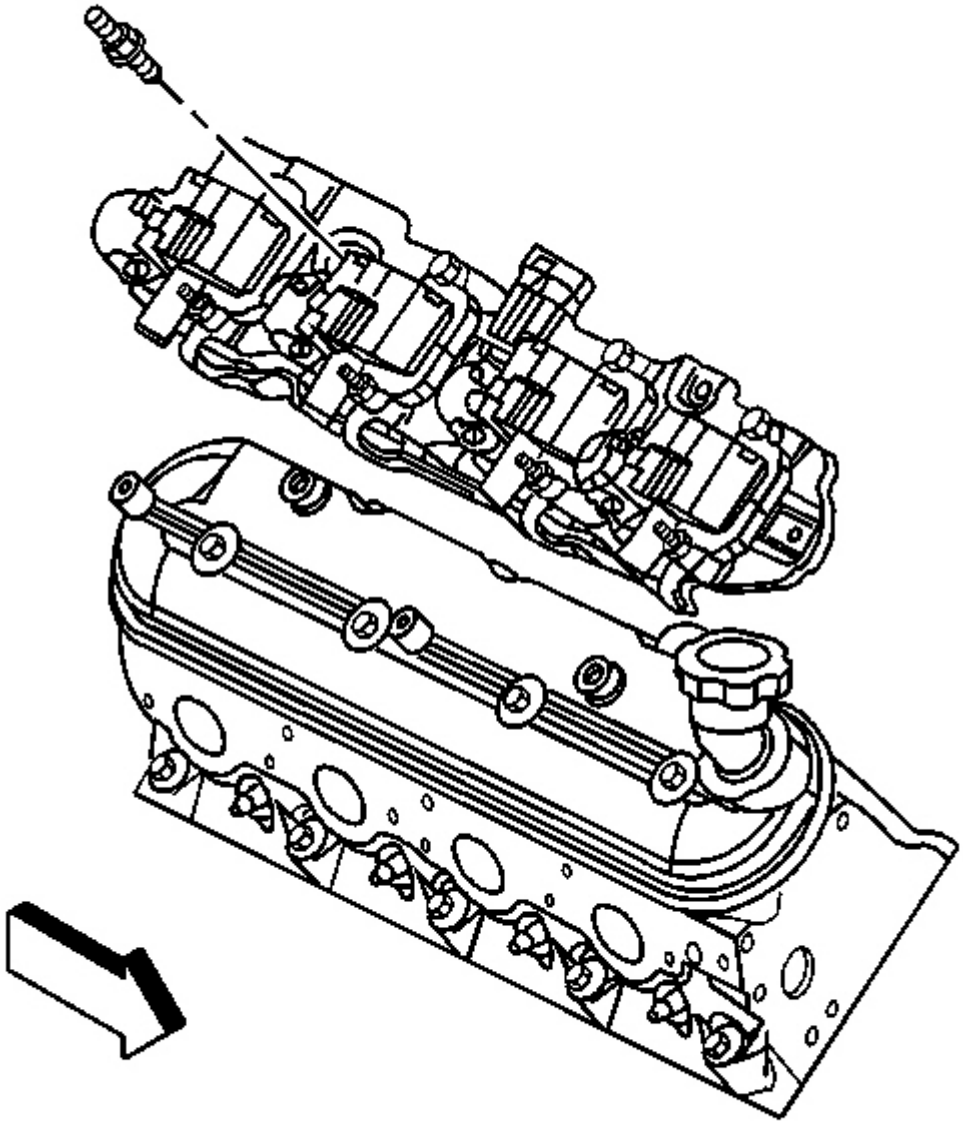

Fig. 113: Ignition Coil Bracket & Studs
Courtesy of GENERAL MOTORS CORP.

15. Remove the ignition coil bracket studs.

cardiagn.com

16. Remove the ignition coil bracket.

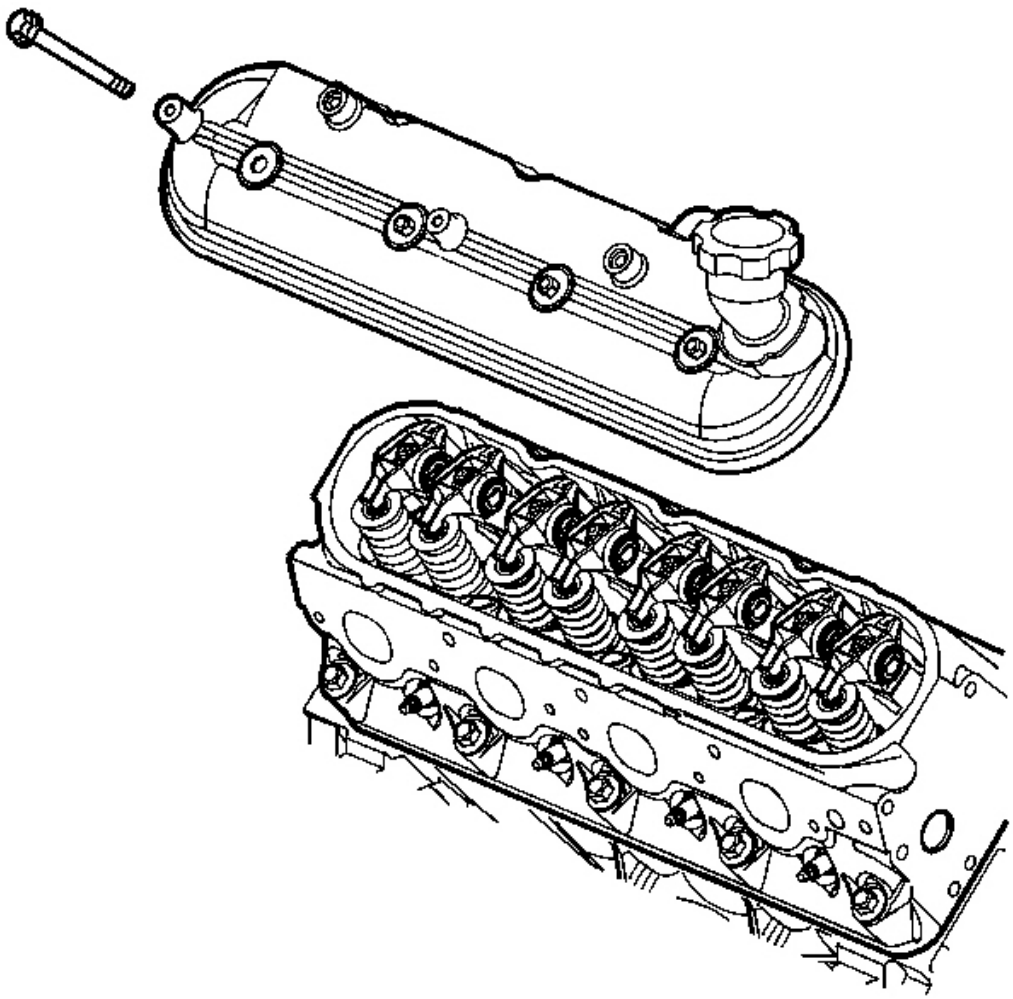

Fig. 114: View Of Valve Rocker Arm Cover & Bolts (Right)
Courtesy of GENERAL MOTORS CORP.

17. Loosen the valve rocker arm cover bolts.
18. Remove the valve rocker arm cover.

cardiagn.com

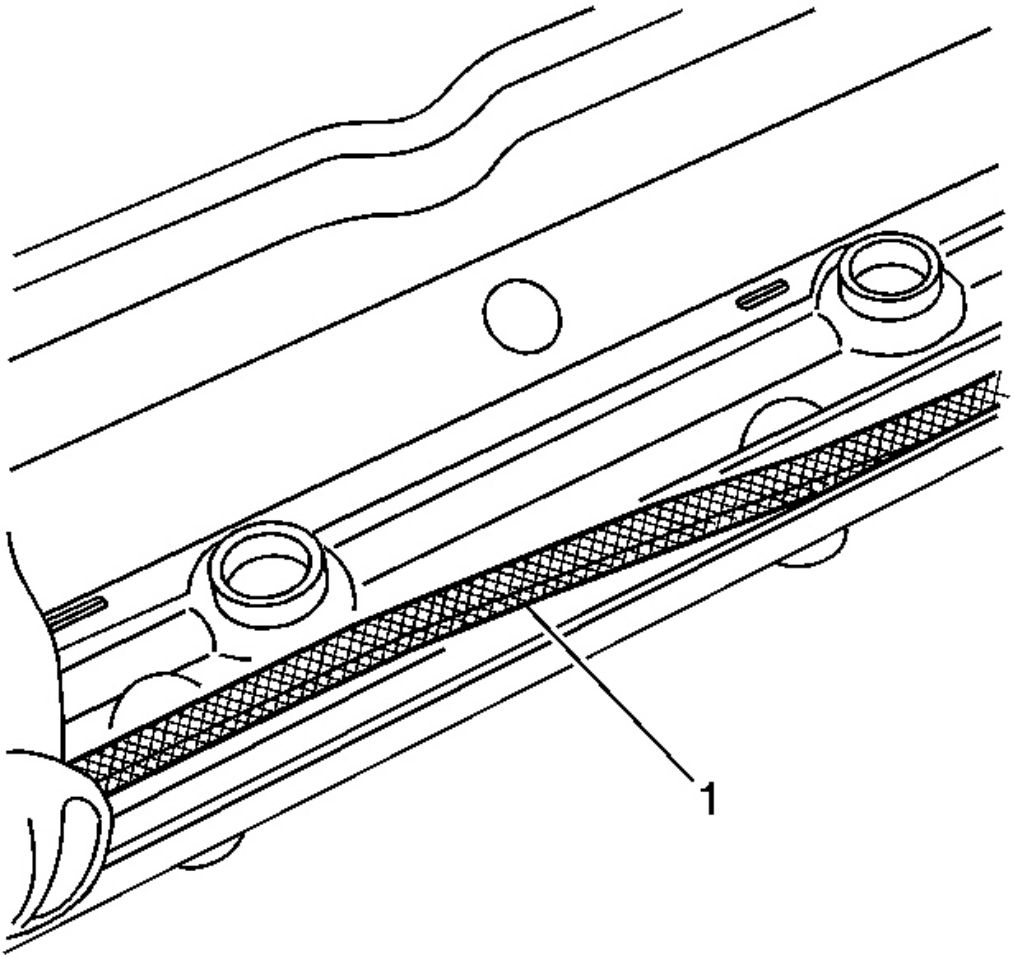

Fig. 115: Rocker Arm Cover & Gasket
Courtesy of GENERAL MOTORS CORP.

19. Remove the gasket (1) from the rocker cover. Discard the OLD gasket.

cardiagn.com

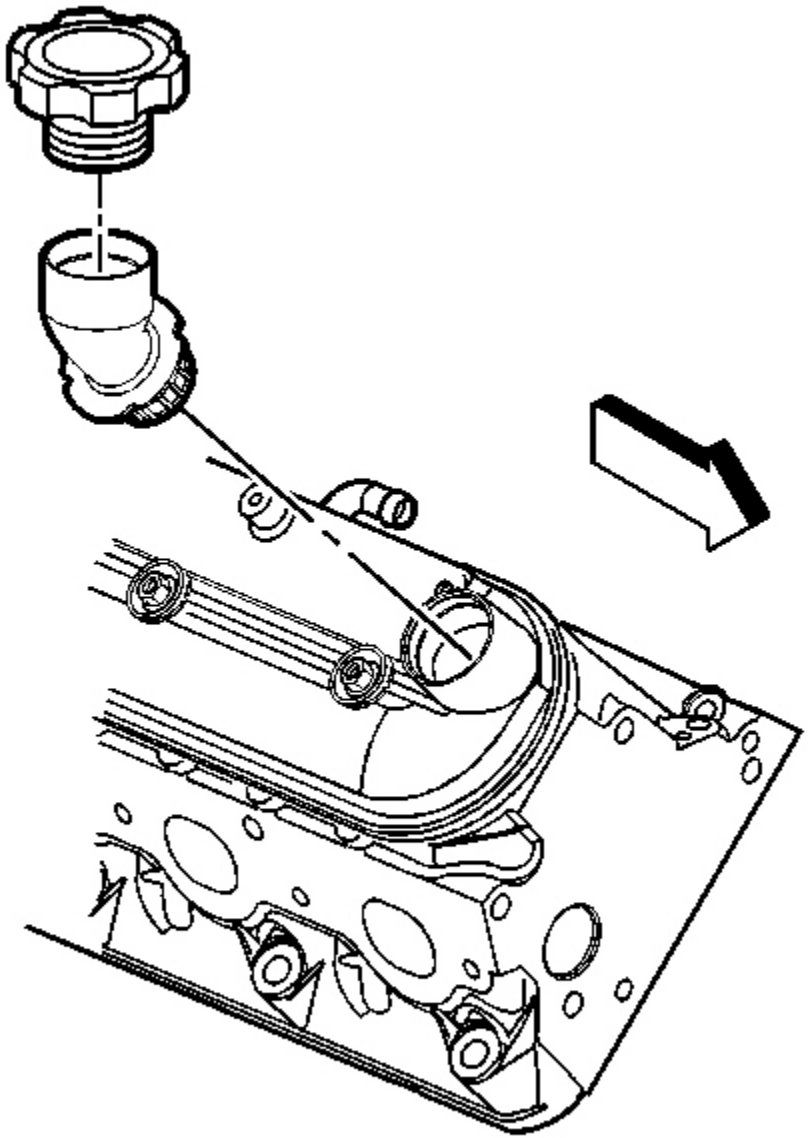

Fig. 116: View Of Oil Fill Tube
Courtesy of GENERAL MOTORS CORP.

20. Remove the oil fill cap from the oil fill tube.
21. Remove the oil fill tube, if required.
22. Discard the oil fill tube.

cardiagn.com

23. Clean and inspect the valve rocker arm cover. Refer to **Valve Rocker Arm Cover Cleaning and Inspection** .

Installation Procedure

IMPORTANT:

- **All gasket surfaces should be free of oil and other foreign material during assembly.**
- **DO NOT reuse the valve rocker arm cover gasket.**
- **The valve rocker arm cover bolt grommets may be reused.**
- **If the oil fill tube has been removed from the rocker arm cover, install a NEW fill tube during assembly.**

cardiagn.com

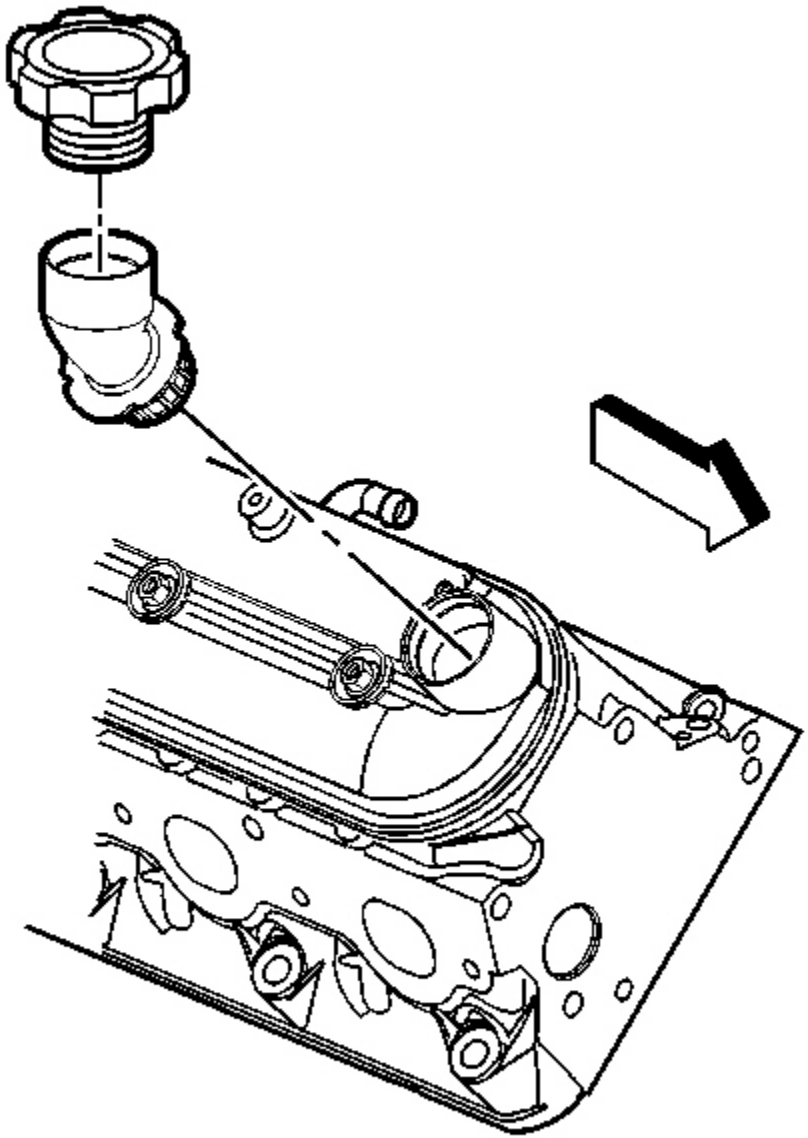

Fig. 117: View Of Oil Fill Tube
Courtesy of GENERAL MOTORS CORP.

1. Lubricate the O-ring seal of the NEW oil fill tube with clean engine oil.
2. Insert the NEW oil fill tube into the rocker arm cover.

   Rotate the tube clockwise until locked in the proper position.

cardiagn.com

3. Install the oil fill cap into the tube.

   Rotate the cap clockwise until locked in the proper position.

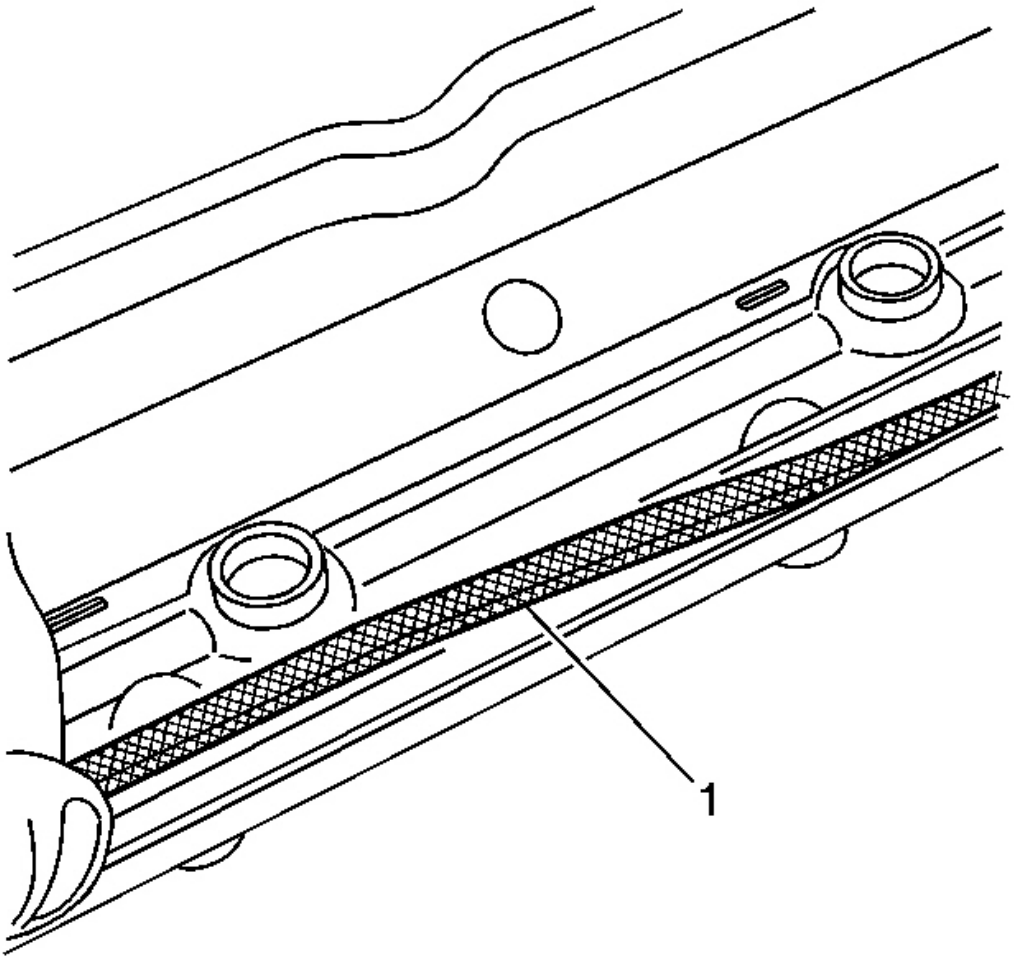

Fig. 118: Rocker Arm Cover & Gasket
Courtesy of GENERAL MOTORS CORP.

4. Install a NEW gasket (1) into the valve rocker cover lip.

cardiagn.com

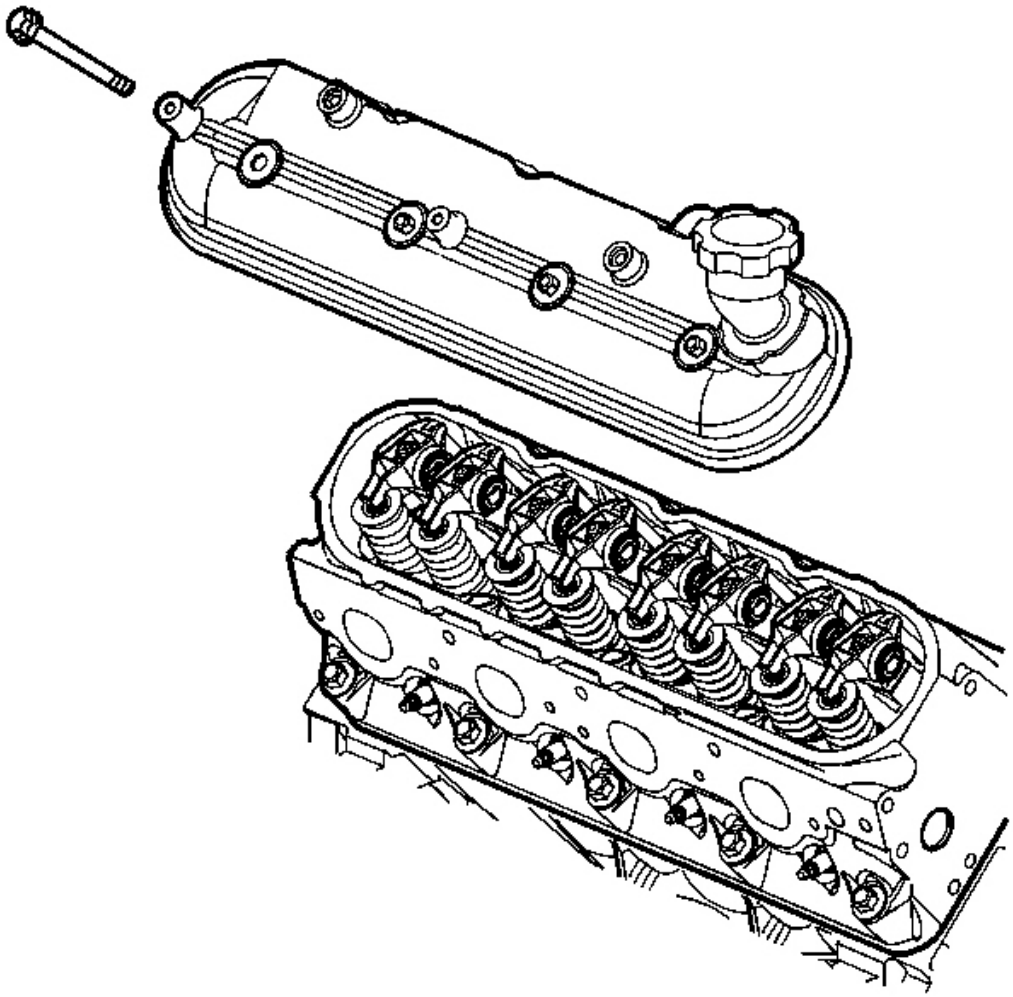

Fig. 119: View Of Valve Rocker Arm Cover & Bolts (Right)
Courtesy of GENERAL MOTORS CORP.

NOTE: Refer to Fastener Notice in Cautions and Notices.

5. Install the valve rocker arm cover onto the cylinder head.
6. Tighten the rocker arm cover bolts.

Tighten: Tighten the valve rocker arm cover bolts to 12 N.m (106 lb in).

cardiagn.com

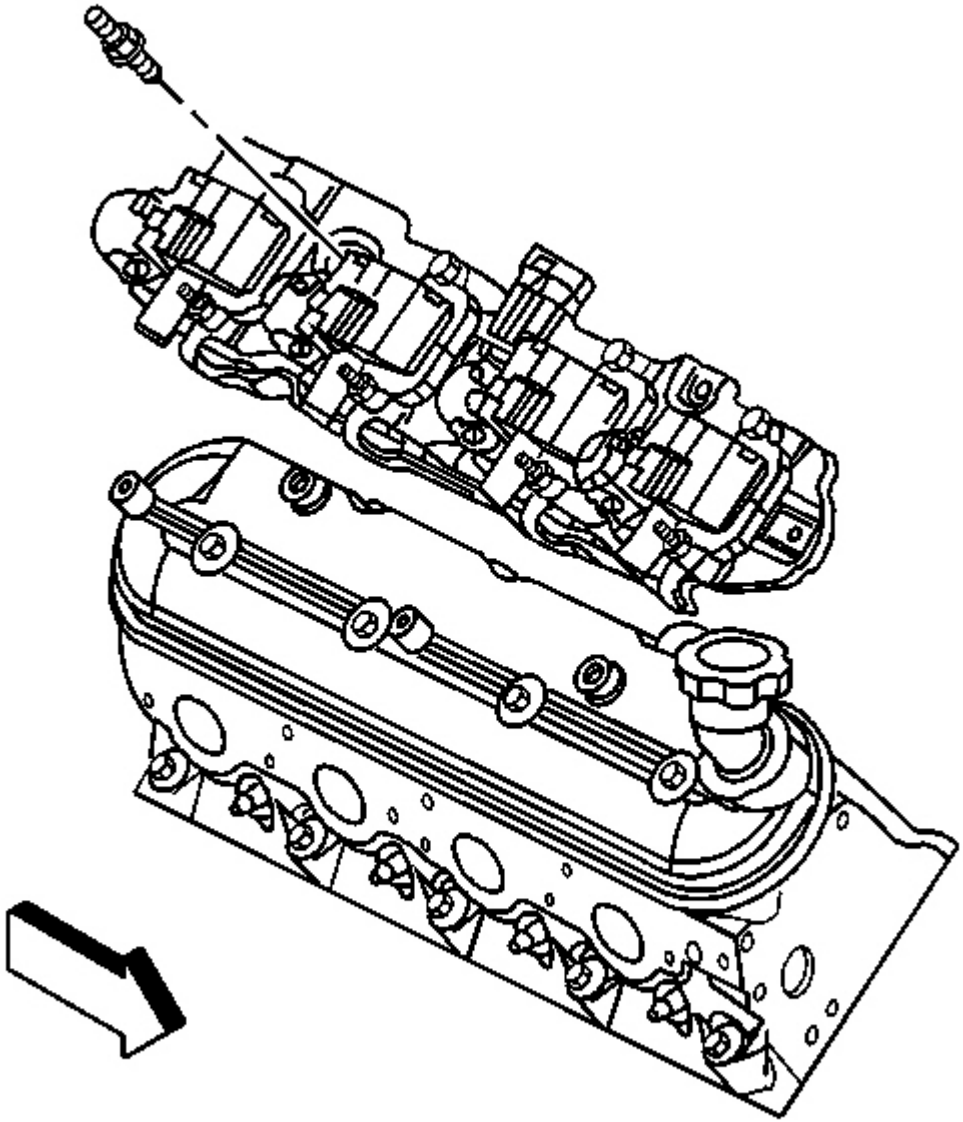

Fig. 120: Ignition Coil Bracket & Studs
Courtesy of GENERAL MOTORS CORP.

7. Install the ignition coil bracket.
8. Apply threadlock GM P/N 12345382 (Canadian P/N 10953489), or equivalent to the threads of the bracket studs.
9. Install the ignition coil bracket studs.

cardiagn.com

Tighten: Tighten the ignition coil bracket studs to 12 N.m (106 lb in).

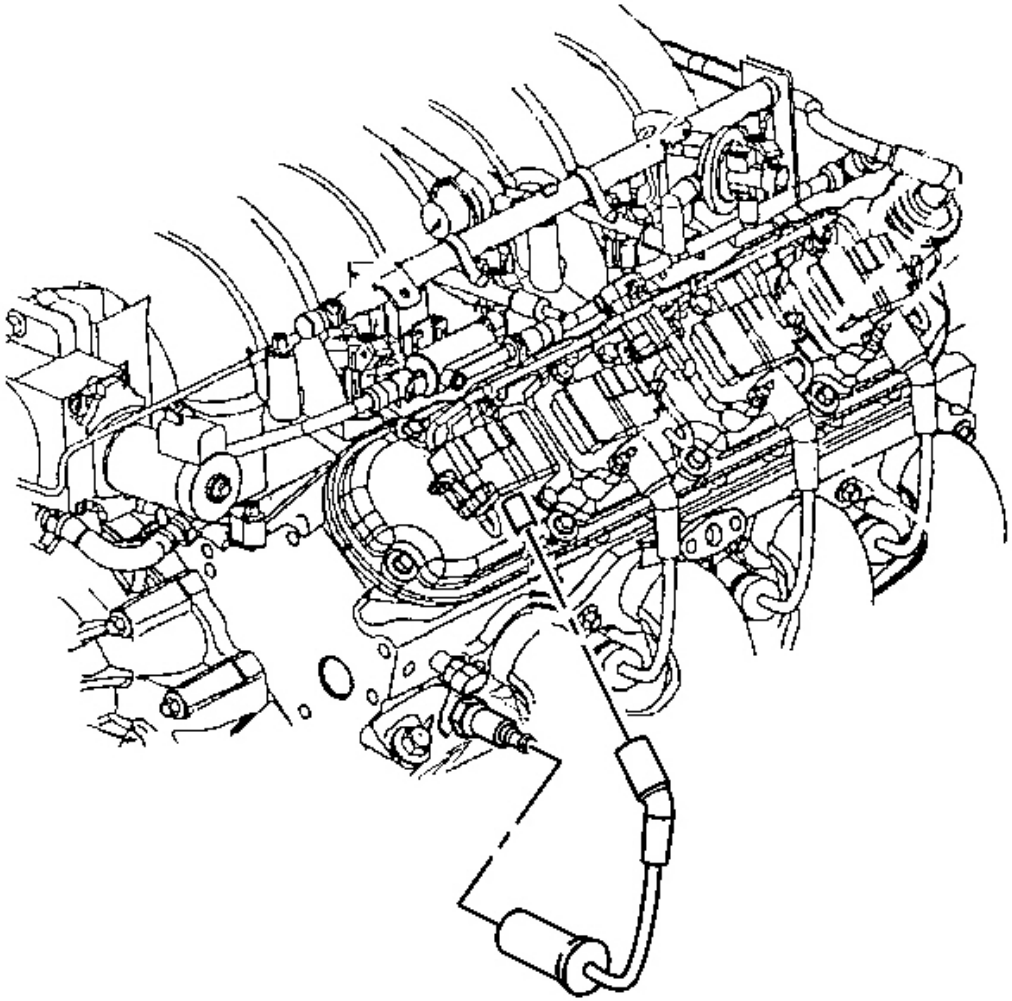

Fig. 121: Spark Plug Wire
Courtesy of GENERAL MOTORS CORP.

10. Connect the ignition coil wire harness main electrical connector.
11. Install the spark plug wires to the ignition coils.

cardiagn.com

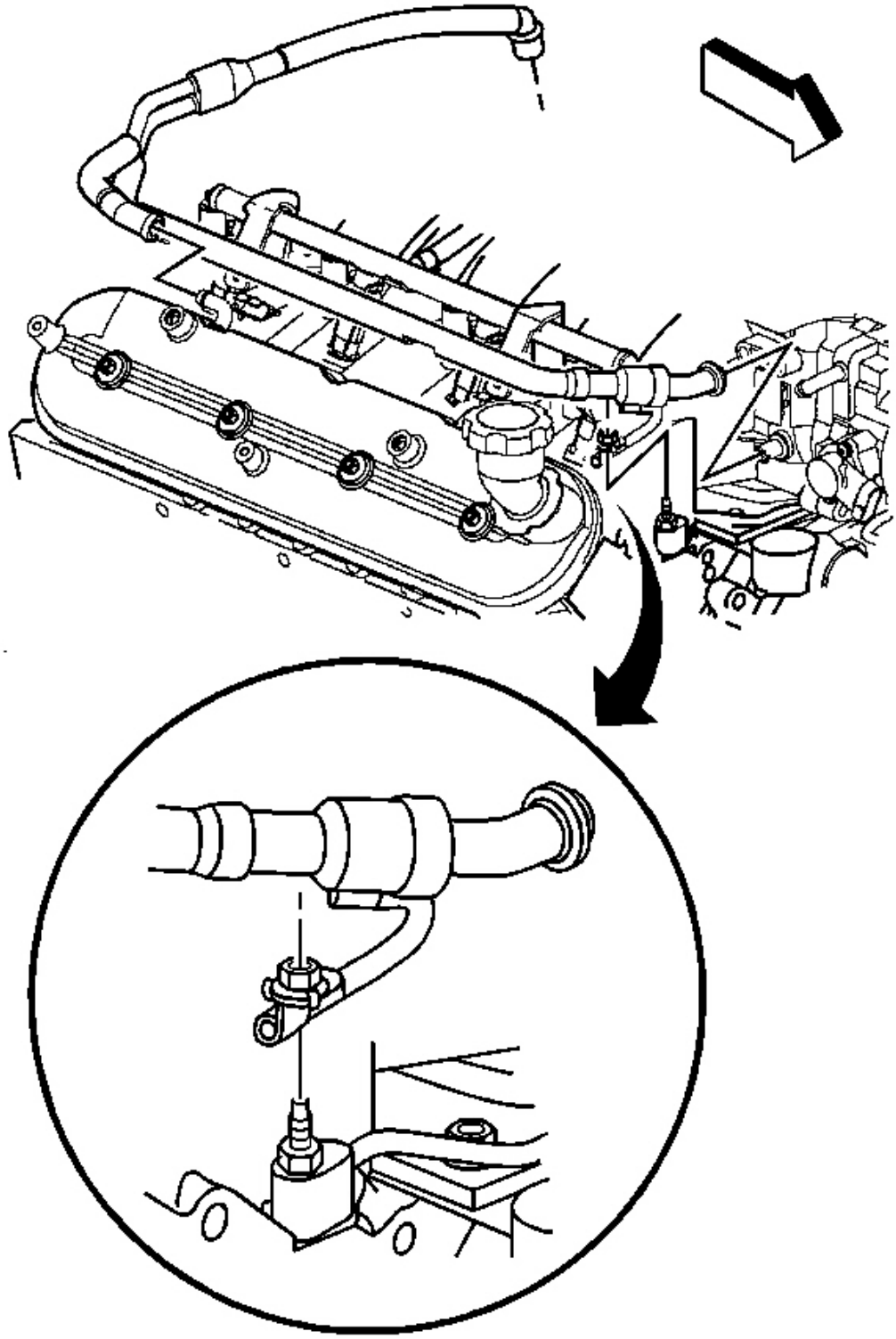

cardiagn.com

Fig. 122: Right Rocker Arm Cover & PCV Valve Pipe
Courtesy of GENERAL MOTORS CORP.

12. If equipped with the RPO LS1 engine, install the PCV valve pipe to the right rocker arm cover and intake manifold.
13. Install the PCV valve pipe strap nut.

    Tighten: Tighten the PCV valve strap nut to 12 N.m (106 lb in).

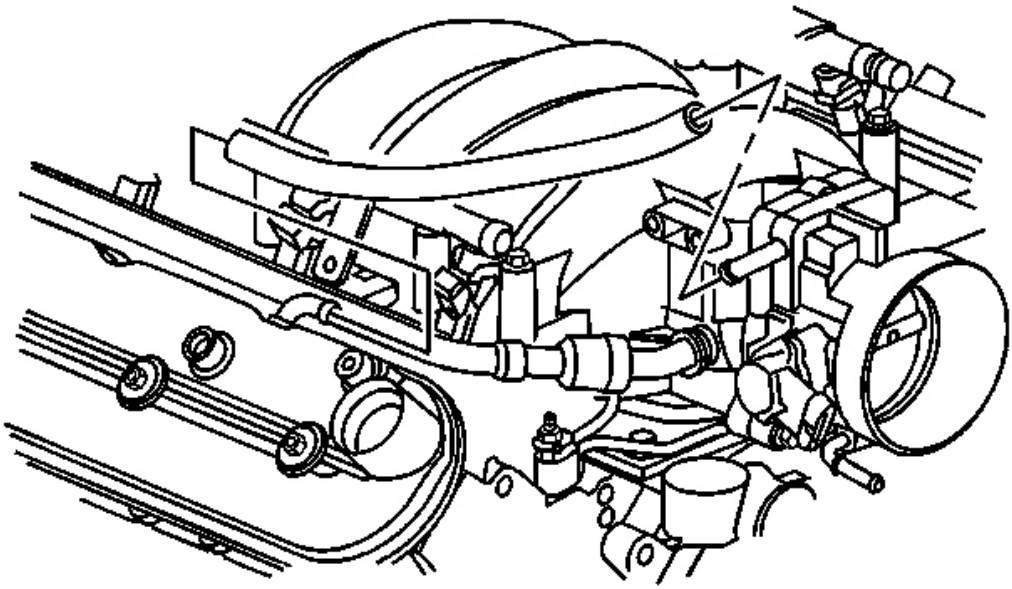

Fig. 123: PCV Tube & Rocker Arm Cover
Courtesy of GENERAL MOTORS CORP.

14. Install the PCV tube to the throttle body and rocker arm cover.
15. Connect the TP sensor harness clip to the PCV tube.

cardiagn.com

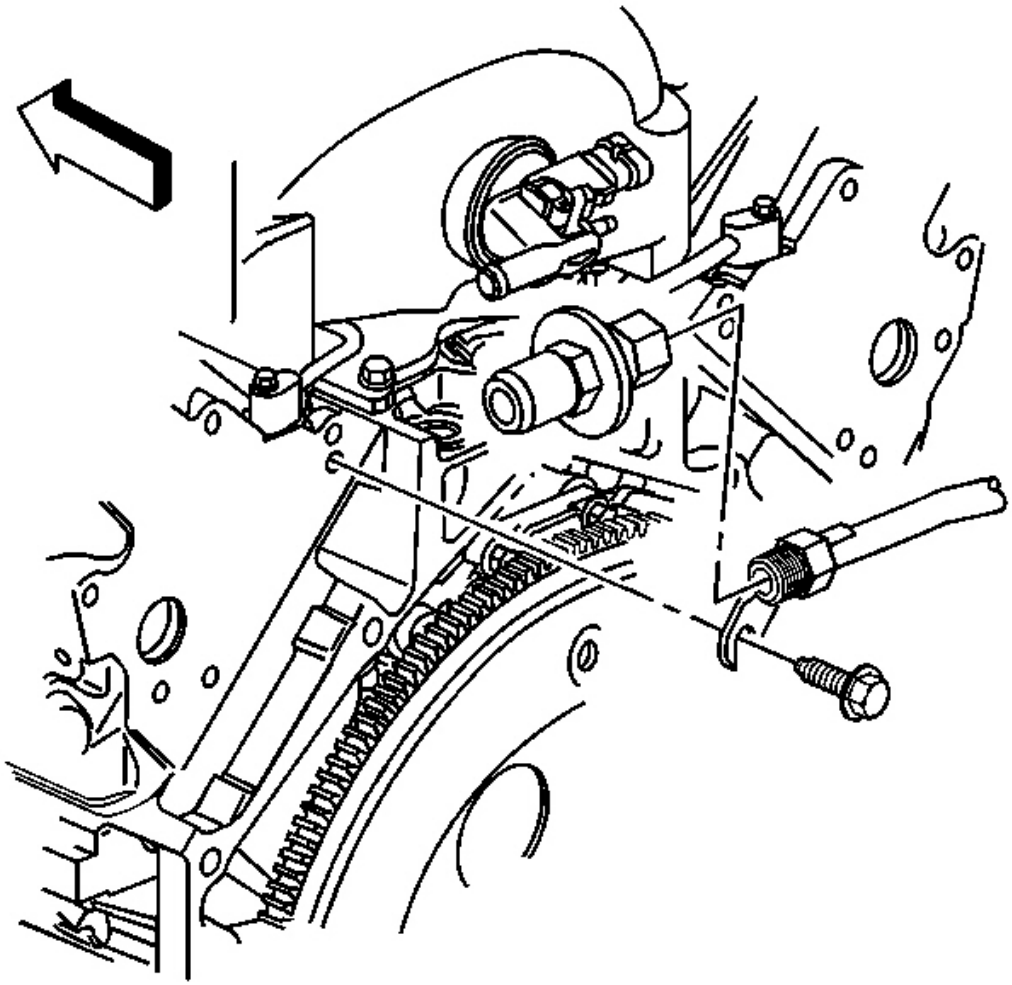

Fig. 124: AIR Pipe Gasket, Exhaust Manifold & Bolts
Courtesy of GENERAL MOTORS CORP.

16. Position the AIR pipe into place.
17. Slide the AIR pipe behind the bolt on the rear of the left cylinder head.

cardiagn.com

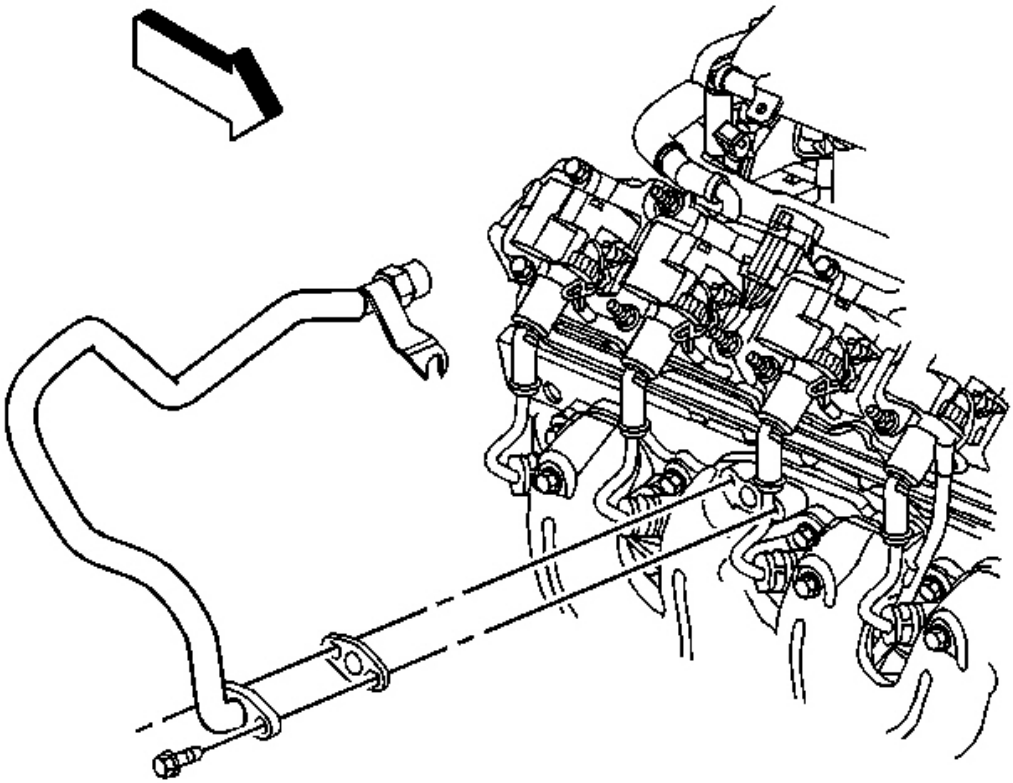

Fig. 125: AIR Pipe & Bolts
Courtesy of GENERAL MOTORS CORP.

18. Install the AIR pipe gasket to the exhaust manifold.
19. Install the AIR pipe to the exhaust manifold.
20. Install the AIR pipe bolts at the exhaust manifold.
21. Tighten the AIR pipe bolts.

Tighten: Tighten the AIR pipe bolts to 20 N.m (15 lb ft).

cardiagn.com

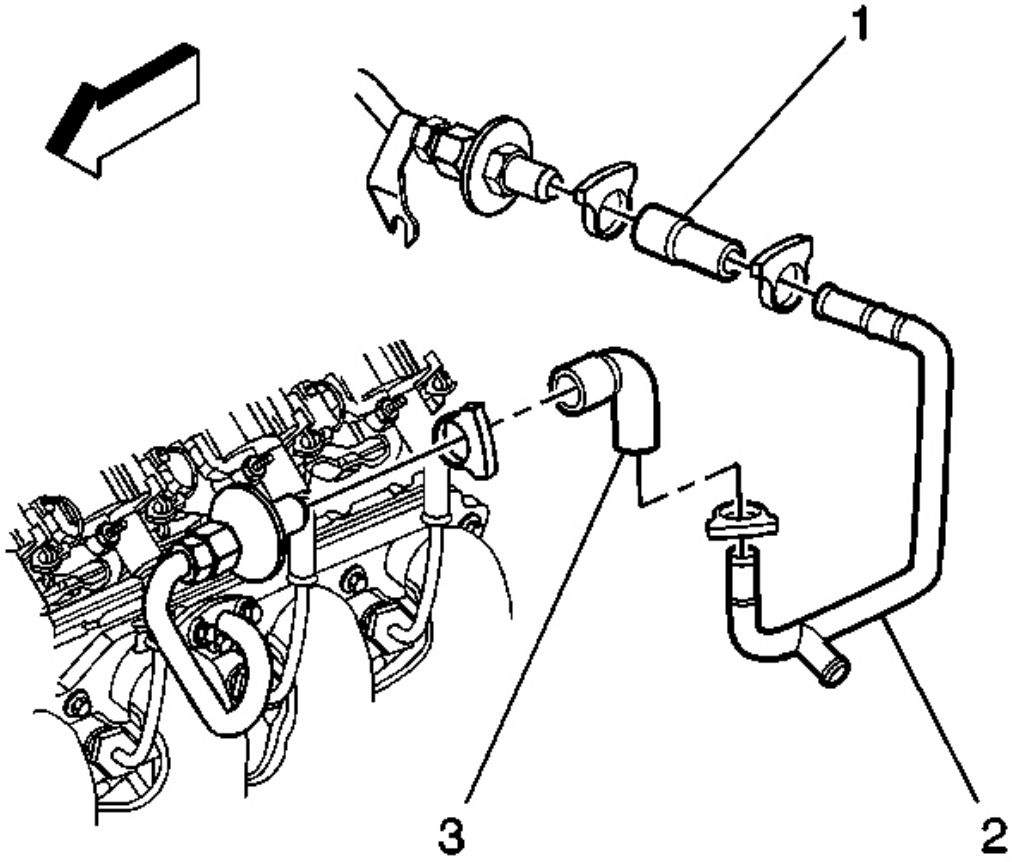

Fig. 126: AIR Hose Clamp & Check Valve
Courtesy of GENERAL MOTORS CORP.

22. Connect the AIR hose (1) to the check valve.
23. Install the AIR hose clamp.

cardiagn.com

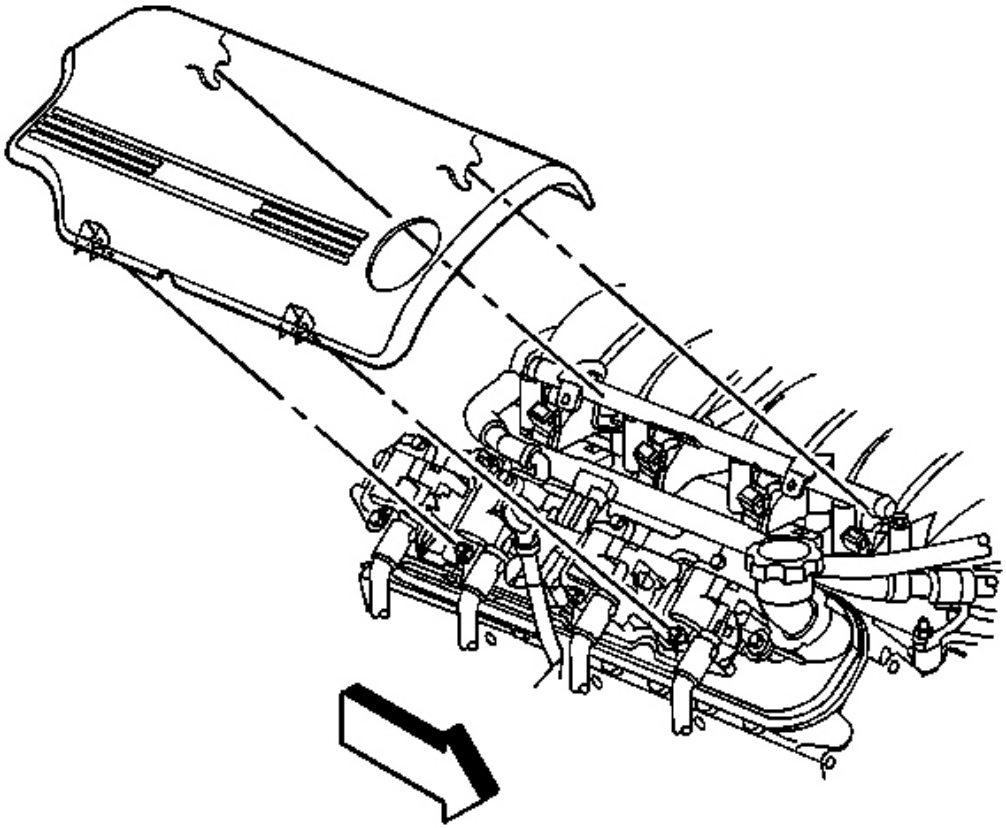

Fig. 127: Right Fuel Injection Rail Cover
Courtesy of GENERAL MOTORS CORP.

24. Install the right fuel injection rail cover.

VALVE ROCKER ARM AND PUSH ROD REPLACEMENT

Removal Procedure

cardiagn.com

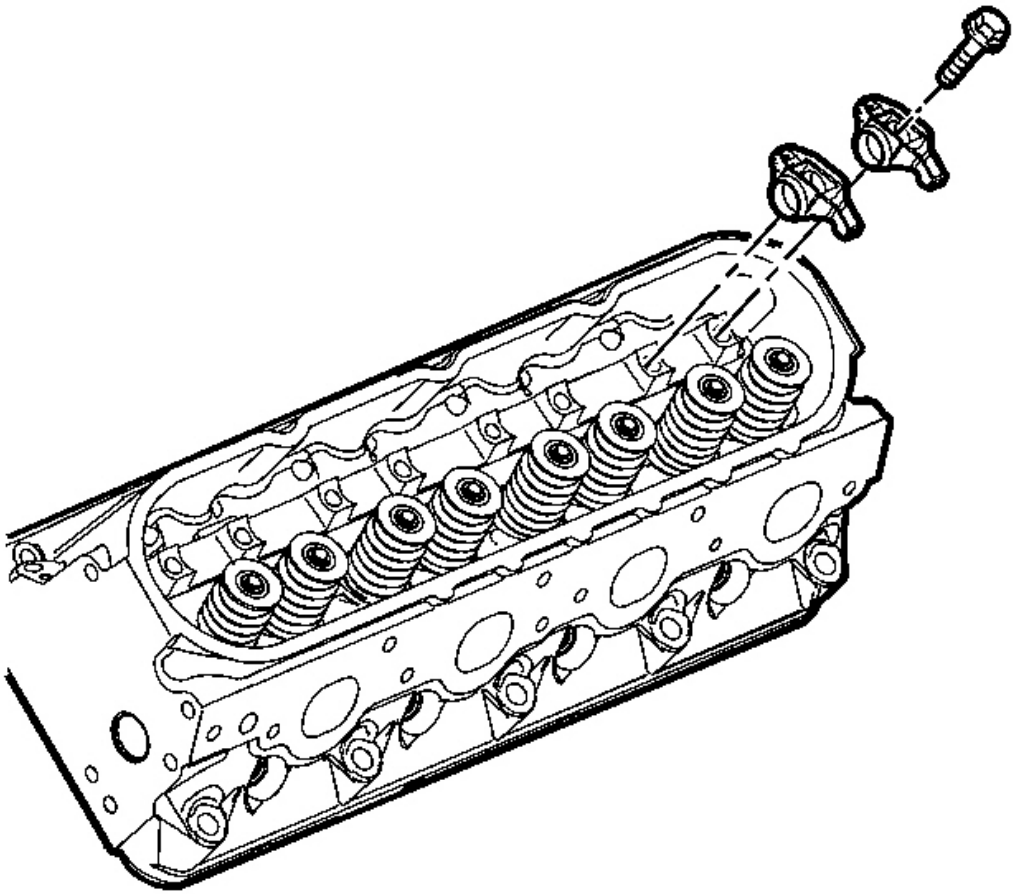

Fig. 128: View Of Valve Rocker Arms & Bolts
Courtesy of GENERAL MOTORS CORP.

IMPORTANT: Place the valve rocker arms, valve pushrods, and pivot support, in a rack so that they can be installed in the same location from which they were removed.

1. Remove the valve rocker arm covers. Refer to **Valve Rocker Arm Cover Replacement - Left** or **Valve Rocker Arm Cover Replacement - Right** .
2. Remove the valve rocker arm bolts.
3. Remove the valve rocker arms.

cardiagn.com

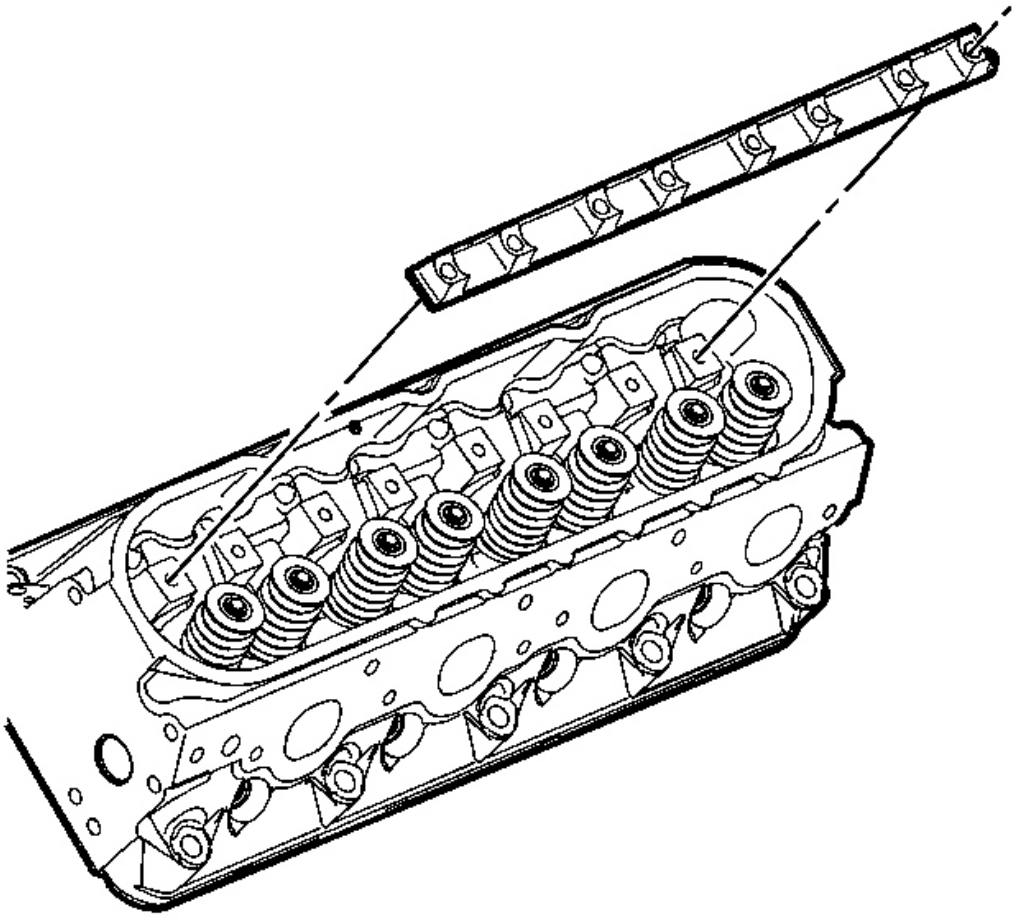

Fig. 129: View Of Valve Rocker Arm Pivot Support
Courtesy of GENERAL MOTORS CORP.

4. Remove the valve rocker arm pivot support.

cardiagn.com

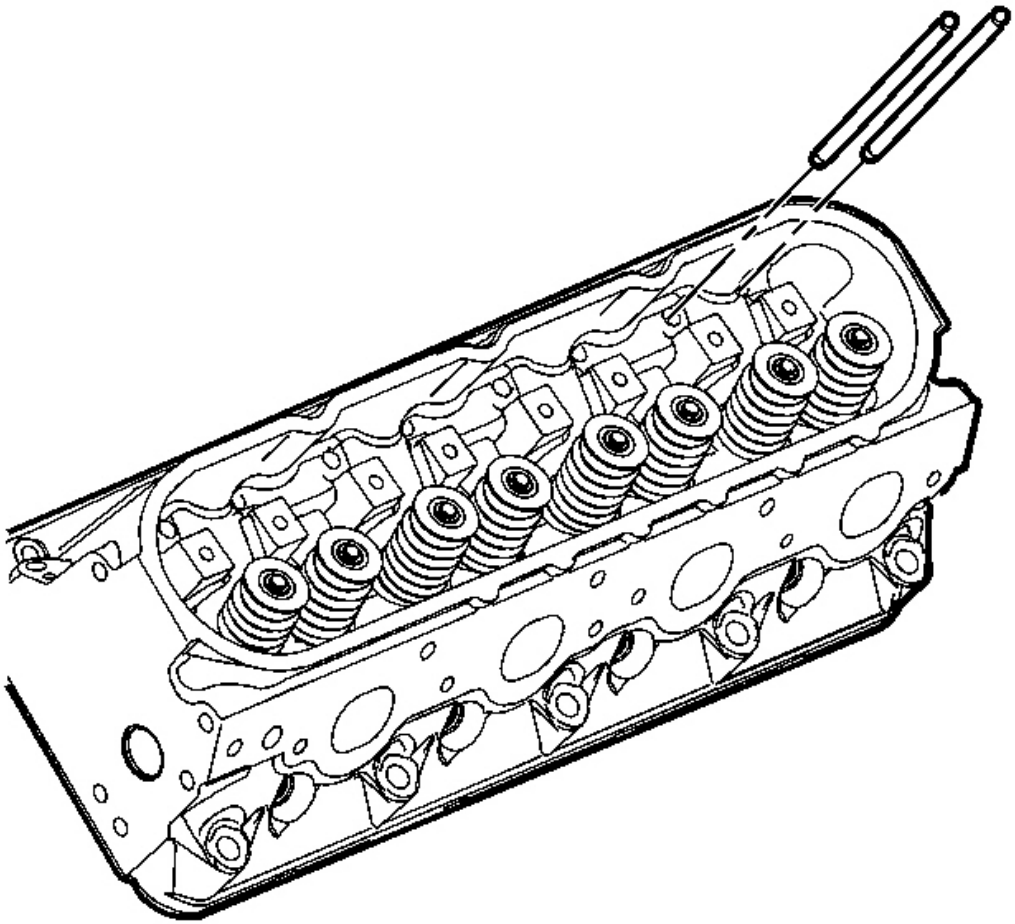

Fig. 130: View Of Pushrods
Courtesy of GENERAL MOTORS CORP.

5. Remove the pushrods.
6. Clean and inspect the valve rocker arms and pushrods. Refer to **Valve Rocker Arm and Push Rods Cleaning and Inspection** .

Installation Procedure

IMPORTANT: When reusing the valvetrain components, always install the components to the original location and position.

Valve lash is net build, no valve adjustment is required.

cardiagn.com

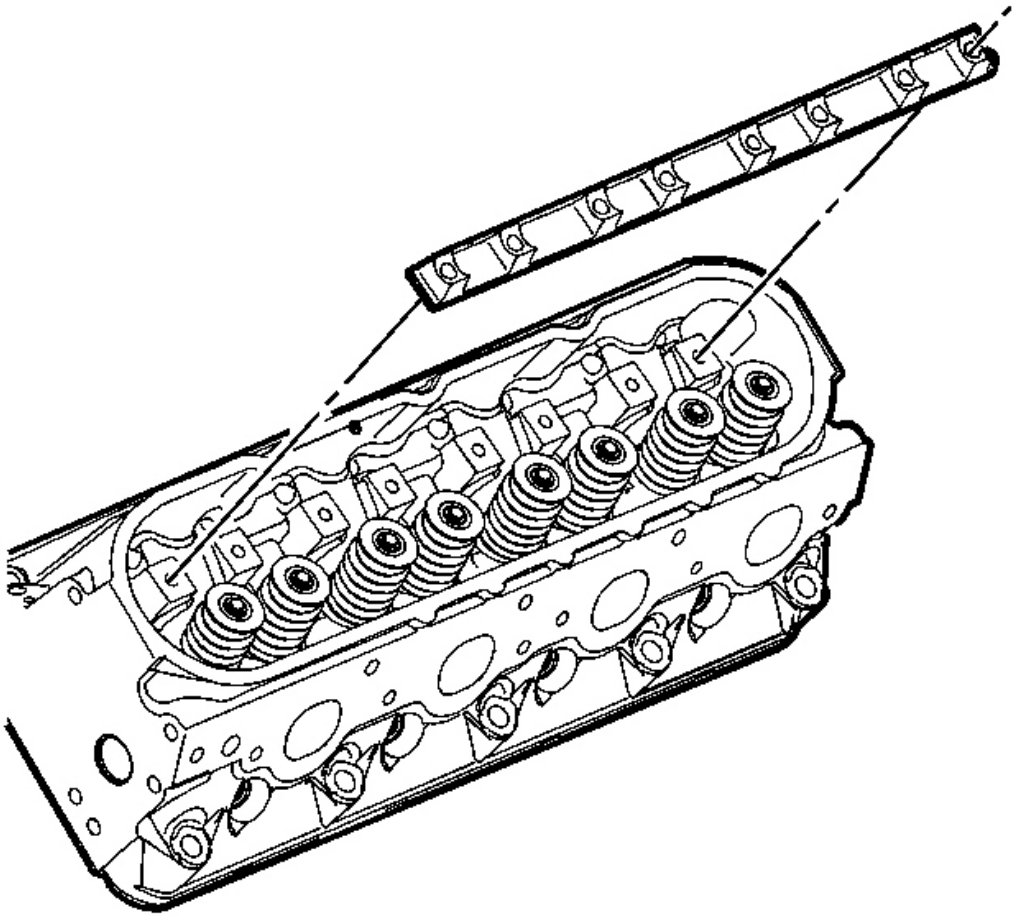

Fig. 131: View Of Valve Rocker Arm Pivot Support
Courtesy of GENERAL MOTORS CORP.

1. Lubricate the valve rocker arms and pushrods with clean engine oil.
2. Lubricate the flange of the valve rocker arm bolts with clean engine oil.

   Lubricate the flange or washer surface of the bolt that will contact the valve rocker arm.

3. Install the valve rocker arm pivot support.

cardiagn.com

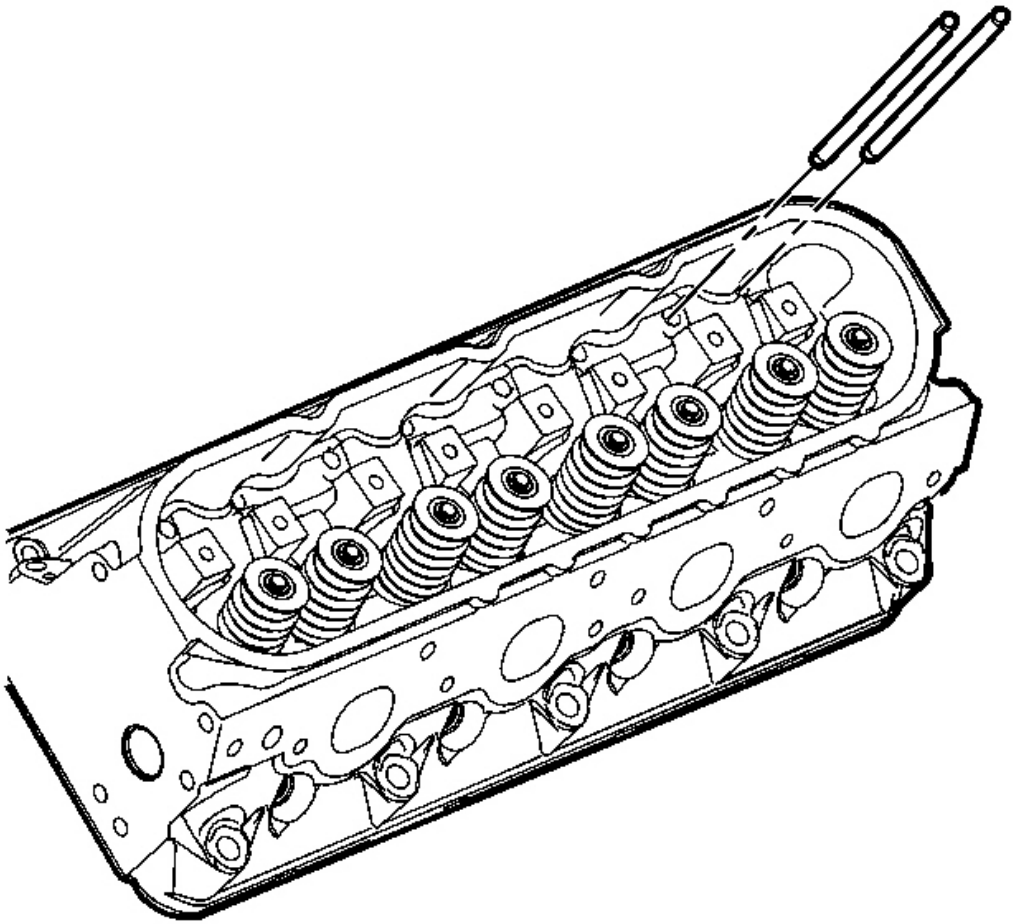

Fig. 132: View Of Pushrods
Courtesy of GENERAL MOTORS CORP.

IMPORTANT: Make sure that the pushrods seat properly to the valve lifter sockets.

4. Install the pushrods.

cardiagn.com

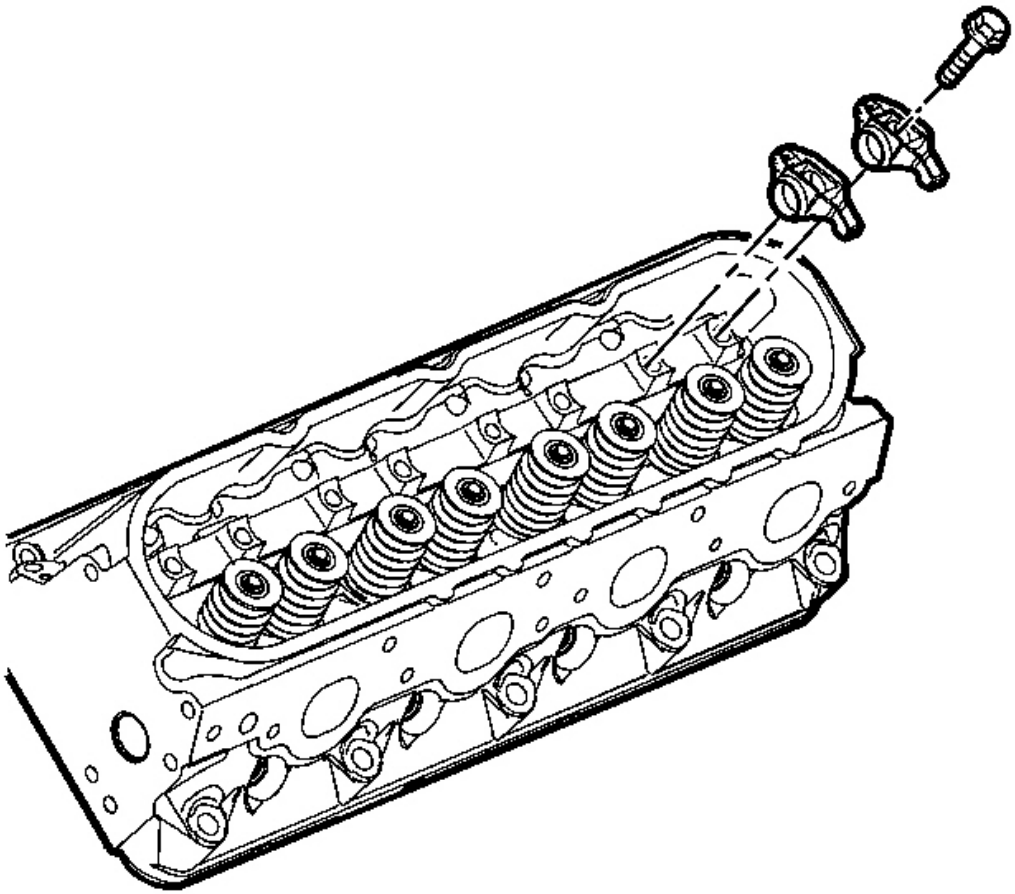

Fig. 133: View Of Valve Rocker Arms & Bolts
Courtesy of GENERAL MOTORS CORP.

IMPORTANT: Make sure that the pushrods seat properly to the ends of the rocker arms.

5. Install the rocker arms and bolts.

   DO NOT tighten the rocker arm bolts at this time.

cardiagn.com

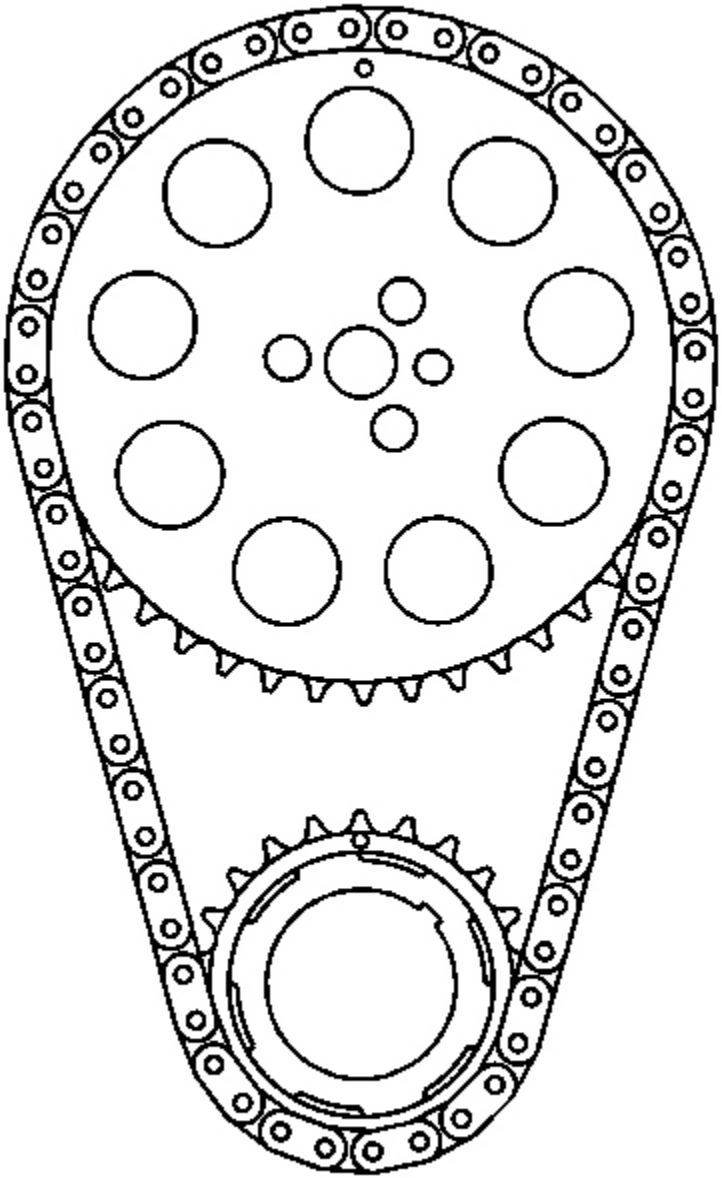

Fig. 134: View of Crankshaft
Courtesy of GENERAL MOTORS CORP.

NOTE: **Refer to Fastener Notice in Cautions and Notices.**

cardiagn.com

6. Rotate the crankshaft until the number one piston is at top dead center (TDC) of the compression stroke.

   In this position, cylinder number one rocker arms will be off lobe lift, and the crankshaft sprocket key will be at the 1:30 position.

   The engine firing order is 1,8,7,2,6,5,4,3.

   Cylinders 1,3,5, and 7 are left bank.

   Cylinders 2,4,6, and 8 are right bank.

7. With the engine in the number one firing position, tighten the following valve rocker arm bolts:

   Tighten:
   - Tighten the exhaust valve rocker arm bolts 1,2,7, and 8 to 30 N.m (22 lb ft).
   - Tighten the intake valve rocker arm bolts 1,3,4, and 5 to 30 N.m (22 lb ft).

8. Rotate the crankshaft 360 degrees.
9. Tighten the following valve rocker arm bolts:

   Tighten:
   - Tighten the exhaust valve rocker arm bolts 3,4,5, and 6 to 30 N.m (22 lb ft).
   - Tighten the intake valve rocker arm bolts 2,6,7, and 8 to 30 N.m (22 lb ft).

10. Install the valve rocker arm covers. Refer to **Valve Rocker Arm Cover Replacement - Left** or **Valve Rocker Arm Cover Replacement - Right** .

VALVE STEM OIL SEAL AND VALVE SPRING REPLACEMENT

Tools Required

- **J 22794** Spark Plug Port Adapter
- **J 38606** Valve Spring Compressor (Head-on)
- J 42078 Valve Stem Oil Seal Installer

Removal Procedure

cardiagn.com

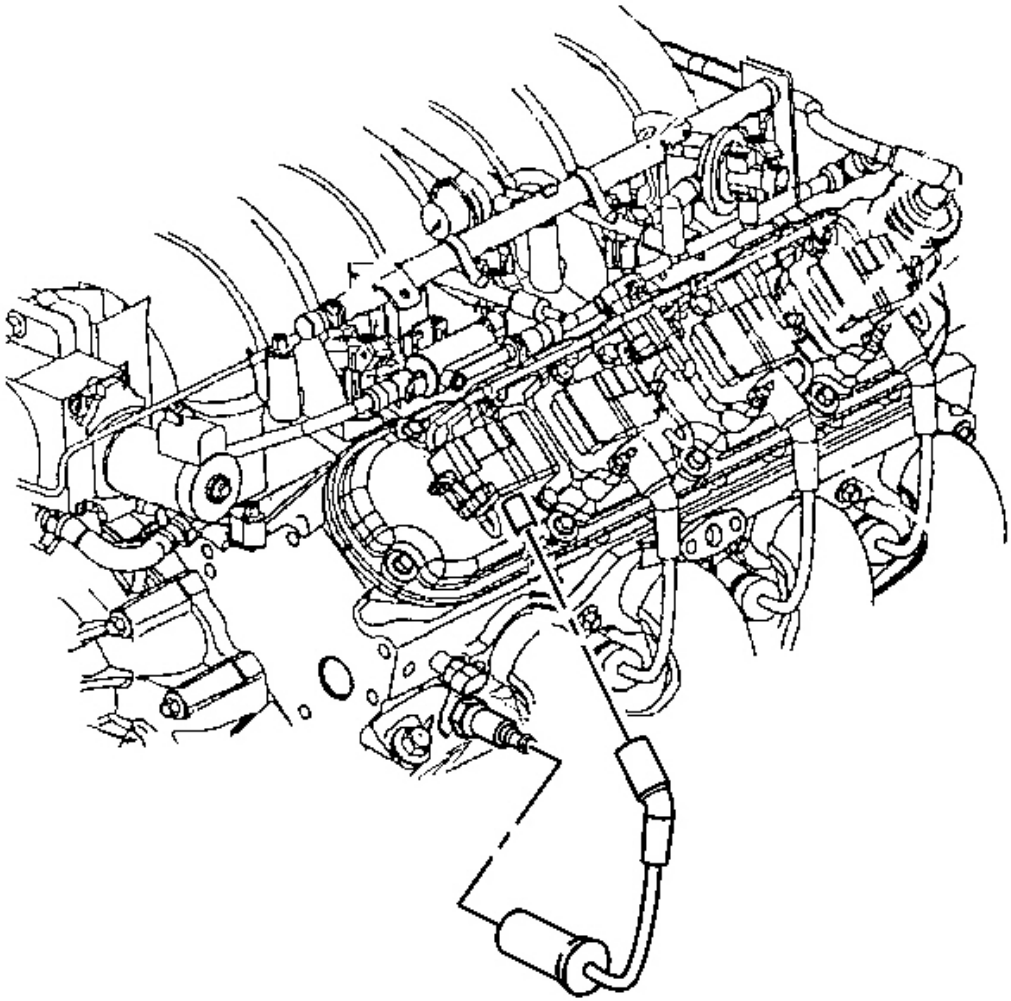

Fig. 135: Spark Plug Wire
Courtesy of GENERAL MOTORS CORP.

1. Remove the valve rocker arms. Refer to **Valve Rocker Arm and Push Rod Replacement** .
2. Remove the spark plug wire from the spark plug for the cylinder to be serviced.
    - Twist the plug wire 1/2 turn.
    - Pull only on the boot in order to remove the wire from the spark plug.

cardiagn.com

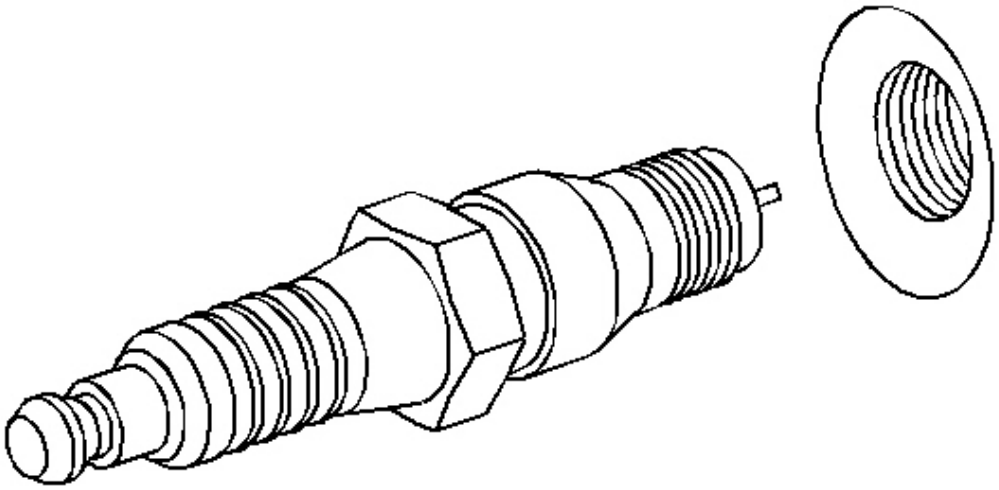

Fig. 136: View Of Spark Plug
Courtesy of GENERAL MOTORS CORP.

IMPORTANT: Remove the spark plugs from the cylinder head with the engine at room temperature.

3. Loosen the spark plug 1 or 2 turns.
4. Brush or use compressed air to remove any dirt or debris around the spark plug.
5. Remove the spark plug.

cardiagn.com

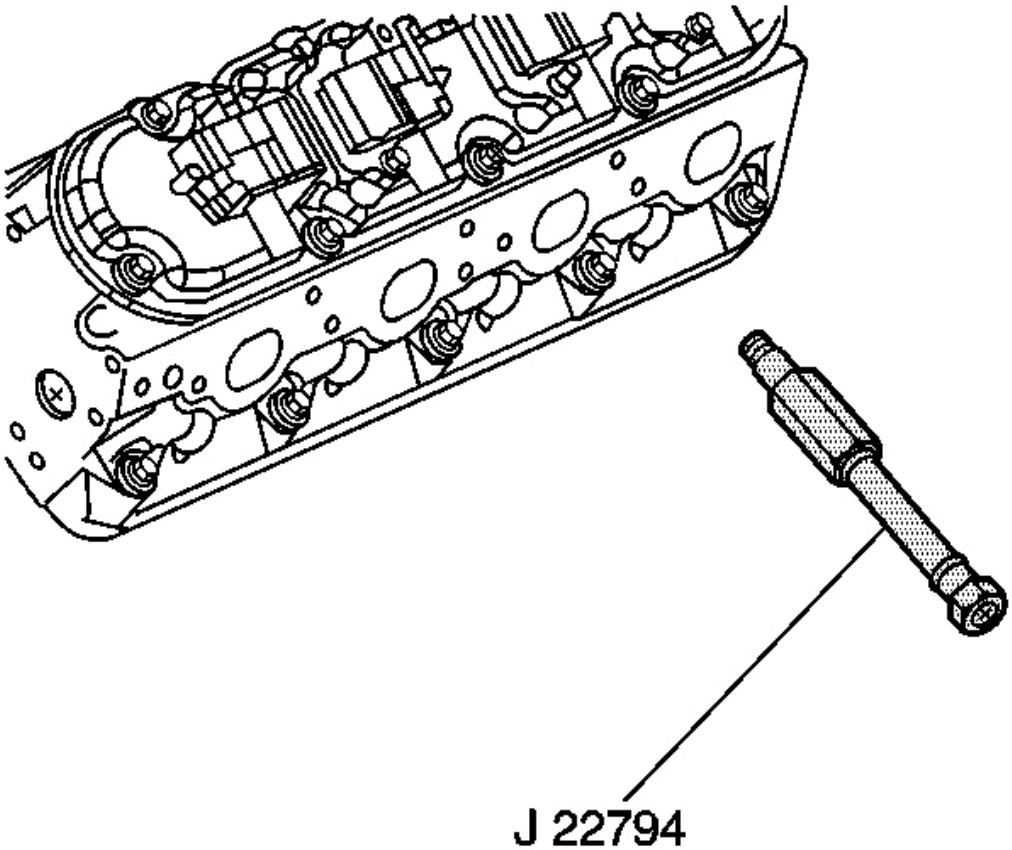

Fig. 137: Install/Remove J 22794 Spark Plug Hole
Courtesy of GENERAL MOTORS CORP.

6. Install the **J 22794** into the spark plug hole.
7. Attach an air hose to **J 22794** .
8. Tap the end of the valve stem with a plastic face hammer in order to loosen any varnish on the valve stem keys.

cardiagn.com

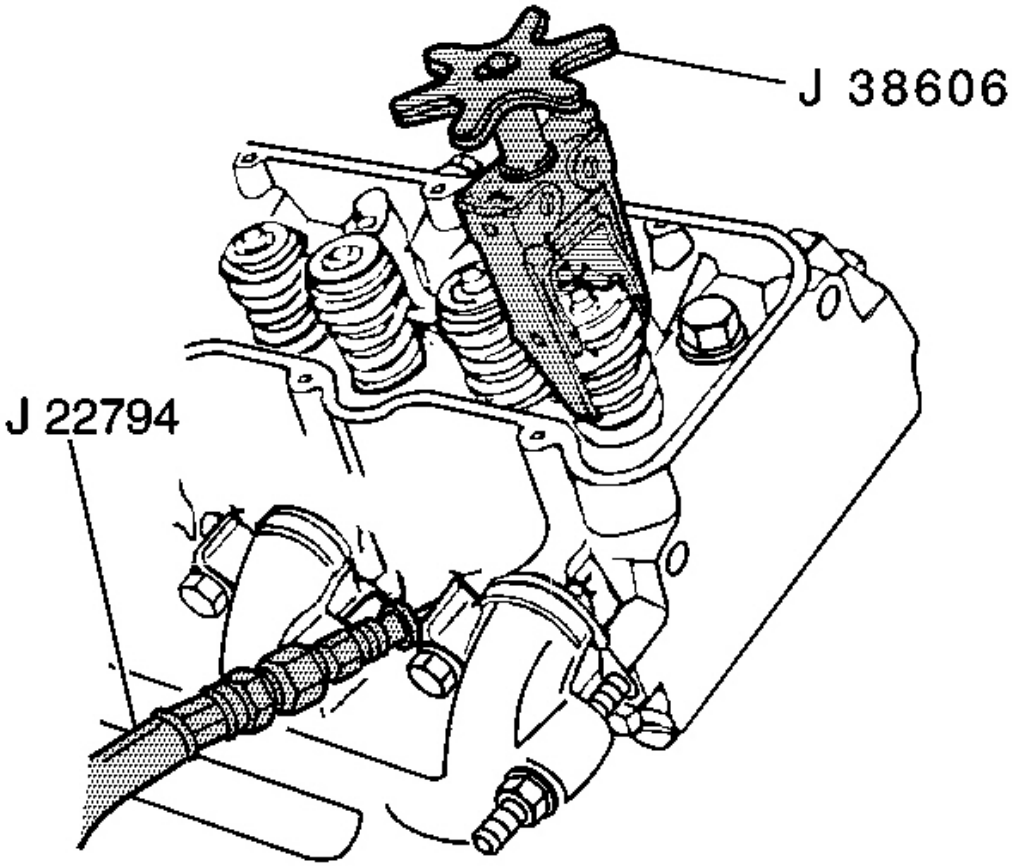

Fig. 138: J 38606, J 5892-D & Valve Spring
Courtesy of GENERAL MOTORS CORP.

9. Use the **J 38606** in order to compress the valve spring.

cardiagn.com

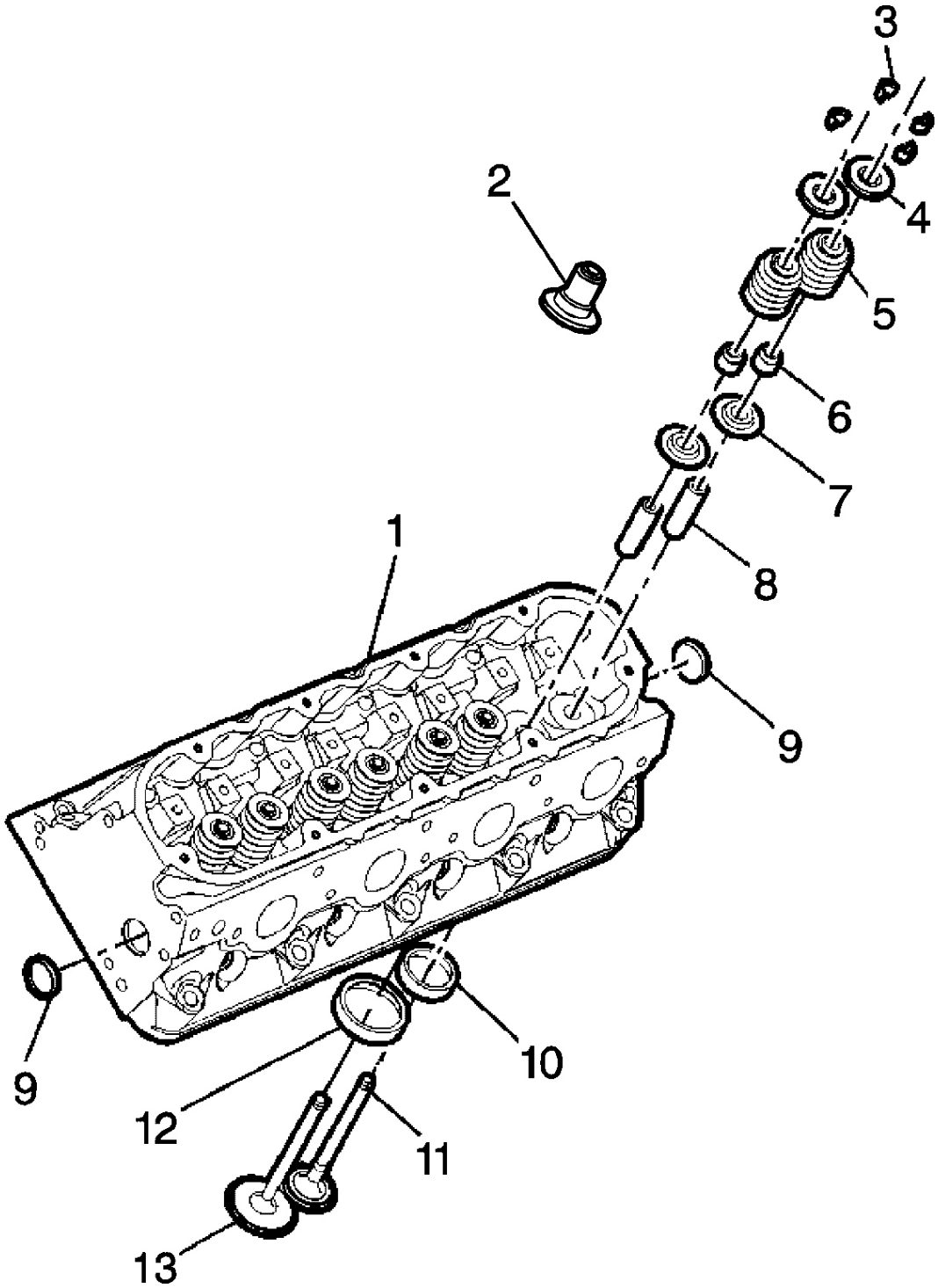

Fig. 139: Valve Stem Keys
Courtesy of GENERAL MOTORS CORP.

cardiagn.com

10. Remove the valve stem keys (3).
11. Carefully release the valve spring tension.
12. Remove the **J 38606** .
13. Remove the valve spring cap (4).
14. Remove the valve spring (5).

IMPORTANT: A second design valve stem oil seal and shim may be used on later engines.
A separate spring shim is not required with the second design seal and shim.

15. Remove the valve stem oil seal (6) (first design).
16. Remove the valve spring shim (7) (first design).
17. Remove the valve stem oil seal and shim (2) (second design).

Installation Procedure

IMPORTANT: The LS6 engine uses a copper plated spring shim. A shim of the same design must be installed during assembly.

cardiagn.com

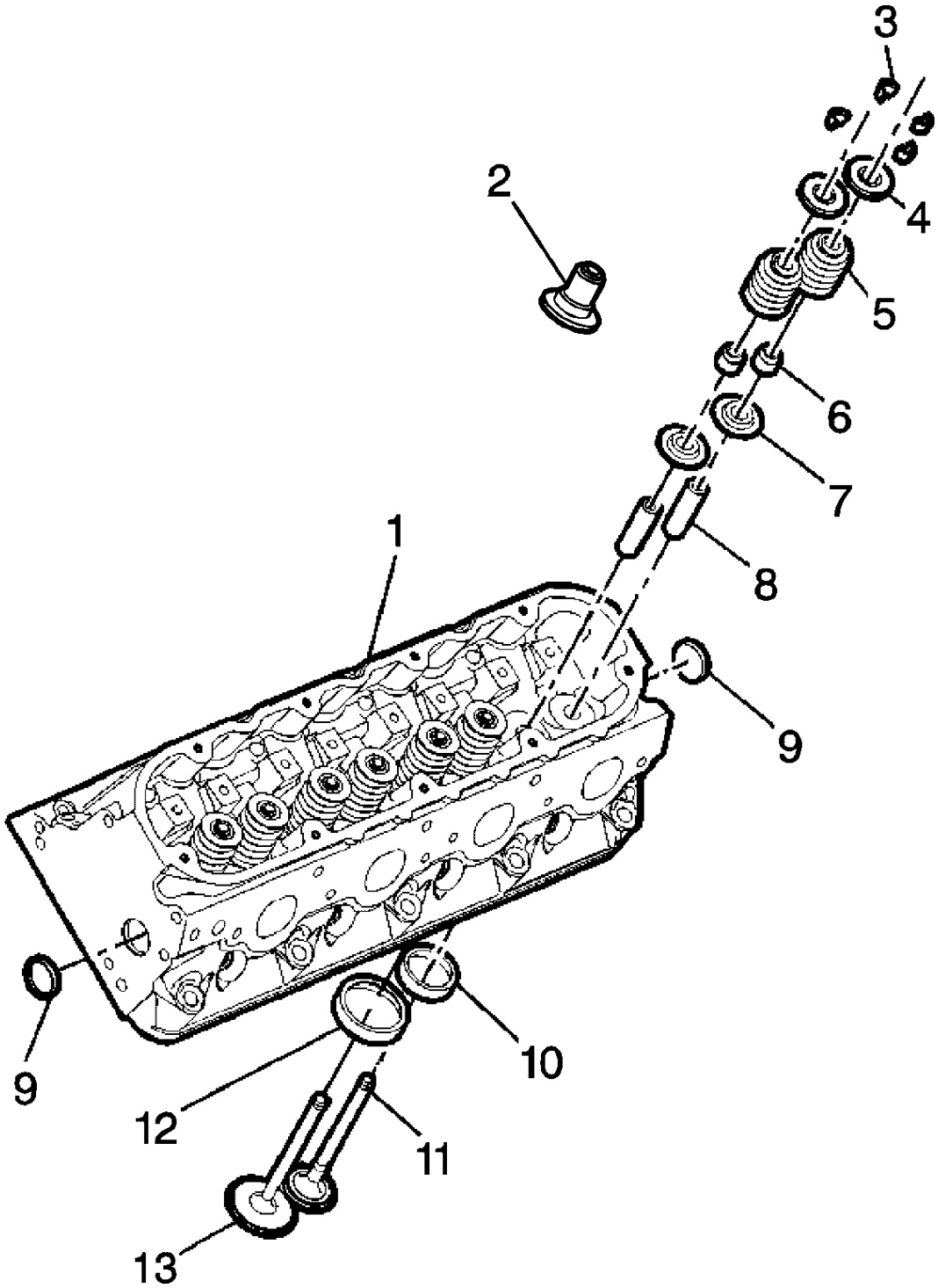

Fig. 140: Valve Stem Keys
Courtesy of GENERAL MOTORS CORP.

cardiagn.com

1. Clean the cylinder head valve spring seat and/or shim area.
2. Install the valve spring shim (7) (first design).
3. Install the valve stem oil seal and shim (2) (second design).

The J 42078 is not required for installation of the second design seal and shim.

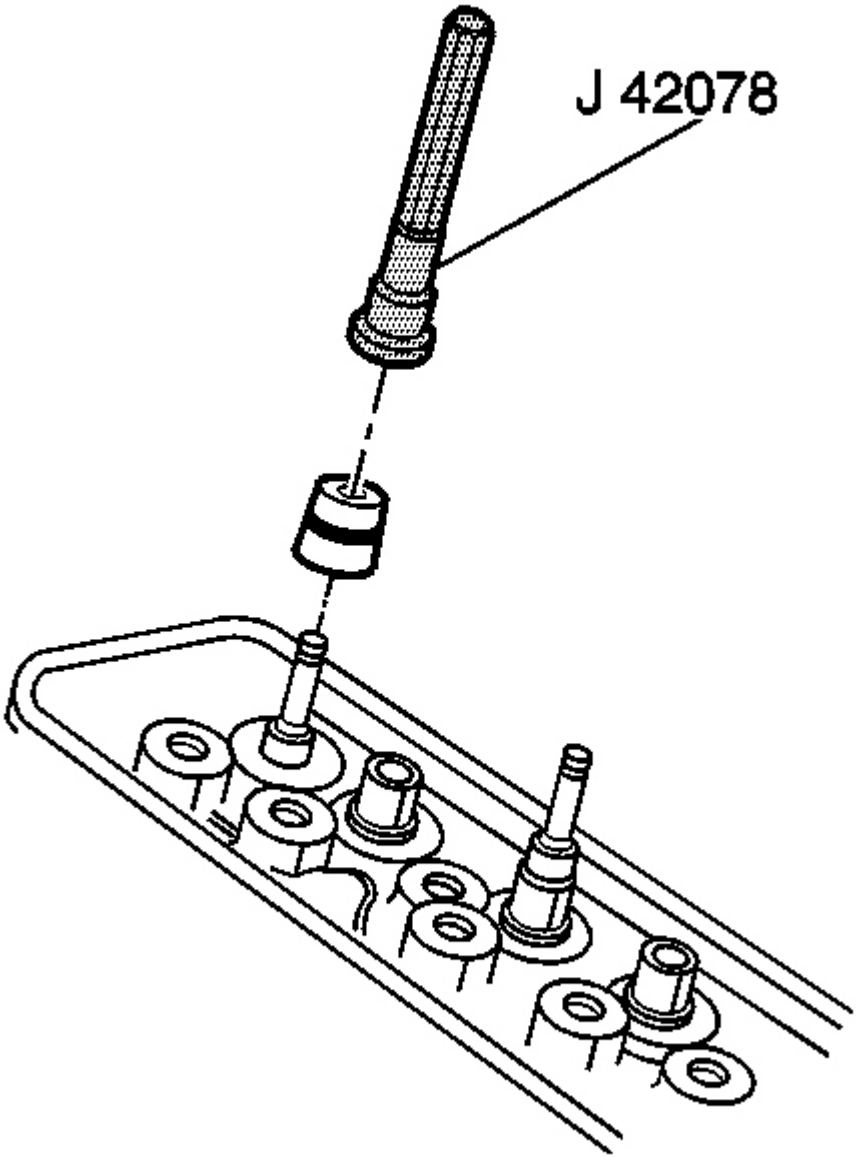

cardiagn.com

Fig. 141: J 42078, Valve Stem Oil Seal & Bolt
Courtesy of GENERAL MOTORS CORP.

IMPORTANT: The valve stem oil seal alignment and position on the valve guide is critical.
An improperly installed valve stem oil seal may lead to excessive oil consumption, and increased vehicle emissions.

4. Install the valve stem oil seal (first design) onto the guide.
   1. Lubricate the valve guide and valve stem oil seal with clean engine oil.
   2. Install the valve stem oil seal (first design) onto the valve stem. Push the seal down until the seal contacts the valve guide.
   3. Use the J 42078 in order to install the oil seal.

      Push or lightly tap the tool until the tool bottoms against the valve spring shim.

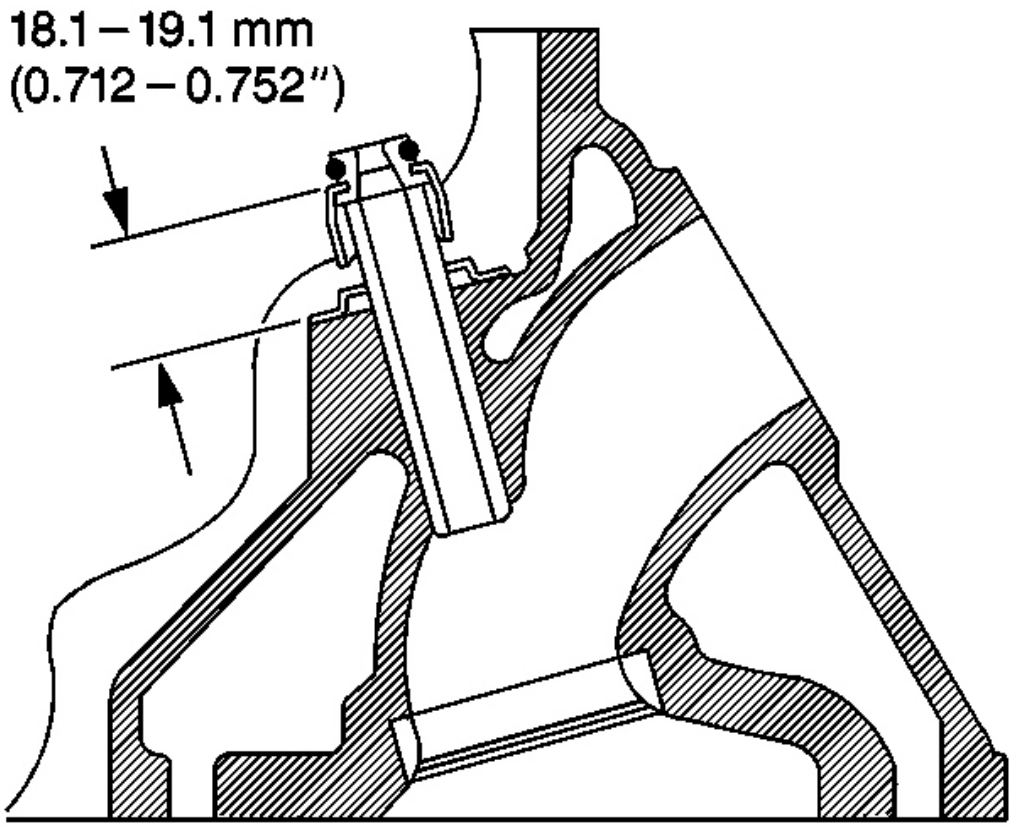

cardiagn.com

Fig. 142: Measuring Valve Stem Oil Seal For Properly Installed Height
Courtesy of GENERAL MOTORS CORP.

5. Measure the valve stem oil seal (first design) for the properly installed height.

   There should be a 18.1-19.1 mm (0.712-0.752 in) gap between the top edge of the oil seal body and the valve spring shim surface.

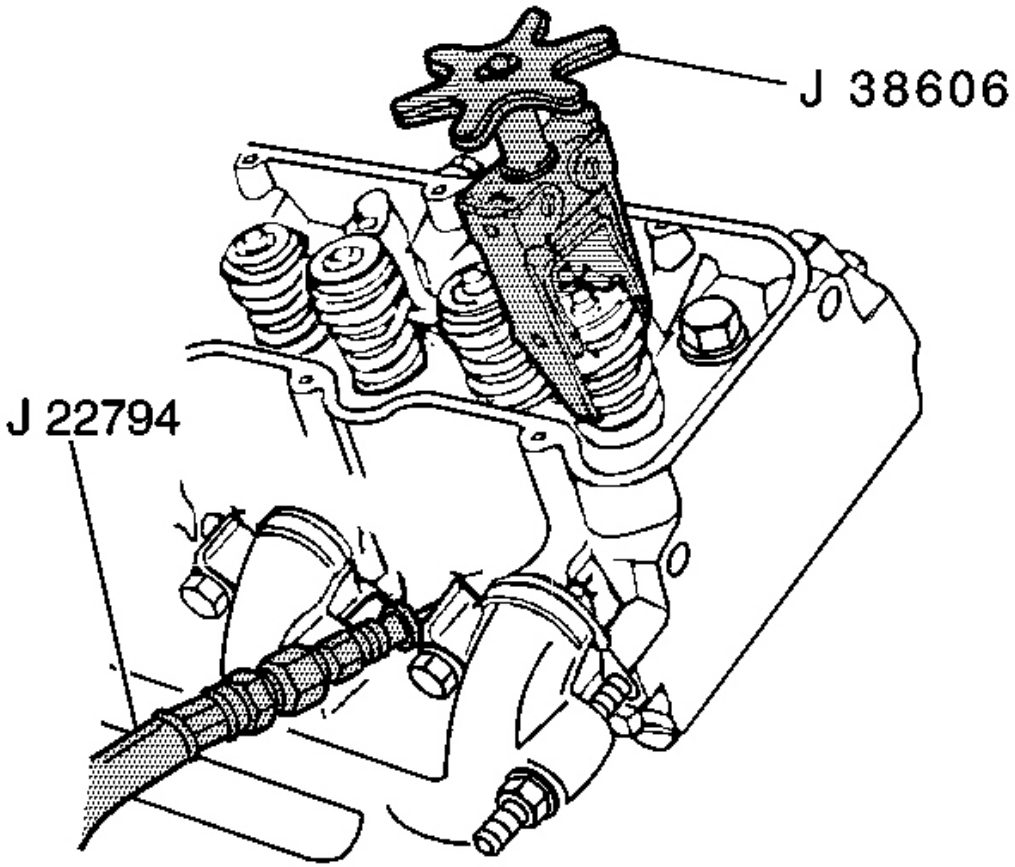

Fig. 143: J 38606, J 5892-D & Valve Spring
Courtesy of GENERAL MOTORS CORP.

6. Install the valve spring to the **J 38606** .
7. Compress the valve spring using the **J 38606** .
8. Install the valve spring to the cylinder head.

cardiagn.com

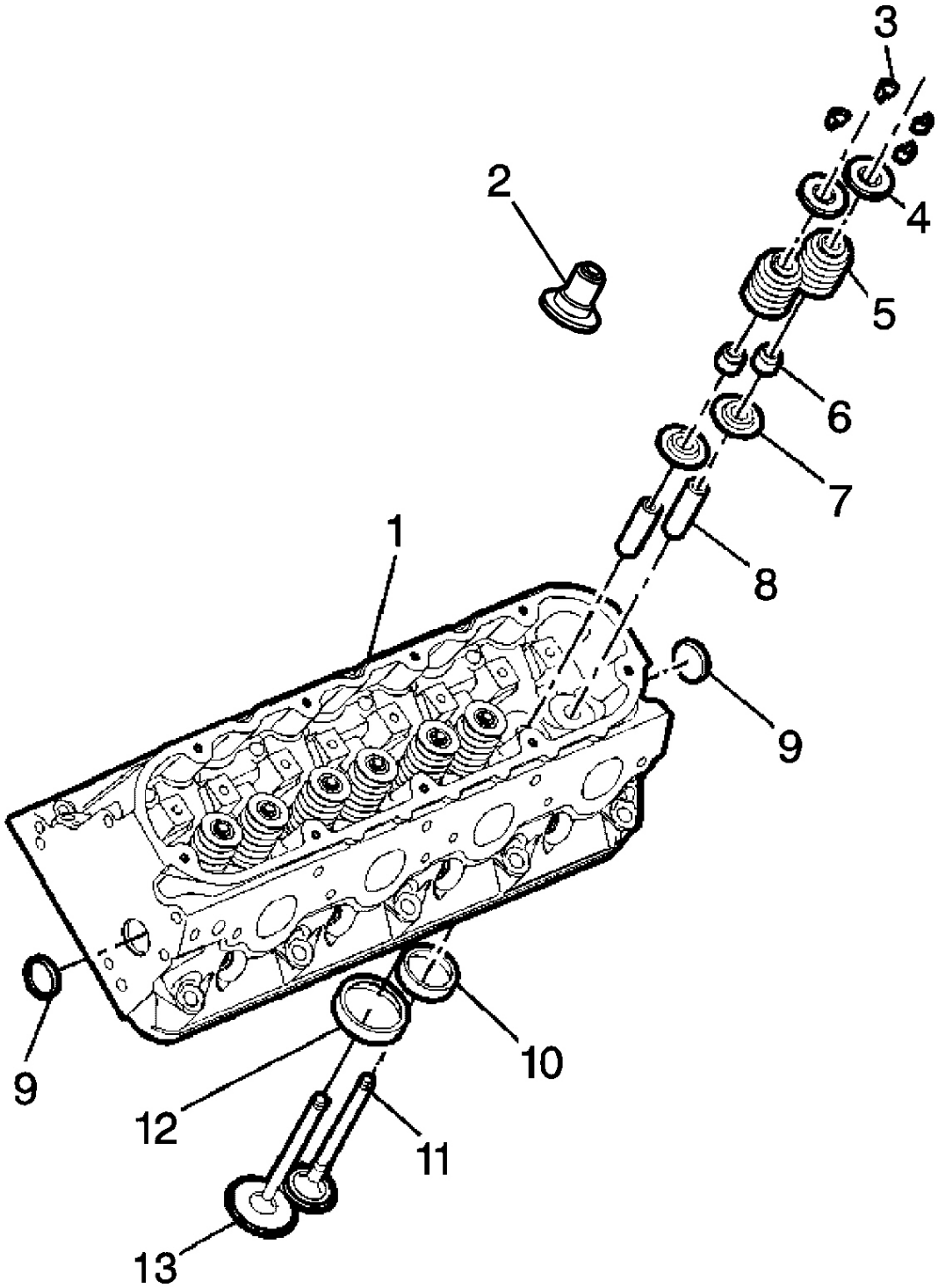

Fig. 144: Valve Stem Keys
Courtesy of GENERAL MOTORS CORP.

cardiagn.com

9. Install the valve spring cap (4).
10. Install the valve stem keys (3).
    - Use grease to hold the keys (3) in place and remove **J 38606** .
    - Make sure the keys (3) seat properly in the groove of the valve stem.
    - Carefully release the valve spring pressure, making sure the valve keys stay in place.
    - Remove the **J 38606** .
    - Tap the end to the valve stem with a plastic faced hammer to seat the keys (if necessary).

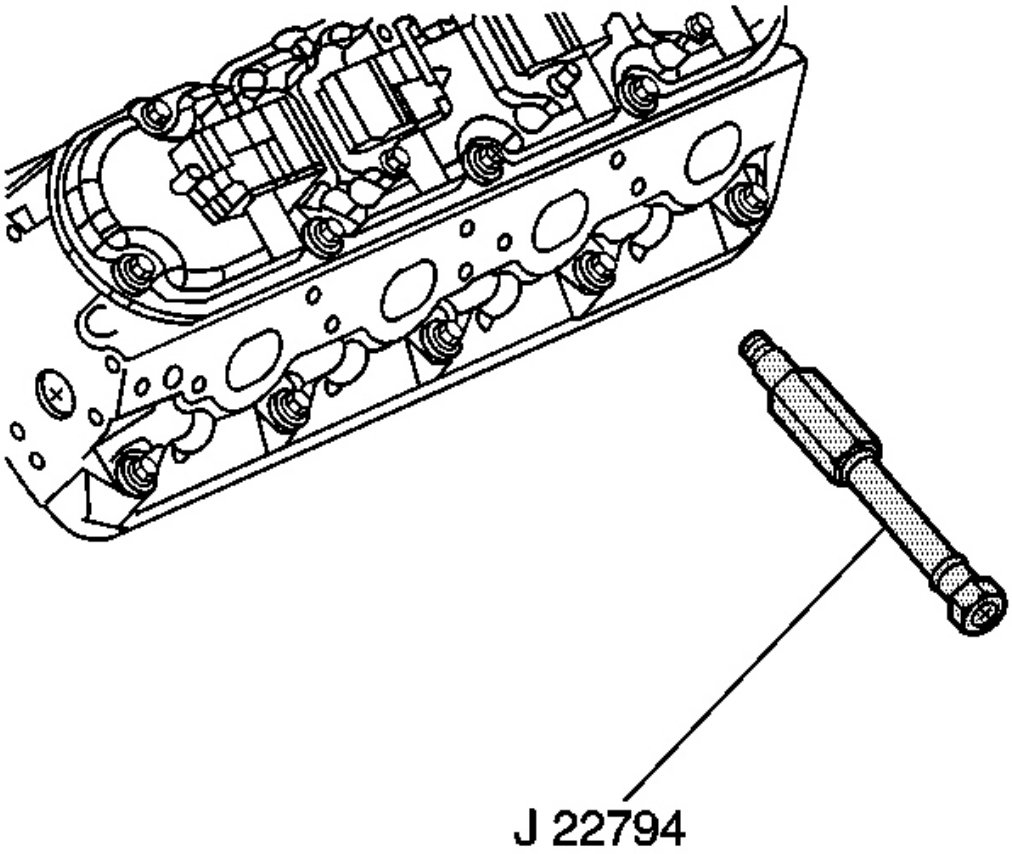

Fig. 145: Install/Remove J 22794 Spark Plug Hole
Courtesy of GENERAL MOTORS CORP.

11. Disconnect and remove the air supply from the **J 22794** .
12. Remove the **J 22794** from the spark plug hole.

cardiagn.com

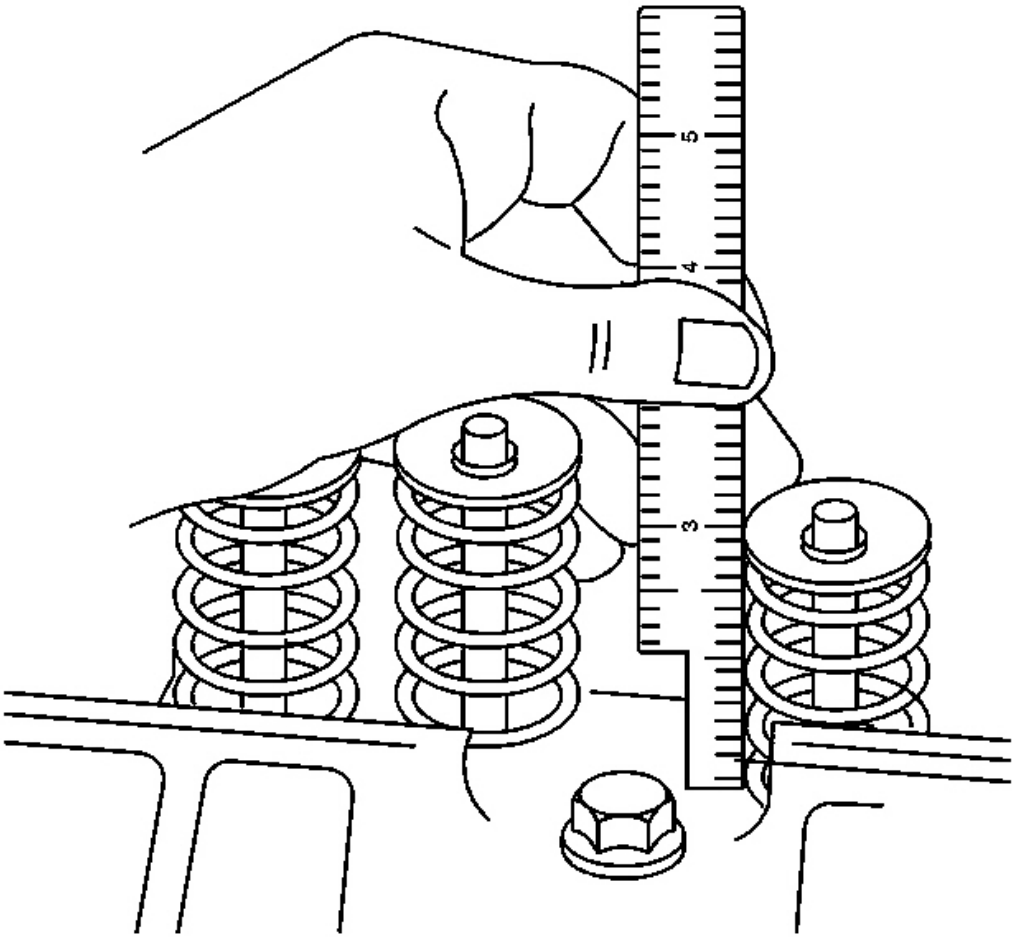

Fig. 146: Measuring Valve Spring Installed Height
Courtesy of GENERAL MOTORS CORP.

13. Measure the valve spring installed height using a ruler.

    Measure from the base of the valve spring to the top of the valve spring.

    - If the installed height exceeds 46.25 mm (1.82 in), install a valve spring shim of approximately 0.5 mm (0.02 in) thick.
    - Do not shim the valve spring to obtain less than the specified height.

      Do not assemble the components without a spring shim on the cylinder head.

14. Remove the air hose from the **J 22794** .

cardiagn.com

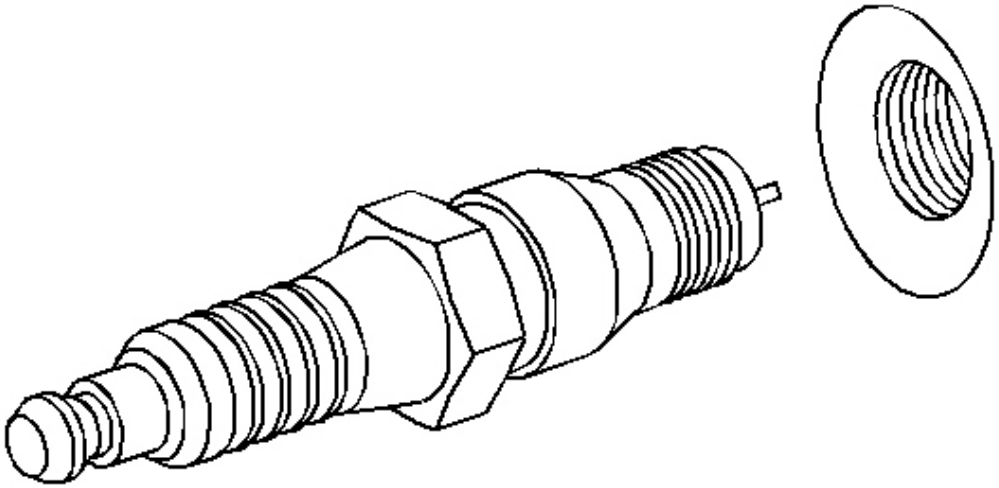

Fig. 147: View Of Spark Plug
Courtesy of GENERAL MOTORS CORP.

NOTE: Refer to Fastener Notice in Cautions and Notices.

15. Instal the spark plug by hand until snug.
16. Tighten the spark plug.

Tighten: Tighten the spark plugs to 15 N.m (11 lb ft).

cardiagn.com

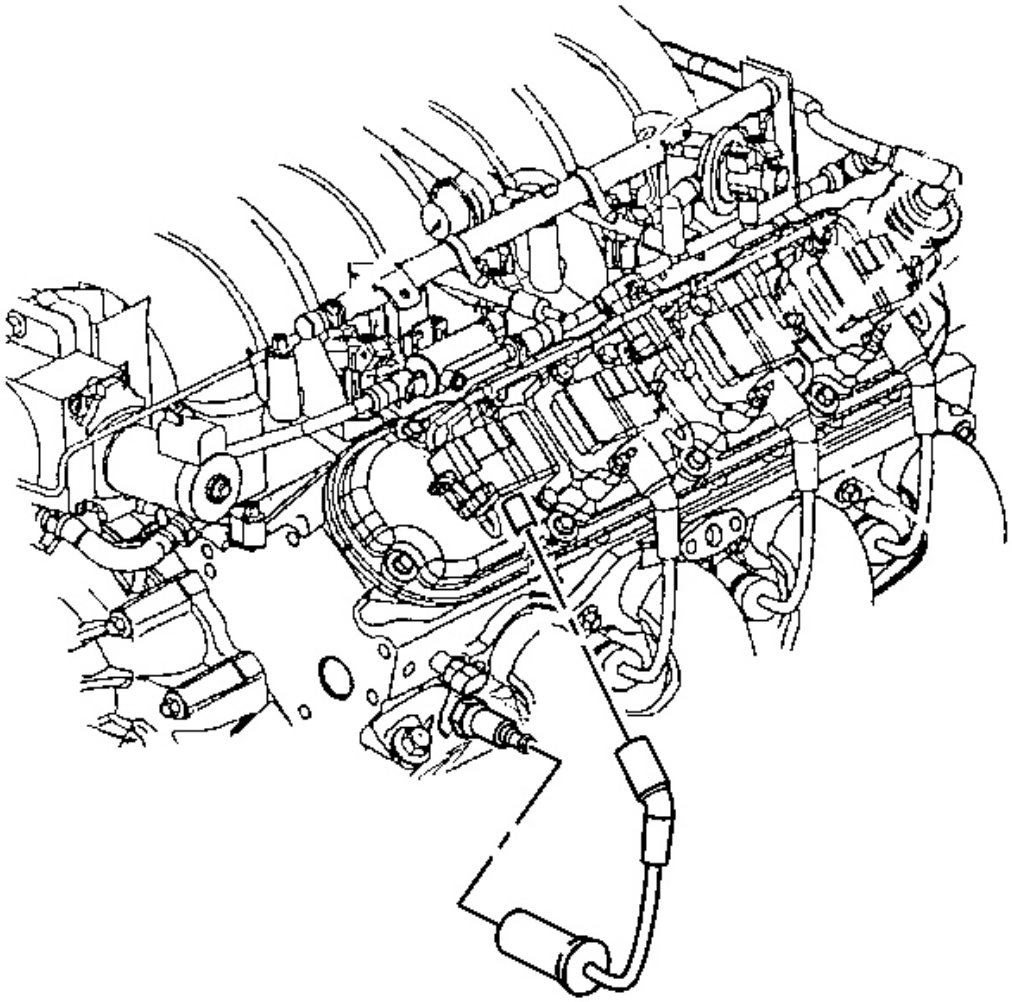

Fig. 148: Spark Plug Wire
Courtesy of GENERAL MOTORS CORP.

17. Install the spark plug wire to the spark plug.
18. Install the valve rocker arms. Refer to **Valve Rocker Arm and Push Rod Replacement** .

OIL LEVEL INDICATOR AND TUBE REPLACEMENT

Removal Procedure

cardiagn.com

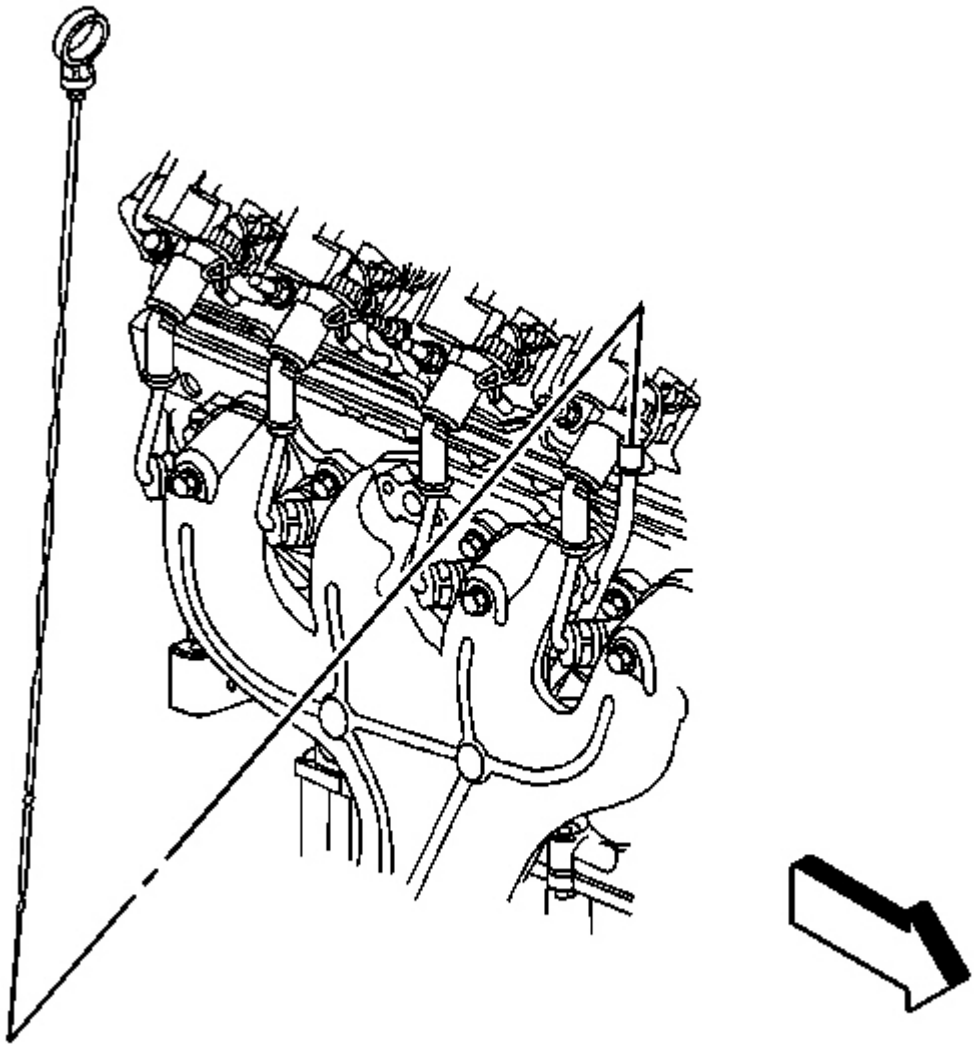

Fig. 149: Oil Level Indicator
Courtesy of GENERAL MOTORS CORP.

1. Remove the oil level indicator.

cardiagn.com

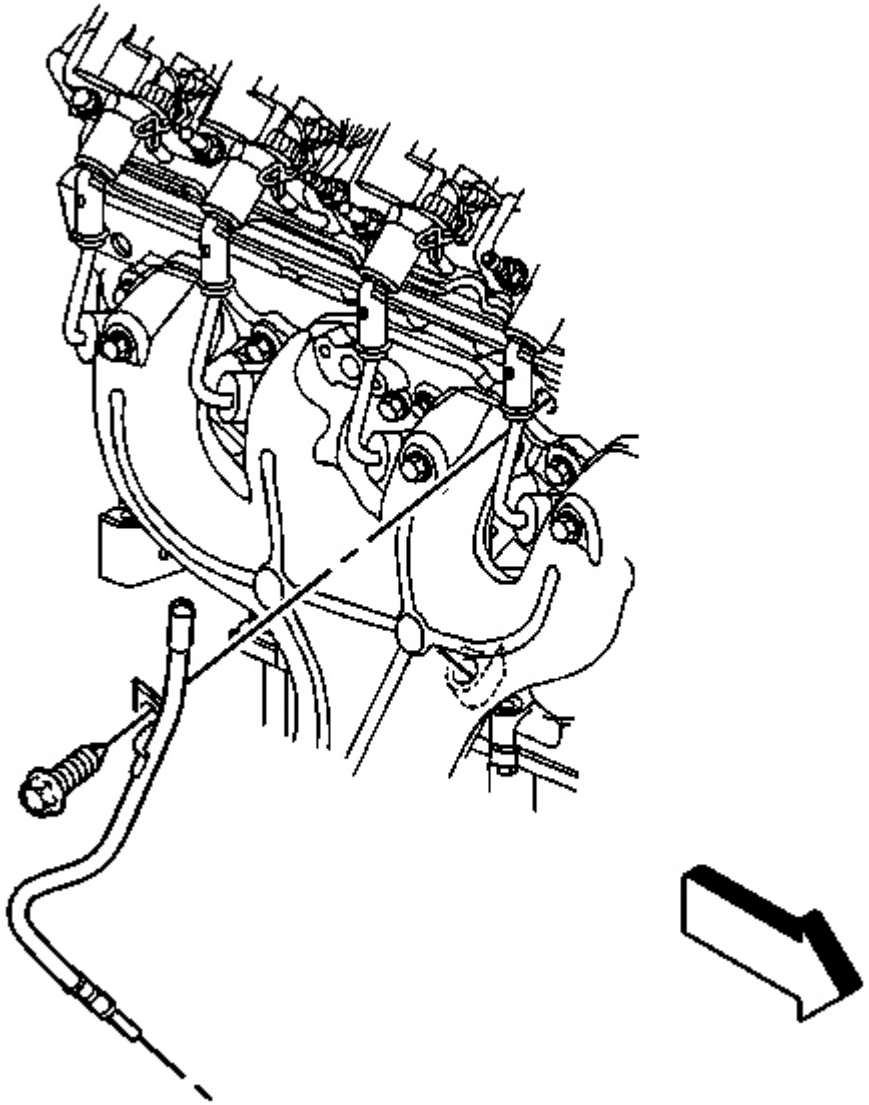

Fig. 150: Oil Level Indicator Tube & Bolt
Courtesy of GENERAL MOTORS CORP.

2. Remove the oil level indicator tube bolt.
3. Remove the oil level indicator tube.

IMPORTANT: Inspect the O-ring seal for cuts or damage. The O-ring seal may be reused

cardiagn.com

if not cut or damaged.

4. Remove the O-ring from the oil level indicator tube, if required.

Installation Procedure

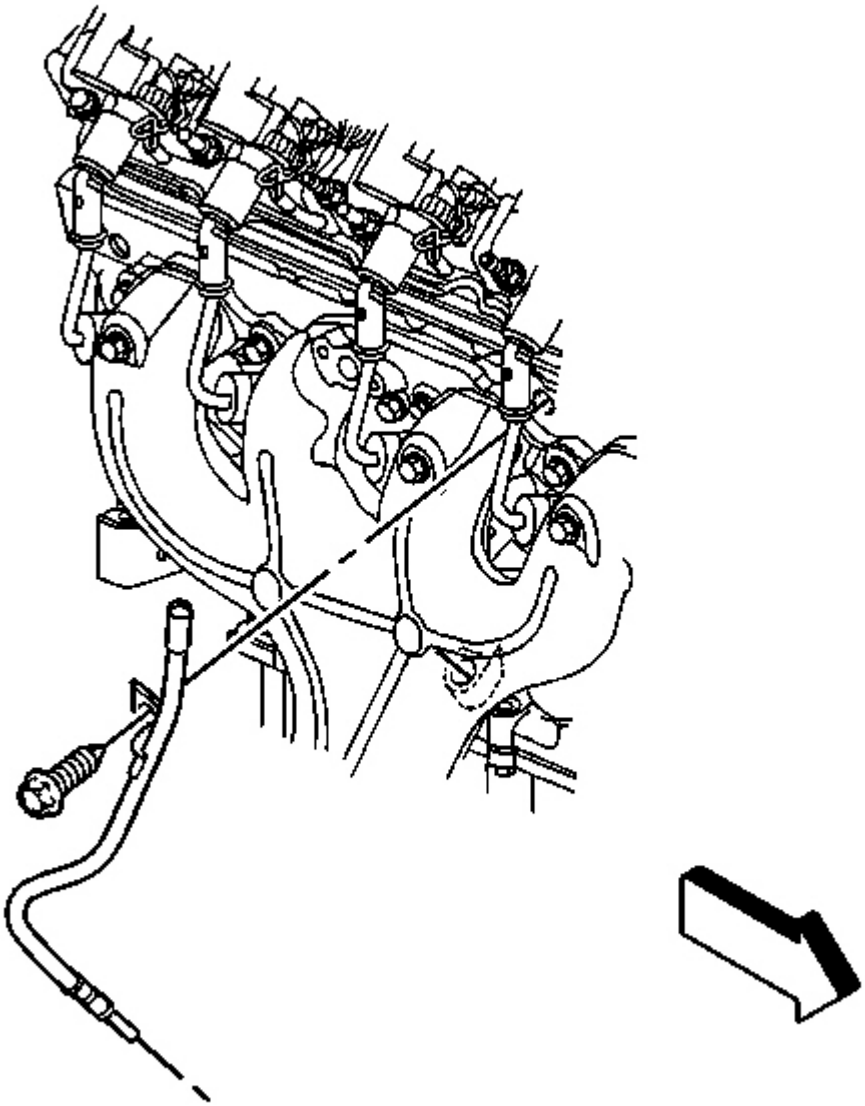

Fig. 151: Oil Level Indicator Tube & Bolt
Courtesy of GENERAL MOTORS CORP.

cardiagn.com

1. Lubricate the O-ring seal with clean engine oil.
2. Install the oil level indicator tube into position.
3. Raise and suitably support the vehicle. Refer to **Lifting and Jacking the Vehicle** in General Information.
4. Insert the oil level indicator tube into the engine block until the collar is flush with the block.
5. Lower the vehicle.

NOTE: Refer to Fastener Notice in Cautions and Notices.

6. Install the oil level indicator tube bolt.

   Tighten: Tighten the oil level indicator tube bolt to 25 N.m (18 lb ft).

cardiagn.com

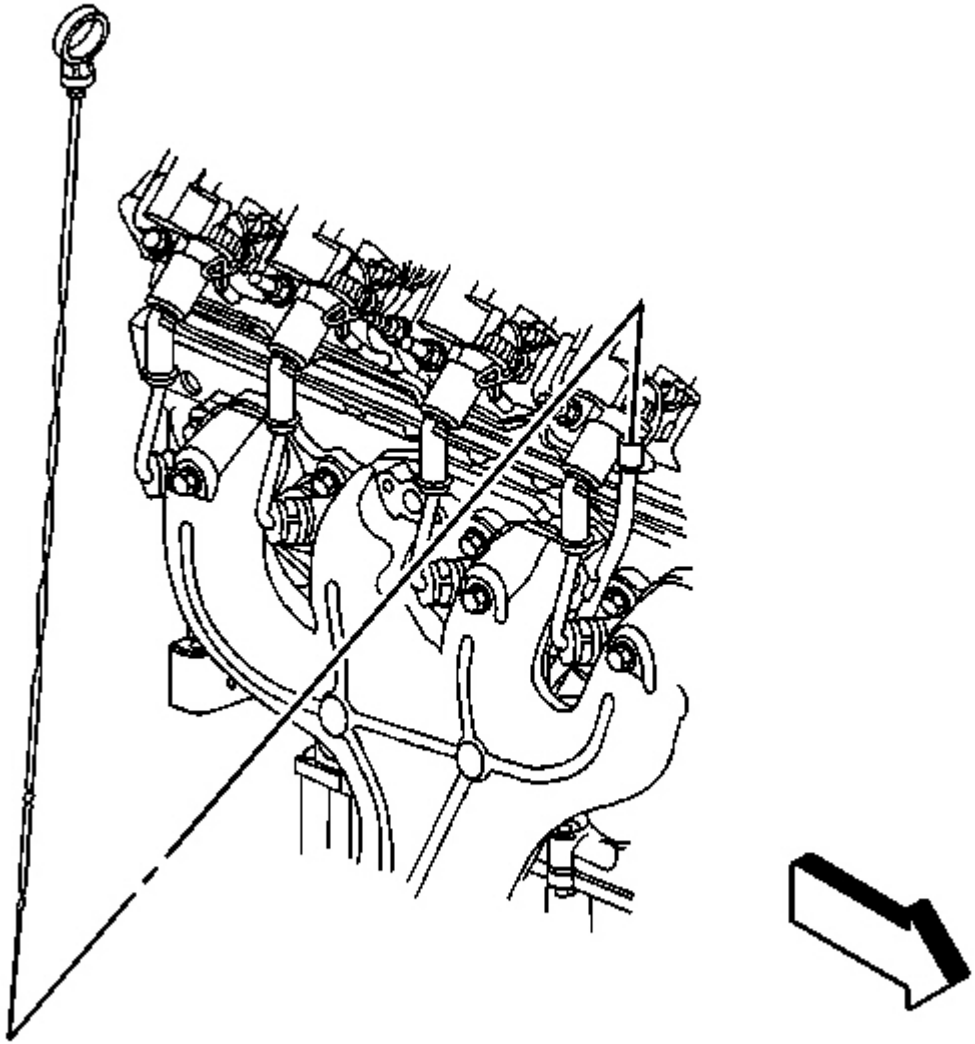

Fig. 152: Oil Level Indicator
Courtesy of GENERAL MOTORS CORP.

7. Install the oil level indicator.
8. Check the oil level and add if necessary.

CYLINDER HEAD REPLACEMENT - LEFT

Tools Required

cardiagn.com

- **J 42385-100** Thread Repair Kit (Cylinder Head/Main Bearing Bolt)
- **J 45059** Angle Meter

Removal Procedure

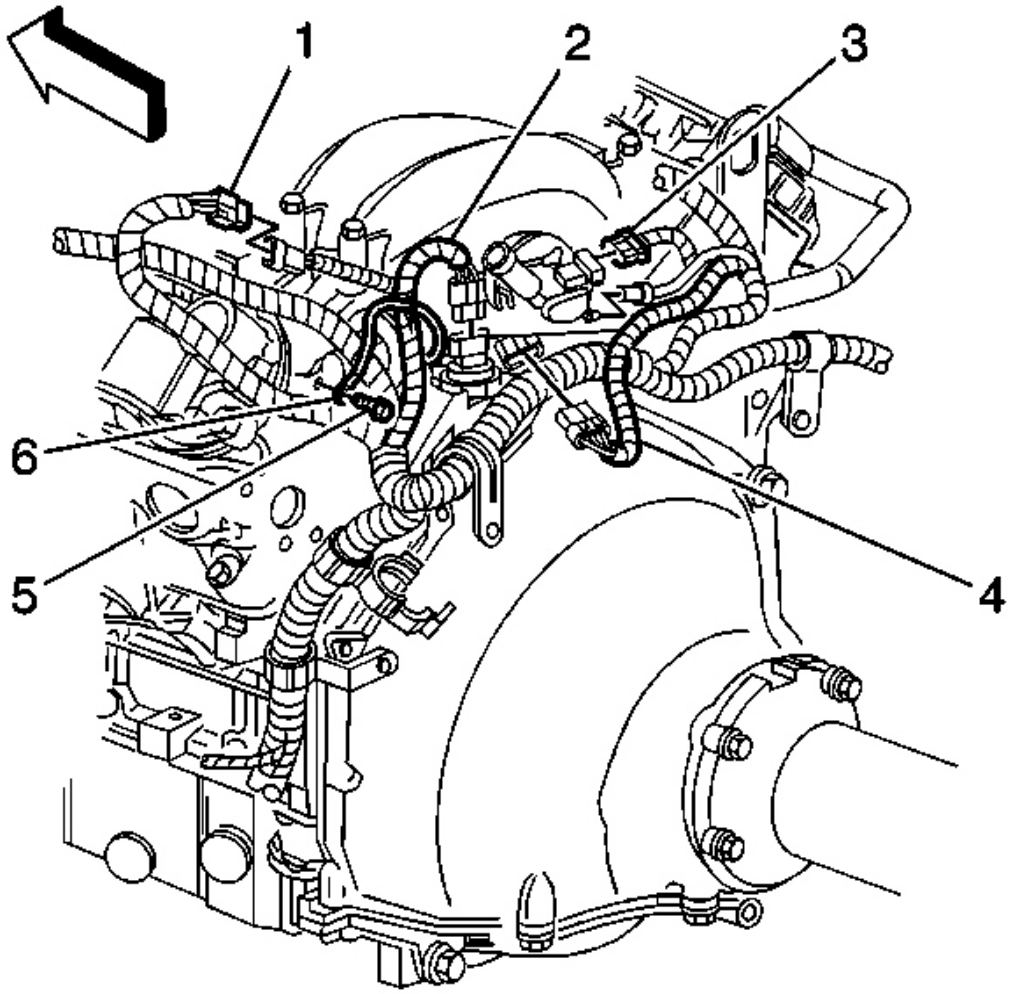

Fig. 153: MAP Sensor Vacuum Hose & MAP Sensor Electrical Connector
Courtesy of GENERAL MOTORS CORP.

1. Remove the valve rocker arms and pushrods. Refer to **Valve Rocker Arm and Push Rod Replacement** .
2. Remove the engine coolant air bleed pipe and covers. Refer to **Coolant Air Bleed Pipe Assembly Replacement** in Engine Cooling.

cardiagn.com

3. Remove the generator bracket. Refer to **Generator Bracket Replacement** in Engine Electrical.
4. Remove the exhaust manifold. Refer to **Exhaust Manifold Replacement - Left** in Engine Exhaust.
5. Remove the engine wiring harness ground bolt (5) from the rear of the left cylinder head.
6. Reposition the engine wire harness ground strap (6) away from the cylinder head.

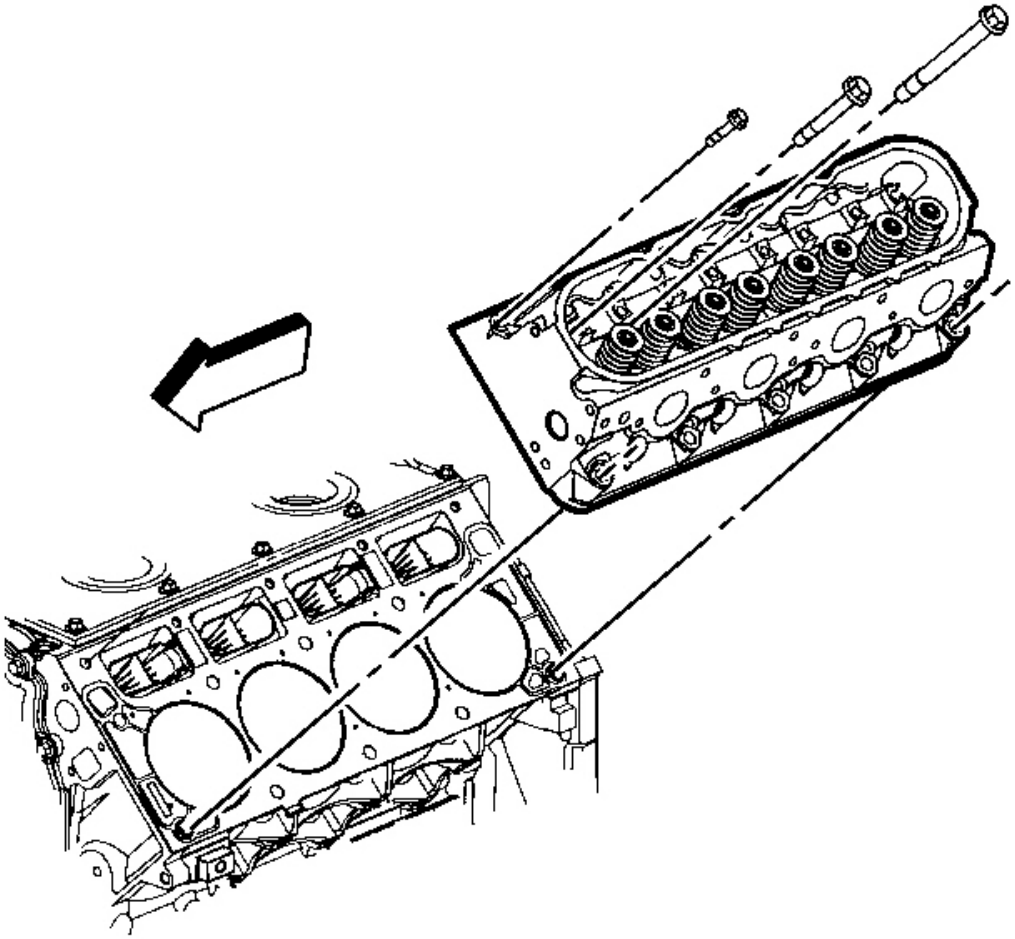

Fig. 154: View Of Cylinder Head & Bolts (Left)
Courtesy of GENERAL MOTORS CORP.

IMPORTANT: The cylinder head bolts are NOT reusable.

NOTE: After removal, place the cylinder head on two wood blocks to prevent damage to the sealing surfaces.

cardiagn.com

7. Remove the cylinder head bolts.
8. Remove the cylinder head.

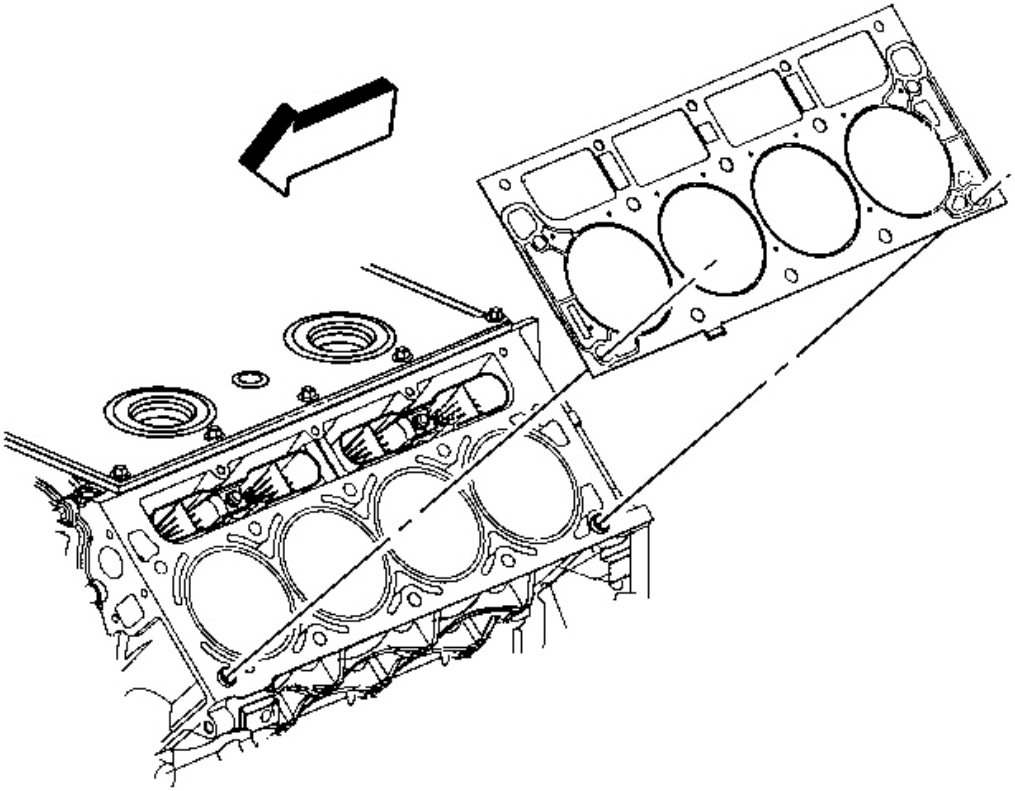

Fig. 155: View Of Cylinder Head Gasket (Left)
Courtesy of GENERAL MOTORS CORP.

9. Remove the cylinder head gasket.
10. Discard the gasket.
11. Discard the M11 cylinder head bolts.
12. Clean and inspect the cylinder head. Refer to **Cylinder Head Cleaning and Inspection** .

Installation Procedure

cardiagn.com

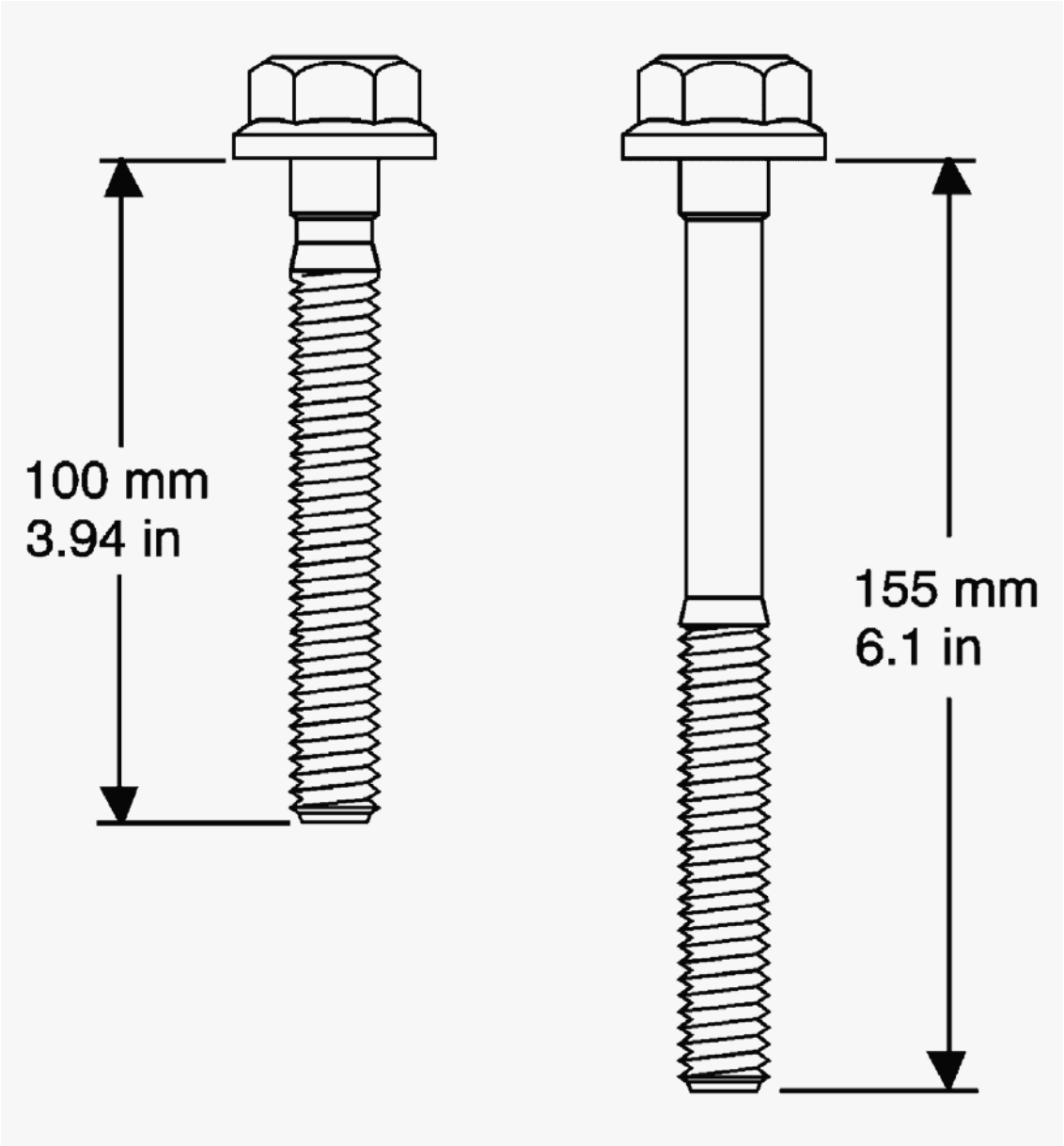

Fig. 156: View Of 100 mm & 155 mm Bolts
Courtesy of GENERAL MOTORS CORP.

CAUTION: Refer to Safety Glasses Caution .

NOTE: **Clean all dirt, debris, and coolant from the engine block cylinder head bolt holes. Failure to remove all foreign material may result in damaged threads, improperly tightened fasteners or damage to components.**

IMPORTANT:

- **Do not use the cylinder head bolts again. Install NEW cylinder head**

cardiagn.com

bolts during assembly.

- **Do not use any type sealant on the cylinder head gasket, unless specified.**
- **The cylinder head gaskets must be installed in the proper direction and position.**

1. Clean the engine block cylinder head bolt holes, if required.

   Thread repair tool J 42385-107 may be used to clean the threads of old threadlocking material.

2. Spray cleaner GM P/N 12346139, GM P/N 12377981 (Canadian P/N 10953463) or equivalent into the hole.
3. Clean the cylinder head bolt holes with compressed air.

cardiagn.com

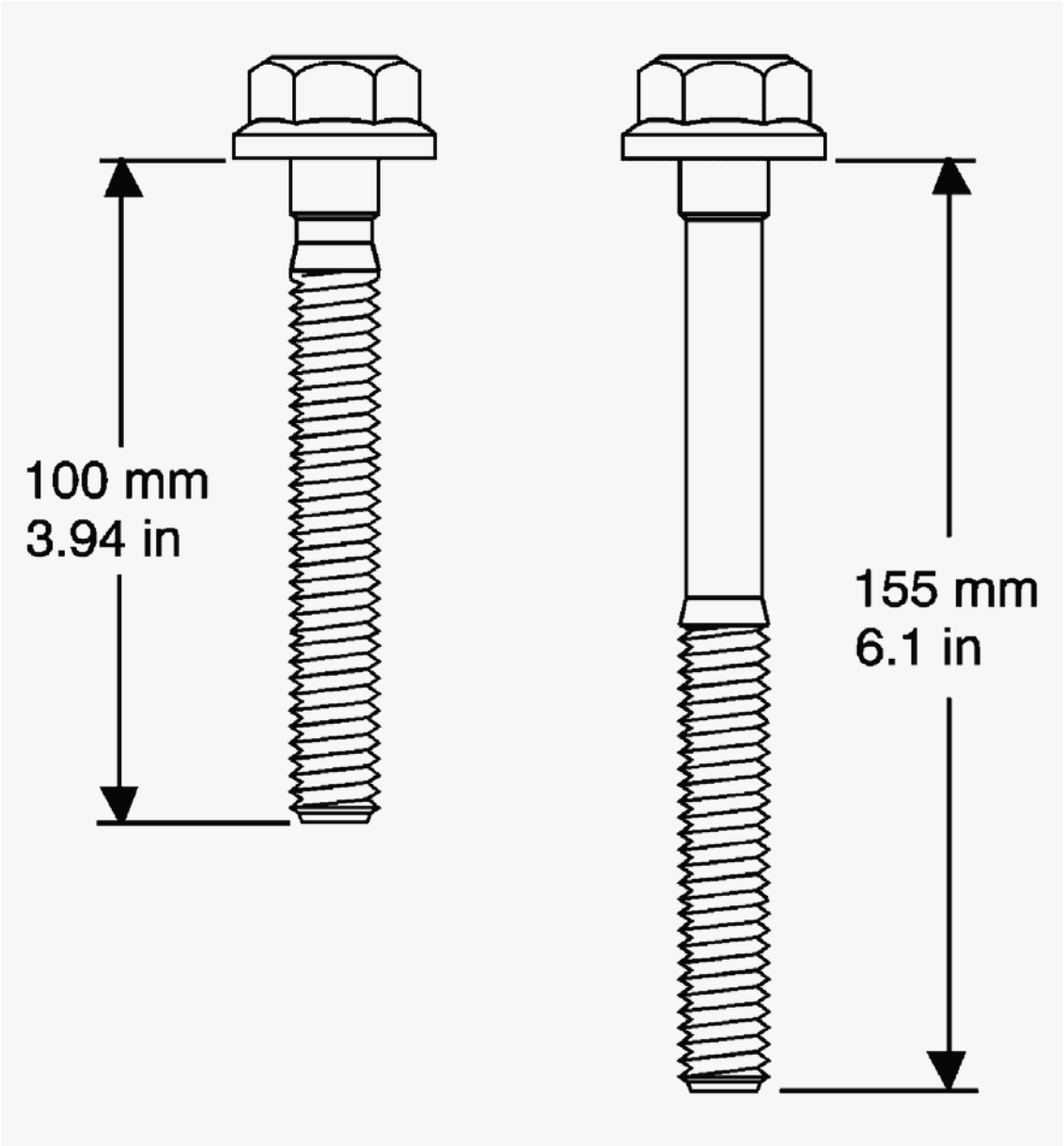

Fig. 157: View Of 100 mm & 155 mm Bolts
Courtesy of GENERAL MOTORS CORP.

IMPORTANT: First design engine blocks have different drill and tap depths using both medium length 100 mm (3.94 in) and long 155 mm (6.1 in) M11 cylinder head bolts. Second design engine blocks use only the medium length 100 mm (3.94 in) bolt with a common drill and tap depth.

4. Measure the depth of the cylinder head bolt holes (1-10) and select the correct length bolts as required.
5. Check the cylinder head locating pins for proper location.

cardiagn.com

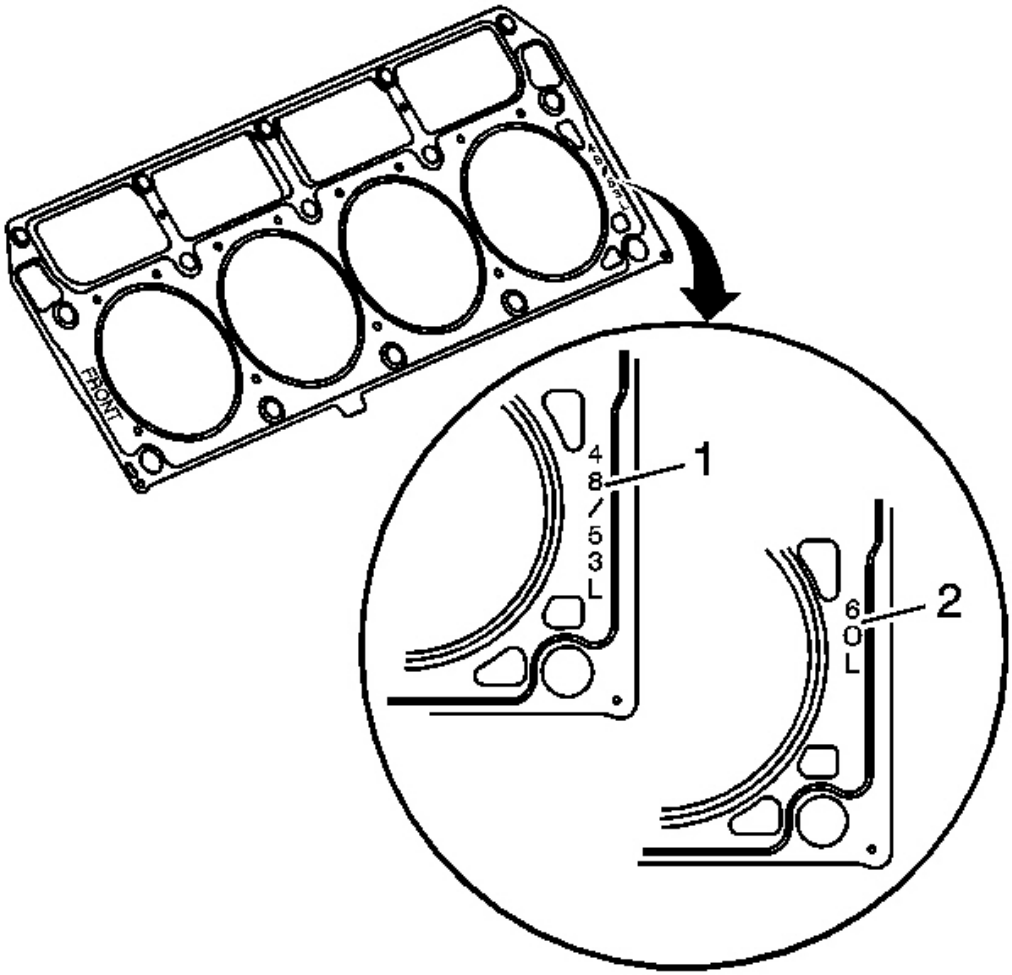

Fig. 158: View Of Cylinder Head Gasket Displacement Markings
Courtesy of GENERAL MOTORS CORP.

6. Inspect the displacement markings (1) on the gasket, for proper usage.

cardiagn.com

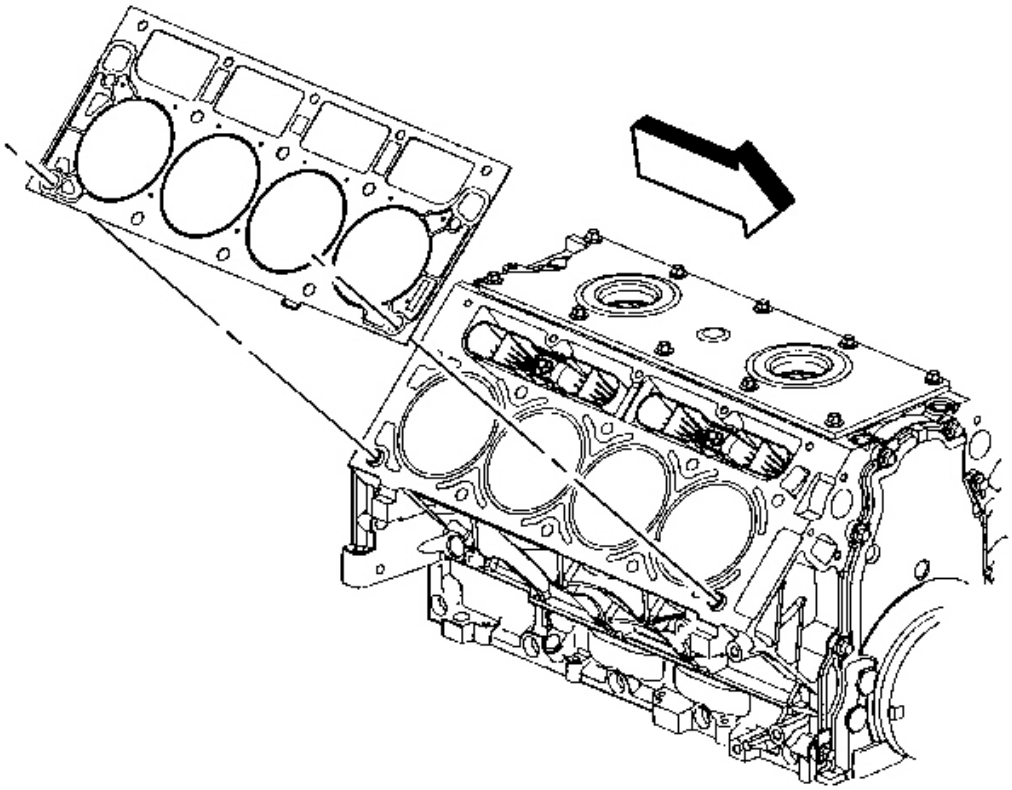

Fig. 159: View Of Cylinder Head Gasket (Right)
Courtesy of GENERAL MOTORS CORP.

IMPORTANT: When properly installed, the tab on the right cylinder head gasket will be located right of center or closer to the front of the engine.

7. Install the NEW cylinder head gasket onto the locating pins.

cardiagn.com

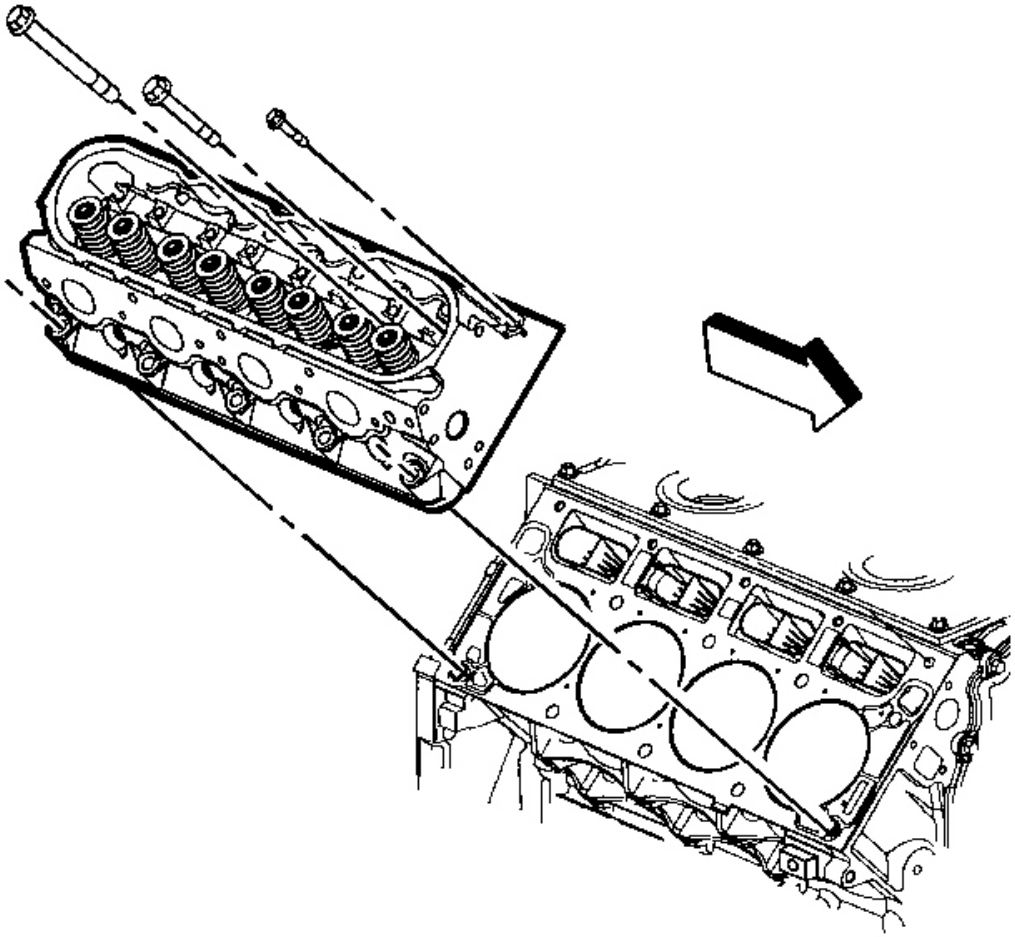

Fig. 160: View Of Cylinder Head & Bolts
Courtesy of GENERAL MOTORS CORP.

8. Install the cylinder head onto the locating pins and the gasket.
9. Install the NEW cylinder head bolts.

cardiagn.com

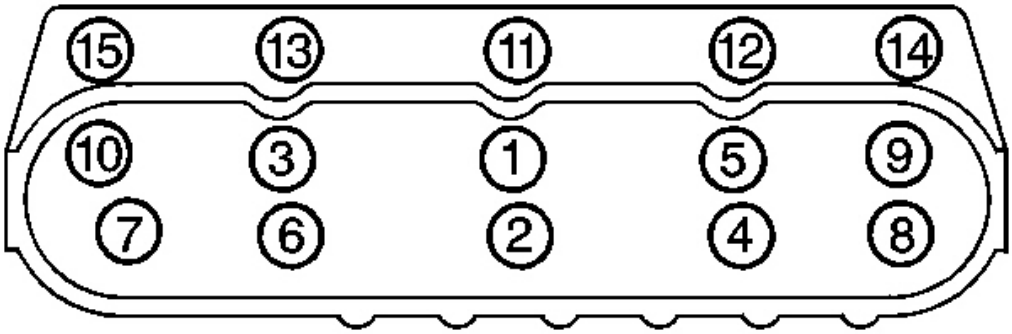

Fig. 161: Cylinder Head Bolt Tightening Sequence (Right)
Courtesy of GENERAL MOTORS CORP.

NOTE: **Refer to Fastener Notice .**

10. Tighten the first design cylinder head bolts.

    Tighten:

    1. Tighten the first design M11 cylinder head bolts a first pass in sequence to 30 N.m (22 lb ft).
    2. Tighten the first design M11 cylinder head bolts a second pass in sequence to 90 degrees using the **J 45059** .
    3. Tighten the first design M11 cylinder head bolts (1, 2, 3, 4, 5, 6, 7, 8) to 90 degrees and the M11 cylinder head bolts (9 and 10) to 50 degrees a final pass in sequence to using the **J 45059** .
    4. Tighten the M8 cylinder head bolts (11, 12, 13, 14, 15) to 30 N.m (22 lb ft). Begin with the center bolt (11) and alternating side-to-side, work outward tightening all of the bolts.

11. Tighten the second design cylinder head bolts.

    Tighten:

    1. Tighten the second design M11 cylinder head bolts (1-10) a first pass in sequence to 30 N.m (22 lb ft).
    2. Tighten the second design M11 cylinder head bolts (1-10) a second pass in sequence to 90 degrees using the **J 45059** .
    3. Tighten the second design M11 cylinder head bolts (1-10) a final pass in sequence to 70 degrees using the **J 45059** .
    4. Tighten the M8 cylinder head bolts (11, 12, 13, 14, 15) to 30 N.m (22 lb ft). Begin with the center bolt (11) and alternating side-to-side, work outward tightening all of the bolts.

cardiagn.com

12. Install the wiring harness to the clip at the rear of the cylinder head.

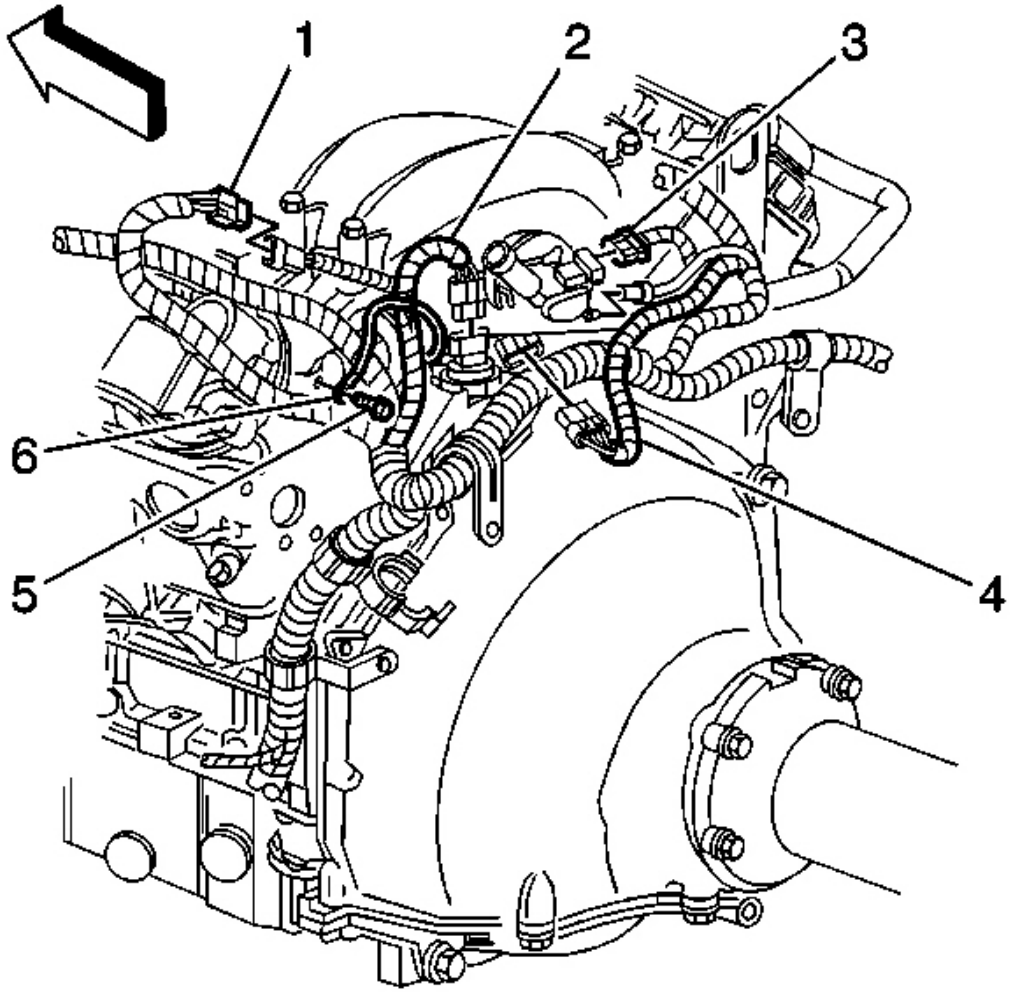

Fig. 162: MAP Sensor Vacuum Hose & MAP Sensor Electrical Connector
Courtesy of GENERAL MOTORS CORP.

13. Position the engine wire harness ground strap (6) against the cylinder head.
14. Install the engine wiring harness ground bolt (5) to the rear of the left cylinder head.

    Tighten: Tighten the engine wire harness ground bolt to 32 N.m (24 lb ft).

15. Install the exhaust manifold. Refer to **Exhaust Manifold Replacement - Left** in Engine Exhaust.

cardiagn.com

16. Install the generator bracket. Refer to **Generator Bracket Replacement** in Engine Electrical.
17. Install the engine coolant air bleed pipe. Refer to **Coolant Air Bleed Pipe Assembly Replacement** in Engine Cooling.
18. Install the valve rocker arms and pushrods. Refer to **Valve Rocker Arm and Push Rod Replacement** .

CYLINDER HEAD REPLACEMENT - RIGHT

Tools Required

- **J 42385-100** Thread Repair Kit (Cylinder Head/Main Bearing Bolt)
- **J 45059** Angle Meter

Removal Procedure

cardiagn.com

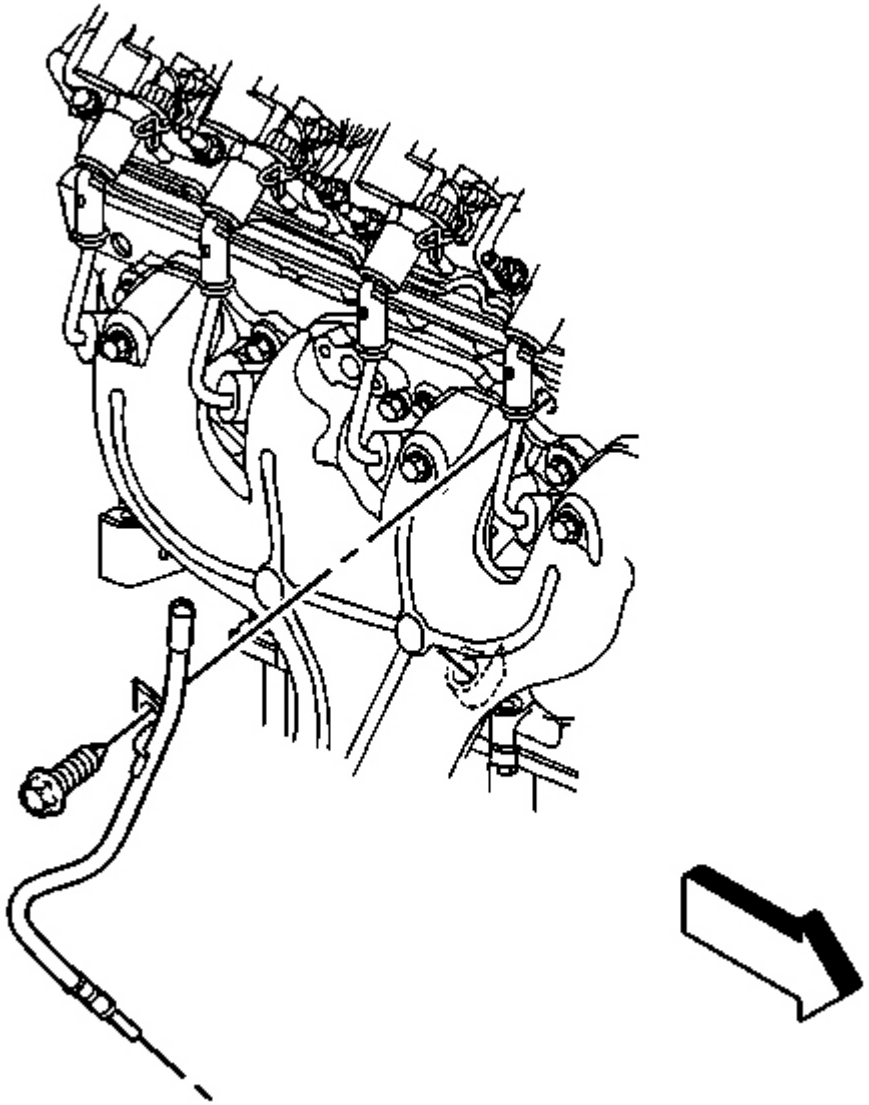

Fig. 163: Oil Level Indicator Tube & Bolt
Courtesy of GENERAL MOTORS CORP.

1. Remove the valve rocker arms and pushrods. Refer to **Valve Rocker Arm and Push Rod Replacement** .
2. Remove the engine coolant air bleed pipe and covers. Refer to **Coolant Air Bleed Pipe Assembly Replacement** in Engine Cooling.
3. Remove the exhaust manifold. Refer to **Exhaust Manifold Replacement - Right** in Engine Exhaust.

cardiagn.com

4. Remove the oil level indicator tube bolt.
5. Reposition the oil level indicator tube, if necessary.
6. Remove the wiring harness from the clip at the rear of the cylinder head.

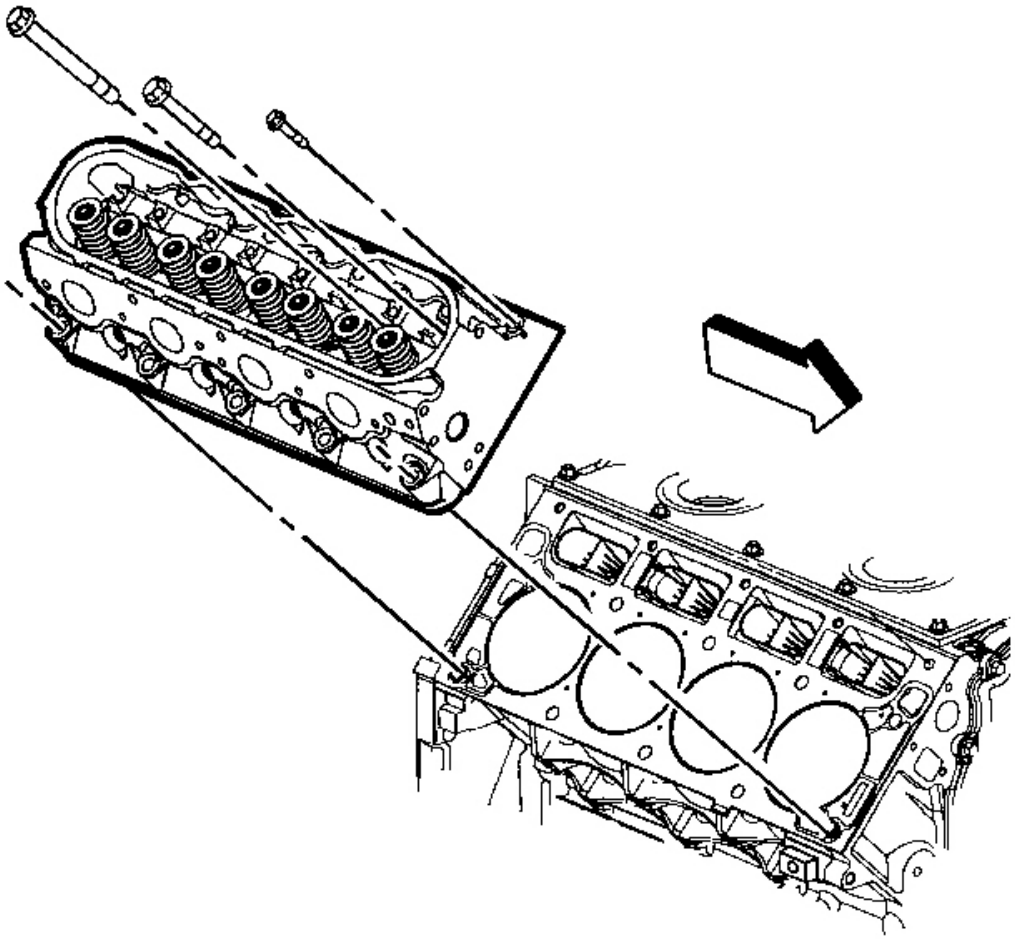

Fig. 164: View Of Cylinder Head & Bolts
Courtesy of GENERAL MOTORS CORP.

IMPORTANT: The cylinder head bolts are NOT reusable.

NOTE: After removal, place the cylinder head on two wood blocks to prevent damage to the sealing surfaces.

cardiagn.com

7. Remove the cylinder head bolts.
8. Remove the cylinder head.

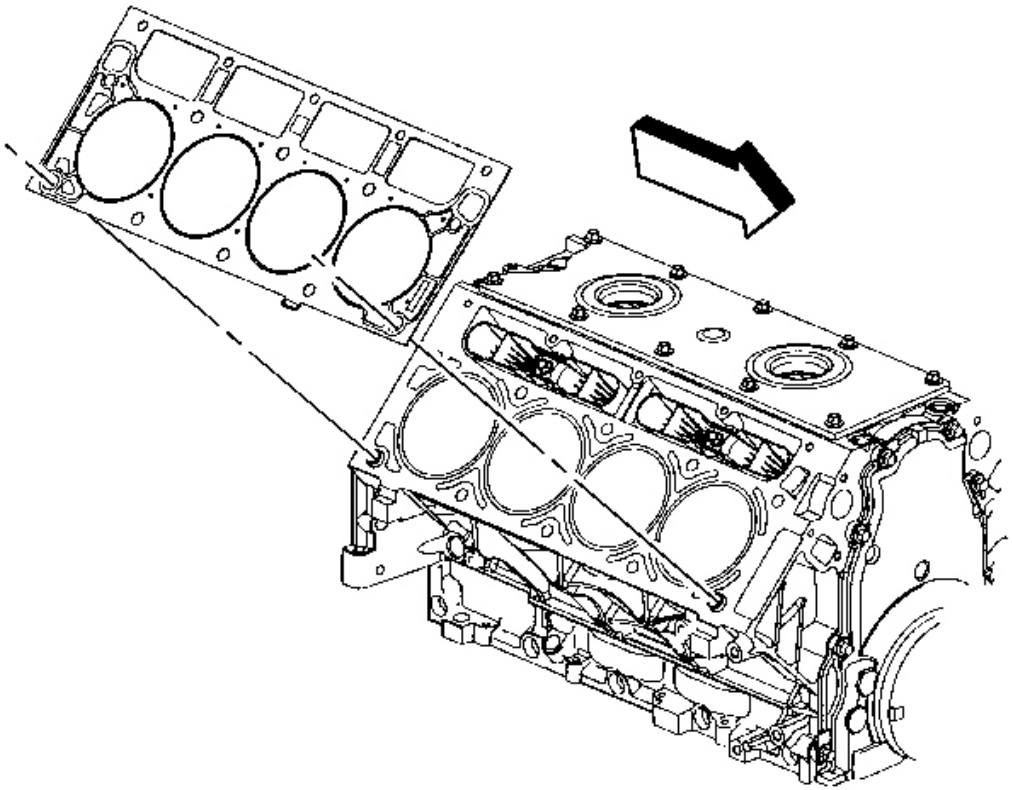

Fig. 165: View Of Cylinder Head Gasket (Right)
Courtesy of GENERAL MOTORS CORP.

9. Remove the cylinder head gasket.
10. Discard the gasket.
11. Discard the cylinder head bolts.
12. Clean and inspect the cylinder head. Refer to **Cylinder Head Cleaning and Inspection** .

Installation Procedure

cardiagn.com

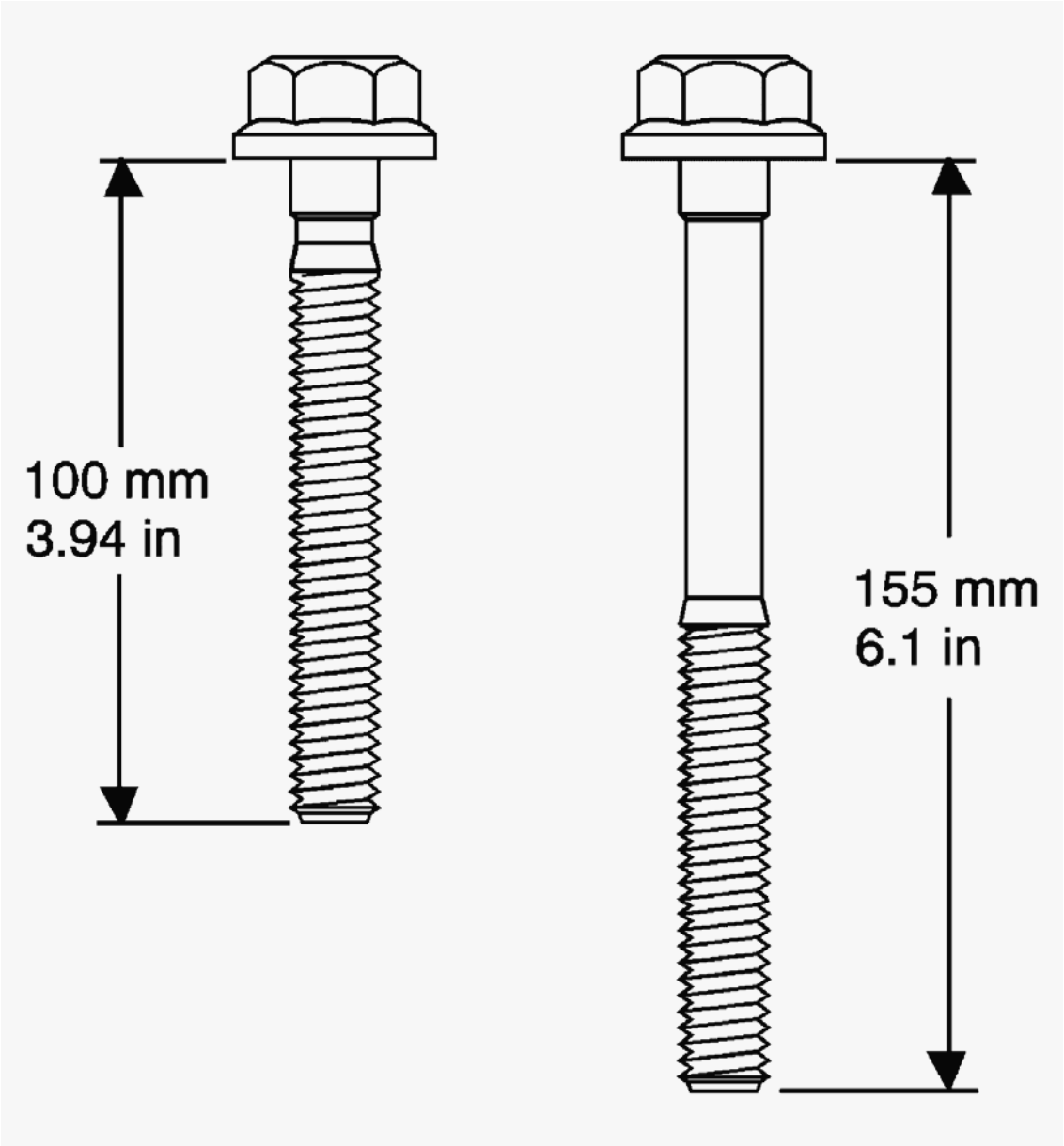

Fig. 166: View Of 100 mm & 155 mm Bolts
Courtesy of GENERAL MOTORS CORP.

CAUTION: Refer to Safety Glasses Caution .

NOTE: **Clean all dirt, debris, and coolant from the engine block cylinder head bolt holes. Failure to remove all foreign material may result in damaged threads, improperly tightened fasteners or damage to components.**

IMPORTANT:

- **Do not use the cylinder head bolts again. Install NEW cylinder head**

cardiagn.com

bolts during assembly.

- **Do not use any type sealant on the cylinder head gasket, unless specified.**
- **The cylinder head gaskets must be installed in the proper direction and position.**

1. Clean the engine block cylinder head bolt holes, if required.

   Thread repair tool J 42385-107 may be used to clean the threads of old threadlocking material.

2. Spray cleaner GM P/N 12346139, GM P/N 12377981 (Canadian P/N 10953463) or equivalent into the hole.
3. Clean the cylinder head bolt holes with compressed air.

cardiagn.com

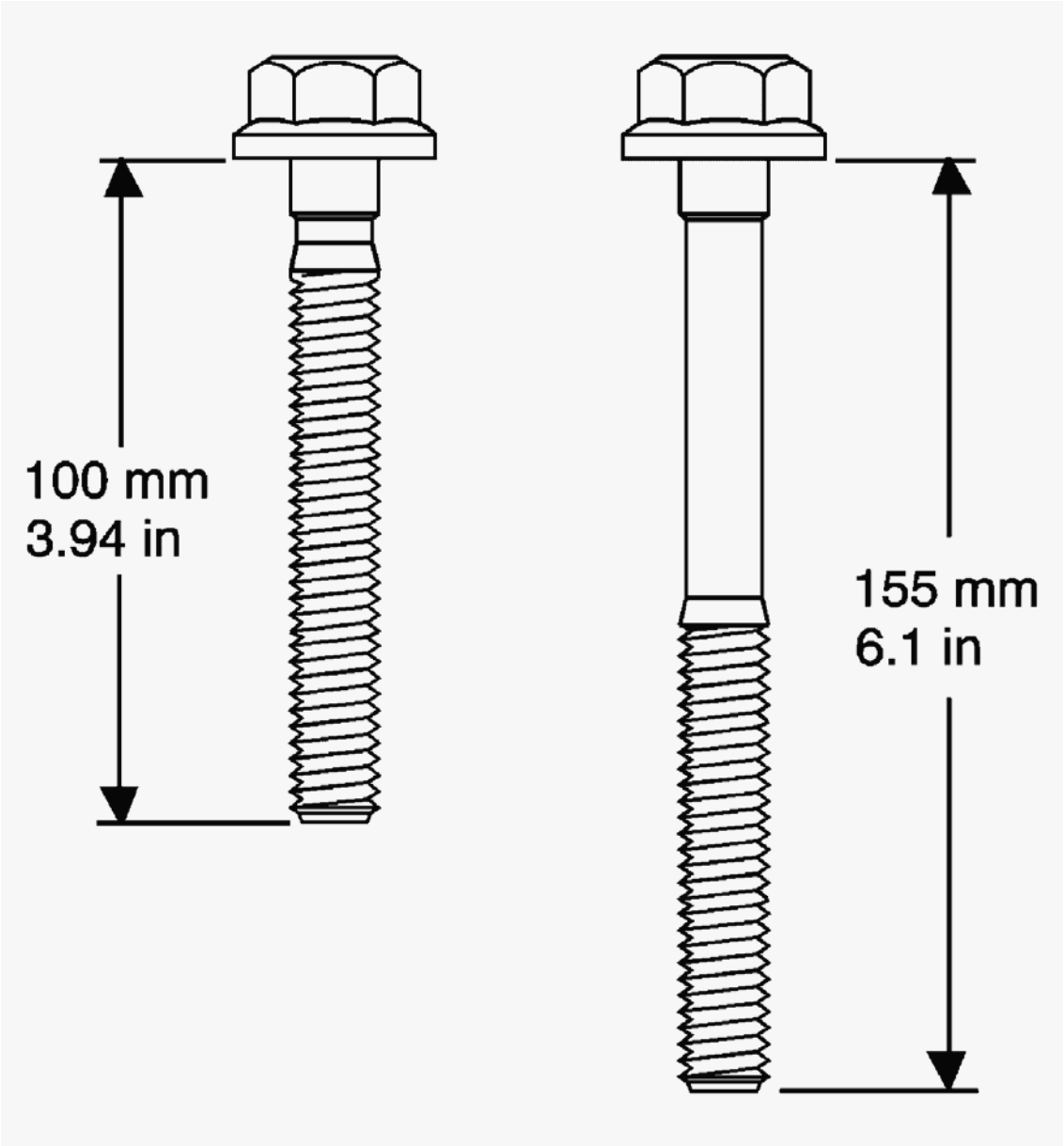

Fig. 167: View Of 100 mm & 155 mm Bolts
Courtesy of GENERAL MOTORS CORP.

IMPORTANT: First design engine blocks have different drill and tap depths using both medium length 100 mm (3.94 in) and long 155 mm (6.1 in) M11 cylinder head bolts. Second design engine blocks use only the medium length 100 mm (3.94 in) bolt with a common drill and tap depth.

4. Measure the depth of the cylinder head bolt holes (1-10) and select the correct length bolts as required.
5. Check the cylinder head locating pins for proper location.

cardiagn.com

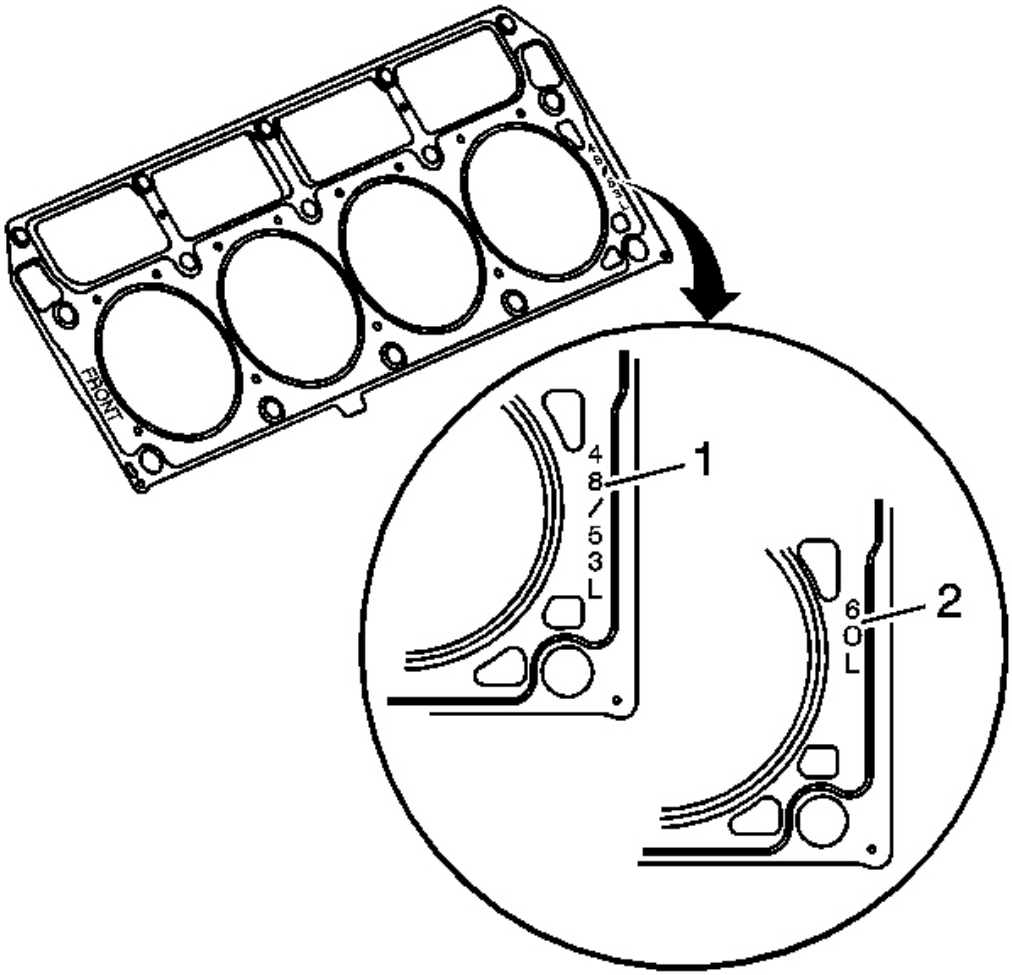

Fig. 168: View Of Cylinder Head Gasket Displacement Markings
Courtesy of GENERAL MOTORS CORP.

6. Inspect the displacement markings (1) on the gasket, for proper usage.

cardiagn.com

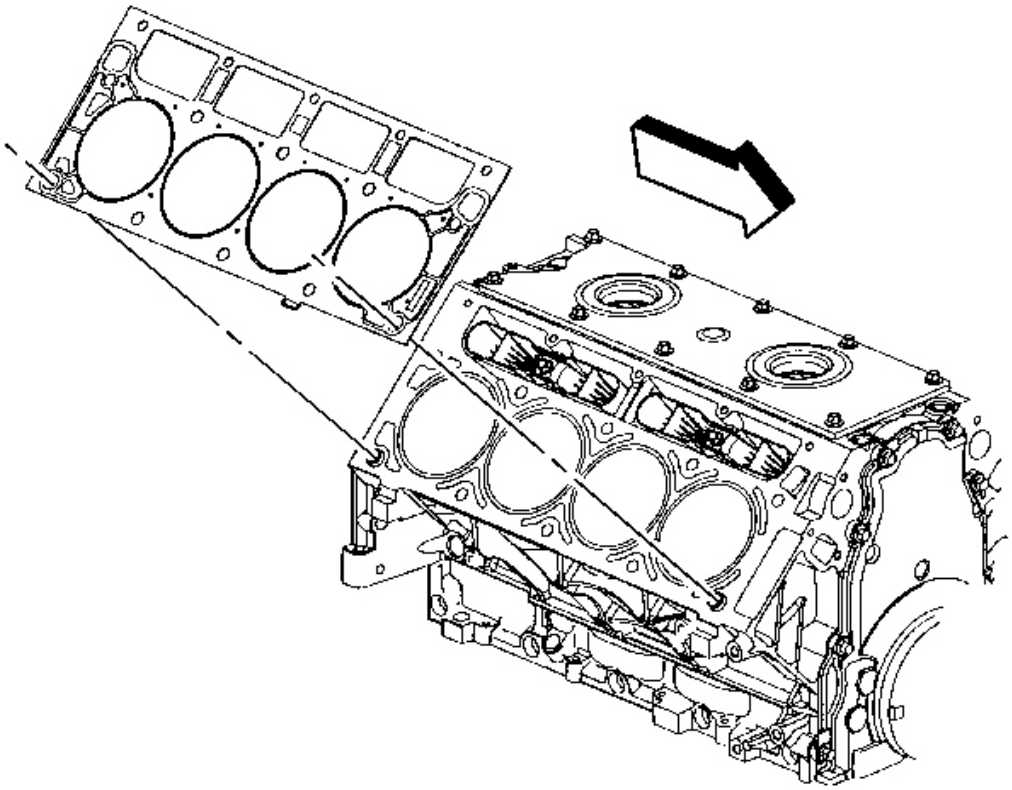

Fig. 169: View Of Cylinder Head Gasket (Right)
Courtesy of GENERAL MOTORS CORP.

IMPORTANT: When properly installed, the tab on the right cylinder head gasket will be located right of center or closer to the front of the engine.

7. Install the NEW cylinder head gasket onto the locating pins.

cardiagn.com

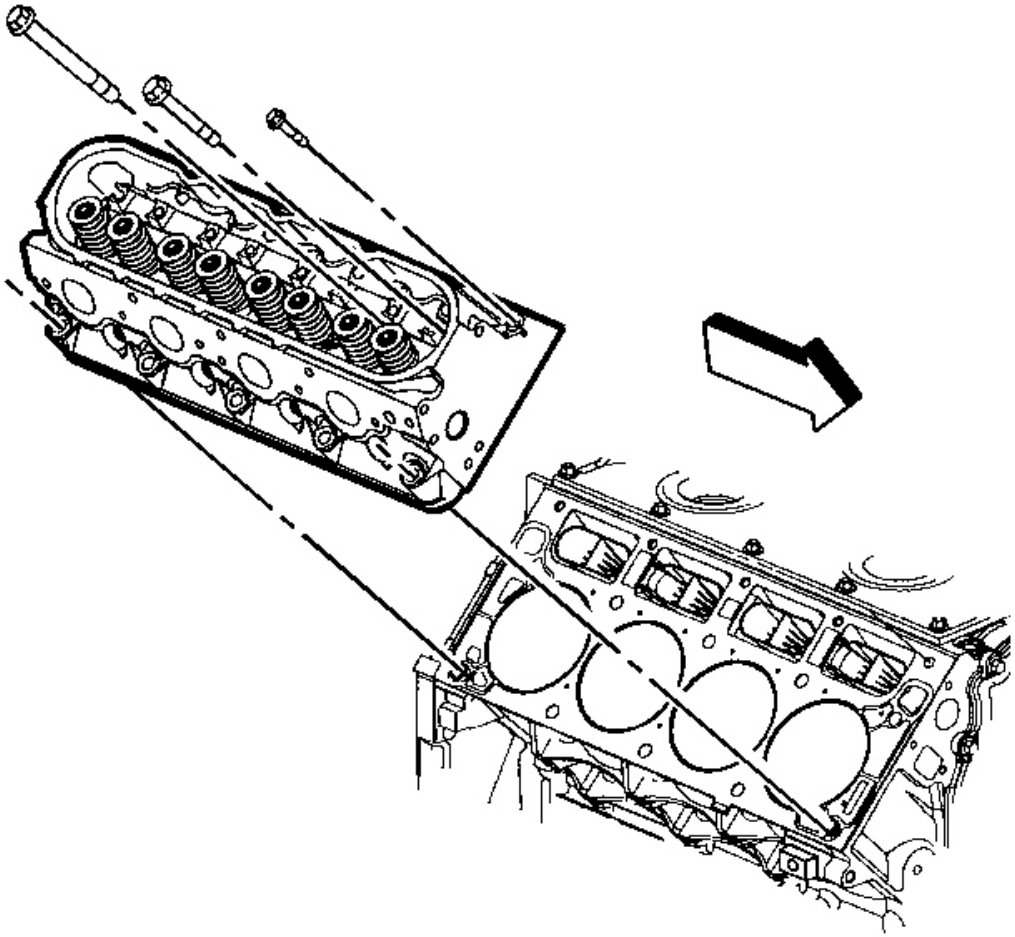

Fig. 170: View Of Cylinder Head & Bolts
Courtesy of GENERAL MOTORS CORP.

8. Install the cylinder head onto the locating pins and the gasket.
9. Install the NEW cylinder head bolts.

cardiagn.com

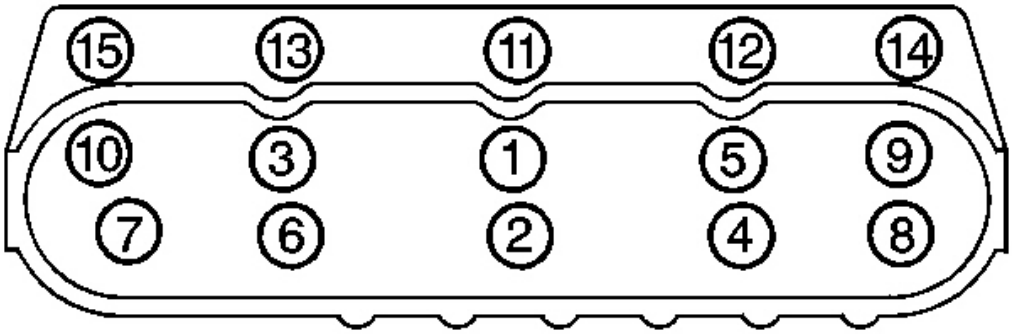

Fig. 171: Cylinder Head Bolt Tightening Sequence (Right)
Courtesy of GENERAL MOTORS CORP.

NOTE: **Refer to Fastener Notice .**

10. Tighten the first design cylinder head bolts.

    Tighten:

    1. Tighten the first design M11 cylinder head bolts a first pass in sequence to 30 N.m (22 lb ft).
    2. Tighten the first design M11 cylinder head bolts a second pass in sequence to 90 degrees using the **J 45059** .
    3. Tighten the first design M11 cylinder head bolts (1, 2, 3, 4, 5, 6, 7, 8) to 90 degrees and the M11 cylinder head bolts (9 and 10) to 50 degrees a final pass in sequence to using the **J 45059** .
    4. Tighten the M8 cylinder head bolts (11, 12, 13, 14, 15) to 30 N.m (22 lb ft). Begin with the center bolt (11) and alternating side-to-side, work outward tightening all of the bolts.

11. Tighten the second design cylinder head bolts.

    Tighten:

    1. Tighten the second design M11 cylinder head bolts (1-10) a first pass in sequence to 30 N.m (22 lb ft).
    2. Tighten the second design M11 cylinder head bolts (1-10) a second pass in sequence to 90 degrees using the **J 45059** .
    3. Tighten the second design M11 cylinder head bolts (1-10) a final pass in sequence to 70 degrees using the **J 45059** .
    4. Tighten the M8 cylinder head bolts (11, 12, 13, 14, 15) to 30 N.m (22 lb ft). Begin with the center bolt (11) and alternating side-to-side, work outward tightening all of the bolts.

cardiagn.com

12. Install the wiring harness to the clip at the rear of the cylinder head.

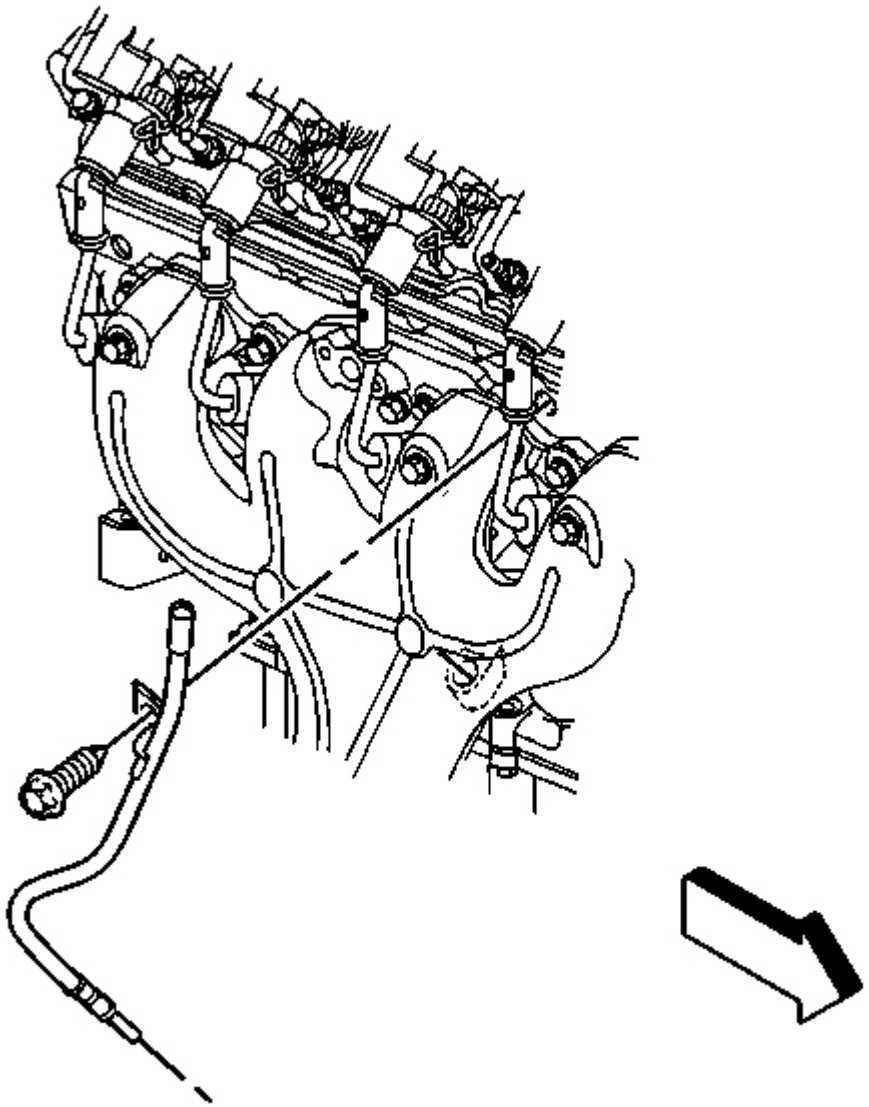

Fig. 172: Oil Level Indicator Tube & Bolt
Courtesy of GENERAL MOTORS CORP.

13. Position the oil level indicator tube into place.
14. Install the oil level indicator tube bolt.

cardiagn.com

Tighten: Tighten the oil level indicator tube bolt to 25 N.m (18 lb ft).

15. Install the exhaust manifold. Refer to **Exhaust Manifold Replacement - Right** in Engine Exhaust.
16. Install the engine coolant air bleed pipe. Refer to **Coolant Air Bleed Pipe Assembly Replacement** in Engine Cooling.
17. Install the valve rocker arms and pushrods. Refer to **Valve Rocker Arm and Push Rod Replacement** .

VALVE LIFTER REPLACEMENT

Tools Required

J 3049-A Valve Lifter Remover

Removal Procedure

cardiagn.com

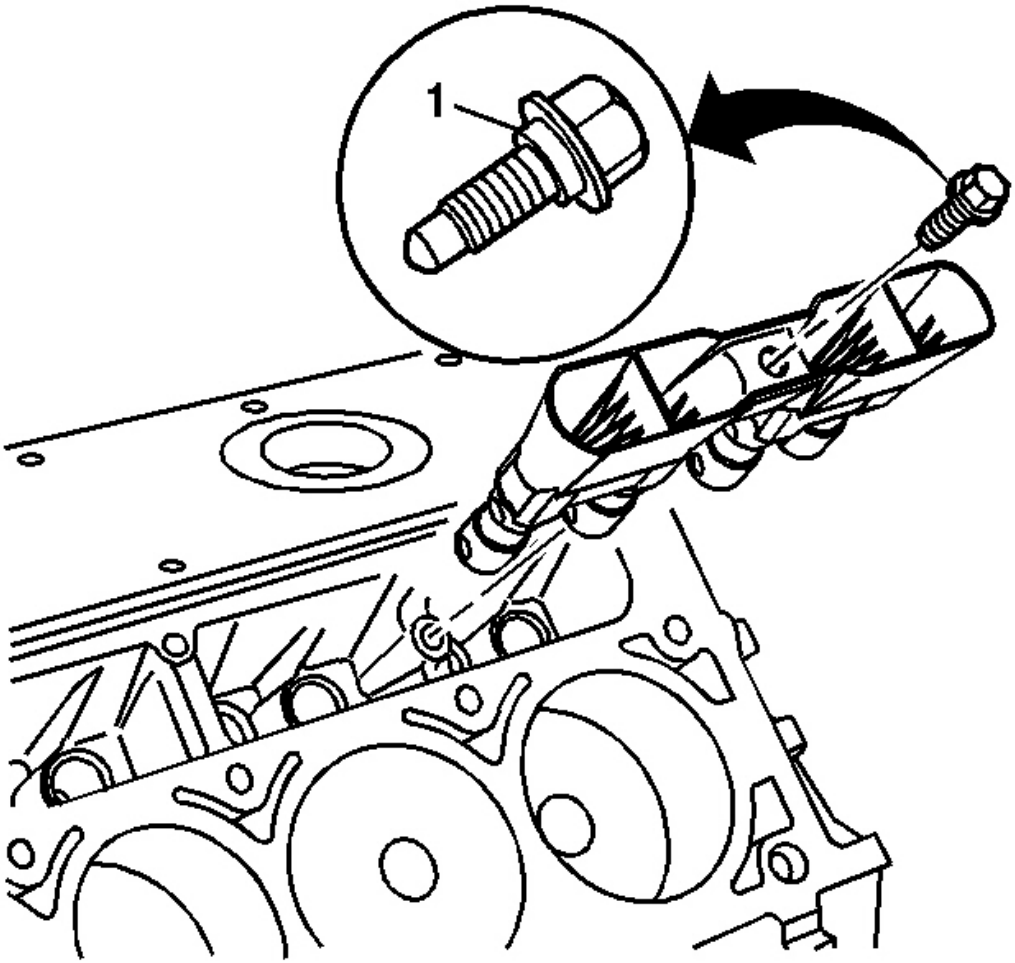

Fig. 173: Valve Lifter Guide & Bolts
Courtesy of GENERAL MOTORS CORP.

1. Remove the cylinder head. Refer to **Cylinder Head Replacement - Left** or **Cylinder Head Replacement - Right** .
2. Remove the valve lifter guide bolts (1).
3. Remove the valve lifters and guide.

cardiagn.com

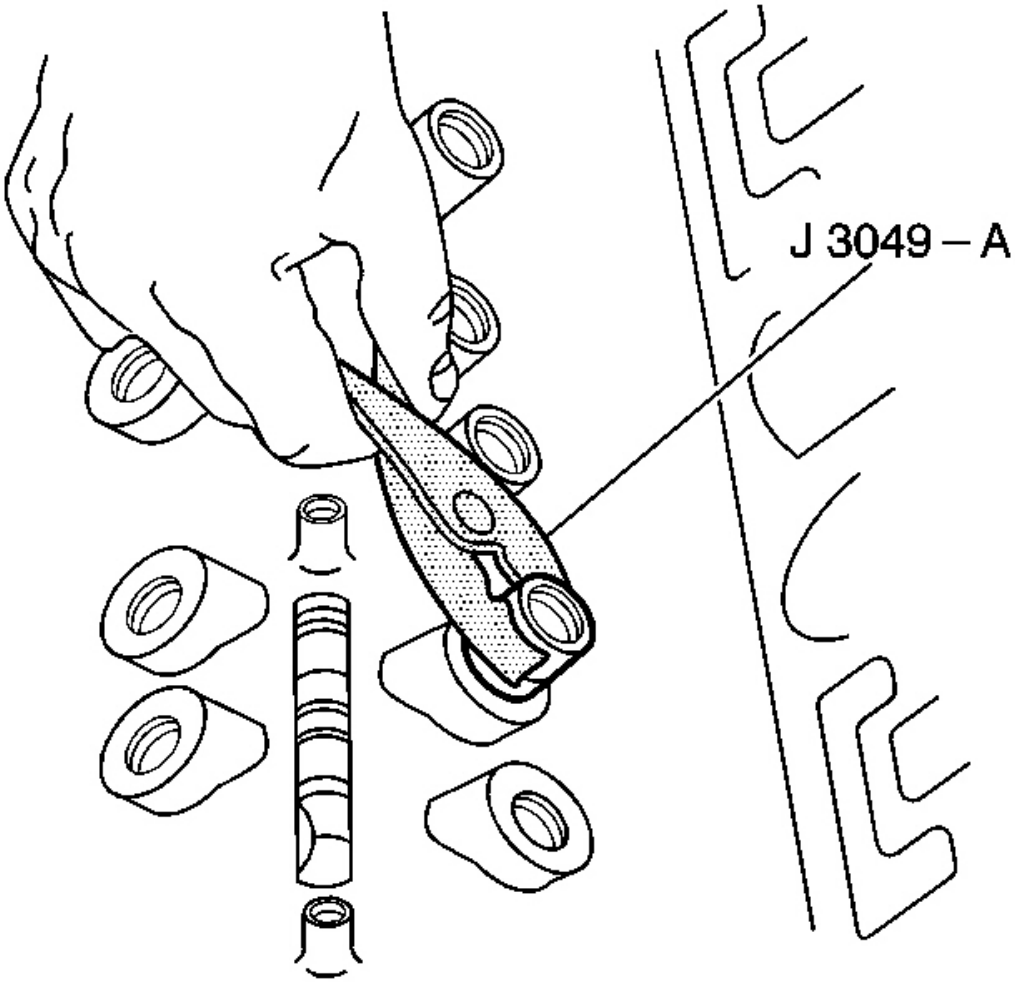

Fig. 174: Using J 3049-A To Remove Stuck Valve Lifters
Courtesy of GENERAL MOTORS CORP.

IMPORTANT: Some valve lifters may be stuck in their bores because of gum or varnish deposits.

4. Use the **J 3049-A** or equivalent in order to remove the valve lifters (if required).

cardiagn.com

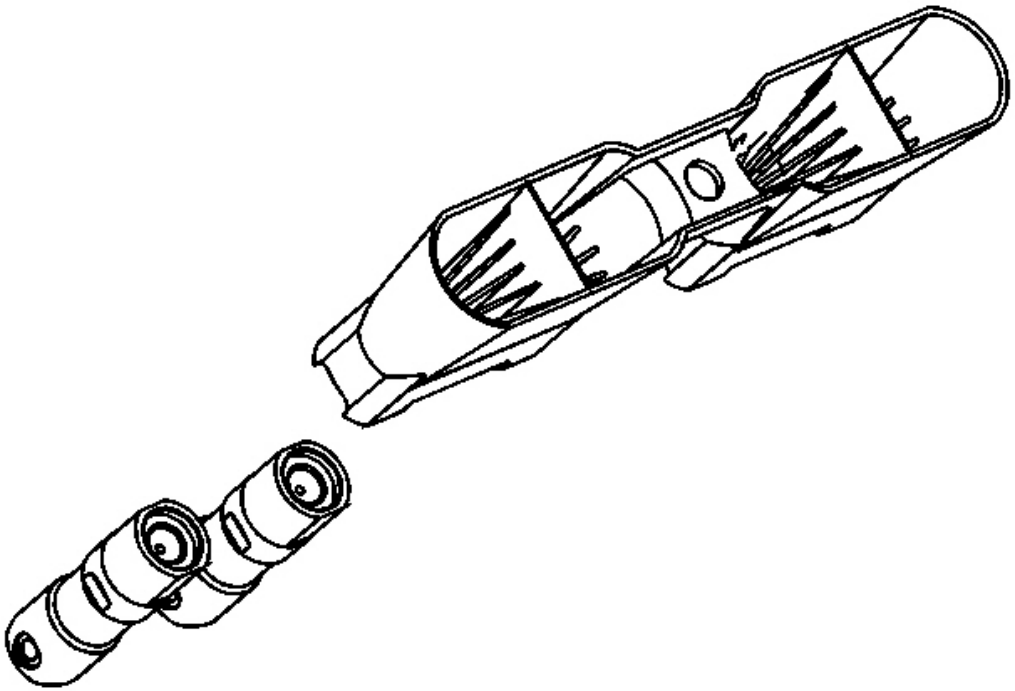

Fig. 175: View Of Valve Lifters & Guide
Courtesy of GENERAL MOTORS CORP.

5. Remove the valve lifters from the guide.
6. Organize or mark the components so that they can be installed in the same location from which they were removed.
7. Clean and inspect the valve lifters and guides. Refer to **Valve Lifters and Guides Cleaning and Inspection** .

Installation Procedure

IMPORTANT: When reusing valve lifters, install the lifters to their original locations.

cardiagn.com

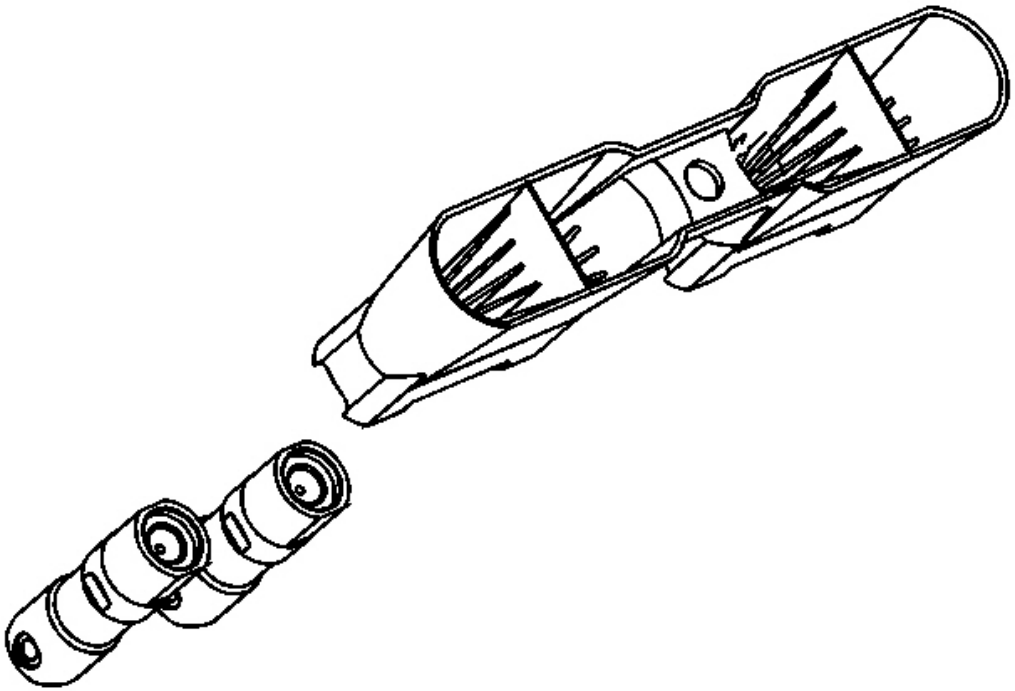

Fig. 176: View Of Valve Lifters & Guide
Courtesy of GENERAL MOTORS CORP.

1. Lubricate the valve lifters and engine block valve lifter bores with clean engine oil.
2. Insert the valve lifters into the lifter guides.

   Align the flat area on the top of the lifter with the flat area in the guide bore. Push the lifter completely into the guide bore.

cardiagn.com

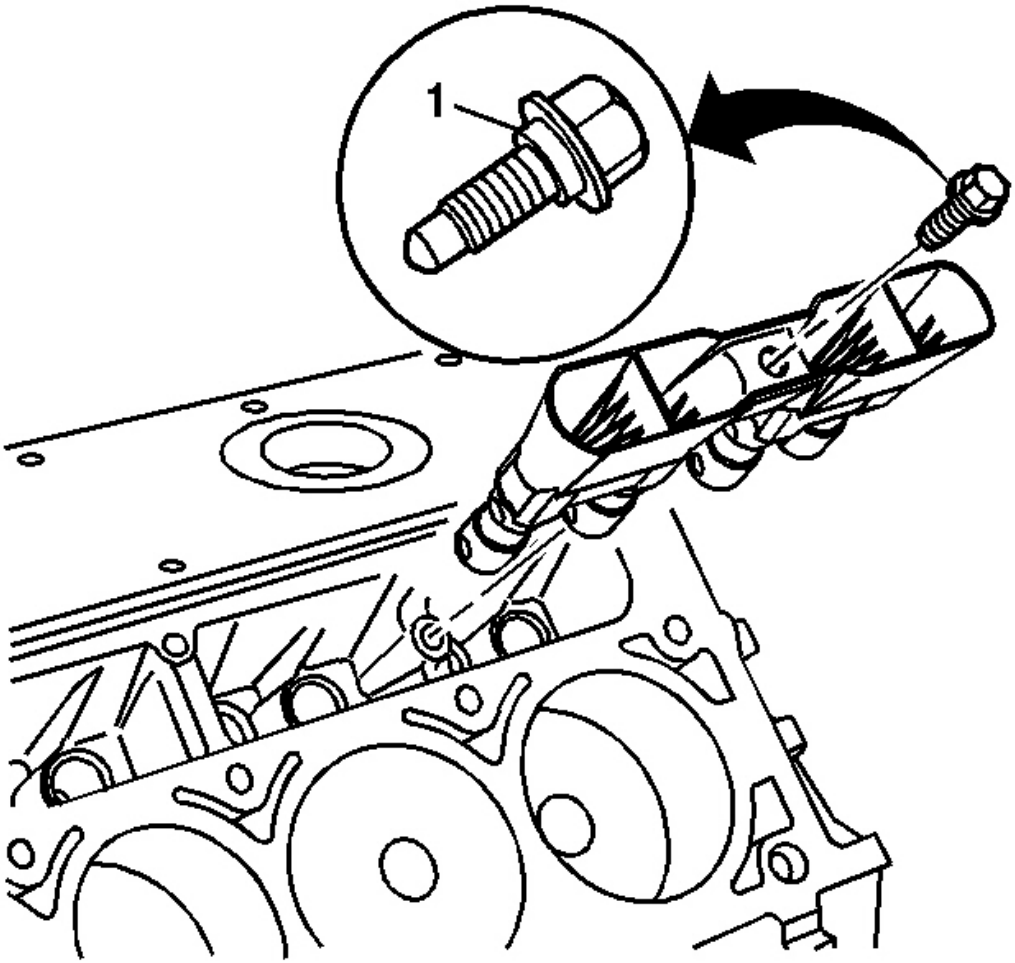

Fig. 177: Valve Lifter Guide & Bolts
Courtesy of GENERAL MOTORS CORP.

NOTE: Refer to Fastener Notice in Cautions and Notices.

3. Install the valve lifters and guide to the engine block.
4. Install the valve lifter guide bolt (1).

   Tighten: Tighten the valve lifter guide bolt to 12 N.m (106 lb in).

5. Install the cylinder head. Refer to **Cylinder Head Replacement - Left** or **Cylinder Head Replacement - Right** .

cardiagn.com

CRANKSHAFT BALANCER REPLACEMENT

Tools Required

- J 41816 Crankshaft Balancer Remover
- J 41816-2 Crankshaft End Protector
- **J 42386-A** Flywheel Holding Tool
- **J 41665** Crankshaft Balancer and Sprocket Installer
- J 36660-A Torque Angle Meter

Removal Procedure

cardiagn.com

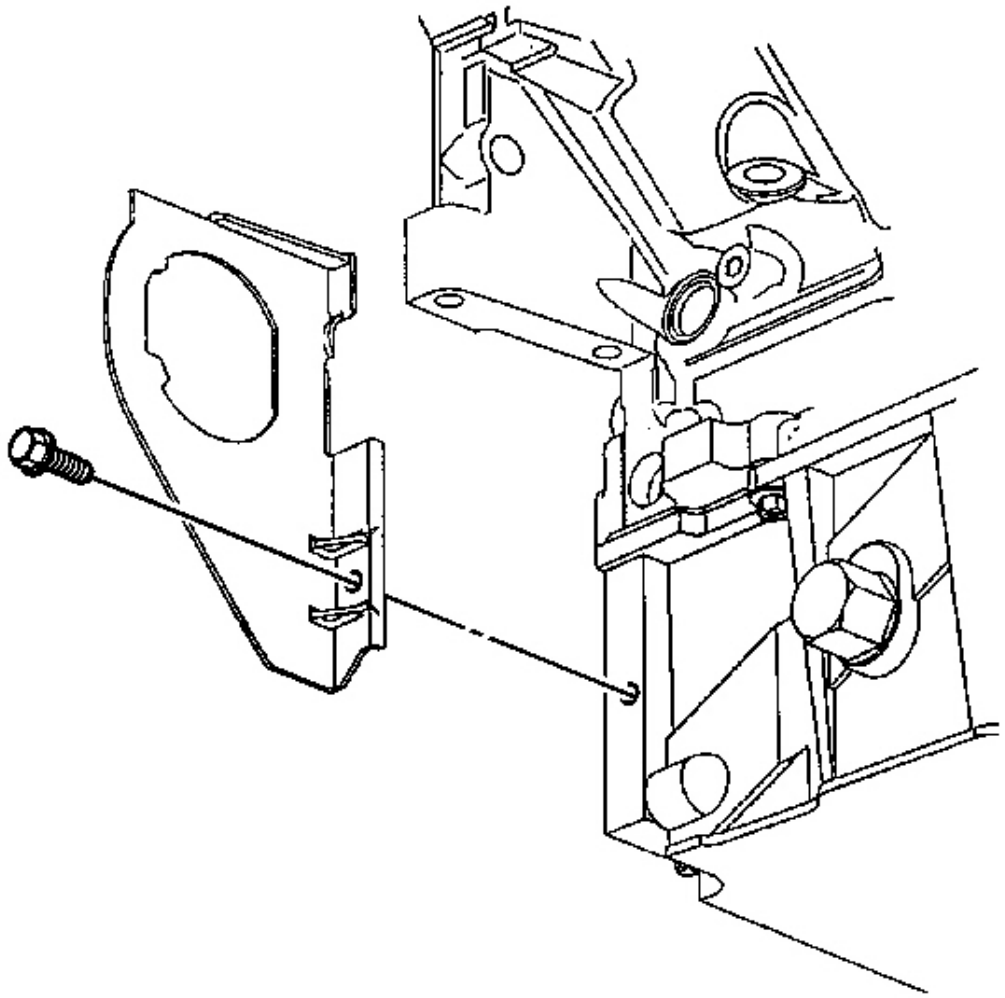

Fig. 178: Right Transmission Cover & Bolt
Courtesy of GENERAL MOTORS CORP.

1. Remove the air conditioning (A/C) drive belt. Refer to **Drive Belt Replacement - Air Conditioning** .
2. Remove the power steering gear. Refer to **Power Steering Gear Replacement** in Power Steering System.
3. Remove the starter motor. Refer to **Starter Motor Replacement** in Engine Electrical.
4. Remove the right transmission cover and bolt.

cardiagn.com

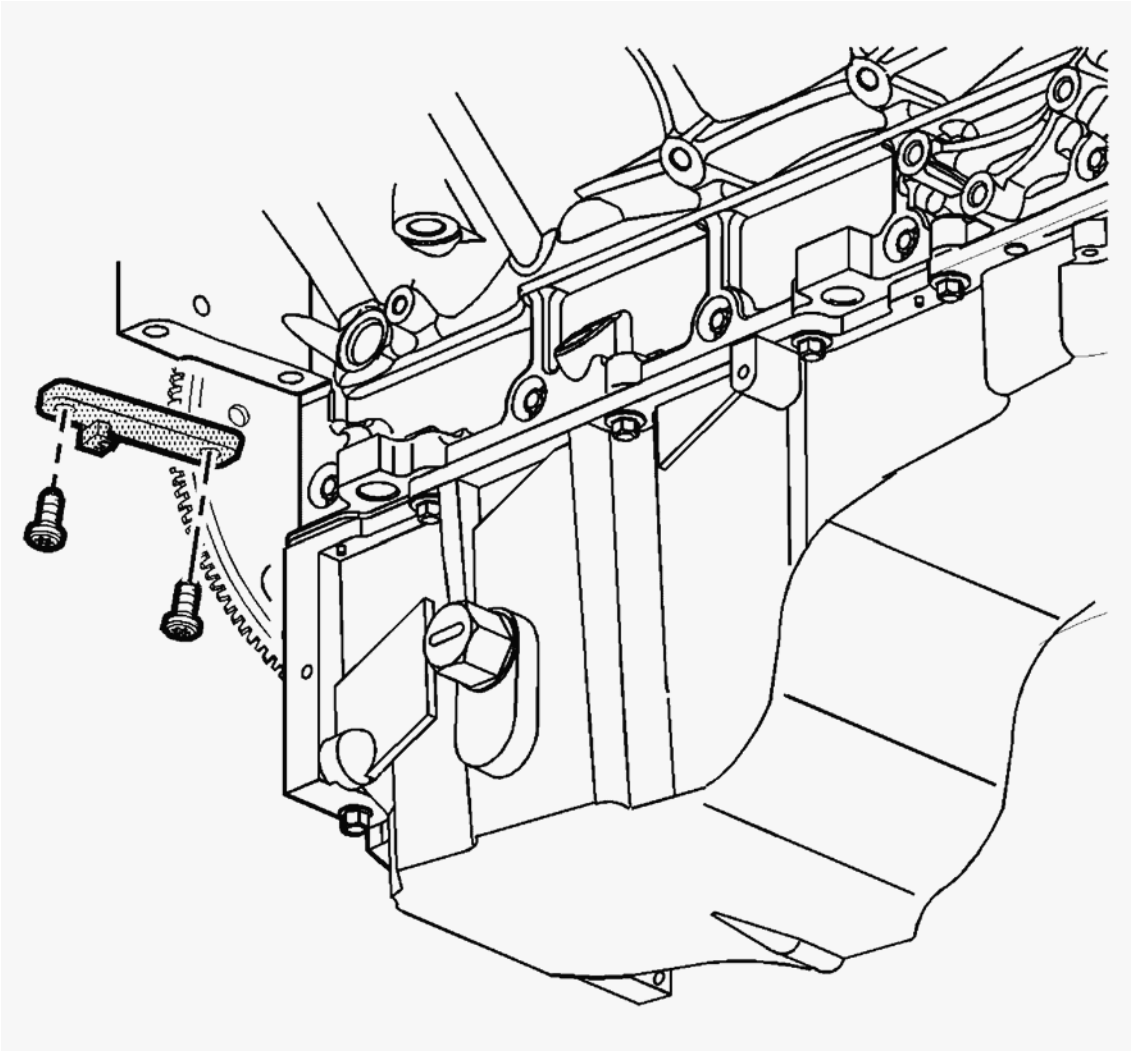

Fig. 179: J 42386-A & Bolts
Courtesy of GENERAL MOTORS CORP.

NOTE: Refer to Fastener Notice in Cautions and Notices.

IMPORTANT: Make sure that the teeth of the flywheel holding tool mesh with the teeth of the engine flywheel.

5. Install the **J 42386-A** and bolts.

   Use one M10-1.5 x 120 mm and one M10-1.5 x 45 mm bolt for proper tool operation

   Tighten: Tighten the **J 42386-A** bolts to 50 N.m (37 lb ft).

cardiagn.com

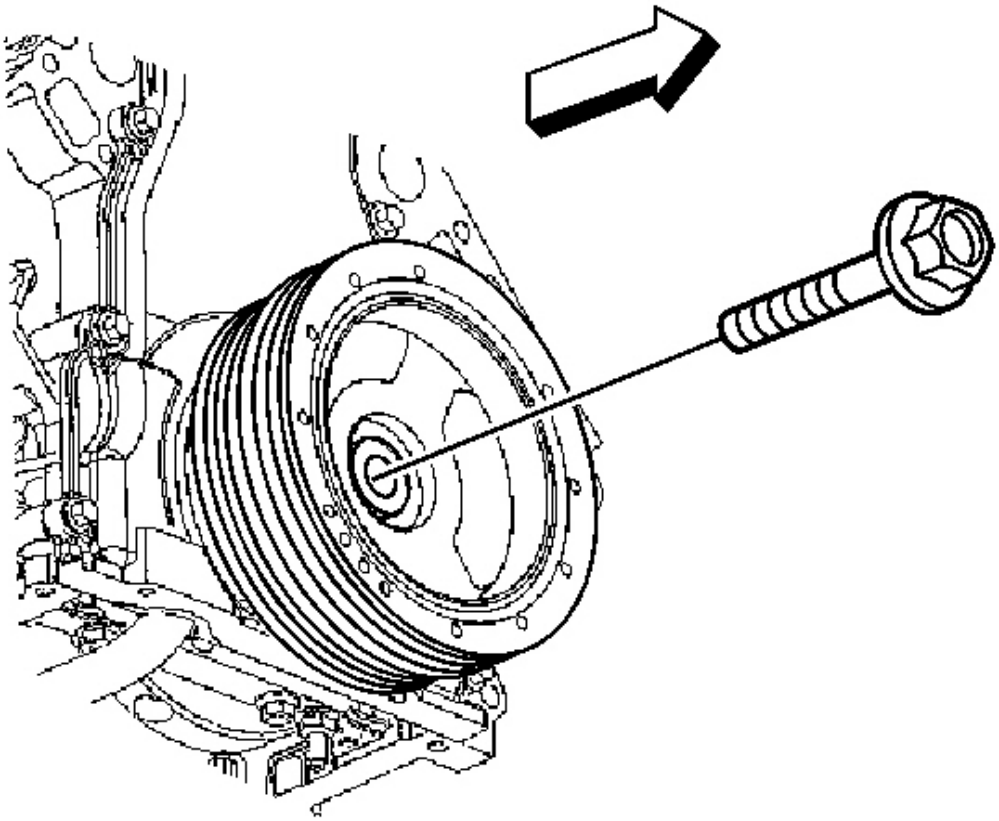

Fig. 180: Identifying Harmonic Balancer Bolt
Courtesy of GENERAL MOTORS CORP.

6. Remove the crankshaft balancer bolt.

   Do not discard the crankshaft balancer bolt. The balancer bolt will be used during the balancer installation procedure.

cardiagn.com

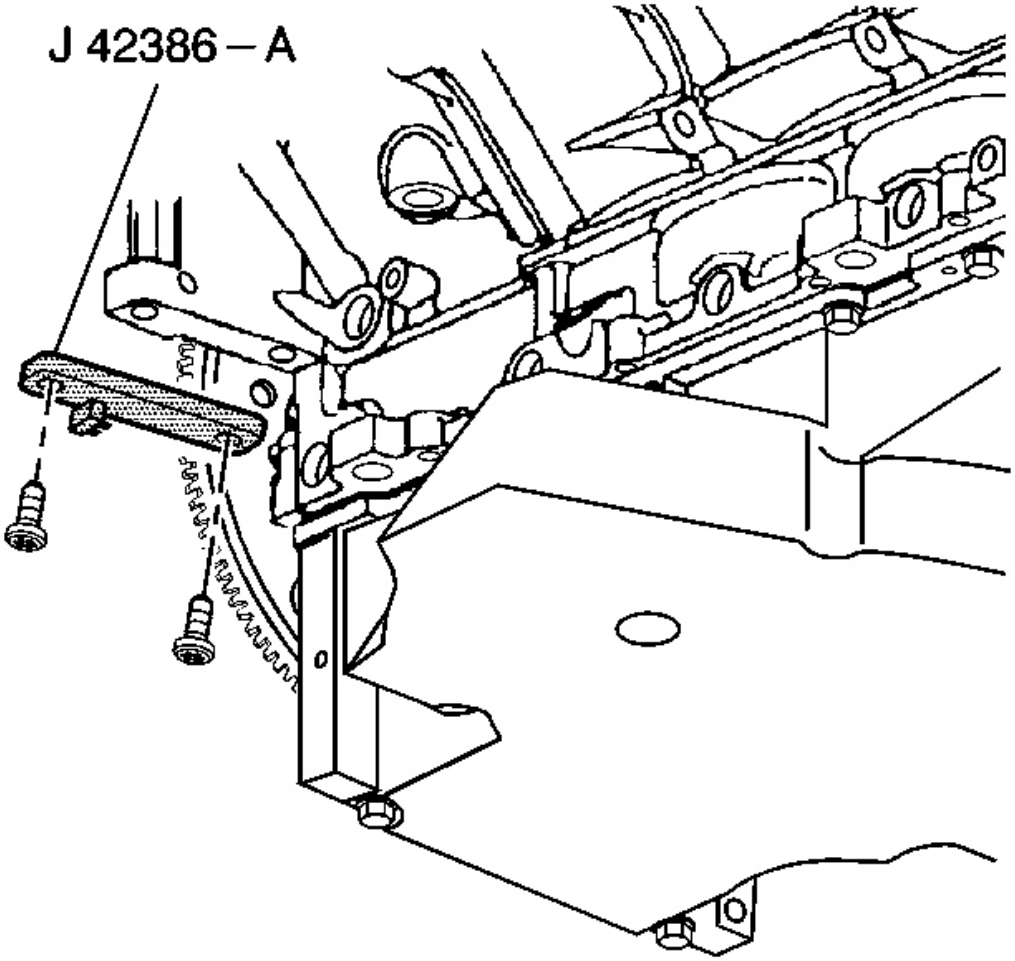

Fig. 181: J 42386-A, Crankshaft Balancer & Bolt
Courtesy of GENERAL MOTORS CORP.

IMPORTANT: For manual transmission applications, note the position of the crankshaft balancer before removal. The balancer does not use a key or keyway for positioning. Mark or scribe the end of the crankshaft and the balancer before removal. If replacing the crankshaft balancer, note the location of any existing balance weights (if applicable). Install new balance weights into the new crankshaft balancer (if applicable) in the same location as the old balancer. A properly installed balance weight will be either flush or below flush with the face of the balancer.

7. Mark or scribe the crankshaft balancer and the end of the crankshaft.

cardiagn.com

Note the balancer installed position on the crankshaft for assembly.

Refer to **Engine Balancing**

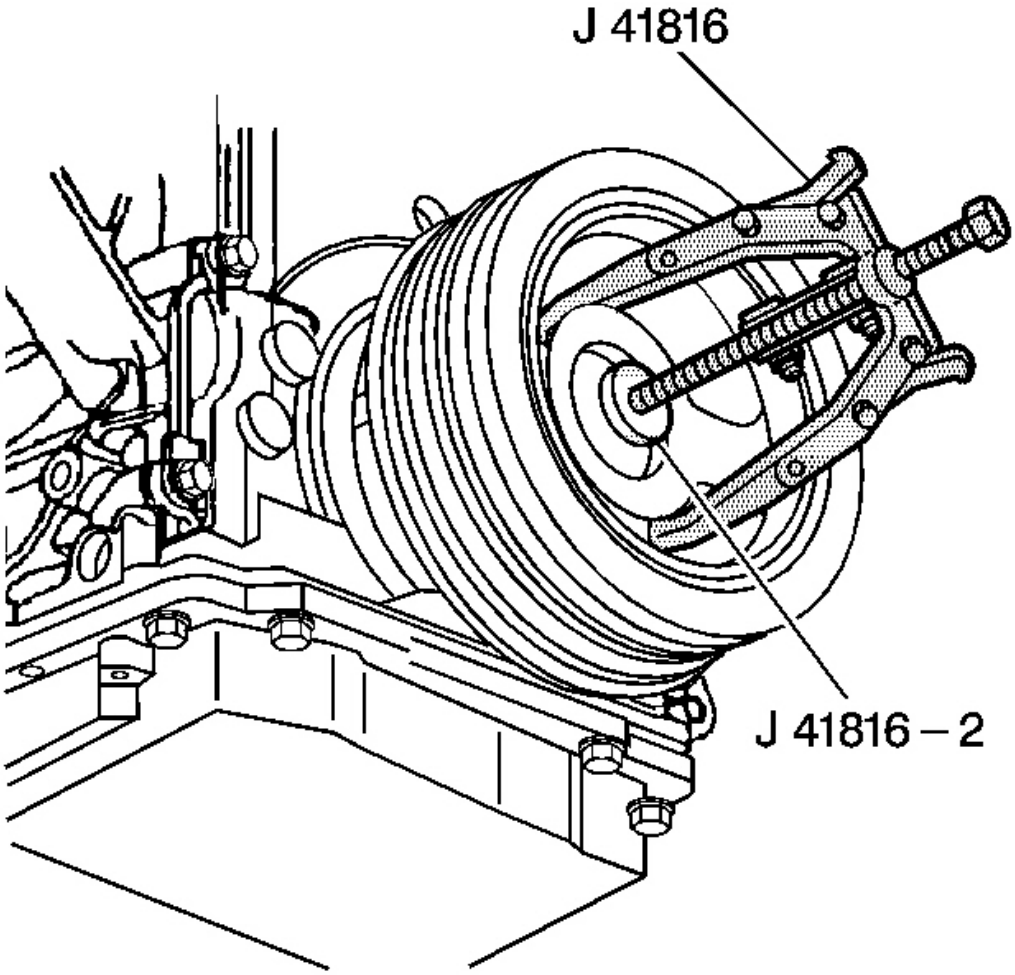

Fig. 182: View Of J 41816 & J 41816-2
Courtesy of GENERAL MOTORS CORP.

8. Use the **J 38416-B** and the J 41816-2 in order to remove the crankshaft balancer.
9. Remove the **J 38416-B** and the J 41816-2 from the crankshaft balancer.

cardiagn.com

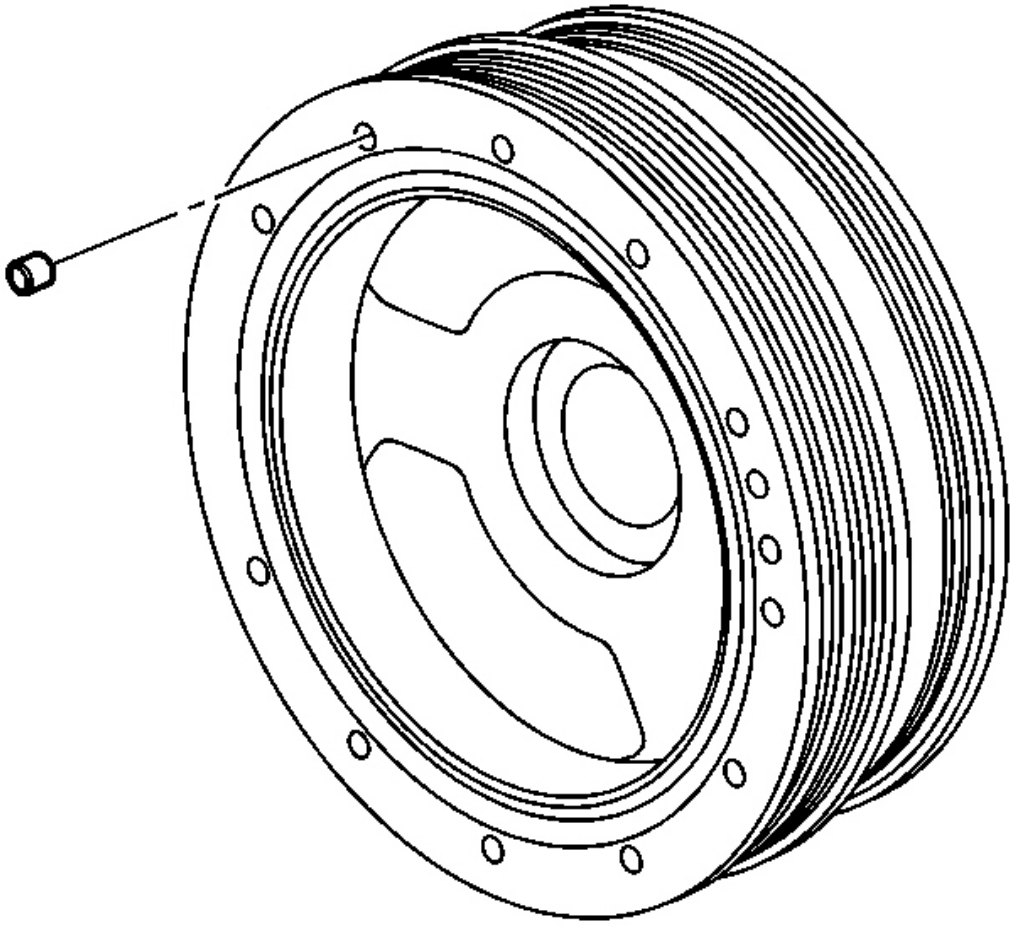

Fig. 183: Crankshaft Balancer Weights
Courtesy of GENERAL MOTORS CORP.

10. Not the position of any crankshaft balancer weights (if applicable).
11. Clean and inspect the crankshaft balancer. Refer to **Crankshaft Balancer Cleaning and Inspection** in the Engine Unit Repair Manual.

Installation Procedure

IMPORTANT:

- **The used crankshaft balancer bolt will be used only during the first pass on the balancer installation procedure. Install a NEW crankshaft balancer bolt and tighten as described in the second, third and fourth passes of the balancer bolt tightening procedure.**

cardiagn.com

- **The crankshaft balancer installation and bolt tightening involves a four stage tightening process. The first pass ensures that the balancer is installed completely onto the crankshaft. The third, and fourth passes tighten the new bolt to the proper torque.**

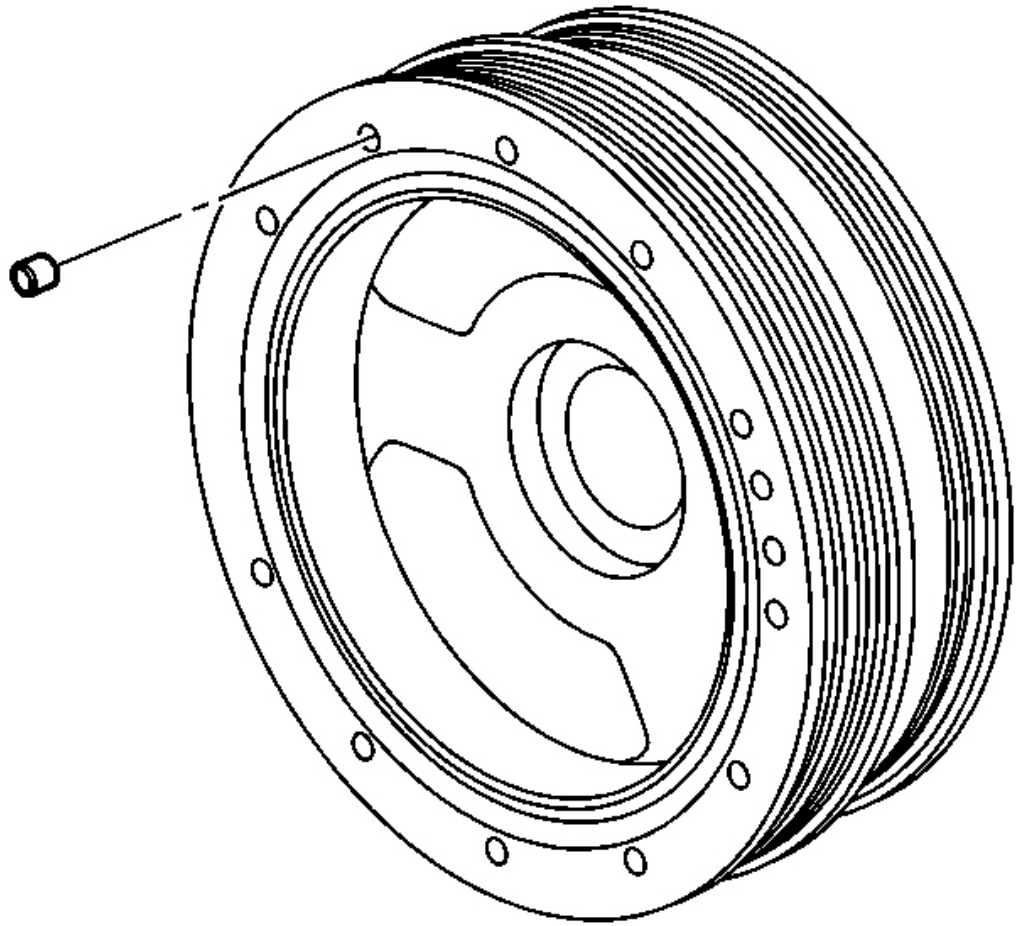

Fig. 184: Crankshaft Balancer Weights
Courtesy of GENERAL MOTORS CORP.

1. Using the old balancer as a reference, mark or scribe the NEW balancer in the same location (if required).

   Refer to **Engine Balancing**

2. Install balance weights into the NEW balancer (if required).

cardiagn.com

Refer to **Crankshaft Balancer Cleaning and Inspection**

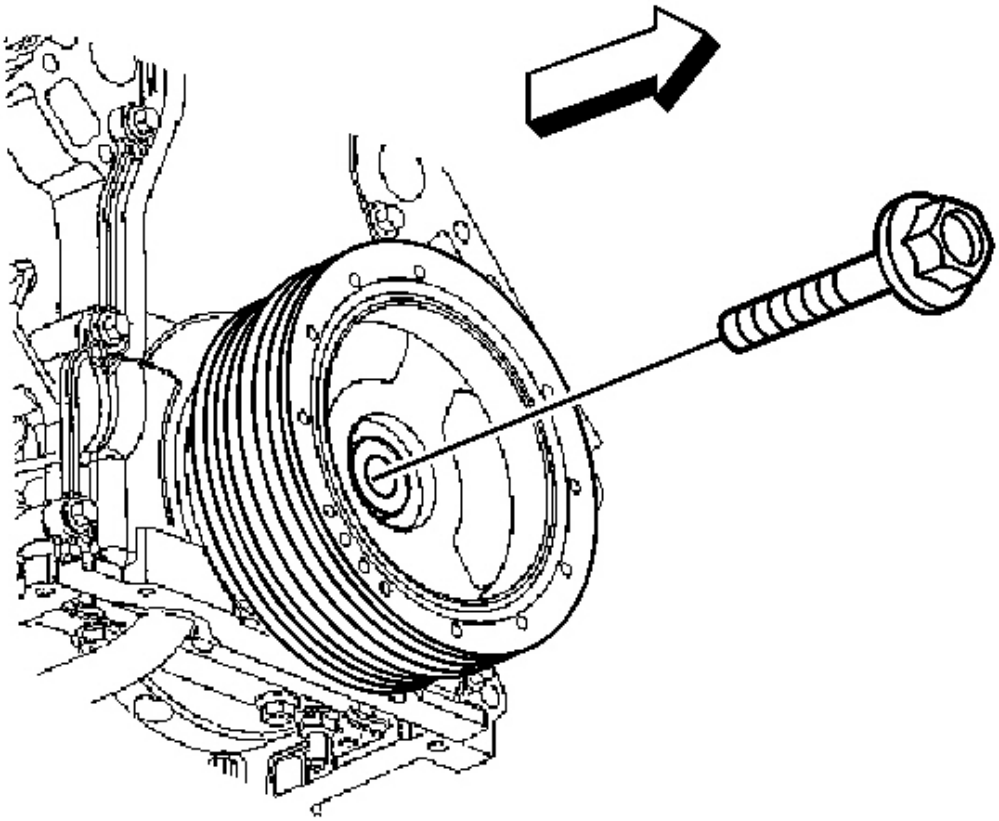

Fig. 185: Identifying Harmonic Balancer Bolt
Courtesy of GENERAL MOTORS CORP.

IMPORTANT: Align the scribe mark on the balancer with the scribe mark on the crankshaft.
The balancer should be positioned onto the end of the crankshaft as straight as possible prior to tool installation.

3. Install the balancer onto the end of the crankshaft.

cardiagn.com

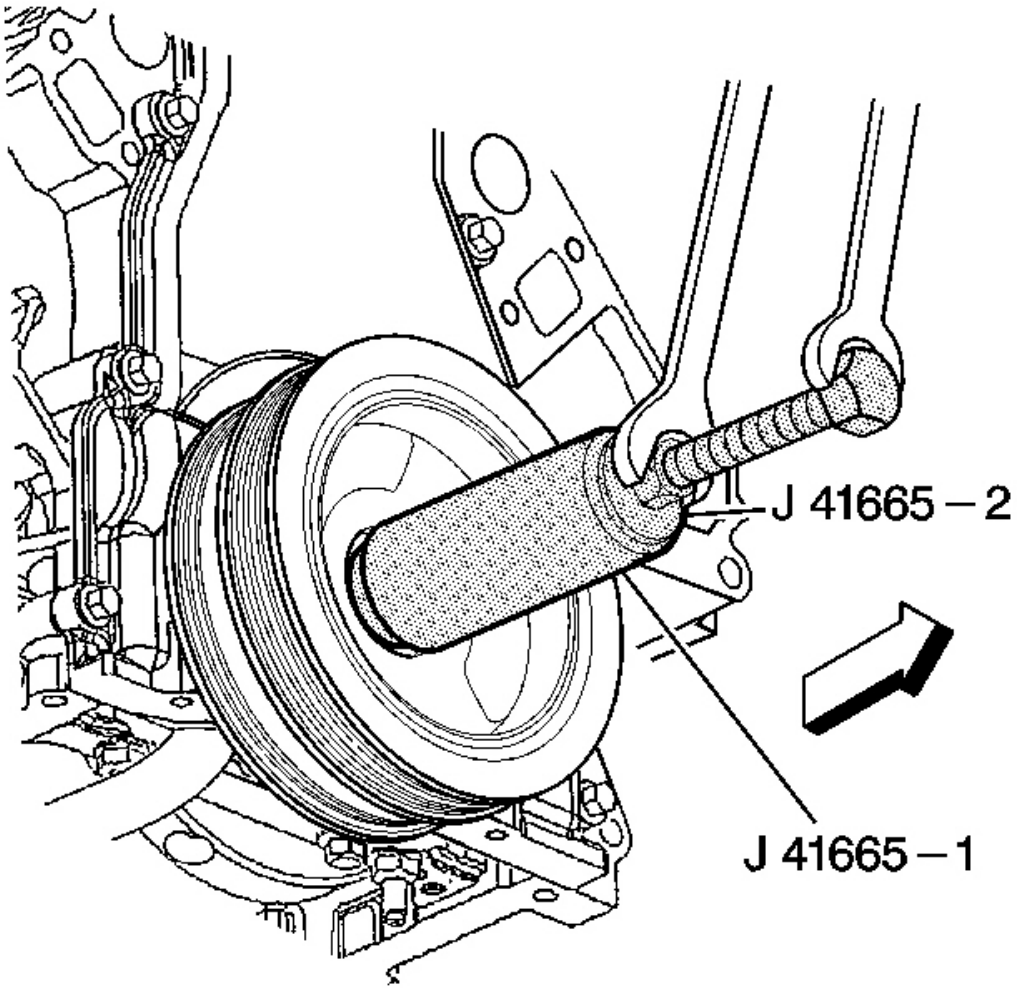

Fig. 186: J 41665 & Crankshaft Balancer
Courtesy of GENERAL MOTORS CORP.

4. Use the **J 41665** in order to install the crankshaft balancer.
    1. Assemble the threaded rod, nut, washer and installer.

       Insert the smaller end of the installer into the front of the balancer.

    2. Use a wrench and hold the hex end of the threaded rod.
    3. Use a second wrench and rotate the installation tool nut clockwise until the balancer is started onto the crankshaft.
    4. Remove the tool and reverse the installation tool.

cardiagn.com

Position the larger end of the installer against the front of the balancer.

5. Use a wrench and hold the hex end of the threaded rod.
6. Use a second wrench and rotate the installation tool nut clockwise until the balancer is installer onto the crankshaft.
7. Remove the balancer installation tool.

cardiagn.com

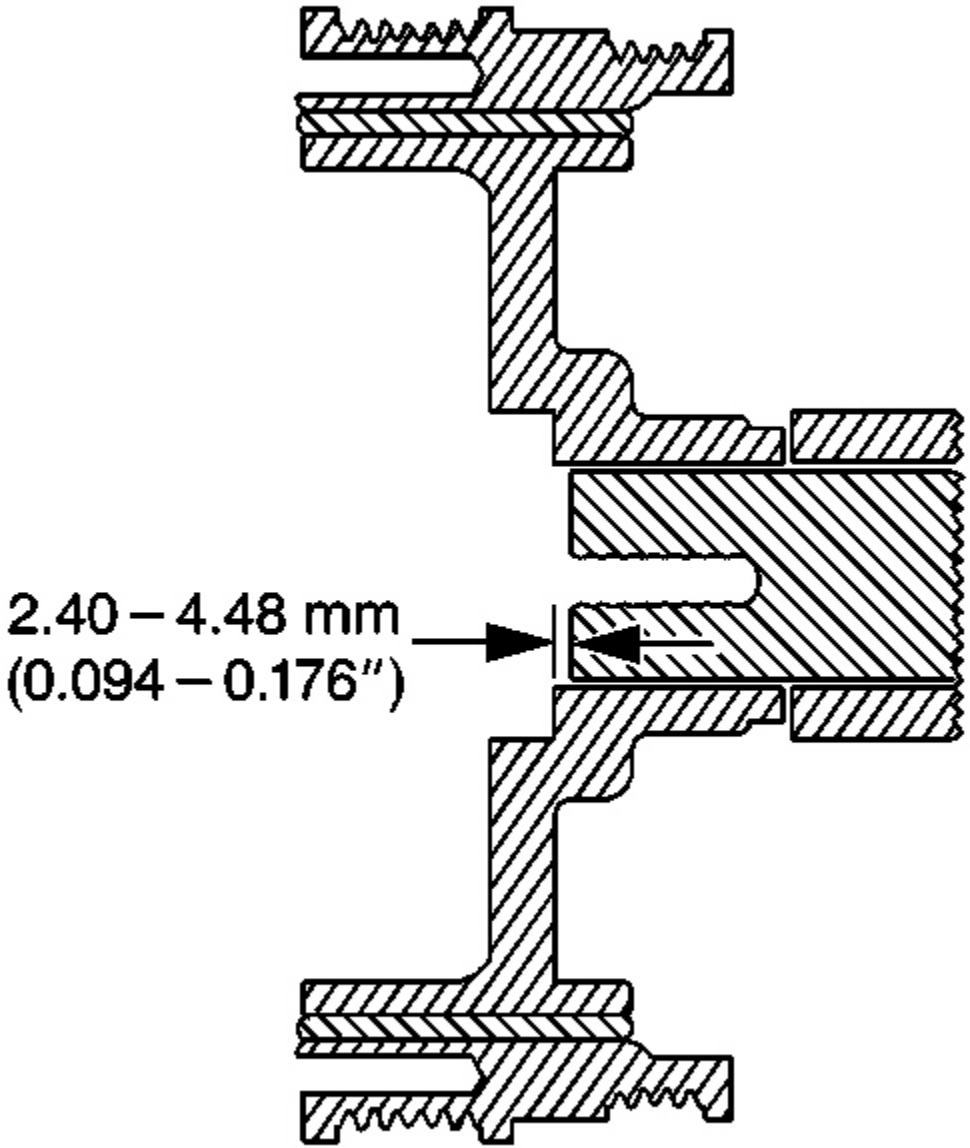

Fig. 187: View Of Balancer Proper Installation Position
Courtesy of GENERAL MOTORS CORP.

5. Install the used crankshaft balancer bolt.

   Tighten: Tighten the used crankshaft balancer bolt to 330 N.m (240 lb ft).

cardiagn.com

6. Remove the used crankshaft balancer bolt.

IMPORTANT: The nose of the crankshaft should be recessed 2.40-4.48 mm (0.094-0.176 in) into the balancer bore.

7. Measure for a correctly installer balancer.

   If the balancer is not installed to the proper dimensions, install the **J 41665** and repeat the installation procedure.

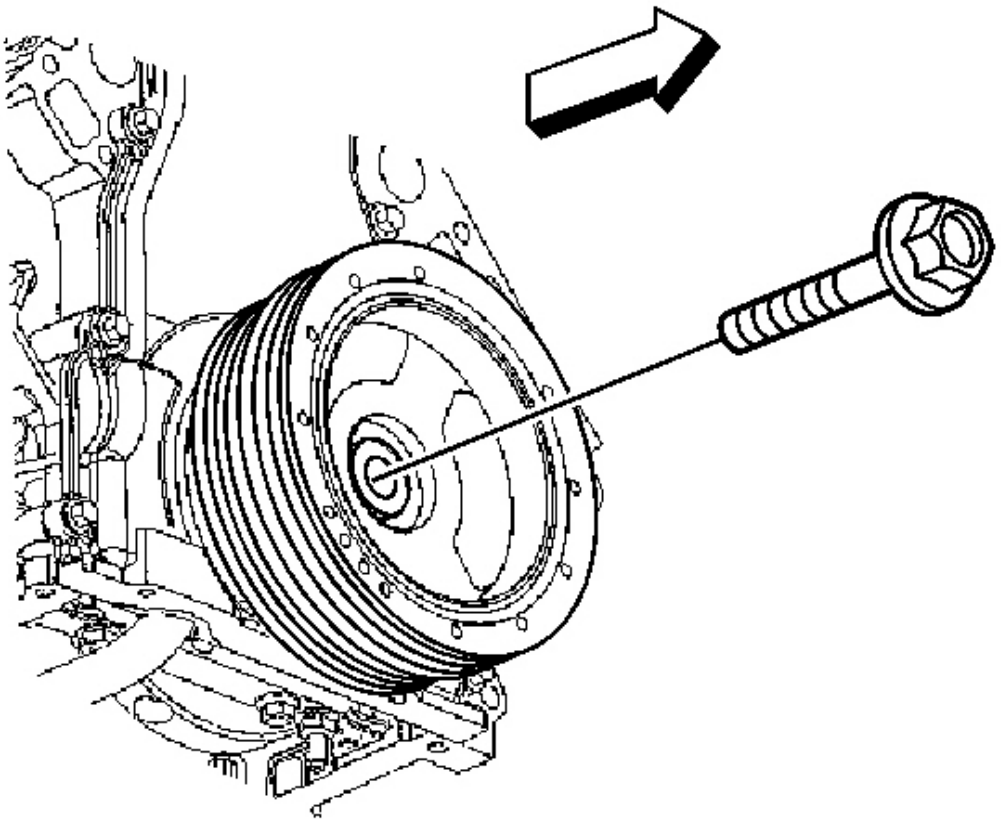

Fig. 188: Identifying Harmonic Balancer Bolt
Courtesy of GENERAL MOTORS CORP.

8. Install the NEW crankshaft balancer bolt.

   Tighten:

cardiagn.com

1. Tighten the new crankshaft balancer bolt a first pass to 50 N.m (37 lb ft).
2. Tighten the new crankshaft balancer bolt a second pass to 140 degrees using the J 36660-A .

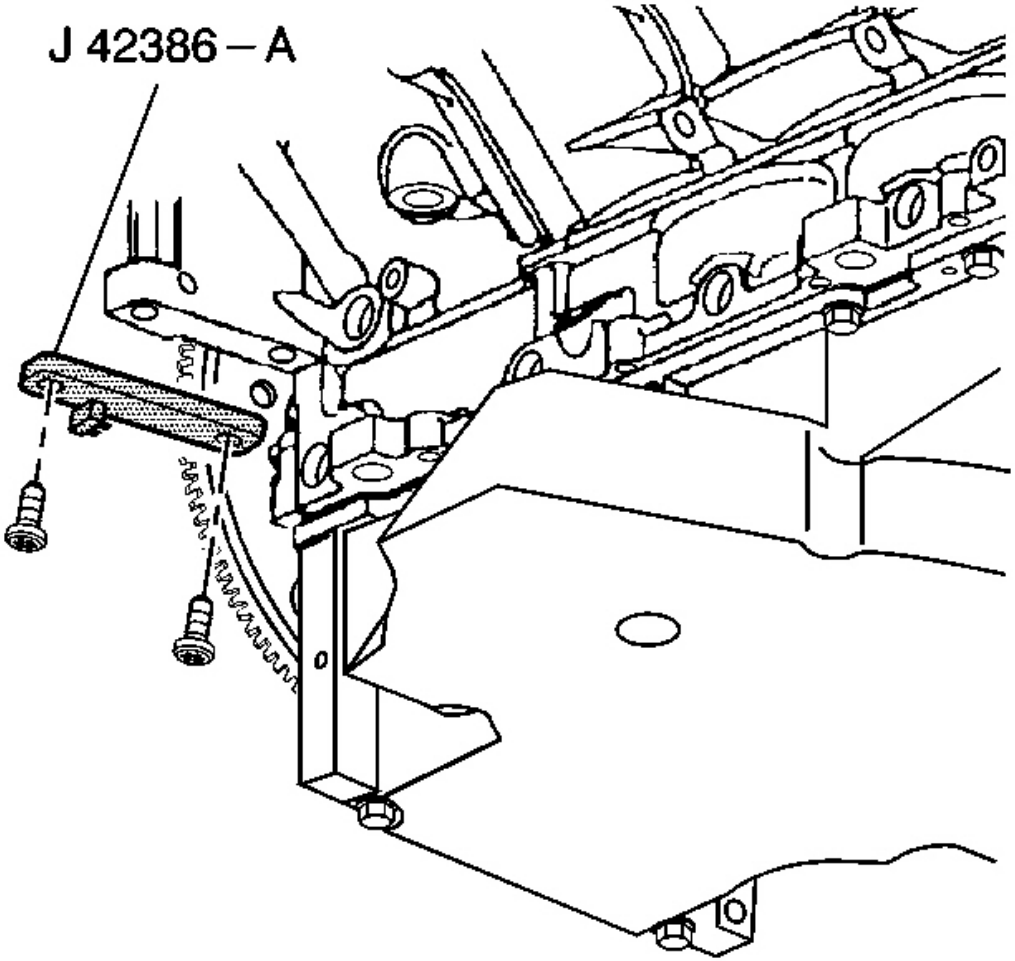

Fig. 189: J 42386-A, Crankshaft Balancer & Bolt
Courtesy of GENERAL MOTORS CORP.

9. Remove the **J 42386-A** and bolts.

cardiagn.com

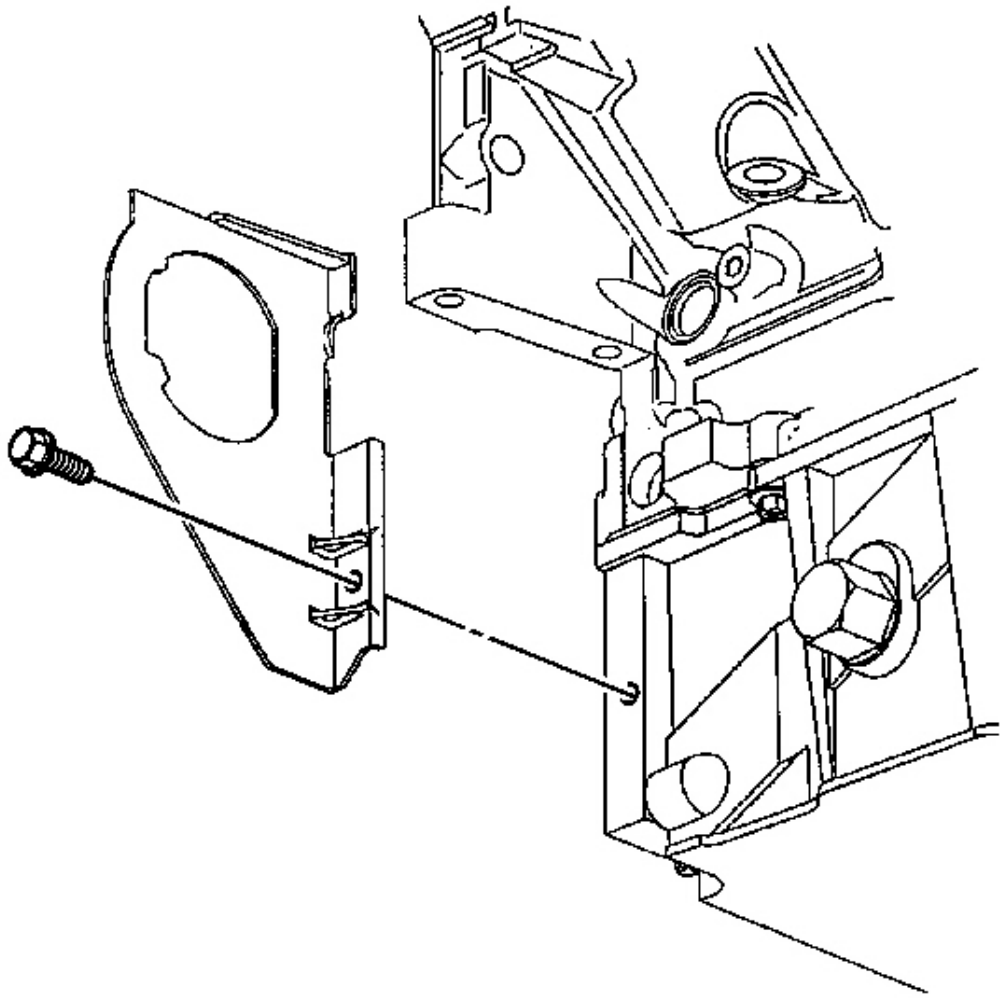

Fig. 190: Right Transmission Cover & Bolt
Courtesy of GENERAL MOTORS CORP.

10. Install the right transmission cover and bolt.

    Tighten: Tighten the right transmission cover bolt to 12 N.m (106 lb in).

11. Install the starter motor. Refer to **Starter Motor Replacement** in Engine Electrical.
12. Install the power steering gear. Refer to **Power Steering Gear Replacement** in Power Steering System.
13. Install the A/C drive belt. Refer to **Drive Belt Replacement - Air Conditioning** .
14. Perform the crankshaft position (CKP) system variation learn procedure. Refer to **CKP System**

cardiagn.com

Variation Learn Procedure in Engine Controls - 5.7 L.

CRANKSHAFT FRONT OIL SEAL REPLACEMENT

Tools Required

J 41478 Crankshaft Front Oil Seal Installer

Removal Procedure

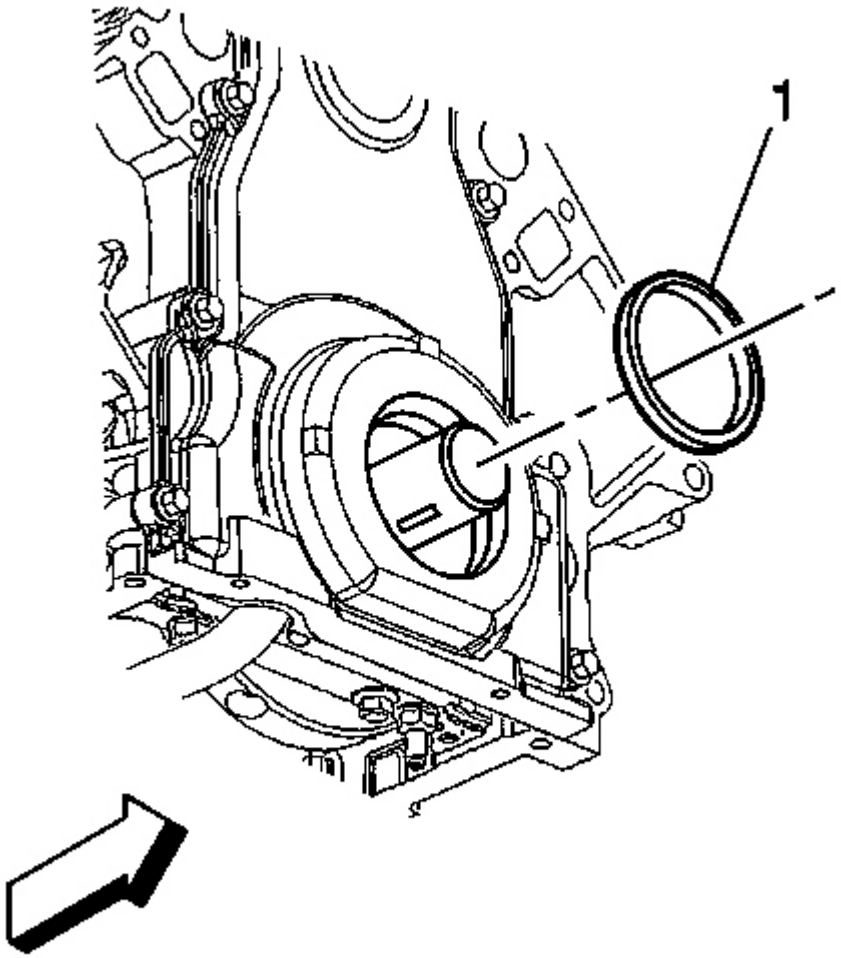

Fig. 191: Front Cover & Oil Seal Bore
Courtesy of GENERAL MOTORS CORP.

cardiagn.com

1. Remove the crankshaft balancer. Refer to **Crankshaft Balancer Replacement** .
2. Gently pry the crankshaft oil seal (1) from the front cover.

Installation Procedure

IMPORTANT:

- **Do not lubricate the oil seal sealing surface.**
- **Do not reuse the crankshaft oil seal.**

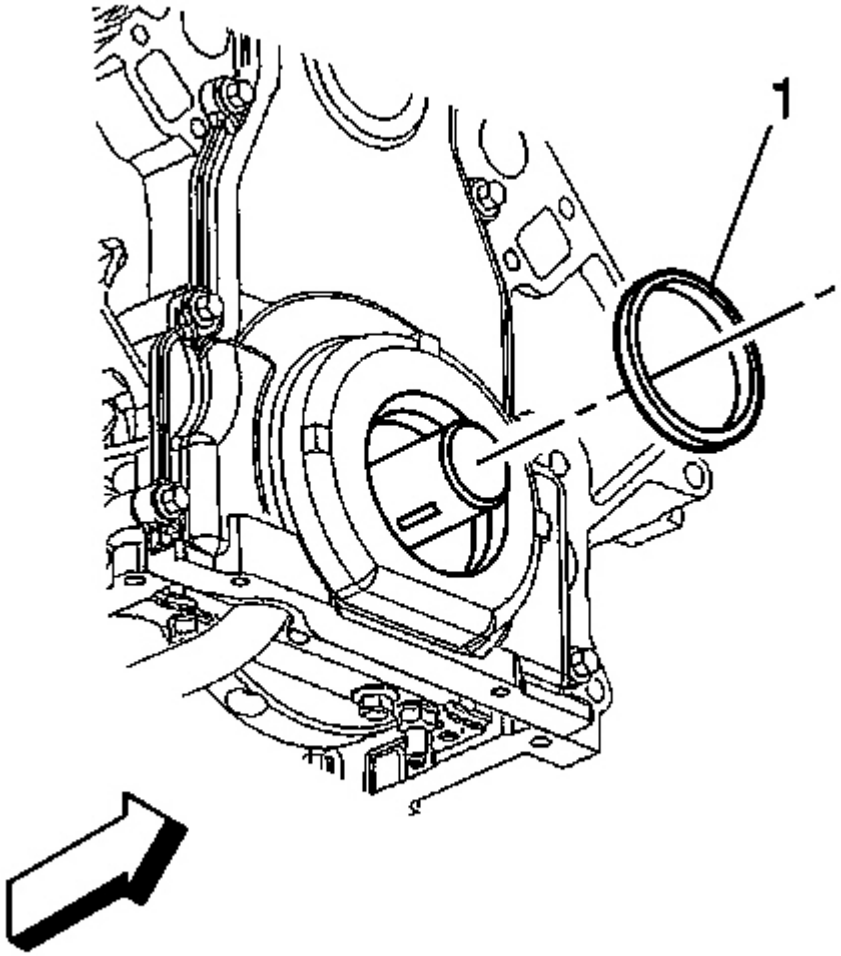

Fig. 192: Front Cover & Oil Seal Bore
Courtesy of GENERAL MOTORS CORP.

cardiagn.com

1. Lubricate the outer edge of the oil seal (1) with clean engine oil.
2. Lubricate the front cover oil seal bore with clean engine oil.

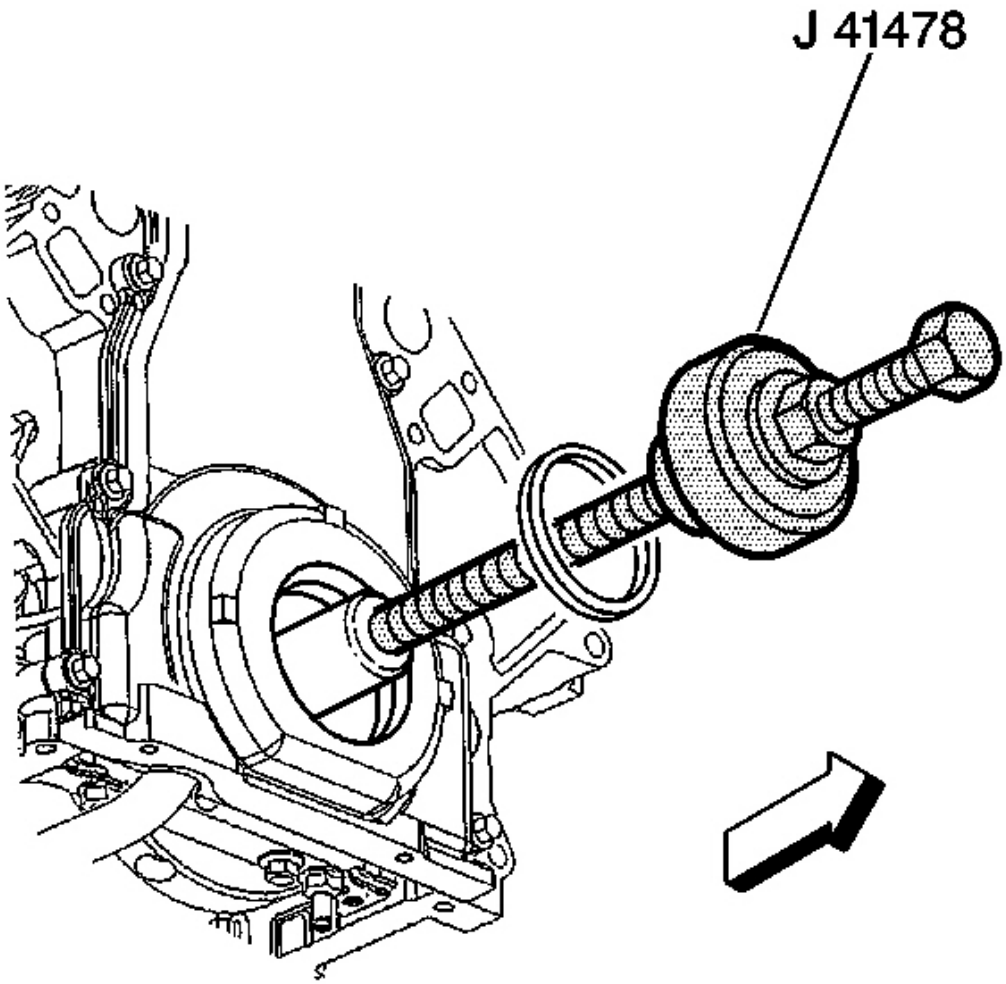

Fig. 193: J 41478 & Crankshaft Front Oil Seal
Courtesy of GENERAL MOTORS CORP.

3. Install the crankshaft front oil seal onto the **J 41478** guide.
4. Install the **J 41478** threaded rod (with nut, washer, guide, and oil seal) into the end of the crankshaft.
5. Use the **J 41478** in order to install the oil seal into the cover bore.
    1. Use a wrench and hold the hex on the installer tool.
    2. Use a second wrench and rotate the installer nut clockwise until the seal bottoms in the cover bore.

cardiagn.com

3. Remove the tool.
4. Inspect the oil seal for proper installation. The oil seal should be installed evenly and completely into the front cover bore.

6. Install the crankshaft balancer. Refer to **Crankshaft Balancer Replacement** .

ENGINE FRONT COVER REPLACEMENT

Tools Required

- **J 41476** Front and Rear Cover Alignment (Crankshaft Oil Seal Area)
- **J 41478** Crankshaft Front Oil Seal Installer

Removal Procedure

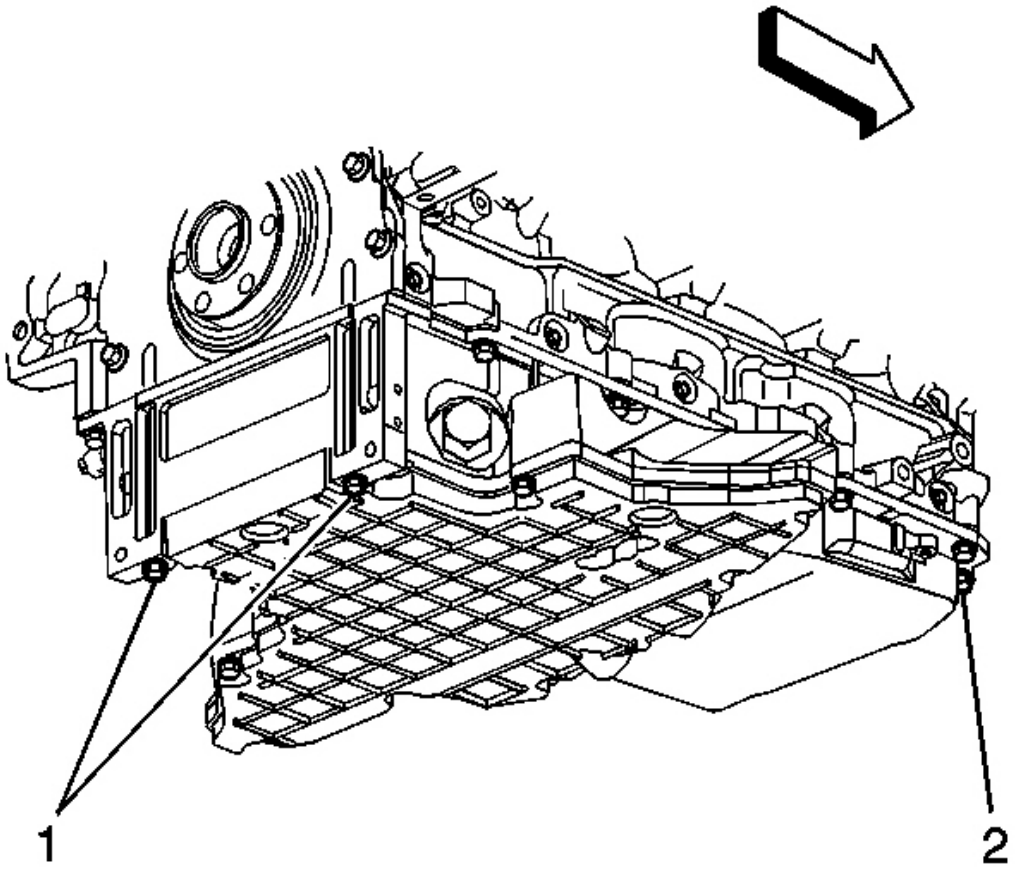

Fig. 194: Oil Pan-To-Front Cover Bolts & Oil Pan-To-Rear Cover Bolts

cardiagn.com

Courtesy of GENERAL MOTORS CORP.

1. Remove the crankshaft balancer. Refer to **Crankshaft Balancer Replacement** .
2. Remove the water pump. Refer to **Water Pump Replacement** in Engine Cooling.
3. Remove the oil pan-to-front cover bolts (2).

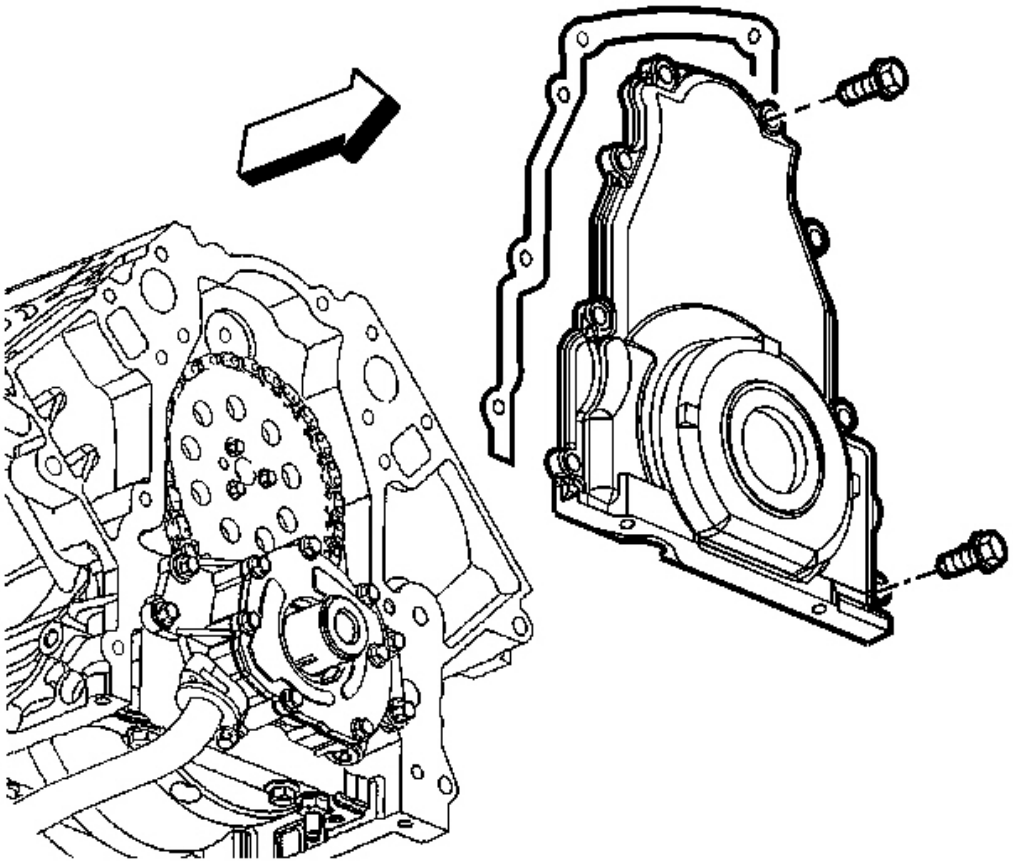

Fig. 195: Front Cover Gasket & Bolts
Courtesy of GENERAL MOTORS CORP.

4. Remove the front cover bolts.
5. Remove the front cover and gasket.
6. Discard the front cover gasket.
7. Clean and inspect the engine front cover. Refer to **Engine Front Cover Cleaning and Inspection** .

Installation Procedure

cardiagn.com

IMPORTANT:

- **Do not reuse the crankshaft oil seal or front cover gasket.**
- **Do not apply any type sealant to the front cover gasket (unless specified).**
- **The special tool in this procedure is used to center the crankshaft front oil seal.**
- **All gasket surfaces should be free of oil or other foreign material during assembly.**
- **The crankshaft front oil seal MUST be centered in relation to the crankshaft.**
- **An improperly aligned front cover may cause premature front oil seal wear and/or engine oil leaks.**

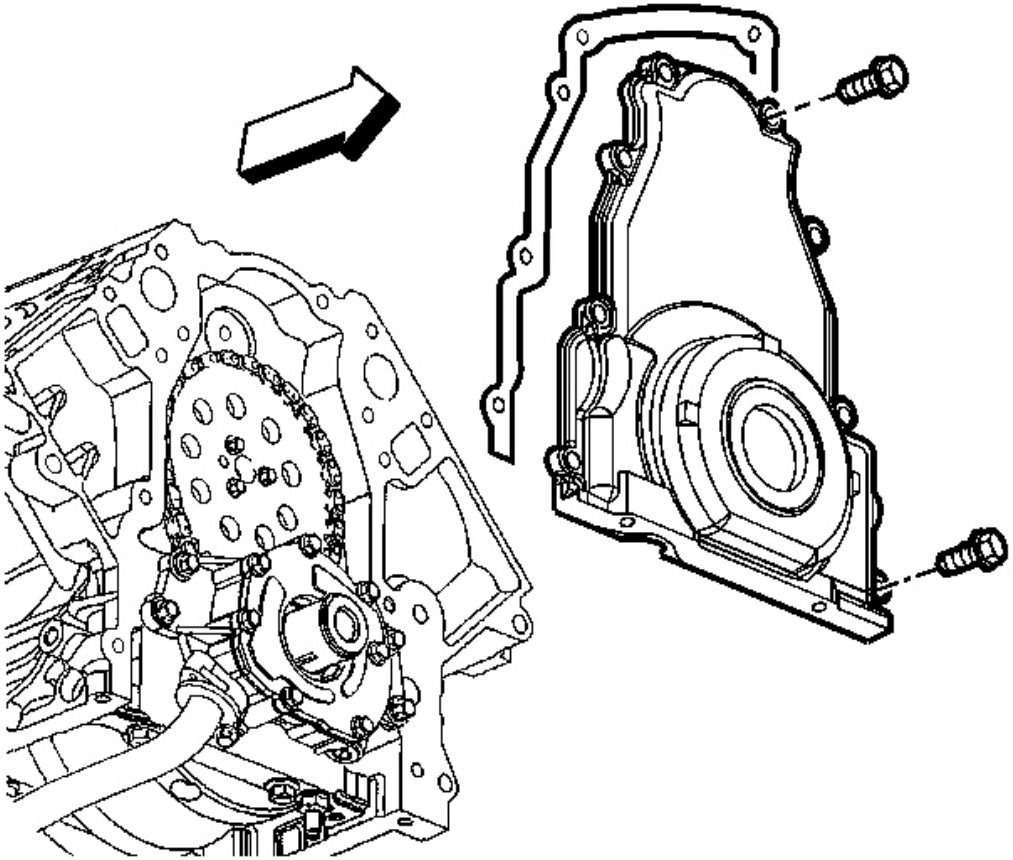

Fig. 196: Front Cover Gasket & Bolts
Courtesy of GENERAL MOTORS CORP.

cardiagn.com

1. Apply a 5 mm (0.20 in) bead of sealant GM P/N 12378190, or equivalent 20 mm (0.80 in) long to the oil pan to engine block junction.
2. Install the front cover gasket and cover.
3. Install the front cover bolts until snug. Do not overtighten.

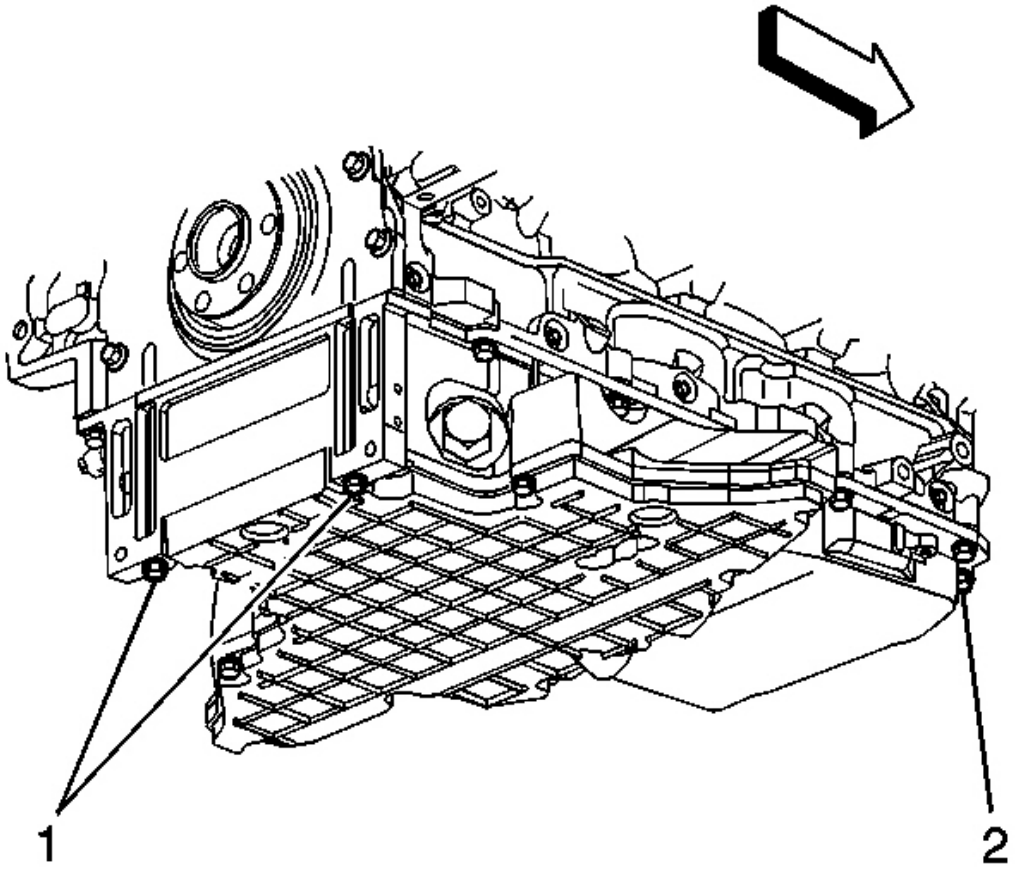

Fig. 197: Oil Pan-To-Front Cover Bolts & Oil Pan-To-Rear Cover Bolts
Courtesy of GENERAL MOTORS CORP.

4. Install the oil pan-to-front cover bolts (2) until snug. Do not overtighten.

cardiagn.com

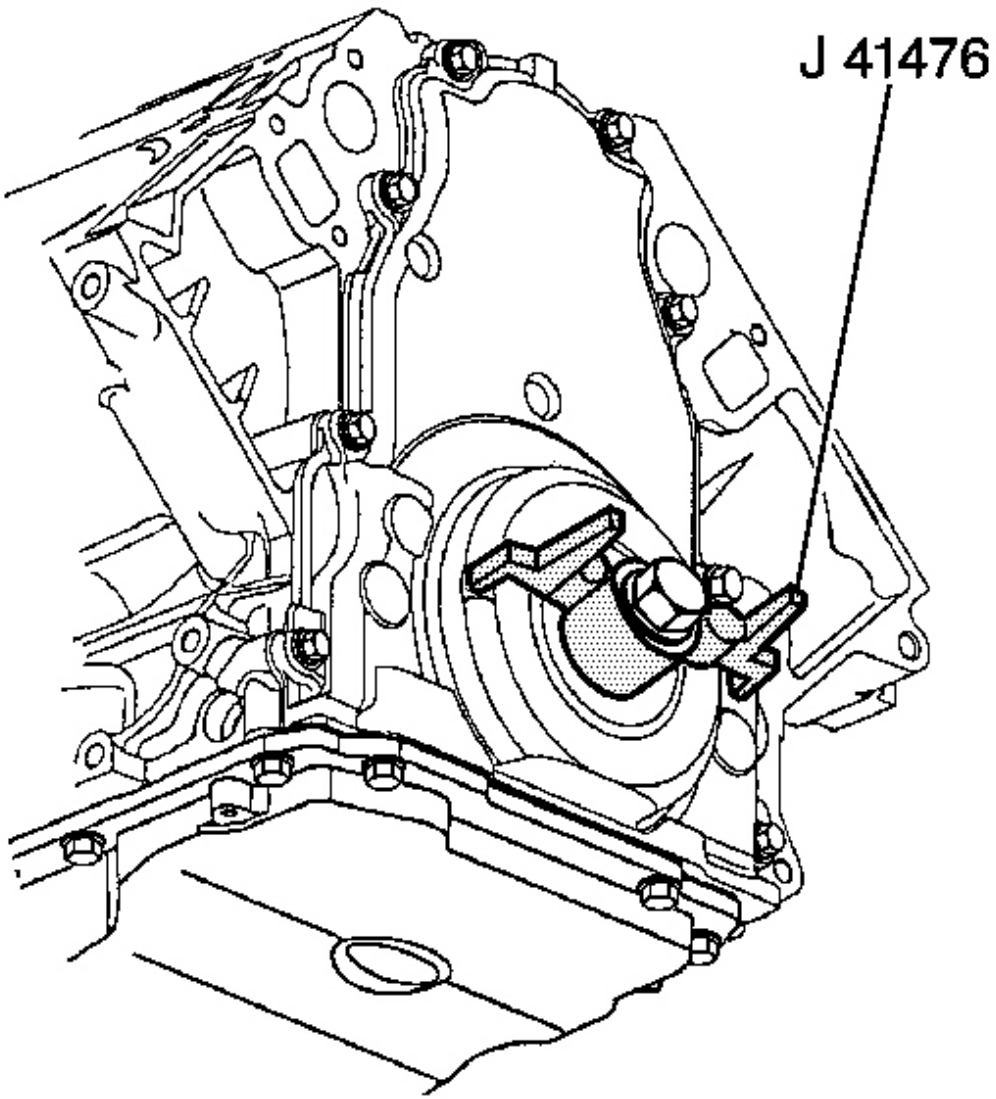

Fig. 198: J 41476 & Front Cover
Courtesy of GENERAL MOTORS CORP.

5. Install the **J 41476** to the front cover.
6. Align the tapered legs of the **J 41476** with the machined alignment surfaces on the front cover.

NOTE: **Refer to Fastener Notice in Cautions and Notices.**

cardiagn.com

7. Install the crankshaft balancer bolt until sung. Do not overtighten.

   Tighten:
   1. Tighten the oil pan-to-front cover bolts to 25 N.m (18 lb ft).
   2. Tighten the engine front cover bolts to 25 N.m (18 lb ft).

8. Remove the **J 41476** .

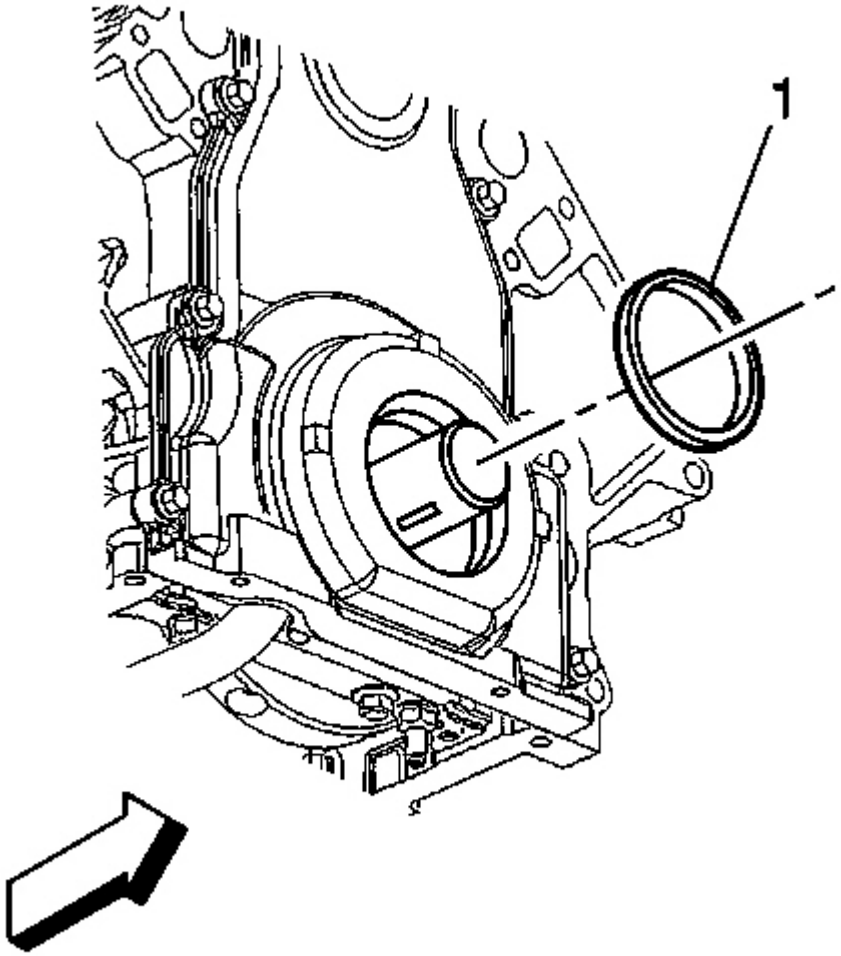

Fig. 199: Front Cover & Oil Seal Bore
Courtesy of GENERAL MOTORS CORP.

cardiagn.com

IMPORTANT:

- **Do not lubricate the oil seal sealing surface.**
- **Do not reuse the crankshaft oil seal.**

9. Lubricate the outer edge of the oil seal (1) with clean engine oil.
10. Lubricate the front cover oil seal bore with clean engine oil.

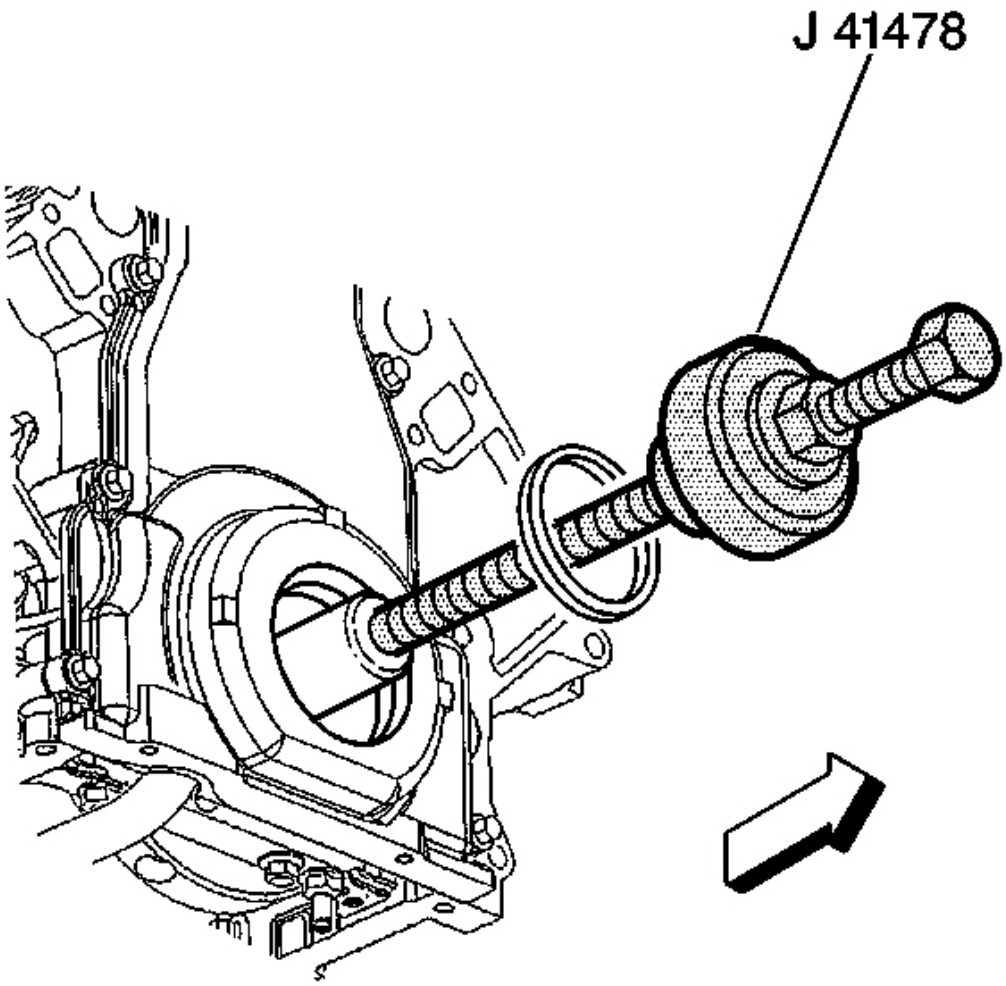

Fig. 200: J 41478 & Crankshaft Front Oil Seal
Courtesy of GENERAL MOTORS CORP.

11. Install the crankshaft front oil seal into the **J 41478** guide.
12. Install the **J 41478** threaded rod (with nut, washer, guide, and oil seal) into the end of the crankshaft.

cardiagn.com

13. Use the **J 41478** in order to install the oil seal into the cover bore.
    - Use a wrench and hold the hex on the installer bolt.
    - Use a second wrench and rotate the installer nut clockwise until the seal bottoms in the cover bore.
    - Remove the tool.
    - Inspect the oil seal for proper installation. The oil seal should be installed evenly and completely into the front cover bore.
14. Install the water pump. Refer to **Water Pump Replacement** in Engine Cooling.
15. Install the crankshaft balancer. Refer to **Crankshaft Balancer Replacement** .

CRANKSHAFT REAR OIL SEAL REPLACEMENT

Tools Required

J 41479 Crankshaft Rear Oil Seal Installer

Removal Procedure

cardiagn.com

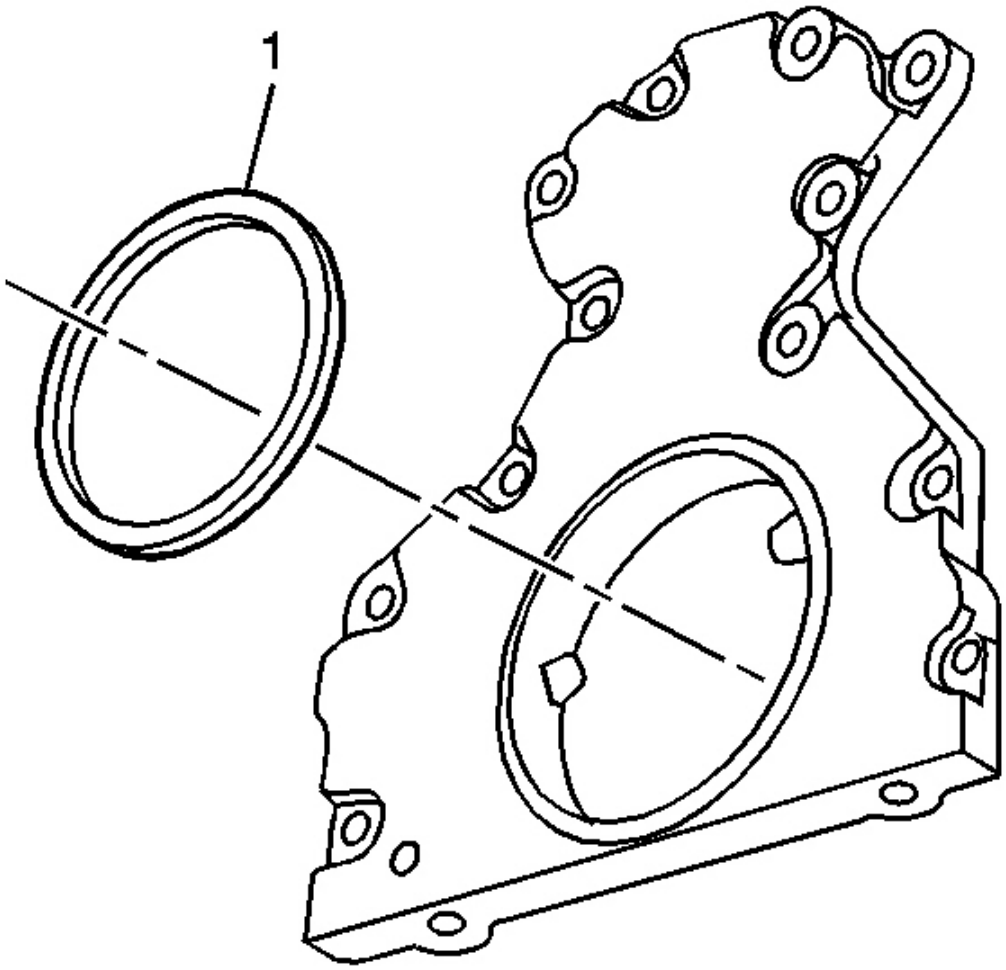

Fig. 201: View Of Crankshaft Rear Oil Seal
Courtesy of GENERAL MOTORS CORP.

1. Remove the engine flywheel. Refer to **Engine Flywheel Replacement** .
2. Gently pry the crankshaft rear oil seal (1) from the rear cover.

Installation Procedure

IMPORTANT:

- **Do not lubricate the oil seal inside diameter (ID) of the crankshaft surface.**
- **Do not reuse the crankshaft rear oil seal.**

cardiagn.com

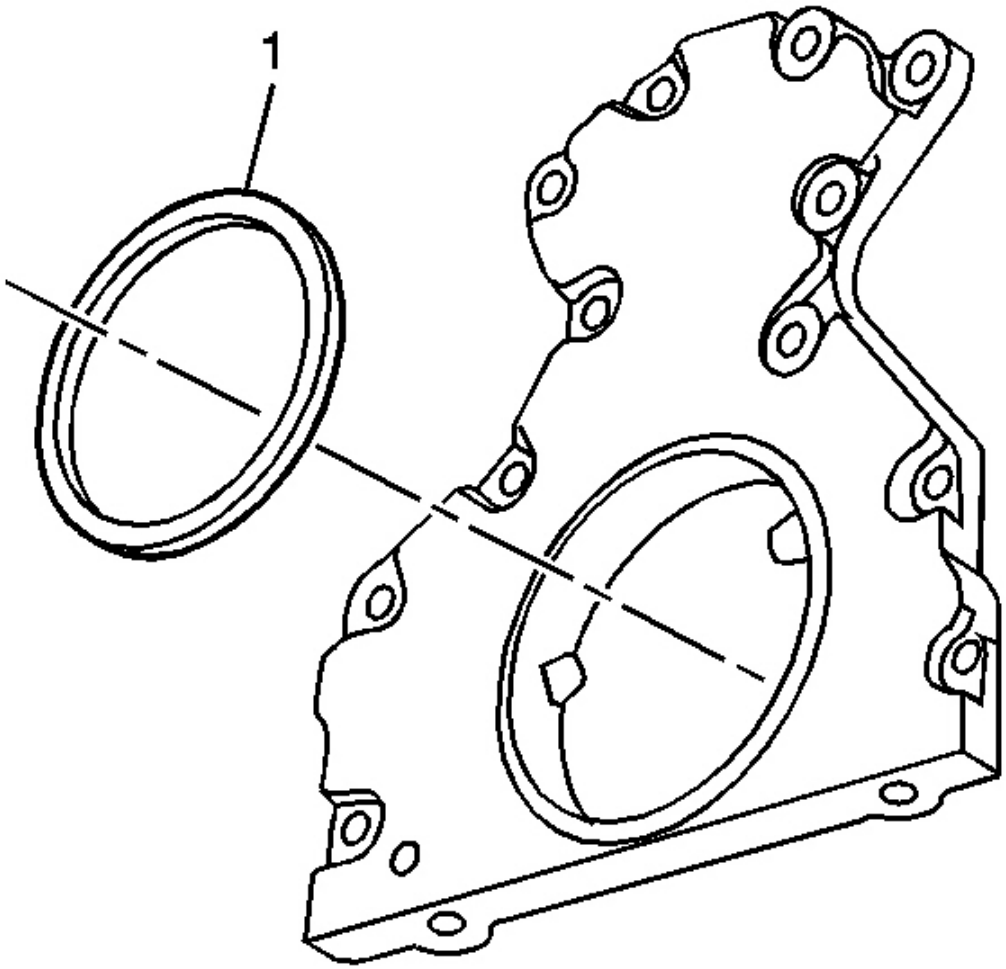

Fig. 202: View Of Crankshaft Rear Oil Seal
Courtesy of GENERAL MOTORS CORP.

1. Lubricate the outside diameter (OD) of the oil seal (1) with clean engine oil.

   DO NOT allow oil or other lubricants to contact the seal surface.

2. Lubricate the rear cover oil seal bore with clean engine oil.

   DO NOT allow oil or other lubricants to contact the crankshaft surface.

cardiagn.com

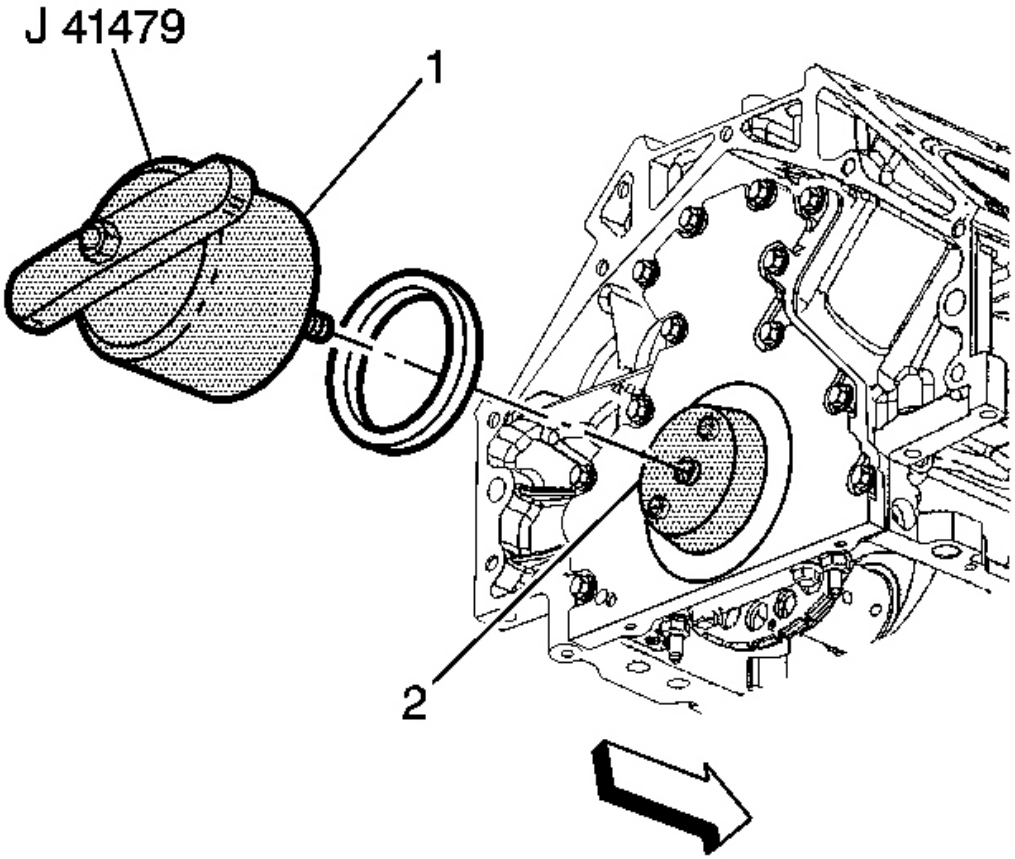

Fig. 203: J 41479, Cone & Rear Crankshaft
Courtesy of GENERAL MOTORS CORP.

3. Install the **J 41479** cone (2) and bolts onto the rear of the crankshaft.
4. Tighten the bolts until snug. Do not overtighten.
5. Install the rear oil seal onto the tapered cone (2) and push the seal to the rear cover bore.
6. Thread the **J 41479** threaded rod into the tapered cone until the tool (1) contacts the oil seal.
7. Align the oil seal onto the tool (1).
8. Rotate the handle of the tool (1) clockwise until the seal enters the rear cover and bottoms into the cover bore.
9. Remove the **J 41479** .
10. Install the engine flywheel. Refer to **Engine Flywheel Replacement** .

ENGINE REAR COVER REPLACEMENT

cardiagn.com

Tools Required

- **J 41476** Front and Rear Cover Alignment (Crankshaft Oil Seal Area)
- **J 41479** Crankshaft Rear Oil Seal Installer

Removal Procedure

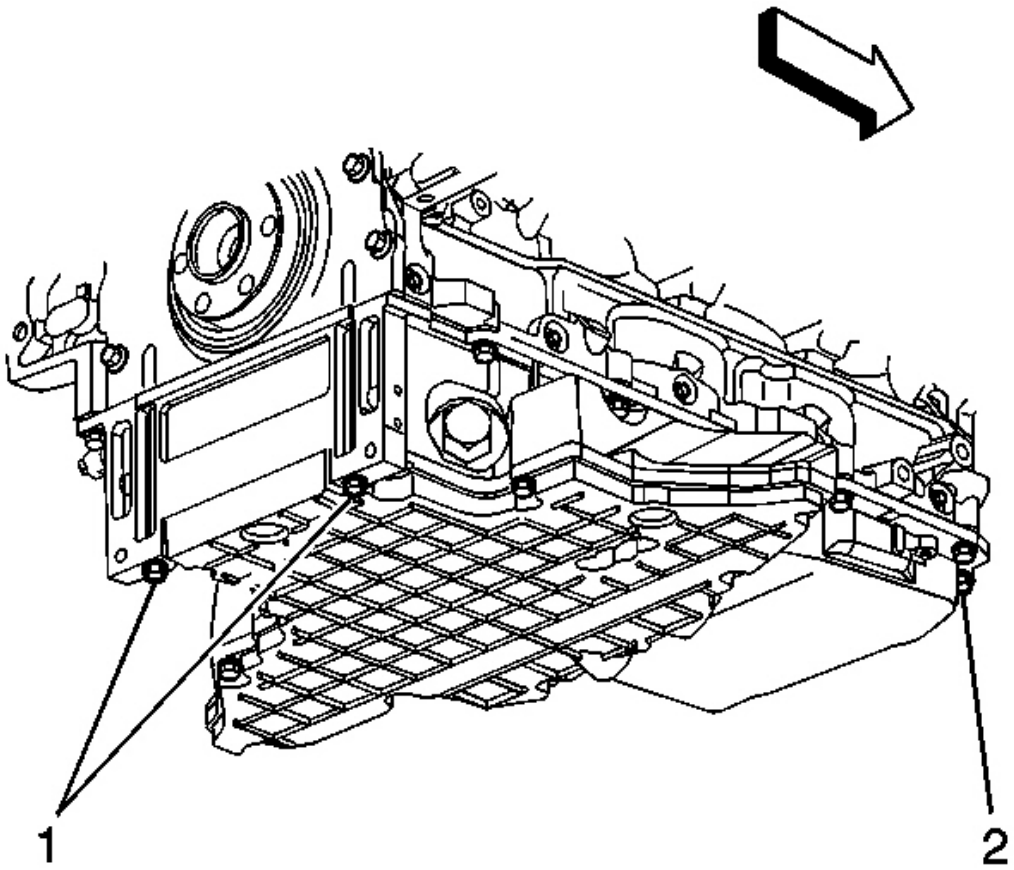

Fig. 204: Oil Pan-To-Front Cover Bolts & Oil Pan-To-Rear Cover Bolts
Courtesy of GENERAL MOTORS CORP.

1. Remove the engine flywheel. Refer to **Engine Flywheel Replacement** .
2. Remove the oil pan-to-rear cover bolts (1).

cardiagn.com

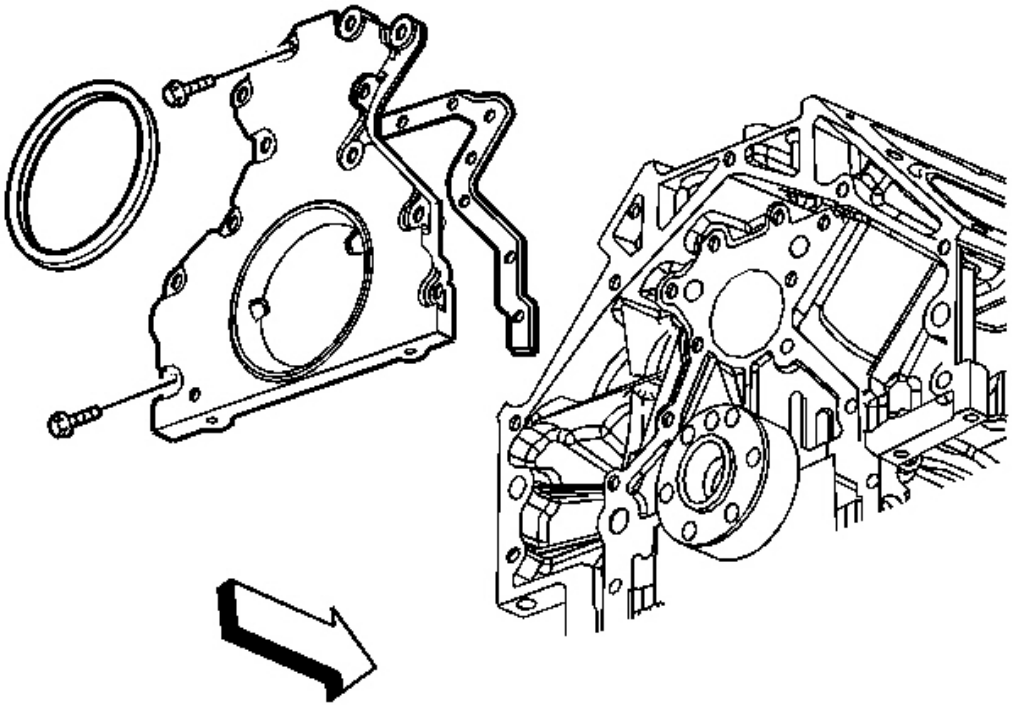

Fig. 205: Rear Cover Gasket & Bolts
Courtesy of GENERAL MOTORS CORP.

3. Remove the rear cover bolts.
4. Remove the rear cover and gasket.
5. Discard the rear cover gasket.
6. Clean and inspect the engine rear cover. Refer to **Engine Rear Cover Cleaning and Inspection** .

Installation Procedure

IMPORTANT:

- **Do not reuse the crankshaft oil seal or rear cover gasket.**
- **Do not apply any type of sealant to the rear cover gasket (unless specified).**
- **The special tool in this procedure is used to center the crankshaft rear oil seal.**
- **All gasket surfaces should be free of oil or other foreign material during assembly.**
- **The crankshaft rear oil seal MUST be centered in relation to the**

cardiagn.com

crankshaft.

- **The crankshaft rear oil seal will be installed after the rear cover has been installed.**
- **An improperly aligned rear cover may cause premature rear oil seal wear and/or engine assembly oil leaks.**

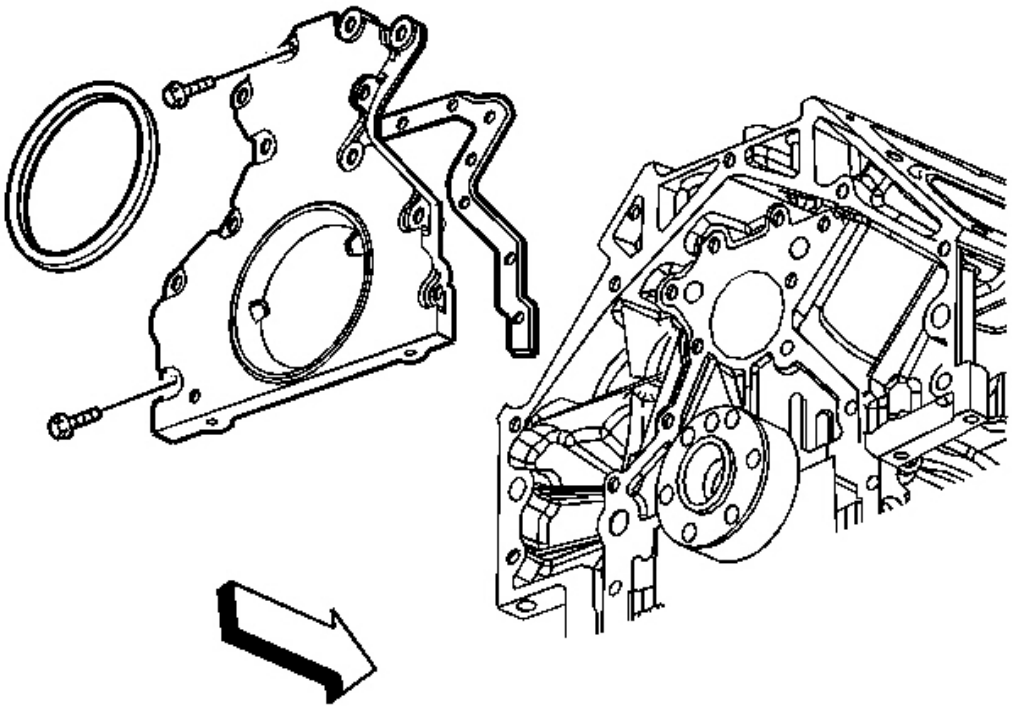

Fig. 206: Rear Cover Gasket & Bolts
Courtesy of GENERAL MOTORS CORP.

1. Install the rear cover gasket and cover.
2. Install the rear cover bolts until snug. Do not overtighten.

cardiagn.com

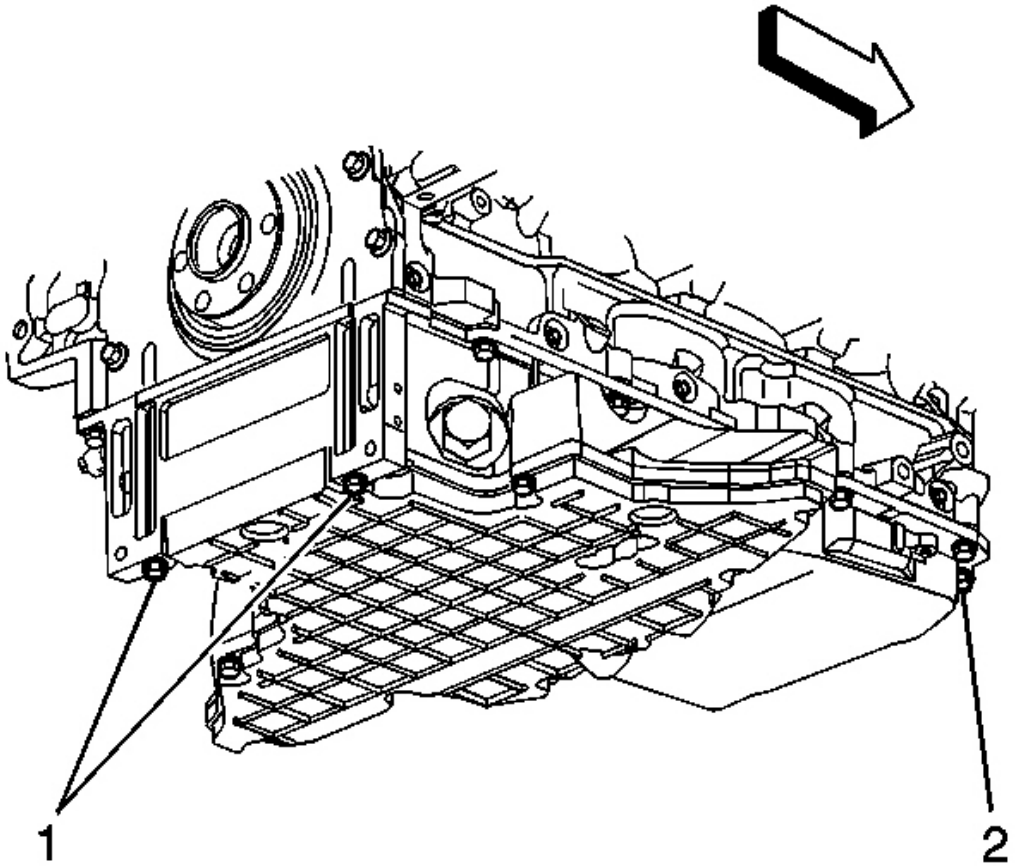

Fig. 207: Oil Pan-To-Front Cover Bolts & Oil Pan-To-Rear Cover Bolts
Courtesy of GENERAL MOTORS CORP.

3. Install the oil pan-to-rear cover bolts (1) until snug. Do not overtighten.

cardiagn.com

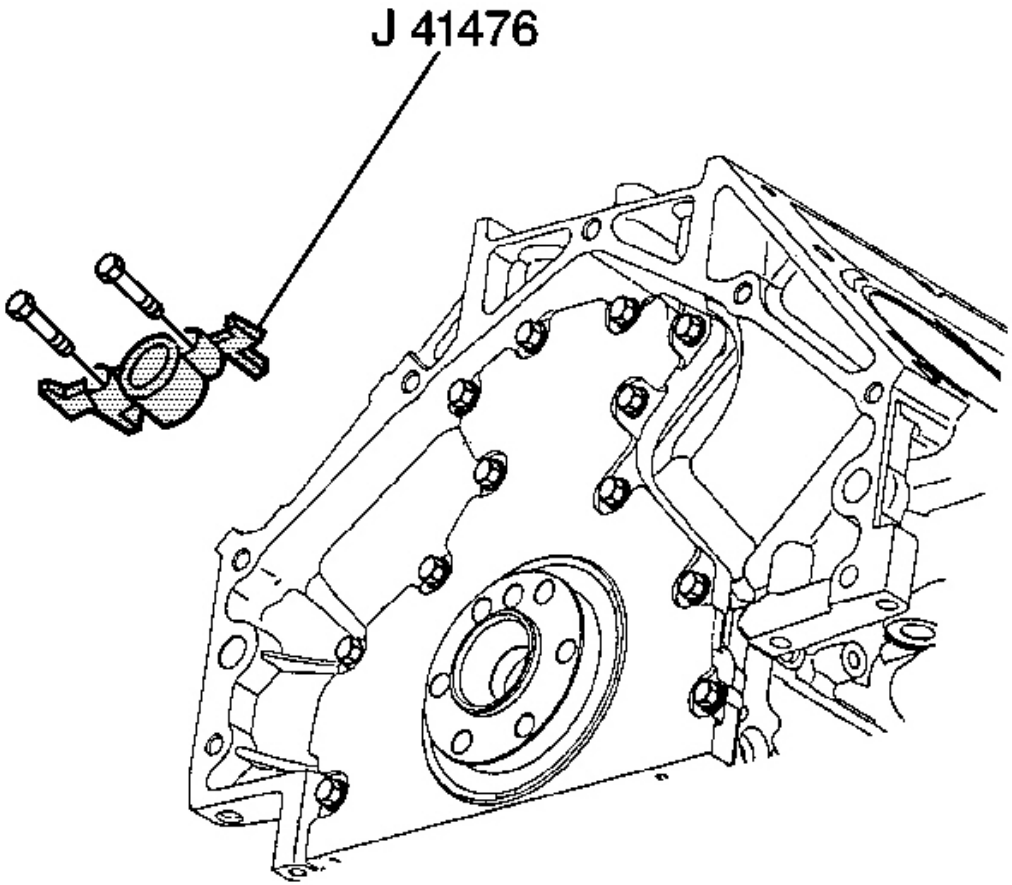

Fig. 208: J 41476 & Bolts
Courtesy of GENERAL MOTORS CORP.

IMPORTANT: The tapered legs of the alignment tool must enter the rear cover oil seal bore.

4. Rotate the crankshaft until 2 opposing flywheel bolt holes are parallel to the oil pan surface.
5. Install the **J 41476** and bolts onto the rear of the crankshaft.

NOTE: Refer to Fastener Notice in Cautions and Notices.

6. Tighten the **J 41476** bolts until snug. Do not overtighten.

Tighten:

cardiagn.com

1. Tighten the oil pan-to-rear cover bolts to 12 N.m (106 lb in).
2. Tighten the engine rear cover bolts to 25 N.m (18 lb ft).

7. Remove the **J 41476** .

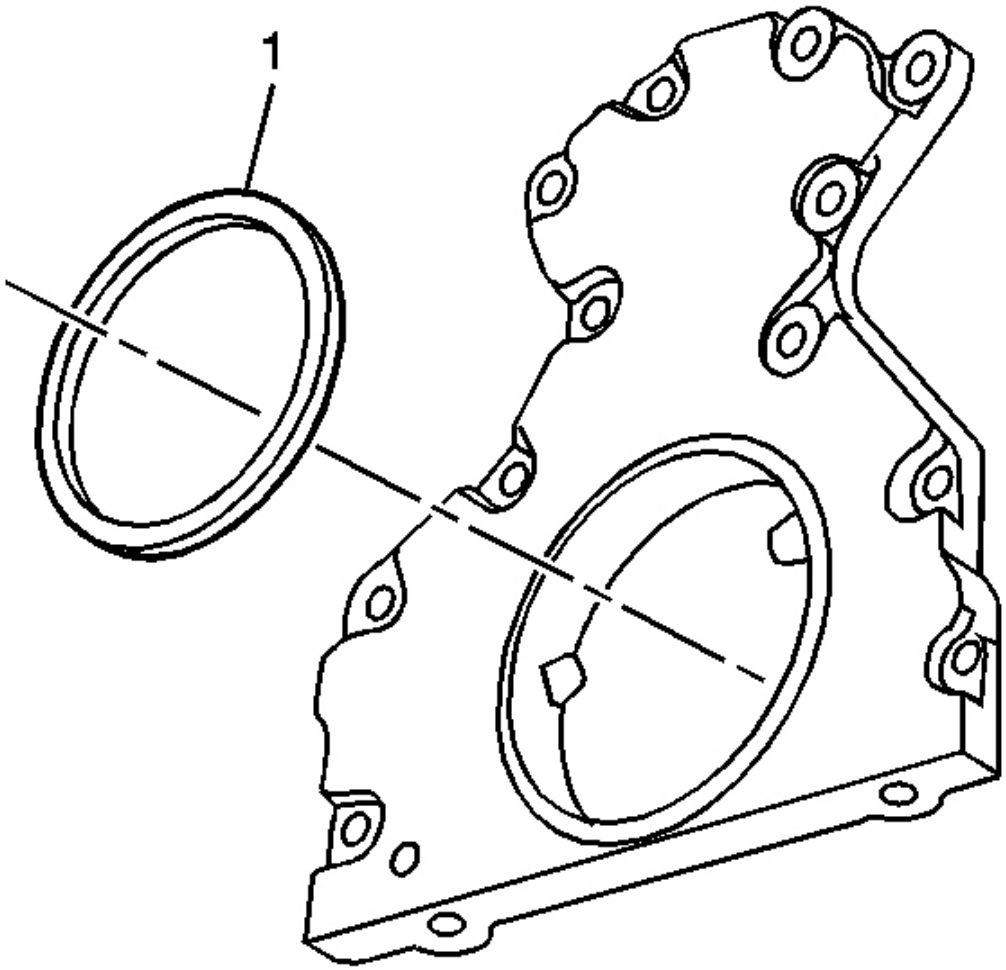

Fig. 209: View Of Crankshaft Rear Oil Seal
Courtesy of GENERAL MOTORS CORP.

IMPORTANT:

- **Do not lubricate the oil seal inside diameter (ID) or the crankshaft surface.**
- **Do not reuse the crankshaft rear oil seal.**

cardiagn.com

8. Lubricate the outside diameter (OD) of the oil seal (1) with clean engine oil.

   Do not allow oil or other lubricants to contact the seal surface.

9. Lubricate the rear cover oil seal bore with clean engine oil.

   Do not allow oil or other lubricants to contact the crankshaft surface.

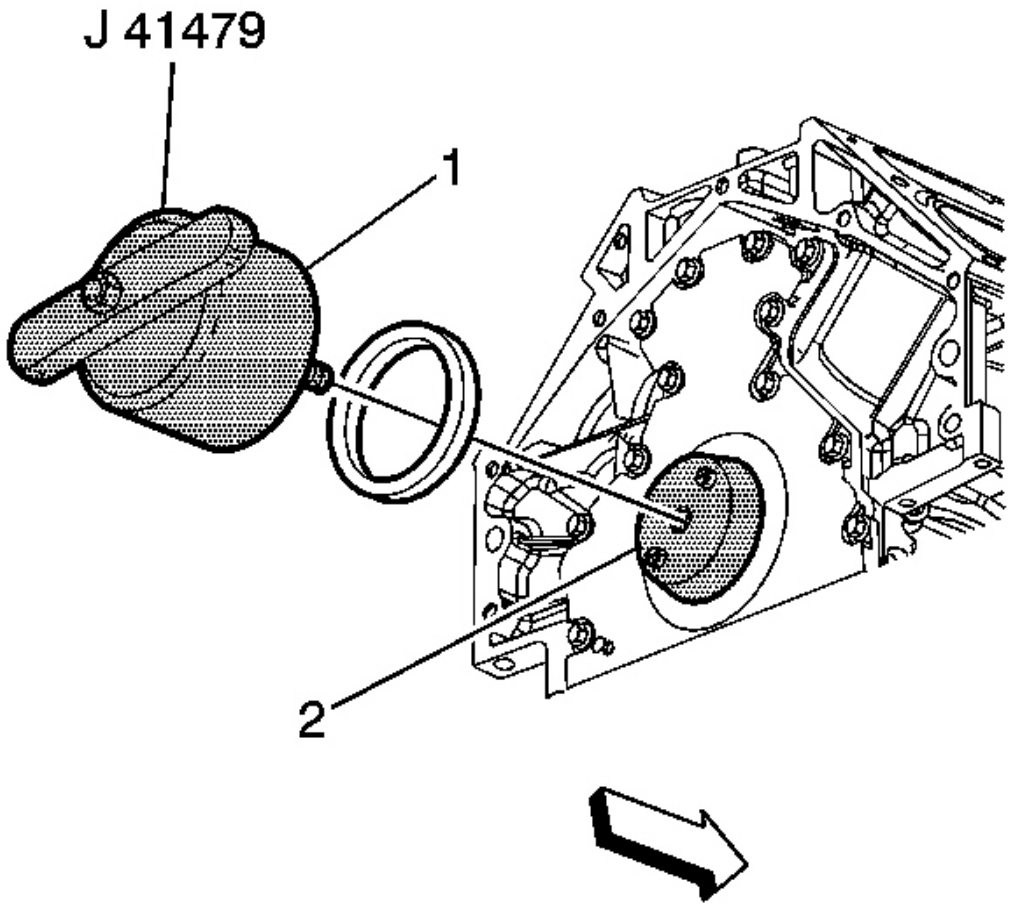

Fig. 210: J 41479, Rear Crankshaft & Cone
Courtesy of GENERAL MOTORS CORP.

10. Install the **J 41479** cone (2) and bolts onto the rear of the crankshaft.
11. Tighten the bolts until snug. Do not overtighten.
12. Install the rear oil seal onto the tapered cone (2) until the tool (1) contacts the oil seal.

cardiagn.com

13. Thread the **J 41479** threaded rod into the tapered cone (2) until the tool (1) contacts the oil seal.
14. Align the oil seal onto the tool (1).
15. Rotate the handle of the **J 41479** clockwise until the seal enters the rear cover and bottoms into the cover bore.
16. Remove the **J 41479** .
17. Install the engine flywheel. Refer to **Engine Flywheel Replacement** .

OIL FILTER ADAPTER REPLACEMENT

Removal Procedure

cardiagn.com

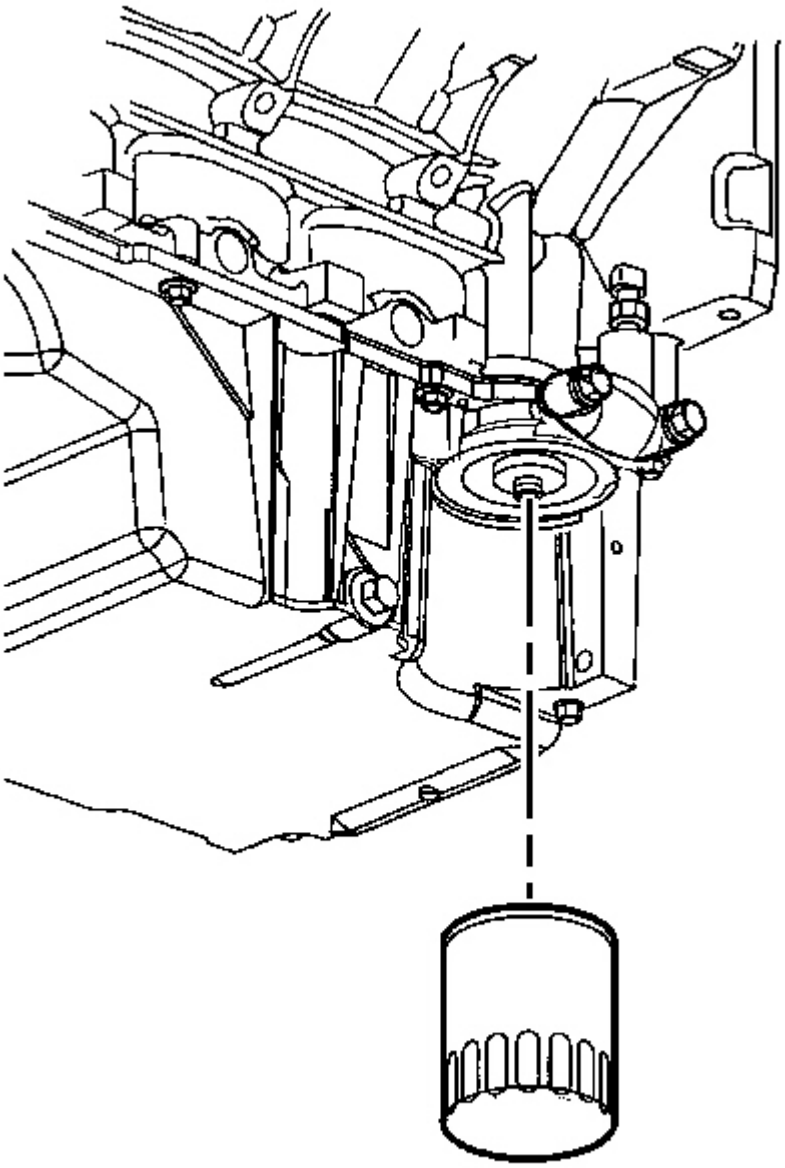

Fig. 211: Oil Filter
Courtesy of GENERAL MOTORS CORP.

1. Drain the engine oil.
2. Remove the oil filter.

cardiagn.com

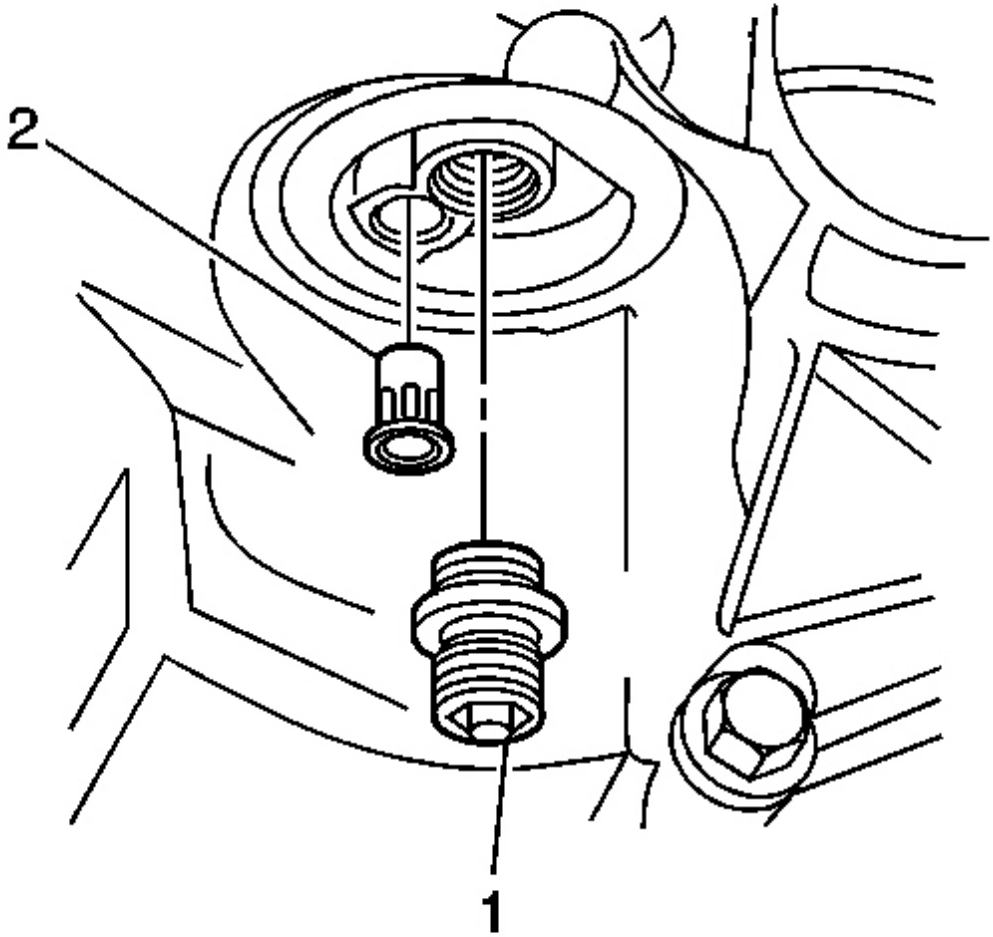

Fig. 212: Oil Filter Adapter & Oil Filter Bypass Valve
Courtesy of GENERAL MOTORS CORP.

3. Remove the oil filter adapter (1).

Installation Procedure

cardiagn.com

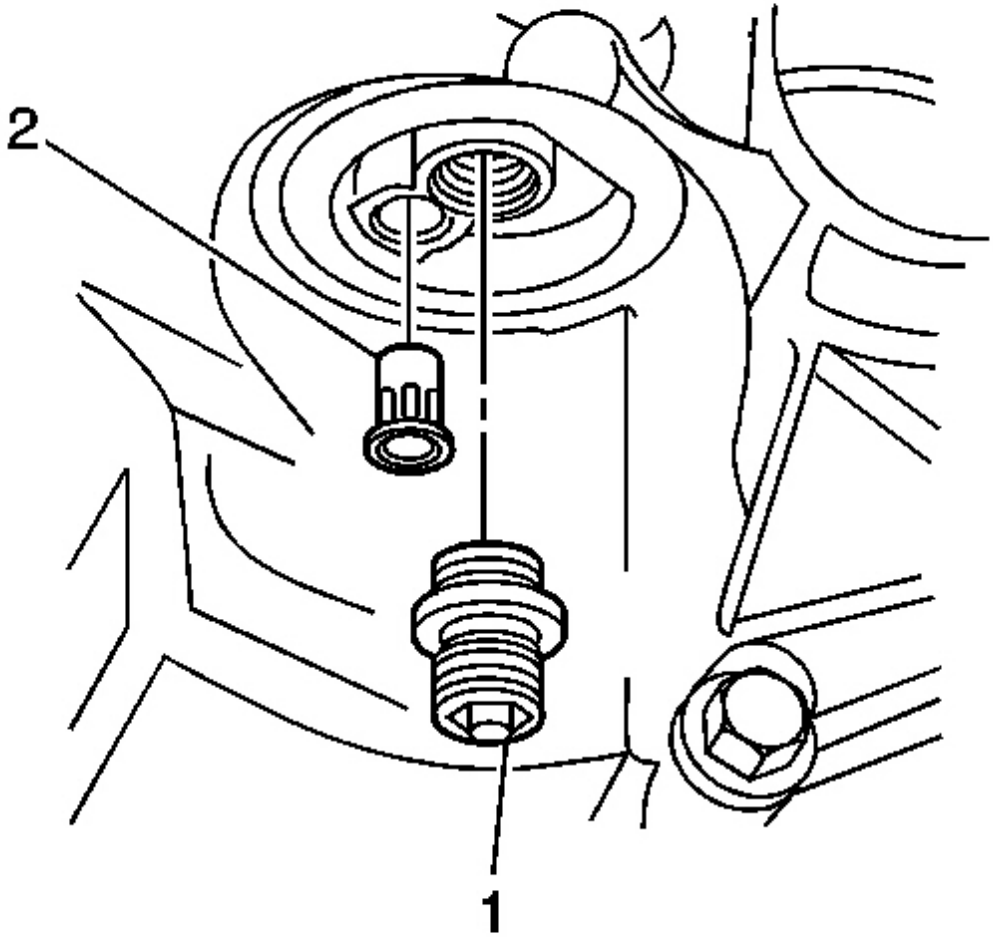

Fig. 213: Oil Filter Adapter & Oil Filter Bypass Valve
Courtesy of GENERAL MOTORS CORP.

NOTE: Refer to Fastener Notice in Cautions and Notices.

1. Install the oil filter adapter (1).

   Tighten: Tighten the oil filter adapter to 55 N.m (40 lb ft).

cardiagn.com

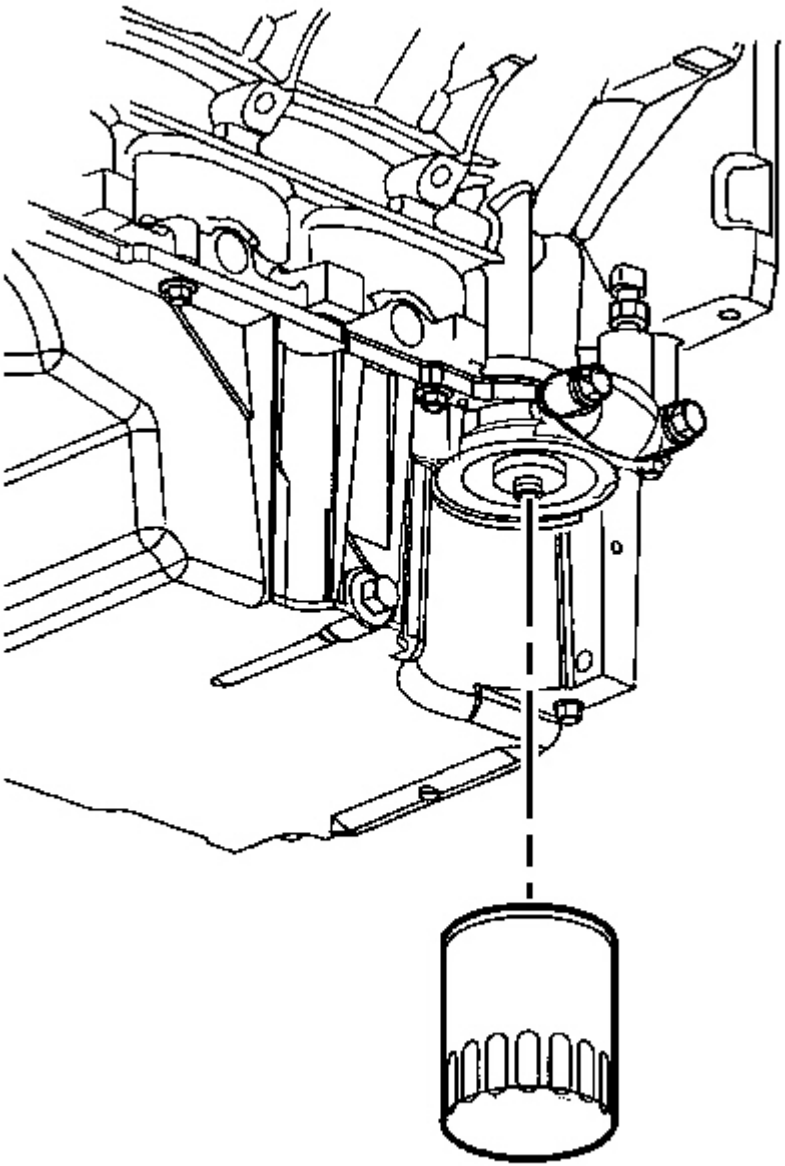

Fig. 214: Oil Filter
Courtesy of GENERAL MOTORS CORP.

2. Install the oil filter.

   Tighten: Tighten the oil filter to 30 N.m (22 lb ft).

cardiagn.com

3. Refill the engine oil.

OIL FILTER BYPASS VALVE REPLACEMENT

Removal Procedure

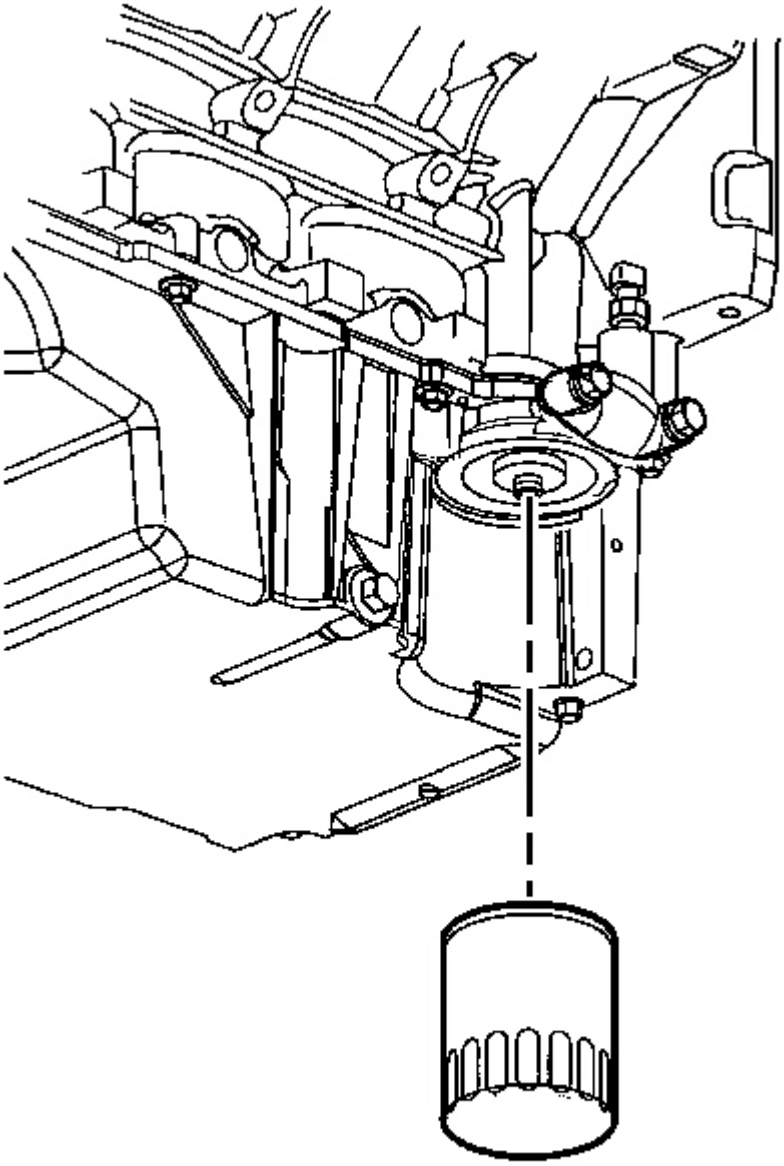

cardiagn.com

Fig. 215: Oil Filter
Courtesy of GENERAL MOTORS CORP.

1. Drain the engine oil.
2. Remove the oil filter.

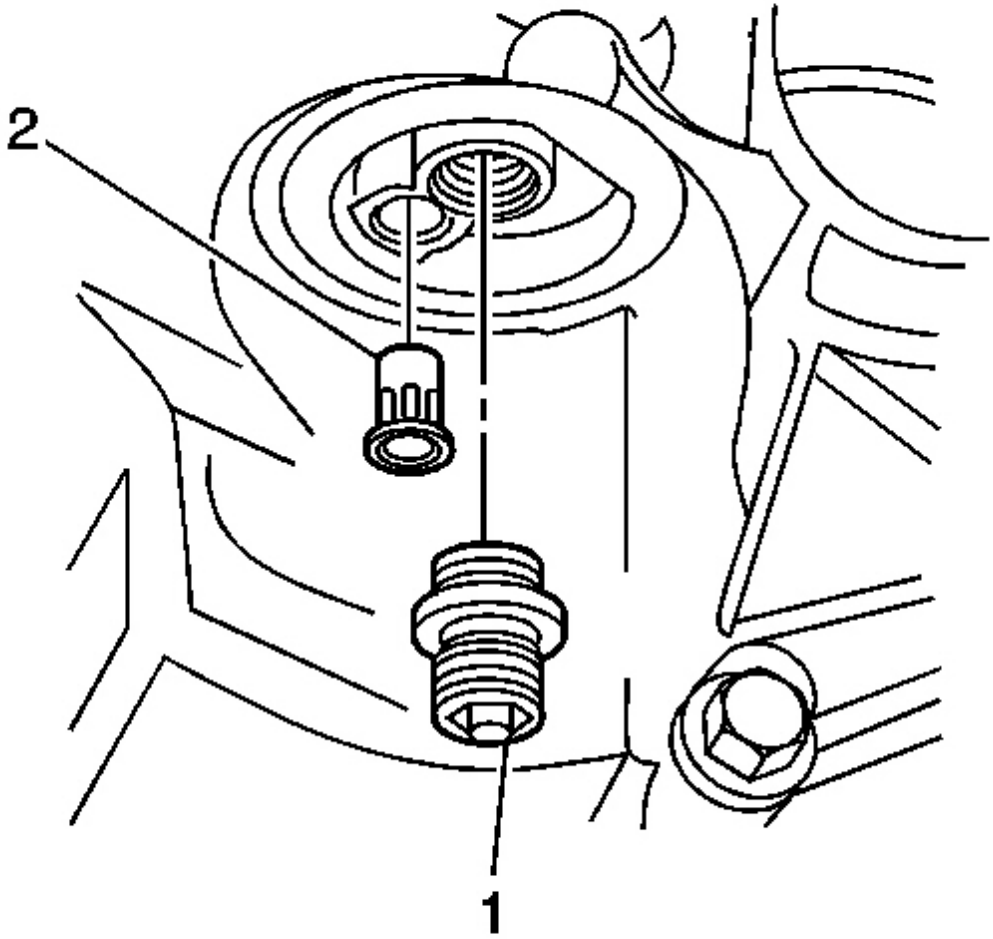

Fig. 216: Oil Filter Adapter & Oil Filter Bypass Valve
Courtesy of GENERAL MOTORS CORP.

3. Remove the oil filter adapter 1.
4. Remove the oil filter bypass valve 2.

cardiagn.com

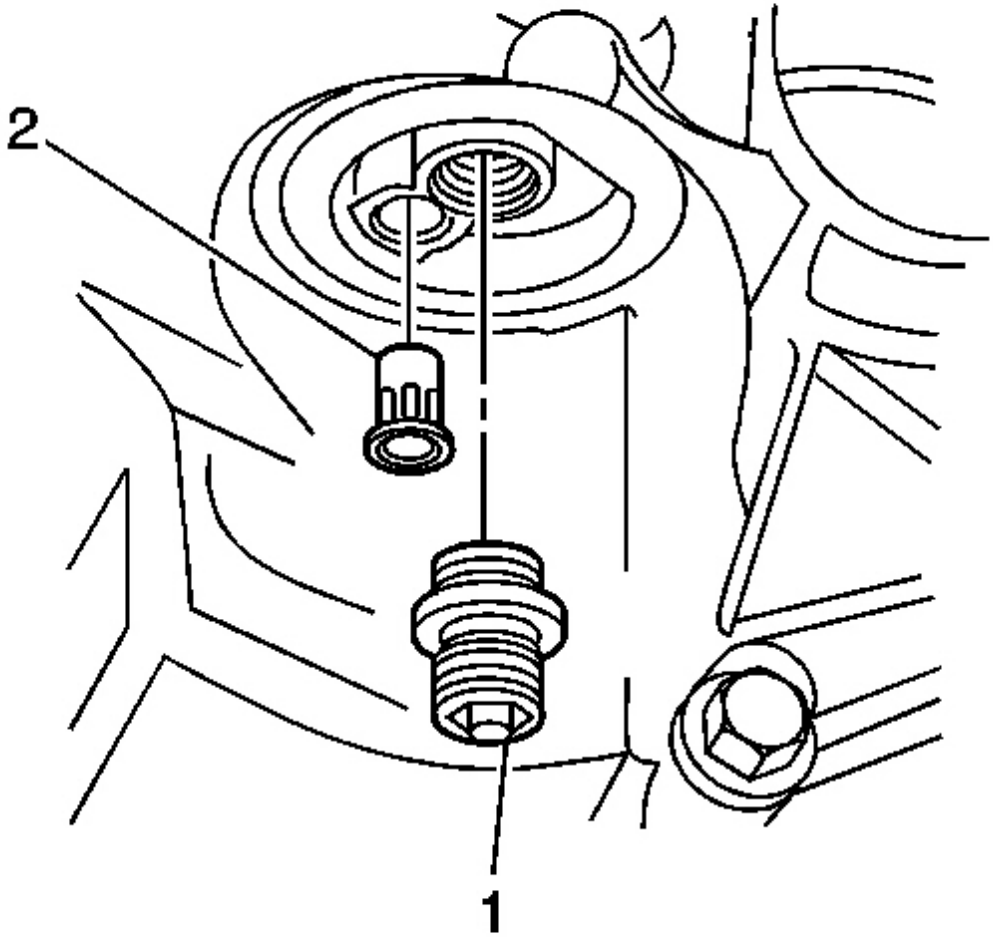

Fig. 217: Oil Filter Adapter & Oil Filter Bypass Valve
Courtesy of GENERAL MOTORS CORP.

NOTE: Refer to Fastener Notice in Cautions and Notices.

1. Install the oil filter bypass valve 2.
2. Install the oil filter adapter 1.

Tighten: Tighten the oil filter adapter to 55 N.m (40 lb ft).

cardiagn.com

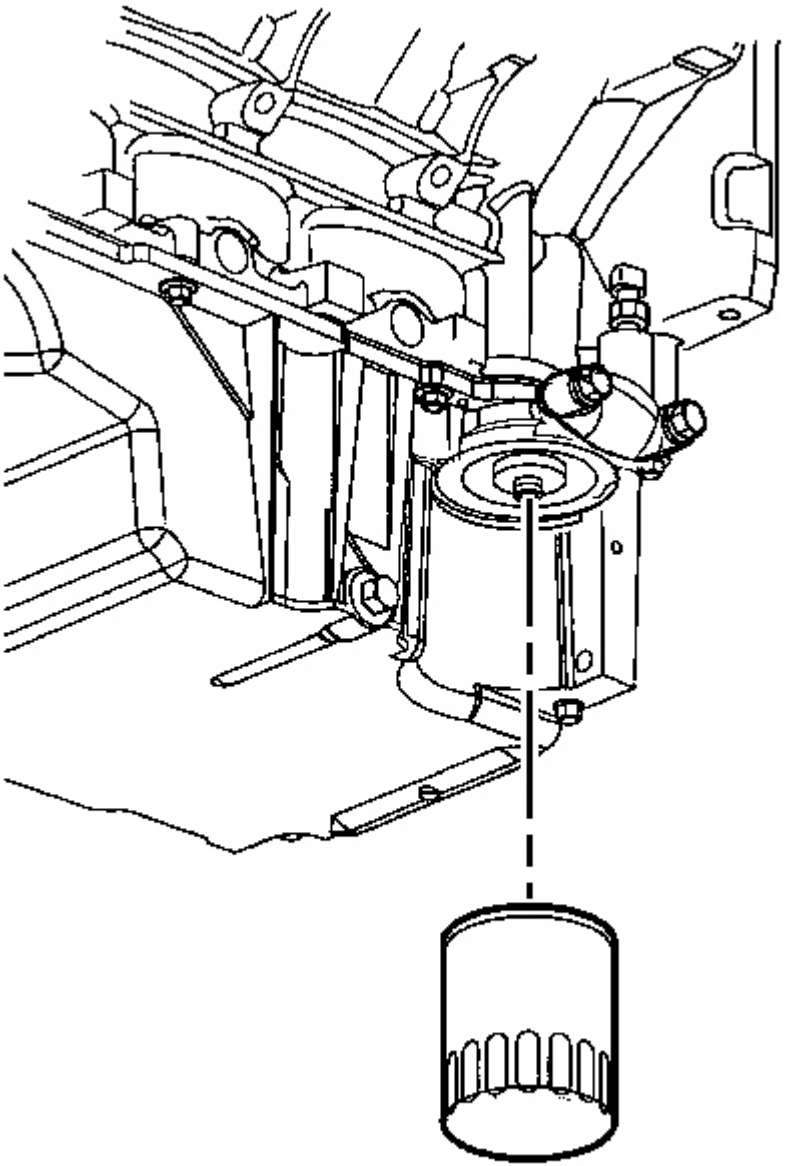

Fig. 218: Oil Filter
Courtesy of GENERAL MOTORS CORP.

3. Install the oil filter.

   Tighten: Tighten the oil filter to 30 N.m (22 lb ft).

cardiagn.com

4. Refill the engine oil.

OIL PAN COVER REPLACEMENT

Removal Procedure

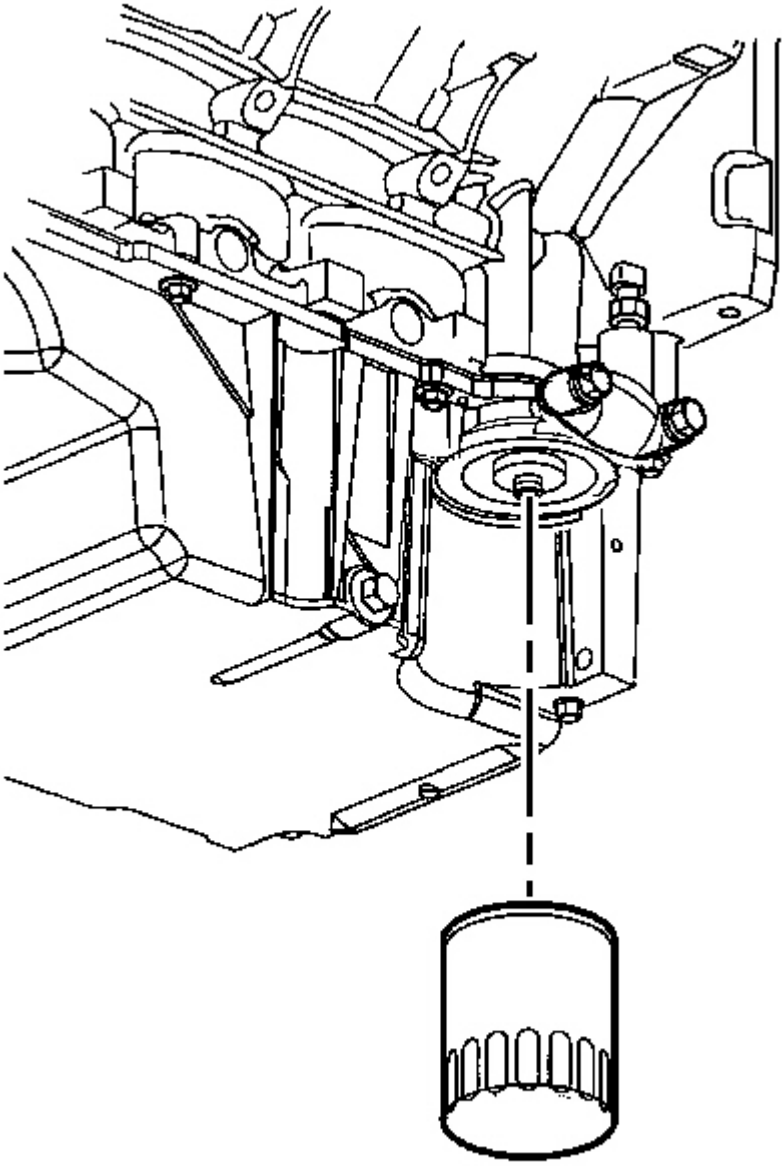

cardiagn.com

Fig. 219: Oil Filter
Courtesy of GENERAL MOTORS CORP.

1. Drain the engine oil.
2. Remove the oil filter.

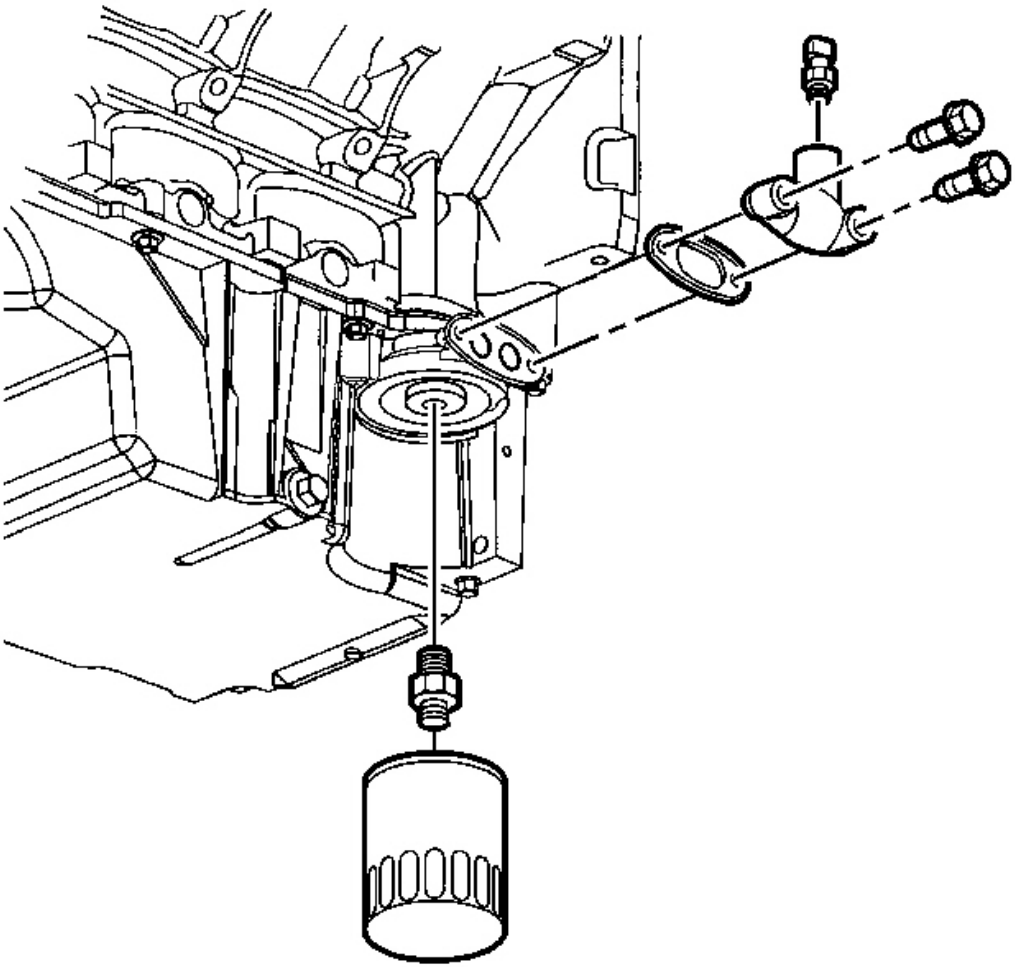

Fig. 220: Oil Pan Cover Bolts, Cover & Gasket
Courtesy of GENERAL MOTORS CORP.

3. Remove the oil pan cover bolts, cover, and gasket.
4. Discard the gasket.

Installation Procedure

cardiagn.com

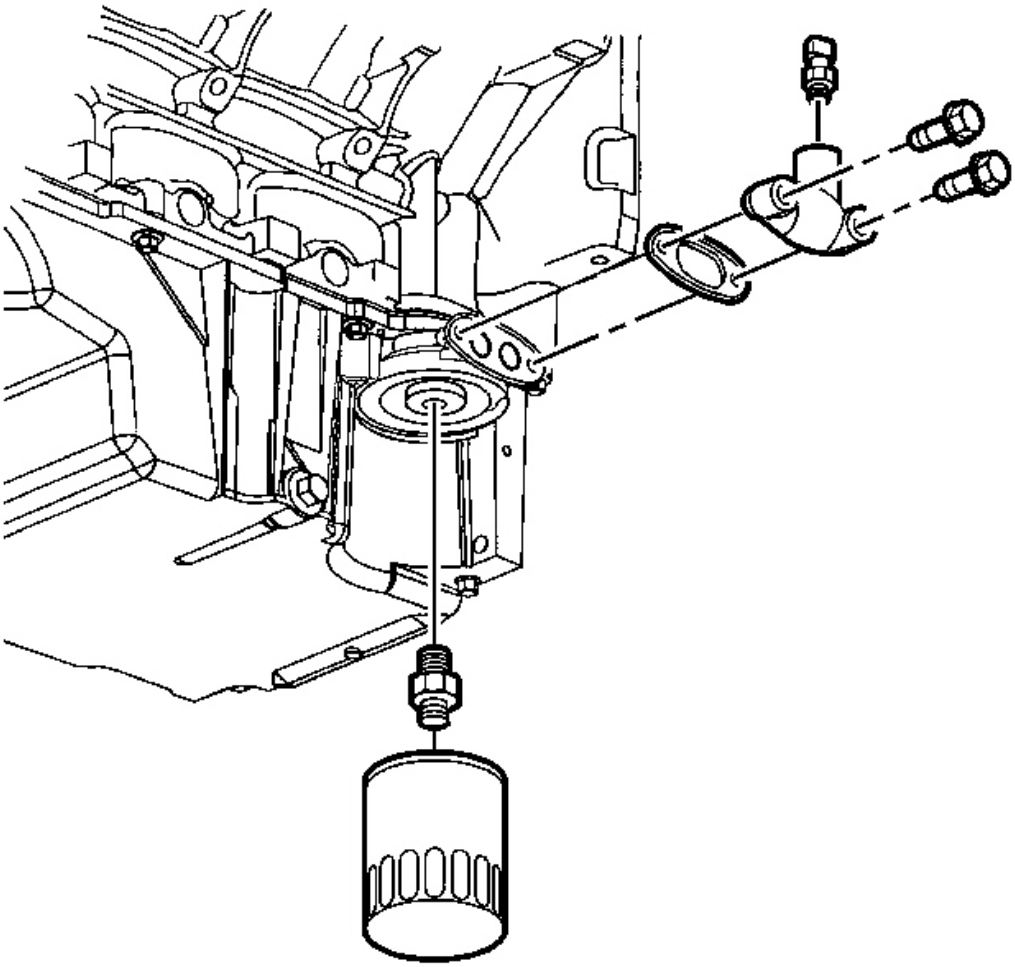

Fig. 221: Oil Pan Cover Bolts, Cover & Gasket
Courtesy of GENERAL MOTORS CORP.

NOTE: Refer to Fastener Notice in Cautions and Notices.

1. Install a new gasket, the cover, and bolts.

   Tighten: Tighten the oil pan cover bolts to 12 N.m (106 lb in).

cardiagn.com

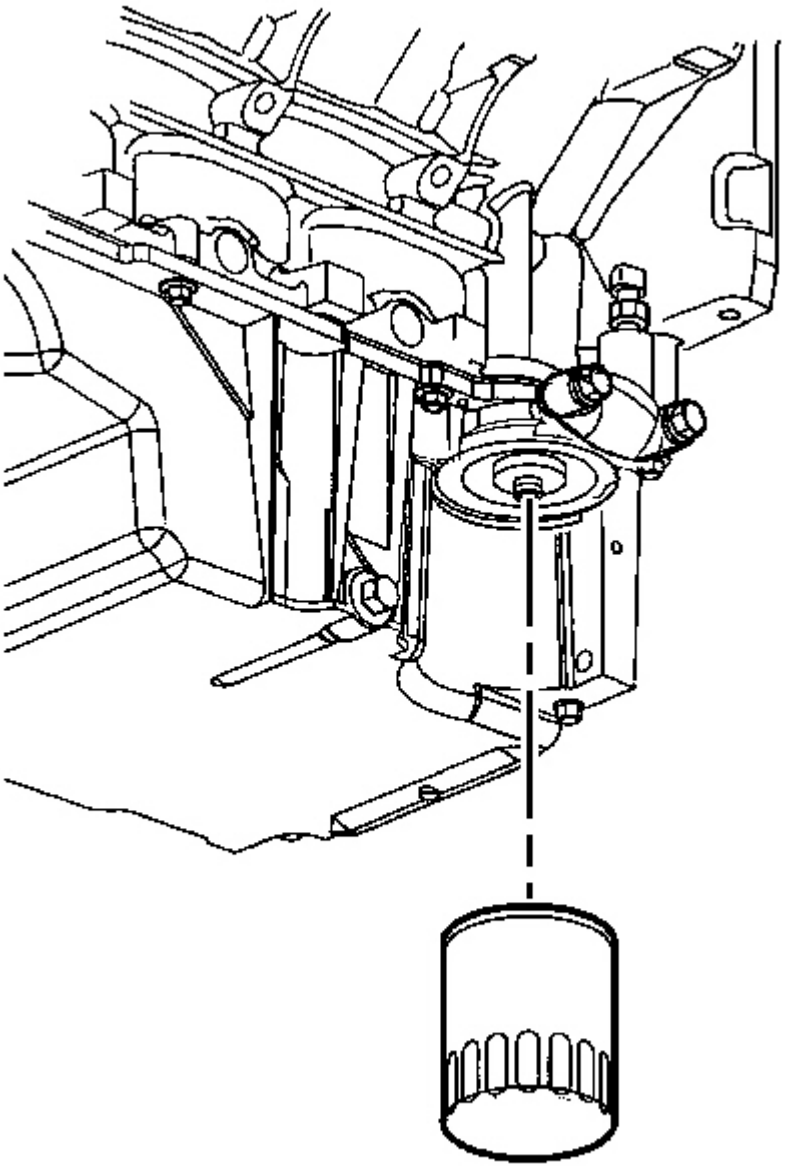

Fig. 222: Oil Filter
Courtesy of GENERAL MOTORS CORP.

2. Install the oil filter.

   Tighten: Tighten the oil filter to 30 N.m (22 lb ft).

cardiagn.com

3. Refill the engine oil.

OIL PAN REPLACEMENT

Removal Procedure

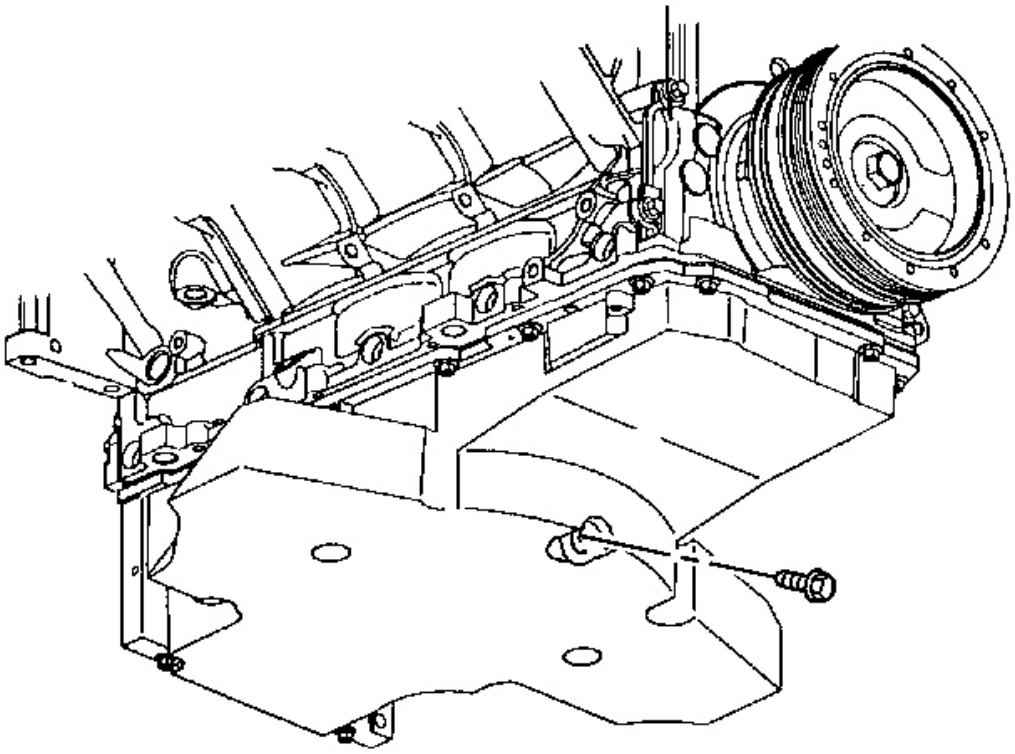

Fig. 223: Oil Pan Drain Plug
Courtesy of GENERAL MOTORS CORP.

1. Remove the front suspension crossmember. Refer to **Crossmember Replacement - Front Suspension** in Front Suspension.
2. Remove the oil pan drain plug and allow the oil to drain.
3. Re-install the engine oil drain plug until snug.

IMPORTANT: It is not necessary to remove the oil pan (lower) in order to remove the oil pan.

4. If oil pan and/or gasket removal or replacement is NOT required proceed to step 10.

cardiagn.com

If the oil pan (lower) gasket replacement is required proceed to the next step.

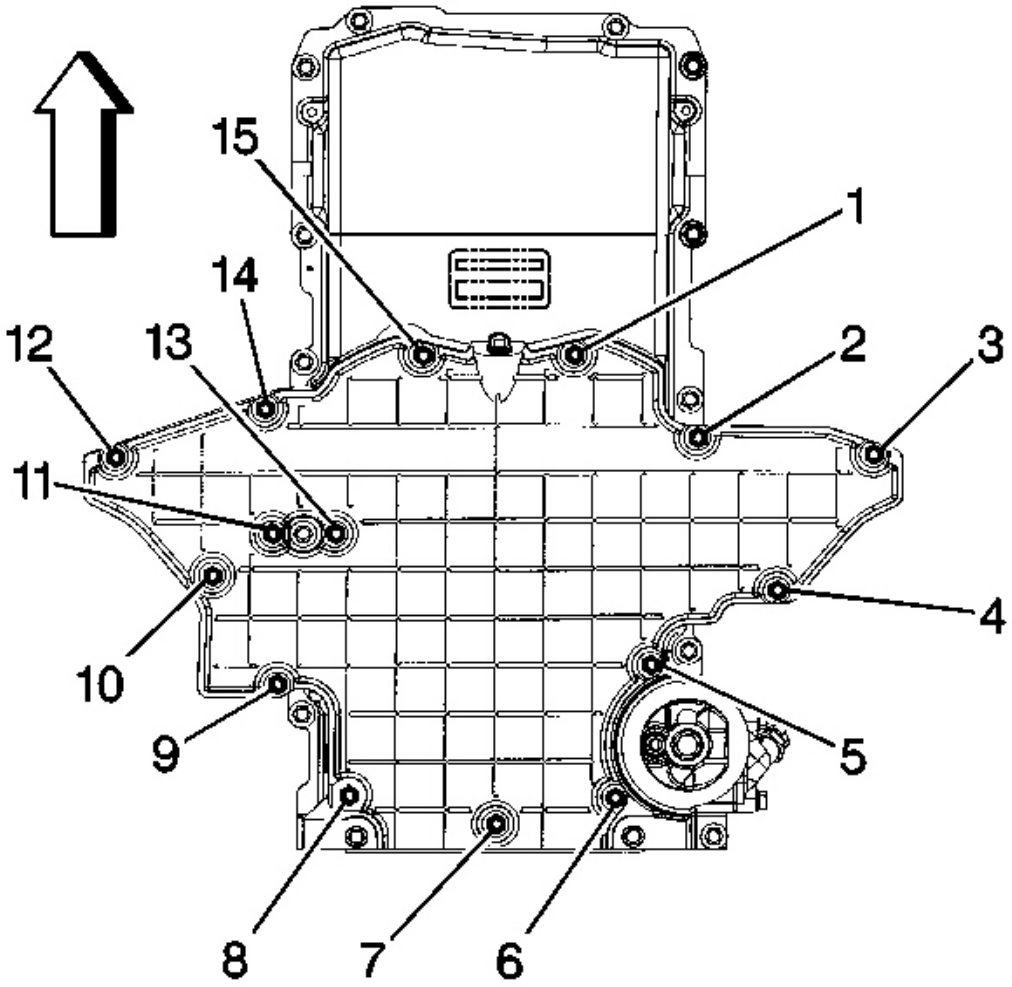

Fig. 224: Lower Oil Pan Bolt (1-15)
Courtesy of GENERAL MOTORS CORP.

5. If replacement of the oil pan (lower) gasket is needed, perform the following:
6. Remove the oil pan (lower) bolt (1-15).

cardiagn.com

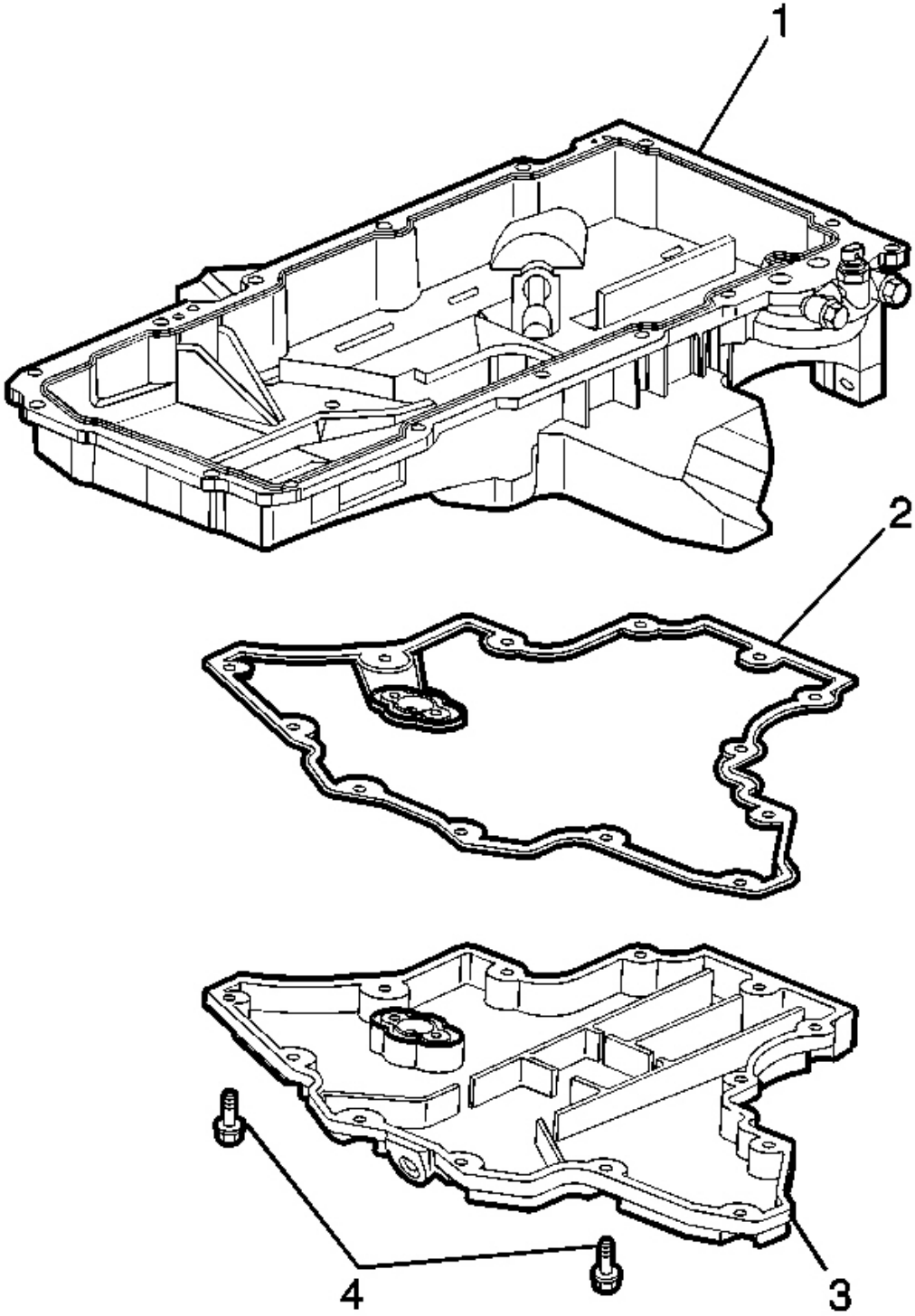

cardiagn.com

Fig. 225: Lower Oil Pan, Gasket, Oil Pan & Bolts
Courtesy of GENERAL MOTORS CORP.

7. Separate the oil pan (lower) (3) from the oil pan (1).
8. Remove the oil pan (lower) gasket (2).
9. Clean the oil pan (lower) gasket surface.

For the oil pan (lower) installation, refer to step 13 in the installation procedure.

cardiagn.com

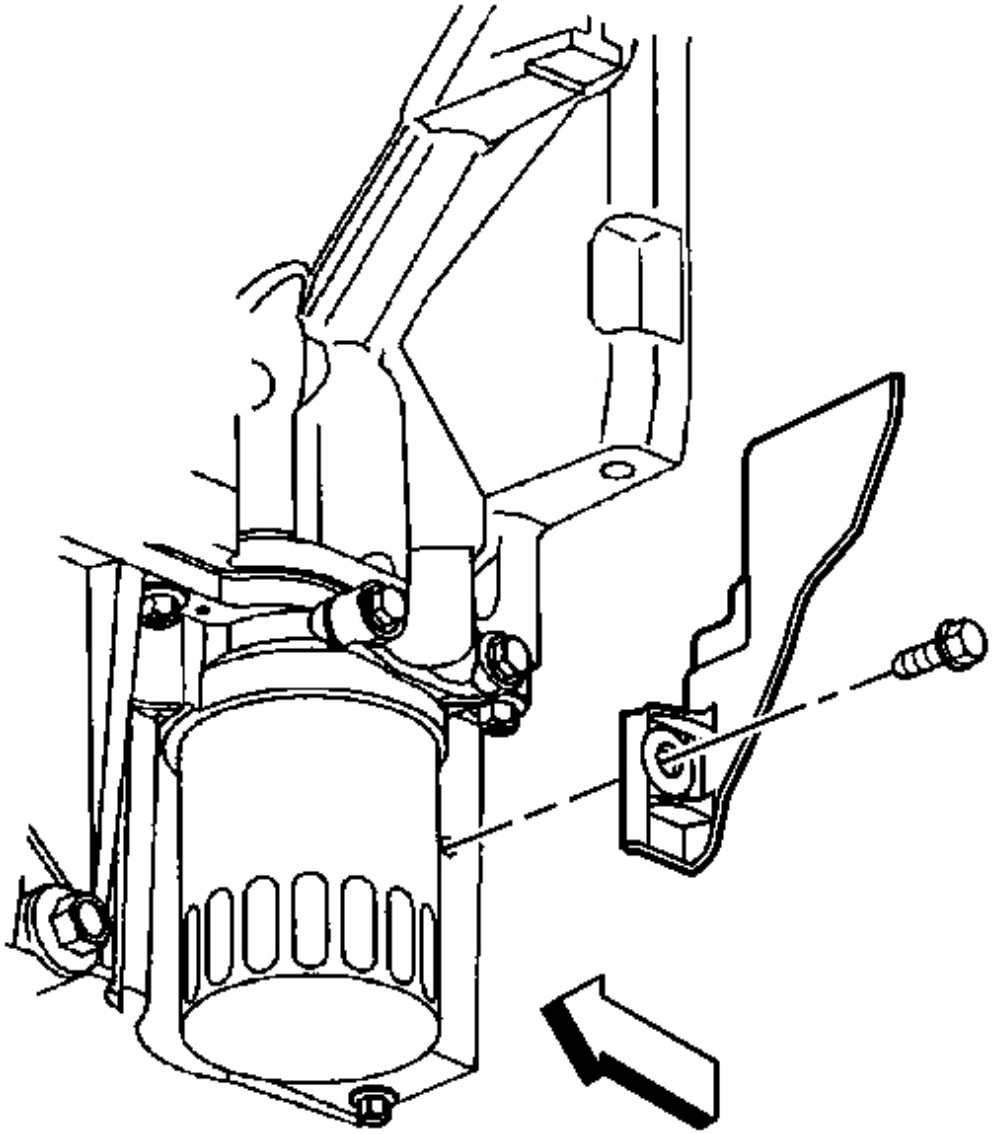

Fig. 226: Left Transmission Cover & Bolt
Courtesy of GENERAL MOTORS CORP.

10. Remove the starter motor. Refer to **Starter Motor Replacement** in Engine Electrical.
11. Remove the left transmission cover bolt and cover.

cardiagn.com

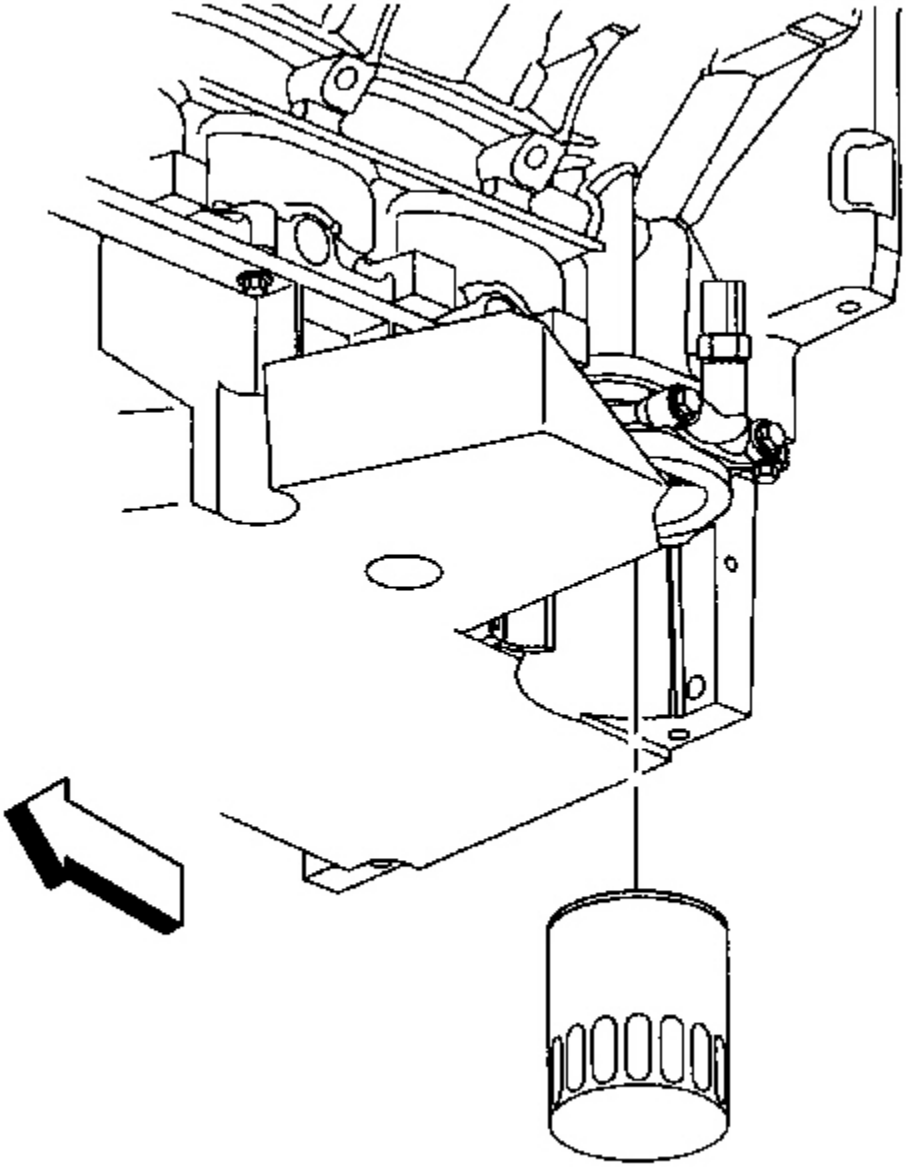

Fig. 227: Engine Oil Filter
Courtesy of GENERAL MOTORS CORP.

12. Remove the engine oil filter and allow the oil to drain.
13. Re-install the engine oil filter until snug.

cardiagn.com

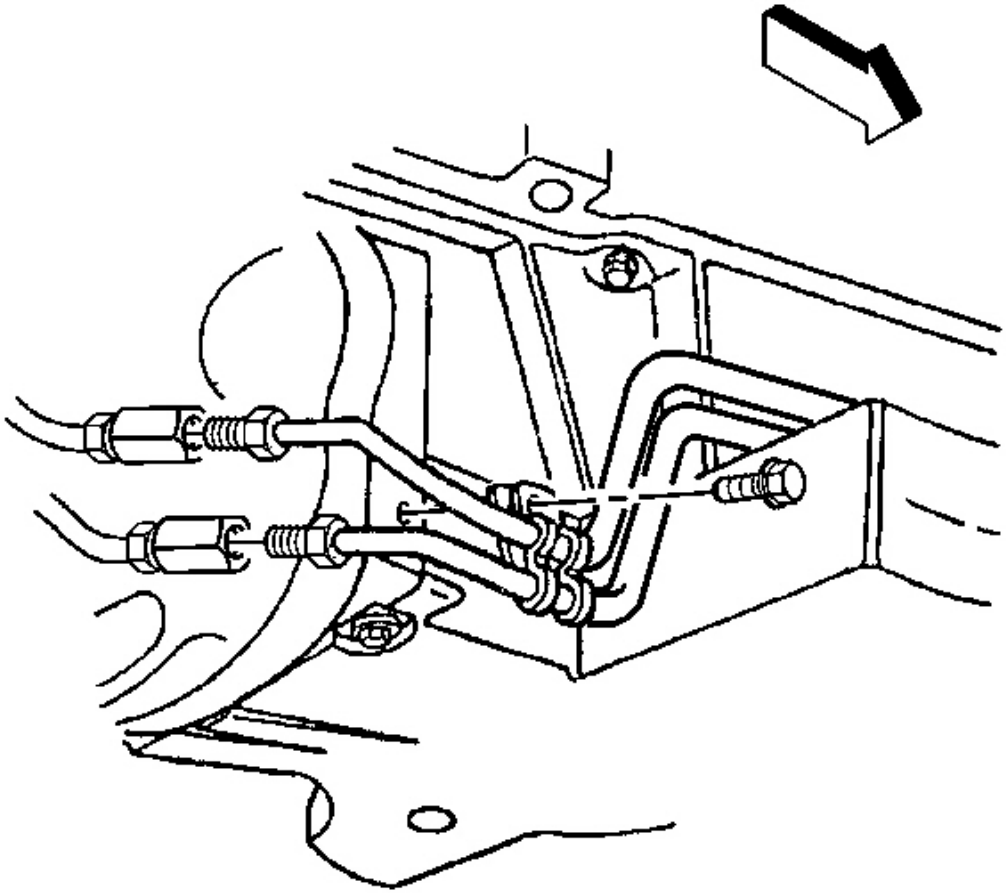

Fig. 228: Automatic Transmission Fluid Cooler Line Clamp & Bolt
Courtesy of GENERAL MOTORS CORP.

14. Remove the automatic transmission fluid cooler line clamp bolt at the right transmission cover, if equipped.

cardiagn.com

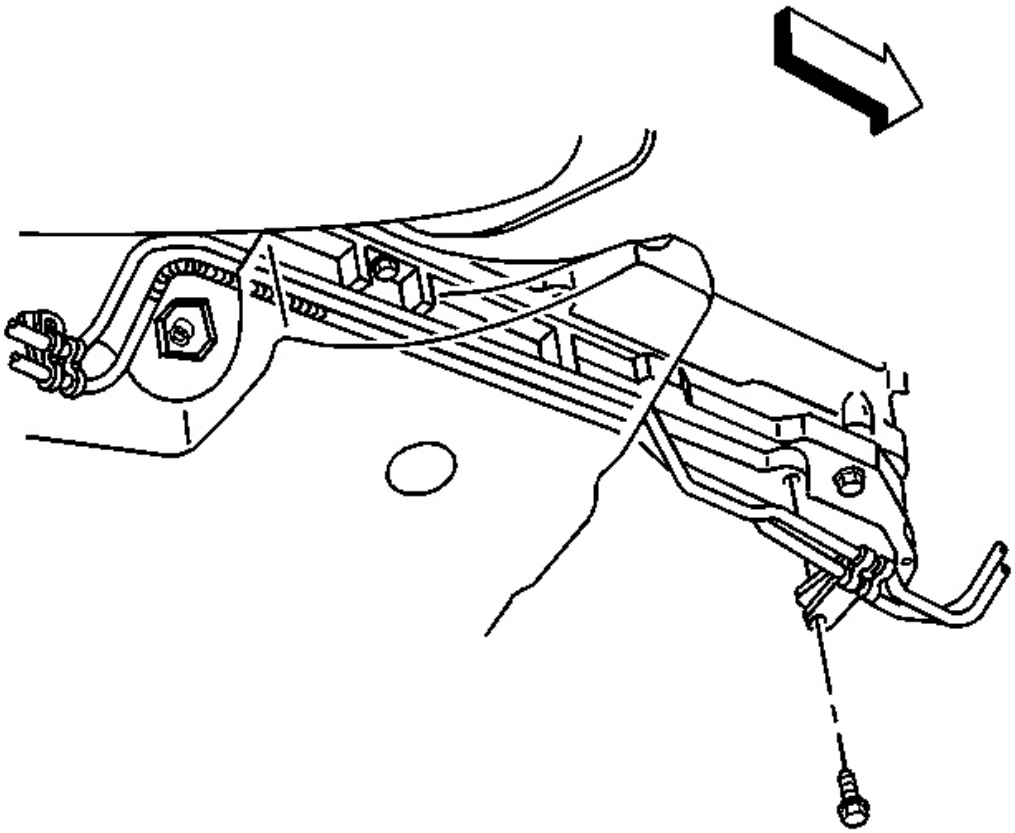

Fig. 229: Automatic Transmission Fluid Cooler Line & Oil Pan
Courtesy of GENERAL MOTORS CORP.

15. Remove the automatic transmission fluid cooler line clamp bolt at the oil pan, if equipped.

cardiagn.com

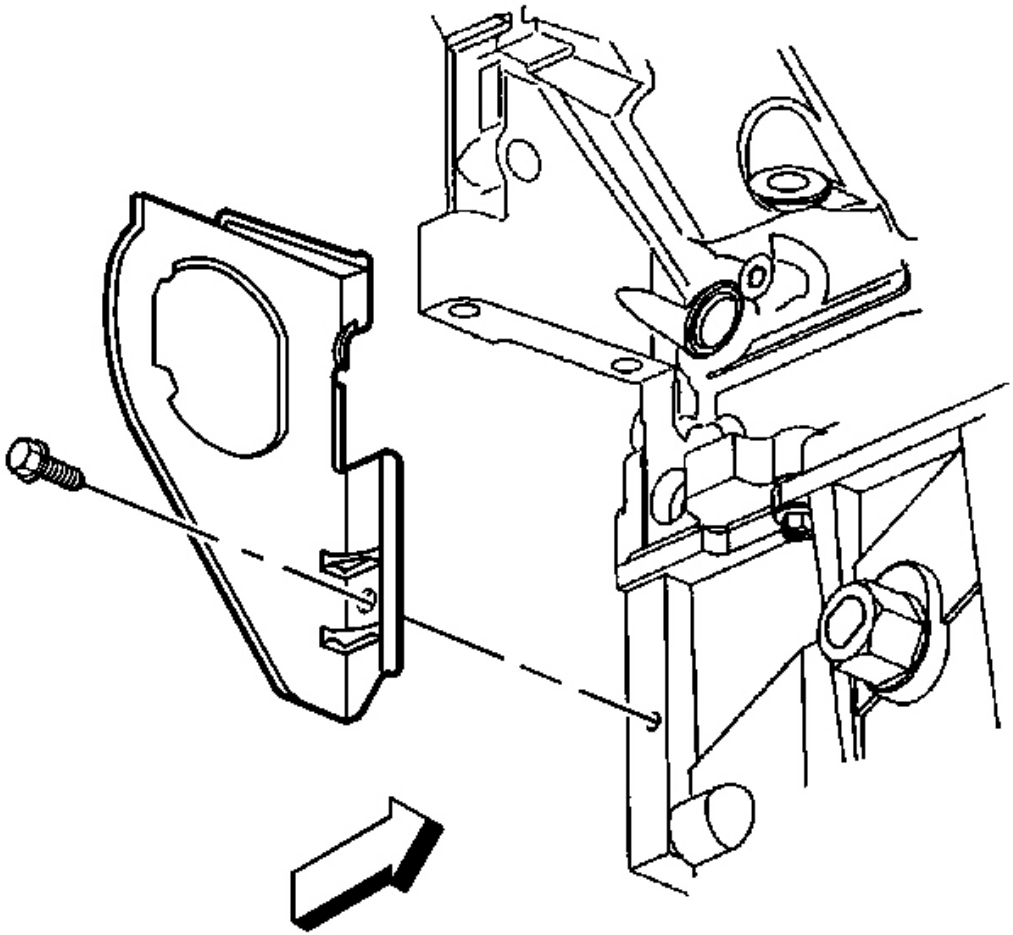

Fig. 230: Right Transmission Cover & Bolt
Courtesy of GENERAL MOTORS CORP.

16. Remove the right transmission cover bolt and cover.

cardiagn.com

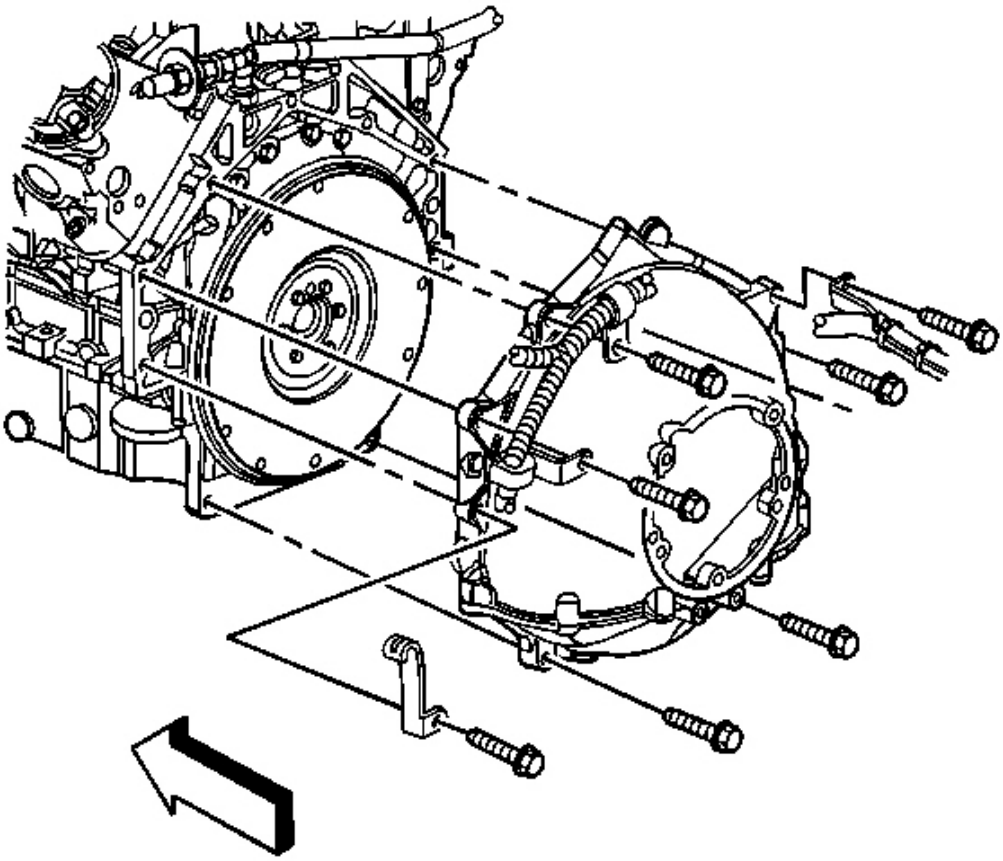

Fig. 231: Bottom Flywheel Housing-To-Oil Pan & Bolts
Courtesy of GENERAL MOTORS CORP.

17. Remove the bottom 2 flywheel housing-to-oil pan bolts.

cardiagn.com

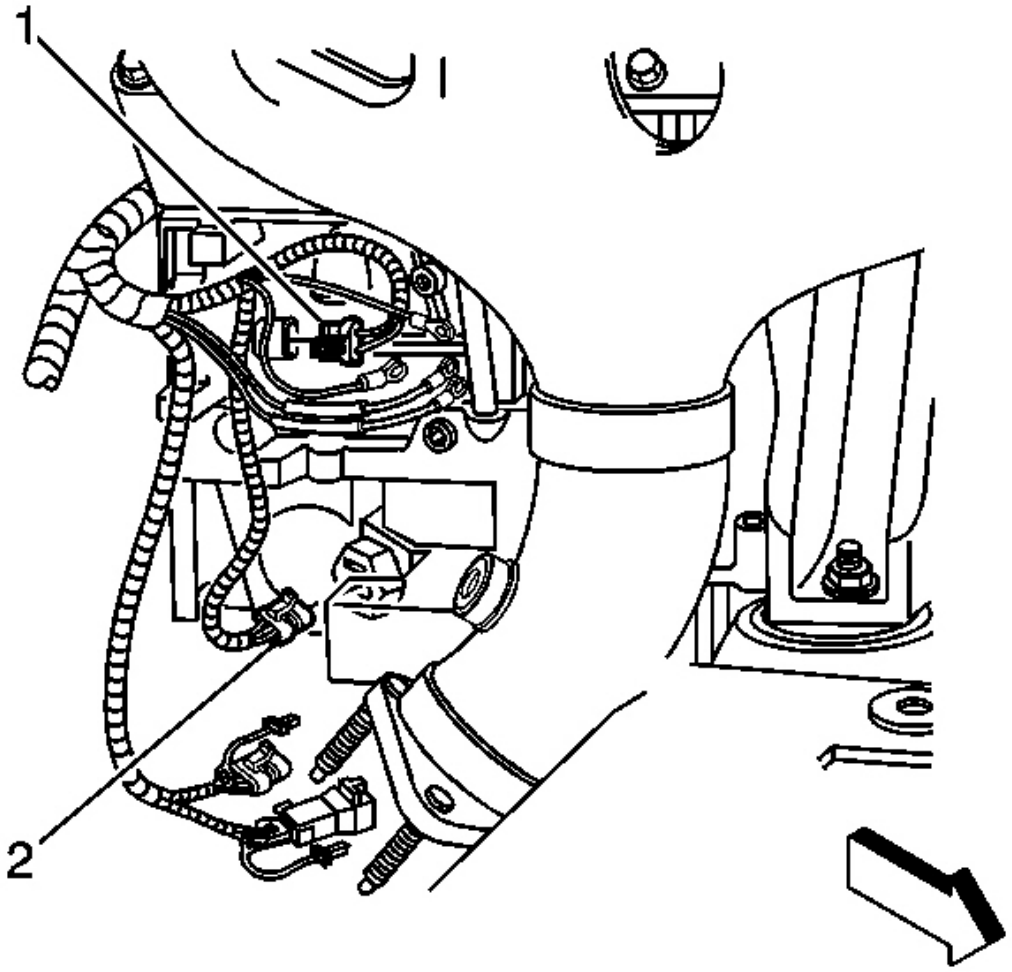

Fig. 232: Engine Oil Level Sensor Electrical Connector & CKP Sensor Electrical Connector
Courtesy of GENERAL MOTORS CORP.

18. Disconnect the engine oil level sensor electrical connector (2).

cardiagn.com

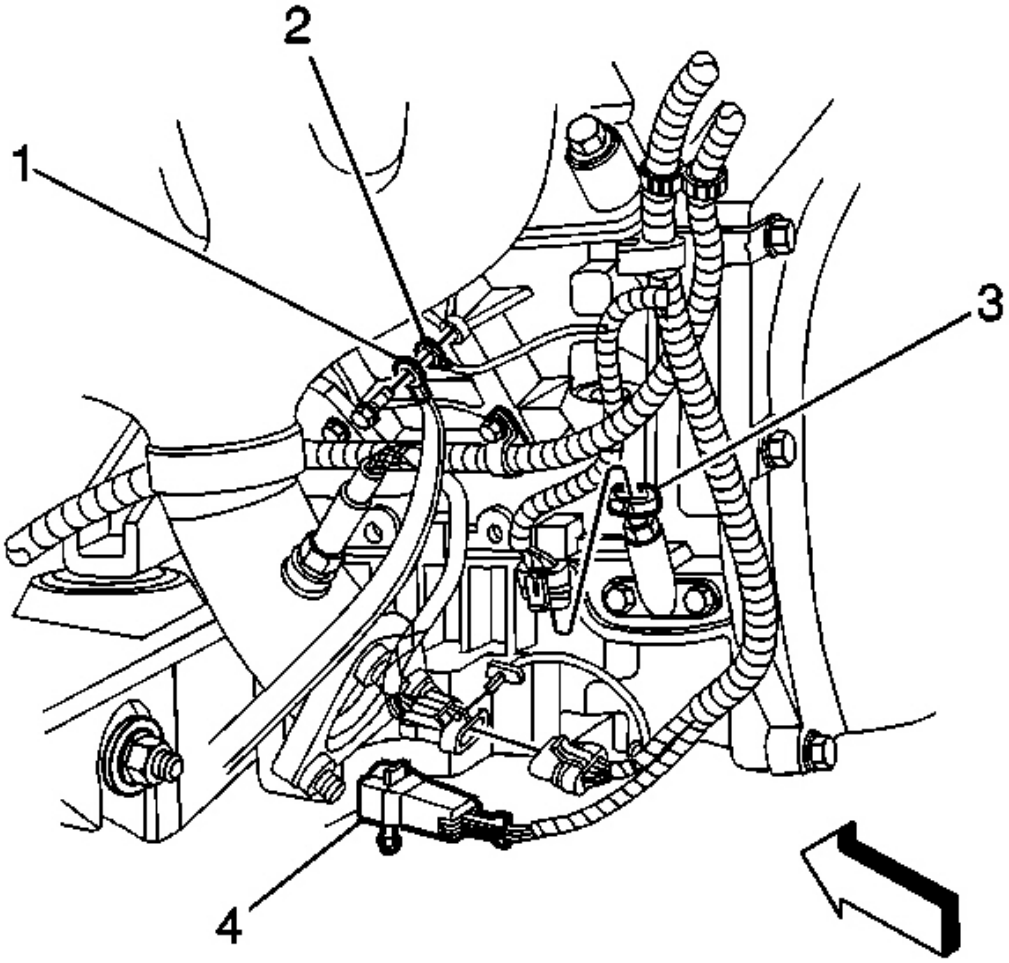

Fig. 233: Engine Oil Temperature Sensor Electrical Connector & Ground Straps
Courtesy of GENERAL MOTORS CORP.

19. Disconnect the engine oil temperature sensor (3) electrical connector.

cardiagn.com

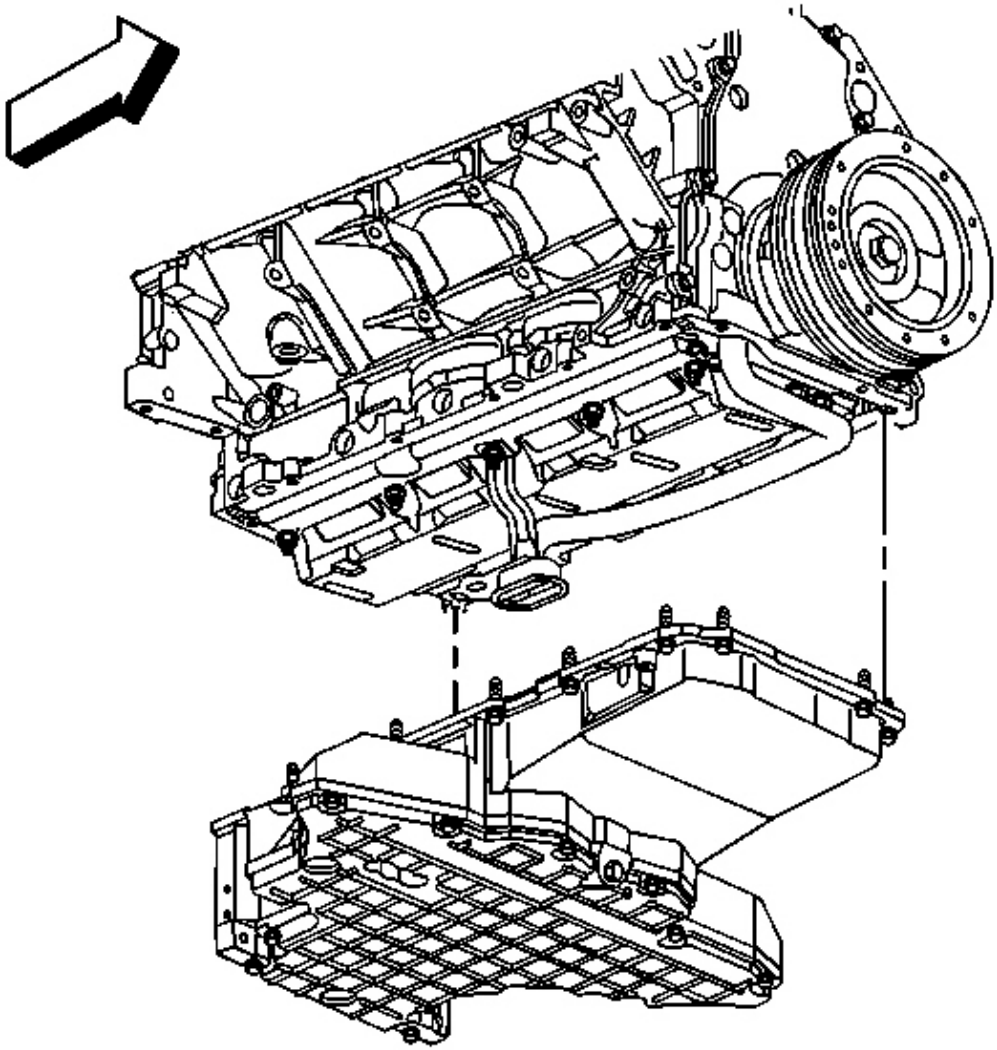

Fig. 234: Oil Pan Gasket & Engine Block
Courtesy of GENERAL MOTORS CORP.

IMPORTANT: The original oil pan gasket is retained and aligned to the oil pan by rivets. When installing a new gasket, it is not necessary to install new oil pan gasket rivets.
DO NOT reuse the oil pan gasket. When installing the oil pan, install a NEW oil pan gasket.
Removal of the oil pan (lower) will not provide access to the crankshaft oil deflector, crankshaft, or other internal engine components.

cardiagn.com

20. Remove the oil pan bolts.
21. Lower the oil pan, rotate the pan until it can be removed from around the oil pump screen.
22. Remove the engine oil filter.
23. Clean and inspect the engine oil pan. Refer to **Oil Pan Cleaning and Inspection** .

Installation Procedure

IMPORTANT: All gasket surfaces should be free of oil or other foreign material during assembly.

The alignment of the structural oil pan is critical. The rear bolt hole locations of the oil pan provide mounting points for the flywheel housing cover. To ensure the rigidity of the powertrain and correct transmission alignment, it is important that the rear of the block and the rear of the oil pan are flush or even. The rear of the oil pan must NEVER protrude beyond the engine block.

Do NOT reuse the oil pan gasket.

It is not necessary to rivet the NEW gasket to the oil pan.

cardiagn.com

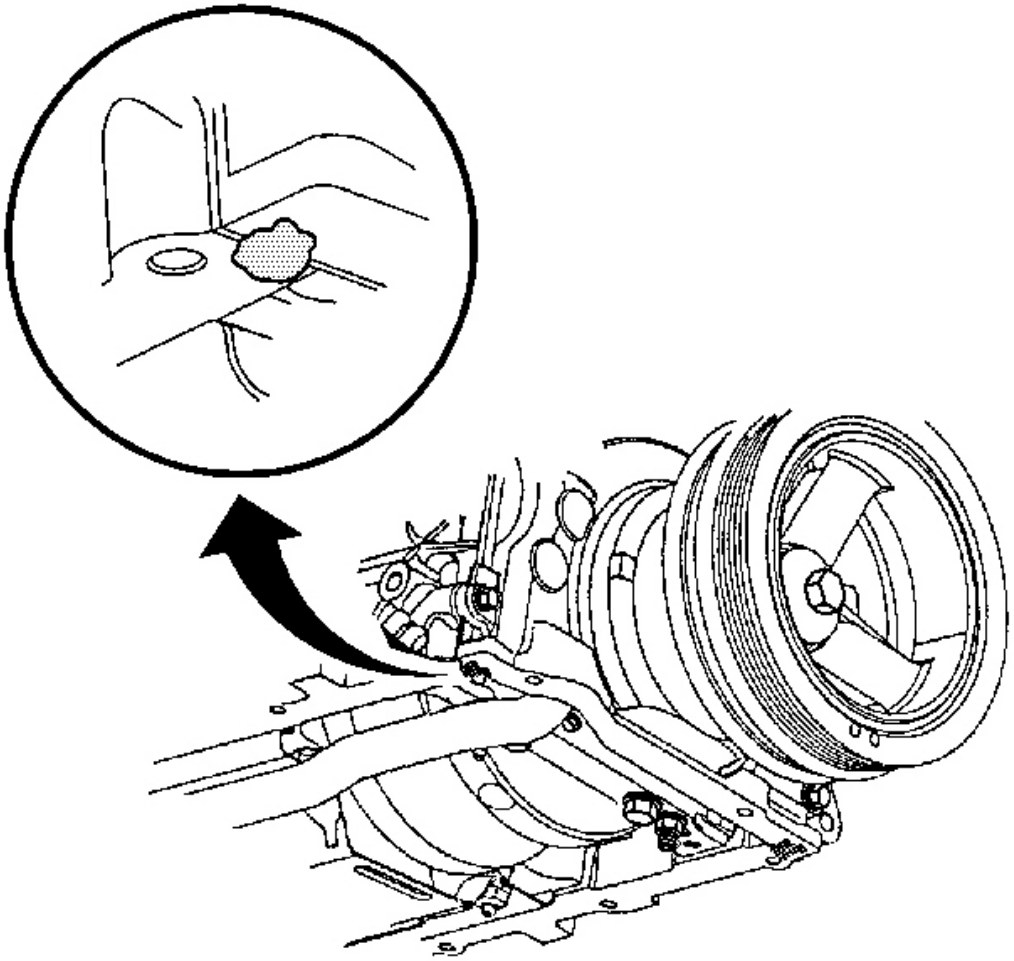

Fig. 235: View Of Sealant Applied To Front Oil Pan-To-Engine Block Junction
Courtesy of GENERAL MOTORS CORP.

1. Apply a 5 mm (0.20 in) bead of sealant GM P/N 12378190, or equivalent 20 mm (0.80 in) long to the engine block. Apply the sealant directly onto the tabs of the front cover gasket that protrude into the oil pan surface.

cardiagn.com

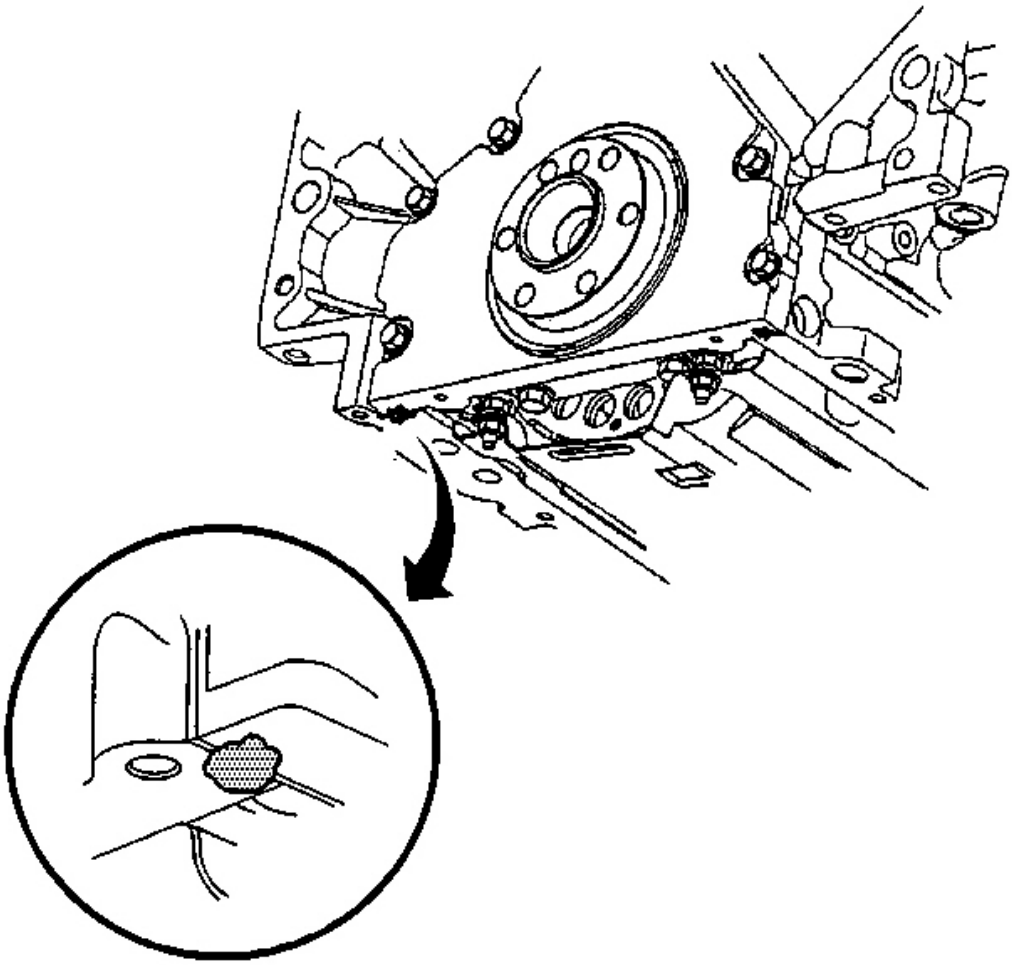

Fig. 236: View Of Sealant Applied To Rear Oil Pan-To-Engine Block Junction
Courtesy of GENERAL MOTORS CORP.

2. Apply a 5 mm (0.20 in) bead of sealant GM P/N 12378190, or equivalent 20 mm (0.80 in) long to the engine block. Apply the sealant directly onto the tabs of the rear cover gasket that protrude into the oil pan surface.

cardiagn.com

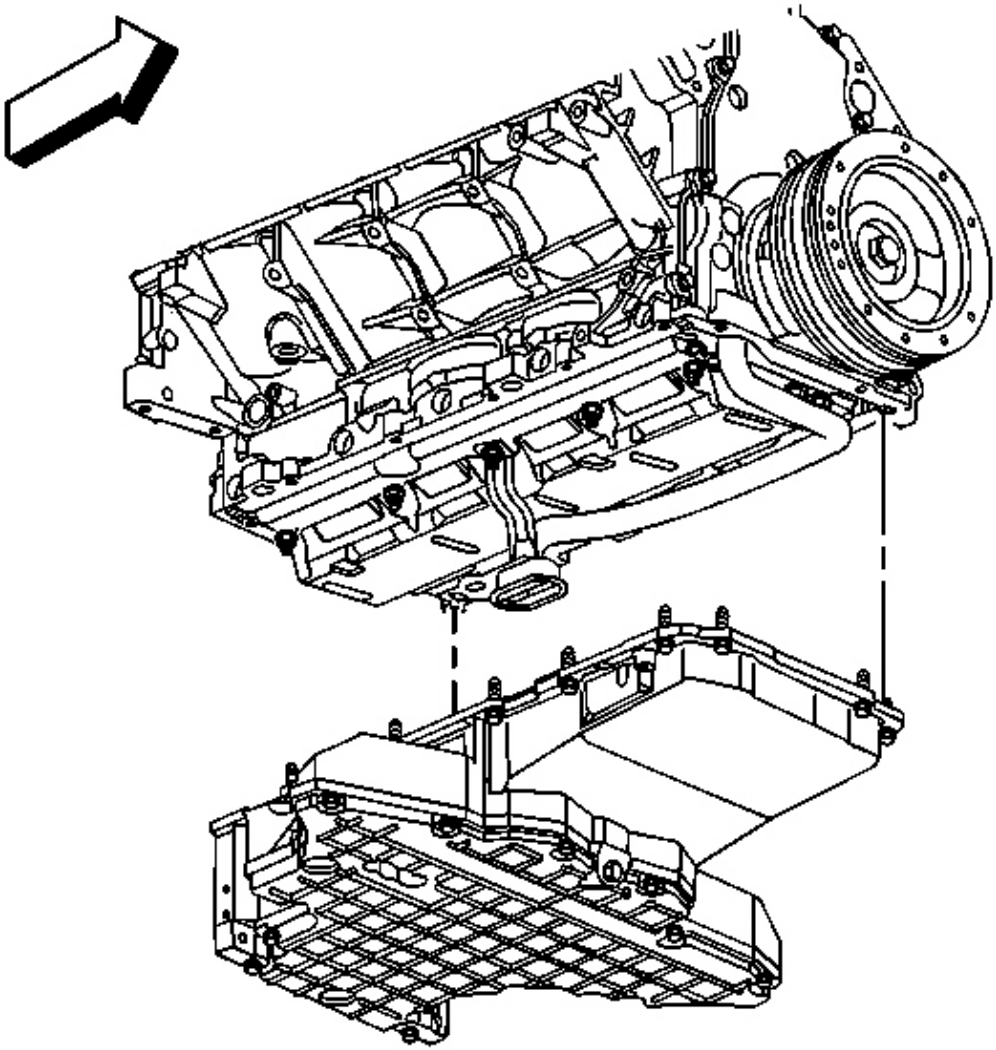

Fig. 237: Oil Pan Gasket & Engine Block
Courtesy of GENERAL MOTORS CORP.

IMPORTANT: Be sure to align the oil gallery passages in the oil pan and engine block properly with the oil pan gasket.

3. Pre-assemble the oil pan gasket to the pan.
    1. Install the gasket onto the oil pan.
    2. Install the oil pan bolts to the pan and through the gasket.

cardiagn.com

3. Install the oil pan, gasket and bolts to the engine block.
4. Tighten the oil pan bolts until snug. Do not overtighten.

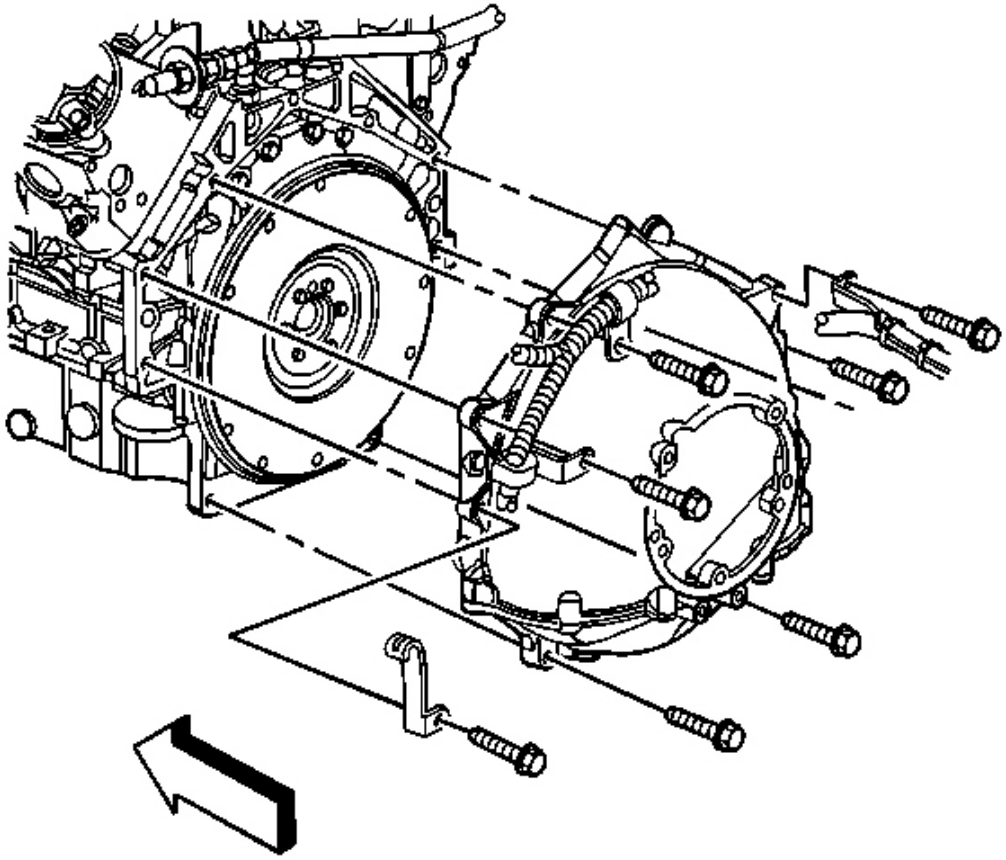

Fig. 238: Bottom Flywheel Housing-To-Oil Pan & Bolts
Courtesy of GENERAL MOTORS CORP.

NOTE: Refer to Fastener Notice in Cautions and Notices.

4. Install the 2 bottom flywheel housing bolts to position the oil pan correctly.
5. Tighten the 2 bottom flywheel housing bolts until snug. Do not overtighten.

Tighten:

1. Tighten the oil pan bolt and oil pan-to-front cover bolts to 25 N.m (18 lb ft).
2. Tighten the oil pan-to-rear cover bolts to 12 N.m (106 lb in).

cardiagn.com

3. Tighten the flywheel housing bolts to 50 N.m (37 lb ft).

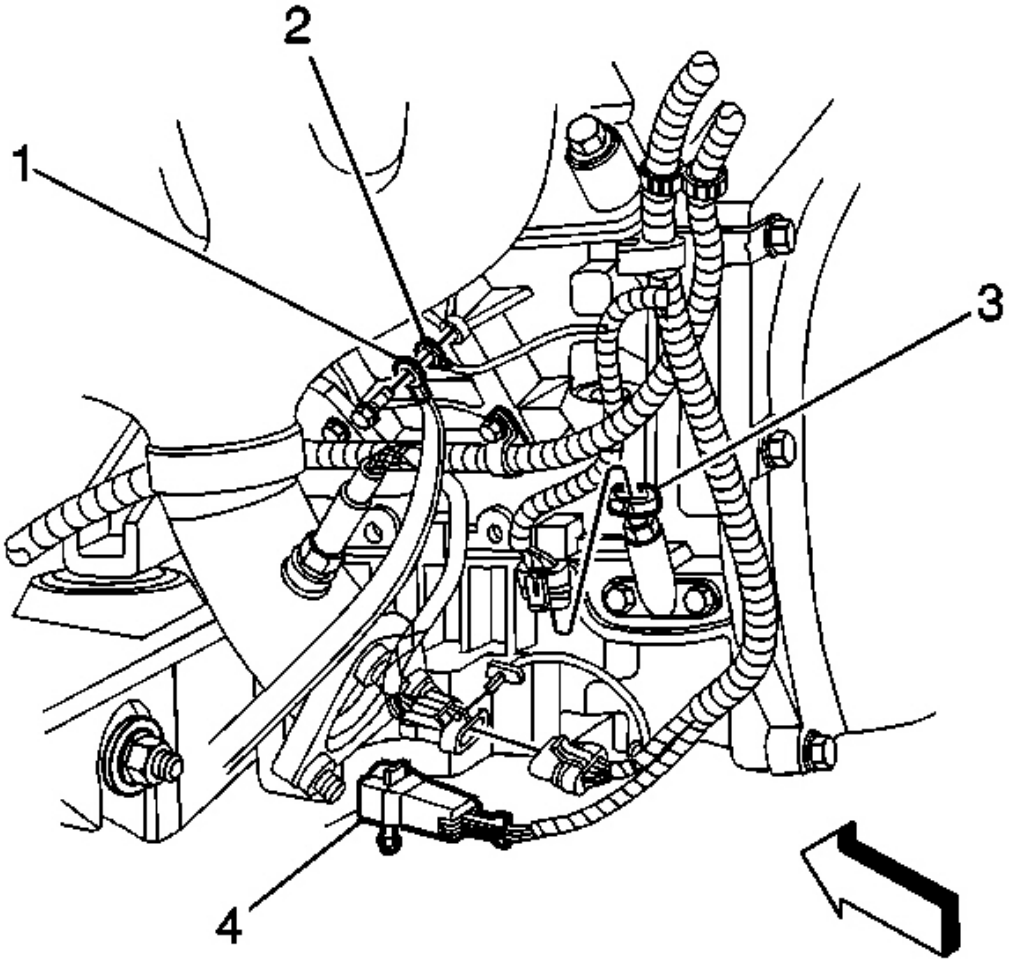

Fig. 239: Engine Oil Temperature Sensor Electrical Connector & Ground Straps
Courtesy of GENERAL MOTORS CORP.

6. Connect the engine oil temperature sensor (3) electrical connector.

cardiagn.com

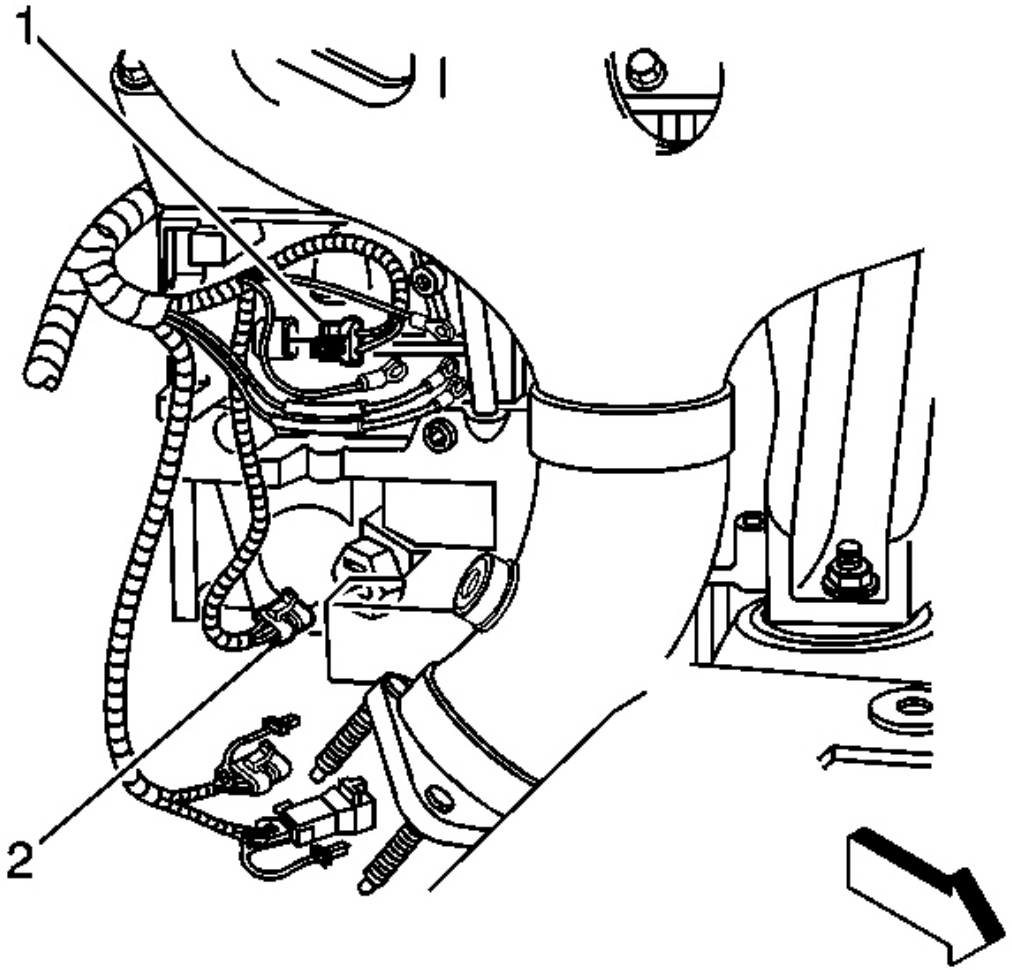

Fig. 240: Engine Oil Level Sensor Electrical Connector & CKP Sensor Electrical Connector
Courtesy of GENERAL MOTORS CORP.

7. Connect the engine oil level sensor electrical connector (2).

cardiagn.com

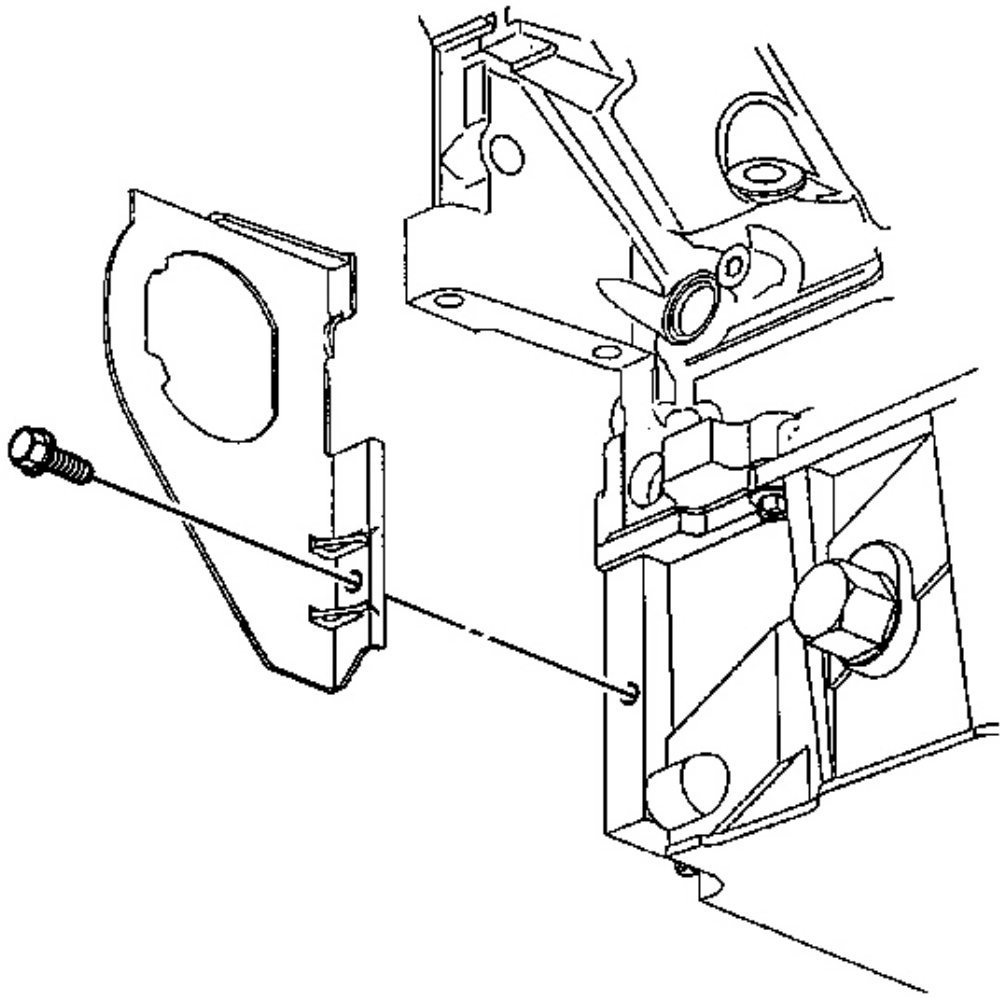

Fig. 241: Right Transmission Cover & Bolt
Courtesy of GENERAL MOTORS CORP.

8. Install the right transmission cover and bolt.

   Tighten: Tighten the right transmission cover bolt to 12 N.m (106 lb in).

cardiagn.com

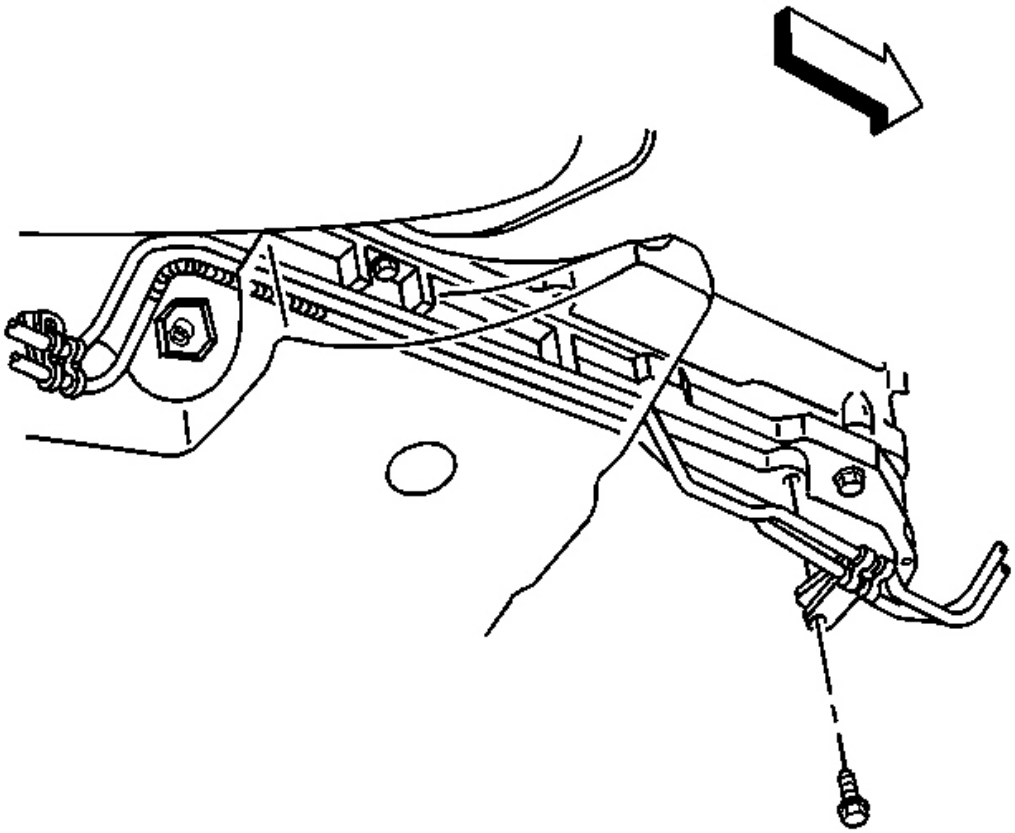

Fig. 242: Automatic Transmission Fluid Cooler Line & Oil Pan
Courtesy of GENERAL MOTORS CORP.

9. Install the automatic transmission fluid cooler line clamp bolt-at-the oil pan, if equipped.

   Tighten: Tighten the automatic transmission fluid cooler line clamp bolt-at-the oil pan to 12 N.m (106 lb in).

cardiagn.com

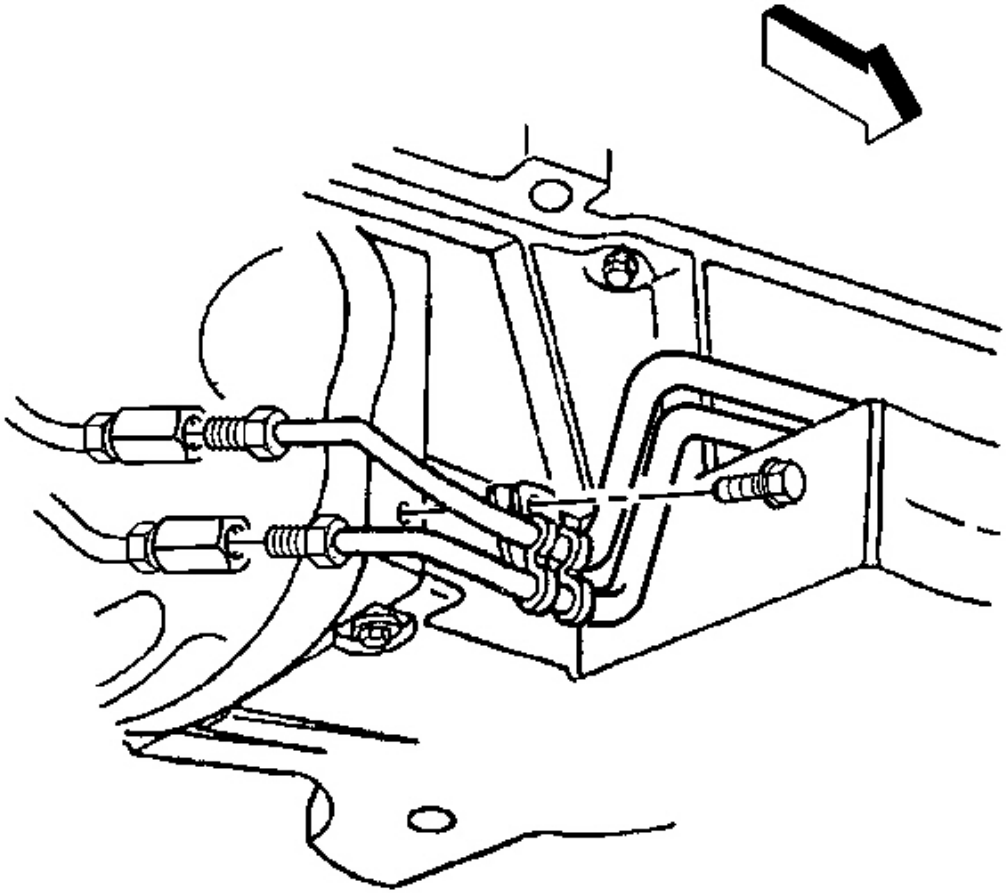

Fig. 243: Automatic Transmission Fluid Cooler Line Clamp & Bolt
Courtesy of GENERAL MOTORS CORP.

10. Install the automatic transmission fluid cooler line clamp bolt-at-right transmission cover, if equipped.

    Tighten: Tighten the automatic transmission fluid cooler line bolt-at-right transmission cover to 2.5 N.m (22 lb in).

cardiagn.com

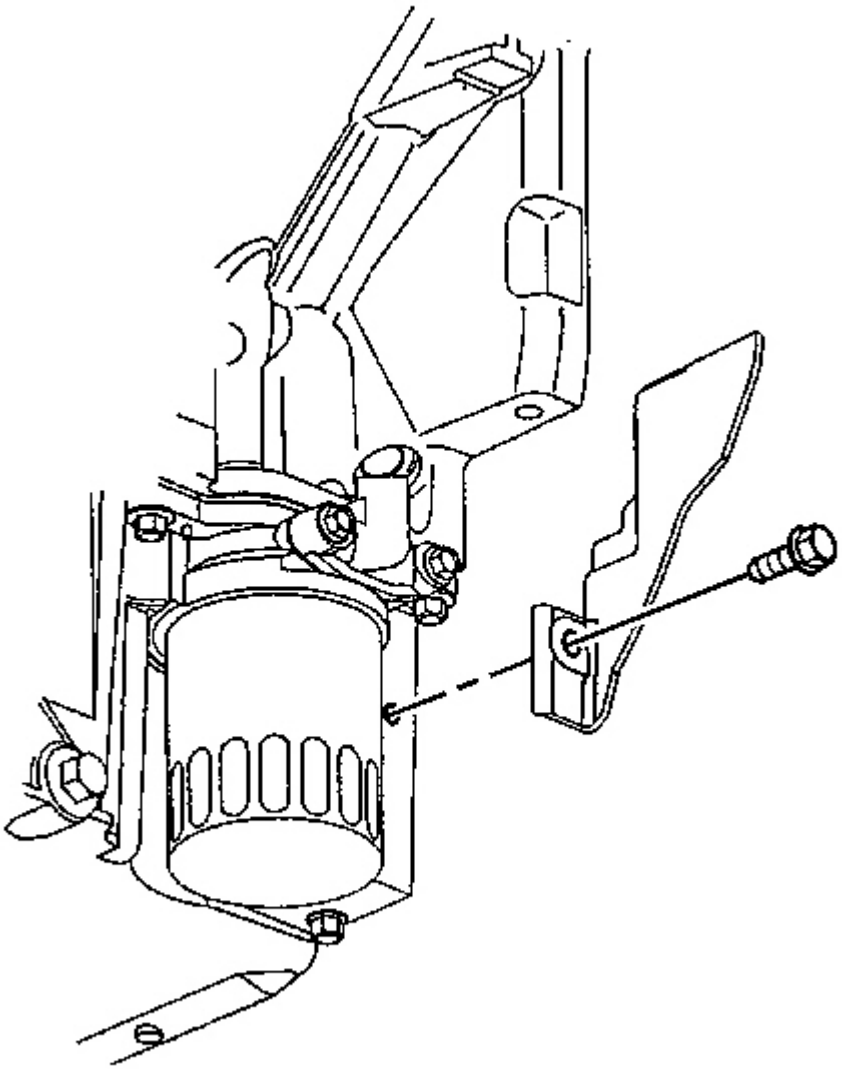

Fig. 244: Left Transmission Cover & Bolt
Courtesy of GENERAL MOTORS CORP.

11. Install the left transmission cover and bolt.

    Tighten: Tighten the left transmission cover bolt to 12 N.m (106 lb in).

12. Install the starter motor. Refer to **Starter Motor Replacement** in Engine Electrical.

cardiagn.com

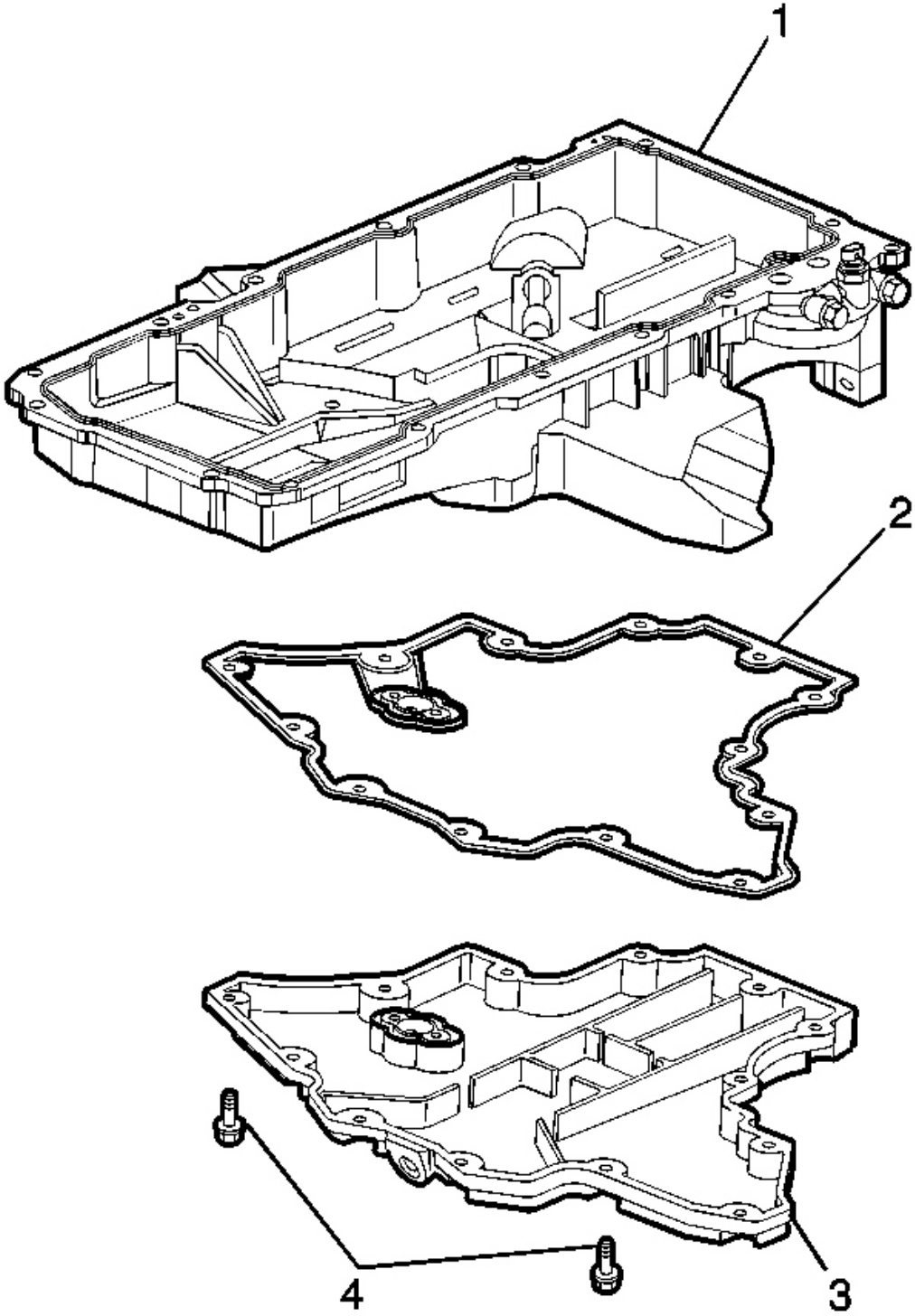

cardiagn.com

Fig. 245: Lower Oil Pan, Gasket, Oil Pan & Bolts
Courtesy of GENERAL MOTORS CORP.

13. Install the oil pan (lower) (3) and gasket (2) to the oil pan (1).
14. Install the oil pan bolts (4).

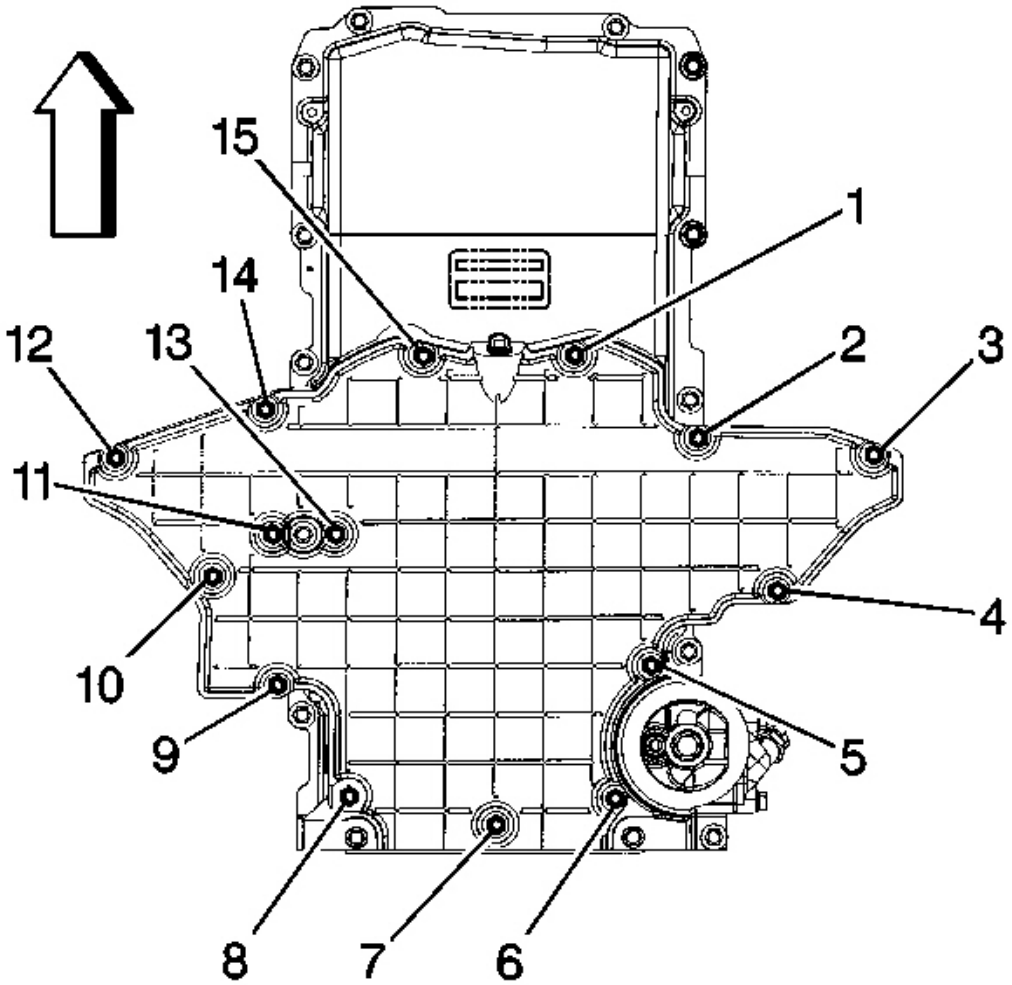

Fig. 246: Lower Oil Pan Bolt (1-15)
Courtesy of GENERAL MOTORS CORP.

15. Tighten the oil pan (lower) bolts (1-15) in a crossing pattern, alternating from side-to-side.

Tighten: Tighten the oil pan (lower) bolts to 12 N.m (106 lb in).

cardiagn.com

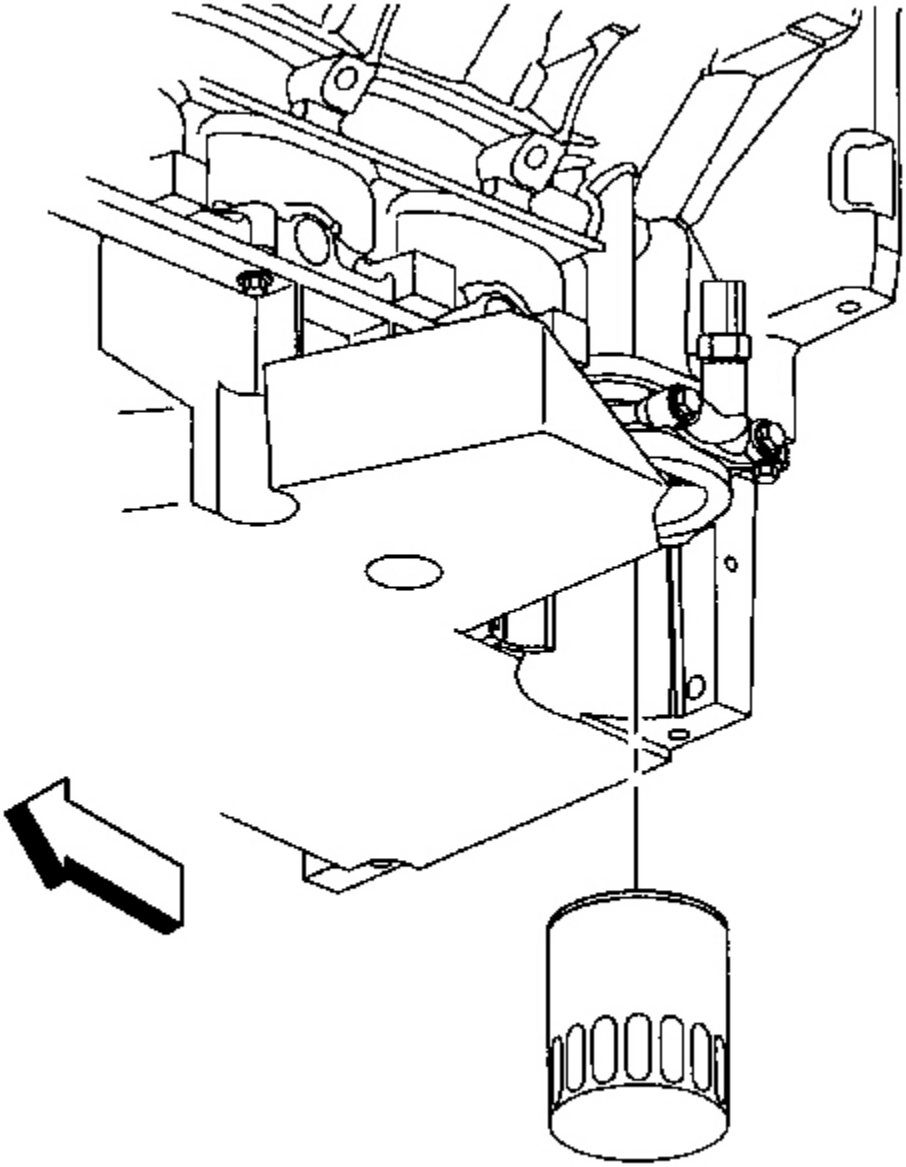

Fig. 247: Engine Oil Filter
Courtesy of GENERAL MOTORS CORP.

16. Install a NEW engine oil filter.

    Tighten: Tighten the engine oil filter to 30 N.m (22 lb ft).

cardiagn.com

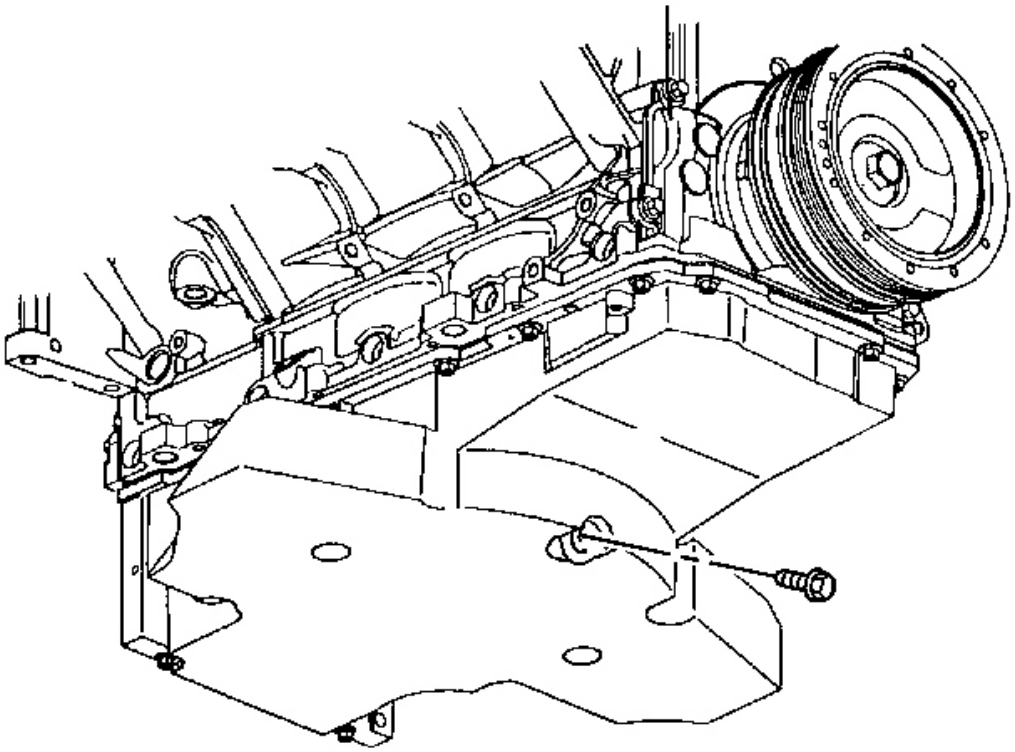

Fig. 248: Oil Pan Drain Plug
Courtesy of GENERAL MOTORS CORP.

17. Install the oil pan drain plug.

    Tighten: Tighten the oil pan drain plug to 25 N.m (18 lb ft).

18. Install the front suspension crossmember to the vehicle. Refer to **Crossmember Replacement - Front Suspension** in Front Suspension.
19. Fill the crankcase with the proper quantity and grade of engine oil. Refer to **Capacities - Approximate Fluid** and **Fluid and Lubricant Recommendations** in Maintenance and Lubrication.
20. Check the transmission fluid, add if necessary.
21. Run the engine and check for leaks.

ENGINE OIL PRESSURE SENSOR AND/OR SWITCH REPLACEMENT

Tools Required

cardiagn.com

J 41712 Oil Pressure Sensor Socket

Removal Procedure

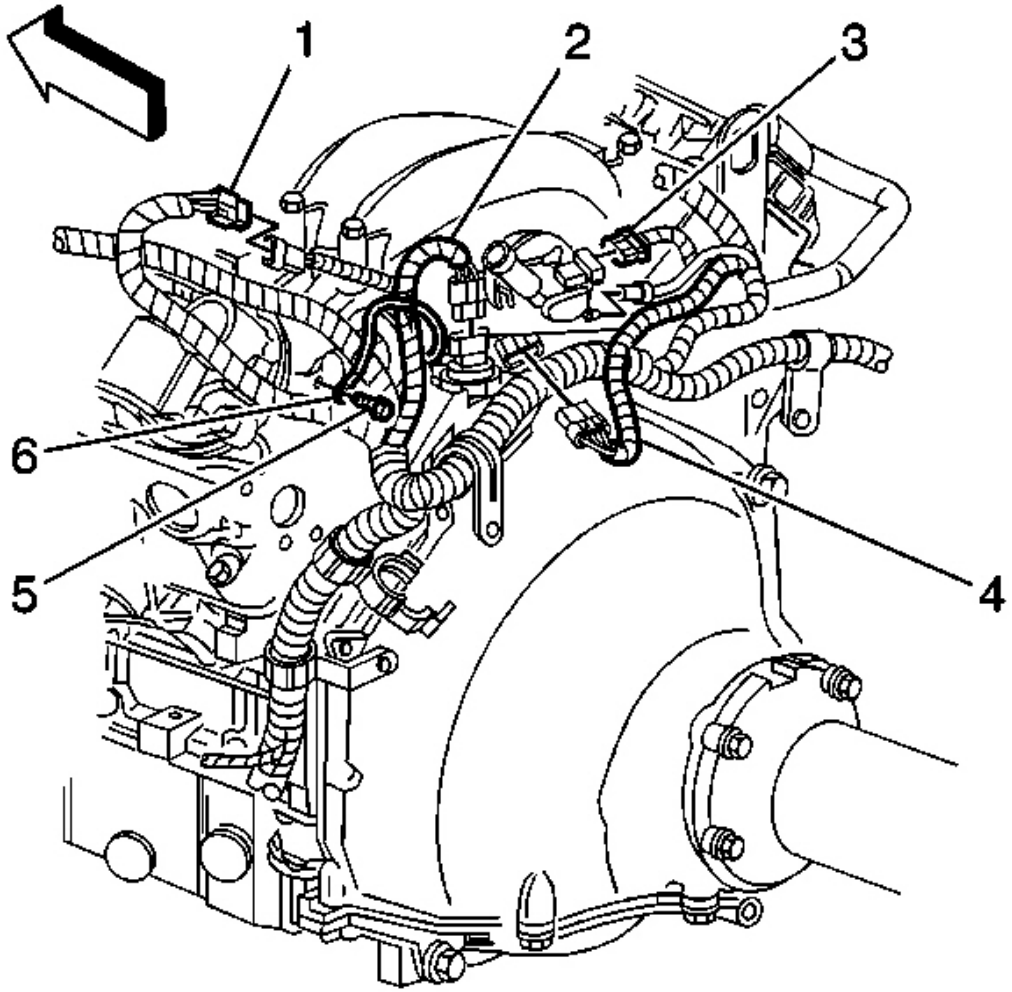

Fig. 249: MAP Sensor Vacuum Hose & MAP Sensor Electrical Connector
Courtesy of GENERAL MOTORS CORP.

1. Remove the intake manifold. Refer to **Intake Manifold Replacement** .
2. Disconnect the oil pressure sensor electrical connector (2).

IMPORTANT: Clean the area around the sensor before removal. This avoids debris from entering the engine.

cardiagn.com

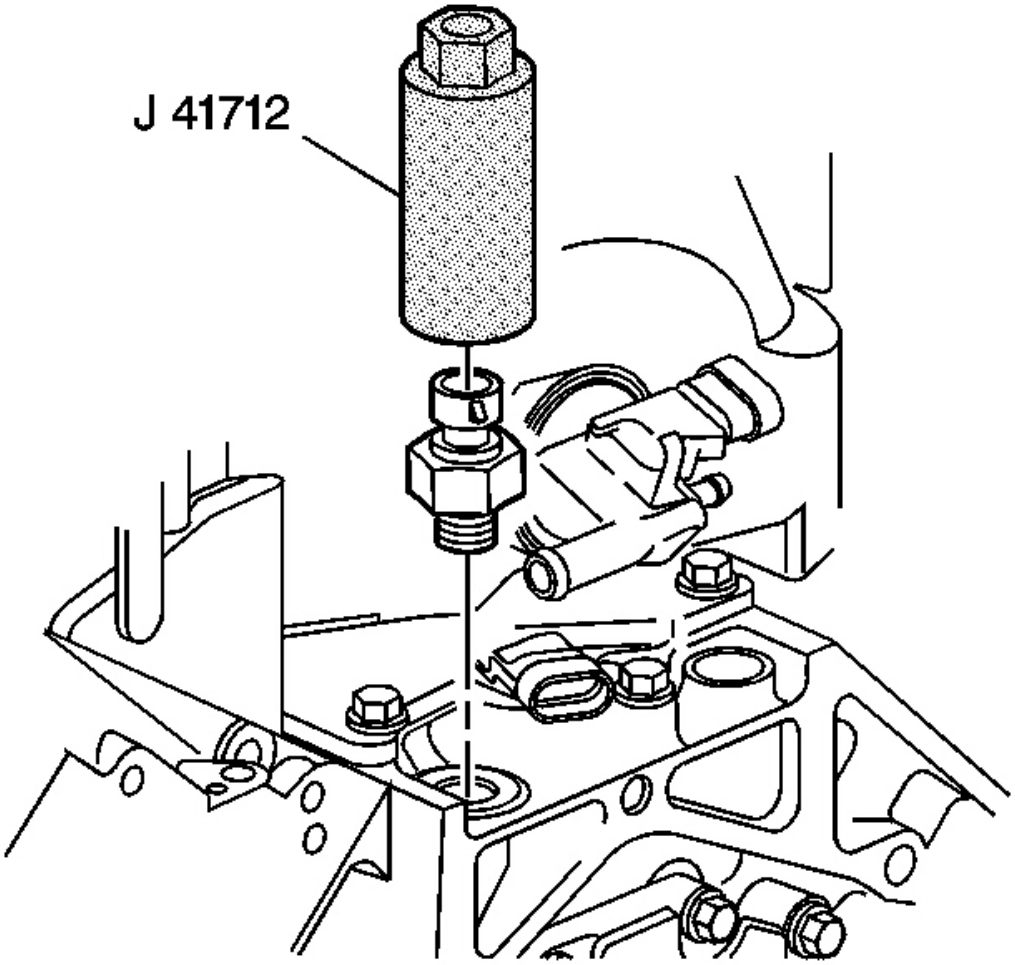

Fig. 250: J 41712 & Oil Pressure Sensor
Courtesy of GENERAL MOTORS CORP.

3. Use J 41712 to remove the oil pressure sensor from the engine block.

Installation Procedure

cardiagn.com

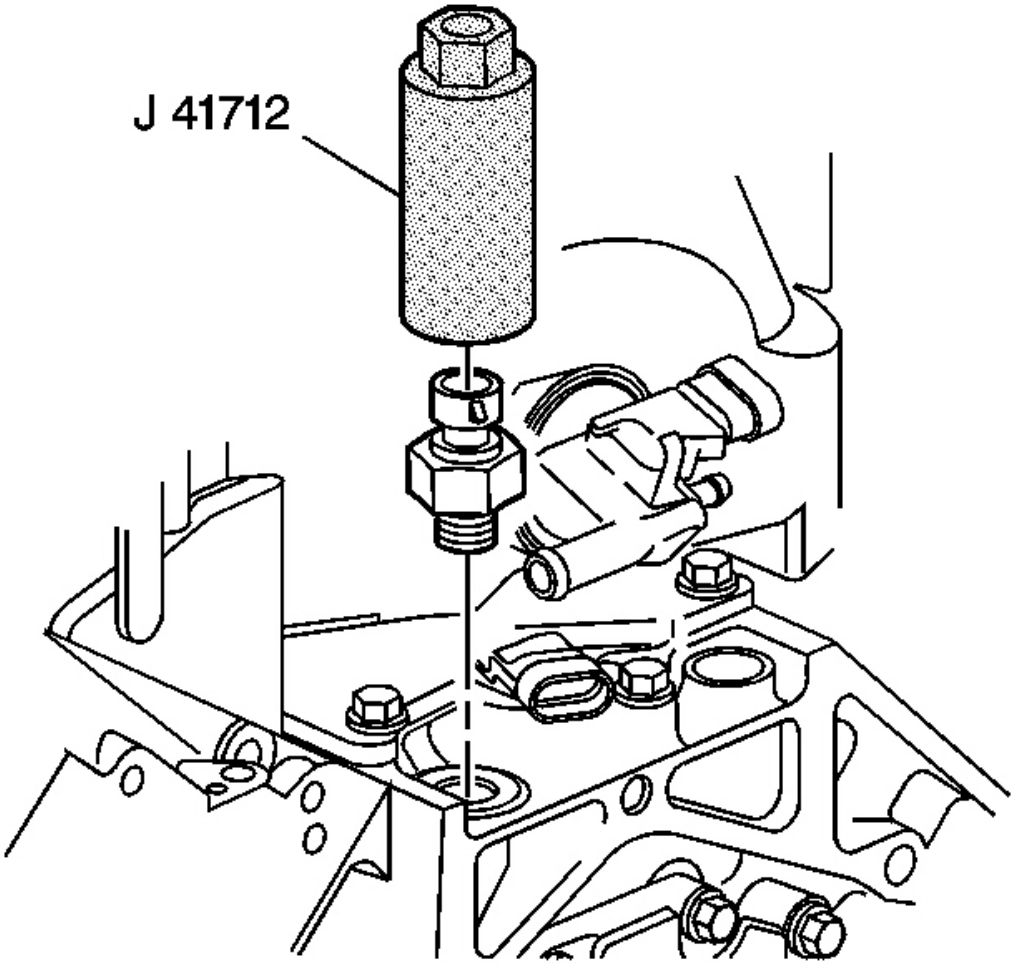

Fig. 251: J 41712 & Oil Pressure Sensor
Courtesy of GENERAL MOTORS CORP.

NOTE: Refer to Fastener Notice in Cautions and Notices.

1. If installing the old sensor, apply thread sealant GM P/N 12346004 (Canadian P/N 10953480), or equivalent.
2. Use J 41712 to install the oil pressure sensor to the engine block.

   Tighten: Tighten the engine oil pressure sensor to 20 N.m (15 lb ft).

cardiagn.com

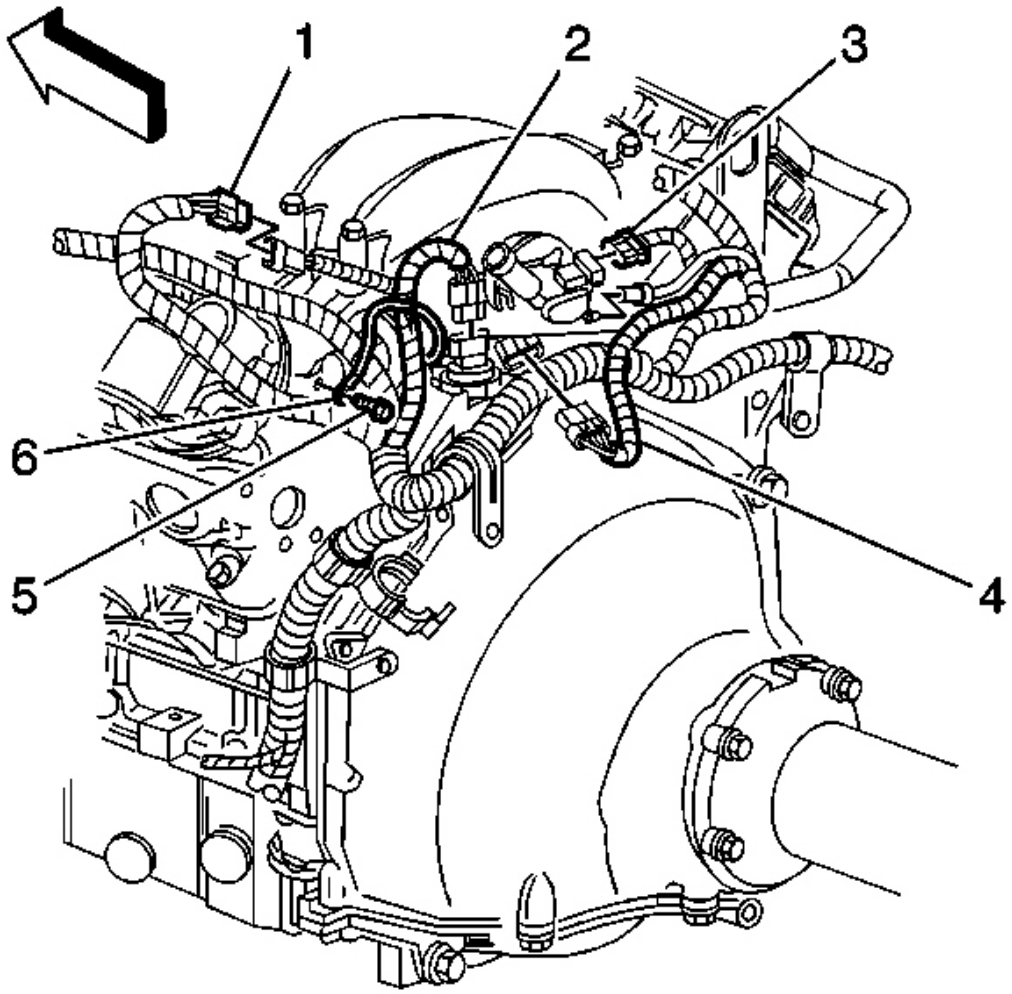

Fig. 252: MAP Sensor Vacuum Hose & MAP Sensor Electrical Connector
Courtesy of GENERAL MOTORS CORP.

3. Connect the oil pressure sensor electrical connector (2).
4. Install the intake manifold. Refer to **Intake Manifold Replacement** .

ENGINE OIL LEVEL SENSOR AND/OR SWITCH REPLACEMENT

Removal Procedure

cardiagn.com

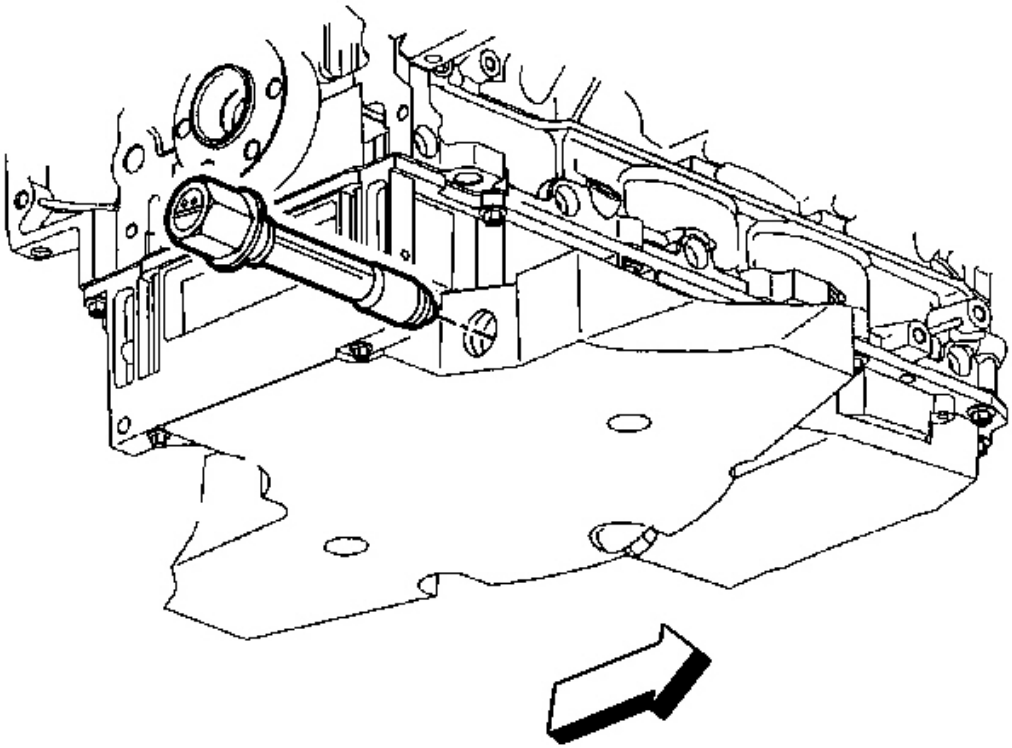

Fig. 253: Engine Oil Level Sensor Electrical Connector
Courtesy of GENERAL MOTORS CORP.

1. Raise and suitably support the vehicle. Refer to **Lifting and Jacking the Vehicle** in General Information.
2. Remove the oil pan drain plug.
3. Completely drain the engine oil.
4. Disconnect the engine oil level sensor electrical connector.
5. Remove the engine oil level sensor.

Installation Procedure

cardiagn.com

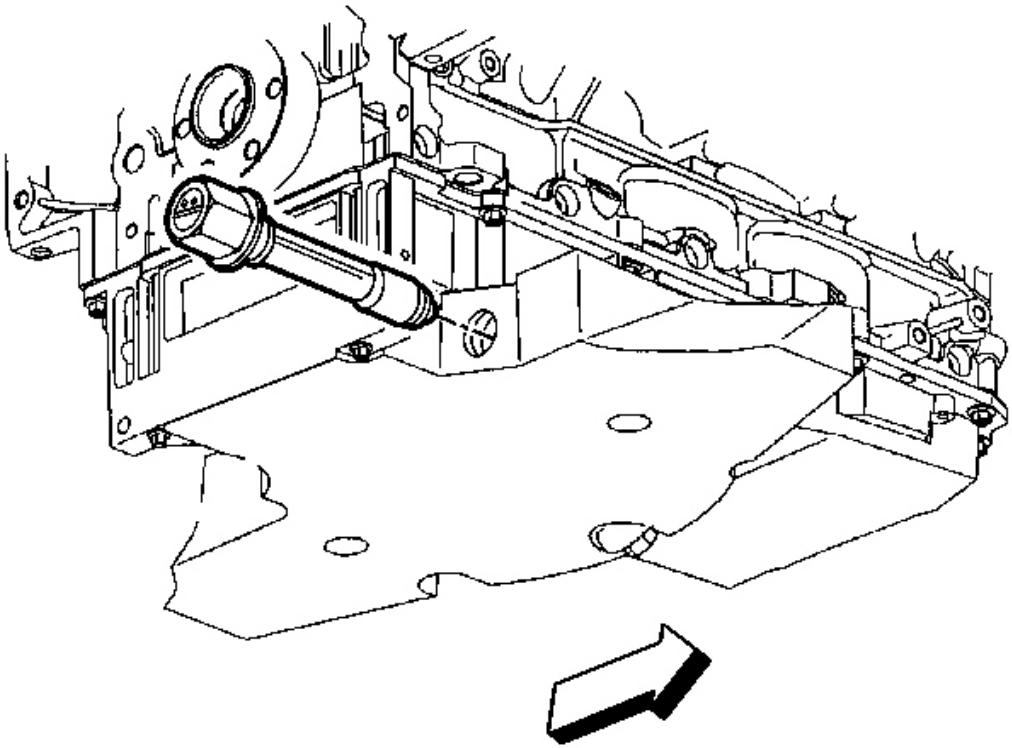

Fig. 254: Engine Oil Level Sensor Electrical Connector
Courtesy of GENERAL MOTORS CORP.

NOTE: Refer to Fastener Notice in Cautions and Notices.

1. Install the drain plug to the oil pan.

   Tighten: Tighten the drain plug to 25 N.m (18 lb ft).

2. Install the engine oil level sensor.

   Tighten: Tighten the engine oil level sensor to 13 N.m (115 lb in).

3. Connector the engine oil level sensor electrical connector.
4. Lower the vehicle.
5. Refill the engine with oil.

ENGINE OIL TEMPERATURE GAGE SENSOR REPLACEMENT

cardiagn.com

Removal Procedure

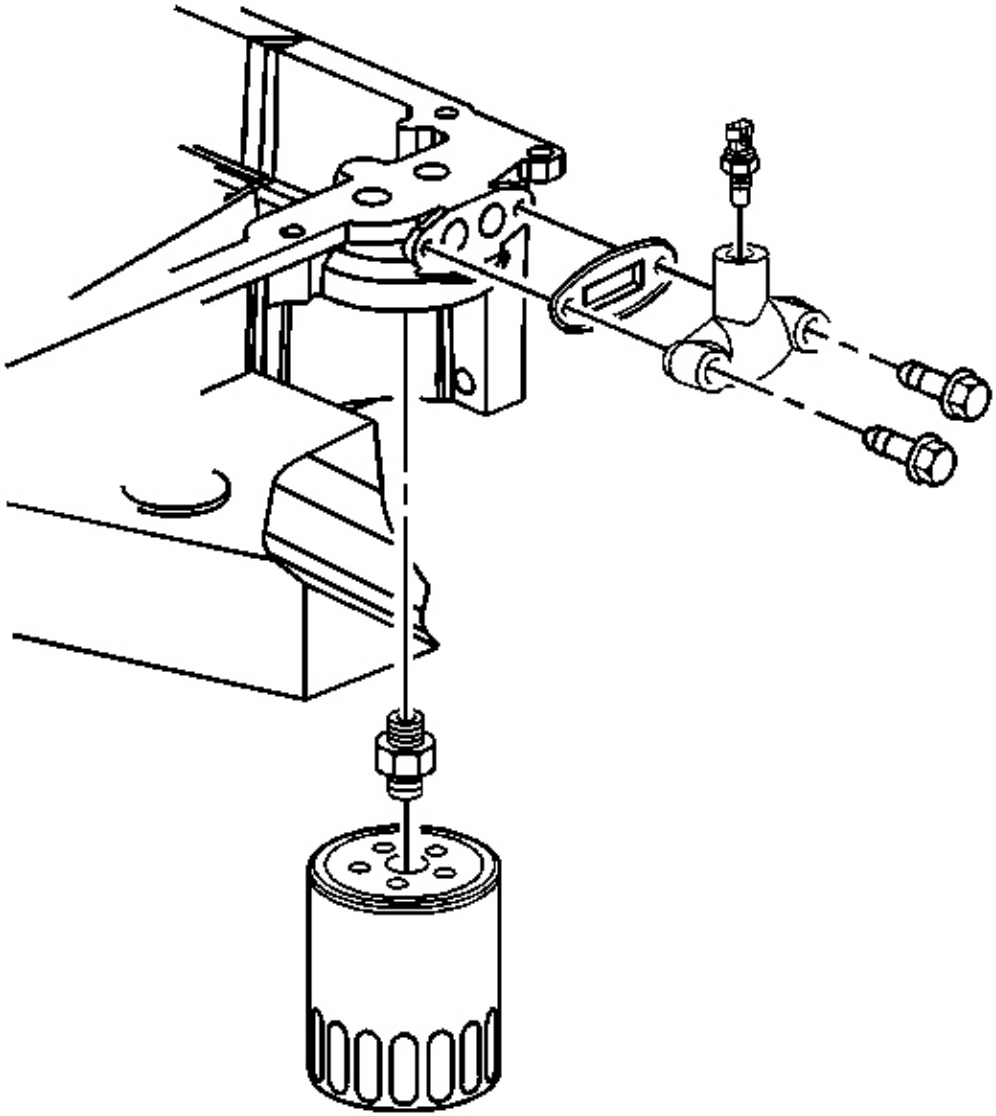

Fig. 255: Engine Oil Temperature Gage Sensor
Courtesy of GENERAL MOTORS CORP.

1. Raise the vehicle. Refer to **Lifting and Jacking the Vehicle** in General Information.
2. Remove the engine oil temperature gage sensor.

cardiagn.com

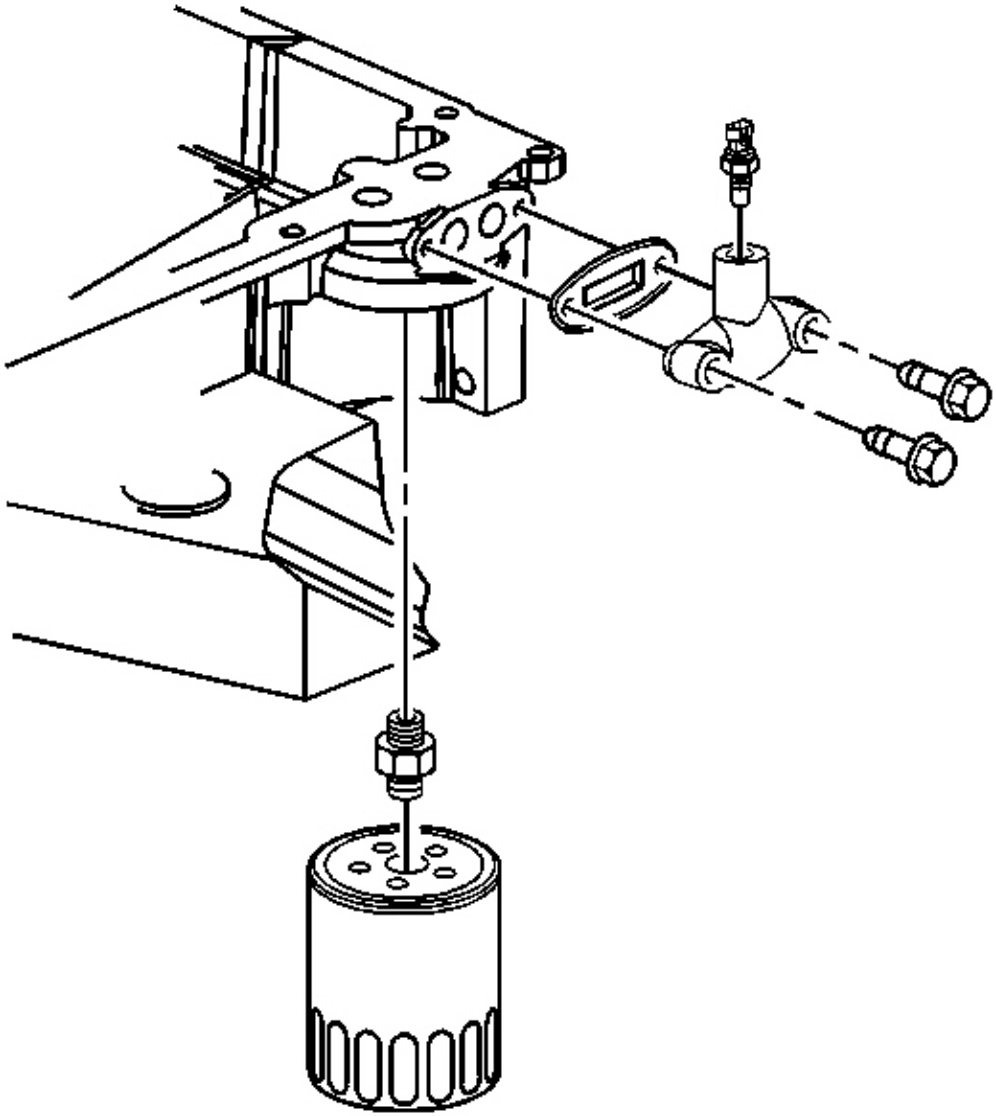

Fig. 256: Engine Oil Temperature Gage Sensor
Courtesy of GENERAL MOTORS CORP.

NOTE: Refer to Fastener Notice in Cautions and Notices.

1. Install the engine oil temperature gage sensor.

cardiagn.com

Tighten: Tighten the engine oil temperature gage sensor to 23 N.m (17 lb ft).

2. Lower the vehicle.

OIL PUMP, PUMP SCREEN AND DEFLECTOR REPLACEMENT

Removal Procedure

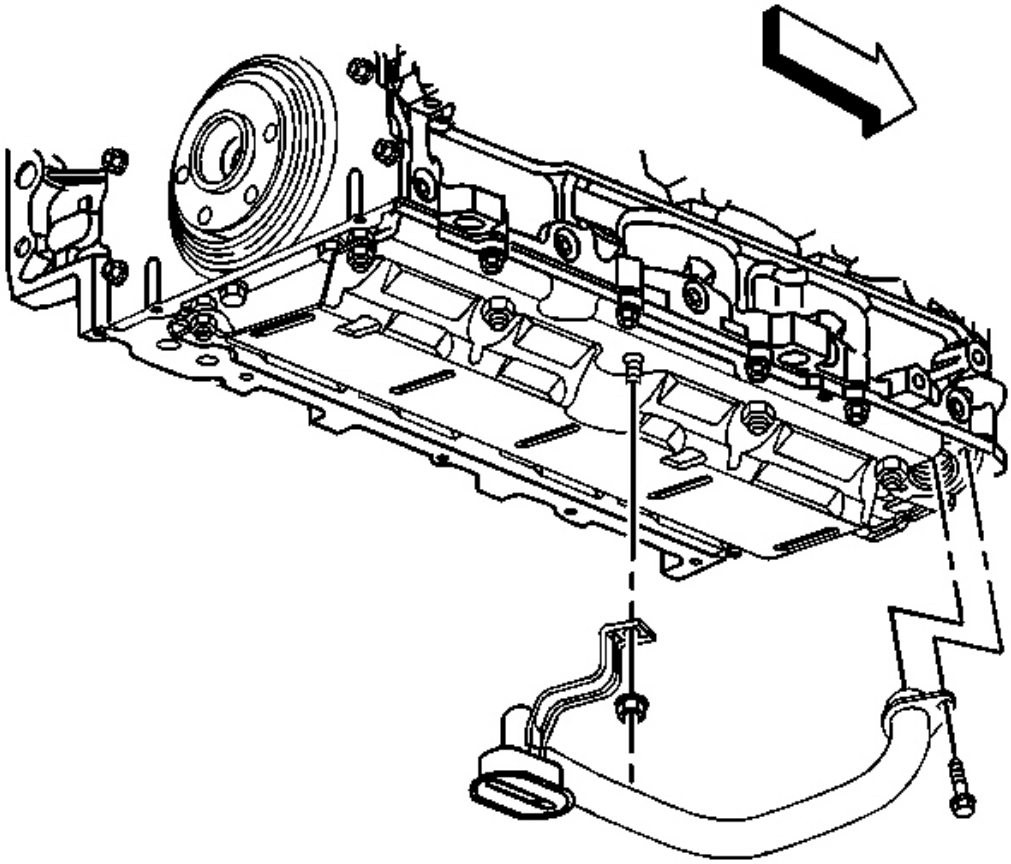

Fig. 257: O-Ring Seal, Oil Pump Screen & Bolt
Courtesy of GENERAL MOTORS CORP.

1. Remove the engine front cover. Refer to **Engine Front Cover Replacement** .
2. Remove the engine oil pan. Refer to **Oil Pan Replacement** .
3. Remove the oil pump screen bolt and nut.
4. Remove the oil pump screen and O-ring seal.

cardiagn.com

5. Remove the O-ring seal from the pump screen.
6. Discard the O-ring seal.

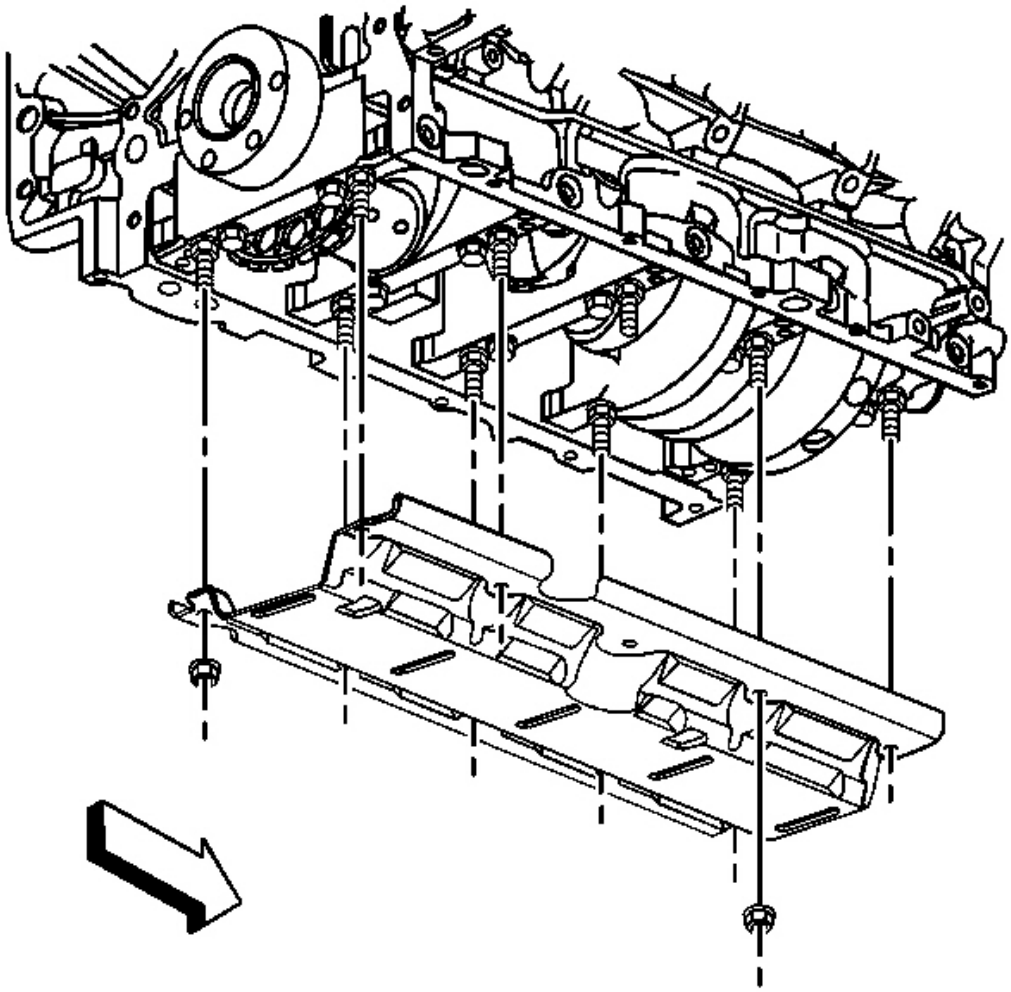

Fig. 258: Crankshaft Oil Deflector & Nuts
Courtesy of GENERAL MOTORS CORP.

7. Remove the remaining crankshaft oil deflector nuts.
8. Remove the crankshaft oil deflector.

cardiagn.com

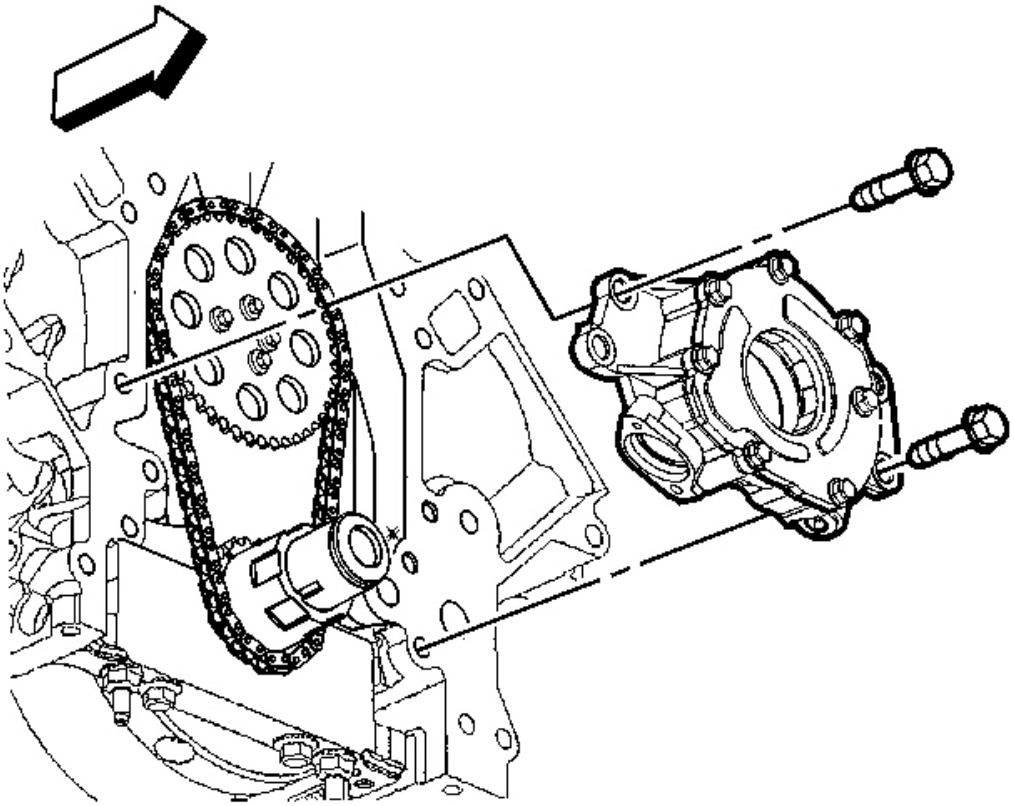

Fig. 259: View Of Oil Pump & Bolt
Courtesy of GENERAL MOTORS CORP.

IMPORTANT: Do not allow dirt or debris to enter the oil pump, cap the ends as necessary.

9. Remove the oil pump bolts.
10. Remove the oil pump.
11. Clean and inspect the oil pump. Refer to **Oil Pump Cleaning and Inspection** .

Installation Procedure

IMPORTANT: Inspect the engine block oil gallery passages. These surfaces must be clear and free of debris or restrictions.

cardiagn.com

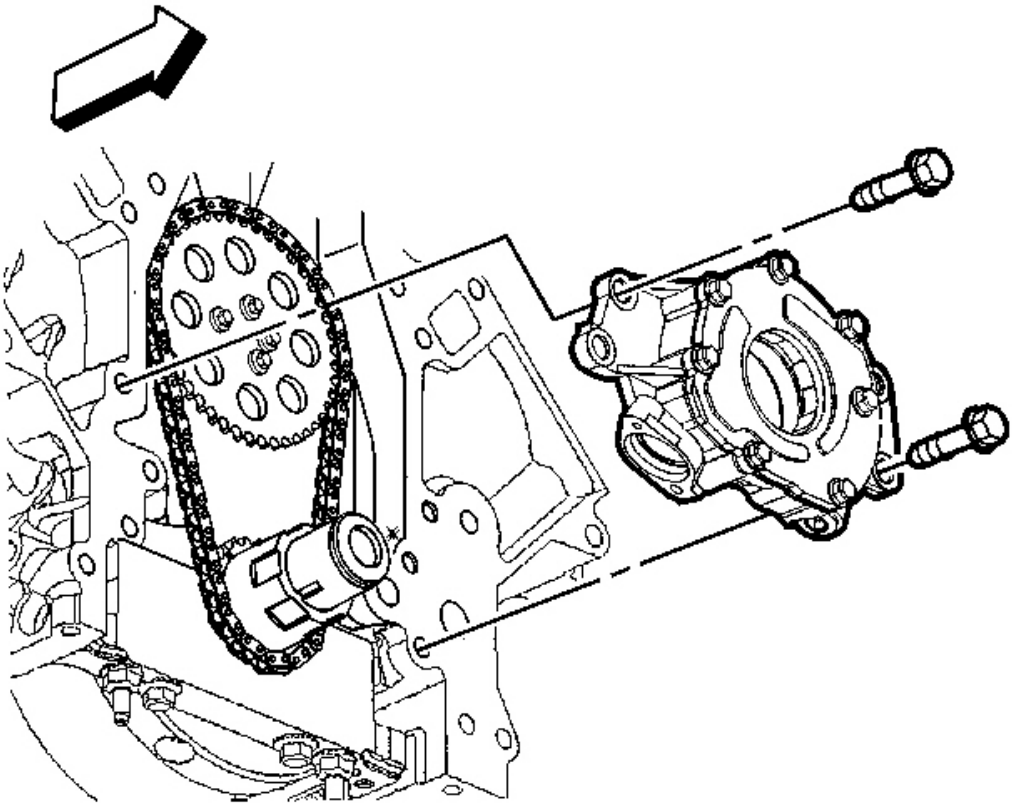

Fig. 260: View Of Oil Pump & Bolt
Courtesy of GENERAL MOTORS CORP.

1. Align the splined surfaces of the crankshaft sprocket and the oil pump drive gear and install the oil pump.
2. Install the oil pump onto the crankshaft sprocket until the pump housing contacts the face of the engine block.

NOTE: **Refer to Fastener Notice in Cautions and Notices.**

3. Install the oil pump bolts.

   Tighten: Tighten the oil pump bolts to 25 N.m (18 lb ft).

cardiagn.com

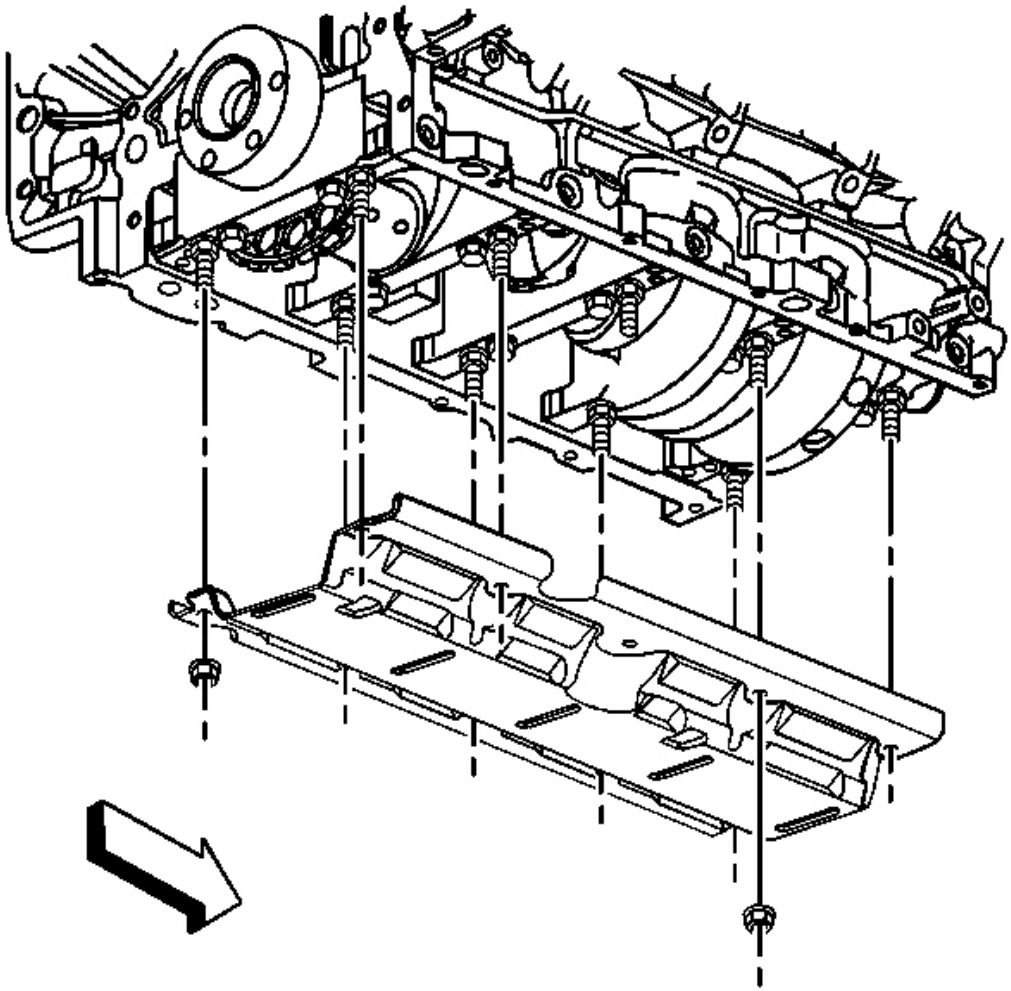

Fig. 261: Crankshaft Oil Deflector & Nuts
Courtesy of GENERAL MOTORS CORP.

4. Install the crankshaft oil deflector.
5. Install the crankshaft oil deflector nuts.

Tighten: Tighten the crankshaft oil deflector nuts to 25 N.m (18 lb ft).

cardiagn.com

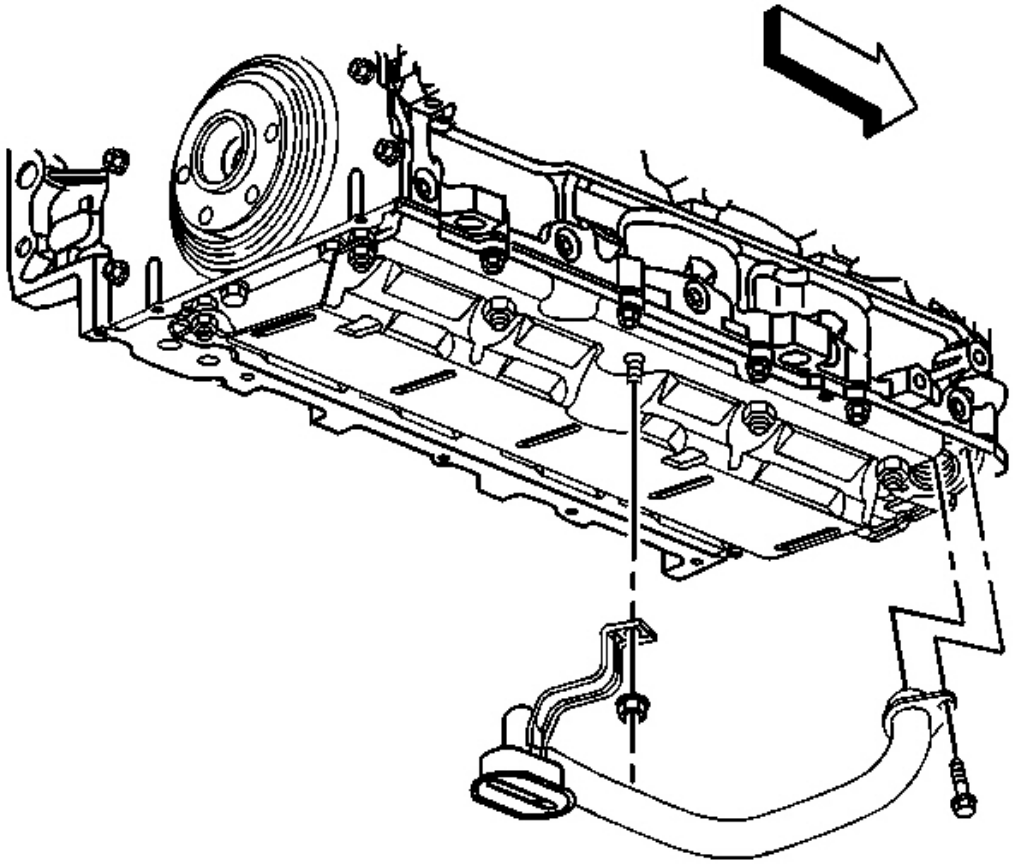

Fig. 262: O-Ring Seal, Oil Pump Screen & Bolt
Courtesy of GENERAL MOTORS CORP.

6. Lubricate a NEW oil pump screen O-ring seal with clean engine oil.
7. Install the NEW O-ring seal onto the oil pump screen.

IMPORTANT: Push the oil pump screen tube completely into the oil pump prior to tightening the bolt. Do not allow the bolt to pull the tube into the pump. Align the oil pump screen brackets with the correct crankshaft bearing cap studs.

8. Install the oil pump screen.
9. Install the oil pump screen bolt and nut.

Tighten:

cardiagn.com

- Tighten the oil pump screen bolt to 12 N.m (106 lb in).
- Tighten the oil pump screen nut to 25 N.m (18 lb ft).

10. Install the engine oil pan. Refer to **Oil Pan Replacement** .
11. Install the engine front cover. Refer to **Engine Front Cover Replacement** .

TIMING CHAIN AND SPROCKETS REPLACEMENT

Tools Required

- **J 8433** Pulley Puller
- **J 41558** Crankshaft Sprocket Remover
- J 41816-2 Crankshaft End Protector
- **J 41665** Crankshaft Balancer and Sprocket Installer

Removal Procedure

NOTE: **Do not turn the crankshaft assembly after the timing chain has been removed in order to prevent damage to the piston assemblies or the valves.**

cardiagn.com

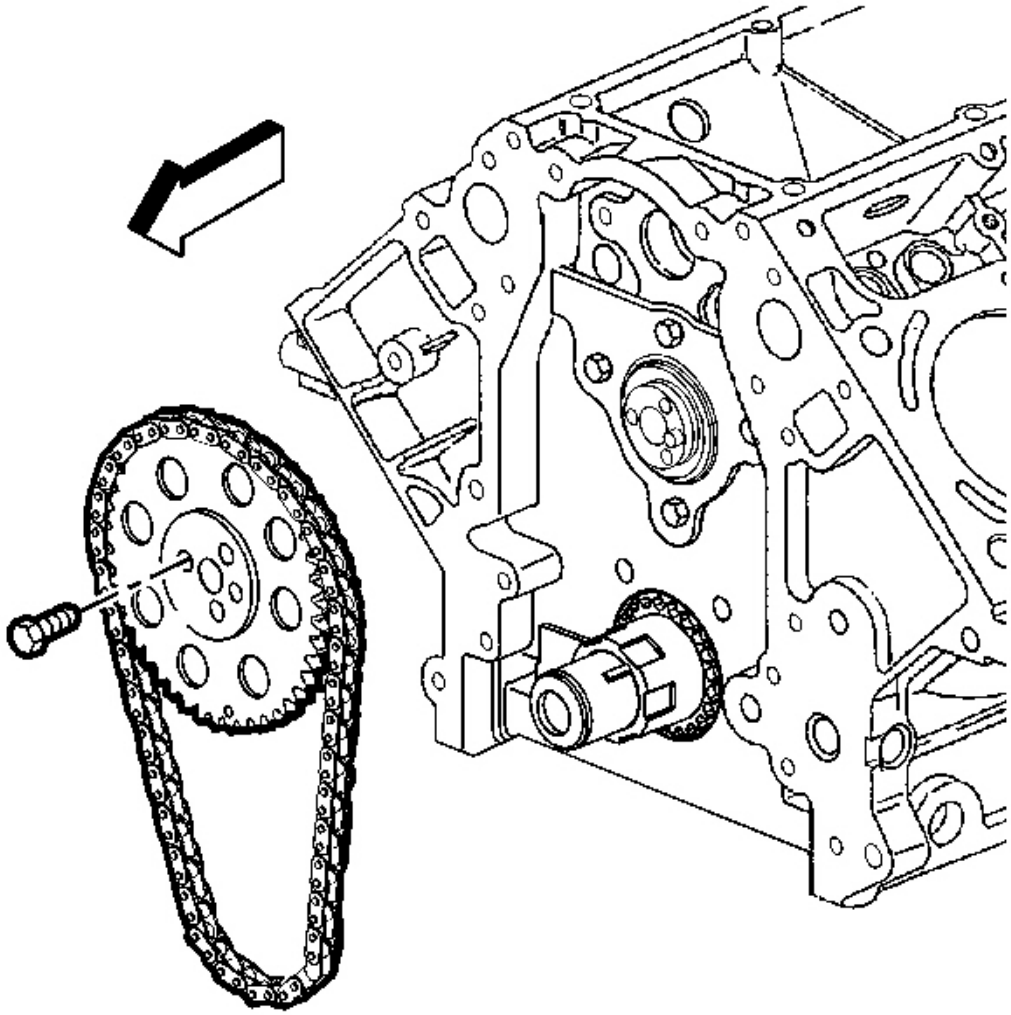

Fig. 263: View Of Camshaft Sprocket, Bolt & Timing Chain
Courtesy of GENERAL MOTORS CORP.

1. Remove the oil pump. Refer to **Oil Pump, Pump Screen and Deflector Replacement** .
2. Remove the camshaft sprocket bolts.
3. Remove the camshaft sprocket and timing chain.

cardiagn.com

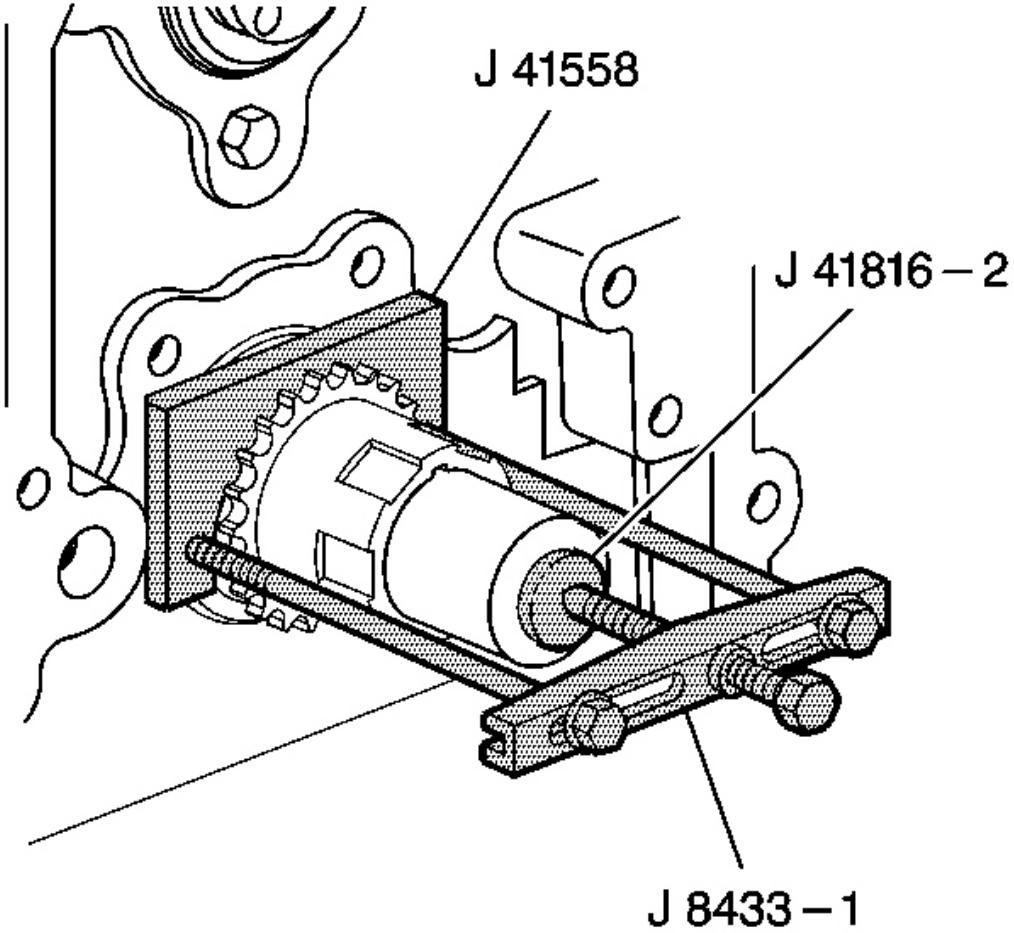

Fig. 264: View Of J 8433-1, J 41816-2 & J 41558
Courtesy of GENERAL MOTORS CORP.

4. Use the **J 8433** , J 41816-2 and **J 41558** in order to remove the crankshaft sprocket.

cardiagn.com

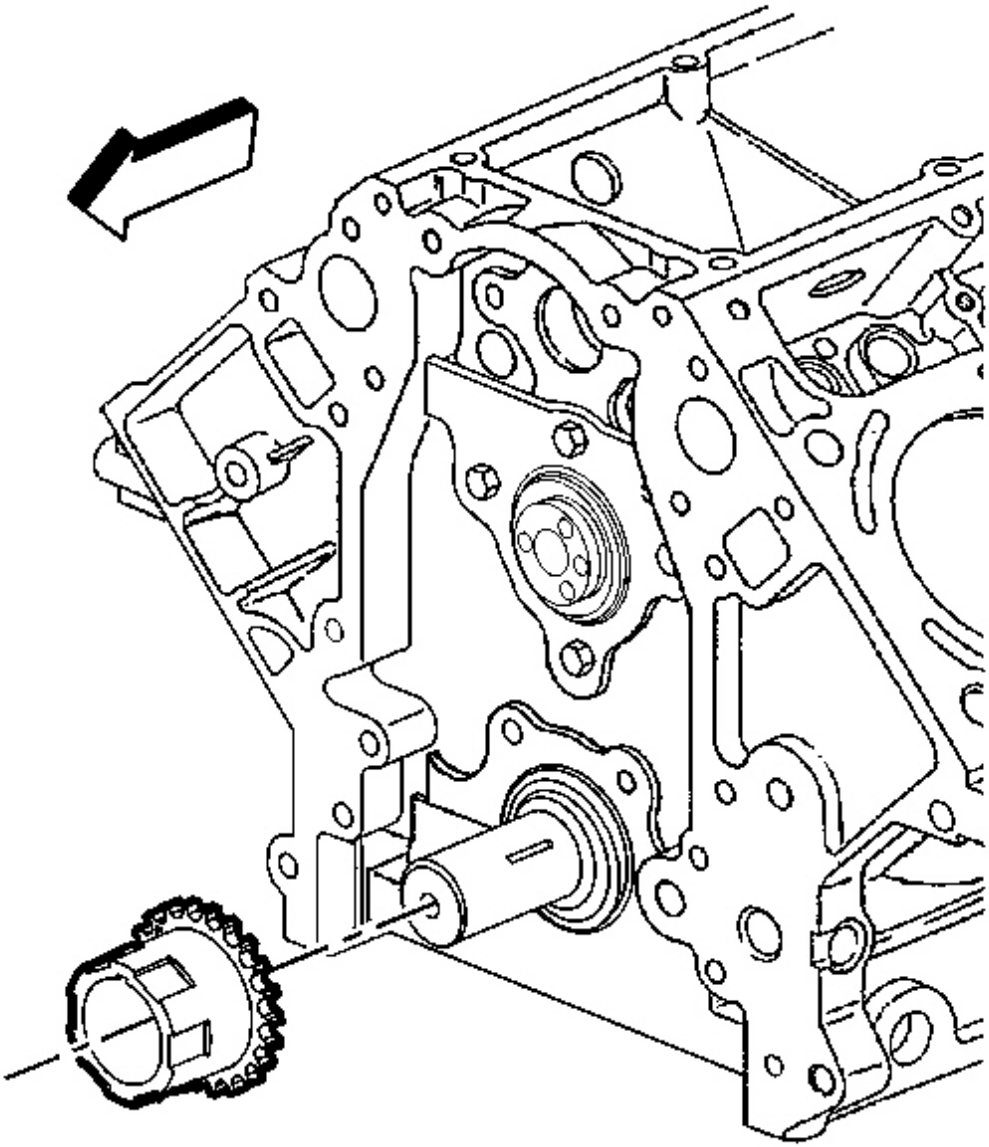

Fig. 265: View Of Crankshaft Sprocket
Courtesy of GENERAL MOTORS CORP.

5. Remove the crankshaft sprocket.

cardiagn.com

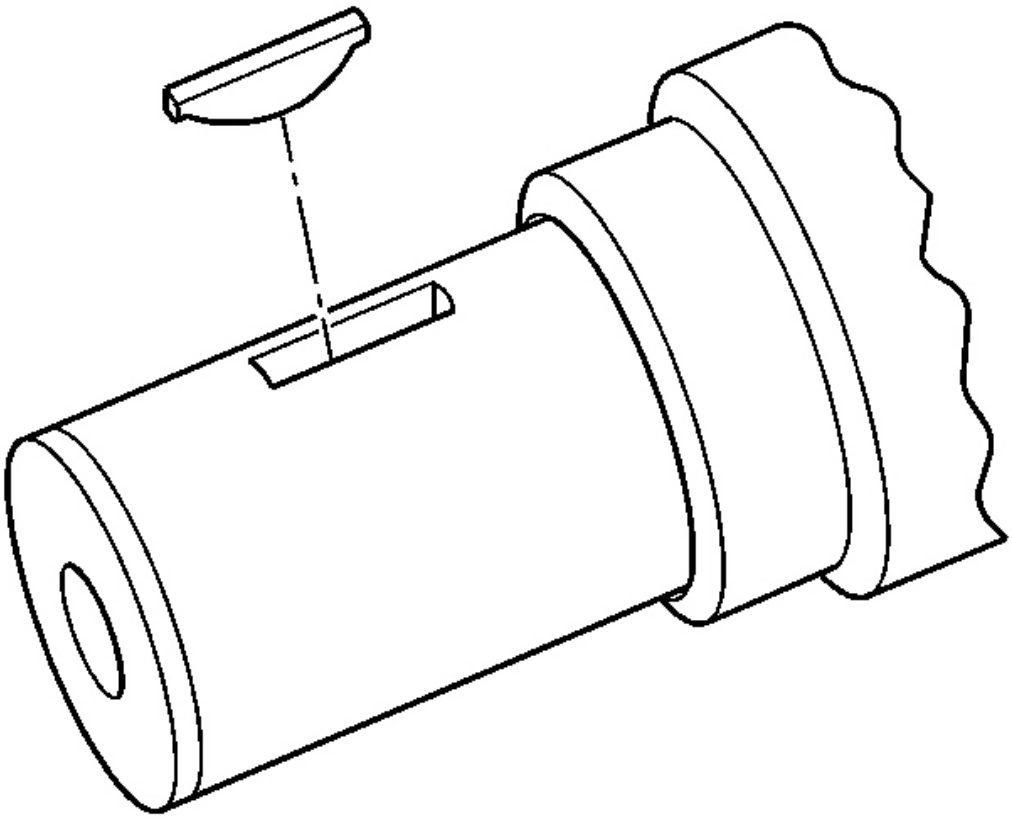

Fig. 266: View Of Crankshaft Sprocket Key
Courtesy of GENERAL MOTORS CORP.

6. Remove the crankshaft sprocket key (if required).
7. Clean and inspect the timing chain and sprockets. Refer to **Timing Chain and Sprockets Cleaning and Inspection** .

Installation Procedure

cardiagn.com

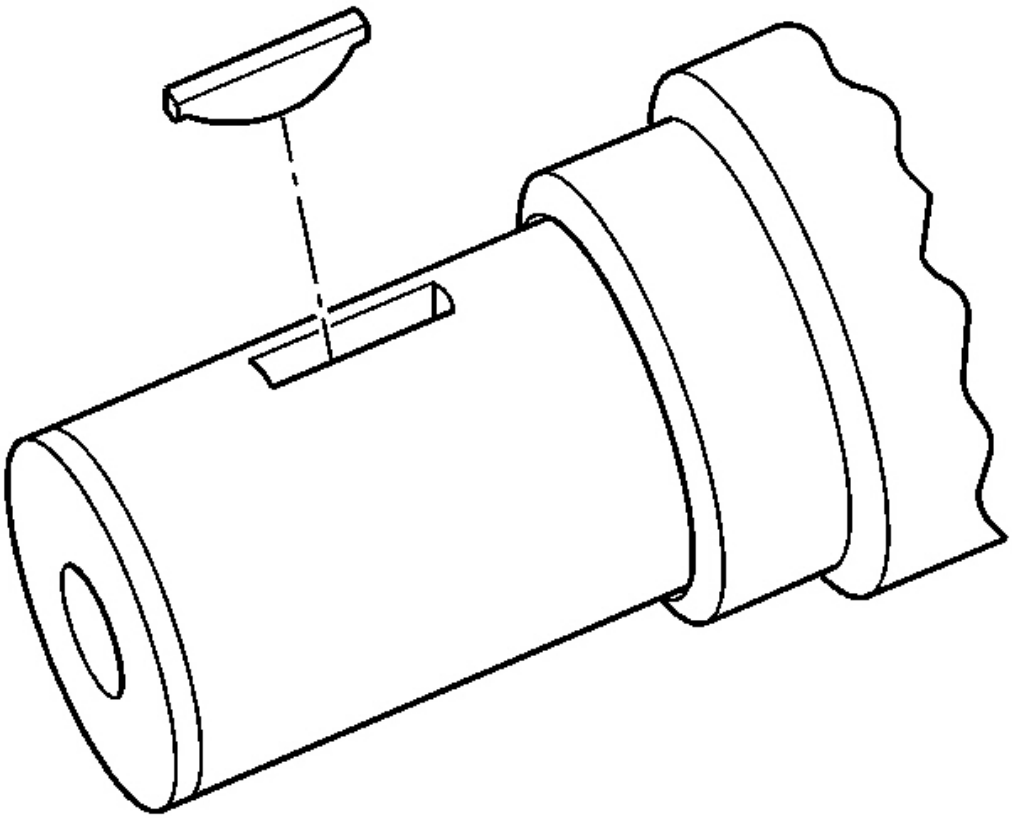

Fig. 267: View Of Crankshaft Sprocket Key
Courtesy of GENERAL MOTORS CORP.

1. Install the key into the crankshaft keyway (if previously removed).

cardiagn.com

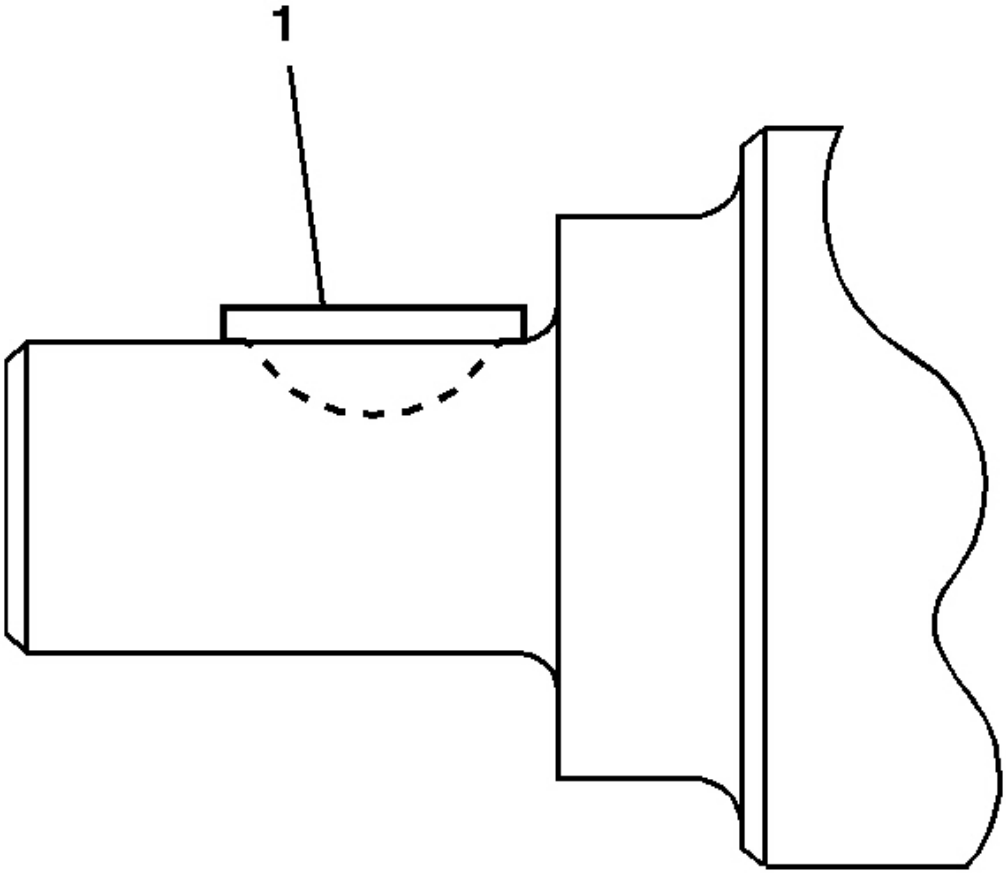

Fig. 268: View Of Crankshaft Sprocket Key Installation Position
Courtesy of GENERAL MOTORS CORP.

2. Tap the key (1) into the keyway until both ends of the key bottom onto the crankshaft.

cardiagn.com

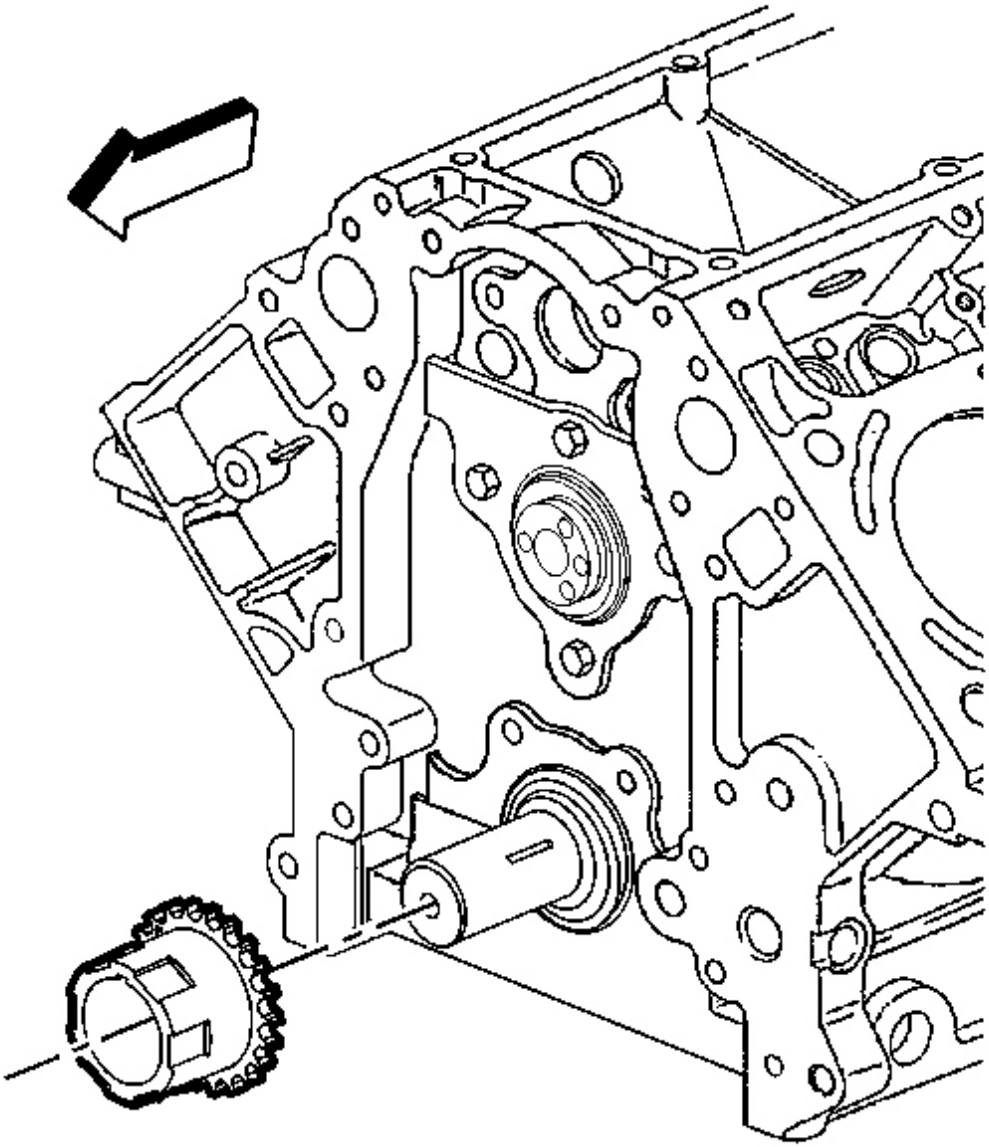

Fig. 269: View Of Crankshaft Sprocket
Courtesy of GENERAL MOTORS CORP.

3. Install the crankshaft sprocket onto the front of the crankshaft. Align the crankshaft key with the crankshaft sprocket keyway.

cardiagn.com

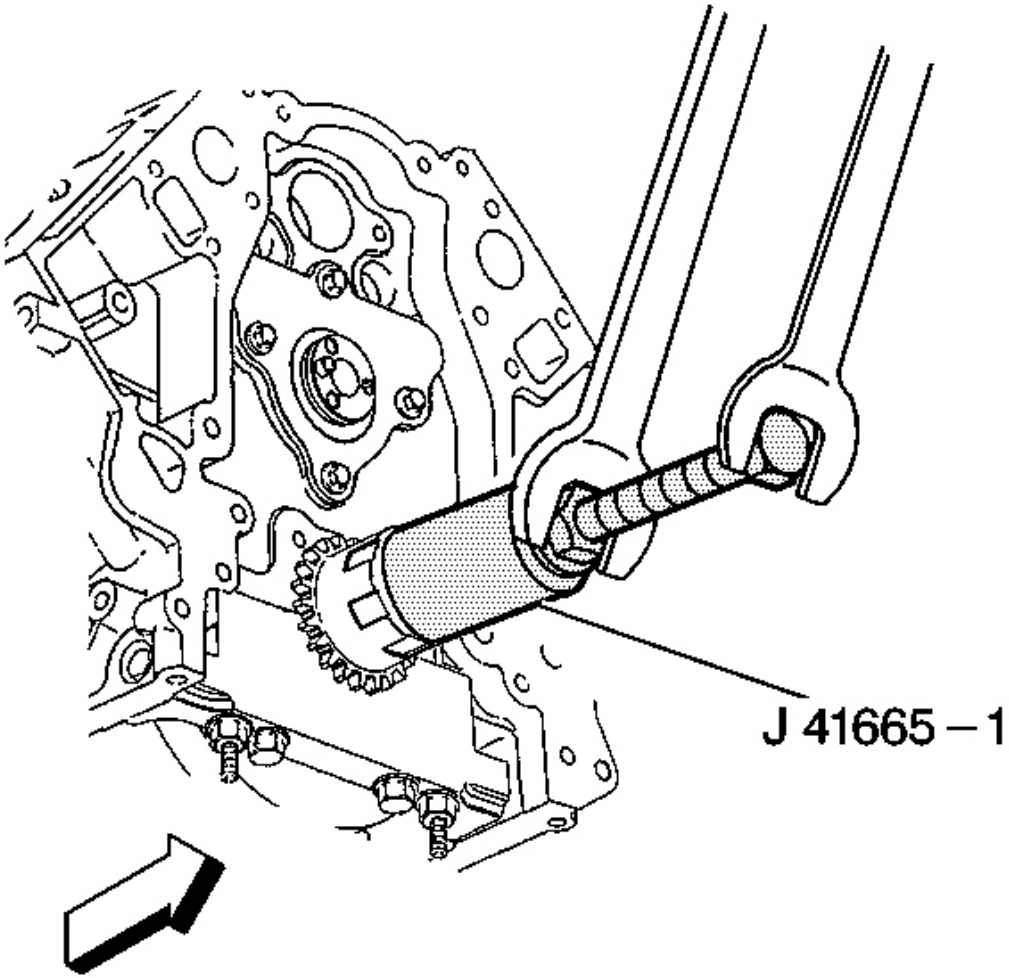

Fig. 270: Installing Crankshaft Sprocket Using J 41665
Courtesy of GENERAL MOTORS CORP.

4. Use the **J 41665** in order to install the crankshaft sprocket.

   Install the sprocket onto the crankshaft until fully seated against the crankshaft flange.

5. Rotate the crankshaft sprocket until the alignment mark is in the 12 o'clock position.

cardiagn.com

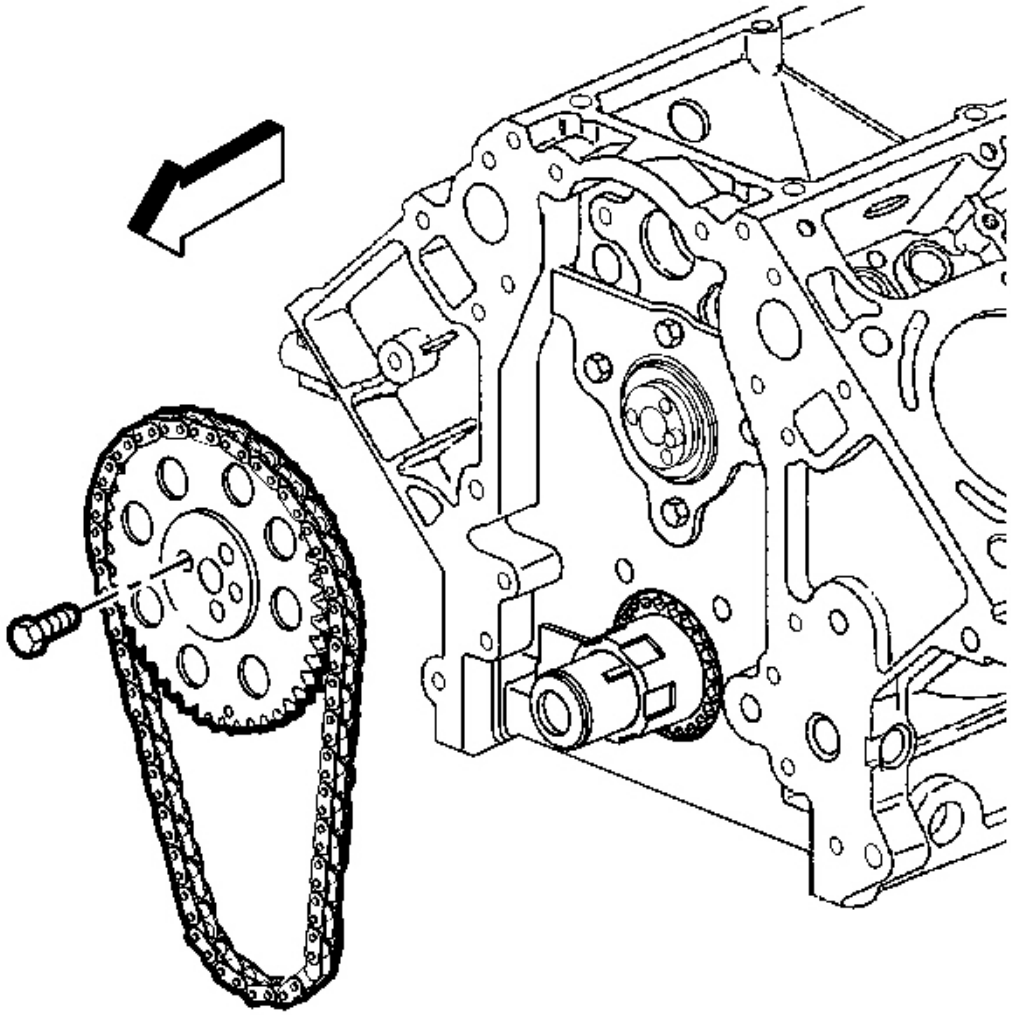

Fig. 271: View Of Camshaft Sprocket, Bolt & Timing Chain
Courtesy of GENERAL MOTORS CORP.

IMPORTANT:

- **Properly locate the camshaft sprocket locating pin with the camshaft sprocket alignment hole.**
- **The sprocket teeth and timing chain must mesh.**
- **The camshaft and the crankshaft sprocket alignment marks MUST be aligned correctly.**

Locate the camshaft sprocket alignment mark in the 6 o'clock

cardiagn.com

position.

6. Install the camshaft sprocket and timing chain.

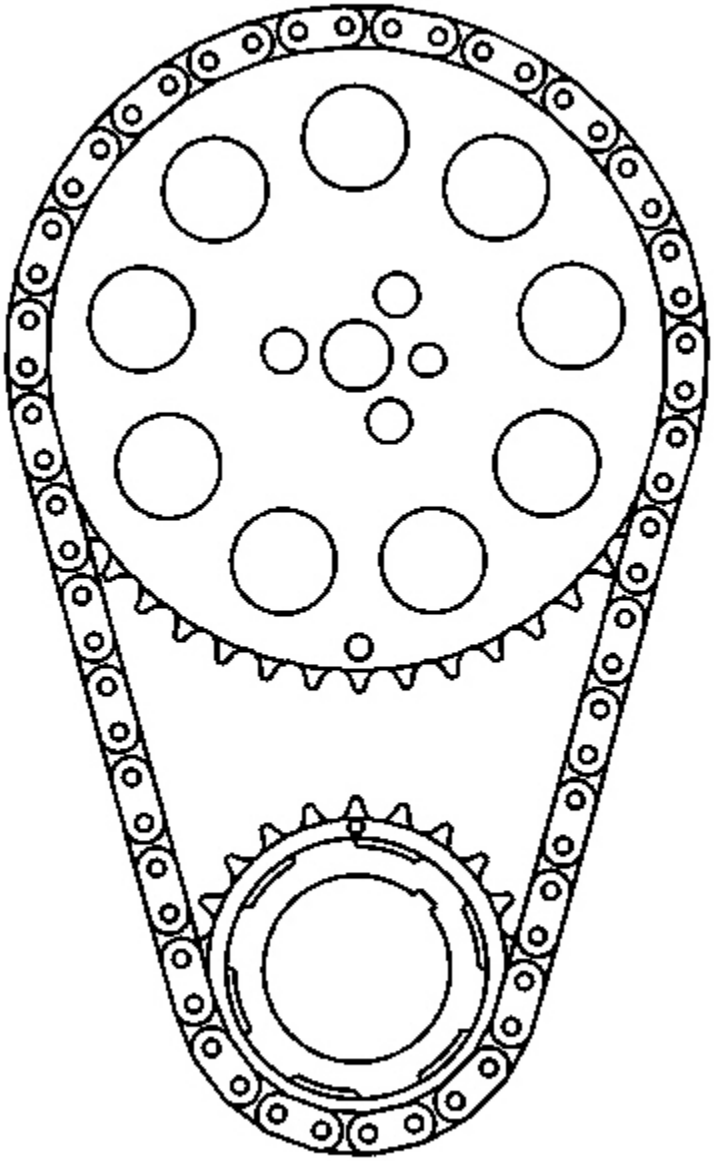

Fig. 272: Crankshaft Sprocket
Courtesy of GENERAL MOTORS CORP.

cardiagn.com

NOTE: Refer to Fastener Notice in Cautions and Notices.

7. If necessary, rotate the camshaft or crankshaft sprockets in order to align the timing marks.
8. Install the camshaft sprocket bolts.

   Tighten: Tighten the camshaft sprocket bolts to 35 N.m (26 lb ft).

9. Install the oil pump. Refer to **Oil Pump, Pump Screen and Deflector Replacement** .

CAMSHAFT REPLACEMENT

Tools Required

J 41476 Front and Rear Cover Alignment Tool

Removal Procedure

cardiagn.com

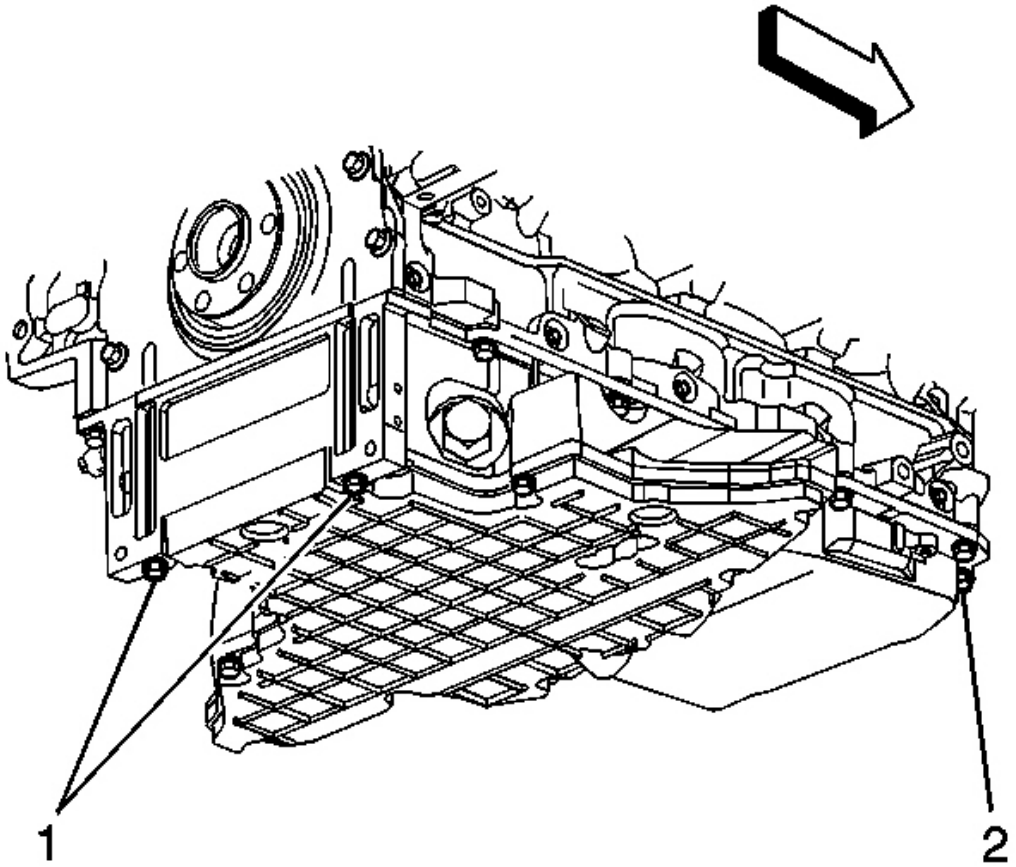

Fig. 273: Oil Pan-To-Front Cover Bolts & Oil Pan-To-Rear Cover Bolts
Courtesy of GENERAL MOTORS CORP.

1. Remove the engine assembly. Refer to **Engine Replacement** .
2. Remove the crankshaft balancer. Refer to **Crankshaft Balancer Removal** .
3. Remove the oil level indicator tube. Refer to **Oil Level Indicator and Tube Removal** .
4. Remove the left and right exhaust manifolds Refer to **Exhaust Manifold Removal - Left** and **Exhaust Manifold Removal - Right** .
5. Remove the water pump. Refer to **Water Pump Removal** .
6. Remove the intake manifold. Refer to **Intake Manifold Removal** .
7. Remove the coolant air bleed pipe. Refer to **Coolant Air Bleed Pipe Removal** .
8. Remove the left and right valve rocker arm covers. Refer to **Valve Rocker Arm Cover Removal - Left** and **Valve Rocker Arm Cover Removal - Right** .
9. Remove the valve rocker arms and push rods. Refer to **Valve Rocker Arm and Push Rod Removal** .

cardiagn.com

10. Remove the left and right cylinder heads. Refer to **Cylinder Head Removal - Left** and **Cylinder Head Removal - Right** .
11. Remove the valve lifters. Refer to **Valve Lifter Removal** .
12. Remove the oil pan-to-front cover bolts (2).

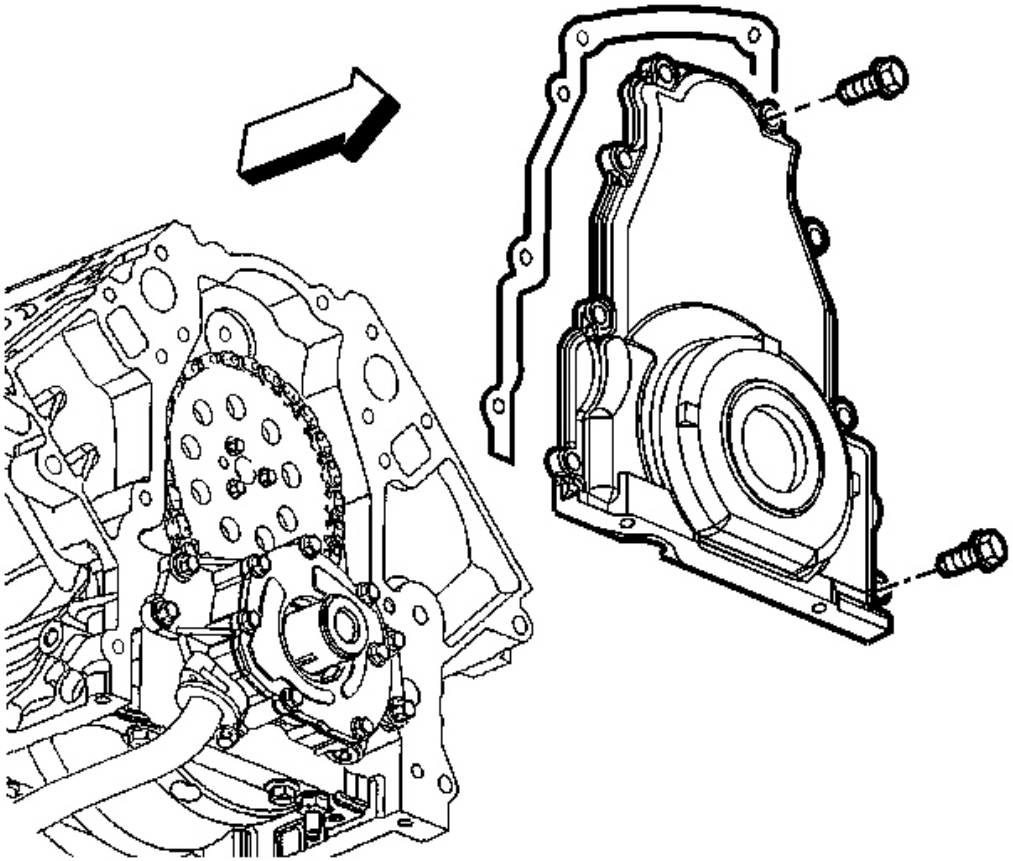

Fig. 274: Front Cover Gasket & Bolts
Courtesy of GENERAL MOTORS CORP.

13. Remove the front cover bolts.
14. Remove the front cover and gasket. Discard the old gasket.

cardiagn.com

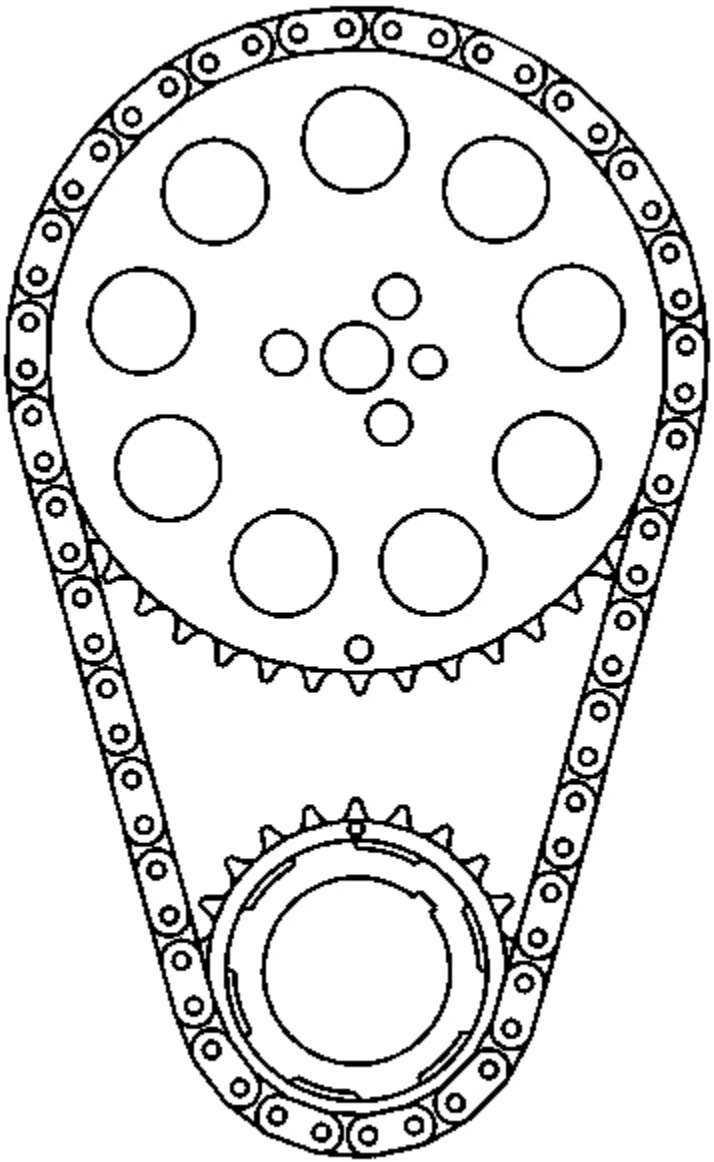

Fig. 275: Crankshaft Sprocket
Courtesy of GENERAL MOTORS CORP.

15. Rotate the engine in order to align the timing marks.

cardiagn.com

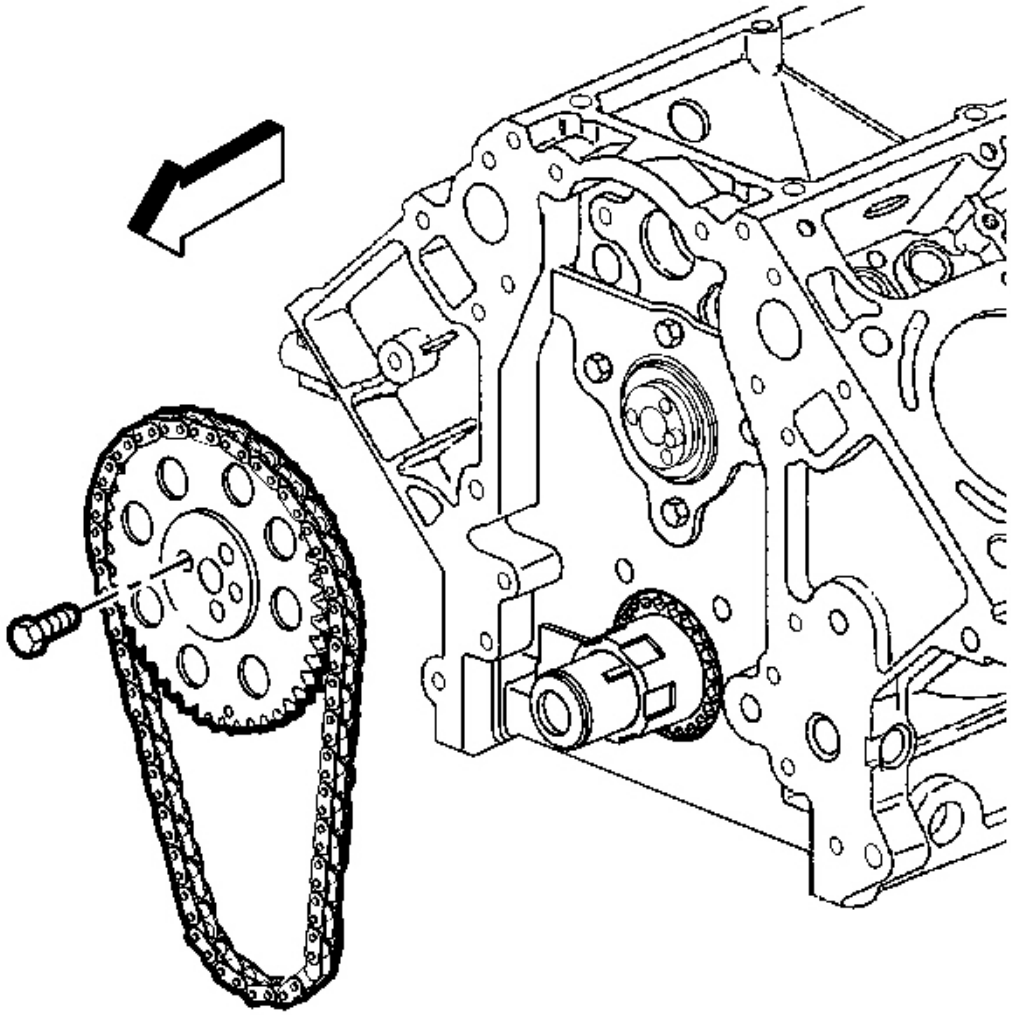

Fig. 276: View Of Camshaft Sprocket, Bolt & Timing Chain
Courtesy of GENERAL MOTORS CORP.

16. Remove the camshaft sprocket bolts.
17. Remove the timing chain from the camshaft sprocket, and allow the timing chain to rest on the crankshaft sprocket.
18. Remove the camshaft. Refer to **Camshaft Removal** .
19. Clean and inspect the camshaft and bearings. Refer to **Camshaft and Bearings Cleaning and Inspection** .

cardiagn.com

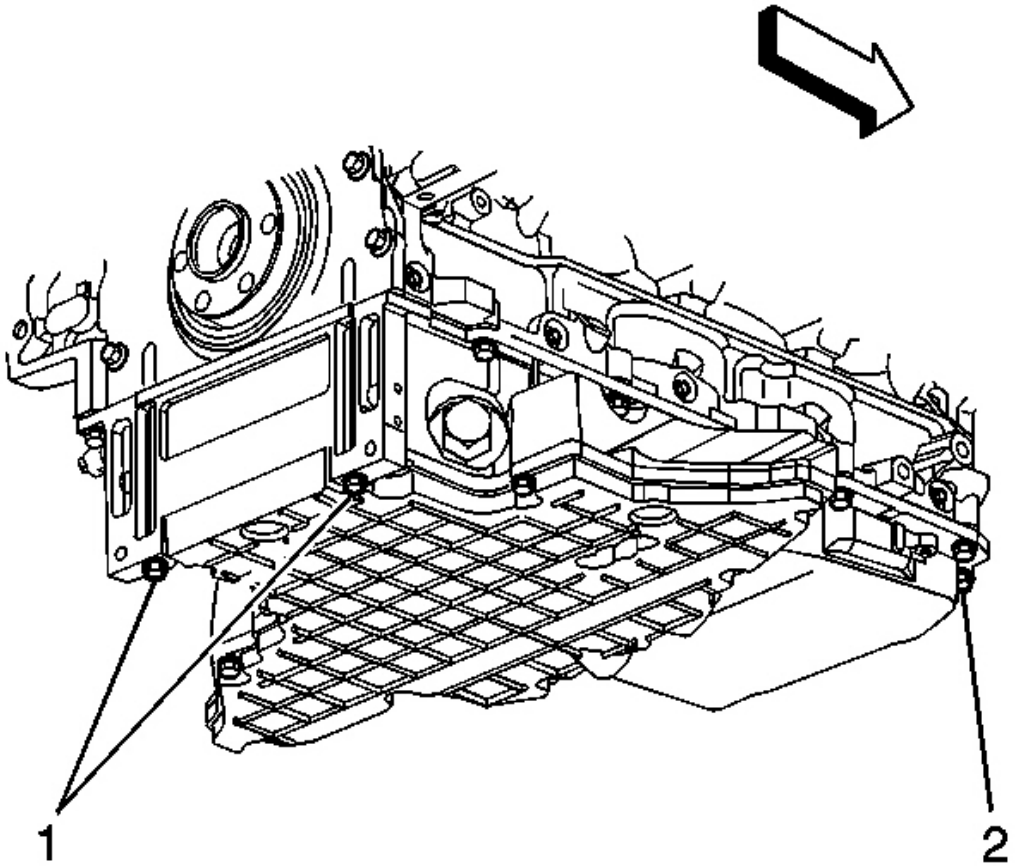

Fig. 277: Oil Pan-To-Front Cover Bolts & Oil Pan-To-Rear Cover Bolts
Courtesy of GENERAL MOTORS CORP.

IMPORTANT: Rear cover removal is not required, if the camshaft bearings are not being replaced.

20. If the camshaft bearings need to be replaced, remove the oil pan-to rear cover bolts (1).

cardiagn.com

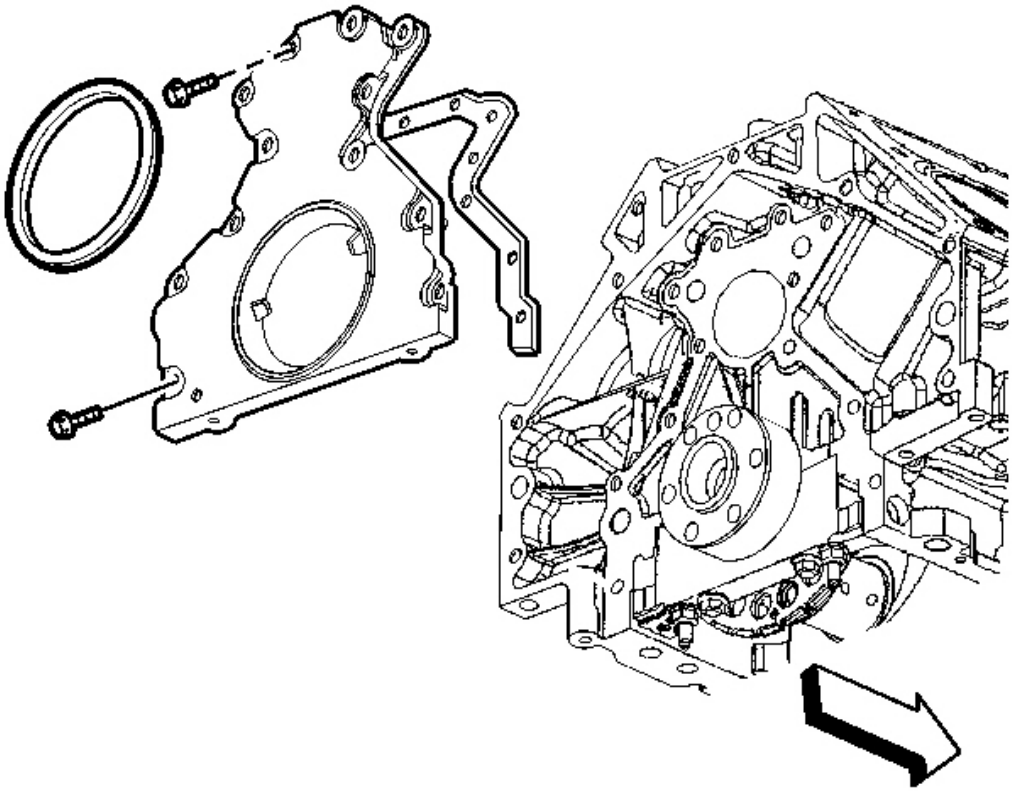

Fig. 278: View Of Rear Cover, Bolts & Gasket
Courtesy of GENERAL MOTORS CORP.

21. Remove the rear cover bolts.
22. Remove the rear cover and gasket. Discard the gasket.
23. Remove the camshaft bearings, if required. Refer to **Camshaft Bearing Removal** .

Installation Procedure

cardiagn.com

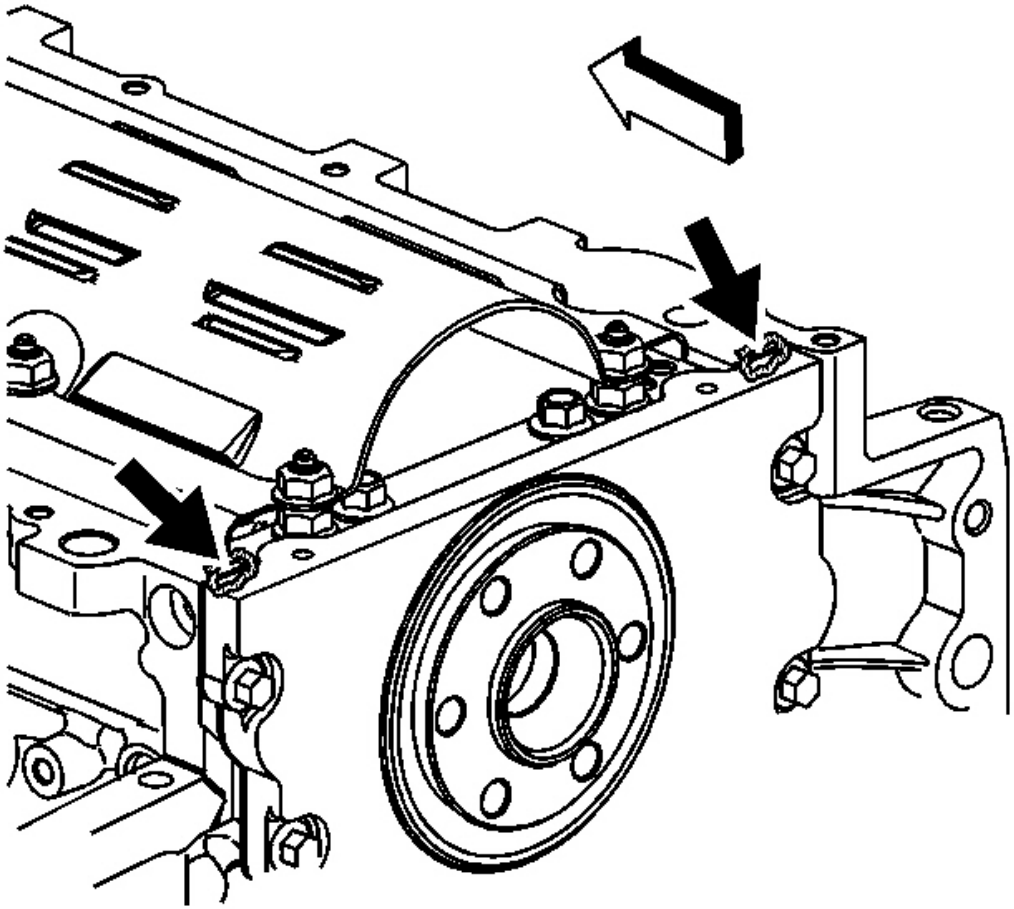

Fig. 279: View Of Sealant On Engine Rear Cover Gasket Tabs
Courtesy of GENERAL MOTORS CORP.

1. Install NEW camshaft bearings, if required. Refer to **Camshaft Bearing Installation** .
2. Apply a 5 mm bead of sealant GM P/N 12378190, or equivalent 20 mm (0.8 in) long to the oil pan to engine block junction, if required.

cardiagn.com

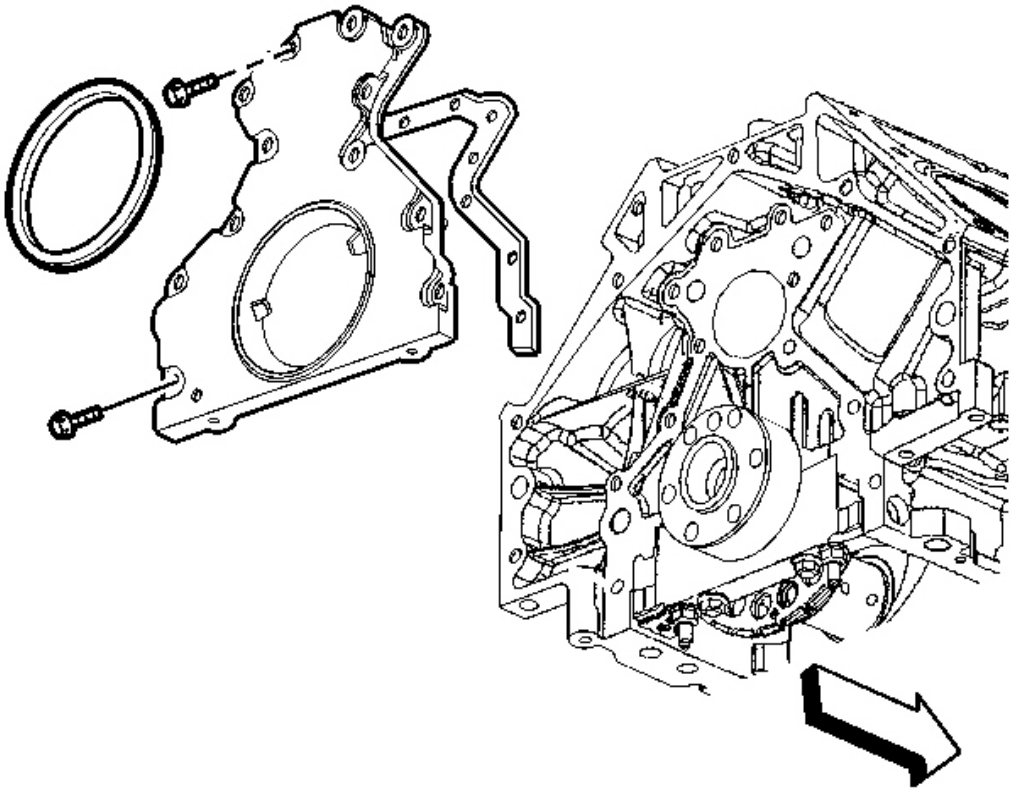

Fig. 280: View Of Rear Cover, Bolts & Gasket
Courtesy of GENERAL MOTORS CORP.

3. Install the rear cover and a new gasket, if required.
4. Install the rear cover bolts until snug, if required.

cardiagn.com

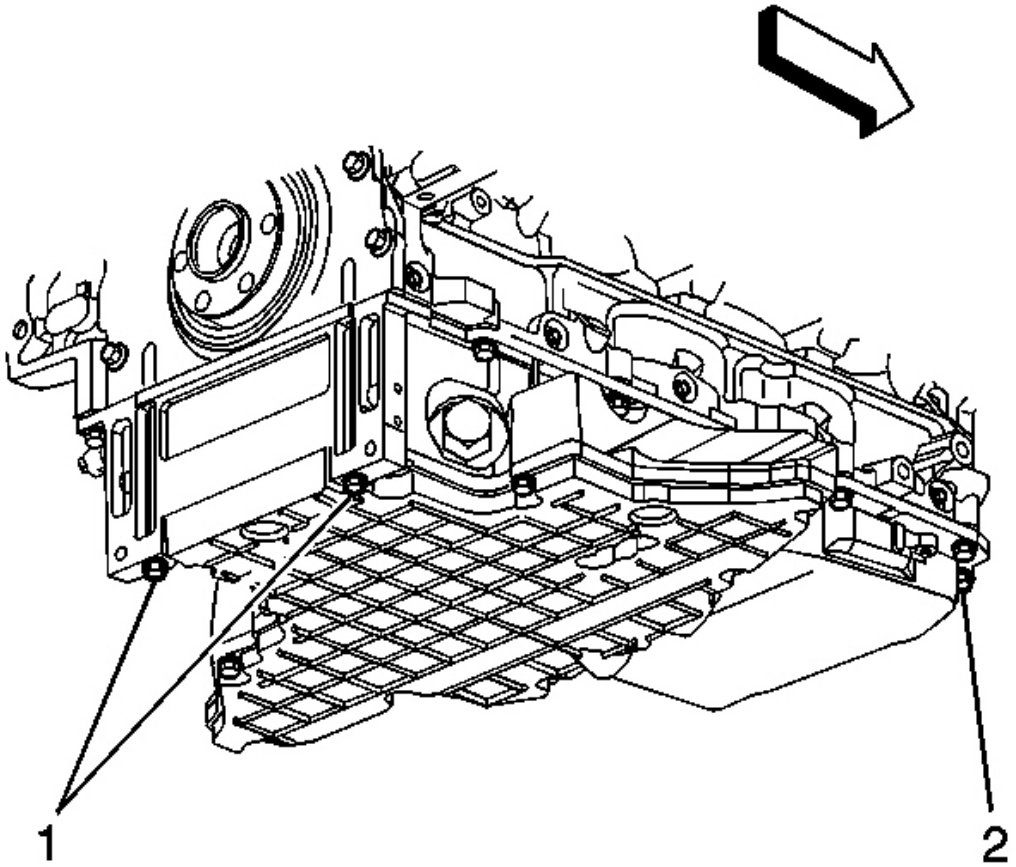

Fig. 281: Oil Pan-To-Front Cover Bolts & Oil Pan-To-Rear Cover Bolts
Courtesy of GENERAL MOTORS CORP.

5. Install the oil pan-to-rear cover bolts (1) until snug, if required.

cardiagn.com

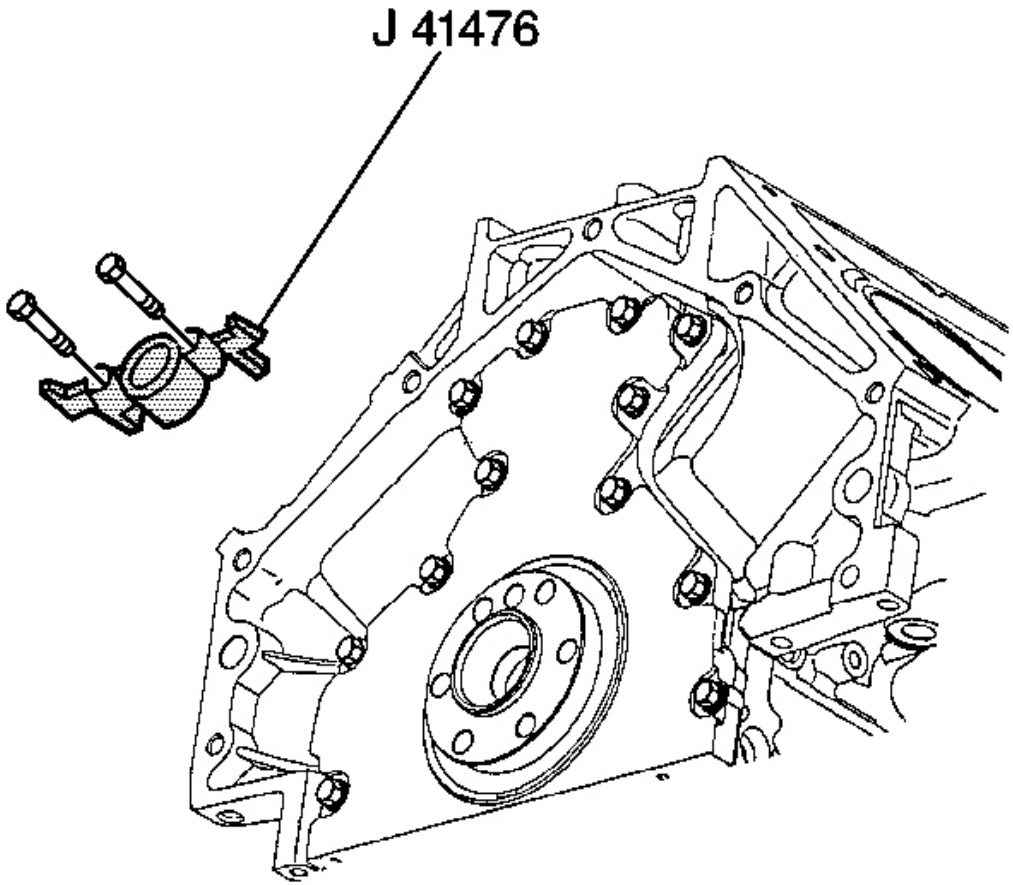

Fig. 282: J 41476 & Bolts
Courtesy of GENERAL MOTORS CORP.

6. Rotate the crankshaft as required until two opposing flywheel bolt holes are parallel to the oil pan surface, if required.

NOTE: **Refer to Fastener Notice in Cautions and Notices.**

IMPORTANT: **The tapered legs of the alignment tool must enter the rear cover oil seal bore.**

7. Install the **J 41476** bolts until snug. Do not overtighten, if required.

Tighten:

cardiagn.com

1. Tighten the oil pan-to-rear cover bolts to 12 N.m (106 lb in).
2. Tighten the engine rear cover bolts to 25 N.m (18 lb ft).

8. Remove the **J 41476** .
9. Install a NEW crankshaft rear oil seal, if required. Refer to **Crankshaft Rear Oil Seal Installation** .

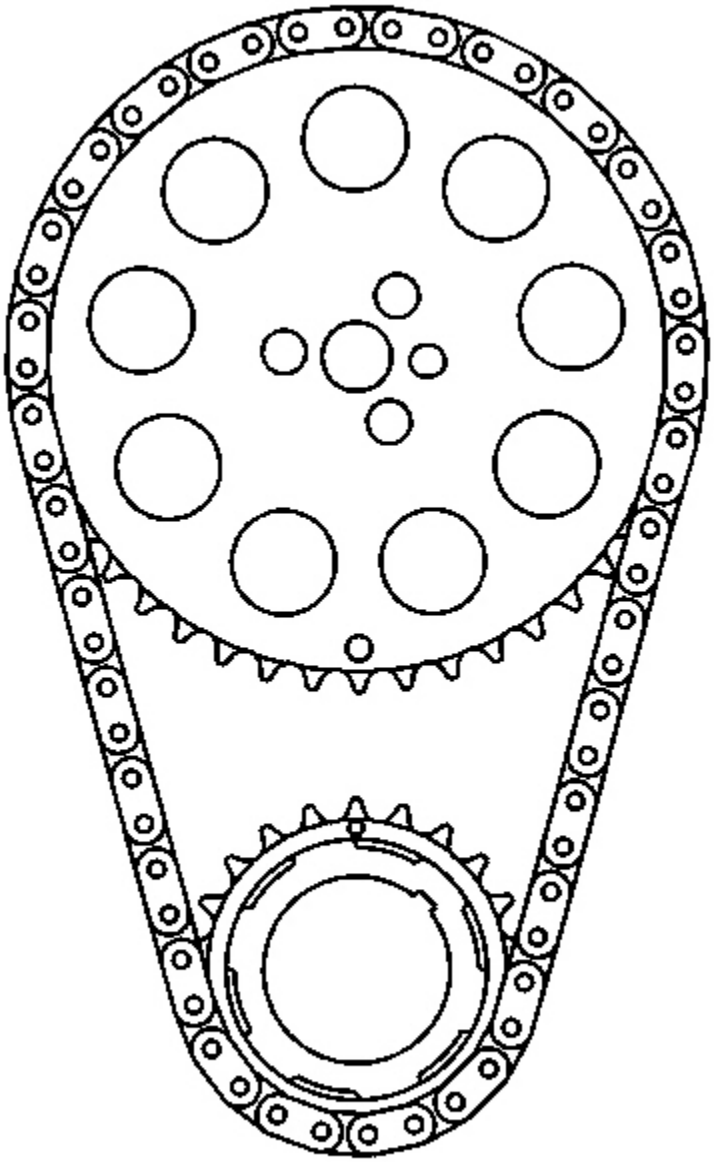

cardiagn.com

Fig. 283: Crankshaft Sprocket
Courtesy of GENERAL MOTORS CORP.

10. Install the camshaft. Refer to **Camshaft Installation** .
11. Align the camshaft sprocket alignment mark in the 6 o'clock position.

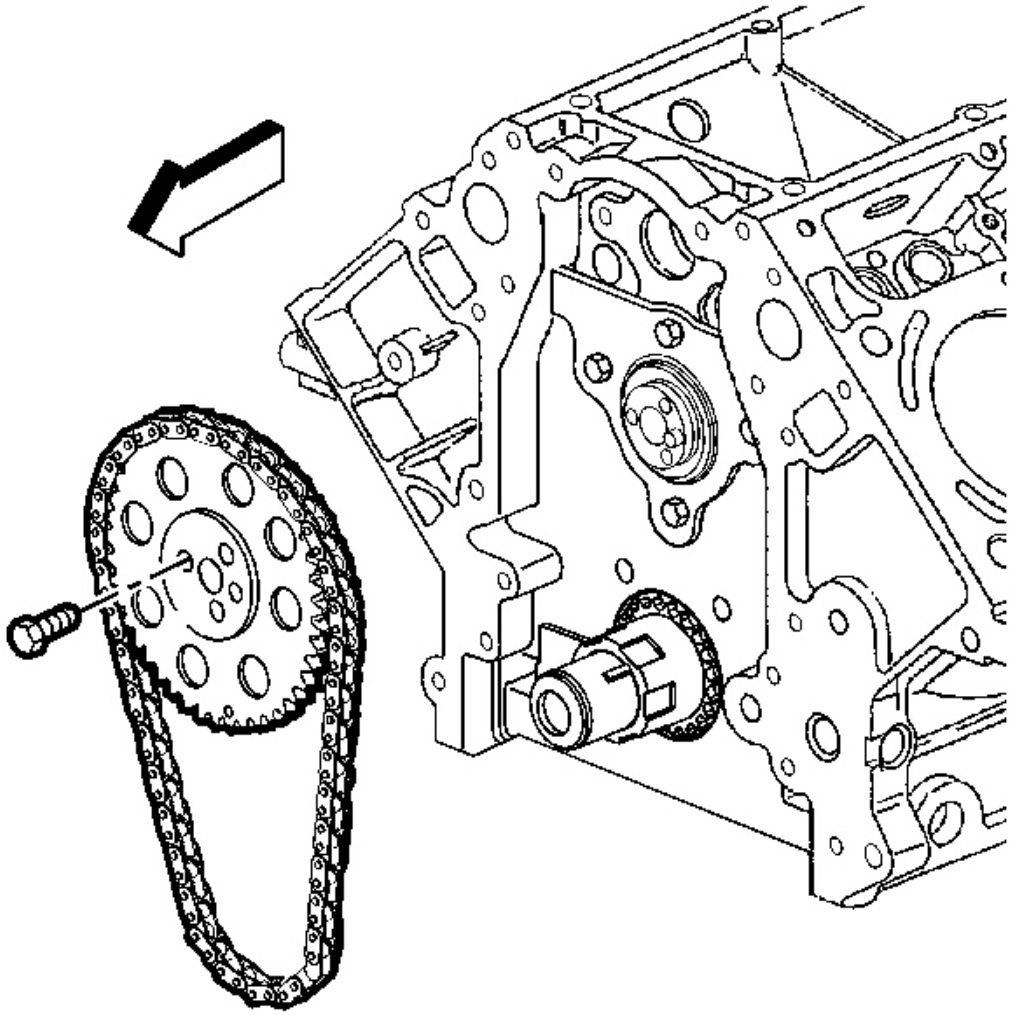

Fig. 284: View Of Camshaft Sprocket, Bolt & Timing Chain
Courtesy of GENERAL MOTORS CORP.

12. Install the camshaft sprocket and timing chain.
13. Install the camshaft sprocket bolts.

cardiagn.com

Tighten: Tighten the camshaft sprocket bolts to 35 N.m (26 lb ft).

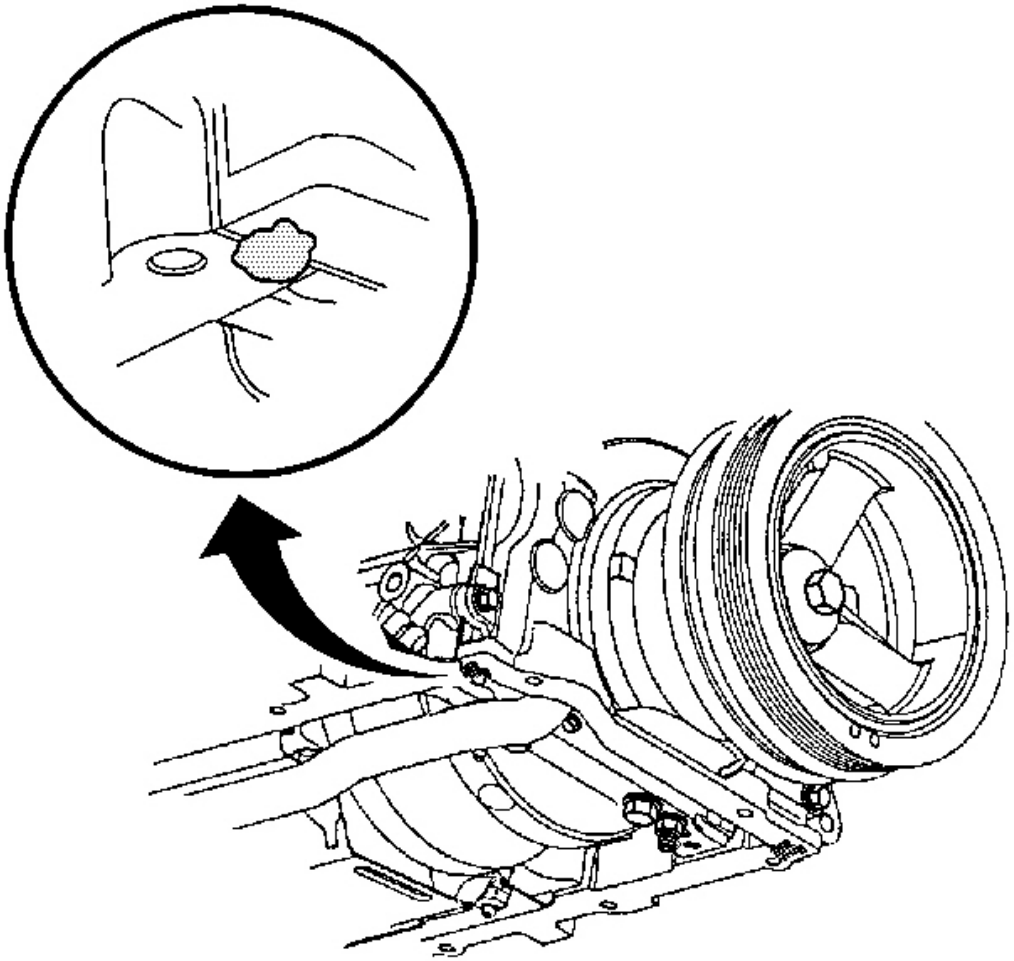

Fig. 285: View Of Sealant Applied To Front Oil Pan-To-Engine Block Junction
Courtesy of GENERAL MOTORS CORP.

14. Apply a 5 mm (0.2 in) bead of sealant GM P/N 12378190, or equivalent 20 mm (0.8 in) long to the oil pan to engine block junction.

cardiagn.com

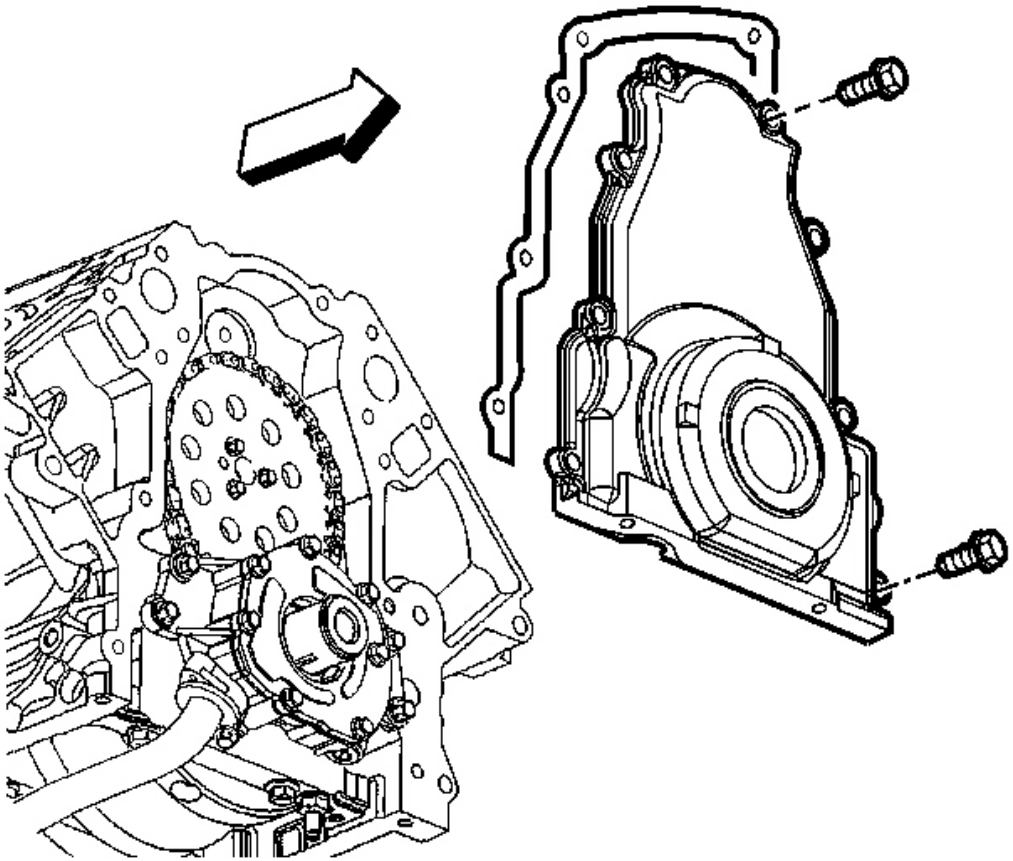

Fig. 286: Front Cover Gasket & Bolts
Courtesy of GENERAL MOTORS CORP.

15. Install the front cover and a new gasket.
16. Install the front cover bolts until snug.

cardiagn.com

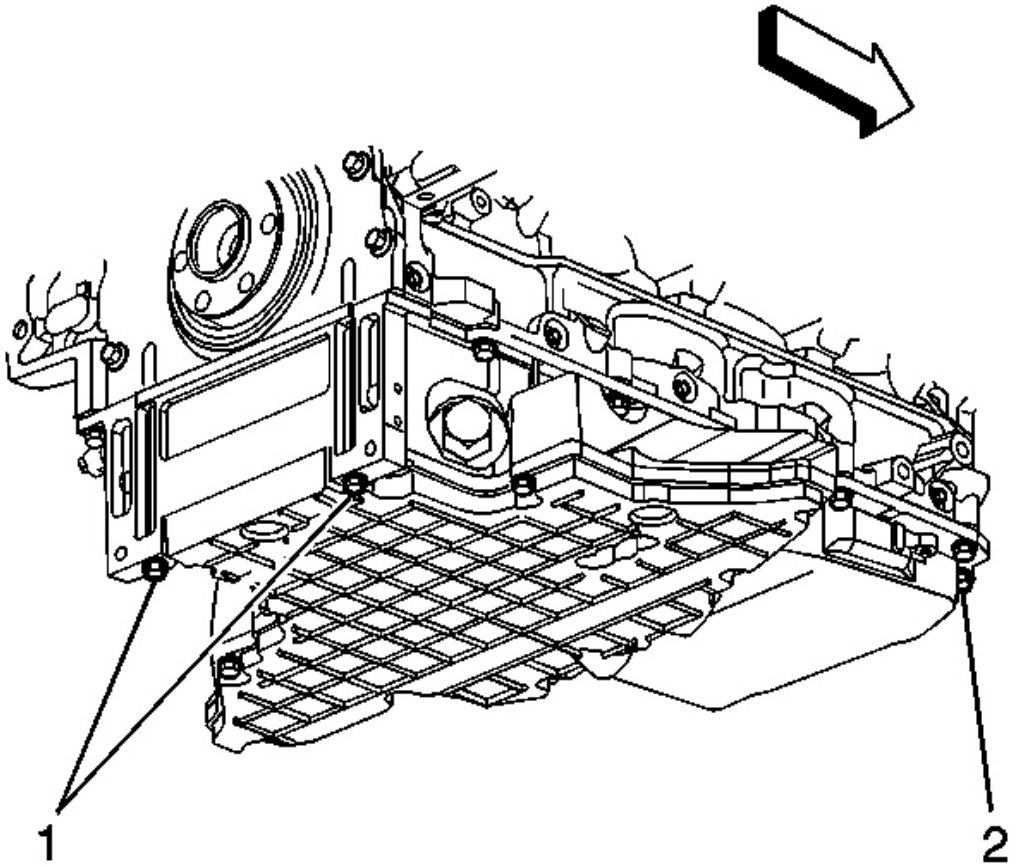

Fig. 287: Oil Pan-To-Front Cover Bolts & Oil Pan-To-Rear Cover Bolts
Courtesy of GENERAL MOTORS CORP.

17. Install the oil pan-to-front cover bolts (1) until snug.

cardiagn.com

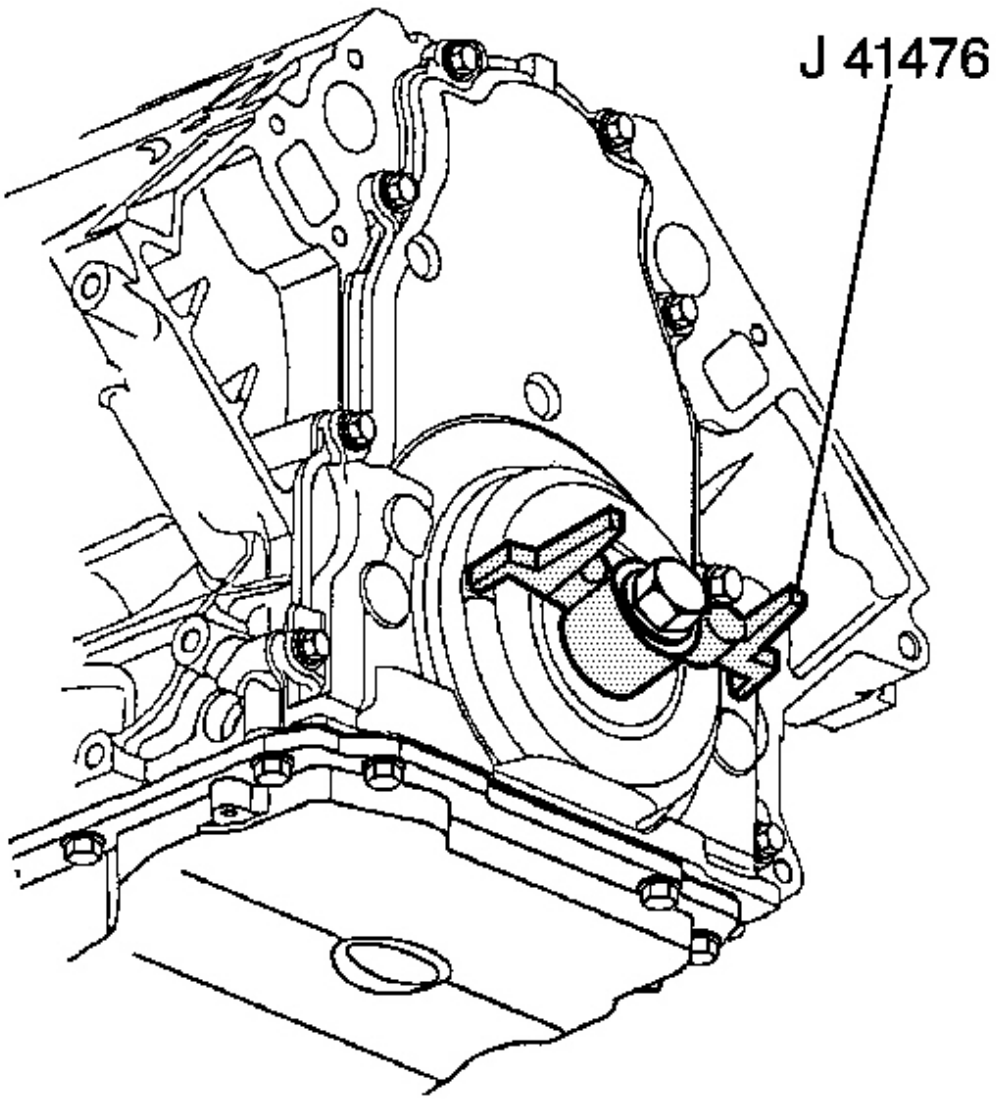

Fig. 288: J 41476 & Front Cover
Courtesy of GENERAL MOTORS CORP.

18. Install the **J 41476** and crankshaft balancer bolt to the front cover.
19. Align the tapered legs of the **J 41476** with the machined alignment surfaces on the front cover.
20. Install the crankshaft balancer bolt until snug. Do not overtighten.

Tighten:

cardiagn.com

1. Tighten the oil pan-to-front cover bolts to 25 N.m (18 lb ft).
2. Tighten the engine front cover bolts to 25 N.m (18 lb ft).

21. Remove the **J 41476** .
22. Install a NEW crankshaft front oil seal. Refer to **Crankshaft Front Oil Seal Installation** .
23. Install the valve lifters. Refer to **Valve Lifter Installation** .
24. Install the right and left cylinder heads. Refer to **Cylinder Head Installation - Right** and **Cylinder Head Installation - Left** .
25. Install the valve rocker arms and push rods. Refer to **Valve Rocker Arm and Push Rod Installation** .
26. Install the right and left valve rocker arm covers. Refer to **Valve Rocker Arm Cover Installation - Right** and **Valve Rocker Arm Cover Installation - Left** .
27. Install the coolant air bleed pipe. Refer to **Coolant Air Bleed Pipe Installation** .
28. Install the intake manifold. Refer to **Intake Manifold Installation** .
29. Install the water pump. Refer to **Water Pump Installation** .
30. Install the left and right exhaust manifolds. Refer to **Exhaust Manifold Installation - Left** and **Exhaust Manifold Installation - Right** .
31. Install the oil level indicator tube. Refer to **Oil Level Indicator and Tube Installation** .
32. Install the crankshaft balancer. Refer to **Crankshaft Balancer Installation** .
33. Install the engine assembly. Refer to **Engine Replacement** .

ENGINE FLYWHEEL REPLACEMENT

Removal Procedure

NOTE: **Failure to follow the proper removal and installation procedures may result in damage to the engine crankshaft thrust bearing.**

NOTE: **When tilting down the rear of the driveline, observe the clearance between the rear of the engine and the composite dash panel. Do not allow the engine to rest unsupported against the composite dash panel, or vehicle damage may result.**

NOTE: **When lowering and removing the rear of the driveline, observe the clearance between the rear of the transaxle assembly and the underbody to prevent damage.**

IMPORTANT:

- **For manual transmission applications, note the position and direction of the engine flywheel before removal. The flywheel does not use a locating pin for alignment. Mark or scribe the end of the crankshaft and the flywheel before component removal. The engine flywheel must be reinstalled to the original position and direction. The engine flywheel will not initially seat against the crankshaft flange, but will be pulled onto the crankshaft by the engine flywheel bolts. This procedure requires a 3 stage**

cardiagn.com

tightening process.

- DO NOT remove the prop shaft hub or flex plate from the automatic transmission engine flywheel. The flywheel, prop shaft hub, and flex plate are balanced as an assembly. If service is required, the entire flywheel assembly should be replaced.

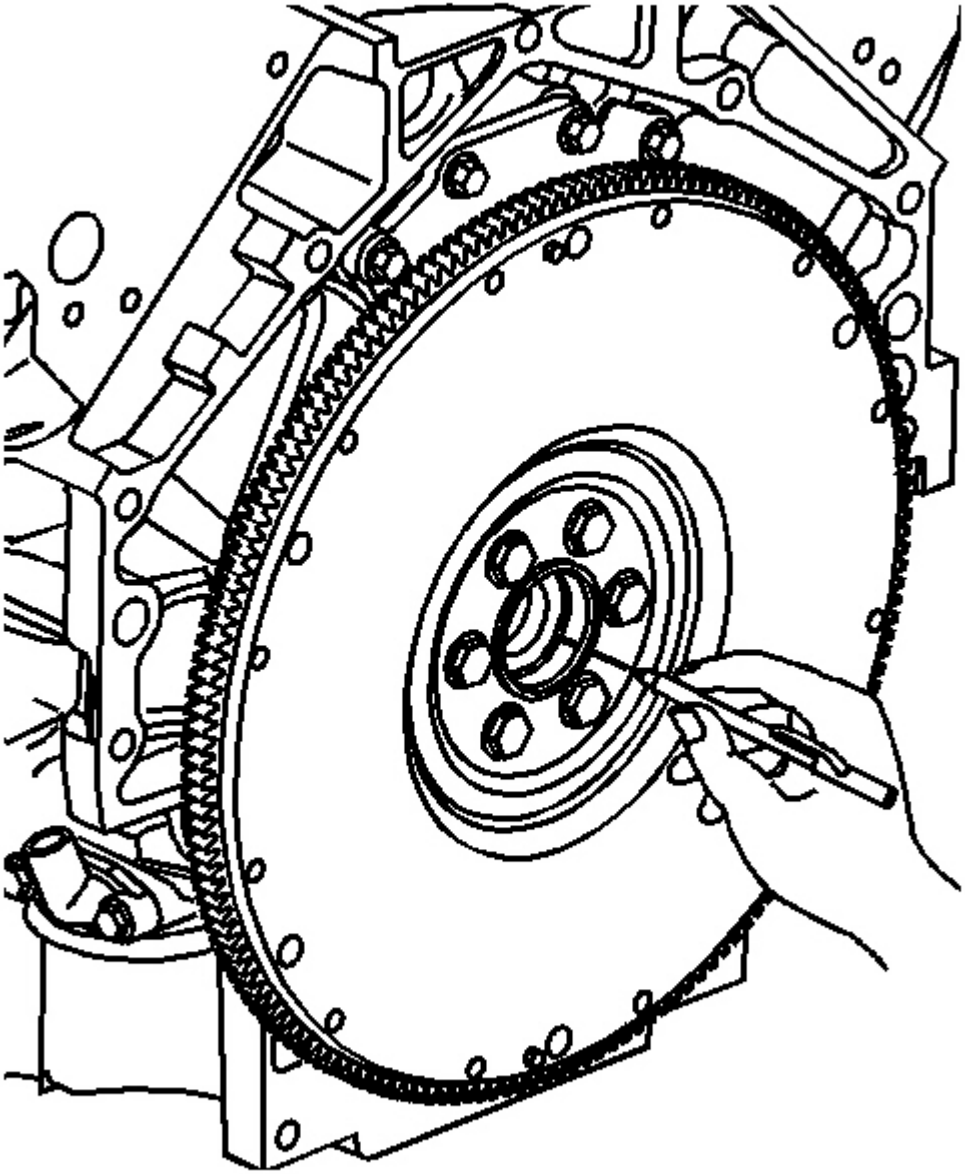

cardiagn.com

Fig. 289: Mark End Of Crankshaft & Manual Transmission Flywheel
Courtesy of GENERAL MOTORS CORP.

1. Remove the catalytic converter. Refer to **Catalytic Converter Replacement** in Engine Exhaust.
2. Remove the driveline support, if equipped with a automatic transmission. Refer to **Driveline Support Assembly Replacement (Automatic Transmission)** or **Driveline Support Assembly Replacement (Manual Transmission)** in Propeller Shaft.
3. Remove the clutch assembly, if equipped with a manual transmission. Refer to **Clutch Assembly Replacement** in Clutch.
4. Mark or scribe the end of the crankshaft and the manual transmission flywheel. Refer to **Engine Balancing** .

-

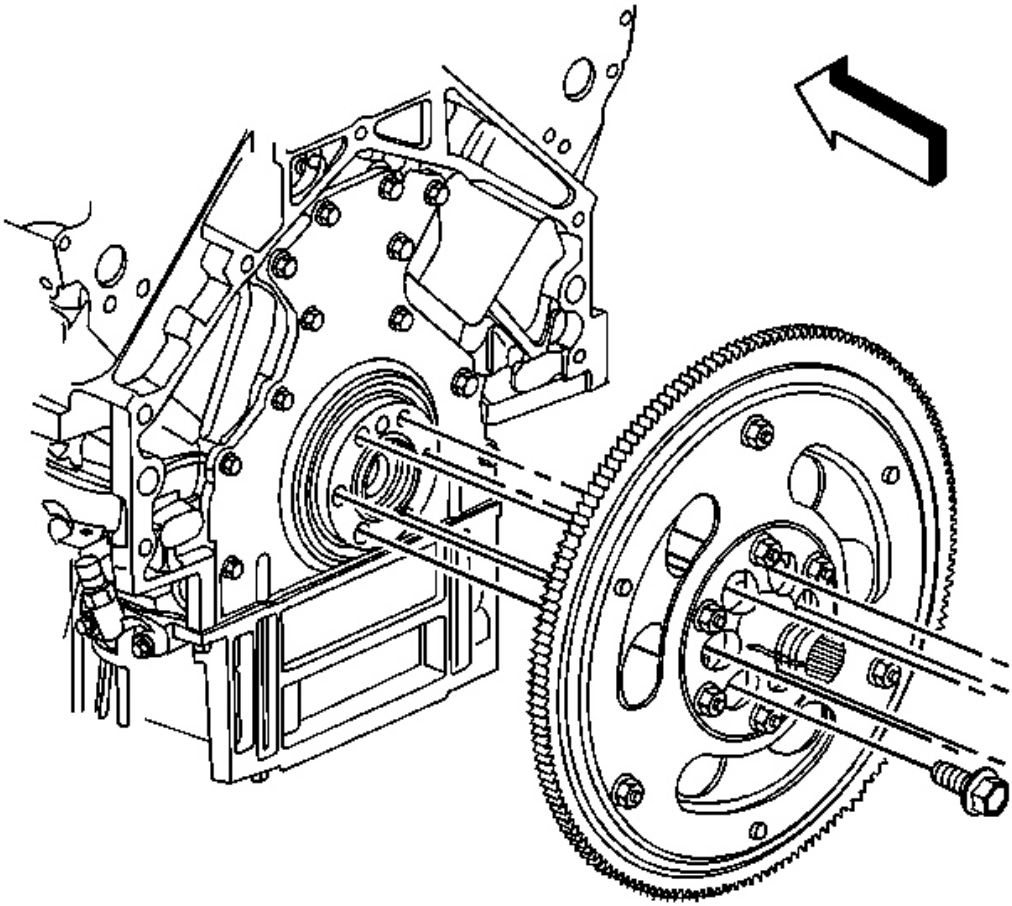

cardiagn.com

Fig. 290: Automatic Transmission Engine Flywheel & Bolts
Courtesy of GENERAL MOTORS CORP.

5. If equipped with an automatic transmission, remove the engine flywheel bolts.

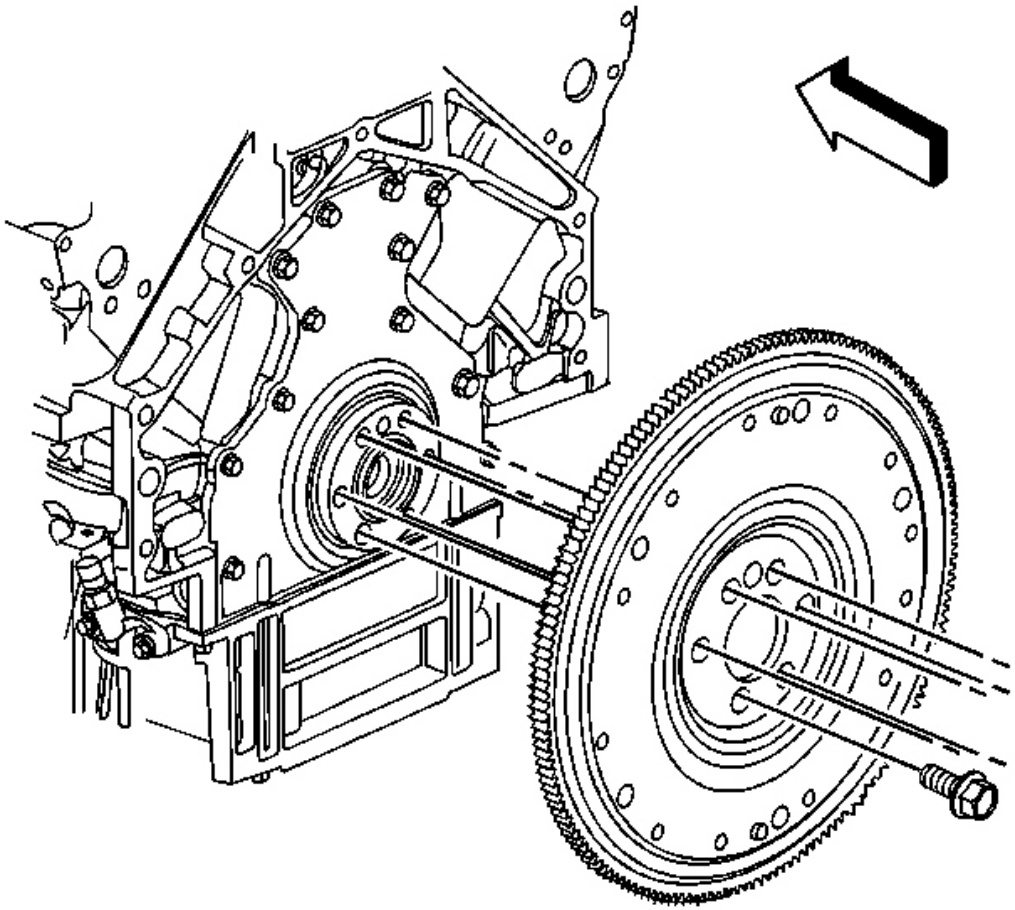

Fig. 291: Manual Transmission Engine Flywheel & Bolts
Courtesy of GENERAL MOTORS CORP.

6. If equipped with a manual transmission, remove the engine flywheel bolts.
7. Remove the engine flywheel.

Installation Procedure

IMPORTANT: For manual transmission applications, note the position and direction of the

cardiagn.com

engine flywheel before removal. The flywheel does not use a locating pin for alignment. Mark or scribe the end of the crankshaft and the flywheel before component removal. The engine flywheel must be reinstalled to the original position and direction. The engine flywheel will not initially seat against the crankshaft flange, but will be pulled onto the crankshaft by the engine flywheel bolts. This procedure requires a 3 stage tightening process.

DO NOT remove the prop shaft hub or flex plate from the automatic transmission engine flywheel. The flywheel, prop shaft hub, and flex plate are balanced as an assembly. If service is required, the entire flywheel assembly should be replaced.

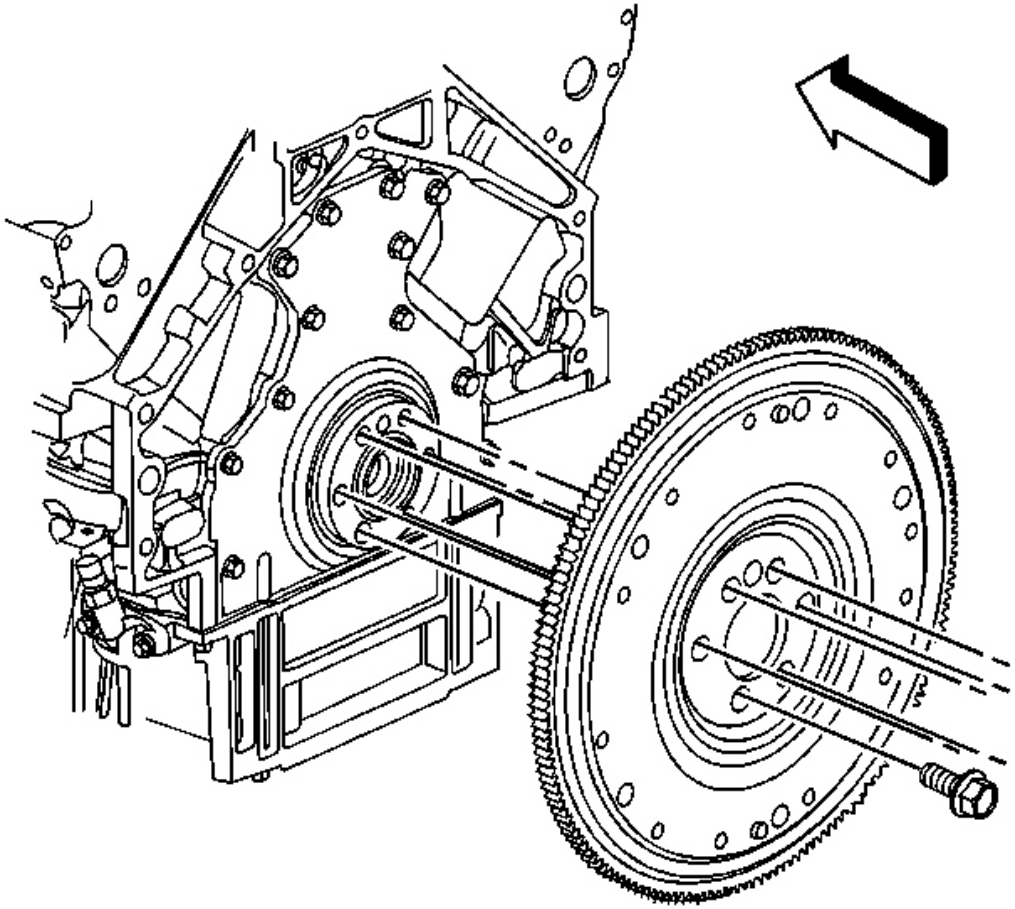

Fig. 292: Manual Transmission Engine Flywheel & Bolts
Courtesy of GENERAL MOTORS CORP.

cardiagn.com

1. If equipped with a manual transmission, align the mark or scribe on the crankshaft with the mark or scribe on the existing flywheel.

   Refer to **Engine Balancing**

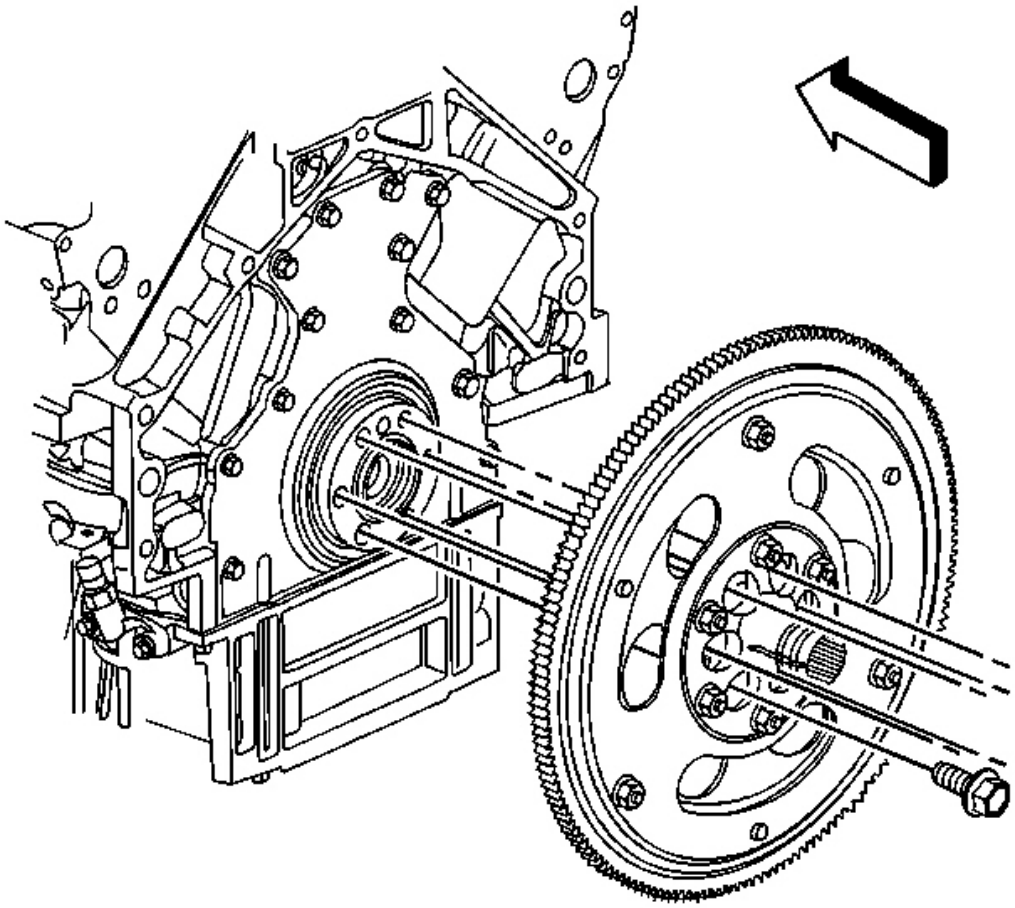

Fig. 293: Automatic Transmission Engine Flywheel & Bolts
Courtesy of GENERAL MOTORS CORP.

2. Install the engine flywheel.

cardiagn.com

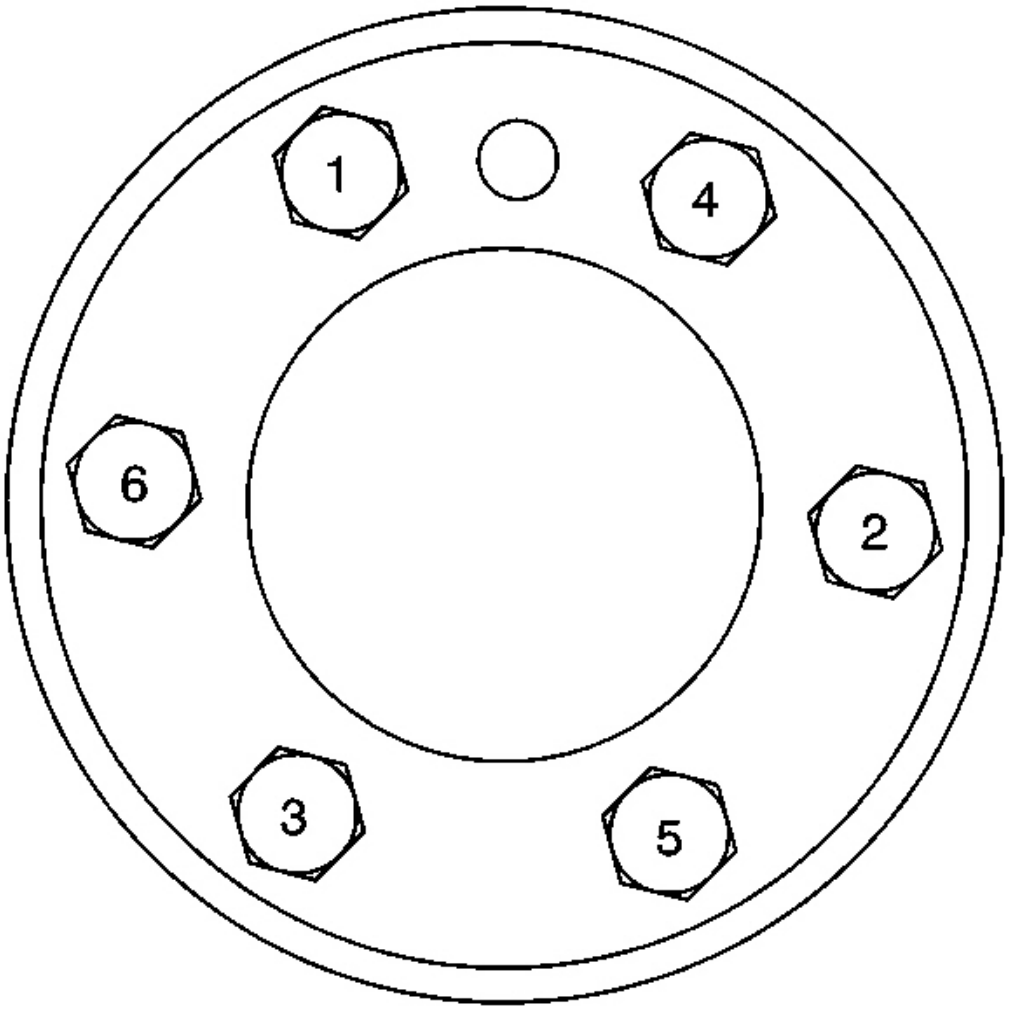

Fig. 294: Flywheel Bolt Tightening Sequence
Courtesy of GENERAL MOTORS CORP.

NOTE: Refer to Fastener Notice in Cautions and Notices.

3. Apply threadlock GM P/N 12345382 (Canadian P/N 10953489), or equivalent to the threads of the flywheel bolts.
4. Install the engine flywheel bolts until snug.

Tighten:

1. Tighten the engine flywheel bolts a first pass in sequence to 20 N.m (15 lb ft).

cardiagn.com

2. Tighten the engine flywheel bolts a second pass in sequence to 50 N.m (37 lb ft).
3. Tighten the engine flywheel bolts a final pass in sequence to 100 N.m (74 lb ft).

5. Install the driveline support, if equipped with a automatic transmission. Refer to **Driveline Support Assembly Replacement (Automatic Transmission)** or **Driveline Support Assembly Replacement (Manual Transmission)** in Propeller Shaft.
6. Install the clutch assembly, if equipped with a manual transmission. Refer to **Clutch Assembly Replacement** in Clutch.
7. Install the catalytic converter. Refer to **Catalytic Converter Replacement** in Engine Exhaust.

ENGINE REPLACEMENT

Tools Required

- **J 25034-C** Power Steering Pump Pulley Remover
- **J 42188** Ball Joint Separator
- **J 39580** Engine Support Table
- **J 39580-500** Engine Support Table Top
- **J 41798** Engine Lifting Brackets
- **J 42203** Driveline Support
- **J 36221** Hydraulic Clutch Line Separator
- **J 25033-C** Power Steering Pump Pulley Installer
- J 36660-A Torque Angle Meter

Removal Procedure

IMPORTANT: The steps in the following procedure are in a specific order. Follow these steps in this order and do not ignore any details.

cardiagn.com

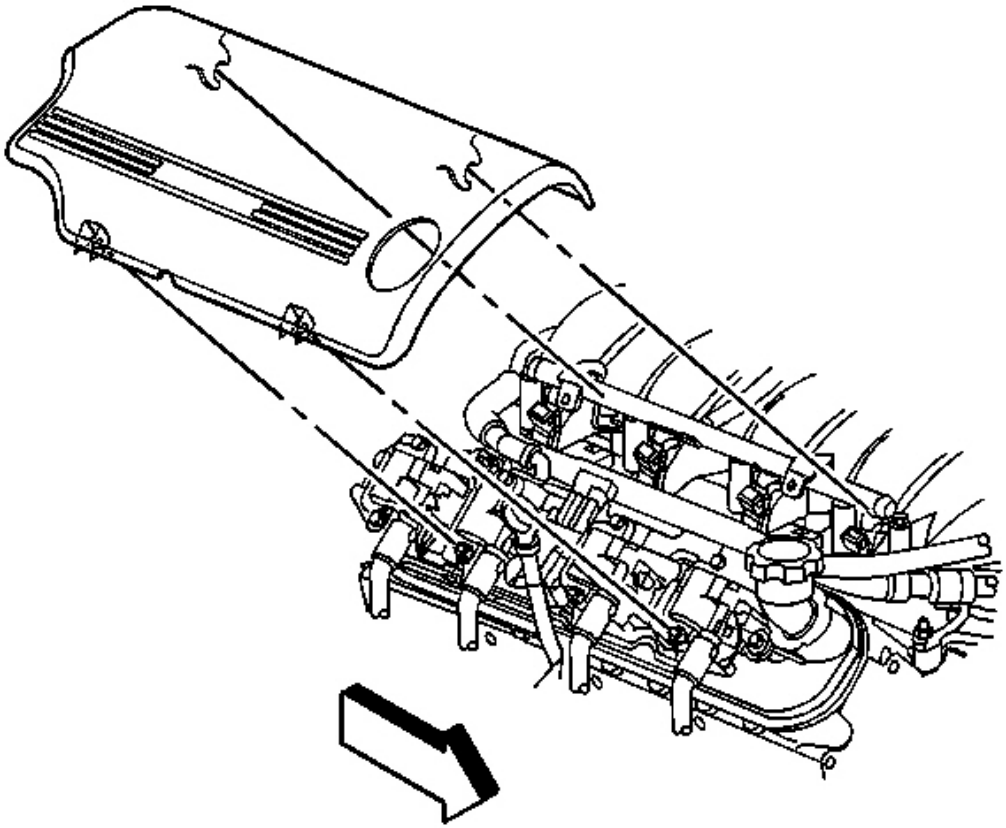

Fig. 295: Right Fuel Injection Rail Cover
Courtesy of GENERAL MOTORS CORP.

1. Recover the air conditioning (A/C) refrigerant. Refer to **Refrigerant Recovery and Recharging** in Heating, Ventilation and Air Conditioning.
2. Remove the radiator. Refer to **Radiator Replacement** in Engine Cooling.
3. Remove the break pressure modulator valve (BPMV) bracket. Refer to **Brake Pressure Modulator Valve (BPMV) Bracket Replacement** in Antilock Brake System.
4. Reposition the brake pipes.
5. Remove the accessory drive belt. Refer to **Drive Belt Replacement - Accessory** .
6. Remove the right fuel injection rail cover.
7. Relieve the fuel system pressure. Refer to **Fuel Pressure Relief Procedure** in Engine Controls - 5.7 L.
8. Disconnect the EVAP emission canister purge hose at the fuel line.
9. Remove the fuel feed hose. Refer to **Fuel Hose/Pipes Replacement - Engine Compartment** in Engine Controls - 5.7 L.

cardiagn.com

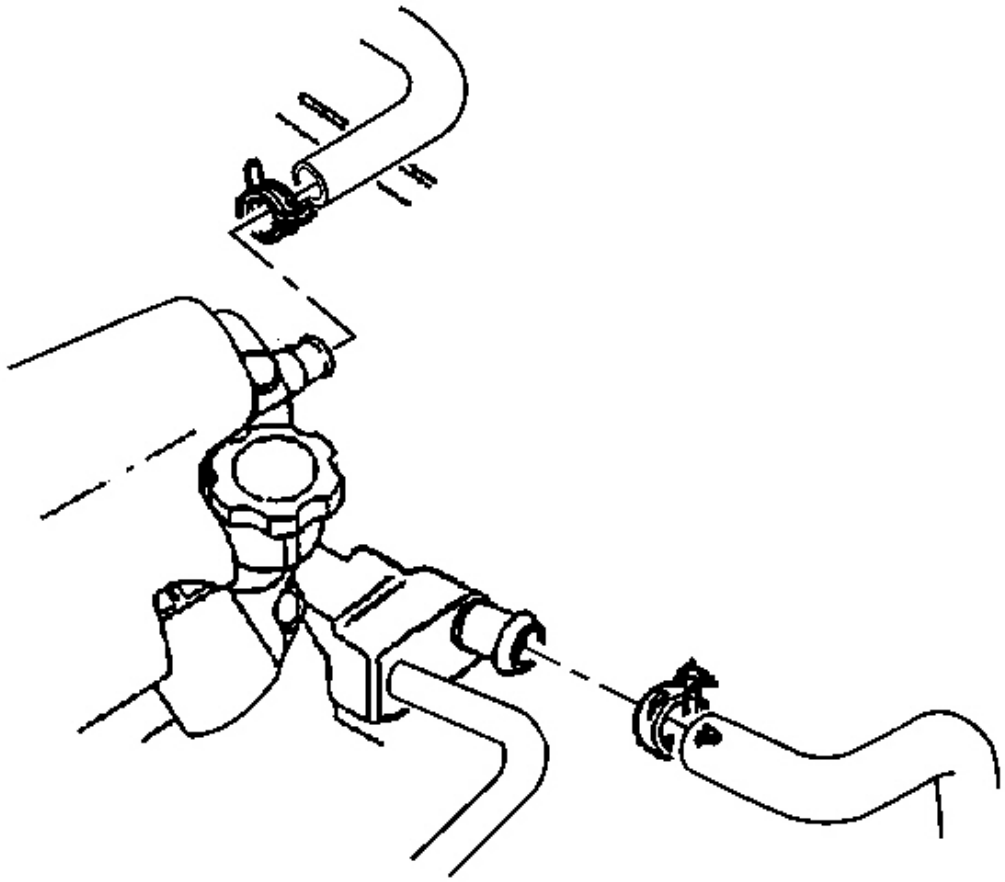

Fig. 296: Radiator Hoses & Water Pump
Courtesy of GENERAL MOTORS CORP.

IMPORTANT: Cap the hoses and inlets when separating the cooling system components, this prevents dirt and other contaminants from entering the cooling system.

10. Remove the radiator hoses from the water pump.

cardiagn.com

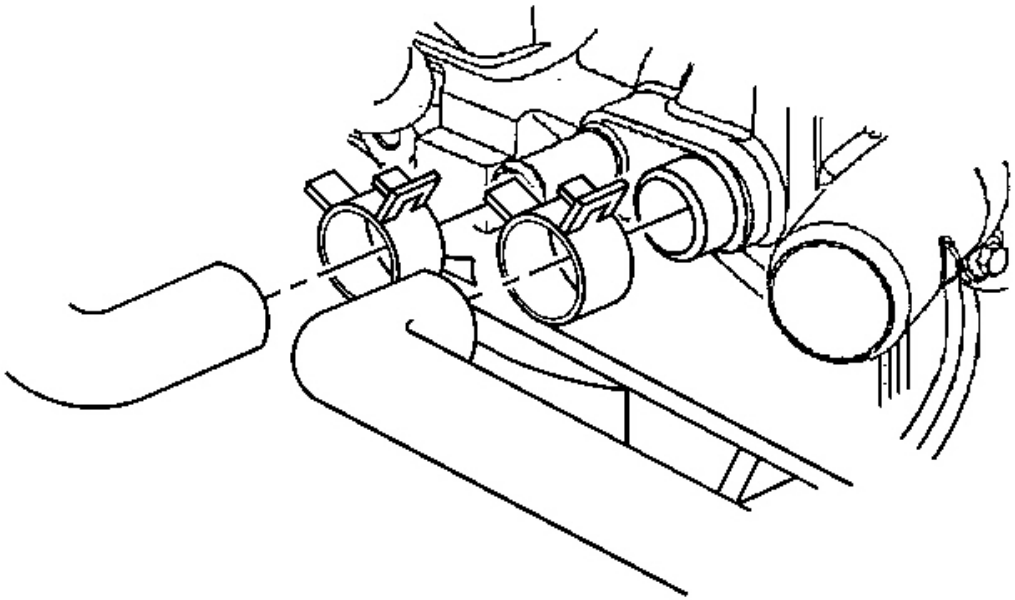

Fig. 297: Heater Hoses & Water Pump
Courtesy of GENERAL MOTORS CORP.

11. Remove the heater hoses from the water pump.

cardiagn.com

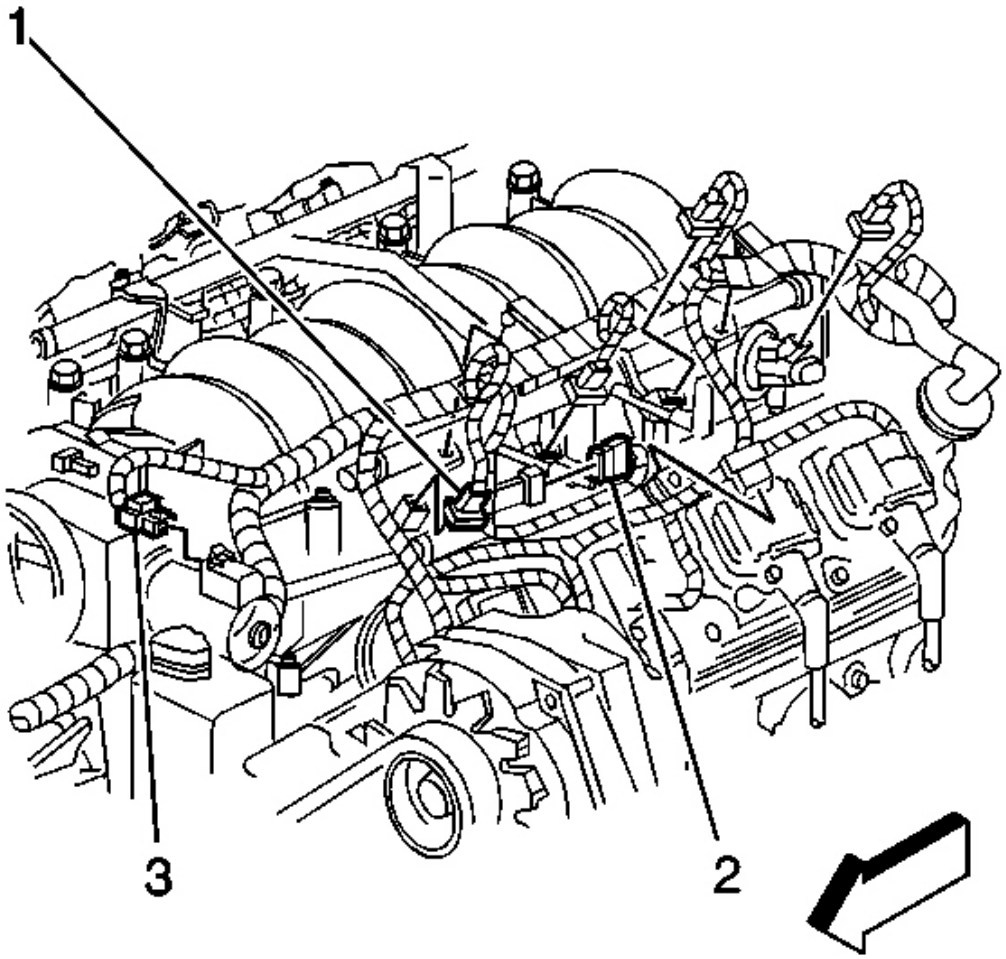

Fig. 298: Electrical Connectors
Courtesy of GENERAL MOTORS CORP.

12. Disconnect the following electrical connectors from the engine:
    - The fuel injectors (1)
    - The ignition coil main harness connectors
    - The evaporative emission (EVAP) solenoid (2)
    - The electric throttle motor (3)
    - The throttle position (TP) sensor
    - The engine coolant temperature (ECT) sensor
    - The A/C compressor

cardiagn.com

13. Remove the generator. Refer to **Generator Replacement** in Engine Electrical.

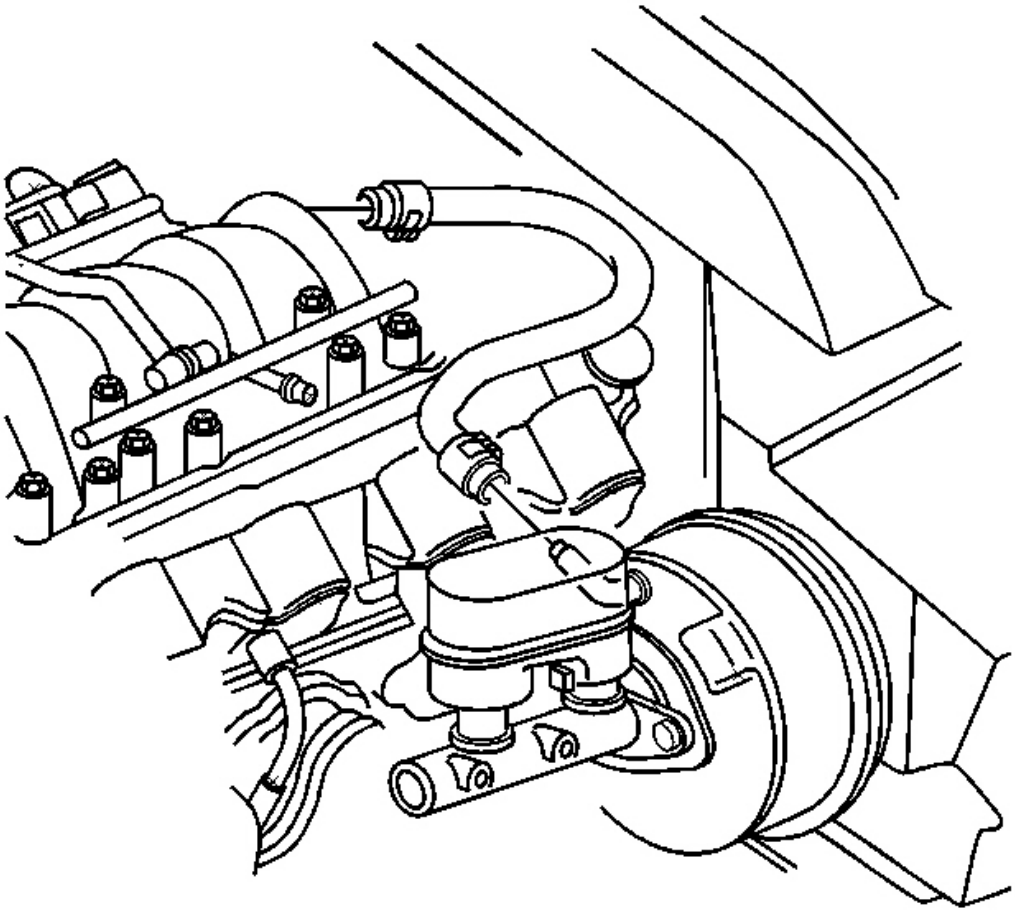

Fig. 299: Vacuum Booster Hose
Courtesy of GENERAL MOTORS CORP.

14. Remove the power brake booster vacuum hose.

cardiagn.com

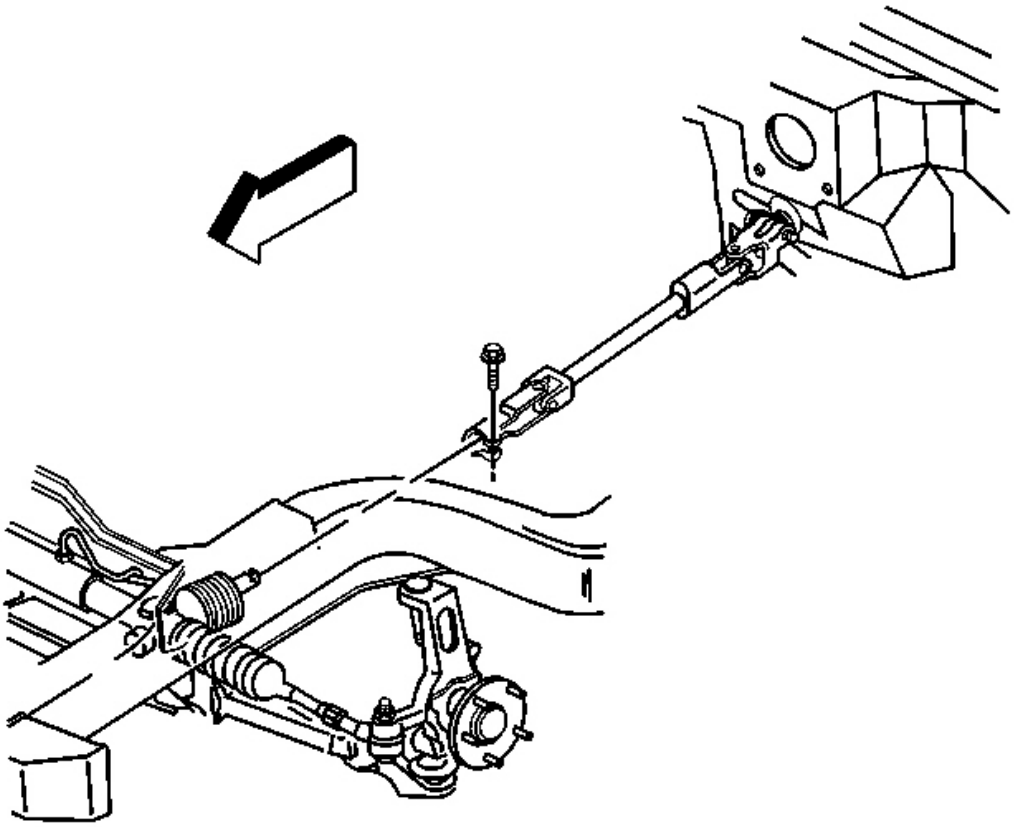

Fig. 300: Intermediate Steering Shaft & Bolt
Courtesy of GENERAL MOTORS CORP.

15. Remove the intermediate steering shaft bolt (to steering gear).
16. Remove the intermediate steering shaft from the steering gear and position it to the left onto the frame rail.

cardiagn.com

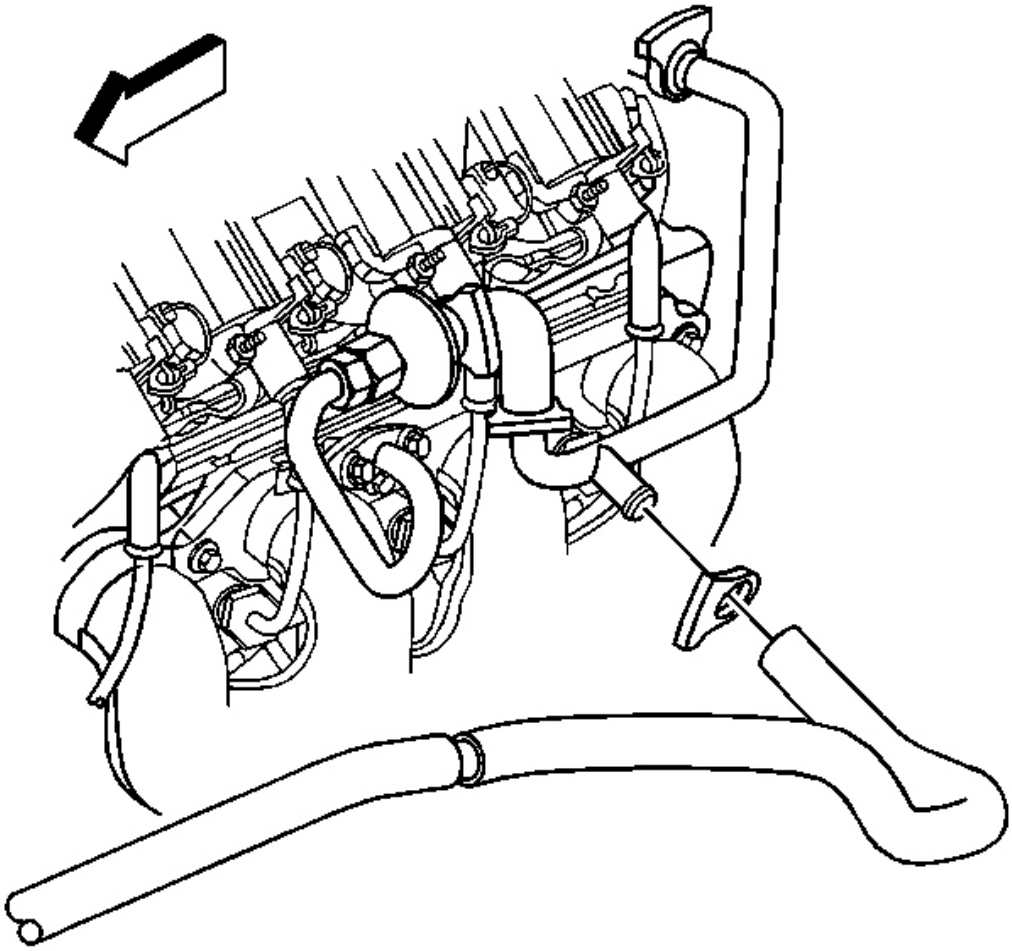

Fig. 301: AIR Pump Hose & AIR Pipe
Courtesy of GENERAL MOTORS CORP.

17. Disconnect the secondary air injection (AIR) pump hose from the AIR pipe.
18. Remove the front tires and wheels. Refer to **Tire and Wheel Removal and Installation** in Tires and Wheels.
19. Remove the catalytic converter. Refer to **Catalytic Converter Replacement** in Engine Exhaust.

cardiagn.com

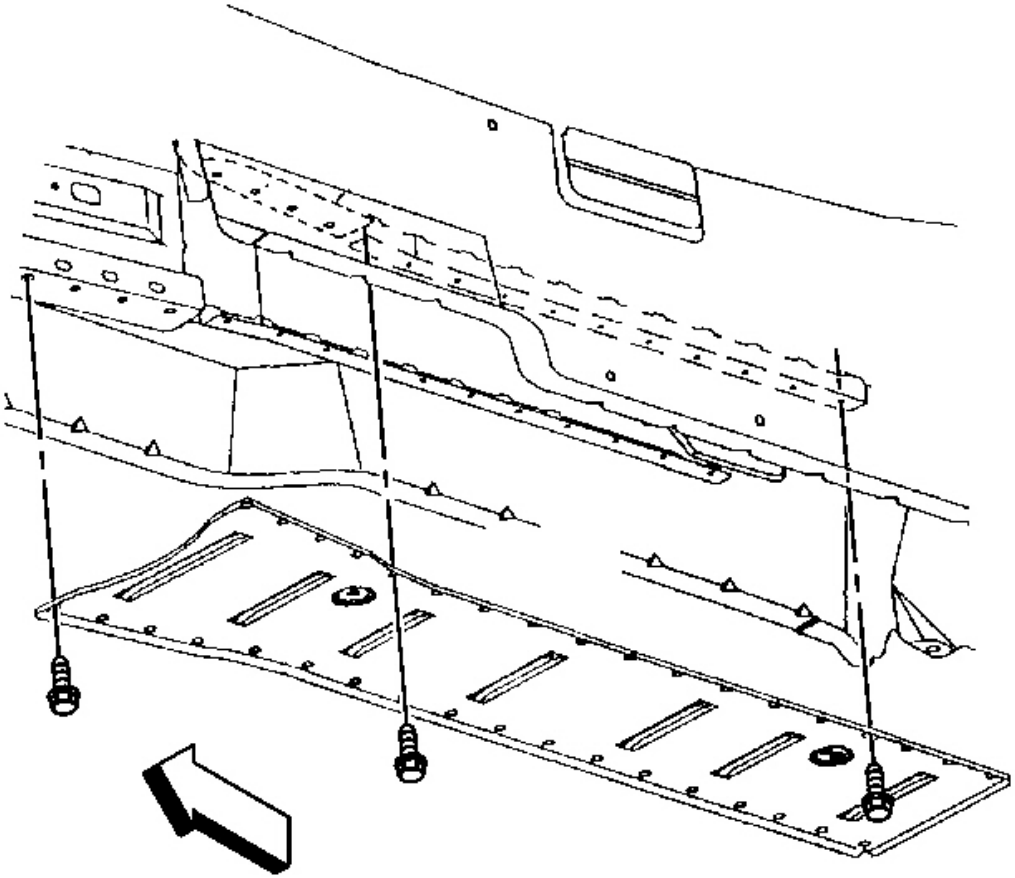

Fig. 302: Driveline Tunnel Close-Out Panel & Bolts
Courtesy of GENERAL MOTORS CORP.

20. Remove the driveline tunnel close-out panel bolts.
21. Remove the driveline tunnel close-out panel.
22. Remove the starter motor. Refer to **Starter Motor Replacement** in Engine Electrical.

cardiagn.com

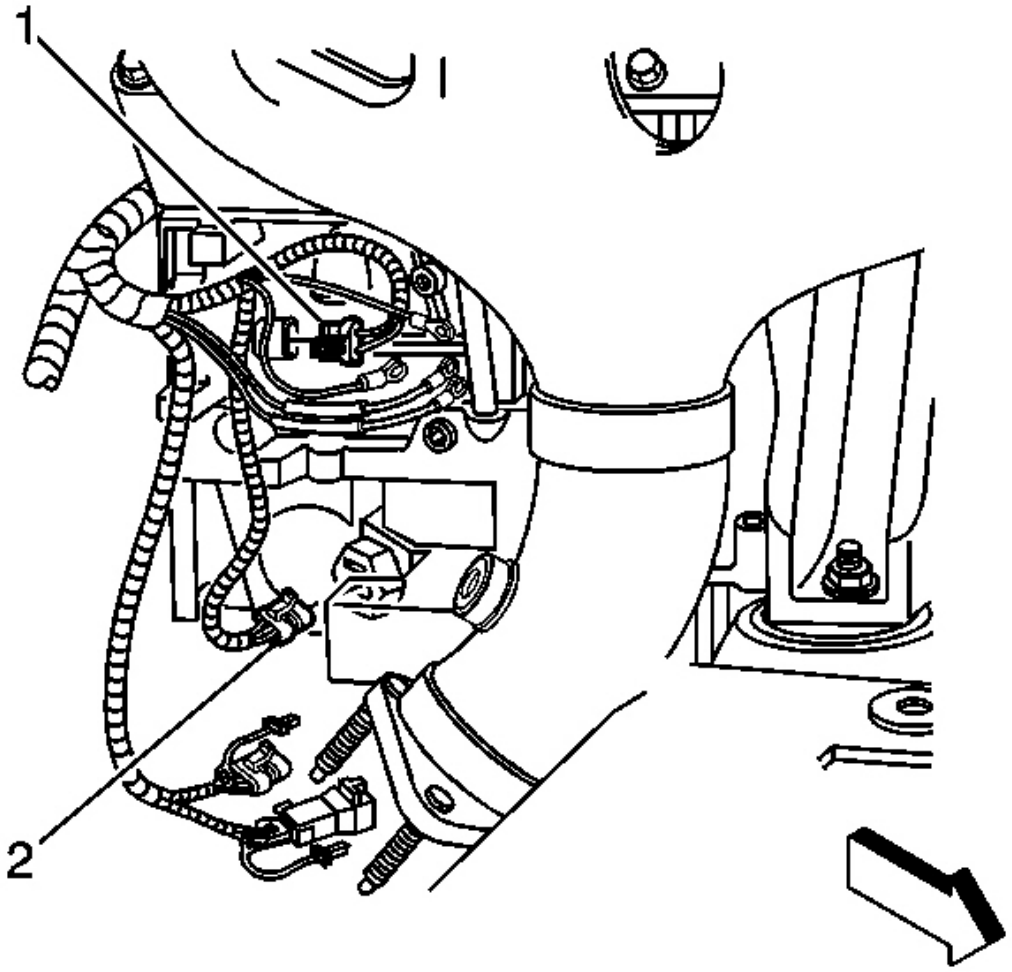

Fig. 303: Engine Oil Level Sensor Electrical Connector & CKP Sensor Electrical Connector
Courtesy of GENERAL MOTORS CORP.

23. Disconnect the crankshaft position (CKP) sensor electrical connector (1).
24. Disconnect the oil level sensor electrical connector (2).
25. Disconnect the right heated oxygen sensor (HO2S) electrical connector.

cardiagn.com

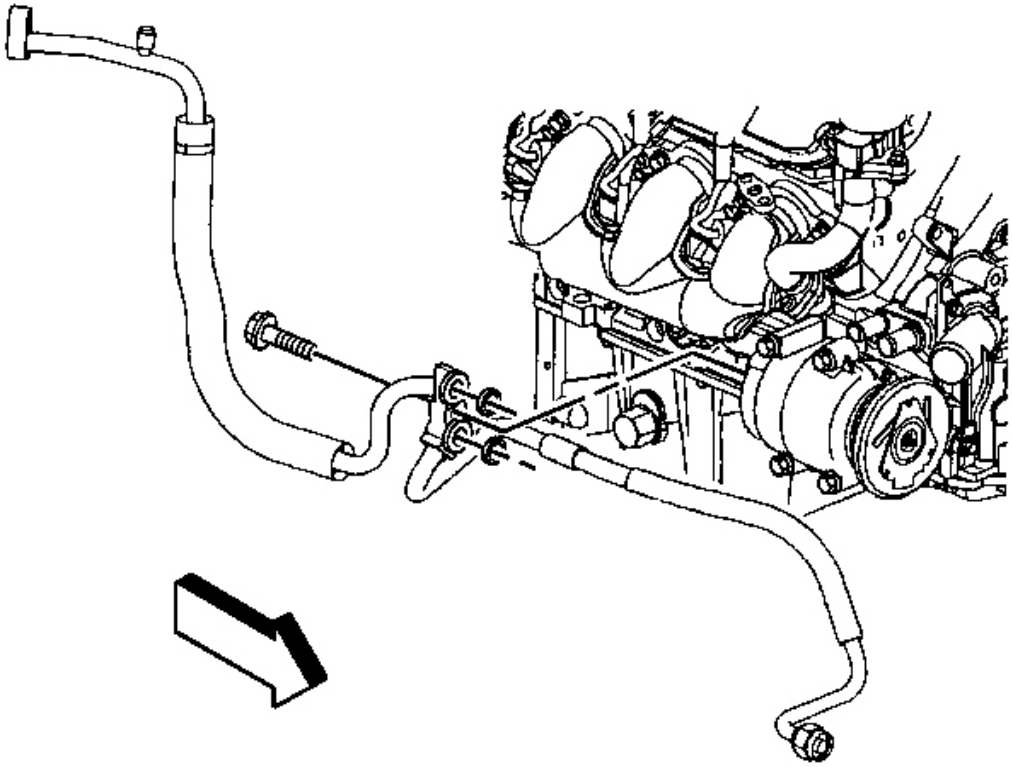

Fig. 304: A/C Compressor & Condenser Hose & Bolt
Courtesy of GENERAL MOTORS CORP.

26. Remove the A/C compressor and condenser hose bolt (at compressor).
27. Separate the A/C compressor and condenser hose from the A/C compressor.

cardiagn.com

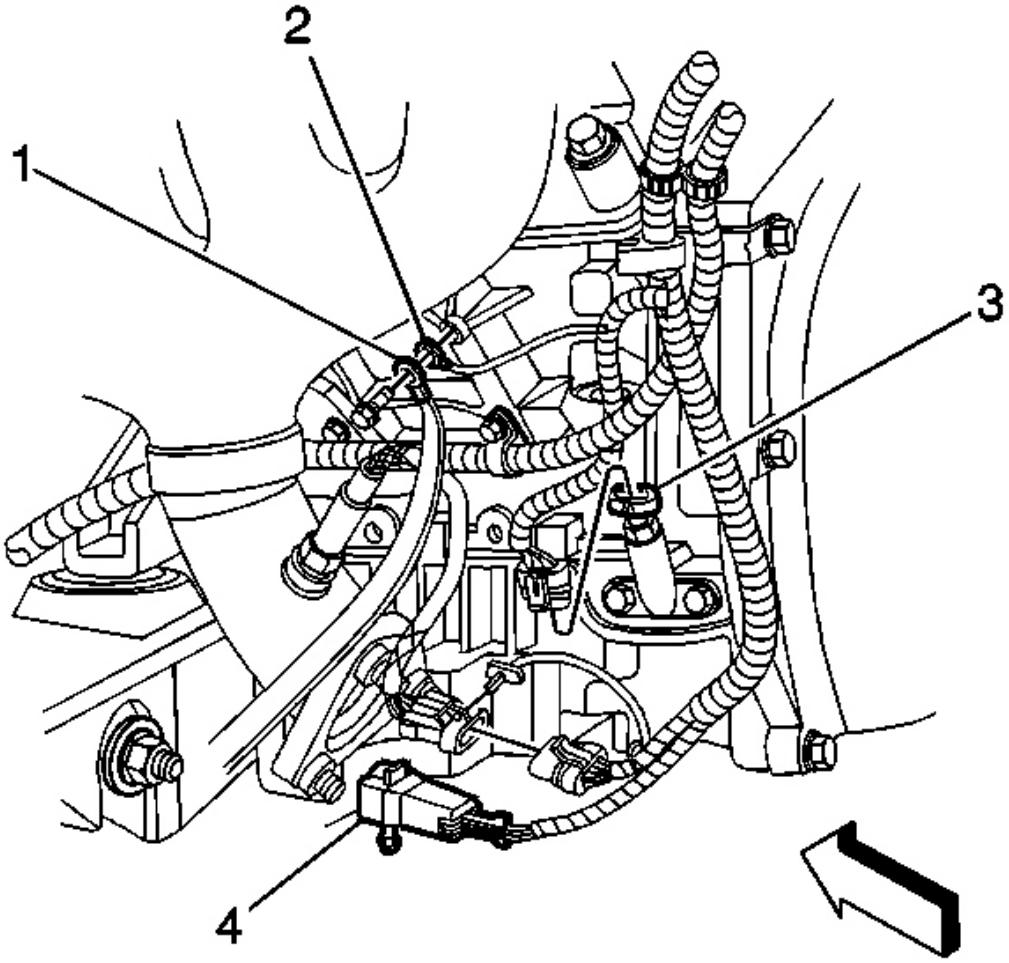

Fig. 305: Engine Oil Temperature Sensor Electrical Connector & Ground Straps
Courtesy of GENERAL MOTORS CORP.

28. Disconnect the engine oil temperature sensor (3) electrical connector.
29. Disconnect the left HO2S electrical connector.
30. Remove the ground strap bolt.

Remove the ground straps (1 and 2) from the engine block.

cardiagn.com

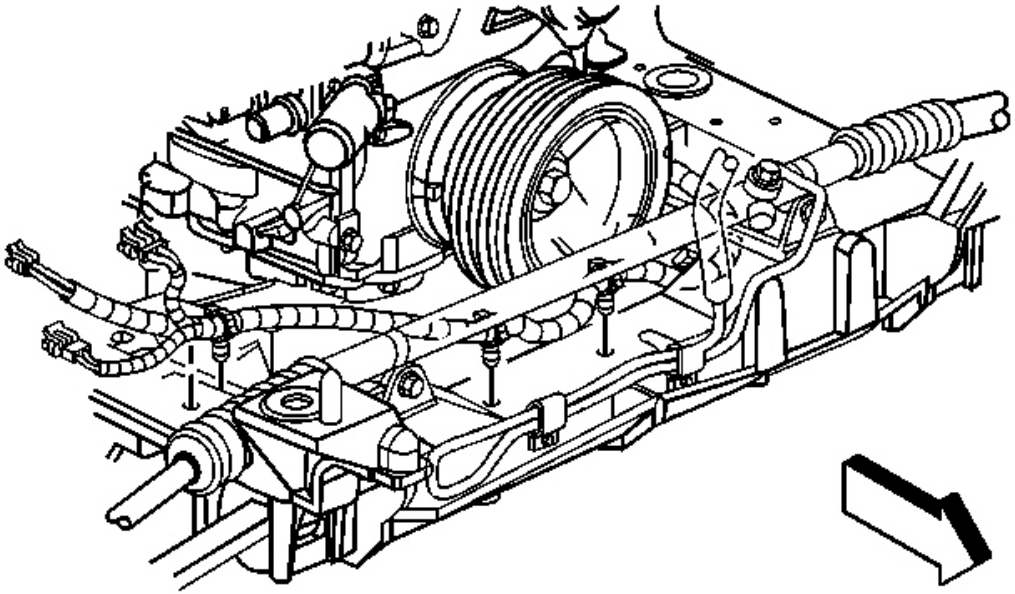

Fig. 306: Transmission Wire Harness & Electrical Connectors
Courtesy of GENERAL MOTORS CORP.

31. Disconnect the wheel speed sensor electrical connectors.
32. If equipped with real time damping (RTD) disconnect the following electrical connectors:
    - Shock absorber damper
    - Position sensor pigtail
33. Unclip the transmission wire harness from the crossmember.
34. Disconnect the electronic variable orifice (EVO) control connector clips from the crossmember.

cardiagn.com

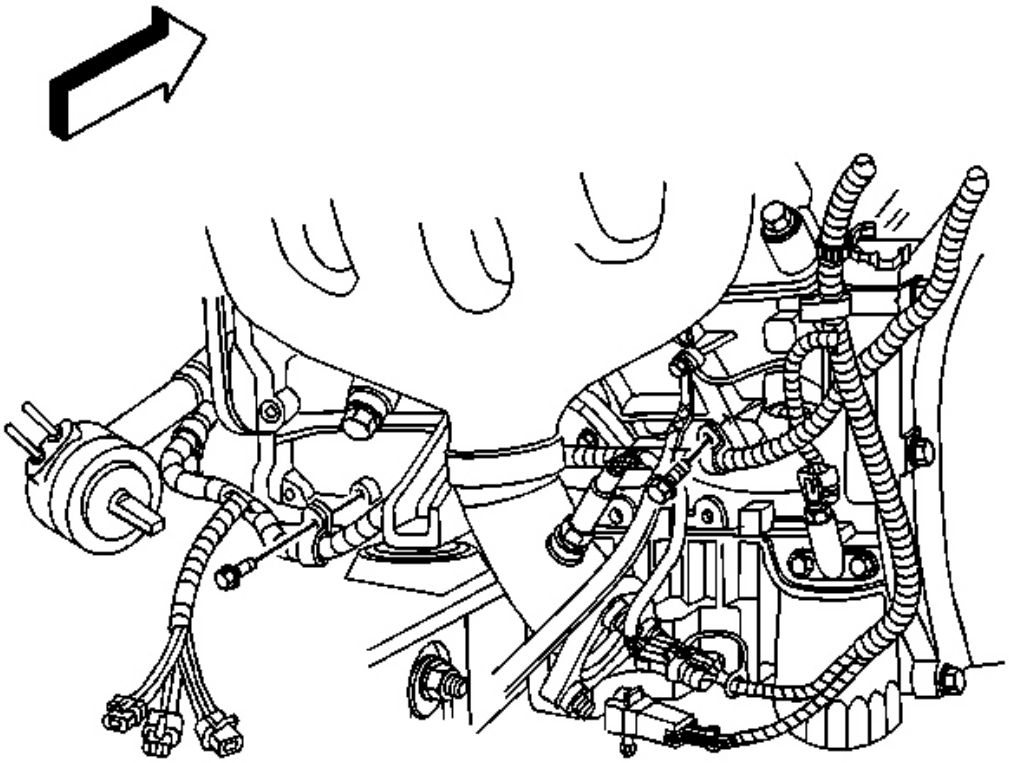

Fig. 307: Transmission Wire Harness & Engine Wire Harness
Courtesy of GENERAL MOTORS CORP.

35. Remove the transmission harness clip bolts from the engine block.
36. Unclip the transmission wire harness from the engine wire harness.
37. Remove the stabilizer shaft. Refer to **Stabilizer Shaft Replacement** in Front Suspension.

cardiagn.com

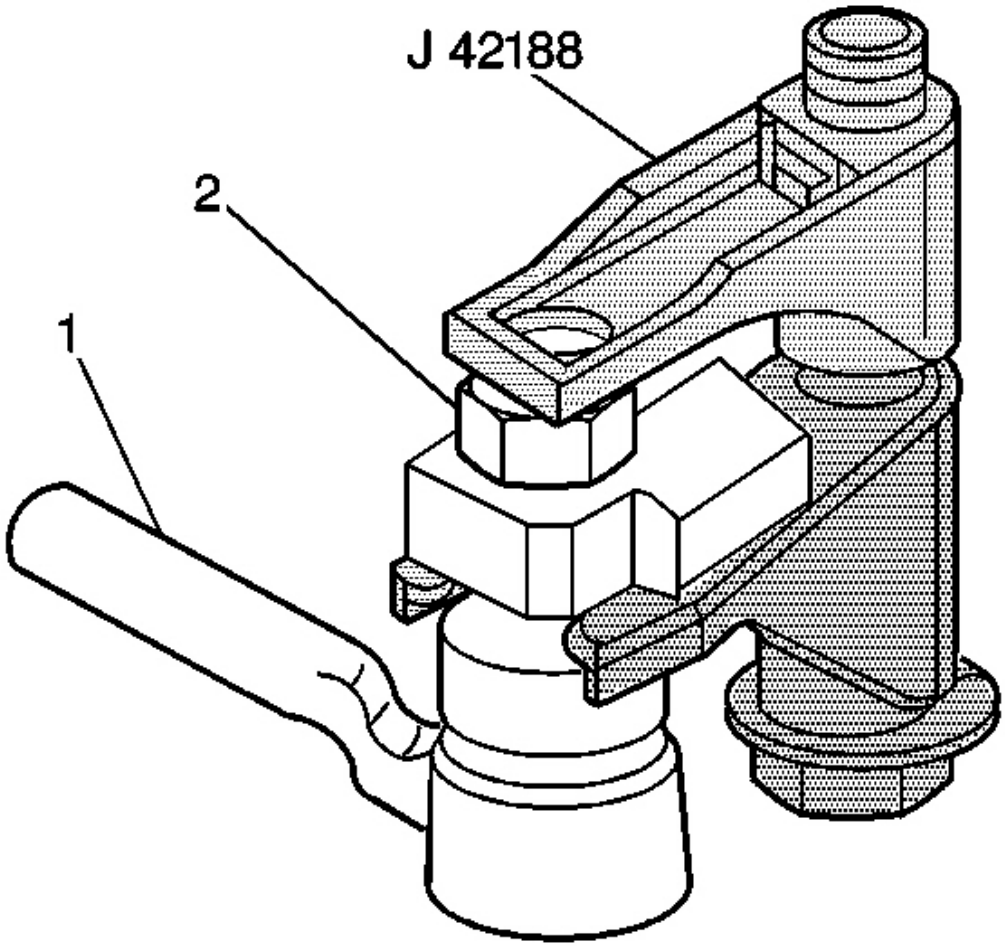

Fig. 308: J 42188, Steering Knuckle & Lower Control Arm Ball Stud
Courtesy of GENERAL MOTORS CORP.

38. Loosen, do not remove, the steering knuckle nut (2) from the lower control arm ball stud.
39. Install the**J 42188** between the steering knuckle and the lower control arm ball stud.
40. Tighten the nut on the **J 42188** until the steering knuckle and the lower control arm ball stud separate.
41. Disconnect the antilock brake system (ABS) electrical connector clips from the crossmember (if equipped).
42. Remove the front transverse leaf spring. Refer to **Front Transverse Spring Replacement** in Front Suspension.

cardiagn.com

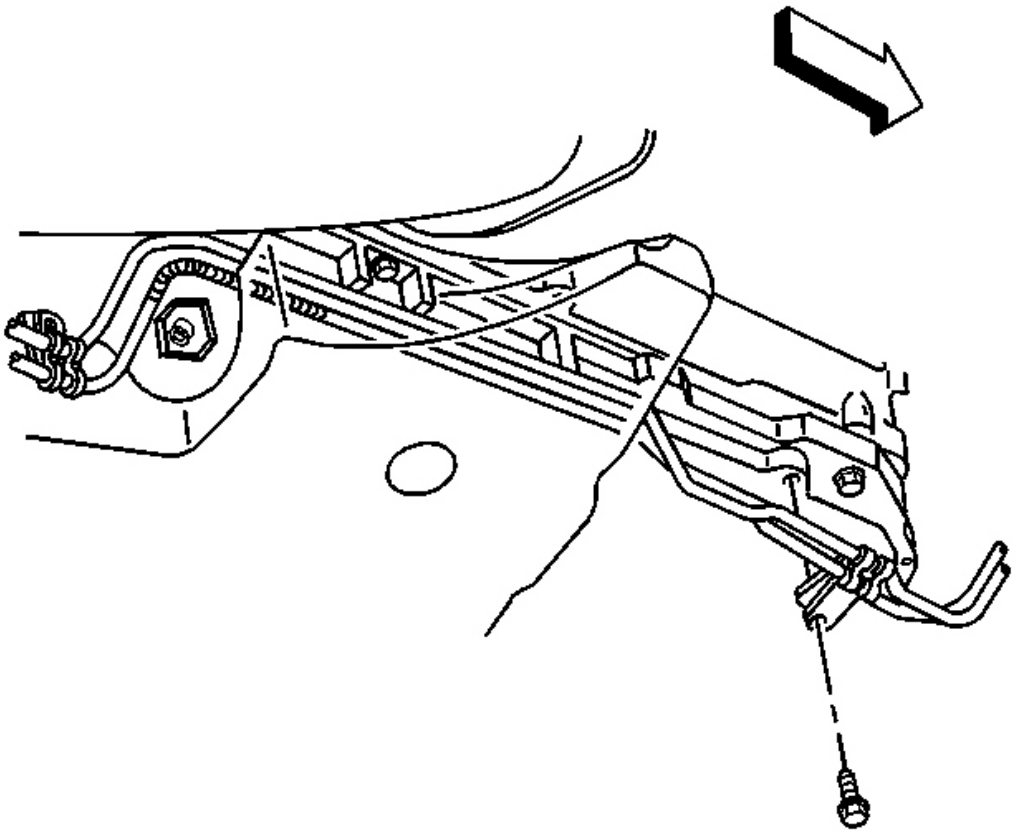

Fig. 309: Automatic Transmission Fluid Cooler Line & Oil Pan
Courtesy of GENERAL MOTORS CORP.

43. Disconnect the automatic transmission fluid cooler pipe clip from the front of the engine oil pan (if equipped).

cardiagn.com

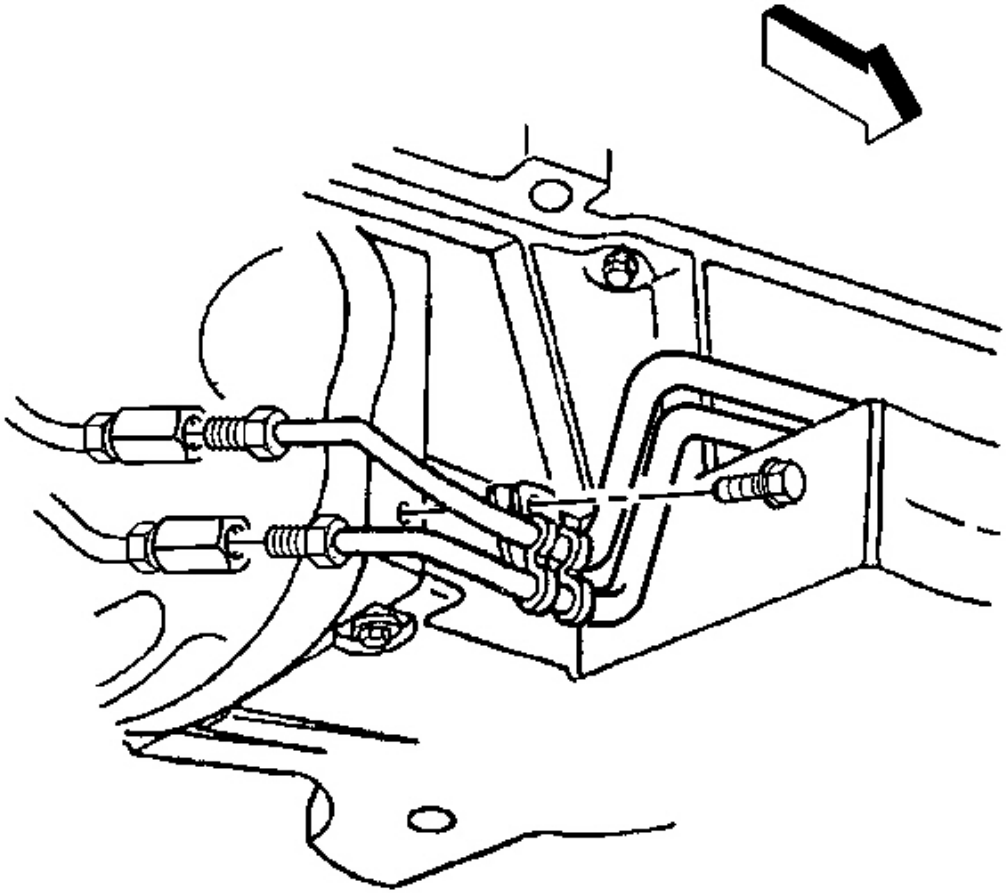

Fig. 310: Automatic Transmission Fluid Cooler Line Clamp & Bolt
Courtesy of GENERAL MOTORS CORP.

44. Disconnect the front automatic transmission fluid cooler pipes from the rear pipes.
45. Disconnect the automatic transmission cooler pipe clip at the right transmission cover (if equipped).

cardiagn.com

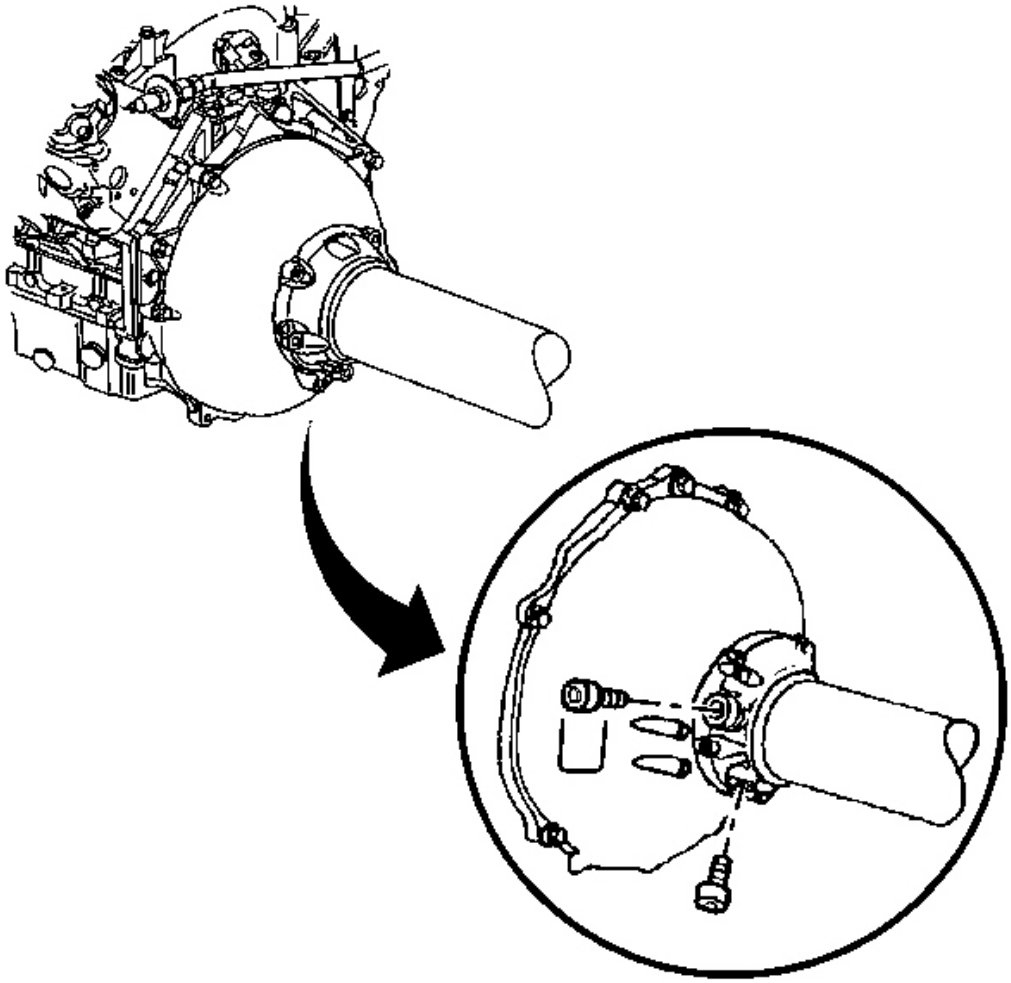

Fig. 311: Driveline Support Plug & Bolts
Courtesy of GENERAL MOTORS CORP.

NOTE: **Refer to Fastener Notice in Cautions and Notices.**

IMPORTANT: Failure to use the minimum fastener length specified will prevent proper retention of the propeller shaft during disassembly.

46. With automatic transmission vehicles, use the following steps:
    1. Remove the 2 driveline support hole plug bolts.
    2. Install a M10.0-1.5 x 55 mm bolt or longer in each plug location.

cardiagn.com

Tighten: Tighten the M10 bearing support bolts to 35 N.m (26 lb ft).

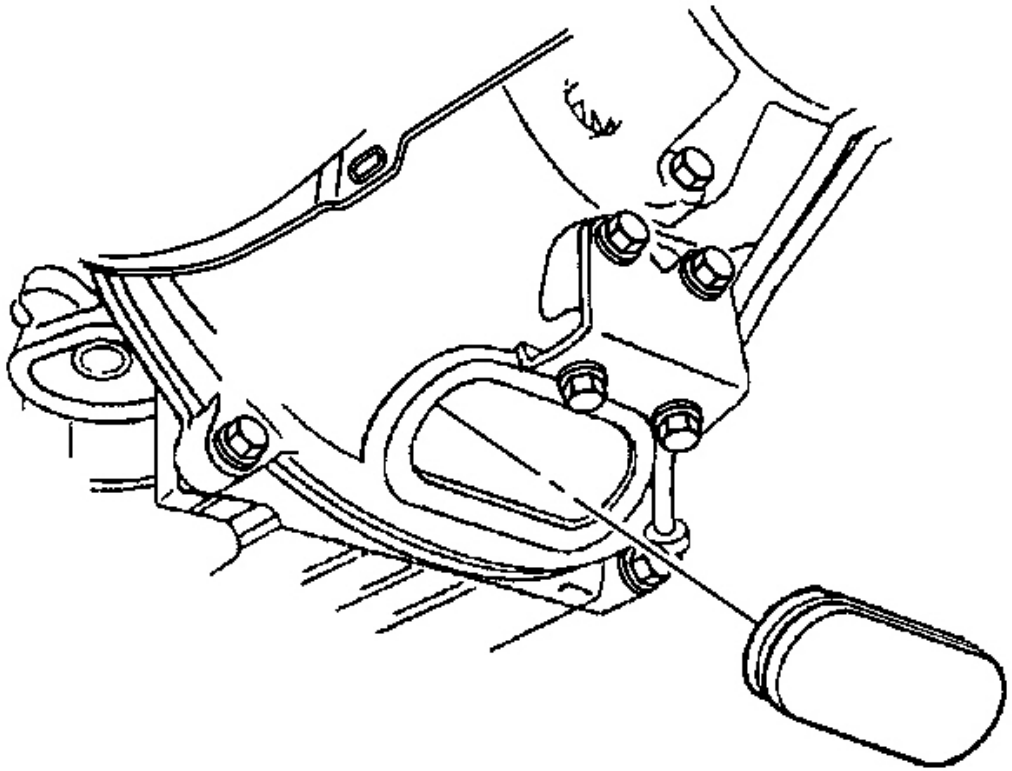

Fig. 312: Flywheel Housing Plug
Courtesy of GENERAL MOTORS CORP.

47. If equipped with a automatic transmission, remove the flywheel housing plug.

cardiagn.com

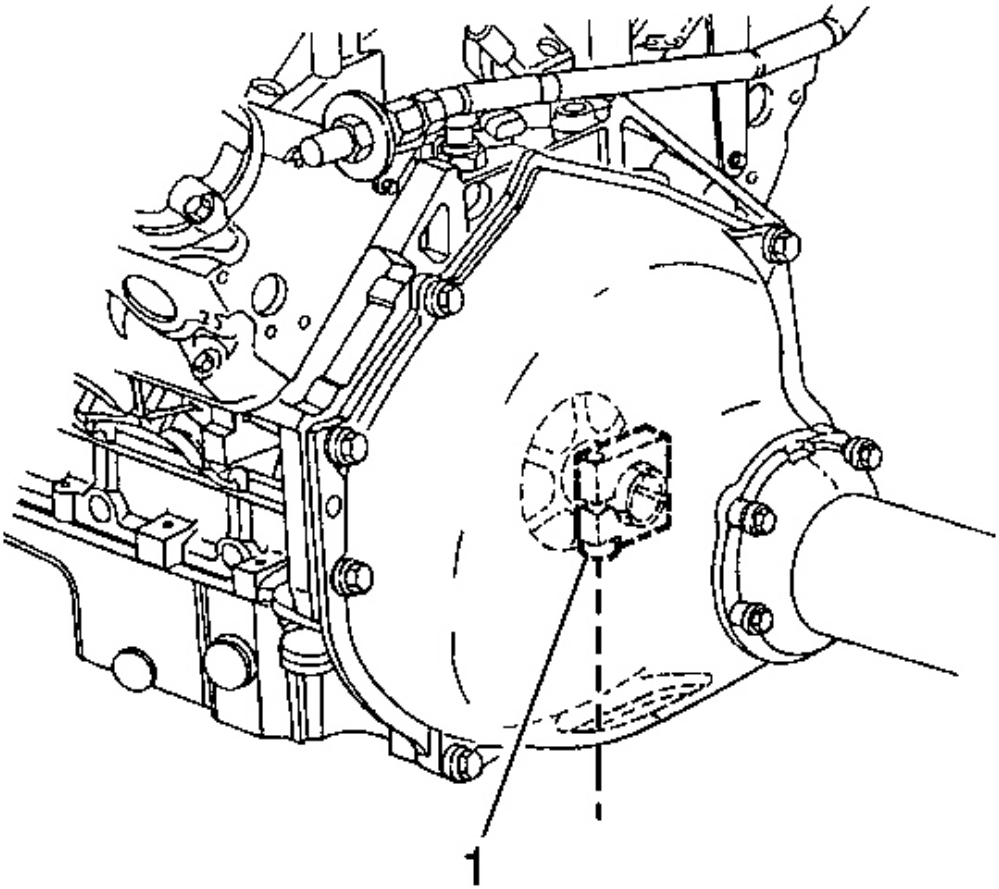

Fig. 313: Prop Shaft Hub Collar & Bolt
Courtesy of GENERAL MOTORS CORP.

48. If equipped with a automatic transmission perform the following:
    1. Orientate the prop shaft hub clamp for access to the bolt (1).
    2. Position the clamp bolt (1) facing downward.
    3. Loosen the prop shaft hub clamp bolt (1).

cardiagn.com

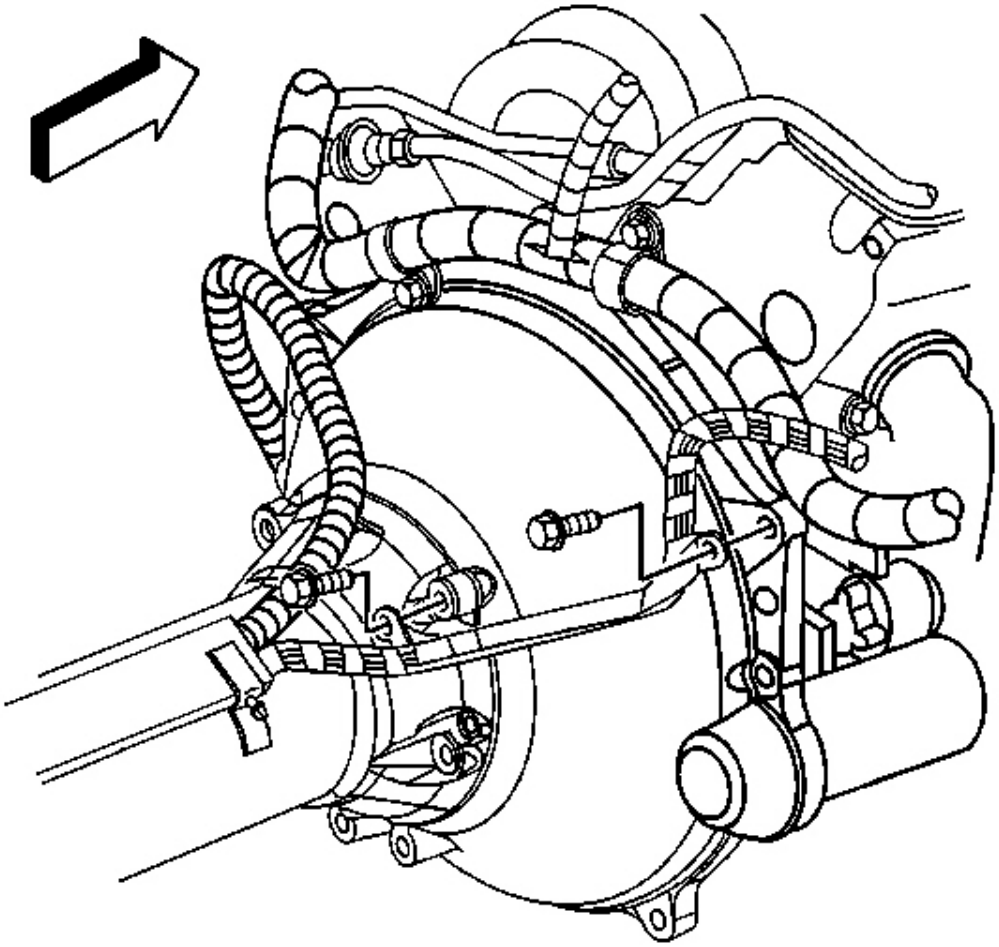

Fig. 314: Transmission Wire Harness Bracket & Bolts
Courtesy of GENERAL MOTORS CORP.

49. Remove bolts attaching the transmission wire harness bracket to the flywheel housing.
50. Remove the transmission wire harness from its mounting location, rearward toward the driveline support.
51. Lay the harness on the driveline support.

    Secure if necessary.

cardiagn.com

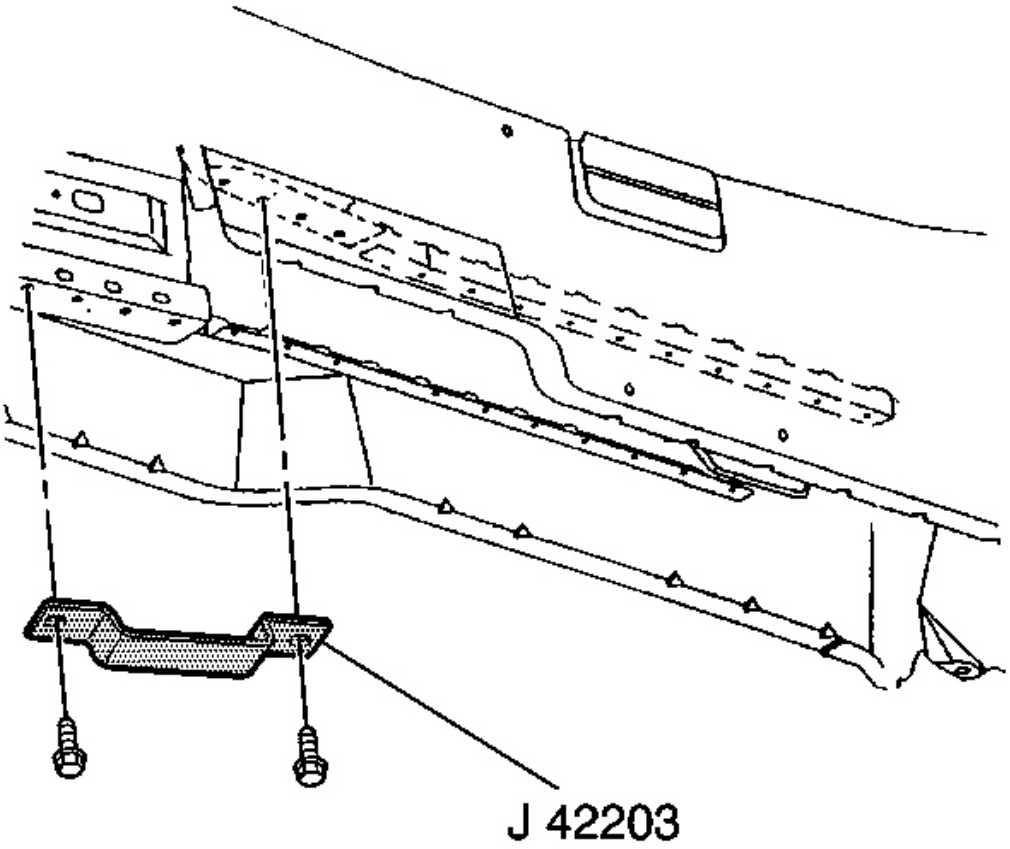

Fig. 315: J 42203, Close-Out Panel Flange & Bolts
Courtesy of GENERAL MOTORS CORP.

IMPORTANT: The weight of the engine should never be supported by the J 42203 .

52. Install the **J 42203** to the close-out panel flange.

cardiagn.com

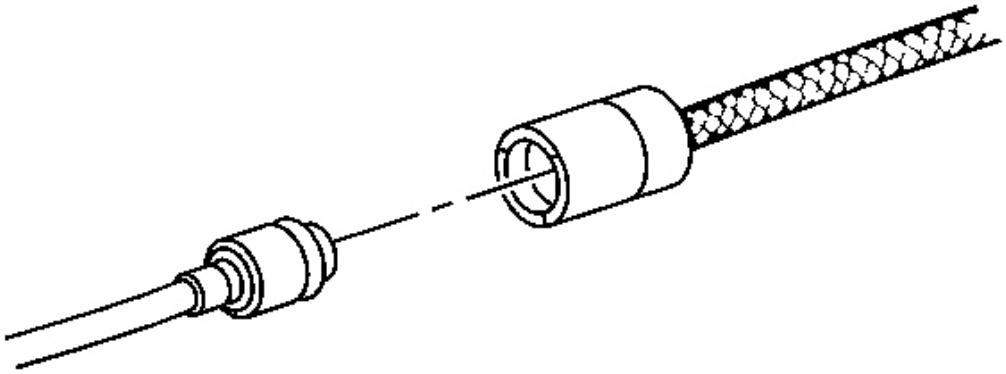

Fig. 316: Identifying White Circular Release Ring On The Actuator Hose
Courtesy of GENERAL MOTORS CORP.

53. If equipped with a manual transmission perform the following:
    1. Unclip the clutch actuator hose from the clutch actuator hose clip.
    2. Using the **J 36221** , depress the white circular release ring on the actuator hose and simultaneously pull lightly on the master cylinder hose to disconnect.
    3. Protect both ends from dirt and damage.

cardiagn.com

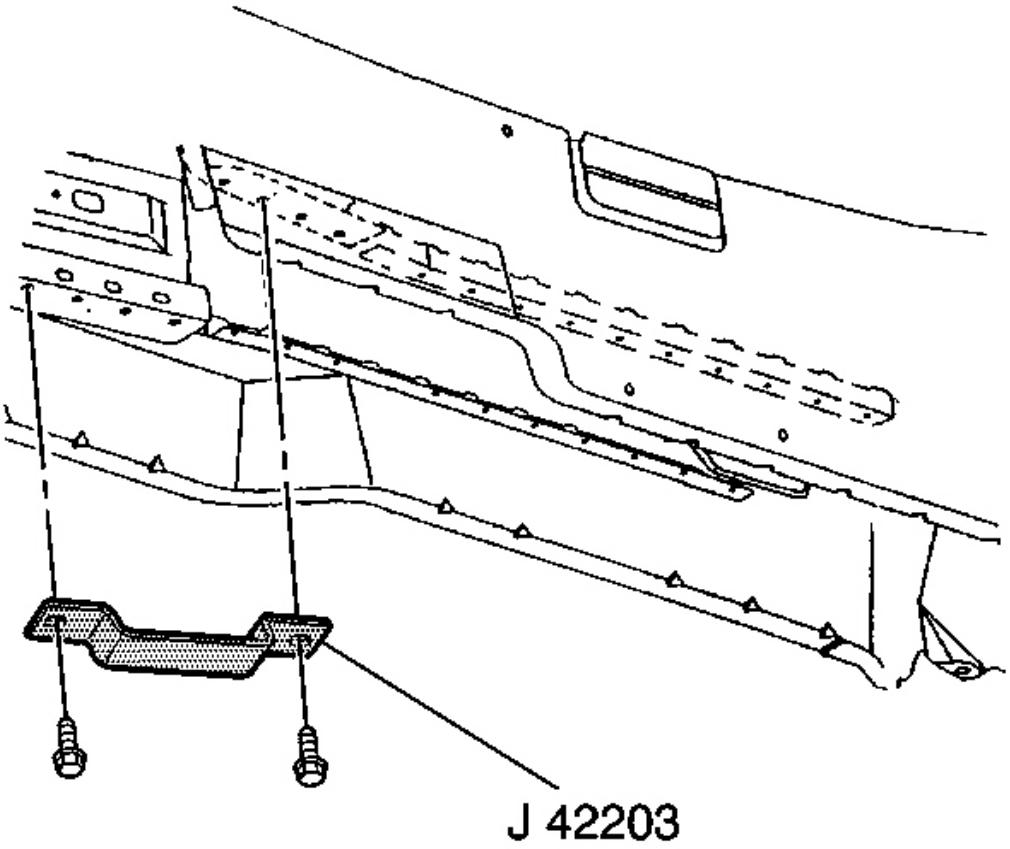

Fig. 317: J 42203, Close-Out Panel Flange & Bolts
Courtesy of GENERAL MOTORS CORP.

IMPORTANT: The weight of the engine should never be supported by the J 42203 .

54. Install the **J 42203** to the close-out panel flange.
55. Slowly lower the vehicle onto the **J 39580** and the **J 39580-500** .
56. Support the engine and crossmember on the **J 39580** and the **J 39580-500** .

cardiagn.com

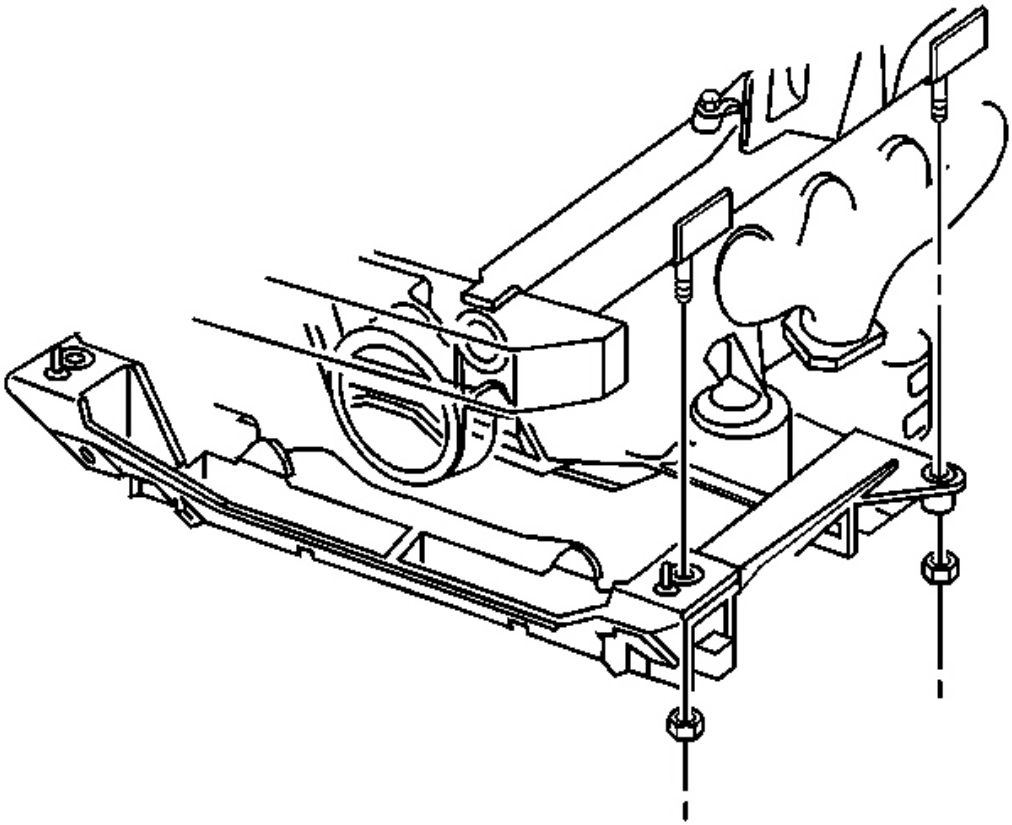

Fig. 318: Front & Rear Crossmember Nuts
Courtesy of GENERAL MOTORS CORP.

57. Using HAND TOOLS ONLY, remove the front and rear crossmember nuts.
58. Partially raise the vehicle.

cardiagn.com

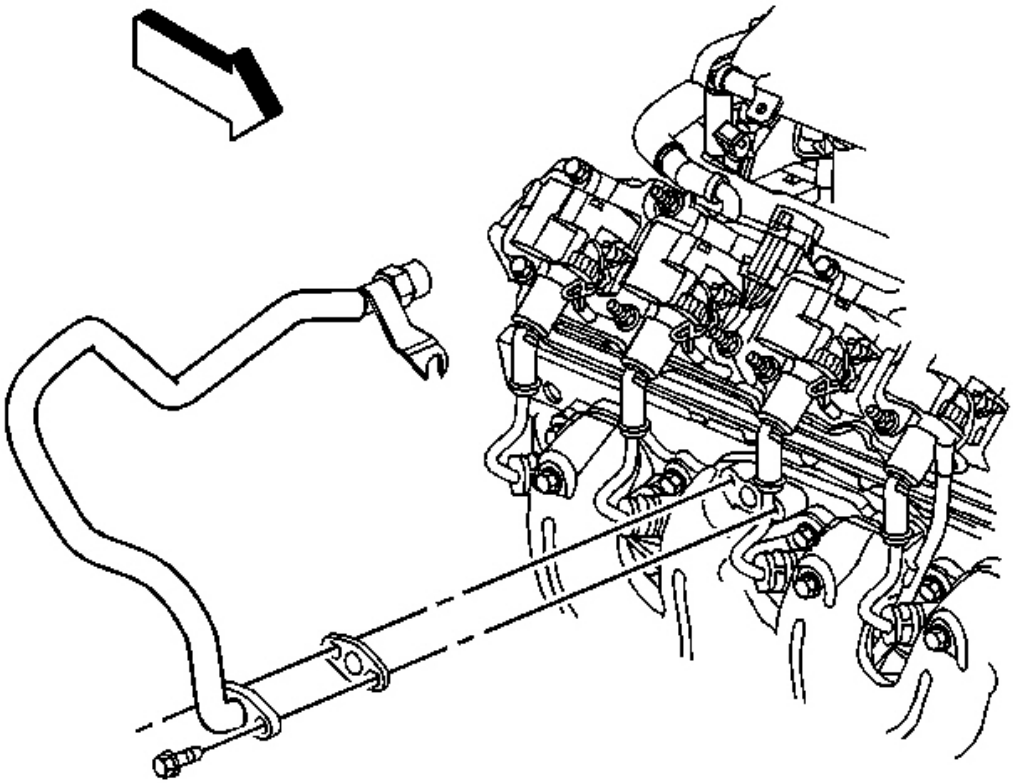

Fig. 319: AIR Pipe & Bolts
Courtesy of GENERAL MOTORS CORP.

59. Remove the AIR pipe bolts from the right exhaust manifold.

cardiagn.com

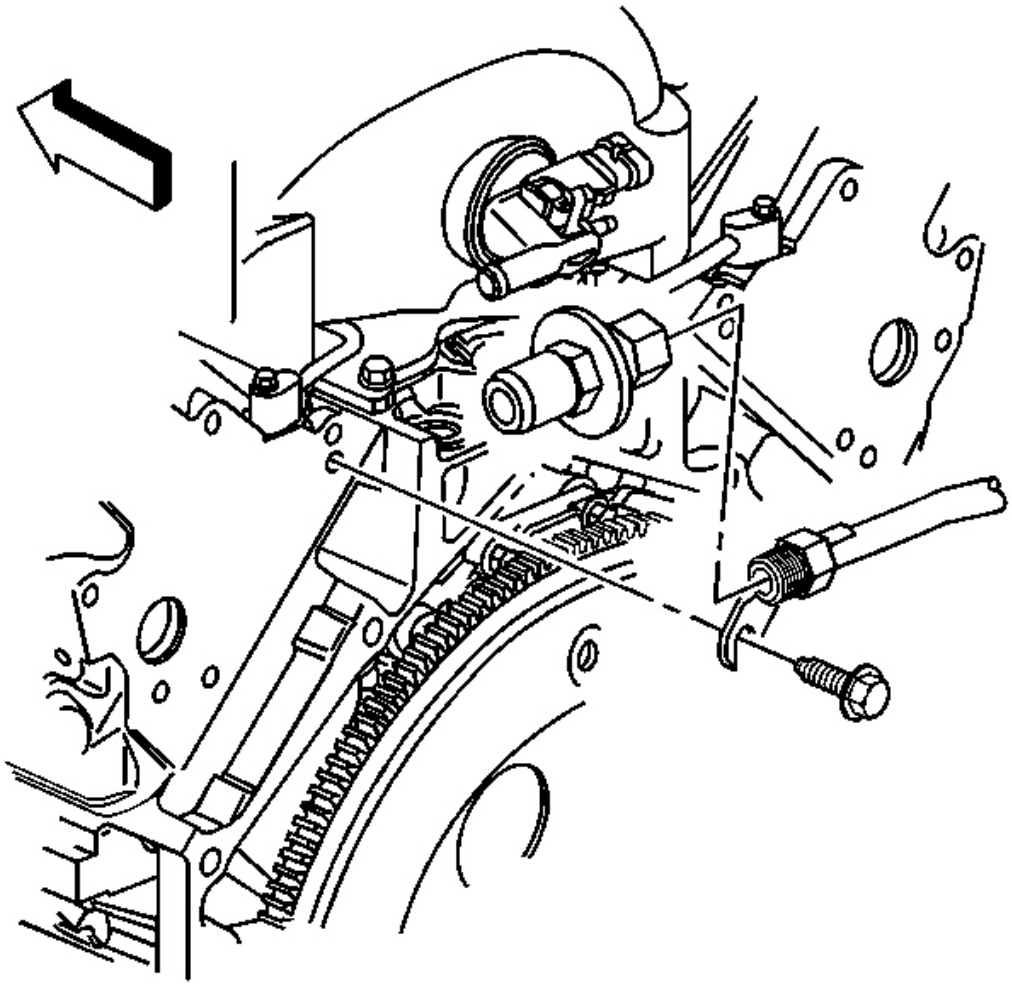

Fig. 320: AIR Pipe Gasket, Exhaust Manifold & Bolts
Courtesy of GENERAL MOTORS CORP.

60. Remove the AIR pipe bracket bolt (at the rear of the cylinder head).
61. Remove the AIR pipe (with check valve) and gasket.

cardiagn.com

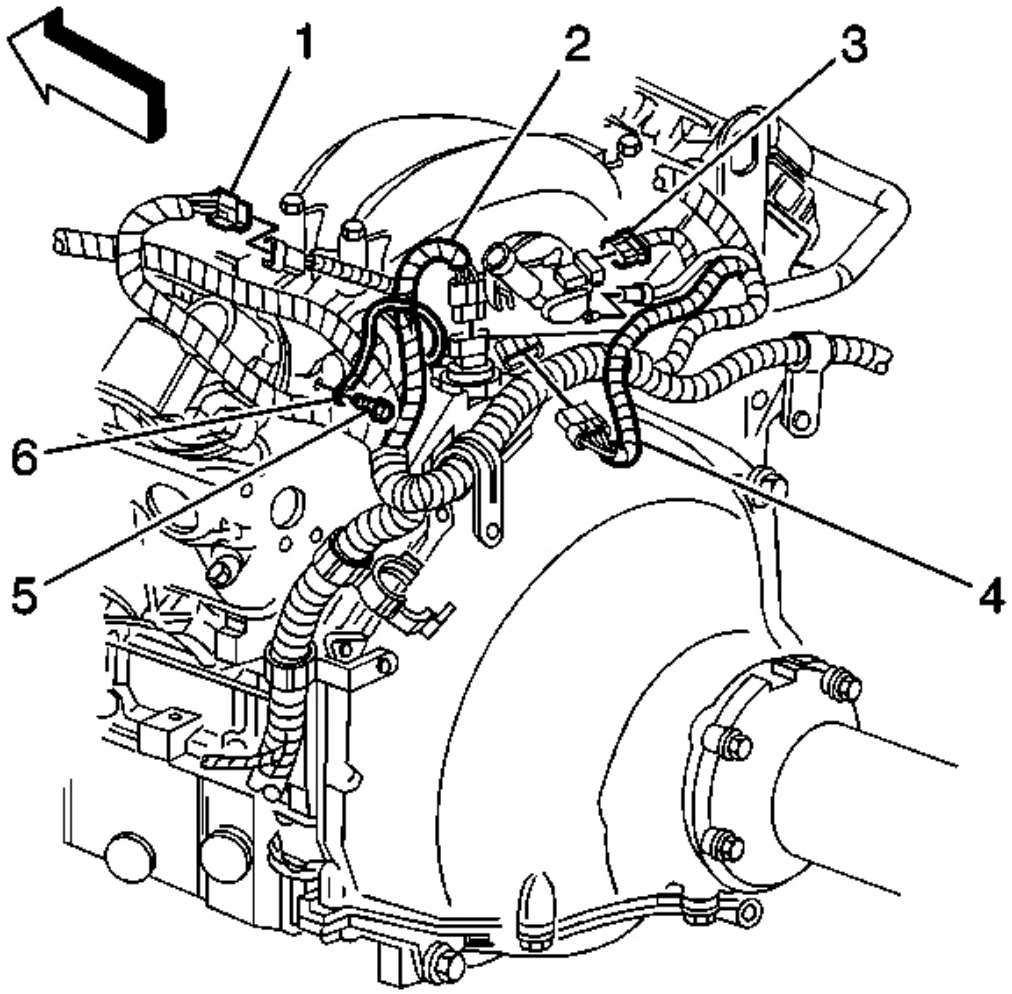

Fig. 321: MAP Sensor Vacuum Hose & MAP Sensor Electrical Connector
Courtesy of GENERAL MOTORS CORP.

62. Remove the ground strap bolt (5).
63. Remove the ground strap (6) from the left rear cylinder head.
64. Disconnect the following electrical connectors from the back of the engine:
    - The knock sensor wire harness (1)
    - The engine oil pressure sensor (2)
    - The manifold absolute pressure (MAP) sensor (3)
    - The camshaft position (CMP) sensor (4)

cardiagn.com

65. Disconnect the vacuum hose from the MAP sensor.

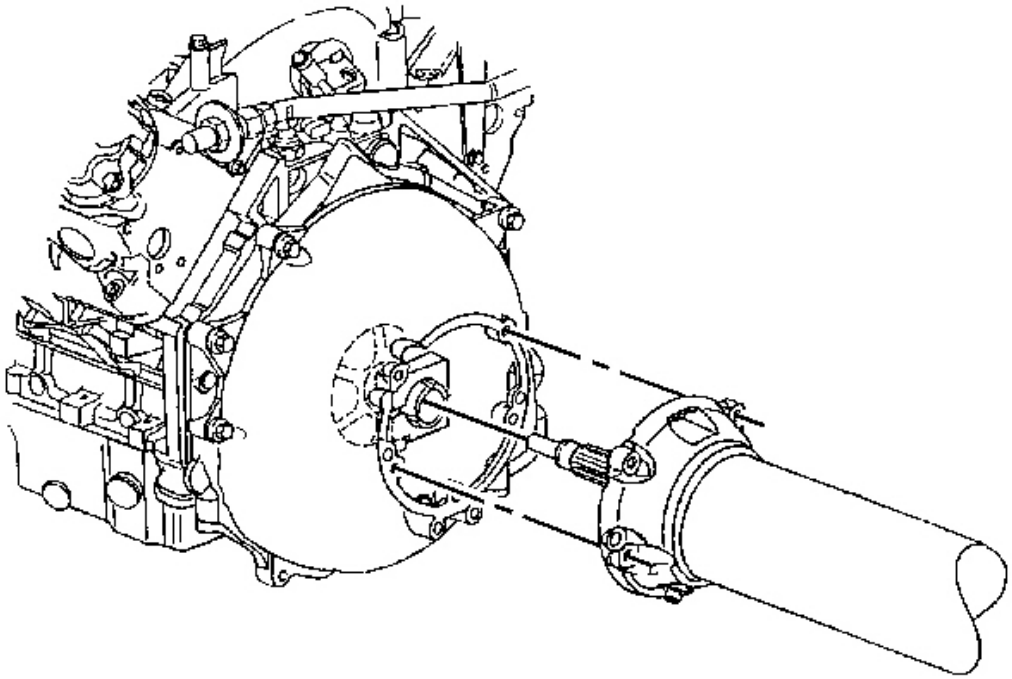

Fig. 322: Driveline Support & Bolts
Courtesy of GENERAL MOTORS CORP.

66. Remove the driveline support bolts.

cardiagn.com

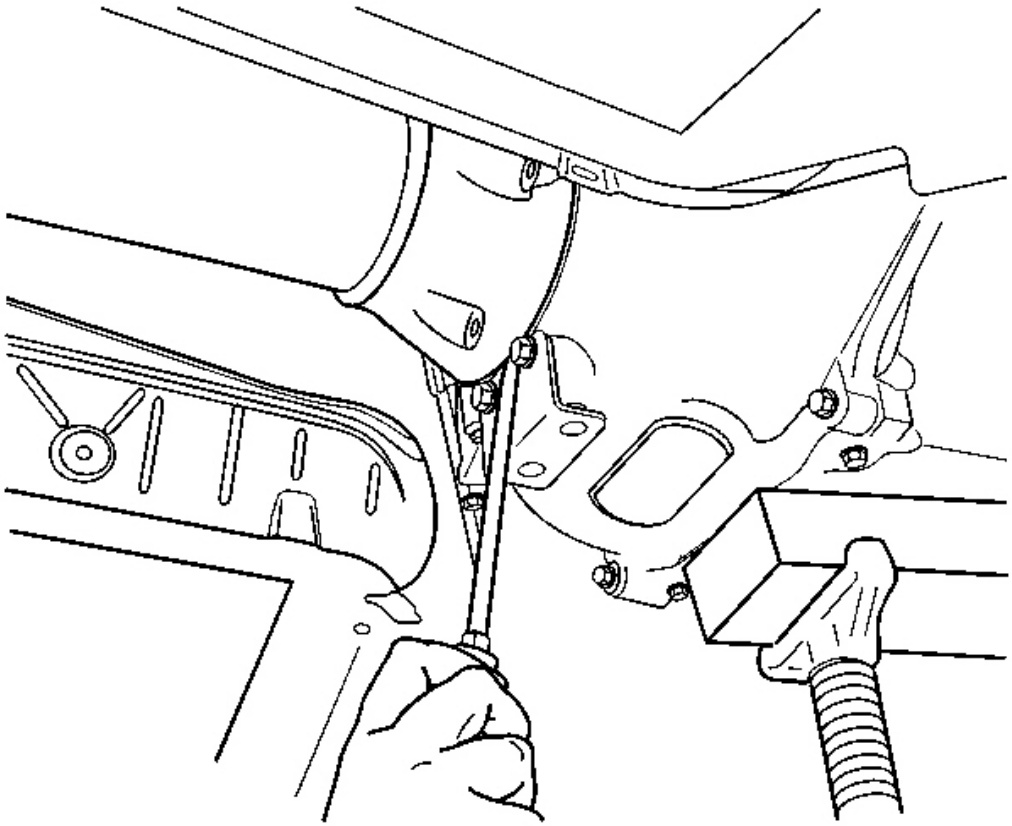

Fig. 323: Inserting Flat Tool Separating Flywheel Housing & Driveline Support
Courtesy of GENERAL MOTORS CORP.

IMPORTANT: Visually inspect the transmission wiring harness to ensure detachment from the engine.

67. Insert a flat bladed screwdriver, or similar tool, between the edge of the driveline support and the flywheel housing, then separate the flywheel housing from the driveline support.
68. Slowly pull the engine away from the propeller shaft.
69. As soon as the propeller input shaft clears the flywheel housing, slowly raise the vehicle.
70. Slide the engine and crossmember forward in order to clear the propeller shaft spline.

cardiagn.com

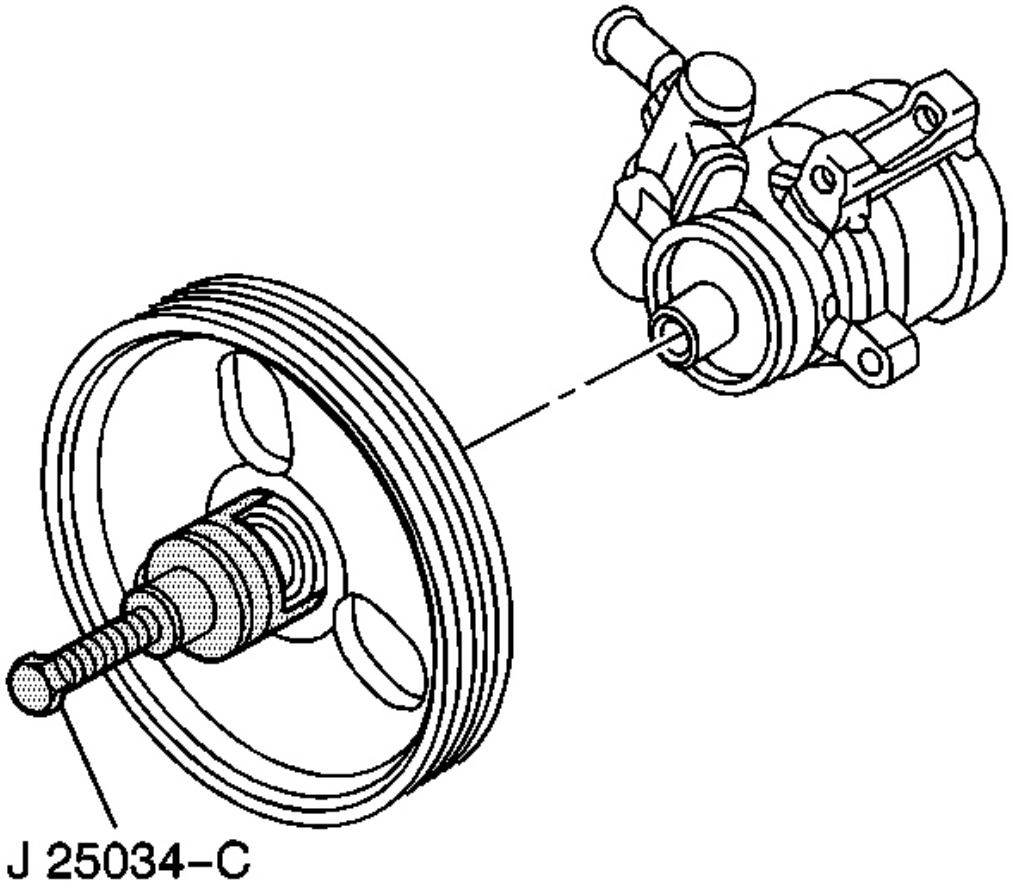

Fig. 324: Power Steering Pump Pulley &
Courtesy of GENERAL MOTORS CORP.

IMPORTANT: Visually inspect the wiring harness clearances while raising the vehicle.

71. Raise the vehicle completely off of the engine and crossmember.
72. Remove the power steering pump pulley hub cap, if necessary.
73. Using the **J 25034-C** remove the power steering pump pulley.

cardiagn.com

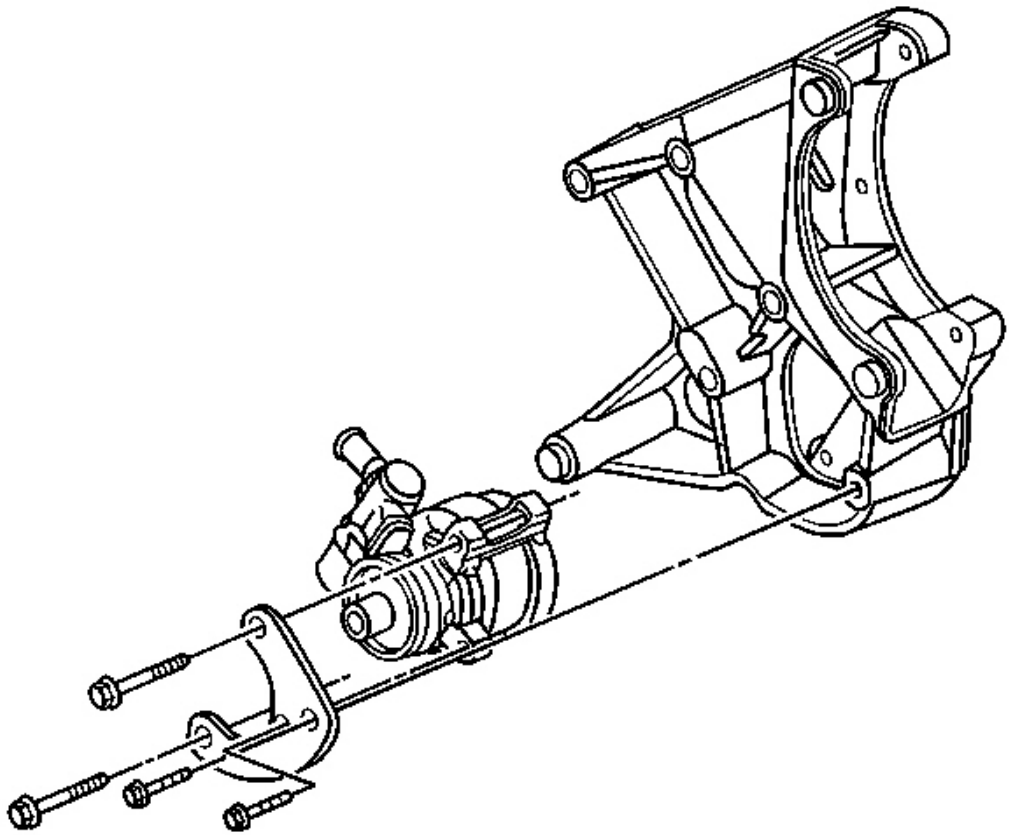

Fig. 325: Power Steering Pump, Generator Bracket & Bolts
Courtesy of GENERAL MOTORS CORP.

IMPORTANT: It is not necessary to open the power steering system during the engine removal procedure.

74. Remove the power steering pump bolts.
75. Remove the power steering pump brace.
76. Remove the power steering pump (with reservoir) from the engine and reposition them to the crossmember.
77. Remove the A/C compressor bracket. Refer to **Compressor Mounting Bracket Replacement** in Heating, Ventilation, and Air Conditioning.

cardiagn.com

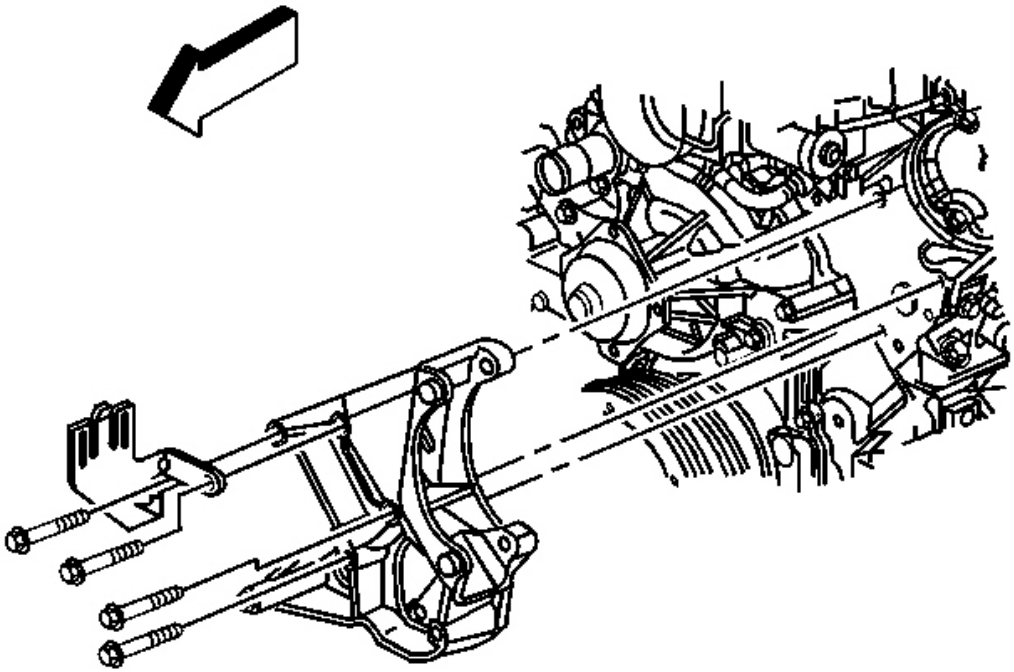

Fig. 326: Generator Bracket & Bolts
Courtesy of GENERAL MOTORS CORP.

78. Remove the generator bracket bolts.
79. Remove the generator bracket and power steering pump bracket.

cardiagn.com

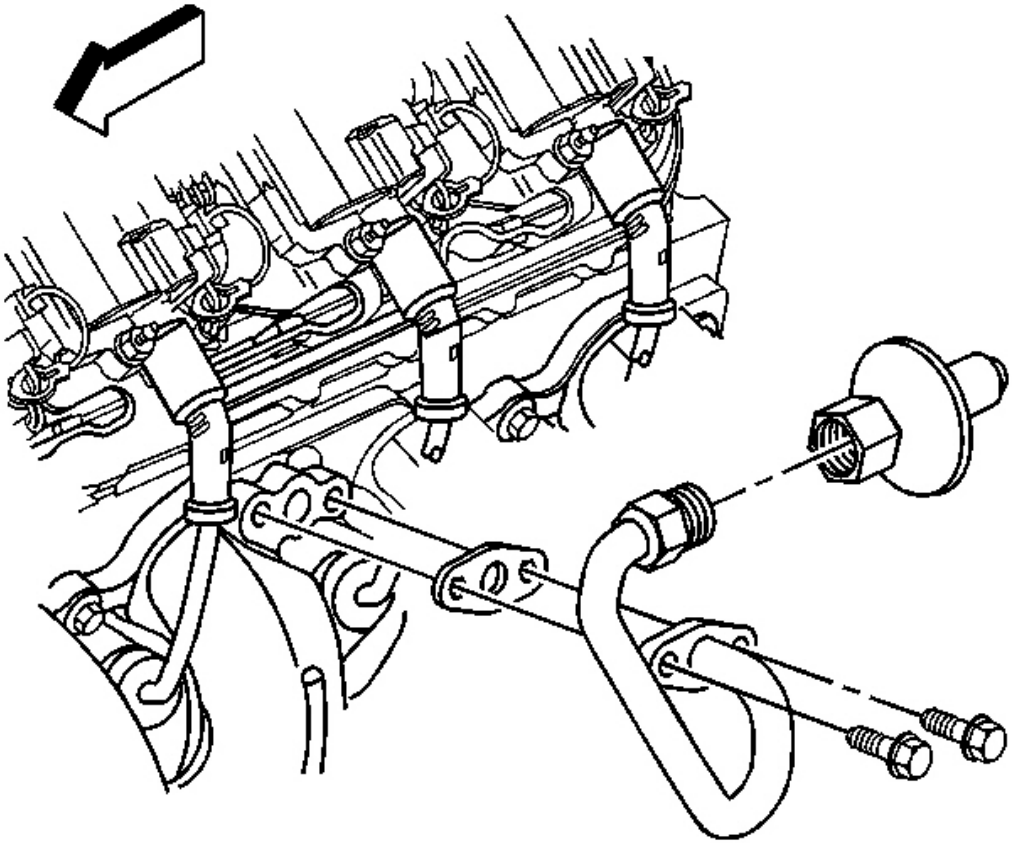

Fig. 327: AIR Pipe Bolts, Exhaust Manifold & Bolts
Courtesy of GENERAL MOTORS CORP.

80. Remove the AIR pipe bolts from the left exhaust manifold.
81. Remove the AIR pipe and gasket.
82. Install the **J 41798** to the engine.
83. Remove the spark plugs. Refer to **Spark Plug Replacement** in Engine Controls - 5.7 L.

cardiagn.com

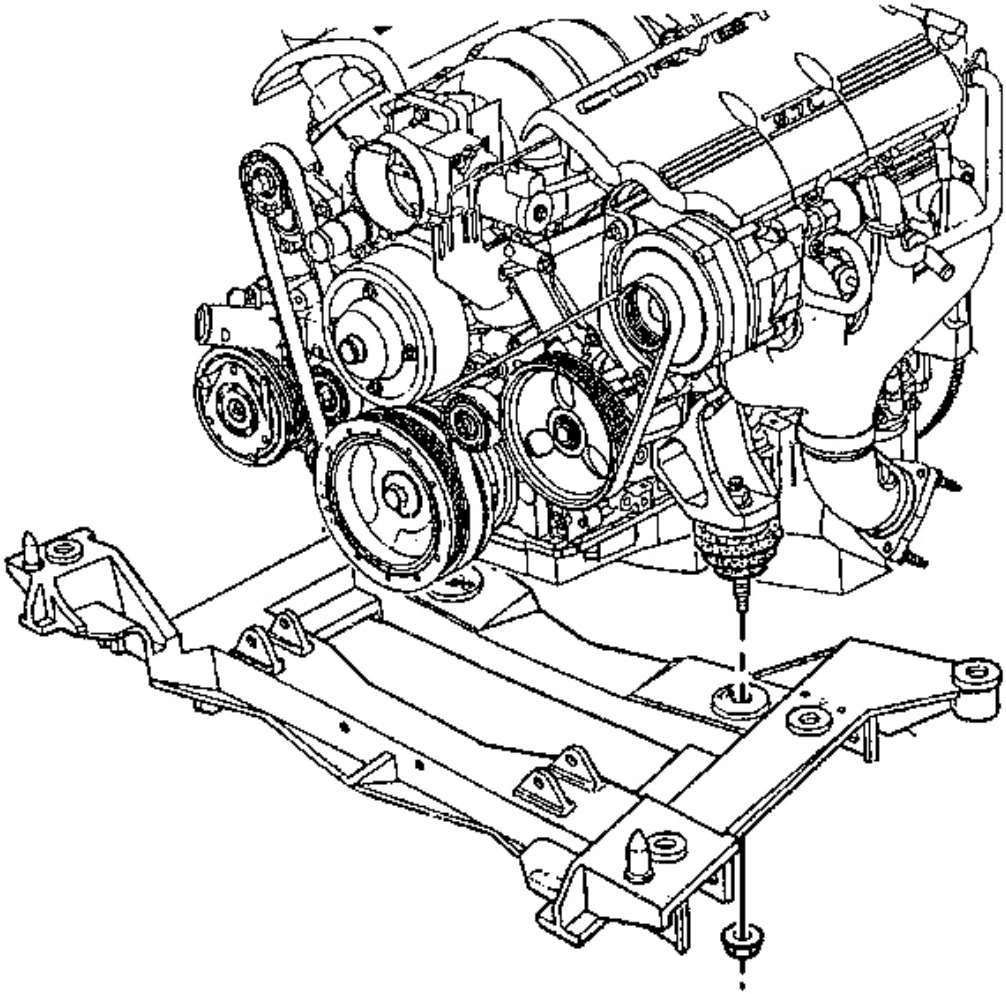

Fig. 328: Engine Mount & Nuts
Courtesy of GENERAL MOTORS CORP.

84. Remove the engine mount nuts.
85. Using a engine hoist and the **J 41798** slowly raise the engine.
86. Remove the engine from the crossmember.

cardiagn.com

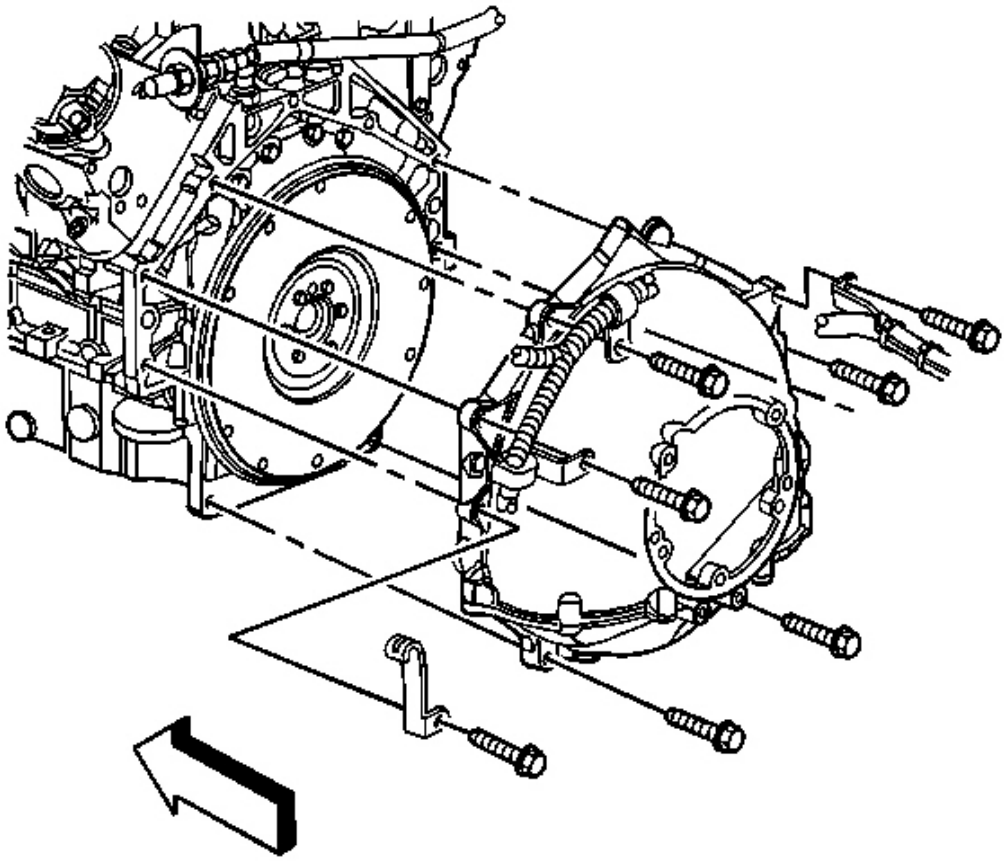

Fig. 329: Bottom Flywheel Housing-To-Oil Pan & Bolts
Courtesy of GENERAL MOTORS CORP.

87. Remove the flywheel housing bolts.
88. Remove the flywheel housing from the engine block.
89. Install the engine onto an engine stand and prepare for disassembly. Refer to **Engine Balancing** .
90. Remove the engine hoist.
91. Remove the **J 41798** from the engine.
92. Remove the engine mount bracket bolts.
93. Remove the engine mount brackets from the engine block.

Installation Procedure

Important

cardiagn.com

The steps in the following procedure are in a specific order. Follow these steps in this order and ignore no details.

1. Prepare the engine for installation. Refer to **Engine Prelubing** and **Engine Balancing** .

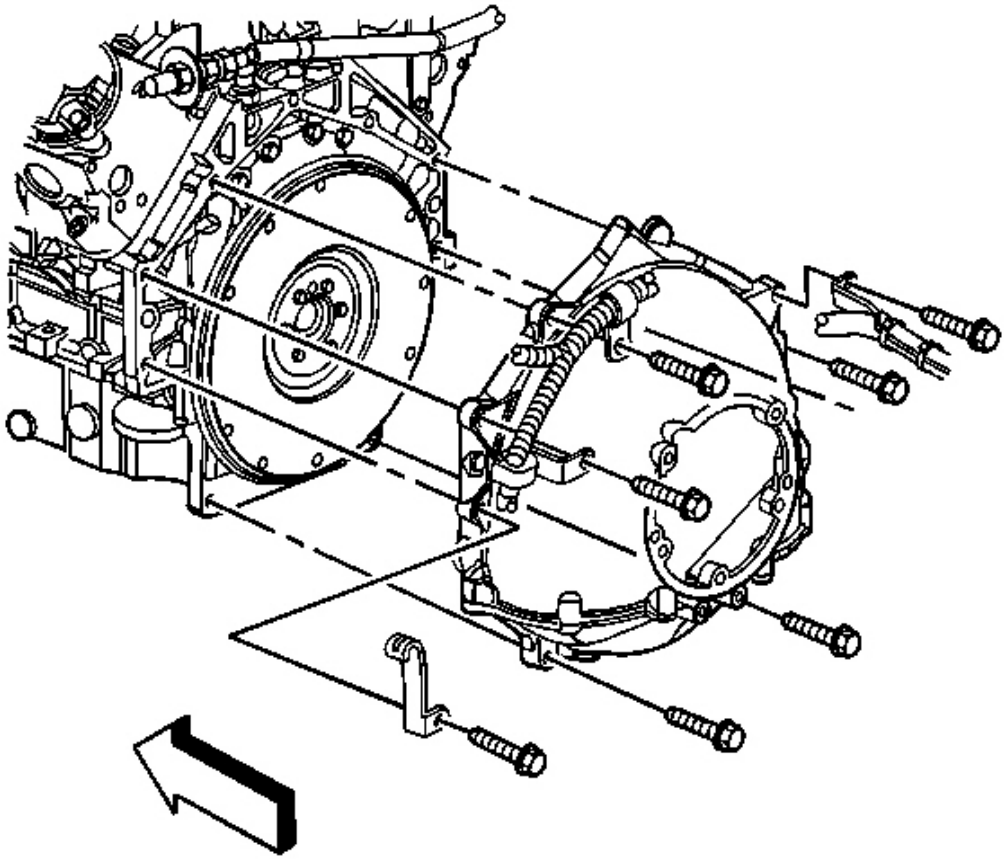

Fig. 330: Bottom Flywheel Housing-To-Oil Pan & Bolts
Courtesy of GENERAL MOTORS CORP.

NOTE: Refer to Fastener Notice in Cautions and Notices.

2. Install the engine mount brackets to the engine block.
3. Install the engine mount bracket bolts.

Tighten: Tighten the engine mount bracket bolts to 50 N.m (37 lb ft).

cardiagn.com

4. Install the **J 41798** to the engine.
5. Using a engine hoist and the **J 41798** raise the engine slightly.
6. Remove the engine from the engine stand.
7. Install the flywheel housing to the engine block.
8. Install the flywheel housing bolts.

   Tighten: Tighten the flywheel housing bolts to 50 N.m (37 lb ft).

9. Using a engine hoist and the **J 41798** lower the engine onto the crossmember.

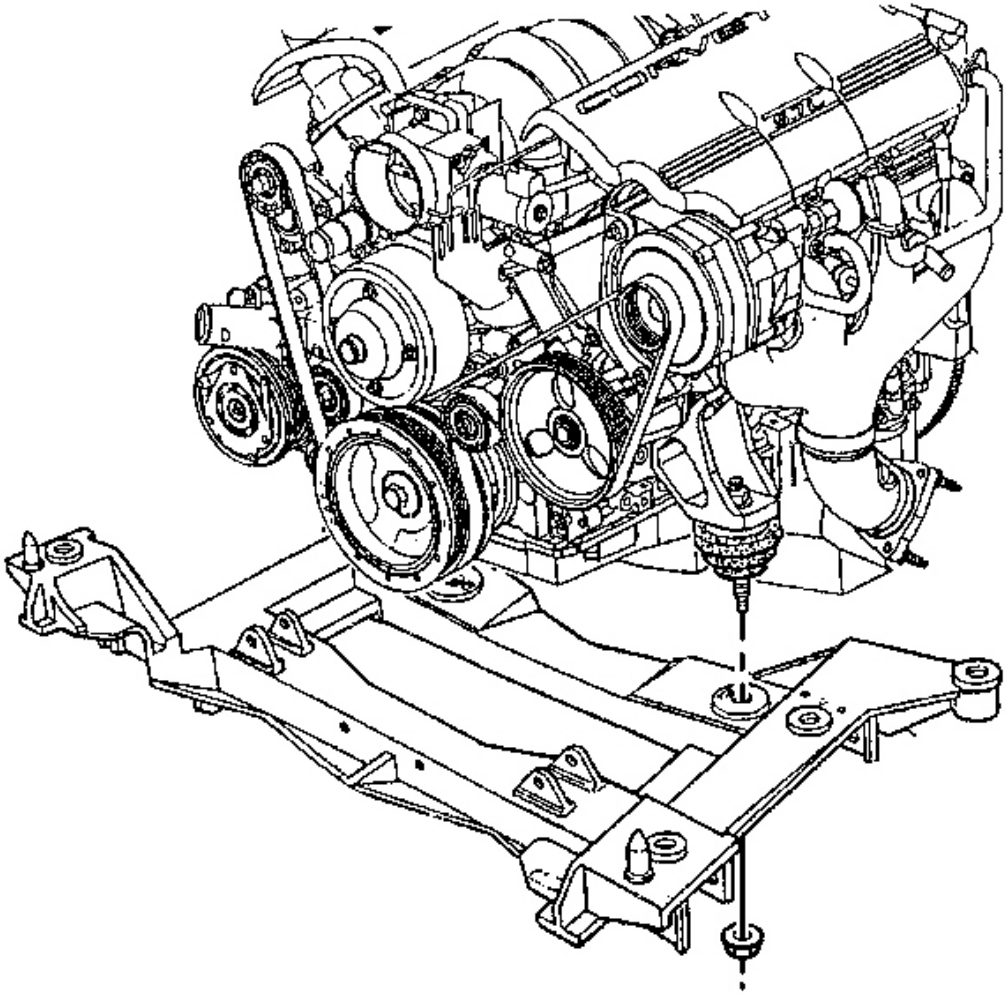

Fig. 331: Engine Mount & Nuts

cardiagn.com

Courtesy of GENERAL MOTORS CORP.

10. Install the engine mount nuts.

    Tighten: Tighten the engine mount nuts to 65 N.m (48 lb ft).

11. Install the spark plugs. Refer to **Spark Plug Replacement** in Engine Controls - 5.7 L.
12. Remove the **J 41798** from the engine.

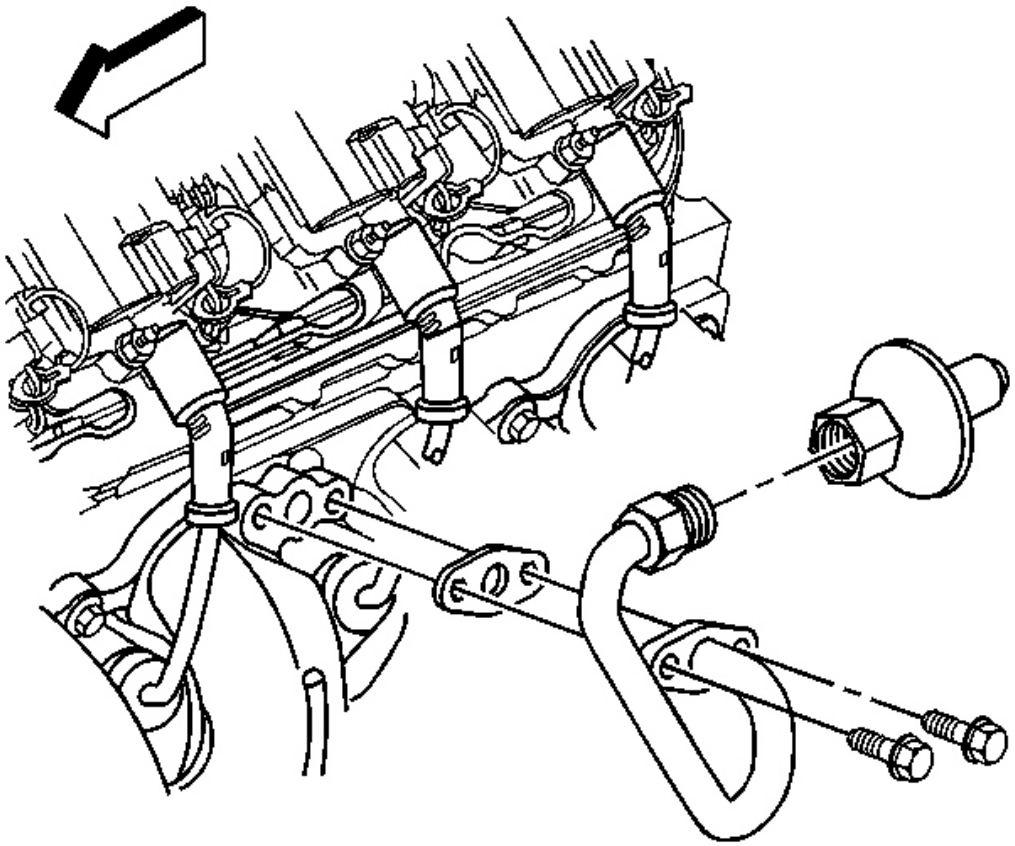

Fig. 332: AIR Pipe Bolts, Exhaust Manifold & Bolts
Courtesy of GENERAL MOTORS CORP.

13. Clean the exhaust manifold AIR pipe gasket flange, if necessary.
14. Install a NEW AIR pipe gasket and the pipe.
15. Install the AIR pipe bolts.

cardiagn.com

Tighten: Tighten the AIR pipe bolts to 20 N.m (15 lb ft).

16. Install the A/C compressor bracket. Refer to **Compressor Mounting Bracket Replacement** in Heating, Ventilation, and Air Conditioning.

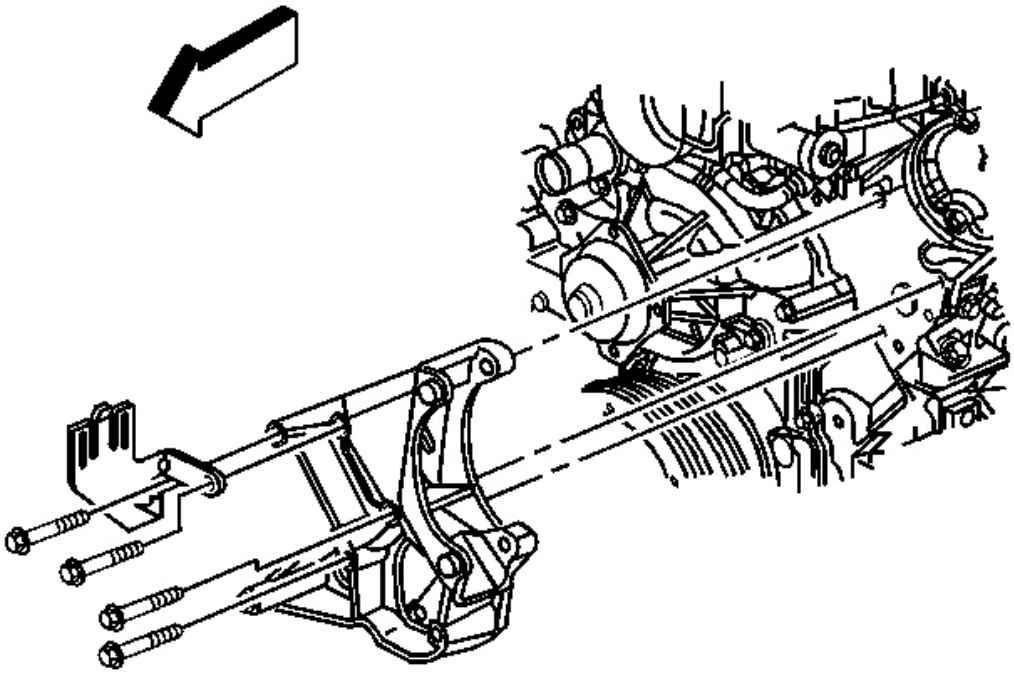

Fig. 333: Generator Bracket & Bolts
Courtesy of GENERAL MOTORS CORP.

17. Install the generator bracket and power steering pump bracket.
18. Install the generator bracket bolts until snug.
19. Tighten the generator bracket bolts in the following order:
    1. Inner power steering pump reservoir bracket bolt
    2. Upper generator bracket bolt
    3. Outer power steering pump reservoir bracket bolt
    4. Lower generator bracket bolt

    Tighten: Tighten the generator bracket bolts to 50 N.m (37 lb ft).

cardiagn.com

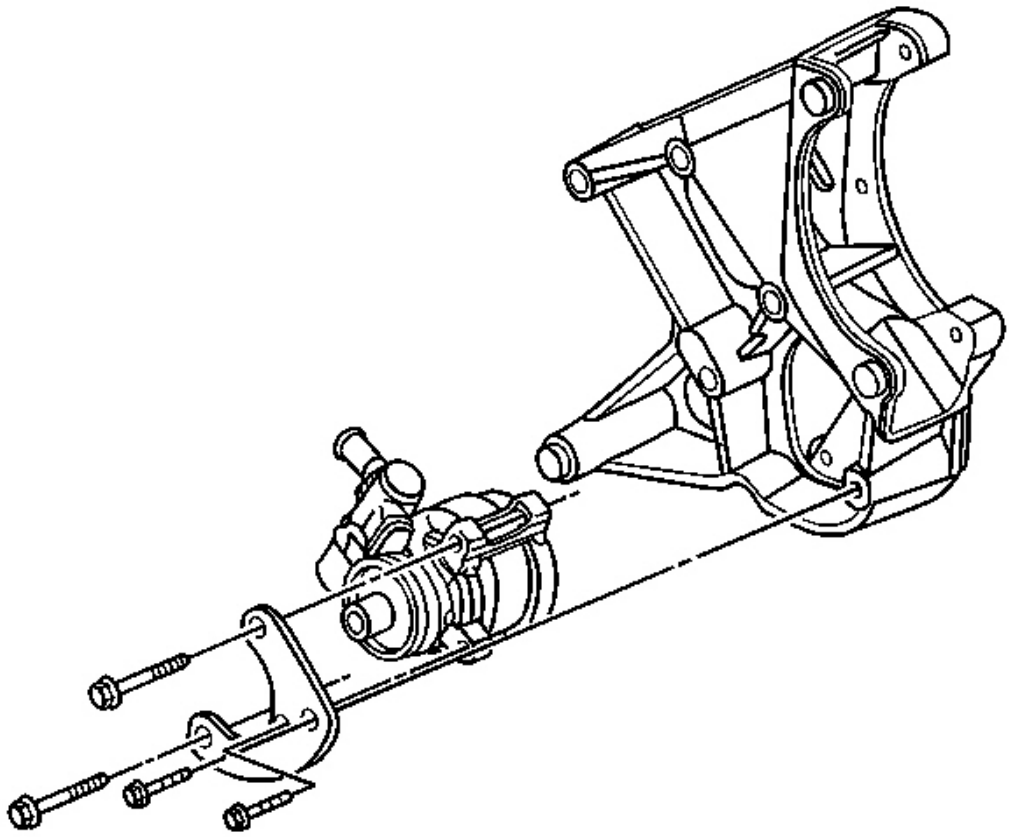

Fig. 334: Power Steering Pump, Generator Bracket & Bolts
Courtesy of GENERAL MOTORS CORP.

20. Install the power steering pump (with reservoir) to the generator bracket.
21. Install the power steering pump brace.
22. Install the power steering pump bolts.

Tighten: Tighten the power steering pump bolts to 25 N.m (18 lb ft).

cardiagn.com

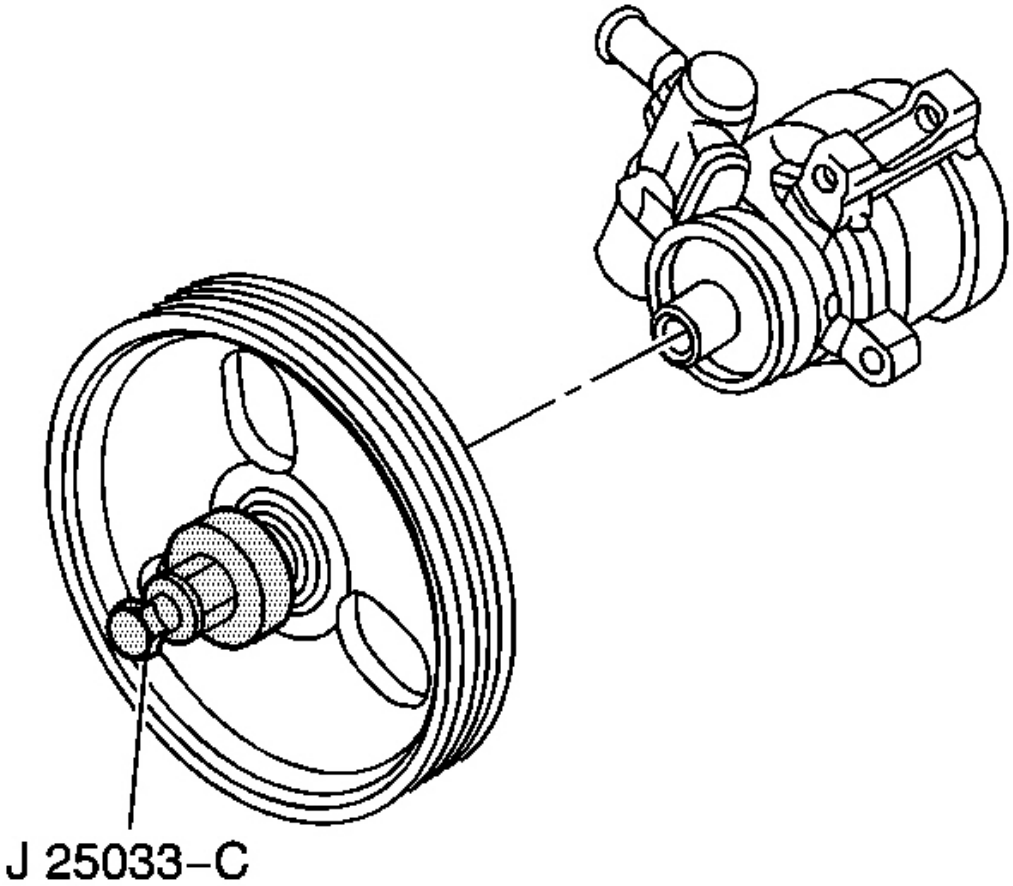

Fig. 335: J 25033-C & Power Steering Pump Pulley
Courtesy of GENERAL MOTORS CORP.

23. Using the **J 25033-C** install the power steering pump pulley.
24. Install the power steering pump pulley hub cap, if necessary.
25. Roll the engine and crossmember underneath the vehicle.
26. Partially lower the vehicle onto the engine and crossmember.

cardiagn.com

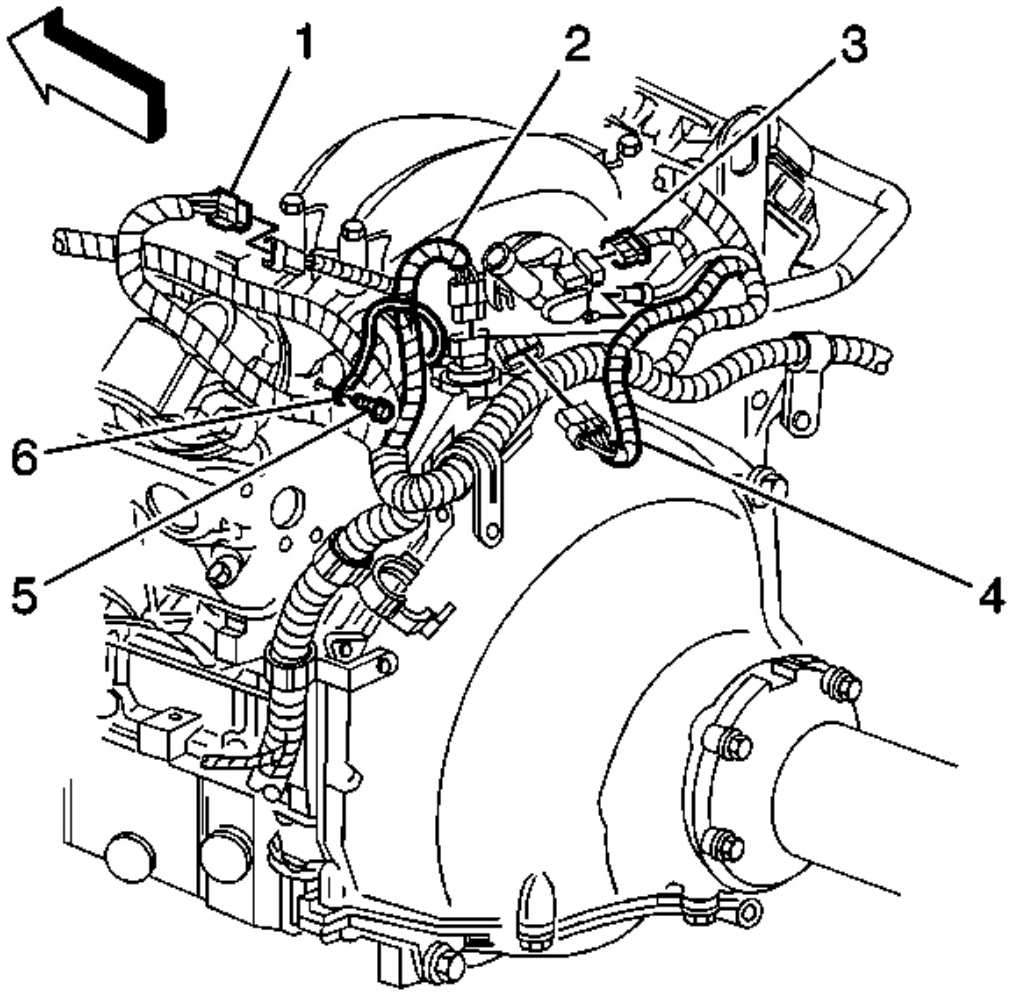

Fig. 336: MAP Sensor Vacuum Hose & MAP Sensor Electrical Connector
Courtesy of GENERAL MOTORS CORP.

27. Install the ground strap (6) and ground strap bolt (5) to the rear of the left cylinder head.

    Tighten: Tighten the ground strap bolt (5) to 32 N.m (24 lb ft).

28. Route the electrical harness and connect the following electrical connectors at the rear of the engine:
    - The knock sensor wire harness (1)
    - The engine oil pressure sensor (2)
    - The MAP sensor (3)

cardiagn.com

- The CMP sensor (4)

29. Connect the vacuum hose to the MAP sensor.

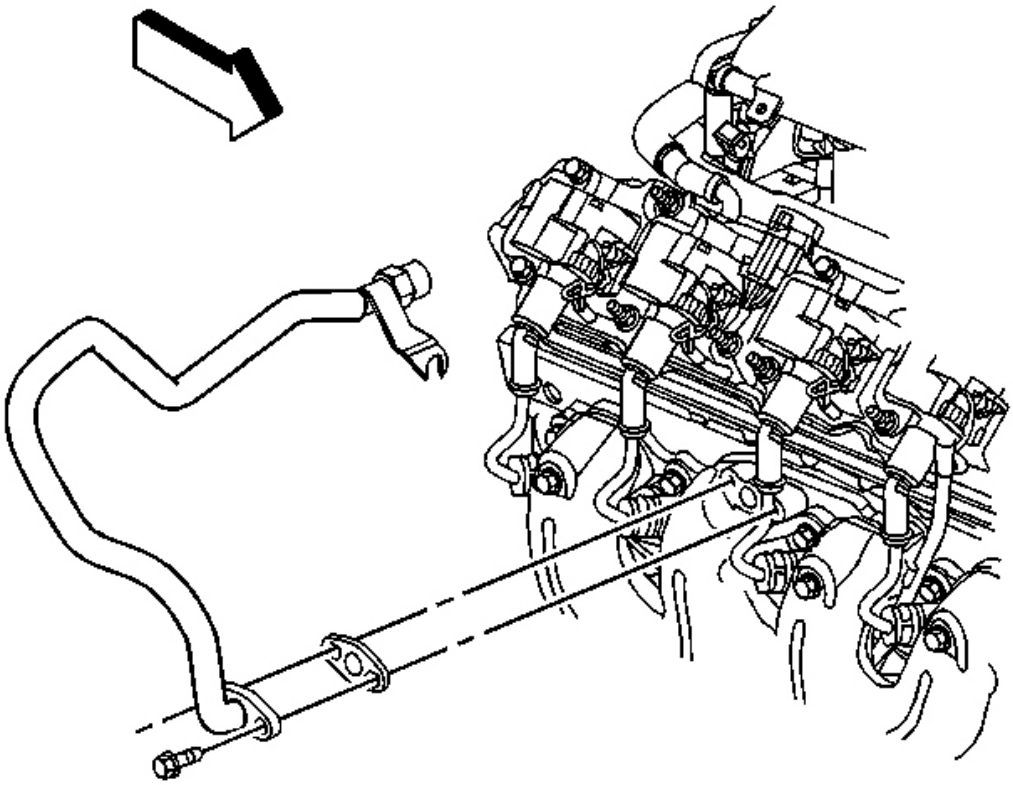

Fig. 337: AIR Pipe & Bolts
Courtesy of GENERAL MOTORS CORP.

30. Clean the exhaust manifold AIR gasket flange, if necessary.
31. Install a NEW AIR pipe gasket and the pipe (with check valve) to the right exhaust manifold.
32. Install the AIR pipe bolts until snug.

cardiagn.com

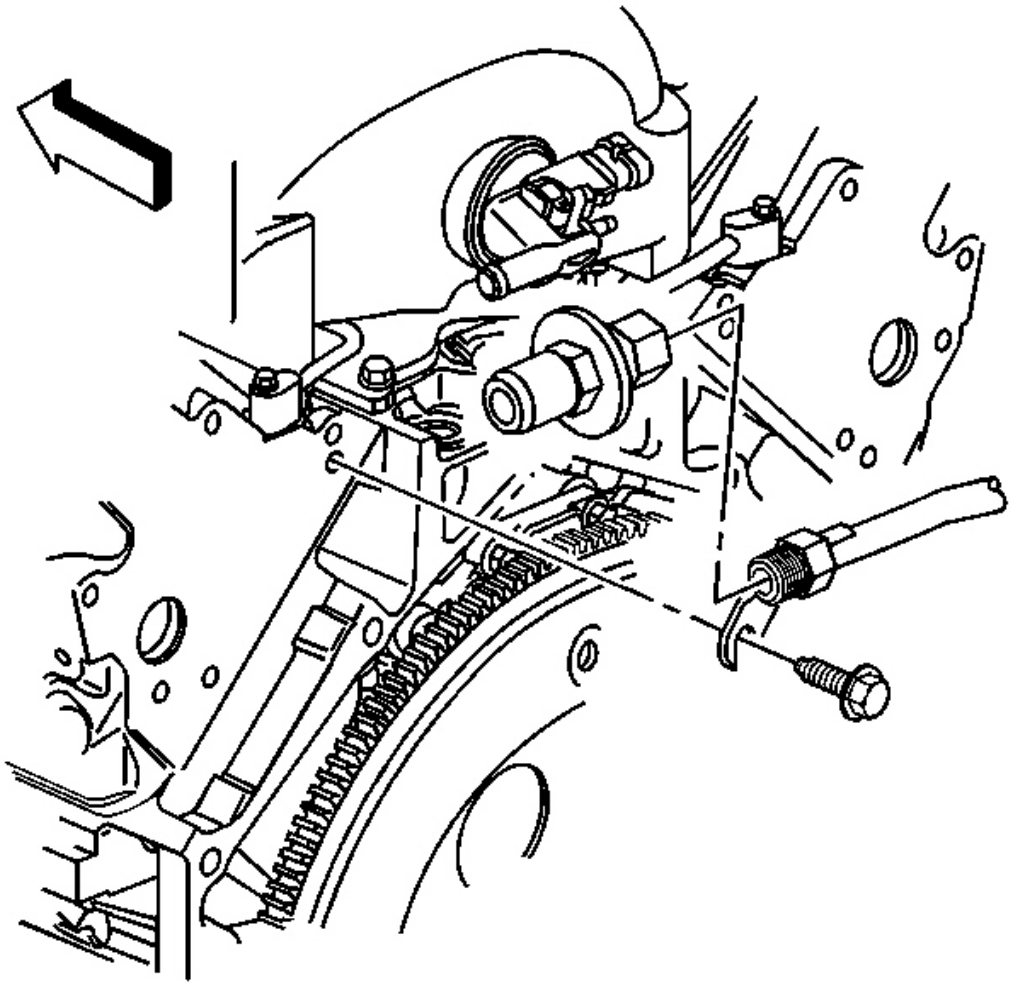

Fig. 338: AIR Pipe Gasket, Exhaust Manifold & Bolts
Courtesy of GENERAL MOTORS CORP.

33. Install the AIR pipe bracket bolt (at the rear of the cylinder head).

    Tighten: Tighten the AIR pipe bolts to 20 N.m (15 lb ft).

cardiagn.com

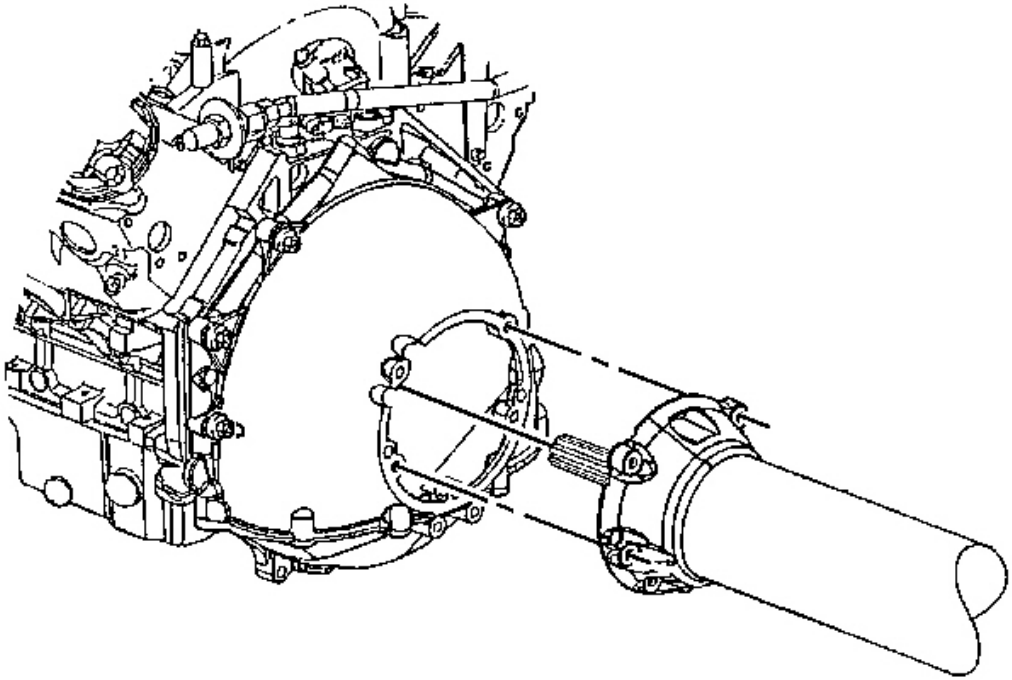

Fig. 339: Propeller Input Shaft & Clutch Driven Plate Hub
Courtesy of GENERAL MOTORS CORP.

34. Vehicles equipped with a manual transmission, slide the engine and crossmember rearward. Do not force the engine onto the propeller spline.
35. Position the engine to the proper height and angle in order to install the propeller input shaft.
36. Insert the propeller input shaft into the clutch driven plate hub while maintaining the proper angle, Do Not Force. Rotate the shaft slightly to bring the 2 splines into alignment, if necessary.

cardiagn.com

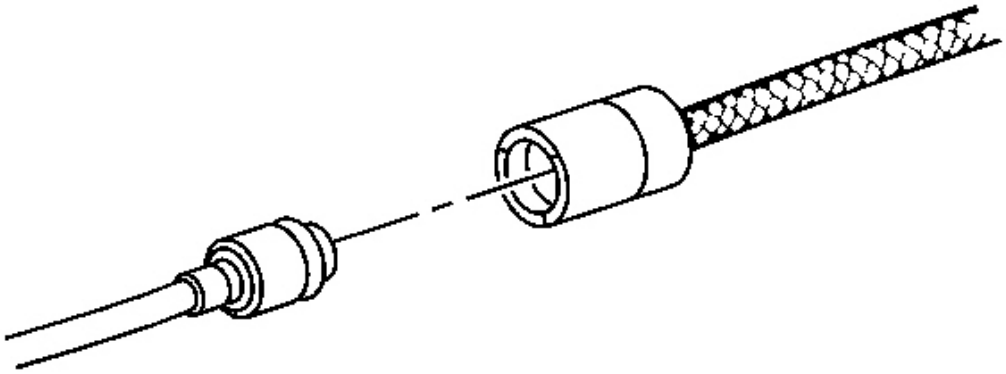

Fig. 340: Identifying White Circular Release Ring On The Actuator Hose
Courtesy of GENERAL MOTORS CORP.

37. Slowly seat the flywheel housing to the driveline.
38. Install the driveline support bolts.

    Tighten: Tighten the driveline support bolts to 50 N.m (37 lb ft).

39. Clip the clutch actuator hose to the clutch actuator hose clip.
40. Connect the master cylinder hose to the clutch actuator hose.

cardiagn.com

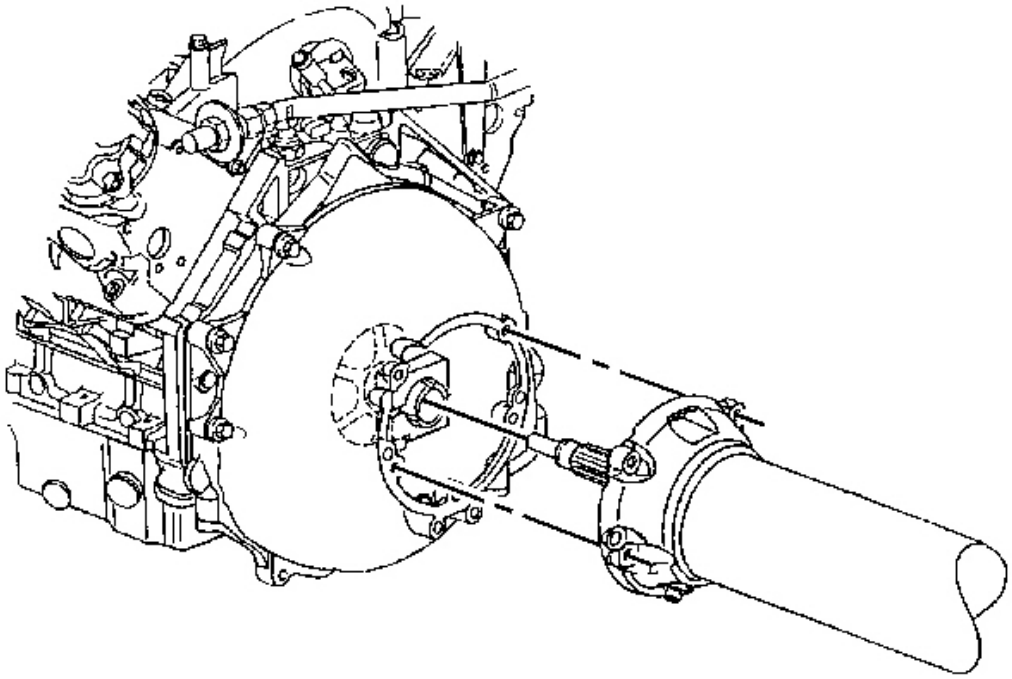

Fig. 341: Driveline Support & Bolts
Courtesy of GENERAL MOTORS CORP.

IMPORTANT: Do not tighten the flywheel hub collar bolt at this time.

41. Vehicles equipped with an automatic transmission, slide the engine and crossmember rearward. Do not force the engine onto the propeller spline.
42. Position the engine to the proper height and angle in order to install the propeller input shaft.
43. Install the driveline support bolts.

    Tighten: Tighten the driveline support bolts to 50 N.m (37 lb ft).

44. Hand tighten the flywheel hub collar bolt.
45. Lower the vehicle onto the crossmember and align the dowels.

cardiagn.com

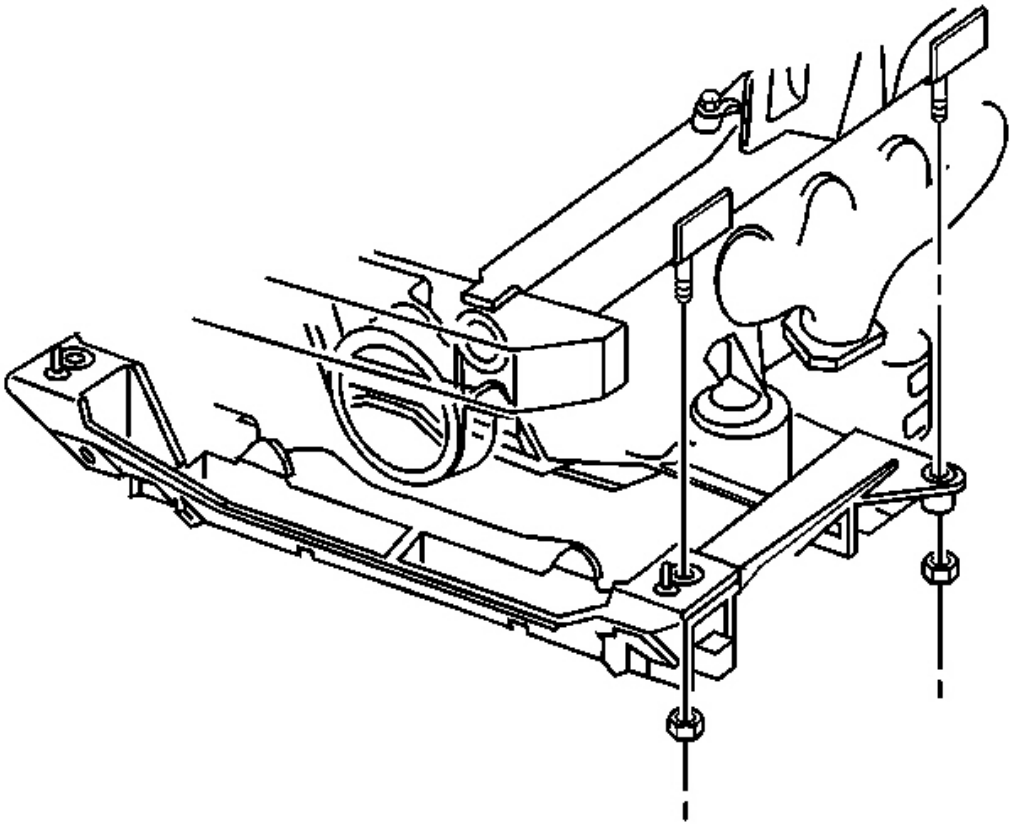

Fig. 342: Front & Rear Crossmember Nuts
Courtesy of GENERAL MOTORS CORP.

IMPORTANT: Use only hand tools when tightening or torquing crossmember nuts.

46. By HAND, install new crossmember nuts until snug.

    Tighten: Tighten the crossmember nuts to 110 N.m (81 lb ft).

47. Raise and suitably support the vehicle.
48. Remove the **J 39580** and the **J 39580-500** .
49. Remove the **J 42203** from the vehicle.

cardiagn.com

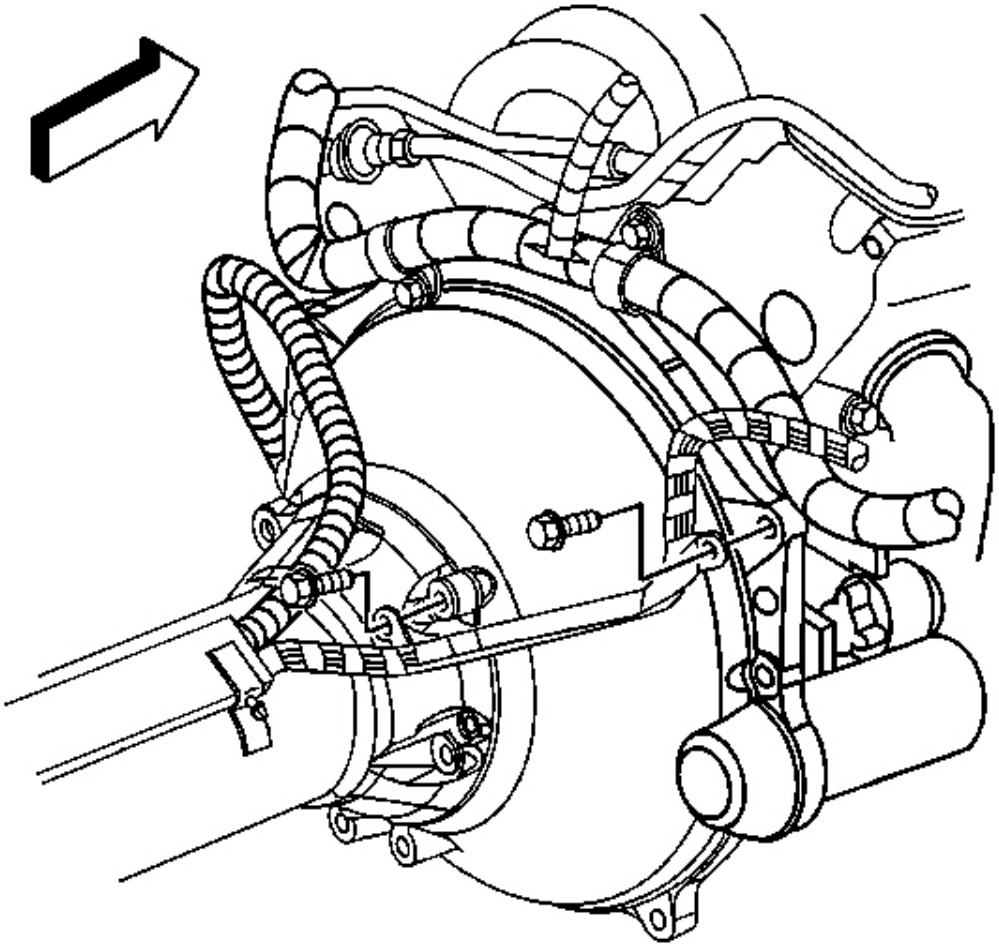

Fig. 343: Transmission Wire Harness Bracket & Bolts
Courtesy of GENERAL MOTORS CORP.

50. Route the transmission wire harness into place.
51. Install the transmission wire harness bracket bolts.

Tighten: Tighten the transmission wire harness bracket bolts to 50 N.m (37 lb ft).

cardiagn.com

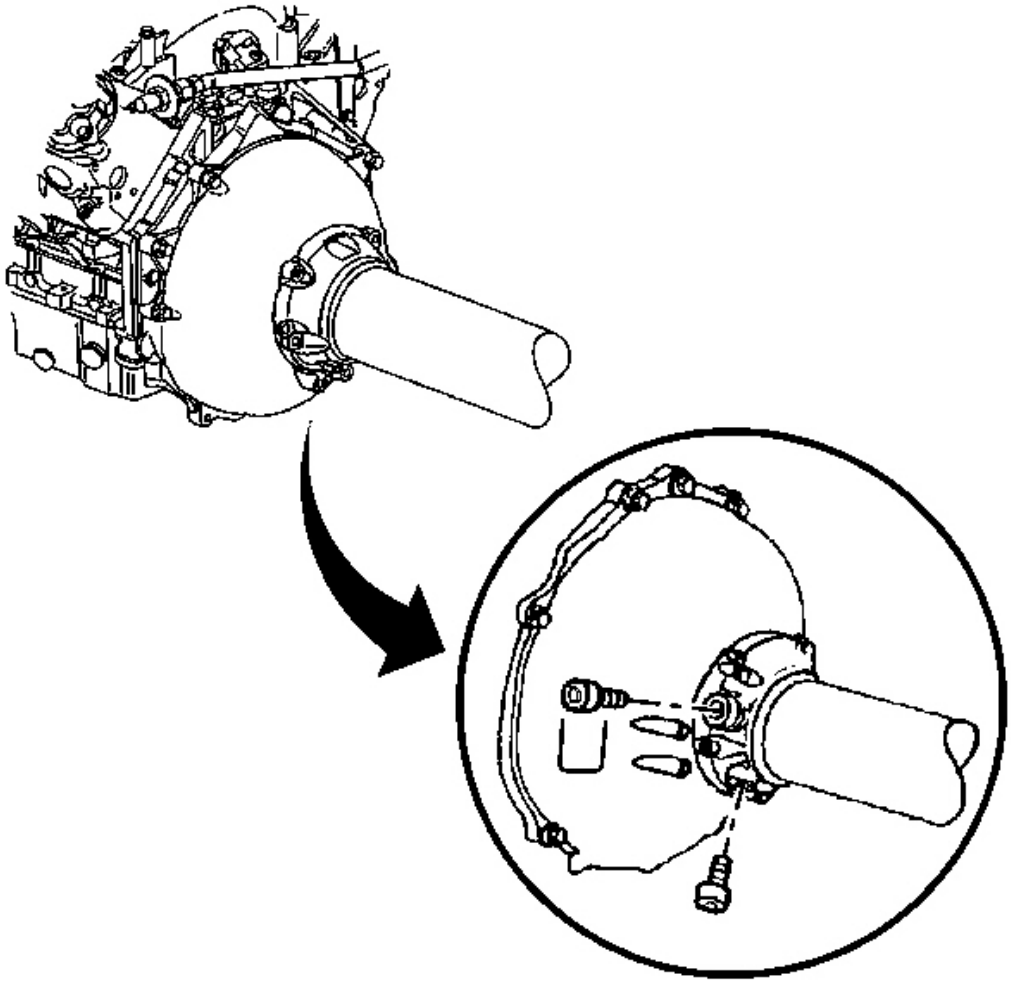

Fig. 344: Driveline Support Plug & Bolts
Courtesy of GENERAL MOTORS CORP.

52. Vehicles equipped with an automatic transmission, remove the previously installed M10-1.5 x 55 mm bolts from the front of the driveline support.
53. Install 2 plugs in the driveline support.

    Tighten: Tighten the driveline support plugs to 50 N.m (37 lb ft).

cardiagn.com

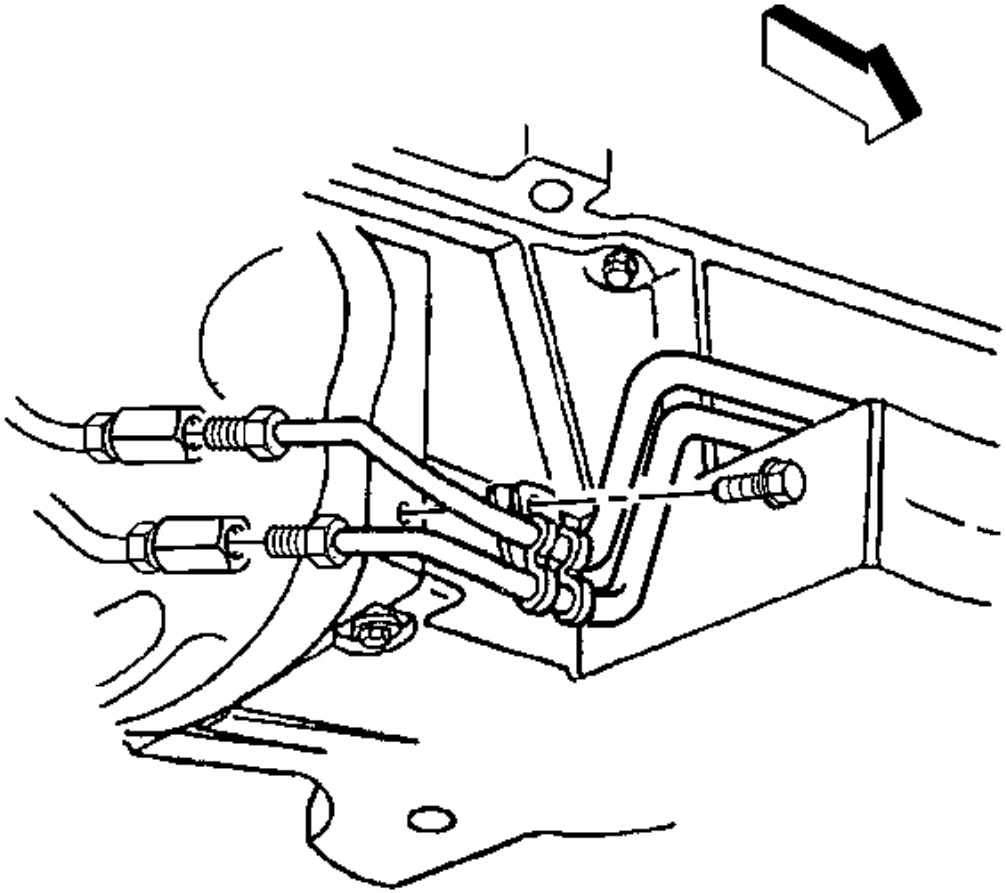

Fig. 345: Automatic Transmission Fluid Cooler Line Clamp & Bolt
Courtesy of GENERAL MOTORS CORP.

54. Connect the front automatic transmission fluid cooler pipes to the rear pipes, if equipped.

    Tighten: Tighten the automatic transmission fluid cooler pipes to 25 N.m (18 lb ft).

55. Install the automatic transmission cooler pipe clamp bolt (at the transmission cover), if equipped.

    Tighten: Tighten the automatic transmission fluid cooler pipe clamp bolt (at the transmission cover) to 2.2 N.m (22 lb in).

cardiagn.com

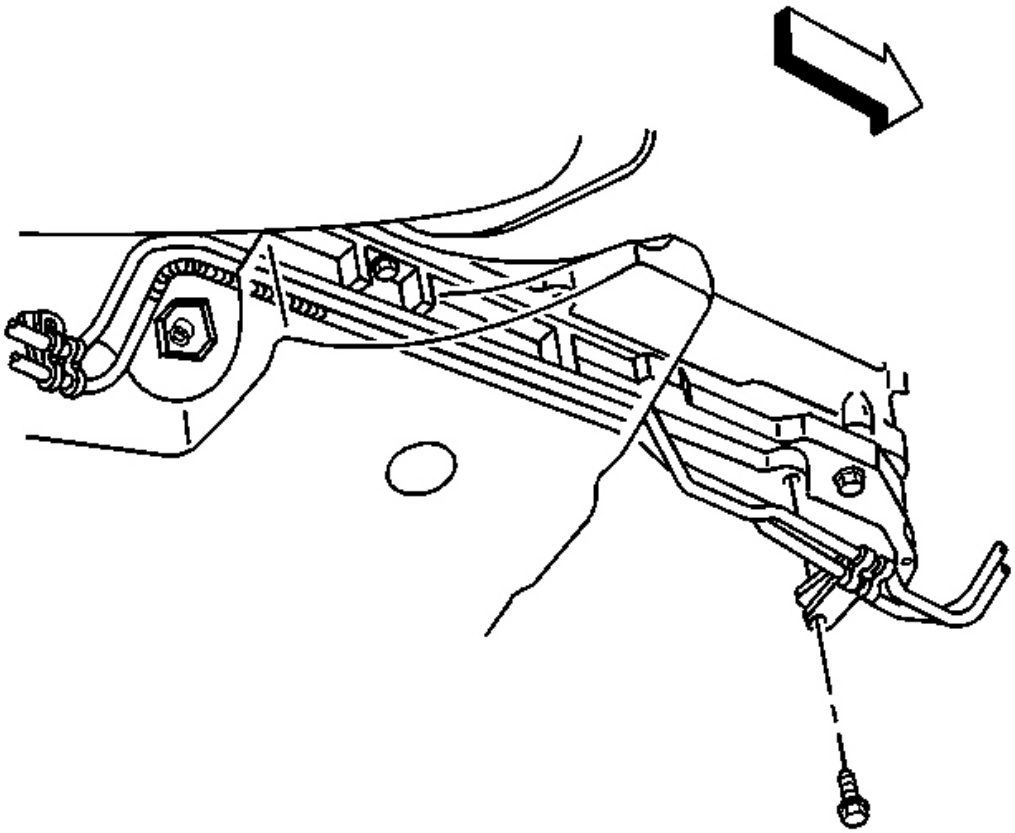

Fig. 346: Automatic Transmission Fluid Cooler Line & Oil Pan
Courtesy of GENERAL MOTORS CORP.

56. Install the automatic transmission fluid cooler pipe clamp bolt (at the oil pan), if equipped.

    Tighten: Tighten the automatic transmission fluid cooler pipe clamp bolt (at the oil pan) to 12 N.m (106 lb in).

57. Install the front transverse leaf spring. Refer to **Front Transverse Spring Replacement** in Front Suspension.

cardiagn.com

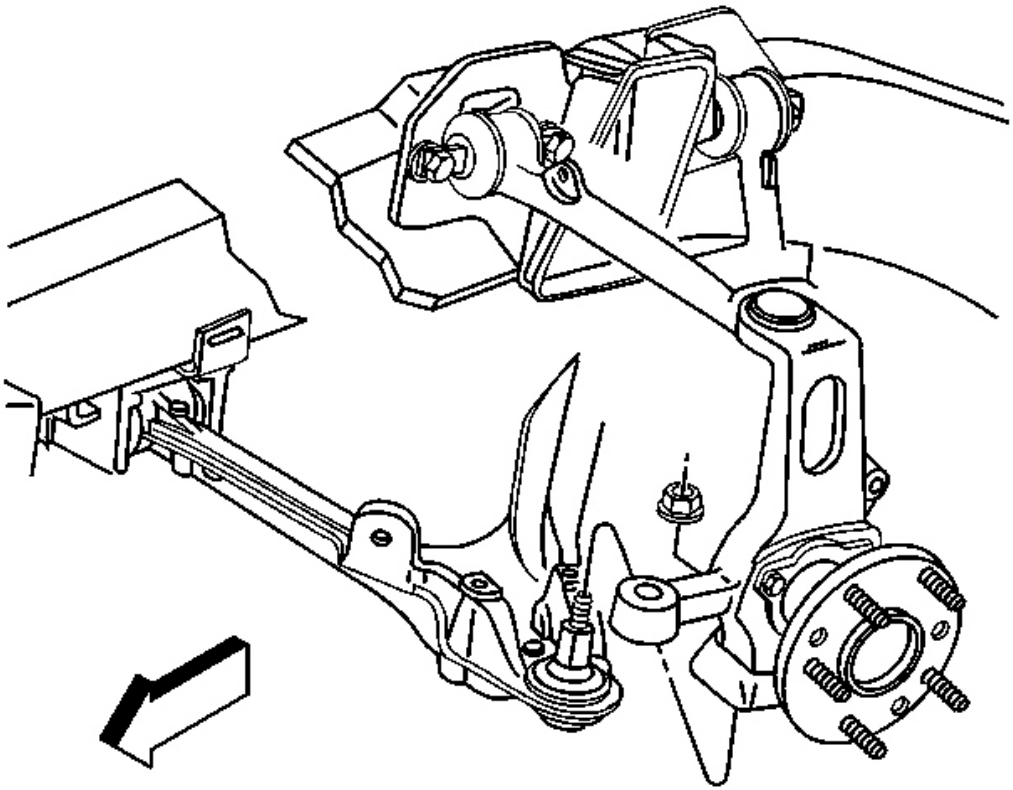

Fig. 347: Lower Control Arm Stud, Steering Knuckle & Nut
Courtesy of GENERAL MOTORS CORP.

58. Install the lower control arm stud to the steering knuckle.
59. Install a NEW steering knuckle nut.

Tighten:

1. Tighten the steering knuckle nut to 20 N.m (15 lb ft) to seat the ball joint stud.
2. Torque the steering knuckle nut an additional 210 degrees using J 36660-A .
3. Check the steering knuckle nut for a final torque of 55 N.m (41 lb ft)

60. Connect the ABS electrical connector clips to the crossmember (if equipped).
61. Install the front stabilizer shaft. Refer to **Stabilizer Shaft Replacement** in Front Suspension.

cardiagn.com

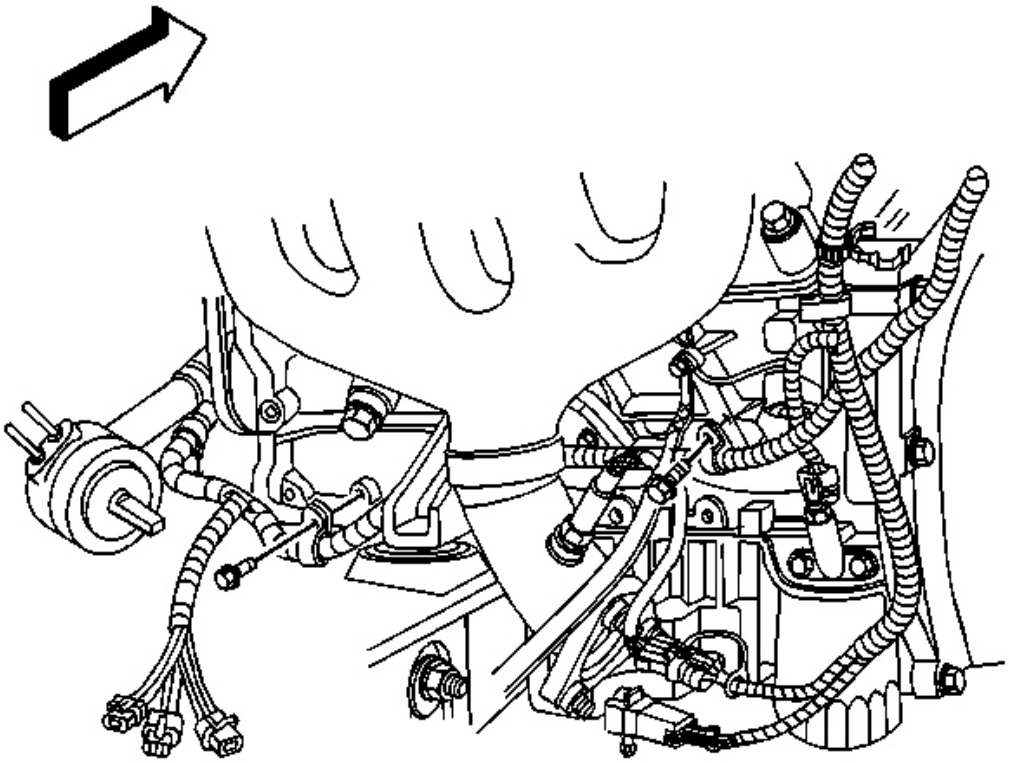

Fig. 348: Transmission Wire Harness & Engine Wire Harness
Courtesy of GENERAL MOTORS CORP.

62. Clip the transmission wire harness the engine wire harness (at the white tape).
63. Install the transmission wire harness clip bolts to the engine block.

Tighten

1. Tighten the transmission wire harness clip bolt (near the harness ground) to 32 N.m (23 lb ft)
2. Tighten the transmission wire harness clip bolt (near the oil pan) to 25 N.m (18 lb ft)

64. Install the EVO electrical connector clips to the crossmember.

cardiagn.com

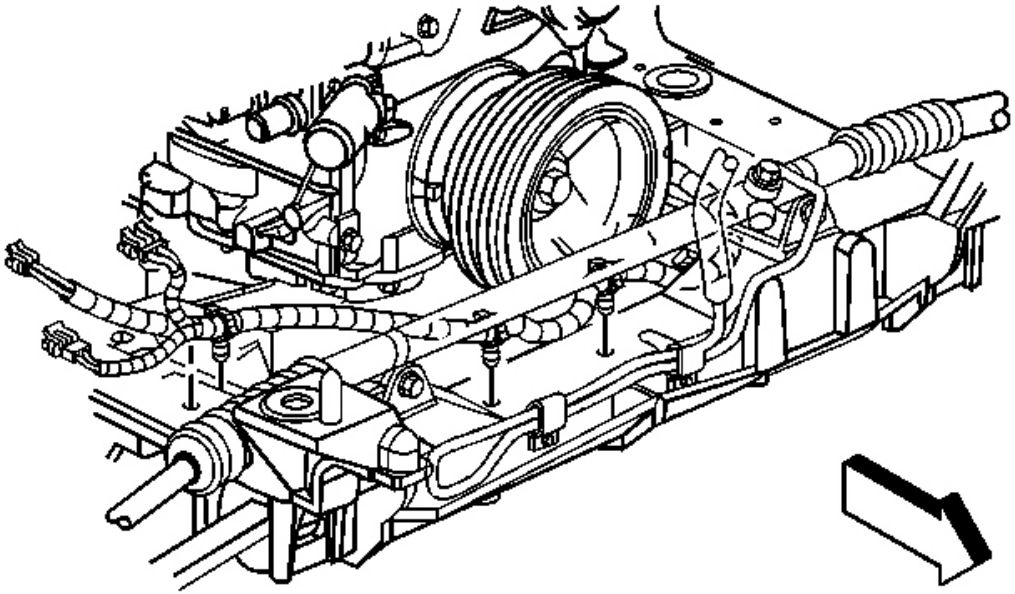

Fig. 349: Transmission Wire Harness & Electrical Connectors
Courtesy of GENERAL MOTORS CORP.

65. Clip the transmission wire harness to the crossmember.
66. If equipped with RTD connect the following electrical connectors:
    - Position sensor pigtail
    - Shock absorber damper

cardiagn.com

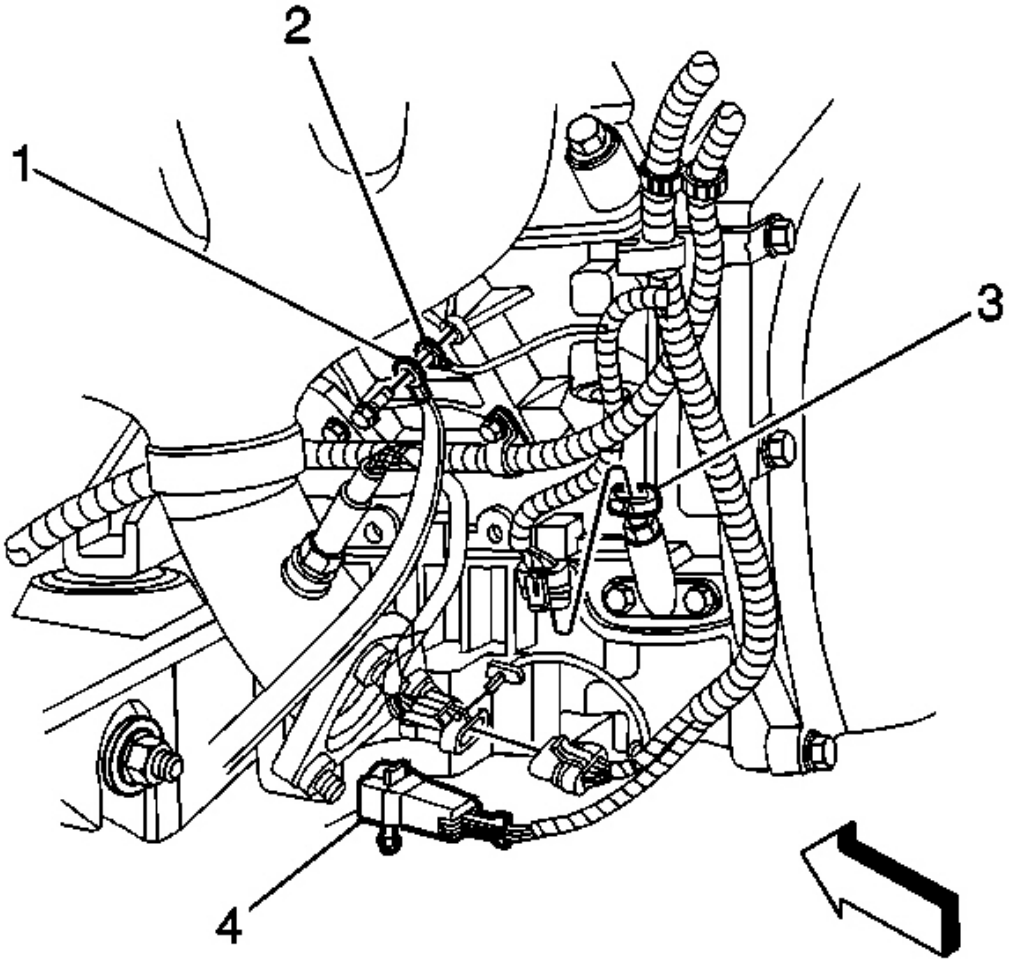

Fig. 350: Engine Oil Temperature Sensor Electrical Connector & Ground Straps
Courtesy of GENERAL MOTORS CORP.

67. Position the ground straps (1 and 2) to the engine block.
68. Install the engine ground strap bolt.

    Tighten: Tighten the engine wire harness ground bolt to 32 N.m (23 lb ft).

69. Connect the left HO2S electrical connector.
70. Connect the engine oil temperature sensor (3) electrical connector.

cardiagn.com

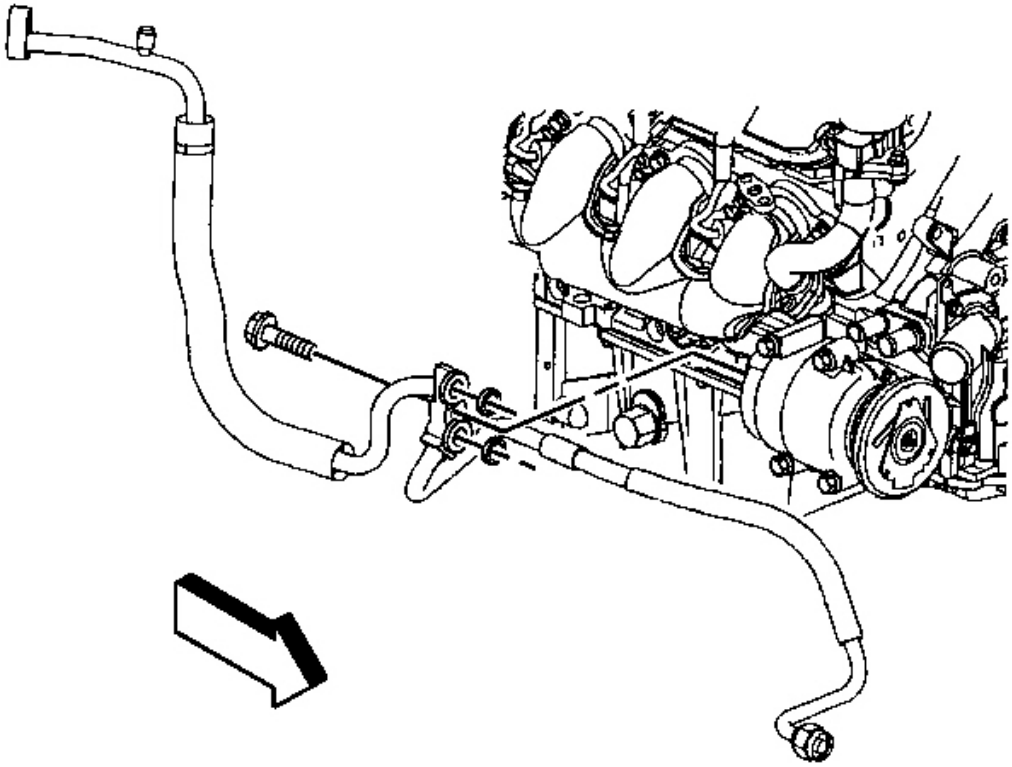

Fig. 351: A/C Compressor & Condenser Hose & Bolt
Courtesy of GENERAL MOTORS CORP.

71. Install the AC compressor and condenser hose to the A/C compressor.
72. Install the A/C compressor and condenser hose bolt (at compressor).

Tighten: Tighten the A/C compressor and condenser hose bolt (at compressor) to 27 N.m (20 lb ft).

cardiagn.com

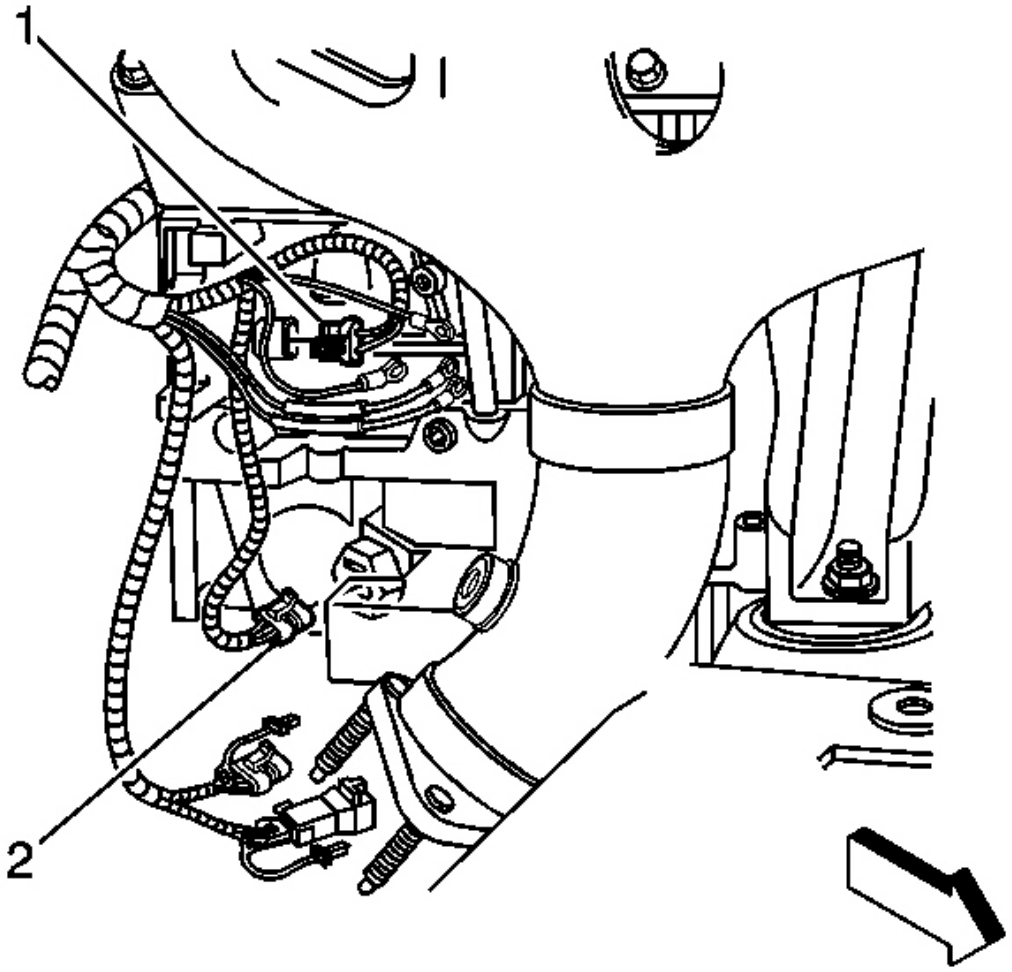

Fig. 352: Engine Oil Level Sensor Electrical Connector & CKP Sensor Electrical Connector
Courtesy of GENERAL MOTORS CORP.

73. Connect the right front HO2S sensor electrical connector.
74. Connect the oil level sensor (2) electrical connector.
75. Connect the CKP sensor (1) electrical connector.
76. Install the starter motor. Refer to **Starter Motor Replacement** in Engine Electrical.

cardiagn.com

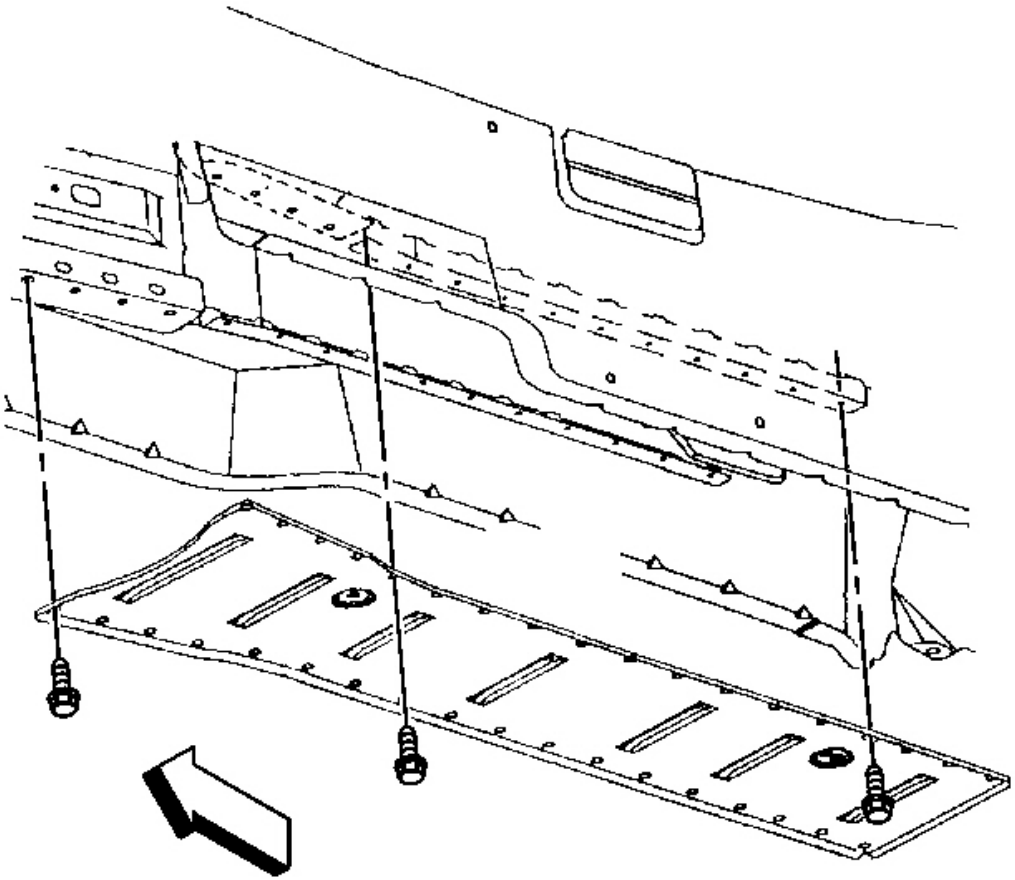

Fig. 353: Driveline Tunnel Close-Out Panel & Bolts
Courtesy of GENERAL MOTORS CORP.

77. Install the driveline close-out panel.
78. Install the driveline close-out panel bolts.

    Tighten: Tighten the driveline close-out panel bolts to 12 N.m (106 lb in).

79. Install the catalytic converter. Refer to **Catalytic Converter Replacement** in Engine Exhaust.
80. Install the front tires and wheels. Refer to **Tire and Wheel Removal and Installation** in Tires and Wheels.
81. Lower the vehicle.

cardiagn.com

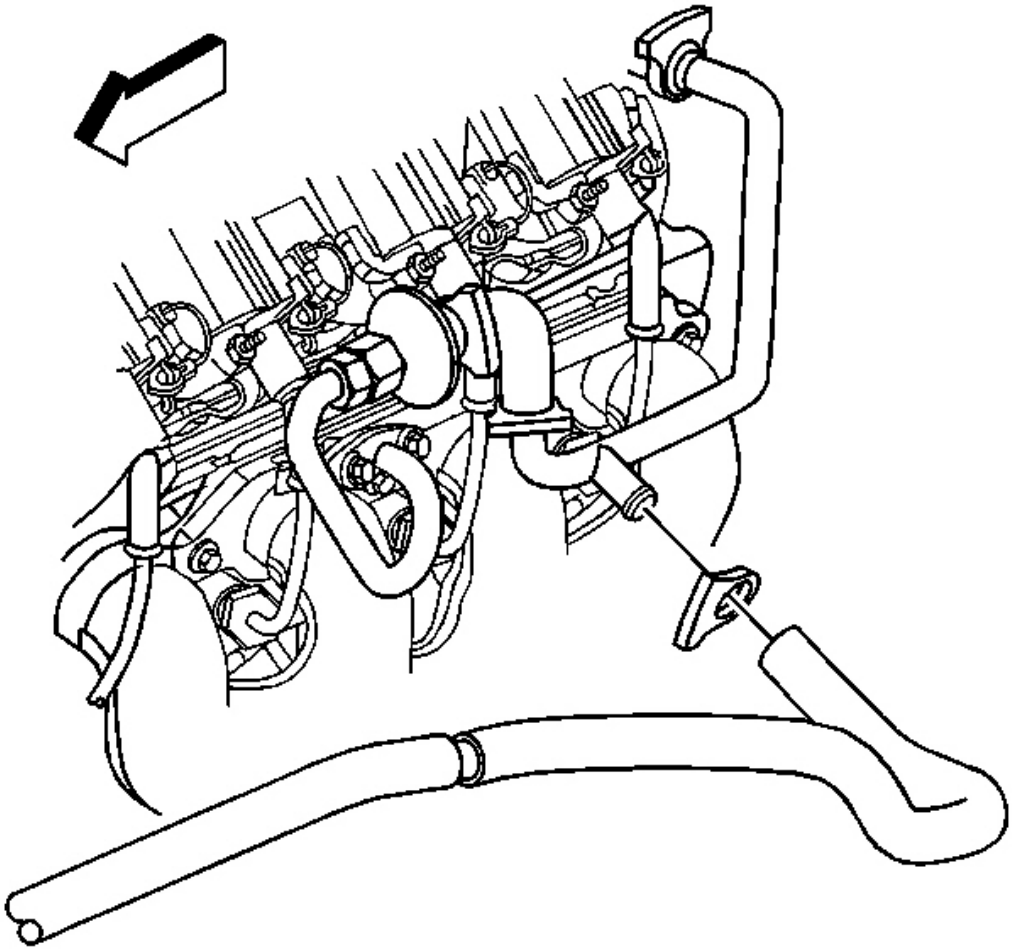

Fig. 354: AIR Pump Hose & AIR Pipe
Courtesy of GENERAL MOTORS CORP.

82. Connect the AIR pump hose to the AIR pipe.

cardiagn.com

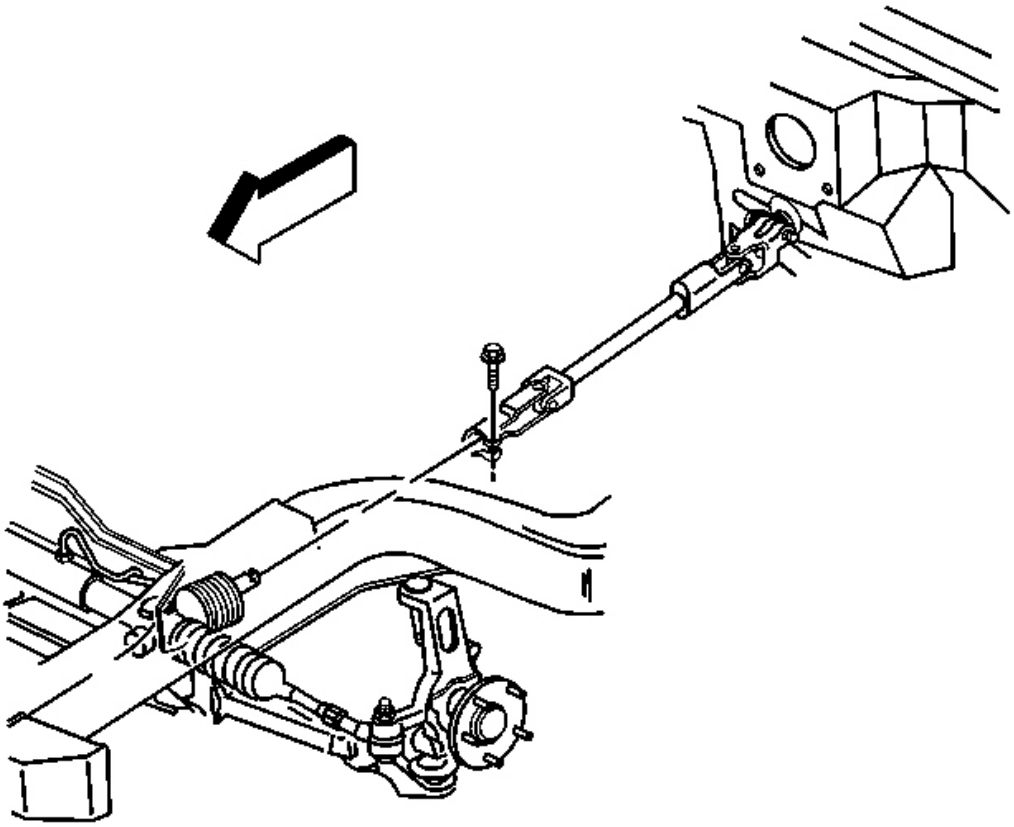

Fig. 355: Intermediate Steering Shaft & Bolt
Courtesy of GENERAL MOTORS CORP.

83. Install the intermediate steering shaft to the steering gear.
84. Install the intermediate steering shaft bolt.

Tighten: Tighten the intermediate steering shaft bolt to 48 N.m (35 lb ft).

cardiagn.com

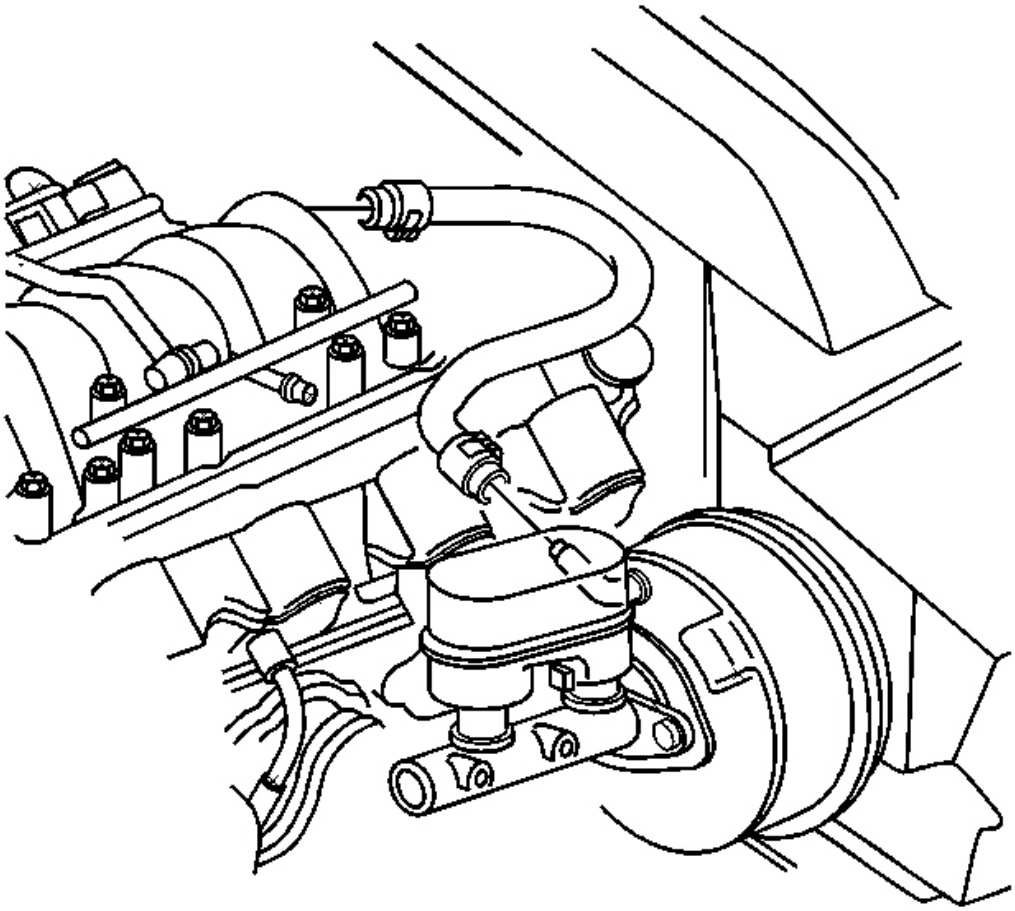

Fig. 356: Vacuum Booster Hose
Courtesy of GENERAL MOTORS CORP.

85. Install the power brake booster vacuum hose.
86. Install the generator. Refer to **Generator Replacement** in Engine Electrical.

cardiagn.com

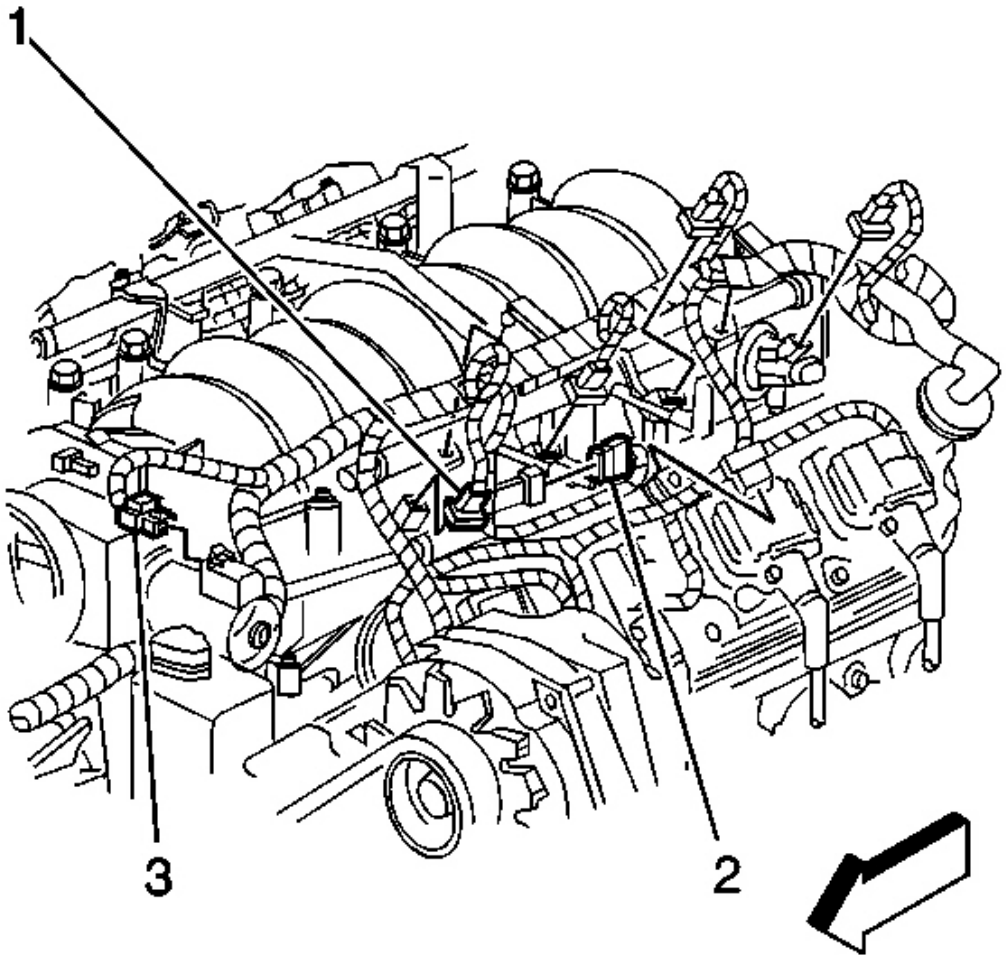

Fig. 357: Electrical Connectors
Courtesy of GENERAL MOTORS CORP.

87. Connect the following electrical connectors to the engine:
    - The fuel injectors (1)
    - The ignition coil main harness connectors
    - The EVAP solenoid (2)
    - The electric throttle motor (3)
    - The TP sensor
    - The ECT sensor
    - The A/C compressor

cardiagn.com

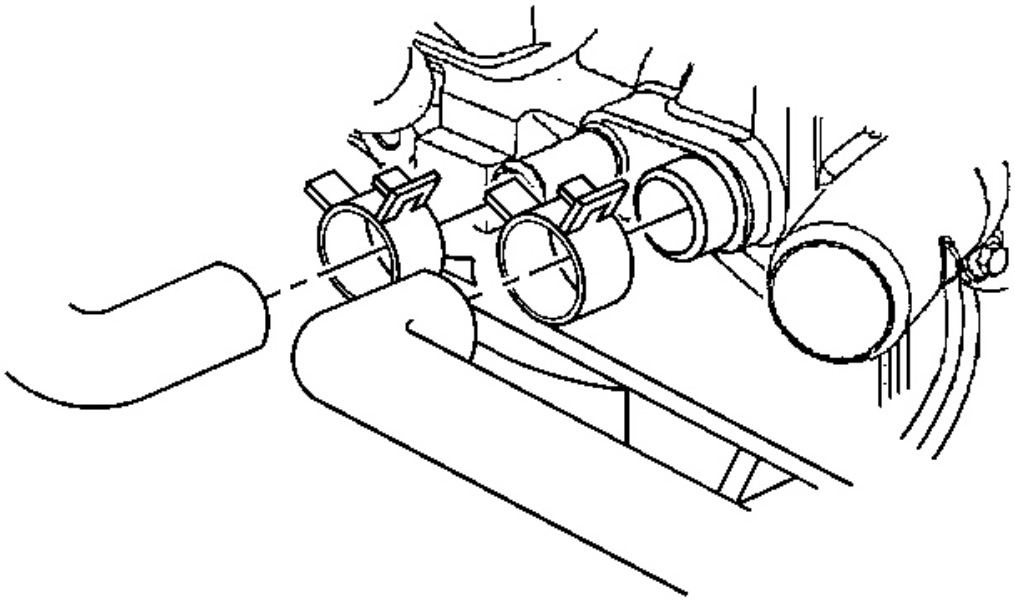

Fig. 358: Heater Hoses & Water Pump
Courtesy of GENERAL MOTORS CORP.

88. Install the heater hoses to the water pump.

cardiagn.com

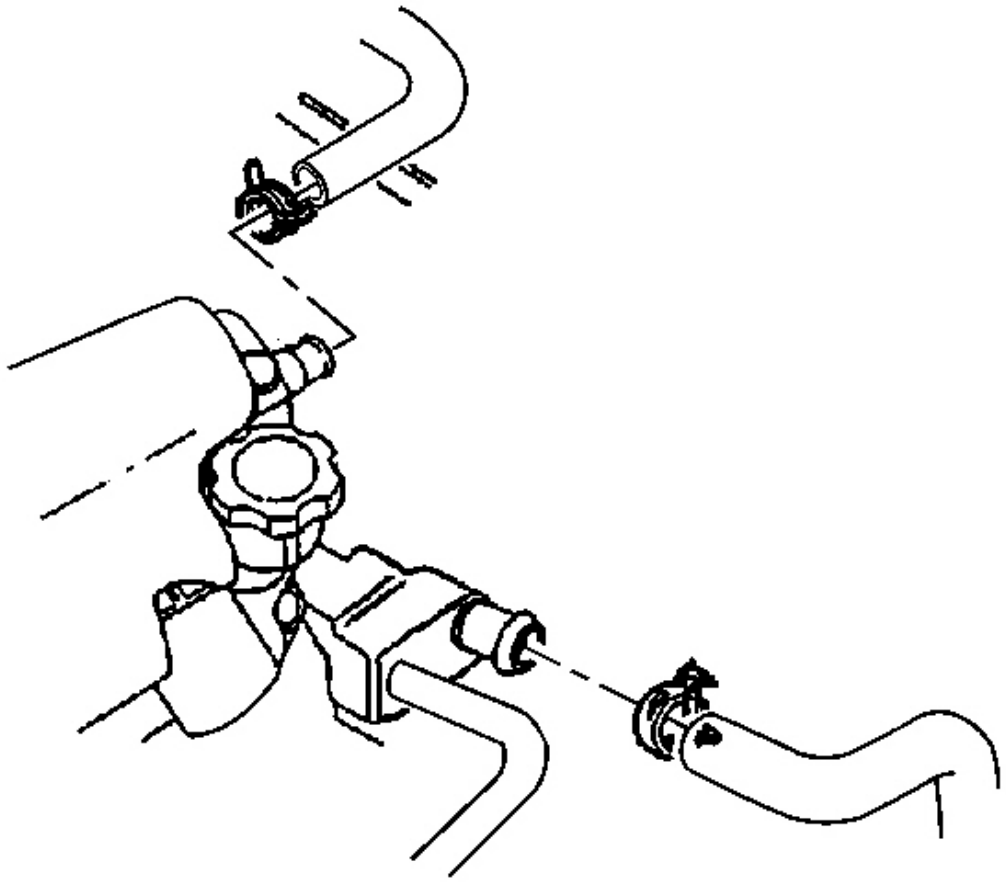

Fig. 359: Radiator Hoses & Water Pump
Courtesy of GENERAL MOTORS CORP.

89. Install the radiator hoses to the water pump.
90. Install the fuel feed hose. Refer to **Fuel Hose/Pipes Replacement - Engine Compartment** in Engine Controls - 5.7 L.
91. Connect the EVAP emission canister purge hose at the fuel line.

cardiagn.com

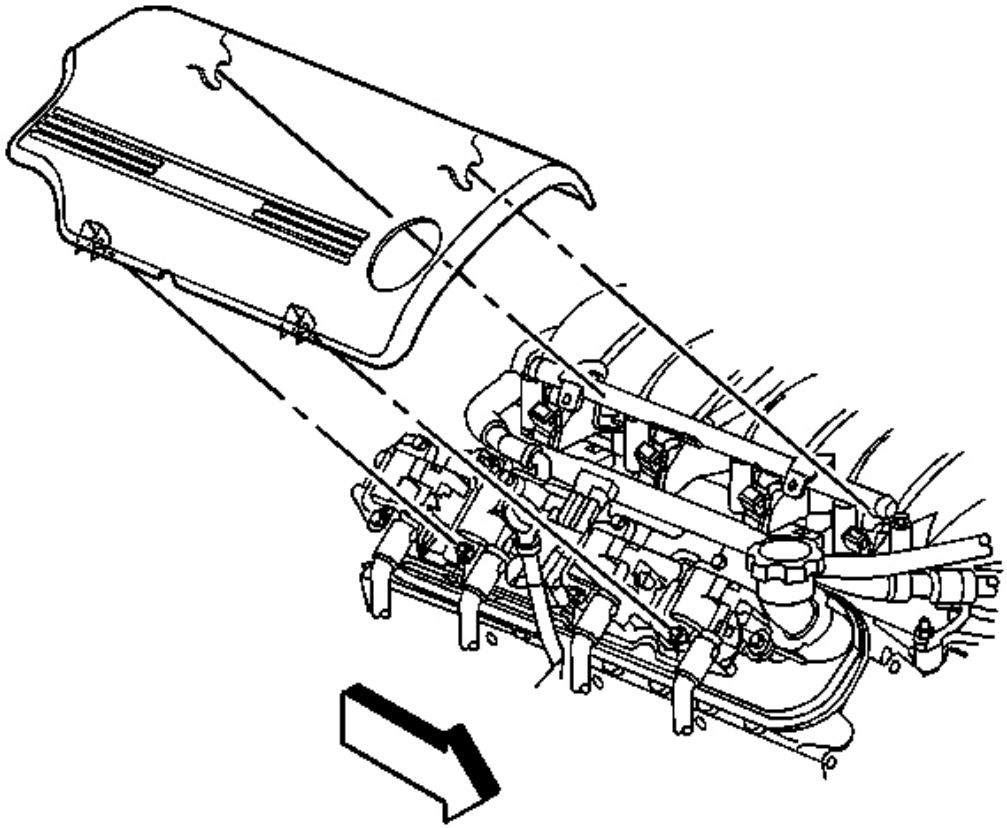

Fig. 360: Right Fuel Injection Rail Cover
Courtesy of GENERAL MOTORS CORP.

92. Install the right fuel injection rail cover.
93. Install the accessory drive belt. Refer to **Drive Belt Replacement - Accessory** .
94. Install the BPMV bracket. Refer to **Brake Pressure Modulator Valve (BPMV) Bracket Replacement** in Antilock Brake System.
95. Install the radiator. Refer to **Radiator Replacement** in Engine Cooling.
96. Recharge the A/C system. Refer to **Refrigerant Recovery and Recharging** in Heating, Ventilation and Air Conditioning.
97. Program the transmitters. Refer to **Transmitter Programming** in Keyless Entry.
98. Bleed the clutch hydraulic system, if equipped. Refer to **Hydraulic Clutch Bleeding** in Clutch.
99. Perform the CKP system variation learn procedure. Refer to **CKP System Variation Learn Procedure** in Engine Controls - 5.7 L.
100. Fill the crankcase with the proper quantity and grade of engine oil. Refer to **Capacities - Approximate**

cardiagn.com

Fluid and **Fluid and Lubricant Recommendations** in Maintenance and Lubrication.

101. Disable the ignition system.
102. Crank the engine several times. Listen for any unusual noises or evidence that parts are binding.
103. Enable the ignition system.
104. Start the engine and listen for unusual noises.
105. Check the vehicle oil pressure gauge and confirm that the engine has acceptable oil pressure.

    If necessary, install an oil pressure gauge and measure the engine oil pressure.

106. Run the engine speed at about 1000 RPM until the engine has reached normal operating temperature.
107. Listen for sticking lifters and other unusual noises.
108. Inspect for fuel, oil, and/or other coolant leaks while the engine is running.

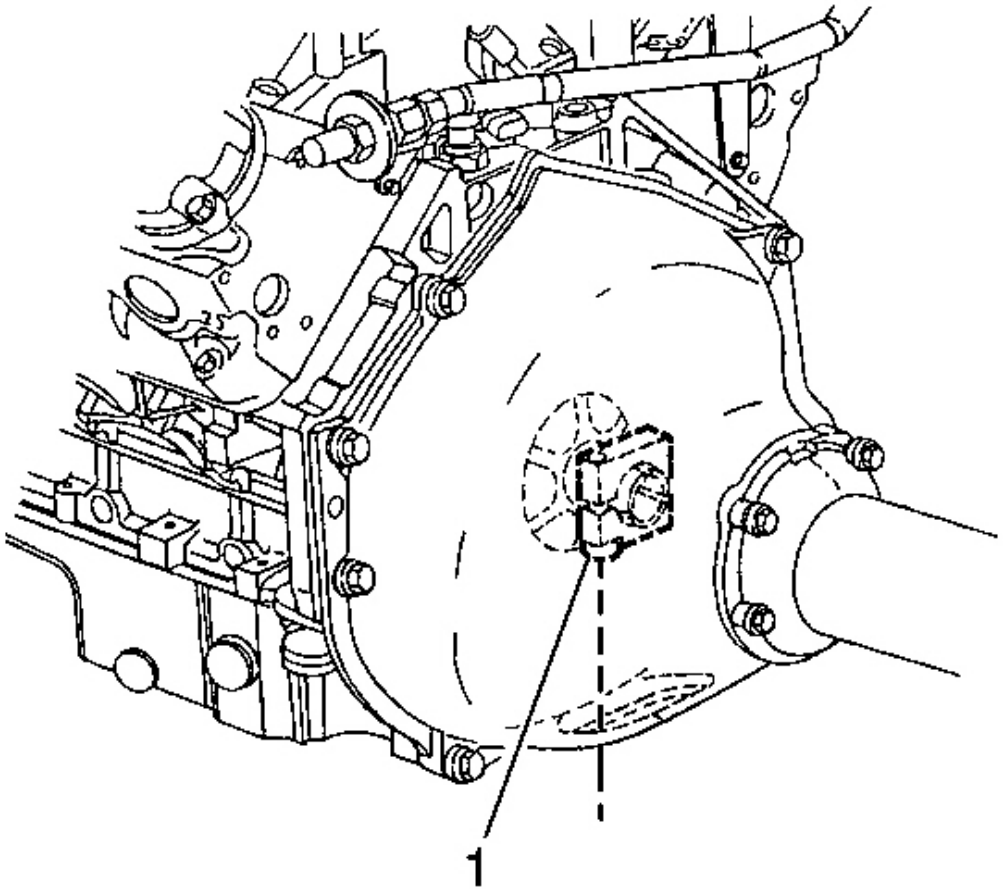

cardiagn.com

Fig. 361: Prop Shaft Hub Collar & Bolt
Courtesy of GENERAL MOTORS CORP.

109. With automatic transmission vehicles perform the following steps:
    1. Shut off the engine.
    2. Allow engine to cool to room temperature.
    3. Raise the vehicle.
    4. Tighten the prop shaft hub collar bolt (1).

    Tighten: Tighten the propeller shaft hub collar bolt to 125 N.m (92 lb ft).

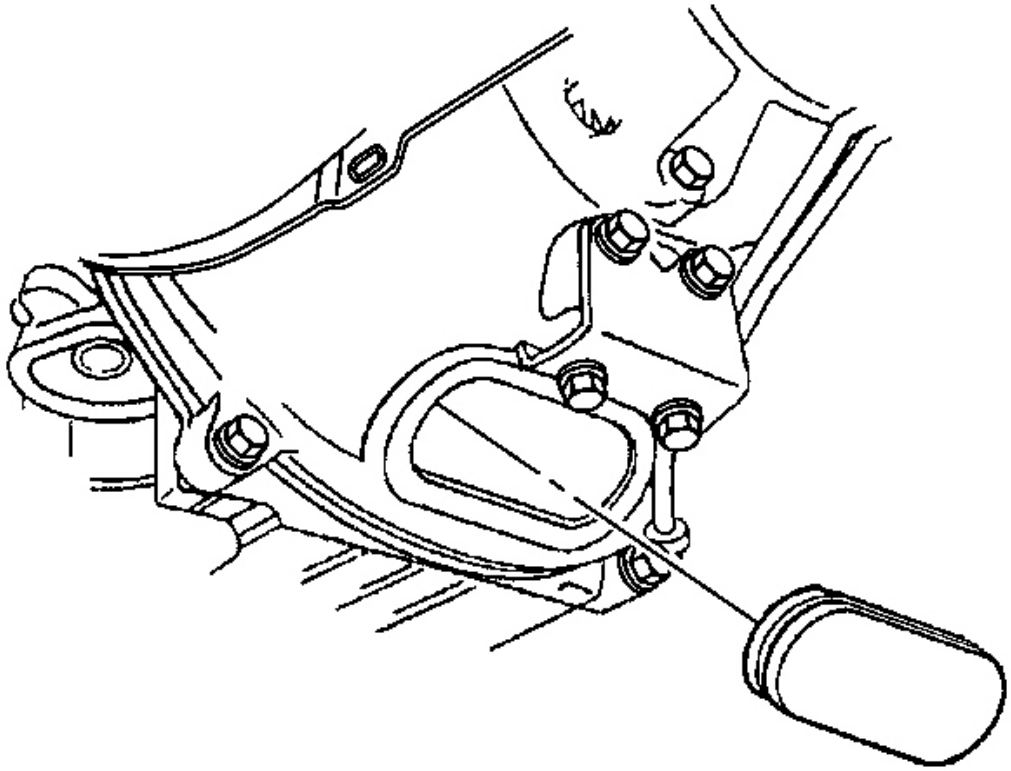

Fig. 362: Flywheel Housing Plug
Courtesy of GENERAL MOTORS CORP.

110. Install the engine flywheel housing inspection plug.
111. Perform a final inspection for the proper engine oil and coolant levels.

cardiagn.com

ENGINE OIL AND OIL FILTER REPLACEMENT

Removal Procedure

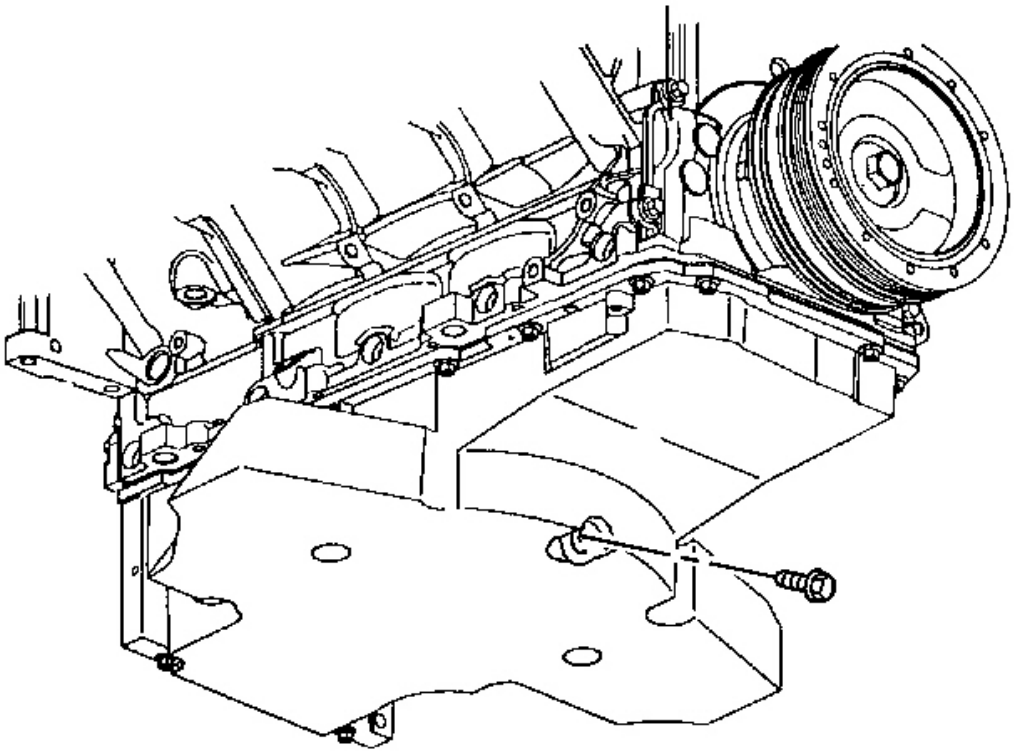

Fig. 363: Oil Pan Drain Plug
Courtesy of GENERAL MOTORS CORP.

1. Open the hood.
2. Remove the oil fill cap.
3. Raise and suitably support the vehicle. Refer to **Lifting and Jacking the Vehicle** in General Information.
4. Remove the oil pan drain plug.
5. Drain the engine oil into an appropriate container.

   Allow sufficient time for the oil to drain.

cardiagn.com

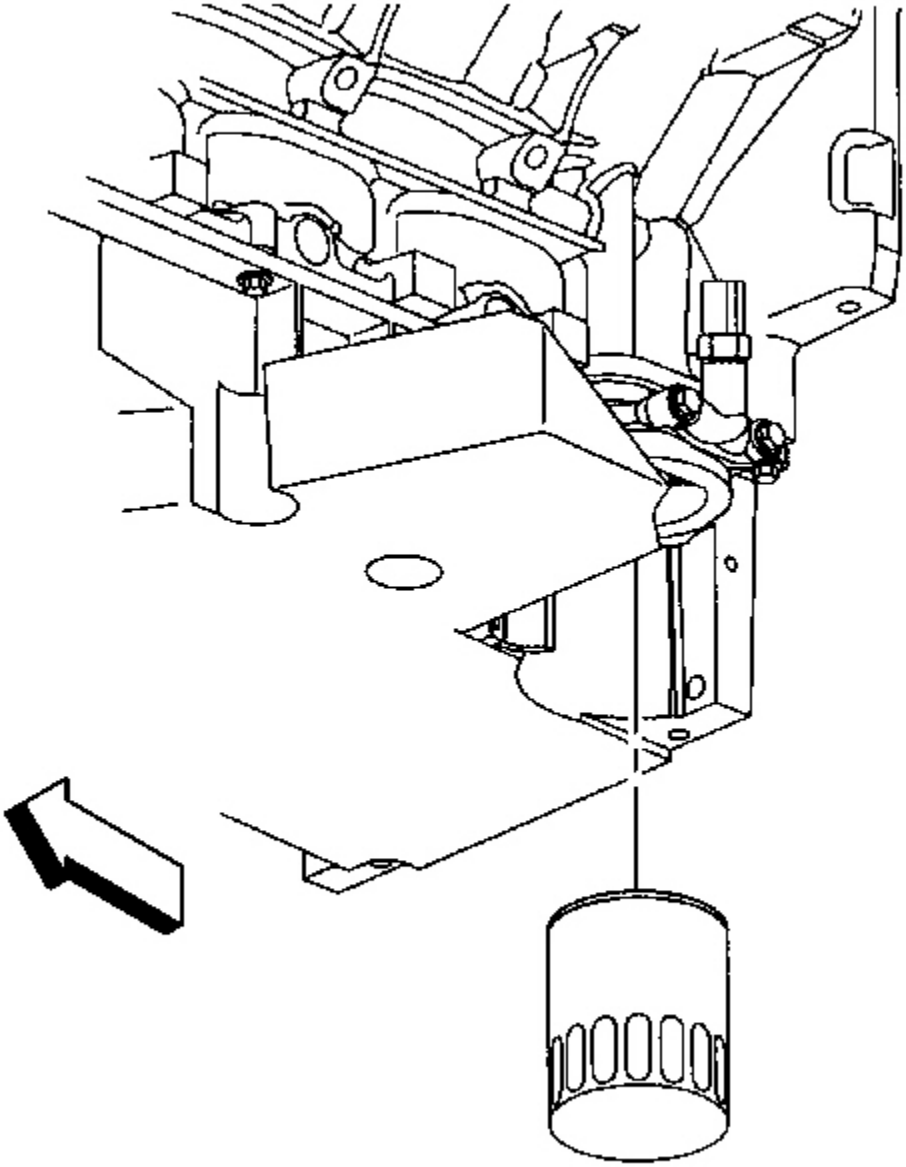

Fig. 364: Engine Oil Filter
Courtesy of GENERAL MOTORS CORP.

IMPORTANT: Check the old oil filter to ensure that the filter seal is not left on the engine block.

cardiagn.com

6. Remove the engine oil filter from the engine block.
7. Empty the oil filter into the drain pan.
8. Allow sufficient time for the oil to drain from the oil filter opening.
9. Wipe the excess oil from the oil filter mounting.

Installation Procedure

cardiagn.com

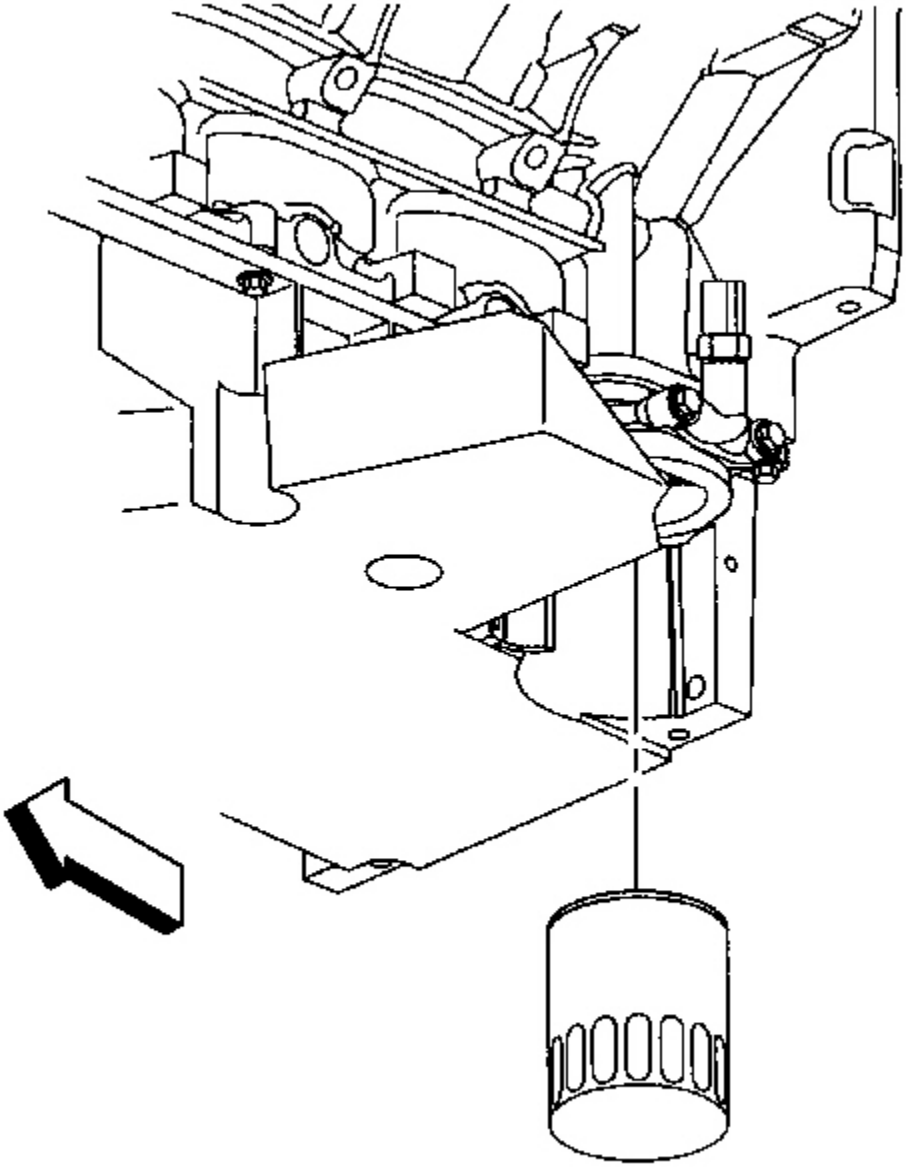

Fig. 365: Engine Oil Filter
Courtesy of GENERAL MOTORS CORP.

NOTE: Refer to Fastener Notice in Cautions and Notices.

1. Wipe any excess oil from the oil filter mounting.

cardiagn.com

IMPORTANT: Lightly oil the engine oil filter gasket, using CLEAN oil.

2. Install the oil filter to the engine block.

   Tighten: Tighten the engine oil filter to 30 N.m (22 lb ft).

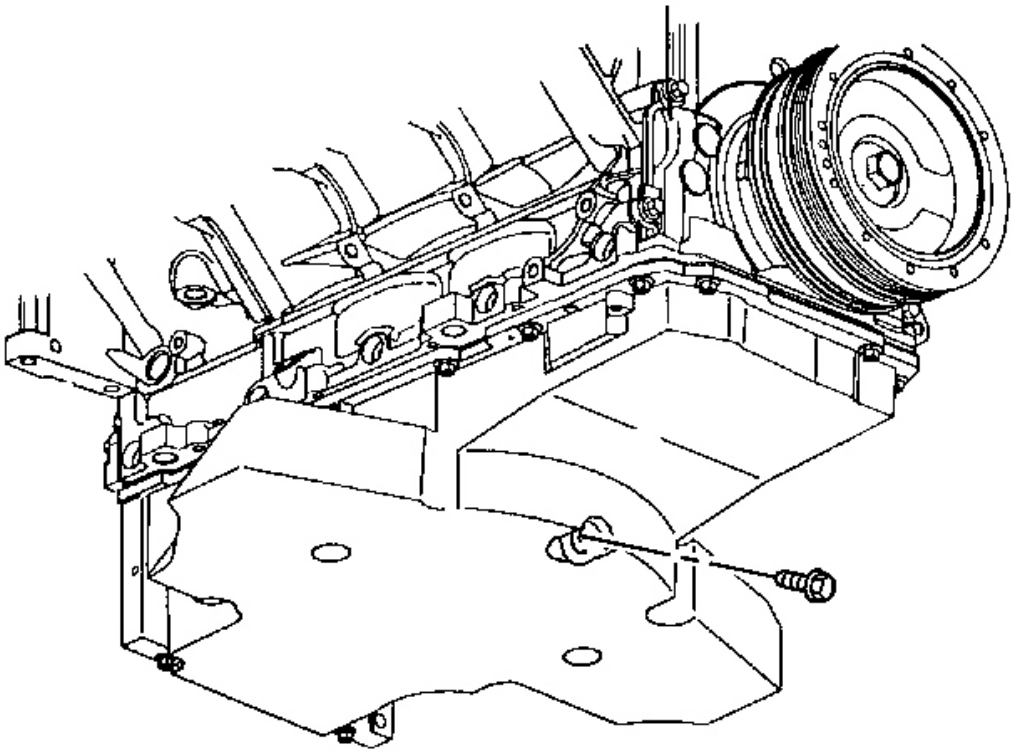

Fig. 366: Oil Pan Drain Plug
Courtesy of GENERAL MOTORS CORP.

3. Wipe any excess oil from the oil pan drain hole.
4. Install the oil pan drain plug.

   Tighten: Tighten the oil pan drain plug to 25 N.m (18 lb ft).

5. Lower the vehicle.

IMPORTANT: DO NOT use any engine oil additives in Corvette engines.

cardiagn.com

6. Fill the engine with the appropriate amount and type of engine oil. Refer to **Capacities - Approximate Fluid** and **Fluid and Lubricant Recommendations** in Maintenance and Lubrication.
7. Run the engine for 3 minutes.
8. Raise the vehicle.
9. Thoroughly inspect the oil filter and the oil pan drain plug areas for leaks.
10. Allow the engine to cool for a minimum of 3 minutes.
11. Lower the vehicle.
12. Check the engine oil level.
13. Top-off the engine oil to the full mark on the oil level indicator (dipstick), if necessary.
14. Install the oil fill cap.
15. Close the hood.
16. Reset the engine oil life monitor. Refer to **GM Oil Life System - Resetting** in Maintenance and Lubrication.

DRAINING FLUIDS AND OIL FILTER REMOVAL

Tools Required

J 41712 Oil Pressure Switch Socket

cardiagn.com

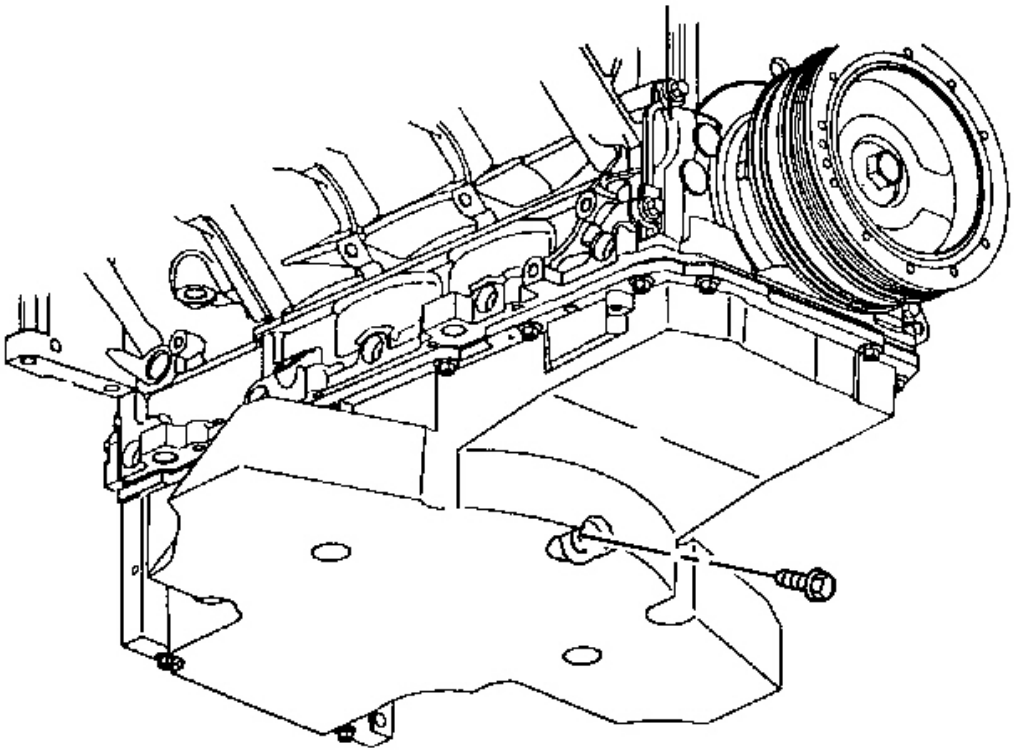

Fig. 367: Oil Pan Drain Plug
Courtesy of GENERAL MOTORS CORP.

IMPORTANT: In order to completely drain the oil from the oil pan internal baffling, the bottom of the oil pan must be level during the oil drain procedure.

1. Remove the oil pan drain plug and allow the oil to drain.

cardiagn.com

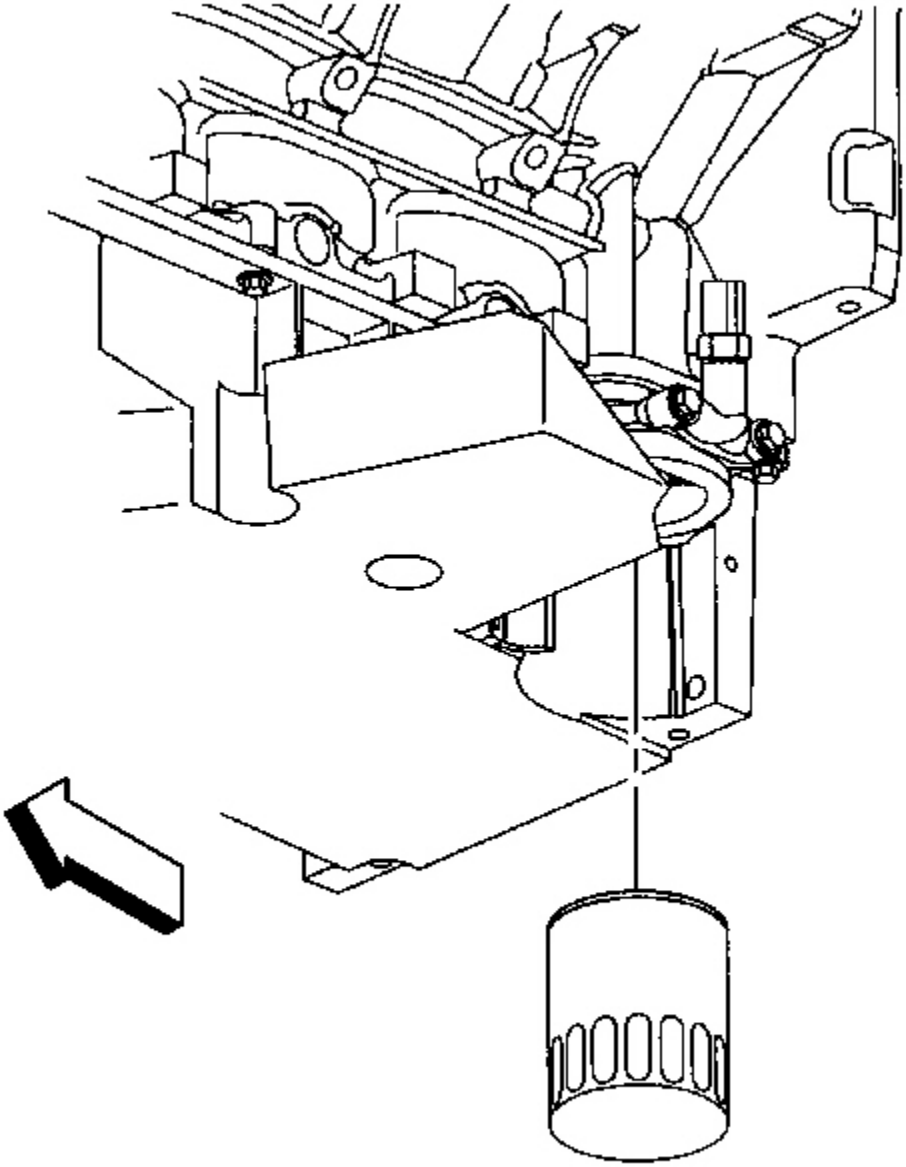

Fig. 368: Engine Oil Filter
Courtesy of GENERAL MOTORS CORP.

2. Remove the engine oil filter.

cardiagn.com

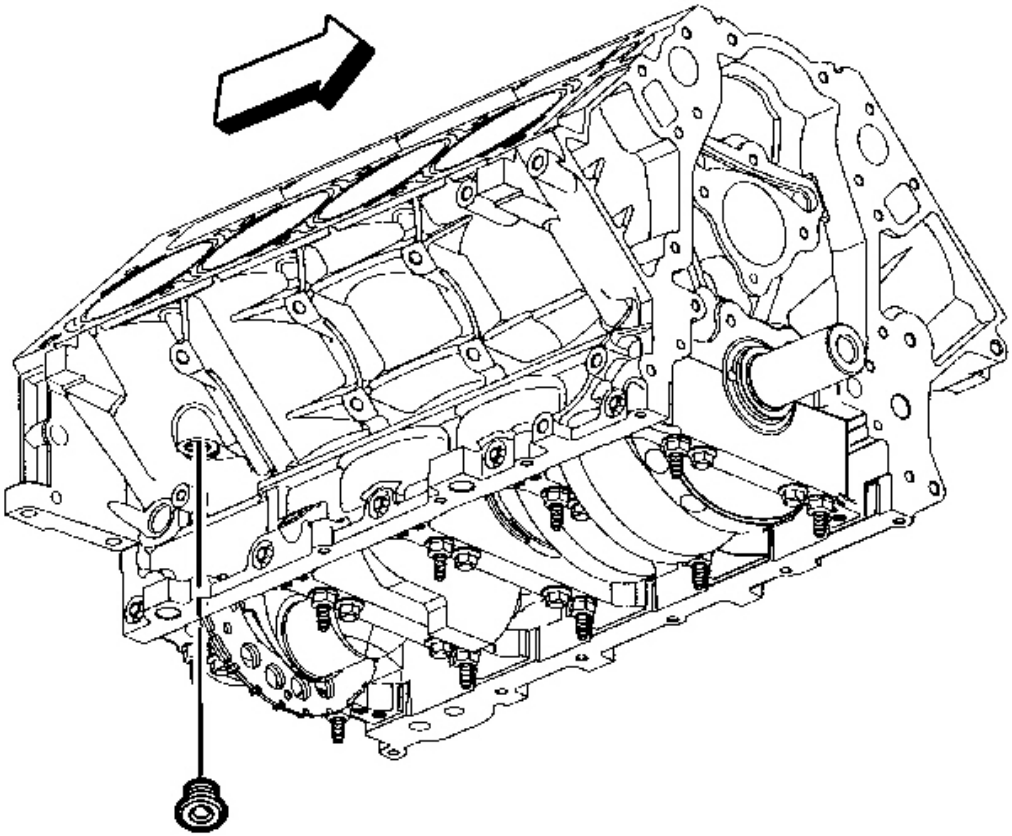

Fig. 369: Right Rear Engine Block Coolant Drain Plug
Courtesy of GENERAL MOTORS CORP.

3. Remove the right rear engine block coolant drain plug and allow the coolant to drain.

cardiagn.com

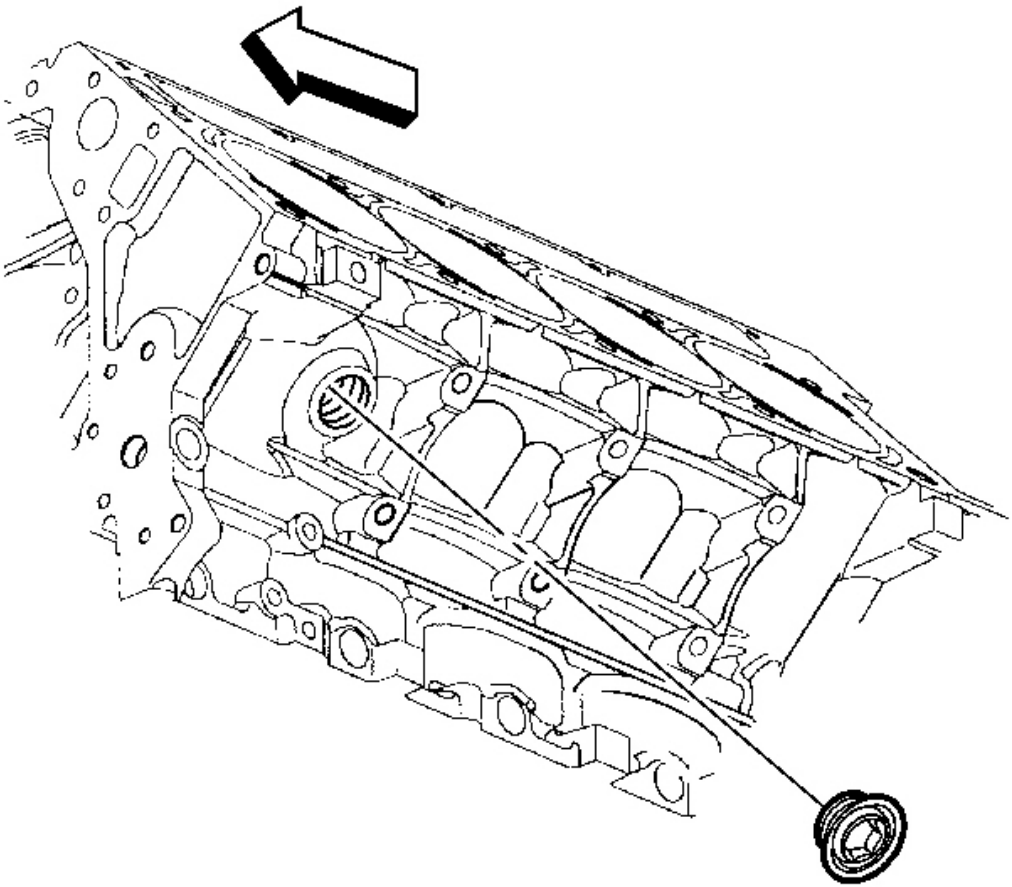

Fig. 370: View Of Engine Block Left Rear Coolant Drain Hole Plug
Courtesy of GENERAL MOTORS CORP.

4. Remove the left front engine block coolant drain plug, if applicable, and allow the coolant to drain.

cardiagn.com

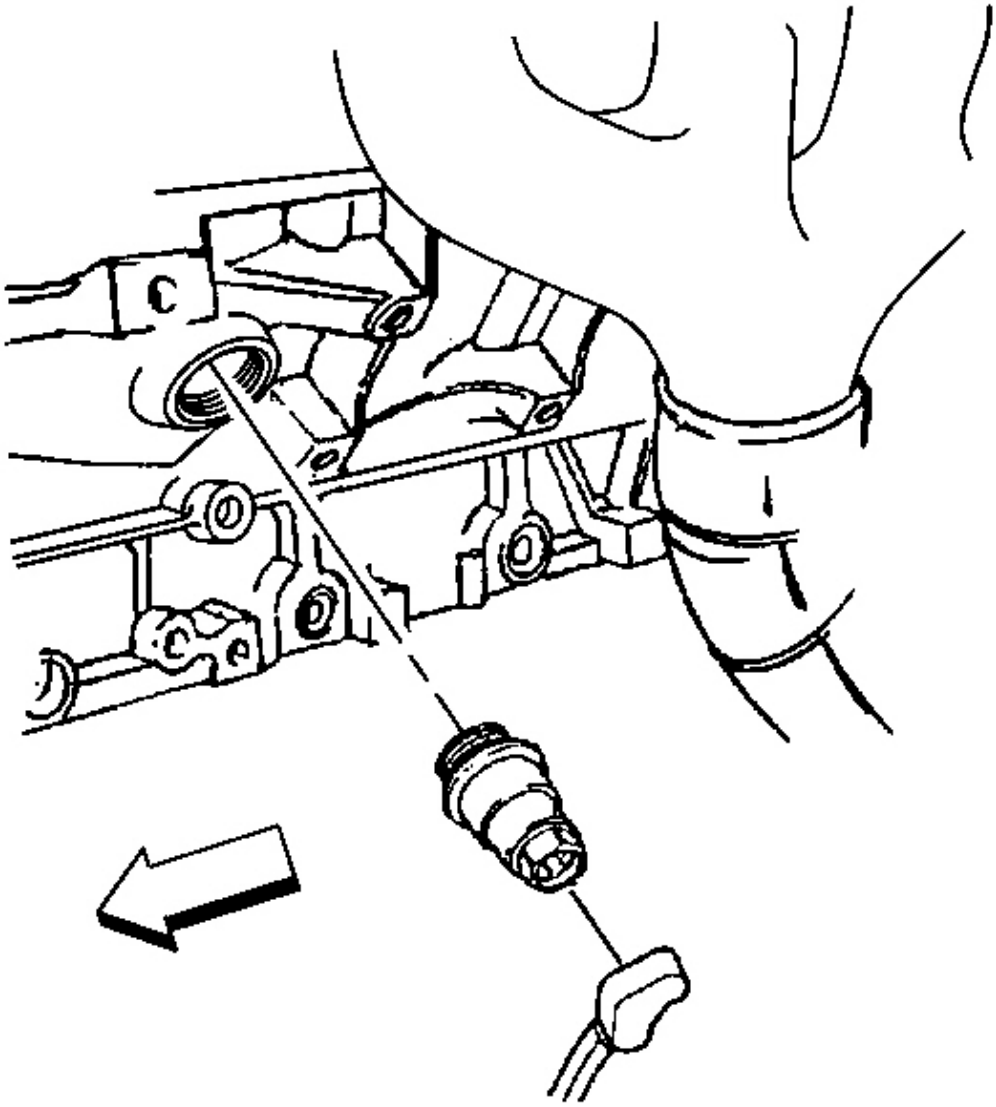

Fig. 371: Engine Block Coolant Heater
Courtesy of GENERAL MOTORS CORP.

5. Remove the engine block coolant heater, if applicable, and allow the coolant to drain.

cardiagn.com

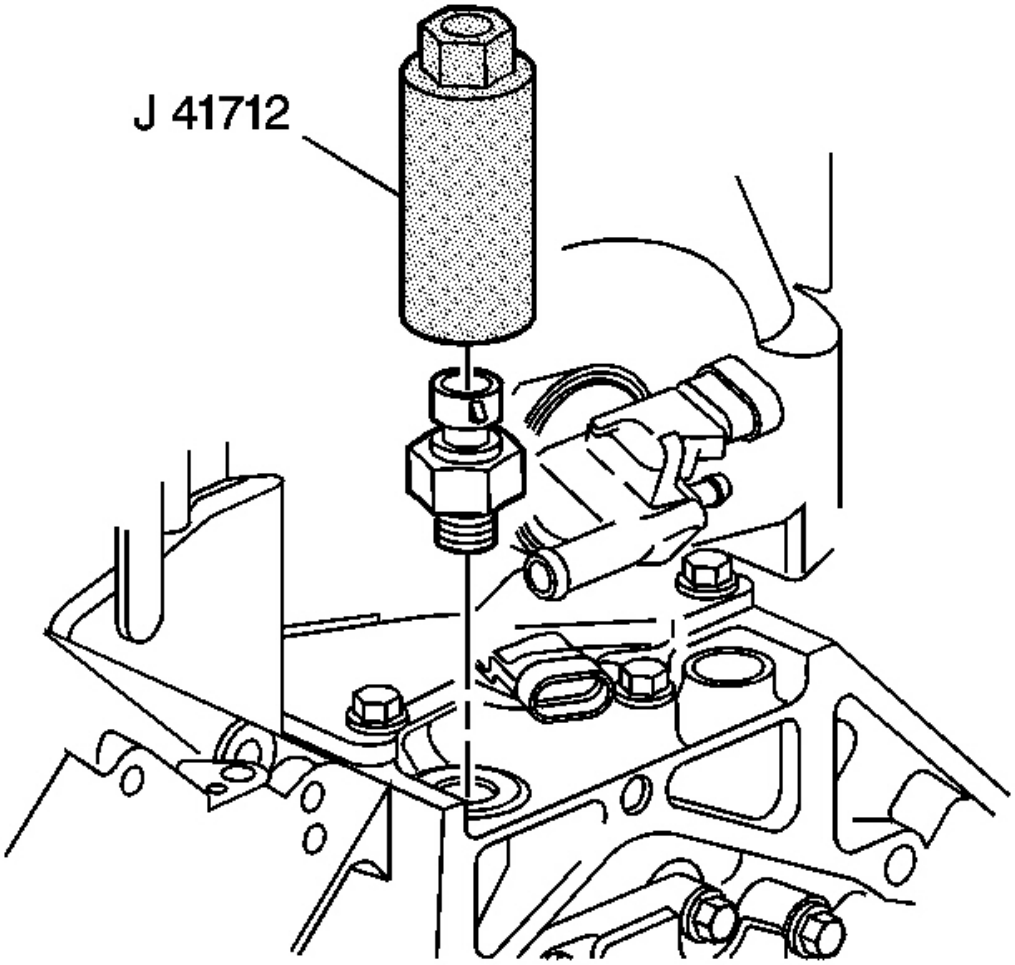

Fig. 372: J 41712 & Oil Pressure Sensor
Courtesy of GENERAL MOTORS CORP.

6. Use the J 41712 or equivalent in order to remove the oil pressure sensor.

CRANKSHAFT BALANCER REMOVAL

Tools Required

- J 41816 Crankshaft Balancer Remover
- J 41816-2 Crankshaft End Protector
- **J 42386-A** Flywheel Holding Tool

cardiagn.com

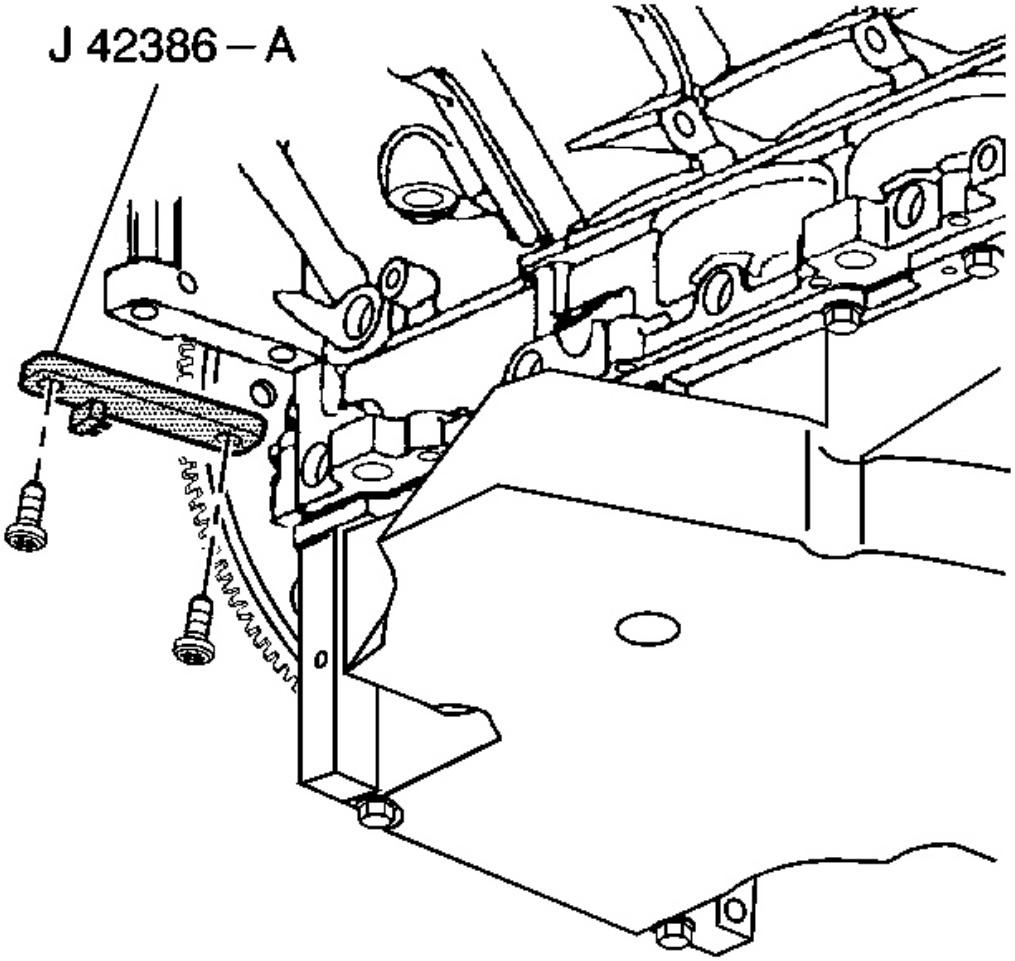

Fig. 373: J 42386-A, Crankshaft Balancer & Bolt
Courtesy of GENERAL MOTORS CORP.

NOTE: **Refer to Fastener Notice in Cautions and Notices.**

IMPORTANT:

- **For manual transmission applications, note the position of the crankshaft balancer before removal. The balancer does not use a key or keyway for positioning. Mark or scribe the end of the crankshaft and the balancer before component removal. The crankshaft balancer must be installed to the original position. If replacing the crankshaft balancer, note the location of any existing balance weights, if applicable. Install new balance weights into the**

cardiagn.com

new crankshaft balancer, if applicable. Crankshaft balancer weights must be installed into the new balancer in the same location as the old balancer. A properly installed balance weight will be either flush or below flush with the face of the balancer.

- **Do not use the crankshaft balancer bolt again. Install a NEW crankshaft balancer bolt during final assembly.**
- **Ensure that the teeth of the flywheel holding tool mesh with the teeth of the engine flywheel.**

1. Install the **J 42386-A** and bolts.

   Use one M10 - 1.5 x 120 mm and one M10 - 1.5 x 45 mm bolt for proper tool operation.

   Tighten: Tighten the **J 42386-A** bolts to 50 N.m (37 lb ft).

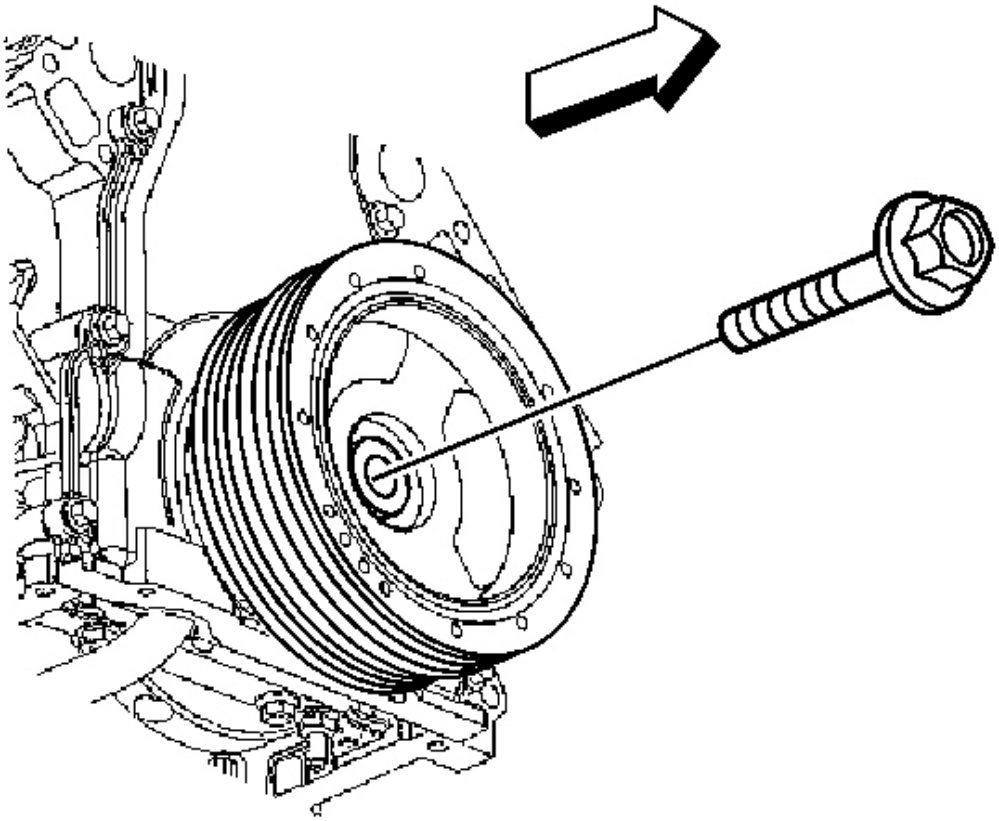

cardiagn.com

Fig. 374: Identifying Harmonic Balancer Bolt
Courtesy of GENERAL MOTORS CORP.

2. Remove the crankshaft balancer bolt.

   Do not discard the crankshaft balancer bolt. The balancer bolt will be used during the balancer installation procedure.

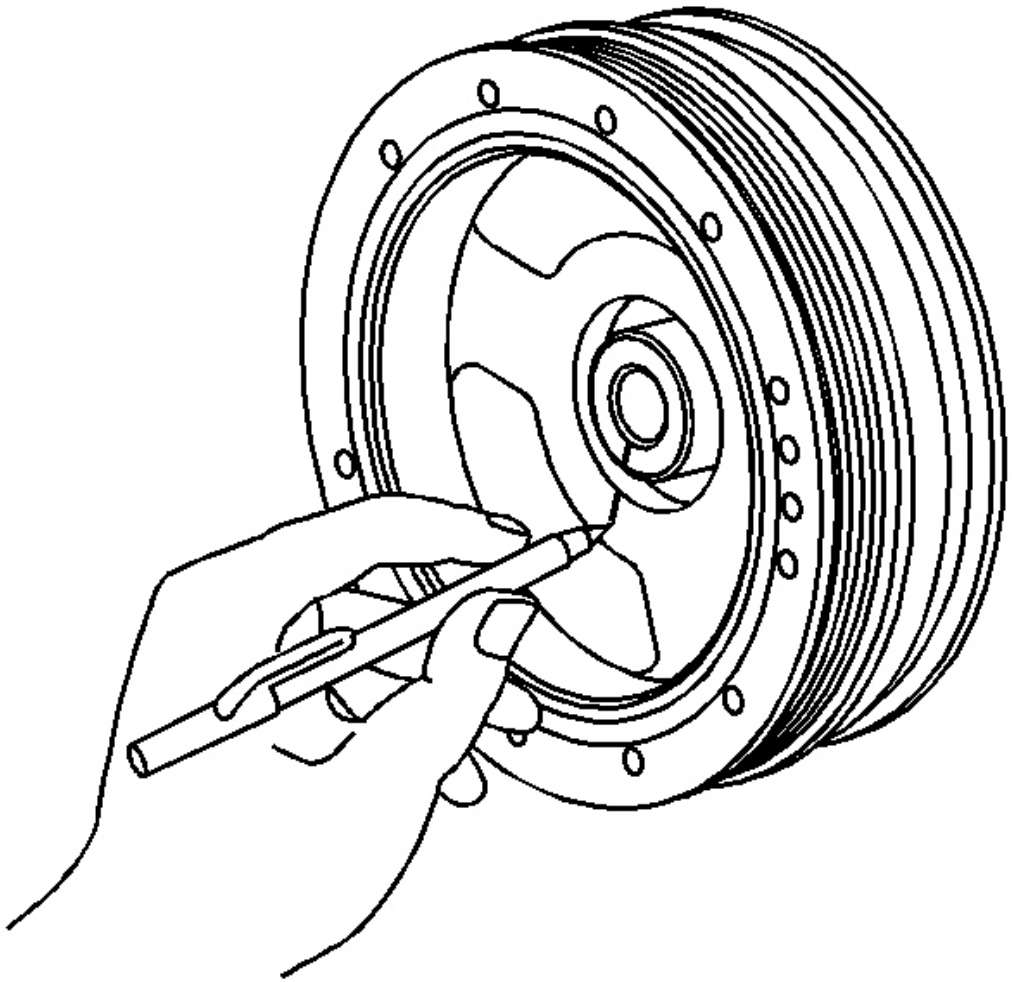

Fig. 375: Mark Crankshaft Balancer & End Of Crankshaft
Courtesy of GENERAL MOTORS CORP.

3. Mark or scribe the crankshaft balancer and the end of the crankshaft.

cardiagn.com

Note the balancer installed position on the crankshaft for assembly. Refer to **Engine Balancing** .

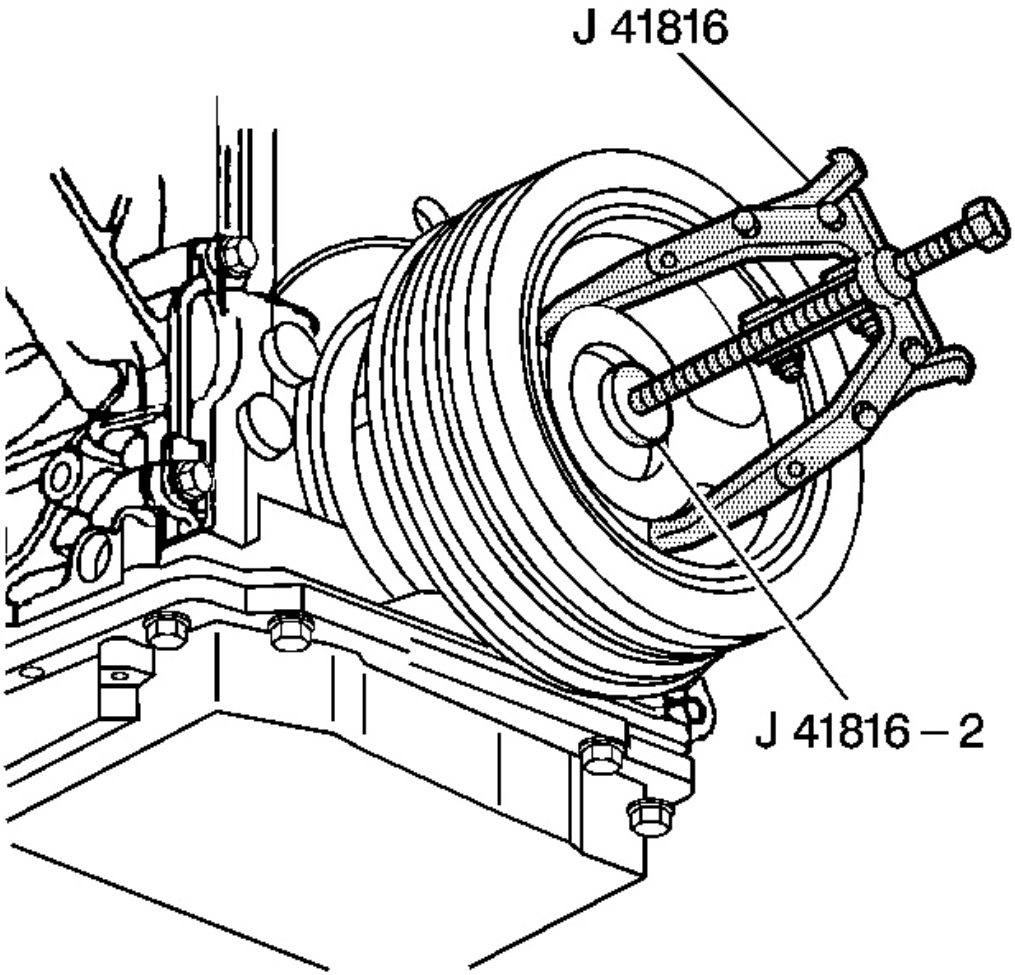

Fig. 376: View Of J 41816 & J 41816-2
Courtesy of GENERAL MOTORS CORP.

4. Use the J 41816 and the J 41816-2 in order to remove the crankshaft balancer.
5. Remove the **J 42386-A** and bolts.

cardiagn.com

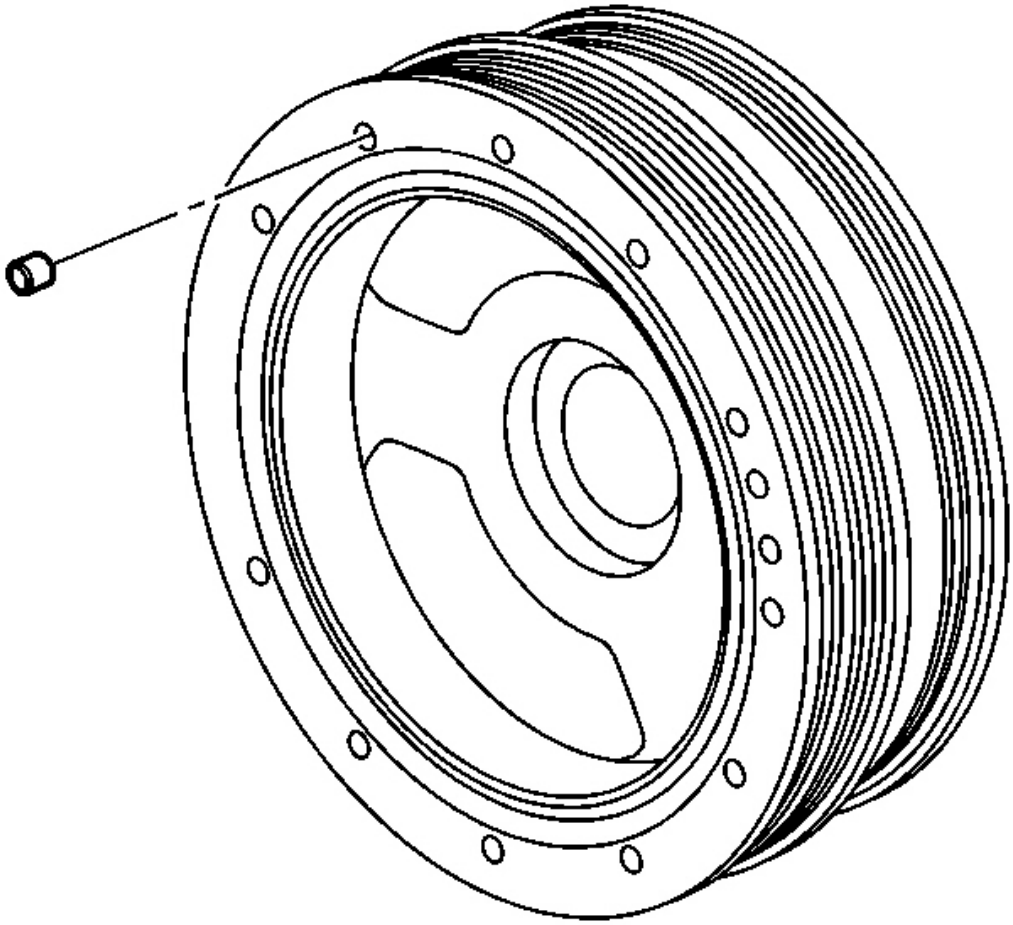

Fig. 377: Crankshaft Balancer Weights
Courtesy of GENERAL MOTORS CORP.

6. Note the position of crankshaft balancer weights, if applicable. Refer to **Crankshaft Balancer Cleaning and Inspection** .

ENGINE FLYWHEEL REMOVAL

cardiagn.com

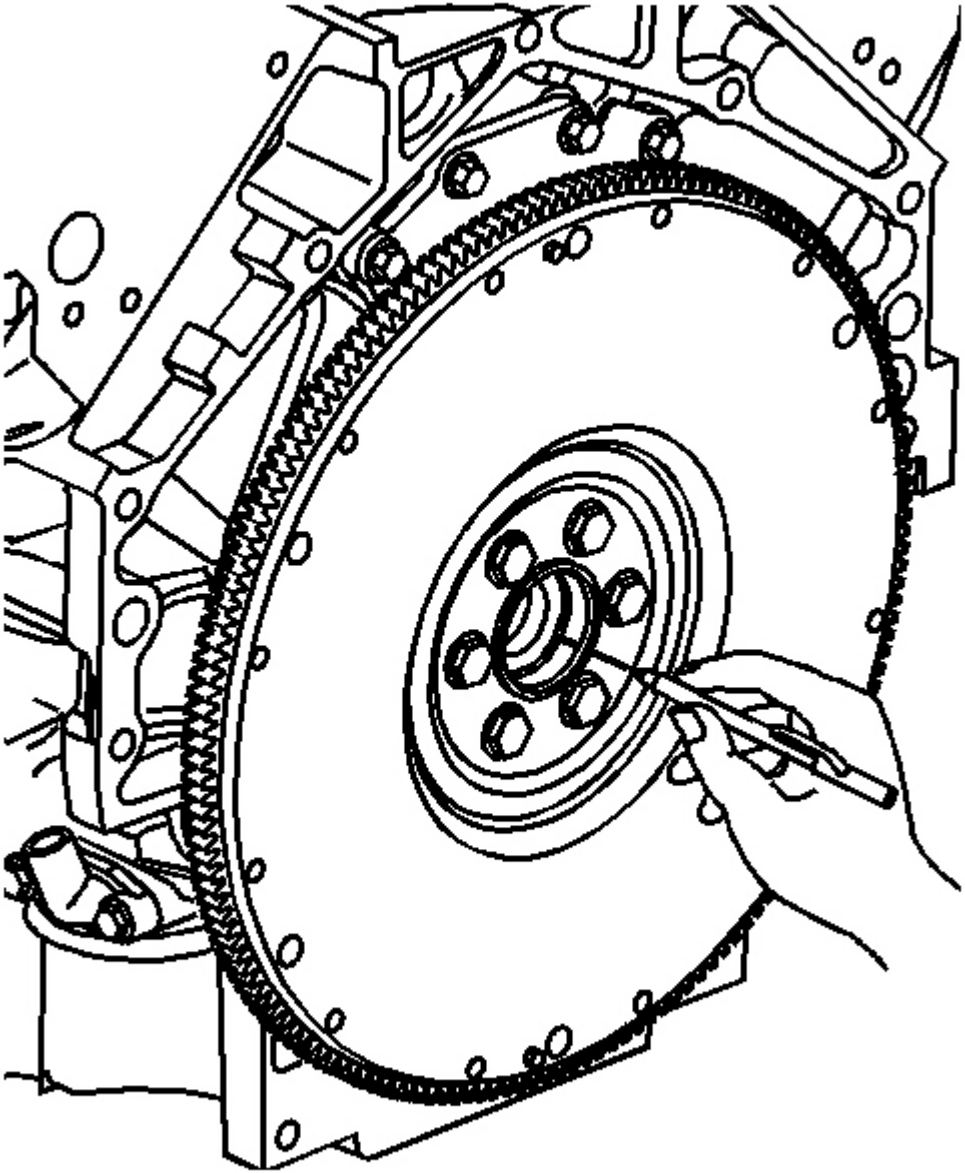

Fig. 378: Mark End Of Crankshaft & Manual Transmission Flywheel
Courtesy of GENERAL MOTORS CORP.

IMPORTANT:

- **For manual transmission applications, note the position and direction of the engine flywheel before removal. The flywheel does**

cardiagn.com

not use a locating pin for alignment. Mark or scribe the end of the crankshaft and the flywheel before component removal. The existing manual transmission engine flywheel must be installed to the original position and direction. The engine flywheel will not initially seat against the crankshaft flange, but will be pulled onto the crankshaft by the engine flywheel bolts. This procedure requires a 3 stage tightening process.

- **DO NOT remove the propeller shaft hub or flexplate from the automatic transmission engine flywheel. The flywheel, propeller shaft hub, and flexplate are balanced as an assembly. If service is required, the entire flywheel assembly should be replaced.**

1. Mark or scribe the end of the crankshaft and the manual transmission flywheel. Refer to **Engine Balancing** .

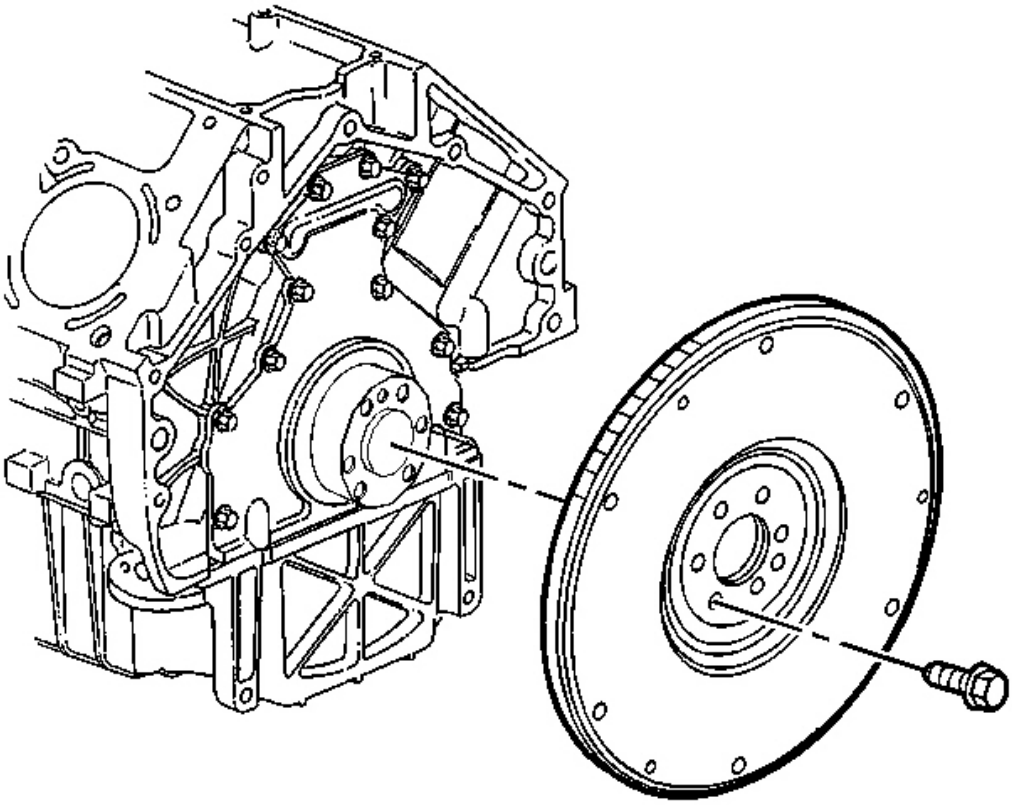

Fig. 379: Engine Flywheel & Bolts (Manual Transmission)
Courtesy of GENERAL MOTORS CORP.

cardiagn.com

2. Remove the manual transmission engine flywheel and bolts.

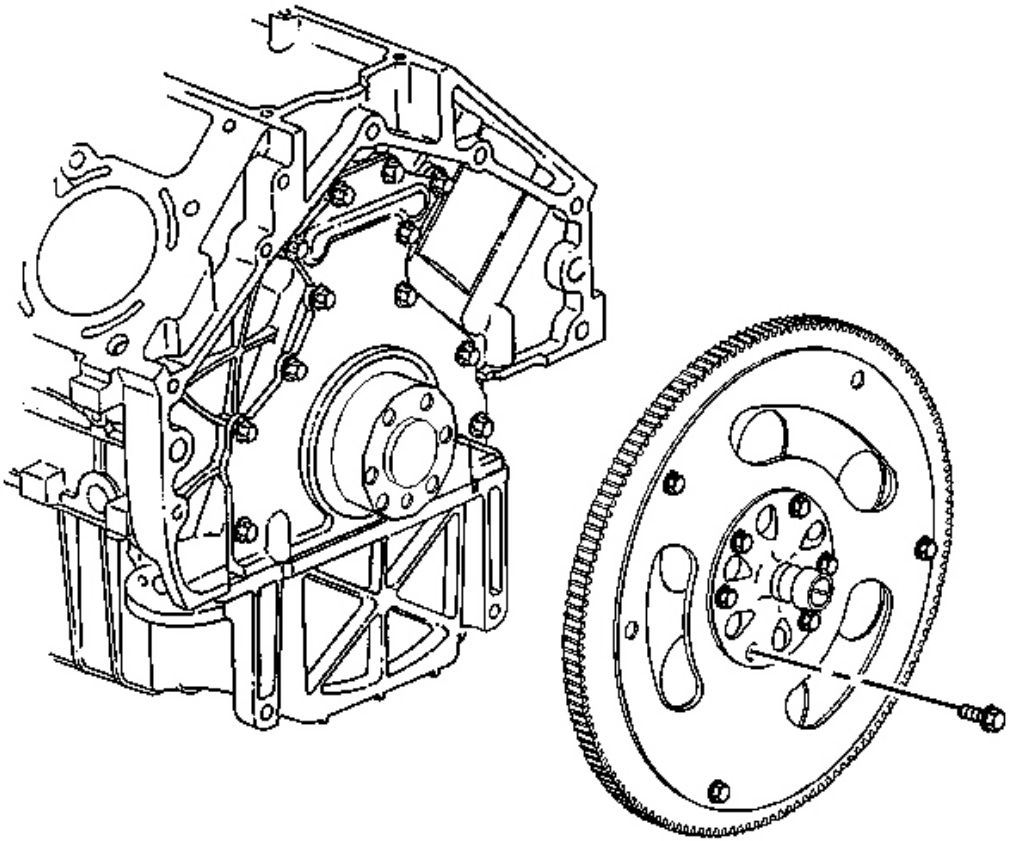

Fig. 380: Automatic Transmission Engine Flywheel & Bolts
Courtesy of GENERAL MOTORS CORP.

3. Remove the automatic transmission engine flywheel and bolts.

CLUTCH PILOT BEARING REMOVAL

Tools Required

J 43276 Clutch Pilot Bearing Remover

cardiagn.com

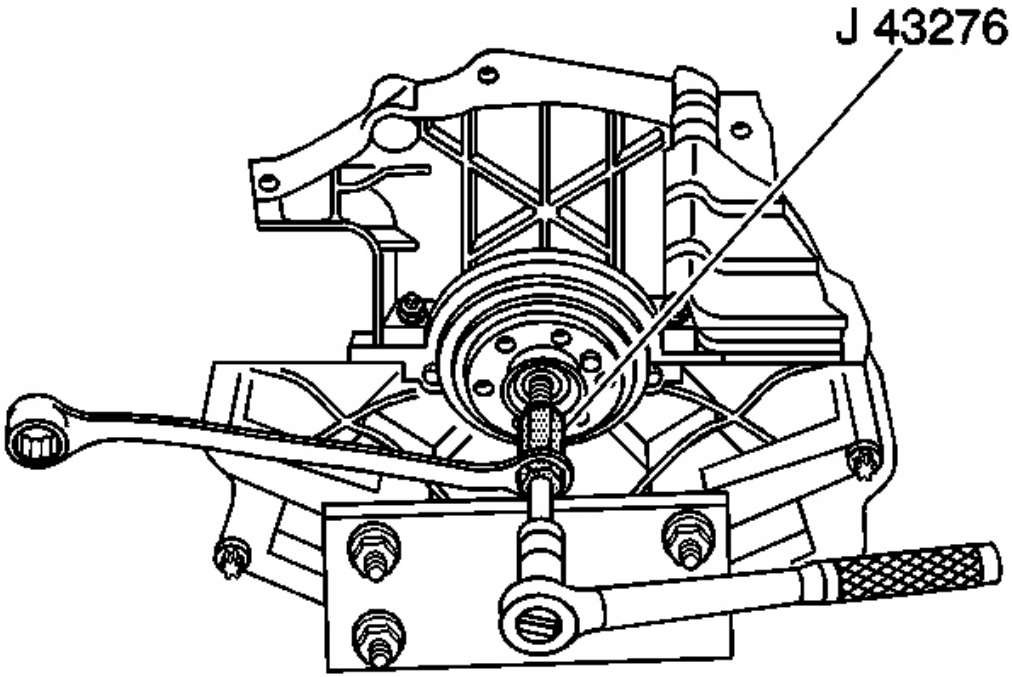

Fig. 381: Clutch Pilot Bearing & J 43276
Courtesy of GENERAL MOTORS CORP.

NOTE: **When using the J 43276 Clutch Pilot Bearing Remover, always secure the J 43276-1 Clutch Pilot Bearing Remover tool body using a wrench. Do not allow the J 43276-1 tool body to rotate. Failing to do so causes damage to the J 43276-1 tool body.**

1. Remove the clutch pilot bearing using the **J 43276** .
    1. Install the J 43276-1 into the clutch pilot bearing.
    2. Using a wrench, secure the J 43276-1.
    3. Insert the J 43276-2 into the J 43276-1.
    4. Rotate the J 43276-2 clockwise into the J 43276-1 until the clutch pilot bearing is completely removed from the crankshaft.
    5. Rotate the J 43276-2 counterclockwise to remove the J 43276-2 from the J 43276-1.
    6. Remove the J 43276-1 from the tool body.

cardiagn.com

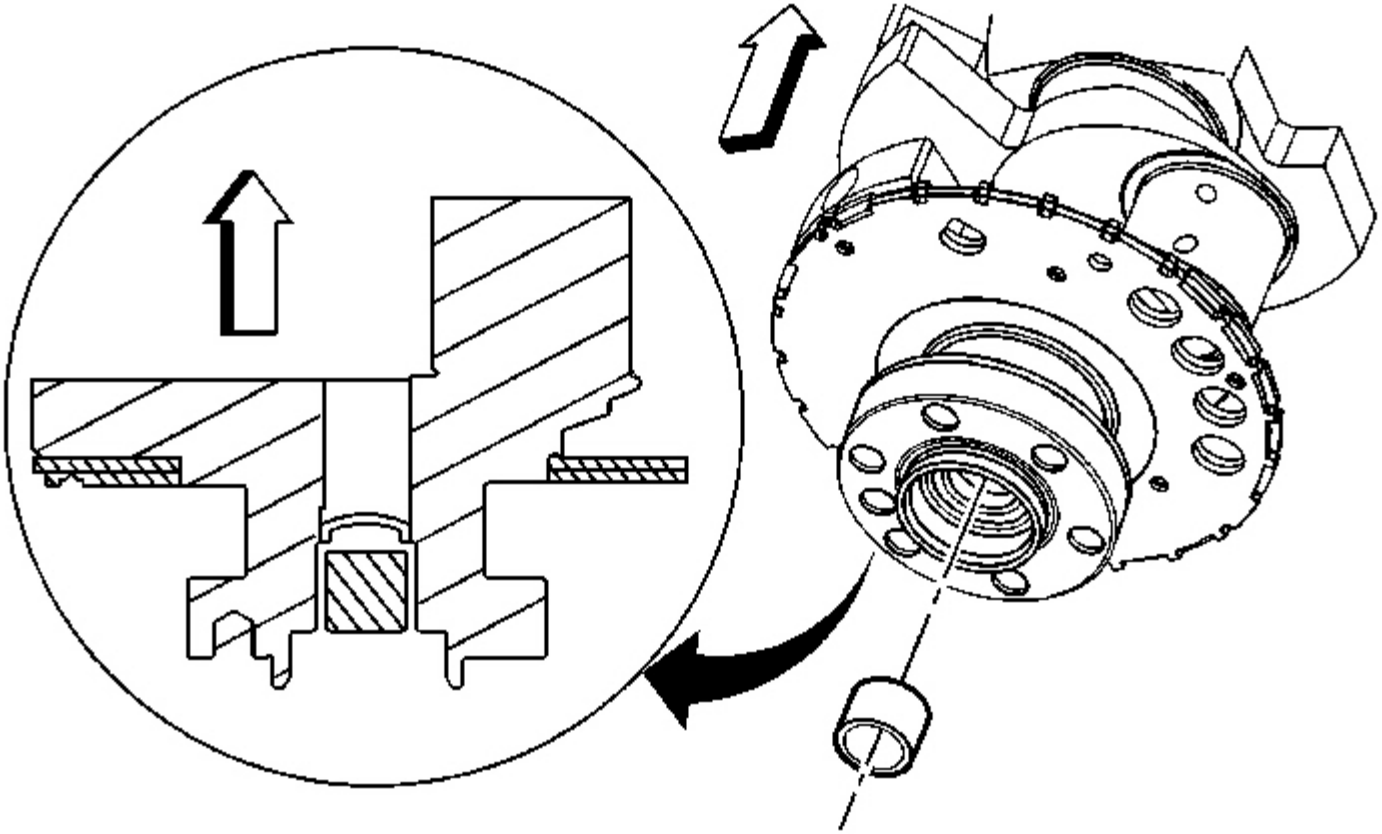

cardiagn.com

Fig. 382: Pilot Bearing
Courtesy of GENERAL MOTORS CORP.

2. Discard the pilot bearing.

OIL LEVEL INDICATOR AND TUBE REMOVAL

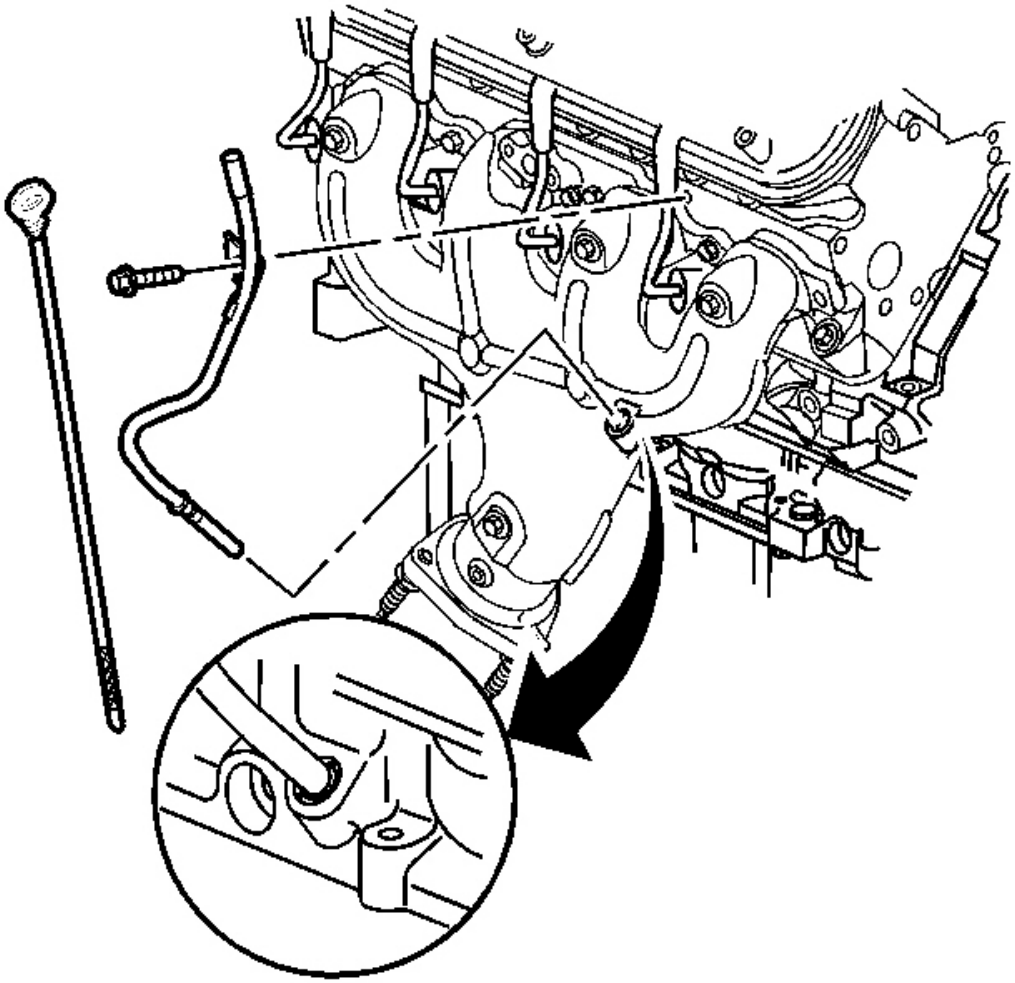

Fig. 383: Oil Level Indicator Tube
Courtesy of GENERAL MOTORS CORP.

1. Remove the oil level indicator from the tube.
2. Remove the oil level indicator tube bolt from the right cylinder head.

cardiagn.com

3. Remove the oil level indicator tube from the engine block.

IMPORTANT: Inspect the O-ring seal for cuts or damage. The O-ring seal may be used again if it is not cut or damaged.

4. Remove the O-ring seal from the tube, if required.

EXHAUST MANIFOLD REMOVAL - LEFT

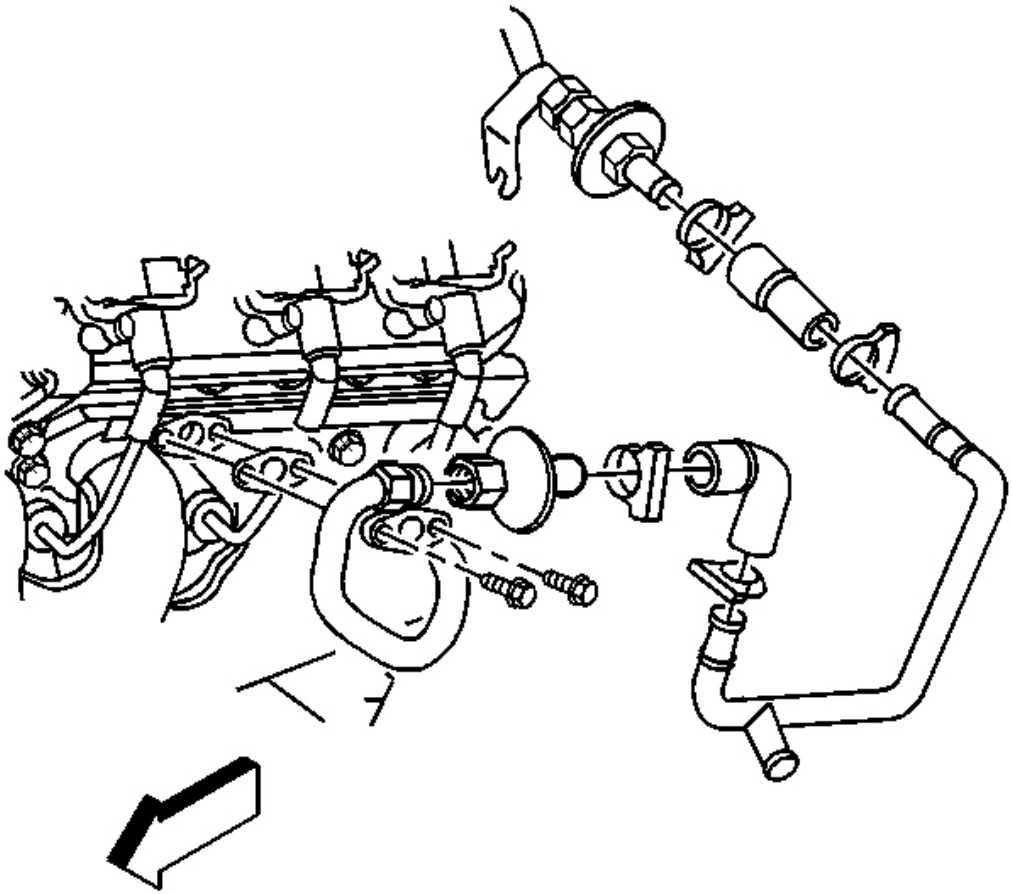

Fig. 384: Air Pipe, Check Valve, Bolts & Gasket From Left Exhaust Manifold
Courtesy of GENERAL MOTORS CORP.

IMPORTANT:

- **Do not remove the check valve from the air injection reaction (AIR) pipe unless service is required.**

cardiagn.com

- **Do not remove the oxygen sensor from the exhaust manifold unless service is required.**

1. Remove the AIR pipe, with check valve, bolts, and gasket from the left exhaust manifold.

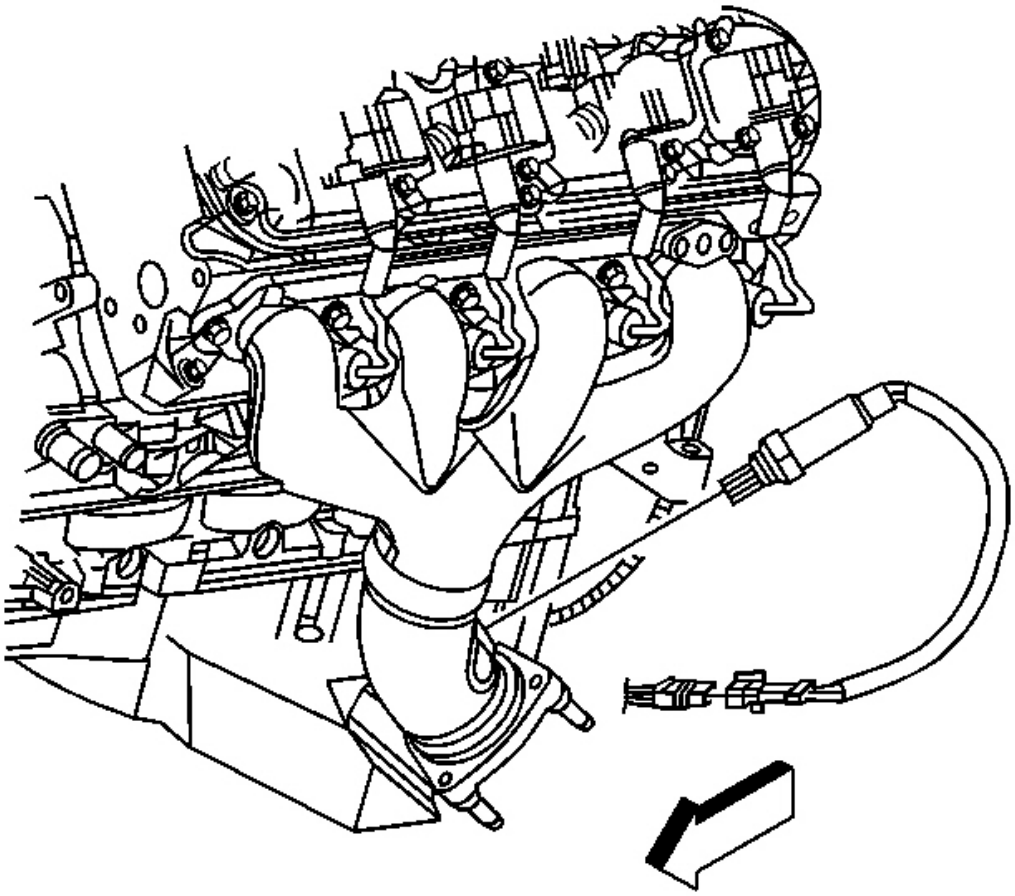

Fig. 385: Spark Plug Wires & Oxygen Sensor
Courtesy of GENERAL MOTORS CORP.

2. Remove the spark plug wires from the spark plugs.

   Do not remove the spark plug wires from the ignition coils unless required.

3. Remove the oxygen sensor from the manifold.

cardiagn.com

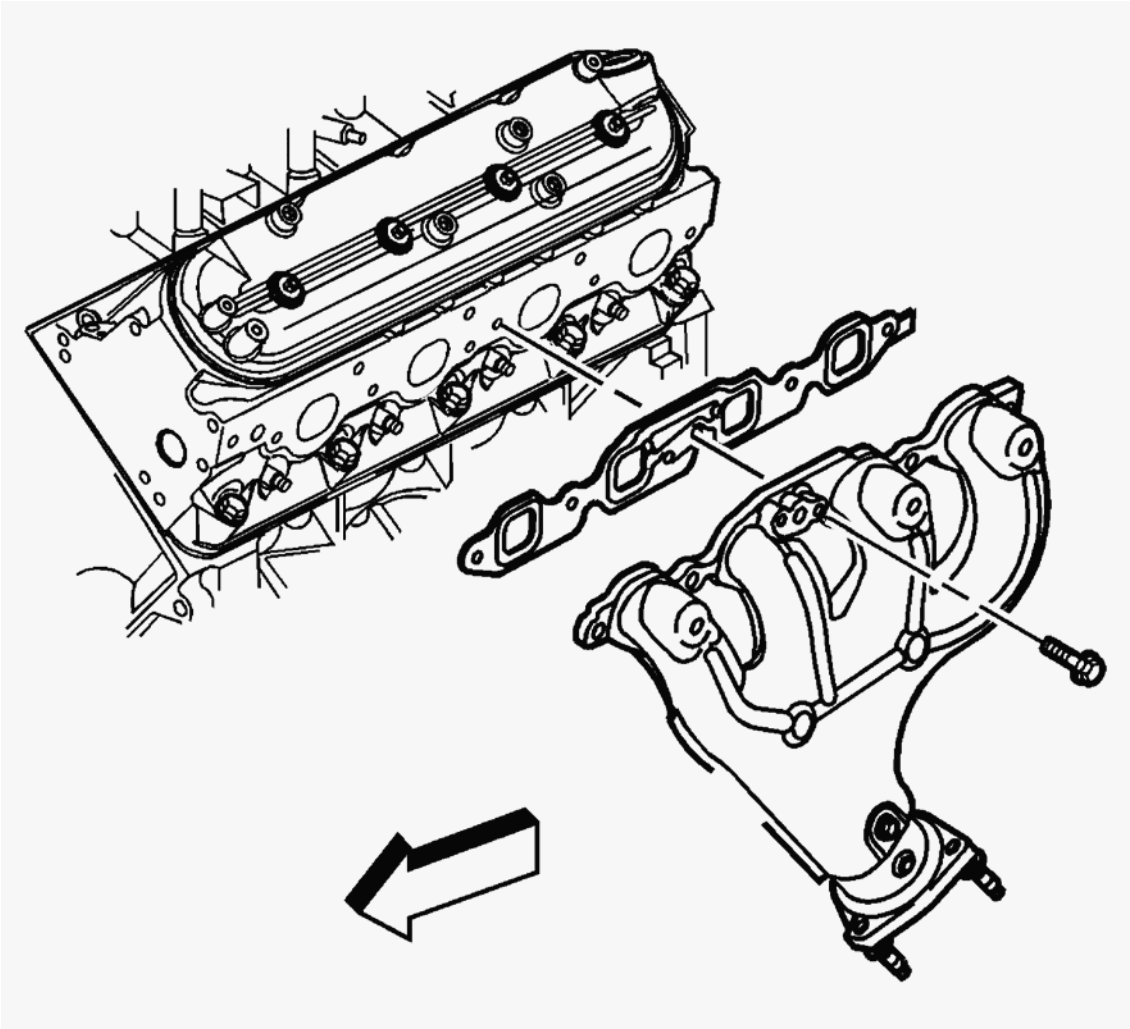

Fig. 386: Exhaust Manifold, Bolts & Gasket
Courtesy of GENERAL MOTORS CORP.

4. Remove the exhaust manifold, bolts, and gasket.
5. Discard the gasket.
6. Remove the heat shield and bolts, if required.

EXHAUST MANIFOLD REMOVAL - RIGHT

cardiagn.com

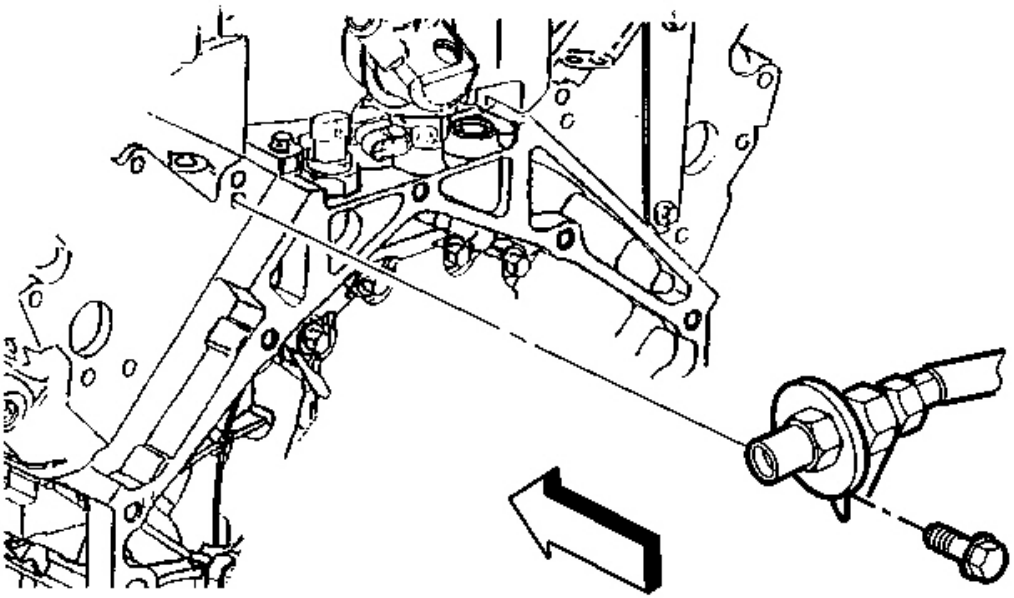

Fig. 387: AIR Pipe, Oxygen Sensor & Bolt
Courtesy of GENERAL MOTORS CORP.

IMPORTANT:

- **Do not remove the check valve from the air injection reaction (AIR) pipe unless service is required.**
- **Do not remove the oxygen sensor from the exhaust manifold unless service is required.**

1. Remove the AIR pipe bracket bolt from the rear of the left cylinder head.

cardiagn.com

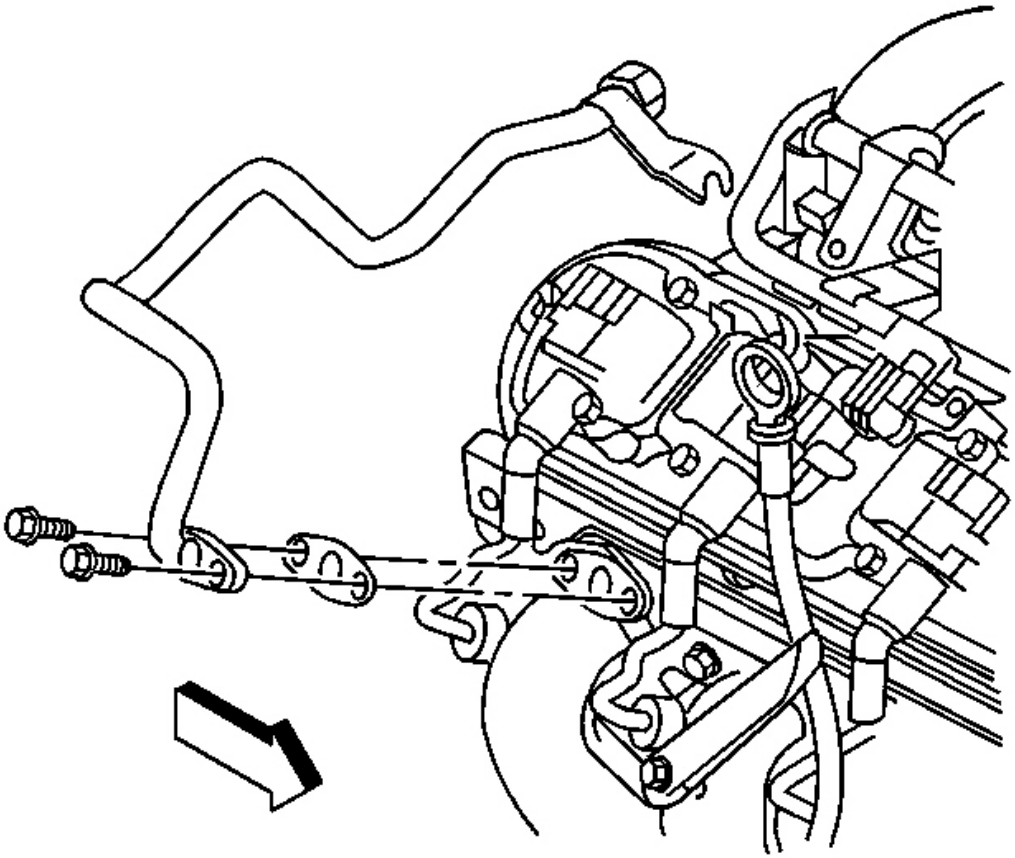

Fig. 388: Air Pipe, Bolts, Gasket & Right Exhaust Manifold
Courtesy of GENERAL MOTORS CORP.

2. Remove the AIR pipe, with check valve, bolts, and gasket from the right exhaust manifold.

cardiagn.com

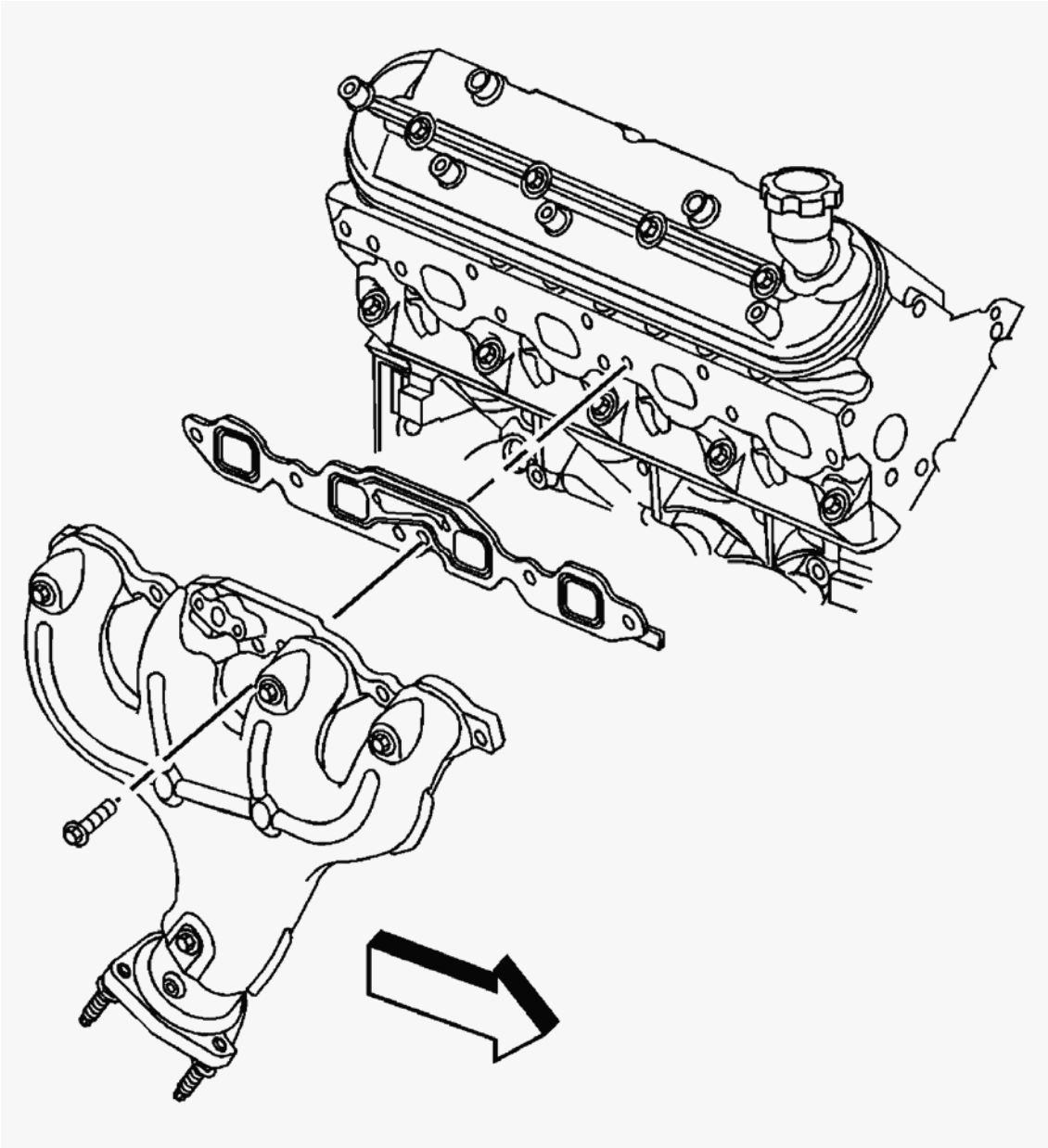

Fig. 389: Exhaust Manifold, Bolts & Gasket
Courtesy of GENERAL MOTORS CORP.

3. Remove the spark plug wires from the spark plugs.

   Do not remove the spark plug wires from the ignition coils unless required.

4. Remove the oxygen sensor from the manifold.
5. Remove the exhaust manifold, bolts, and gasket.
6. Discard the gasket.
7. Remove the heat shield and bolts, if required.

cardiagn.com

WATER PUMP REMOVAL

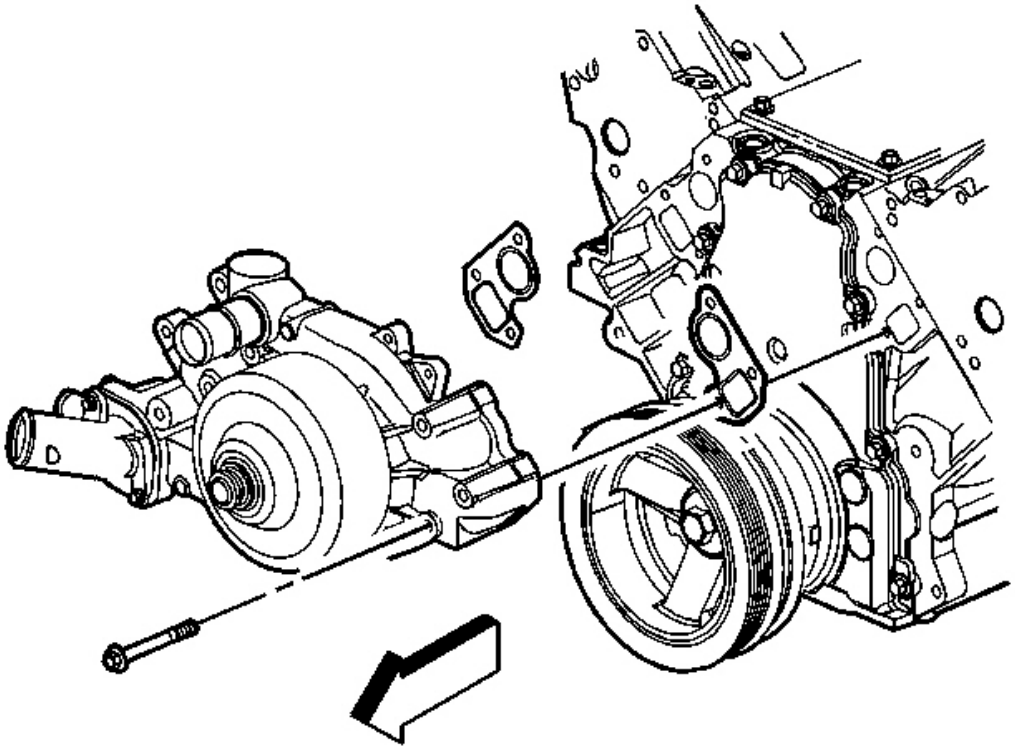

Fig. 390: Water Pump, Gaskets & Bolts
Courtesy of GENERAL MOTORS CORP.

1. Remove the water pump bolts.
2. Remove the water pump and gaskets.
3. Discard the water pump gaskets.

cardiagn.com

REPAIR INSTRUCTIONS

THROTTLE BODY REMOVAL

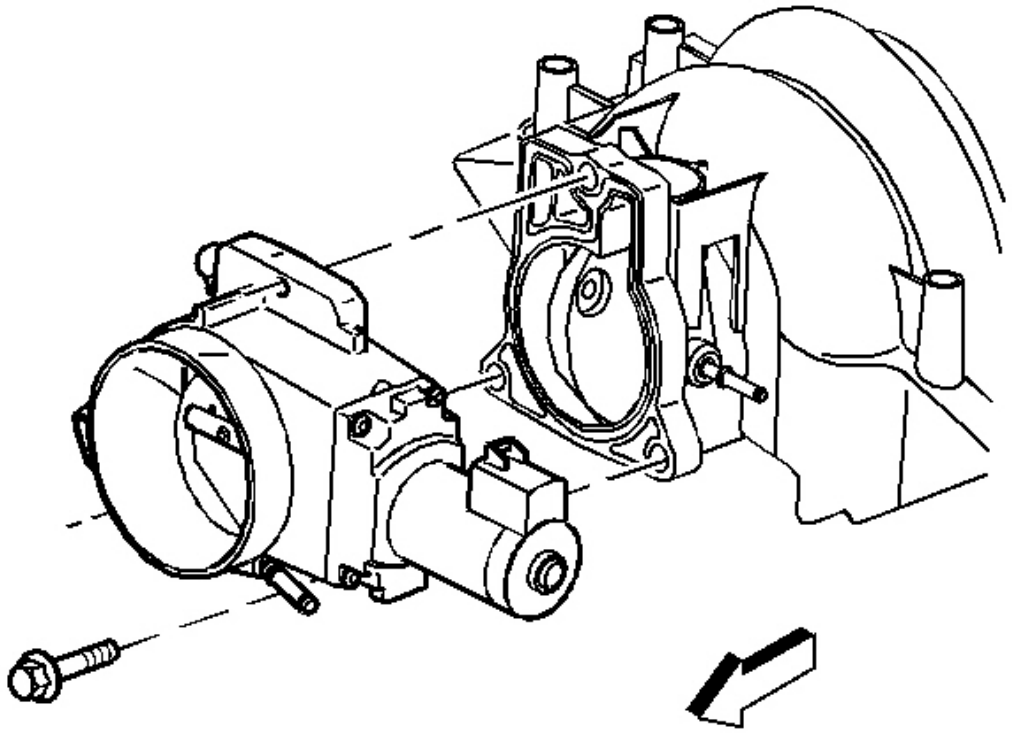

Fig. 1: Throttle Body & Bolts
Courtesy of GENERAL MOTORS CORP.

IMPORTANT: The intake manifold, throttle body, fuel injection rail and fuel injectors may be removed as an assembly. If not servicing the individual components, remove the manifold as a complete assembly.

1. Remove the electrical wire harness connectors from the throttle body.
2. Remove the engine coolant air bleed hose and clamp.

cardiagn.com

NOTE: **Handle the electronic throttle control components carefully. Use cleanliness in order to prevent damage. Do not drop the electronic throttle control components. Do not roughly handle the electronic throttle control components. Do not immerse the electronic throttle control components in cleaning solvents of any type.**

3. Remove the throttle body bolts.
4. Remove the throttle body.

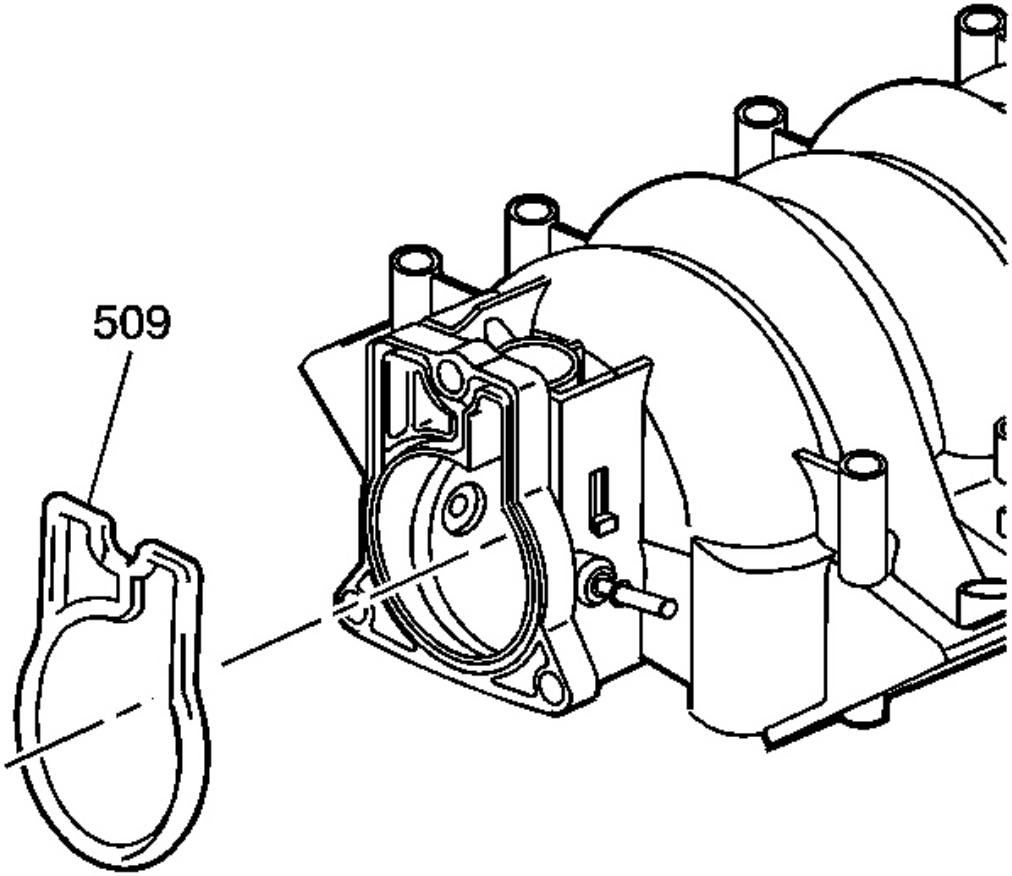

Fig. 2: Throttle Body Gasket
Courtesy of GENERAL MOTORS CORP.

5. Remove the throttle body gasket (509).

IMPORTANT: DO NOT use the throttle body gasket again. Install a NEW gasket during

cardiagn.com

assembly.

6. Discard the gasket.

FUEL RAIL AND INJECTORS REMOVAL

cardiagn.com

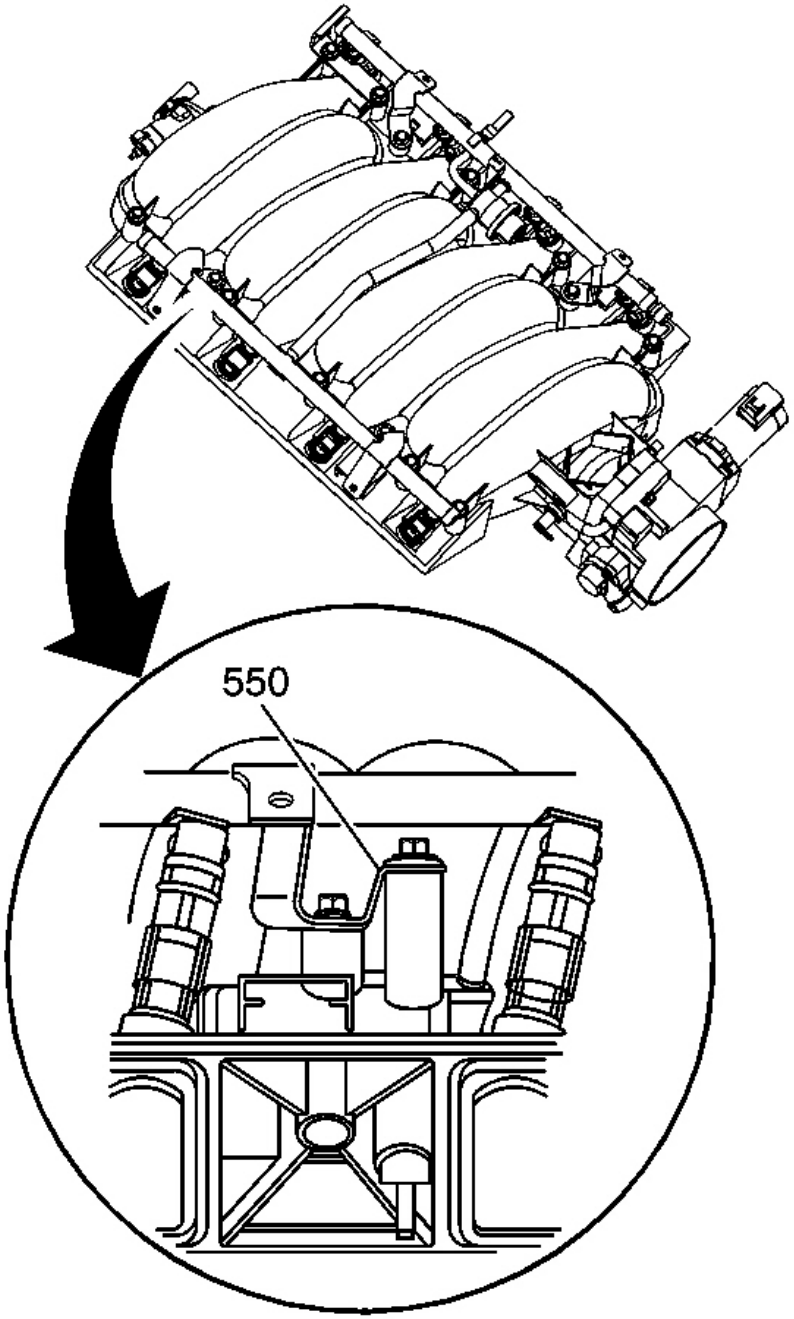

Fig. 3: Fuel Rail Ground Strap
Courtesy of GENERAL MOTORS CORP.

IMPORTANT: The intake manifold, throttle body, fuel injection rail and fuel injectors

cardiagn.com

may be removed as an assembly. If not servicing the individual components, remove the intake manifold as a complete assembly.

1. Note the location of the fuel rail ground strap (550) on the intake manifold.

   The fuel rail ground strap must be installed during assembly.

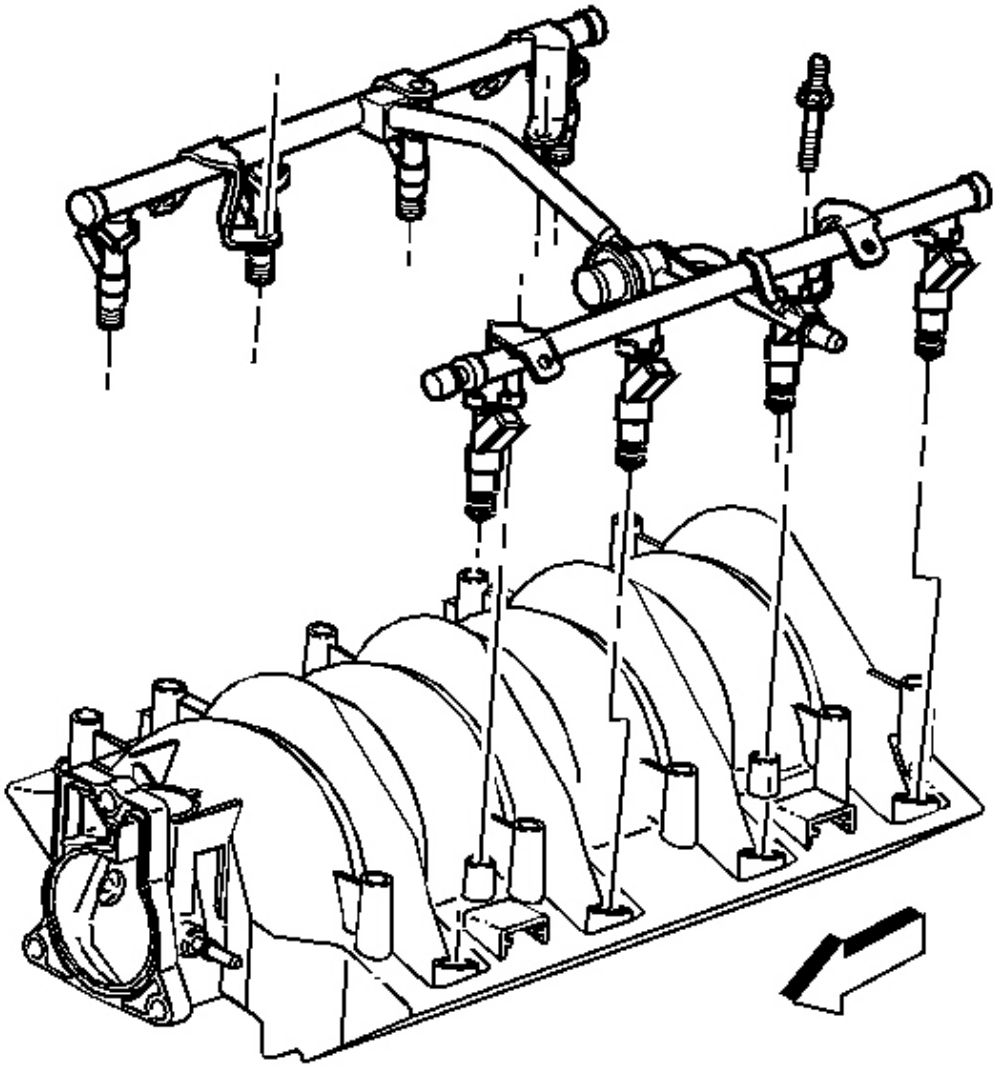

Fig. 4: Fuel Rail & Bolts
Courtesy of GENERAL MOTORS CORP.

cardiagn.com

CAUTION: Refer to Fuel Rail Stop Bracket Installation Caution in Cautions and Notices.

2. Remove the fuel rail bolts.

IMPORTANT:

- **Do not separate the fuel injectors from the fuel rail unless component service is required.**
- **Use cleanliness and care when handling the fuel system components.**
- **Do not allow dirt or debris to enter the fuel injectors or fuel rail components, cap ends as necessary.**

3. Remove the fuel rail, with injectors, lifting evenly from both sides of the fuel rail until all the injectors have left their bores.

INTAKE MANIFOLD REMOVAL

cardiagn.com

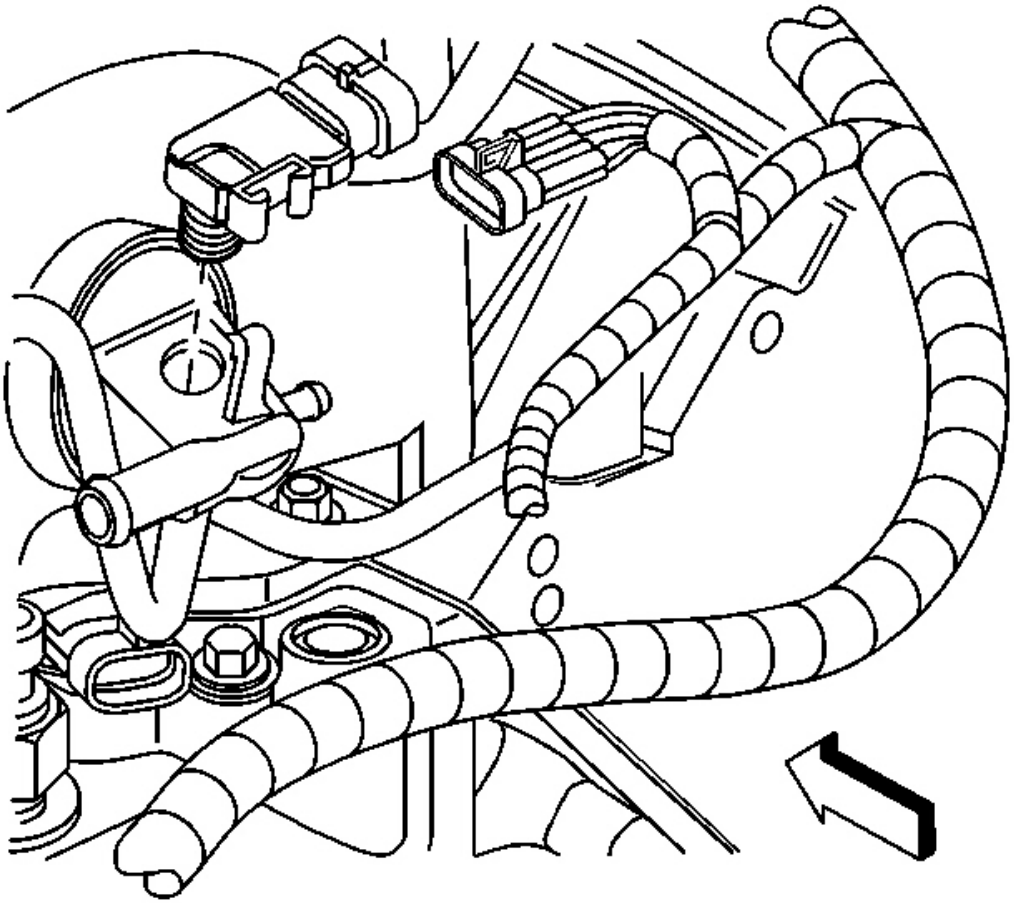

Fig. 5: MAP Sensor
Courtesy of GENERAL MOTORS CORP.

IMPORTANT:

- **The intake manifold, throttle body, fuel injection rail, and fuel injectors may be removed as an assembly. If not servicing the individual components, remove the manifold as a complete assembly.**
- **DO NOT use the intake manifold-to-cylinder head gaskets again.**

1. Remove the manifold absolute pressure (MAP) sensor, if required.

cardiagn.com

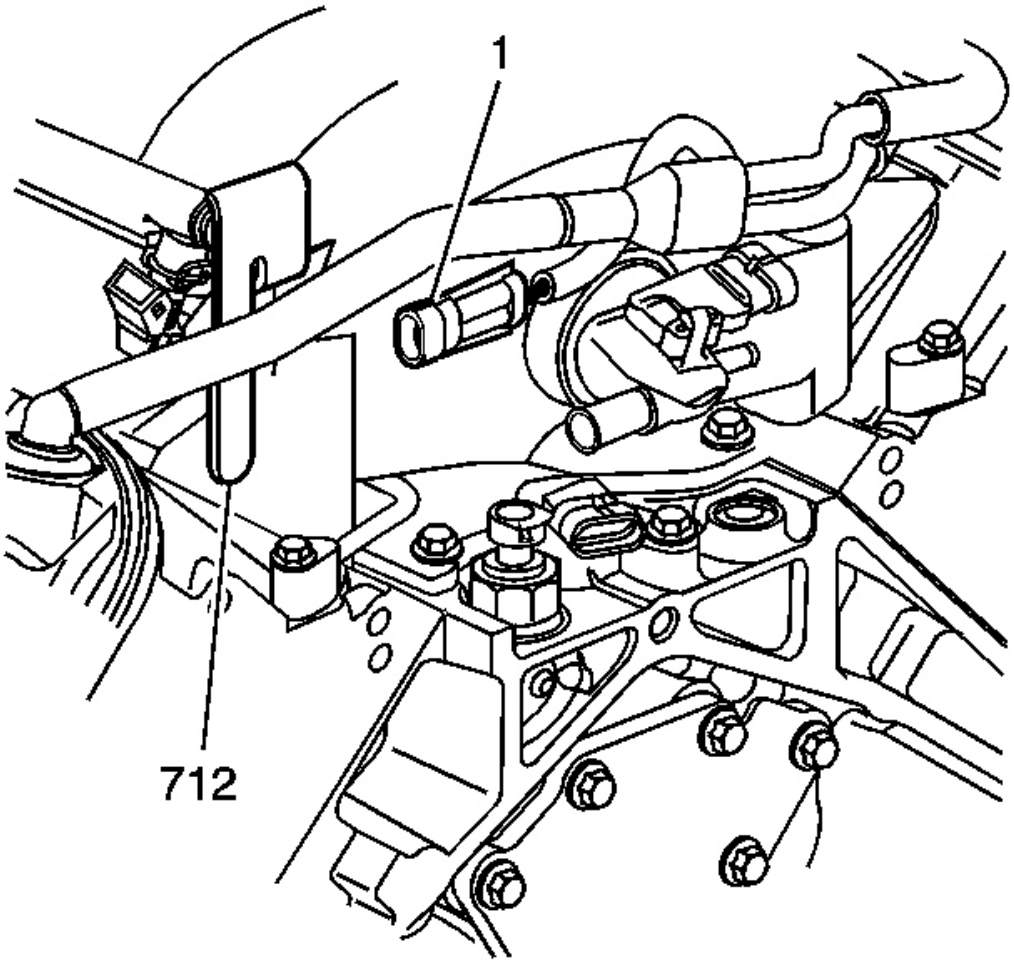

Fig. 6: Knock Sensor Wire Harness Connector & Fuel Rail Stop Bracket
Courtesy of GENERAL MOTORS CORP.

2. Disconnect the knock sensor wire harness connector (1) from the fuel rail stop bracket (712).

cardiagn.com

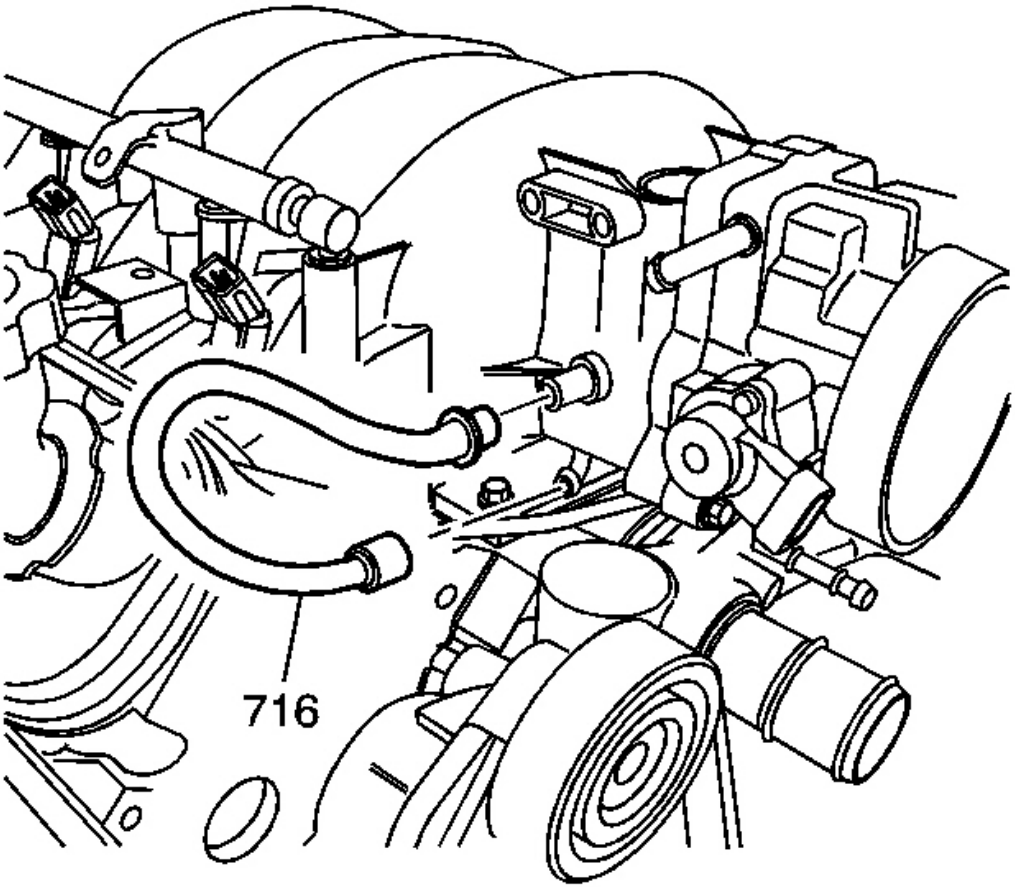

Fig. 7: PCV Dirty Air Pipe, Valley Cover & Intake Manifold
Courtesy of GENERAL MOTORS CORP.

3. Remove the positive crankcase ventilation (PCV) pipe - dirty air (716) from the valley cover and intake manifold.

cardiagn.com

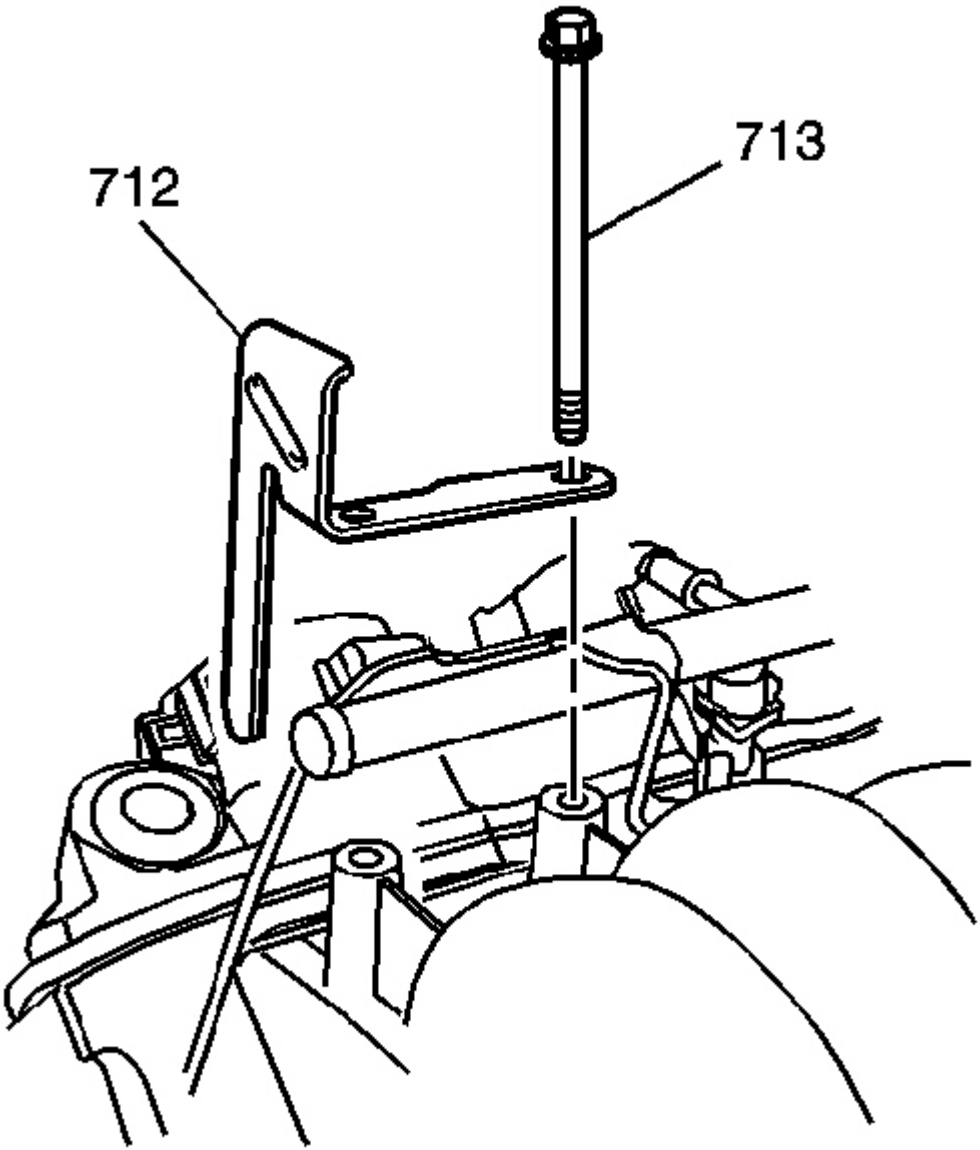

Fig. 8: Intake Manifold Bolts & Fuel Rail Stop Bracket
Courtesy of GENERAL MOTORS CORP.

CAUTION: Refer to Fuel Rail Stop Bracket Installation Caution in Cautions and Notices.

cardiagn.com

4. Remove the intake manifold bolts (713) and fuel rail stop bracket (712).

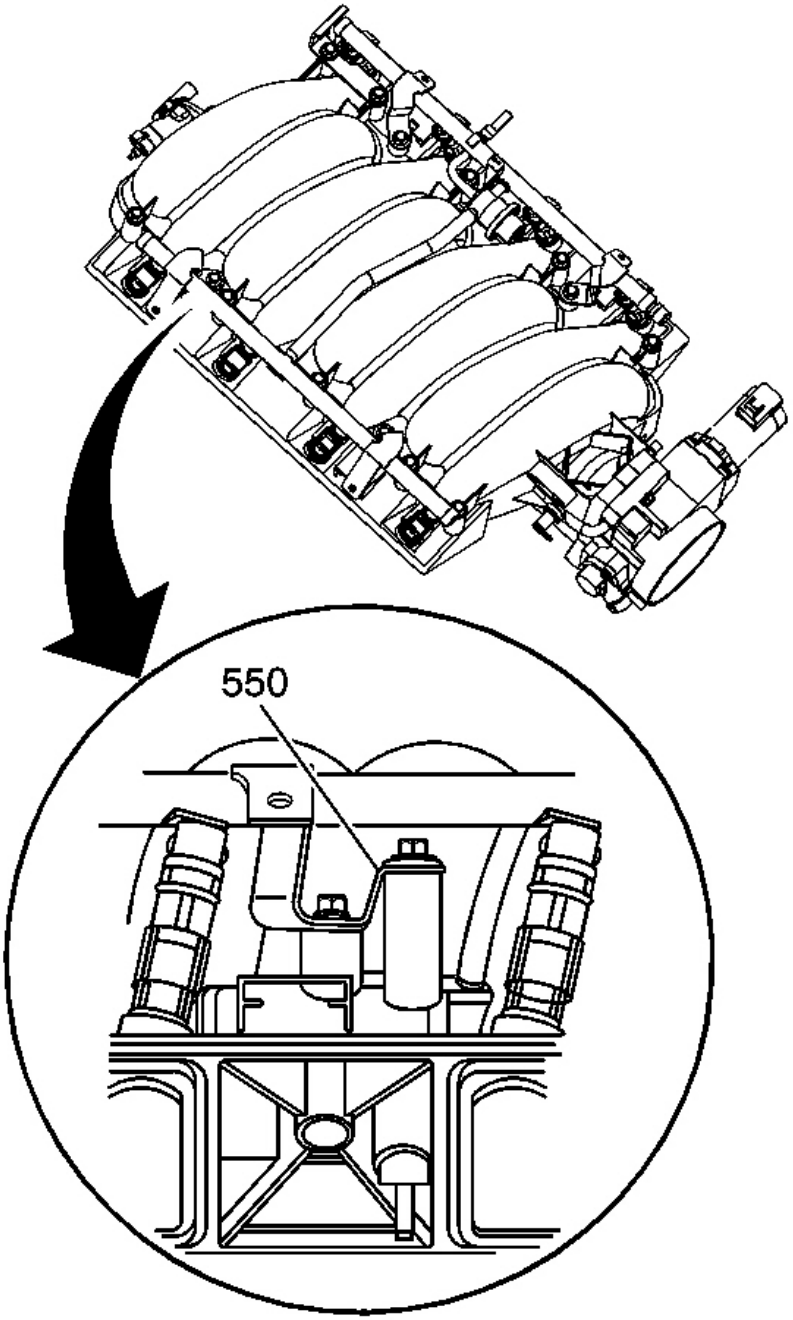

Fig. 9: Fuel Rail Ground Strap
Courtesy of GENERAL MOTORS CORP.

cardiagn.com

5. Note the location of the fuel rail ground strap (550) on the intake manifold.

   The fuel rail ground strap must be installed during assembly.

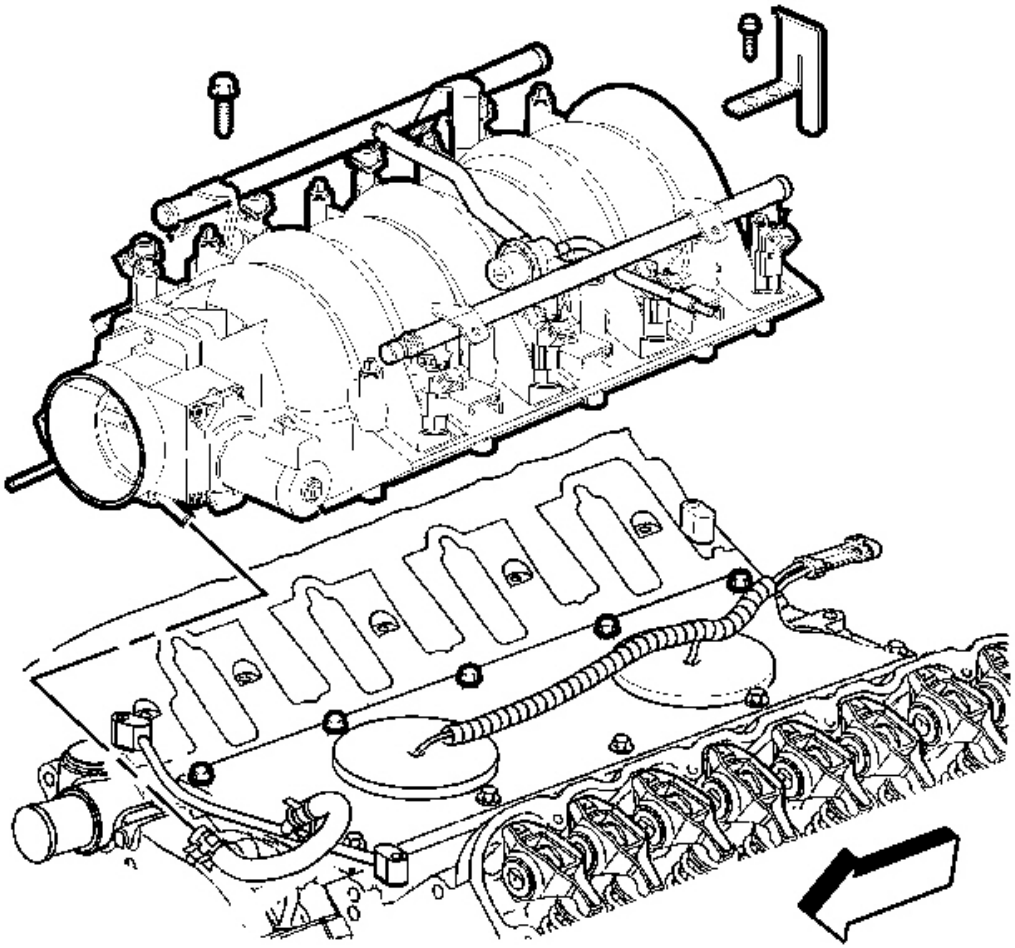

Fig. 10: Engine Coolant Air Bleed Pipe Hose & Throttle Body
Courtesy of GENERAL MOTORS CORP.

6. Remove the engine coolant air bleed pipe hose from the throttle body.
7. Remove the intake manifold.

cardiagn.com

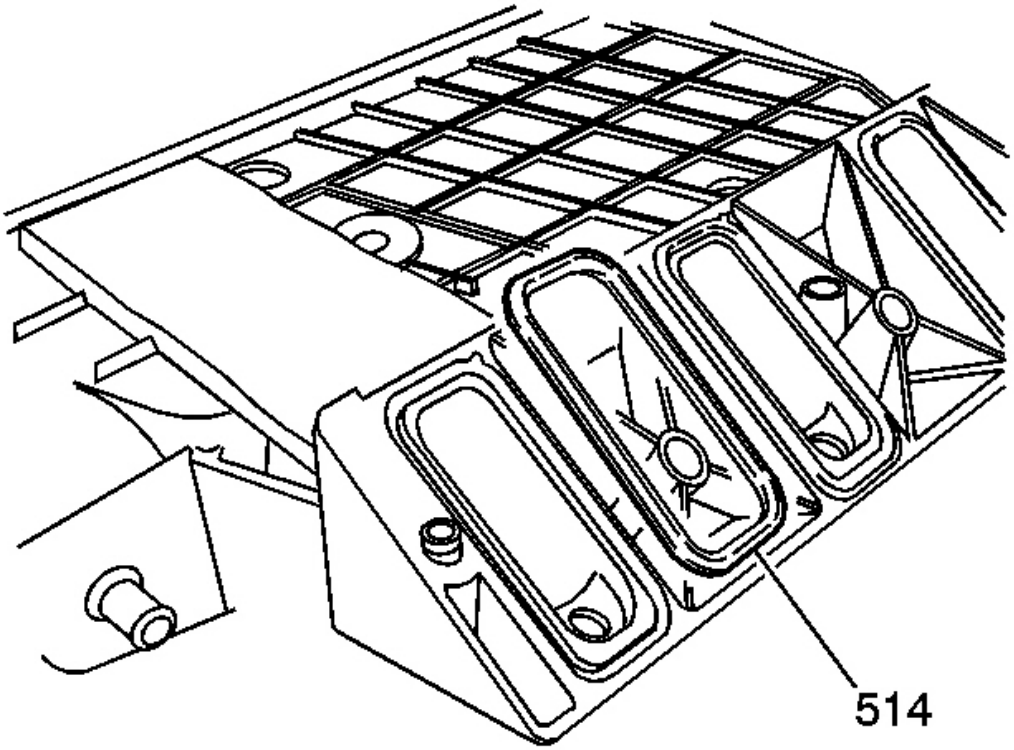

Fig. 11: Manifold-To-Cylinder Head Gaskets
Courtesy of GENERAL MOTORS CORP.

8. Remove the manifold-to-cylinder head gaskets (514) from the intake manifold.
9. Discard the intake manifold gaskets.

COOLANT AIR BLEED PIPE REMOVAL

cardiagn.com

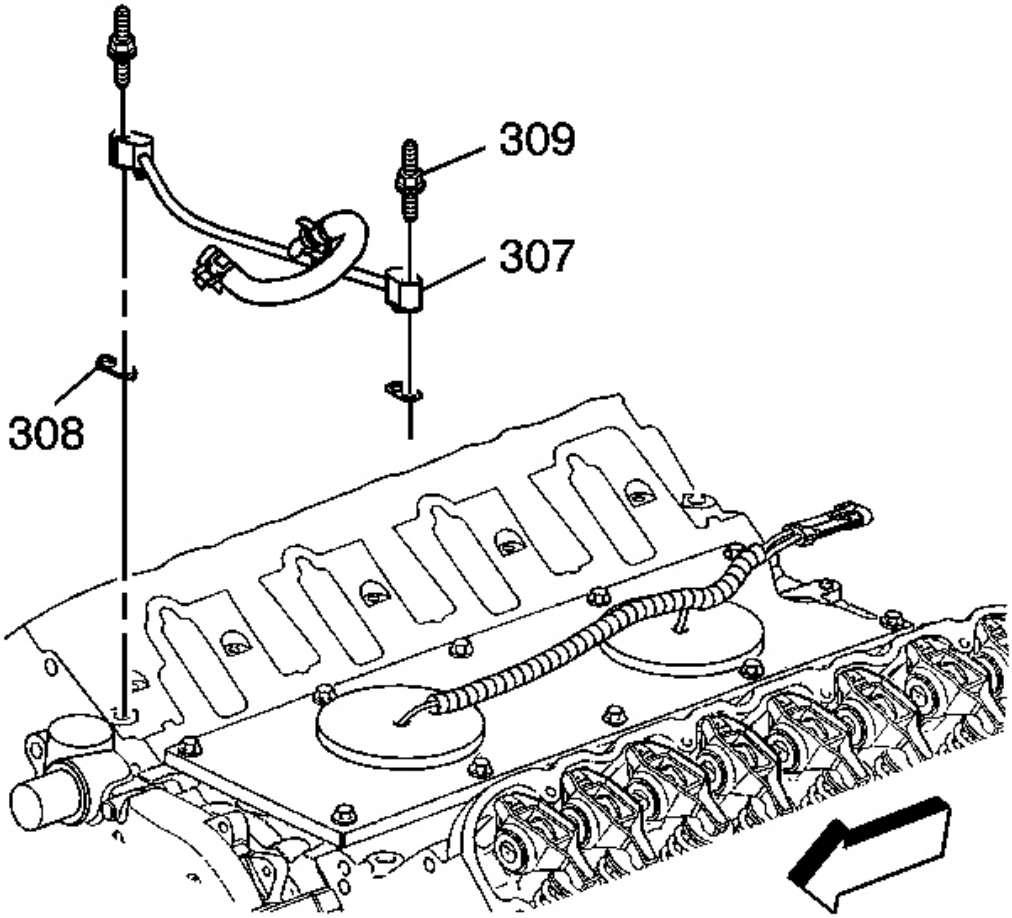

Fig. 12: Engine Coolant Air Bleed Pipe Studs, Pipe & Gaskets
Courtesy of GENERAL MOTORS CORP.

1. Remove the engine coolant air bleed pipe studs (309).
2. Remove the pipe (307) and gaskets (308).

cardiagn.com

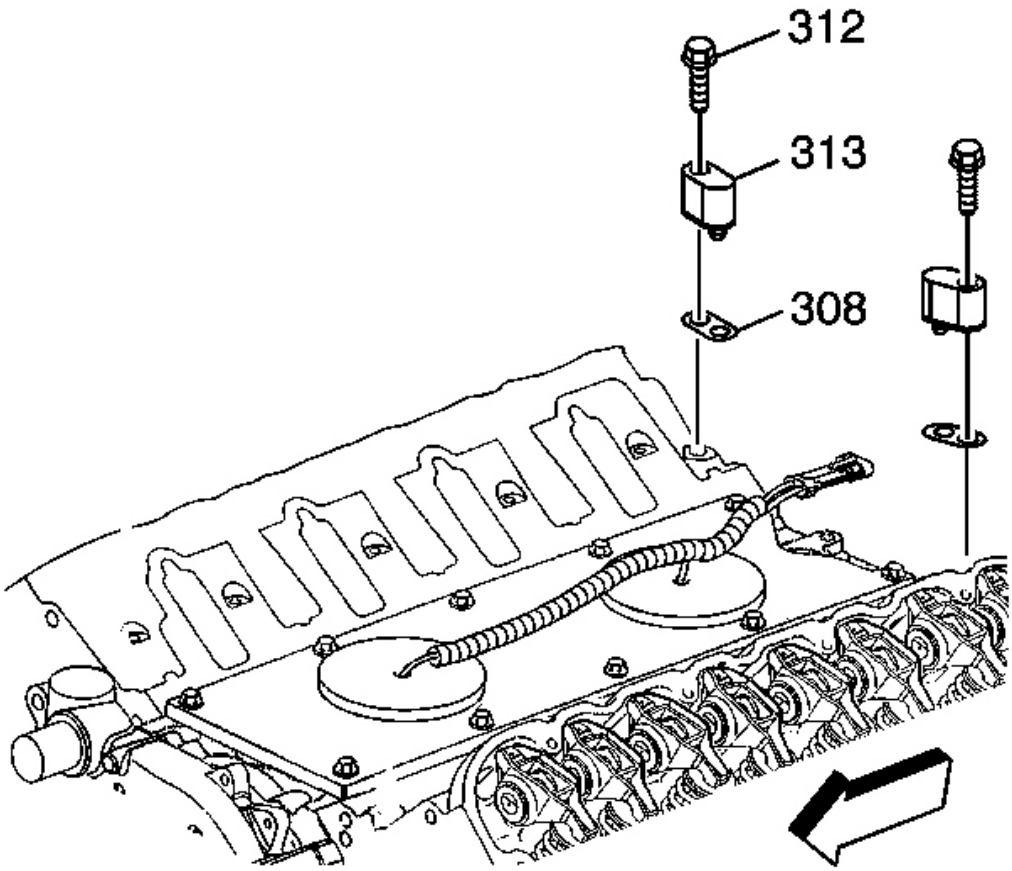

Fig. 13: View Of Engine Coolant Air Bleed Cover & Bolts
Courtesy of GENERAL MOTORS CORP.

3. Remove the engine coolant air bleed cover bolts (312) and covers (313).

cardiagn.com

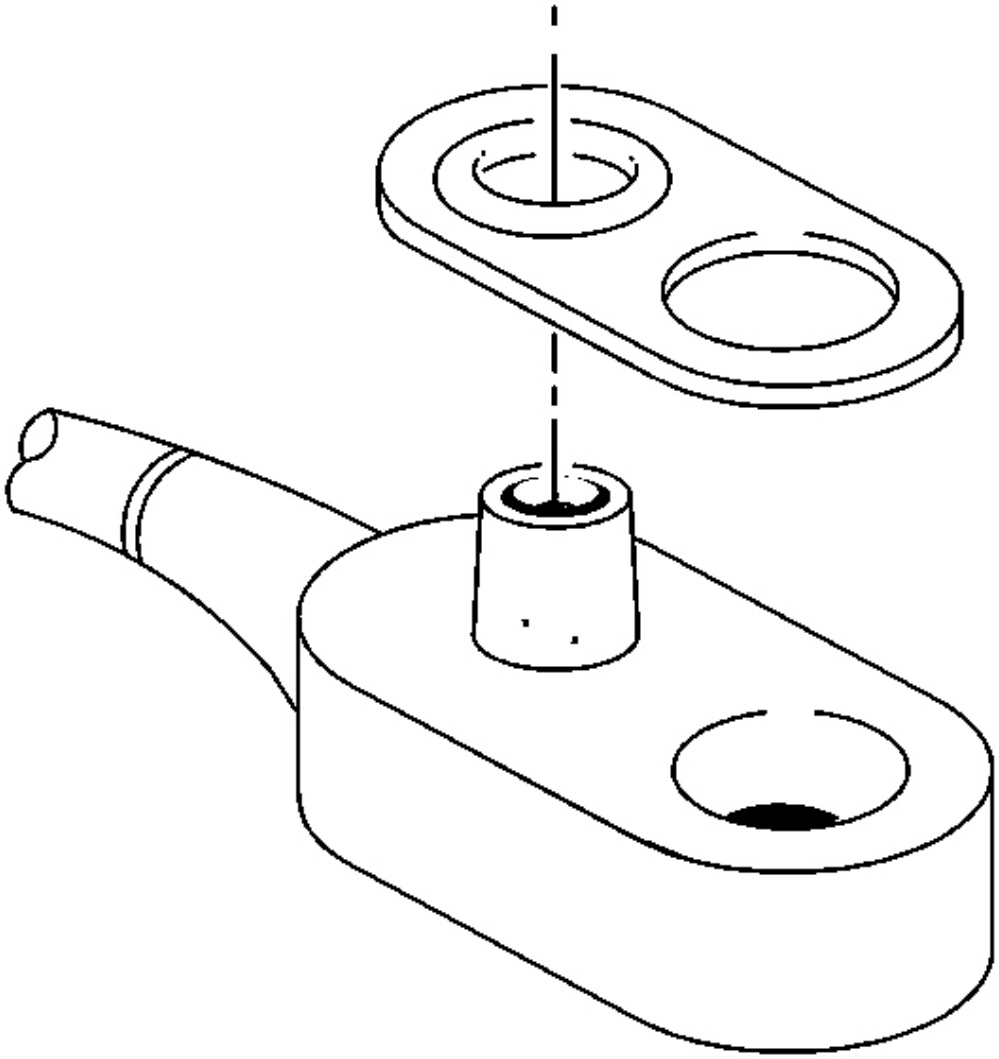

Fig. 14: View Of Pipe, Cover & Gasket
Courtesy of GENERAL MOTORS CORP.

4. Remove the gaskets from the pipe and covers.
5. Discard the gaskets.

cardiagn.com

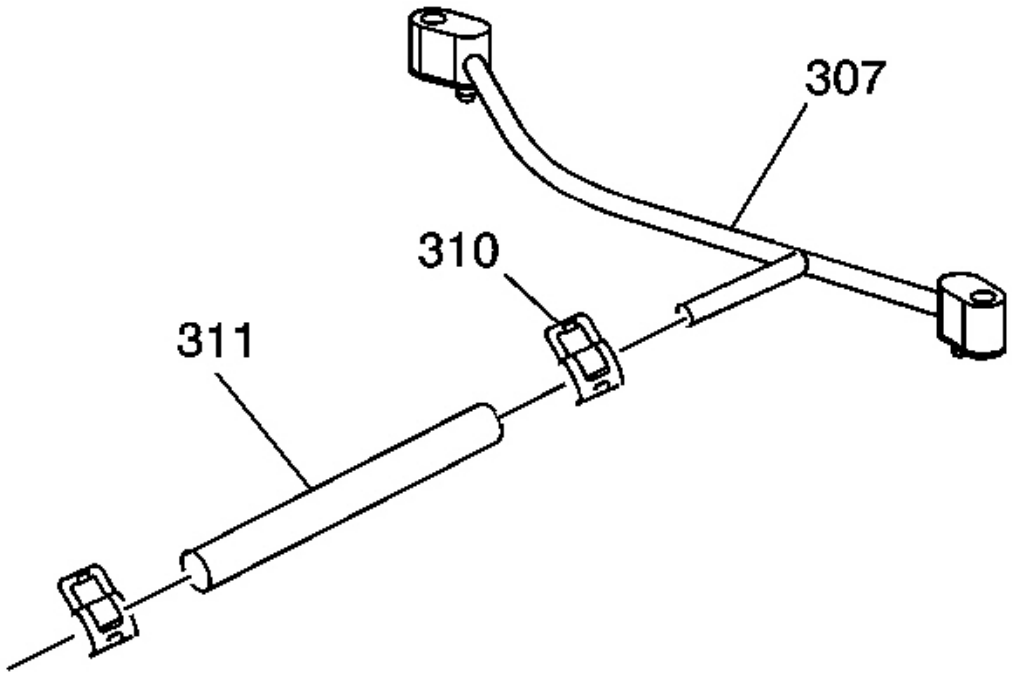

Fig. 15: Hose, Clamps & Pipe
Courtesy of GENERAL MOTORS CORP.

6. Remove the hose (311) and clamps (310) from the pipe (307).

ENGINE VALLEY COVER REMOVAL

cardiagn.com

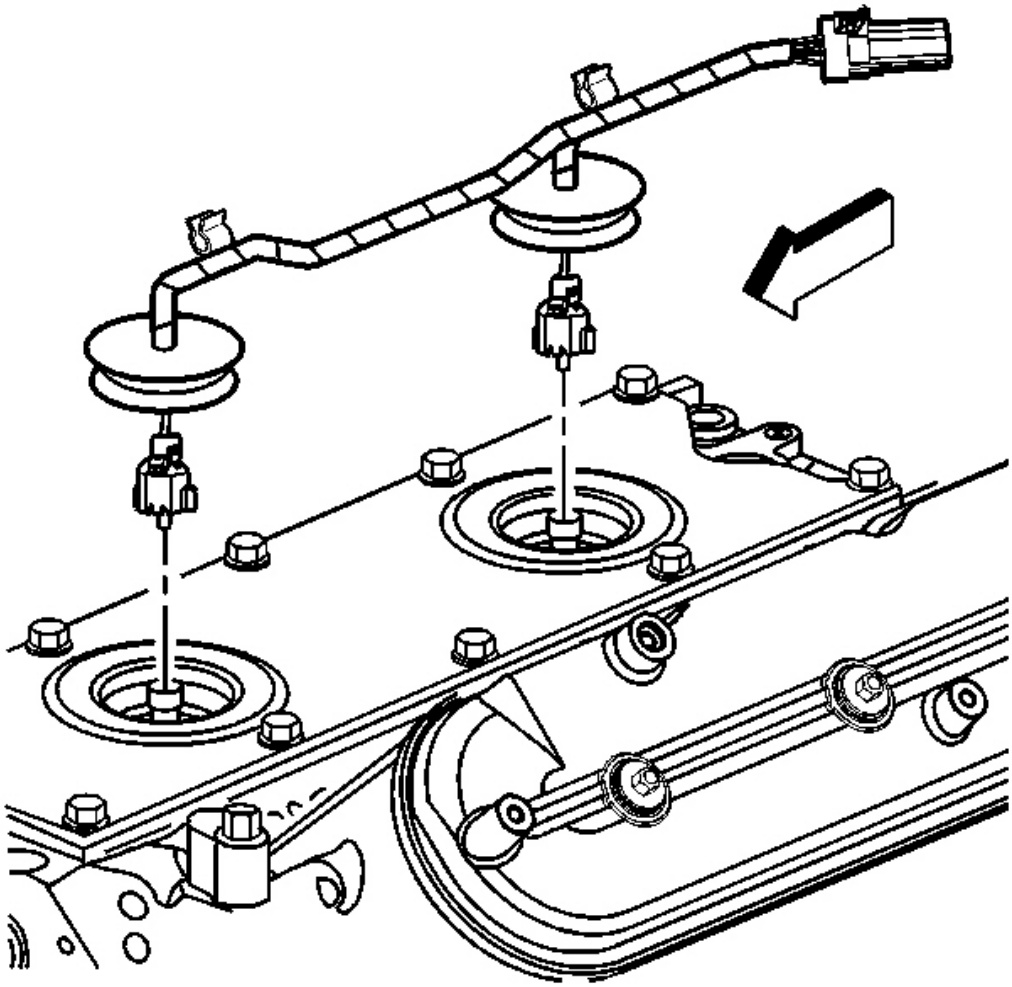

Fig. 16: View Of Knock Sensor Wire Harness
Courtesy of GENERAL MOTORS CORP.

1. Remove the knock sensor wire harness.

cardiagn.com

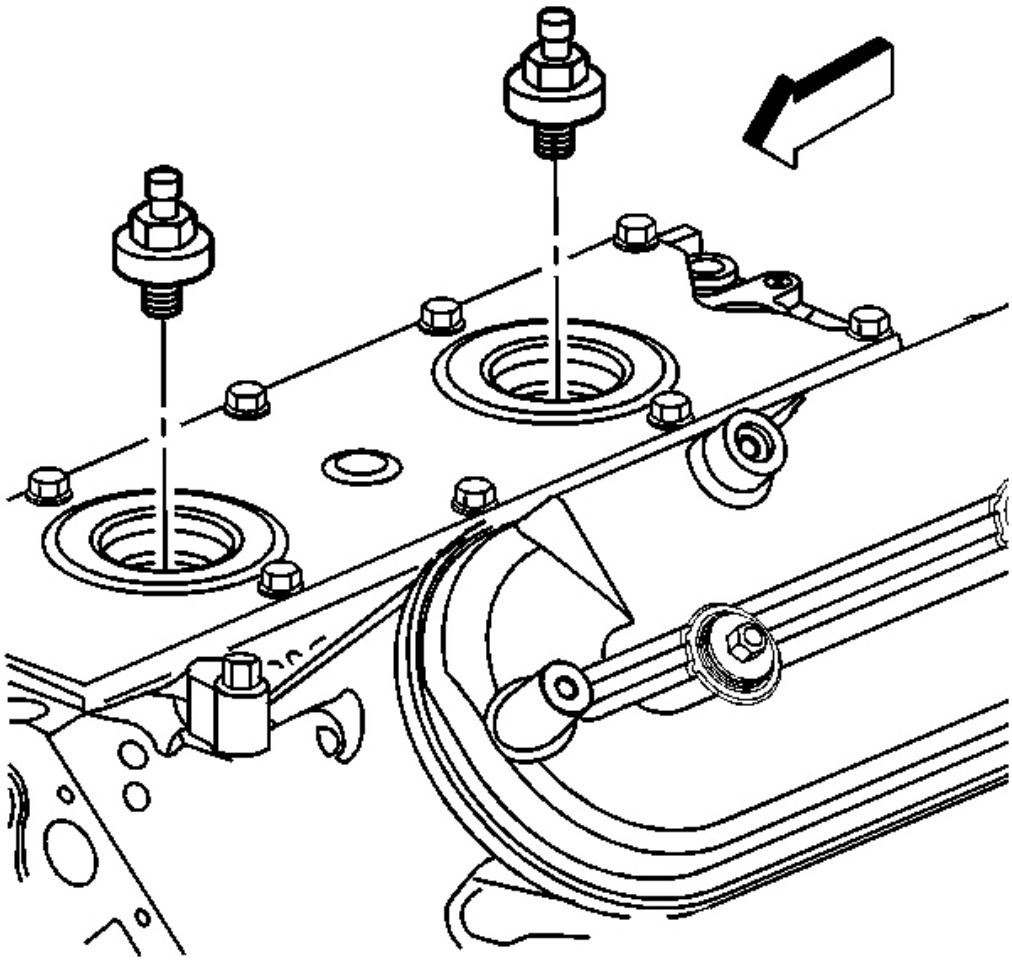

Fig. 17: View Of Knock Sensors
Courtesy of GENERAL MOTORS CORP.

2. Remove the knock sensors.

cardiagn.com

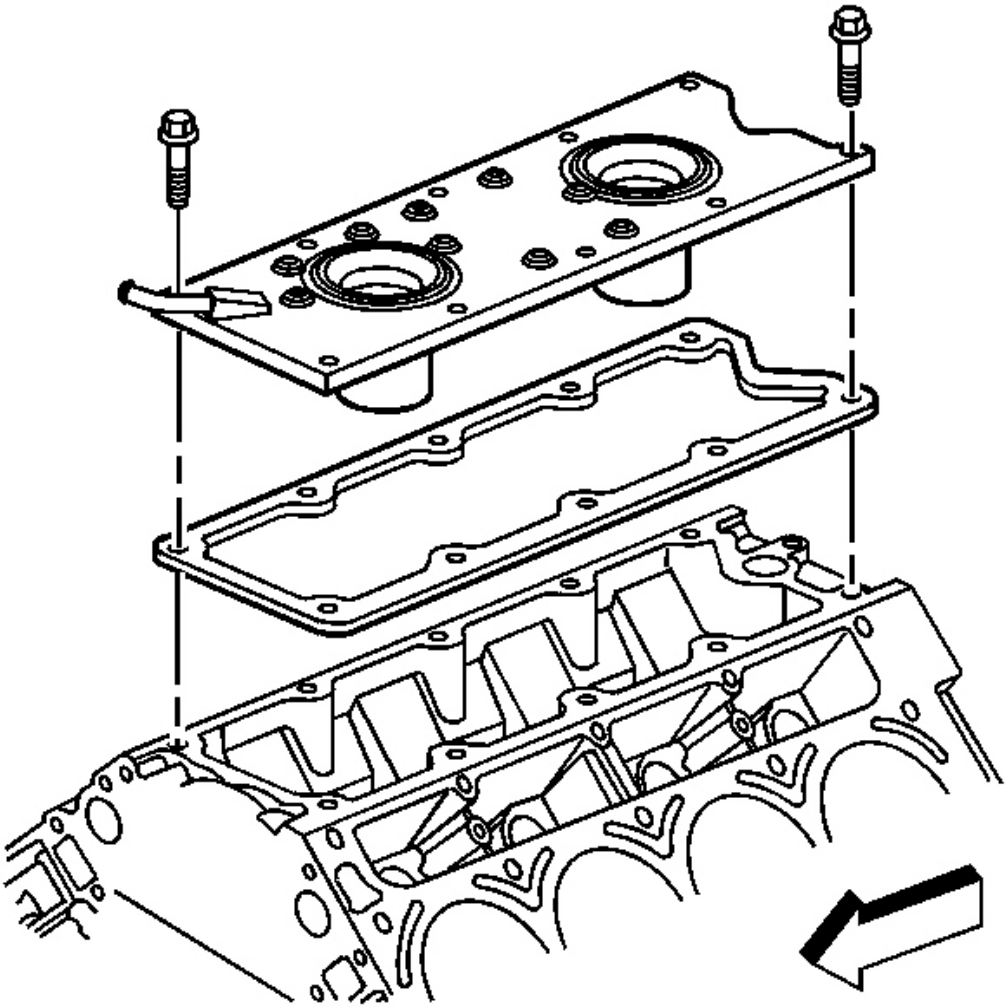

Fig. 18: Valley Cover Gasket & Bolts
Courtesy of GENERAL MOTORS CORP.

3. Remove the valley cover bolts.
4. Remove the valley cover and gasket.
5. Discard the valley cover gasket.

cardiagn.com

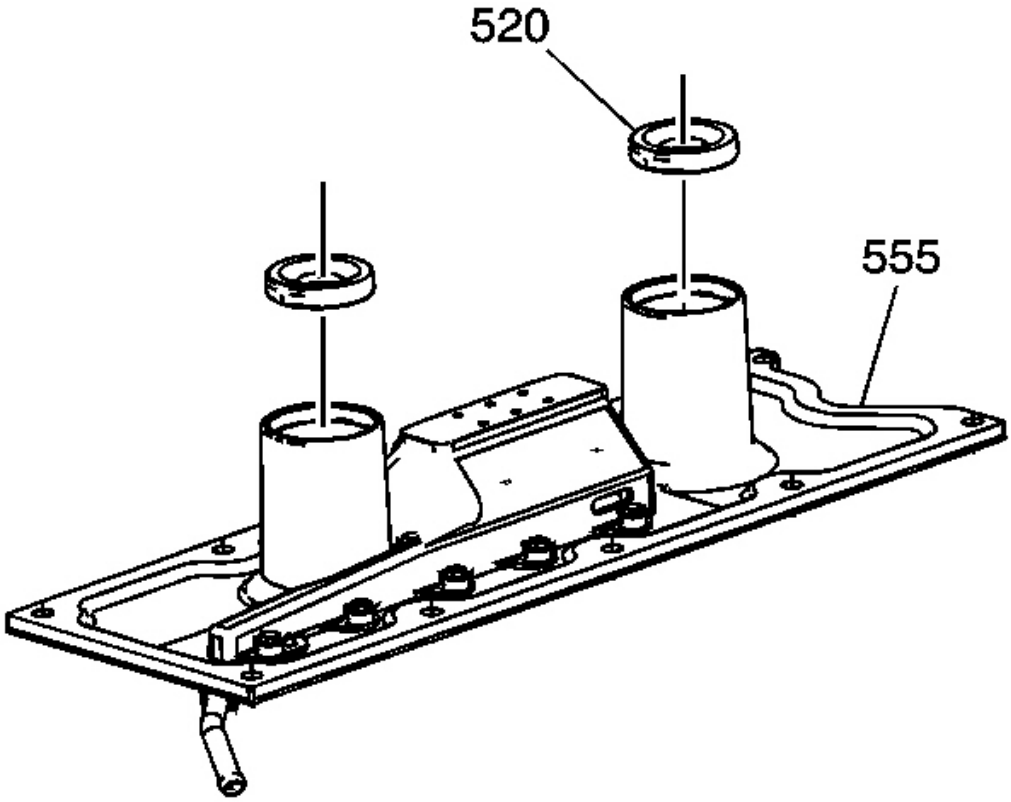

Fig. 19: Knock Sensor Oil Seals & Cover
Courtesy of GENERAL MOTORS CORP.

6. Remove the knock sensor oil seals (520) from the cover (555).

VALVE ROCKER ARM COVER REMOVAL - LEFT

cardiagn.com

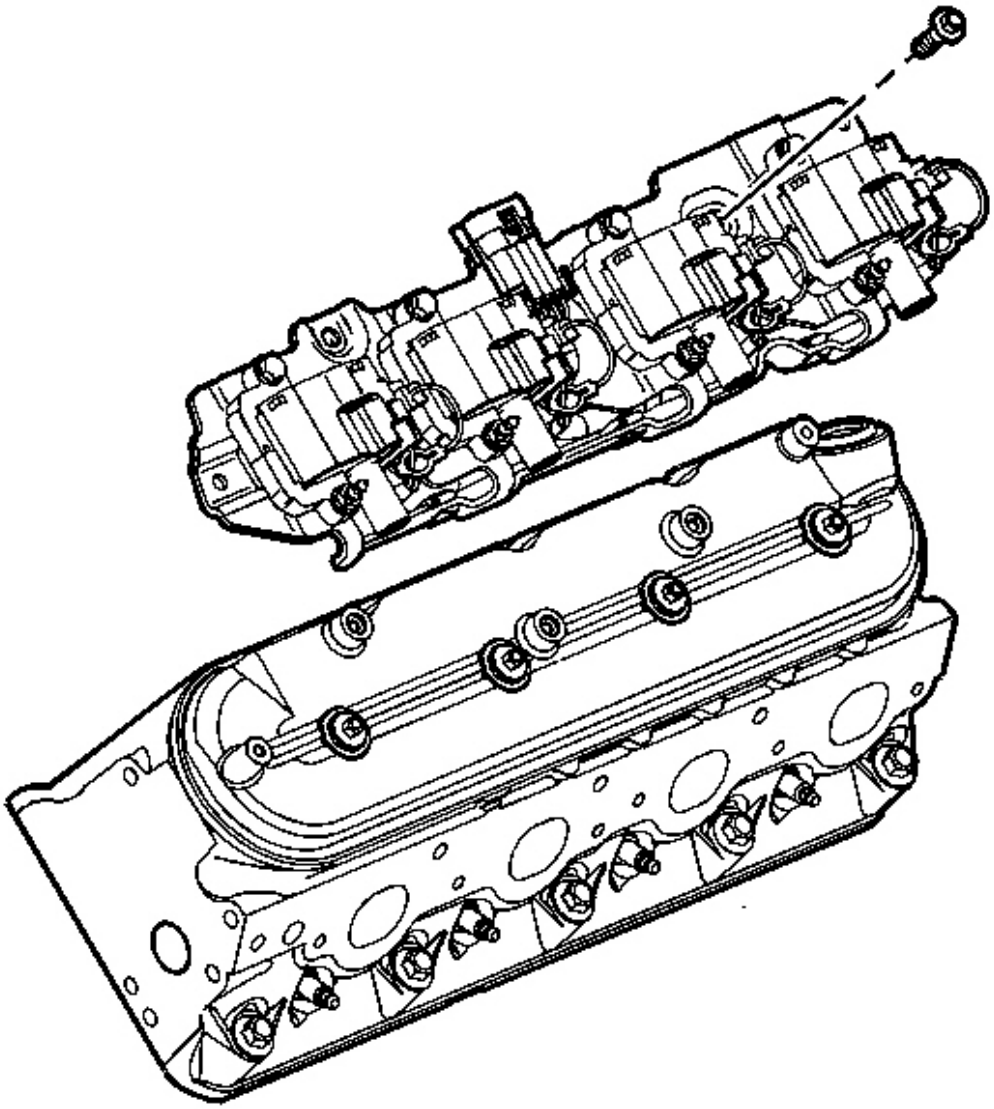

Fig. 20: Ignition Coil, Bracket Assembly & Bolts
Courtesy of GENERAL MOTORS CORP.

IMPORTANT:

- **Do not remove the positive crankcase ventilation (PCV) valve grommet from the cover unless service is required.**
- **If the grommet has been removed from the cover, a NEW grommet must be installed.**

cardiagn.com

1. Remove the ignition coil and bracket assembly and bolts.

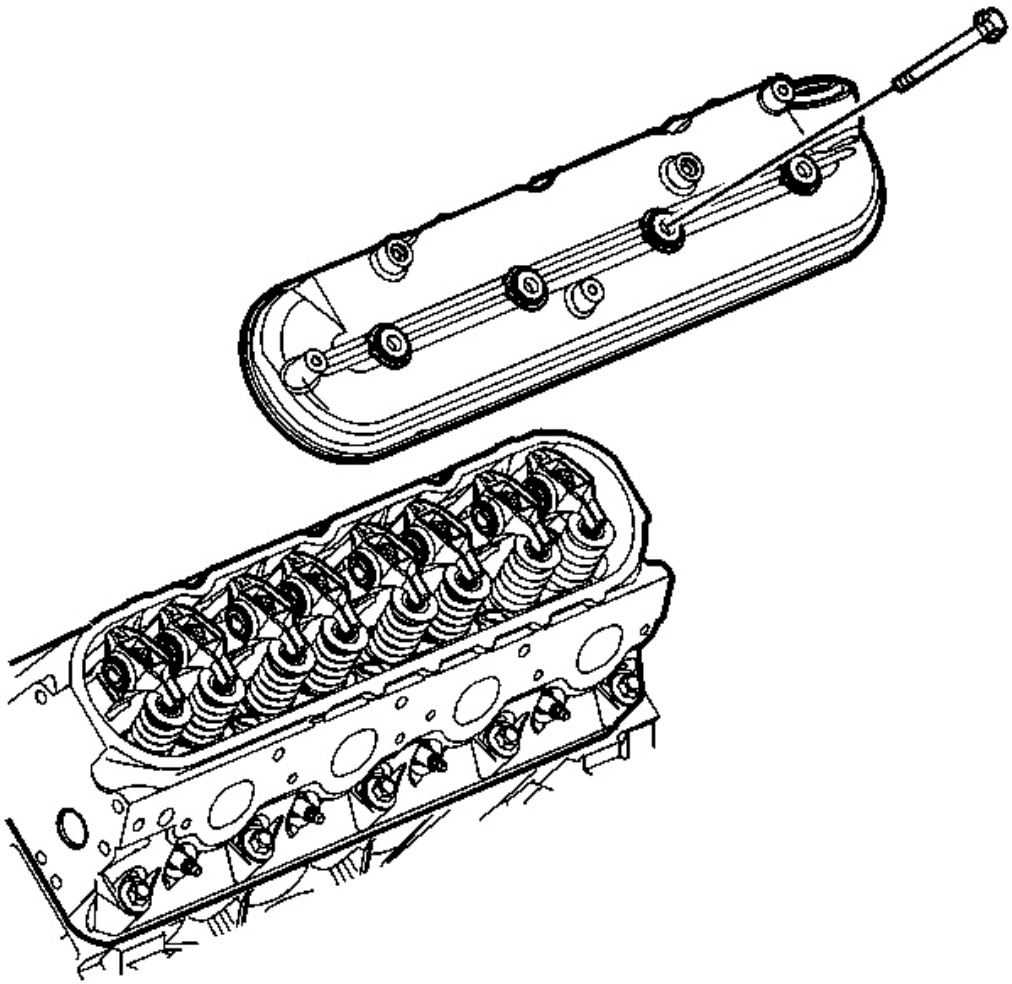

Fig. 21: Valve Cover To Cylinder Head View
Courtesy of GENERAL MOTORS CORP.

2. Remove the valve rocker arm cover bolts.
3. Remove the valve rocker arm cover.

cardiagn.com

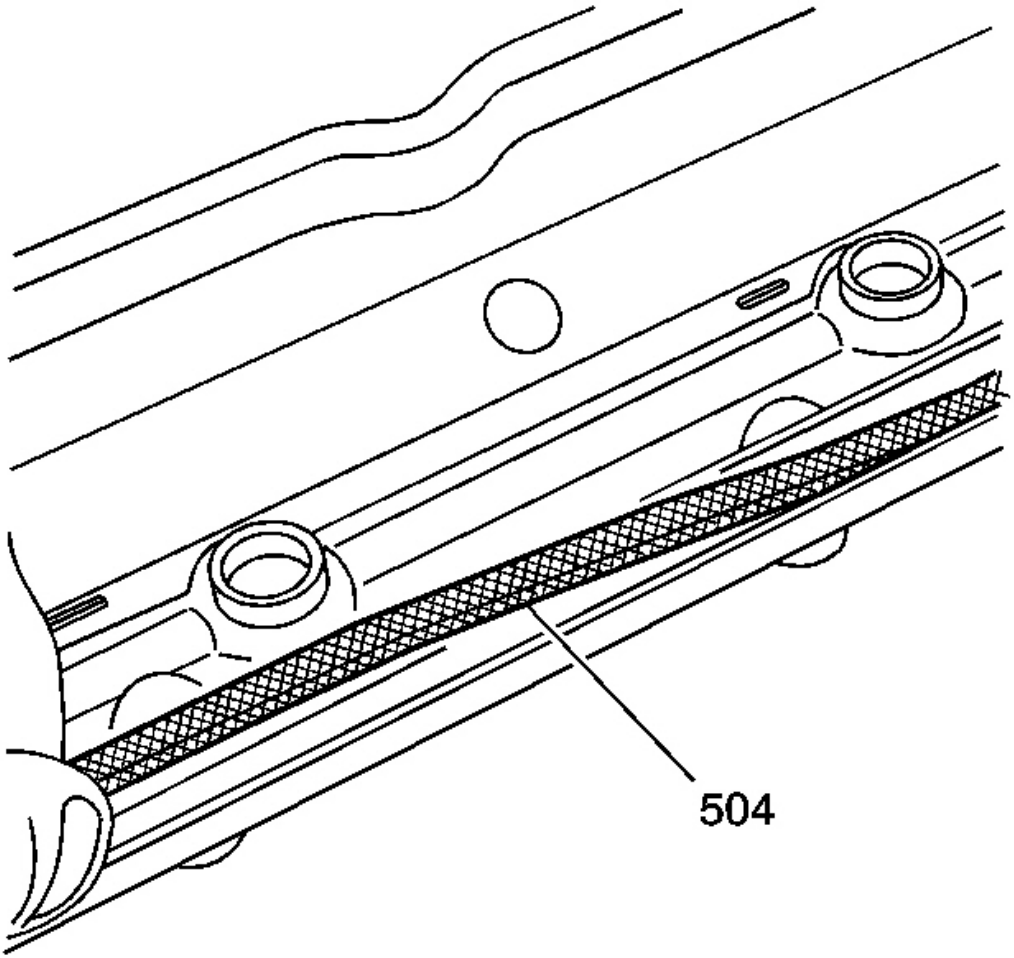

Fig. 22: View Of Valve Rocker Arm Cover Gasket
Courtesy of GENERAL MOTORS CORP.

4. Remove the gasket (504) from the cover.
5. Discard the gasket.

The bolt grommets may be used again, if not damaged.

cardiagn.com

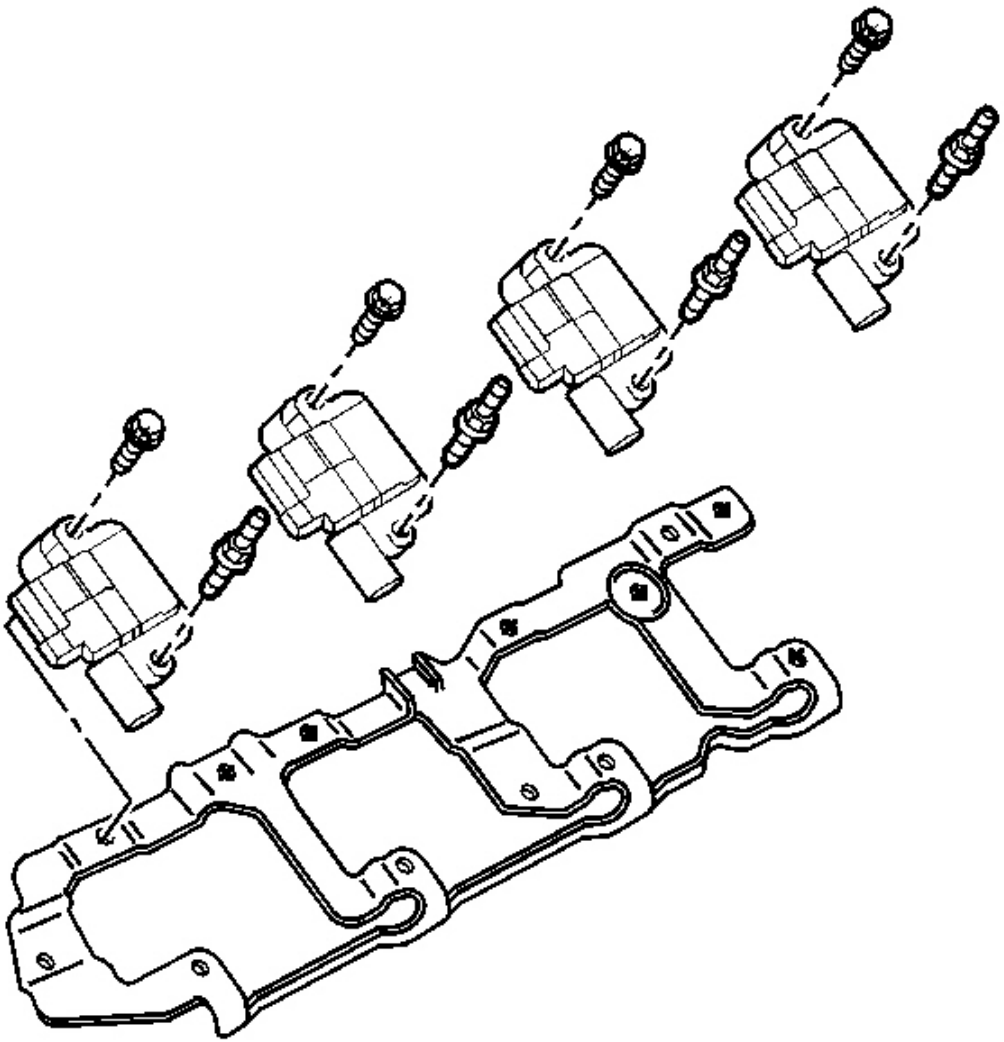

Fig. 23: View Of Left Ignition Coils & Bolts
Courtesy of GENERAL MOTORS CORP.

6. Remove the ignition coils, wire harness, and bolts from the bracket, if required.

VALVE ROCKER ARM COVER REMOVAL - RIGHT

cardiagn.com

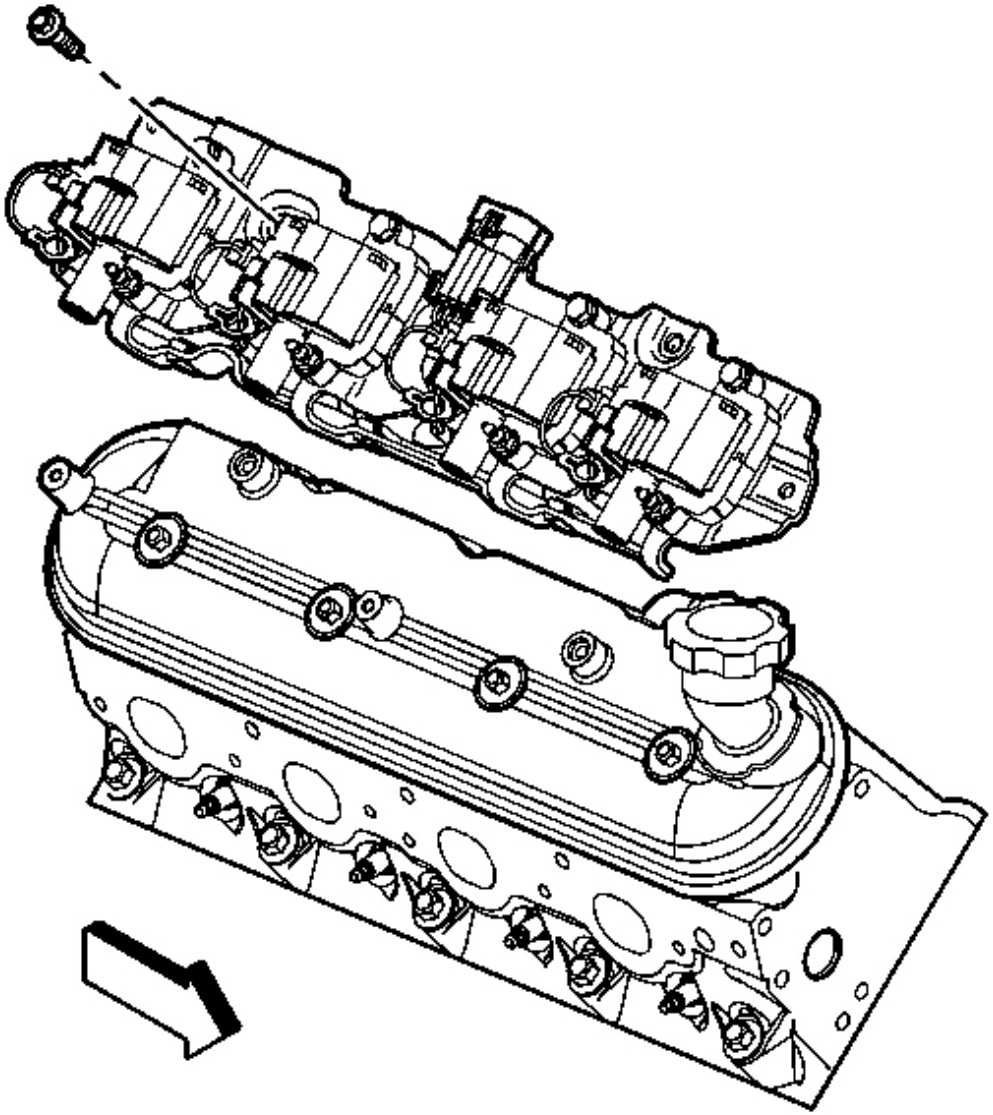

Fig. 24: View Of Right Ignition Coils & Bolts
Courtesy of GENERAL MOTORS CORP.

IMPORTANT:

- **Do not remove the oil fill tube from the cover unless service is required.**
- **If the oil fill tube has been removed from the cover, install a NEW tube during assembly.**

cardiagn.com

1. Remove the ignition coil and bracket assembly and bolts.

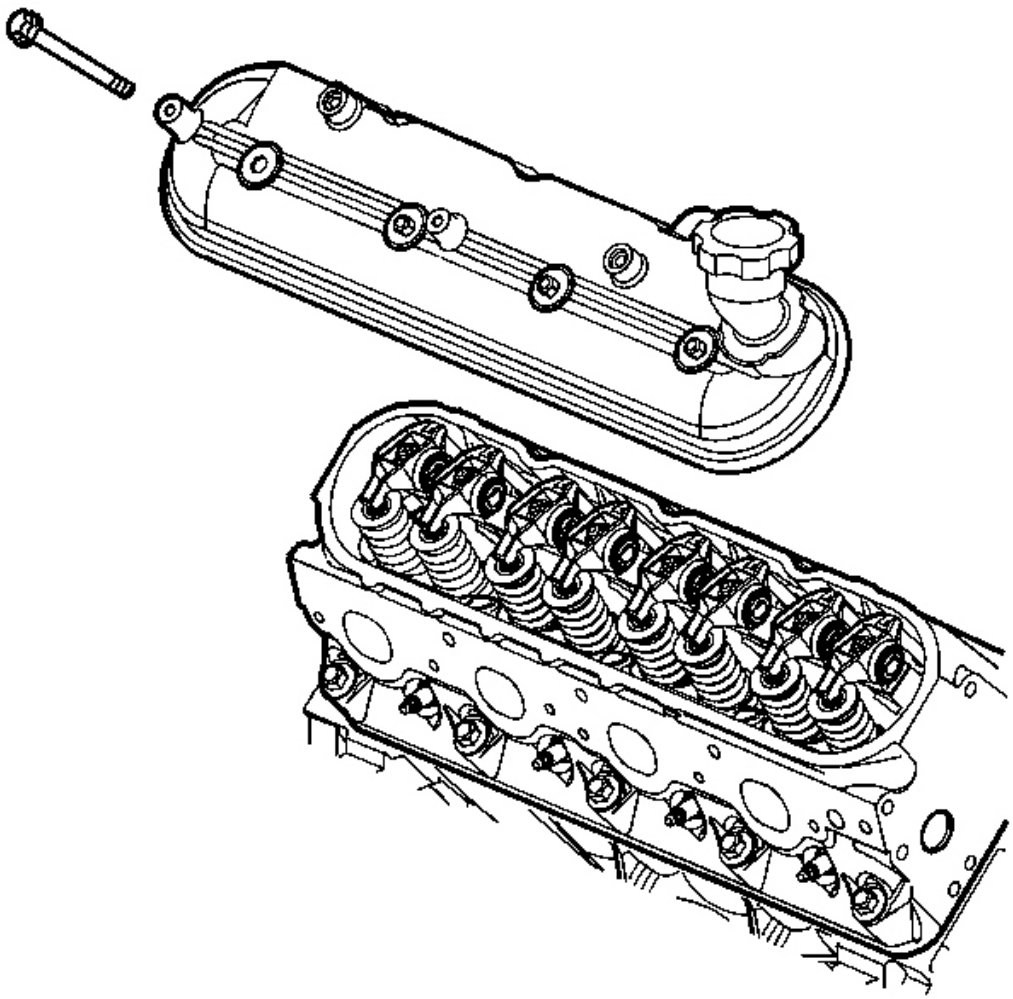

Fig. 25: View Of Valve Rocker Arm Cover & Bolts (Right)
Courtesy of GENERAL MOTORS CORP.

2. Remove the valve rocker arm cover bolts.
3. Remove the valve rocker arm cover.

cardiagn.com

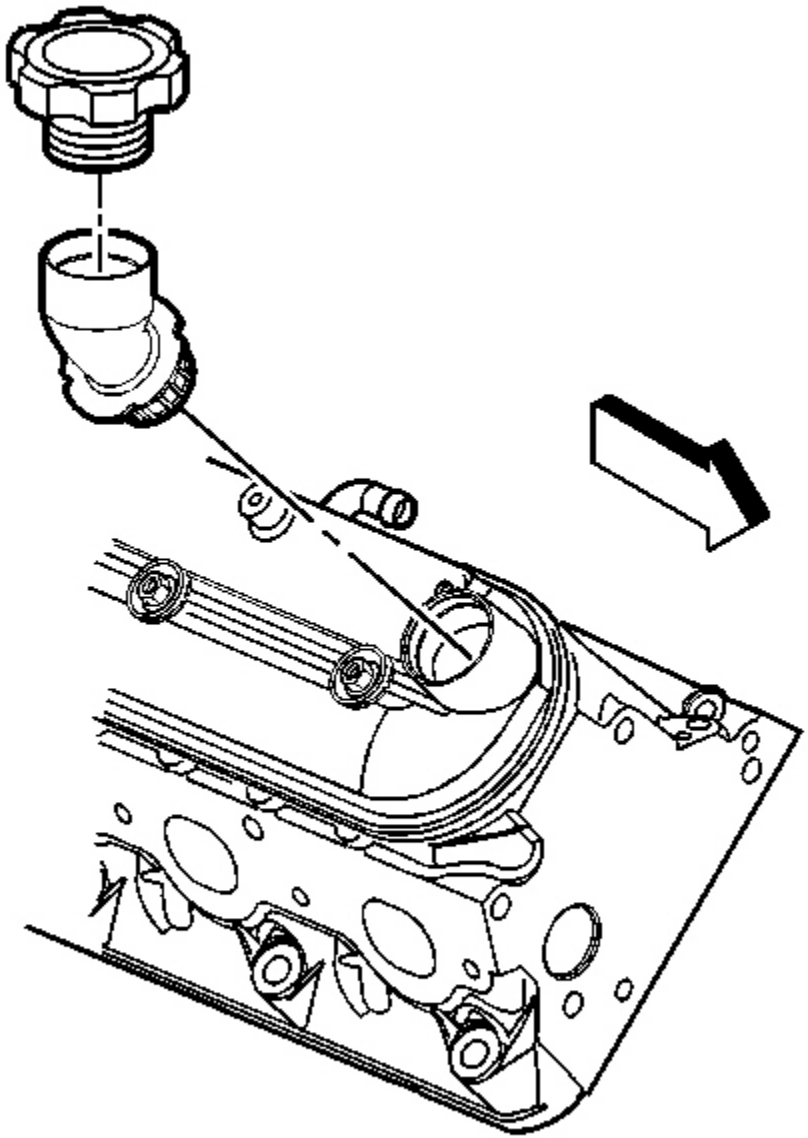

Fig. 26: View Of Oil Fill Tube
Courtesy of GENERAL MOTORS CORP.

4. Remove the oil fill cap from the oil fill tube.
5. Remove the oil fill tube, if required.
6. Discard the oil fill tube.

cardiagn.com

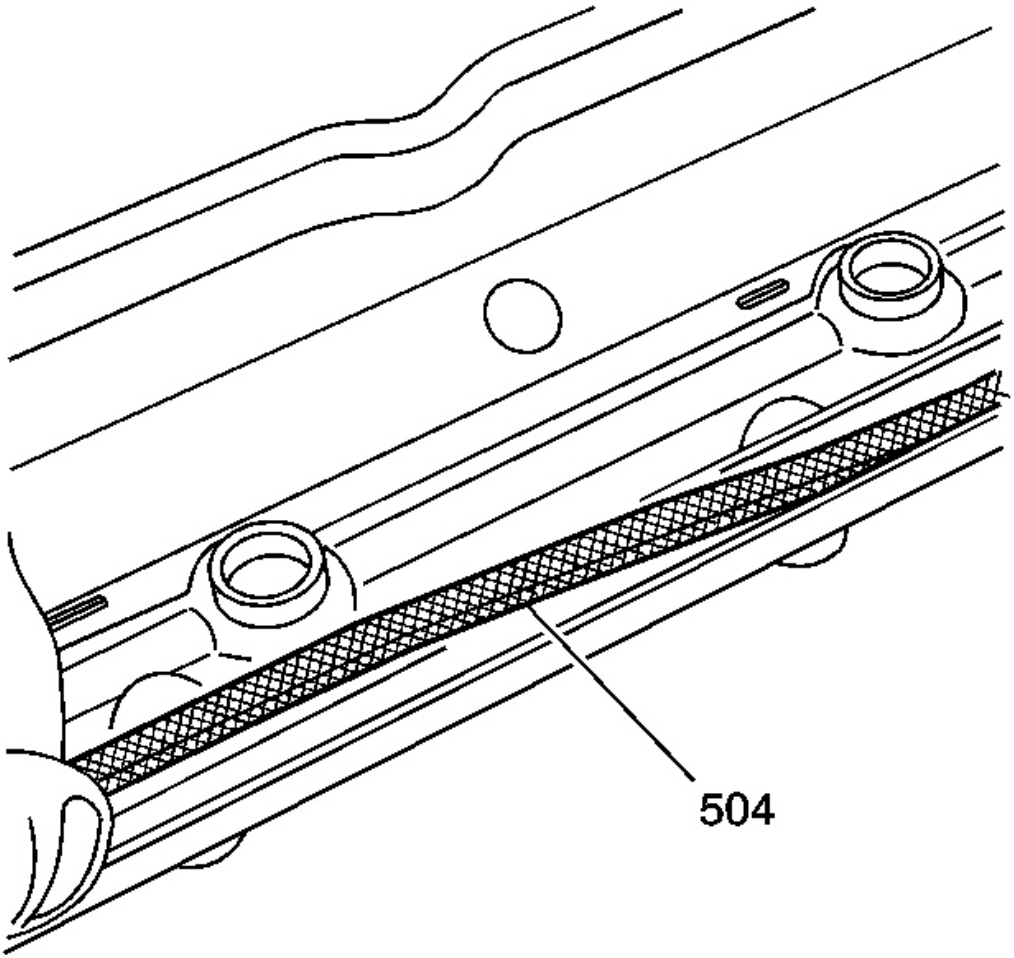

Fig. 27: View Of Valve Rocker Arm Cover Gasket
Courtesy of GENERAL MOTORS CORP.

7. Remove the gasket (504) from the cover.
8. Discard the gasket.

The bolt grommets may be used again, if not damaged.

cardiagn.com

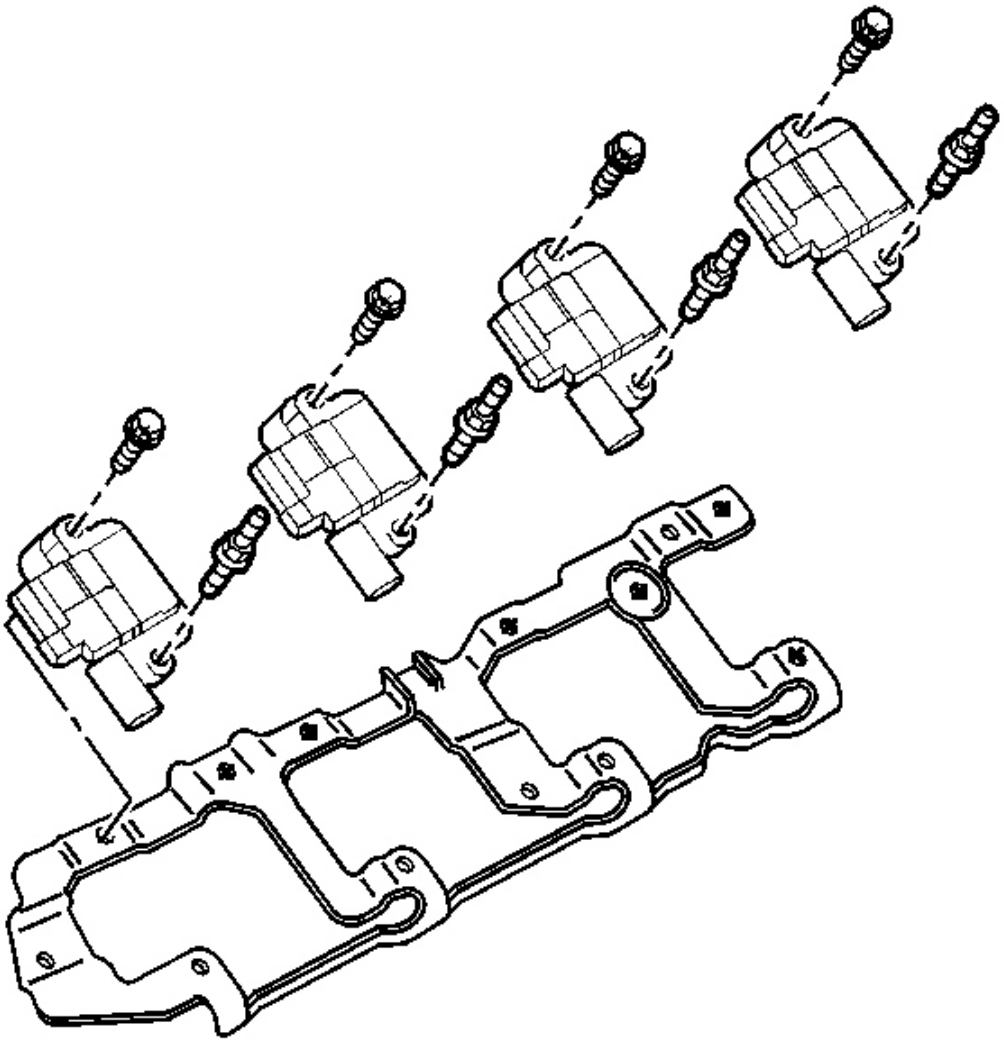

Fig. 28: View Of Left Ignition Coils & Bolts
Courtesy of GENERAL MOTORS CORP.

9. Remove the ignition coils, wire harness, and bolts from the bracket, if required.

VALVE ROCKER ARM AND PUSH ROD REMOVAL

IMPORTANT: Place valve rocker arms, valve pushrods, and pivot support, in a rack so that they can be installed in the same location from which they were removed.

cardiagn.com

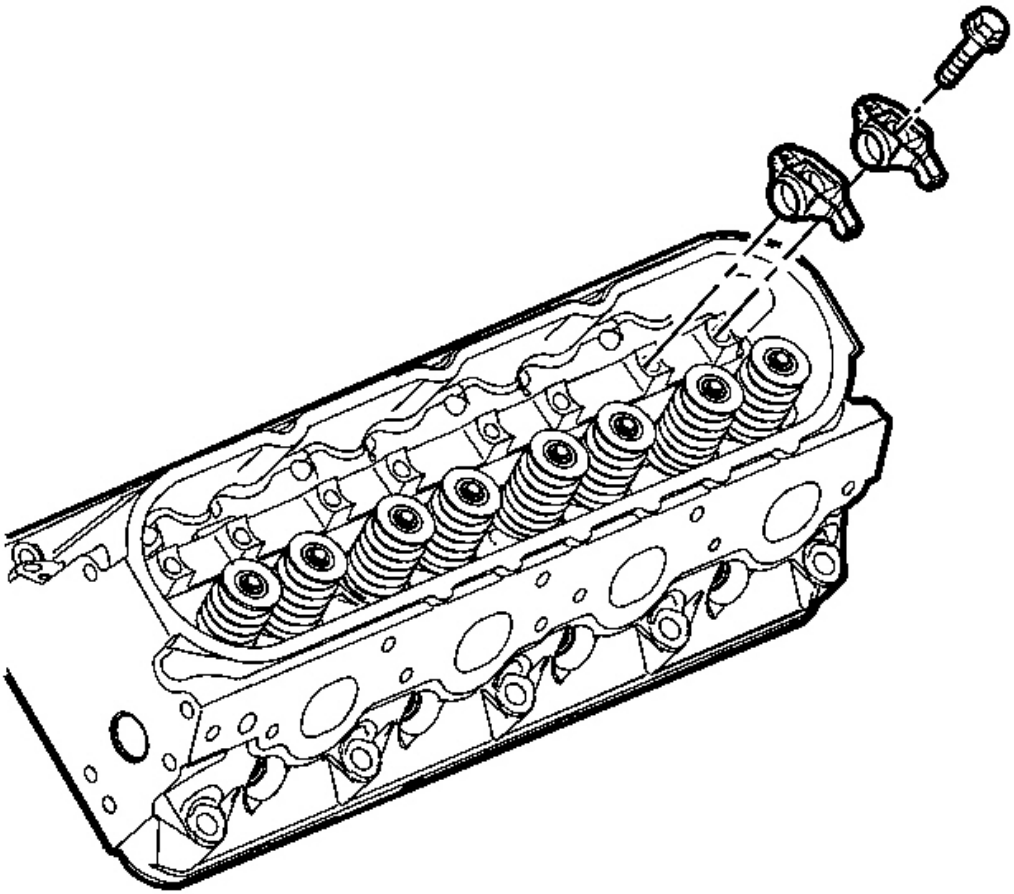

Fig. 29: View Of Valve Rocker Arms
Courtesy of GENERAL MOTORS CORP.

1. Remove the valve rocker arm bolts.
2. Remove the valve rocker arms.

cardiagn.com

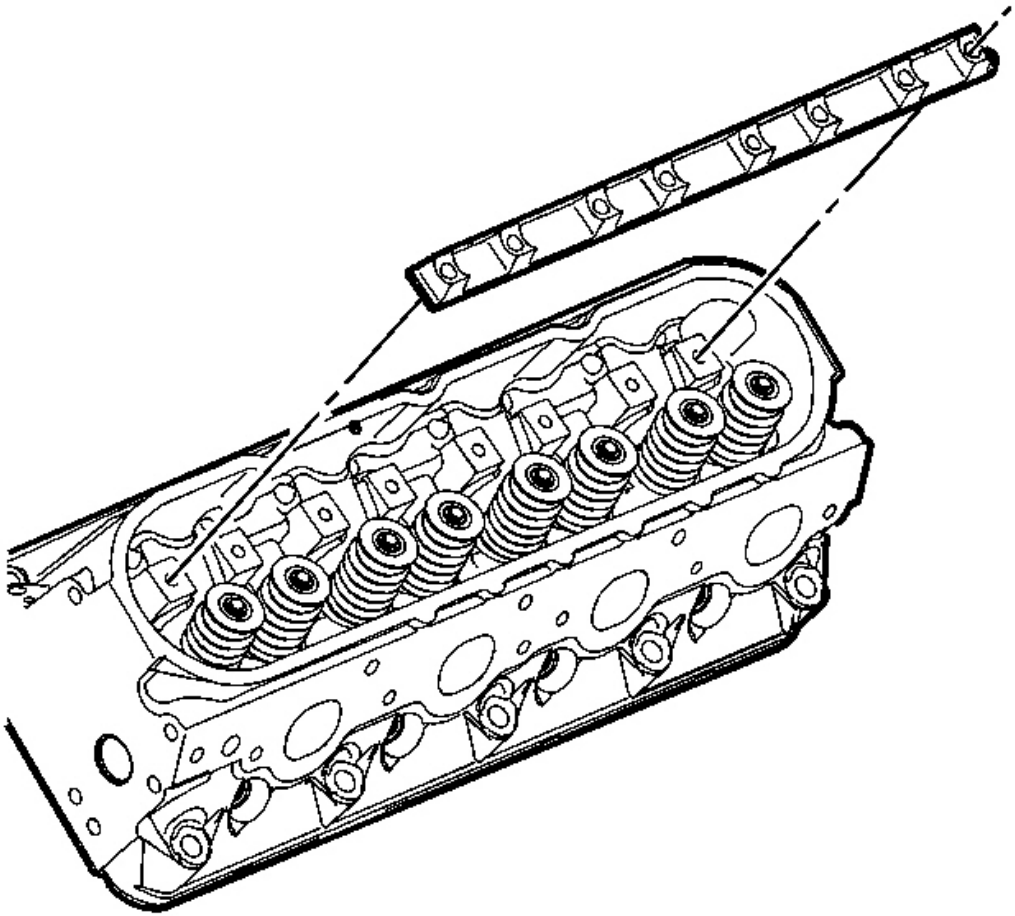

Fig. 30: View Of Valve Rocker Arm Pivot Support
Courtesy of GENERAL MOTORS CORP.

3. Remove the valve rocker arm pivot support.

cardiagn.com

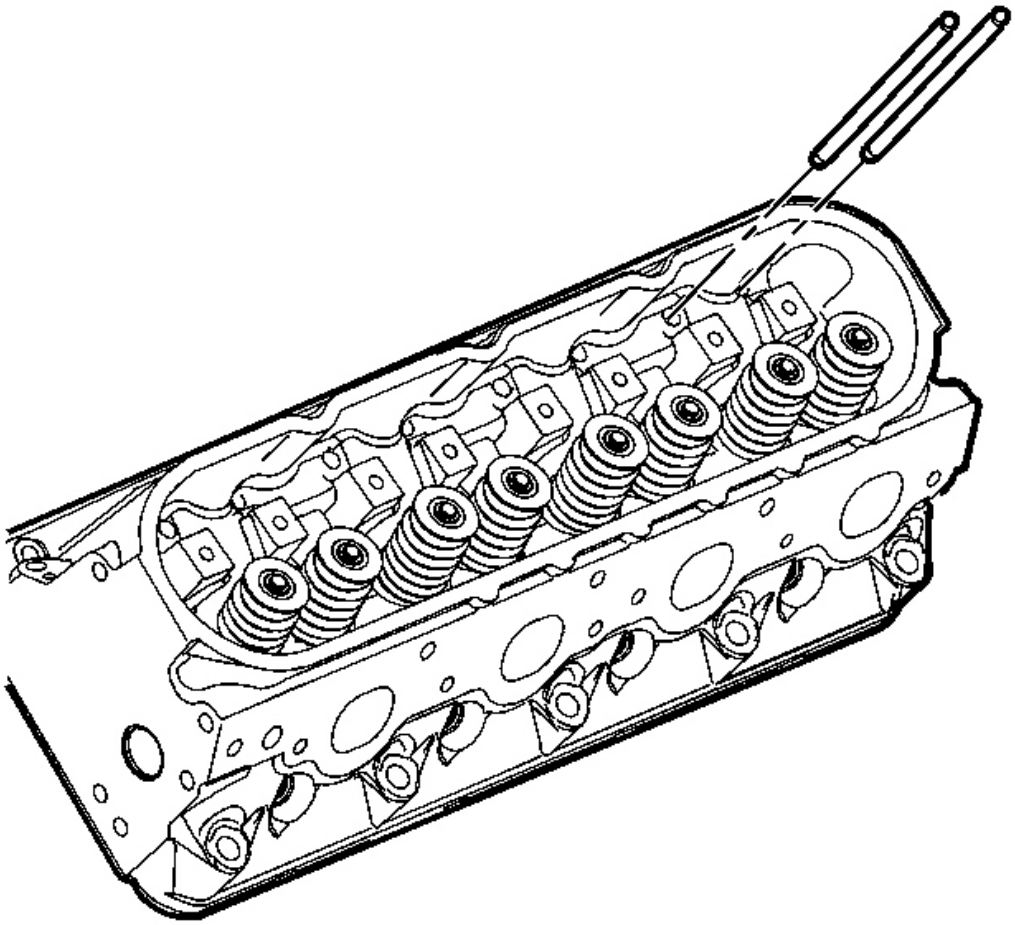

Fig. 31: View Of Pushrods
Courtesy of GENERAL MOTORS CORP.

4. Remove the pushrods.

CYLINDER HEAD REMOVAL - LEFT

cardiagn.com

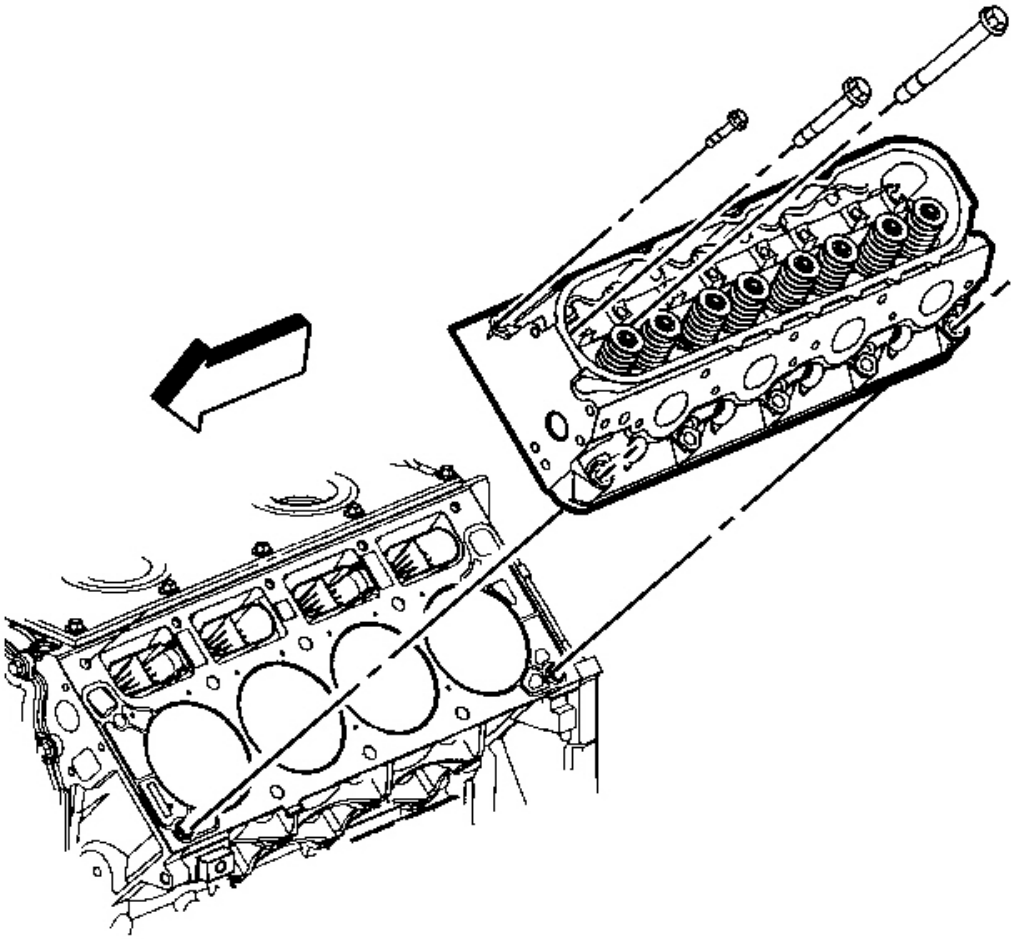

Fig. 32: View Of Cylinder Head & Bolts (Left)
Courtesy of GENERAL MOTORS CORP.

1. Remove the spark plugs from the cylinder head.

IMPORTANT: The cylinder head bolts can NOT be used again. Install NEW cylinder head bolts during assembly.

2. Remove the cylinder head bolts.

NOTE: After removal, place the cylinder head on two wood blocks to prevent damage to the sealing surfaces.

cardiagn.com

3. Remove the cylinder head.

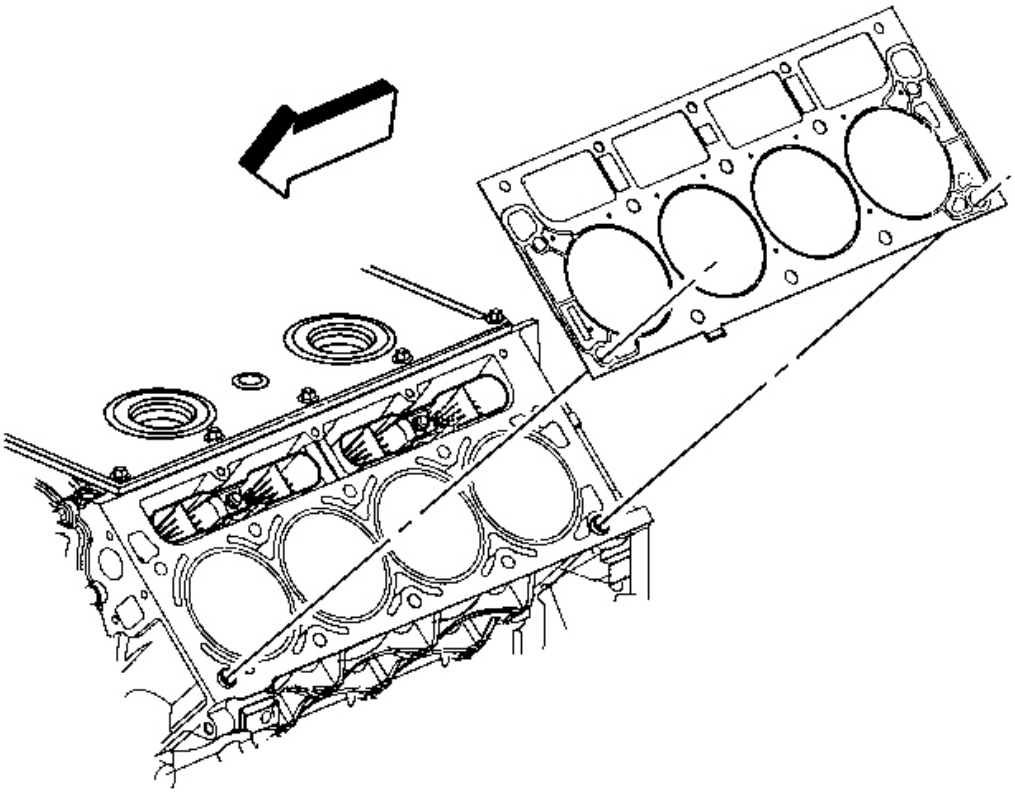

Fig. 33: View Of Cylinder Head Gasket (Left)
Courtesy of GENERAL MOTORS CORP.

4. Remove the gasket.
5. Discard the gasket.
6. Discard the cylinder head bolts.

CYLINDER HEAD REMOVAL - RIGHT

cardiagn.com

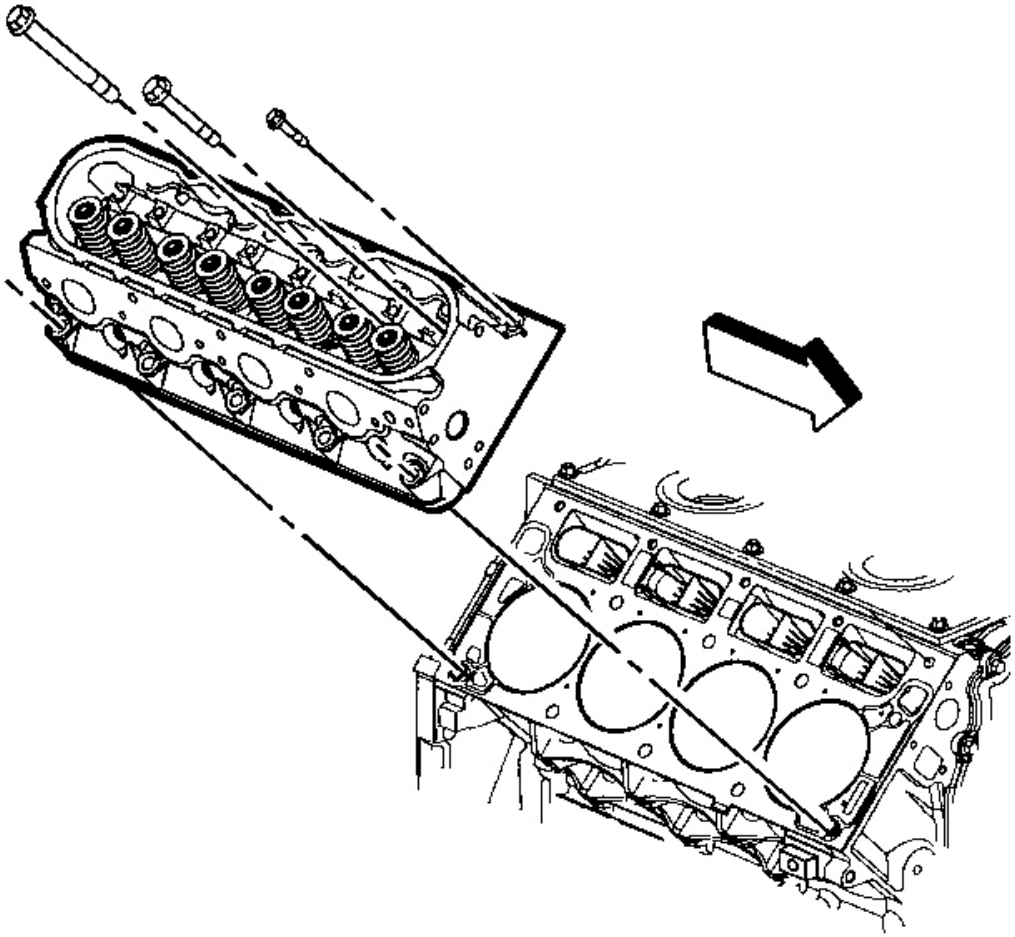

Fig. 34: View Of Cylinder Head & Bolts
Courtesy of GENERAL MOTORS CORP.

1. Remove the spark plugs from the cylinder head.

IMPORTANT: The cylinder head bolts can NOT be used again. Install NEW cylinder head bolts during assembly.

2. Remove the cylinder head bolts.

NOTE: After removal, place the cylinder head on two wood blocks to prevent damage to the sealing surfaces.

cardiagn.com

3. Remove the cylinder head.

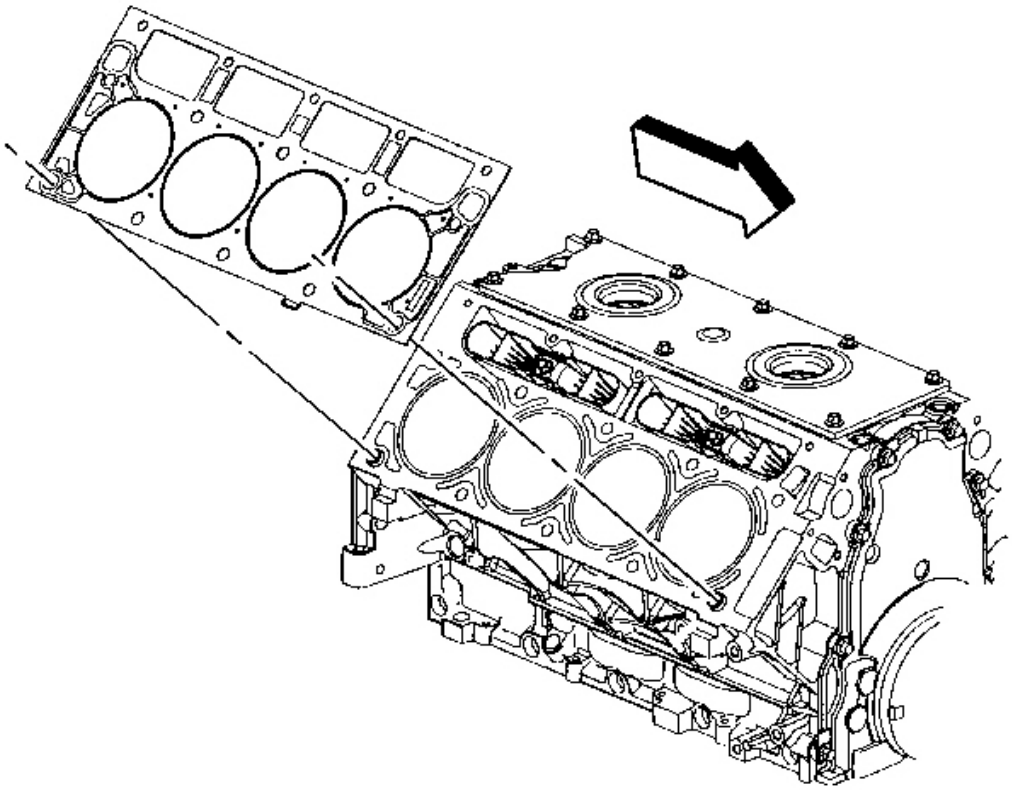

Fig. 35: View Of Cylinder Head Gasket (Right)
Courtesy of GENERAL MOTORS CORP.

4. Remove the gasket.
5. Discard the gasket.
6. Discard the cylinder head bolts.

VALVE LIFTER REMOVAL

Tools Required

J 3049-A Valve Lifter Remover

cardiagn.com

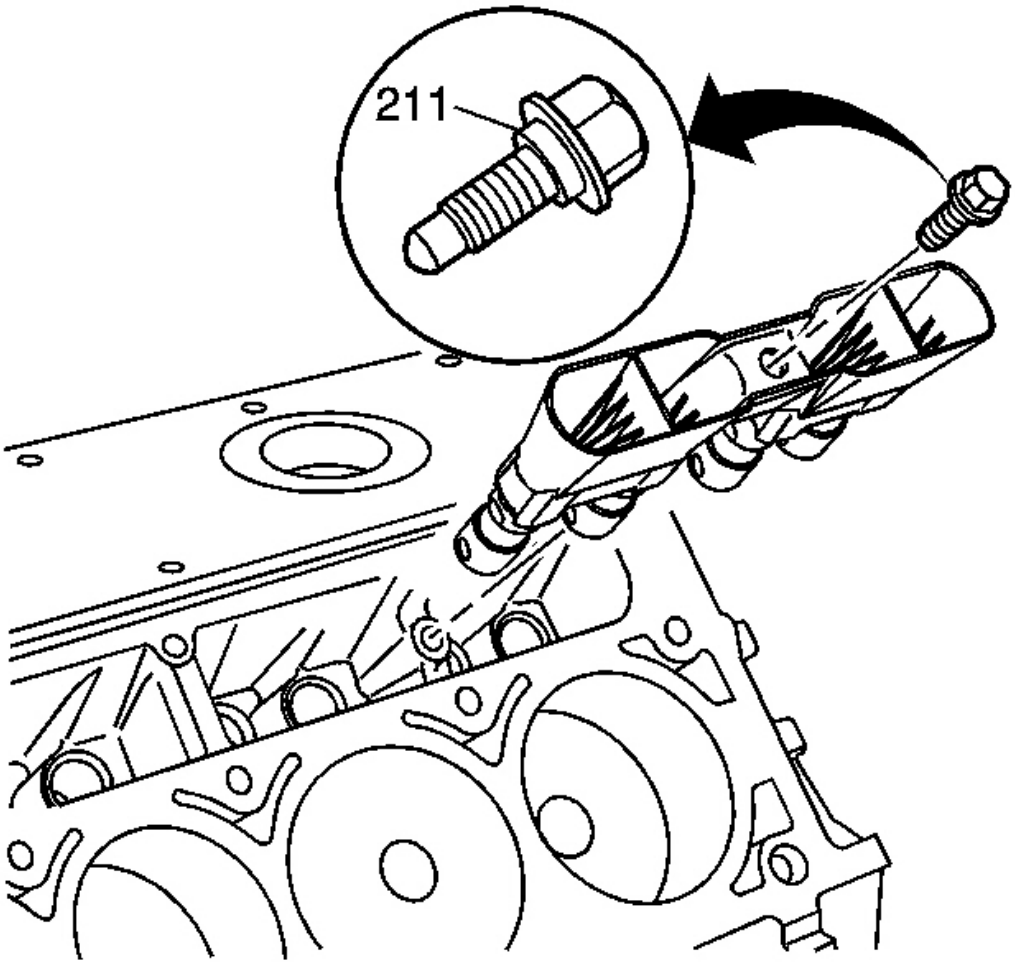

Fig. 36: View Of Valve Lifter & Guide Bolts
Courtesy of GENERAL MOTORS CORP.

1. Remove the valve lifter guide bolts (211).
2. Remove the valve lifters and guide.

cardiagn.com

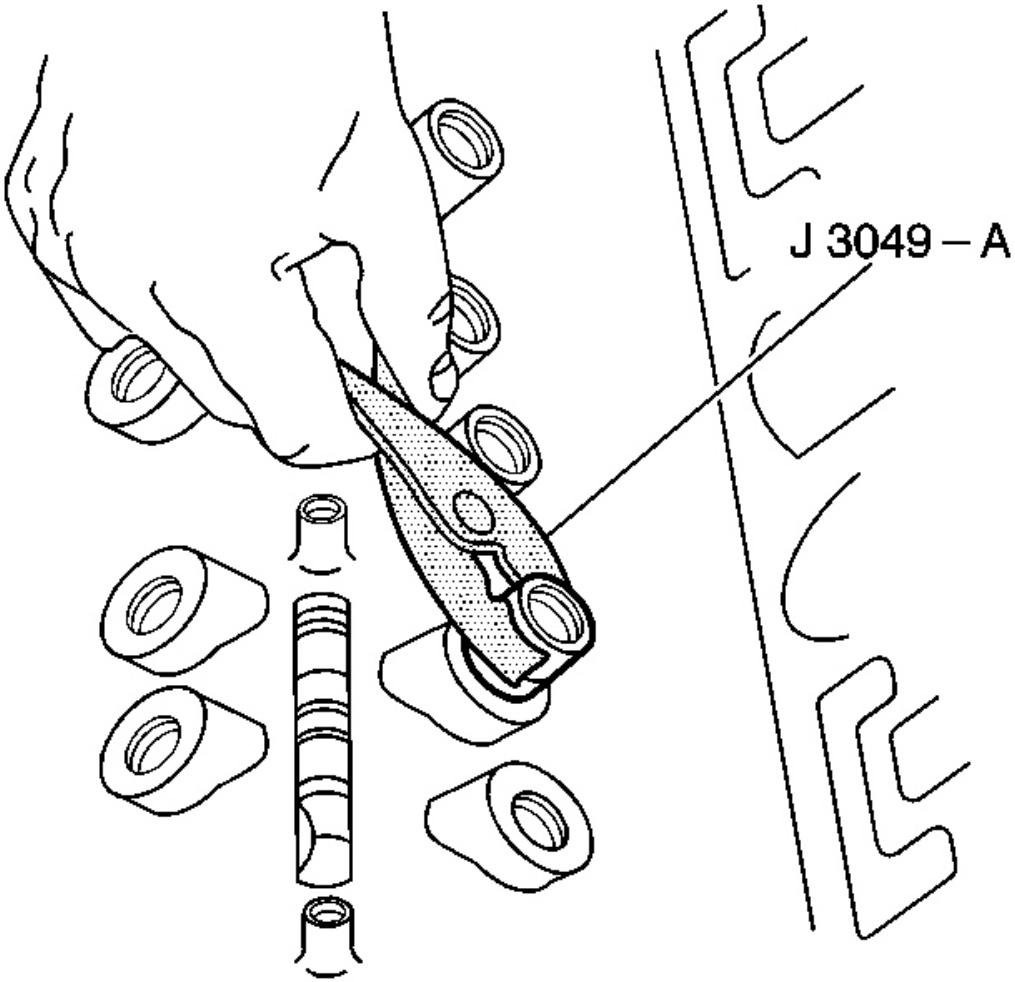

Fig. 37: Using J 3049-A To Remove The Stuck Valve Lifters
Courtesy of GENERAL MOTORS CORP.

IMPORTANT: Some valve lifters may be stuck in their bores because of gum or varnish deposits.

3. Use the **J 3049-A** or equivalent in order to remove the valve lifters, if required.

cardiagn.com

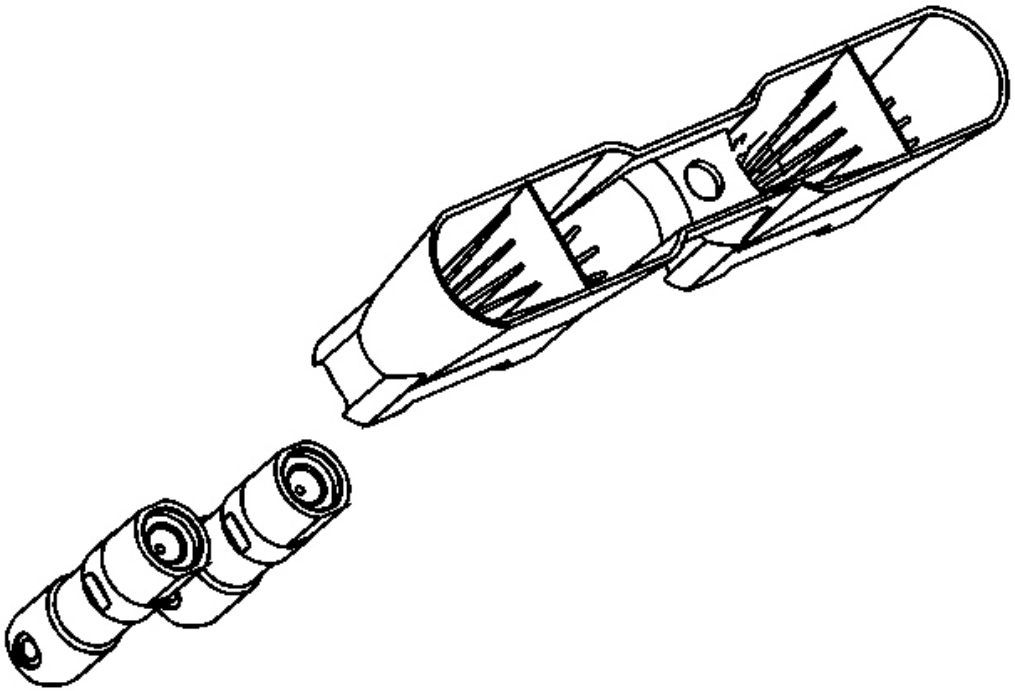

Fig. 38: View Of Valve Lifters Removed From Guide
Courtesy of GENERAL MOTORS CORP.

4. Remove the valve lifters from the guide.
5. Organize or mark the components so that they can be installed in the same location from which they were removed. Refer to **Separating Parts** .

OIL FILTER, ADAPTER AND PAN COVER REMOVAL

cardiagn.com

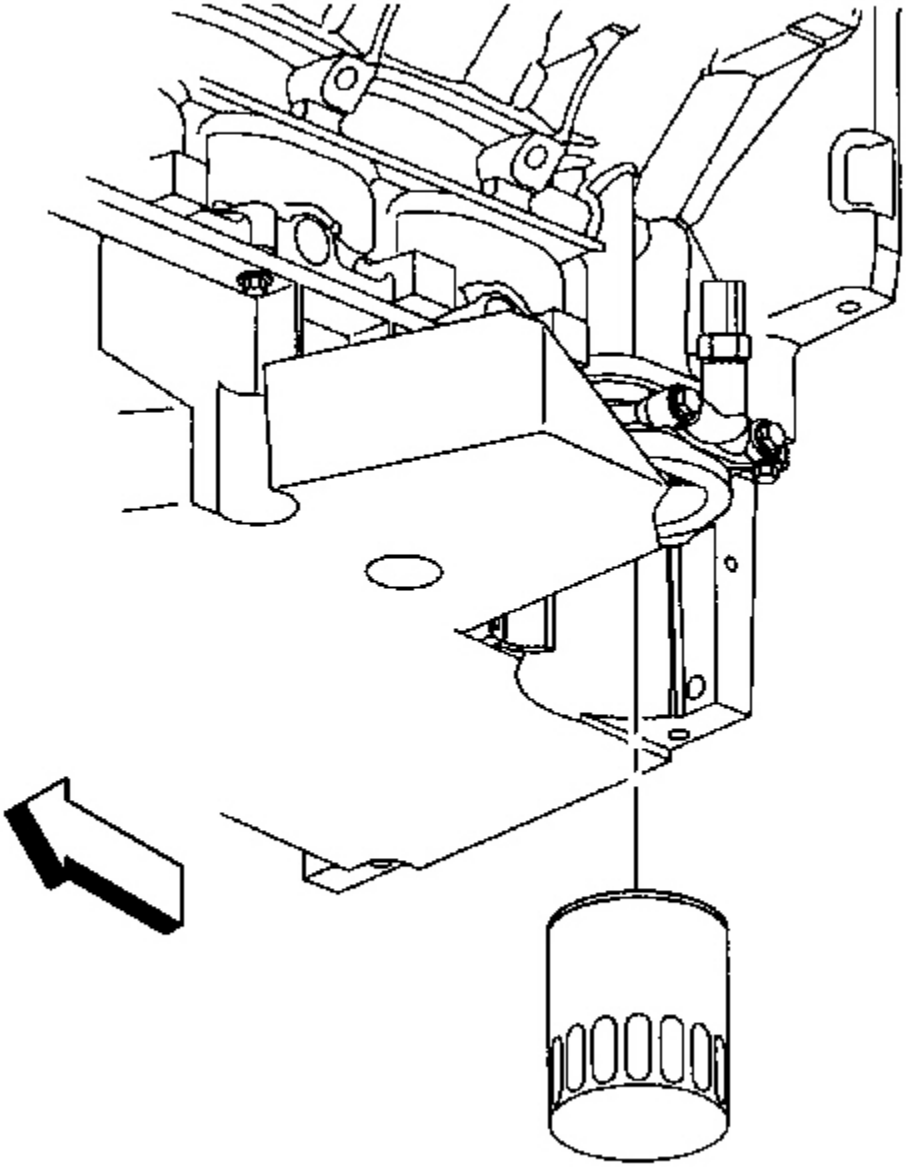

Fig. 39: Oil Filter
Courtesy of GENERAL MOTORS CORP.

1. Remove the oil filter.

cardiagn.com

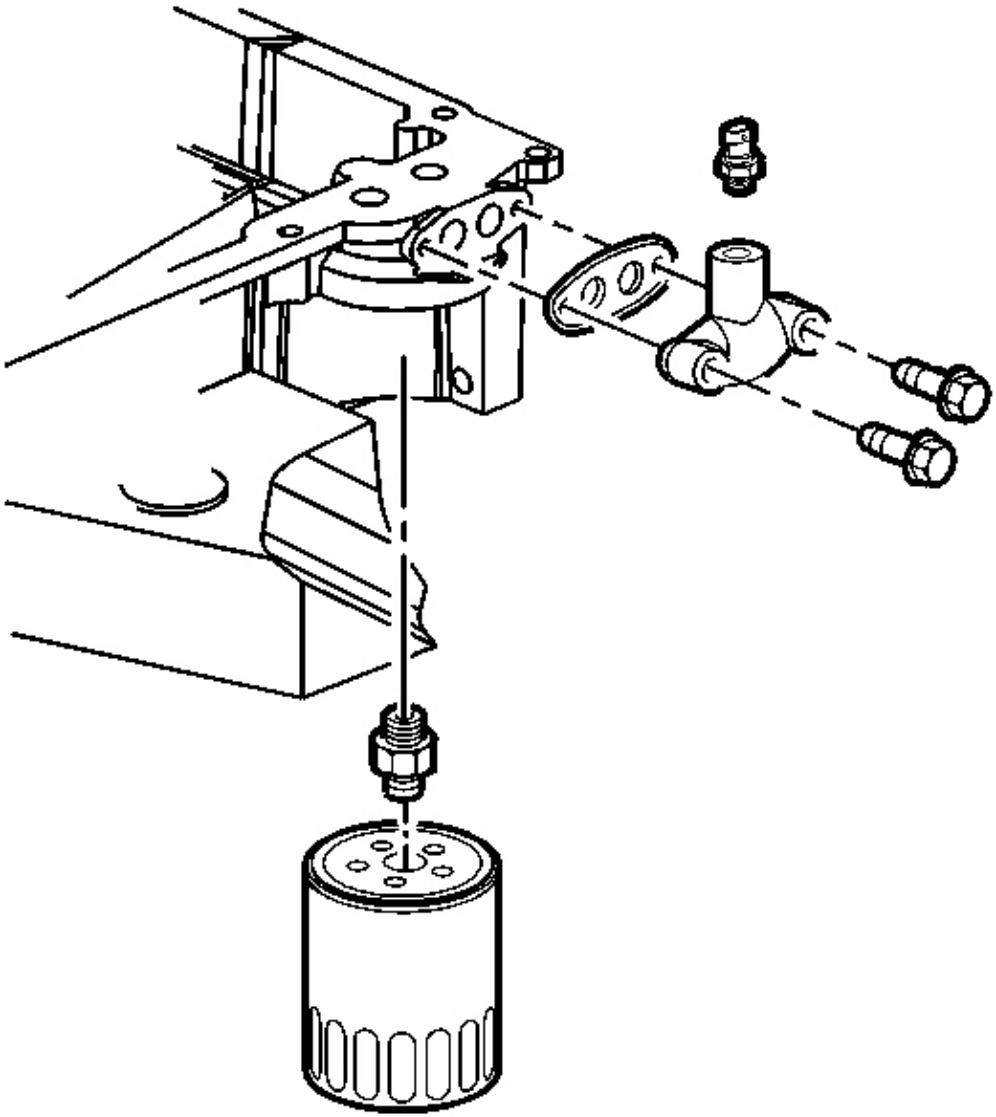

Fig. 40: Oil Temperature Sensor, Oil Pan Cover, Bolts, And Gasket
Courtesy of GENERAL MOTORS CORP.

2. Remove the oil temperature sensor from the oil pan cover.
3. Remove the oil pan cover, bolts, and gasket.
4. Discard the gasket.

cardiagn.com

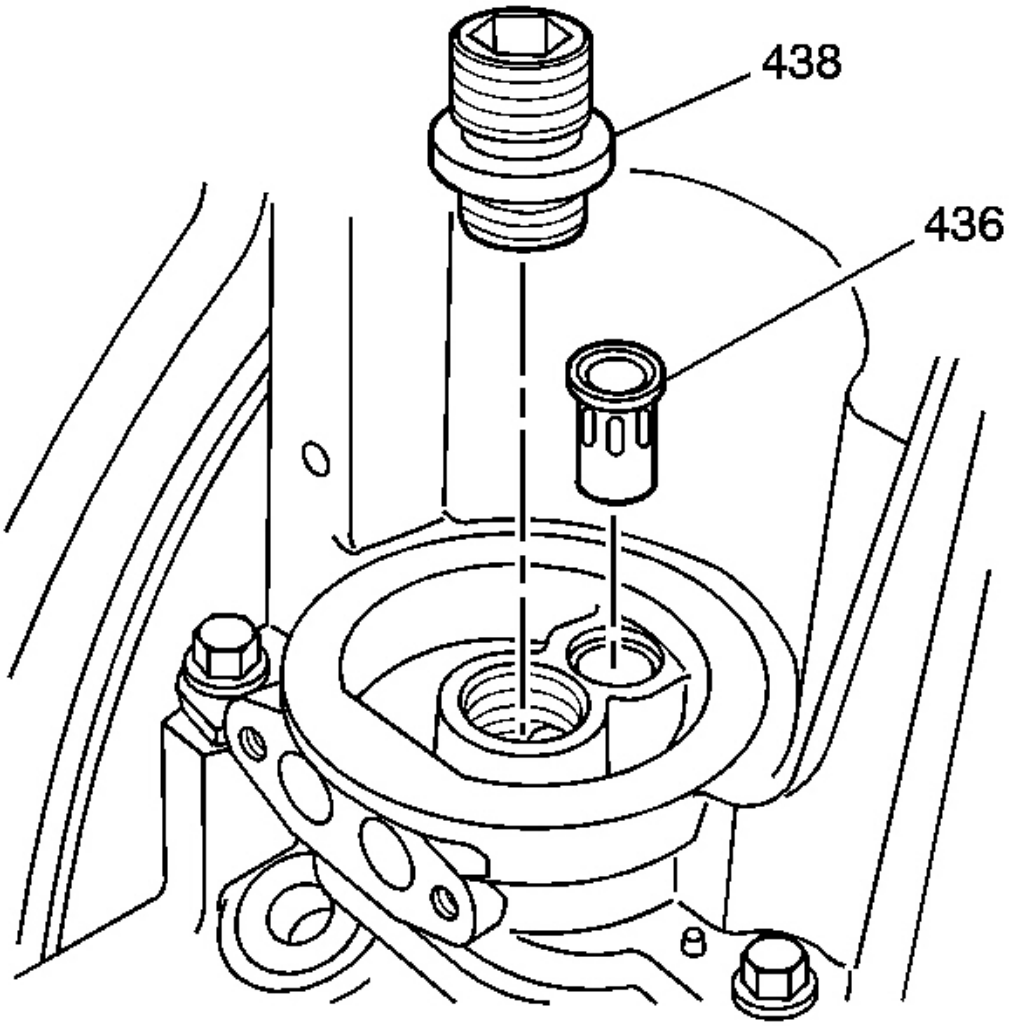

Fig. 41: View Of Oil Filter Fitting & Valve
Courtesy of GENERAL MOTORS CORP.

5. Remove the oil filter fitting (438) and valve (436), if required.

OIL PAN REMOVAL

cardiagn.com

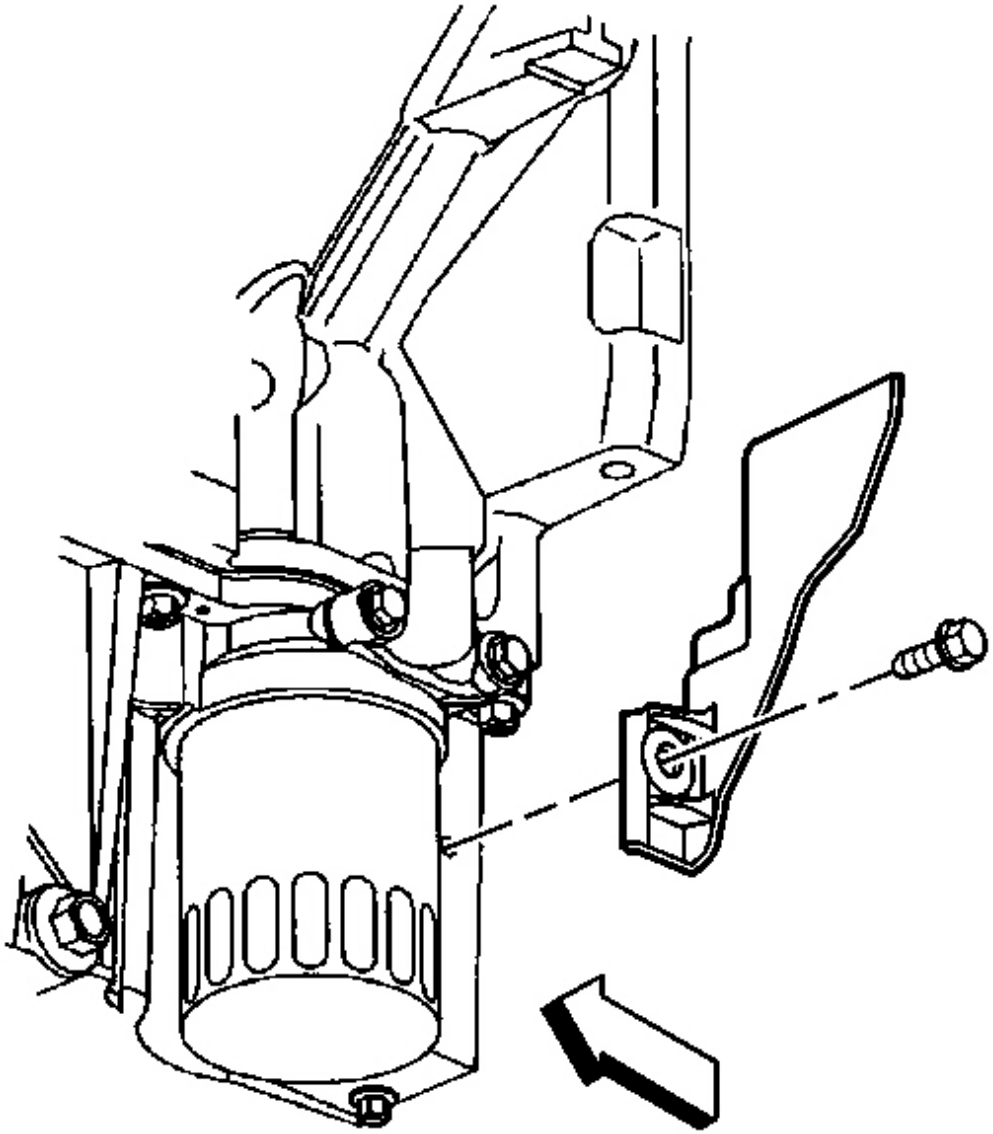

Fig. 42: View Of Left Closeout Cover & Bolt
Courtesy of GENERAL MOTORS CORP.

IMPORTANT:

- **It is not necessary to remove the oil pan - lower - in order to remove the oil pan assembly.**
- **The original oil pan gasket is retained and aligned to the oil pan by**

cardiagn.com

rivets. When installing a new gasket, it is not necessary to install new oil pan gasket rivets.

- **DO NOT use the oil pan gaskets again. When installing the oil pan, install NEW oil pan gaskets.**

1. Remove the left closeout cover and bolt.

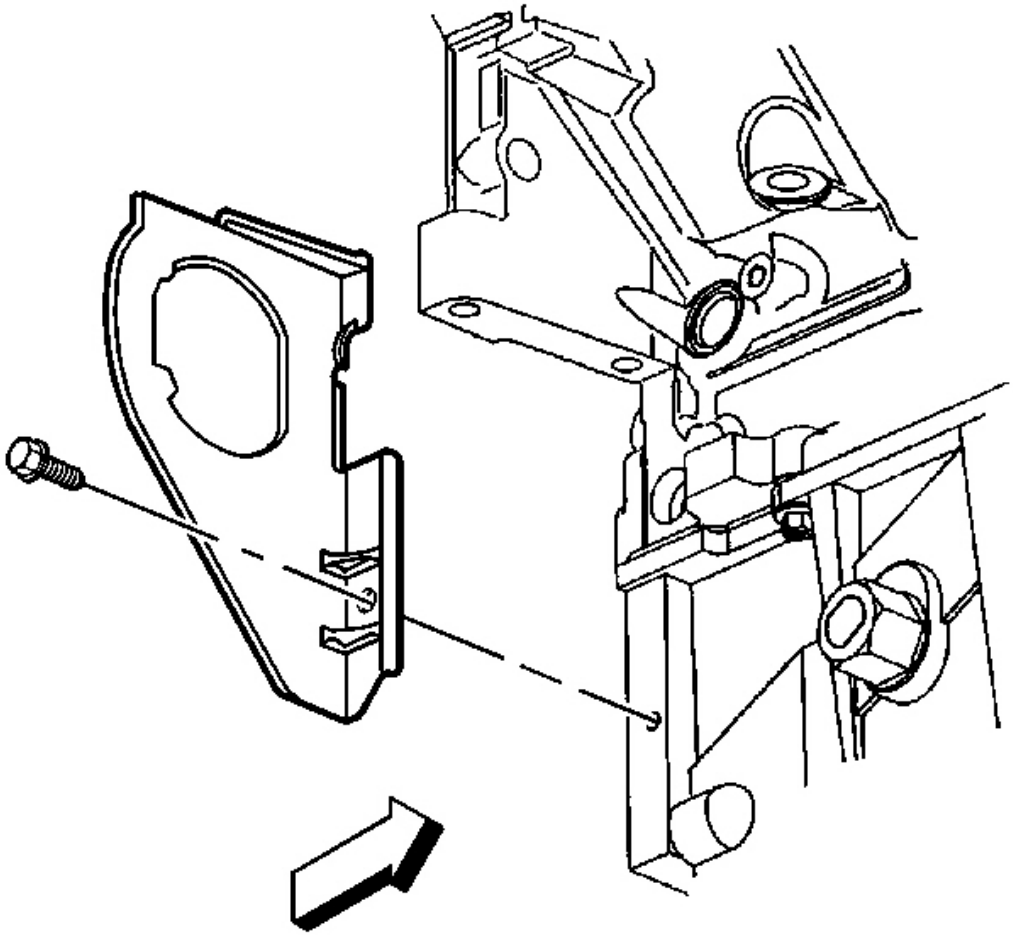

Fig. 43: View Of Right Closeout Cover & Bolt
Courtesy of GENERAL MOTORS CORP.

2. Remove the right closeout cover and bolt.

cardiagn.com

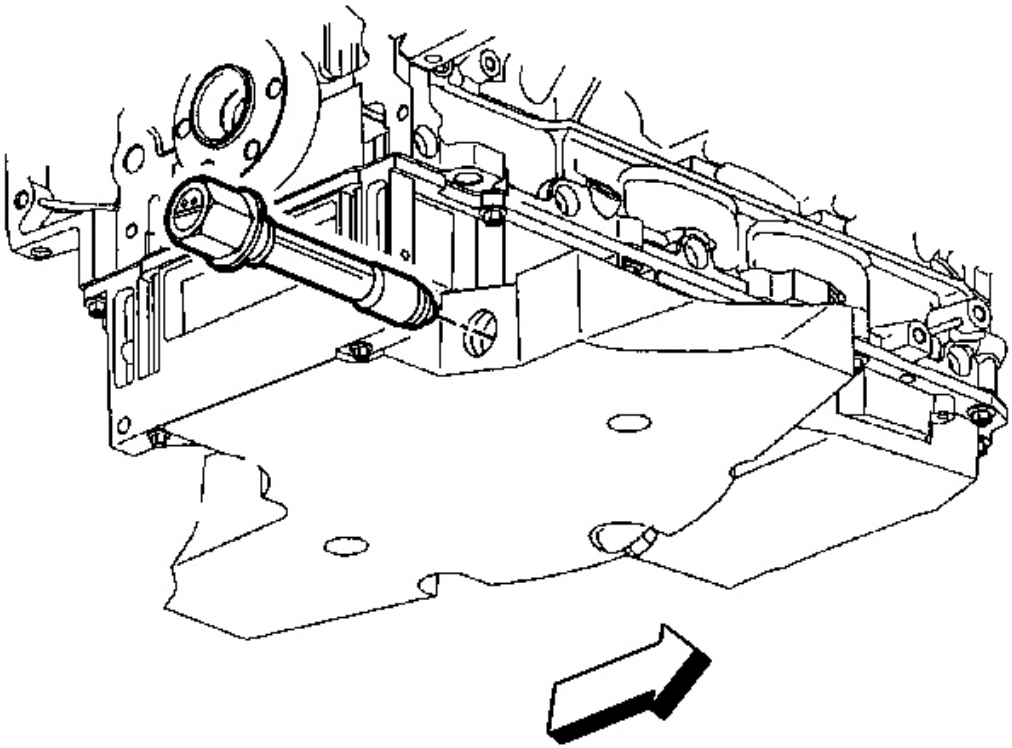

Fig. 44: Oil Level Sensor & Oil Pan
Courtesy of GENERAL MOTORS CORP.

IMPORTANT: It is not necessary to remove the oil level sensor prior to oil pan removal. Remove the oil level sensor if service is required.

3. Remove the oil level sensor from the oil pan, if required.

cardiagn.com

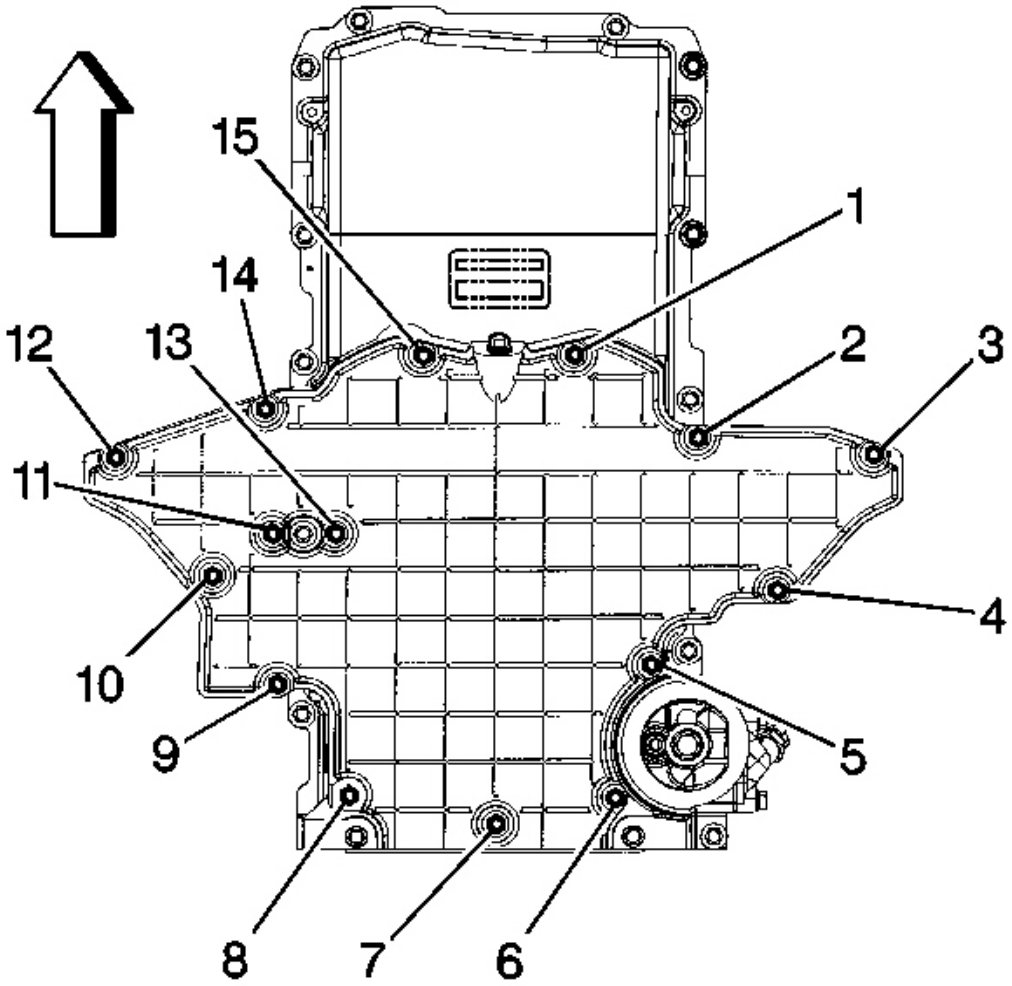

Fig. 45: Oil Pan - Lower - Bolts
Courtesy of GENERAL MOTORS CORP.

IMPORTANT: It is not necessary to remove the oil pan - lower - to remove the oil pan assembly.

4. Remove the oil pan - lower - bolts (1-15), if required.

cardiagn.com

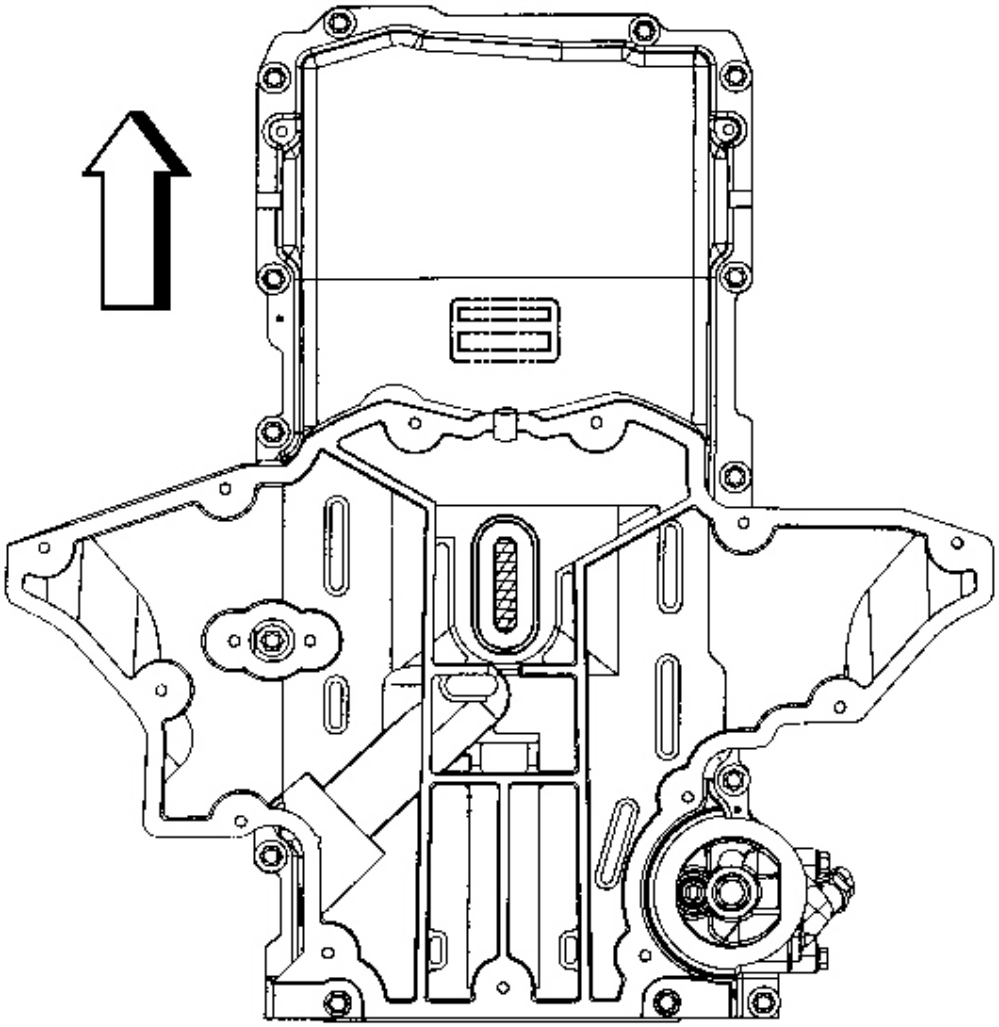

Fig. 46: Lower Oil Pan
Courtesy of GENERAL MOTORS CORP.

5. Removal of the oil pan - lower - will not provide access to the crankshaft oil deflector, crankshaft, or other internal engine components.

cardiagn.com

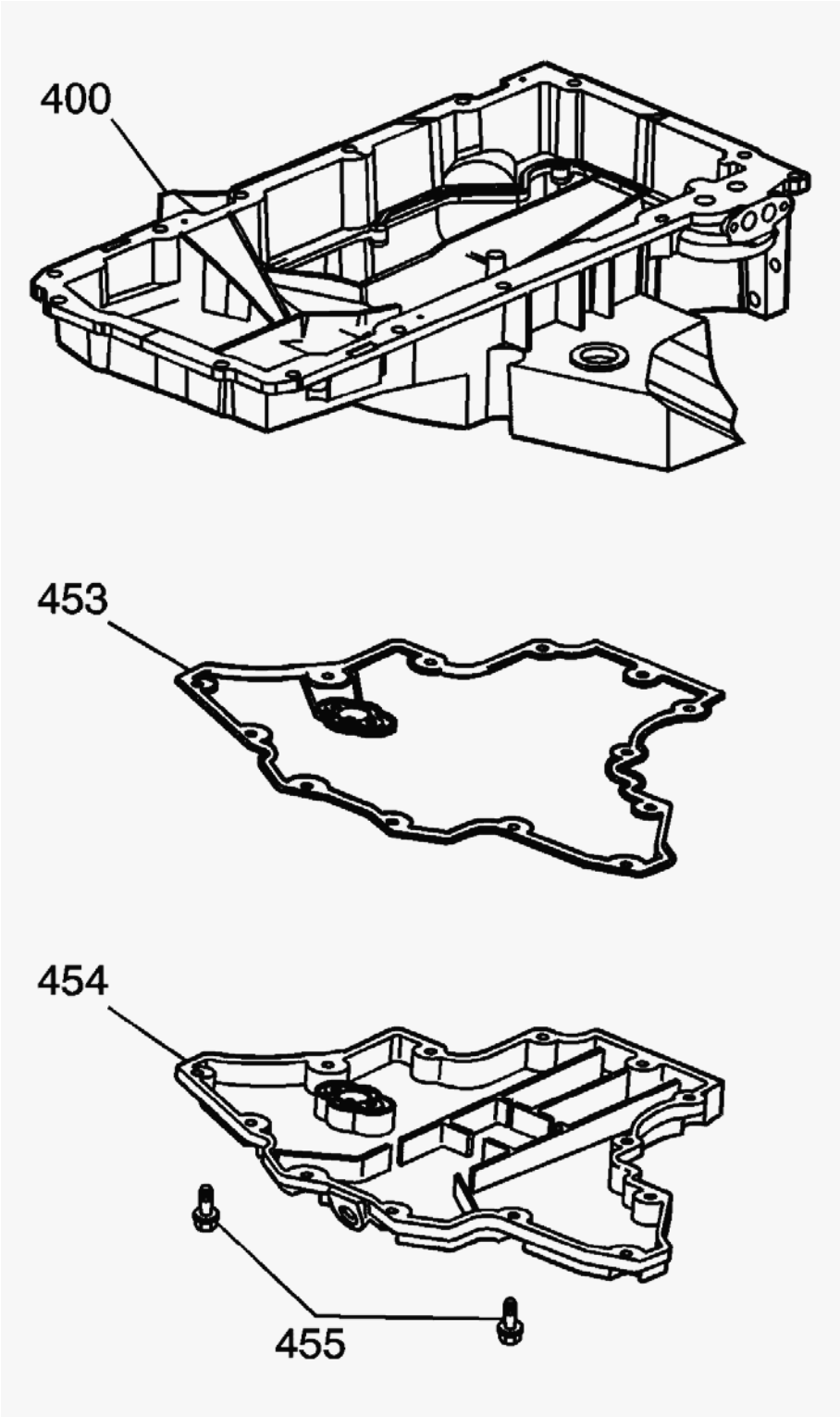

Fig. 47: Oil Pan - Upper, Gasket, Oil Pan - Lower & Bolts
Courtesy of GENERAL MOTORS CORP.

6. Separate the oil pan (400) - upper, gasket (453), oil pan (454) - lower, and bolts (455), if required.

cardiagn.com

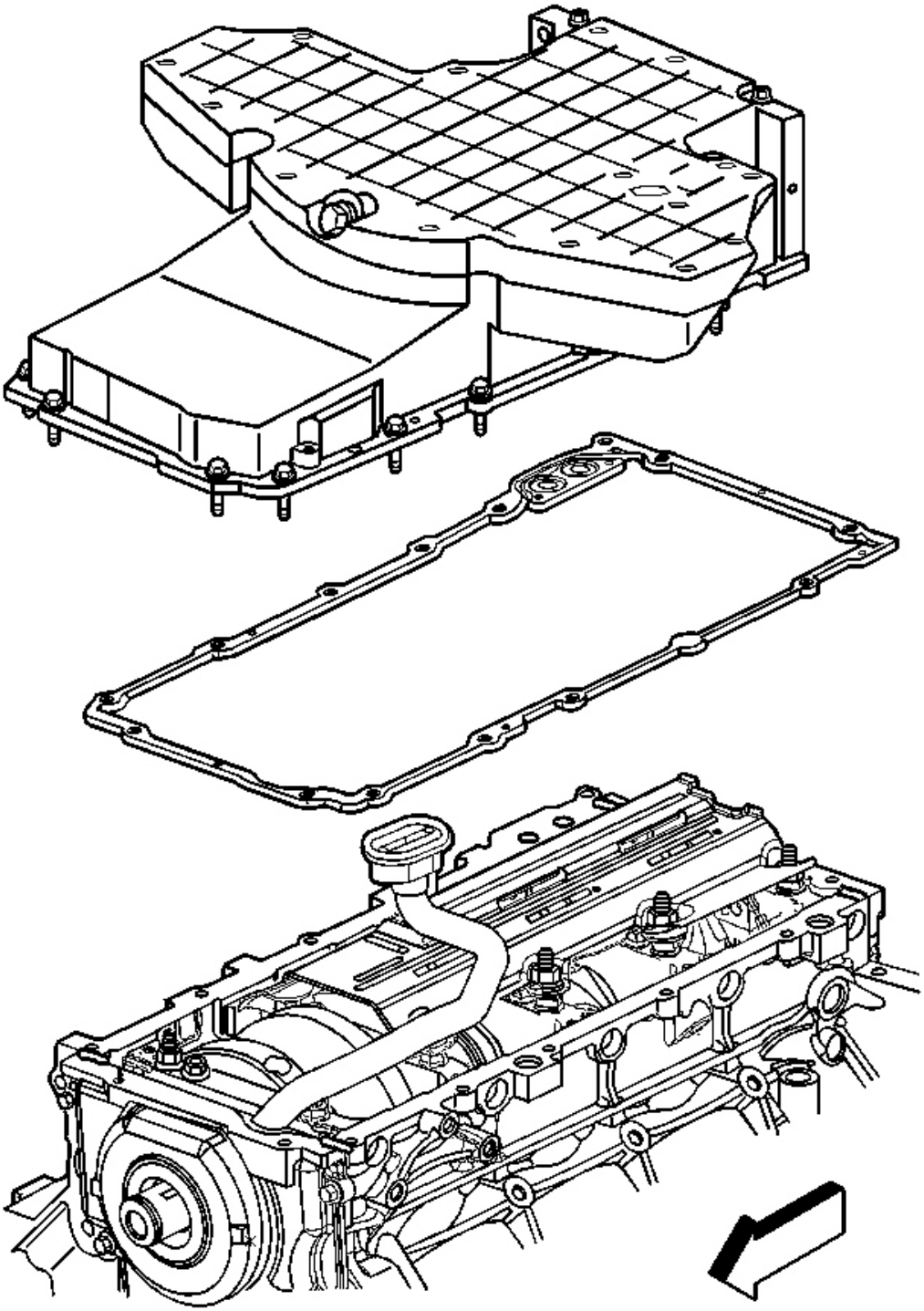

cardiagn.com

Fig. 48: Oil Pan & Gasket
Courtesy of GENERAL MOTORS CORP.

7. Remove the oil pan bolts.
8. Remove the oil pan.

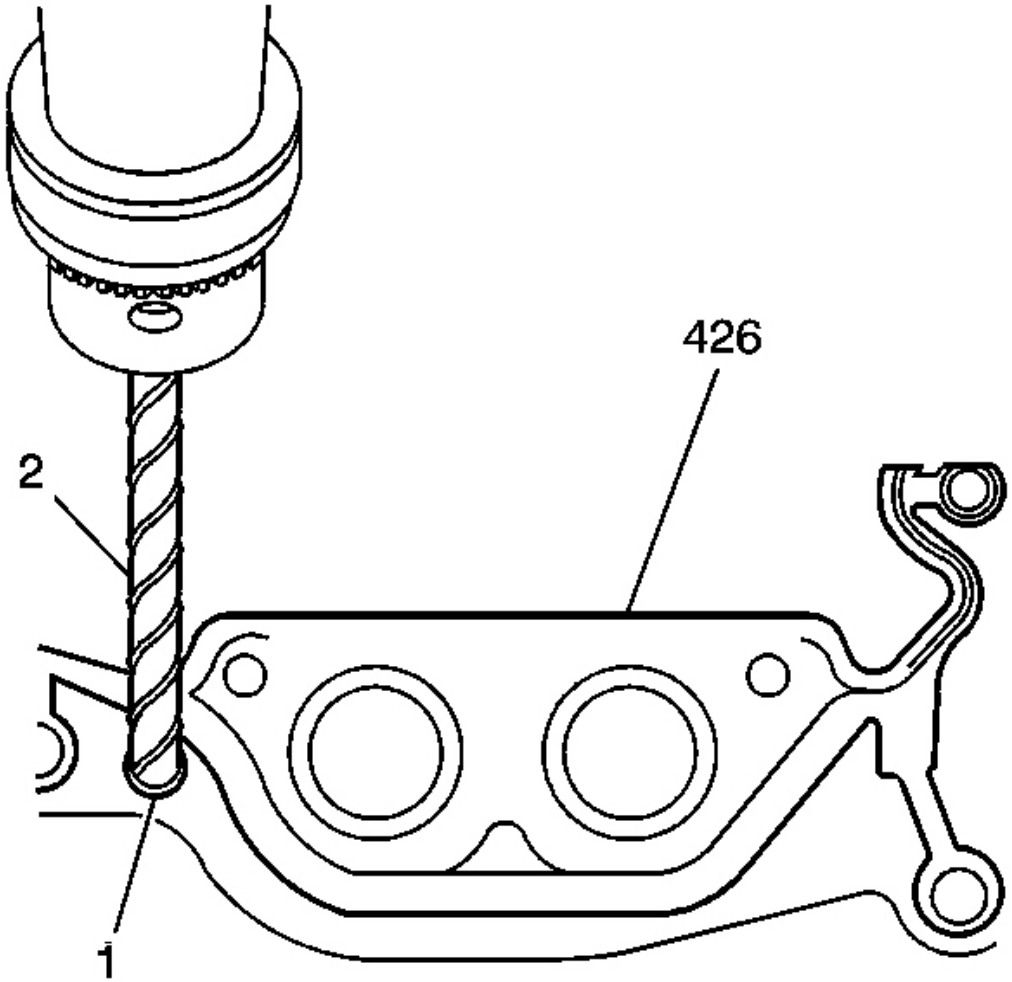

Fig. 49: Drill, Gasket & Oil Pan Gasket Retaining Rivets
Courtesy of GENERAL MOTORS CORP.

IMPORTANT:

- **DO NOT allow foreign material to enter the oil passages of the oil pan. Cap or cover the openings as required.**

cardiagn.com

- **Use care not to gouge, score, or damage the oil pan sealing surface.**

9. Drill (2) out the oil pan gasket retaining rivets (1), if required.
10. Remove the gasket (426) from the pan - upper.
11. Discard the gasket and rivets.

ENGINE FRONT COVER REMOVAL

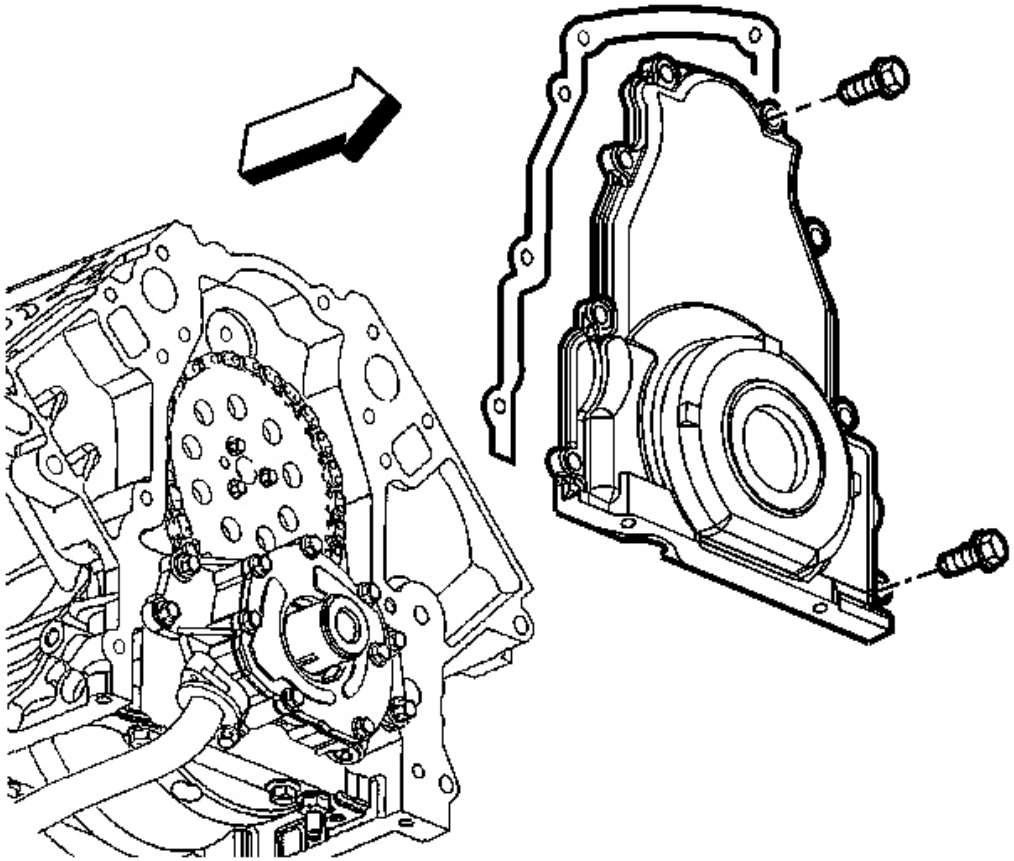

Fig. 50: View Of Front Cover & Gasket
Courtesy of GENERAL MOTORS CORP.

1. Remove the front cover bolts.
2. Remove the front cover and gasket.
3. Discard the front cover gasket.

cardiagn.com

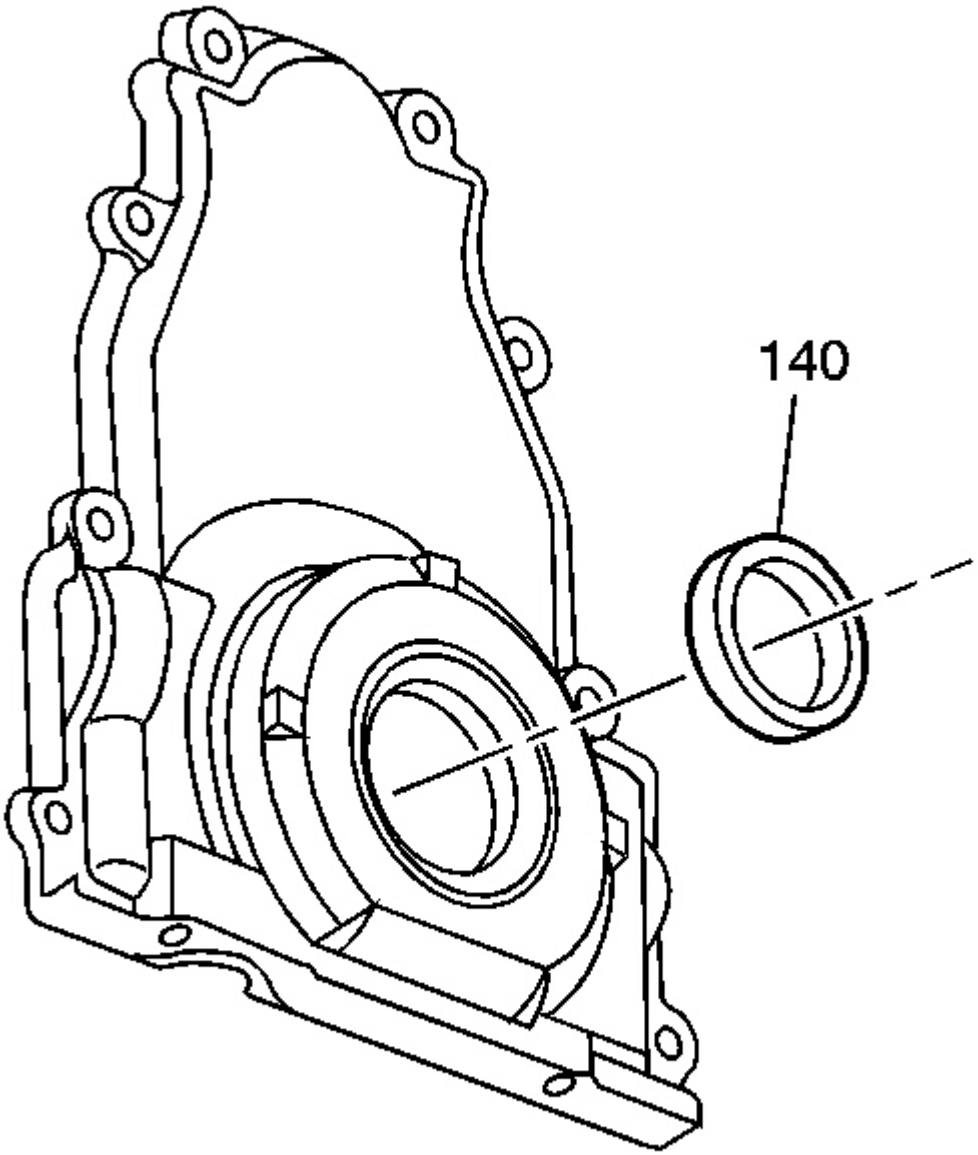

Fig. 51: View Of Crankshaft Front Oil Seal
Courtesy of GENERAL MOTORS CORP.

4. Remove the crankshaft front oil seal (140) from the cover.

ENGINE REAR COVER REMOVAL

cardiagn.com

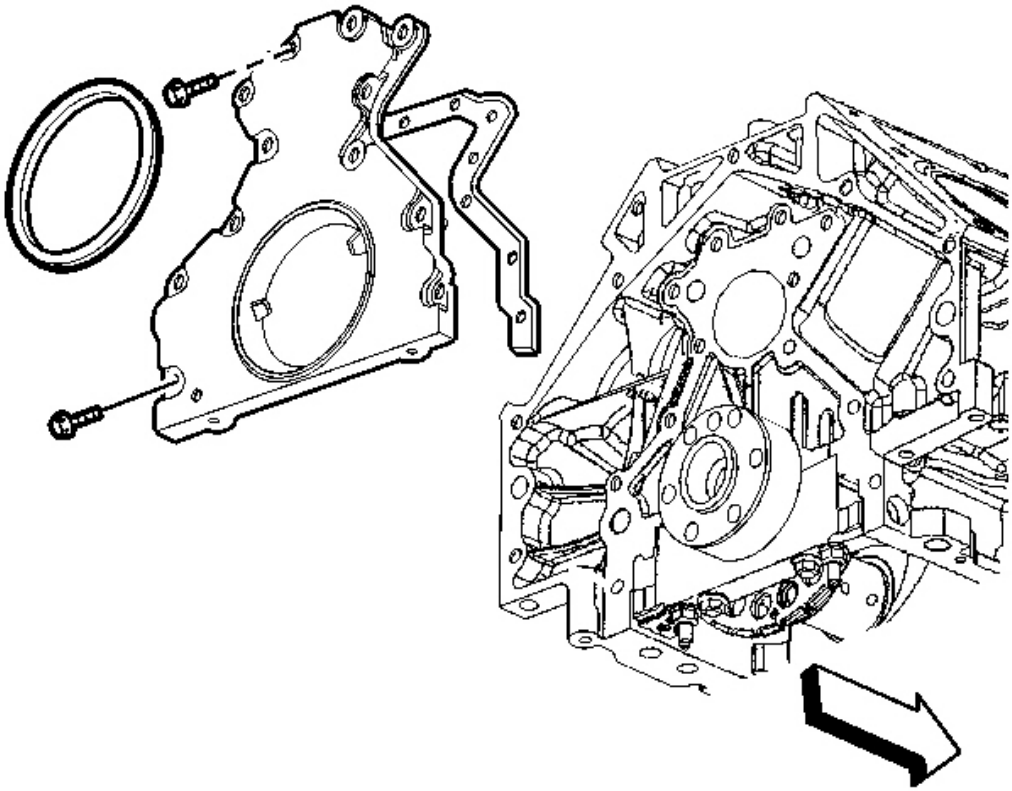

Fig. 52: View Of Rear Cover, Bolts & Gasket
Courtesy of GENERAL MOTORS CORP.

1. Remove the rear cover bolts.
2. Remove the rear cover and gasket.
3. Discard the rear cover gasket.

cardiagn.com

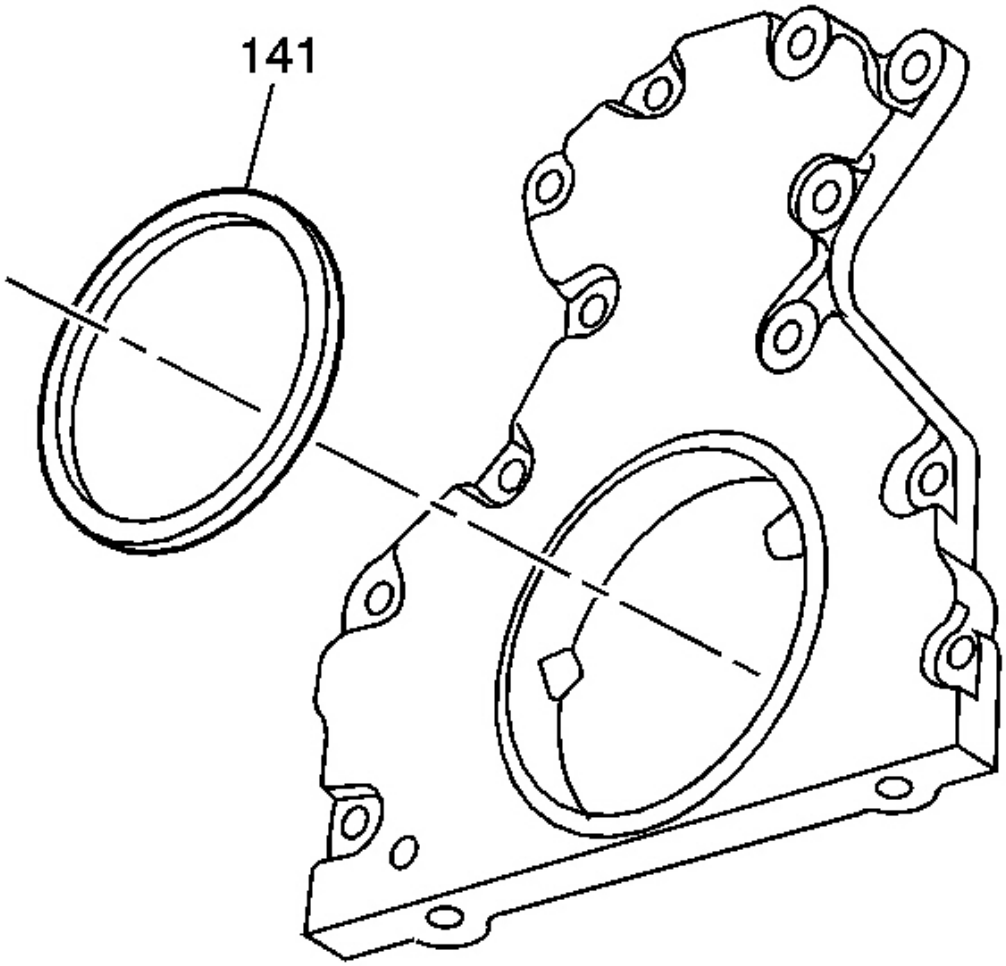

Fig. 53: View Of Crankshaft Rear Oil Seal
Courtesy of GENERAL MOTORS CORP.

4. Remove the crankshaft rear oil seal (141) from the cover.

OIL PUMP, PUMP SCREEN AND DEFLECTOR REMOVAL

cardiagn.com

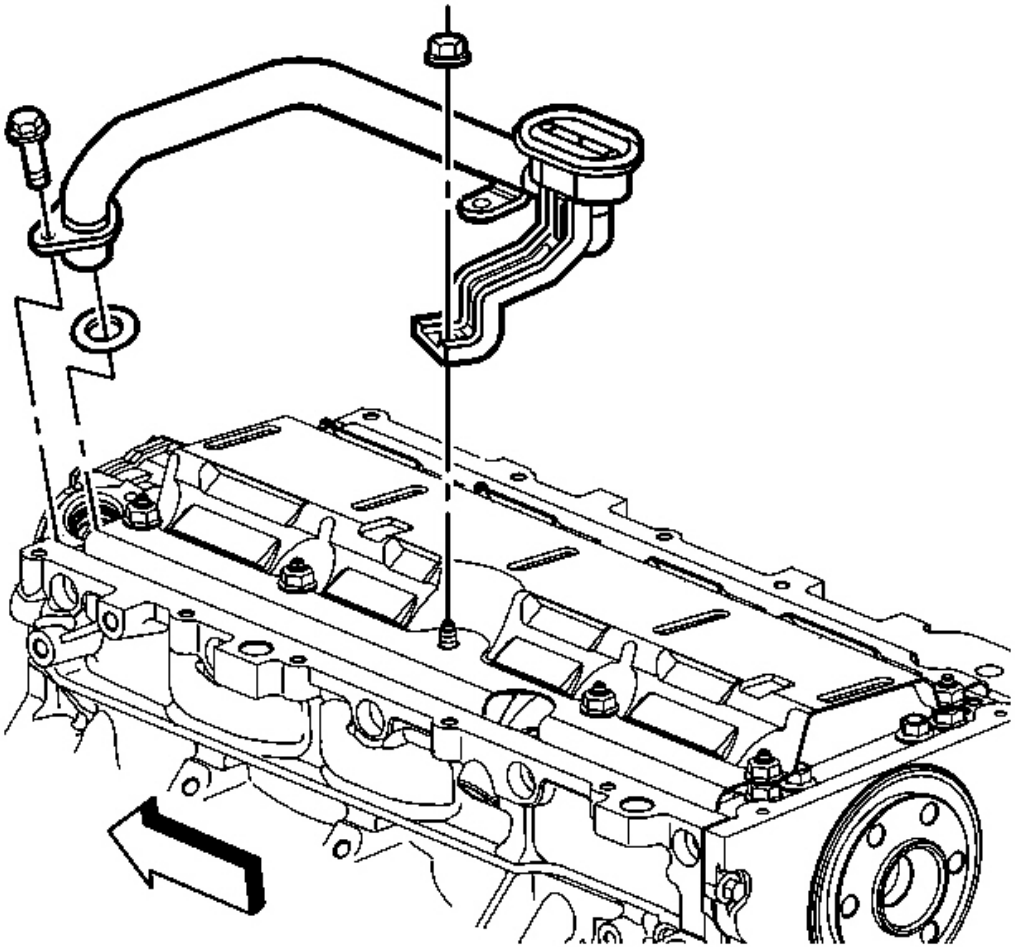

Fig. 54: View Of Oil Pump Screen, Nuts & Bolts
Courtesy of GENERAL MOTORS CORP.

1. Remove the oil pump screen bolt and nuts.
2. Remove the oil pump screen with O-ring seal.
3. Remove the O-ring seal from the pump screen.
4. Discard the O-ring seal.

cardiagn.com

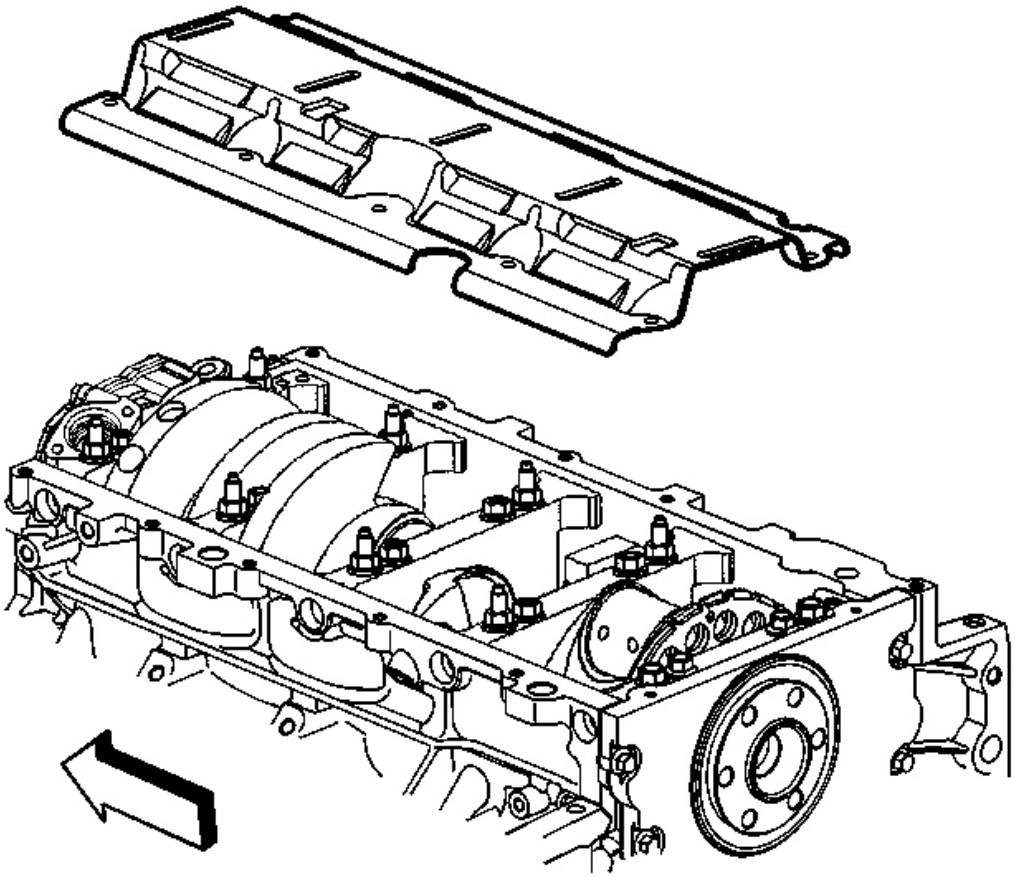

Fig. 55: Crankshaft Oil Deflector
Courtesy of GENERAL MOTORS CORP.

5. Remove the remaining crankshaft oil deflector nuts.
6. Remove the crankshaft oil deflector.

cardiagn.com

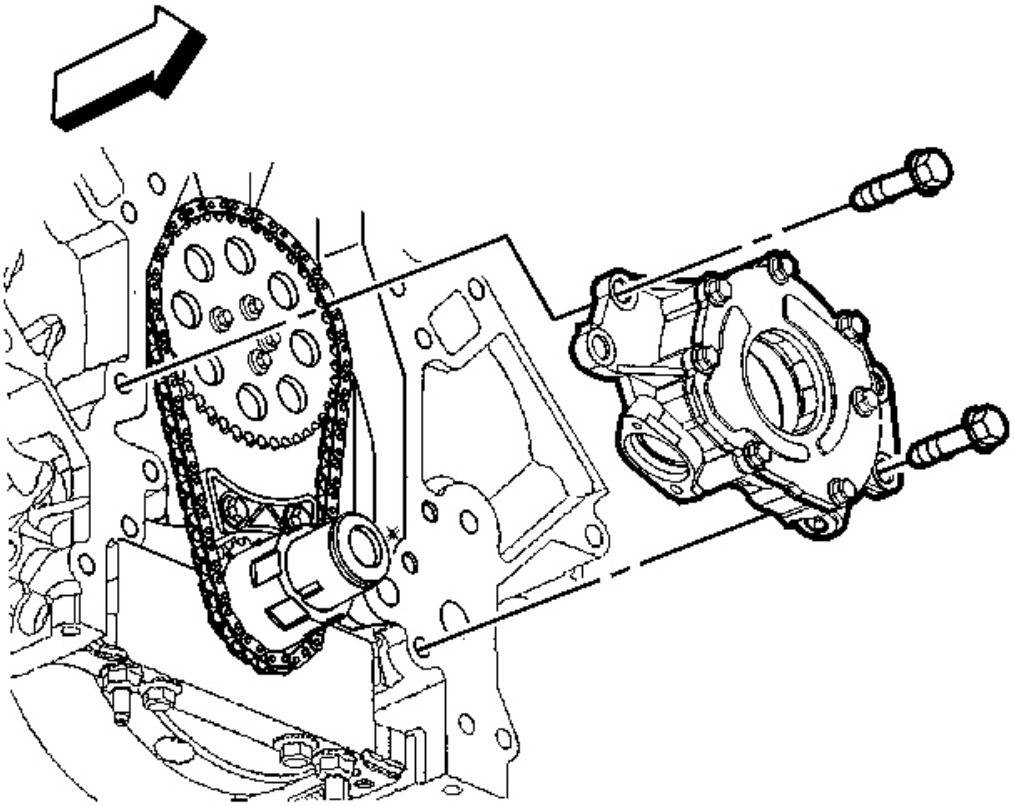

Fig. 56: Oil Pump & Bolts
Courtesy of GENERAL MOTORS CORP.

7. Remove the oil pump bolts.

IMPORTANT: Do not allow dirt or debris to enter the oil pump assembly. Cap ends as necessary.

8. Remove the oil pump.

TIMING CHAIN AND SPROCKETS REMOVAL

Tools Required

- **J 8433-1** Puller Bar
- **J 41558** Crankshaft Sprocket Remover
- J 41816-2 Crankshaft End Protector

cardiagn.com

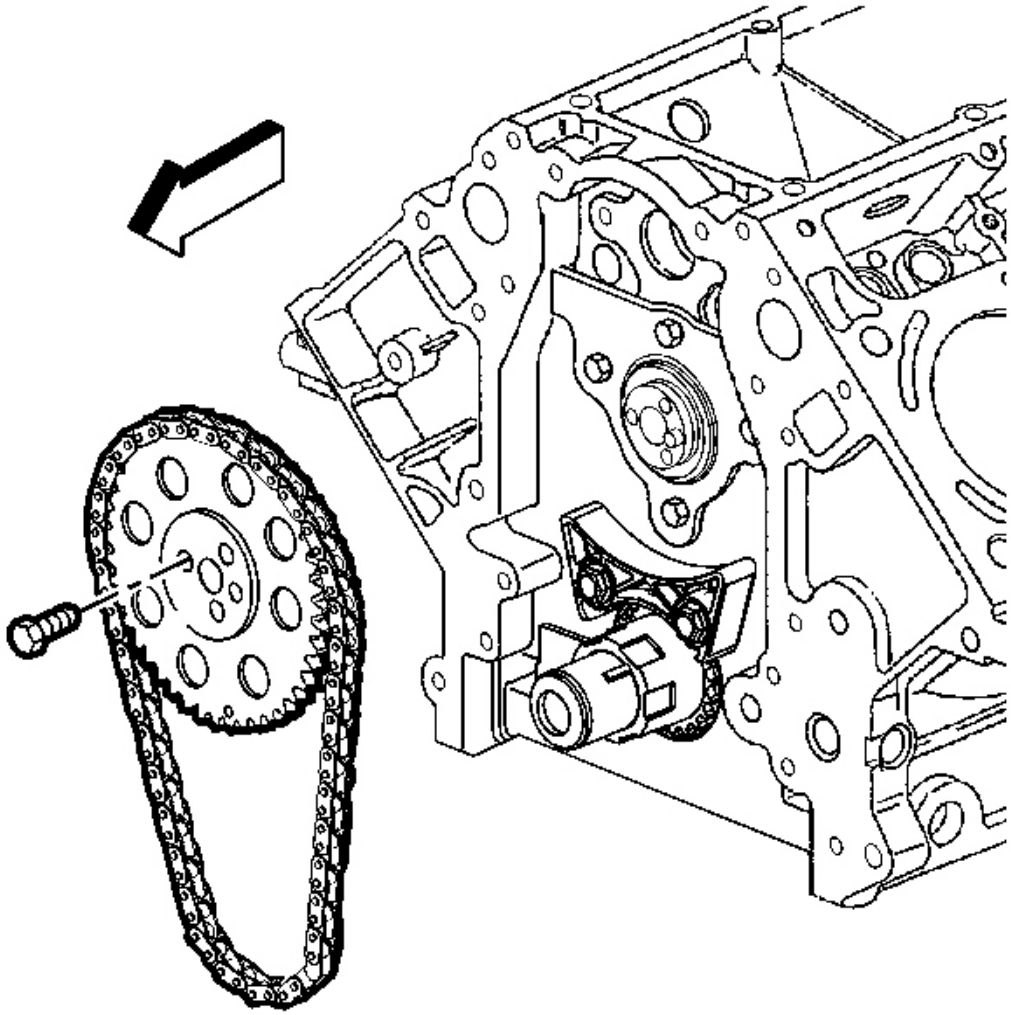

Fig. 57: Camshaft Sprocket, Timing Chain & Bolts
Courtesy of GENERAL MOTORS CORP.

NOTE: **Do not turn the crankshaft assembly after the timing chain has been removed in order to prevent damage to the piston assemblies or the valves.**

1. Remove the camshaft sprocket bolts.
2. Remove the camshaft sprocket and timing chain.

cardiagn.com

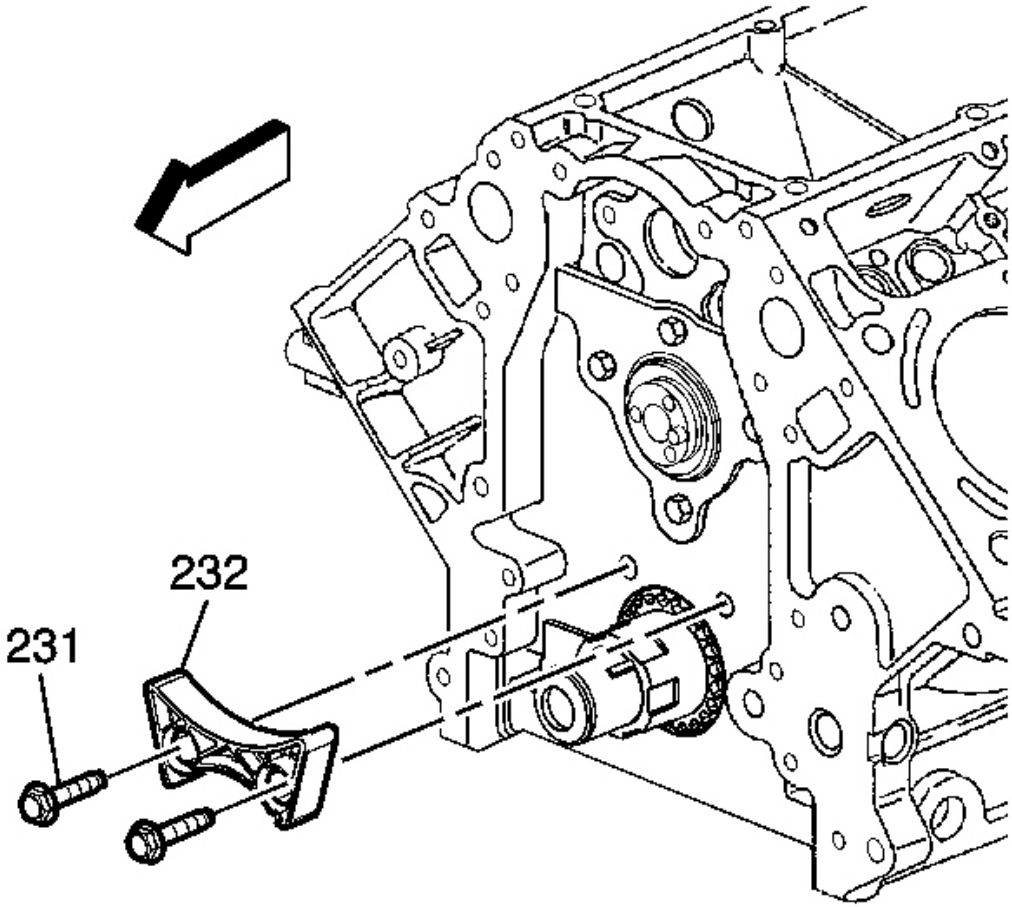

Fig. 58: Chain Dampener & Bolts
Courtesy of GENERAL MOTORS CORP.

3. Remove the chain dampener (232) and bolts (231).

cardiagn.com

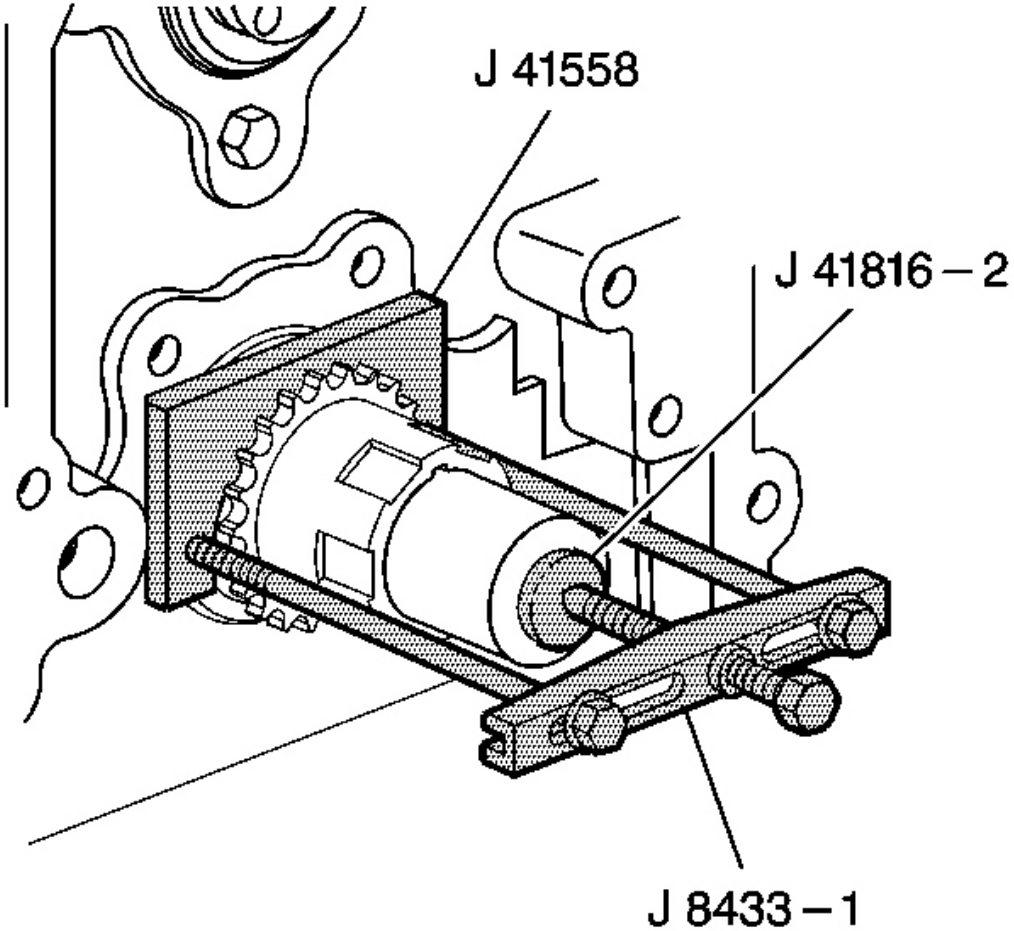

Fig. 59: View Of J 8433-1, J 41816-2 & J 41558
Courtesy of GENERAL MOTORS CORP.

4. Use the **J 8433-1** , the J 41816-2 , and the **J 41558** in order to remove the crankshaft sprocket.

cardiagn.com

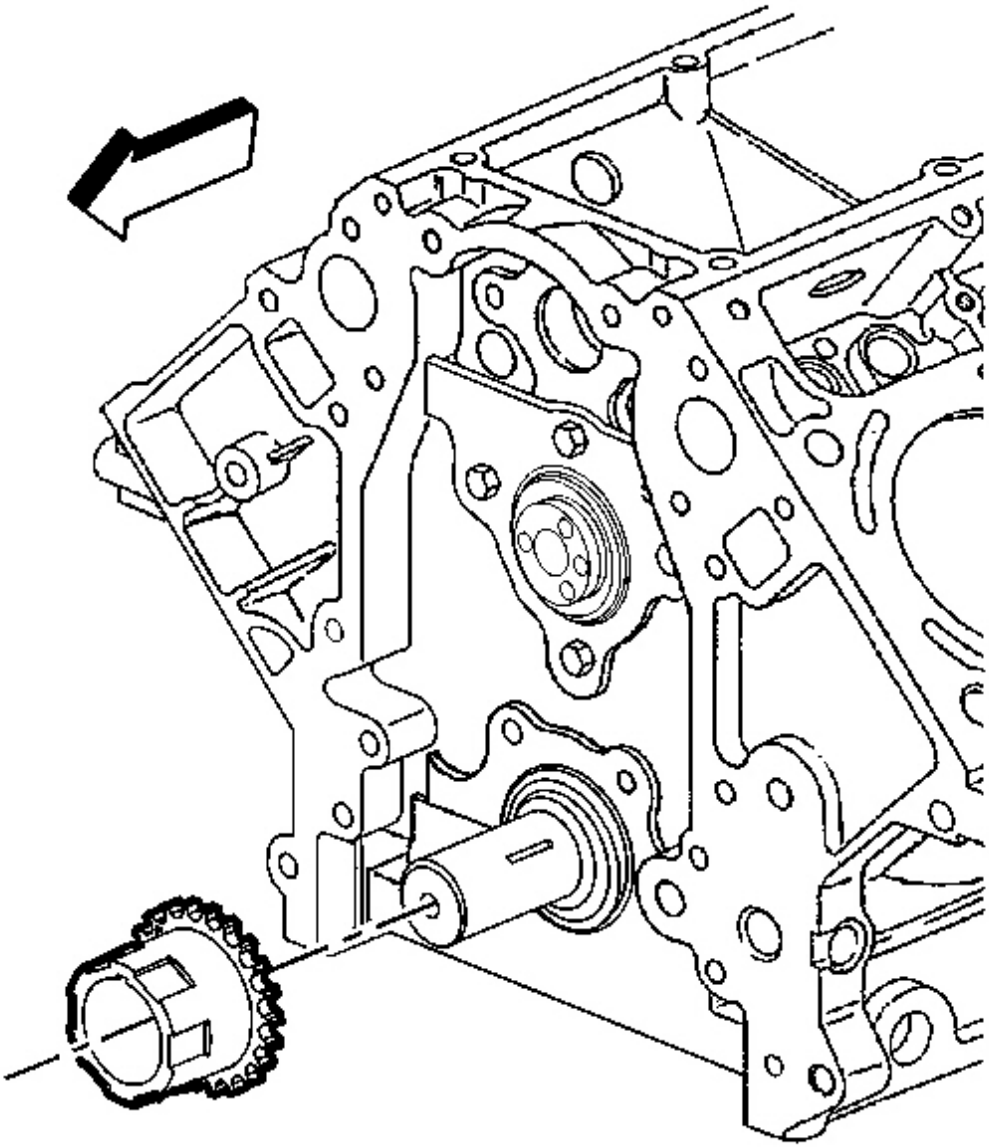

Fig. 60: View Of Crankshaft Sprocket
Courtesy of GENERAL MOTORS CORP.

5. Remove the crankshaft sprocket.

cardiagn.com

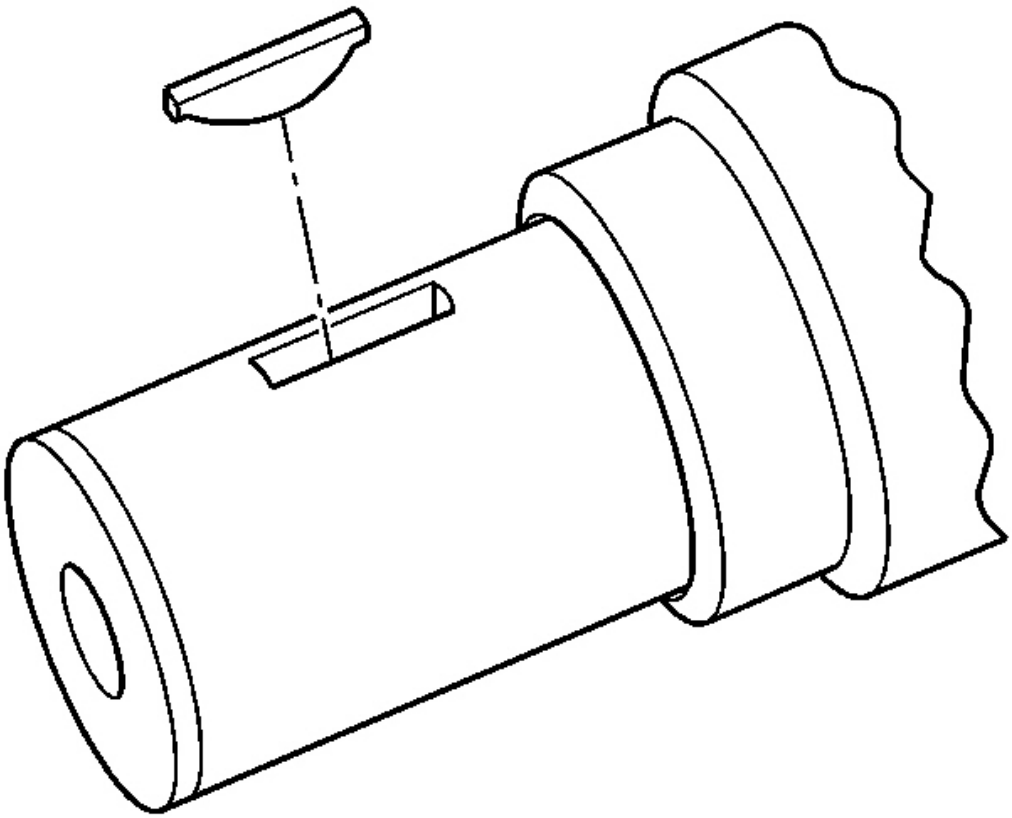

Fig. 61: View Of Crankshaft Sprocket Key
Courtesy of GENERAL MOTORS CORP.

6. Remove the crankshaft sprocket key, if required.

CAMSHAFT REMOVAL

cardiagn.com

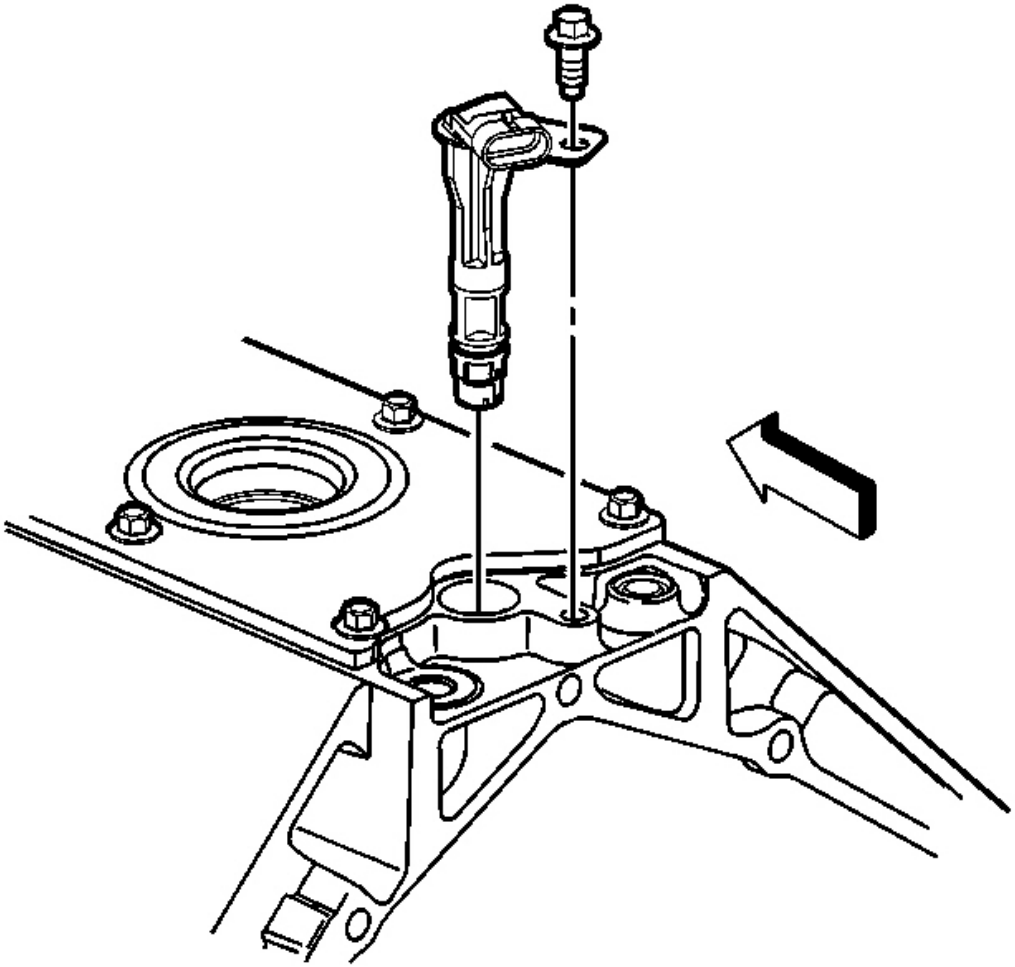

Fig. 62: View Of Camshaft Sensor & Bolt
Courtesy of GENERAL MOTORS CORP.

1. Remove the camshaft position (CMP) sensor bolt and the sensor.

cardiagn.com

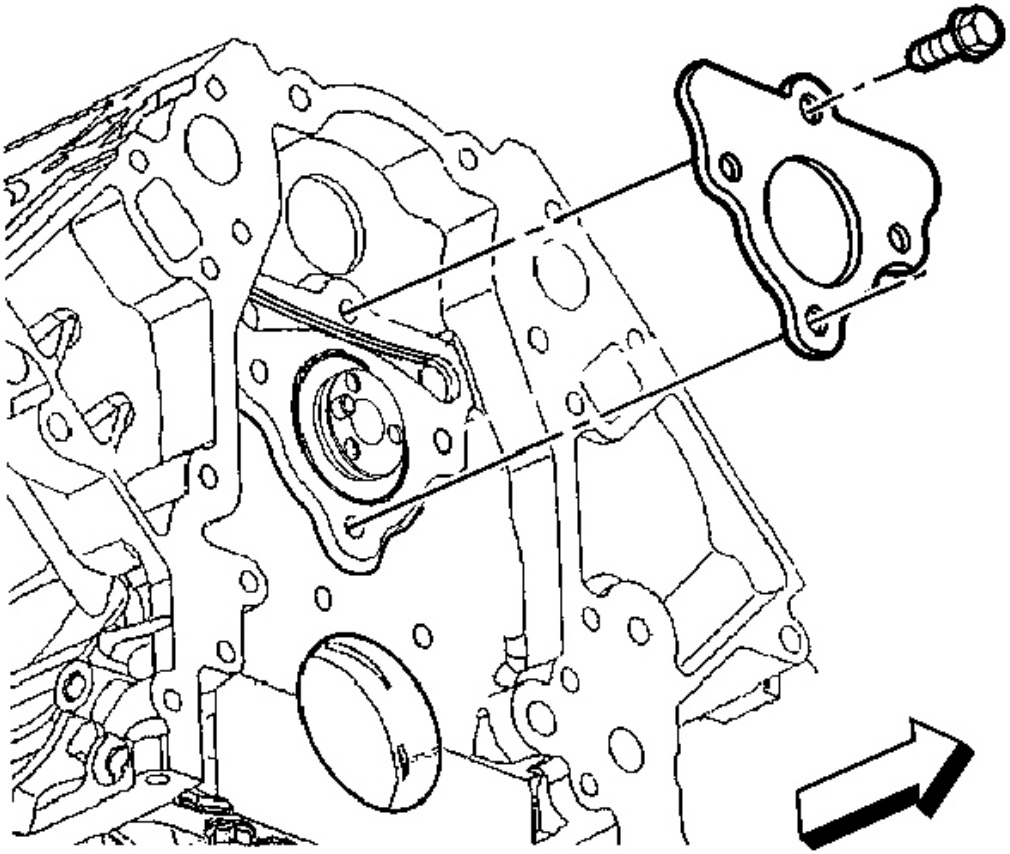

Fig. 63: View Of Camshaft Retainer & Bolts
Courtesy of GENERAL MOTORS CORP.

2. Remove the camshaft retainer bolts and the retainer.

cardiagn.com

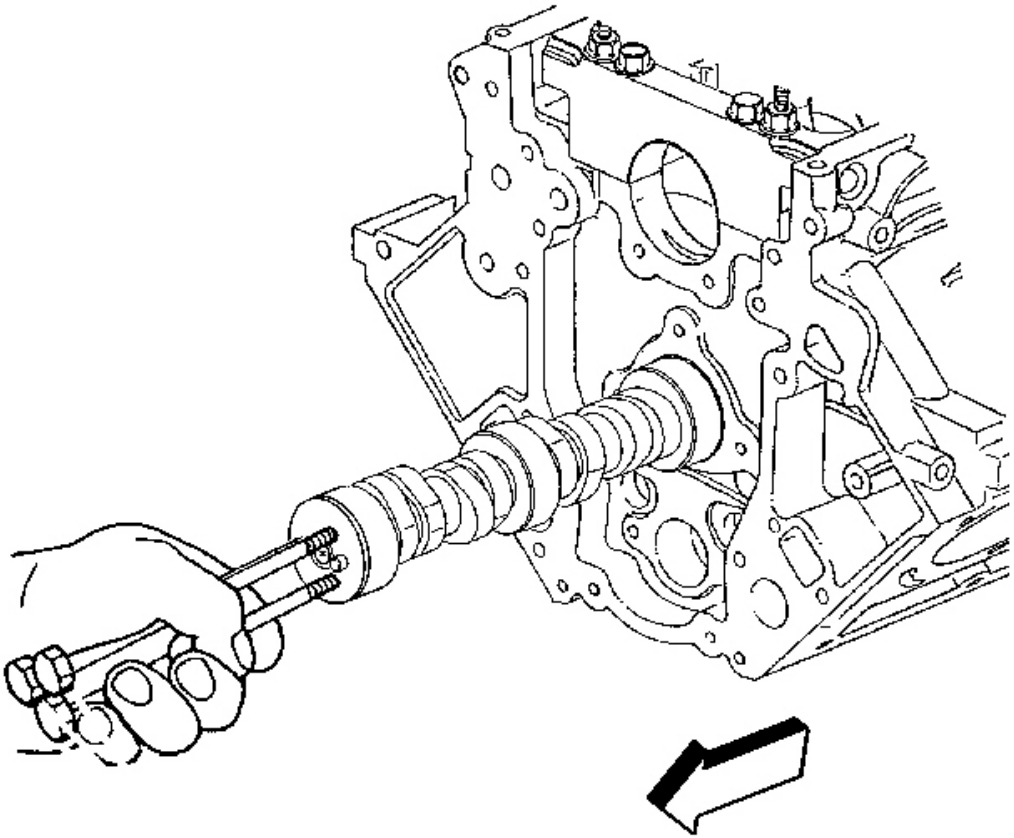

Fig. 64: 3 M8 - 1.25 X 100 mm Bolts & Camshaft Front Bolt Holes
Courtesy of GENERAL MOTORS CORP.

NOTE: **All camshaft journals are the same diameter, so care must be used in removing or installing the camshaft to avoid damage to the camshaft bearings.**

3. Remove the camshaft.
    1. Install the 3 M8 - 1.25 x 100 mm bolts in the camshaft front bolt holes.
    2. Using the bolts as a handle, carefully rotate and pull the camshaft out of the engine block.
    3. Remove the bolts from the front of the camshaft.

PISTON, CONNECTING ROD, AND BEARING REMOVAL

Tools Required

cardiagn.com

- **J 24270** Cylinder Bore Ridge Reamer
- **J 41556** Connecting Rod Guide

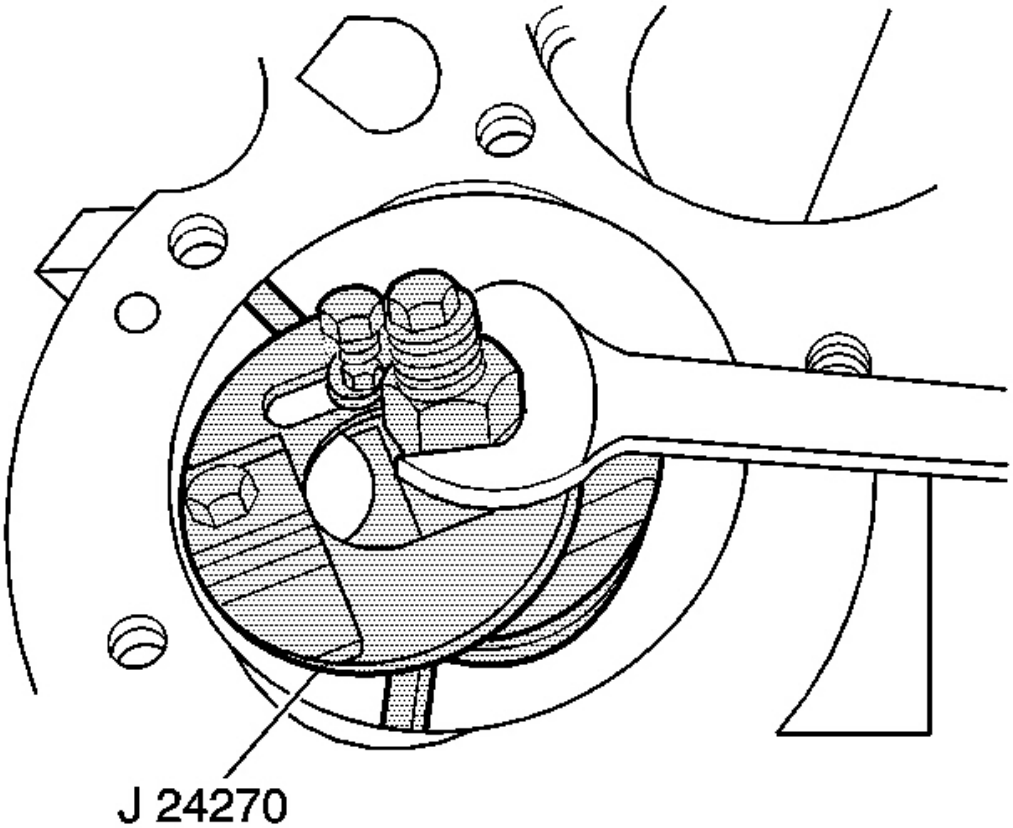

Fig. 65: Cylinder Ridge & J 24270
Courtesy of GENERAL MOTORS CORP.

IMPORTANT: The connecting rods and the bearing caps are NOT interchangeable.

1. Use the **J 24270** in order to remove the cylinder bore ring ridge, if required.
    1. Turn the crankshaft until the piston is at the bottom of the stroke.
    2. Place a cloth on top of the piston.
    3. Use the **J 24270** or equivalent in order to remove cylinder ring ridge.
    4. Turn the crankshaft so the piston is at the top of the stroke.
    5. Remove the cloth.
    6. Remove the cutting debris from the cylinder and piston.

cardiagn.com

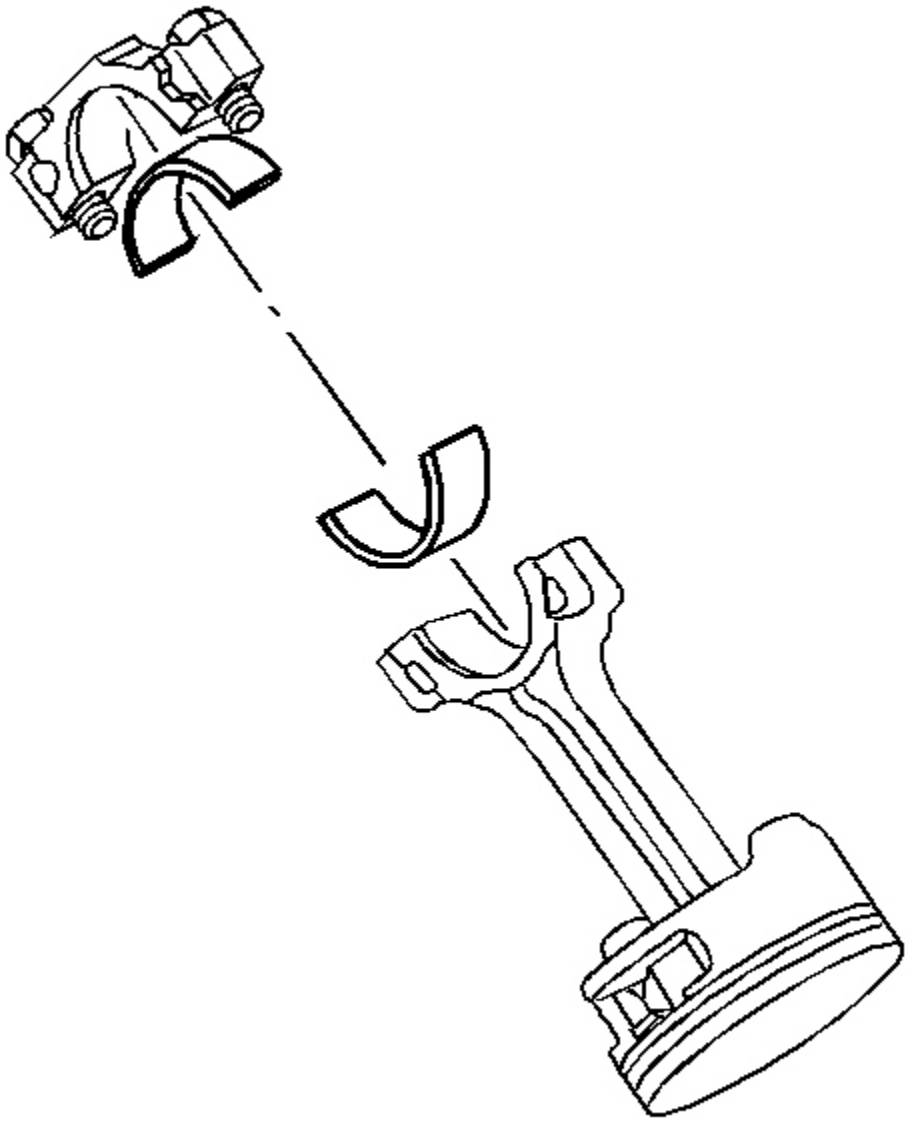

Fig. 66: View Of Connecting Rod Cap & Bolts
Courtesy of GENERAL MOTORS CORP.

IMPORTANT:

- **Using a paint stick or etching tool, place matchmarks or numbers on the connecting rods and the connecting rod caps. The connecting rods and caps MUST be assembled to their original position and direction.**

cardiagn.com

- **A stamping mark on the side of the connecting rod, at the crank journal, may effect component geometry.**
- **Mark the top of the piston to the specific cylinder bore.**

2. Remove the connecting rod bolts.

IMPORTANT: Mark, sort, or organize the connecting rod bearings so they may be installed to their original position and location.

3. Remove the connecting rod cap. Refer to **Separating Parts** .

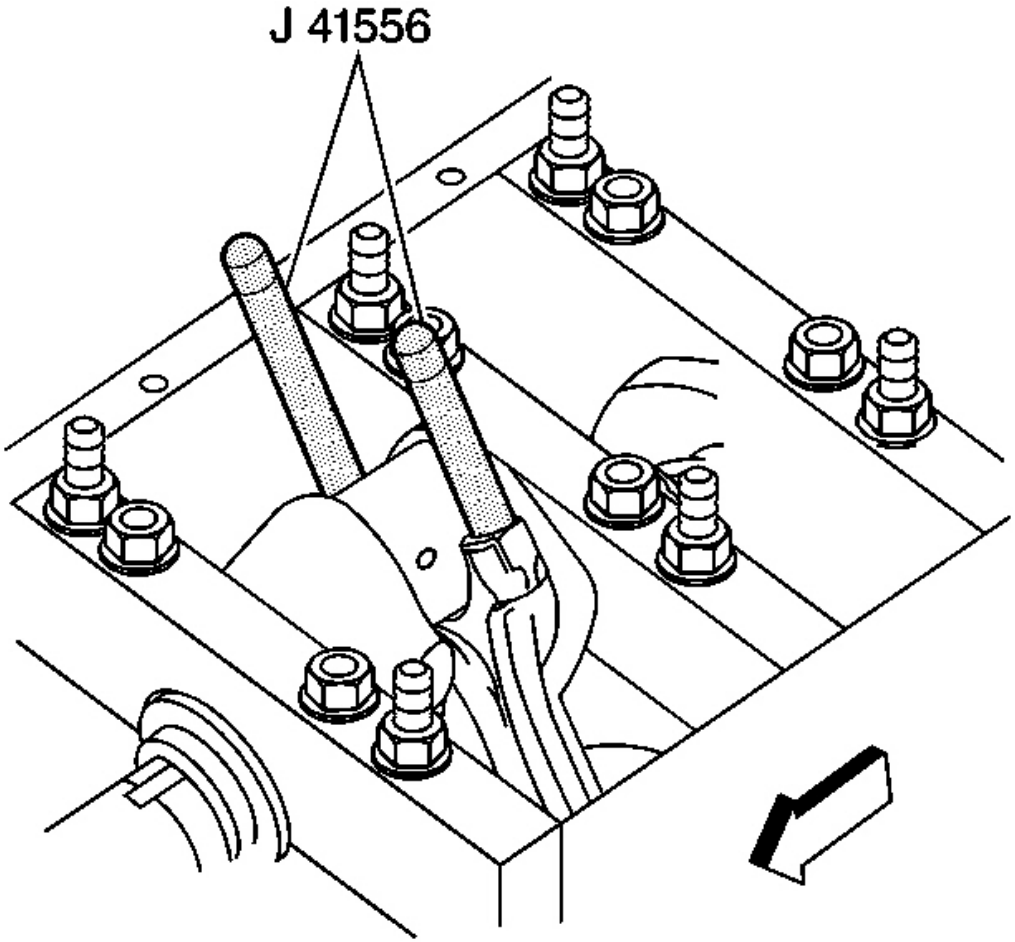

Fig. 67: View Of J 41556 & Connecting Rod
Courtesy of GENERAL MOTORS CORP.

cardiagn.com

4. Install the **J 41556** to the connecting rod.

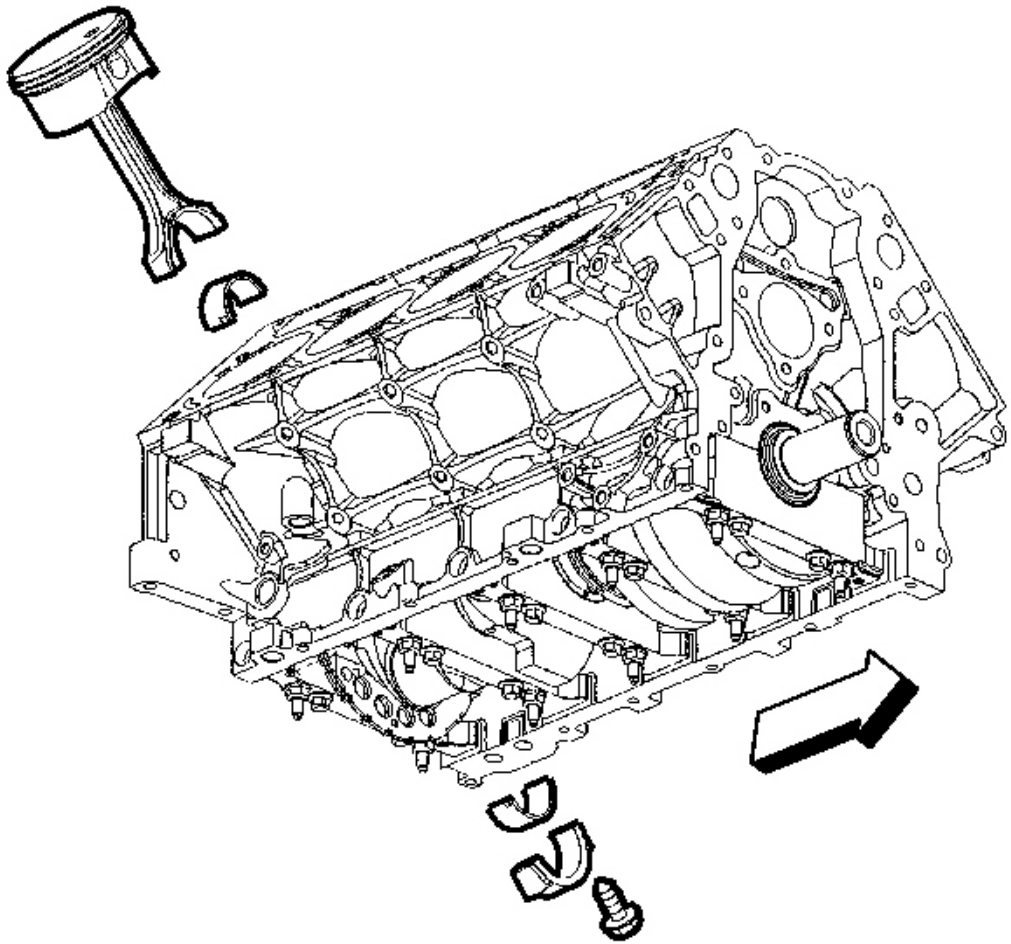

Fig. 68: View Of Piston, Cylinder Bore & Connecting Rod Assembly
Courtesy of GENERAL MOTORS CORP.

5. Use a hammer and tap lightly on the end of the **J 41556** in order to remove the piston and connecting rod assembly from the cylinder bore.

cardiagn.com

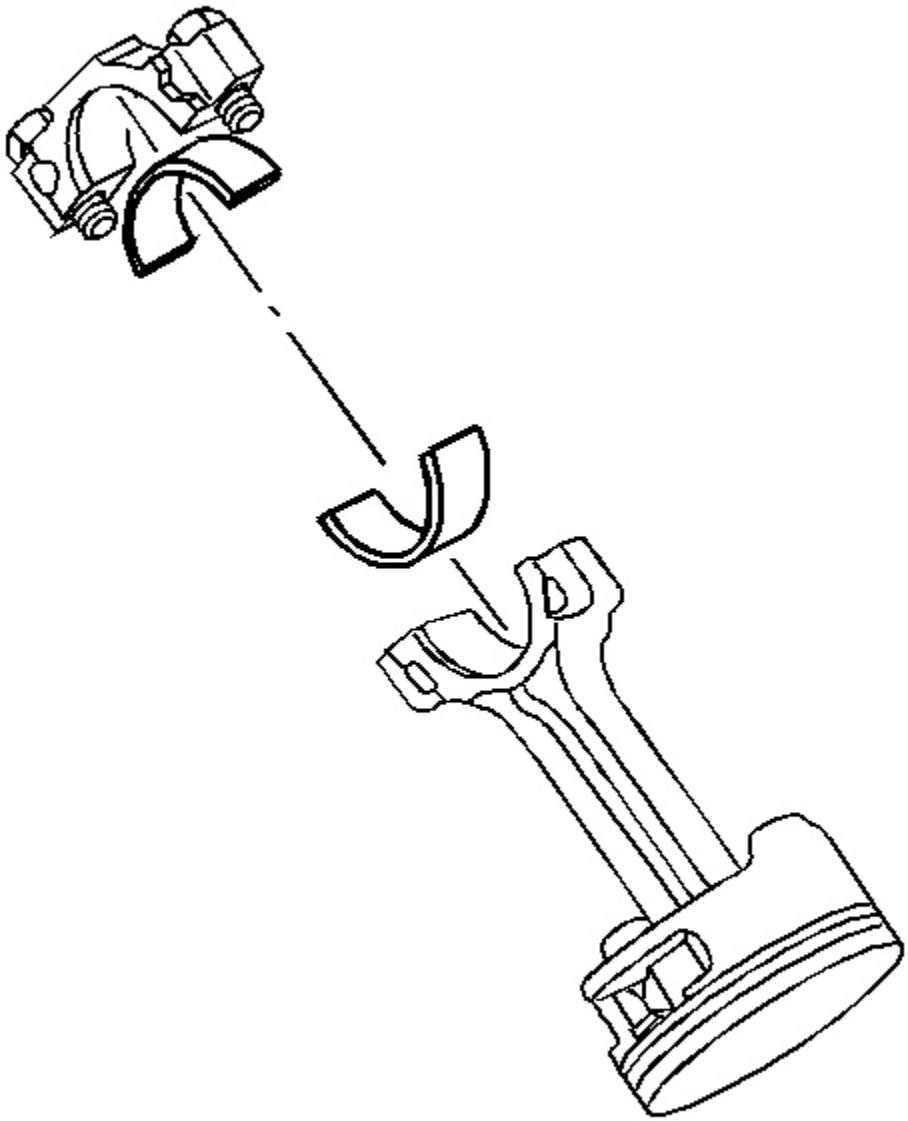

Fig. 69: View Of Connecting Rod Cap & Bolts
Courtesy of GENERAL MOTORS CORP.

6. Upon removal of the piston and connecting rod assembly, assemble the connecting rod cap and bolts onto the matching connecting rod.

CRANKSHAFT AND BEARINGS REMOVAL

cardiagn.com

Tools Required

- **J 6125-1B** Slide Hammer
- J 41818 Crankshaft Bearing Cap Remover

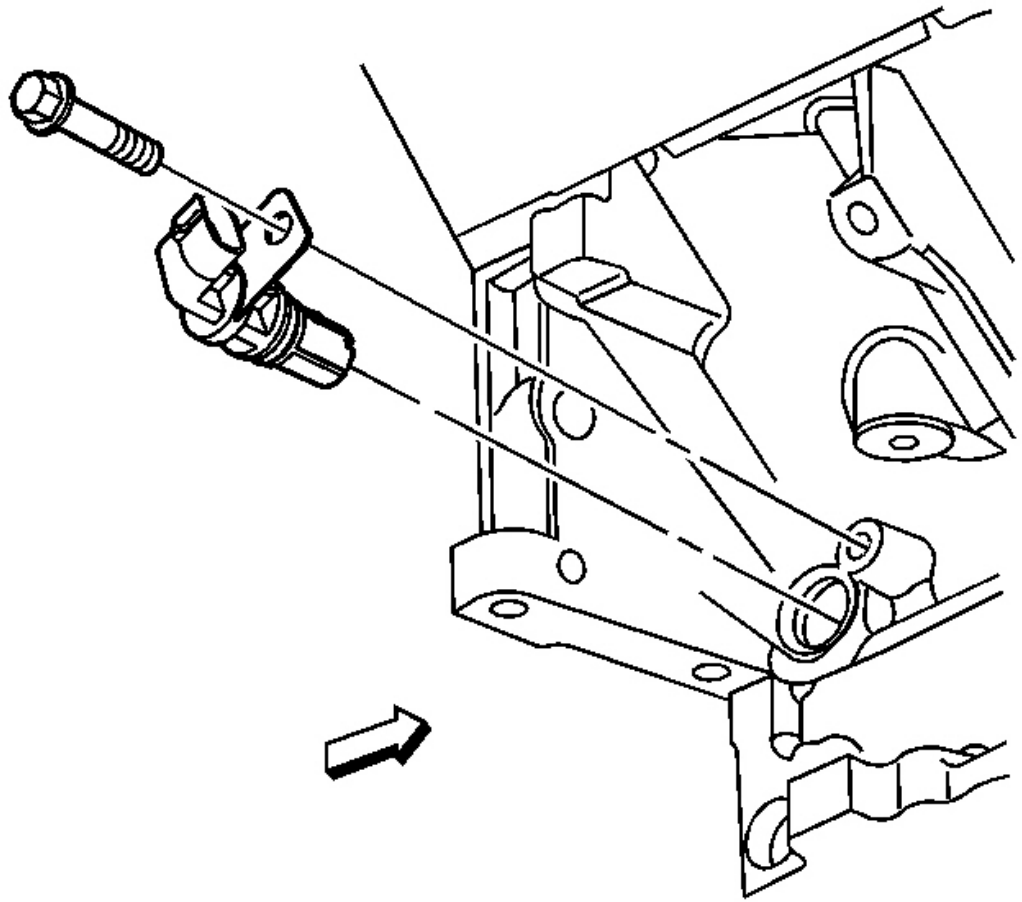

Fig. 70: View Of CKP Sensor & Bolt
Courtesy of GENERAL MOTORS CORP.

IMPORTANT:

- **The crankshaft bearing caps are machined with the engine block, for the proper clearances. Mark or identify each crankshaft bearing cap location and direction before removal. The crankshaft bearing caps MUST be installed to their original position and direction.**
- **Do not use the bearing cap M8 bolts again.**
- **Remove the bearing cap M8 bolts prior to cap removal.**

cardiagn.com

1. Remove the crankshaft position (CKP) sensor bolt.
2. Remove the CKP sensor.

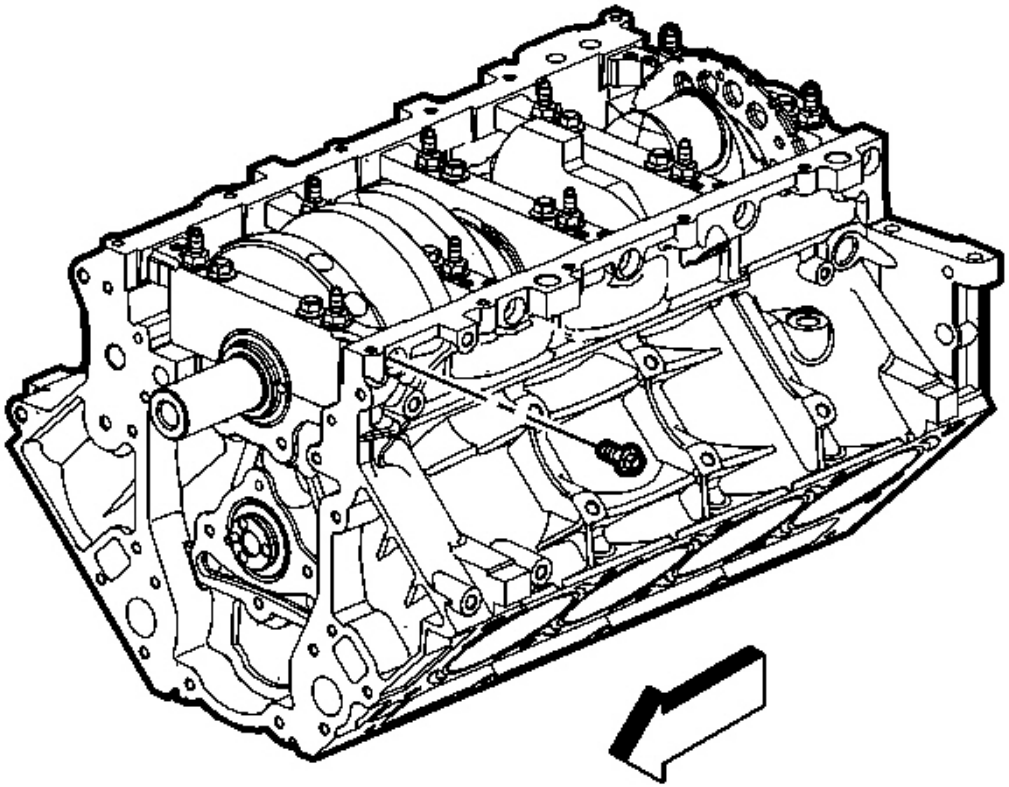

Fig. 71: View Of Bearing Cap Bolts & Studs
Courtesy of GENERAL MOTORS CORP.

3. Remove the crankshaft bearing cap M8 bolts.
4. Remove the bearing cap M10 bolts and studs.

cardiagn.com

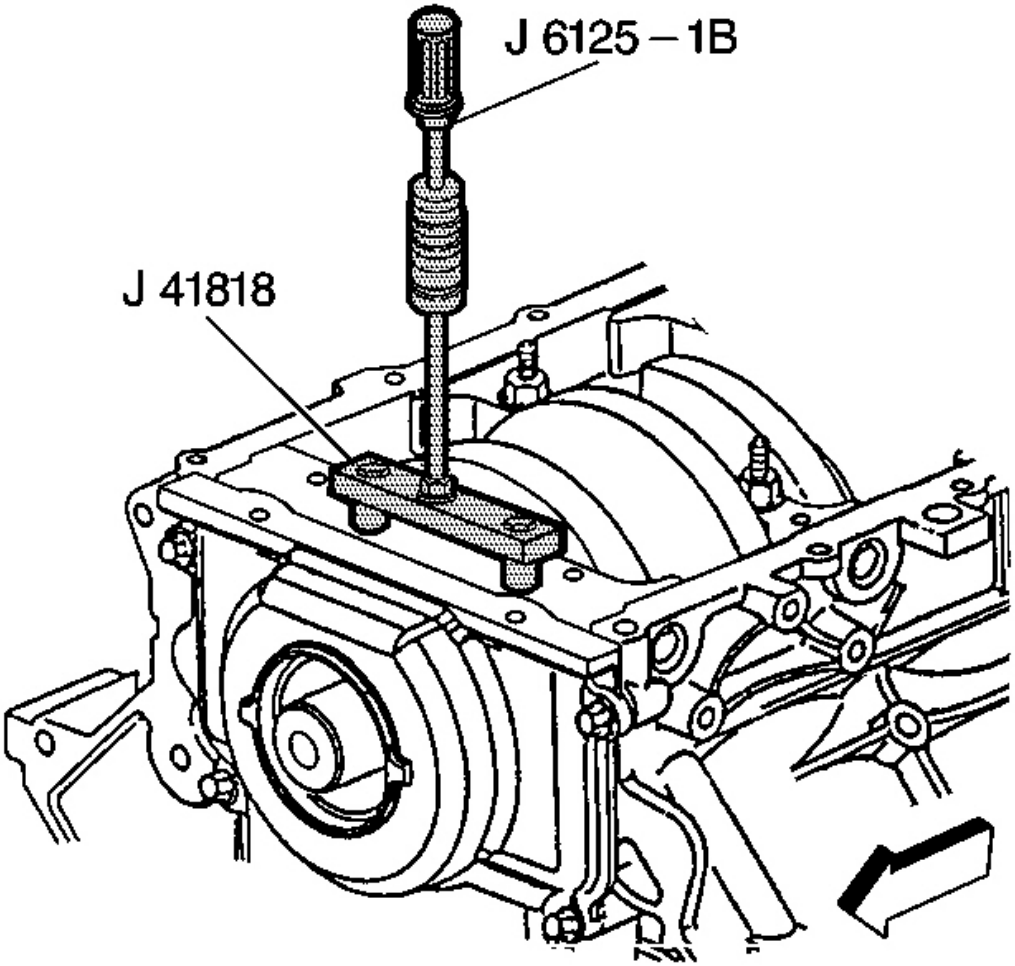

Fig. 72: View Of J 6125-1B & J 41818
Courtesy of GENERAL MOTORS CORP.

NOTE: **Refer to Fastener Notice in Cautions and Notices.**

5. Install the J 41818 .

   Tighten: Tighten the J 41818 bolts to 11 N.m (100 lb in).

6. Install the **J 6125-1B** to the J 41818 in order to remove the crankshaft bearing caps.

cardiagn.com

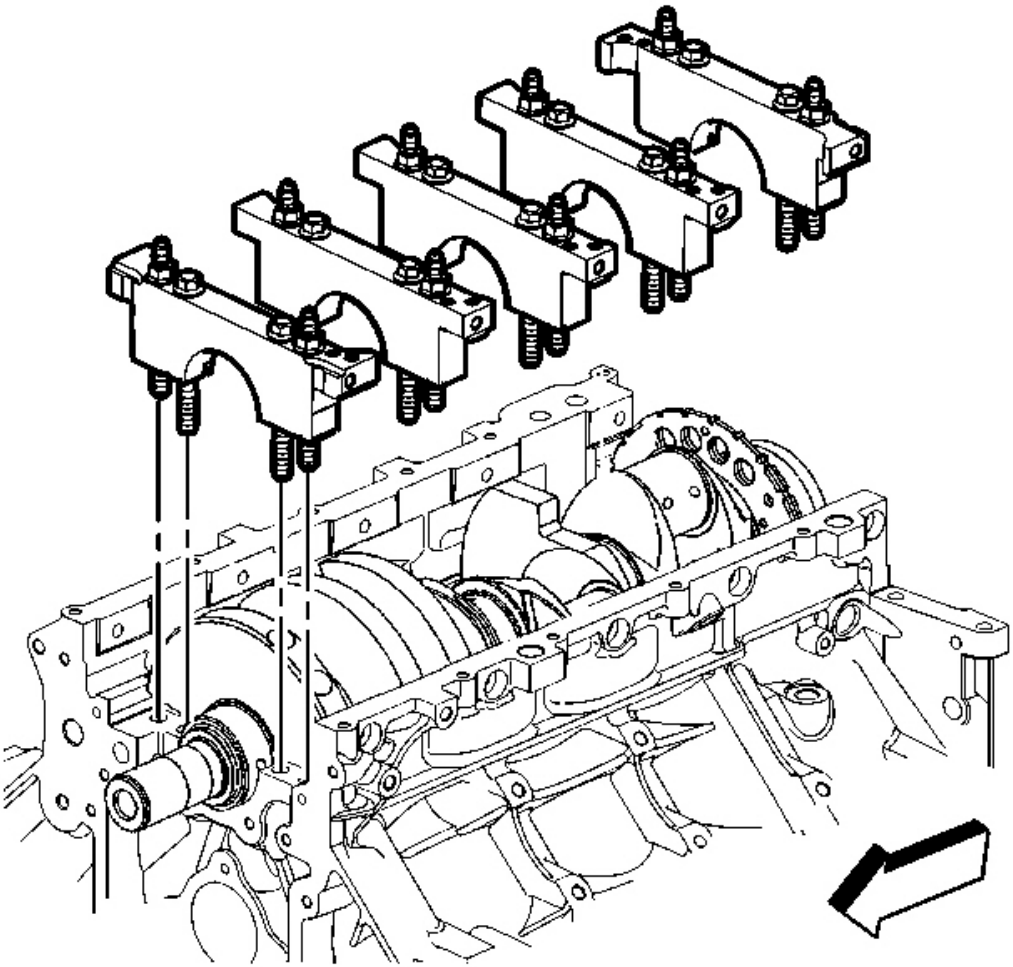

Fig. 73: View Of Bearing Caps
Courtesy of GENERAL MOTORS CORP.

7. Remove the bearing caps.

cardiagn.com

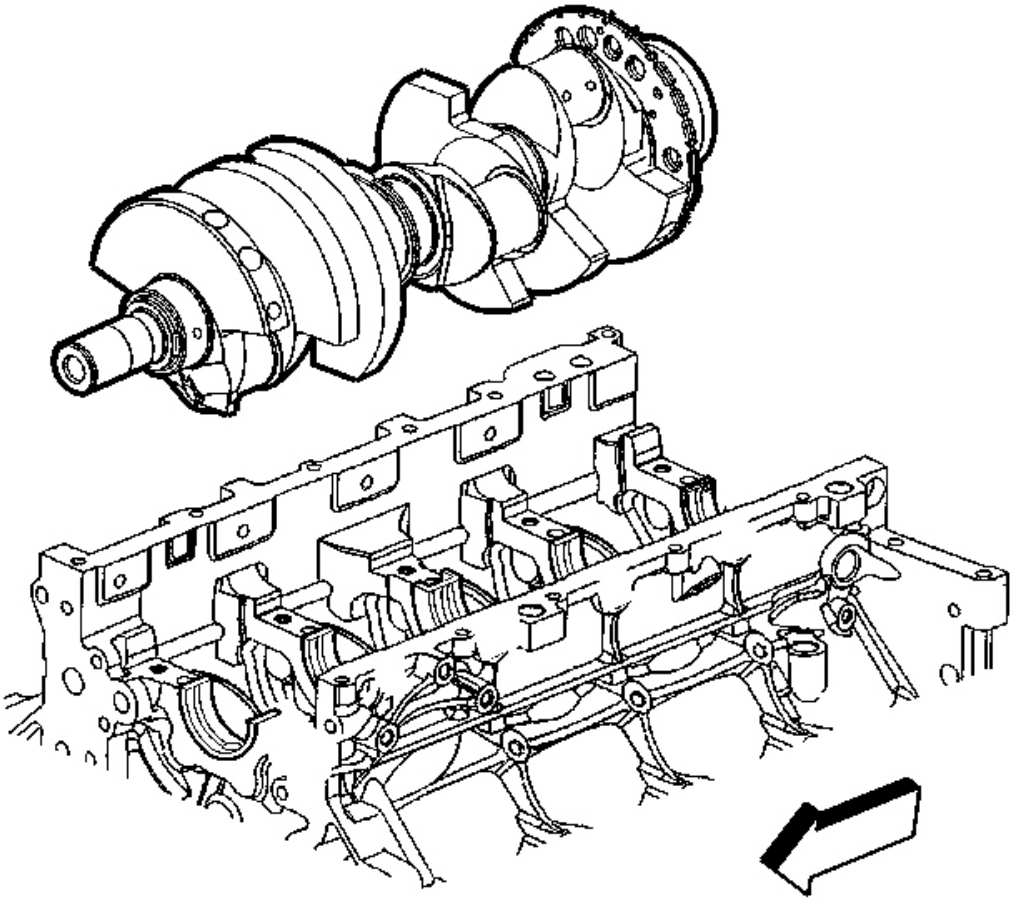

Fig. 74: View Of Crankshaft
Courtesy of GENERAL MOTORS CORP.

8. Remove the crankshaft.

cardiagn.com

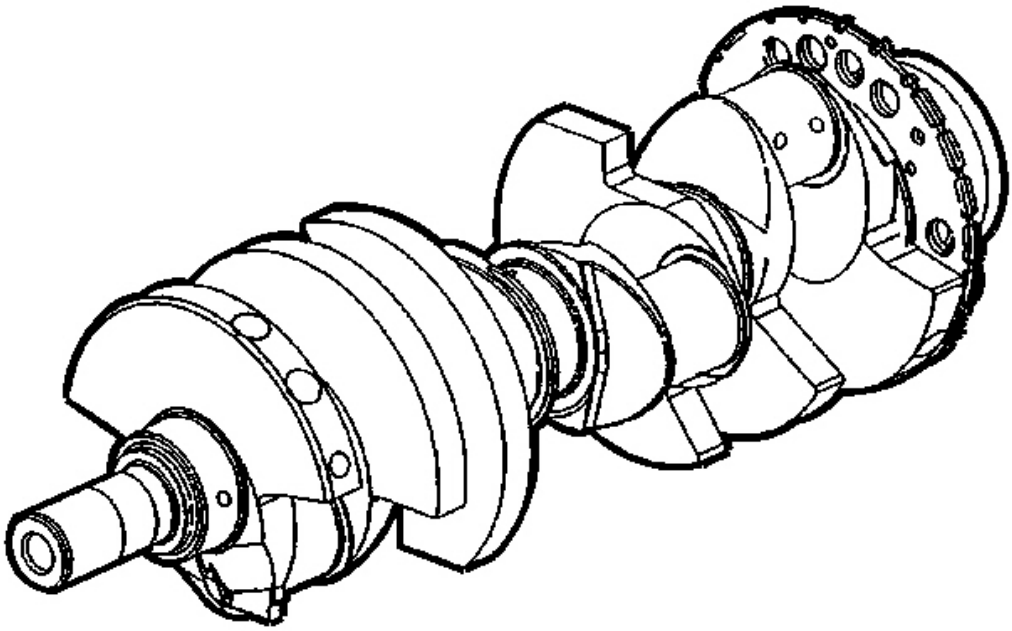

Fig. 75: CKP Reluctor Ring Lobes
Courtesy of GENERAL MOTORS CORP.

IMPORTANT: Use care when handling the crankshaft. Avoid damage to the crankshaft position sensor reluctor ring teeth. Nicks, burrs or other damage to the teeth may effect On-Board Diagnostics (OBD) II system performance.

9. Lay the crankshaft onto 2 wooden V-blocks or other protective surface.

cardiagn.com

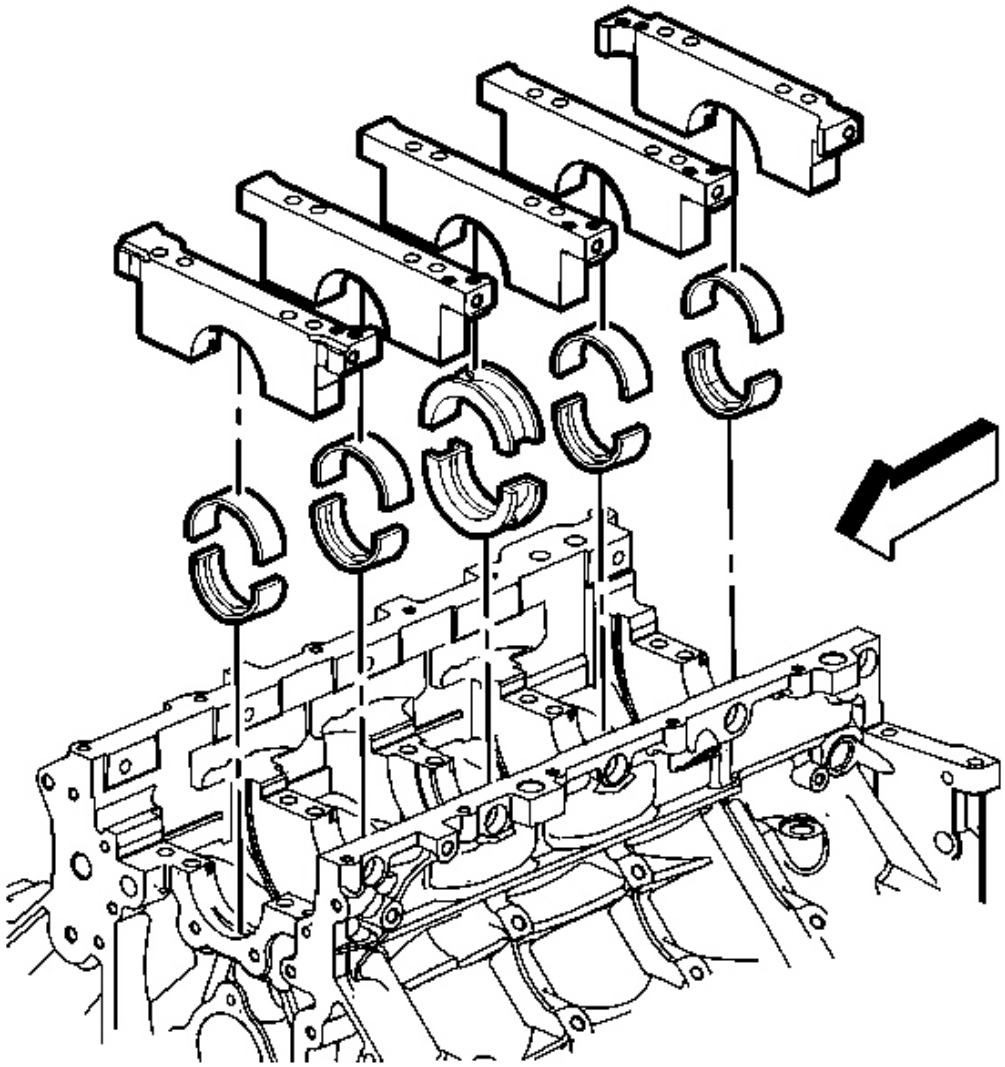

Fig. 76: View Of Crankshaft Bearings & Bearing Caps
Courtesy of GENERAL MOTORS CORP.

10. Remove the crankshaft bearings from the bearing caps and the engine block.
11. Mark, sort, or organize the crankshaft bearings so they may be installed to their original position and location. Refer to **Separating Parts** .

ENGINE BLOCK PLUG REMOVAL

cardiagn.com

Tools Required

J 41712 Oil Pressure Switch Socket

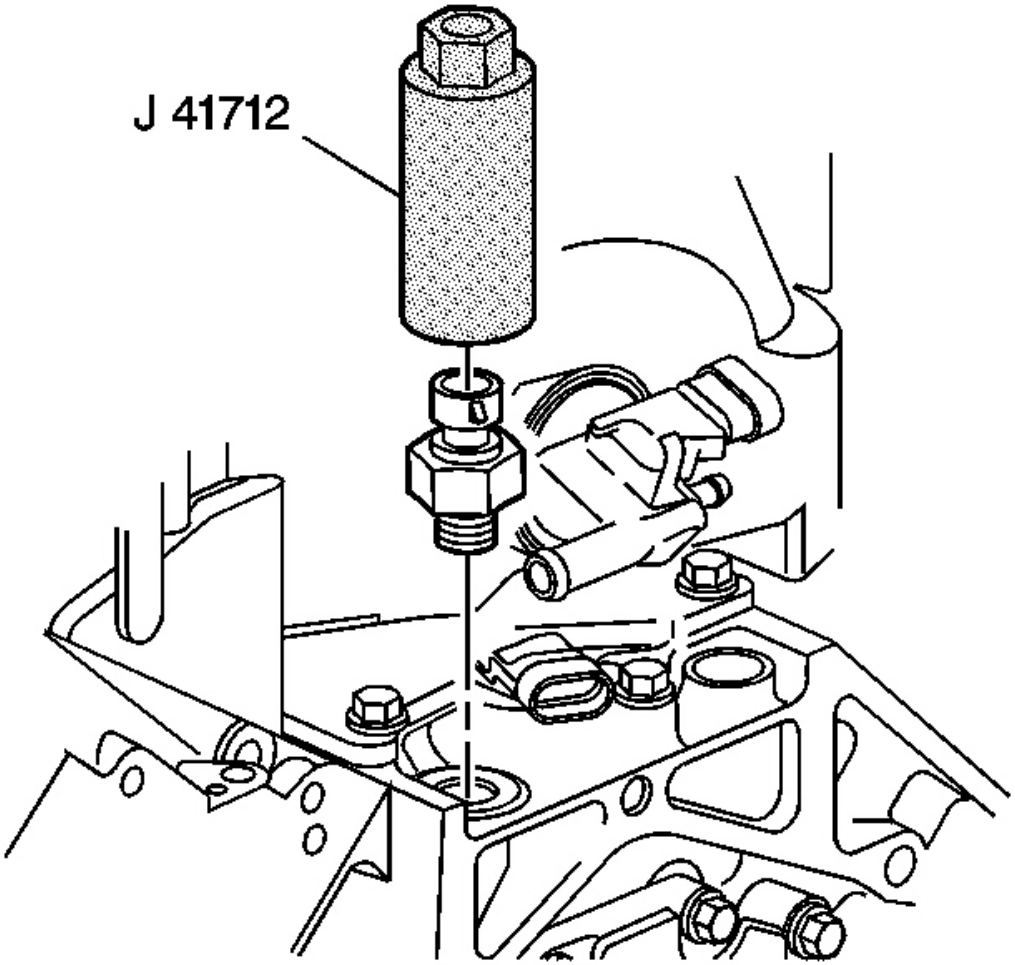

Fig. 77: Remove J 41712 Oil Pressure Sensor
Courtesy of GENERAL MOTORS CORP.

IMPORTANT:

- **Do not remove the engine block front oil gallery plug unless service is required.**
- **If the front oil gallery plug is removed for service, a NEW oil gallery plug must be installed.**

cardiagn.com

1. Use the J 41712 or equivalent in order to remove the oil pressure sensor, if not previously removed.

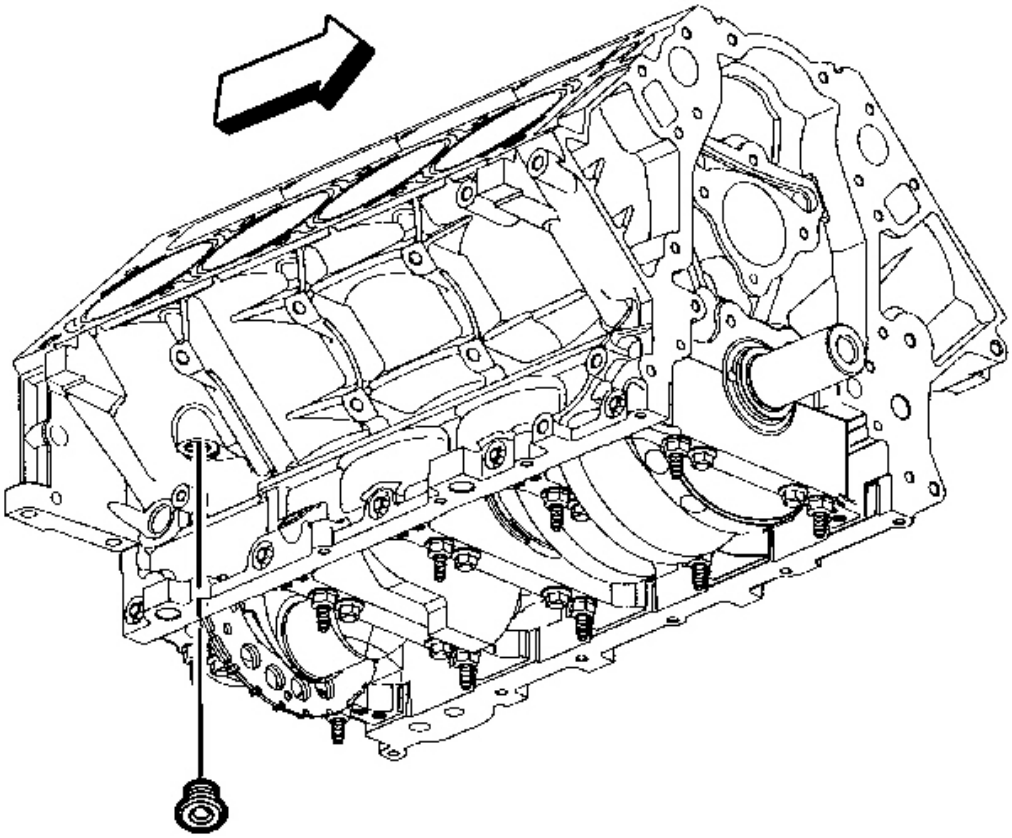

Fig. 78: Identifying Plug Location On Underside Of Block
Courtesy of GENERAL MOTORS CORP.

2. Remove the engine block right side coolant drain hole plug.

cardiagn.com

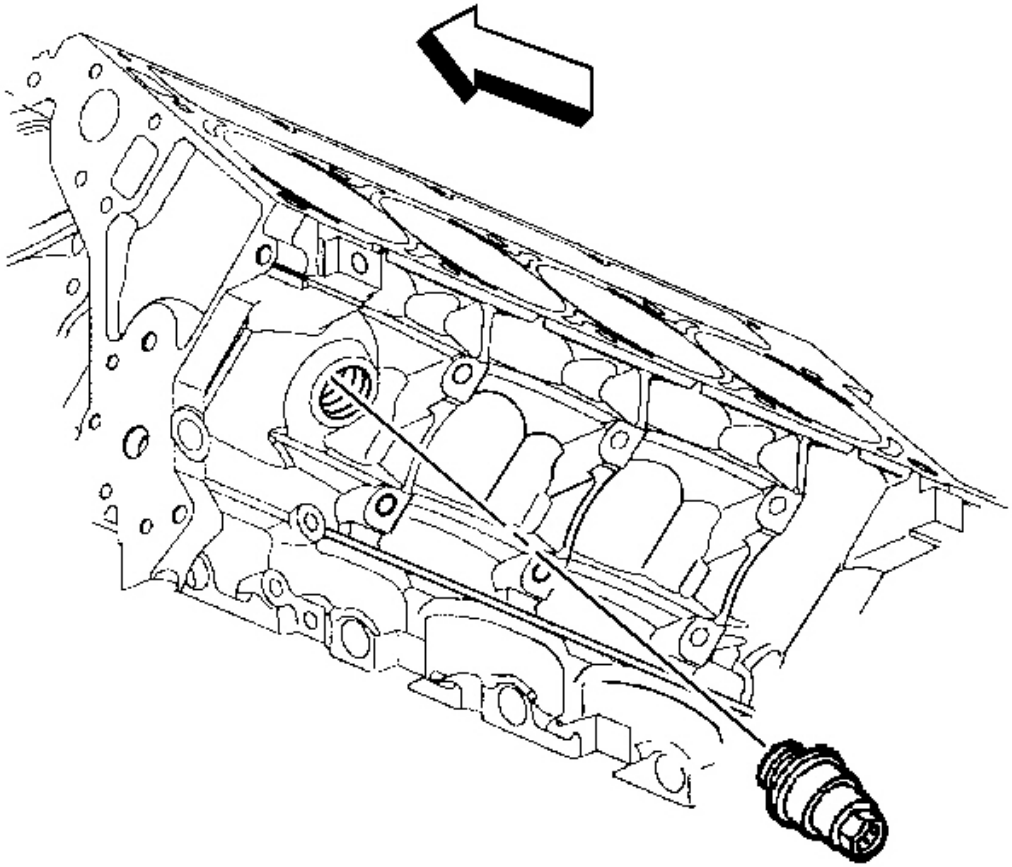

Fig. 79: View Of Engine Block Coolant Heater
Courtesy of GENERAL MOTORS CORP.

3. Remove the engine block coolant heater, if applicable.

cardiagn.com

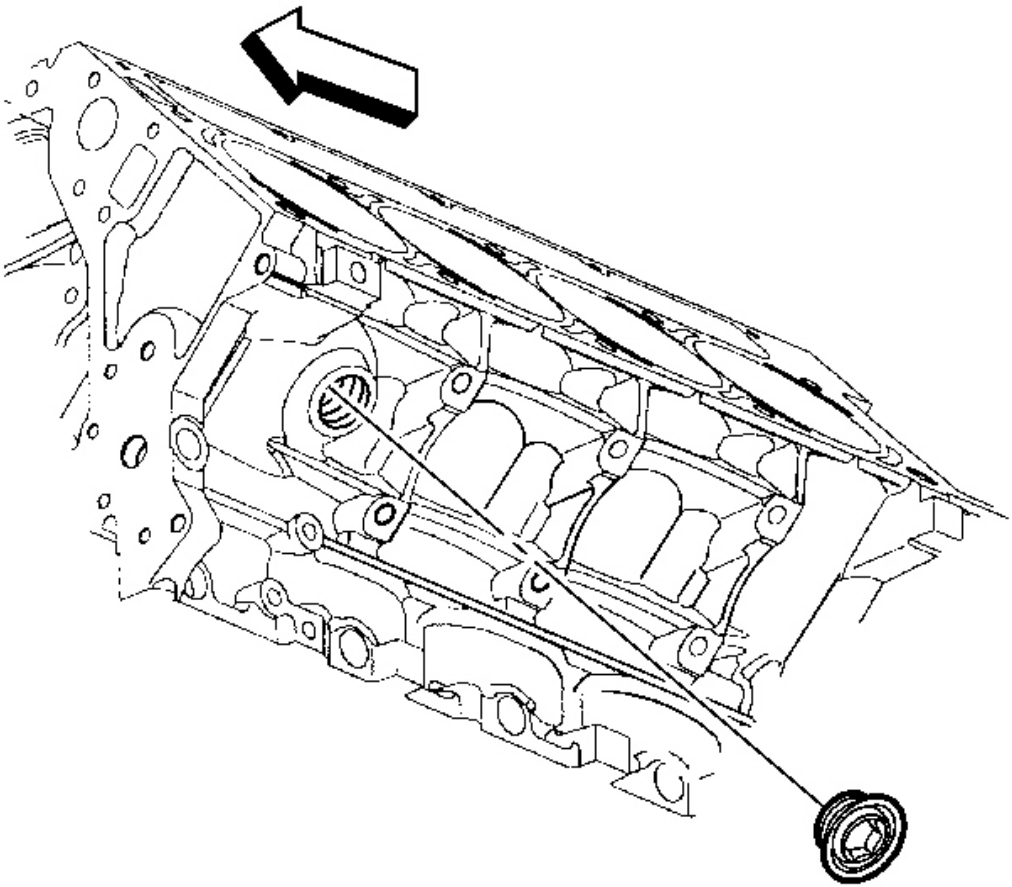

Fig. 80: View Of Engine Block Left Rear Coolant Drain Hole Plug
Courtesy of GENERAL MOTORS CORP.

4. Remove the engine block left side coolant drain hole plug, if applicable.

cardiagn.com

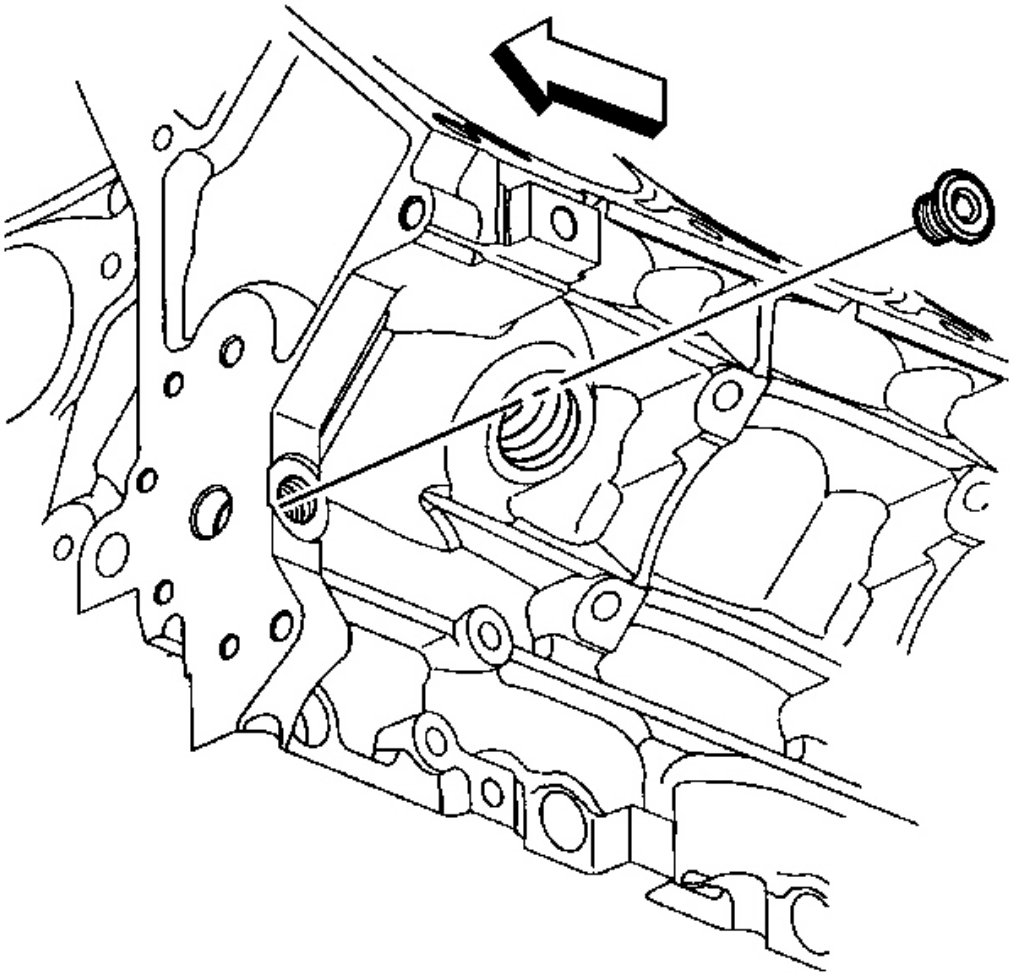

Fig. 81: Engine Block Left Front Oil Gallery Plug
Courtesy of GENERAL MOTORS CORP.

5. Remove the engine block left front oil gallery plug.

cardiagn.com

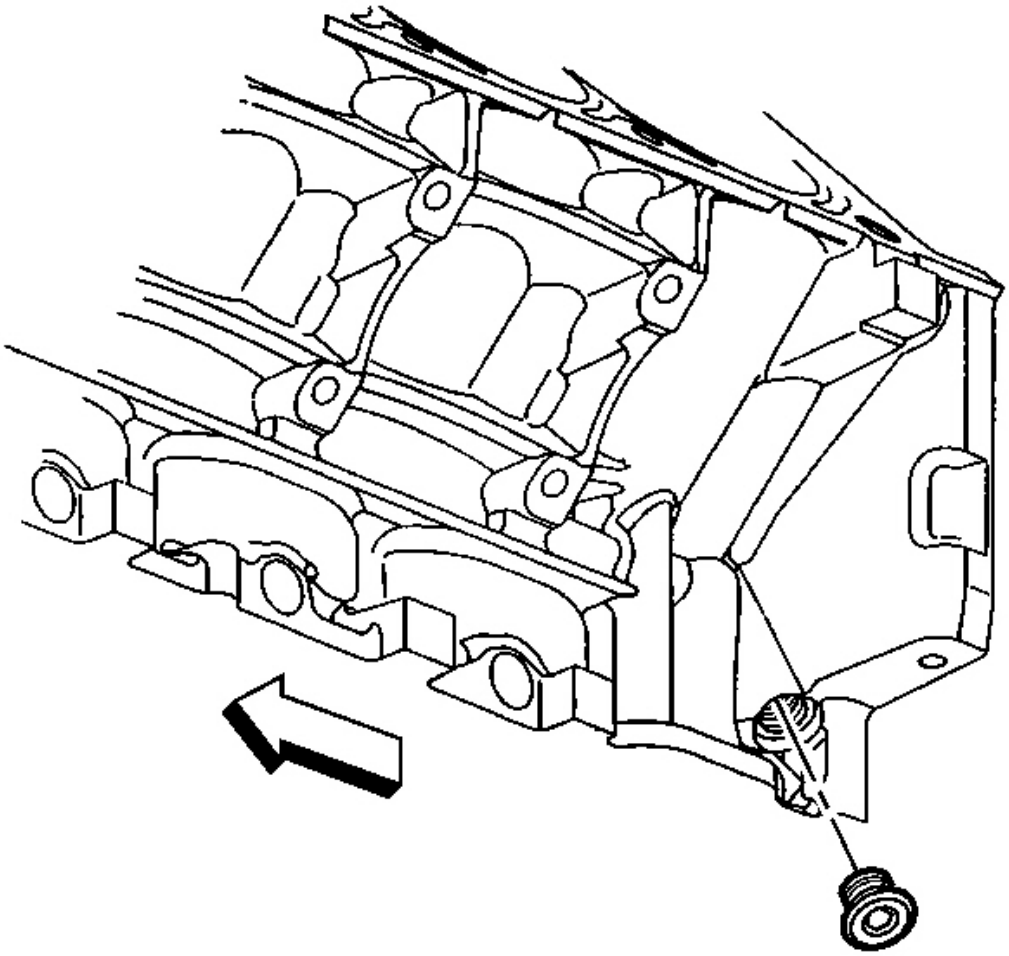

Fig. 82: Engine Block Left Rear Oil Gallery Plug
Courtesy of GENERAL MOTORS CORP.

6. Remove the engine block left rear oil gallery plug.
7. Inspect the block plug sealing washers.

   If the block plug and coolant heater sealing washers are not damaged, they may be used during assembly.

cardiagn.com

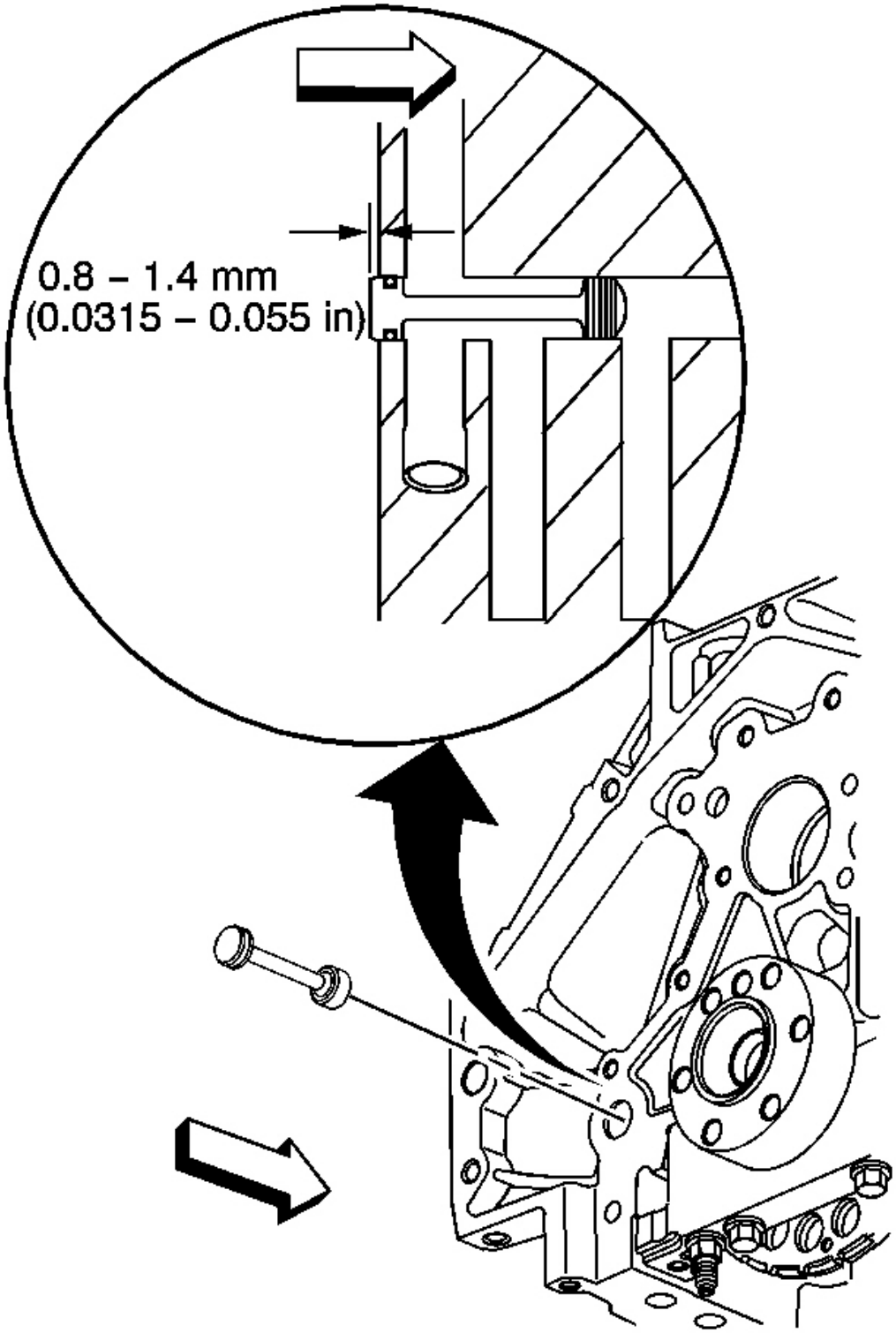

cardiagn.com

Fig. 83: Engine Block Rear Oil Gallery Plug
Courtesy of GENERAL MOTORS CORP.

8. Remove the engine block rear oil gallery plug.
9. Inspect the O-ring seal of the rear oil gallery plug.

   If the O-ring seal is not cut or damaged, the plug and O-ring seal may be used during assembly.

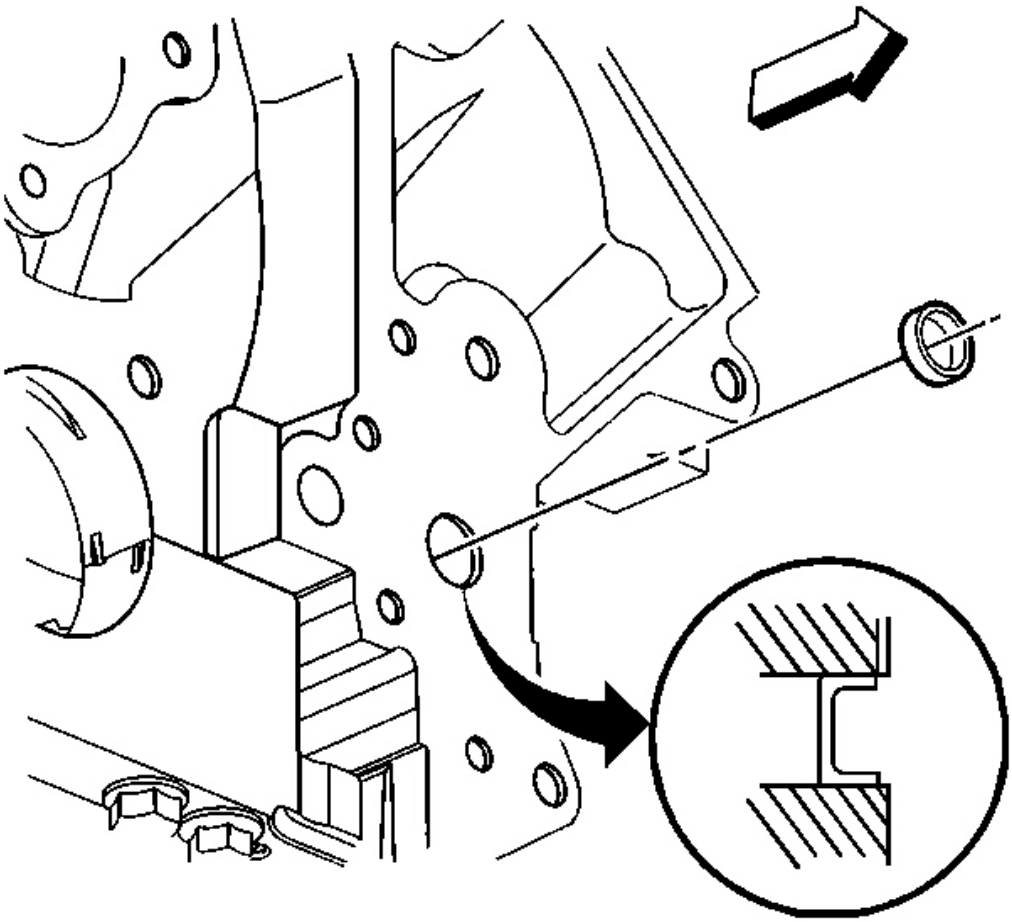

Fig. 84: Engine Block Front Oil Gallery Plug
Courtesy of GENERAL MOTORS CORP.

IMPORTANT:

- **Remove the front oil gallery plug only if service is required.**
- **If the front oil gallery plug is removed, a NEW oil gallery plug must**

cardiagn.com

be installed.

10. Remove the engine block front oil gallery plug.

ENGINE BLOCK CLEANING AND INSPECTION

Tools Required

- **J 8087** Cylinder Bore Gage
- **J 42385-100** Head/Main Bolt Thread Repair Kit

1. Clean the following areas:

NOTE: Do not use a caustic solution to clean the aluminum engine block.

IMPORTANT: When cleaning an engine block in a thermal type oven, do not exceed 232°C (450°F).

- The engine block in the solvent

  Remove all sludge, dirt, or debris. Refer to **Cleanliness and Care** .

CAUTION: Refer to Safety Glasses Caution in Cautions and Notices.

- Dry the block with compressed air.
- The gasket surfaces

  Refer to **Replacing Engine Gaskets** .

- The coolant passages
- The oil galleries
- The main bearing caps
- The engine block head bolt holes for threadlocking material

  Thread repair tool J 42385-107 may be used to clean the threads of old threadlocking material.

2. Inspect the following areas:
   - The cylinder walls for excessive scratches, gouging, or ring ridge
   - The coolant jacket for cracks
   - The valve lifter bores for excessive scoring or wear
   - The crankshaft bearing webs for cracks

cardiagn.com

- The gasket sealing surfaces for excessive scratches or gouging

  Refer to **Replacing Engine Gaskets** .

- The oil galleries for restrictions
- All threaded bolt holes for damage

3. Measure the cylinder bores for oversize.

Measuring the Cylinder for Oversize

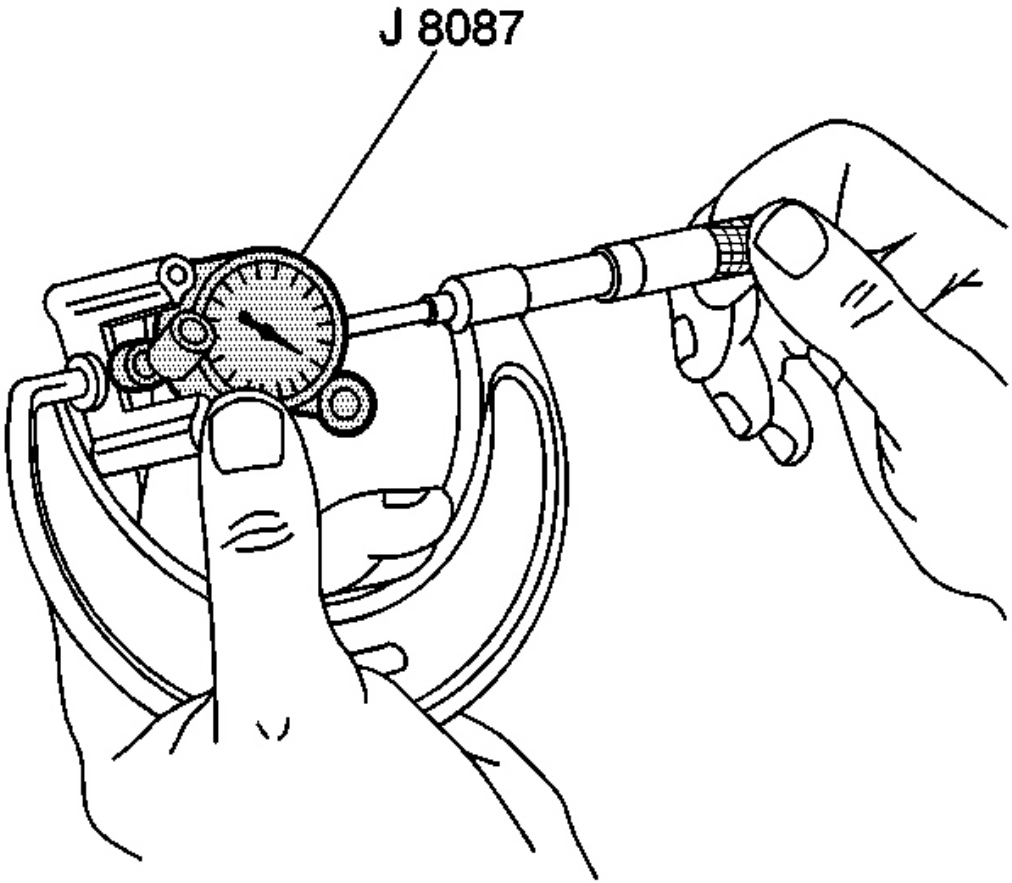

Fig. 85: Measuring The Micrometer & Bore Gauge Dial Using J 8087
Courtesy of GENERAL MOTORS CORP.

1. Adjust the micrometer to 99.0 mm (3.897 in).

cardiagn.com

2. Insert the **J 8087** into the micrometer and zero the bore gauge dial.

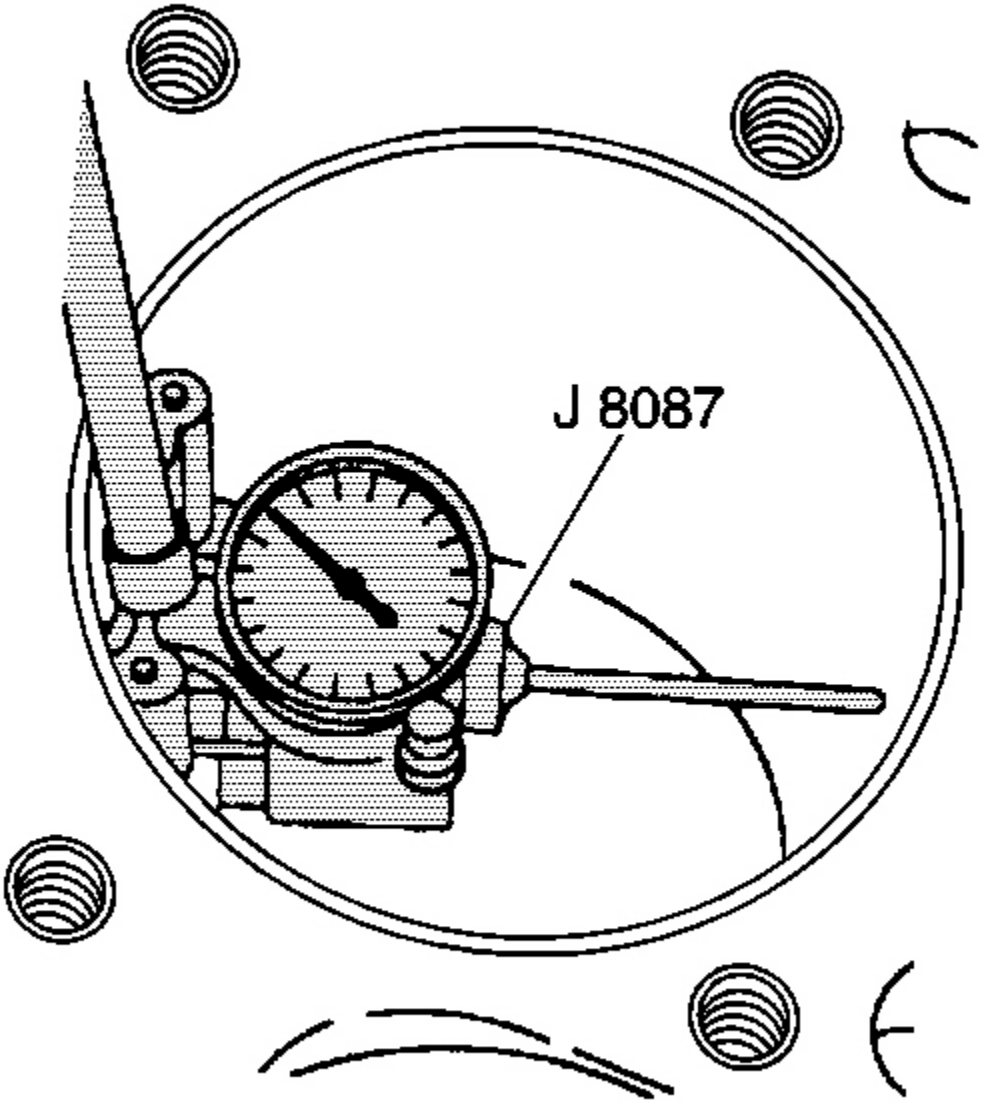

Fig. 86: Determining The Cylinder Bore Out-Of-Round Using J 8087
Courtesy of GENERAL MOTORS CORP.

3. Use a bore gage and measure the cylinder bore for oversize.

   Slide the bore gage up and down throughout the length of the cylinder bore. Check the bore both parallel

cardiagn.com

and perpendicular to the centerline of the crankshaft.

A cylinder that measures 99.0-99.018 mm (3.897-3.898 in) may be honed and serviced with a standard size piston.

A cylinder bore that exceeds the maximum diameter must be serviced with an oversized piston.

CYLINDER BORING AND HONING

Boring Procedure

1. A 0.25 mm (0.01 in) oversize service piston and piston ring set are available for the LS1/LS6 engine.

   IMPORTANT: Do not bore the cylinder liners on the LS1/LS6 engine.

2. It is recommended to hone the cylinder to achieve proper fit for the oversize piston.

   Refer to the Cylinder Honing information for the proper honing procedure.

Honing Procedure

cardiagn.com

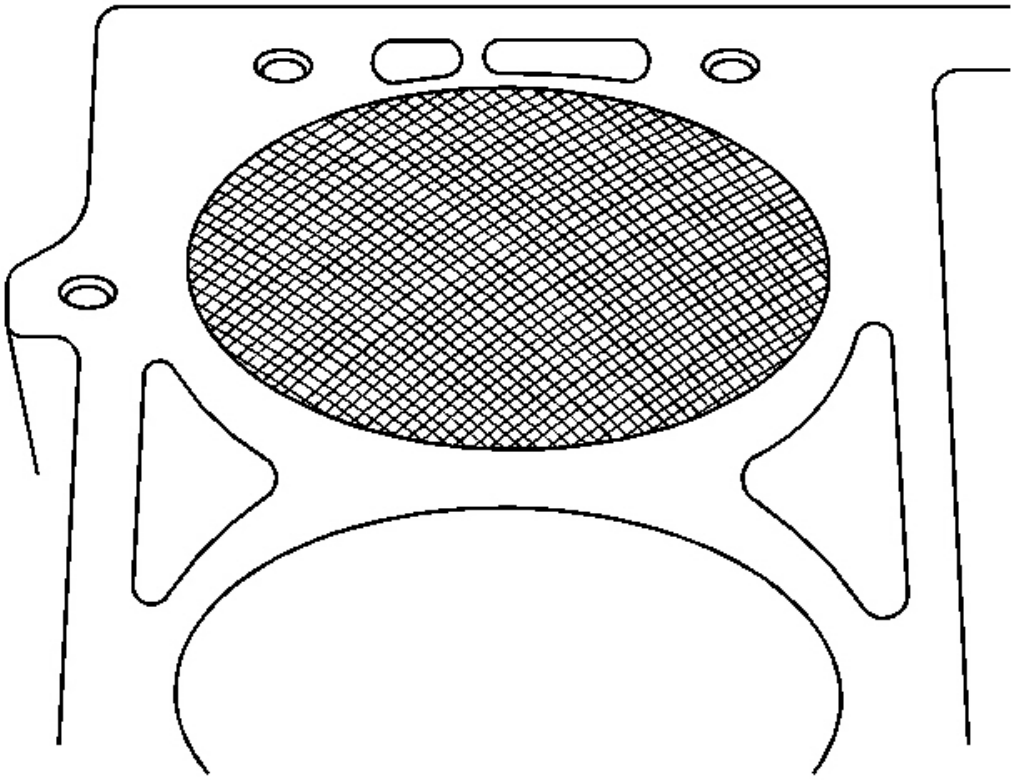

Fig. 87: Cylinder Bore Cross Hatch Pattern
Courtesy of GENERAL MOTORS CORP.

1. When honing the cylinders, follow the manufacturer's recommendations for equipment use, cleaning, and lubrication. Use only clean, sharp stones of the proper grade for the amount of material you remove. Dull, dirty stones cut unevenly and generate excessive heat. Do not hone to final clearance with a coarse or medium-grade stone. Leave sufficient metal so that all stone marks may be removed with fine-grade stones. Perform final honing with a fine-grade stone, honing the cylinder to the proper clearance.
2. During the honing operation, thoroughly clean the cylinder bore. Repeatedly check the cylinder bore for fit with the selected piston.

   All measurements of the piston or the cylinder bore should be made with the components at normal room temperature.

3. When honing a cylinder for fit to an oversize piston, first perform the preliminary honing with a 100 grit stone.
4. Perform final cylinder honing with a 240 grit stone and obtain a 45 degree cross hatch pattern.

cardiagn.com

A 240 grit stone is preferred for final honing. If a 240 grit stone is not available, a 220 grit stone may be used as a substitute.

5. When honing to eliminate taper in the cylinder, make full strokes the complete length of the bore.

   Repeatedly check the measurement at the top, the middle, and the bottom of the bore.

6. The finish marks should be clean but not sharp. The finish marks should also be free from imbedded particles and torn or folded metal.
7. By measuring the selected piston at the sizing point and by adding the average of the clearance specification, you can determine the final cylinder honing dimension required.
8. When finished, the reconditioned cylinder bores should have less than or meet the specified out-of-round and taper requirements.
9. After final honing and before the piston is checked for fit, clean the cylinder bores with hot water and detergent. Scrub the bores with a stiff bristle brush and rinse the bores thoroughly with hot water. Do not allow any abrasive material to remain in the cylinder bores. This abrasive material may cause premature wear of the new piston rings and the cylinder bores. Abrasive material will also contaminate the engine oil and may cause premature wear of the bearings. After washing the cylinder bore, dry the bore with a clean rag.
10. Perform final measurements of the piston and the cylinder bore.
11. Permanently mark the top of the piston for the specific cylinder to which it has been fitted.
12. Apply clean engine oil to each cylinder bore in order to prevent rusting.

Deglazing Procedure

cardiagn.com

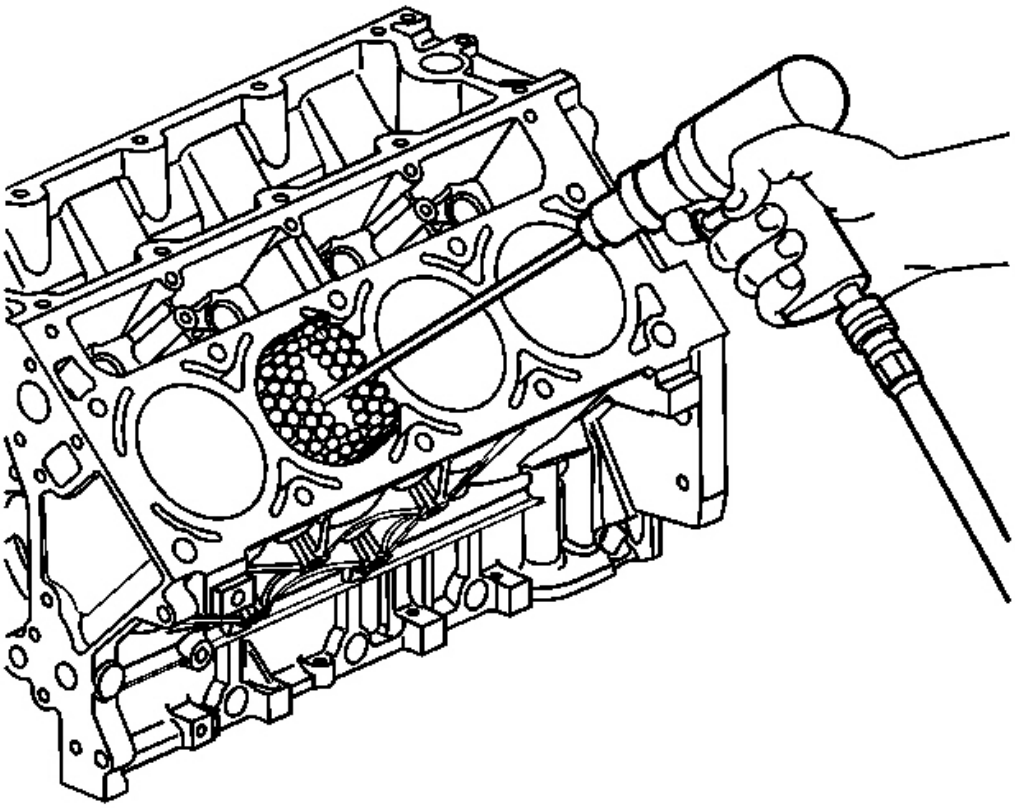

Fig. 88: Deglazing The Cylinder Bore
Courtesy of GENERAL MOTORS CORP.

Using a ball type or self centering honing tool, deglaze the cylinder bore lightly. Deglazing should be done only to remove any deposits that may have formed. Use a 240 grit stone of silicone carbide or equivalent material when preforming the deglazing procedure.

A 240 grit stone is preferred for final honing. If a 240 grit stone is not available, a 220 grit stone may be used as a substitute.

CRANKSHAFT AND BEARINGS CLEANING AND INSPECTION

Tools Required

- **J 6125-1B** Slide Hammer
- **J 7872** Magnetic Base Dial Indicator Set
- J 41818 Crankshaft Bearing Cap Remover

cardiagn.com

- **J 45059** Angle Meter

Cleaning Procedure

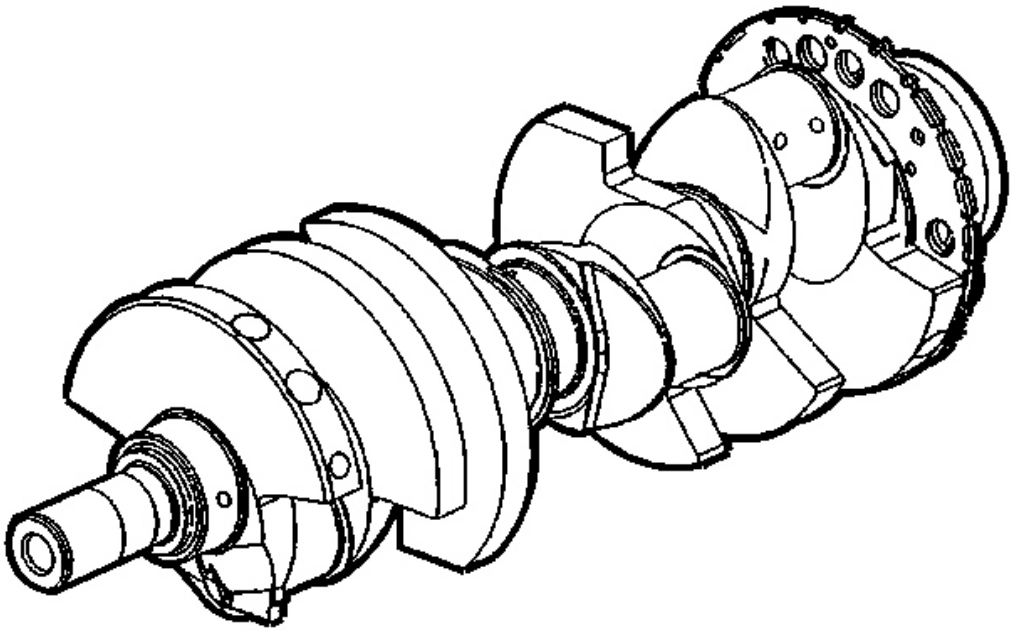

Fig. 89: CKP Reluctor Ring Lobes
Courtesy of GENERAL MOTORS CORP.

IMPORTANT: Use care when handling the crankshaft. Avoid damage to the bearing surfaces or the lobes of the crankshaft position reluctor ring. Damage to the teeth of the crankshaft position reluctor ring may effect On-Board Diagnostics (OBD) II system performance.

1. Clean the crankshaft with solvent.
2. Thoroughly clean all oil passages and inspect for restrictions or burrs.

CAUTION: Refer to Safety Glasses Caution in Cautions and Notices.

3. Dry the crankshaft with compressed air.

Inspection Procedure

cardiagn.com

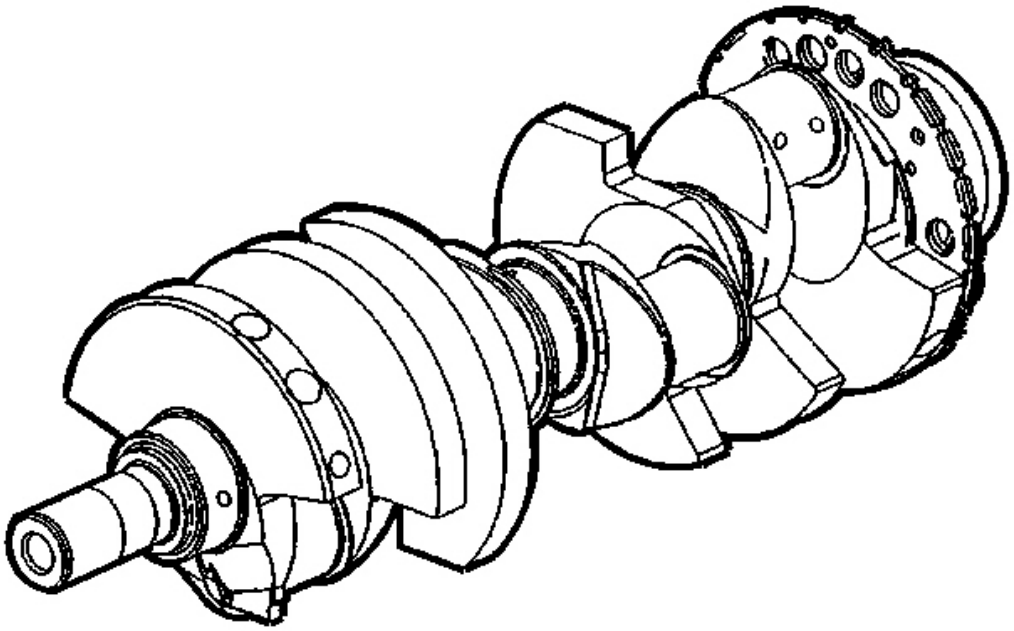

Fig. 90: CKP Reluctor Ring Lobes
Courtesy of GENERAL MOTORS CORP.

IMPORTANT:

- **The reluctor ring teeth should not have imperfections on the rising or falling edges.**
- **Imperfections of the reluctor ring teeth may effect OBD II system performance.**

1. Perform a visual inspection of the crankshaft for damage.
2. Inspect the crankshaft position (CKP) reluctor ring lobes for damage.

cardiagn.com

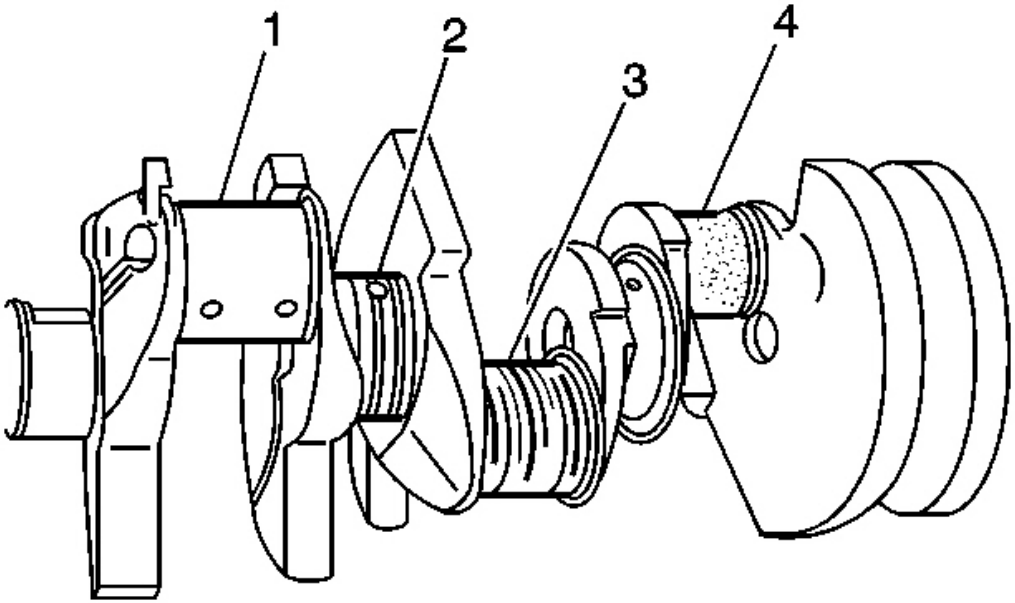

Fig. 91: Crankshaft Inspection Areas (1-4)
Courtesy of GENERAL MOTORS CORP.

3. Inspect the crankshaft journals for wear (1).

   Journals should be smooth with no signs of scoring, wear, or damage.

4. Inspect the crankshaft journals for grooves or scoring (2).
5. Inspect the crankshaft journals for scratches or wear (3).
6. Inspect the crankshaft journals for pitting or imbedded bearing material (4).

cardiagn.com

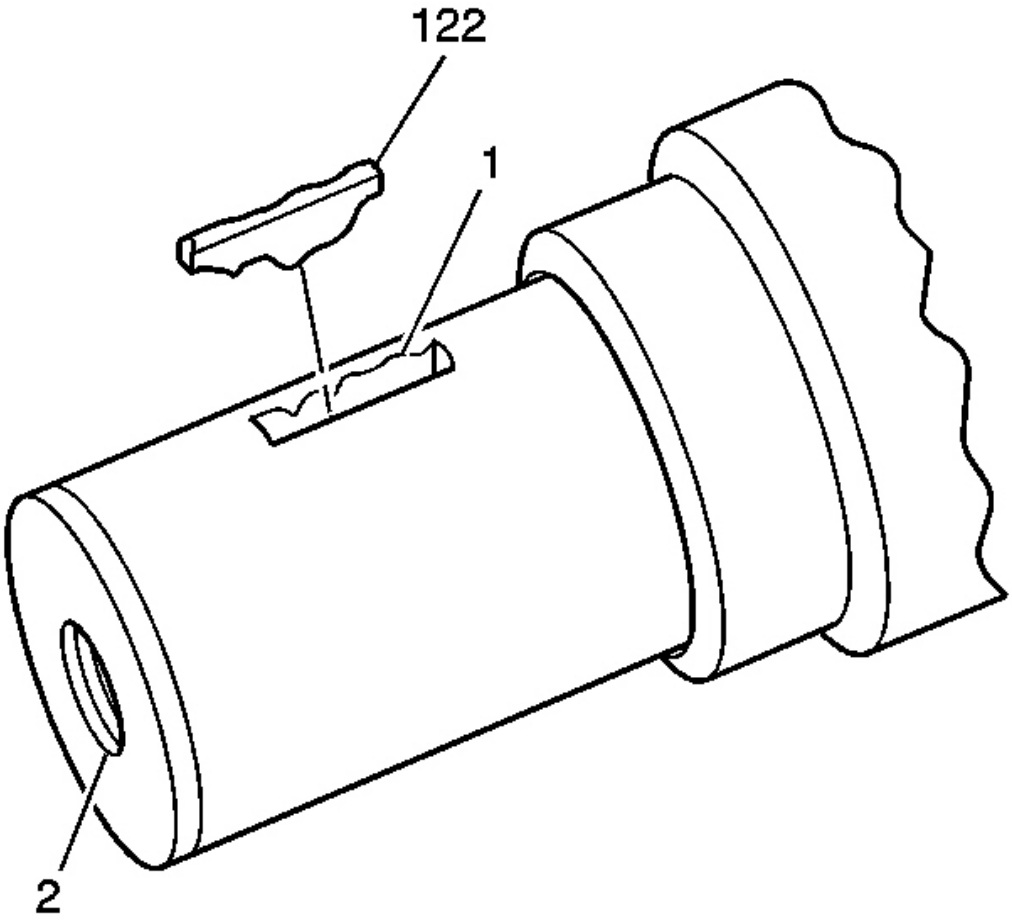

Fig. 92: View Of Crankshaft Key, Keyway & Threaded Hole
Courtesy of GENERAL MOTORS CORP.

7. Inspect the crankshaft key (122), keyway (1), and threaded hole (2) for damage.

cardiagn.com

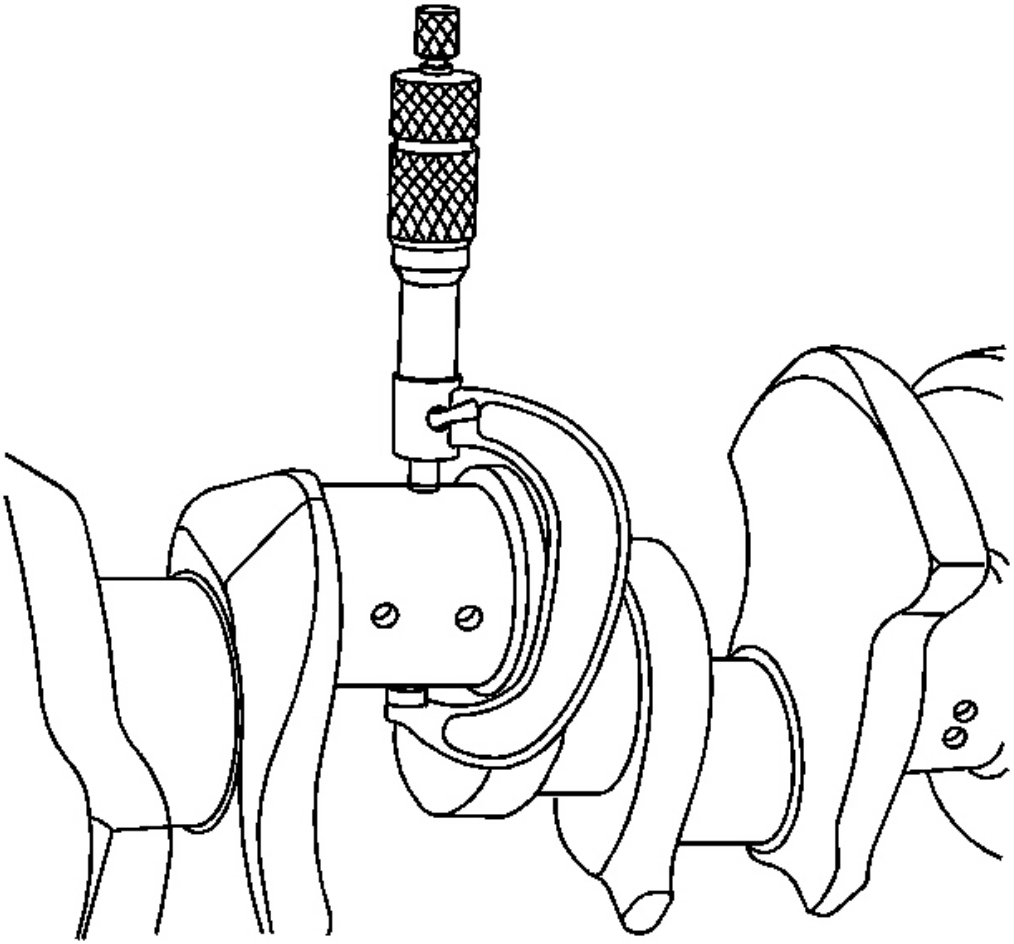

Fig. 93: Measuring The Crankpins For Out-Of-Round & Taper
Courtesy of GENERAL MOTORS CORP.

8. Measure the crankpins for the out-of-round.
9. Measure the crankpins for taper.

cardiagn.com

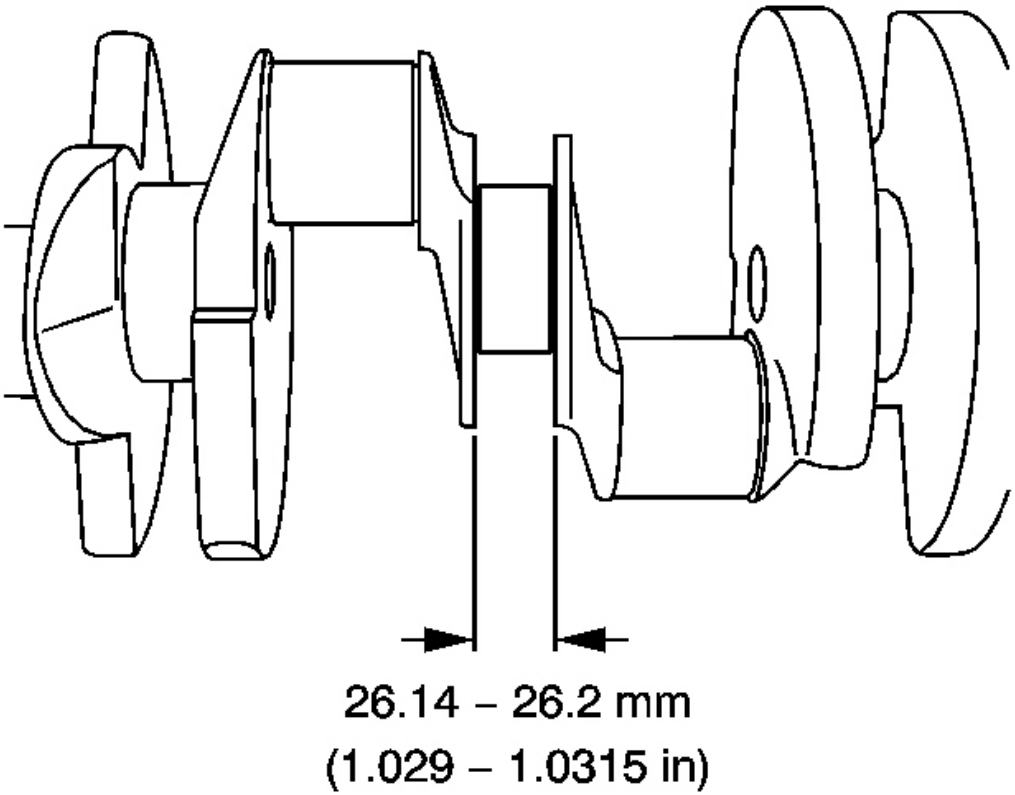

Fig. 94: Measuring The Crankshaft Thrust Wall Width
Courtesy of GENERAL MOTORS CORP.

10. Measure the crankshaft thrust wall width.

    A crankshaft with a thrust wall width in excess of 26.2 mm (1.0315 in) must be replaced.

cardiagn.com

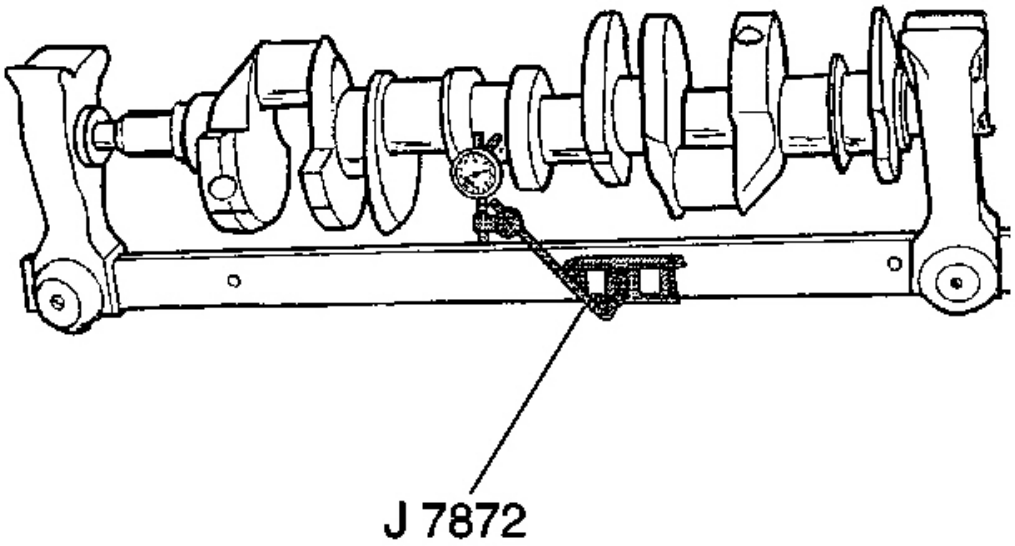

Fig. 95: Measuring The Crankshaft Runout Using J 7872
Courtesy of GENERAL MOTORS CORP.

11. Measure the crankshaft runout.

    Use wooden V blocks or a fixture to support the crankshaft on the front and rear journals.

12. Use the **J 7872** in order to measure the crankshaft runout at the front and rear intermediate journals.
13. Use the **J 7872** in order to measure the runout of the crankshaft rear flange.
14. Use the **J 7872** in order to measure the runout of the crankshaft position reluctor ring. Reluctor ring runout should be measured 1.0 mm (0.04 in) below the ring teeth.

    If the reluctor ring has runout in excess of 0.7 mm (0.028 in), replace the crankshaft.

cardiagn.com

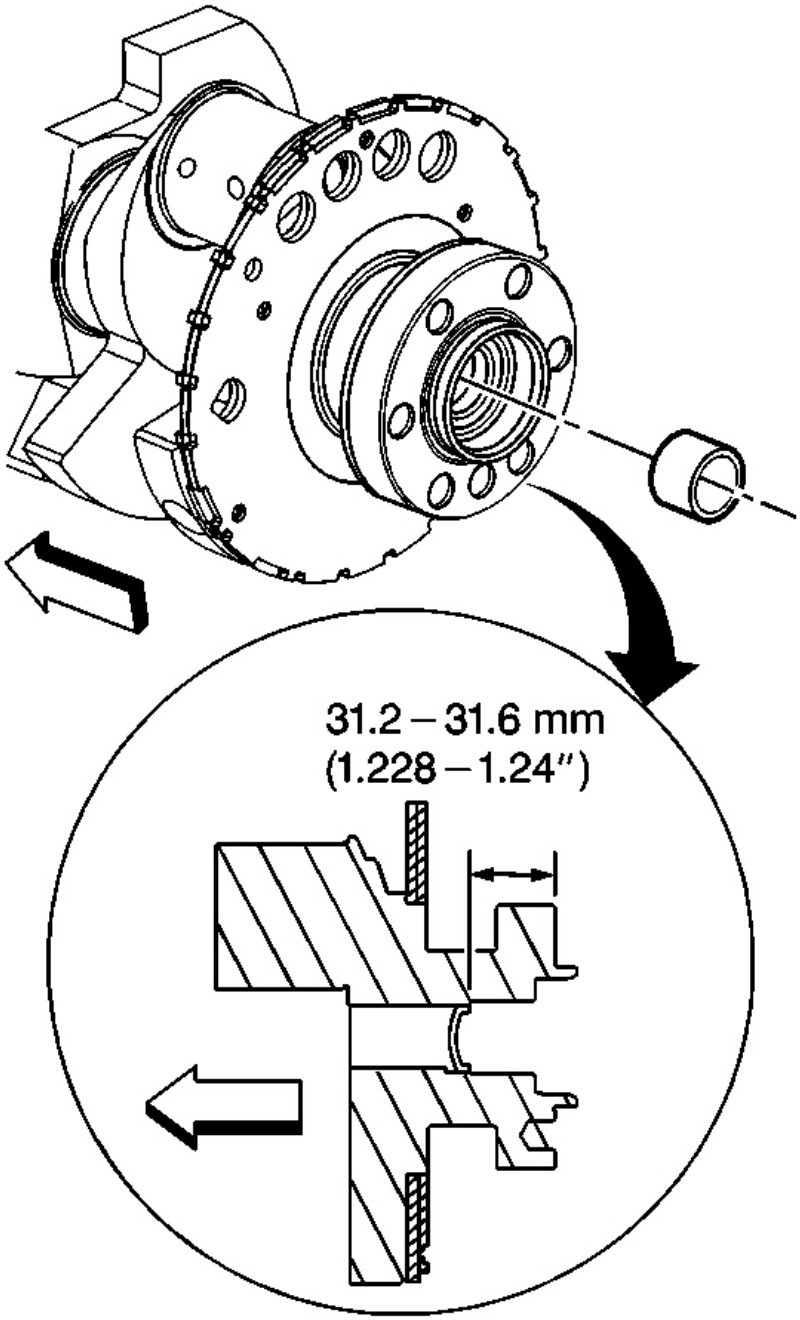

Fig. 96: Crankshaft Rear Oil Gallery Plug
Courtesy of GENERAL MOTORS CORP.

IMPORTANT: A loose or damaged crankshaft oil gallery plug must be replaced.

cardiagn.com

15. Inspect the crankshaft rear oil gallery plug for a loose fit or leaking.

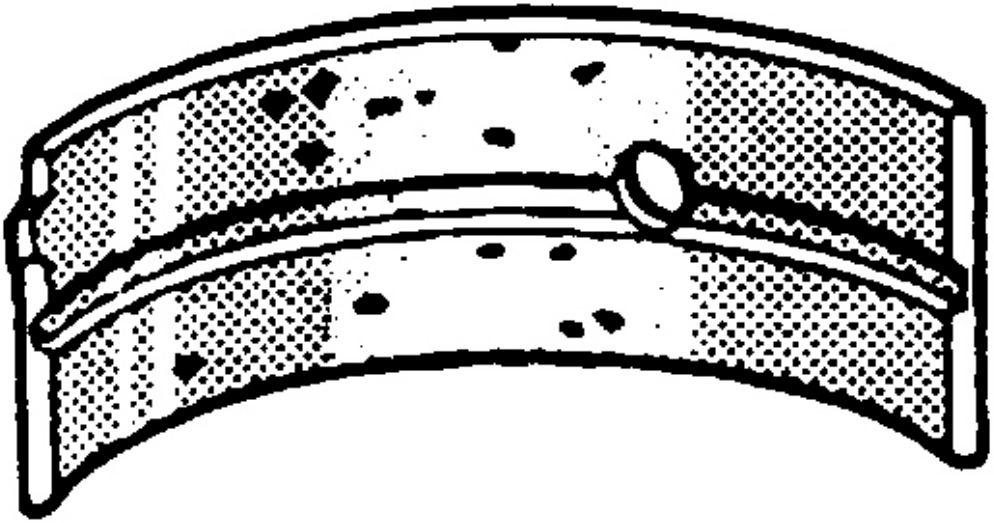

Fig. 97: Inspecting Bearings For Craters Or Pockets
Courtesy of GENERAL MOTORS CORP.

16. Inspect crankshaft bearings for craters or pockets. Flattened sections on the bearing halves also indicate fatigue.

cardiagn.com

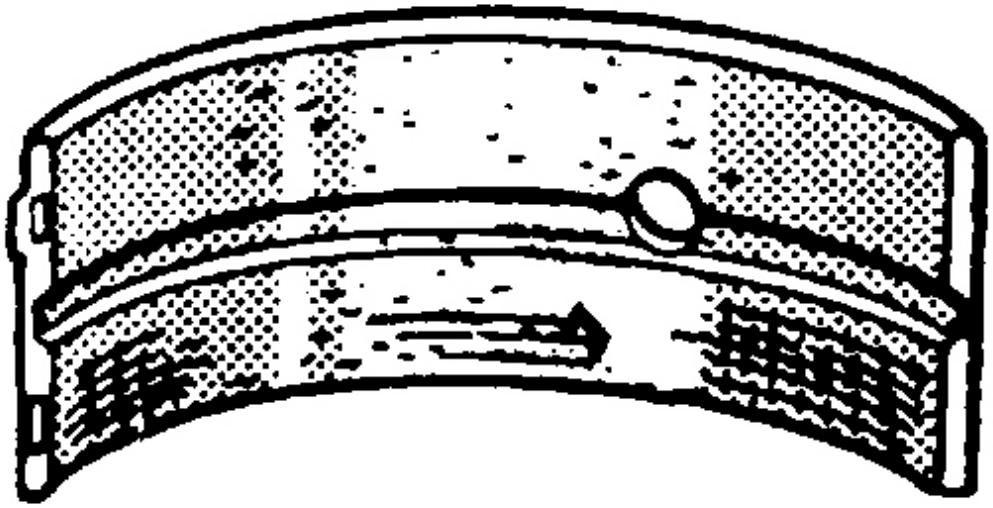

Fig. 98: Inspecting The Crankshaft Rod Bearings For Excess Scoring Or Discoloration
Courtesy of GENERAL MOTORS CORP.

17. Inspect the crankshaft bearings for excessive scoring or discoloration.
18. Inspect the crankshaft bearings for dirt or debris imbedded into the bearing material.

cardiagn.com

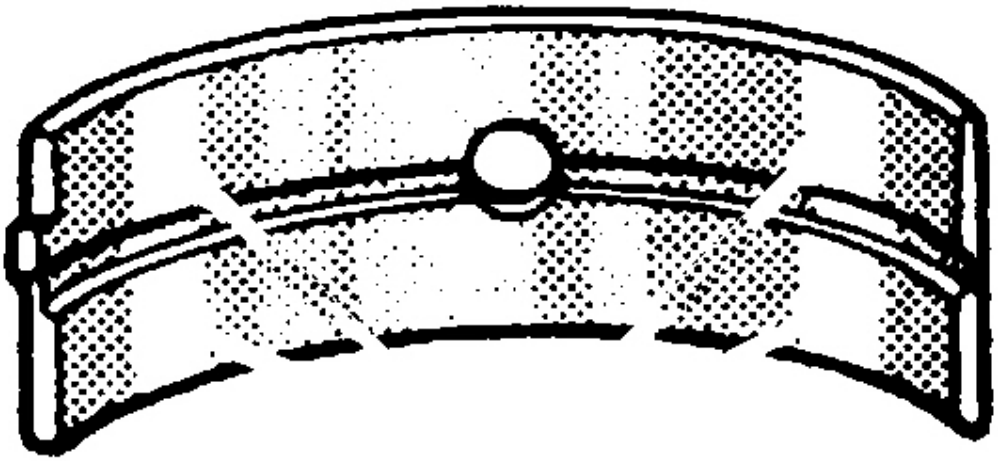

Fig. 99: Inspect The Crankshaft Bearings For Improper Seating
Courtesy of GENERAL MOTORS CORP.

19. Inspect the crankshaft bearings for improper seating indicated by bright, polished sections of the bearing.

    If the lower half of the bearing is worn or damaged, both upper and lower halves should be replaced.

    Generally, if the lower half is suitable for use, the upper half should also be suitable for use.

Measuring Main Bearing Clearance - Gaging Plastic Method

cardiagn.com

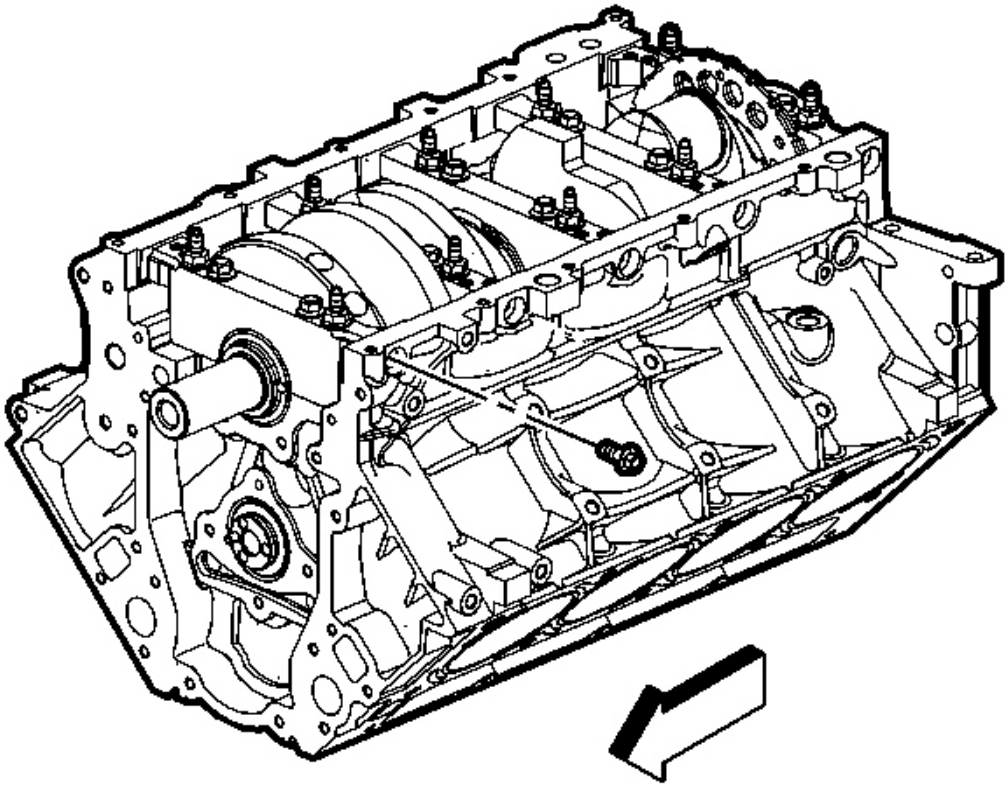

Fig. 100: View Of Bearing Cap Bolts & Studs
Courtesy of GENERAL MOTORS CORP.

IMPORTANT:

- **The crankshaft main bearings are a precision insert type. Main bearing caps are machined with the engine block, for proper clearance, and cannot be shimmed or filed for bearing fit. If the clearances are found to be excessive, new bearings and/or engine block and cap repair or replacement may be required.**
- **Do not rotate the crankshaft while gaging plastic is between the crankshaft journal and the bearing surface.**
- **The crankshaft bearing clearances are critical. Excessive bearing clearance may effect crankshaft position sensor signals and may effect On-Board Diagnostics (OBD) II system operation.**
- **Remove the bearing cap side bolts prior to cap removal.**

1. Remove the bearing cap M8 bolts.

cardiagn.com

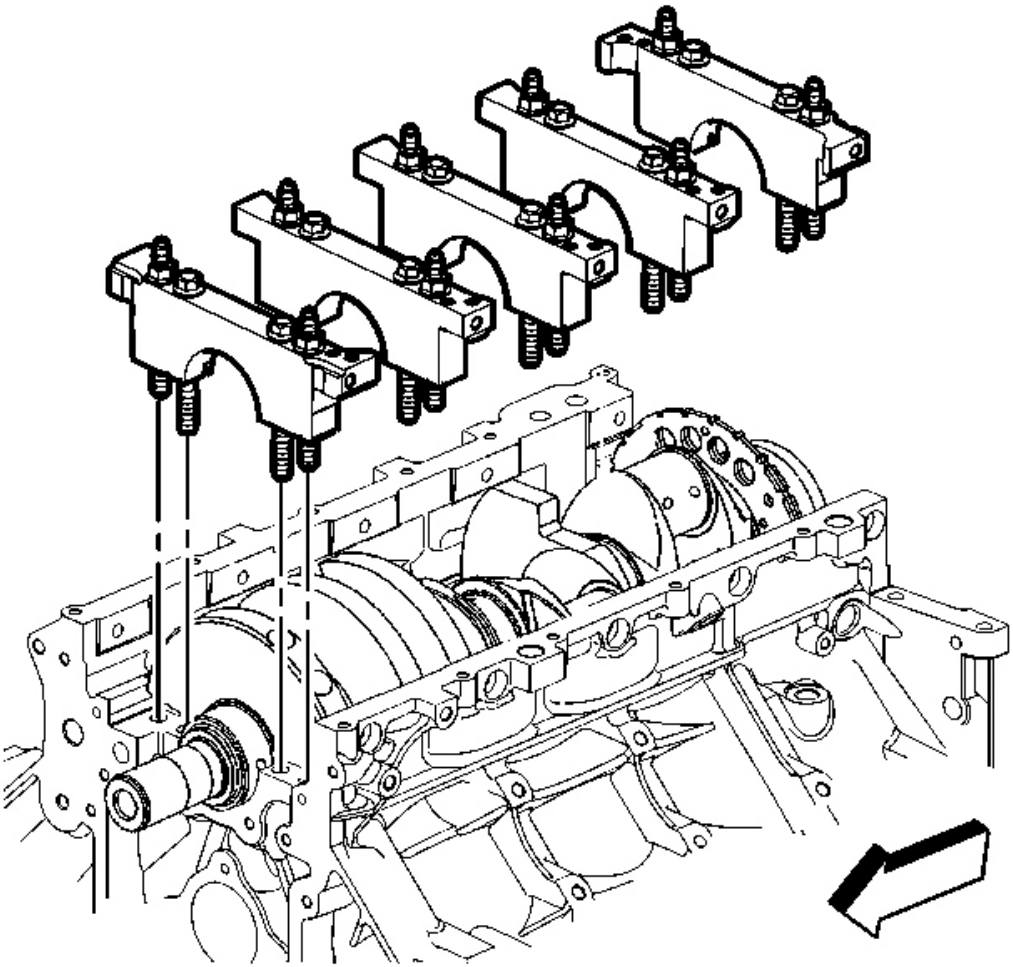

Fig. 101: View Of Bearing Caps
Courtesy of GENERAL MOTORS CORP.

2. Remove the bearing cap M10 bolts and studs.

cardiagn.com

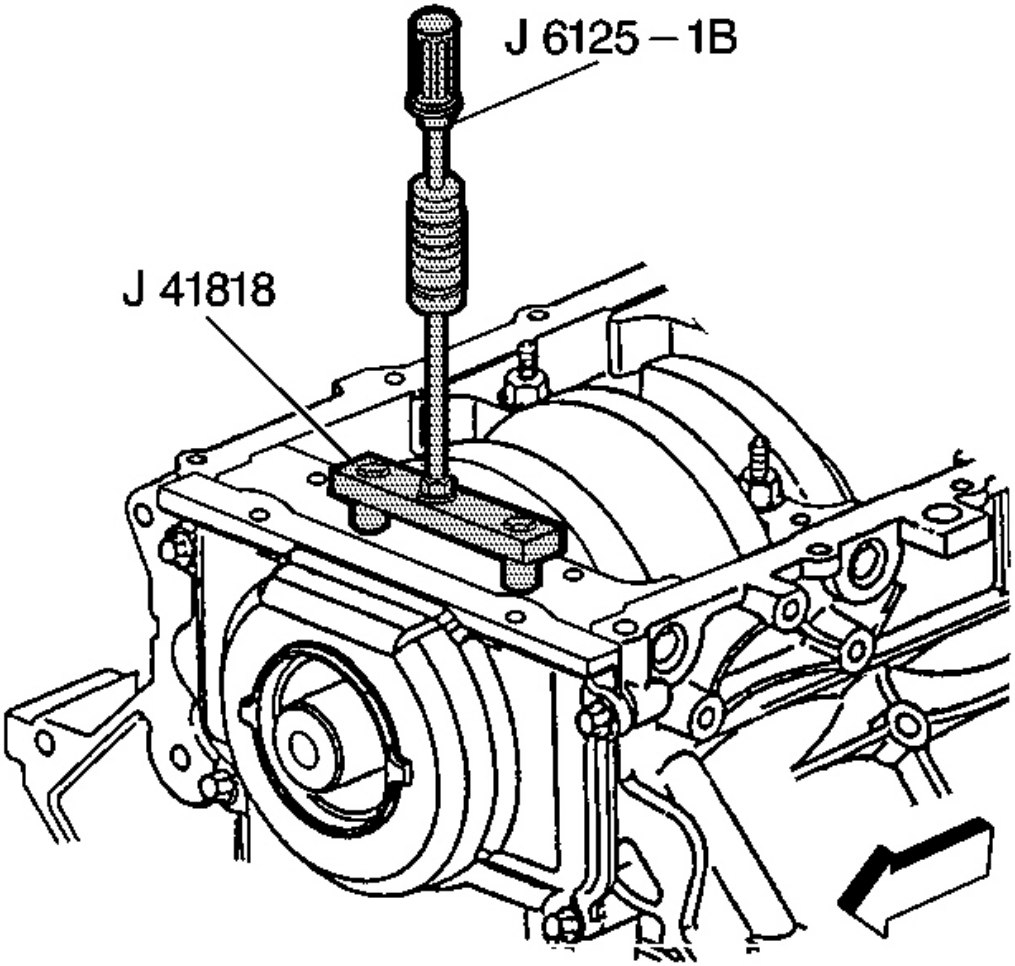

Fig. 102: View Of J 6125-1B & J 41818
Courtesy of GENERAL MOTORS CORP.

NOTE: **Refer to Fastener Notice in Cautions and Notices.**

3. Install the J 41818 to the bearing cap.

   Tighten: Tighten the J 41818 bolts to 11 N.m (100 lb in).

4. Install the **J 6125-1B** to the J 41818 in order to remove the bearing cap.

cardiagn.com

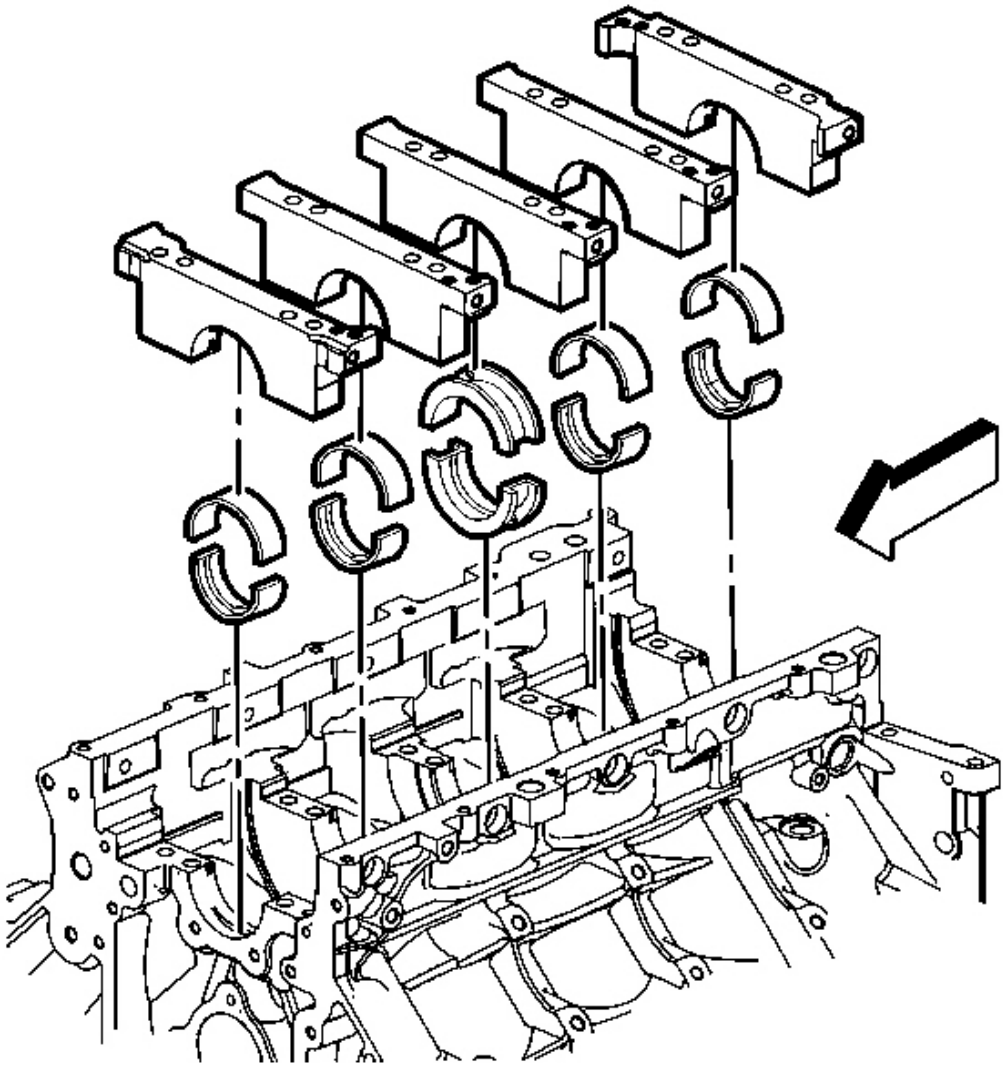

Fig. 103: View Of Crankshaft Bearings & Bearing Caps
Courtesy of GENERAL MOTORS CORP.

5. Remove the bearing cap and lower bearing.

cardiagn.com

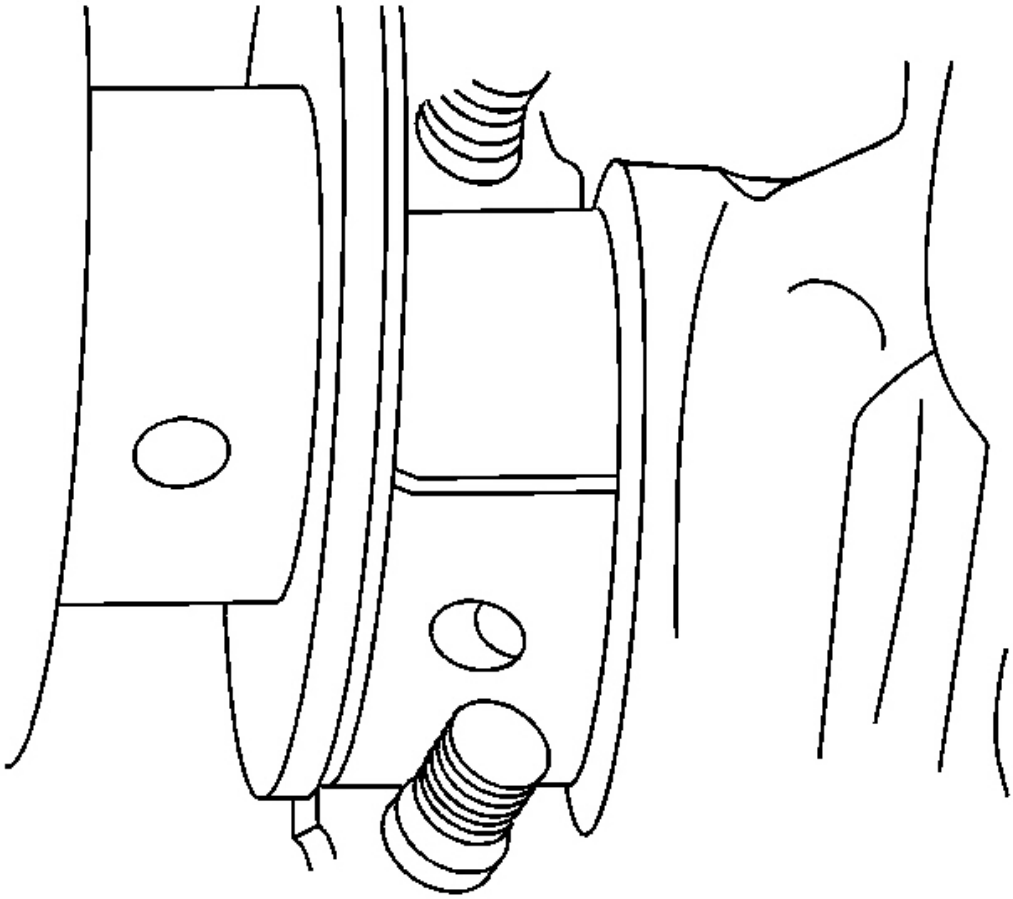

Fig. 104: View Of Gaging Plastic & Crankshaft Journal
Courtesy of GENERAL MOTORS CORP.

6. Install gaging plastic onto the crankshaft journal. Install the gaging plastic the full width of crankshaft bearing journal.

cardiagn.com

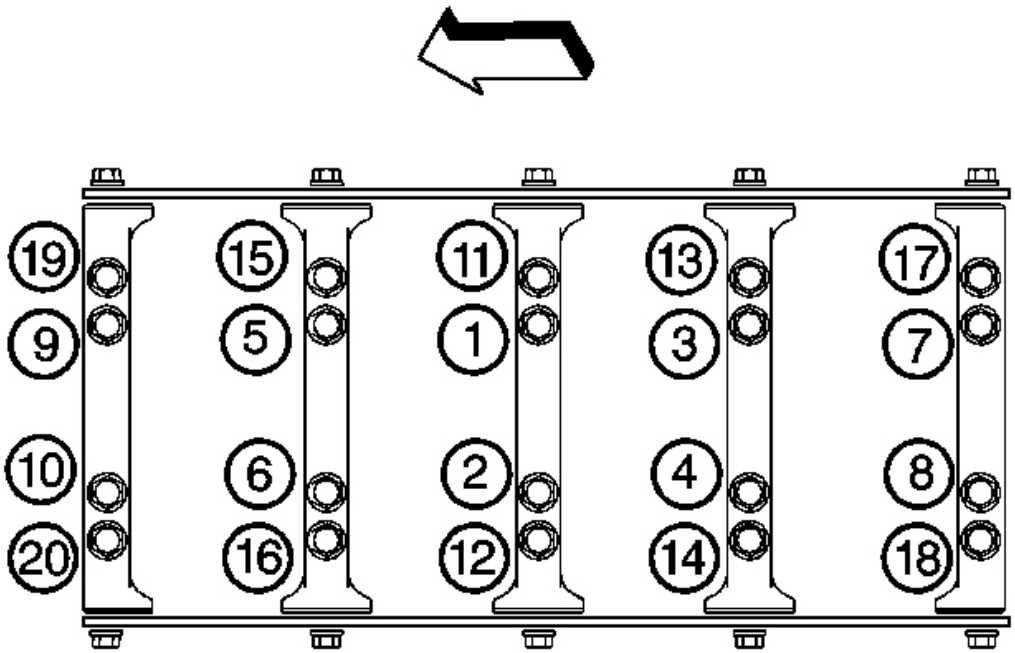

Fig. 105: Main Cap Bolt Hole Tightening Sequence
Courtesy of GENERAL MOTORS CORP.

7. Install the bearing, bearing cap, bolts and studs.

   Tighten:

   1. Tighten the M10 bolts (1-10) a first pass in sequence to 20 N.m (15 lb ft).
   2. Tighten the M10 bolts (1-10) a final pass in sequence to 80 degrees using the **J 45059** .
   3. Tighten the M10 studs (11-20) a first pass in sequence to 20 N.m (15 lb ft).
   4. Tighten the M10 studs (11-20) a final pass in sequence to 53 degrees using the **J 45059** .
   5. Tighten the M8 bolts to 25 N.m (18 lb ft).

      Tighten the bolt on one side of the bearing cap and then tighten the bolt on the opposite side of the same bearing cap.

cardiagn.com

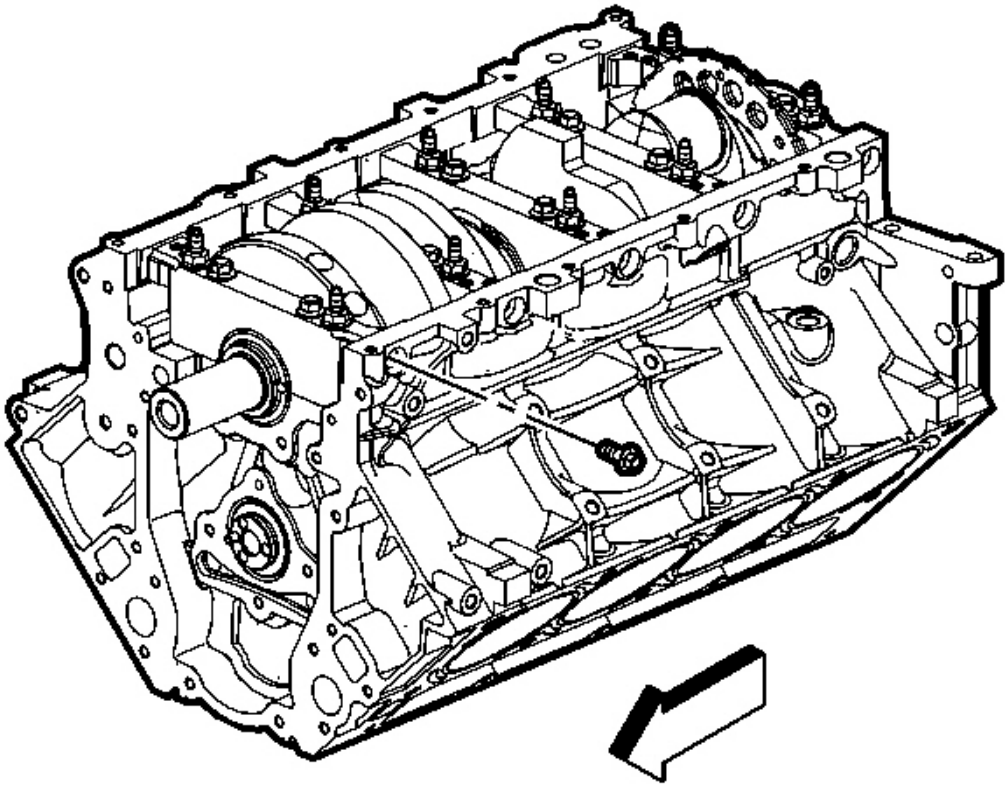

Fig. 106: View Of Bearing Cap Bolts & Studs
Courtesy of GENERAL MOTORS CORP.

IMPORTANT: Remove the bearing cap side bolts prior to cap removal.

8. Remove the bearing cap M8 bolts.

cardiagn.com

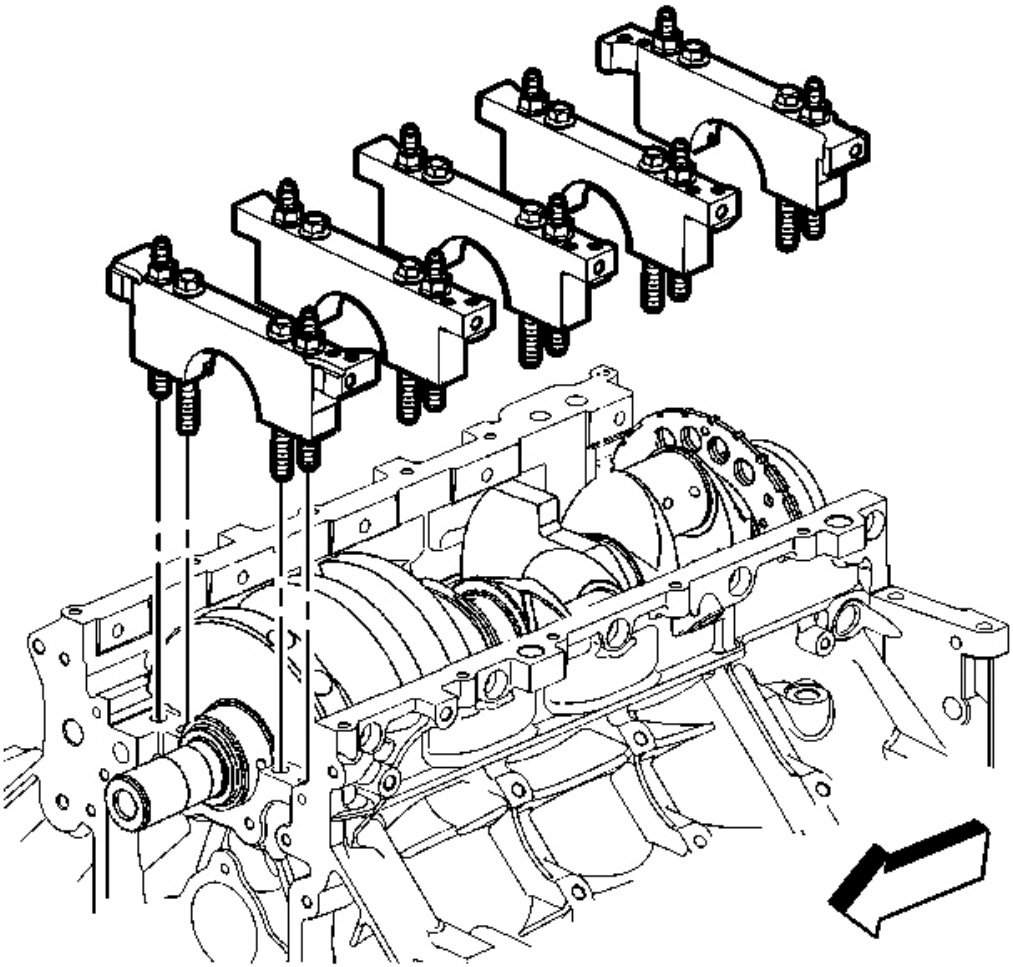

Fig. 107: View Of Bearing Caps
Courtesy of GENERAL MOTORS CORP.

9. Remove the bearing cap M10 bolts and studs.

cardiagn.com

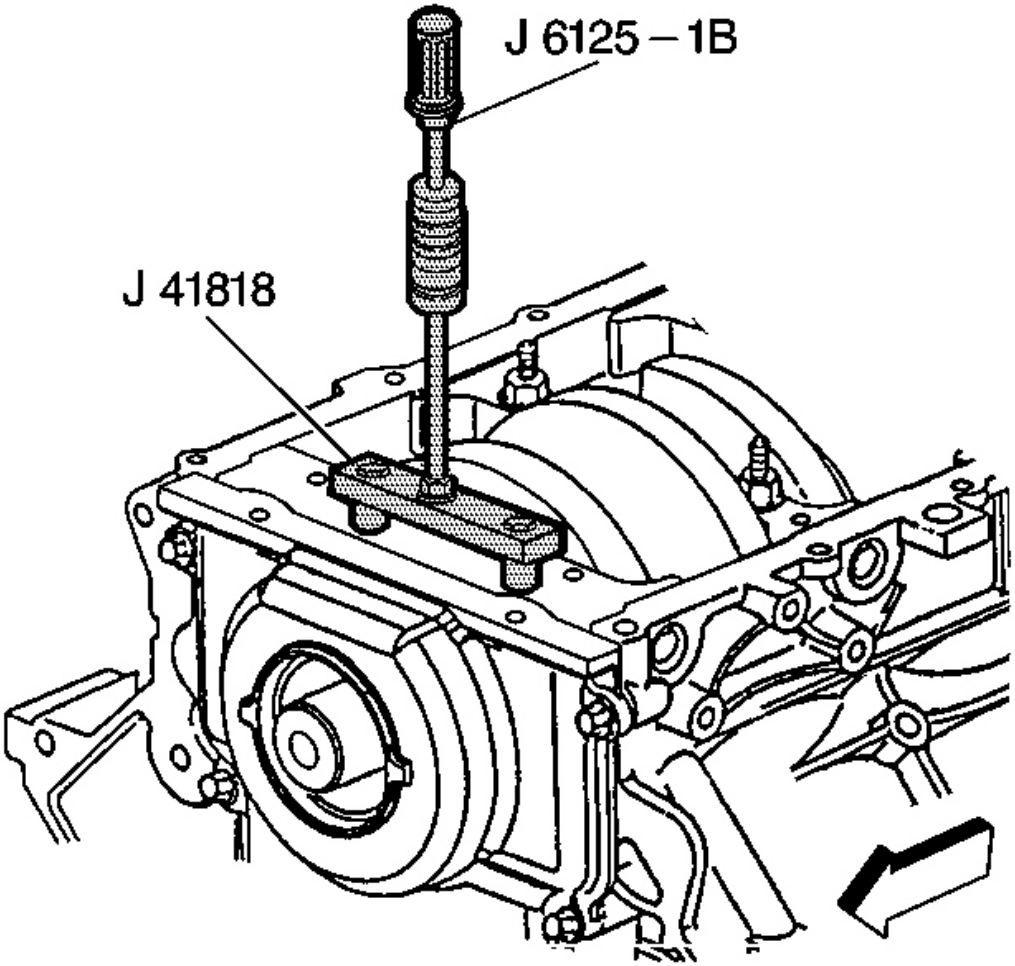

Fig. 108: View Of J 6125-1B & J 41818
Courtesy of GENERAL MOTORS CORP.

10. Use the J 41818 and the **J 6125-1B** in order to remove the bearing cap.

cardiagn.com

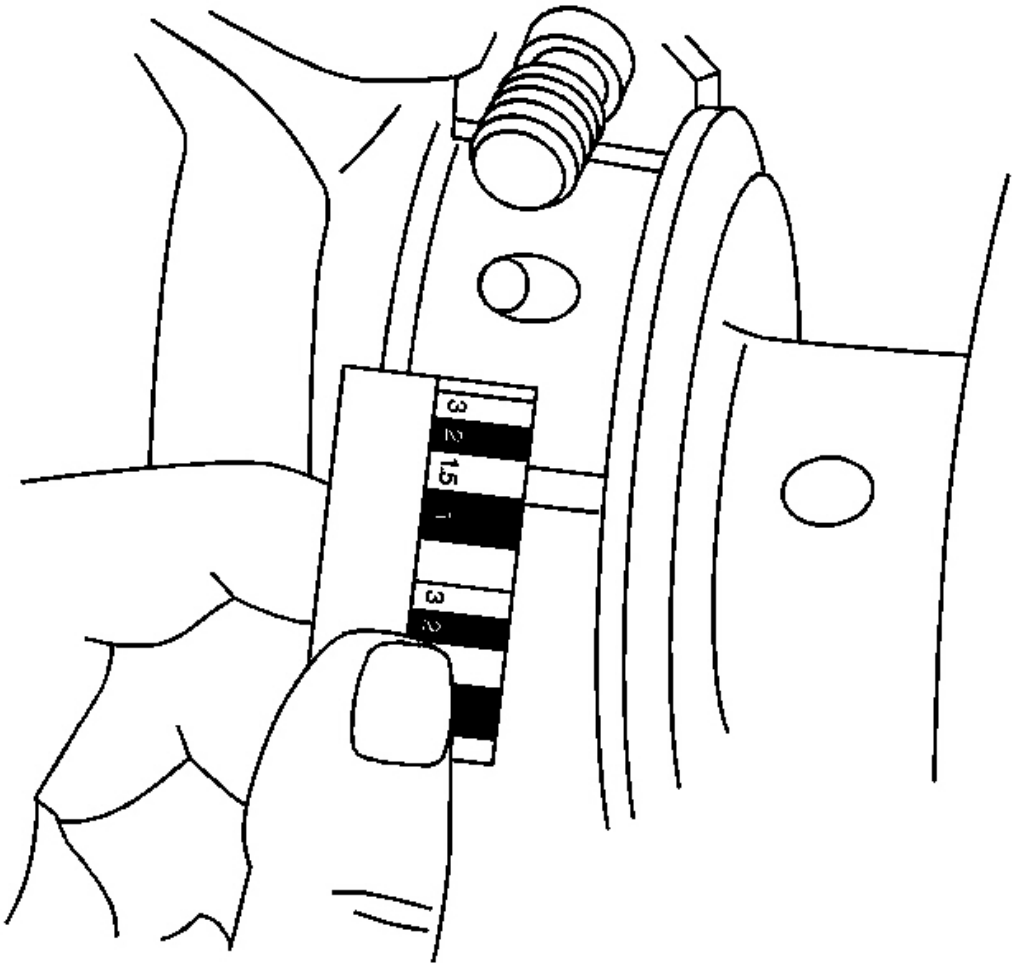

Fig. 109: Measuring The Gaging Plastic On Crankshaft
Courtesy of GENERAL MOTORS CORP.

11. Measure the gaging plastic at its widest area using the scale supplied with the plastic gaging kit.
    - If the gaging plastic shows irregularity in the journal exceeding 0.025 mm (0.001 in), remove the crankshaft and measure the journal with a micrometer.
    - If the bearing clearance is greater than 0.065 mm (0.0025 in), select and install an undersized bearing set, and measure the clearance with gaging plastic.
    - If clearance cannot be brought to specifications, replace the crankshaft or grind the crankshaft for use with the next undersized bearing.

cardiagn.com

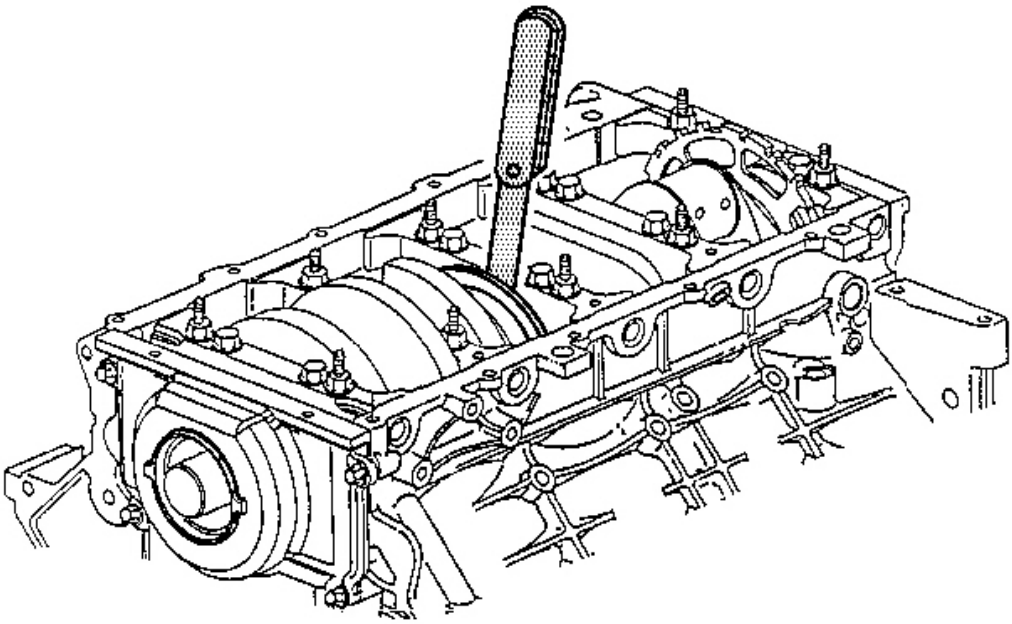

Fig. 110: Measuring Crankshaft End Play
Courtesy of GENERAL MOTORS CORP.

12. Measure the crankshaft end play.
    1. Thrust the crankshaft forward or rearward.
    2. Insert a feeler gage between the center crankshaft bearing and the bearing surface of the crankshaft and measure the bearing clearance. Refer to **Engine Mechanical Specifications (LS1)** or **Engine Mechanical Specifications (LS6)** .
    3. If the bearing clearance is not within specifications:
        - Inspect the thrust surfaces for nicks, gouges or raised metal. Minor imperfections may be removed with a fine stone.
        - Replace the thrust bearings and measure the end play.
        - If the correct measurements cannot be obtained, repair the crankshaft thrust surfaces or replace the crankshaft.

Measuring Connecting Rod Bearing Clearance - Gaging Plastic Method

cardiagn.com

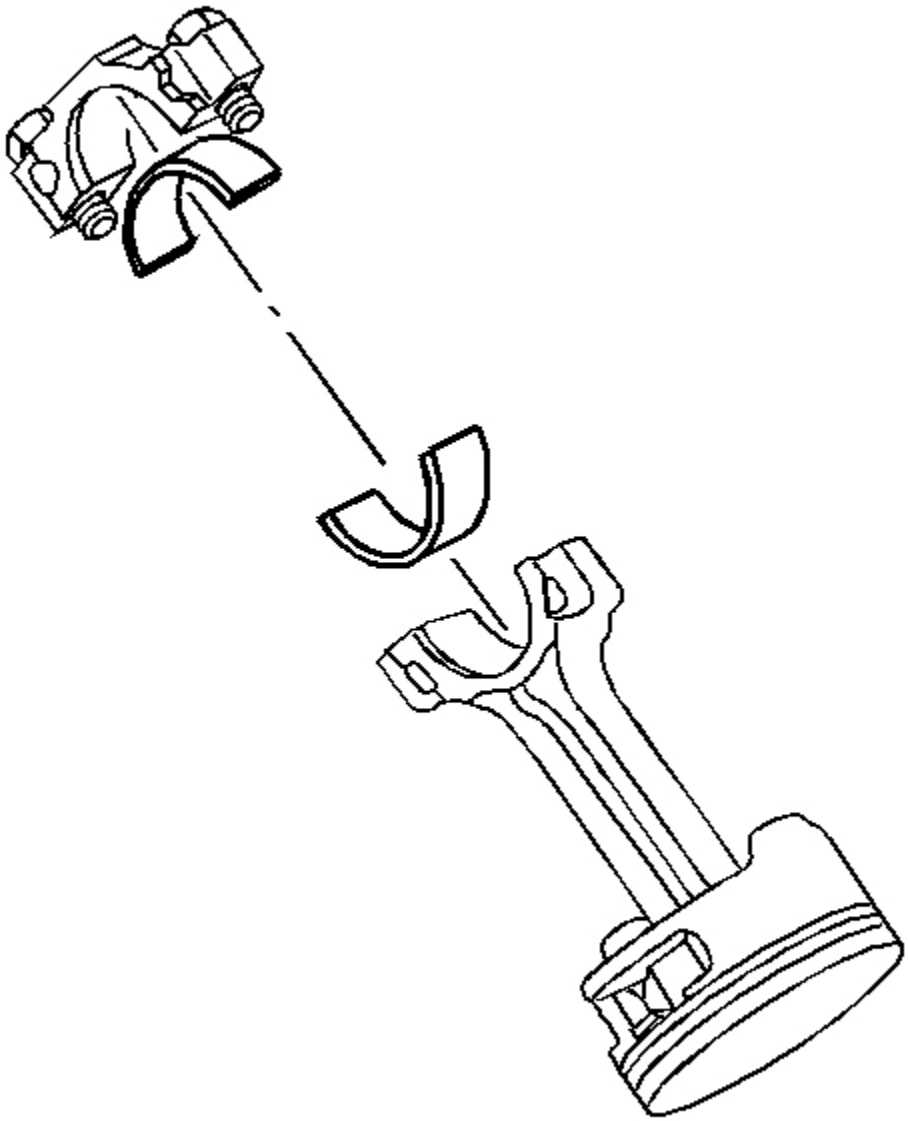

Fig. 111: View Of Connecting Rod Cap & Bolts
Courtesy of GENERAL MOTORS CORP.

IMPORTANT:

- **Connecting rod bearings are a precision insert type. Connecting rods are of a powdered metal design and cannot be shimmed or filed for bearing fit. If clearances are found to be excessive, a new bearing and/or connecting rod are required.**

cardiagn.com

- **Do not rotate the crankshaft while gaging plastic is between the crankshaft journal and the bearing surface.**

1. Remove the bearing cap, bearing half and bolts.

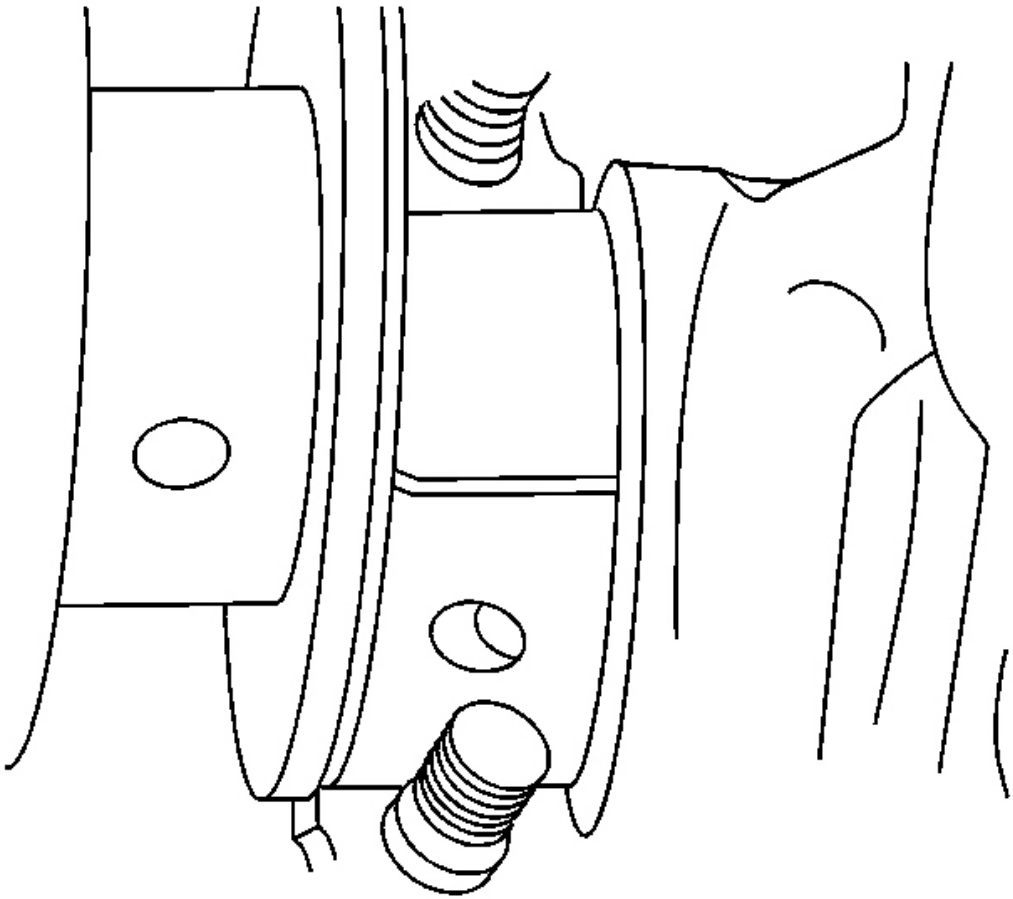

Fig. 112: View Of Gaging Plastic & Crankshaft Journal
Courtesy of GENERAL MOTORS CORP.

2. Install the gaging plastic onto the connecting rod bearing journal. Install the gaging plastic the full width of the journal.

cardiagn.com

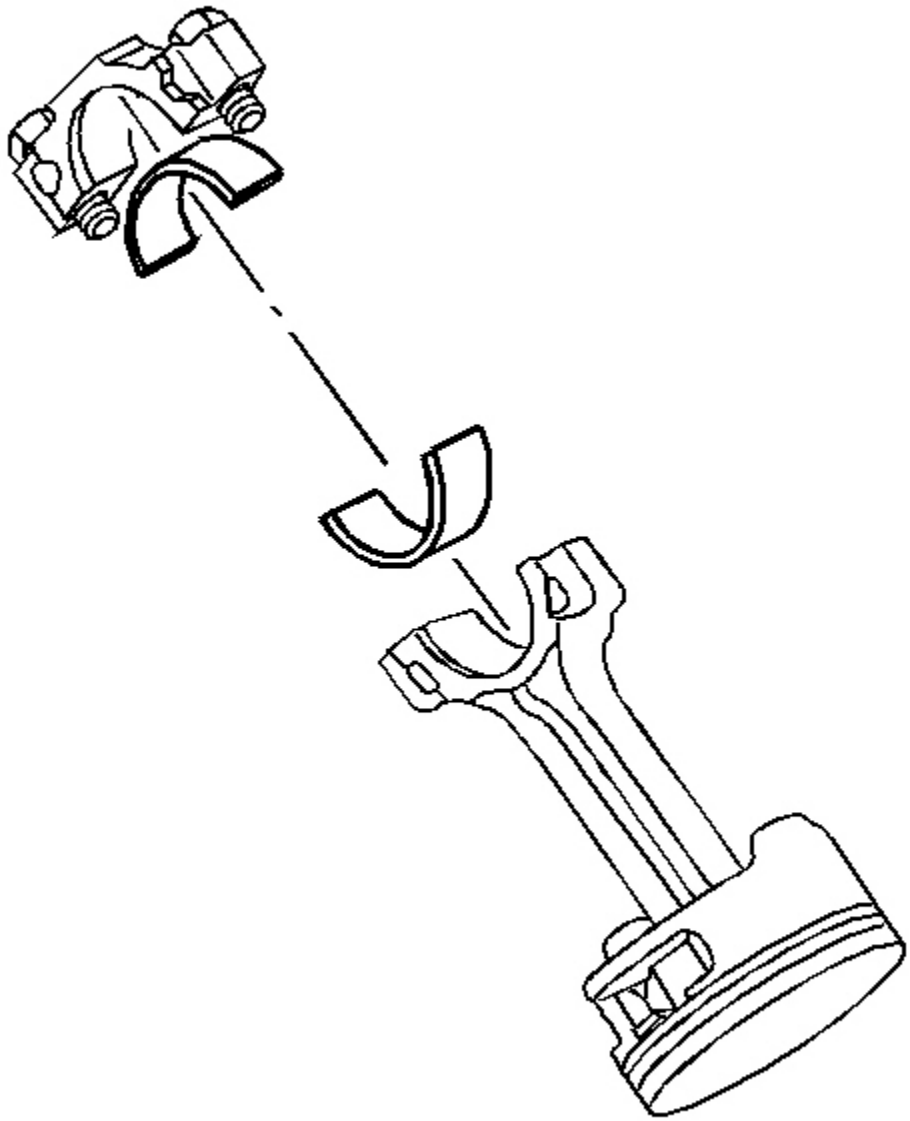

Fig. 113: View Of Connecting Rod Cap & Bolts
Courtesy of GENERAL MOTORS CORP.

NOTE: Refer to Fastener Notice in Cautions and Notices.

3. Install the bearing cap, bearing, and bolts.

cardiagn.com

Tighten:

1. Tighten the connecting rod bolts first pass to 20 N.m (15 lb ft).
2. Tighten the connecting rod bolts final pass to 75 degrees using the **J 45059** .

4. Remove the bearing cap, bearing, and bolts.

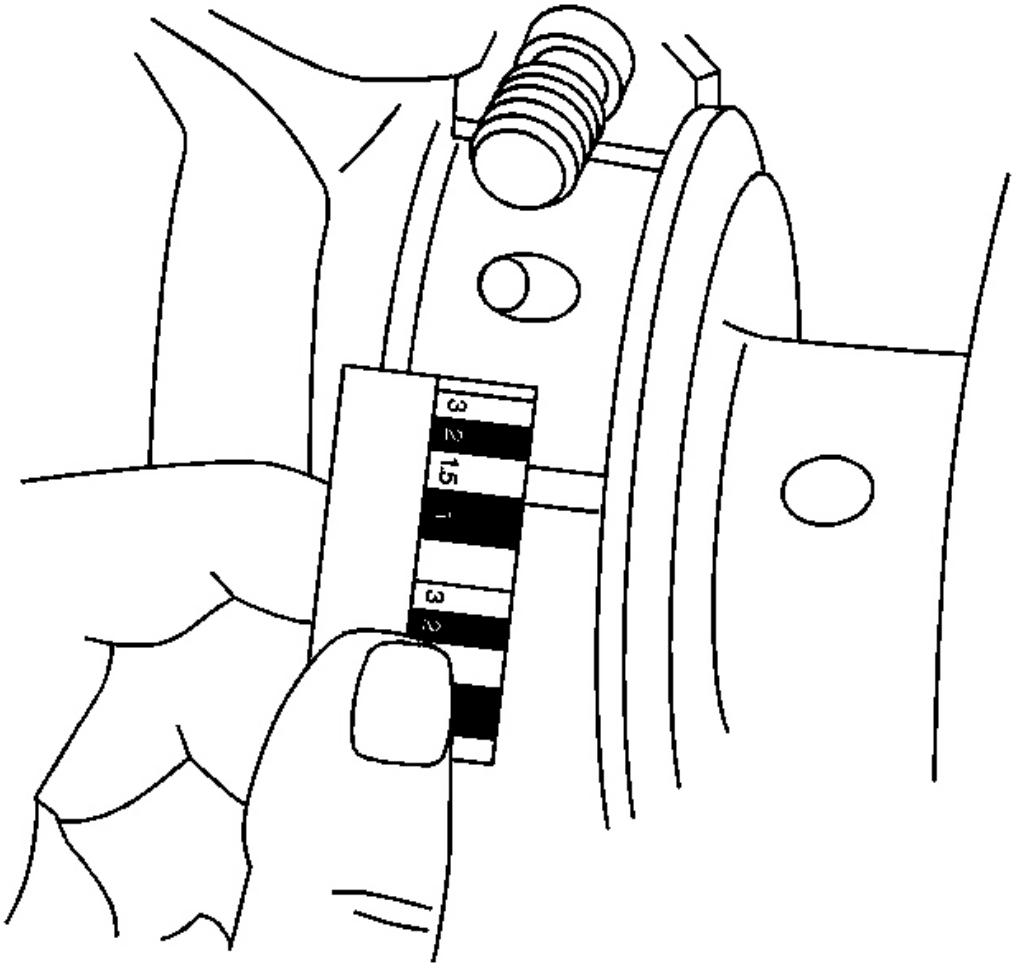

Fig. 114: Measuring The Gaging Plastic On Crankshaft
Courtesy of GENERAL MOTORS CORP.

5. Measure the gaging plastic at its widest area using the scale supplied with the plastic gaging kit. Refer to **Engine Mechanical Specifications (LS1)** or **Engine Mechanical Specifications (LS6)** .

Measuring Connecting Rod Bearing Clearance - Using J 43690/J 43690-100

cardiagn.com

J 43690 and **J 43690-100** have been developed as a more accurate method to measure connecting rod bearing clearances. The instructions below provide an overview of tool set-up and usage. For more detailed information, refer to the tool instruction sheets as supplied by the tool manufacturer.

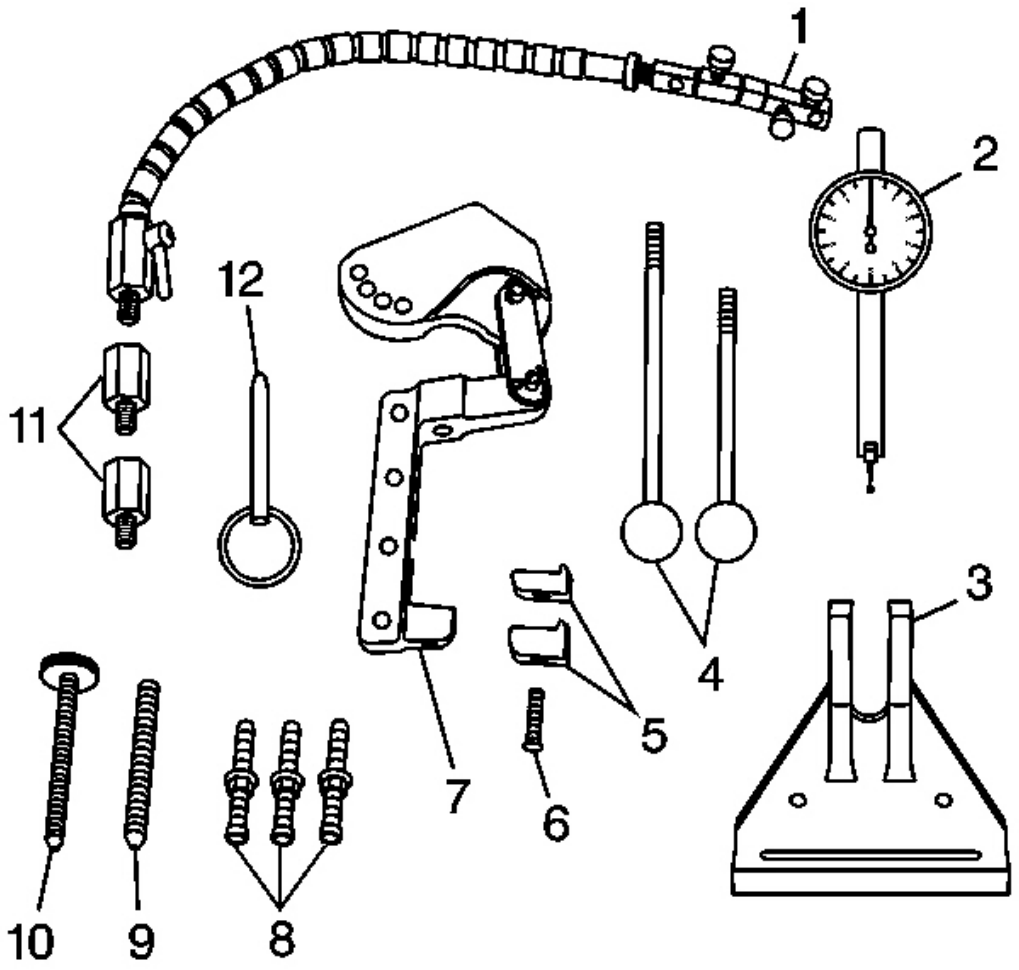

Fig. 115: View Of J 43690 & Components
Courtesy of GENERAL MOTORS CORP.

J 43690

- J 43690-20 Swivel Base (1)
- J 43690-19 Dial Indicator (2)
- J 43690-2 Base (3)

cardiagn.com

- J 43690-5, -6 Handle (4)
- J 43690-10, -11 Foot (5)
- 280307 Screw (6)
- J 43690-1 Pivot Arm Assembly (7)
- J 43690-3, -7, -8 Screws (8)
- 280319 Screw (9)
- 280311 Screw (10)
- J 43690-17, -18 Adapter (11)
- 280310 Pin (12)

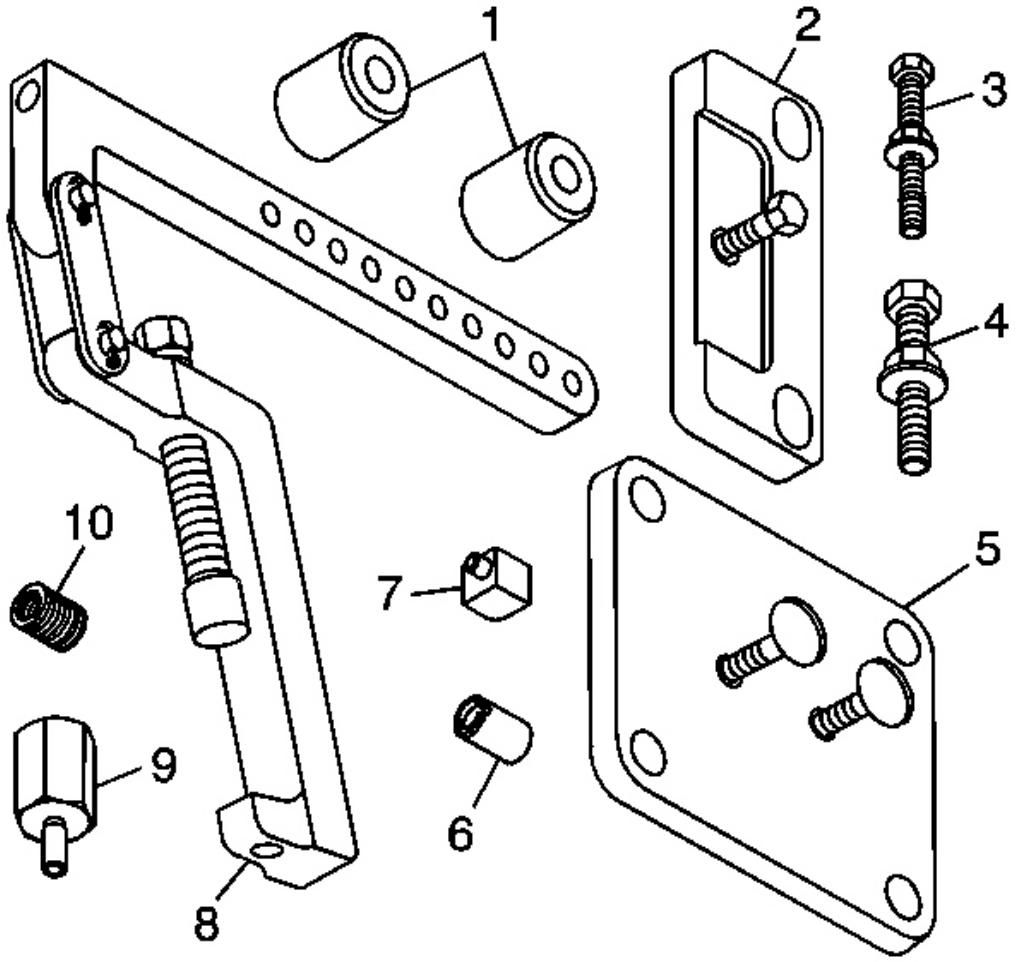

Fig. 116: View Of J 43690-100 & Components

cardiagn.com

Courtesy of GENERAL MOTORS CORP.

J 43690-100

- J 43690-104 Spacer (1)
- J 43690-105 Retainer Plate (2)
- 505478 Bolt (3)
- 511341 Bolt (4)
- J 43690-106 Retainer Plate (5)
- J 43690-107 Cap (6)
- J 43690-102 Foot (7)
- J 43690-101 Pivot Arm Assembly (8)
- J 43690-103 Adapter (9)
- 505439 Adapter (10)

cardiagn.com

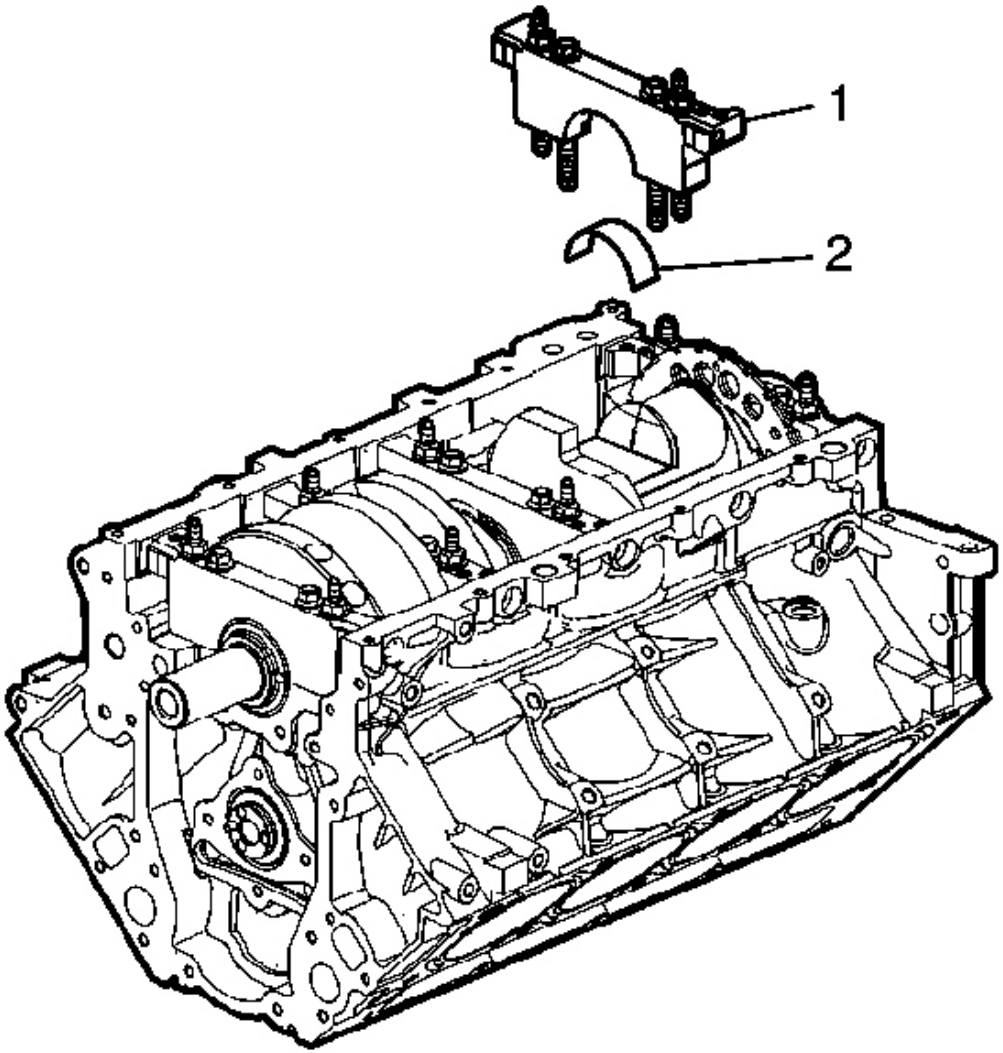

Fig. 117: View OF Bearing Cap Bolt & Bearing Half
Courtesy of GENERAL MOTORS CORP.

IMPORTANT: The crankshaft must be secure with no movement or rotation in order to obtain an accurate reading.

1. Rotate the crankshaft until the journal/connecting rod to be measured is in the 12 o'clock position.
2. Remove a bearing cap and bolts (1).
3. Remove the bearing half (2).

cardiagn.com

4. Insert a piece of paper card stock onto the crankshaft journal.
5. Install the bearing half (2) and cap and bolts (1). Refer to **Fastener Tightening Specifications** .

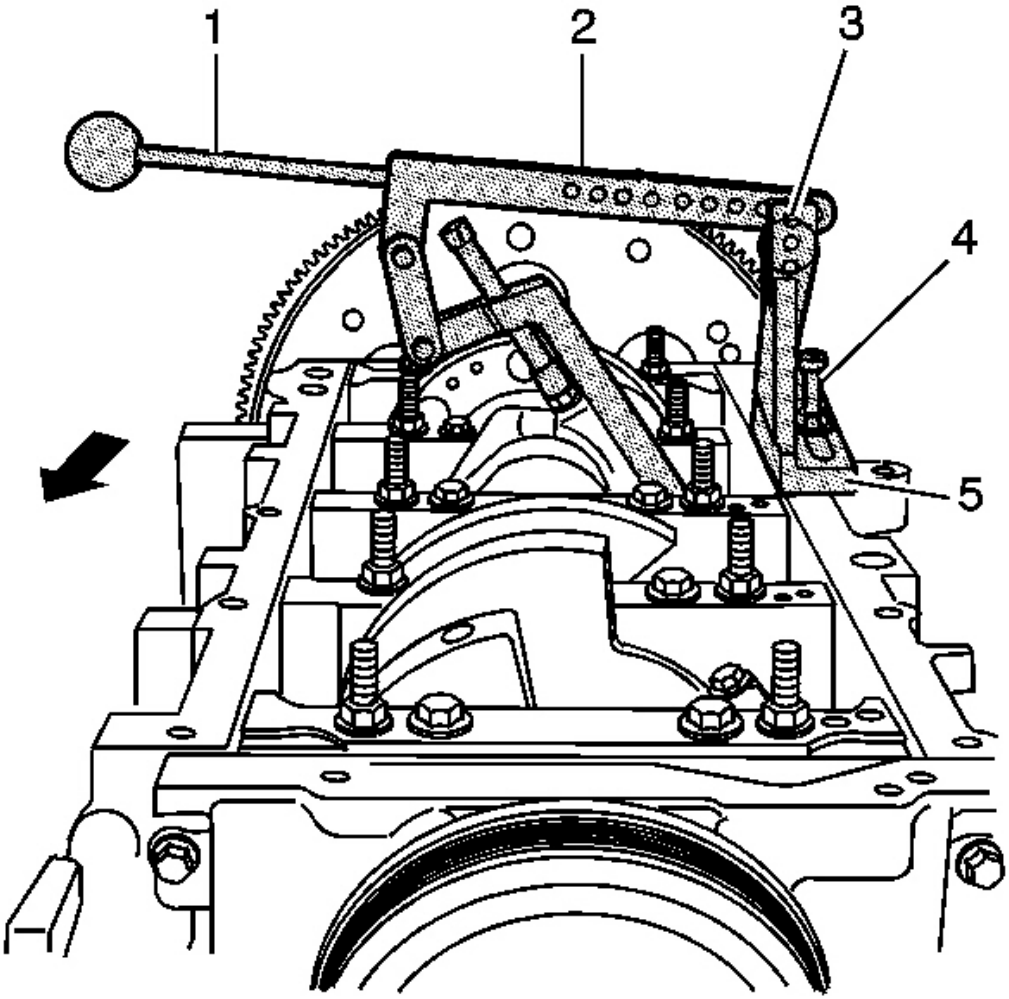

Fig. 118: View Of J 43690-2, J 43690-3, J 43690-101, 280310 & J 43690-5
Courtesy of GENERAL MOTORS CORP.

6. Install the following:
    1. J 43690-2 (5)
    2. J 43690-3 (4)
    3. J 43690-101 (2)

cardiagn.com

4. 280310 (3)
5. J 43690-5 (1)

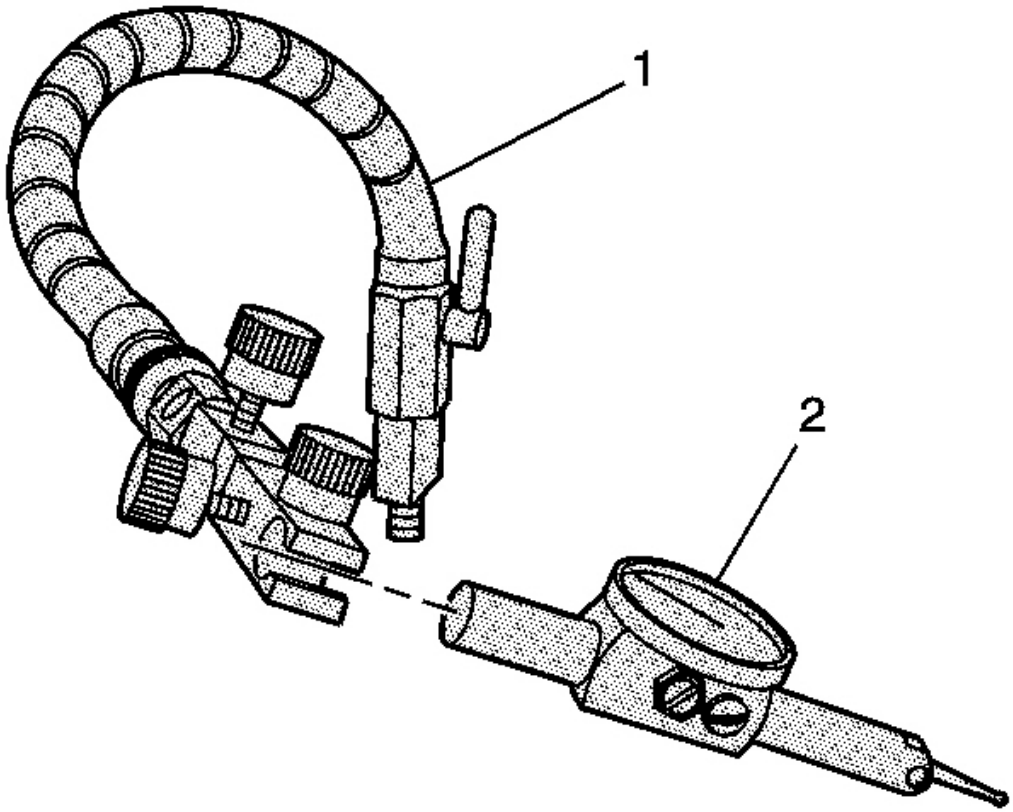

Fig. 119: Swivel Base & Dial Indicator
Courtesy of GENERAL MOTORS CORP.

7. Install the swivel base (1) and dial indicator (2).
8. Adjust per the manufacturers instructions and measure the connecting rod bearing clearance.

   A connecting rod with a clearance in excess of 0.076 mm (0.003 in) is considered excessive. Service components as required.

CRANKSHAFT BALANCER CLEANING AND INSPECTION

cardiagn.com

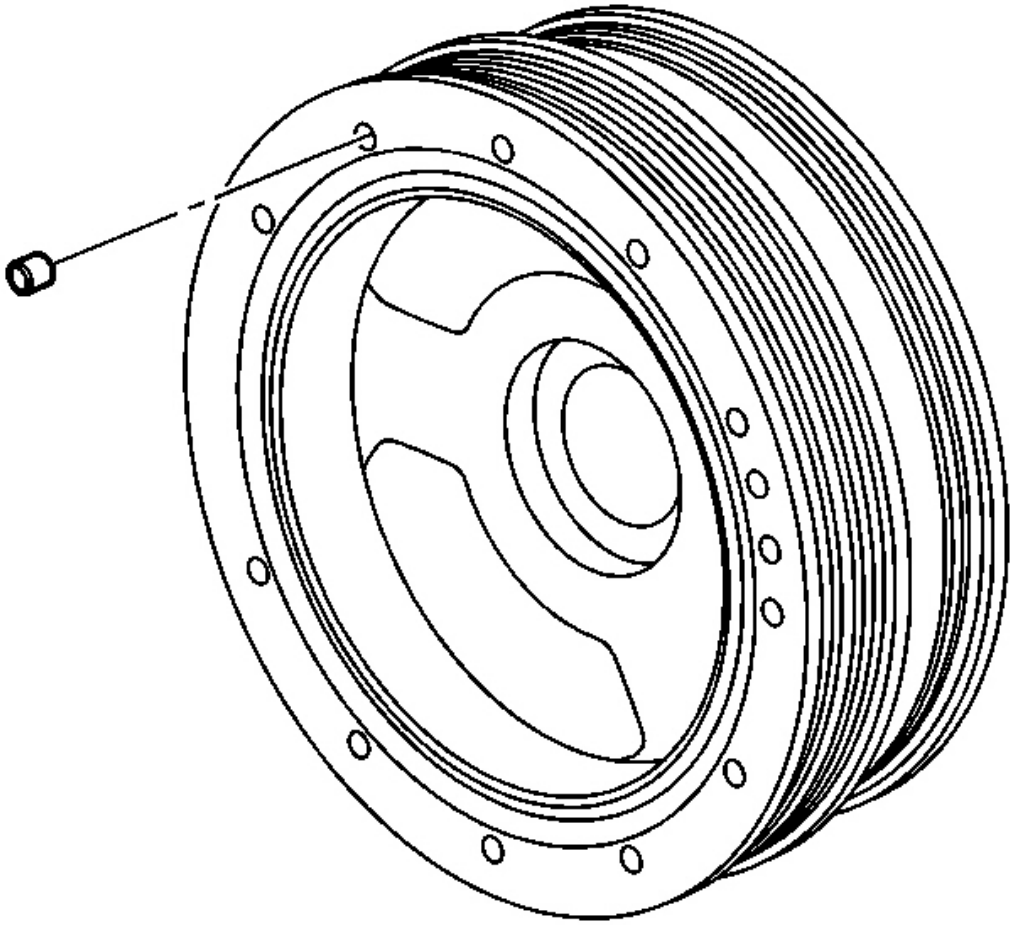

Fig. 120: Crankshaft Balancer
Courtesy of GENERAL MOTORS CORP.

1. Clean the crankshaft balancer in solvent.
2. Clean the belt grooves of all dirt or debris with a wire brush.
3. Dry the crankshaft balancer with compressed air.
4. Inspect the crankshaft balancer for the following:
   - Loose or improperly installed balance weights, manual transmission applications

     A properly installed balance weight should be installed until flush or below flush with the face of the balancer.

   - Worn, grooved, or damaged hub seal surface

cardiagn.com

A crankshaft balancer hub seal surface with excessive scoring, grooves, rust or other damage must be replaced.

Minor imperfections on the hub seal surface may be removed with polishing compound or fine grade emery cloth.

IMPORTANT: In order for the belt to track properly, the belt grooves should be free of all dirt or debris.

- Dirty or damaged belt grooves

  The balancer belt grooves should be free of any nicks, gouges, or other damage that may not allow the belt to track properly.

  Minor imperfections may be removed with a fine file.

- Worn, chunking or deteriorated rubber between the hub and pulley

Replacing the Crankshaft Balancer and Balance Weights - Corvette

cardiagn.com

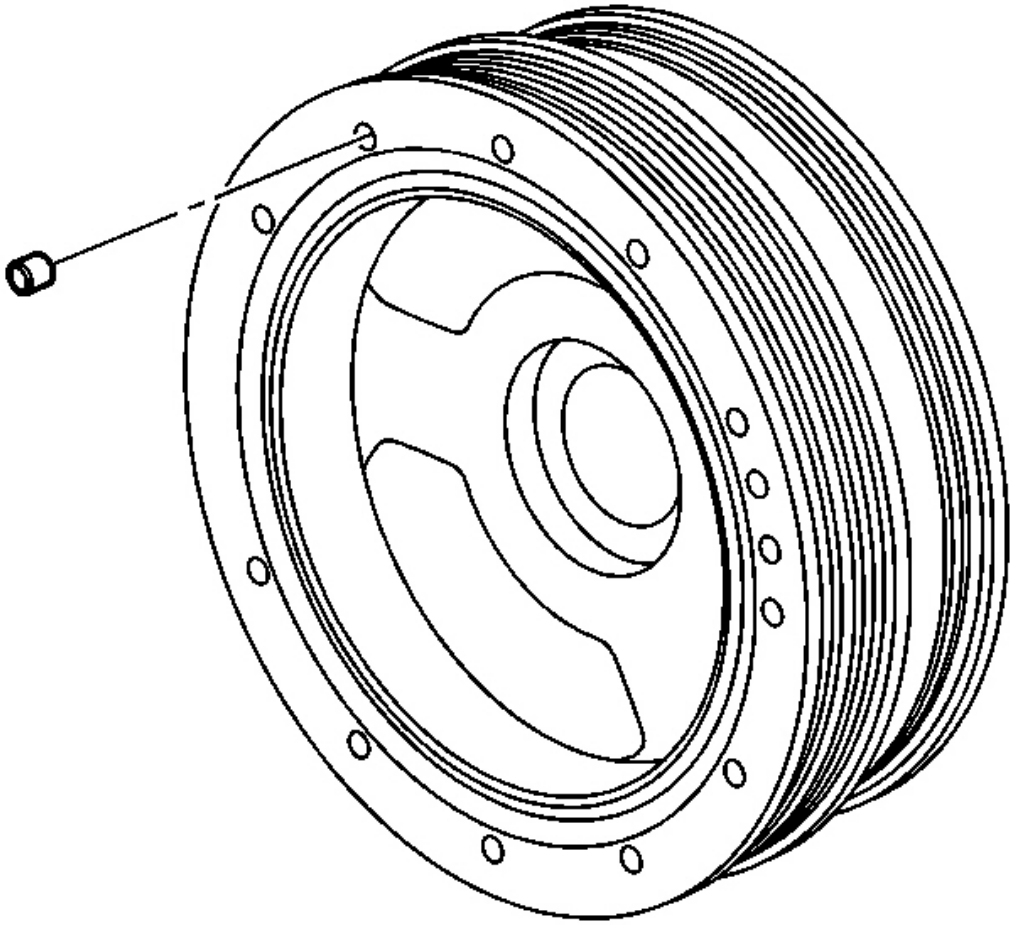

Fig. 121: Crankshaft Balancer
Courtesy of GENERAL MOTORS CORP.

IMPORTANT: The position of the crankshaft balancer must be marked before removal, relative to the crankshaft. The balancer does not use a key or keyway for positioning. Mark or scribe the end of the crankshaft and the balancer before removal. The crankshaft balancer must be installed to the original position. If replacing the crankshaft balancer, note the location of any existing balance weights, if applicable. Crankshaft balancer weights must be installed into the new balancer in the same location as the old balancer. A properly installed balance weight will be either flush or below flush with the face of the balancer.

1. Check the crankshaft balancer weight holes for any existing balance weights.

cardiagn.com

CAUTION: Refer to Safety Glasses Caution in Cautions and Notices.

2. Use a punch and position the balance weights to the bottom of the weight holes.
3. With a marking crayon, note the weight holes containing balance weights.
4. Lay the old crankshaft balancer on a bench or flat table.

   Rotate the old balancer until one of the marked balance weight holes is in the 12 o'clock position.

5. Lay the new crankshaft balancer on the bench next to the old balancer.

   Rotate the new balancer until one of the balance weight holes is in the 12 o'clock position.

6. With a marking crayon, mark the new balancer weight hole located in the 12 o'clock position.
7. Viewing the old balancer, note the position of the crankshaft-to-balancer alignment mark.

   Mark the new balancer in the same location.

8. Measure the distance from the top of the balance weights to the face of the old crankshaft balancer.
9. Record the readings.
10. Determine the proper balance weight size for the new balancer.
    - A balance weight hole depth that measures 13.0 mm (0.512 in), has a short balance weight in the hole.
    - A balance weight hole depth that measures 6.69 mm (0.263 in), has a medium balance weight in the hole.
    - A balance weight hole that depth measures 0.29 mm (0.011 in), has a long balance weight in the hole.
      - A short balance weight will measure 12.7 mm (0.5 in) in length.
      - A medium balance weight will measure 19.0 mm (0.75 in) in length.
      - A long balance weight will measure 25.4 mm (1.0 in) in length.
11. Insert new crankshaft balance weights of the proper size into the new balancer in the same location as with the old balancer.

    A properly installed balance weight will be either flush or below flush with the face of the balancer.

ENGINE FLYWHEEL CLEANING AND INSPECTION

cardiagn.com

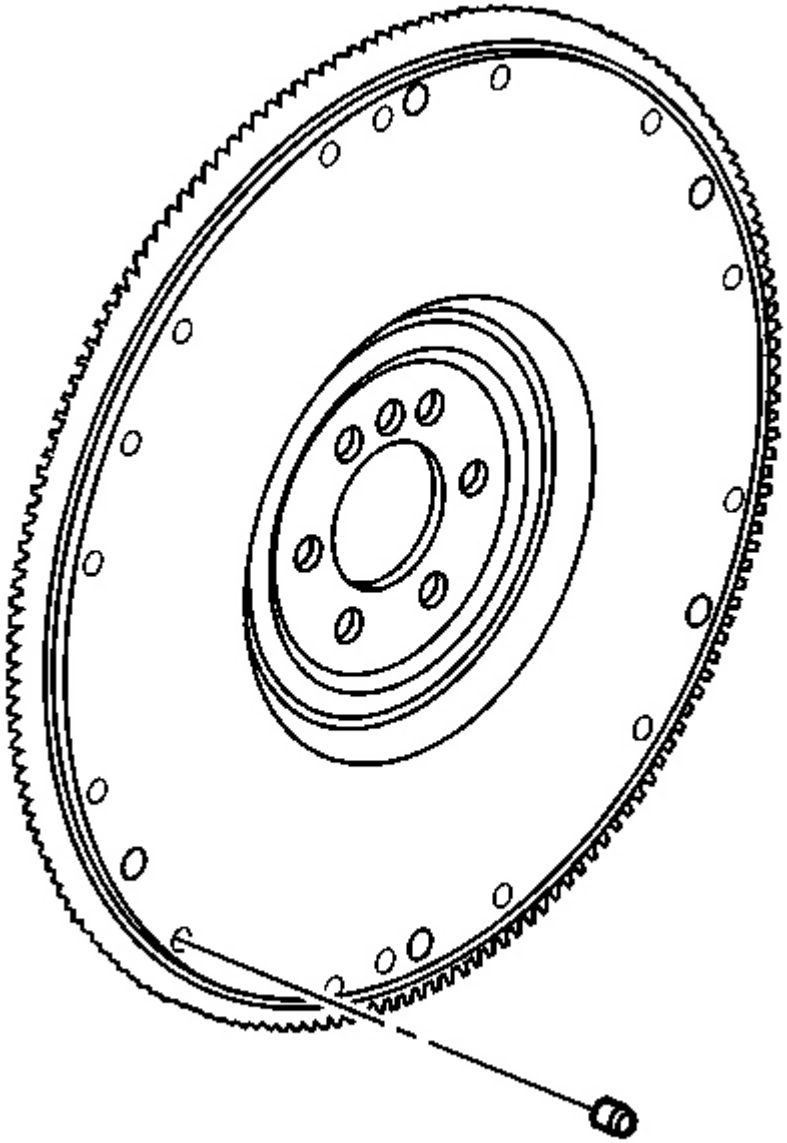

Fig. 122: Flywheel Weights (Manual Transmission)
Courtesy of GENERAL MOTORS CORP.

IMPORTANT: In order to maintain the proper component balance, contact surface taper, and heat transfer, manual transmission flywheels are NOT to be machined.

cardiagn.com

1. Clean the flywheel in solvent.

CAUTION: Refer to Safety Glasses Caution in Cautions and Notices.

2. Dry the flywheel with compressed air.
3. Inspect the manual transmission flywheel for loose or improperly installed balance weights.

   A properly installed balance weight should be installed until flush or below flush with the face of the flywheel.

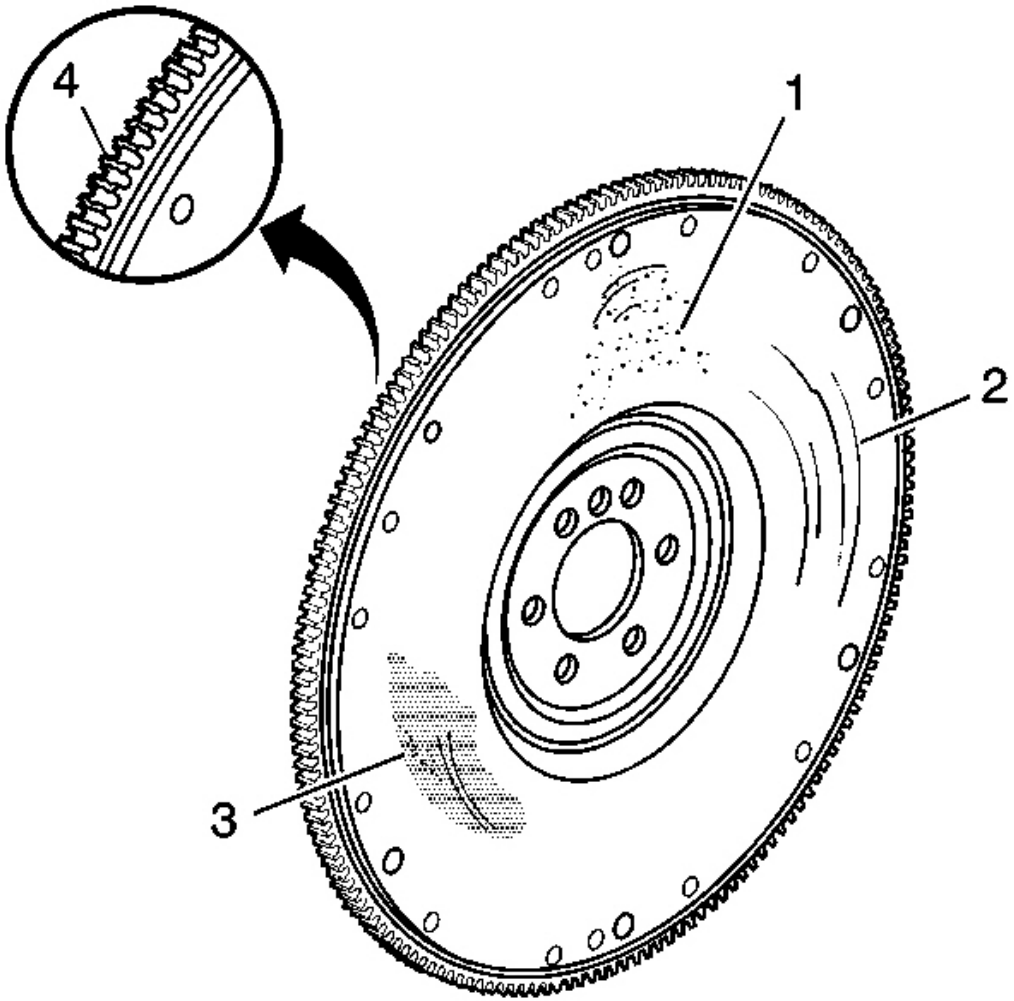

cardiagn.com

Fig. 123: Flywheel Inspection Areas (Manual Transmission)
Courtesy of GENERAL MOTORS CORP.

4. Inspect the manual transmission flywheel for the following:
   - Pitted surface (1)
   - Grooved or scored surface (2)
   - Rusted surface (3)
   - Damaged ring gear teeth (4)
   - Loose or improperly positioned ring gear

     The ring gear has an interference fit onto the flywheel and should be positioned completely against the flange of the flywheel.

   - Missing, bent, or damaged pressure plate locating pins

     The 2 locating pins are installed into the flywheel and spaced 170 degrees apart to ensure proper orientation of the clutch pressure plate to the engine flywheel during assembly.

cardiagn.com

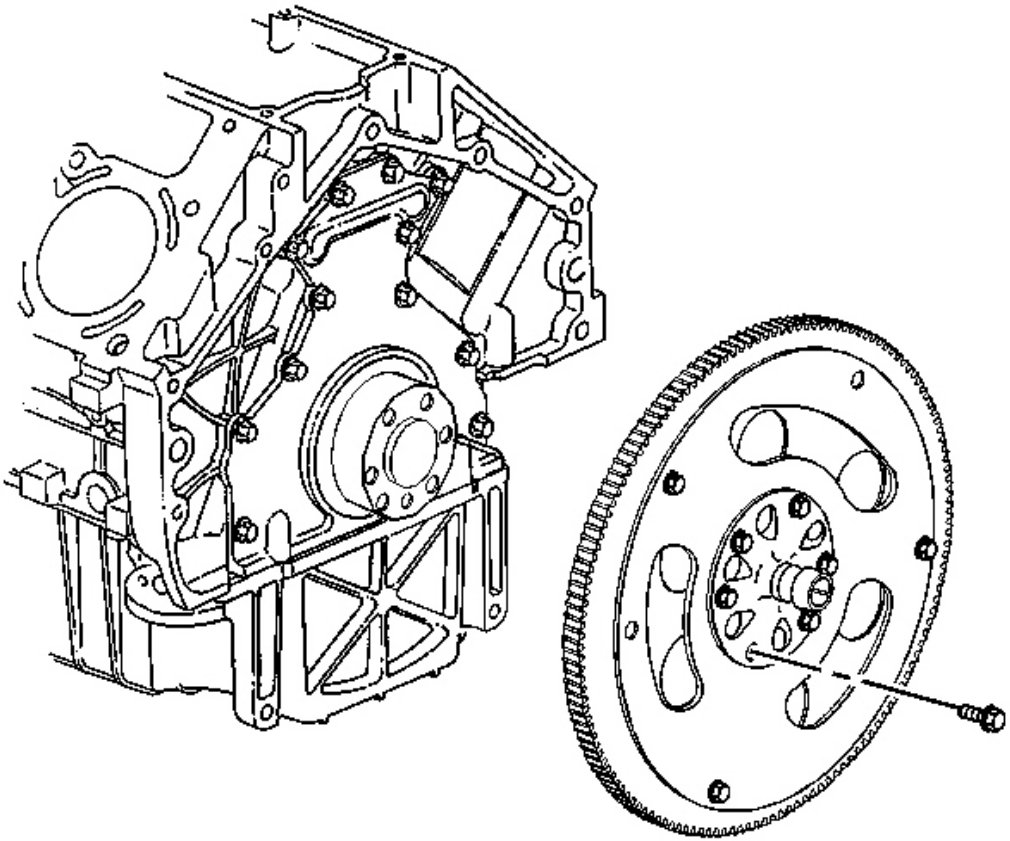

Fig. 124: Automatic Transmission Flywheel
Courtesy of GENERAL MOTORS CORP.

5. Inspect the automatic transmission flywheel for the following:
    - Damaged ring gear teeth
    - Stress cracks around the flywheel-to-crankshaft bolt hole locations
    - Worn prop shaft drive hub splines
    - Loose prop shaft drive hub

IMPORTANT: Do not attempt to repair the welded areas that retain the ring gear to the flywheel plate. Install a new flywheel.

- Welded areas that retain the ring gear onto the flywheel for cracking

PISTON AND CONNECTING ROD DISASSEMBLE

cardiagn.com

Tools Required

J 24086-C Piston Pin Remover/Installer Set

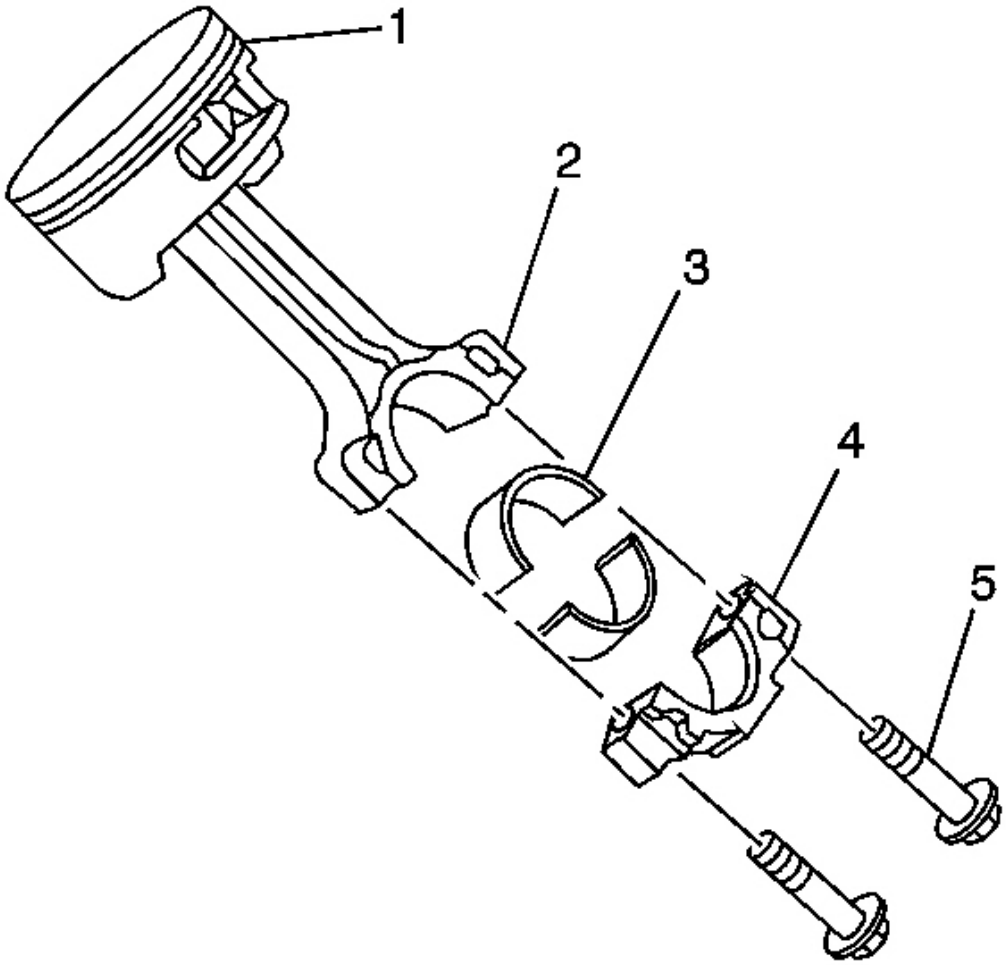

Fig. 125: View Of Piston, Connecting Rod & Components
Courtesy of GENERAL MOTORS CORP.

IMPORTANT:

- **Disassembly of the piston, press-fit design piston pin, and connecting rod may create scoring or damage to the piston pin and piston pin bore. If the piston, pin, and connecting rod have been disassembled, replace the components as an assembly.**
- **The disassembly procedure, as shown, is to be used for diagnostic**

cardiagn.com

purposes only.

1. Remove the connecting rod bearings (3) from the rod (2) and cap (4).

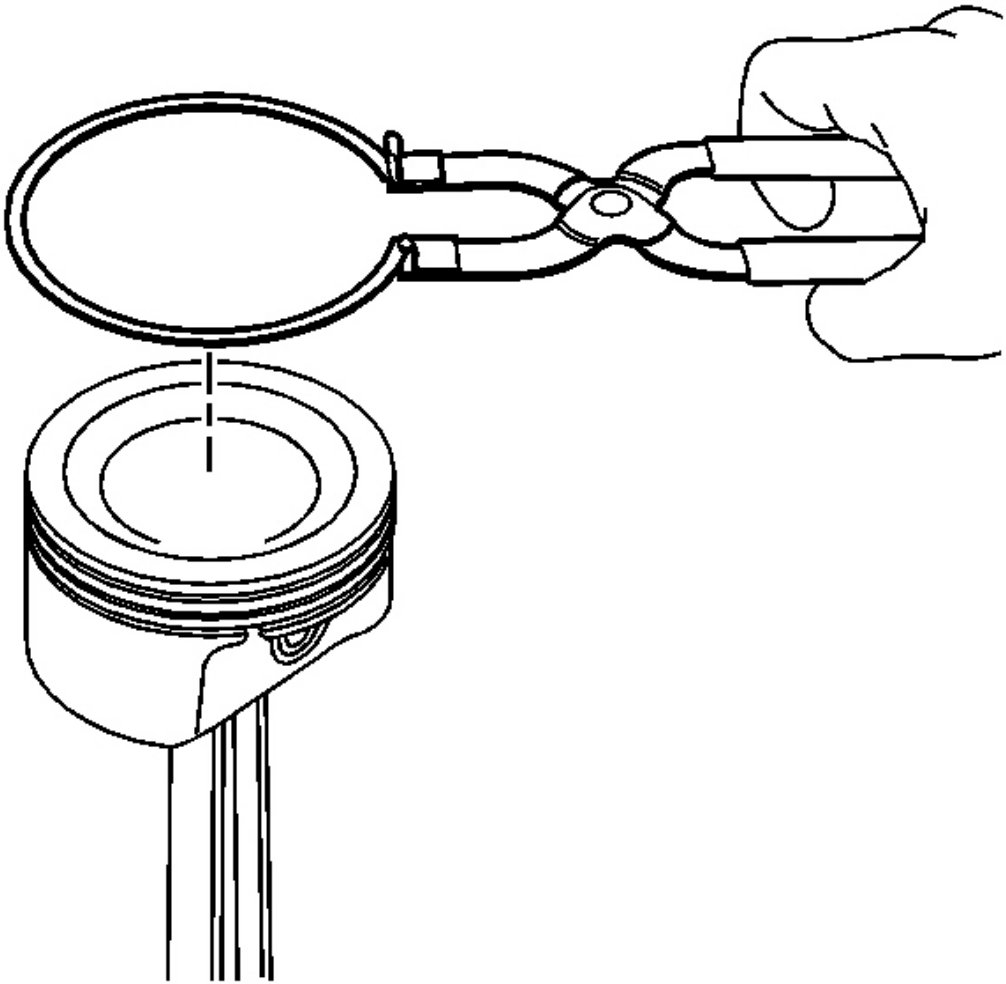

Fig. 126: Piston Rings & Piston
Courtesy of GENERAL MOTORS CORP.

2. Using piston ring pliers, remove the piston rings from the piston.

cardiagn.com

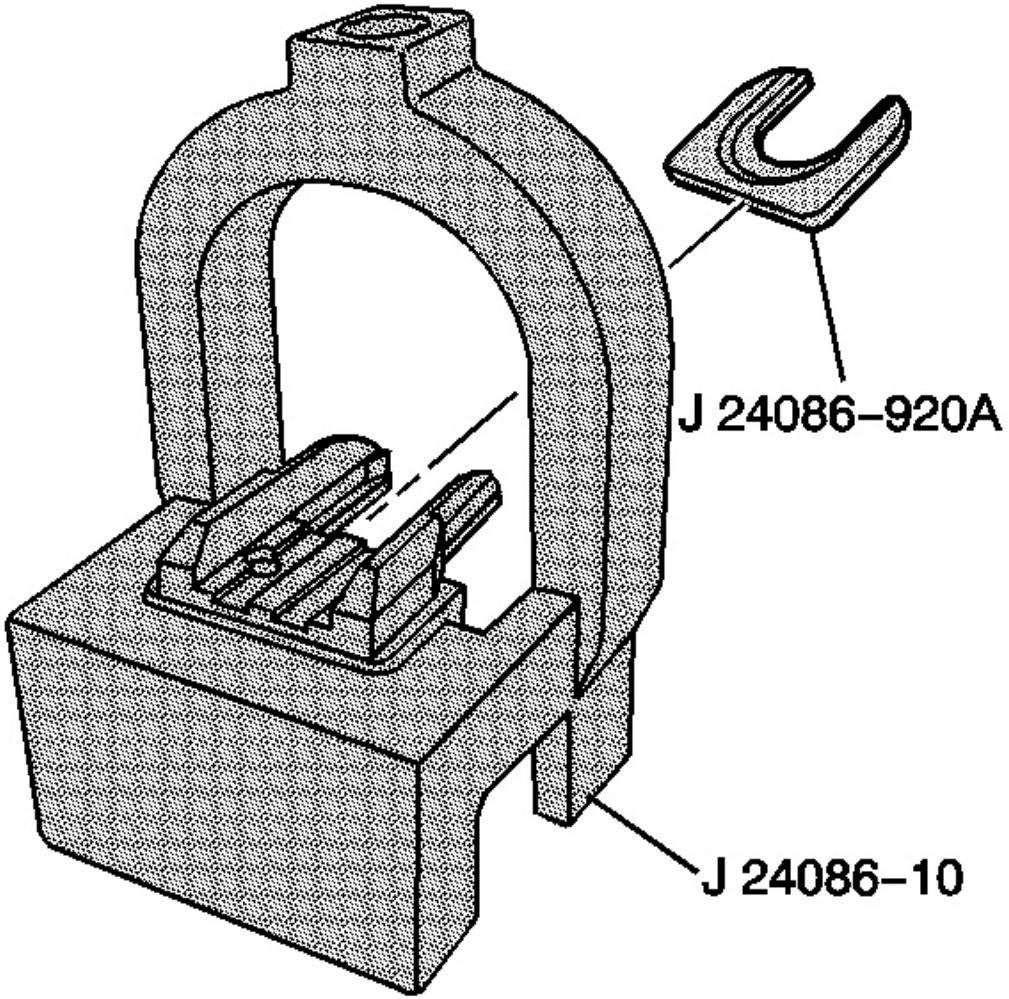

Fig. 127: View Of J 24086-920A & J 24086-10
Courtesy of GENERAL MOTORS CORP.

3. Install fork insert J 24086-920A into J 24086-10 .

cardiagn.com

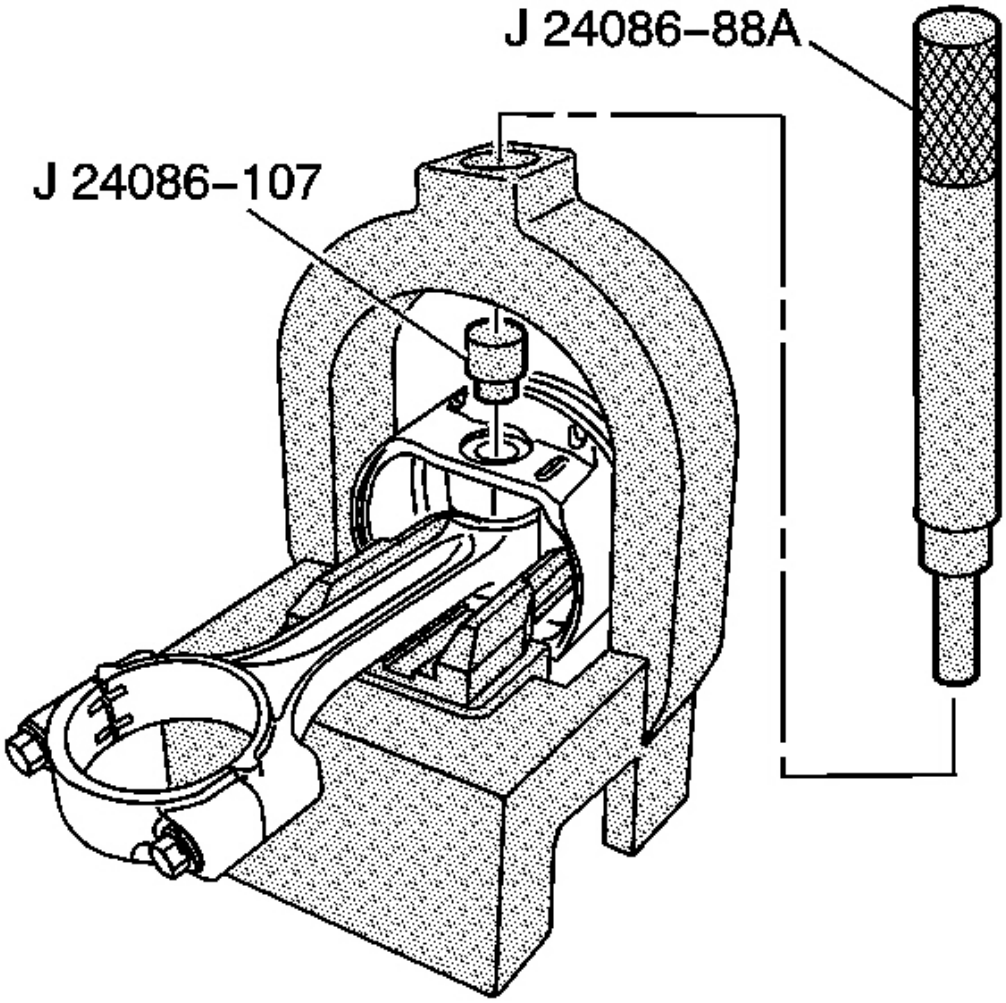

Fig. 128: J 24086-88A & J 24086-107
Courtesy of GENERAL MOTORS CORP.

4. Install the piston and connecting rod assembly onto J 24086-10 .
5. Install J 24086-107 to the piston pin.
6. Install J 24086-88A through the fixture and to the J 24086-107.

cardiagn.com

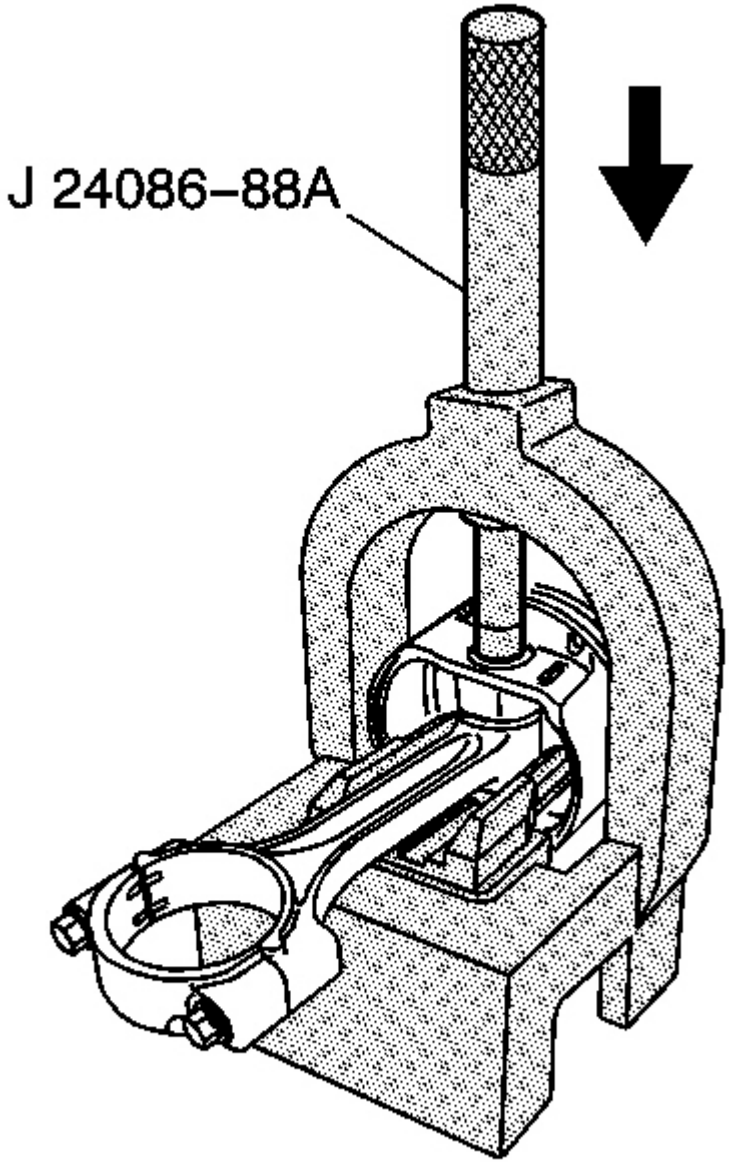

Fig. 129: Pressing Piston Pin From Piston & Connecting Rod Assembly
Courtesy of GENERAL MOTORS CORP.

NOTE: **After the installer hub bottoms on the support assembly, do not exceed 35 000 kPa (5,000 psi) pressure, this could cause damage to the tool.**

cardiagn.com

7. Press the piston pin from the piston and connecting rod assembly.

Full-Floating Piston Pin

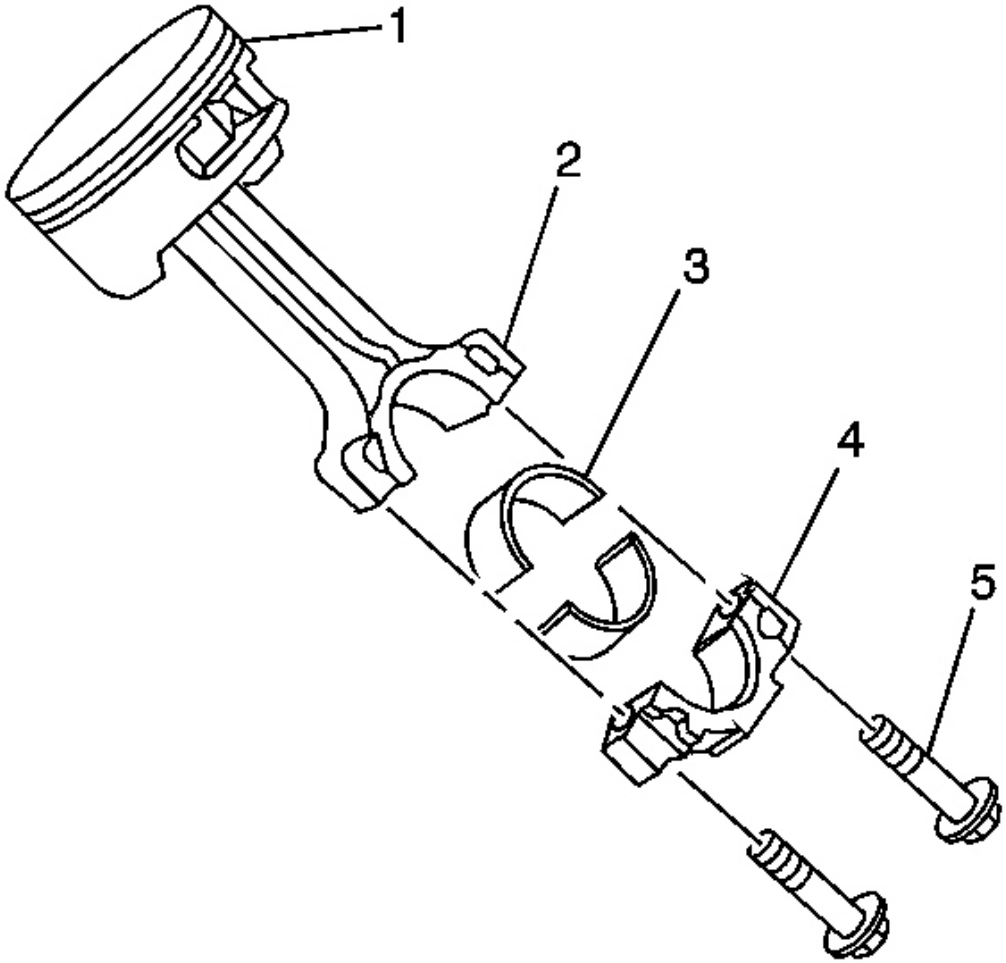

Fig. 130: View Of Piston, Connecting Rod & Components
Courtesy of GENERAL MOTORS CORP.

1. Remove the connecting rod bearings (3) from the rod (2) and cap (4).

cardiagn.com

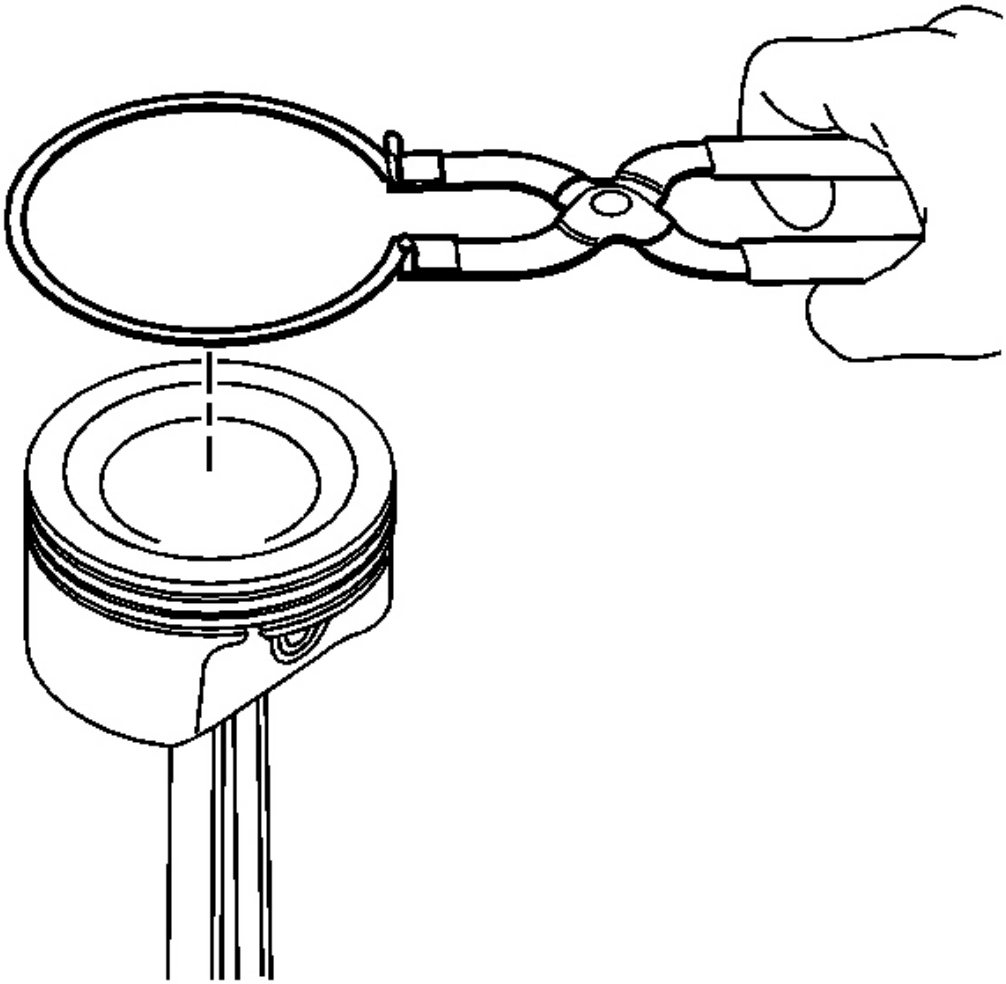

Fig. 131: Piston Rings & Piston
Courtesy of GENERAL MOTORS CORP.

2. Using piston ring pliers, remove the piston rings from the piston.

cardiagn.com

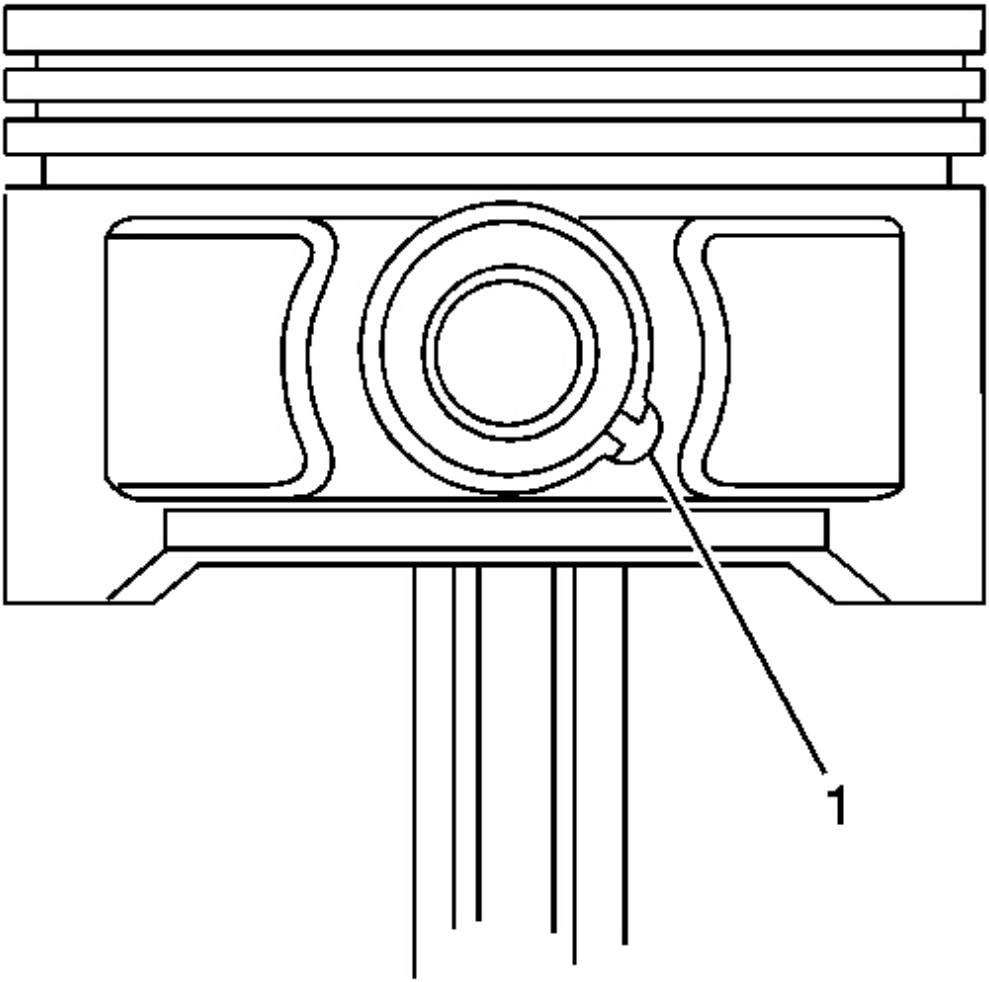

Fig. 132: Cutout Area Of Pin Bore
Courtesy of GENERAL MOTORS CORP.

3. Rotate the piston pin retaining clips until the ring end gap is positioned in the cutout area (1) of the pin bore.

cardiagn.com

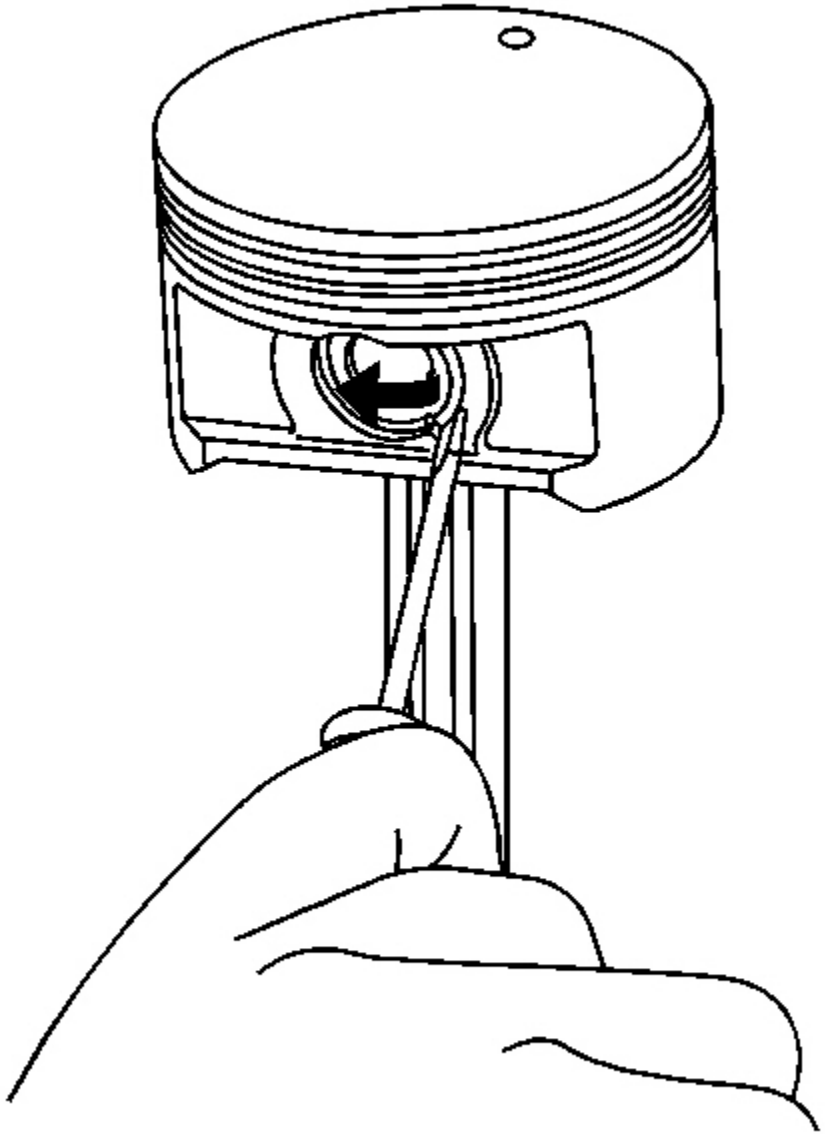

Fig. 133: Removing Clips Starting In Cutout Area
Courtesy of GENERAL MOTORS CORP.

4. Remove the clips starting in the cutout area of the pin bore.

cardiagn.com

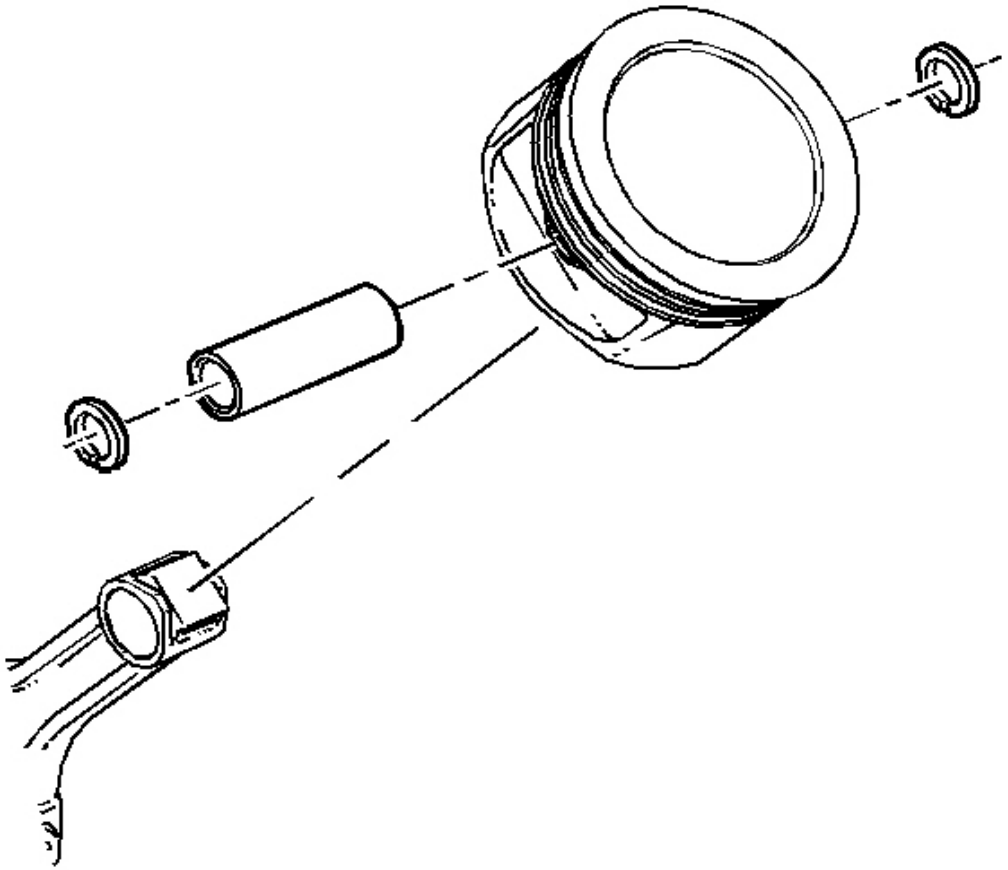

Fig. 134: Pin, Piston & Connecting Rod
Courtesy of GENERAL MOTORS CORP.

5. Remove the pin from the piston and connecting rod.
6. The piston and pin are a matched set and are not to be serviced separately.

   Mark, sort, or organize the piston and the matching piston pin.

PISTON, CONNECTING ROD, AND BEARINGS CLEANING AND INSPECTION

Piston, Pin, and Piston Rings

cardiagn.com

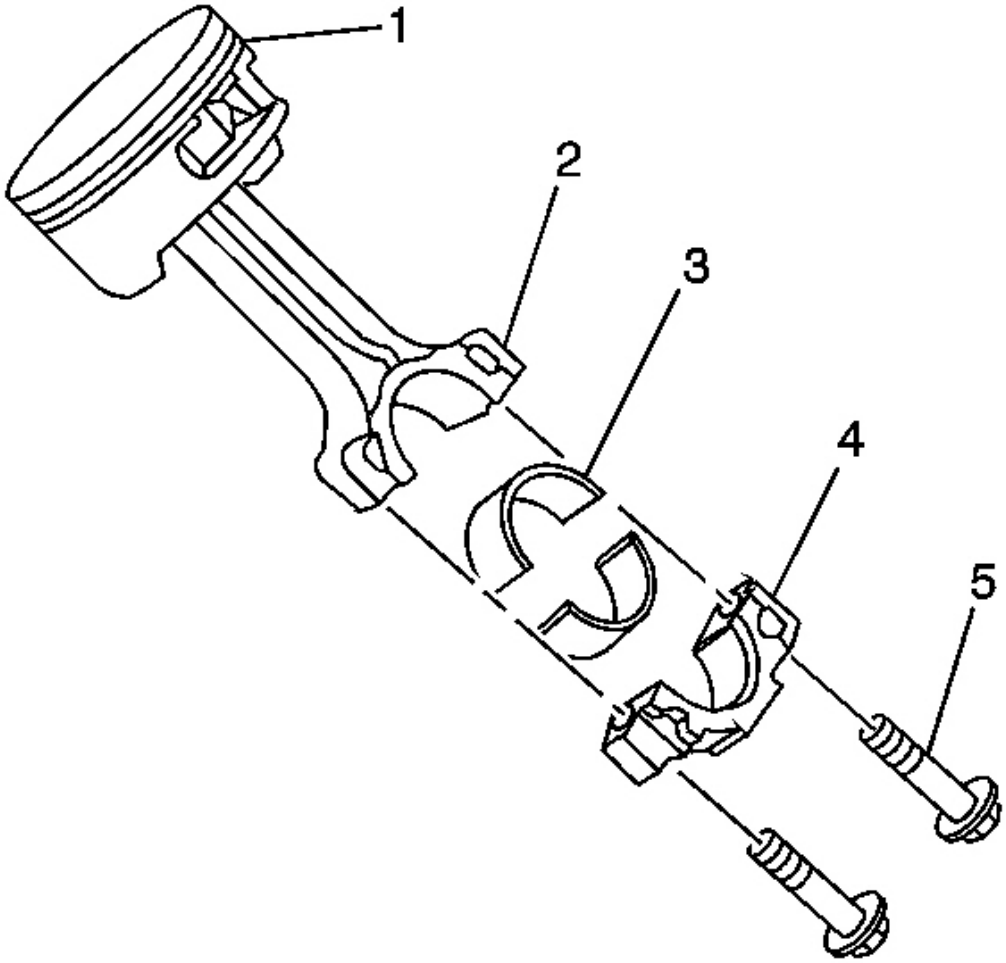

Fig. 135: View Of Piston, Connecting Rod & Components
Courtesy of GENERAL MOTORS CORP.

IMPORTANT:

- **Replace pistons, pins, and connecting rods that are damaged or show signs of excessive wear.**
- **The first design press-fit piston, pin, and connecting rod are to be serviced as an assembly.**
- **Do not wire brush any part of the piston.**
- **Measurement of the components should be taken with the components at normal room temperature.**

cardiagn.com

1. Clean the varnish and carbon from the piston (1) using cleaning solvent.

CAUTION: Wear safety glasses in order to avoid eye damage.

2. Dry the components with compressed air.

cardiagn.com

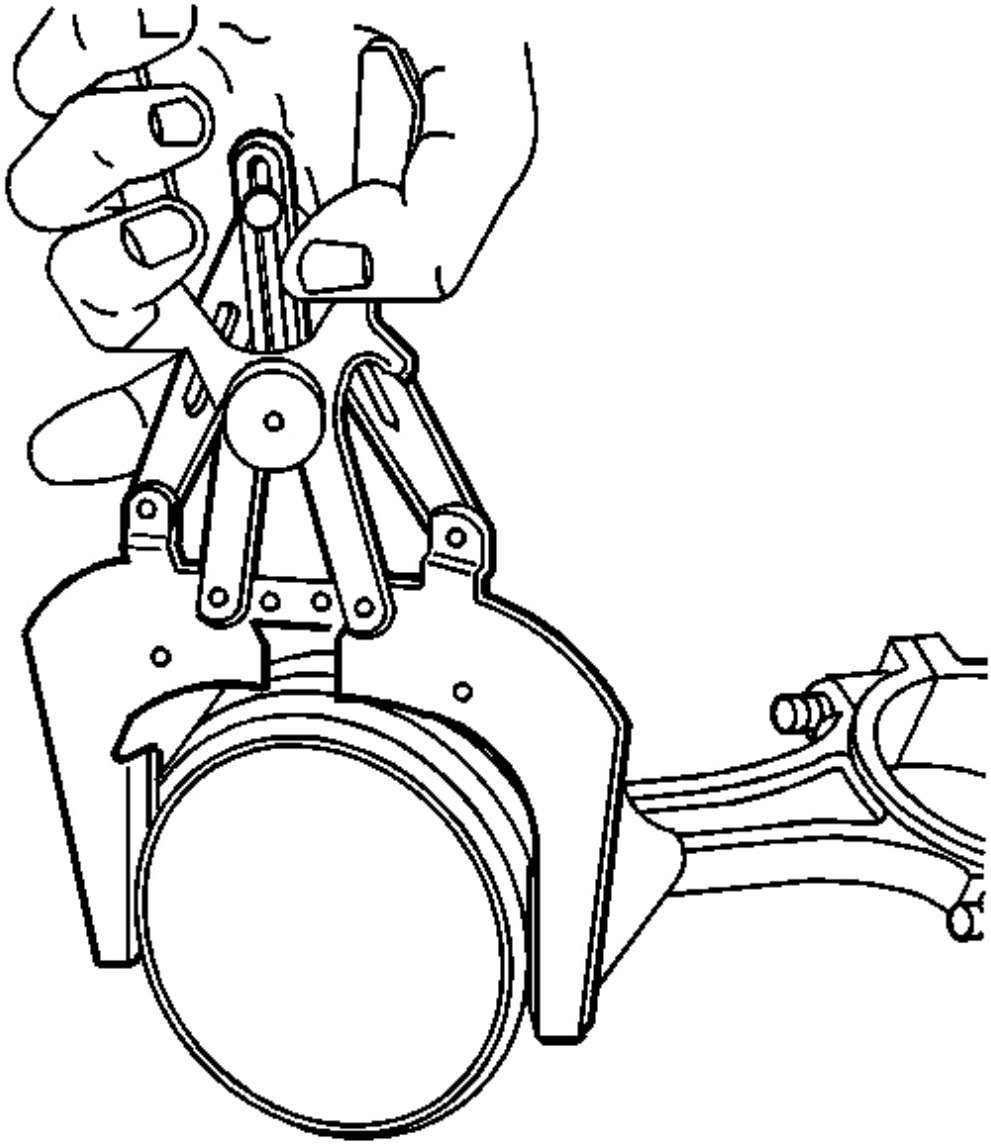

Fig. 136: Cleaning The Piston Ring Grooves With Suitable Ring Groove Cleaning Tool
Courtesy of GENERAL MOTORS CORP.

3. Clean the piston ring grooves with a suitable ring groove cleaning tool.
4. Clean the oil lubrication holes and slots.

cardiagn.com

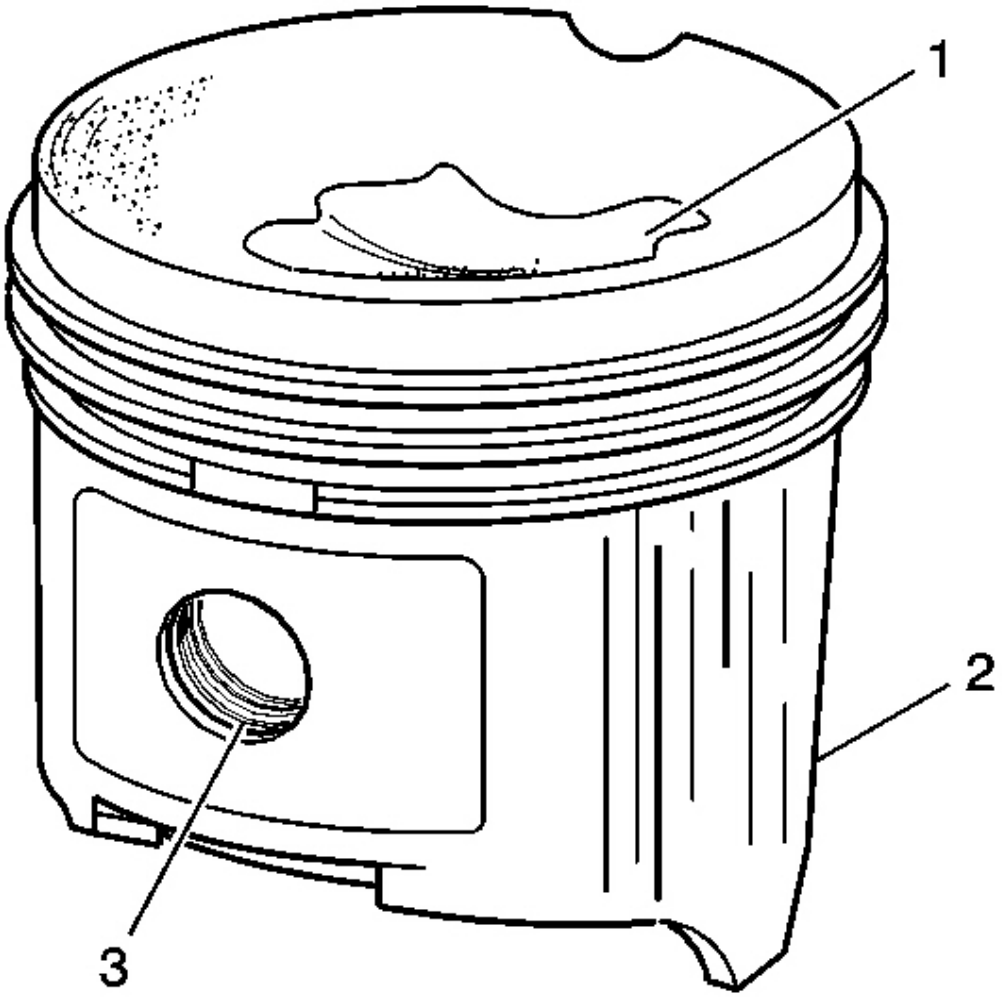

Fig. 137: Inspecting Piston For Damage
Courtesy of GENERAL MOTORS CORP.

5. Inspect the piston for the following conditions:
   - Cracks in the piston ring lands, the piston skirt, or pin bosses
   - Piston ring grooves for nicks, burrs, or warpage which may cause the piston ring to bind

     MINOR imperfections may be removed from the piston with a fine file.

   - Scuffed or damaged skirts (2)
   - Eroded areas at the top of the piston (1)

cardiagn.com

- Scoring to the full-floating design piston pin bore (3) or piston pin

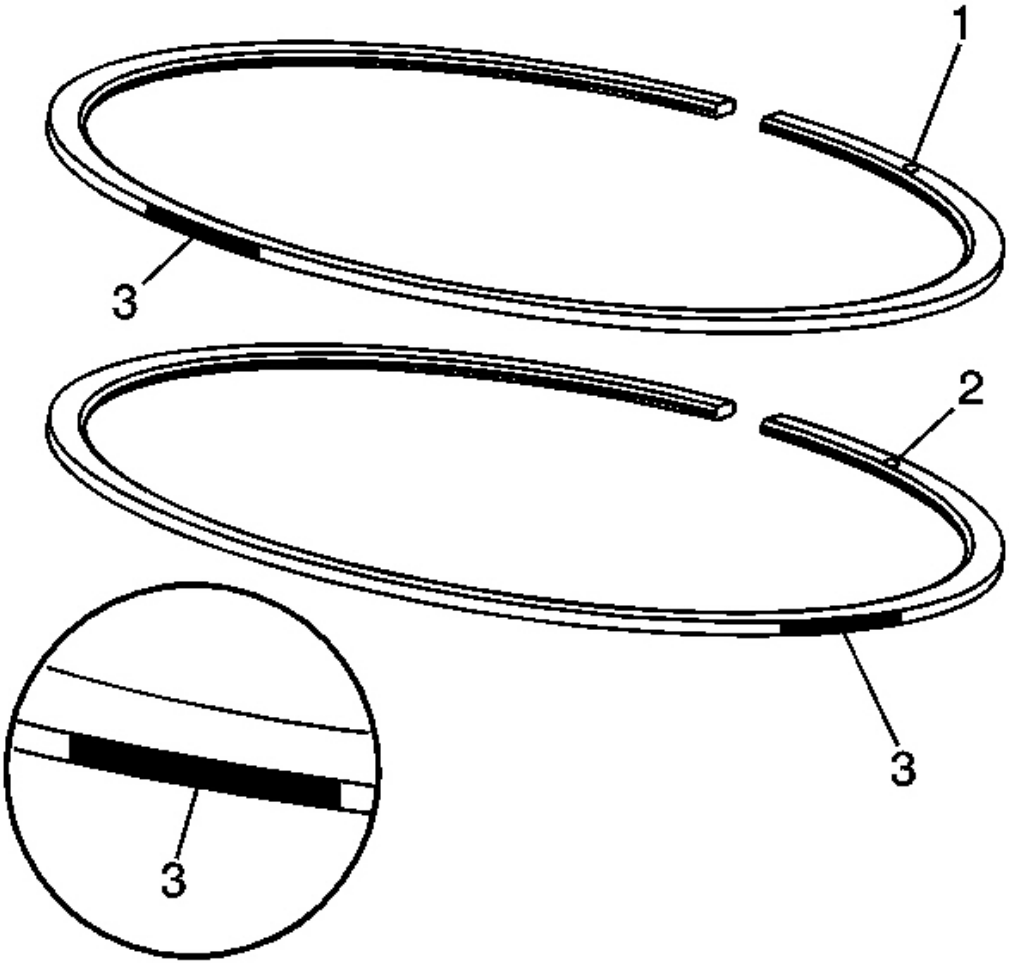

Fig. 138: View Of Upper/Lower Compression Rings & Marks
Courtesy of GENERAL MOTORS CORP.

6. Identify the NEW upper and lower compression rings. The upper compression ring can be identified by a paint mark (3) located 180 degrees from the end gap. The lower compression ring can be identified by a paint mark (3) located 90 degrees from the end gap. Both rings should be installed with the orientation marks (1, 2) facing the top of the piston.

cardiagn.com

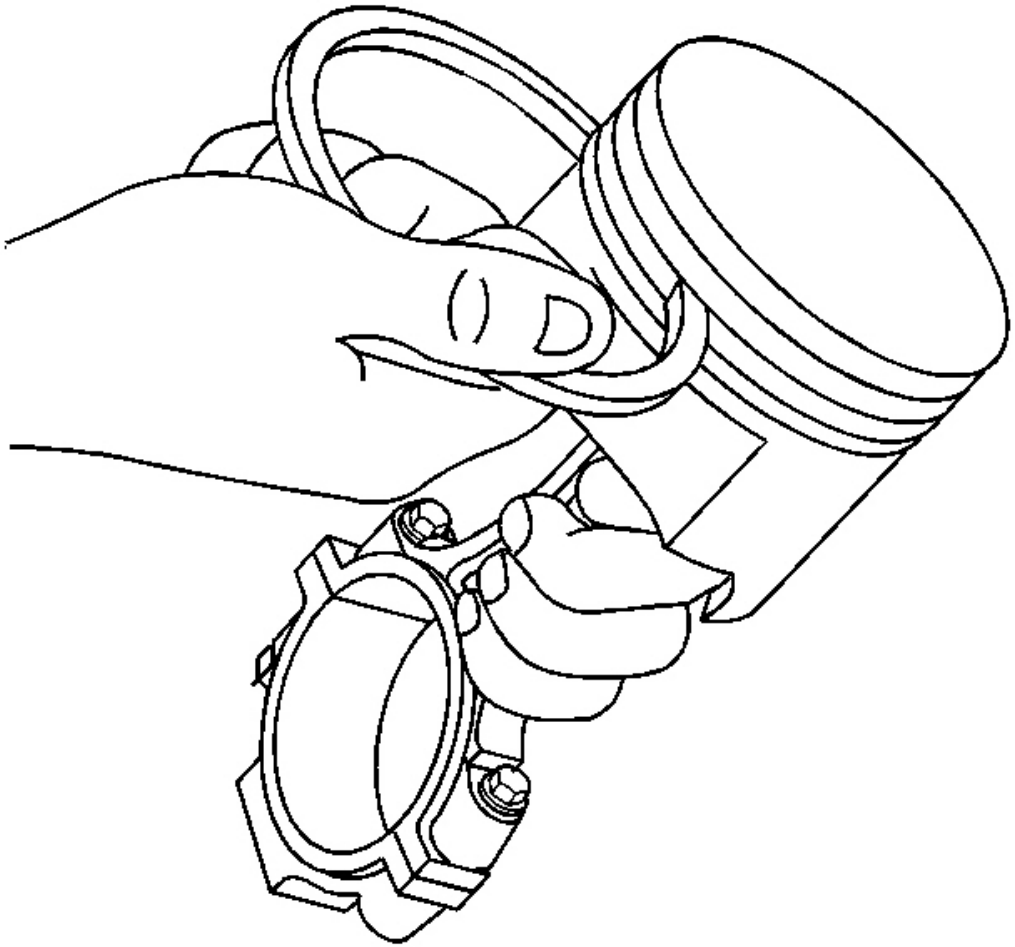

Fig. 139: Inserting Piston Ring-To-Piston Ring Groove Side
Courtesy of GENERAL MOTORS CORP.

7. Insert the edge of the piston ring into the piston ring groove.

   Roll the piston ring completely around the piston. If binding is caused by distorted ring groove, MINOR imperfections may be removed with a fine file. If binding is caused by a distorted piston ring, replace the rings as required.

cardiagn.com

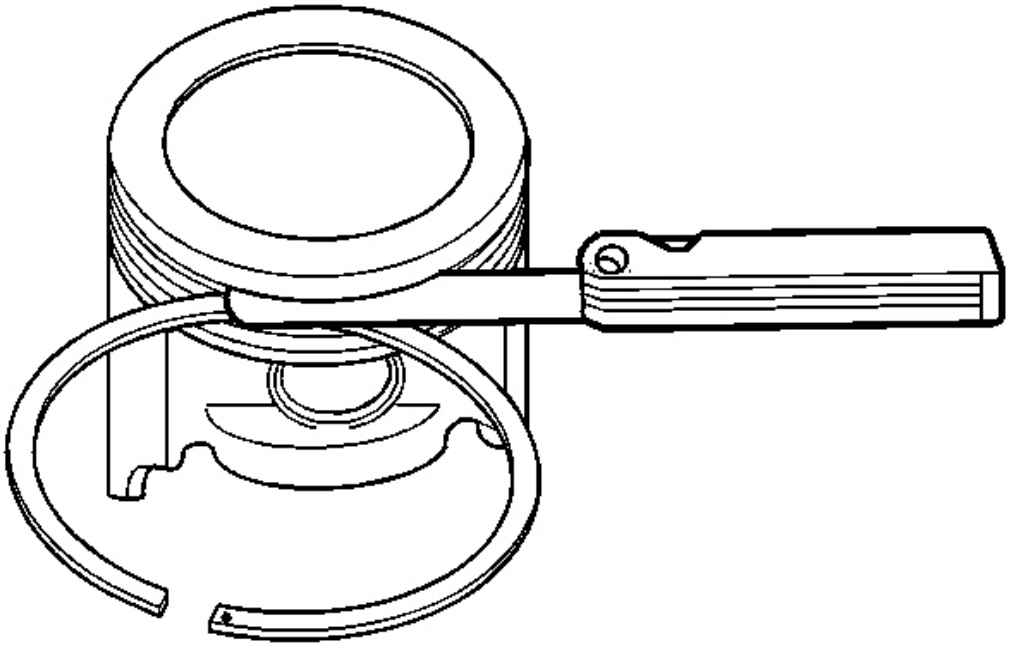

Fig. 140: Measuring The Piston Ring Side Clearance With Feeler Gauge
Courtesy of GENERAL MOTORS CORP.

8. Measure the piston ring side clearance with a feeler gauge. If side clearance is not within specifications, try another piston ring. If the proper ring-to- groove clearance cannot be obtained, replace the first design press-fit piston, pin, and connecting rod assembly. Refer to **Engine Mechanical Specifications (LS1)** or **Engine Mechanical Specifications (LS6)** .

cardiagn.com

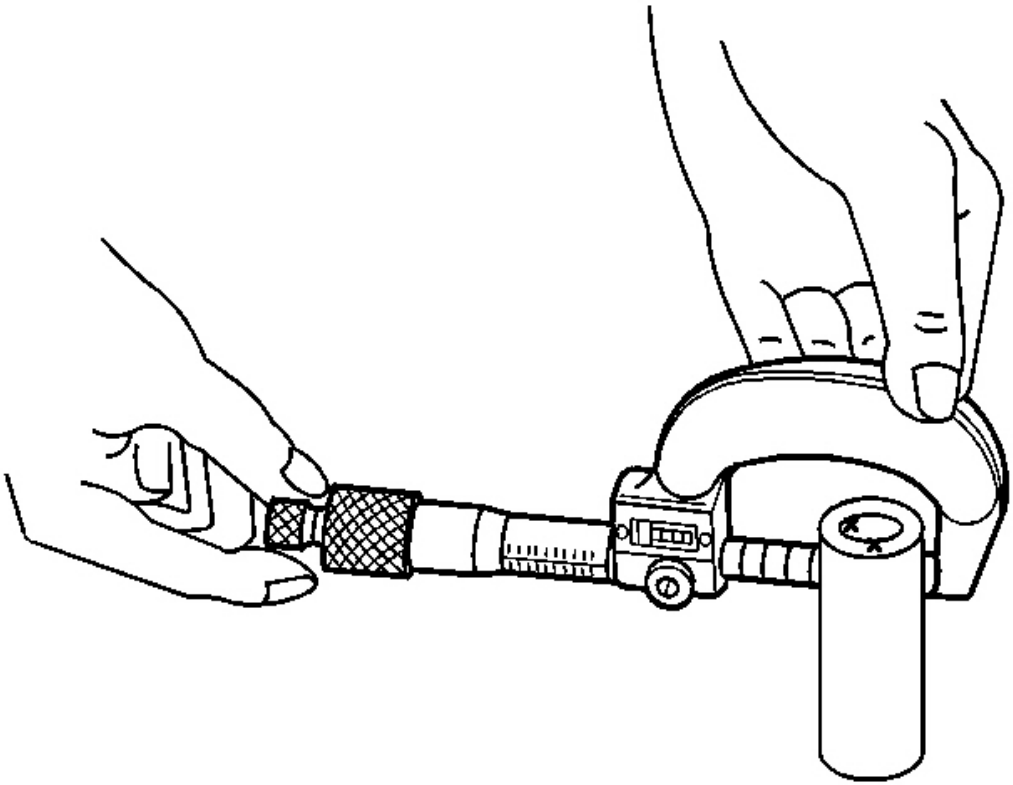

Fig. 141: Measuring The Piston Pin Diameter
Courtesy of GENERAL MOTORS CORP.

9. To determine piston pin-to-bore clearance, use a micrometer and measure the piston pin outside diameter (OD).

cardiagn.com

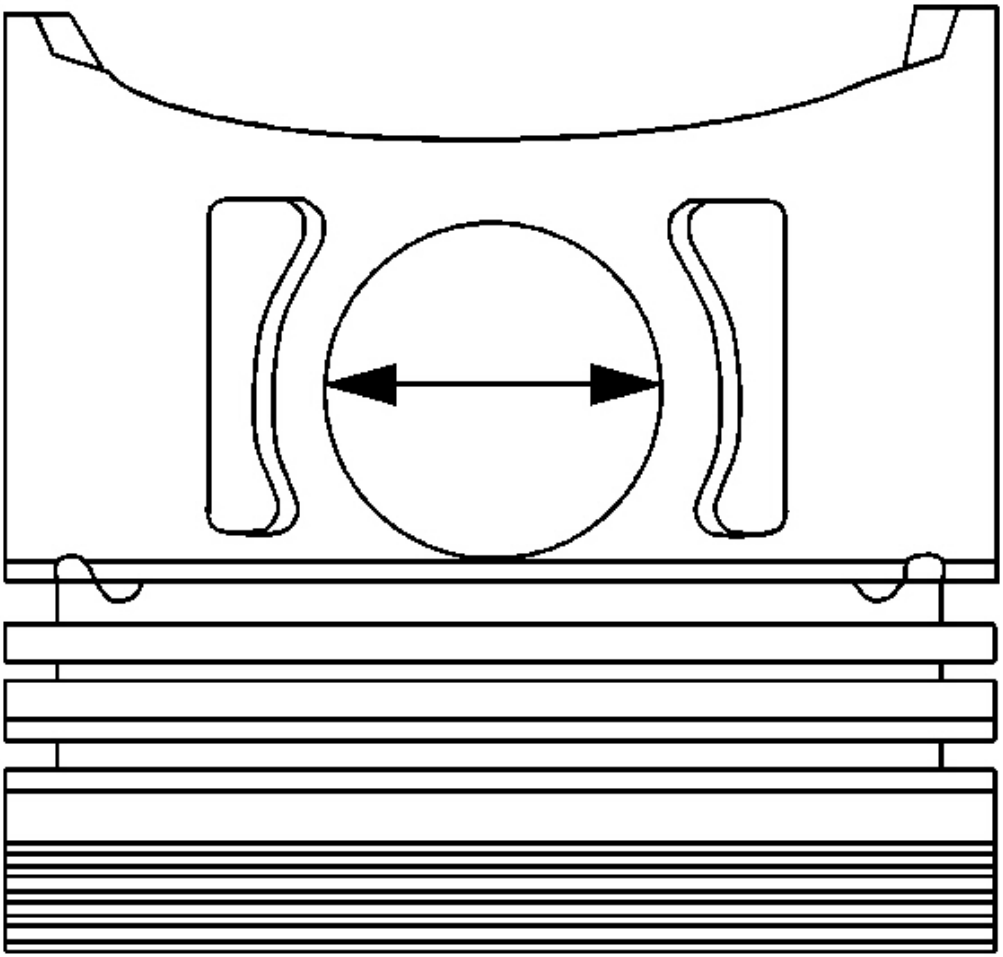

Fig. 142: Measuring The Piston Pin Bore
Courtesy of GENERAL MOTORS CORP.

10. To determine the piston pin-to-bore clearance, use an inside micrometer and measure the piston pin bore inside diameter (ID).
11. Subtract the piston pin OD measurement from the piston pin bore ID measurement to determine pin-to-bore clearance.

Refer to **Engine Mechanical Specifications (LS1)** or **Engine Mechanical Specifications (LS6)** .

Measuring Piston Ring End Gap

cardiagn.com

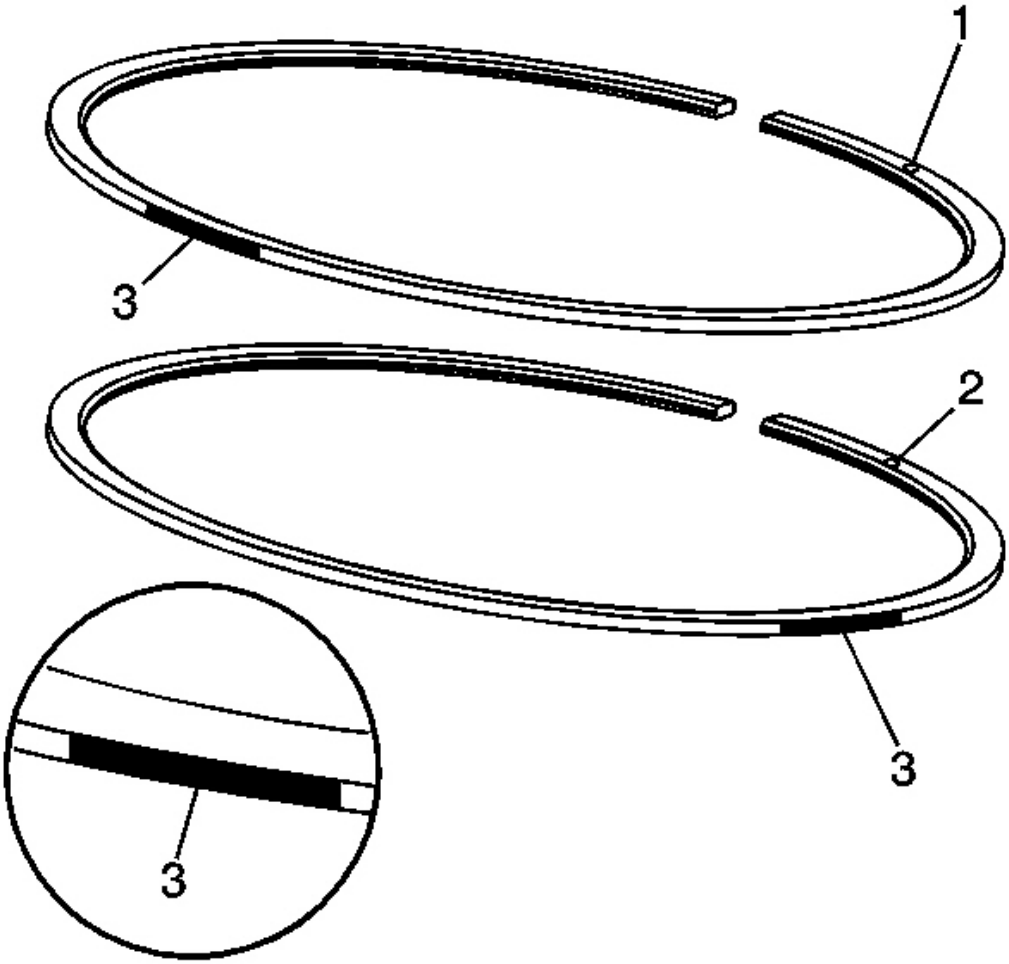

Fig. 143: View Of Upper/Lower Compression Rings & Marks
Courtesy of GENERAL MOTORS CORP.

IMPORTANT:

- **Do not attempt to file the end of the piston ring to achieve the proper end gap clearance.**
- **Measure the piston ring in the cylinder in which it will be used.**

1. Identify the NEW upper and lower compression rings. The upper compression ring can be identified by a paint mark (3) located 180 degrees from the end gap. The lower compression ring can be identified by a paint mark (3) located 90 degrees from the end gap. Both rings should be installed with the orientation marks (1, 2) facing the top of the piston.

cardiagn.com

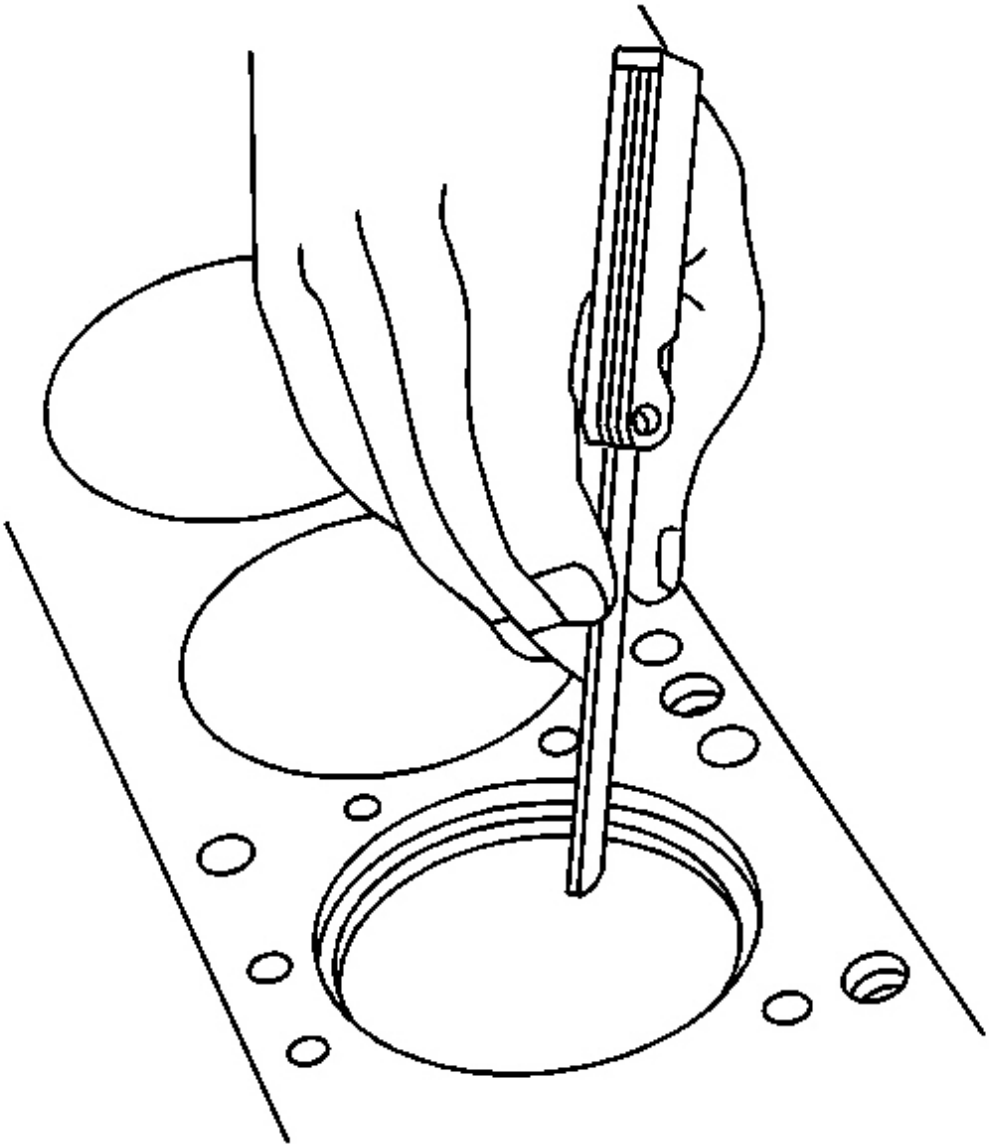

Fig. 144: Measuring The Piston Compression Ring End Gap
Courtesy of GENERAL MOTORS CORP.

2. Place the piston ring into the cylinder bore 6.5 mm (0.25 in) below the top of the ring travel area.
3. Insert a feeler gage and measure the piston ring end gap. Refer to **Engine Mechanical Specifications (LS1)** or **Engine Mechanical Specifications (LS6)** .

cardiagn.com

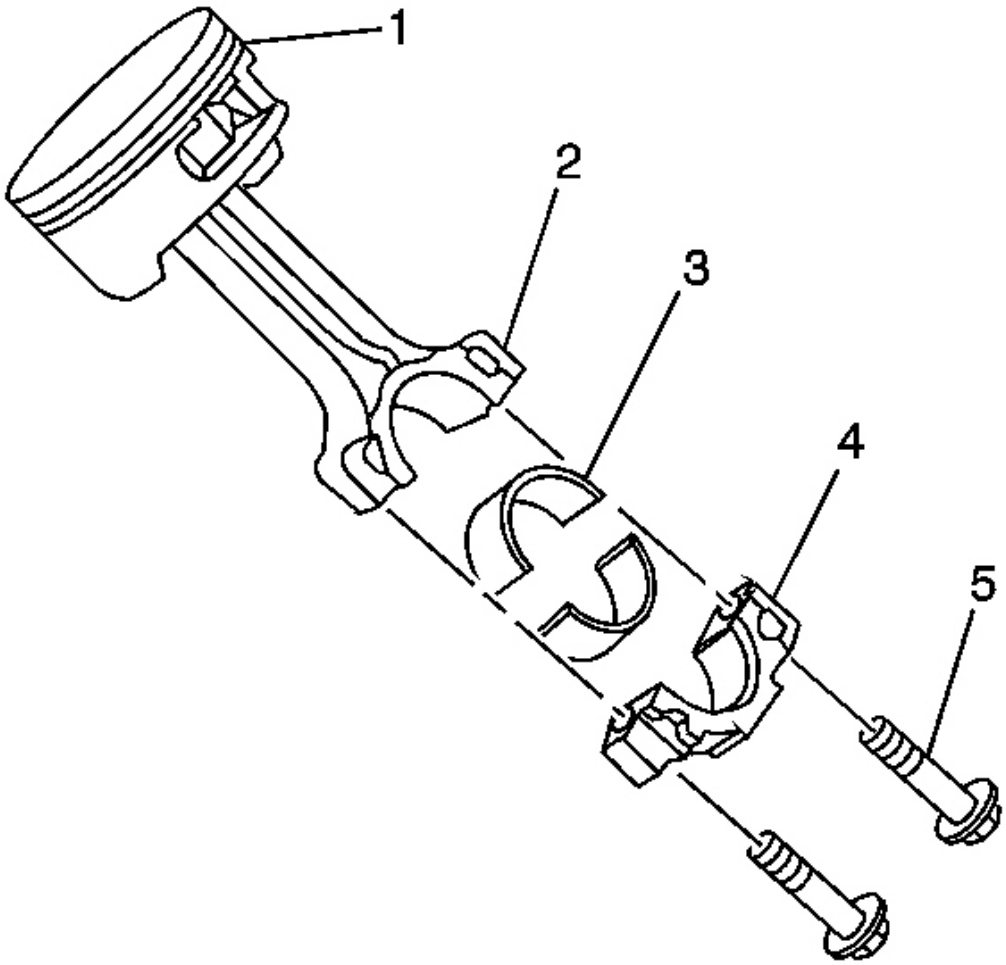

Fig. 145: View Of Piston, Connecting Rod & Components
Courtesy of GENERAL MOTORS CORP.

IMPORTANT:

- **The powdered metal connecting rod and cap are machined for proper clearances. The connecting rod and cap must be used as an assembly with no repair or modifications to either mating surface. Do not attempt to repair the rod or cap. If service is required, replace the first design press-fit piston, pin, and connecting rod as an assembly.**
- **Do not attempt to repair the bolt hole threads of the connecting rod.**

cardiagn.com

1. Clean the connecting rod (2) and cap (4) in solvent.

CAUTION: Wear safety glasses in order to avoid eye damage.

2. Dry the components with compressed air.

cardiagn.com

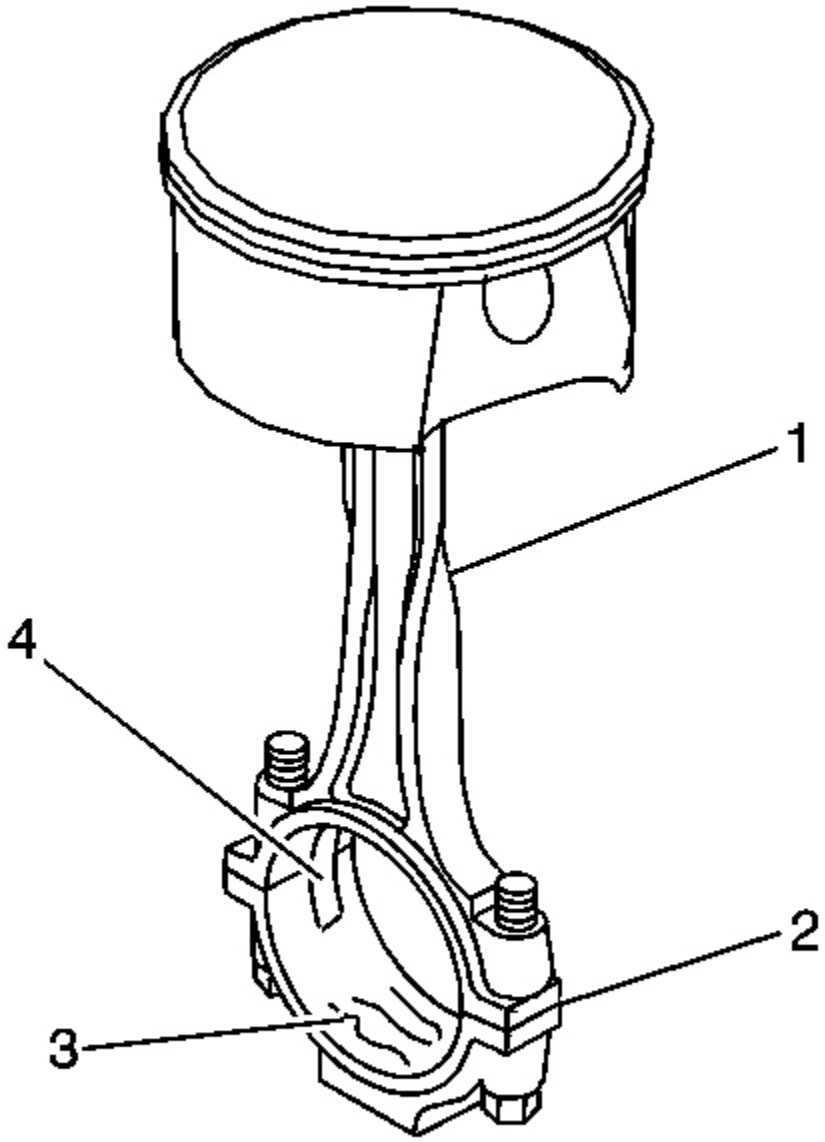

Fig. 146: Inspecting The Connecting Rod For Damage
Courtesy of GENERAL MOTORS CORP.

3. Inspect the connecting rod for the following conditions:
   - Twisting (1)
   - Proper fit of the connecting rod and cap mating surfaces (2)

cardiagn.com

- Nicks or gouges in the bearing bore (3)
- Damage to the bearing locating slots (4)

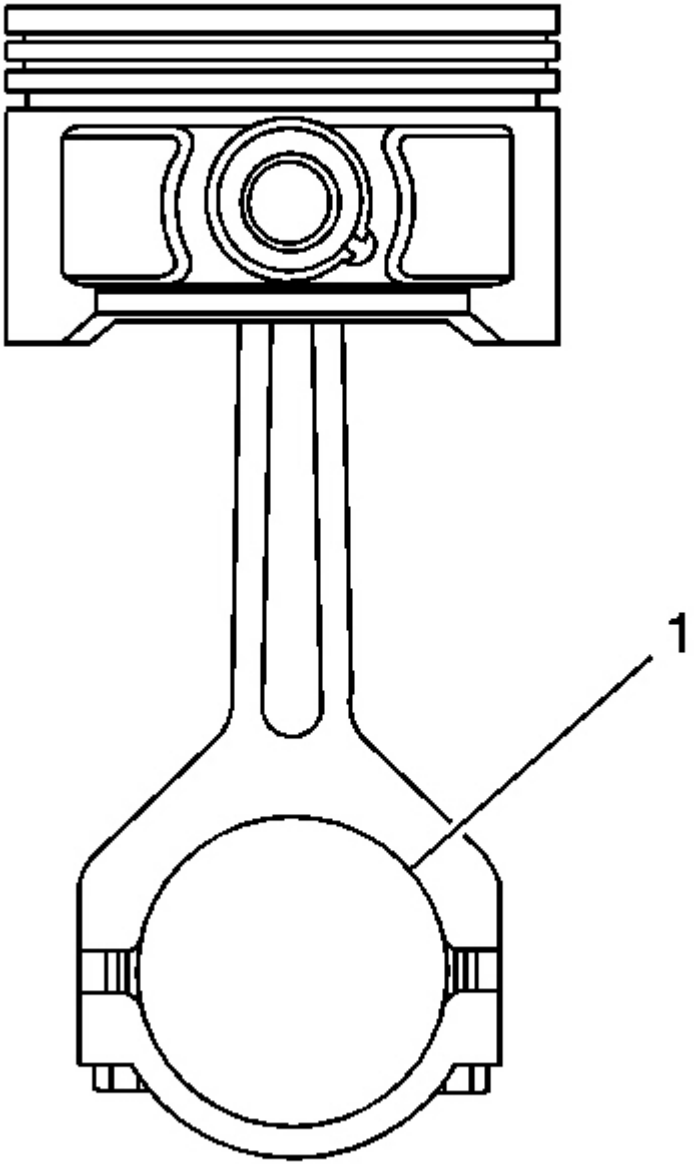

Fig. 147: Measuring The Connecting Rod Bearing Bore For Out-Of-Round Condition
Courtesy of GENERAL MOTORS CORP.

cardiagn.com

4. Measure the connecting rod bearing bore (1) for an out-of-round condition. Refer to **Engine Mechanical Specifications (LS1)** or **Engine Mechanical Specifications (LS6)** .

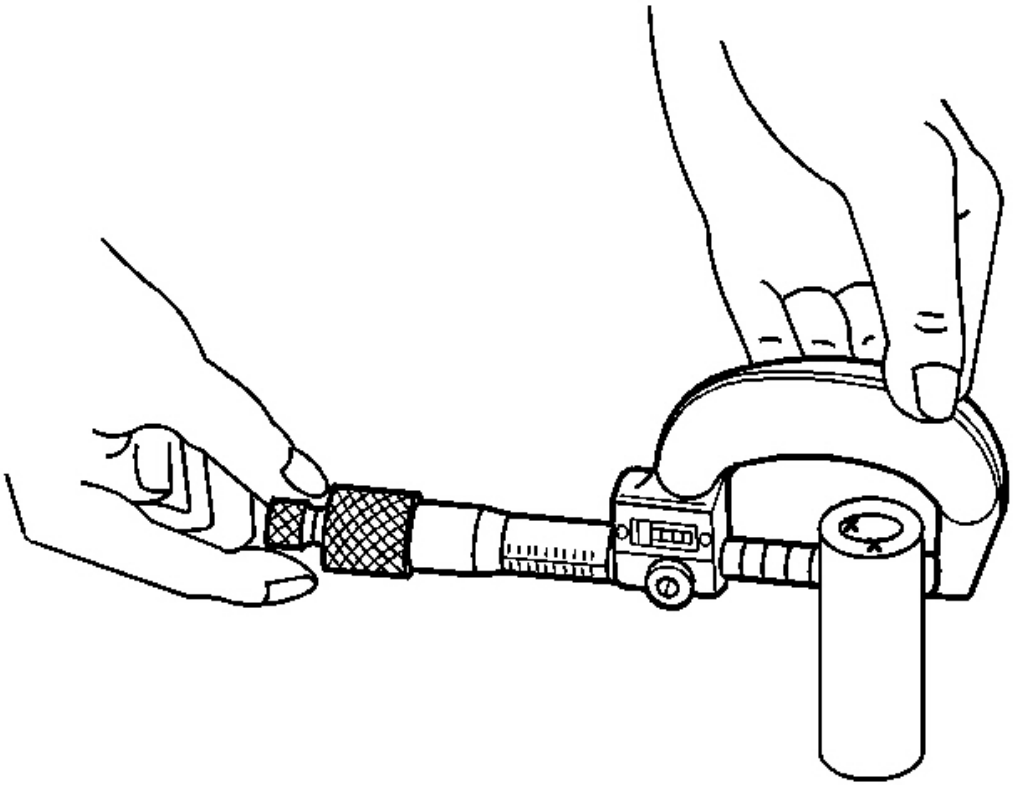

Fig. 148: Measuring The Piston Pin Diameter
Courtesy of GENERAL MOTORS CORP.

5. To determine piston pin-to-connecting rod bore clearance, use a micrometer and measure the piston pin outside diameter (OD).

cardiagn.com

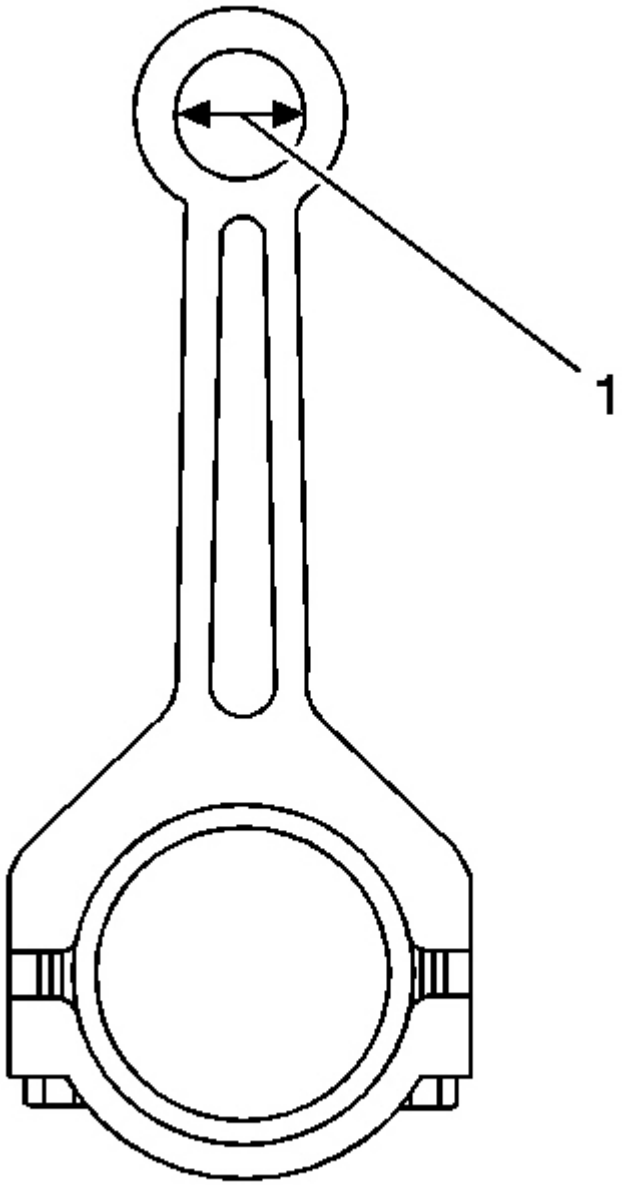

Fig. 149: Measuring The Connecting Rod Pin Bore Inside Diameter
Courtesy of GENERAL MOTORS CORP.

6. To determine piston pin-to-connecting rod bore clearance, use a micrometer and measure the connecting rod pin bore (1) inside diameter (ID).
7. Subtract the piston pin OD measurement from the connecting rod pin bore ID measurement to determine

cardiagn.com

pin-to-bore clearance. Refer to **Engine Mechanical Specifications (LS1)** or **Engine Mechanical Specifications (LS6)** .

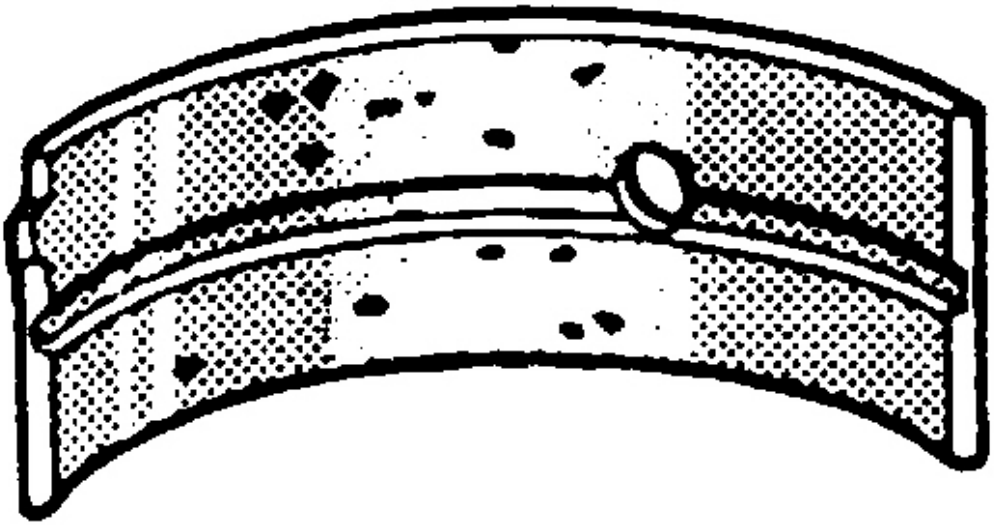

Fig. 150: Inspecting Bearings For Damage
Courtesy of GENERAL MOTORS CORP.

8. Inspect the connecting rod bearings for craters or pockets. Flattened sections on the bearing halves indicate fatigue.

cardiagn.com

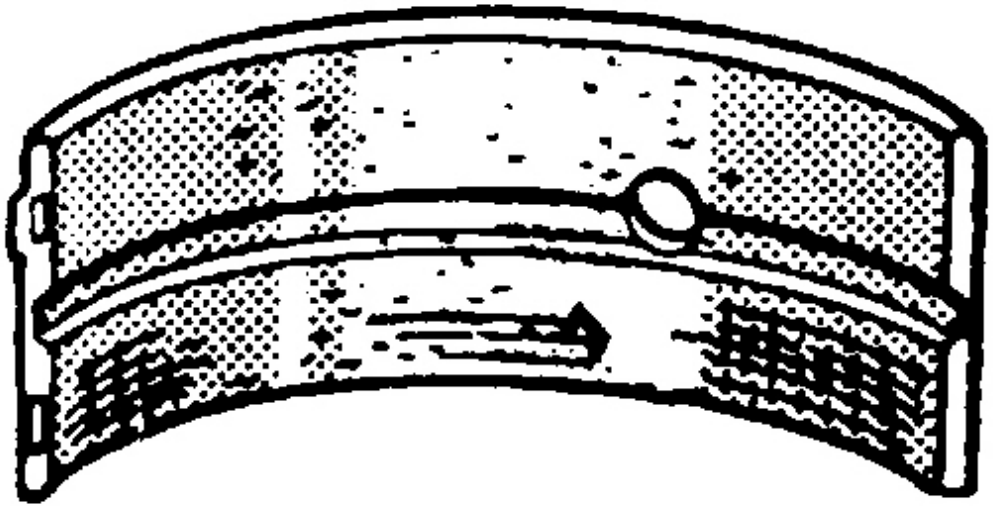

Fig. 151: Inspecting Connecting Rod Bearings For Excess Scoring Or Discoloration
Courtesy of GENERAL MOTORS CORP.

9. Inspect the connecting rod bearings for excessive scoring or discoloration.
10. Inspect the connecting rod bearings for dirt or debris imbedded into the bearing material.

cardiagn.com

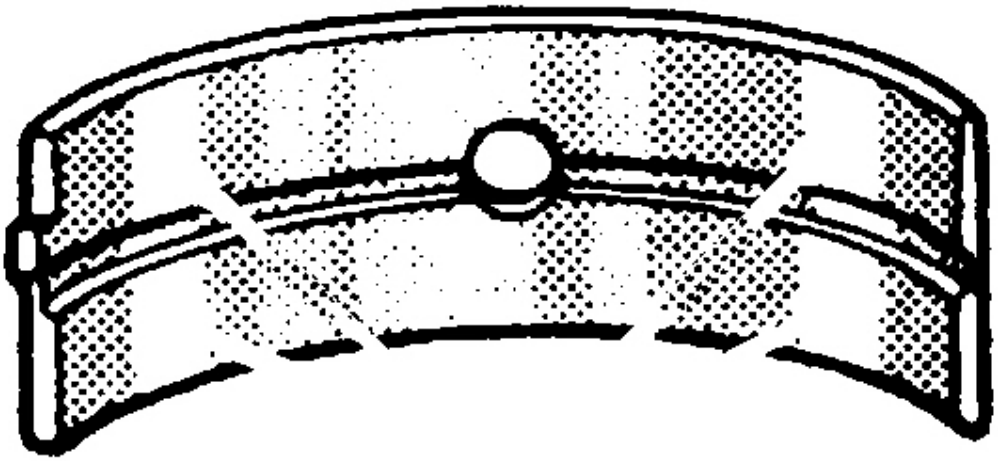

Fig. 152: Inspecting Bearings For Improper Seating
Courtesy of GENERAL MOTORS CORP.

11. Inspect the connecting rod bearings for improper seating indicated by bright, polished sections of the bearing surface.

PISTON AND CONNECTING ROD ASSEMBLE

Tools Required

J 24086-C Piston Pin Remover/Installer Set

cardiagn.com

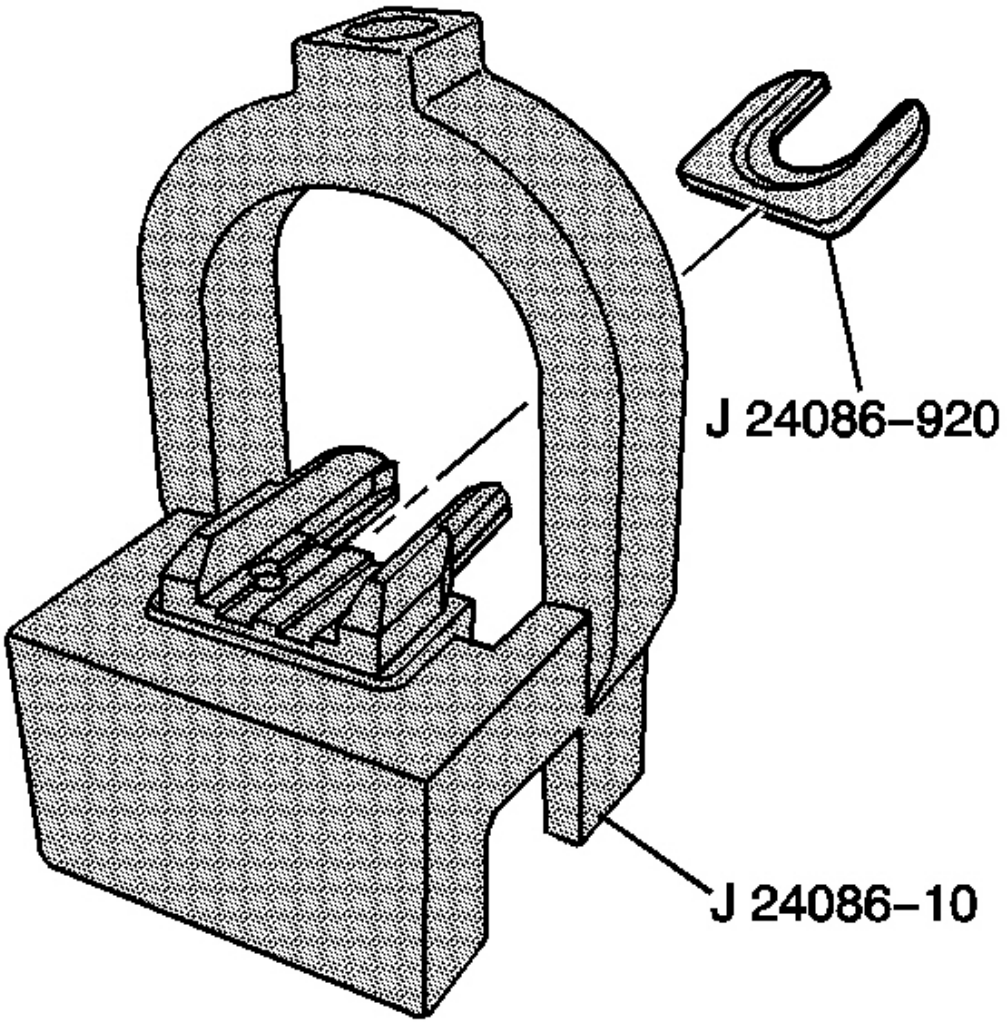

Fig. 153: View Of J 24086-920 & J 24086-10
Courtesy of GENERAL MOTORS CORP.

IMPORTANT:

- **Disassembly of the piston, press-fit design piston pin, and connecting rod may create scoring or damage to the piston pin and piston pin bore. If the piston, pin, and connecting rod have been disassembled, replace the components as an assembly.**
- **If reusing the piston and connecting rod assembly, install the assembly to the original cylinder and corresponding crankshaft journal.**

cardiagn.com

- **The assembly procedure, as shown, is to be used for diagnostic purposes only.**

1. Install fork insert J 24086-920 into J 24086-10 .

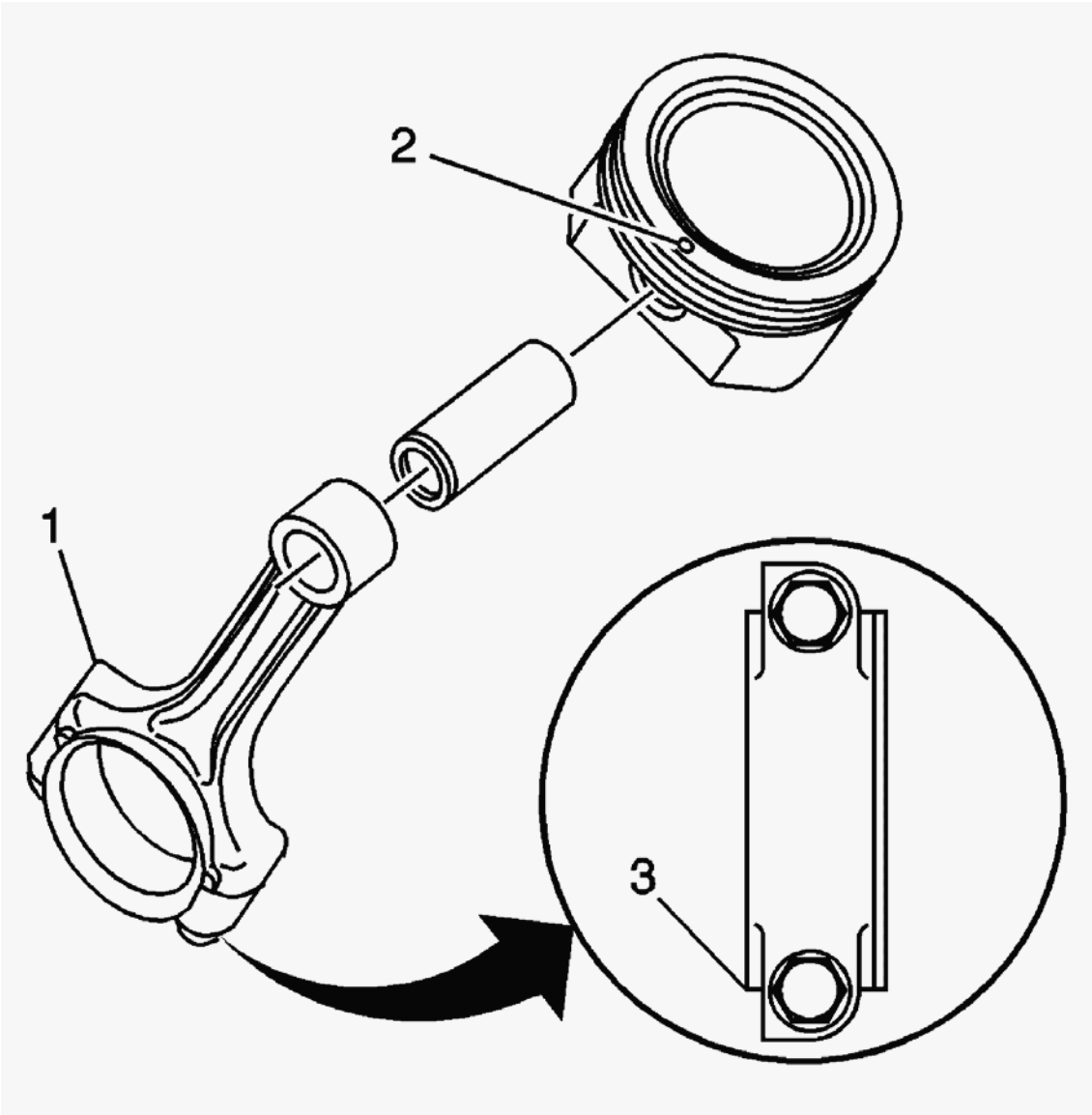

Fig. 154: Connecting Rod, Positioning Tab & Flat Flange
Courtesy of GENERAL MOTORS CORP.

CAUTION: Avoid contact with HOT components. Wear safety glasses and protective gloves to avoid personal injury.

NOTE: Applying excessive heat to the connecting rod may damage or distort the rod. Rod temperature SHOULD NOT exceed 315°C (600°F). At this

cardiagn.com

temperature the end of the connecting rod will turn a straw color upon visual inspection.

2. Use a torch and apply MILD heat to the pin end of the connecting rod. Mild heating of the connecting rod will ease in piston and pin assembly.
3. Identify the positioning tab (1) or flat flange (3) of the connecting rod. When properly assembled, the positioning tab or flat flange of the rod and the mark (2) on the top of the piston should both be facing the front of the engine.

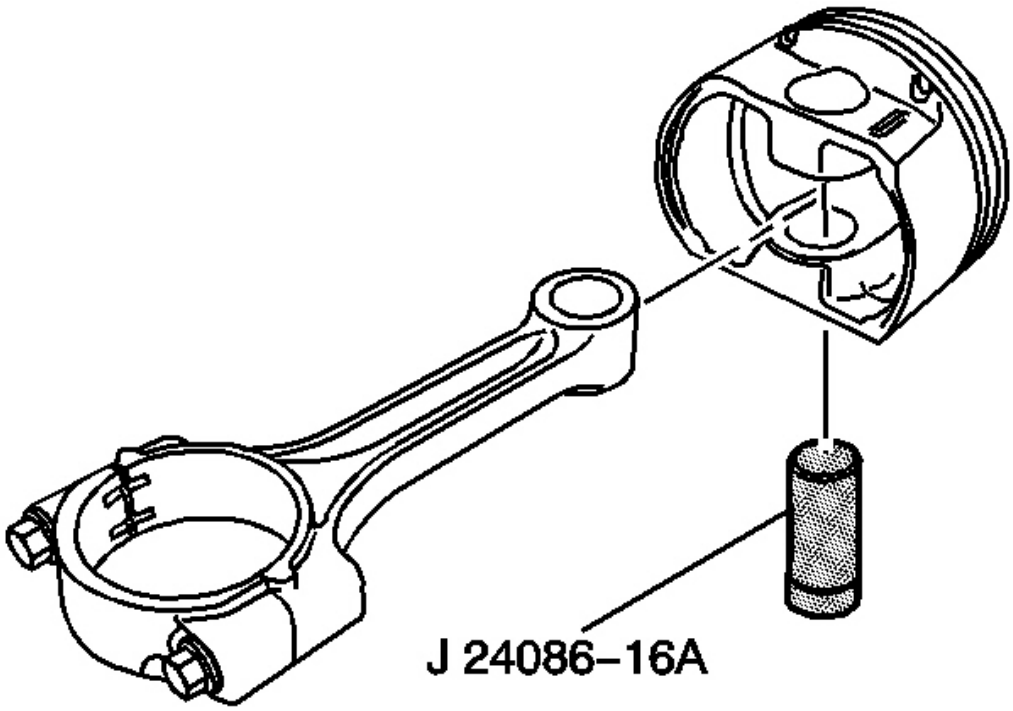

Fig. 155: View Of Piston, Connecting Rod & J 24086-16A
Courtesy of GENERAL MOTORS CORP.

4. Assemble the piston, the connecting rod, and the J 24086-16A.

cardiagn.com

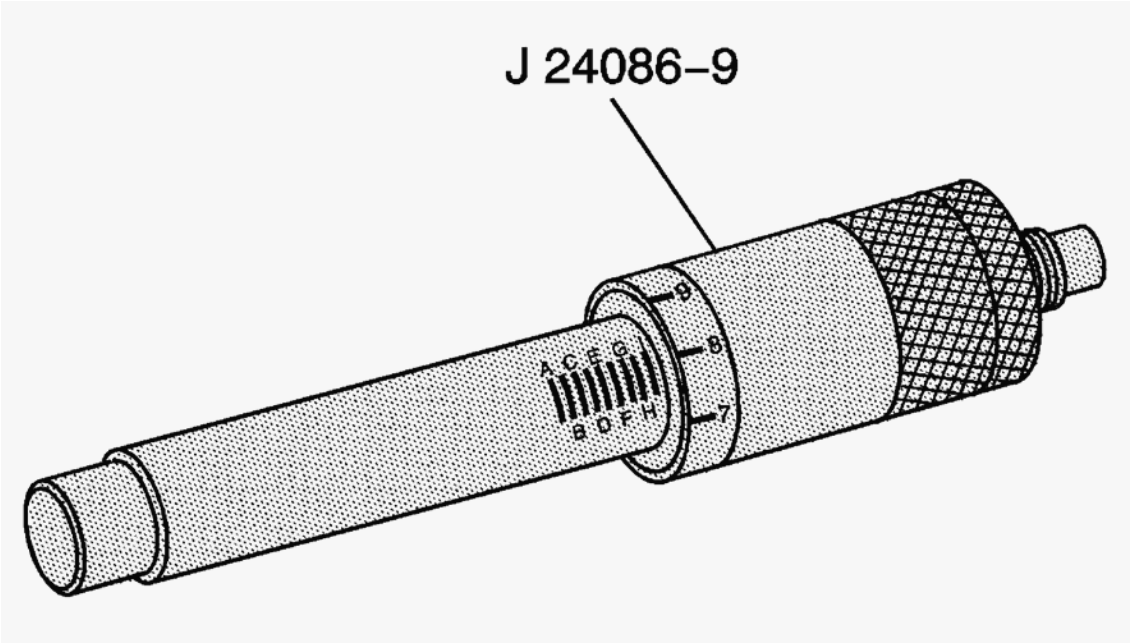

Fig. 156: J 24086-9
Courtesy of GENERAL MOTORS CORP.

5. Adjust the J 24086-9 to I 8.

cardiagn.com

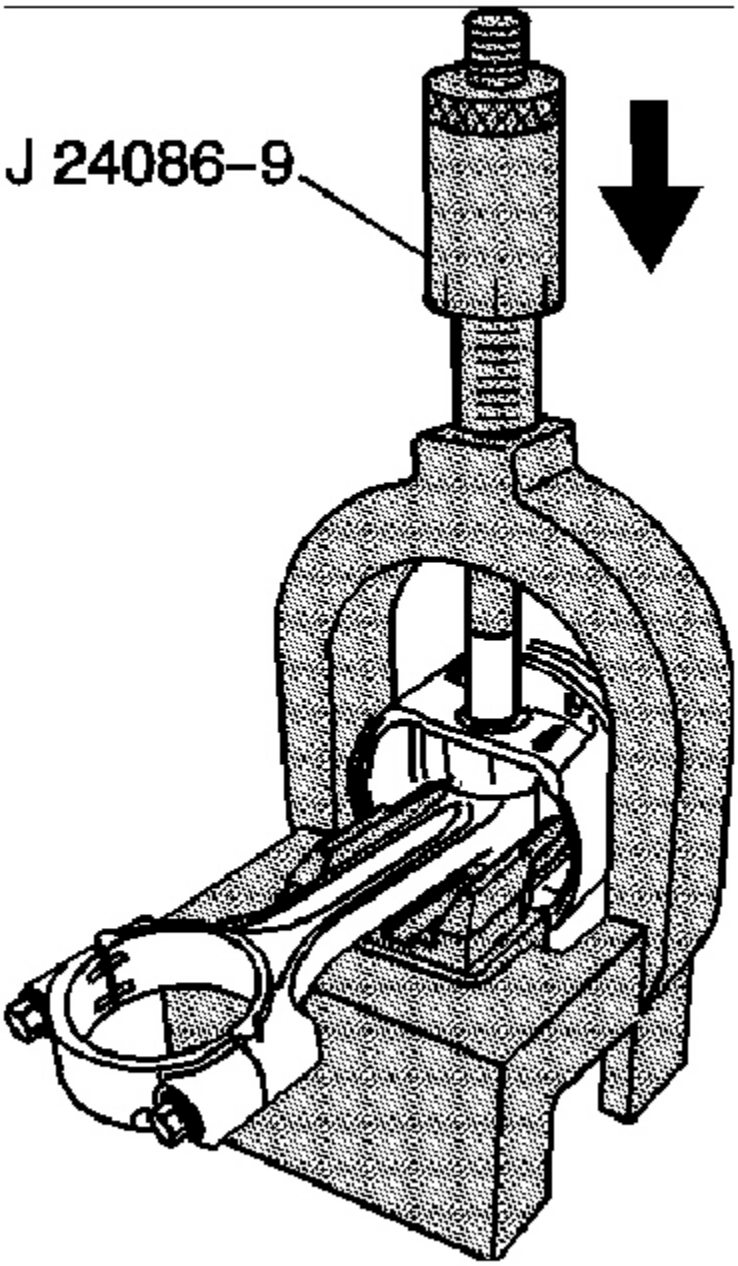

Fig. 157: J 24086-9
Courtesy of GENERAL MOTORS CORP.

6. Install the piston, connecting rod, piston pin, and J 24086-16A to the J 24086-10 .

cardiagn.com

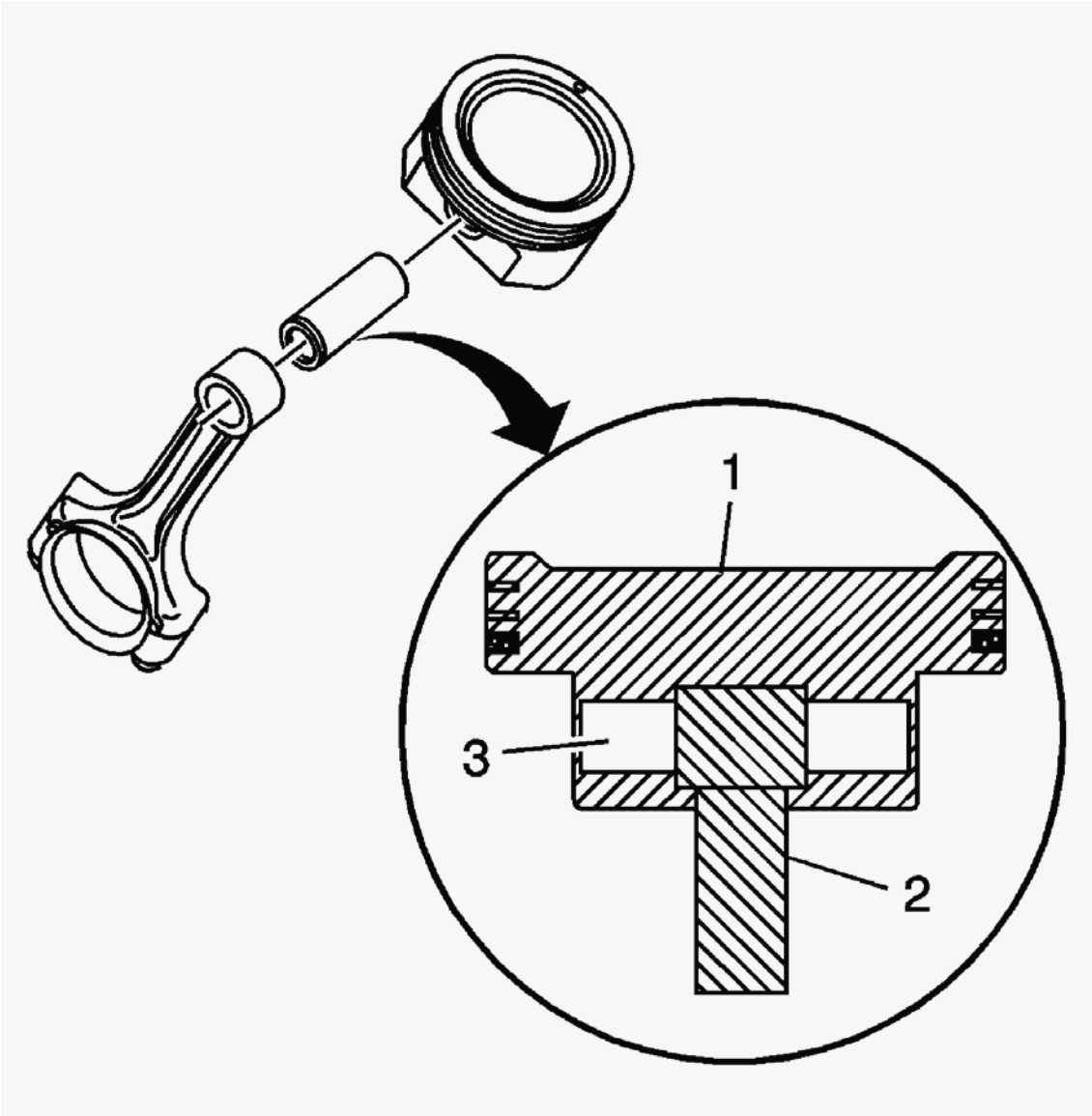

Fig. 158: View Of Piston, Pin & Connecting Rod Proper Assembly
Courtesy of GENERAL MOTORS CORP.

NOTE: **After the installer hub bottoms on the support assembly, do not exceed 35 000 kPa (5,000 psi) pressure, this could cause damage to the tool.**

7. Insert J 24086-9 through J 24086-10 and to the piston pin.
8. Press J 24086-9 until the installer bottoms on the J 24086-10 .
9. Inspect the piston (1), pin (3), and connecting rod (2) for proper assembly.

When properly installed, the piston pin (3) should be centered in the connecting rod (2).

cardiagn.com

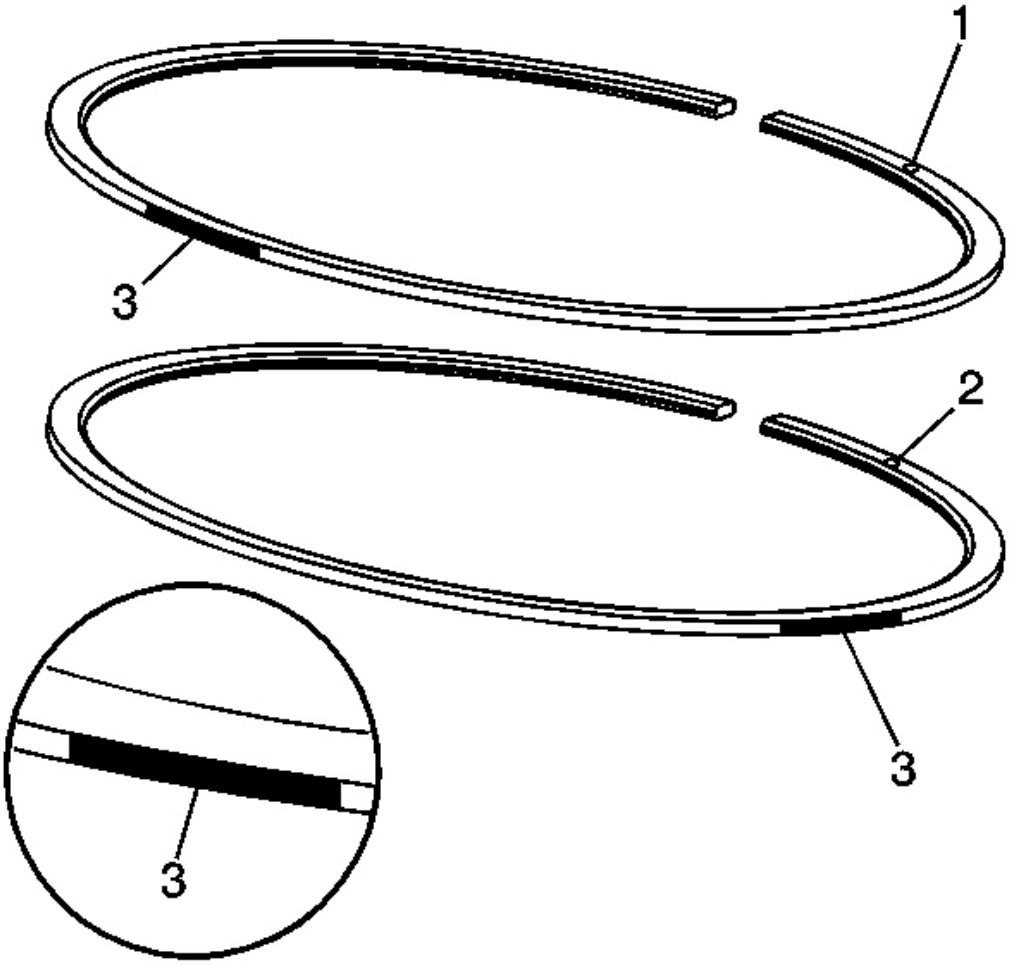

Fig. 159: View Of Upper/Lower Compression Rings & Marks
Courtesy of GENERAL MOTORS CORP.

10. Identify the compression and oil control rings for proper installation. The upper compression ring can be identified by a paint mark (3) located 180 degrees from the end gap. The lower compression ring can be identified by a paint mark (3) located 90 degrees from the end gap. Both rings should be installed with the orientation marks (1, 2) facing the top of the piston.

cardiagn.com

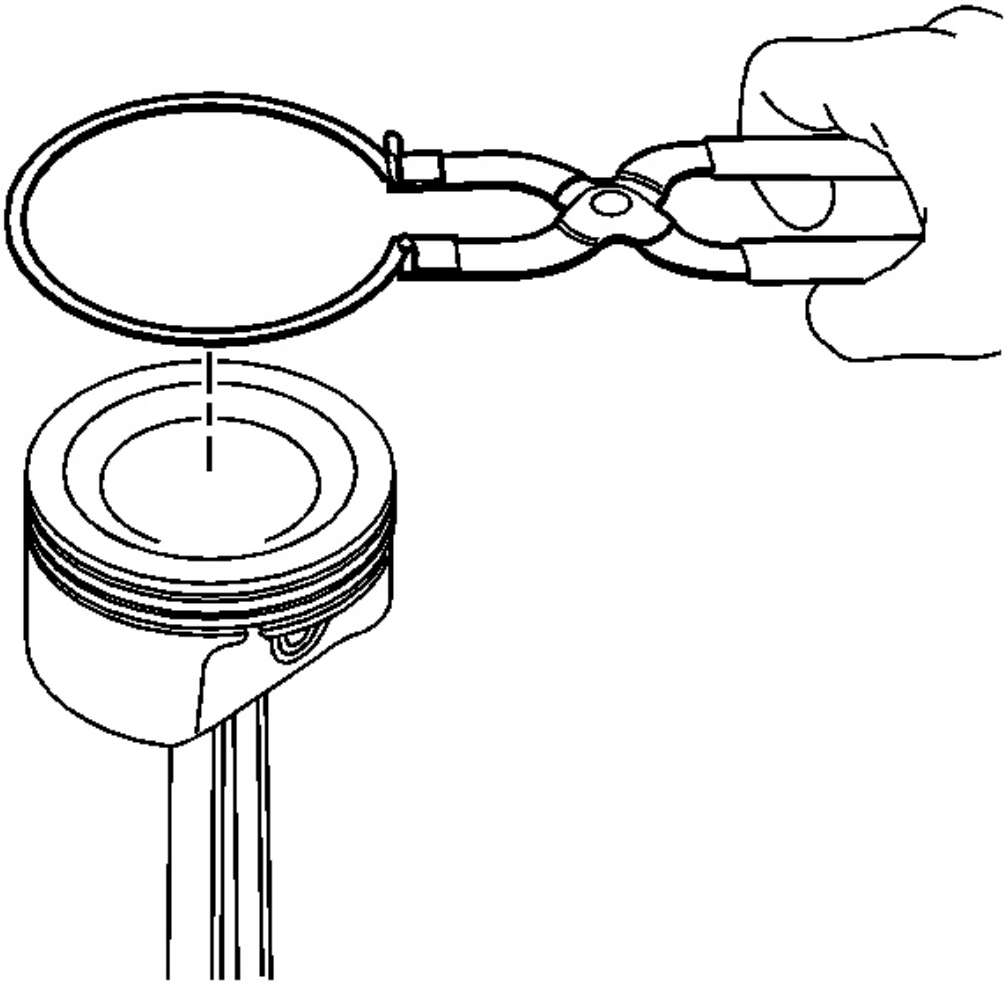

Fig. 160: Piston Rings & Piston
Courtesy of GENERAL MOTORS CORP.

IMPORTANT: When installing piston rings, use a ring expander plier type tool. Do not roll the rings into the grooves of the piston. Use caution and care to expand the rings only slightly larger than the outside diameter (OD) of the piston.

11. Using piston ring pliers, install the piston rings onto the piston.
12. Position the oil control ring end gaps a minimum of 25 mm (1.0 in) from each other.
13. Position the compression ring end gaps 180 degrees opposite each other.

cardiagn.com

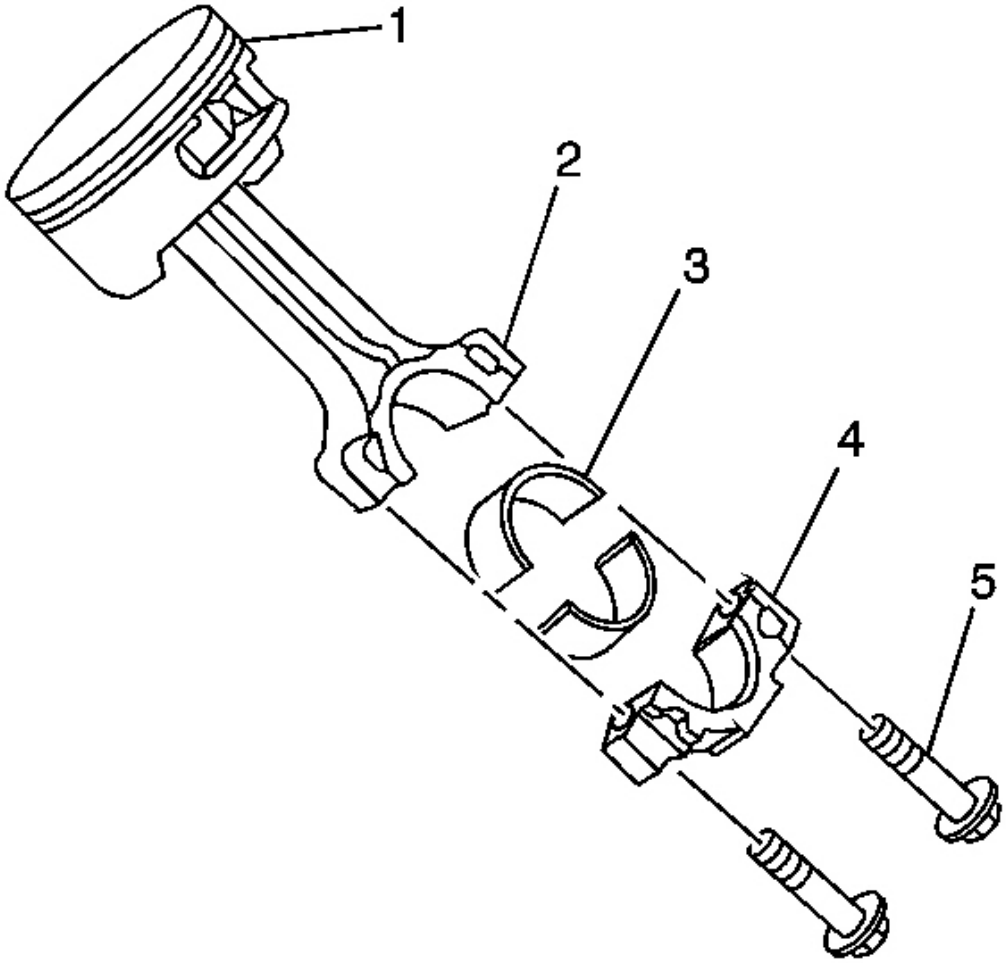

Fig. 161: View Of Piston, Connecting Rod & Components
Courtesy of GENERAL MOTORS CORP.

14. Install the connecting rod bearings (3) to the rod (2) and cap (4).

Full-Floating Piston Pin

cardiagn.com

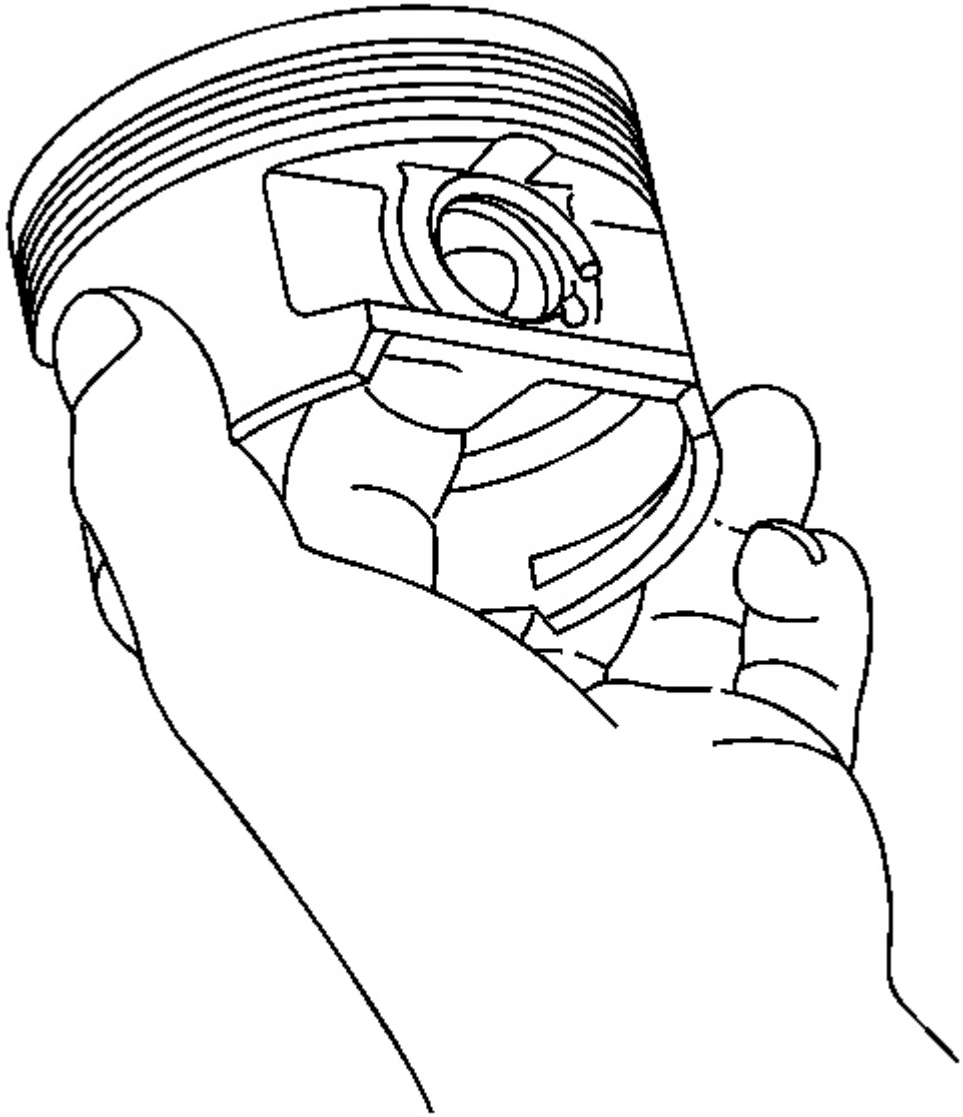

Fig. 162: Installing Retaining Clip In Groove Of Pin Bore
Courtesy of GENERAL MOTORS CORP.

1. Install the retaining clip. The clip should be seated in the groove of the pin bore.

cardiagn.com

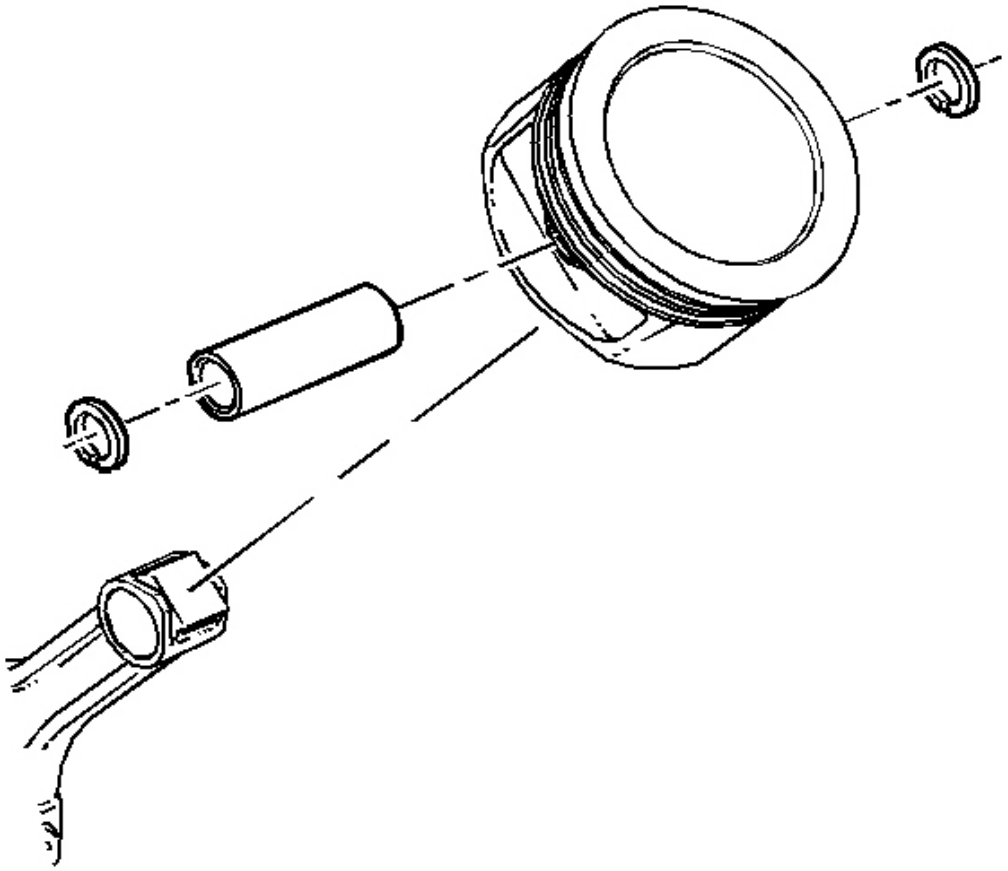

Fig. 163: Pin, Piston & Connecting Rod
Courtesy of GENERAL MOTORS CORP.

2. Install the piston pin to the piston and connecting rod.
3. Install the retaining clip. The clip should be seated in the groove of the pin bore.

cardiagn.com

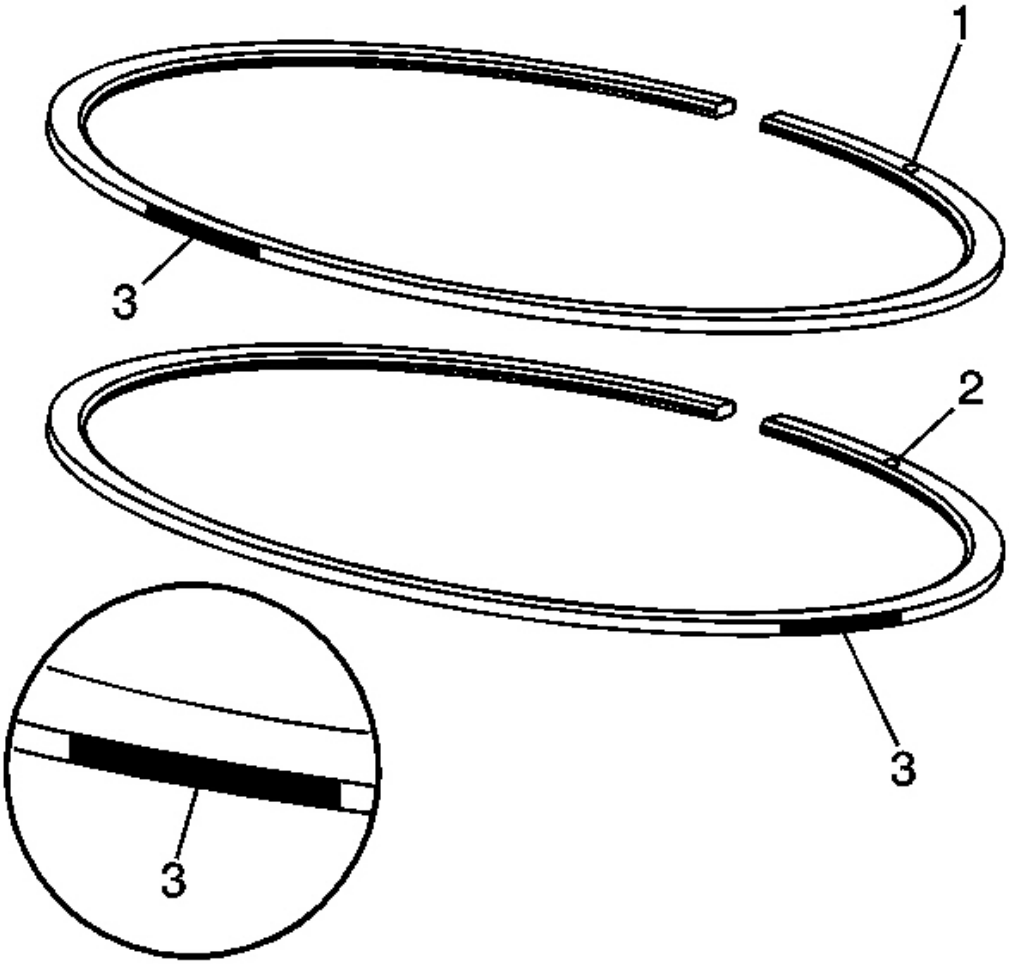

Fig. 164: View Of Upper/Lower Compression Rings & Marks
Courtesy of GENERAL MOTORS CORP.

IMPORTANT: When installing piston rings, use a ring expander plier type tool. Do not roll the rings into the grooves of the piston. Use caution and care to expand the rings only slightly larger than the outside diameter (OD) of the piston.

4. Identify the compression and oil control rings for proper installation. The upper compression ring can be identified by a paint mark (3) located 180 degrees from the end gap. The lower compression ring can be identified by a paint mark (3) located 90 degrees from the end gap. Both rings should be installed with the orientation marks (1, 2) facing the top of the piston.

cardiagn.com

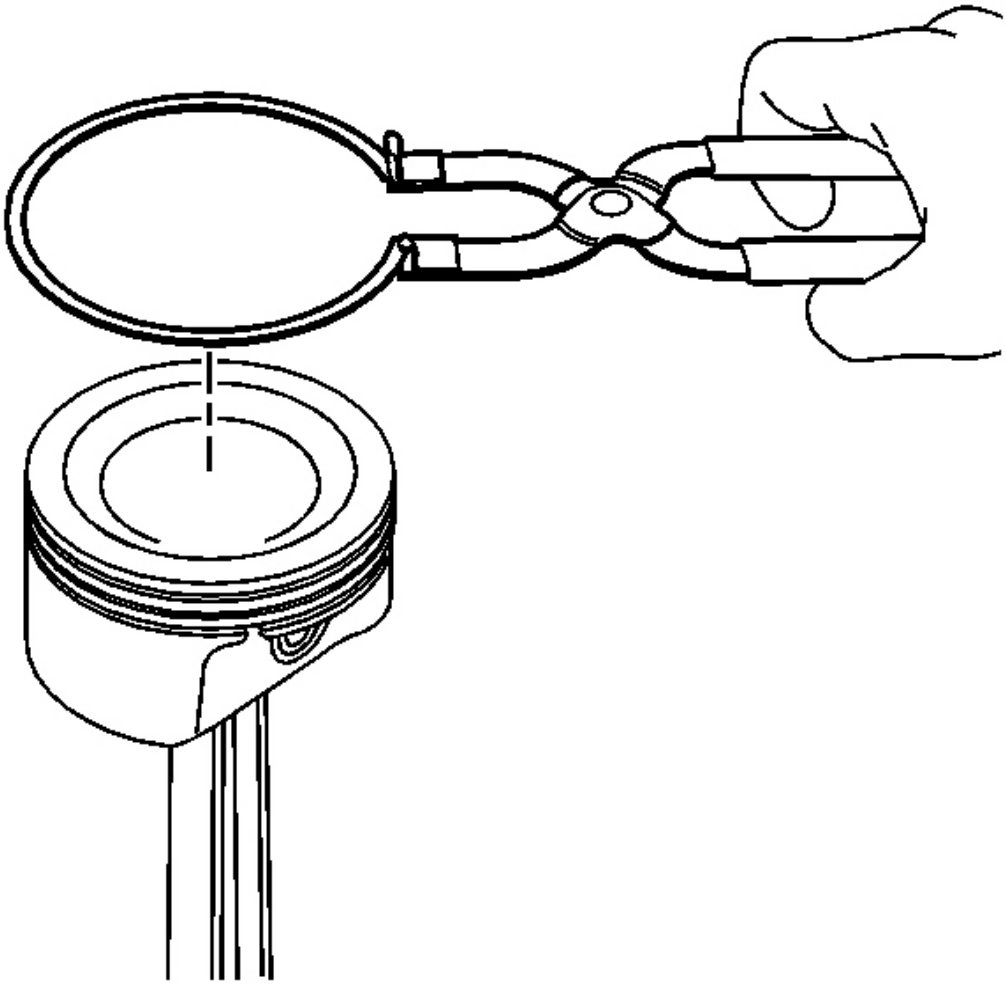

Fig. 165: Piston Rings & Piston
Courtesy of GENERAL MOTORS CORP.

5. Using piston ring pliers, install the piston rings onto the piston.
6. Position the oil control ring end gaps a minimum of 25 mm (1.0 in) from each other.
7. Position the compression ring end gaps 180 degrees opposite each other.

cardiagn.com

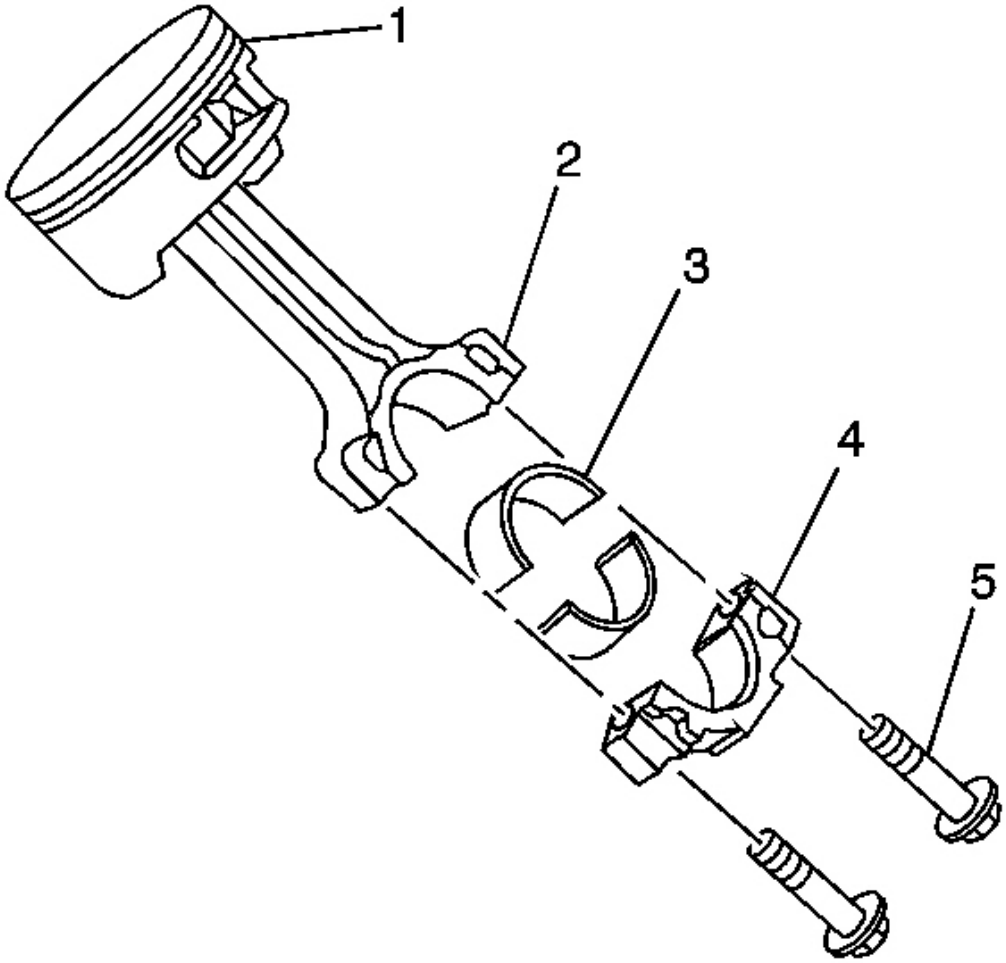

Fig. 166: View Of Piston, Connecting Rod & Components
Courtesy of GENERAL MOTORS CORP.

8. Install the connecting rod bearings (3) to the rod (2) and cap (4).

CAMSHAFT BEARING REMOVAL

Tools Required

J 33049 Camshaft Bearing Service Set

cardiagn.com

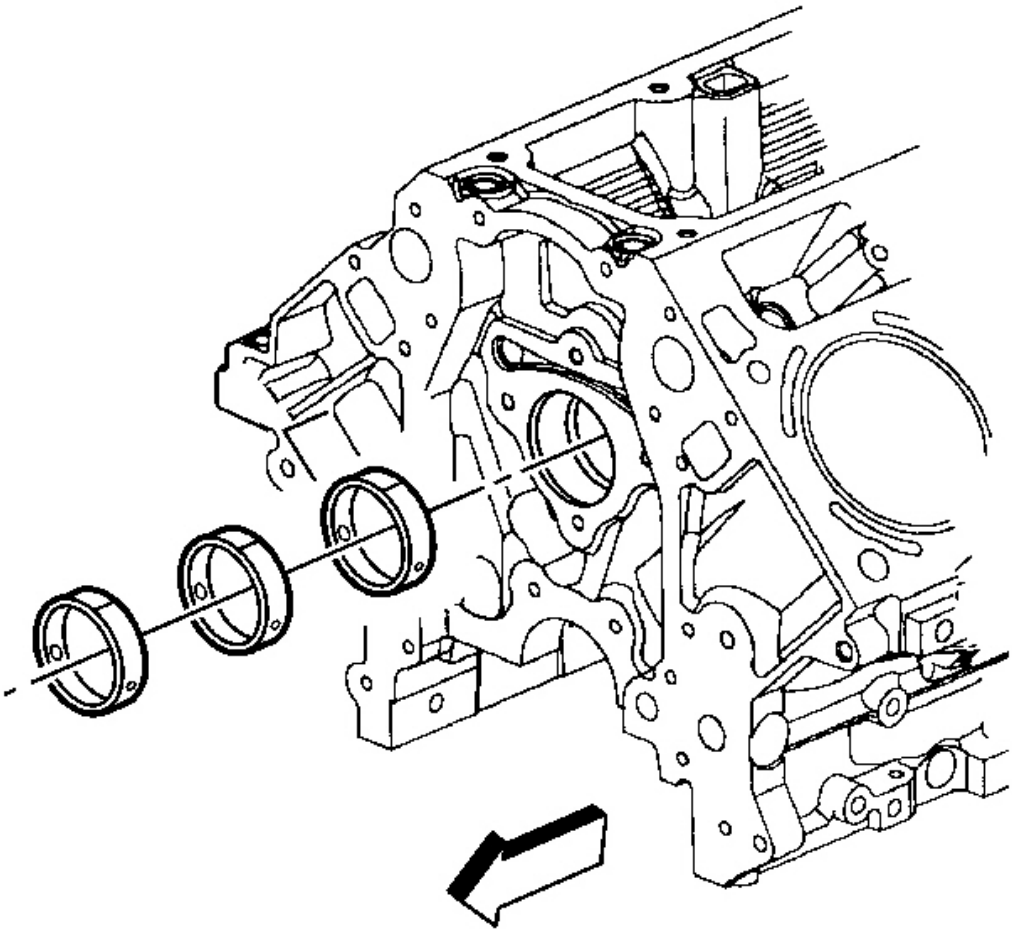

Fig. 167: View Of Camshaft Bearings
Courtesy of GENERAL MOTORS CORP.

IMPORTANT: A loose camshaft bearing may be caused by an enlarged, out of round or damaged engine block bearing bore.

1. Prior to bearing removal, inspect the camshaft bearings for loose fit in the engine block bearing bores. Refer to **Camshaft and Bearings Cleaning and Inspection** .
2. Repair or replace the components as required.

cardiagn.com

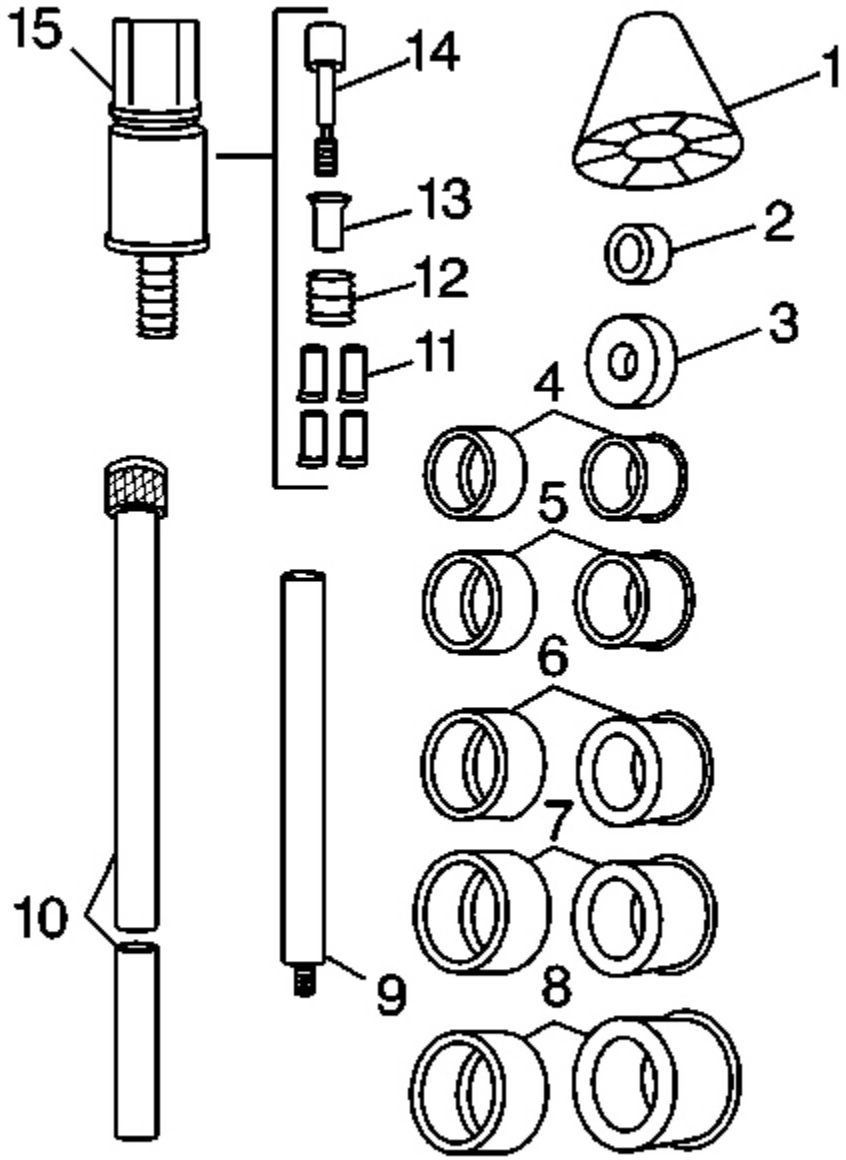

Fig. 168: J 33049 Camshaft Bearing Service Kit Components
Courtesy of GENERAL MOTORS CORP.

3. Select the expanding driver (4-8) and washer (2 or 3) from the tool usage information.
4. Assemble the **J 33049** .
5. Insert the tool through the front of the engine block and into the bearing.

cardiagn.com

6. Tighten the expander assembly (15) nut until snug.
7. Push the guide cone (1) into the front camshaft bearing to align the tool.

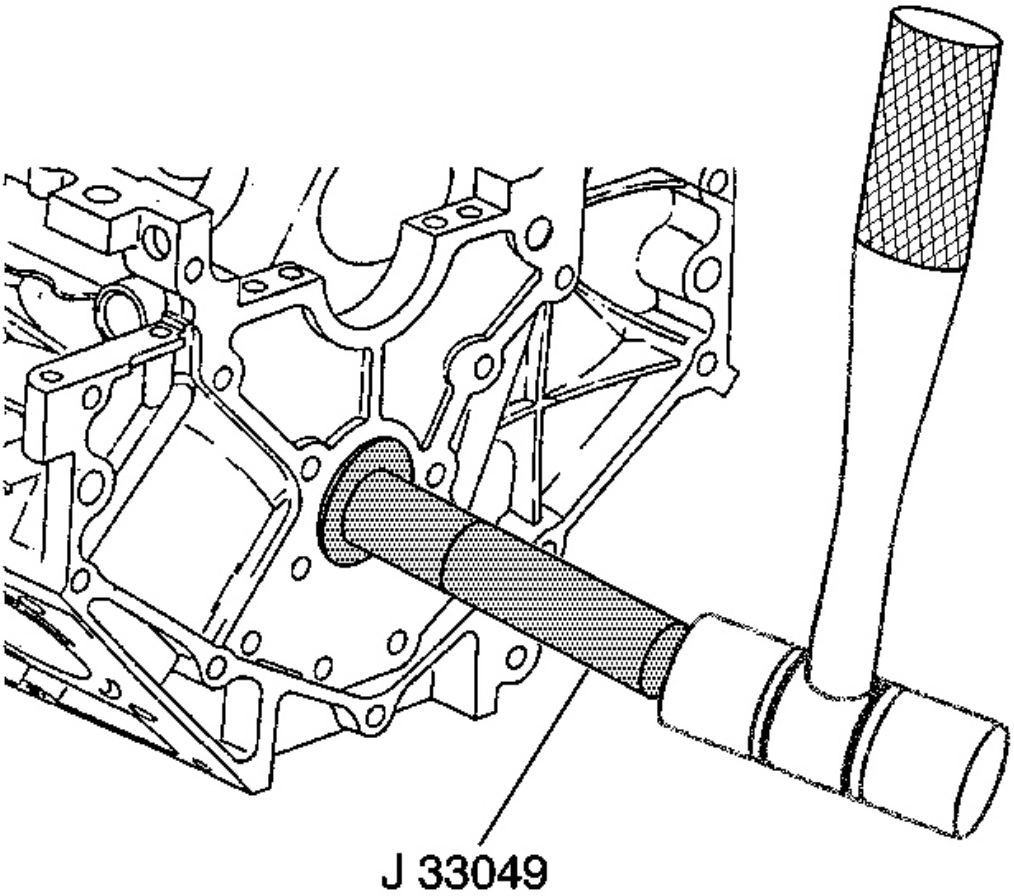

Fig. 169: Bearing & Block Bore
Courtesy of GENERAL MOTORS CORP.

8. Drive the bearing from the block bore.

IMPORTANT: To remove the front camshaft bearing, operate the tool from the rear of the block using the guide cone in the rear camshaft bearing bore.

9. Repeat the above procedures to remove the remaining bearings.

Tool Usage Information

cardiagn.com

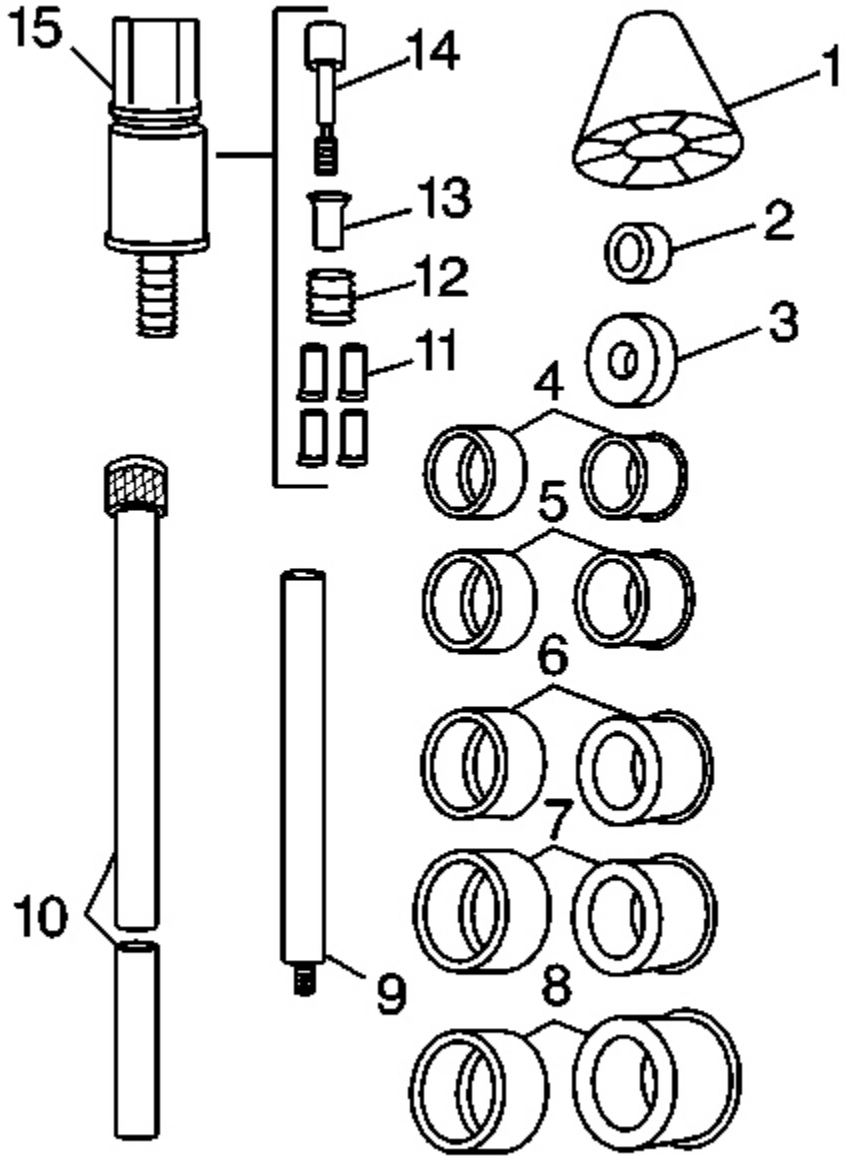

Fig. 170: J 33049 Camshaft Bearing Service Kit Components
Courtesy of GENERAL MOTORS CORP.

- The tool consists of a guide cone (1), driving washers (2 or 3), expander bearing drivers (4-8), driver bars (9 or 10), expander jaws (11), expander sleeve (12), expander cone (13), expander shaft (14), and expander assembly (15).

cardiagn.com

- Expander bearing driver number one inside diameter is 28.575-37.465 mm (1.125-1.475 in) and is used with the expander assembly and the small washer.
- Expander bearing driver number 2 inside diameter is 37.465-43.18 mm (1.475-1.7 in) and is used with number 1 expanding driver and the small washer.
- Expander bearing driver number 3 inside diameter is 43.18-48.895 mm (1.7-1.925 in) and is used with number 2 expanding driver and the large washer.
- Expander bearing driver number 4 inside diameter is 48.895-54.61 mm (1.925-2.15 in) and is used with number 3 expanding driver and the large washer.
- Expander bearing driver number 5 inside diameter is 54.61-60.325 mm (2.15-2.375 in) and is used with number 4 expanding driver and the large washer.
- Expander bearing driver number 6 inside diameter is 60.325-68.326 mm (2.375-2.69 in) and is used with number 5 expanding driver and the large washer.

Tool Assembly and Operation

1. Select the proper expanding driver and washer from the expanding driver and washer information.

IMPORTANT:

- **To install or remove the expanding driver, always push on or pull from the ends.**
- **Pressure on the outside diameter may cause a bind against the rubber expanding sleeve.**

2. Place the expanding driver onto the expander assembly.
3. Check to ensure that the separation lines between the segments of the expanding driver align with the separation lines of the expander assembly.
4. Place the guide cone over the driving bar, with the small end of the cone facing the driver assembly.
5. Place the driving washer over the threaded portion of the expander assembly.
6. Screw the expander assembly, with driving washer, onto the driving bar.

   It may be necessary to install the driver bar extension for removal of the inner bearings.

cardiagn.com

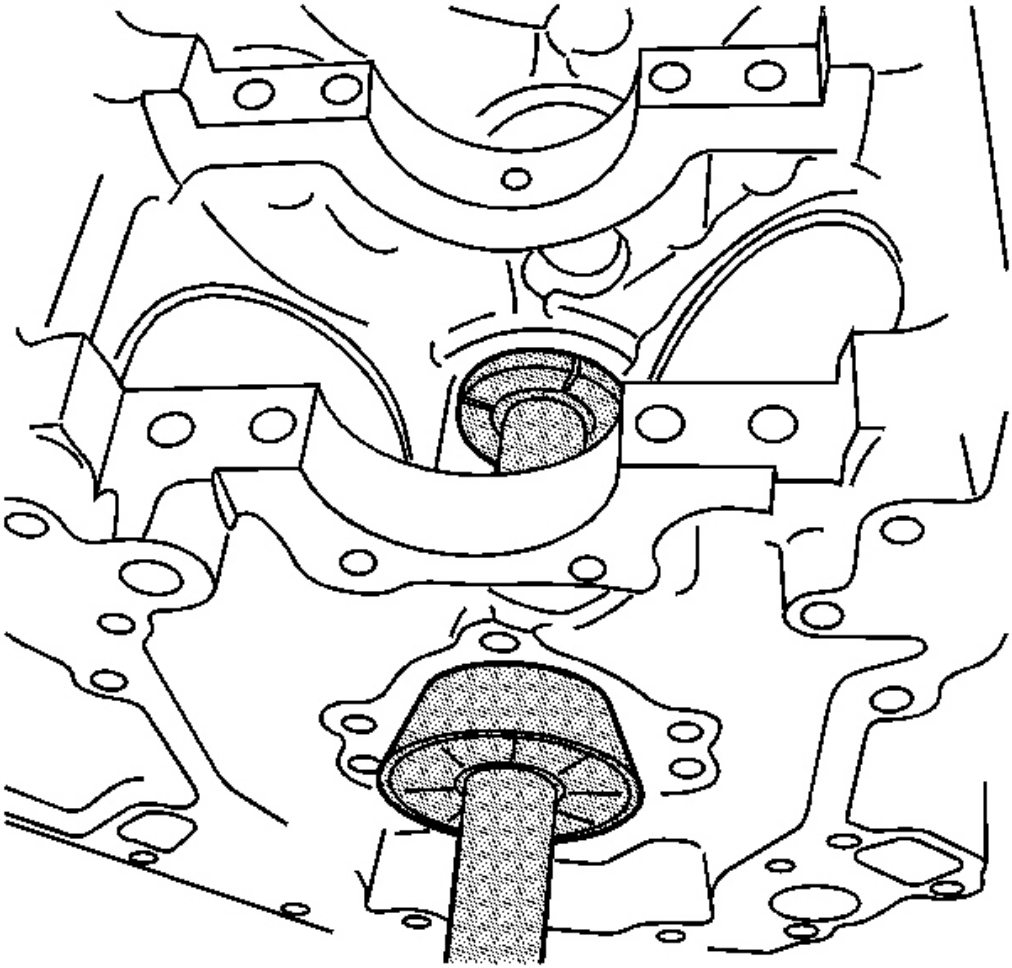

Fig. 171: Inner Camshaft Bearing & Snug
Courtesy of GENERAL MOTORS CORP.

7. Insert the tool into a inner camshaft bearing and tighten until snug.

   Operate the tool from the front or rear of the engine block.

   On some engine blocks, the nut on the expander assembly is inaccessible except from either end. In this case you must use a socket and extension to enlarge and reduce the expander assembly.

8. Slide the nylon cone into the front or rear camshaft bearing. This will properly align the tool.
9. Drive the bearing out of or into the engine block.

cardiagn.com

10. Repeat the procedure for the additional inner bearings.

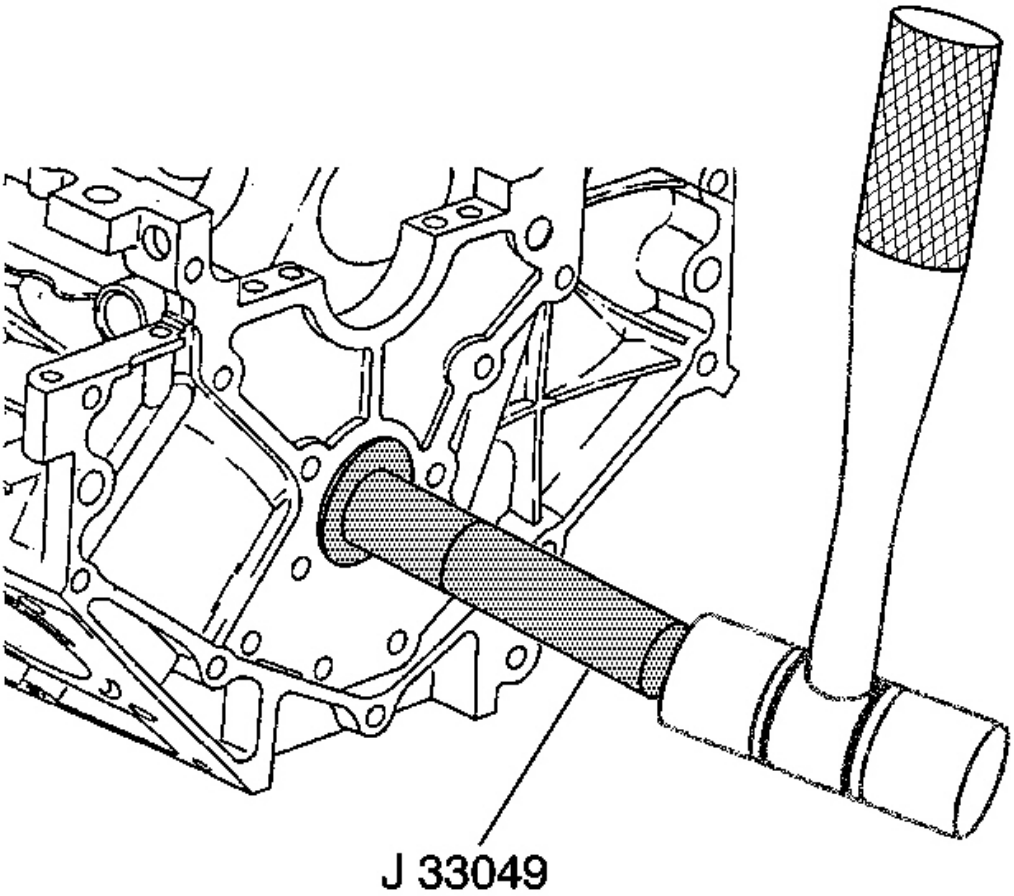

Fig. 172: Bearing & Block Bore
Courtesy of GENERAL MOTORS CORP.

11. For the 2 end bearings, front and rear, remove the nylon cone and driver bar extension.
12. Drive the bearings out of or into the engine block.

CAMSHAFT AND BEARINGS CLEANING AND INSPECTION

Tools Required

- **J 7872** Magnetic Base Dial Indicator Set
- **J 8520** Camshaft Lobe Lift Indicator

cardiagn.com

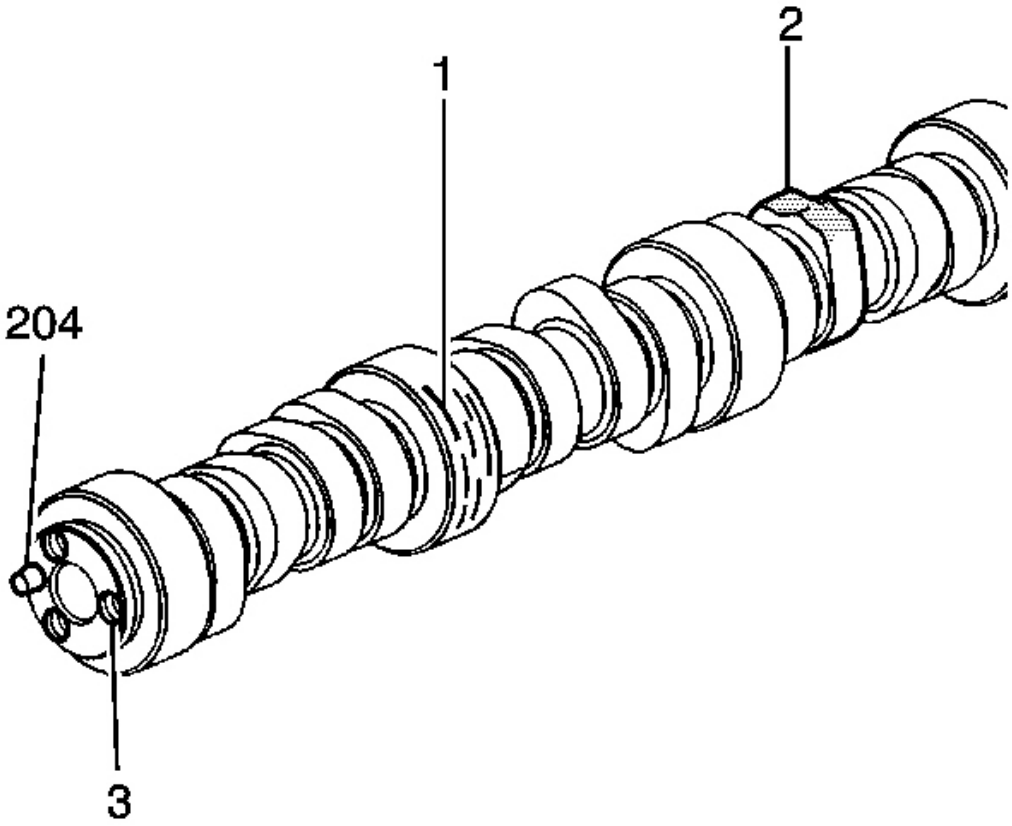

Fig. 173: Inspecting The Camshaft Bearing Journals, Threaded Bolt Holes, Camshaft Valve Lifter Lobes & Camshaft Sprocket Pin For Damage
Courtesy of GENERAL MOTORS CORP.

1. Clean the components in solvent.

CAUTION: Refer to Safety Glasses Caution in Cautions and Notices.

2. Dry the components with compressed air.
3. Inspect the camshaft bearing journals (1) for scoring or excessive wear.
4. Inspect the camshaft valve lifter lobes (2) for scoring or excessive wear.
5. Inspect the threaded bolt holes (3) in the front of the camshaft for damaged threads or debris.
6. Inspect the camshaft sprocket pin (204) for damage.
7. Inspect the camshaft position (CMP) reluctor ring for nicks or damage.

cardiagn.com

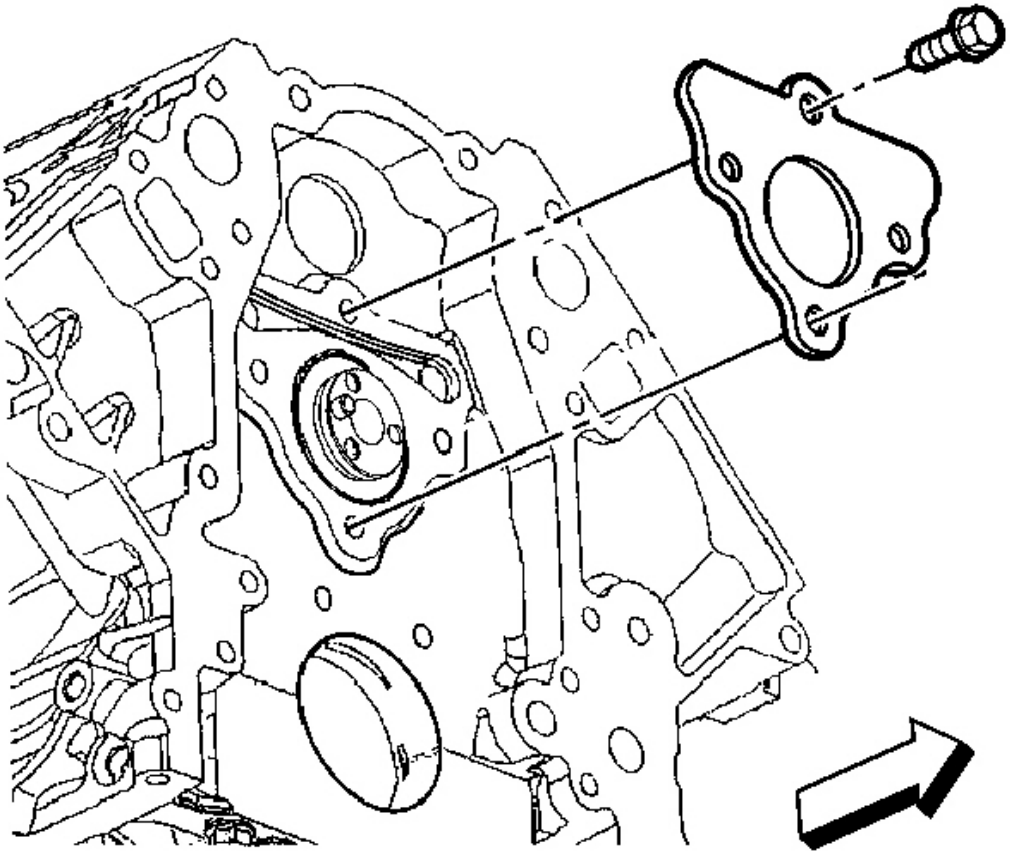

Fig. 174: View Of Camshaft Retainer & Bolts
Courtesy of GENERAL MOTORS CORP.

8. Inspect the camshaft retainer plate for wear or a damaged sealing gasket.

   If the camshaft retainer plate sealing gasket is not cut or damaged, it may be used again.

cardiagn.com

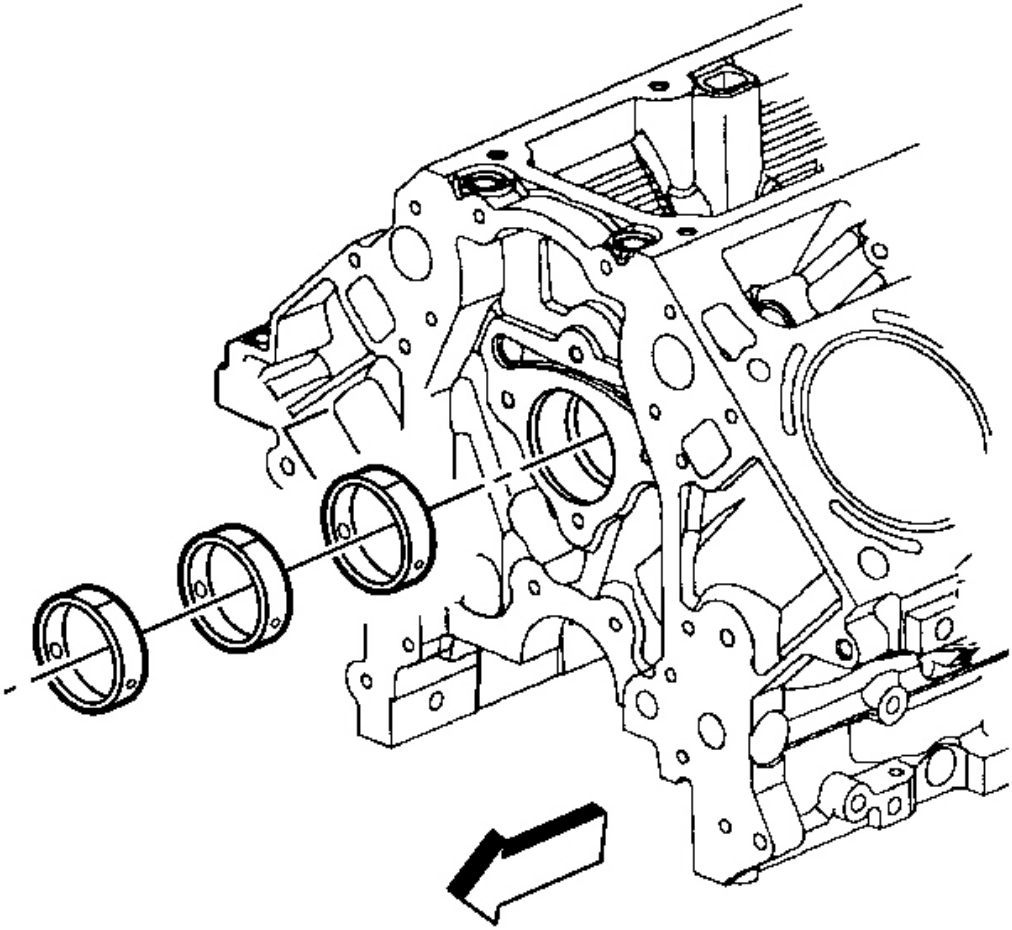

Fig. 175: View Of Camshaft Bearings
Courtesy of GENERAL MOTORS CORP.

9. Inspect the camshaft bearings for proper fit in the engine block. The camshaft bearings have an interference fit to the engine block and should not be loose in their engine block bearing bores.
10. Inspect the camshaft bearings for excessive wear or scoring.

    Bearings with excessive scoring or wear must be replaced.

cardiagn.com

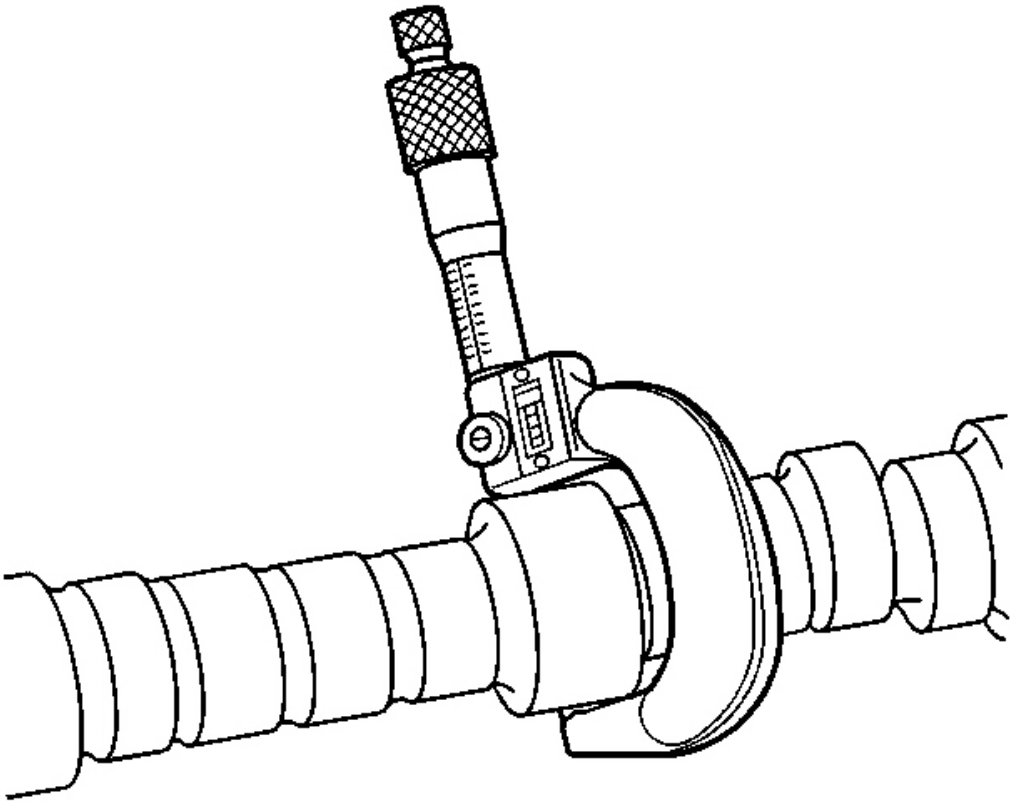

Fig. 176: Measuring The Camshaft Journals For Wear & Out-Of-Round
Courtesy of GENERAL MOTORS CORP.

11. Measure the camshaft journals for wear and out-of-round with a micrometer.
    - A camshaft with bearing journals that measure more than 0.025 mm (0.001 in) out-of-round, must be replaced.
    - A camshaft with bearing journal diameters that measure less that 54.99 mm (2.164 in), must be replaced.

cardiagn.com

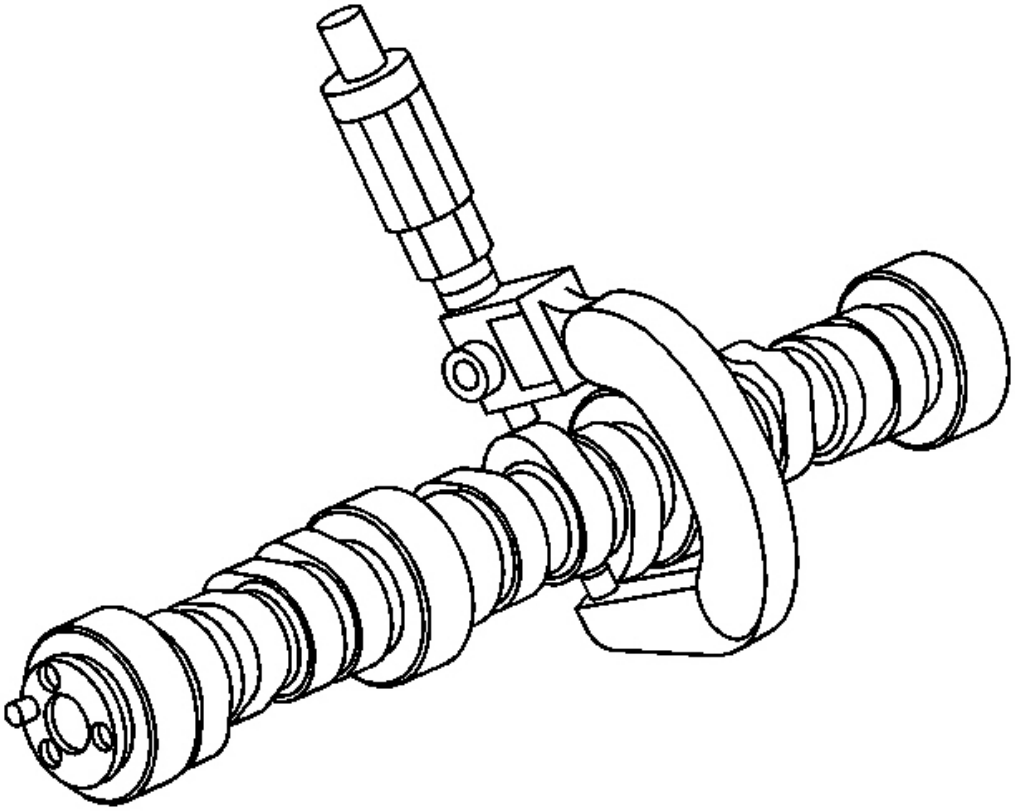

Fig. 177: Measuring The Camshaft Lobes For Wear
Courtesy of GENERAL MOTORS CORP.

12. Measure the camshaft lobes for wear with a micrometer.
    - An LS1 camshaft with an intake lobe that measures 46.31 mm (1.823 in) or less, must be replaced.
    - An LS1 camshaft with an exhaust lobe that measures 46.31 mm (1.823 in) or less, must be replaced.
    - An LS6 camshaft with an intake lobe that measures 46.24 mm (1.82 in) or less, must be replaced.
    - An LS6 camshaft with an exhaust lobe that measures 46.19 mm (1.818 in) or less, must be replaced.

cardiagn.com

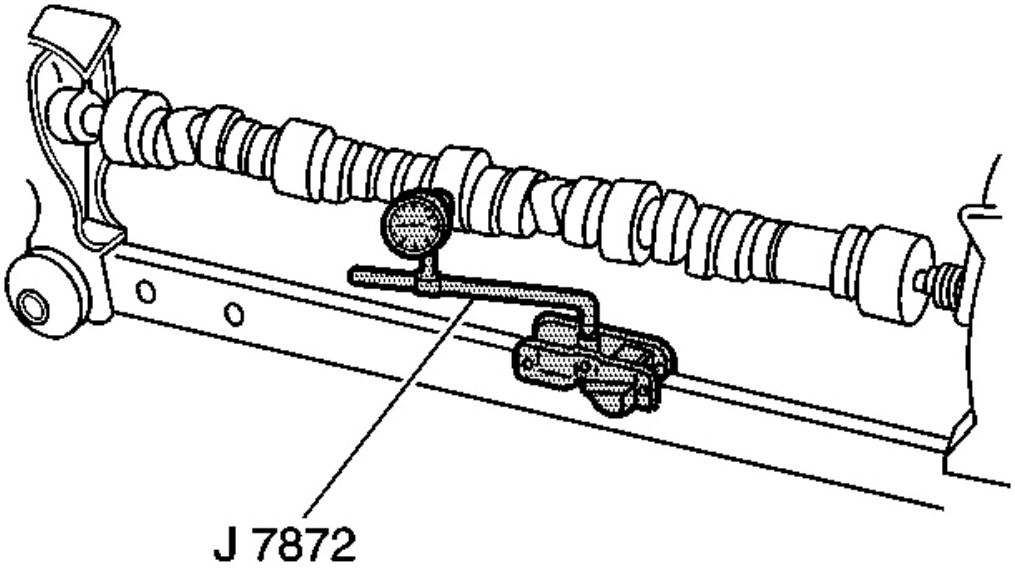

Fig. 178: Measuring The Camshaft Runout Using
Courtesy of GENERAL MOTORS CORP.

13. Measure the camshaft runout.
    1. Mount the camshaft in wooden V-blocks or between centers on a fixture.
    2. Check the runout of the intermediate camshaft bearing journals using the **J 7872** .
    3. If camshaft runout exceeds 0.05 mm (0.002 in), the camshaft is bent and should be replaced.

Measuring Camshaft Lobe Lift

cardiagn.com

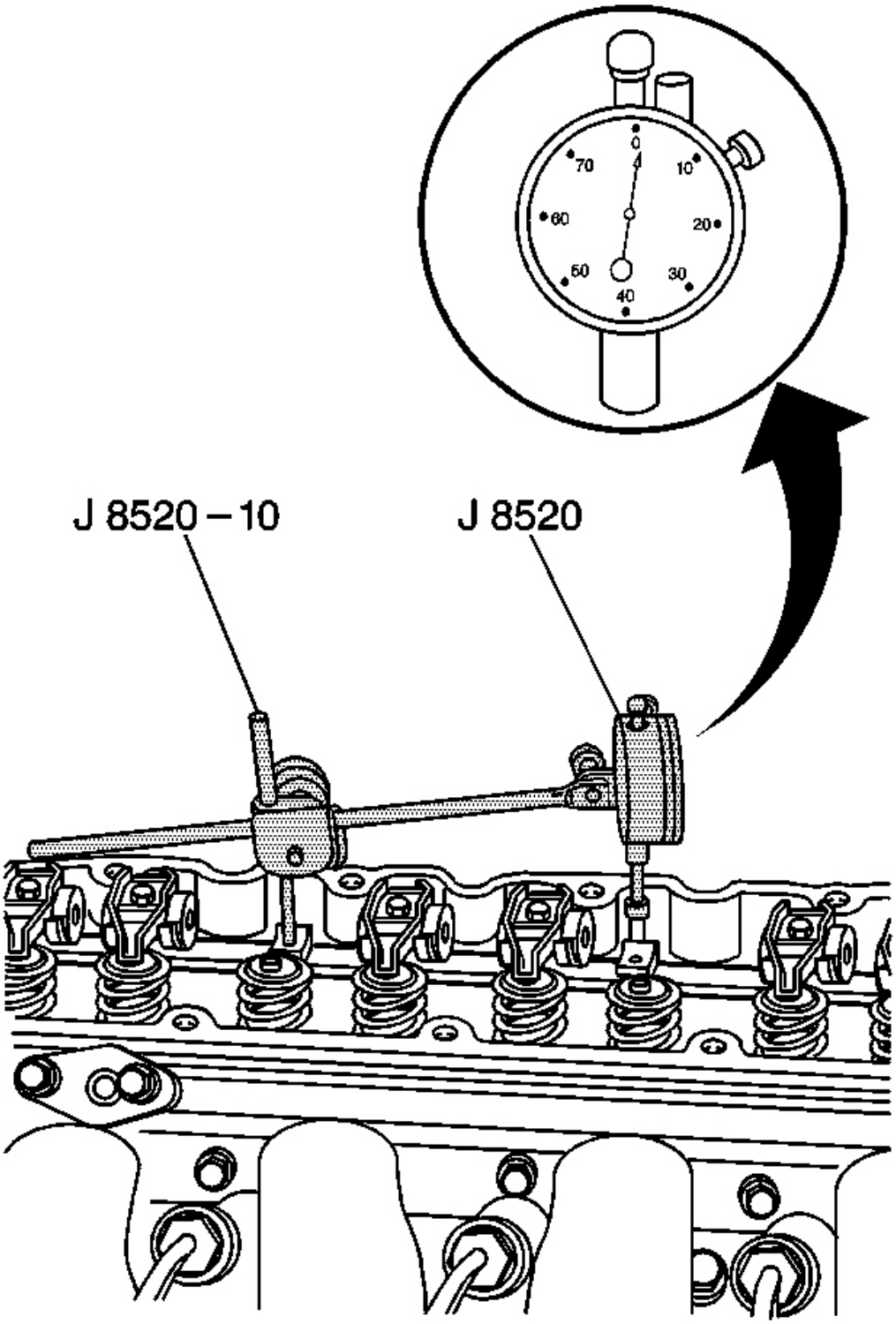

cardiagn.com

Fig. 179: Measuring Camshaft Lobe Lift Using
Courtesy of GENERAL MOTORS CORP.

IMPORTANT: Measuring camshaft lobe lift is a procedure used to determine if the camshaft lobes have worn. This test is to be performed prior to engine disassembly and with the camshaft and valve train components installed in the engine.

1. Measure camshaft lobe lift using **J 8520** .
    1. Remove the valve rocker arms and bolts
    2. Install the dial indicator mounting stud into the valve rocker arm bolt hole.
    3. Assemble the components of the **J 8520** and position onto the stud.
    4. Position the shaft of the dial indicator onto the end of the pushrod.
    5. Rotate the face of the dial indicator to zero.
    6. Slowly rotate the crankshaft clockwise until the dial indicator obtains its highest and lowest readings.
    7. Compare the total lift shown to specifications.
        - The proper lobe lift for the LS1 intake lobes is 6.96 mm (0.274 in).
        - The proper lobe lift for the LS1 exhaust lobes is 7.13 mm (0.281 in).
        - The proper lobe lift for the LS6 intake lobes is 8.24 mm (0.324 in).
        - The proper lobe lift for the LS6 exhaust lobes is 8.19 mm (0.322 in).
    8. Remove the tool.
2. Compare measurements to specifications.

    If the readings are not within specifications, remove the camshaft. Inspect and/or replace components as required.

CAMSHAFT BEARING INSTALLATION

Tools Required

J 33049 Camshaft Bearing Service Set

cardiagn.com

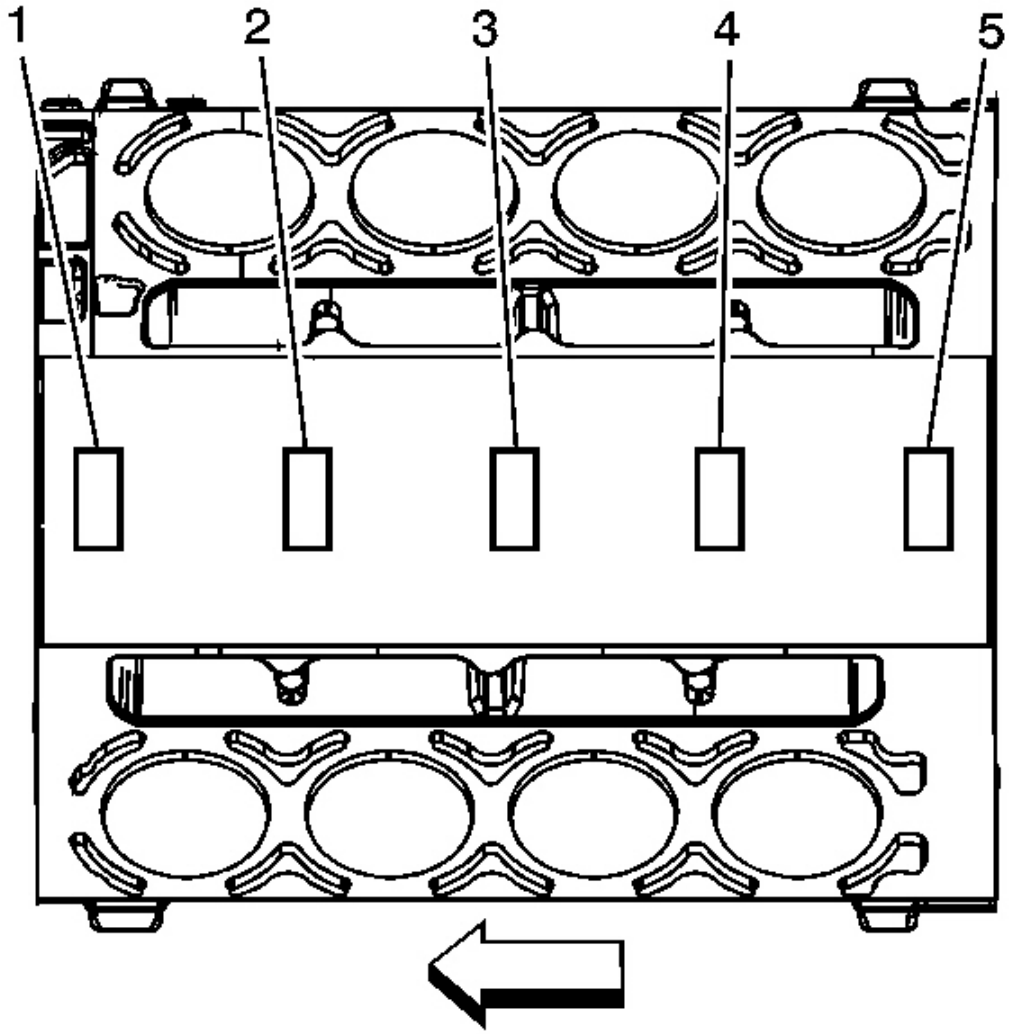

Fig. 180: Measuring The Engine Block Camshaft Bearing Bores (1-5)
Courtesy of GENERAL MOTORS CORP.

IMPORTANT: The engine block camshaft bearing bores are machined for 3 different OD size bearings. Positions 1 and 5 are the largest diameter bores. Position 3 is the smallest diameter bore. Positions 2 and 4 are the intermediate size bores. The ID for all camshaft bearings is the same size.

1. Measure the engine block camshaft bearing bores (1-5) to identify the correct OD size bearing for each position. Refer to **Engine Mechanical Specifications (LS1)** or **Engine Mechanical Specifications**

cardiagn.com

(LS6) .

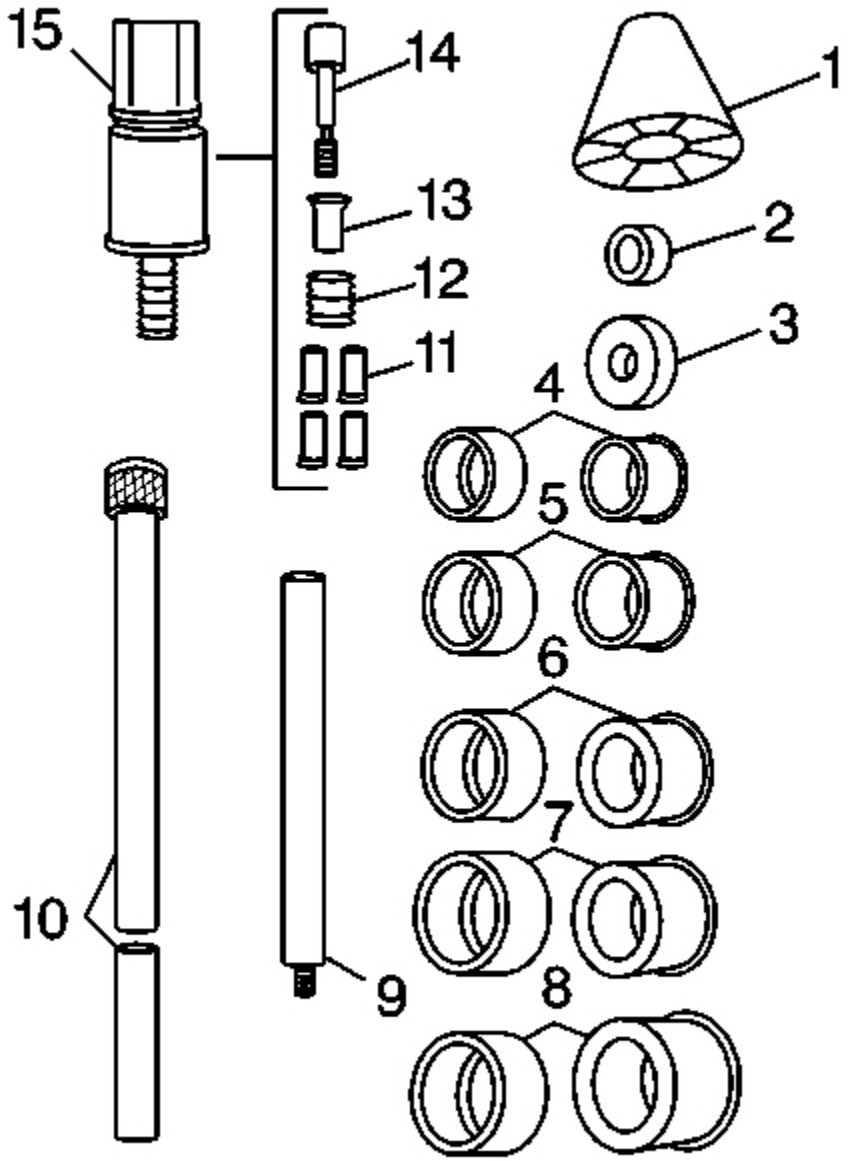

Fig. 181: J 33049 Camshaft Bearing Service Kit Components
Courtesy of GENERAL MOTORS CORP.

2. Select the expanding driver (4-8) and washer (2 or 3) from the **J 33049** . Refer to **Camshaft Bearing**

cardiagn.com

Removal .

3. Assemble the tool.

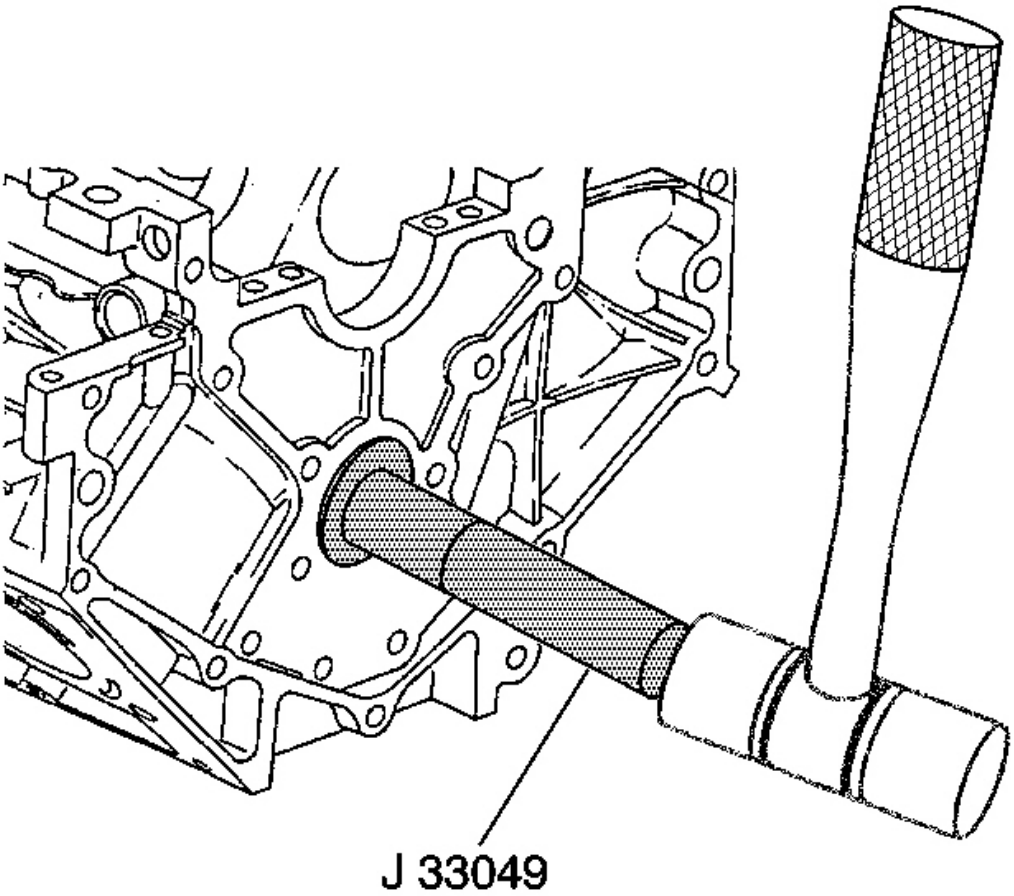

Fig. 182: Bearing & Block Bore
Courtesy of GENERAL MOTORS CORP.

4. Insert the tool through the front of the engine block and into the bearing.
5. Tighten the expander assembly nut until snug.
6. Push the guide cone into the front camshaft bearing to align the tool.
7. Drive the bearing into the block bore.
8. Repeat the above procedures to install the remaining bearings.

TIMING CHAIN AND SPROCKETS CLEANING AND INSPECTION

cardiagn.com

1. Clean the components with cleaning solvent.

CAUTION: Refer to Safety Glasses Caution in Cautions and Notices.

2. Dry the components with compressed air.

cardiagn.com

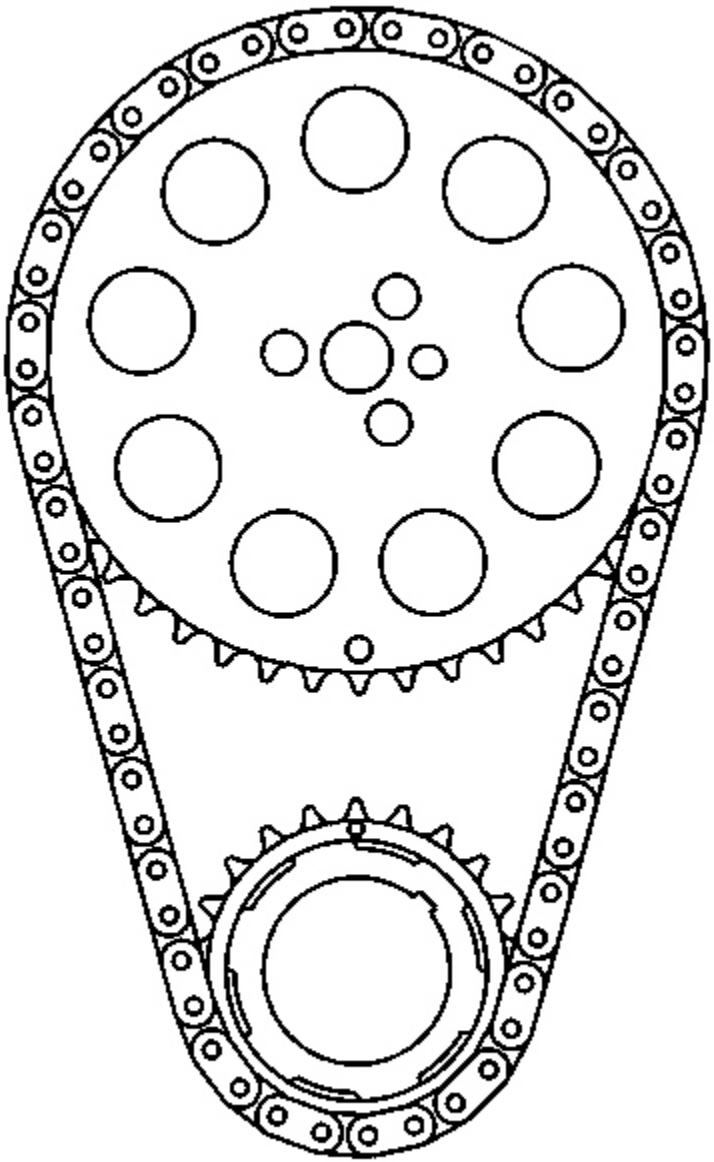

Fig. 183: View Of Camshaft & Crankshaft Sprockets Aligned
Courtesy of GENERAL MOTORS CORP.

3. Inspect the timing chain for binding or wear.

cardiagn.com

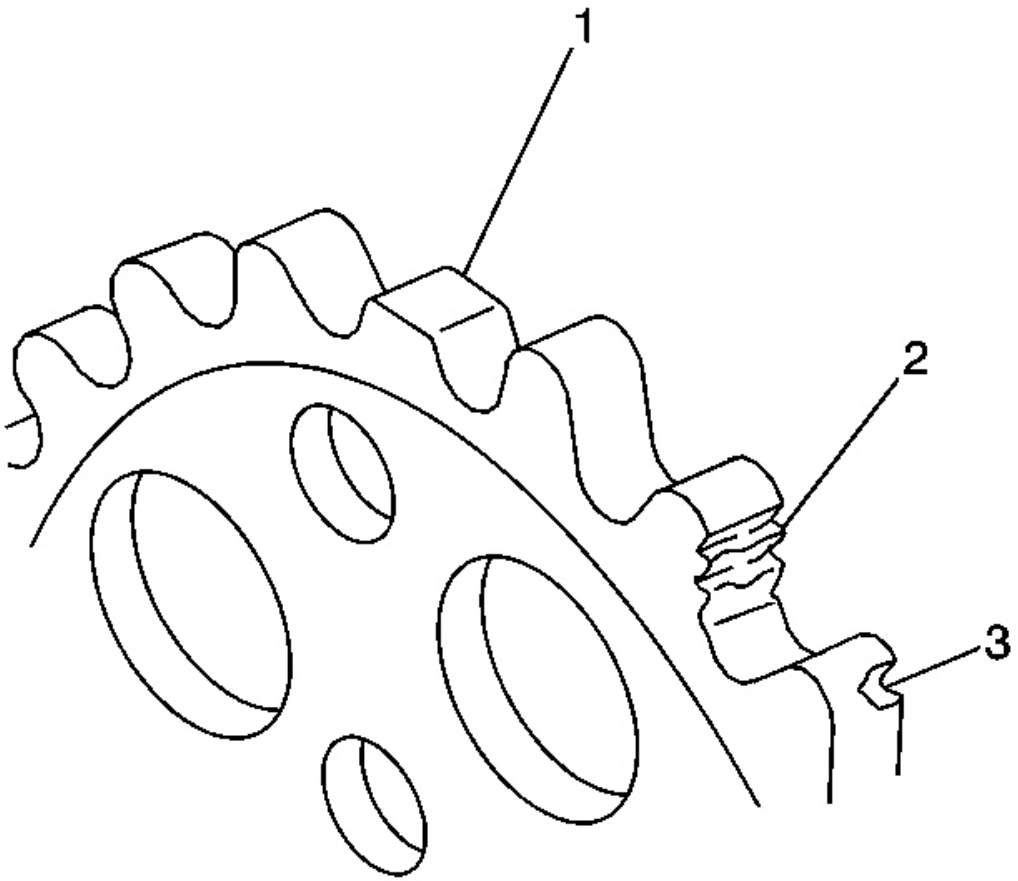

Fig. 184: Inspecting Camshaft & Crankshaft Sprockets For Damage
Courtesy of GENERAL MOTORS CORP.

4. Inspect the camshaft and crankshaft sprockets for:
    - Worn teeth (1)
    - Damaged teeth (2)
    - Chipped teeth (3)
    - Worn valleys between the sprocket teeth

cardiagn.com

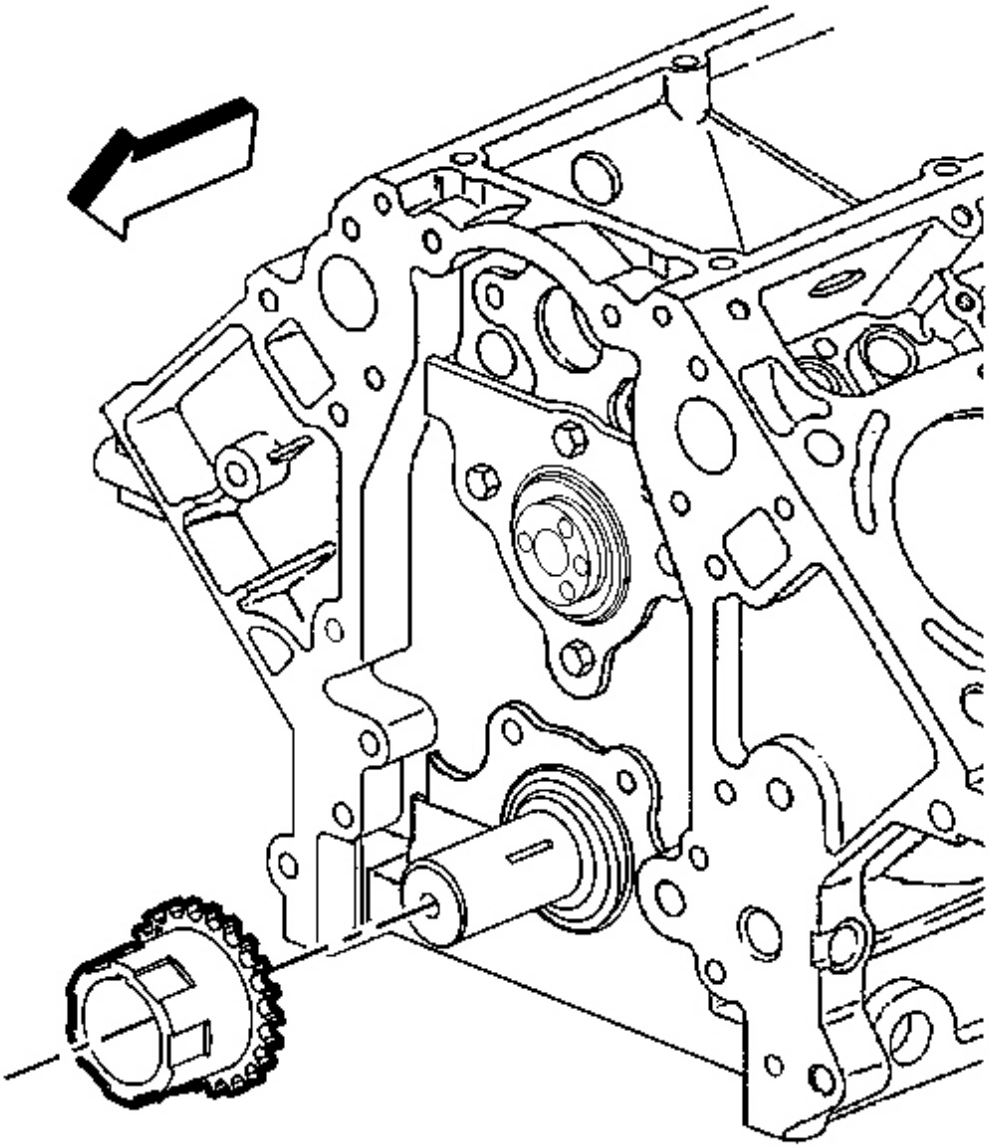

Fig. 185: View Of Crankshaft Sprocket
Courtesy of GENERAL MOTORS CORP.

5. Inspect the crankshaft sprocket keyway for wear.
6. Inspect the crankshaft sprocket oil pump drive splines for wear.

cardiagn.com

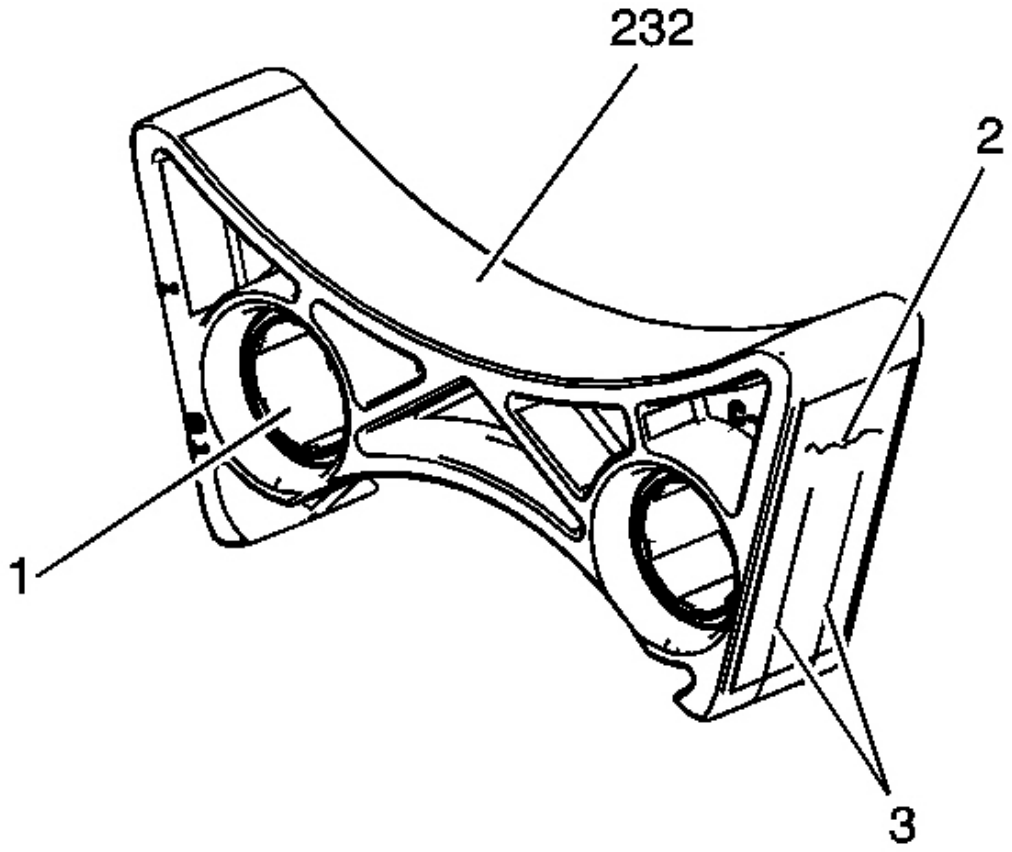

Fig. 186: Inspecting Chain Dampener For Damage
Courtesy of GENERAL MOTORS CORP.

7. Inspect the chain dampener (232) for the following conditions:
   - Loose metal inserts (1)
   - Cracking (2) in the chain contact area
   - Excessive grooves (3) in the chain contact area

   Grooves 1 mm (0.040 in) or less in depth are to be considered normal wear.

VALVE ROCKER ARM AND PUSH RODS CLEANING AND INSPECTION

cardiagn.com

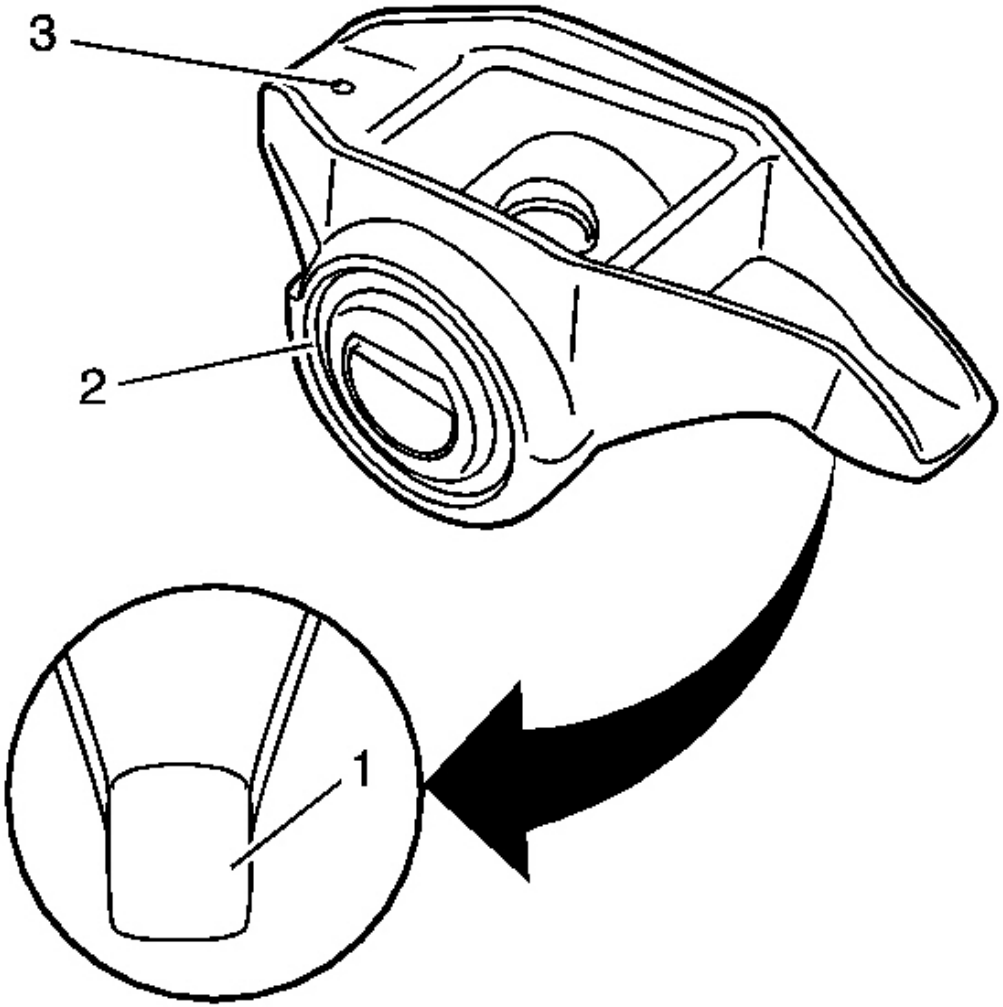

Fig. 187: View Of Valve Stem Mating Surfaces, Valve Rocker Arms Bearing & Pushrod Sockets
Courtesy of GENERAL MOTORS CORP.

IMPORTANT: Parts that are to be used again must be marked, sorted or organized for assembly.

1. Mark, sort, or organize the components for assembly. Refer to **Separating Parts** .
2. Clean the components with cleaning solvent.

CAUTION: Refer to Safety Glasses Caution in Cautions and Notices.

cardiagn.com

3. Dry the components with compressed air.
4. Inspect the valve rocker arms bearings (2) for binding or roughness.
5. Inspect the valve rocker arm pushrod sockets (3) and valve stem mating surfaces (1). These surfaces should be smooth with no scoring or exceptional wear.

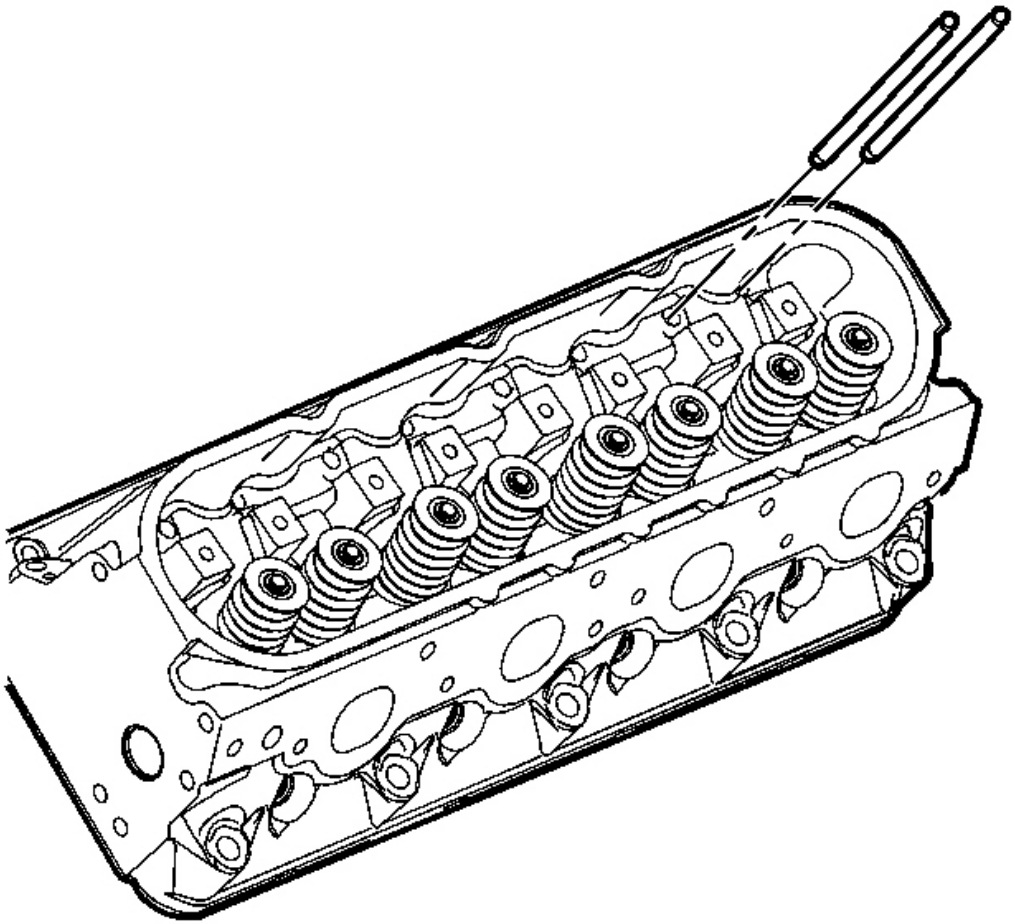

Fig. 188: View Of Pushrods
Courtesy of GENERAL MOTORS CORP.

6. Inspect the pushrods for worn or scored ends. These surfaces should be smooth with no scoring or exceptional wear.
7. Inspect the pushrods for bends. Roll the pushrod on a flat surface to determine if the pushrod is bent.
8. Inspect the pushrod oil passages for restrictions.

cardiagn.com

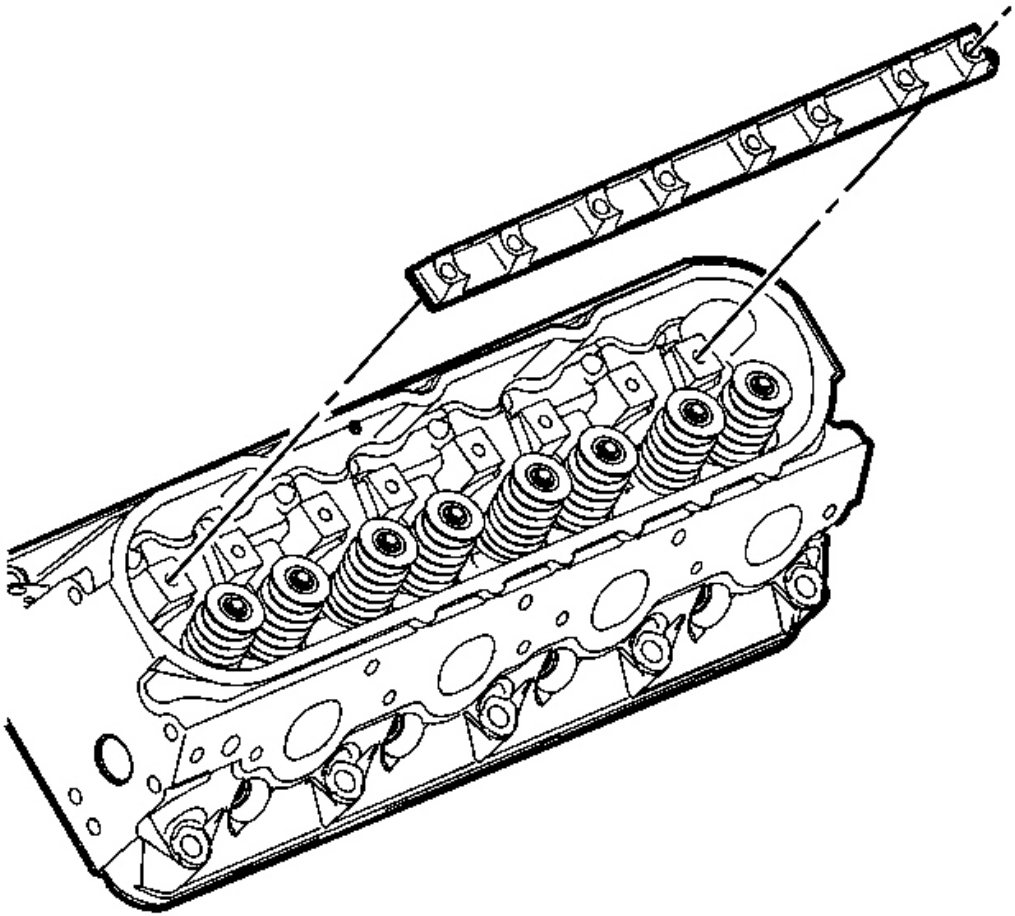

Fig. 189: View Of Valve Rocker Arm Pivot Support
Courtesy of GENERAL MOTORS CORP.

9. Inspect the pivot supports for cracks, wear, or other damage.

VALVE LIFTERS AND GUIDES CLEANING AND INSPECTION

cardiagn.com

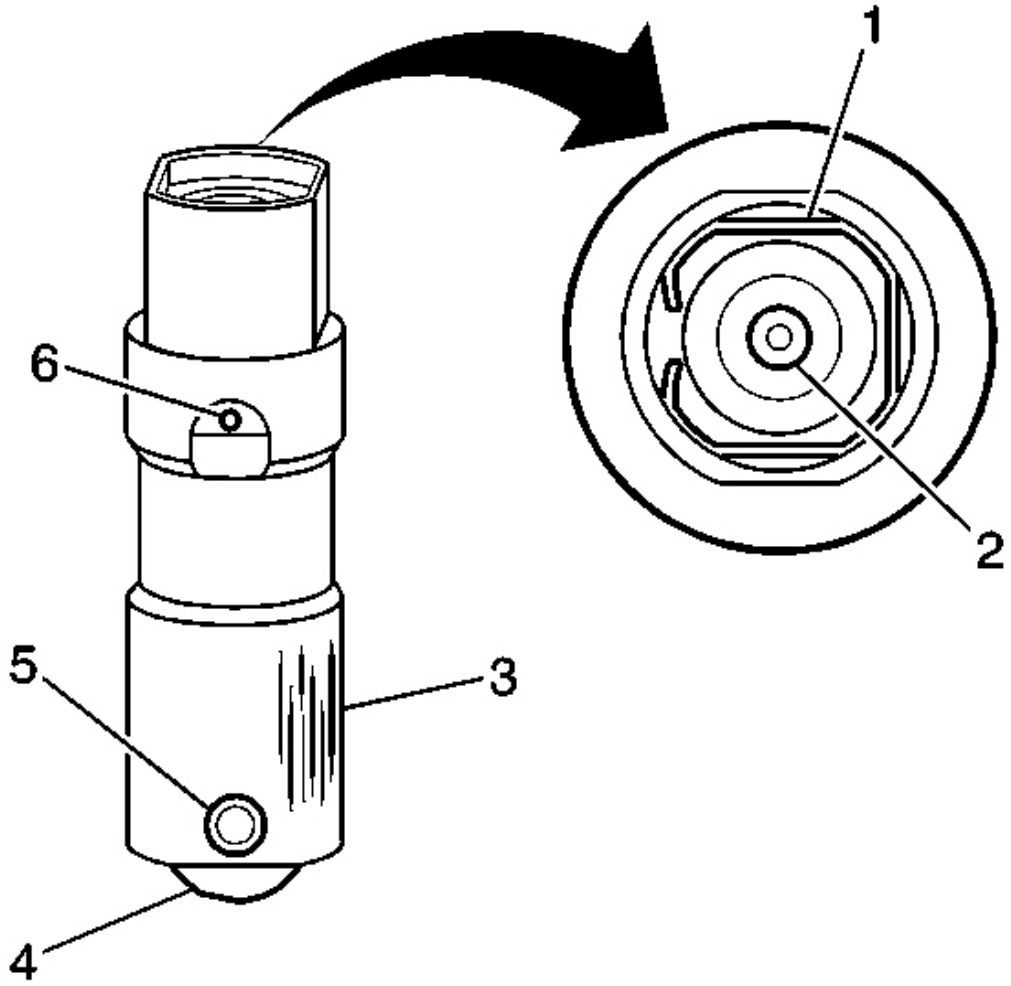

Fig. 190: Inspecting The Valve Lifters For Damage
Courtesy of GENERAL MOTORS CORP.

IMPORTANT: Components that are to be used again must be marked, sorted or organized for assembly.

1. Mark, sort, or organize the components for assembly. Refer to **Separating Parts** .
2. Clean the components in cleaning solvent.

CAUTION: Refer to Safety Glasses Caution in Cautions and Notices.

cardiagn.com

3. Dry the components with compressed air.
4. Inspect the valve lifters for the following conditions:
    - Bent or broken clip (1)
    - Worn pushrod socket (2)
    - Scuffed or worn sides (3)

      If the valve lifter shows wear, inspect the engine block lifter bores for wear or damage.

    - Flat spots on the roller (4)
    - Loose or damaged pin (5)
    - Plugged oil hole (6)
    - Worn or damaged roller bearing

      The roller should rotate freely with no binding or roughness.

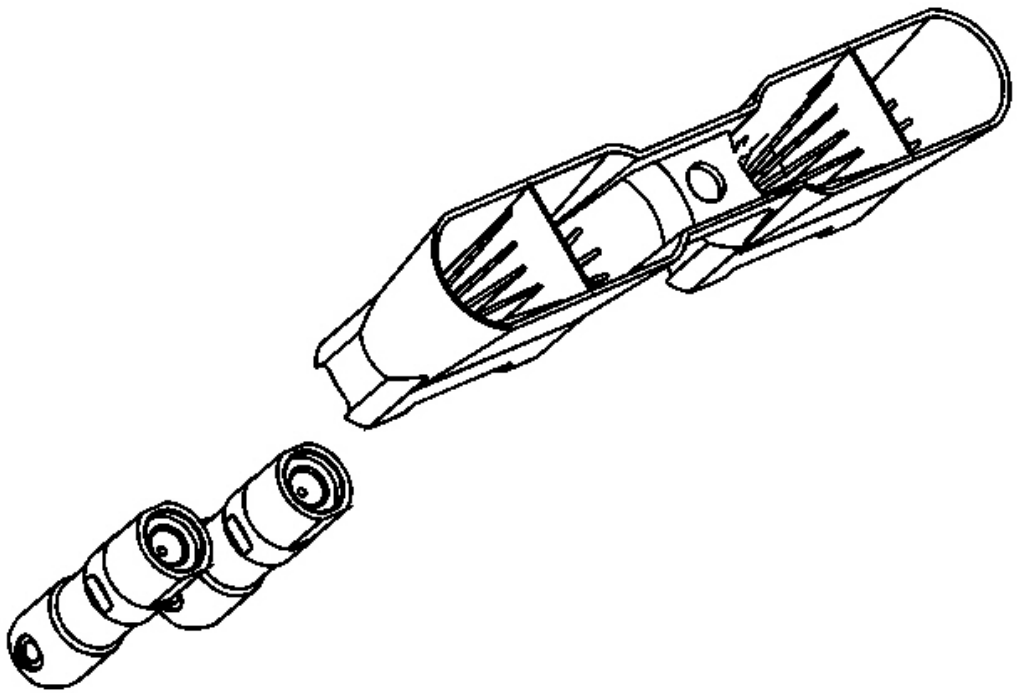

Fig. 191: View Of Valve Lifters Removed From Guide
Courtesy of GENERAL MOTORS CORP.

5. Inspect the valve lifter guides for the following:

cardiagn.com

- For cracks or damage
- Excessive wear in the lifter mounting bores

CYLINDER HEAD DISASSEMBLE

Tools Required

J 8062 Valve Spring Compressor

cardiagn.com

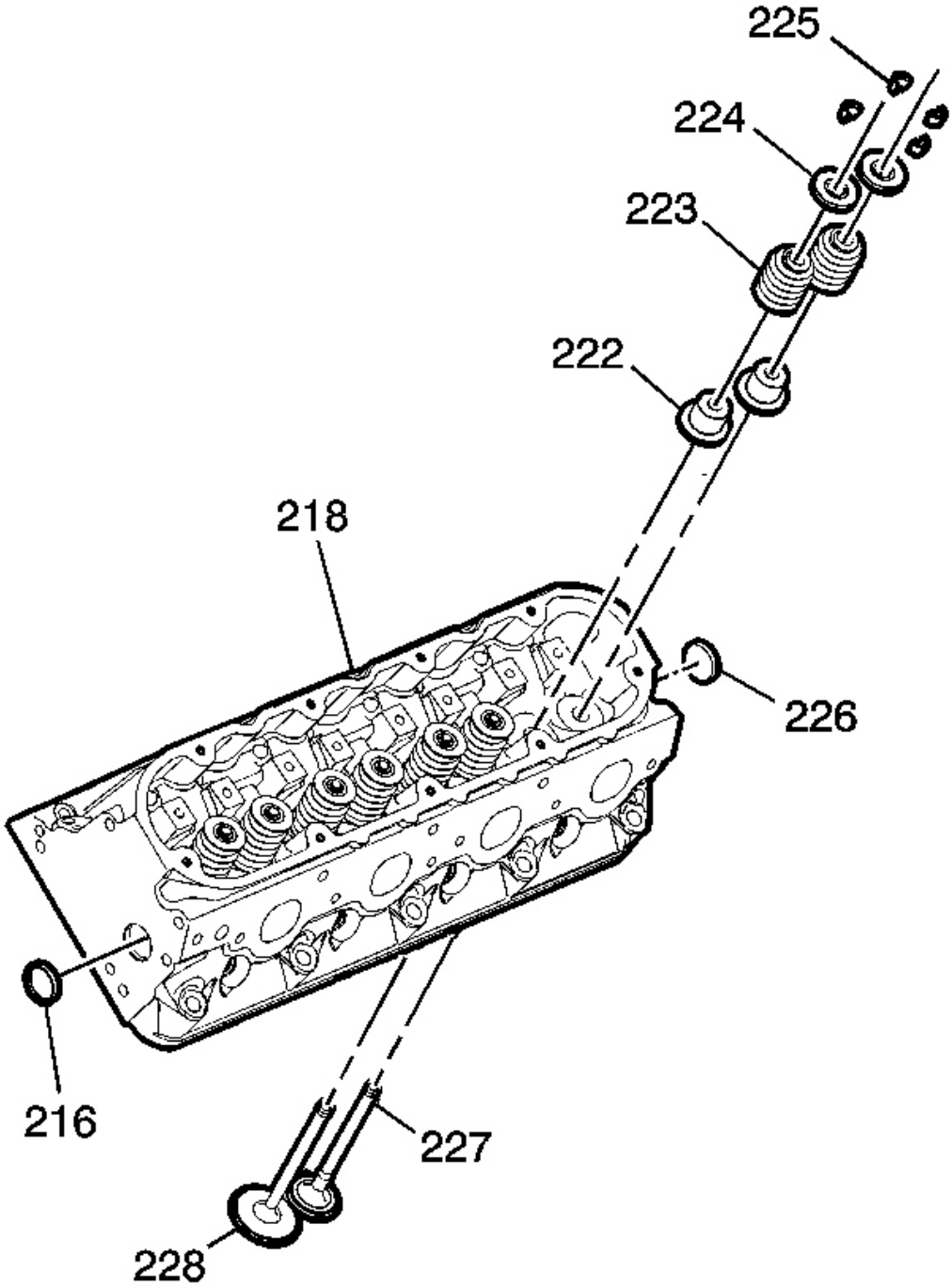

Fig. 192: View Of Cylinder Head Components
Courtesy of GENERAL MOTORS CORP.

cardiagn.com

IMPORTANT:

- **Remove the spark plugs from the cylinder head with the components at room temperature.**
- **Mark, organize, or sort the cylinder head components for assembly. Return the components to their original location during assembly.**
- **Do not remove the cylinder head expansion plugs (226) unless service is required.**

1. Remove the spark plugs from the cylinder heads.

cardiagn.com

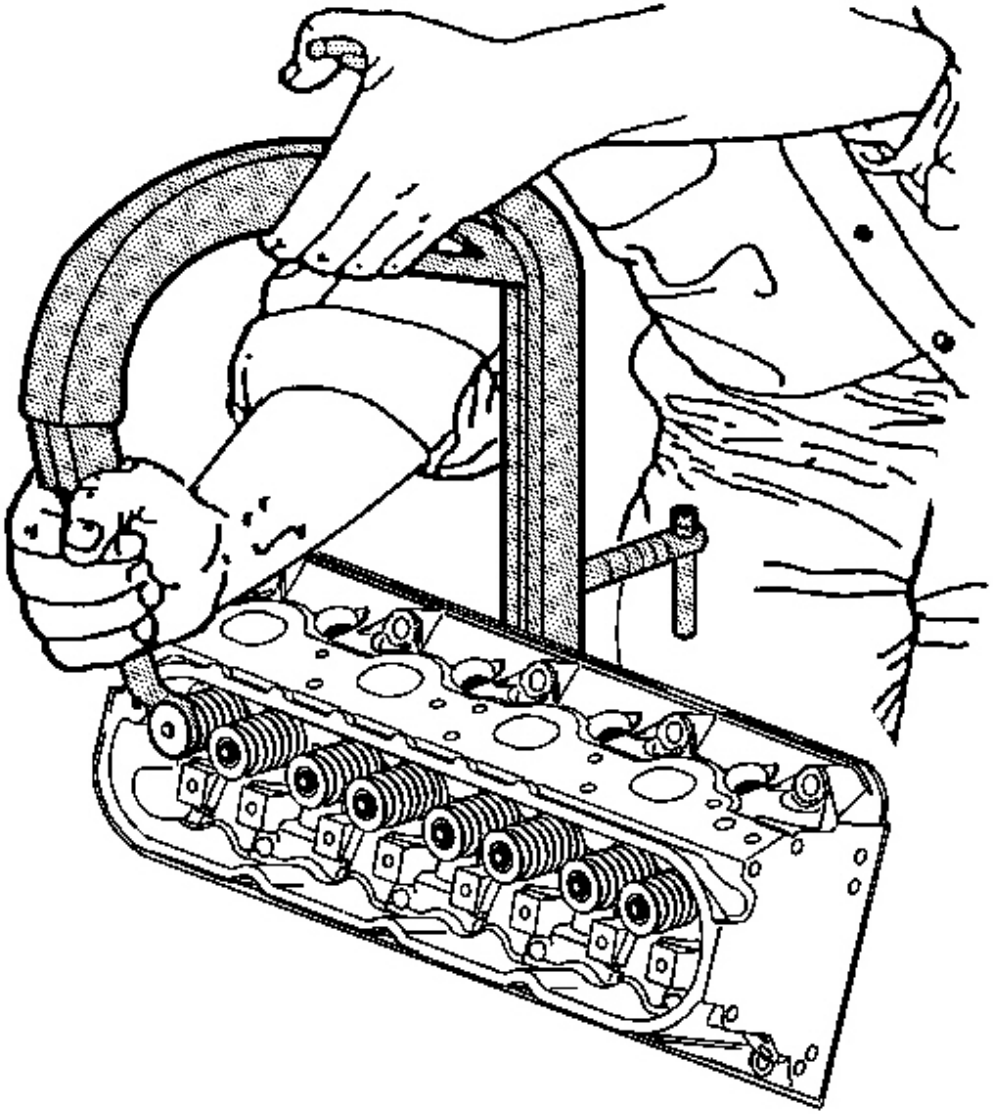

Fig. 193: Compressing The Valve Spring Using J 8062
Courtesy of GENERAL MOTORS CORP.

2. Use the **J 8062** in order to compress the valve spring.

cardiagn.com

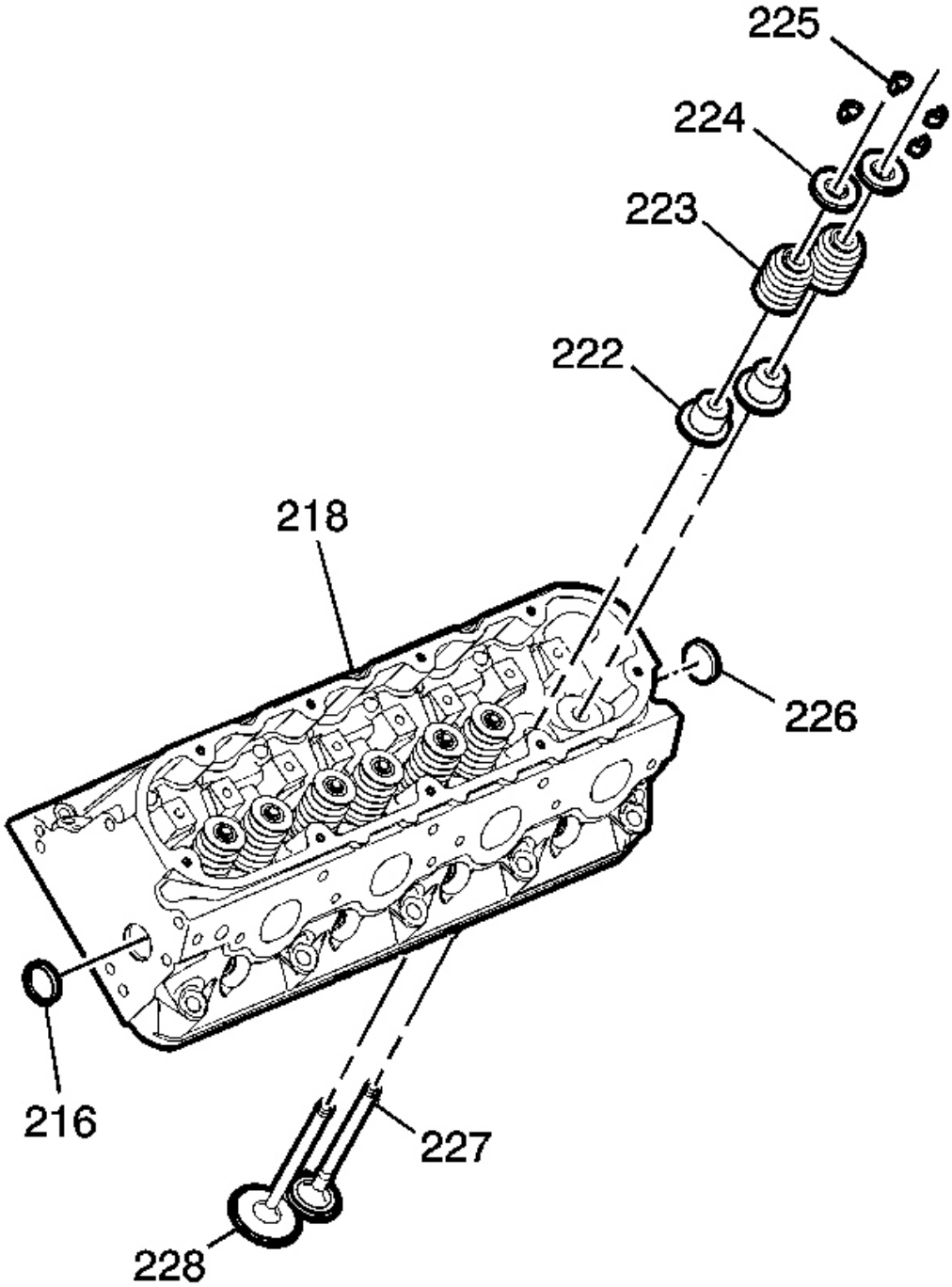

Fig. 194: View Of Cylinder Head Components
Courtesy of GENERAL MOTORS CORP.

cardiagn.com

3. Remove the valve stem keys (225).
4. Remove the valve spring cap (224).
5. Remove the valve spring (223).
6. Remove the valves (227 and 228).
7. Remove the valve stem oil seal (222). Refer to **Separating Parts** .

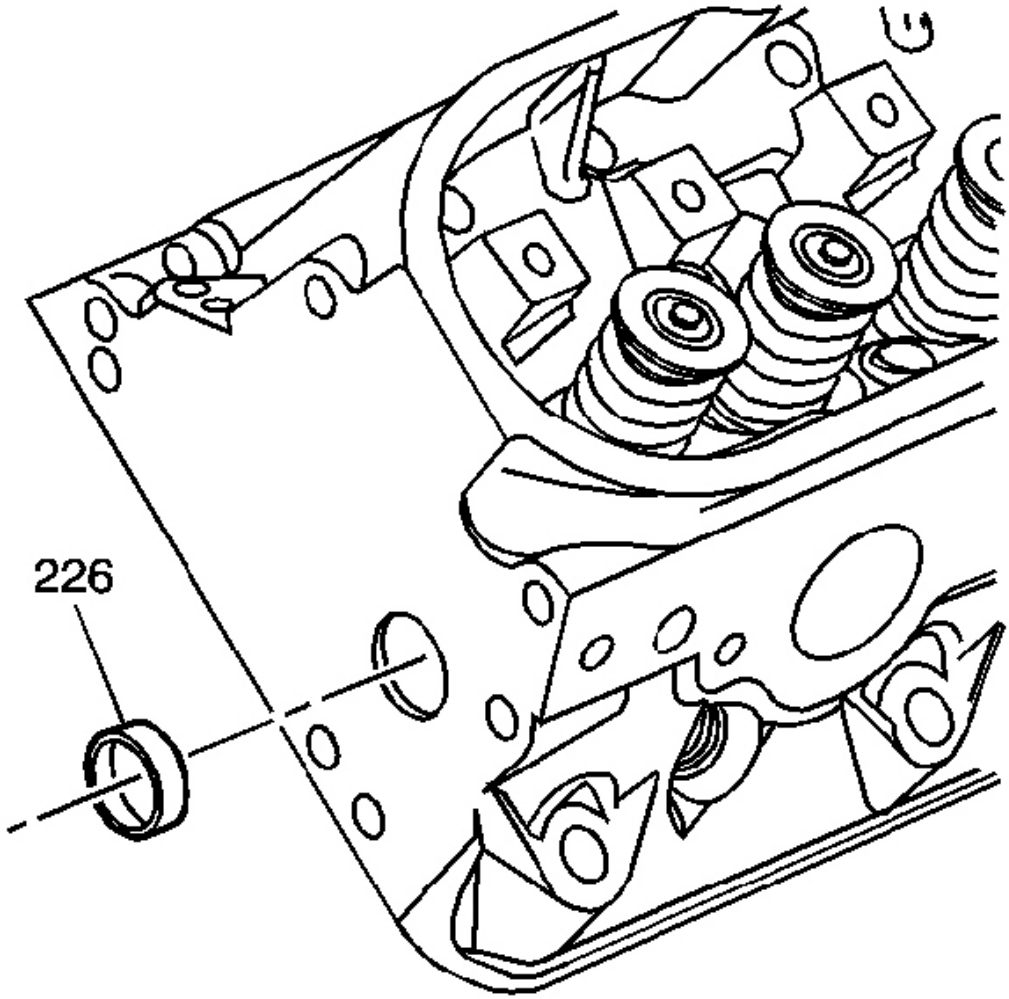

Fig. 195: View Of Cylinder Head Expansion Plugs
Courtesy of GENERAL MOTORS CORP.

8. Remove the cylinder head expansion plugs (226), if required.

cardiagn.com

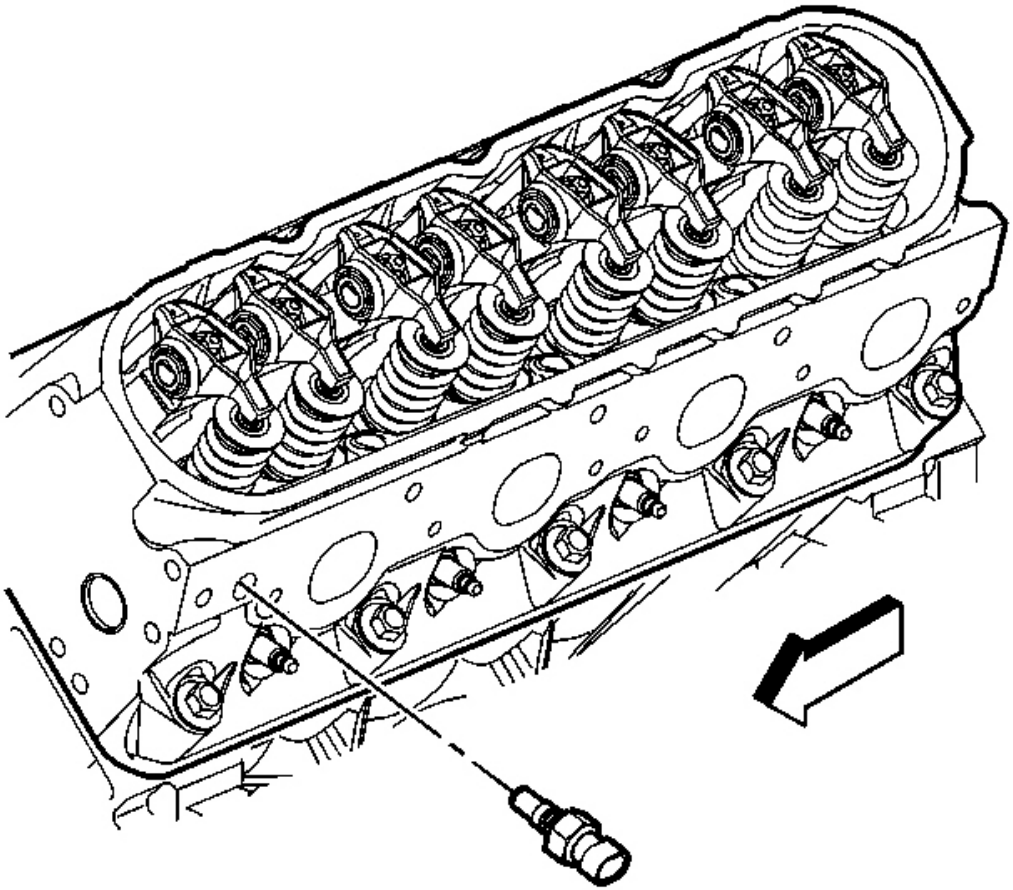

Fig. 196: View Of Coolant Temperature Sensor (Left Cylinder Head)
Courtesy of GENERAL MOTORS CORP.

9. Remove the coolant sensor from the left cylinder head.

cardiagn.com

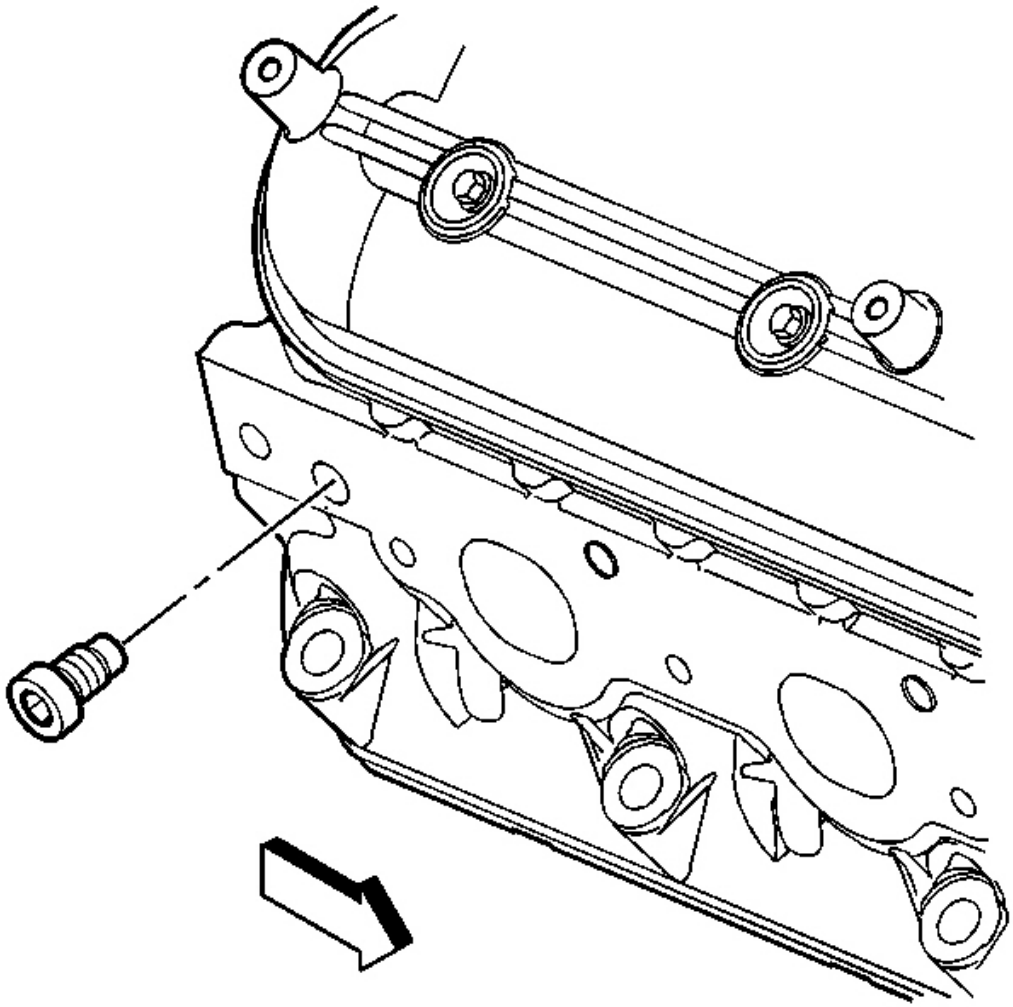

Fig. 197: View Of Coolant Plug (Right Cylinder Head)
Courtesy of GENERAL MOTORS CORP.

10. Remove the coolant plug from the right cylinder head.

CYLINDER HEAD CLEANING AND INSPECTION

Tools Required

- J 8089 Carbon Removing Brush
- J 9666 Valve Spring Tester

cardiagn.com

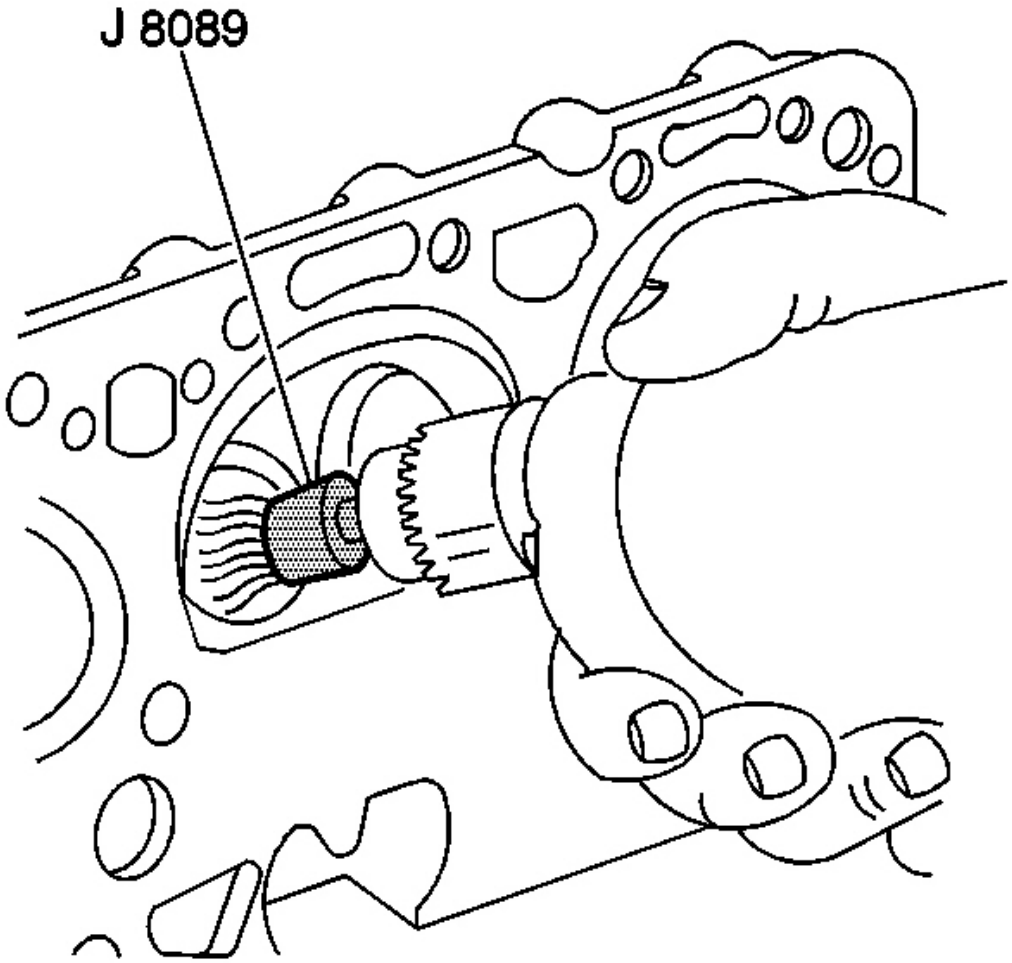

Fig. 198: Cleaning The Carbon From Combustion Chambers Using J 8089
Courtesy of GENERAL MOTORS CORP.

CAUTION: Refer to Safety Glasses Caution in Cautions and Notices.

IMPORTANT: When cleaning a cylinder head in a thermal type oven, do not exceed 204° C (400°F).

1. Clean the following components:

IMPORTANT: Be careful not to scuff the chamber.

cardiagn.com

- Use the J 8089 in order to remove the carbon from the combustion chambers.
- Gasket surfaces

  Refer to **Replacing Engine Gaskets** .

- Valve stems and heads on a buffing wheel
- Bolt hole threads

  Remove all dirt, debris, or threadlocking material from the bolt holes.

cardiagn.com

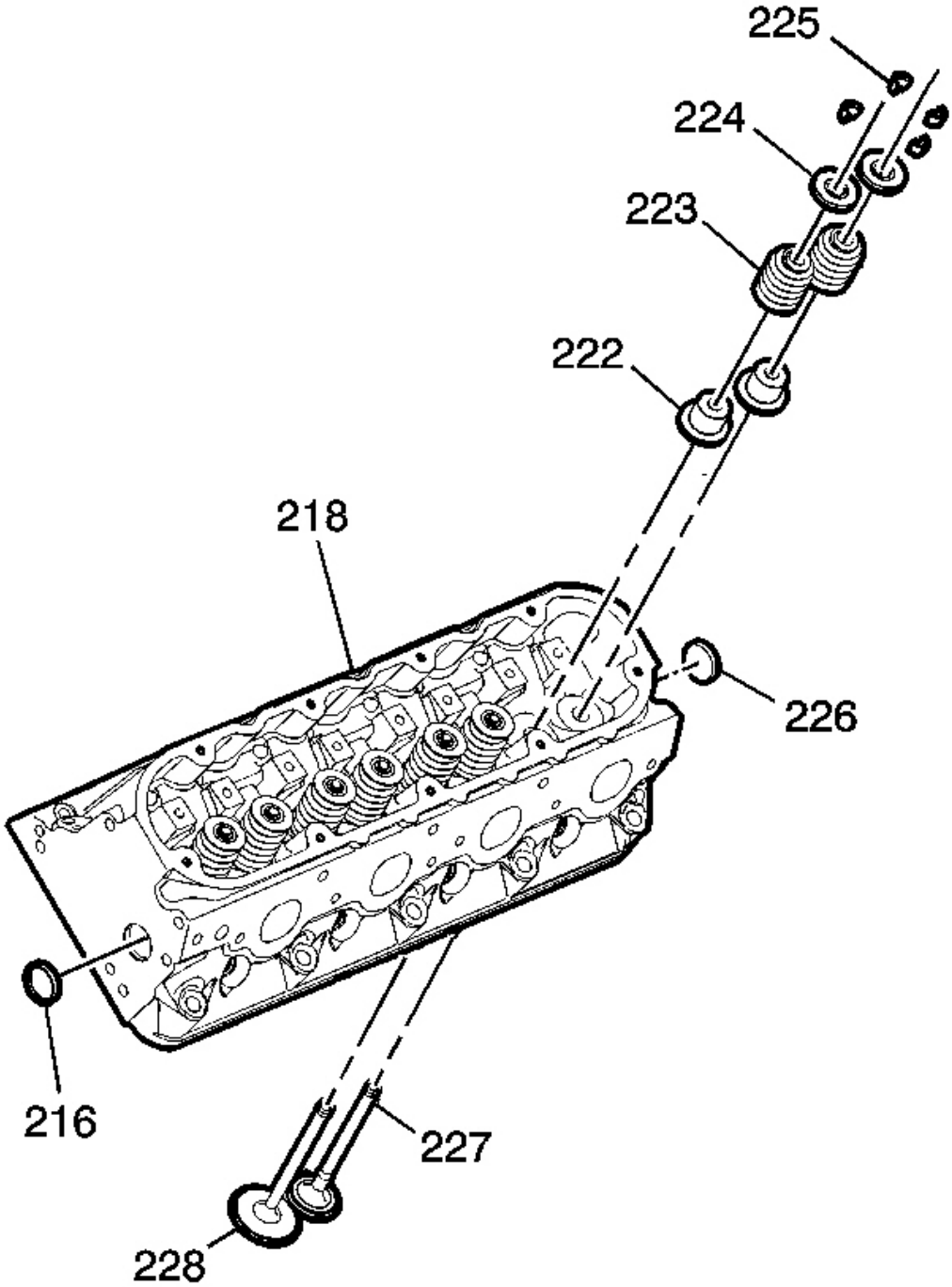

Fig. 199: View Of Cylinder Head Components
Courtesy of GENERAL MOTORS CORP.

cardiagn.com

2. Inspect for the following conditions:
    1. The cylinder head (218) for cracks in the exhaust ports and combustion chambers
    2. The cylinder head for external cracks in the water chambers
    3. The gasket surfaces for excessive scratches or gouging

       Refer to **Replacing Engine Gaskets** .

    4. The bolt hole threads for debris or damaged threads

       Refer to **Thread Repair** or **Thread Repair Specifications** .

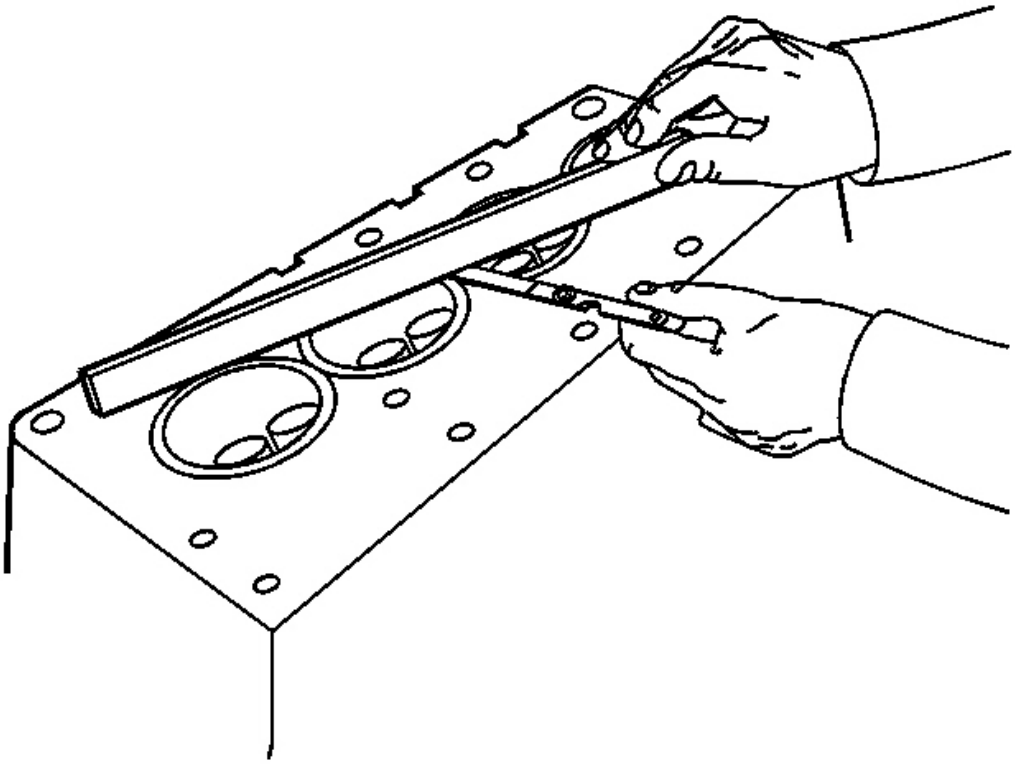

Fig. 200: Inspecting The Cylinder Head For Warpage
Courtesy of GENERAL MOTORS CORP.

3. Inspect the cylinder head for warpage.

cardiagn.com

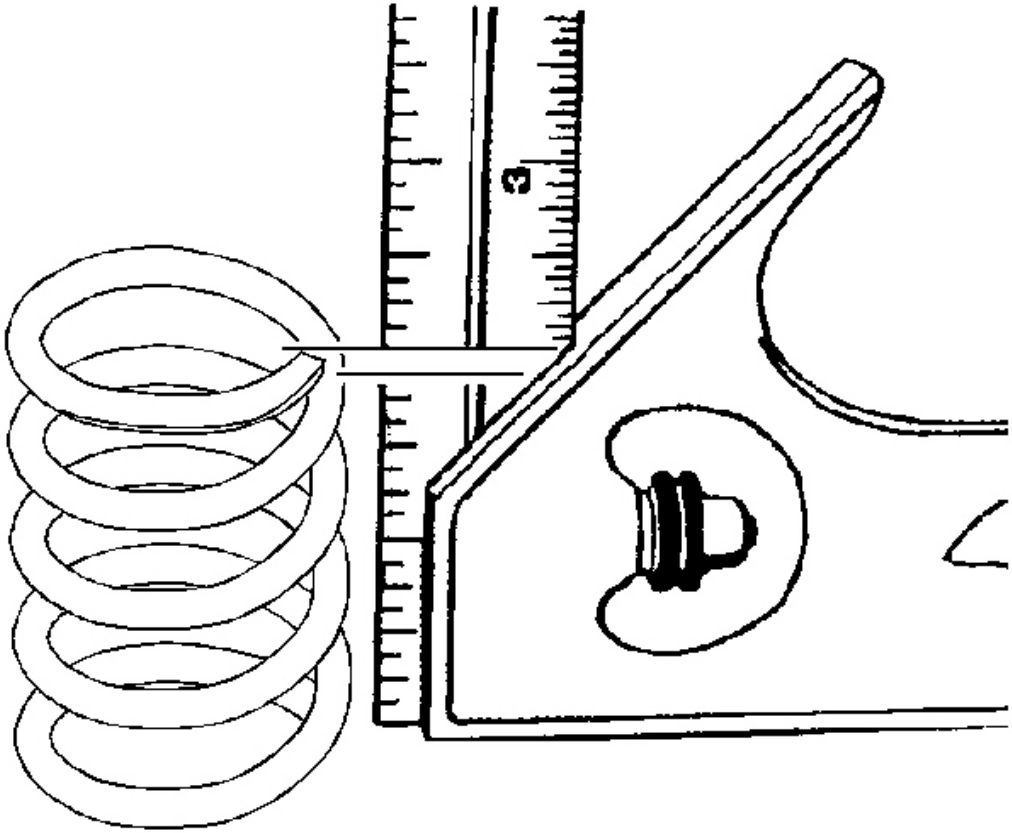

Fig. 201: Inspecting Valve Spring For Squareness
Courtesy of GENERAL MOTORS CORP.

4. Inspect the valve springs for squareness.

cardiagn.com

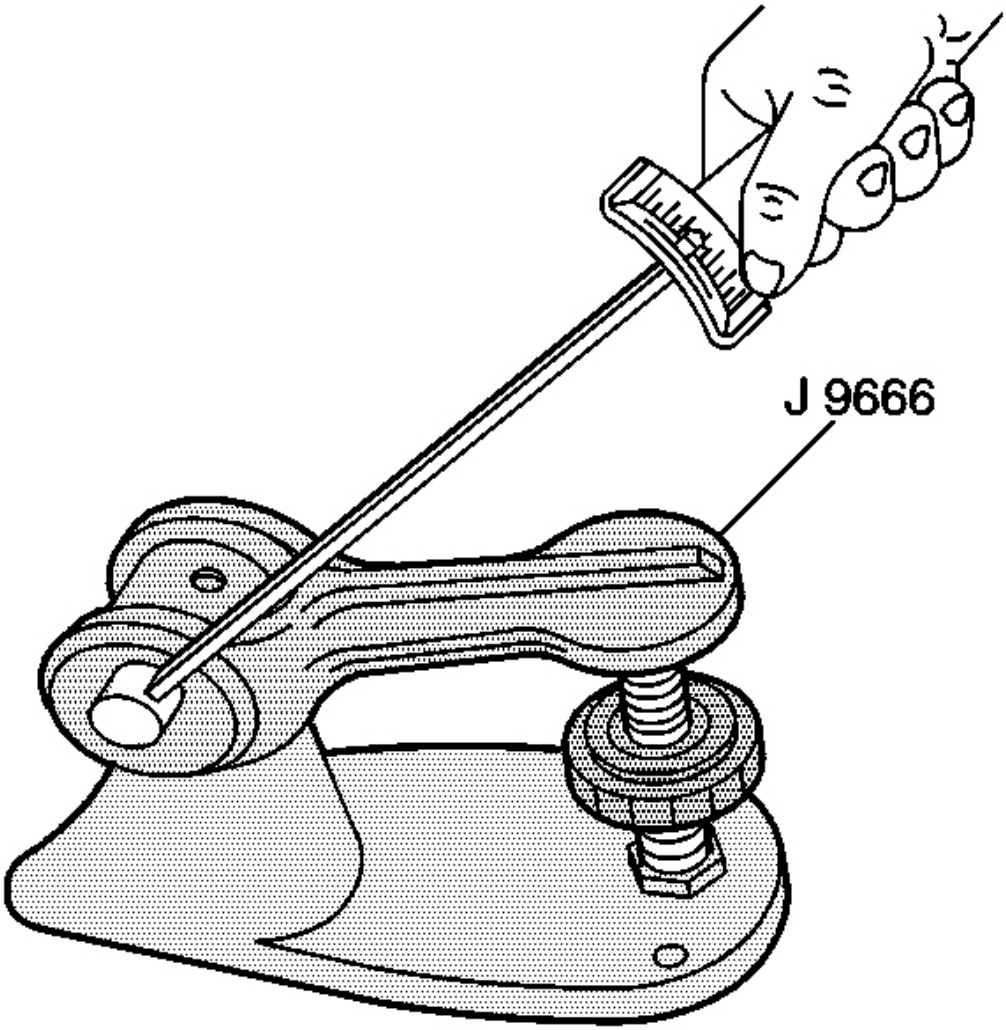

Fig. 202: Measuring The Valve Spring Using J 9666
Courtesy of GENERAL MOTORS CORP.

5. Use the J 9666 in order to measure the valve spring tension.
    - Replace the LS1 spring if the spring tension is less than 310 N (70 lb) at 45.75 mm (1.80 in).
    - Replace the LS6 spring if the spring tension is less than 400 N (90 lb) at 45.75 mm (1.80 in).

VALVE GUIDE REAMING/VALVE AND SEAT GRINDING

Valve Guide Reaming

cardiagn.com

Tools Required

J 37378-1 Valve Guide Reamer

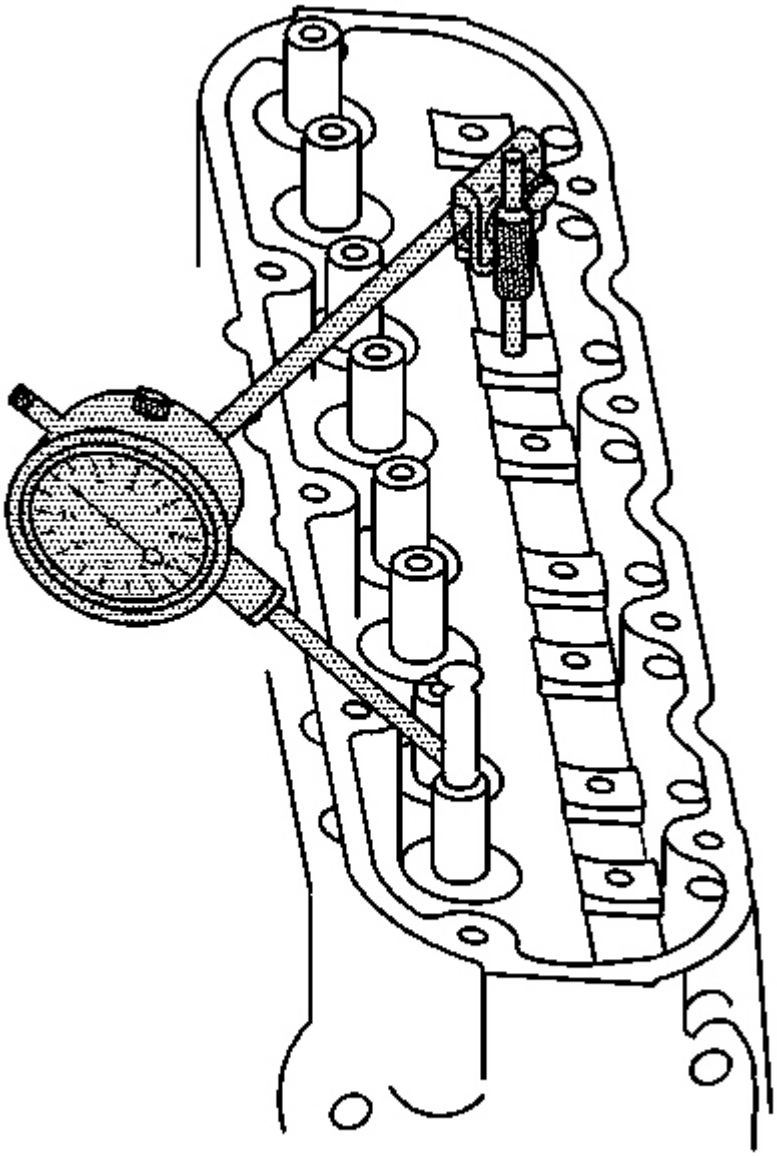

Fig. 203: Measuring The Valve Stem-To-Guide Clearance Using Dial Indicator
Courtesy of GENERAL MOTORS CORP.

cardiagn.com

IMPORTANT:

- **Excessive valve stem-to-guide clearance may cause a noisy valve train, premature valve stem oil seal wear, component damage, and/or excessive engine oil consumption.**
- **Insufficient valve stem-to-guide clearance will result in noisy or sticking valves. Valves that are too tight may disturb engine smoothness or lead to component damage.**

1. Measure the valve stem-to-guide clearance using a dial indicator.

   Valve stem-to-guide clearance may also be obtained by using a micrometer to measure the valve stem diameter and a ball type measuring gage to measure the guide bore.

cardiagn.com

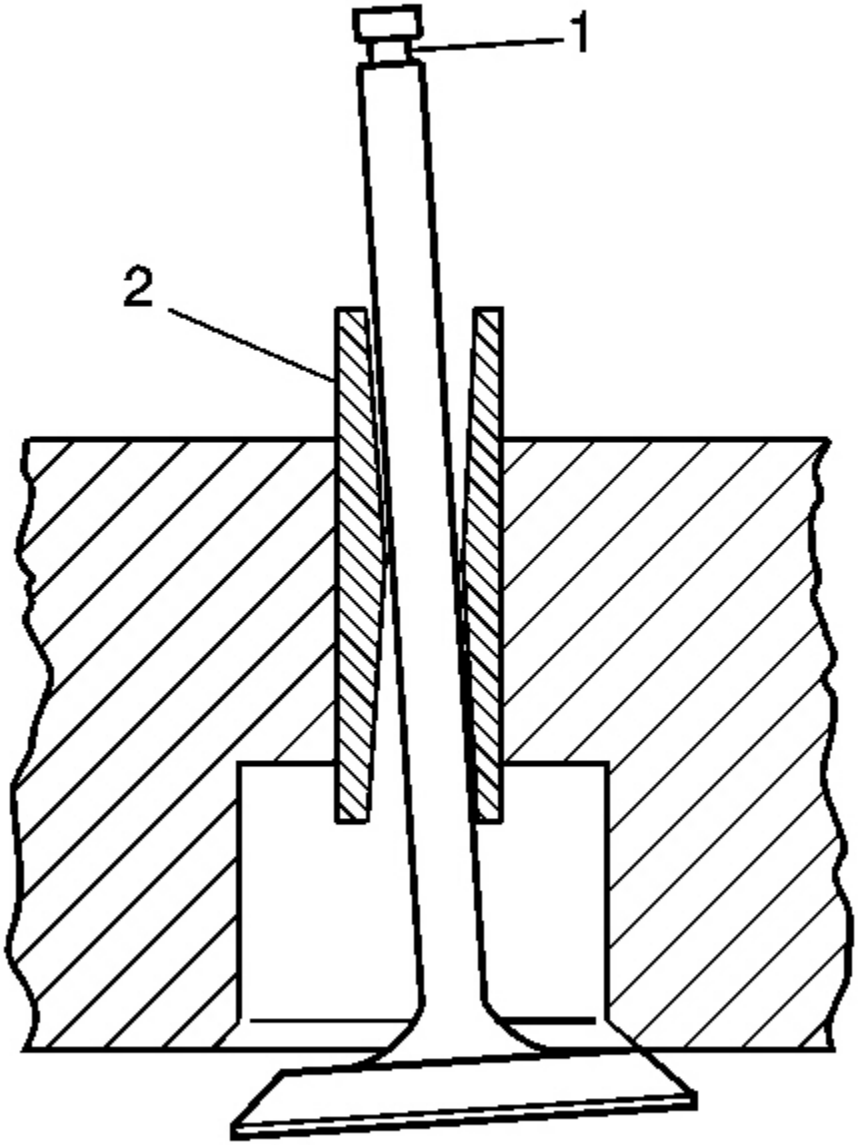

Fig. 204: Valve Stem & Guide
Courtesy of GENERAL MOTORS CORP.

2. A valve stem (1) and guide (2) with clearance in excess of 0.093 mm (0.0037 in) must be repaired or the components replaced.

cardiagn.com

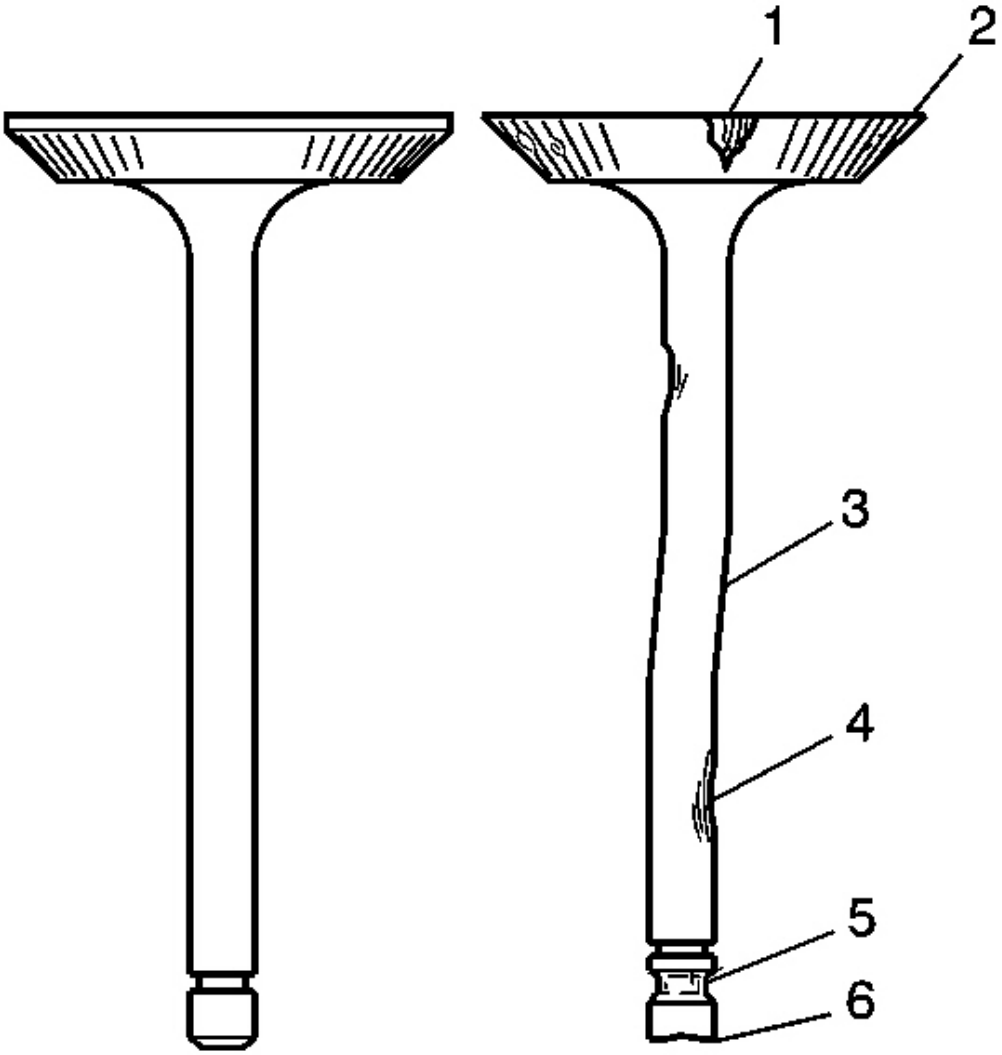

Fig. 205: Inspecting Valves For Damage
Courtesy of GENERAL MOTORS CORP.

3. Inspect the valve stems for excessive scoring, wear, or warpage.
   - A valve stem that has excessive scoring (3 or 4) or wear (4 or 6) must be replaced.
   - A valve guide that is worn and has excessive stem-to-guide clearance should be reamed and valves with oversize stems installed.
4. Measure the valve stem diameter. A valve stem with a diameter less than 7.95 mm (0.313 in) must be replaced. Position the tip of the dial indicator at the top of the valve guide.

cardiagn.com

If the valve stem diameter is within specifications, and the stem-to-guide clearance is excessive, the valve guide must be reamed oversize and a valve with oversize stem installed.

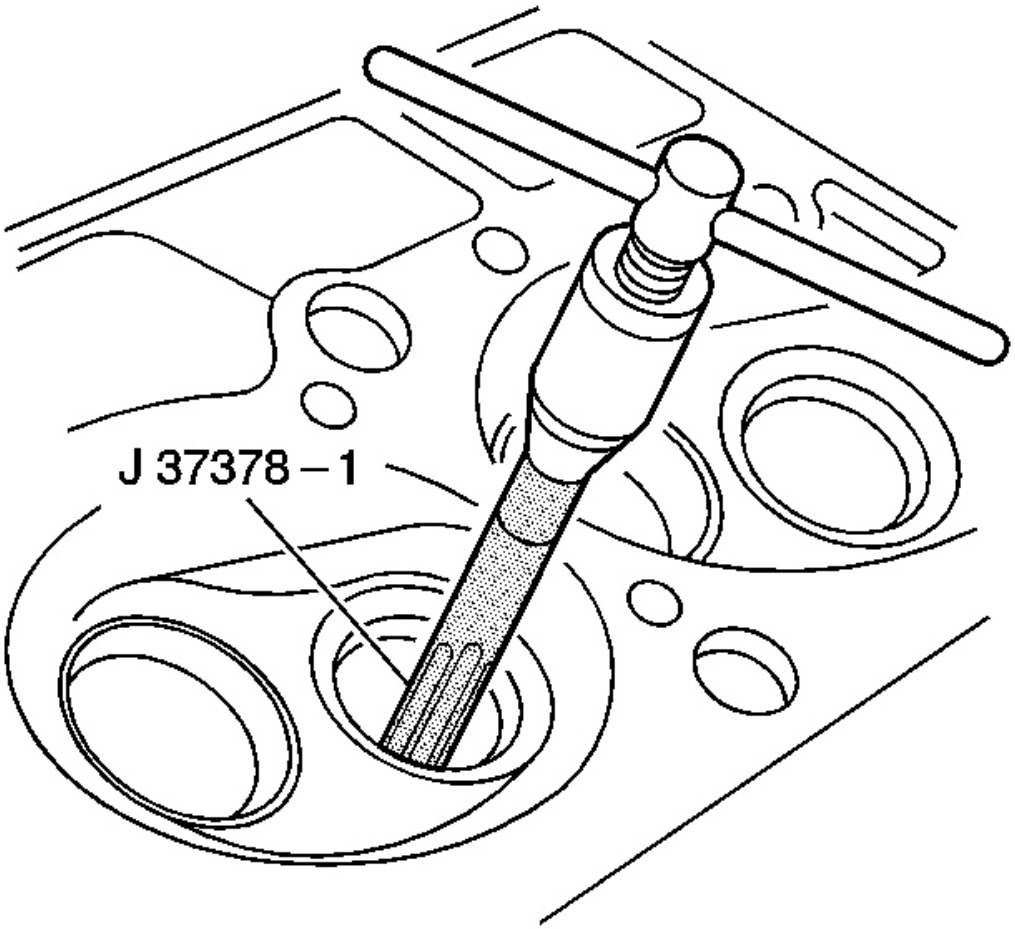

Fig. 206: Reaming The Valve Guide Using J 37378-1
Courtesy of GENERAL MOTORS CORP.

5. Ream the valve guide using the **J 37378-1** .
6. Clean the guide bore of all metal shavings and debris.

cardiagn.com

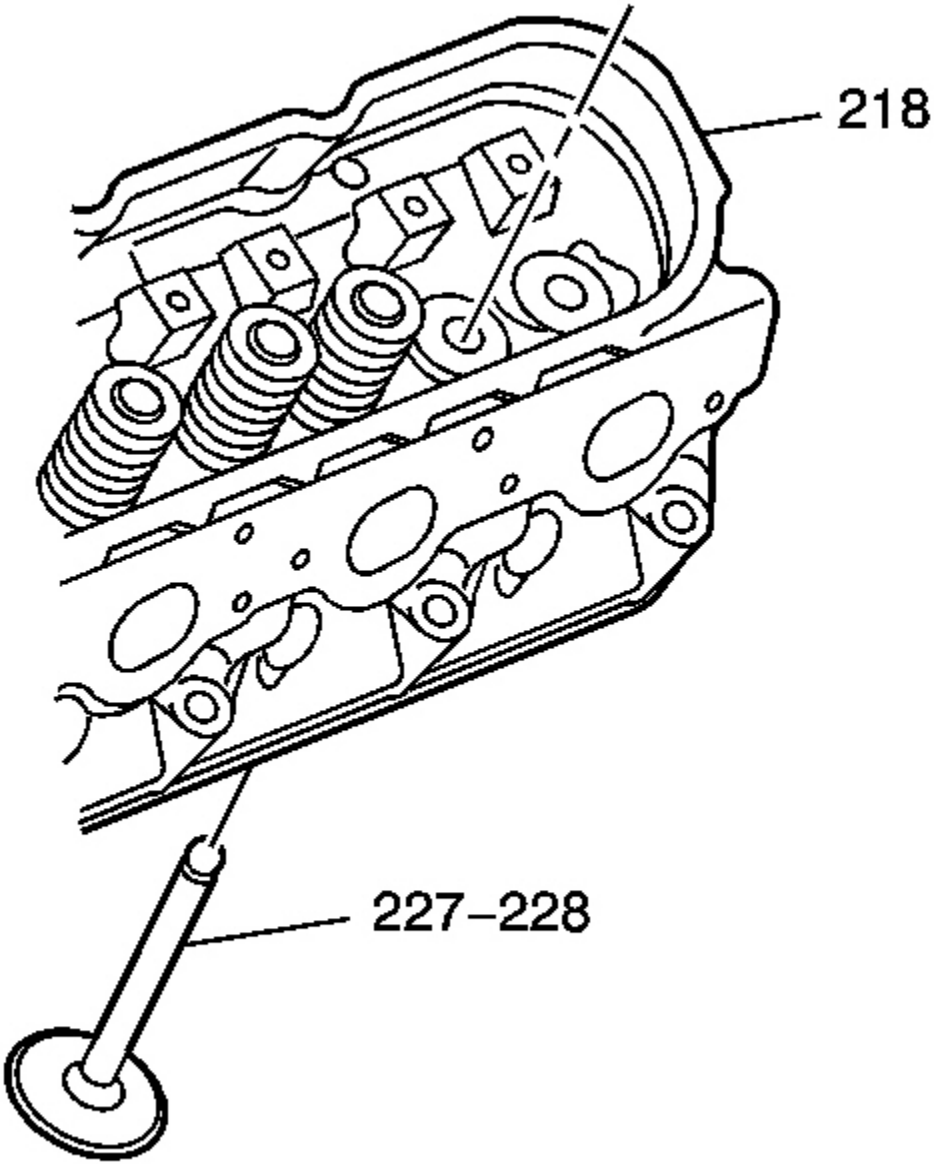

Fig. 207: View Of Valve & Cylinder Head
Courtesy of GENERAL MOTORS CORP.

7. Install the valve (227 and 228), with oversize stem, into the cylinder head (218).
8. Inspect the valve for proper fit.

cardiagn.com

Move the valve back and forth in the guide. The valve should move freely with no resistance or drag.

Valve and Seat Grinding

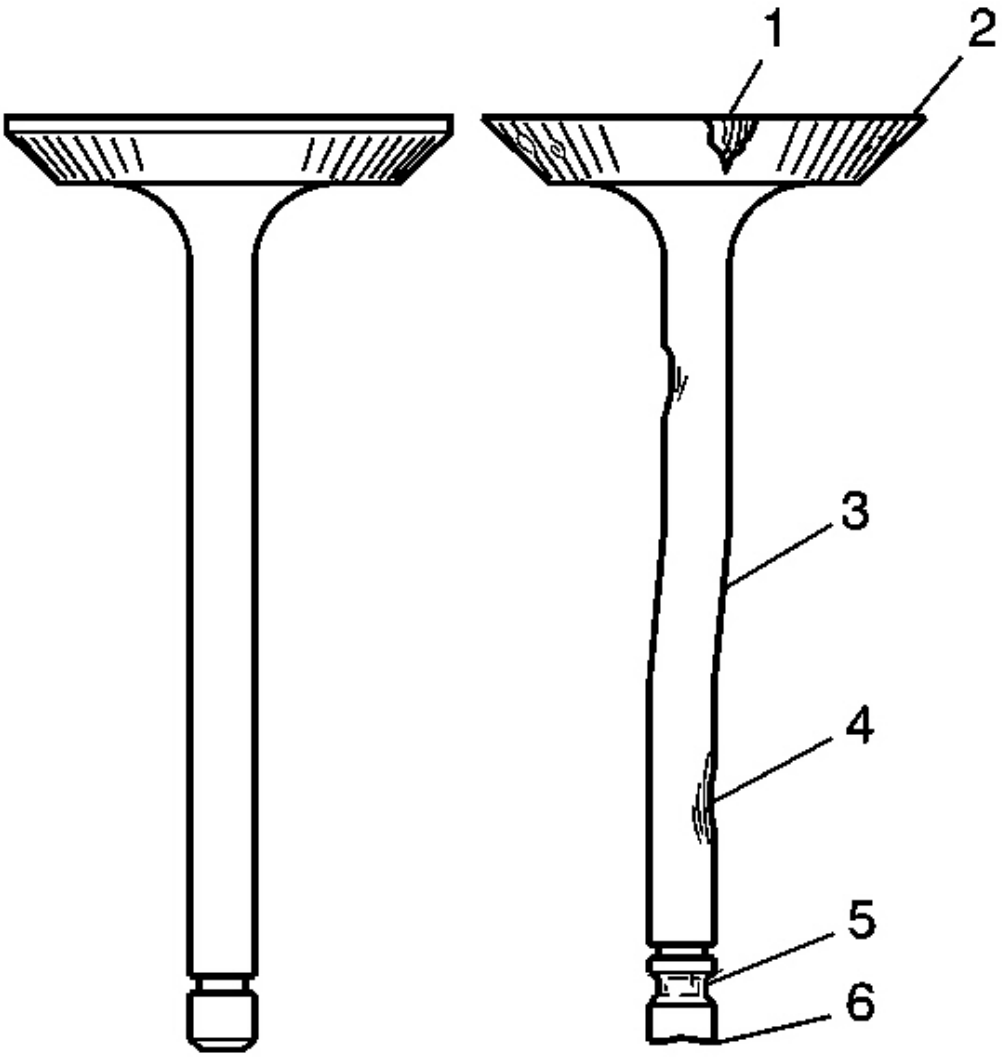

Fig. 208: Inspecting Valves For Damage
Courtesy of GENERAL MOTORS CORP.

IMPORTANT:

- **Reconditioning the valve seats is very important. The seating of the valves must be perfect for the engine to deliver optimum power and**

cardiagn.com

performance. Several different types of equipment are available for grinding valve seats.

- **Another important factor is the cooling of the valve head. Good contact between the valve and the seat will ensure that heat will be properly dissipated.**
- **The recommendations of the manufacturer of the equipment should be followed carefully to obtain the proper results. Regardless of what type of equipment is used, it is essential that valve guide bores be free from carbon or dirt to ensure proper centering of the tool pilot in the guide.**
- **Valves that are pitted must be refaced to the proper angle. Valve stems that show excessive wear, or valves that are warped excessively must be replaced. When a valve head that is warped excessively is refaced, a knife edge may be ground on part or all of the valve head due to the amount of metal that must be removed. Knife edges lead to breakage, burning or pre-ignition due to heat localizing on this knife edge. If the edge of the valve head is less than 1.25 mm (0.05 in) after grinding, replace the valve.**
- **Several different types of equipment are available for refacing valves. The recommendation of the manufacturer of the equipment should be carefully followed to obtain the proper results.**
- **DO NOT reface intake valves. Intake valves with excessive wear or damage MUST be replaced.**

1. Inspect the valve for the following conditions:
   - Burnt or eroded areas (1)
   - A worn margin (2)
   - A bent stem (3)
   - A worn or scored stem (4)
   - A worn key groove (5)
   - A worn stem tip (6)

cardiagn.com

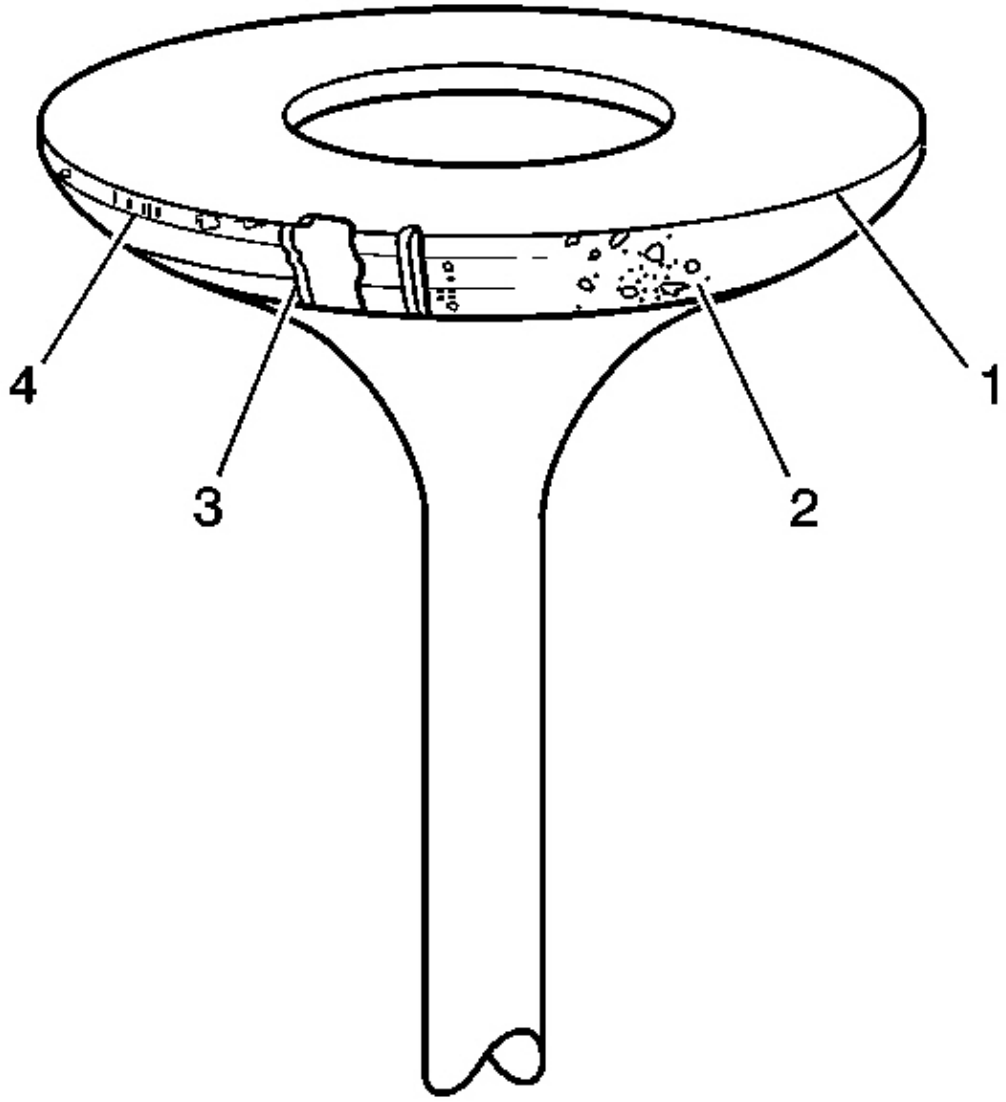

Fig. 209: Inspecting Valve Face For Damage
Courtesy of GENERAL MOTORS CORP.

2. Inspect the valve face for the following conditions:
    - Worn or no margin (1 or 4)
    - Pitted surfaces (2)
    - Burnt or eroded areas (3)

cardiagn.com

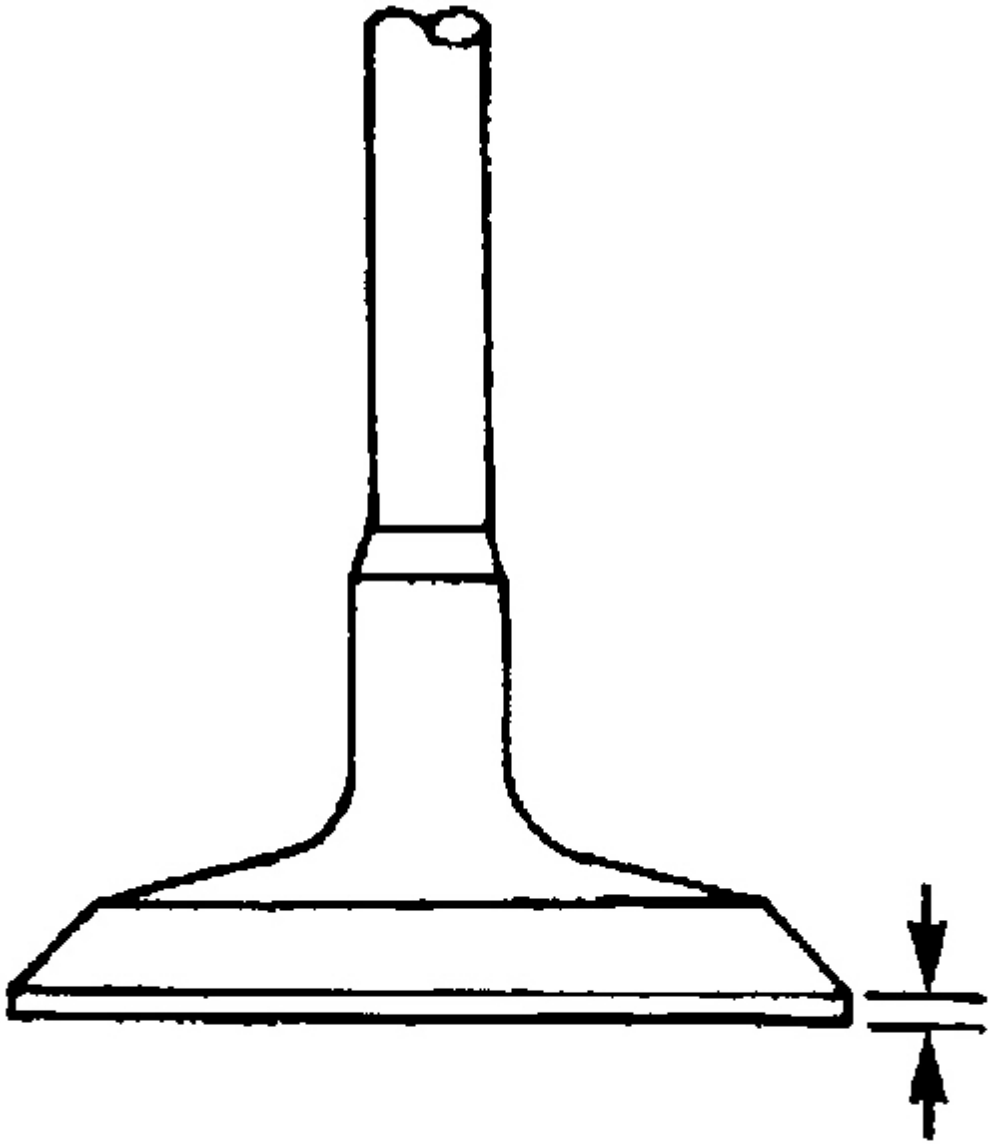

Fig. 210: Inspecting The Valve Margin
Courtesy of GENERAL MOTORS CORP.

3. Inspect the valve margin.

   The exhaust valve may be refaced if the margin is greater than 1.25 mm (0.05 in) thick before grinding.

cardiagn.com

4. Reface pitted exhaust valves on a suitable valve refacing machine.
5. Replace the valve if the margin is less than 1.25 mm (0.05 in) thick after grinding.
6. If the valve face has been ground, it may be necessary to shim the valve spring to obtain the proper spring installed height. Refer to **Cylinder Head Assemble** .

cardiagn.com

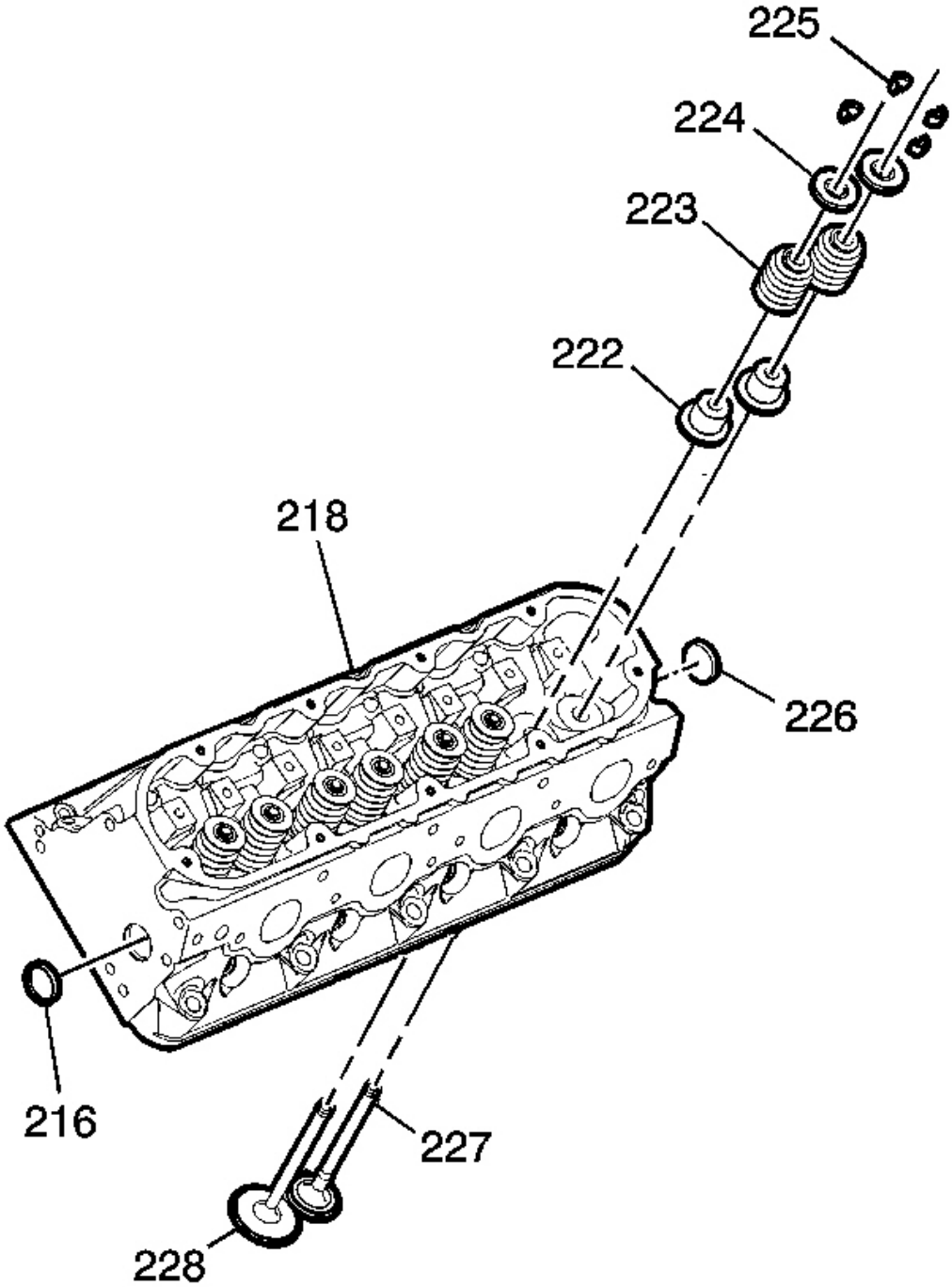

Fig. 211: View Of Cylinder Head Components
Courtesy of GENERAL MOTORS CORP.

cardiagn.com

7. Inspect for a loose valve seat in the cylinder head (218). The valve seat has an interference fit to the cylinder head.
8. Clean the valve guide bores with a suitable tool. Remove all carbon or dirt from the bores.

   The valve guide must be clean for the seat grinding tool to obtain proper results.

9. Grind the valve seat.

   The recommendations of the manufacturer of the equipment should be followed carefully to obtain the proper results. Regardless of what type of equipment is used, it is essential that valve guide bores be free from carbon or dirt to ensure proper centering of the tool pilot in the guide.

10. Inspect the valve seats.
    - The valve seats should be concentric to within 0.05 mm (0.0021 in) total indicator reading.
    - If the valve seat has been ground, it may be necessary to shim the valve spring to attain the proper spring installed height.

      Refer to **Cylinder Head Assemble** .

CYLINDER HEAD ASSEMBLE

Tools Required

J 8062 Valve Spring Compressor

cardiagn.com

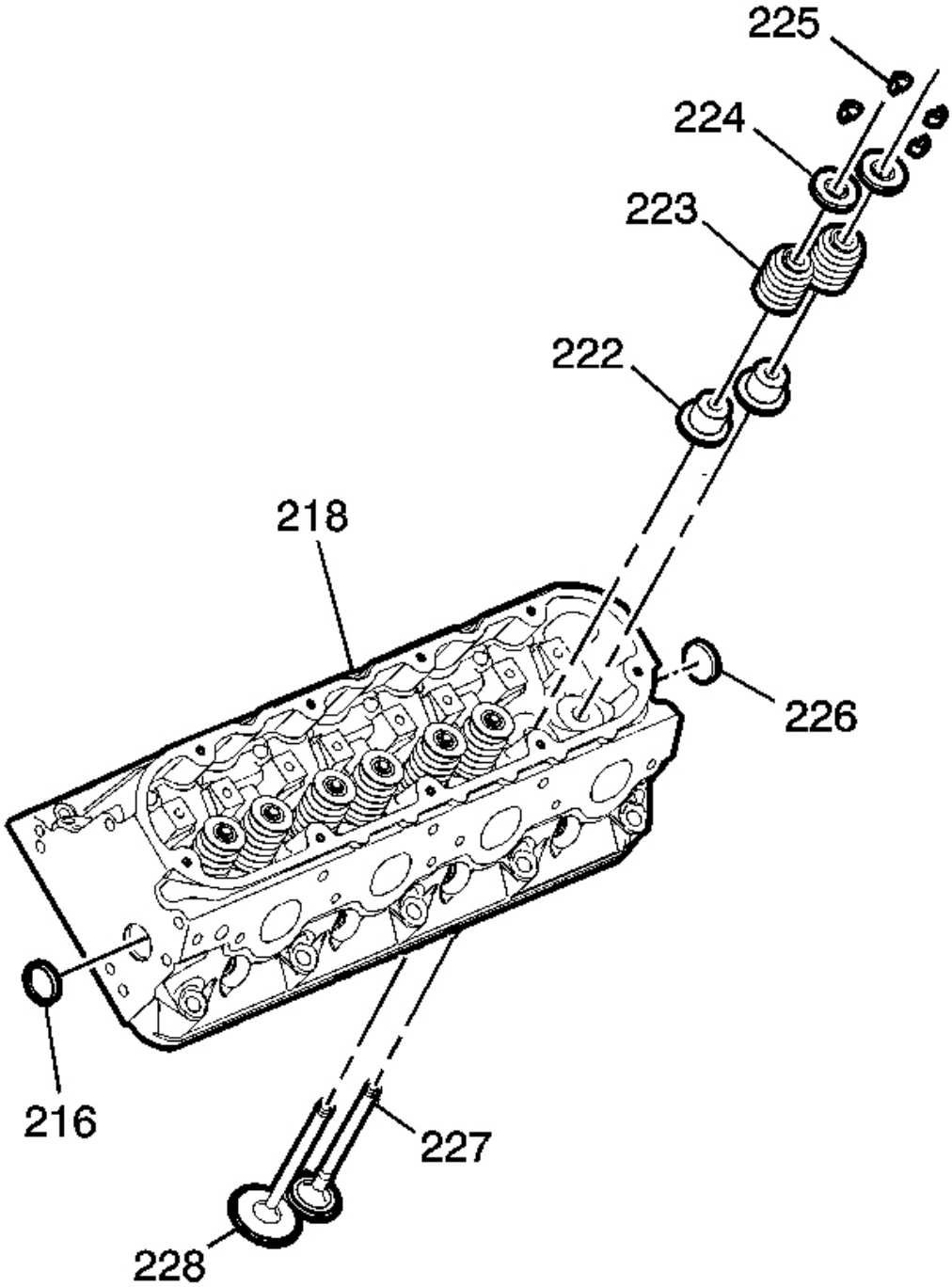

Fig. 212: View Of Cylinder Head Components
Courtesy of GENERAL MOTORS CORP.

cardiagn.com

1. Clean the cylinder head valve spring shim area.

IMPORTANT: When using the valves and related components again, install the parts to their original location.

2. Install the valves (227 and 228) into the proper port.

   Refer to **Separating Parts** .

IMPORTANT:

- **The valve stem oil seal alignment and position on the valve guide is critical.**
- **An improperly installed valve stem oil seal may lead to excessive oil consumption, increased vehicle emissions, or component damage.**

3. Install the valve stem oil seal (222).
4. Install the valve spring (223).
5. Install the valve spring cap (224).

cardiagn.com

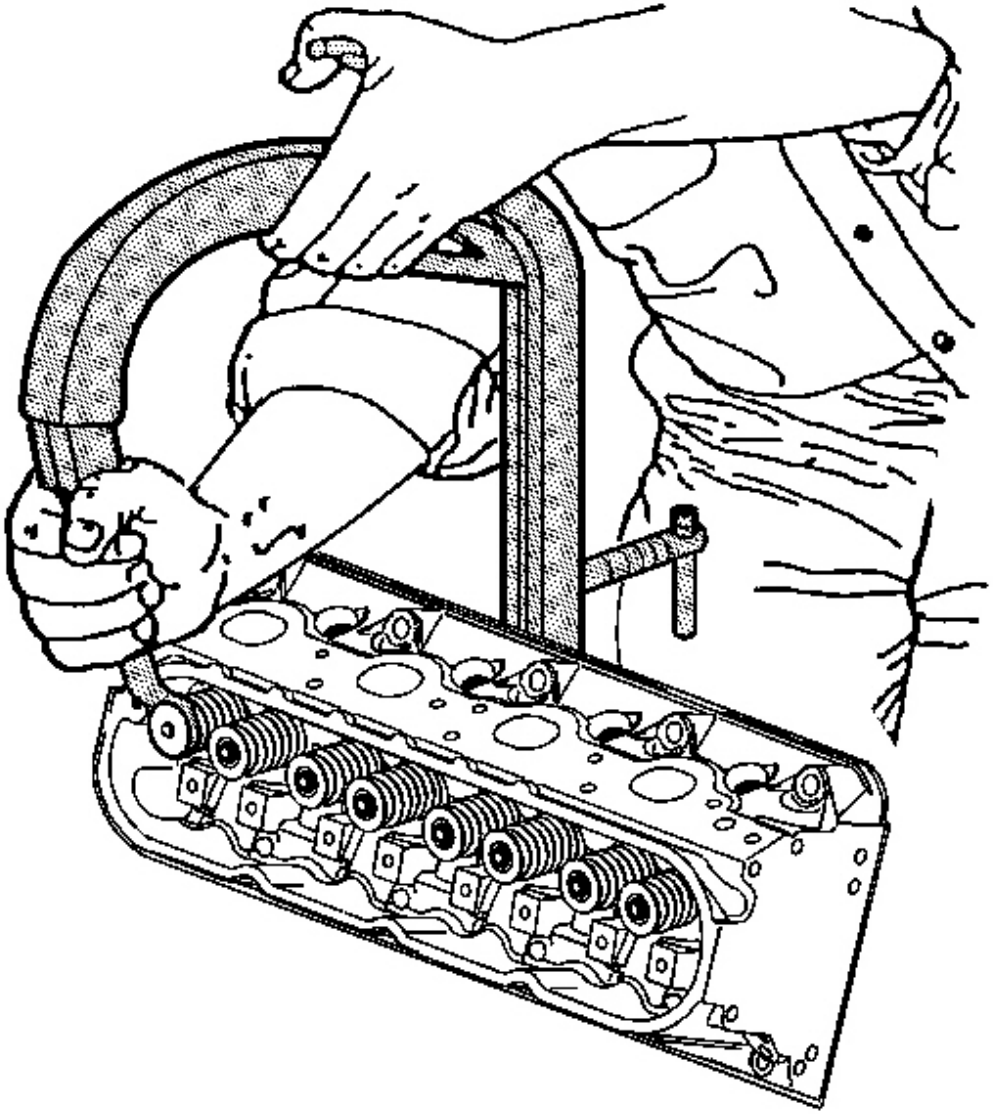

Fig. 213: Compressing The Valve Spring Using J 8062
Courtesy of GENERAL MOTORS CORP.

6. Compress the valve spring using the **J 8062** .
7. Install the valve stem keys.
    1. Use grease to hold the keys in place and remove the **J 8062** .
    2. Ensure the keys seat properly in the groove of the valve stem.

cardiagn.com

3. Tap the end to the valve stem with a plastic faced hammer to seat the keys, if necessary.

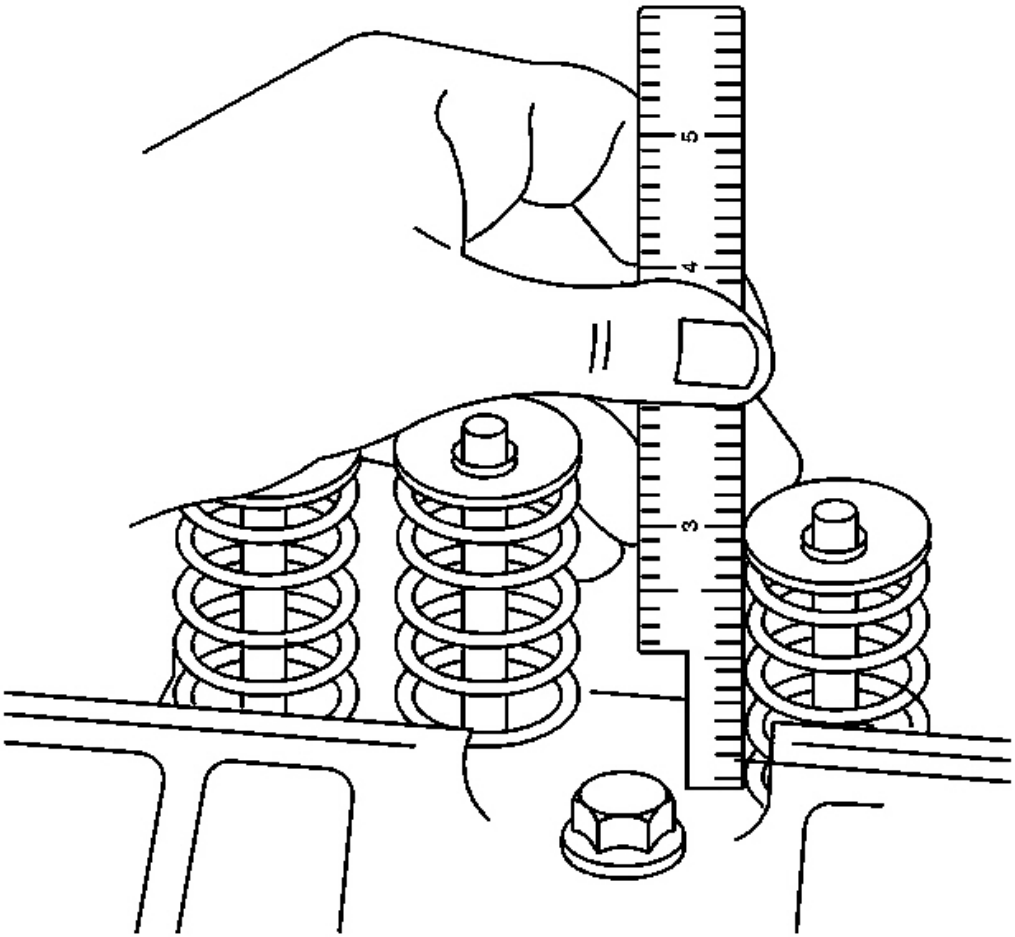

Fig. 214: Measuring Valve Spring Installed Height
Courtesy of GENERAL MOTORS CORP.

8. Measure the valve spring installed height using a ruler.

   Measure from the base of the valve spring to the top of the valve spring.

   Specification:

   - If the installed height exceeds 46.25 mm (1.82 in), install a valve spring shim of approximately 0.5 mm (0.02 in) thick.
   - Do not shim the valve spring to obtain less than the specified height.

cardiagn.com

Do not assemble the components without a spring shim on the cylinder head.

9. Install the remaining valves, springs, and other components.

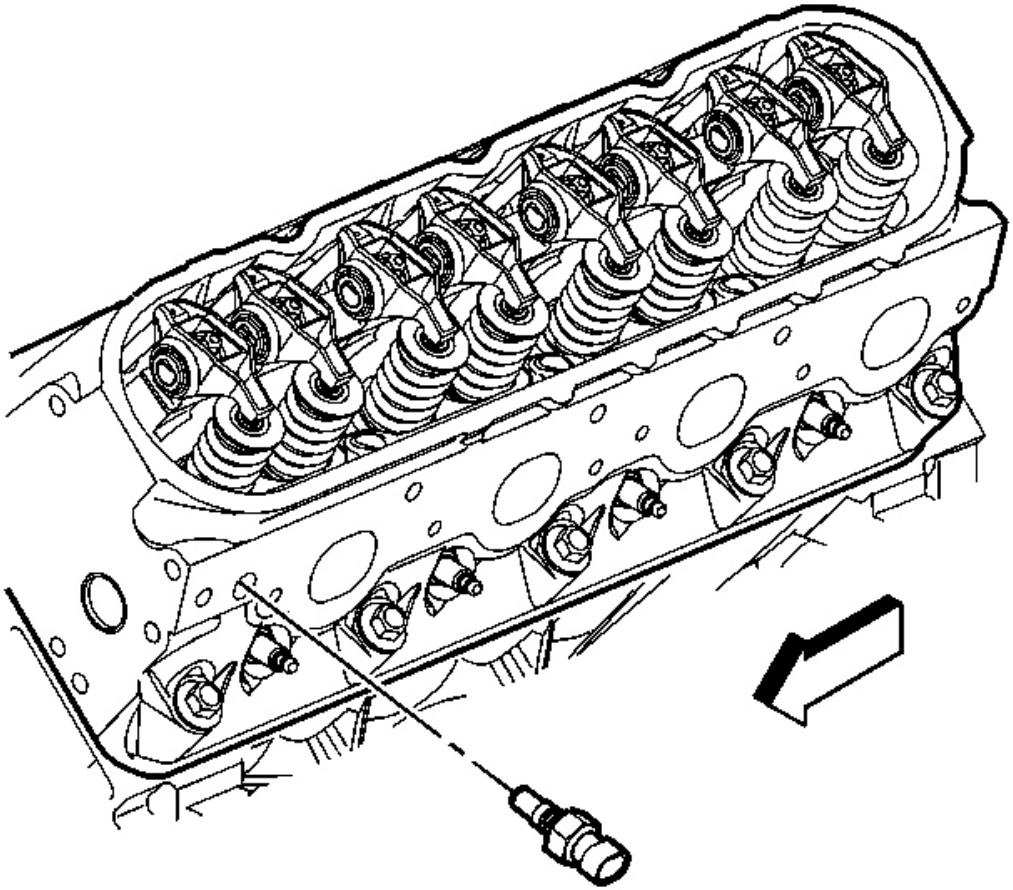

Fig. 215: View Of Coolant Temperature Sensor (Left Cylinder Head)
Courtesy of GENERAL MOTORS CORP.

10. Install sealant GM P/N 12346004 (Canadian P/N 10953480) or equivalent to the threads of the coolant sensor.

NOTE: **Refer to Fastener Notice in Cautions and Notices.**

11. Install the coolant sensor into the left cylinder head.

Tighten: Tighten the coolant sensor to 20 N.m (15 lb ft).

cardiagn.com

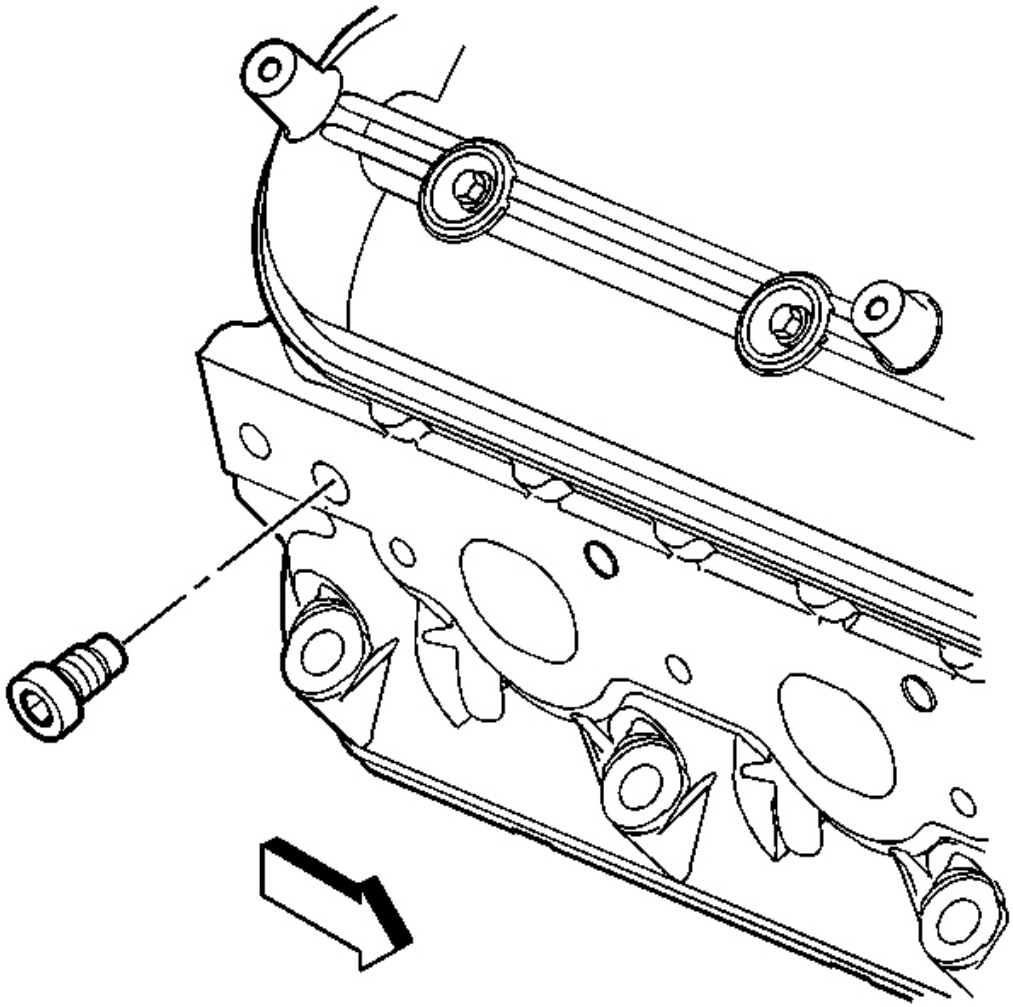

Fig. 216: View Of Coolant Plug (Right Cylinder Head)
Courtesy of GENERAL MOTORS CORP.

12. Install the coolant plug to the right cylinder head.

    Tighten: Tighten the coolant plug to 20 N.m (15 lb ft).

cardiagn.com

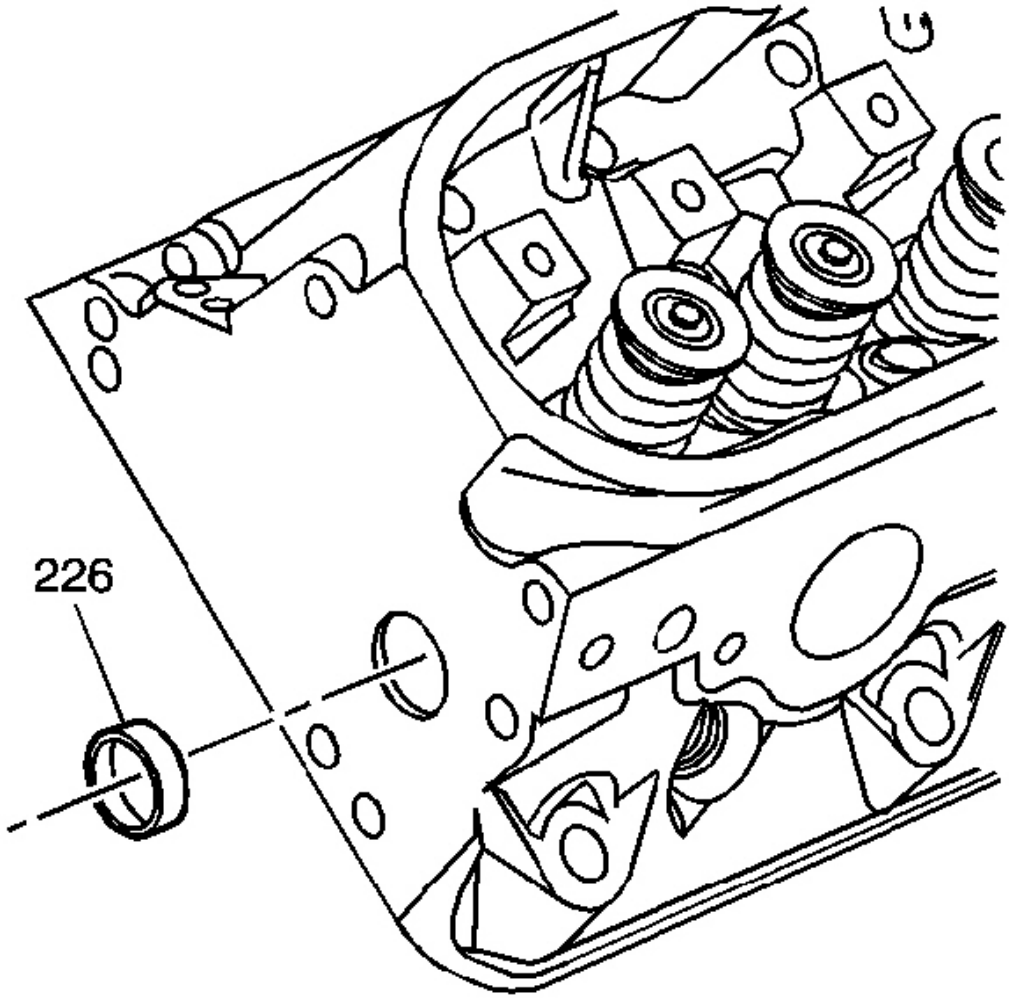

Fig. 217: View Of Cylinder Head Expansion Plugs
Courtesy of GENERAL MOTORS CORP.

13. Apply threadlock GM P/N 12345382 (Canadian P/N 10953489) or equivalent to the sides of the cylinder head expansion plugs (226).
14. Install the expansion plugs into the cylinder head.

    A properly installed plug should be installed 2.5 mm (0.1 in) below the end face of the head.

OIL PUMP DISASSEMBLE

cardiagn.com

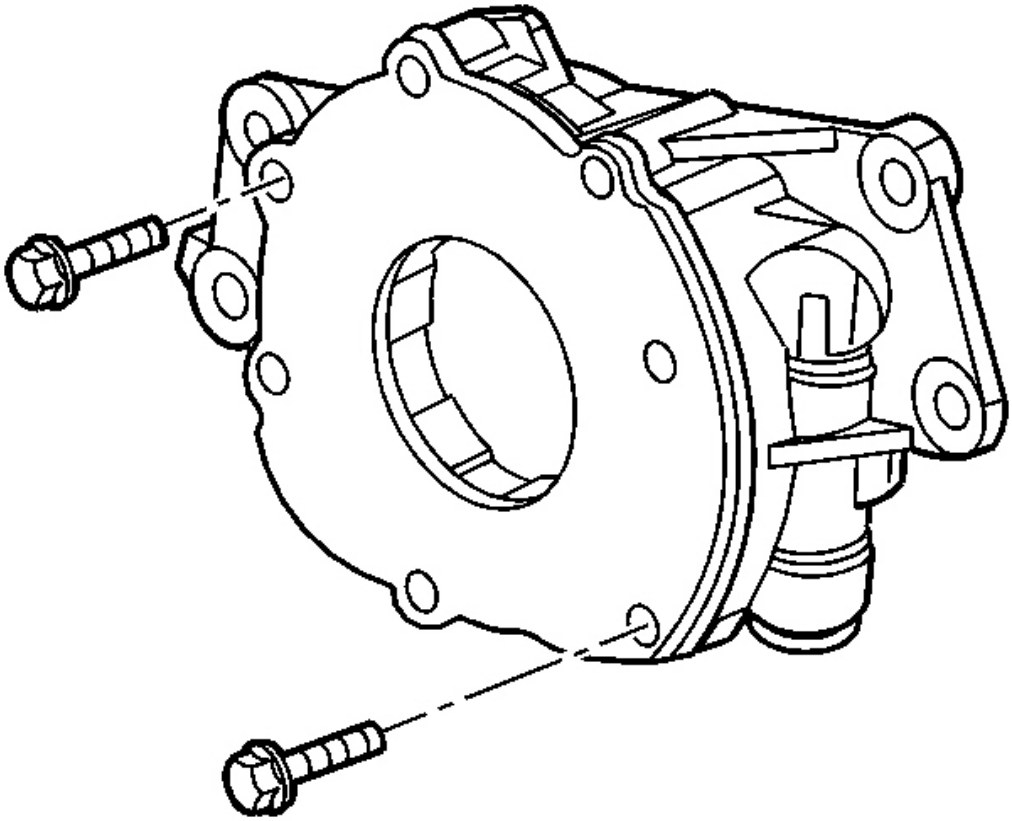

Fig. 218: View Of Oil Pump Cover & Bolts
Courtesy of GENERAL MOTORS CORP.

IMPORTANT: The internal parts of the oil pump assembly are not serviced separately, excluding the spring. If the oil pump components are worn or damaged, replace the oil pump as an assembly.

1. Remove the oil pump cover bolts.

cardiagn.com

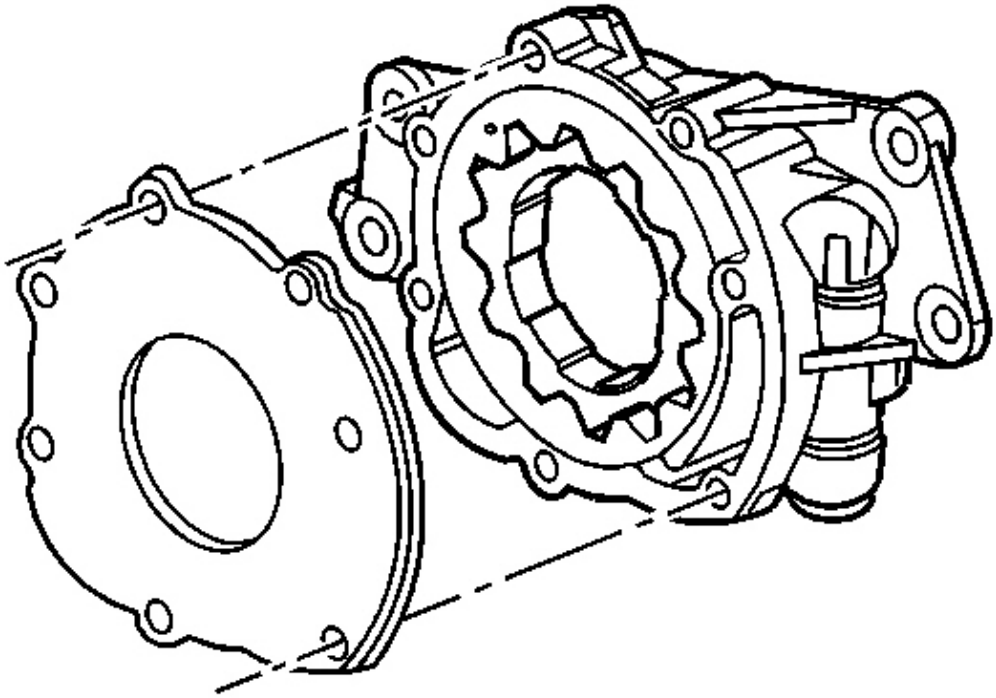

Fig. 219: View Of Oil Pump & Cover
Courtesy of GENERAL MOTORS CORP.

2. Remove the oil pump cover.

cardiagn.com

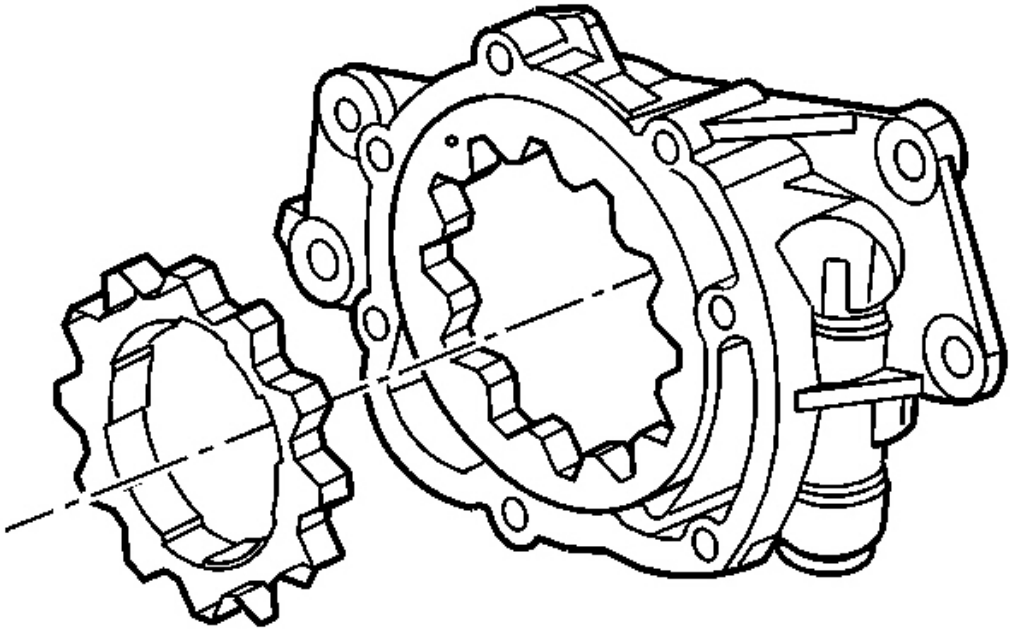

Fig. 220: View Of Oil Pump Drive Gear Splines
Courtesy of GENERAL MOTORS CORP.

IMPORTANT: Mark or identify the gears for assembly. Refer to Separating Parts .

3. Remove the drive gear.

cardiagn.com

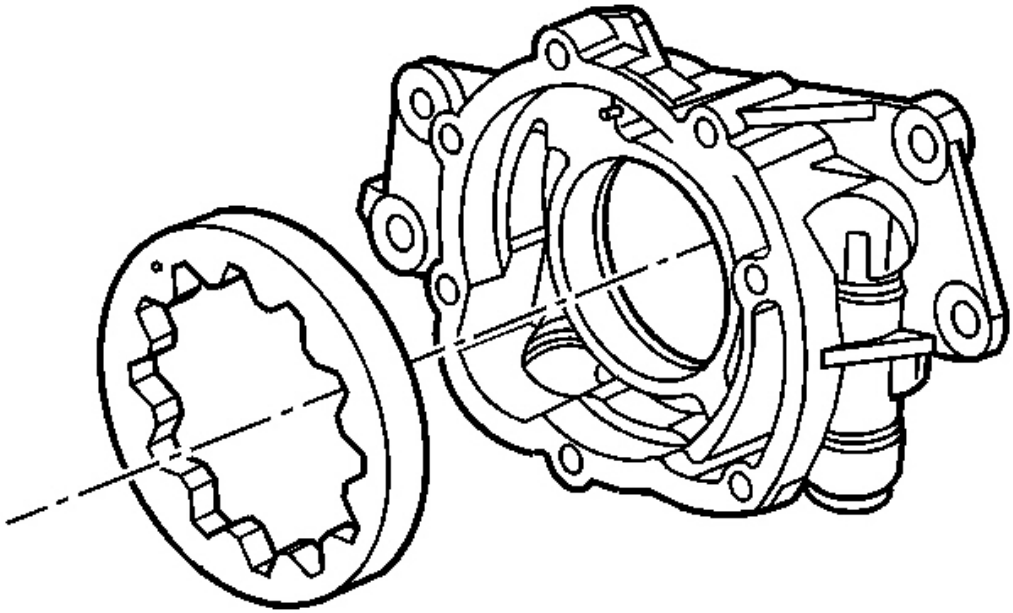

Fig. 221: View Of Oil Pump Driven Gear
Courtesy of GENERAL MOTORS CORP.

4. Remove the driven gear.

cardiagn.com

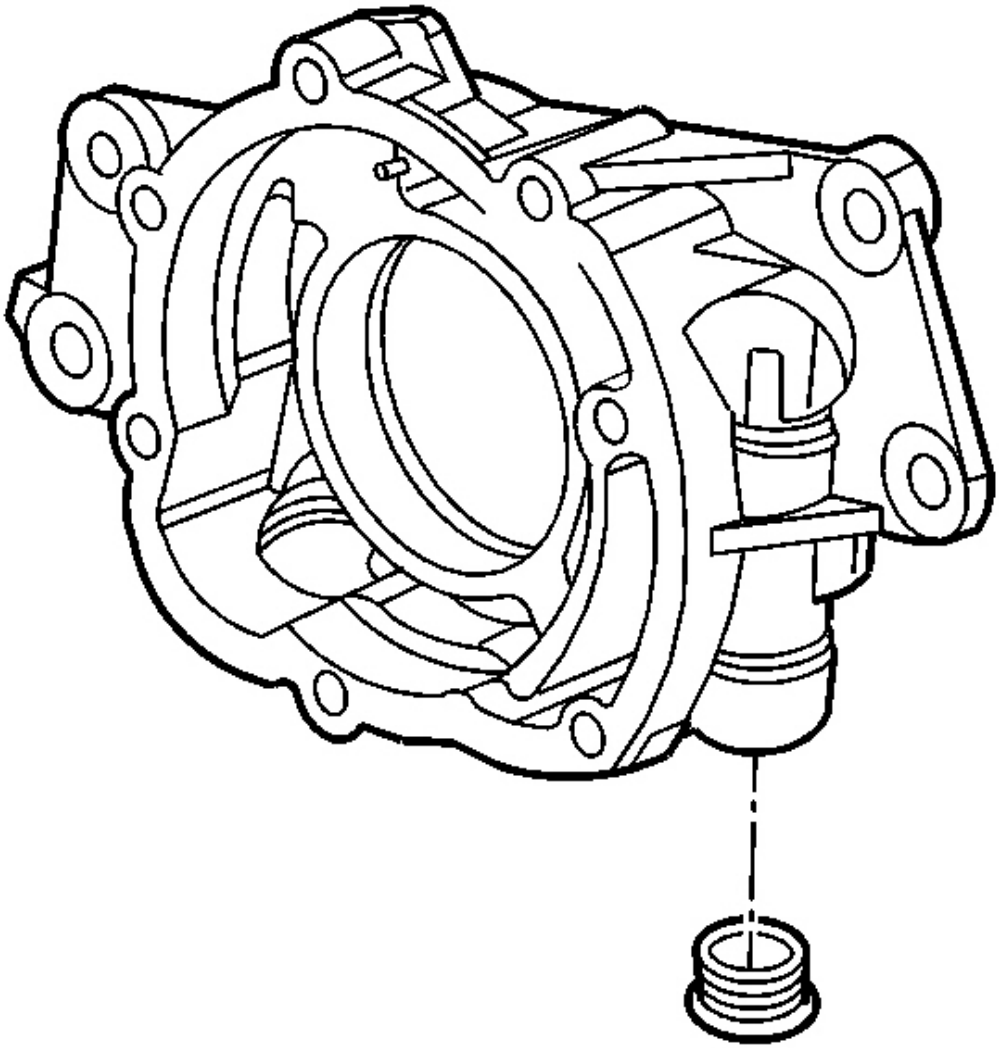

Fig. 222: View Of Oil Pump Pressure Relief Valve Plug
Courtesy of GENERAL MOTORS CORP.

5. Remove the pressure relief valve plug.

cardiagn.com

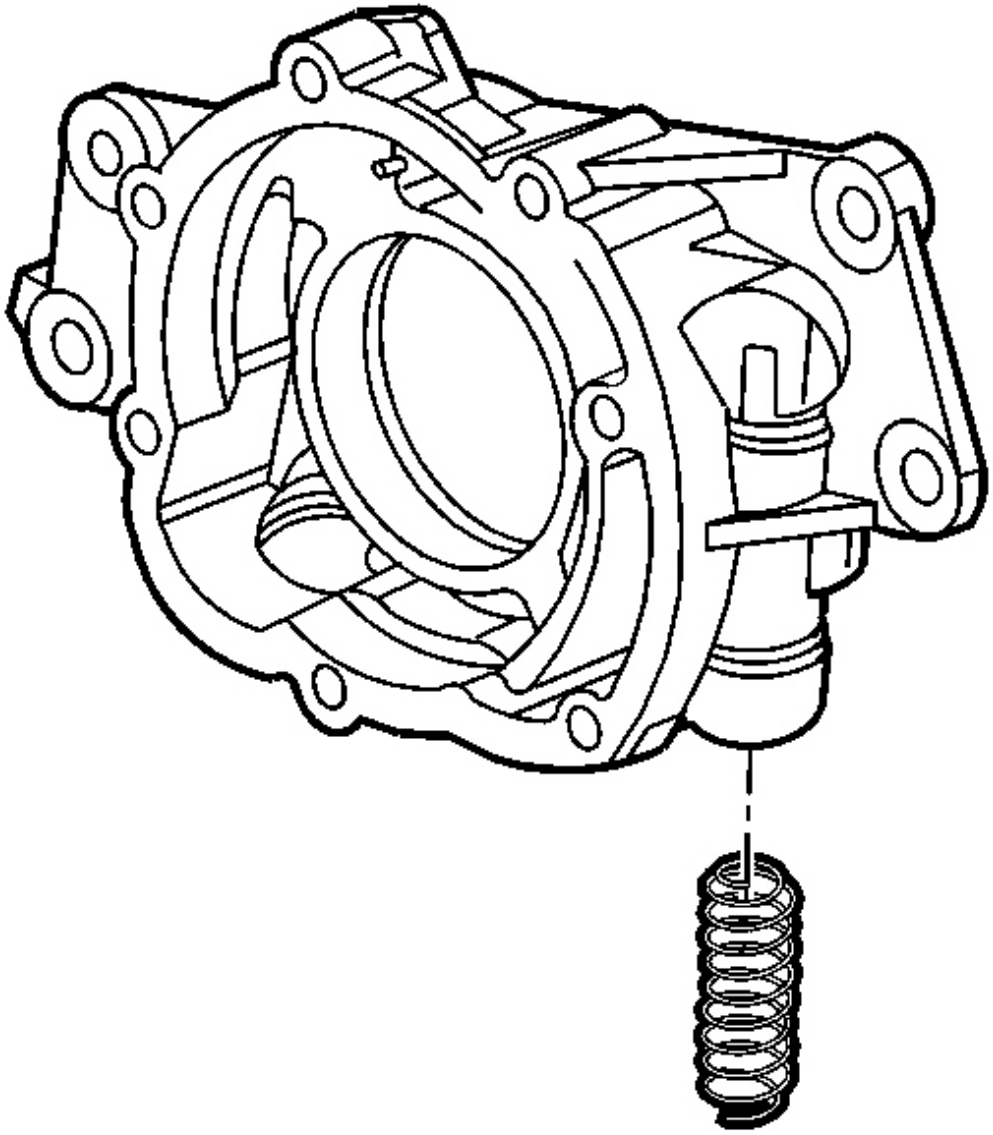

Fig. 223: View Of Oil Pump Pressure Relief Valve Spring
Courtesy of GENERAL MOTORS CORP.

6. Remove the pressure relief valve spring.

cardiagn.com

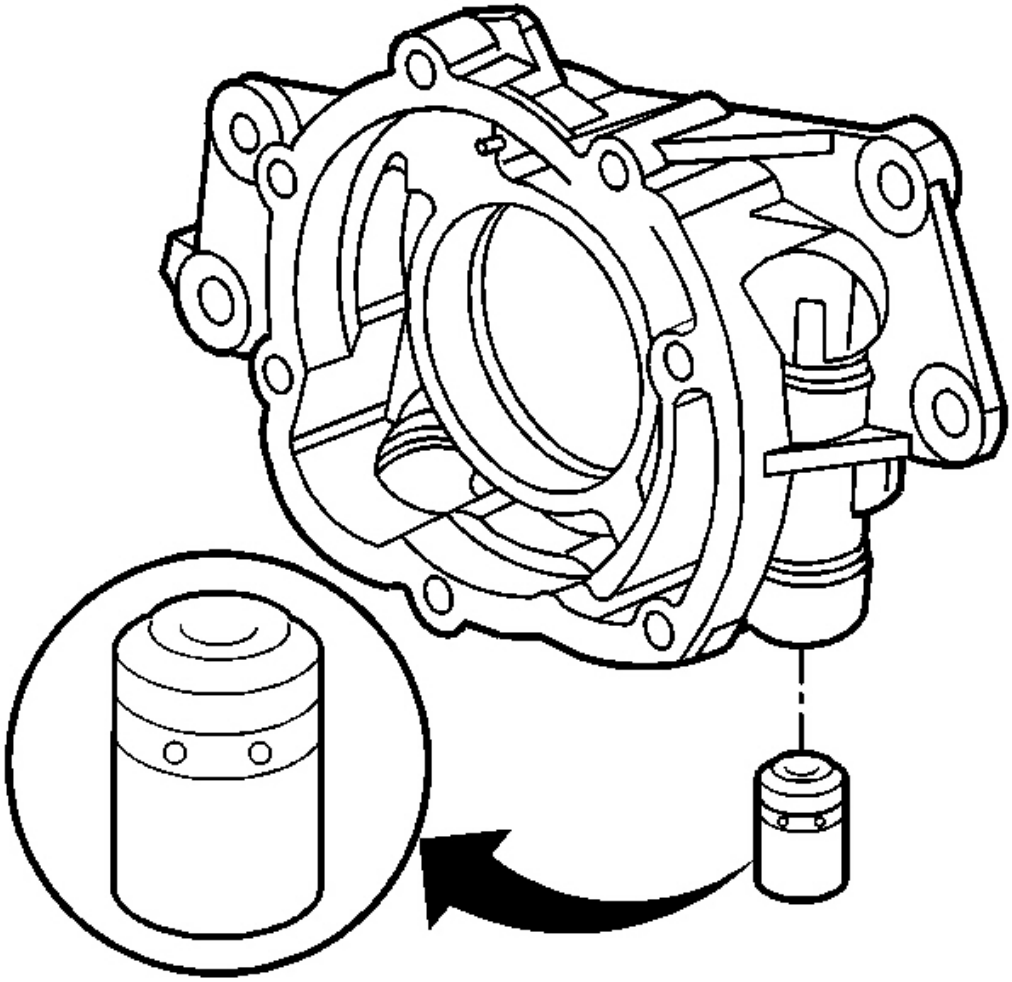

Fig. 224: View Of Oil Pump Pressure Relief Valve
Courtesy of GENERAL MOTORS CORP.

7. Remove the pressure relief valve.
8. Inspect the oil pump components. Refer to **Oil Pump Cleaning and Inspection** .

OIL PUMP CLEANING AND INSPECTION

IMPORTANT:

- **The internal parts of the oil pump assembly are not serviced separately, excluding the spring. If the oil pump components are worn or damaged, replace the oil pump as an assembly.**

cardiagn.com

- **The oil pump pipe and screen are to be serviced as an assembly. Do not attempt to repair the wire mesh portion of the pump and screen assembly.**

1. Clean the parts in solvent.

CAUTION: Refer to Safety Glasses Caution in Cautions and Notices.

2. Dry the parts with compressed air.

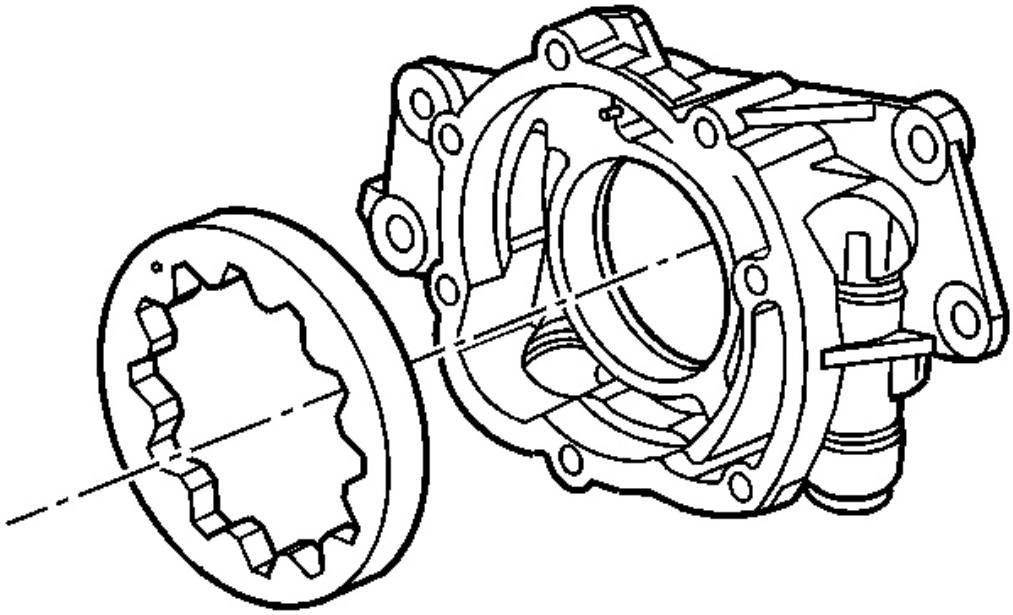

Fig. 225: View Of Oil Pump Driven Gear
Courtesy of GENERAL MOTORS CORP.

3. Inspect the oil pump housing and the cover for cracks, excessive wear, scoring, or casting imperfections.
4. Inspect the oil pump housing-to-engine block oil gallery surface for scratches or gouging.
5. Inspect the oil pump housing for damaged bolt hole threads.

cardiagn.com

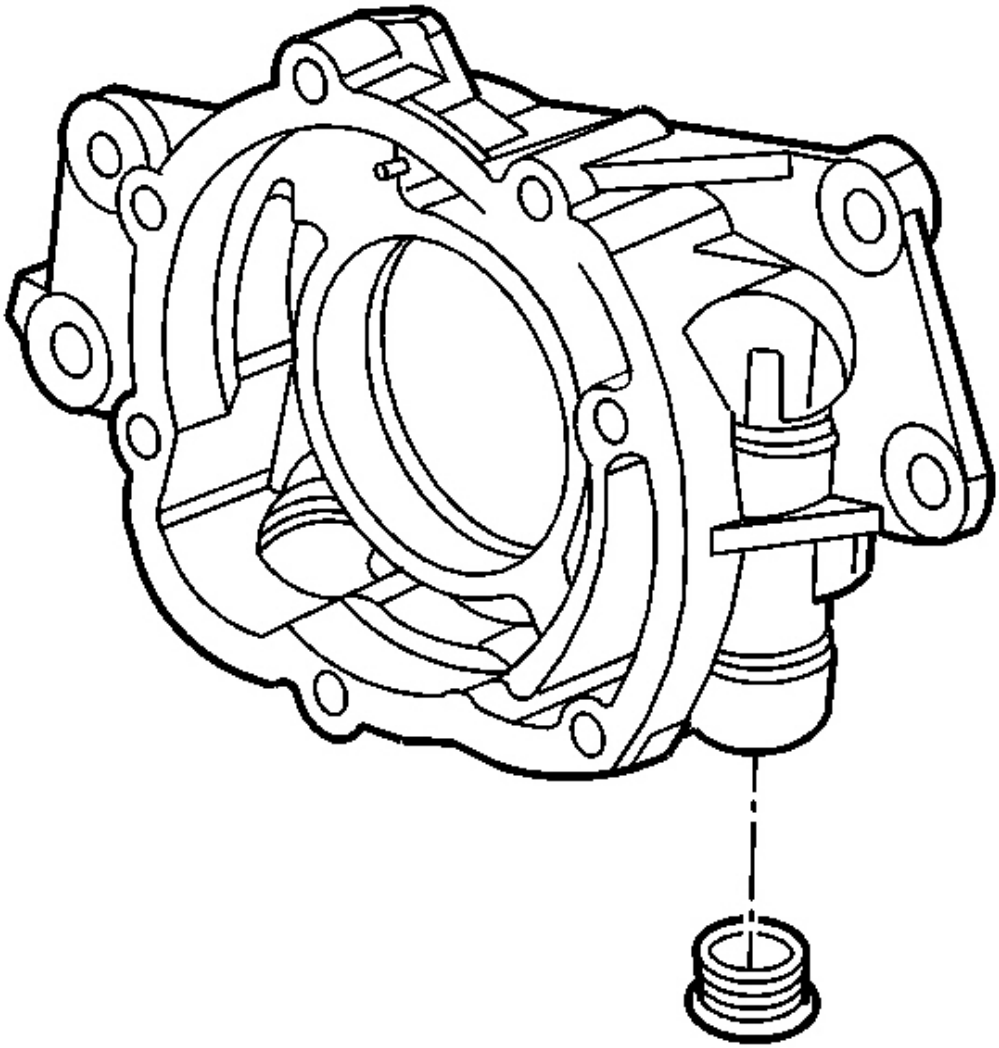

Fig. 226: View Of Oil Pump Pressure Relief Valve Plug
Courtesy of GENERAL MOTORS CORP.

6. Inspect the relief valve plug and plug bore for damaged threads.
7. Inspect the oil pump internal oil passages for restrictions.

cardiagn.com

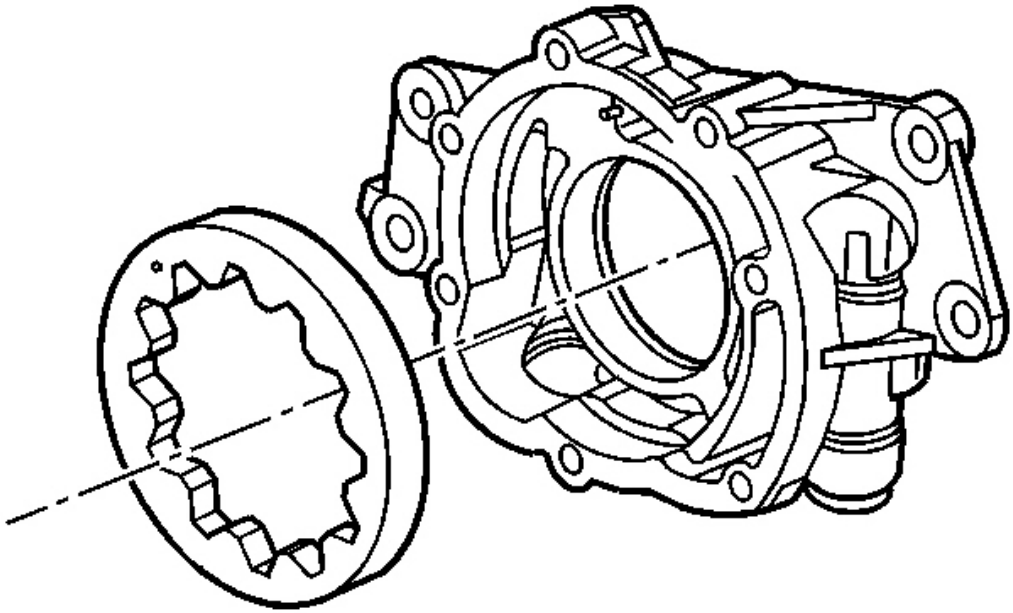

Fig. 227: View Of Oil Pump Driven Gear
Courtesy of GENERAL MOTORS CORP.

8. Inspect the drive gear and driven gear for chipping, galling or wear.

   Minor burrs or imperfections on the gears may be removed with a fine oil stone.

cardiagn.com

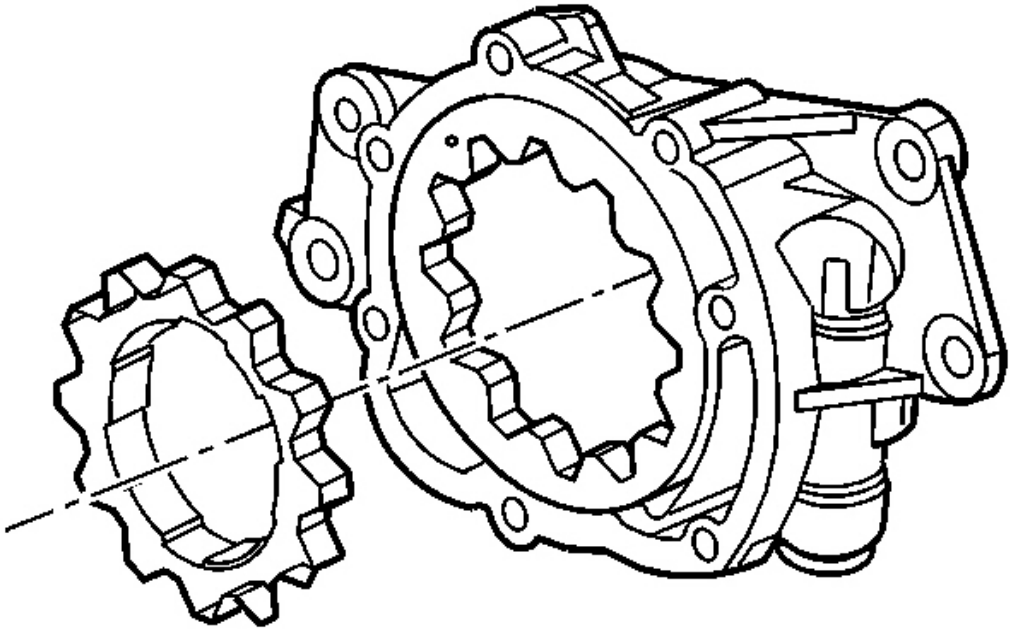

Fig. 228: View Of Oil Pump Drive Gear Splines
Courtesy of GENERAL MOTORS CORP.

9. Inspect the drive gear splines for excessive wear.

cardiagn.com

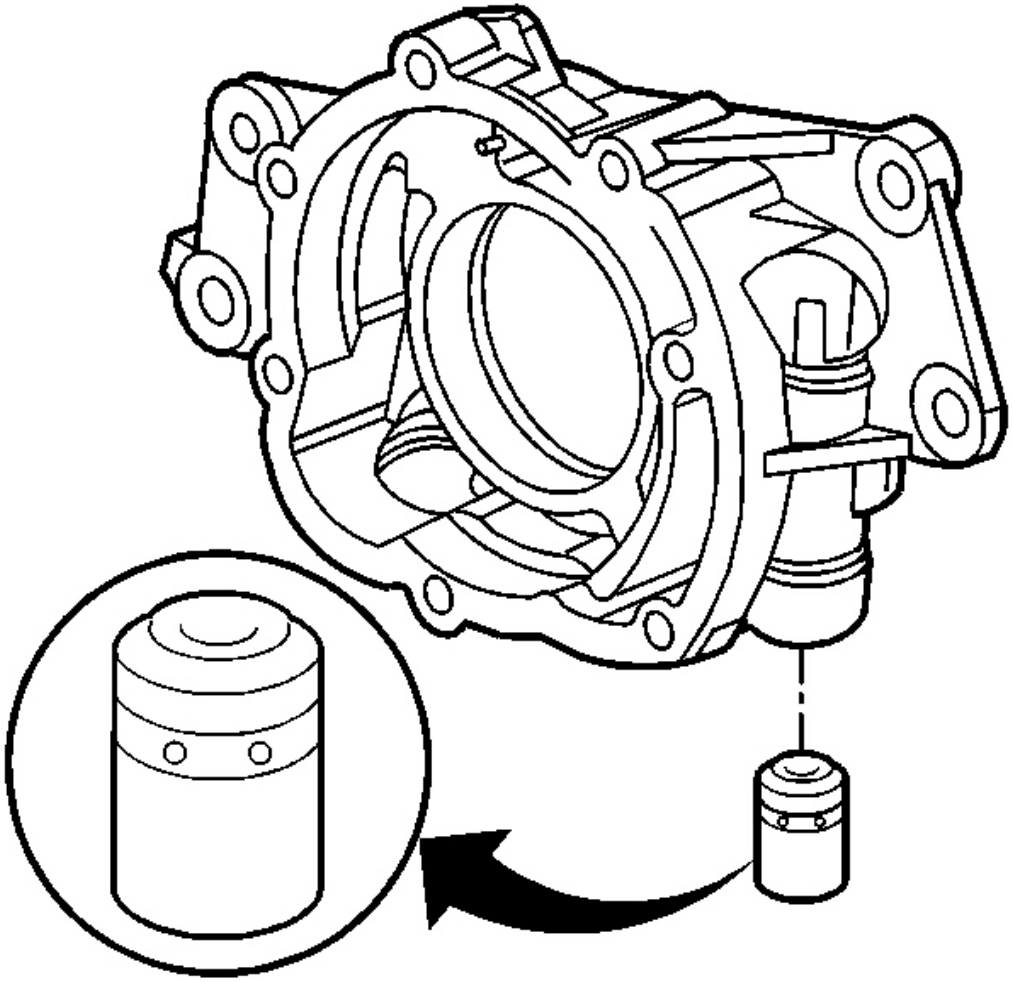

Fig. 229: View Of Oil Pump Pressure Relief Valve
Courtesy of GENERAL MOTORS CORP.

10. Inspect the pressure relief valve and bore for scoring or wear.

    The valve must move freely in the bore with no restrictions.

cardiagn.com

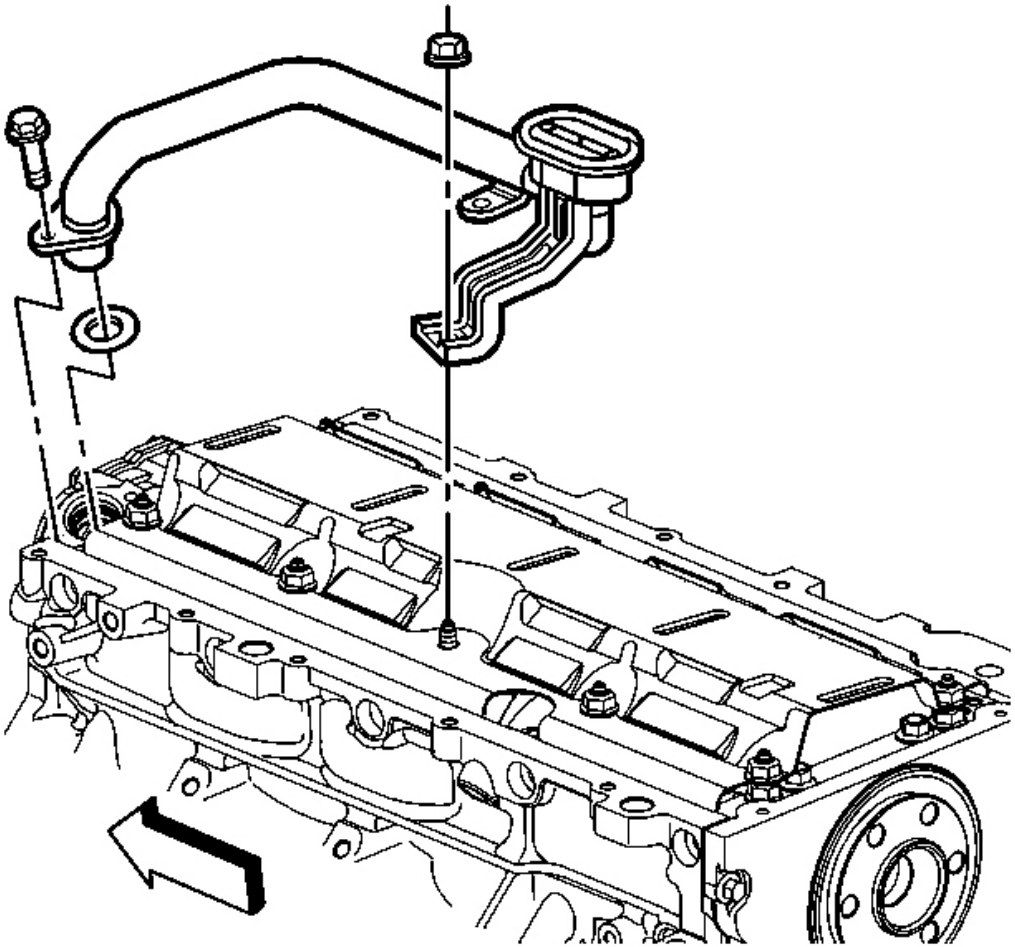

Fig. 230: View Of Oil Pump Screen, Nuts & Bolts
Courtesy of GENERAL MOTORS CORP.

11. Inspect the oil pump screen for debris or restrictions.
12. Inspect the oil pump screen for broken or loose wire mesh.

OIL PUMP ASSEMBLE

cardiagn.com

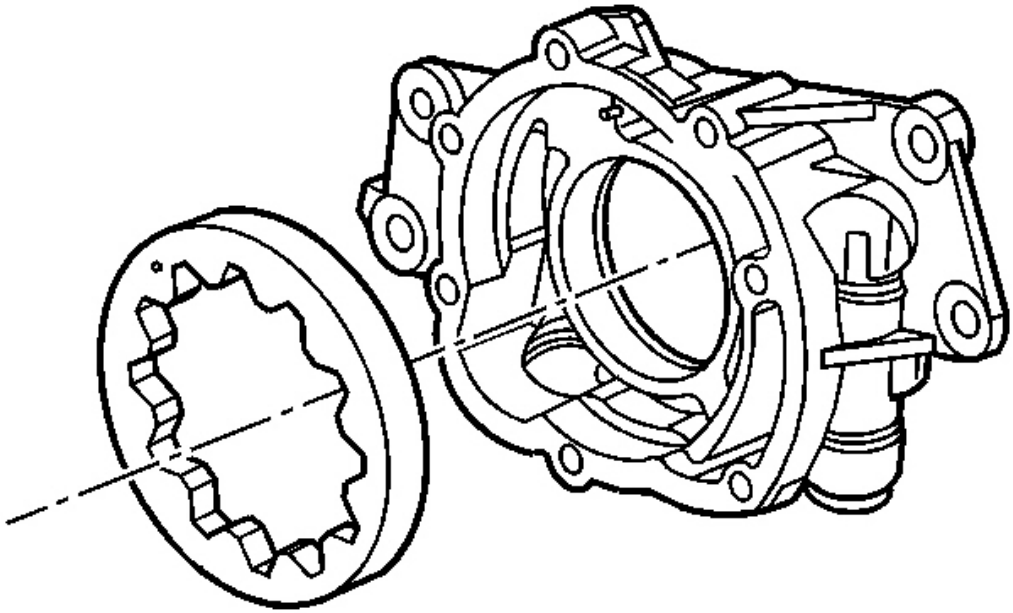

Fig. 231: View Of Oil Pump Driven Gear
Courtesy of GENERAL MOTORS CORP.

IMPORTANT: Prior to assembling the oil pump, coat all wear or internal surfaces with clean engine oil.

1. Install the driven gear into the pump housing.

   Install the driven gear with the orientation mark facing the pump cover.

cardiagn.com

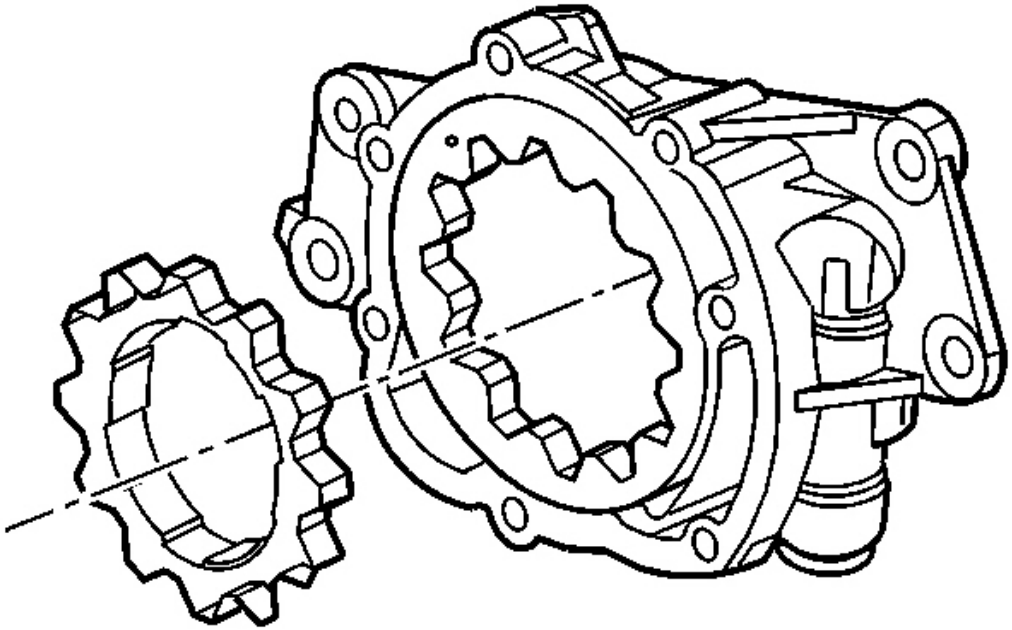

Fig. 232: View Of Oil Pump Drive Gear Splines
Courtesy of GENERAL MOTORS CORP.

2. Install the drive gear into the pump housing.

cardiagn.com

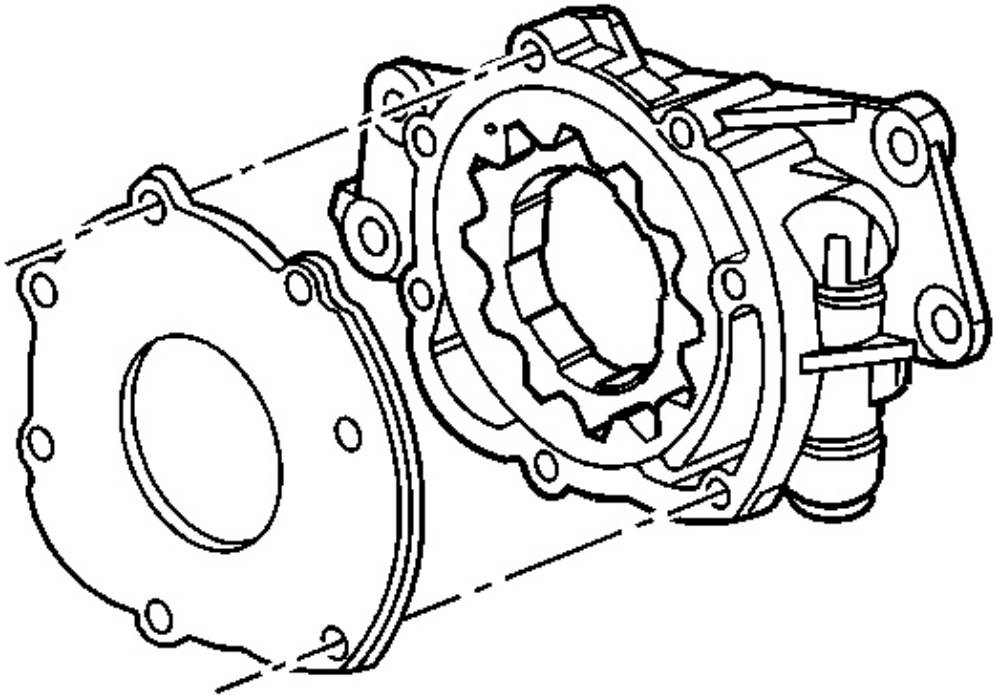

Fig. 233: View Of Oil Pump & Cover
Courtesy of GENERAL MOTORS CORP.

3. Install the oil pump cover.

cardiagn.com

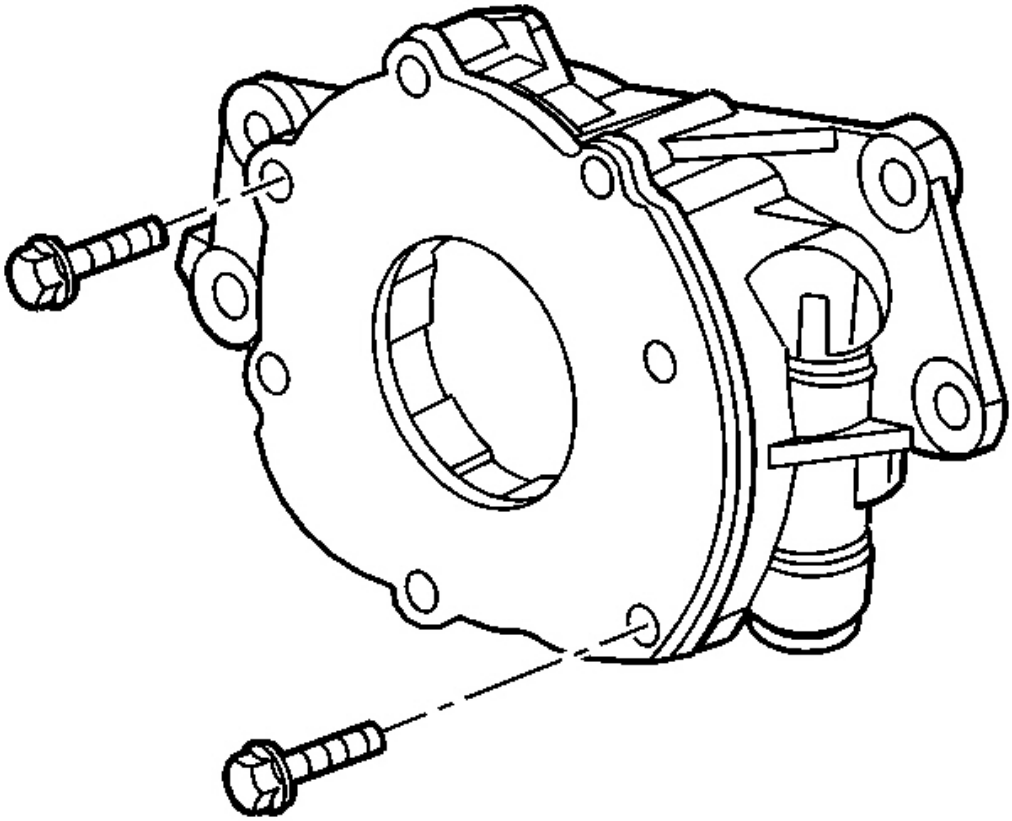

Fig. 234: View Of Oil Pump Cover & Bolts
Courtesy of GENERAL MOTORS CORP.

NOTE: Refer to Fastener Notice in Cautions and Notices.

4. Install the pump cover bolts.

   Tighten: Tighten the oil pump cover bolts to 12 N.m (106 lb in).

cardiagn.com

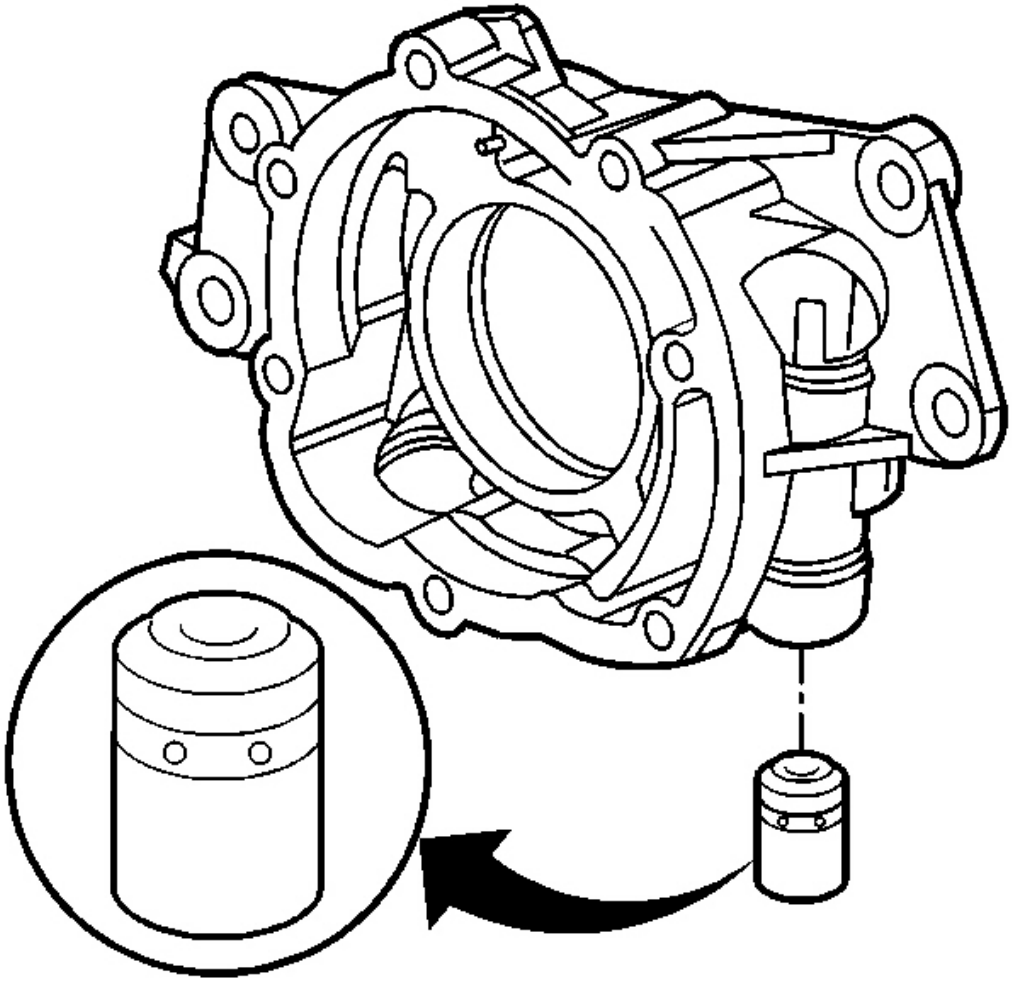

Fig. 235: View Of Oil Pump Pressure Relief Valve
Courtesy of GENERAL MOTORS CORP.

5. Install the regulator valve.

cardiagn.com

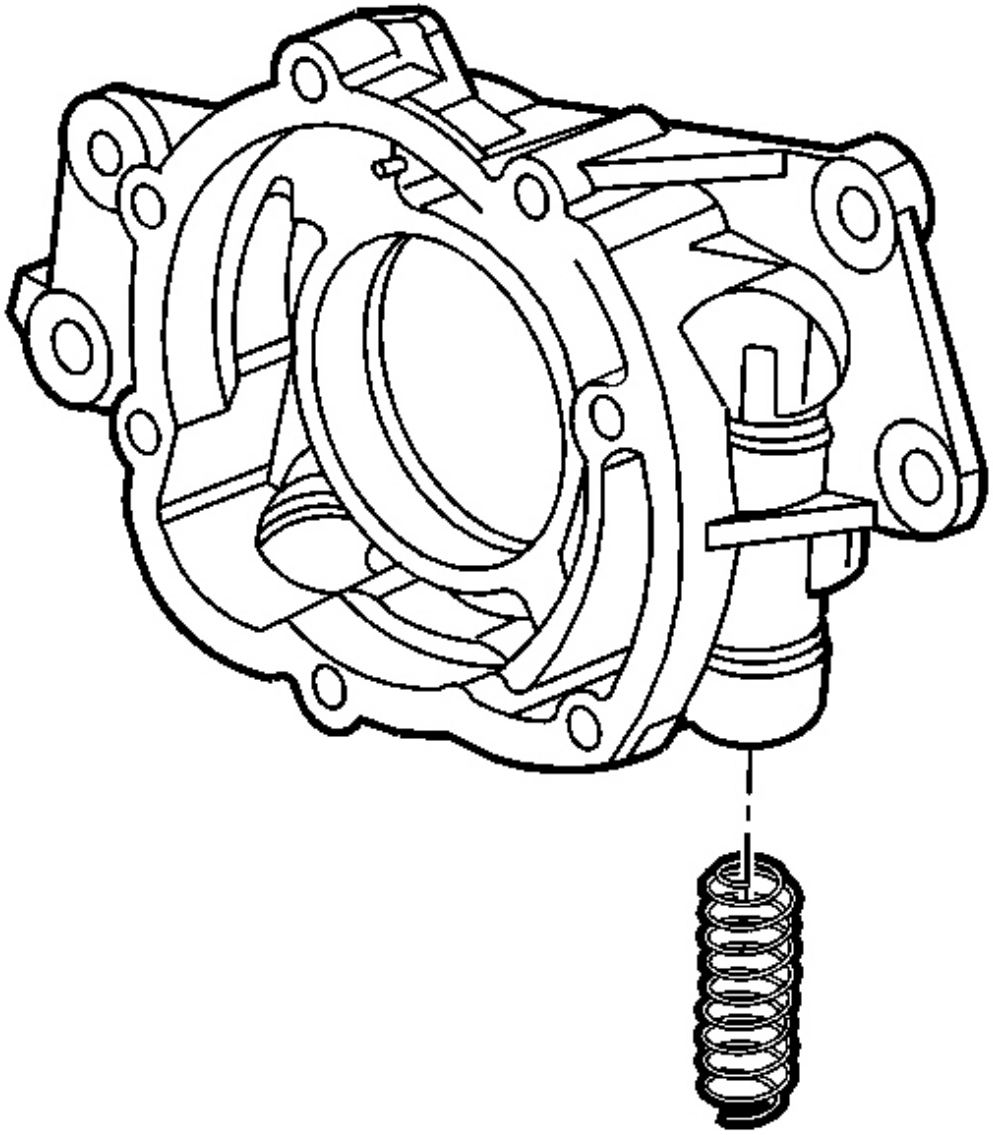

Fig. 236: View Of Oil Pump Pressure Relief Valve Spring
Courtesy of GENERAL MOTORS CORP.

6. Install a NEW regulator valve spring.

cardiagn.com

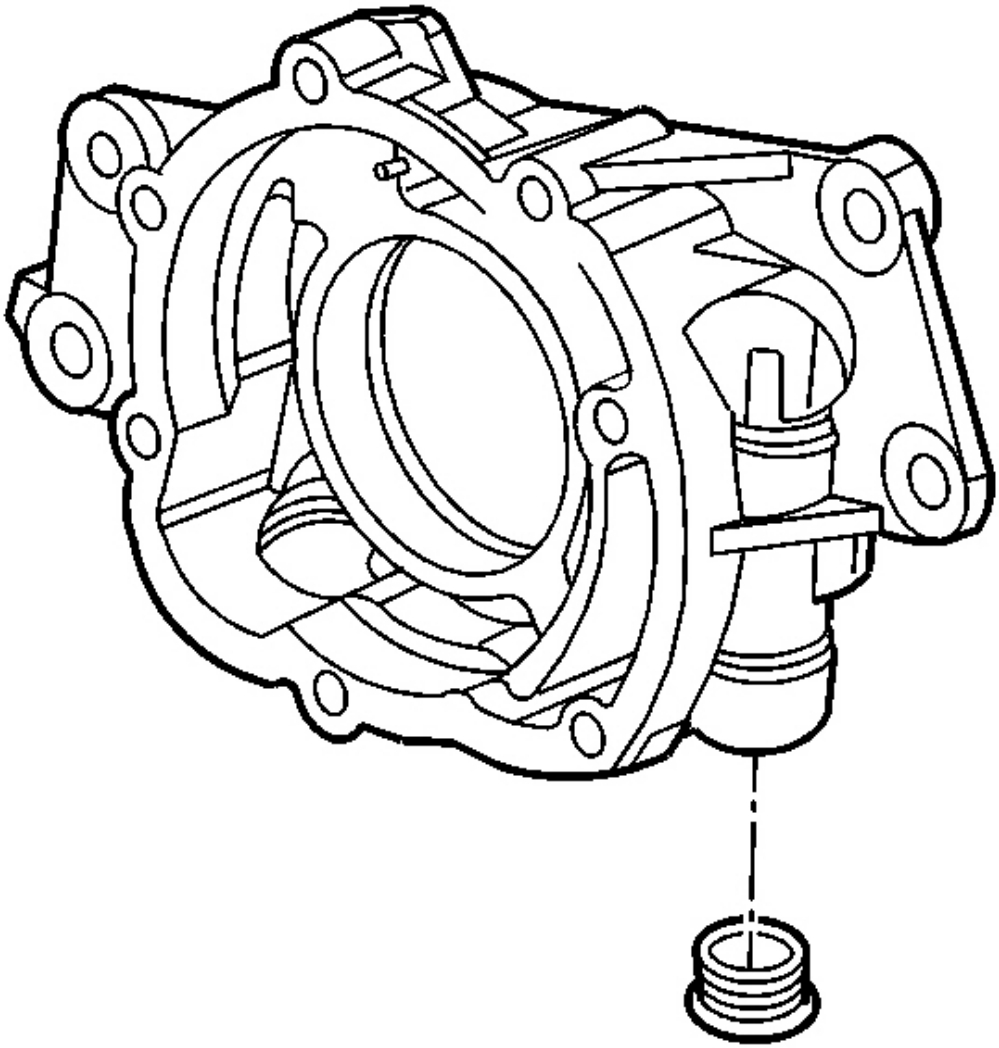

Fig. 237: View Of Oil Pump Pressure Relief Valve Plug
Courtesy of GENERAL MOTORS CORP.

7. Install the pressure relief valve plug.

   Tighten: Tighten the pressure relief valve plug to 12 N.m (106 lb in).

8. Inspect the oil pump for smooth operation by rotating the drive gear.

ENGINE FRONT COVER CLEANING AND INSPECTION

cardiagn.com

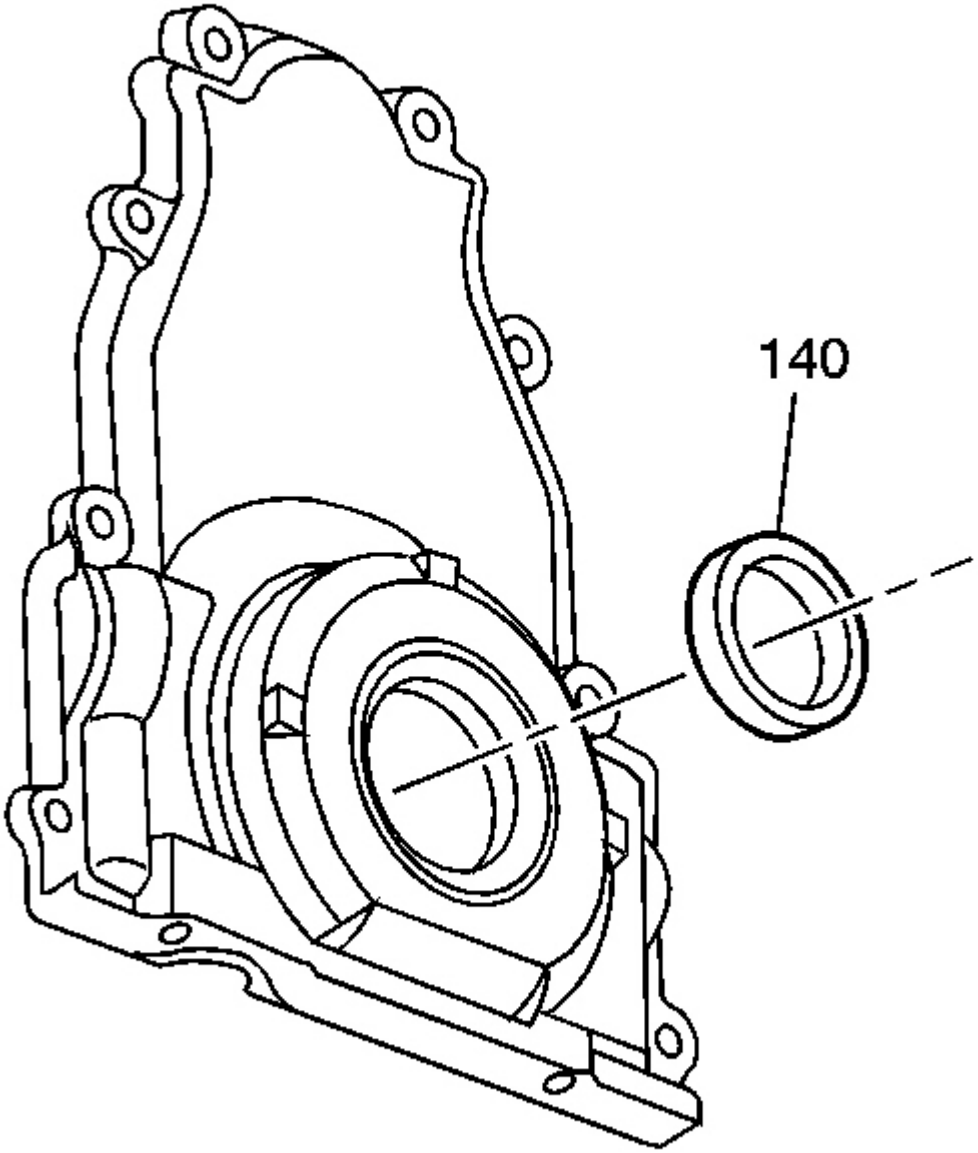

Fig. 238: View Of Crankshaft Front Oil Seal
Courtesy of GENERAL MOTORS CORP.

IMPORTANT:

- **Do not use the crankshaft oil seal again. Install a NEW crankshaft oil seal during assembly.**
- **Do not use the front cover-to-engine block gasket again. Install a**

cardiagn.com

NEW gasket during assembly.

1. Remove the crankshaft oil seal (140) from the front cover.
2. Clean the cover in solvent. Remove the sealant from the cover oil pan surface. Refer to **Replacing Engine Gaskets** .

CAUTION: Refer to Safety Glasses Caution in Cautions and Notices.

3. Dry the cover with compressed air.
4. Inspect the gasket sealing surfaces for excessive scratches or gouging.
5. Inspect the cover-to-oil pan threaded bolt holes for damaged threads or debris.
6. Inspect the crankshaft oil seal mounting bore for damage.

ENGINE REAR COVER CLEANING AND INSPECTION

cardiagn.com

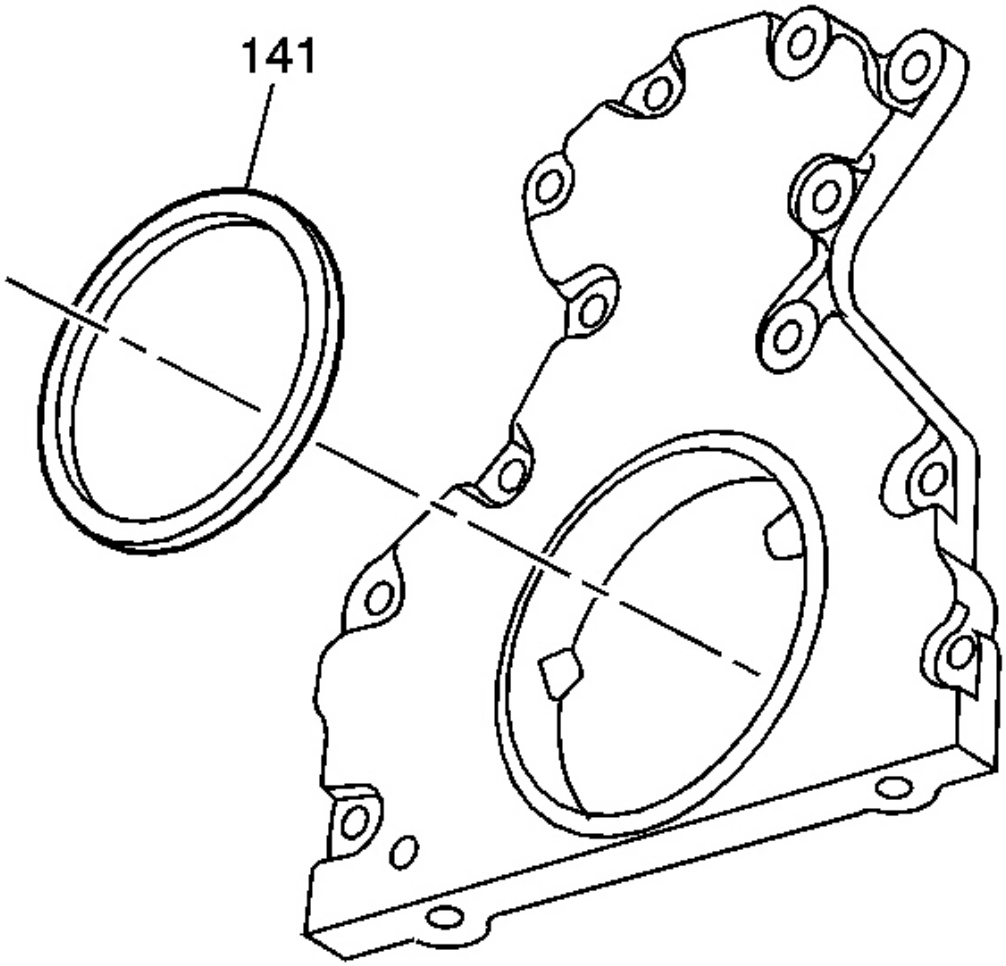

Fig. 239: View Of Crankshaft Rear Oil Seal
Courtesy of GENERAL MOTORS CORP.

IMPORTANT:

- **Do not use the crankshaft oil seal again. Install a NEW crankshaft oil seal during assembly.**
- **Do not use the rear cover-to-engine block gasket again. Install a NEW gasket during assembly.**

1. Remove the crankshaft oil seal (141) from the rear cover.
2. Clean the cover in solvent. Remove the sealant from the cover oil pan surface. Refer to **Replacing Engine Gaskets** .

cardiagn.com

CAUTION: Refer to Safety Glasses Caution in Cautions and Notices.

3. Dry the cover with compressed air.
4. Inspect the gasket sealing surfaces for excessive scratches or gouging.
5. Inspect the cover-to-oil pan threaded bolt holes for damaged threads or debris.
6. Inspect the crankshaft oil seal mounting bore for damage.

ENGINE VALLEY COVER CLEANING AND INSPECTION

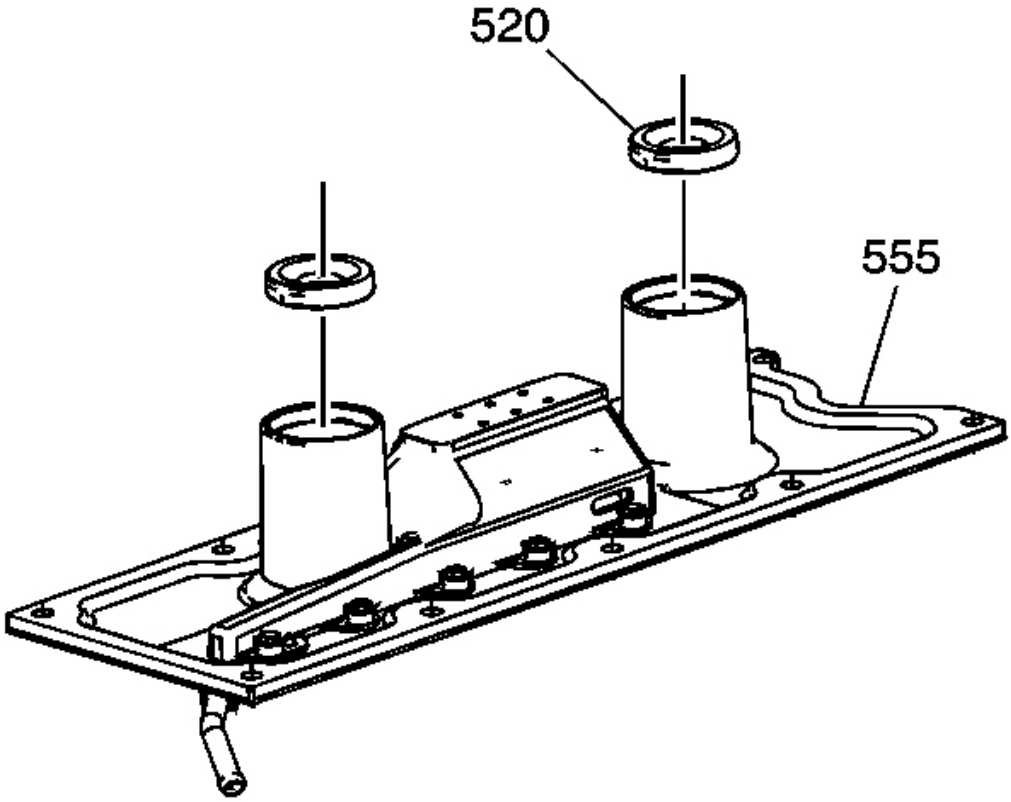

Fig. 240: Knock Sensor Oil Seals & Cover
Courtesy of GENERAL MOTORS CORP.

IMPORTANT: Do not use the valley cover knock sensor oil seals again. Install NEW oil seals during assembly.

cardiagn.com

1. Remove the knock sensor oil seals (520) from the valley cover (555).

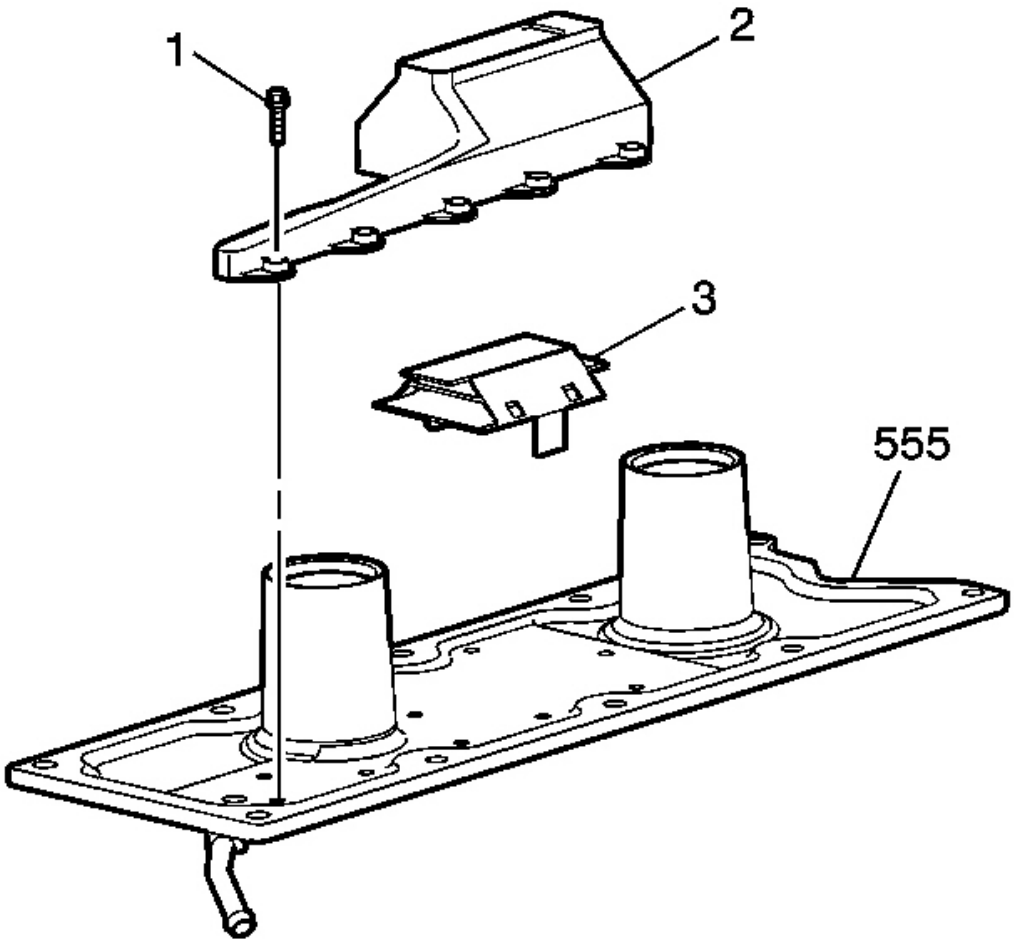

Fig. 241: Bolts, Baffle Cover, Baffle & Valley Cover
Courtesy of GENERAL MOTORS CORP.

2. Remove the bolts (1), baffle cover (2), and baffle (3) from the valley cover (555).
3. Clean the valley cover components in solvent.

CAUTION: Refer to Safety Glasses Caution in Cautions and Notices.

4. Dry the components with compressed air.

cardiagn.com

5. Inspect the gasket sealing surfaces for excessive scratches or gouging.
6. Inspect the oil seal bores for excessive scratching or gouging.
7. Inspect the ventilation tube for a loose fit or restrictions.

NOTE: Refer to Fastener Notice in Cautions and Notices.

8. Install the baffle (3), baffle cover (2) and bolts (1) to the valley cover (555).

   Tighten: Tighten the baffle cover bolts to 5 N.m (44 lb in).

VALVE ROCKER ARM COVER CLEANING AND INSPECTION

cardiagn.com

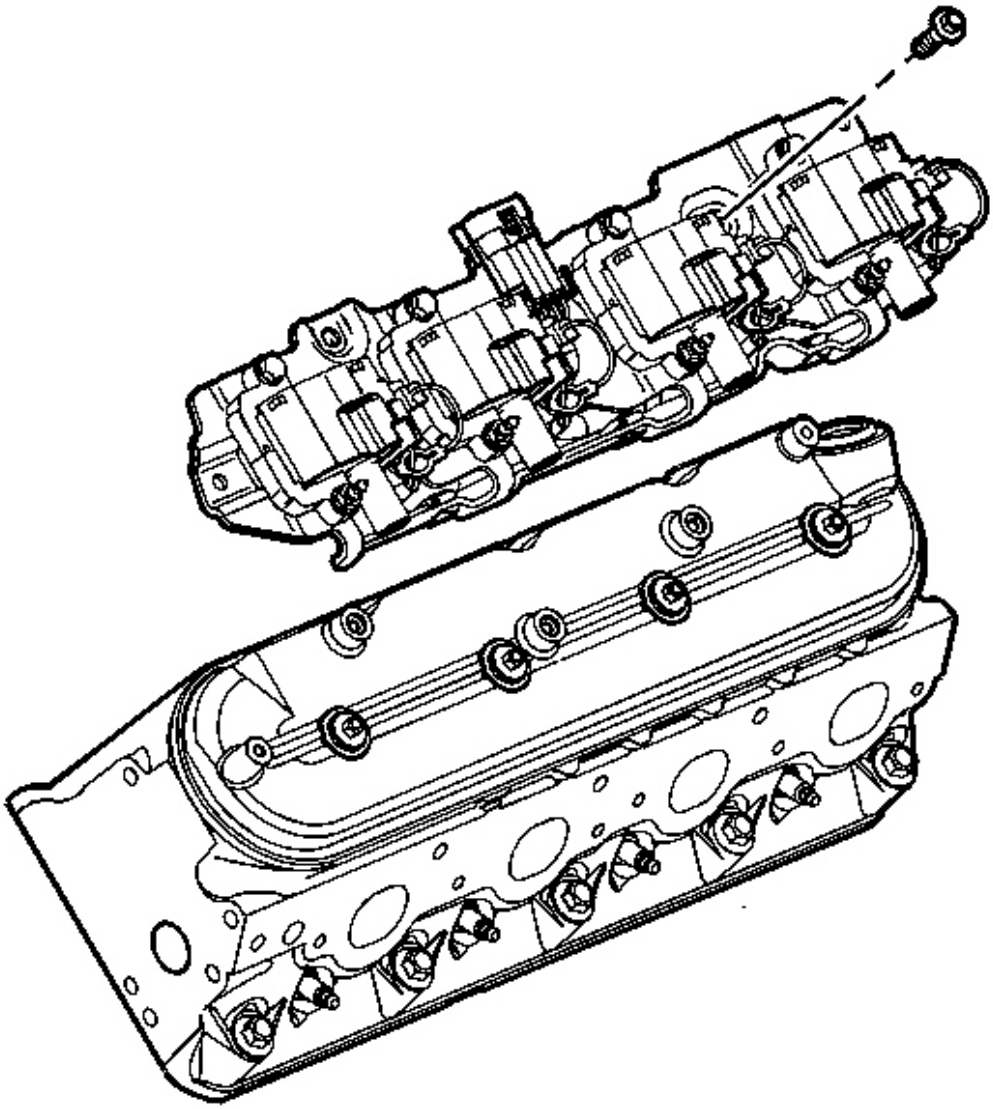

Fig. 242: Ignition Coil, Bracket Assembly & Bolts
Courtesy of GENERAL MOTORS CORP.

IMPORTANT:

- **Do not use the valve rocker arm cover gasket again. Install a NEW gasket during assembly.**
- **Remove the ignition coils from the bracket before cleaning the bracket in solvent. Do not submerge the ignition coils in solvent.**

cardiagn.com

- **Do not remove the oil fill tube from the cover unless service is required.**
- **If the oil fill tube has been removed from the rocker arm cover, install a NEW tube during assembly.**

1. Remove the ignition coil and bracket assembly and bolts from the rocker cover, if required.

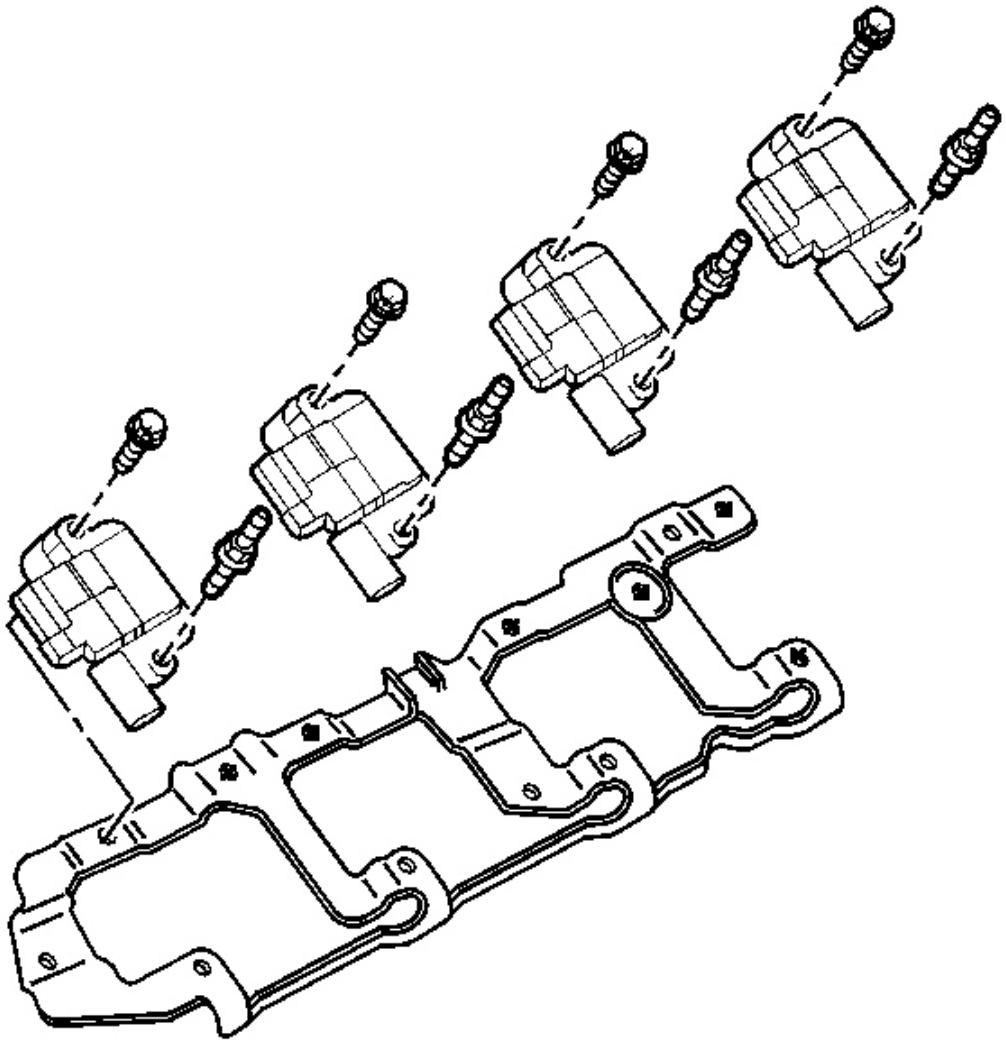

Fig. 243: View Of Left Ignition Coils & Bolts
Courtesy of GENERAL MOTORS CORP.

cardiagn.com

2. Remove the ignition coils and bolts from the bracket, if required.

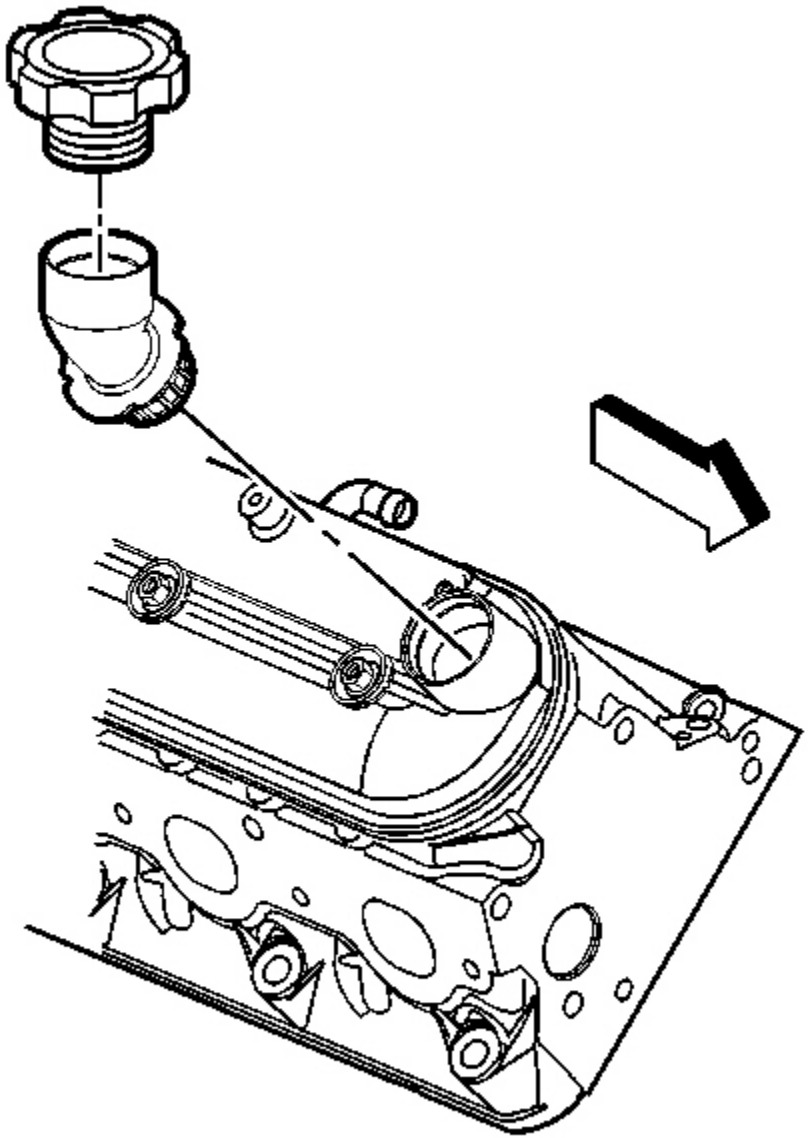

Fig. 244: View Of Oil Fill Tube
Courtesy of GENERAL MOTORS CORP.

3. Inspect the tube for a loose fit or damage.

cardiagn.com

4. Remove the oil fill cap and tube from the right cover, if required.

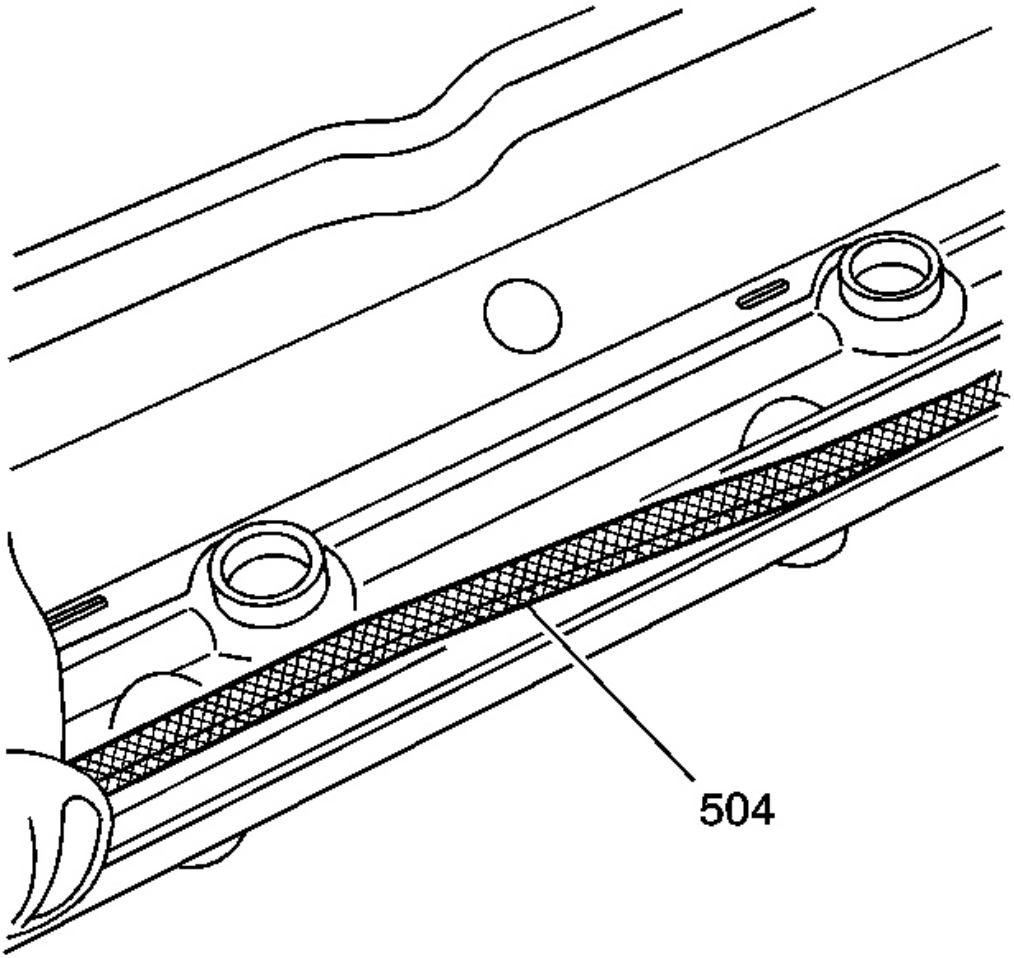

Fig. 245: View Of Valve Rocker Arm Cover Gasket
Courtesy of GENERAL MOTORS CORP.

5. Remove the gaskets (504) from the covers.
6. Remove the cover mounting bolts, with grommets.

   Cover mounting bolts and grommets that are not damaged may be used again during assembly.

7. Clean the covers and coil brackets in solvent.

cardiagn.com

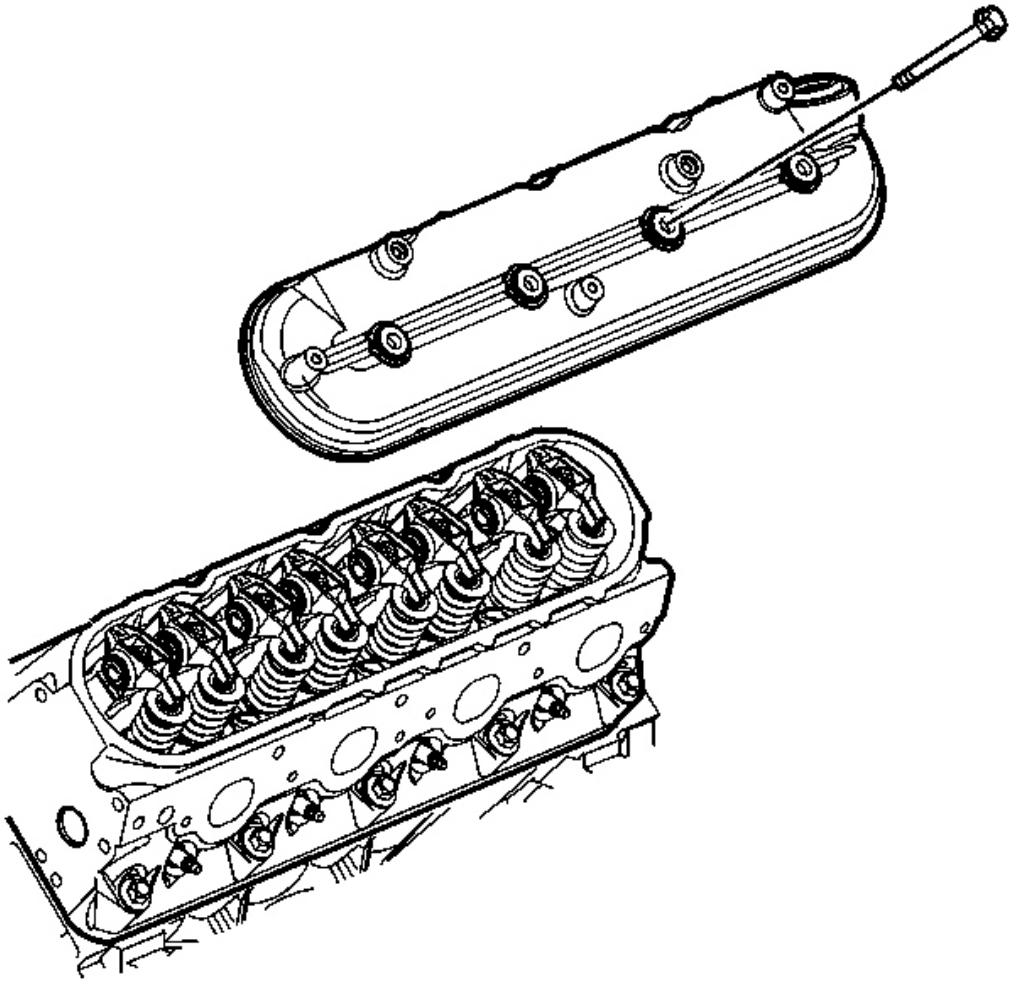

Fig. 246: Valve Cover To Cylinder Head View
Courtesy of GENERAL MOTORS CORP.

CAUTION: Refer to Safety Glasses Caution in Cautions and Notices.

8. Dry the components with compressed air.
9. Inspect the ventilation system passages for restrictions.
10. Inspect the gasket grooves for damage.
11. Inspect the coil bracket threaded bolt holes for damaged threads or debris.

cardiagn.com

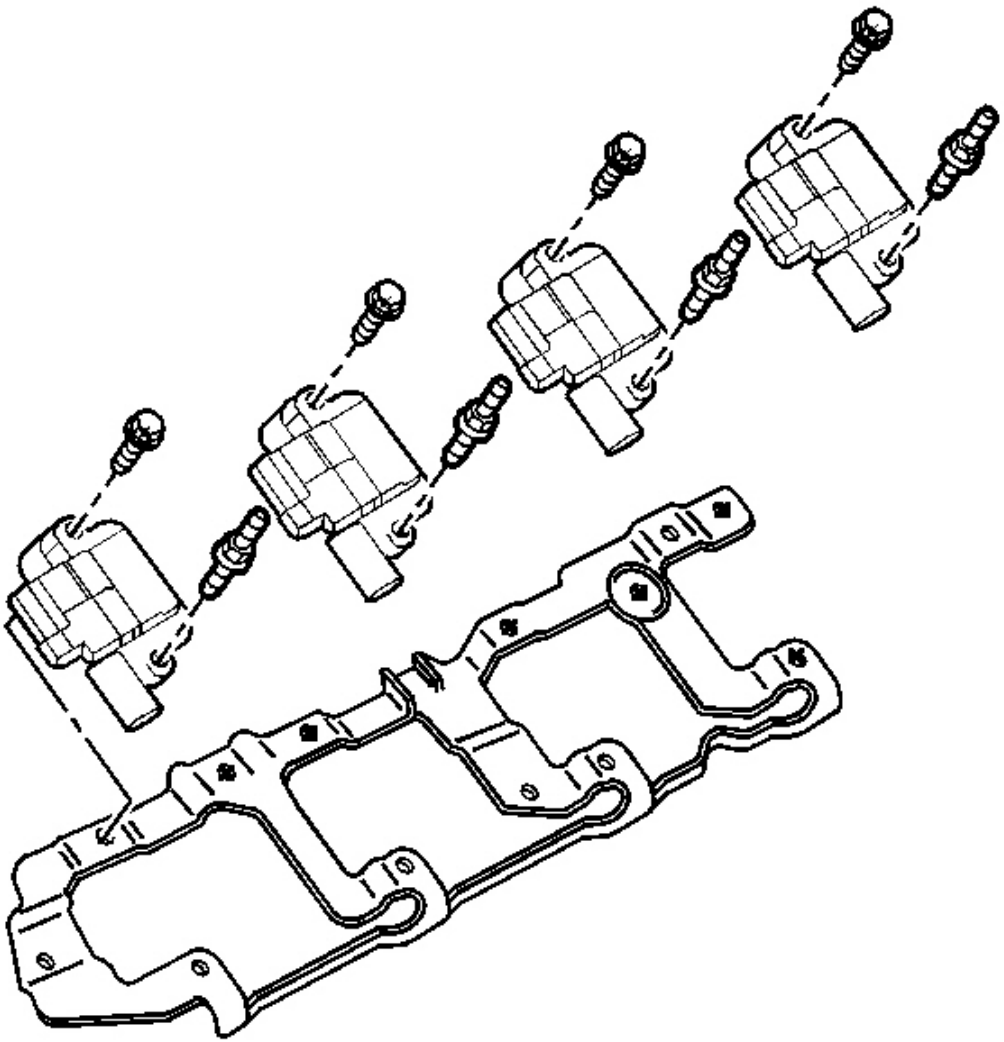

Fig. 247: View Of Left Ignition Coils & Bolts
Courtesy of GENERAL MOTORS CORP.

12. Inspect the coil mounting brackets for cracking, stripped bolt hole threads, or other damage.
13. Inspect the ignition coils for exterior damage and bent or broken connector pins.

OIL PAN CLEANING AND INSPECTION

cardiagn.com

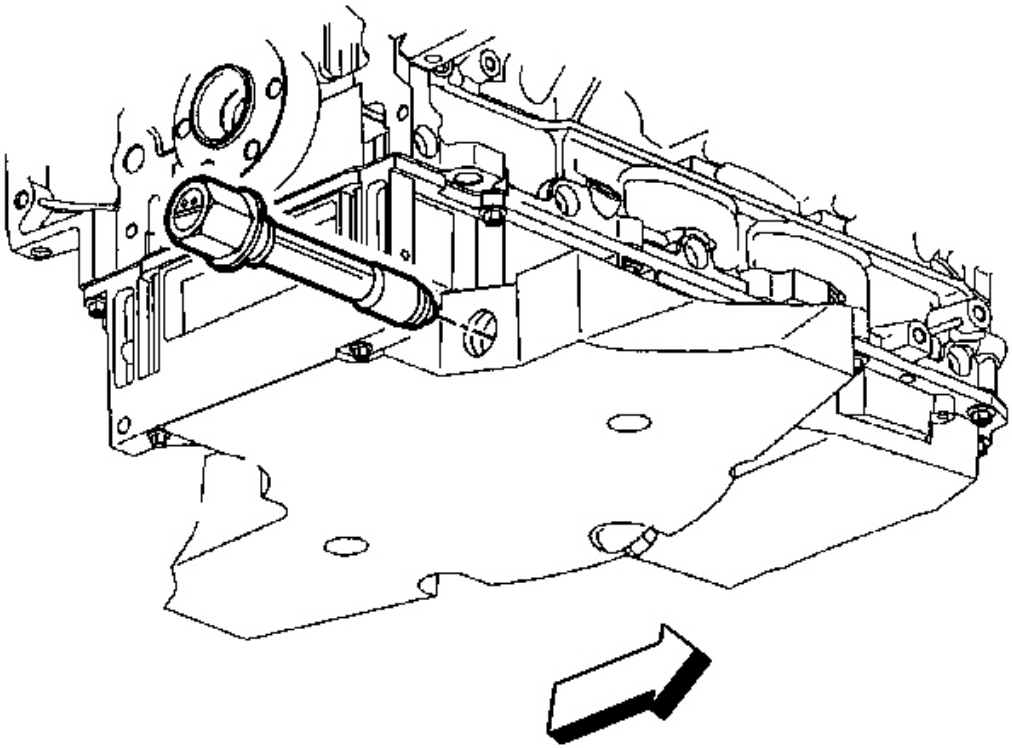

Fig. 248: Oil Level Sensor & Oil Pan
Courtesy of GENERAL MOTORS CORP.

IMPORTANT:

- **Do not use the oil pan gaskets again. Install NEW gaskets during assembly.**
- **When installing a NEW oil pan gasket, it is not necessary to install the rivets that retain the NEW gasket to the pan.**

1. Remove the oil level sensor from the pan.

cardiagn.com

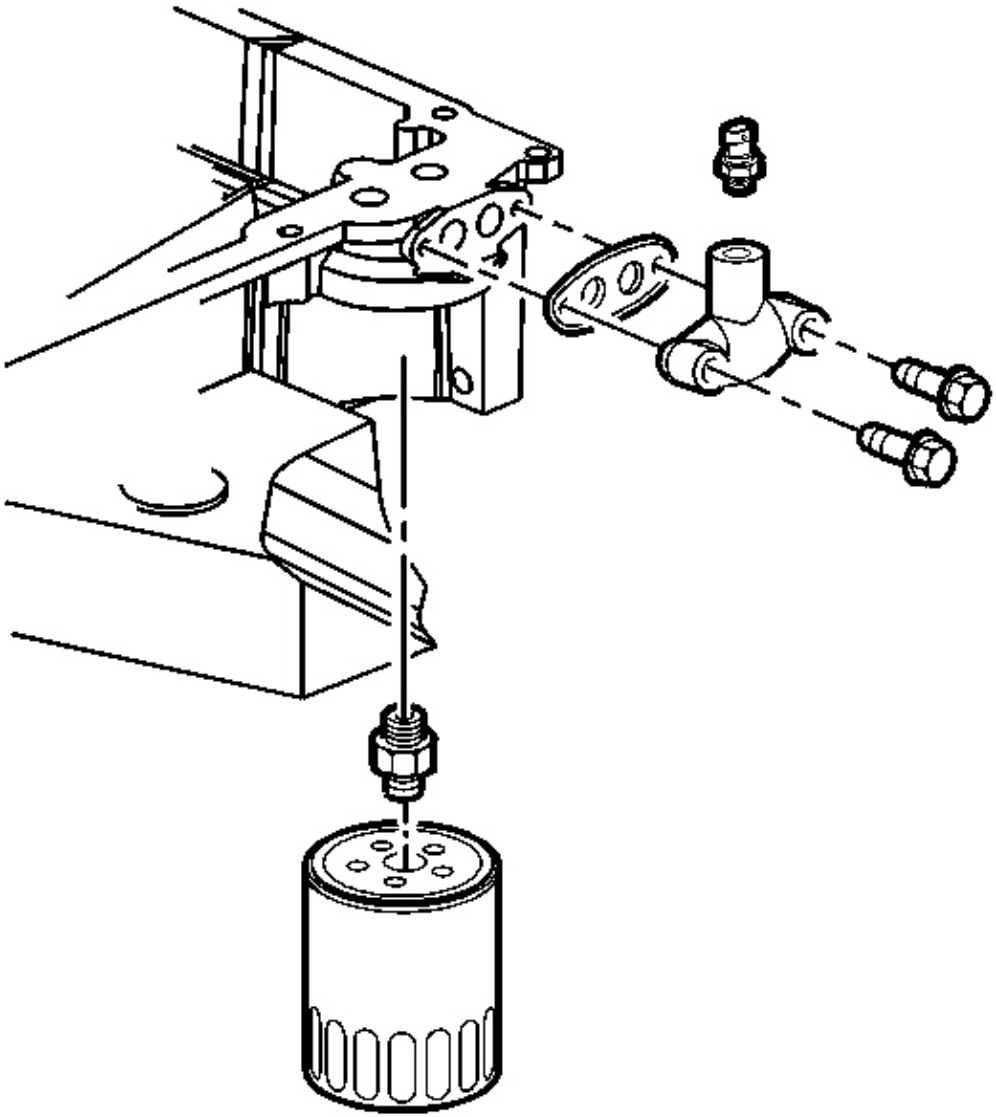

Fig. 249: Oil Temperature Sensor, Oil Pan Cover, Bolts, And Gasket
Courtesy of GENERAL MOTORS CORP.

2. Remove the oil temperature sensor, oil pan cover, gasket, and bolts.

cardiagn.com

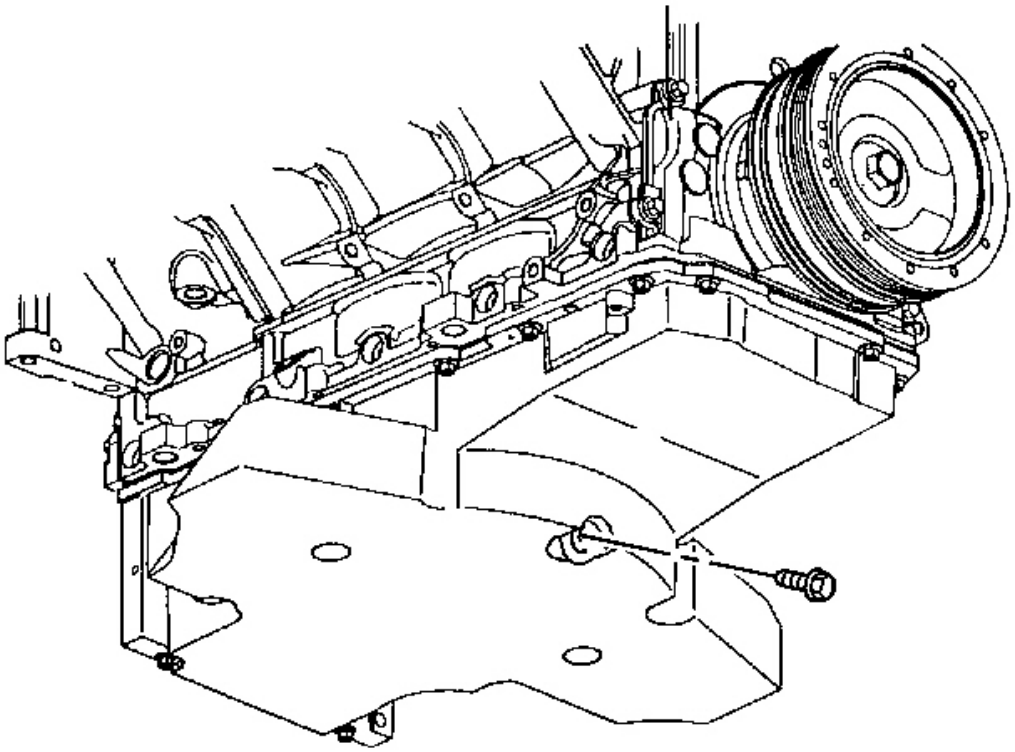

Fig. 250: Oil Pan Drain Plug & O-Ring Seal
Courtesy of GENERAL MOTORS CORP.

3. Remove the oil pan drain plug and O-ring seal.

cardiagn.com

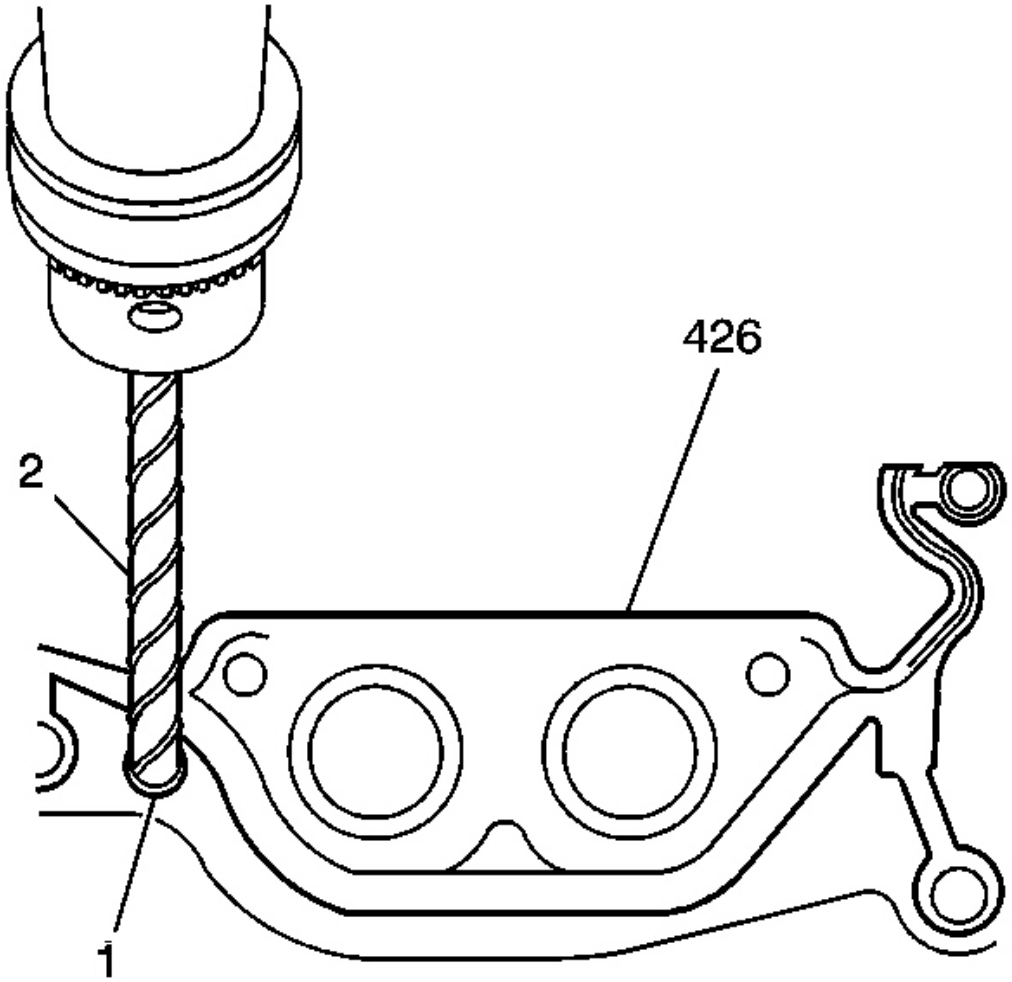

Fig. 251: Drill, Gasket & Oil Pan Gasket Retaining Rivets
Courtesy of GENERAL MOTORS CORP.

4. Drill (2) out the oil pan gasket retaining rivets (1), if required.
5. Remove the oil pan gasket (426).
6. Discard the gasket.

cardiagn.com

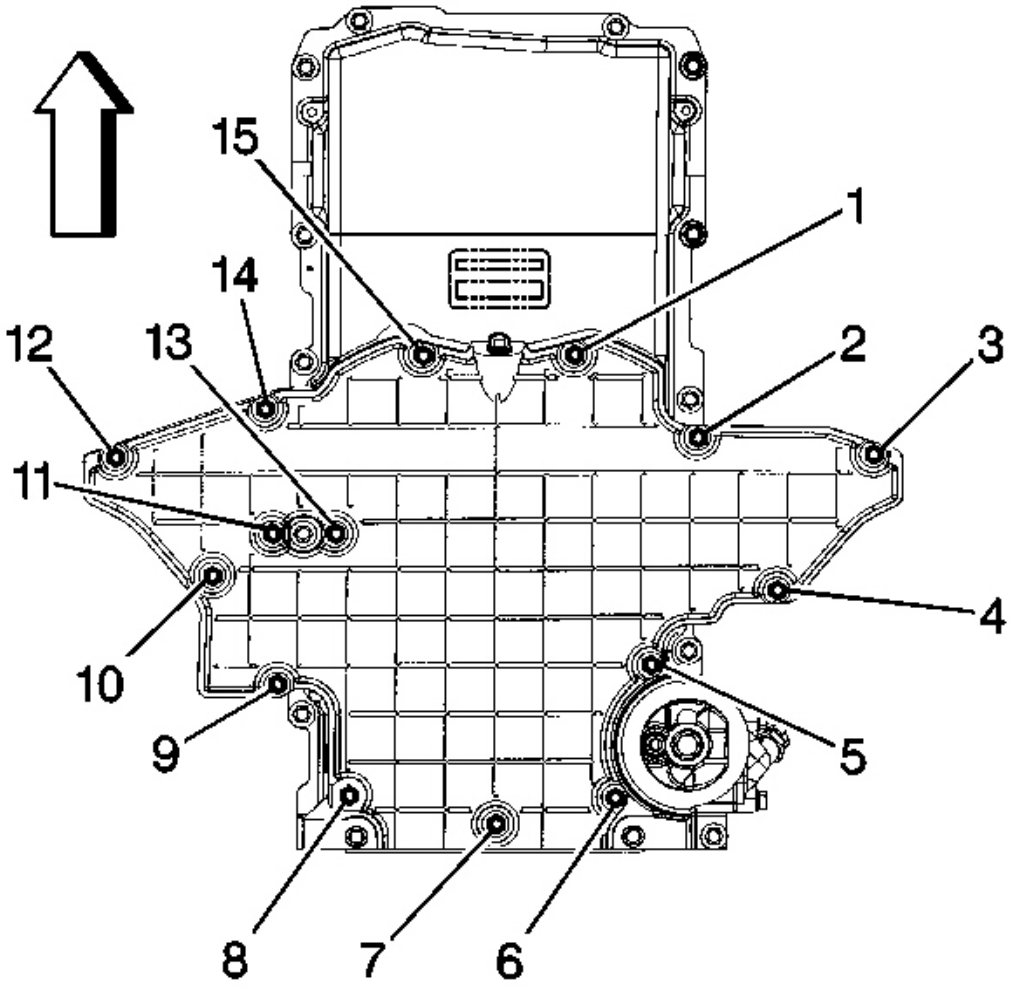

Fig. 252: Oil Pan - Lower - Bolts
Courtesy of GENERAL MOTORS CORP.

7. Remove the oil pan - lower - bolts (1-15).

cardiagn.com

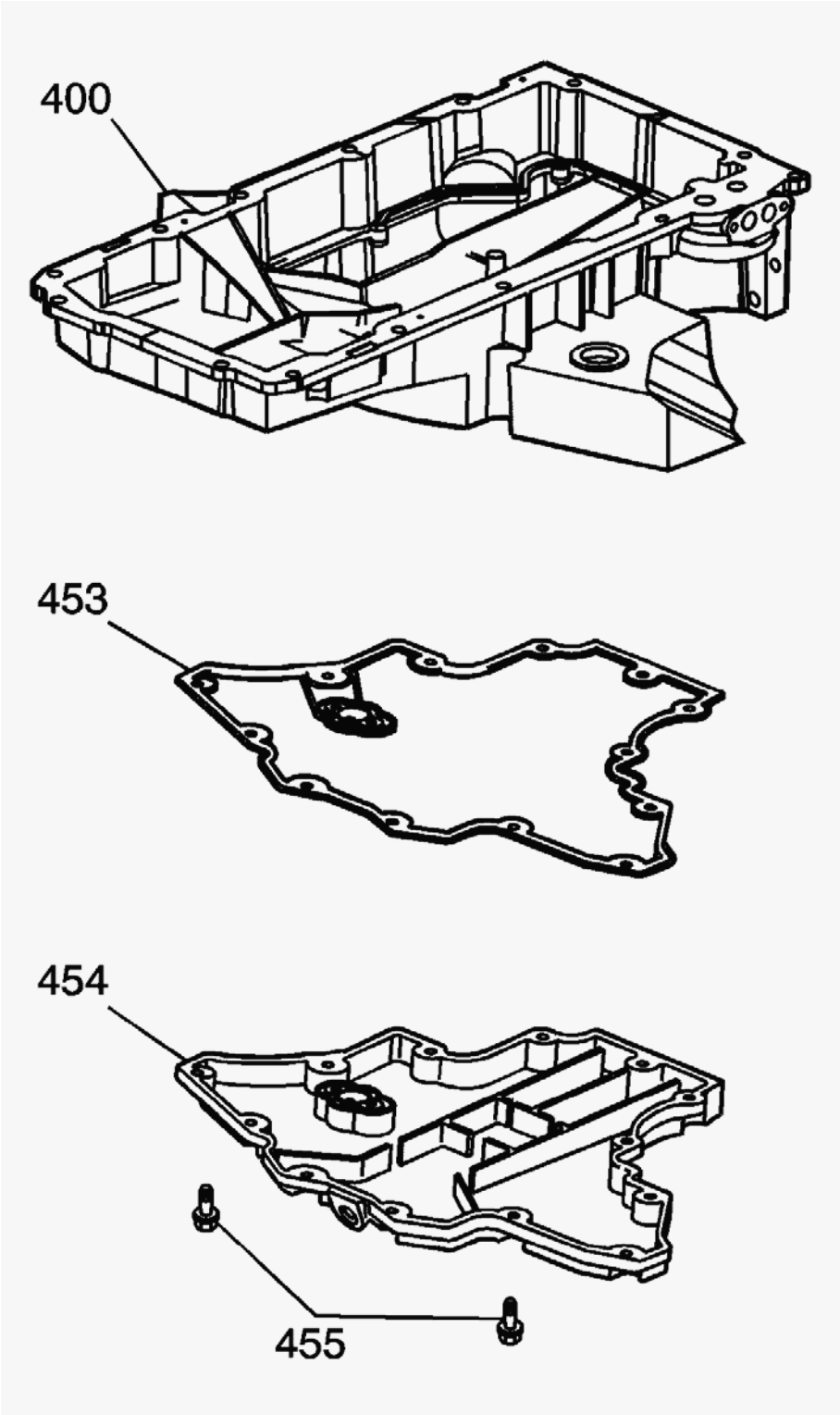

Fig. 253: Oil Pan - Upper, Gasket, Oil Pan - Lower & Bolts
Courtesy of GENERAL MOTORS CORP.

8. Separate the oil pan (400) - upper, gasket (453), oil pan (454) - lower, and bolts (455).

cardiagn.com

9. Discard the oil pan gasket.

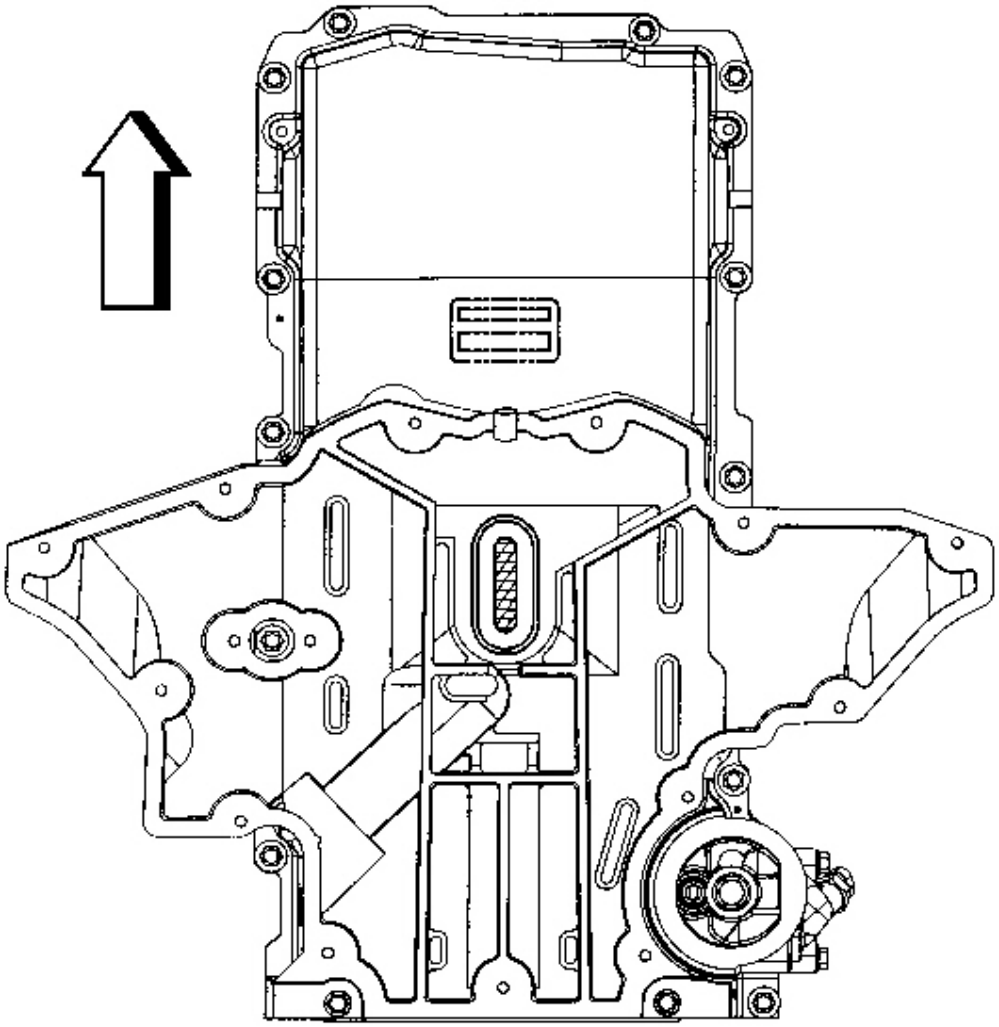

Fig. 254: Oil Pan - Lower - To Crankshaft Oil Deflector, Crankshaft, Or Other Internal Engine Components
Courtesy of GENERAL MOTORS CORP.

10. Clean the oil pan halves in solvent. Be sure to thoroughly clean all of the oil passages and recesses of dirt and debris.
11. Clean the oil pan gasket surfaces. Refer to **Replacing Engine Gaskets** .

cardiagn.com

CAUTION: Refer to Safety Glasses Caution in Cautions and Notices.

12. Dry the oil pan with compressed air.
13. Inspect the gasket sealing surfaces for excessive scratches or gouging. Refer to **Replacing Engine Gaskets** .

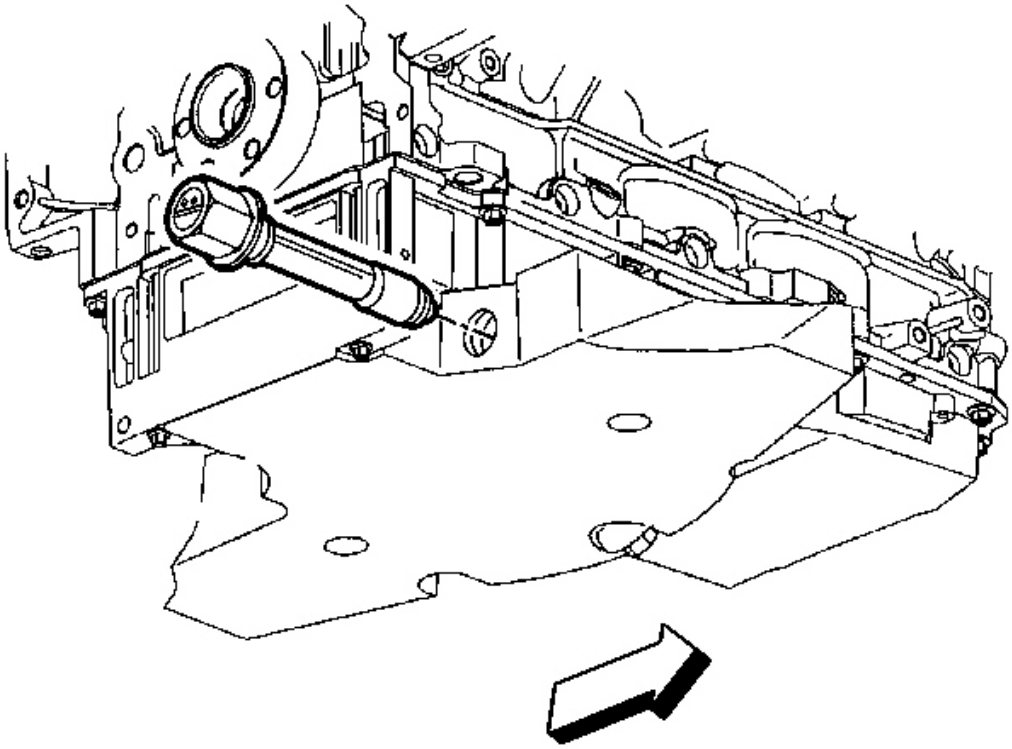

Fig. 255: Oil Level Sensor & Oil Pan
Courtesy of GENERAL MOTORS CORP.

14. Inspect the oil pan oil level sensor seal surface damage.

    The O-ring seal of the sensor may be used again if it is not cut or damaged.

cardiagn.com

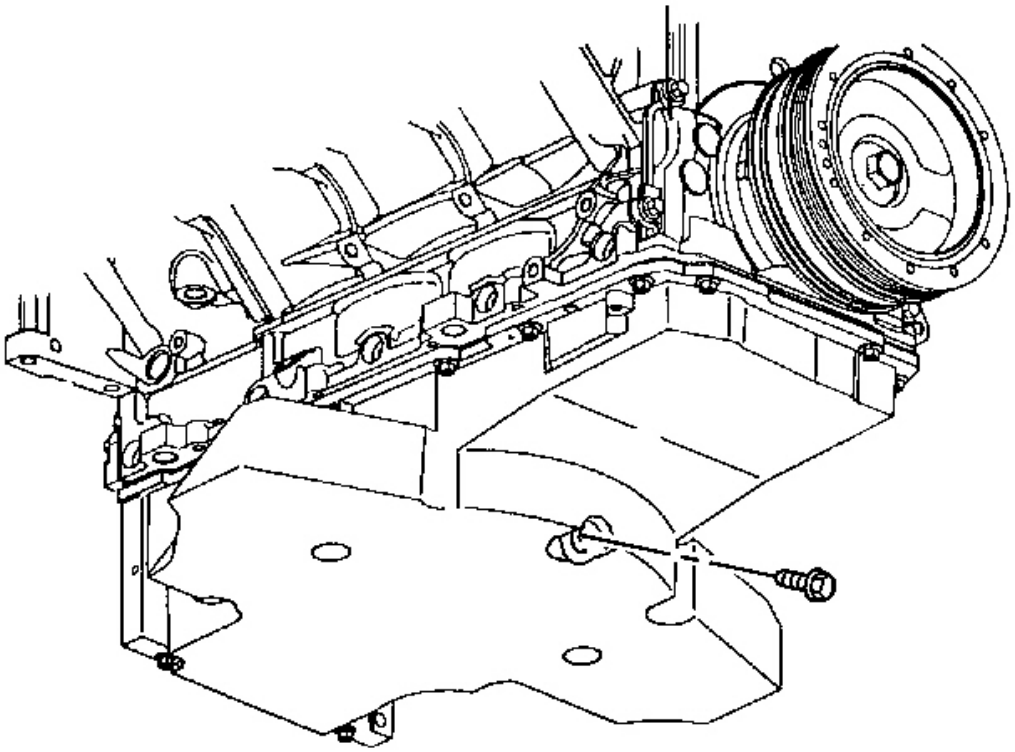

Fig. 256: Oil Pan Drain Plug & O-Ring Seal
Courtesy of GENERAL MOTORS CORP.

15. Inspect the oil pan drain plug and threaded drain hole for damaged threads.

    The drain plug O-ring seal may be used again if it is not cut or damaged.

cardiagn.com

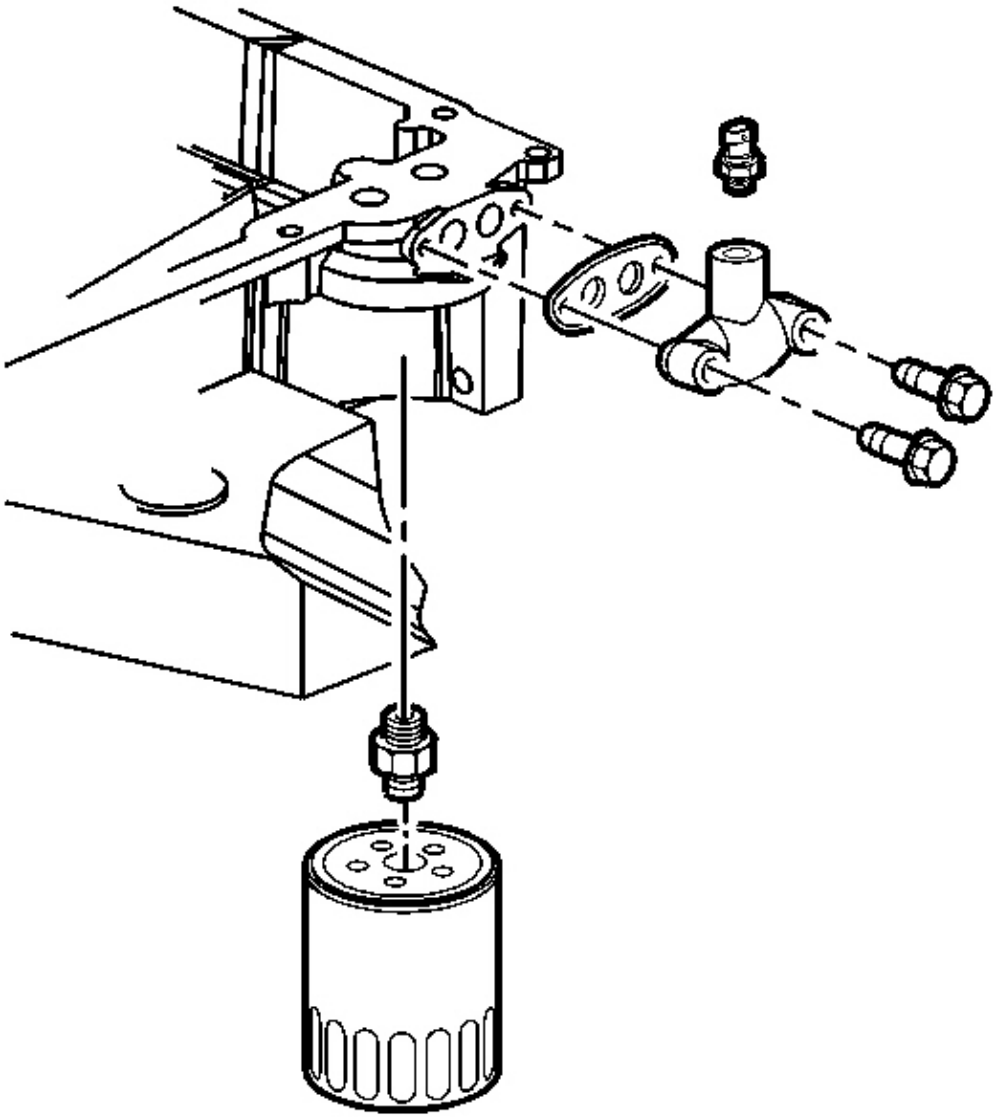

Fig. 257: Oil Temperature Sensor, Oil Pan Cover, Bolts, And Gasket
Courtesy of GENERAL MOTORS CORP.

16. Inspect the oil filter and pan cover sealing surface for scratches or gouging.
17. Inspect the oil passages for restrictions.

cardiagn.com

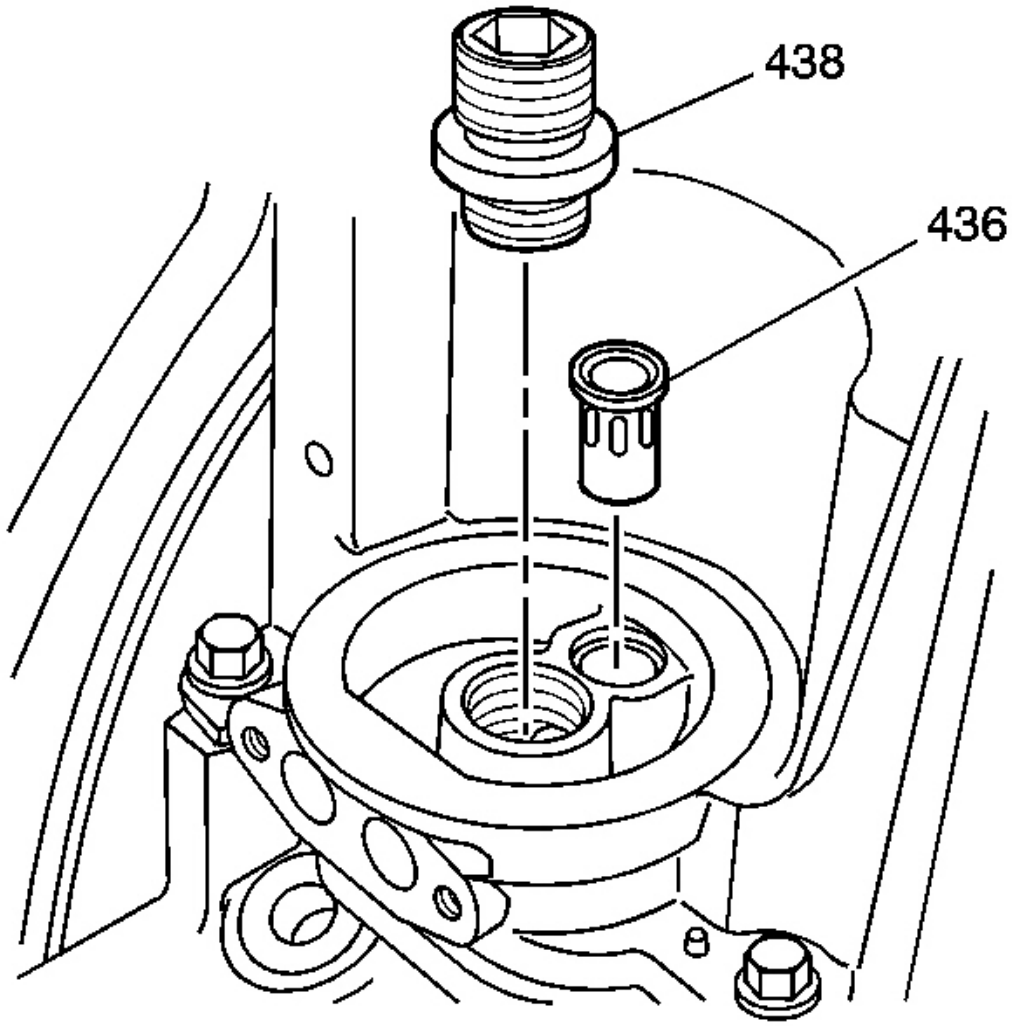

Fig. 258: View Of Oil Filter Fitting & Valve
Courtesy of GENERAL MOTORS CORP.

18. Inspect the oil filter fitting (438) for a loose fit or damaged threads.
19. Inspect the oil filter bypass valve (436) for proper operation.

Lightly push the bypass valve into the bore. The valve spring should seat the valve to the proper position.

INTAKE MANIFOLD CLEANING AND INSPECTION

Cleaning Procedure

cardiagn.com

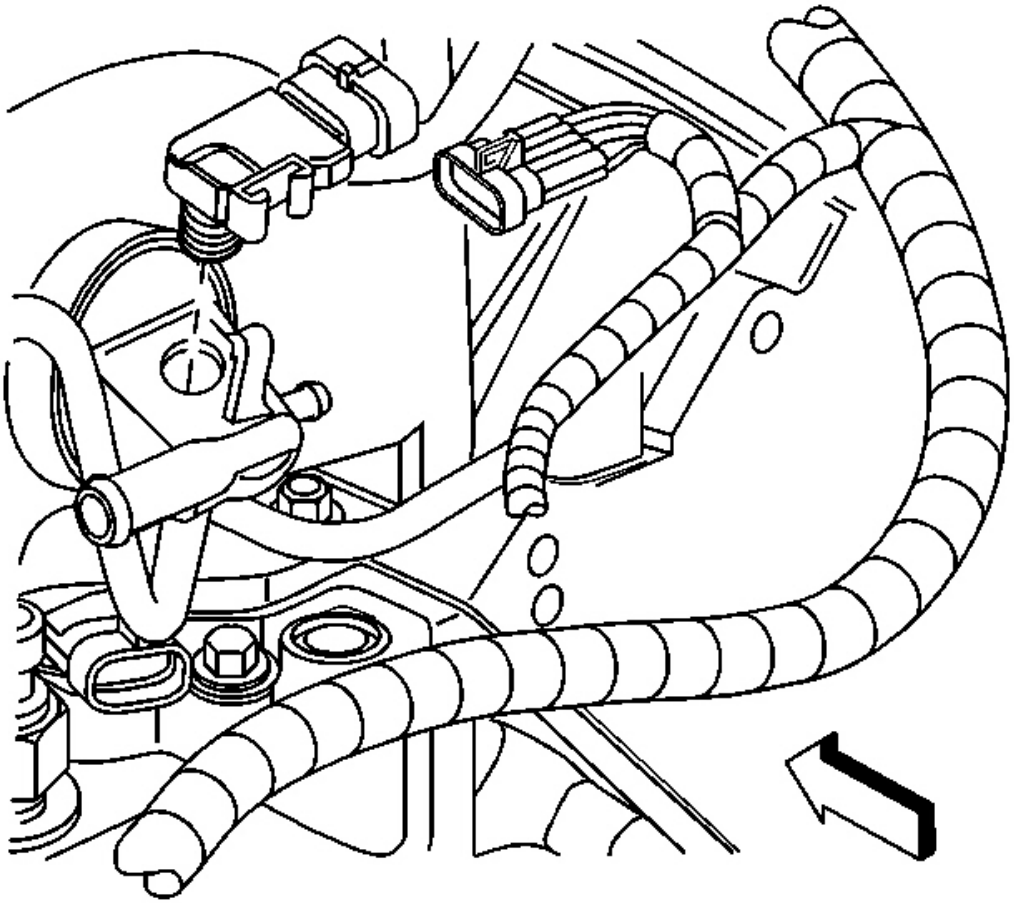

Fig. 259: MAP Sensor
Courtesy of GENERAL MOTORS CORP.

1. Remove the manifold absolute pressure (MAP) sensor from the rear of the intake manifold. The MAP sensor is to be installed upon completion of the cleaning and inspection procedures.
2. Inspect the sealing grommet on the MAP sensor. The grommet should not be torn or damaged.

cardiagn.com

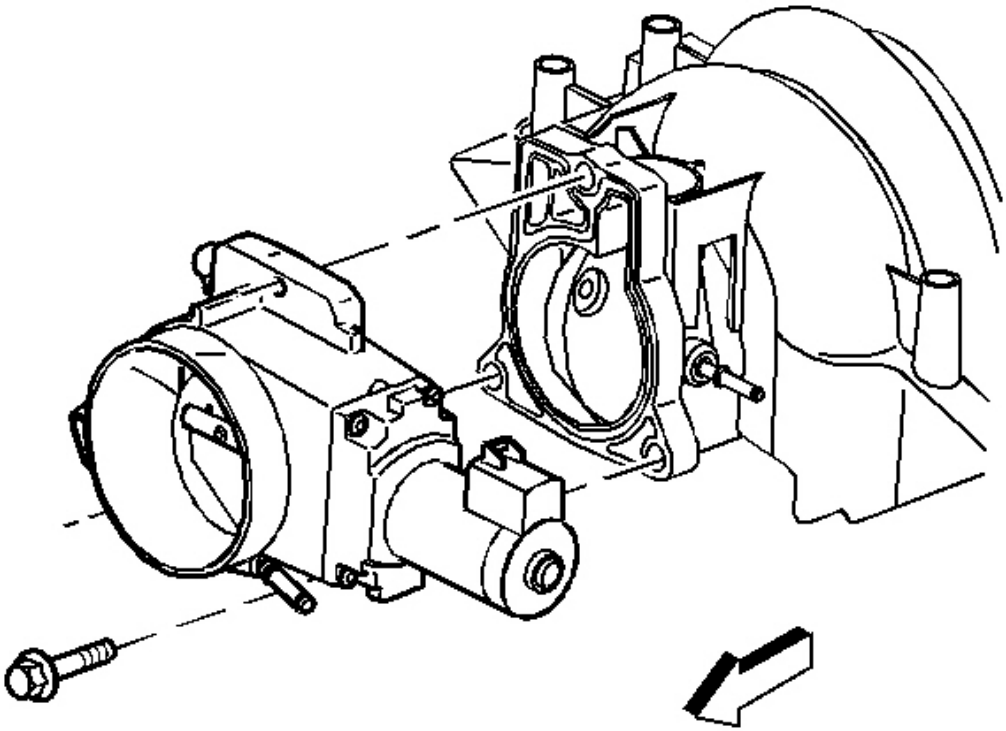

Fig. 260: Throttle Body & Bolts
Courtesy of GENERAL MOTORS CORP.

3. Remove the throttle body.

cardiagn.com

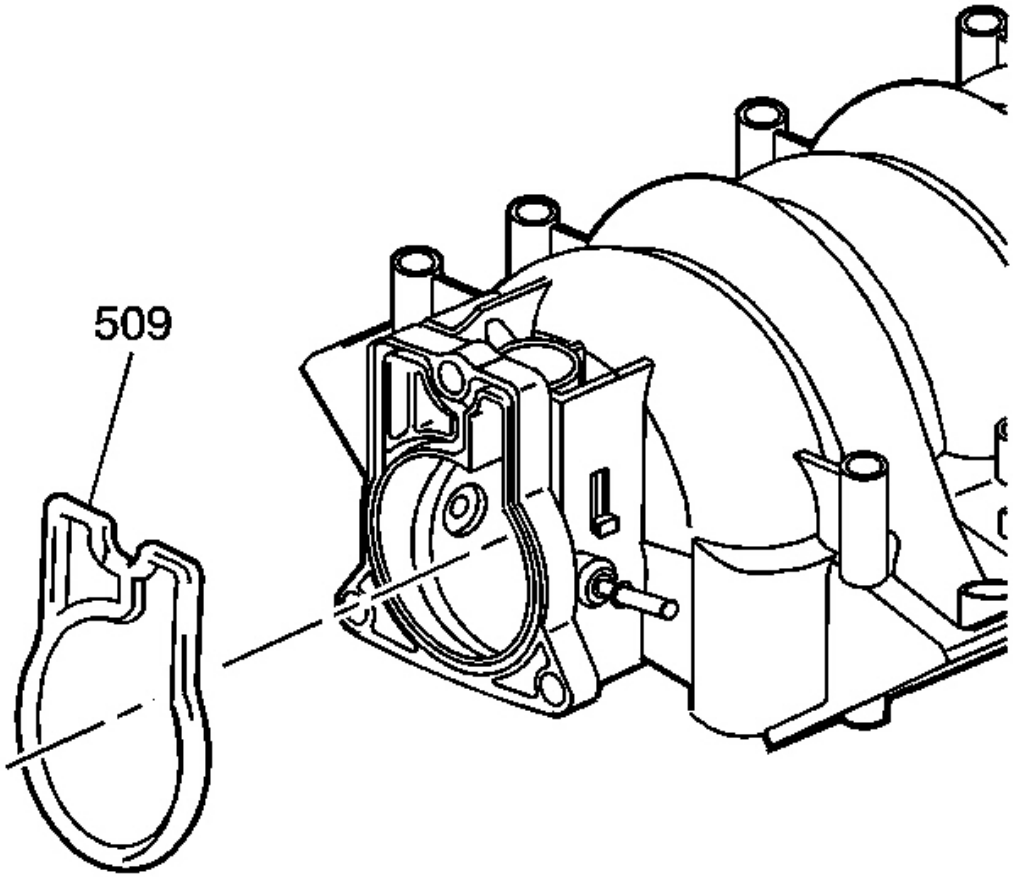

Fig. 261: Throttle Body Gasket
Courtesy of GENERAL MOTORS CORP.

4. Remove the throttle body gasket (509).
5. Discard the gasket.

cardiagn.com

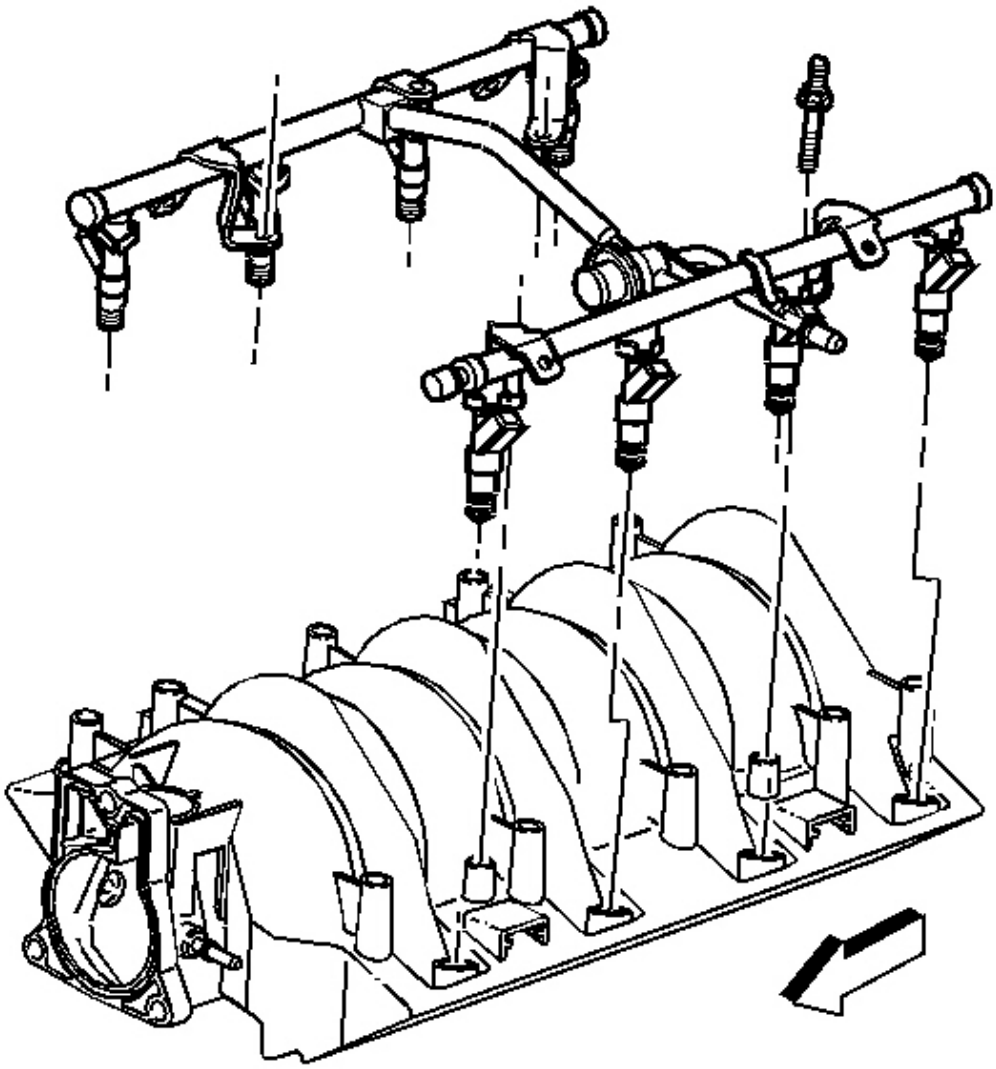

Fig. 262: Fuel Rail & Bolts
Courtesy of GENERAL MOTORS CORP.

6. Remove the fuel rail with injectors.

cardiagn.com

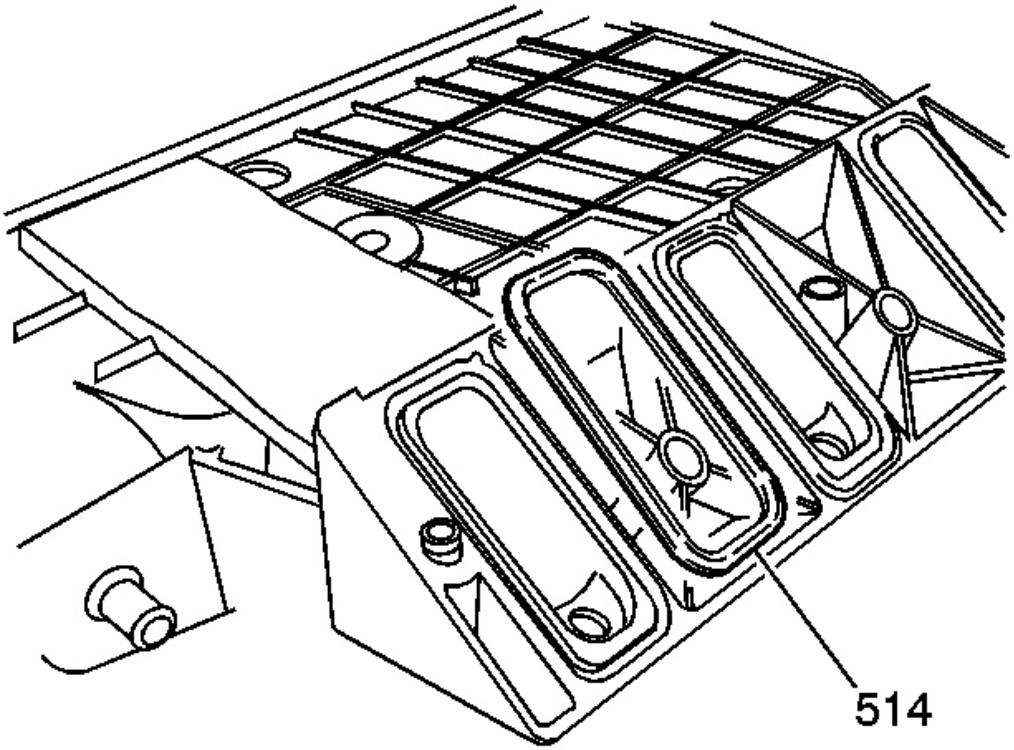

Fig. 263: Manifold-To-Cylinder Head Gaskets
Courtesy of GENERAL MOTORS CORP.

7. Remove and discard the intake manifold-to-cylinder head gaskets (514).
8. Clean the intake manifold in solvent.
   - Clean the intake manifold gasket grooves.
   - Clean the intake manifold vacuum passages at the rear of the intake.

CAUTION: Refer to Safety Glasses Caution in Cautions and Notices.

9. Dry the intake manifold with compressed air.
10. Upon installation of the intake manifold, install NEW manifold-to-cylinder head gaskets.

Inspection Procedure

cardiagn.com

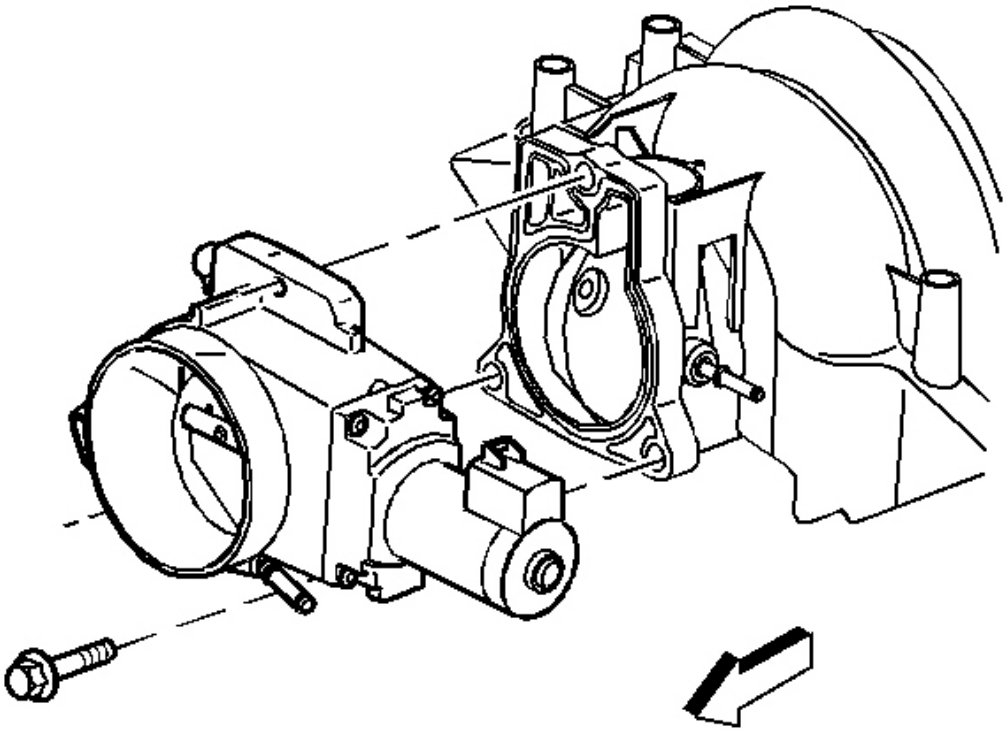

Fig. 264: Throttle Body & Bolts
Courtesy of GENERAL MOTORS CORP.

1. Inspect the throttle body bolt inserts for looseness or damaged threads.

cardiagn.com

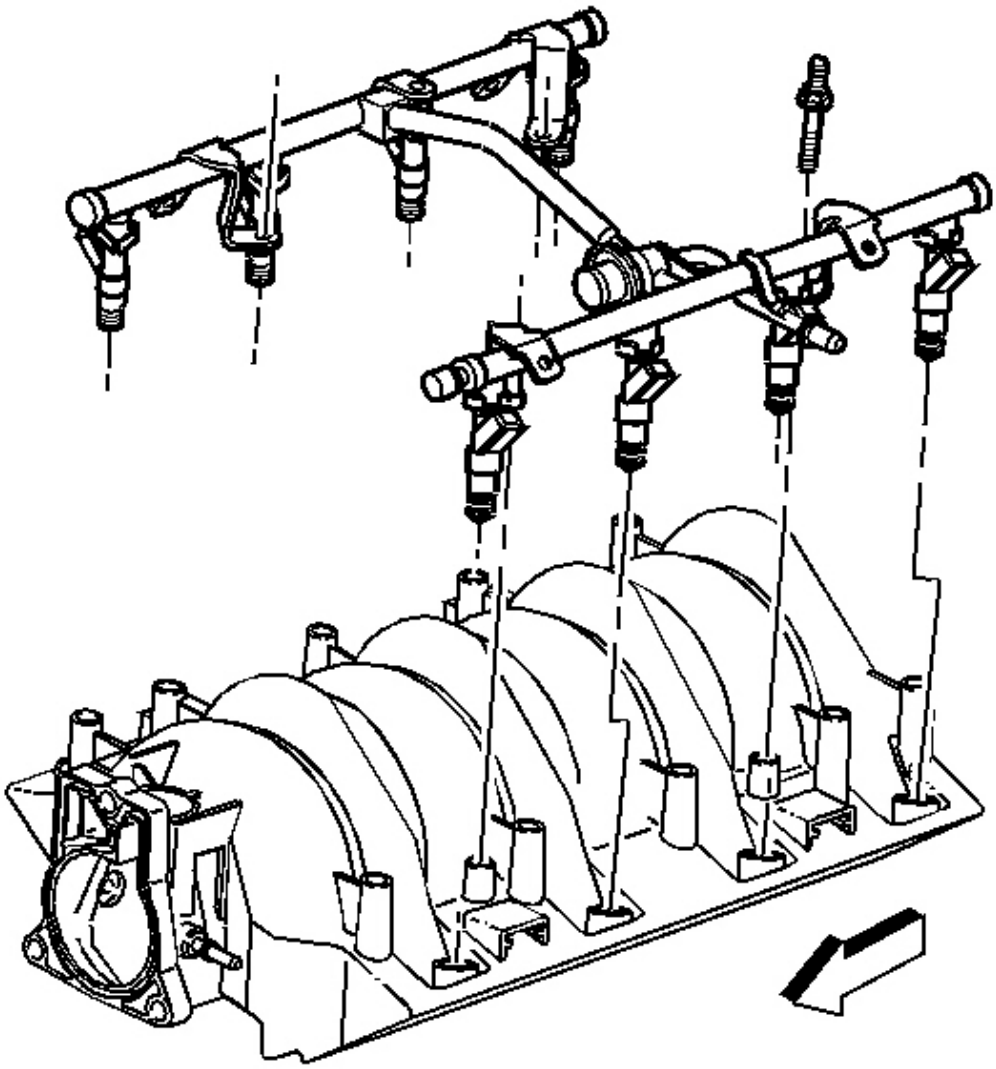

Fig. 265: Fuel Rail & Bolts
Courtesy of GENERAL MOTORS CORP.

2. Inspect the fuel rail bolt inserts for looseness or damaged threads.
3. Inspect the intake manifold vacuum passages for debris or restrictions.

cardiagn.com

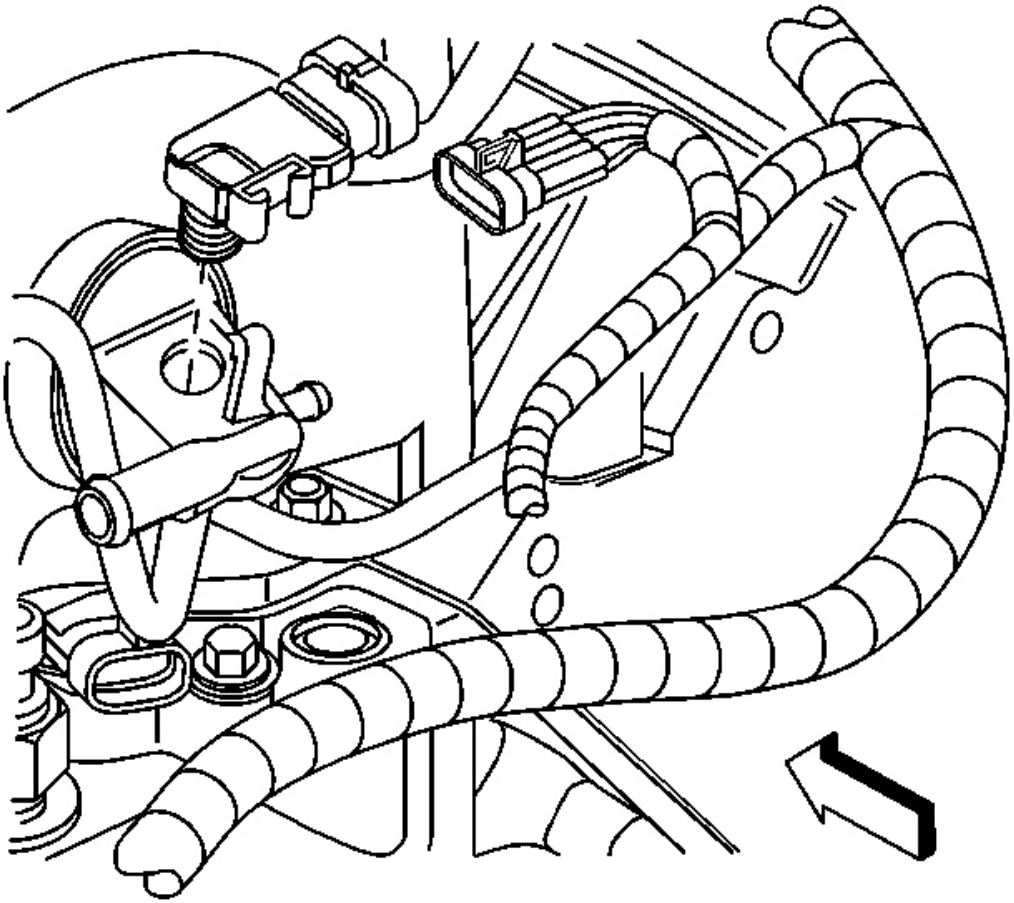

Fig. 266: MAP Sensor
Courtesy of GENERAL MOTORS CORP.

IMPORTANT:

- **The manifold absolute pressure (MAP) sensor housing is retained to the intake manifold by push-in-place snap lock design.**
- **The MAP sensor housing is sealed at the intake manifold by an O-ring seal.**

4. Inspect the MAP sensor housing.
   - Inspect for damaged or broken vacuum fittings, damaged MAP sensor mounting bore, or broken MAP sensor retaining tab.
   - Inspect the rear MAP sensor housing for looseness or poor sealing to the intake manifold. Repair or replace the components as necessary.

cardiagn.com

5. Inspect the composite intake manifold assembly for cracks or damage.

   Inspect the areas between the intake runners.

6. Inspect all the gasket sealing surfaces and grooves for cracking or damage.

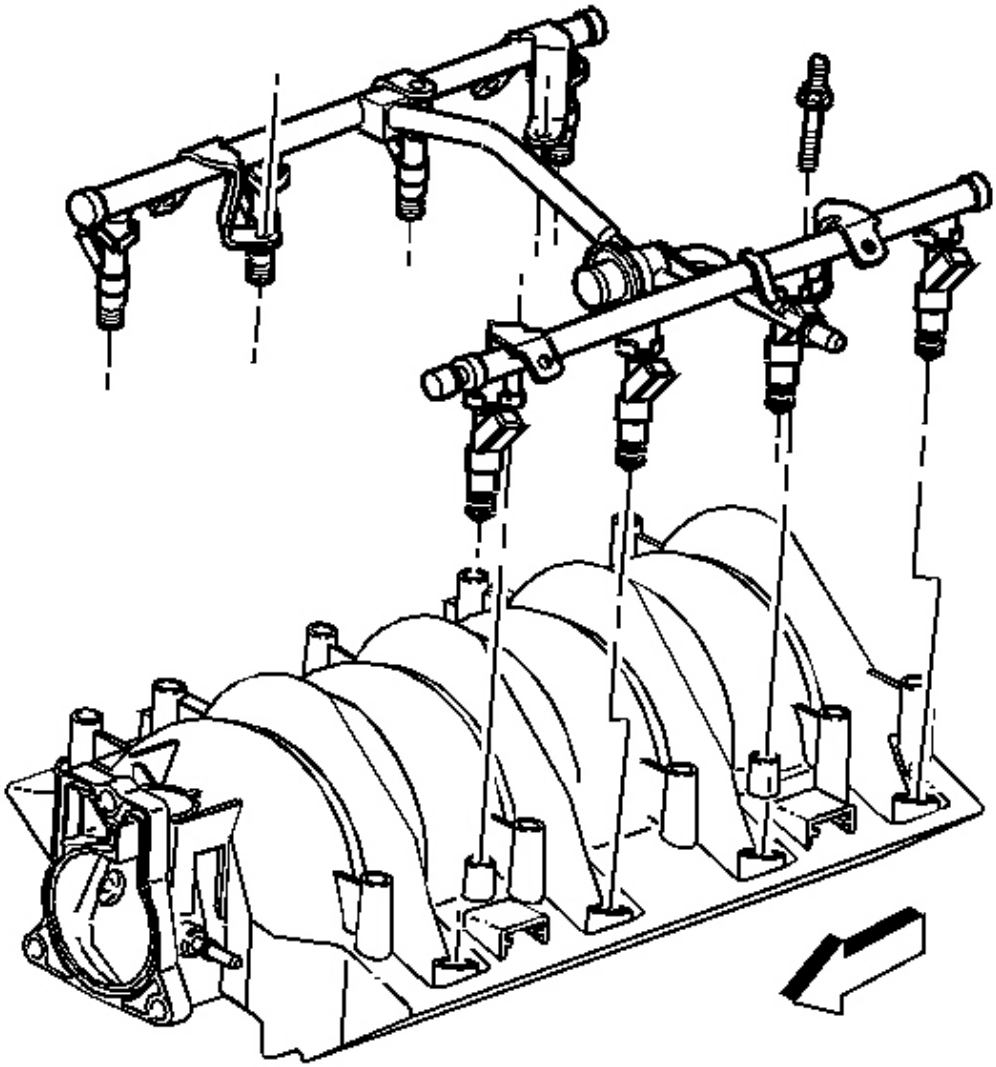

Fig. 267: Fuel Rail & Bolts
Courtesy of GENERAL MOTORS CORP.

cardiagn.com

7. Inspect the fuel injector bores for excessive scoring or damage.
8. Inspect the intake manifold cylinder head deck for warpage.
    1. Locate a straight edge across the intake manifold cylinder head deck surface.
    2. Insert a feeler gauge between the intake manifold and the straight edge.

    A intake manifold with warpage in excess of 0.5 mm (0.02 in), must be replaced.

9. Upon completion of inspection, install the MAP sensor to the manifold.

EXHAUST MANIFOLD CLEANING AND INSPECTION

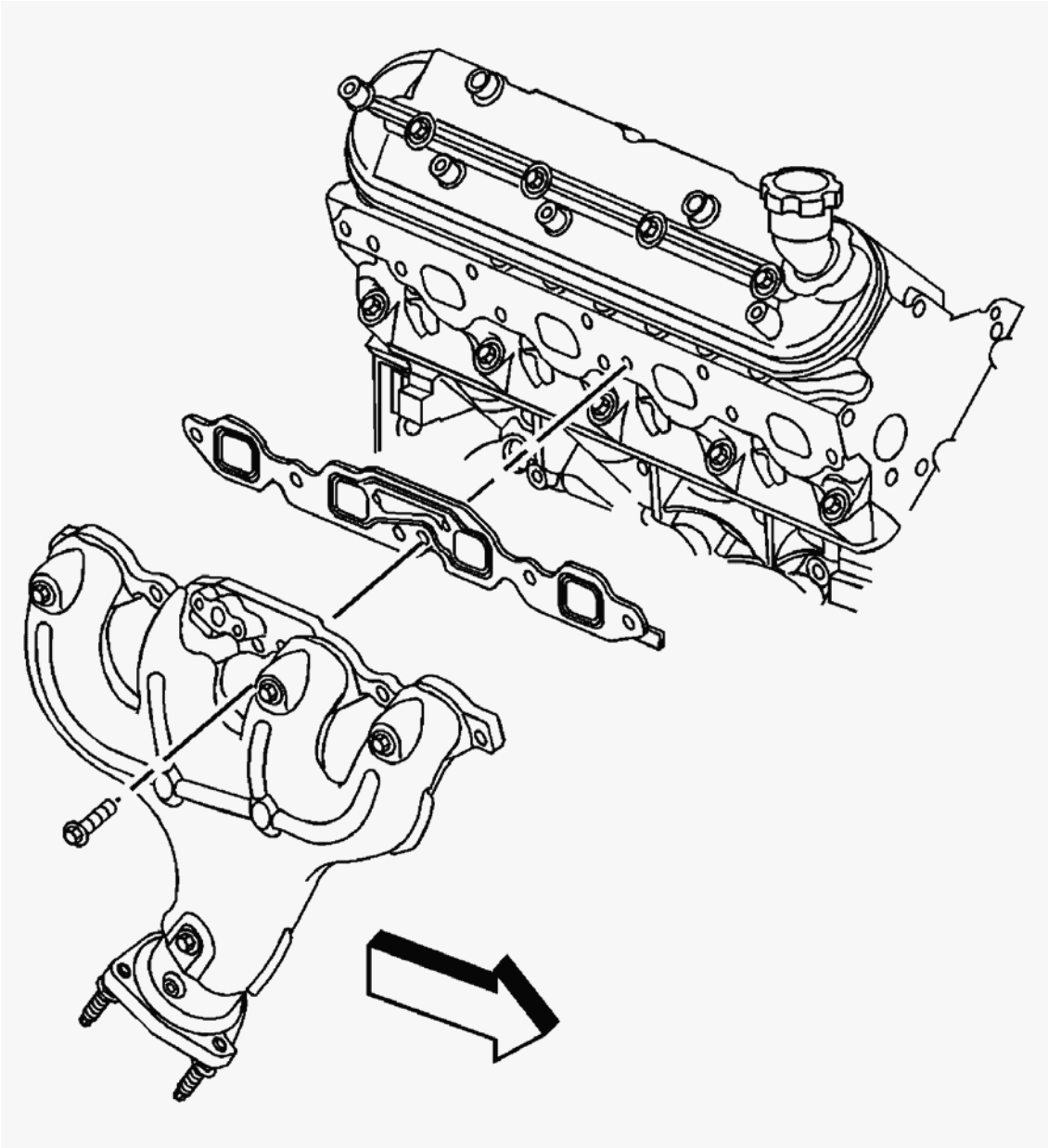

cardiagn.com

Fig. 268: Exhaust Manifold Air Injection Reaction
Courtesy of GENERAL MOTORS CORP.

IMPORTANT:

- **Do not use the exhaust manifold-to-cylinder head gaskets again. Upon installation of the exhaust manifold, install a NEW gasket. An improperly installed gasket or leaking exhaust system may effect On-Board Diagnostics (OBD) II system performance.**
- **Remove the oxygen sensor prior to cleaning the manifold, do not submerge the oxygen sensor in cleaning solvent.**

1. Remove the oxygen sensor from the manifold.
2. Clean the exhaust manifold in solvent.

CAUTION: Refer to Safety Glasses Caution in Cautions and Notices.

3. Dry the exhaust manifold with compressed air.
4. Inspect the exhaust manifold air injection reaction (AIR) passages for restrictions.
5. Inspect the AIR flange threaded bolt holes threads for damage.
6. Inspect the AIR flange gasket surface for excessive scratches or gouging.
7. Inspect the exhaust manifold-to-cylinder head gasket surface for excessive scratches or gouging.
8. Inspect for a loose or damaged heat shield.

cardiagn.com

Fig. 269: Inspecting The Take Down Studs For Damaged Threads
Courtesy of GENERAL MOTORS CORP.

9. Inspect the take down studs for damaged threads.

cardiagn.com

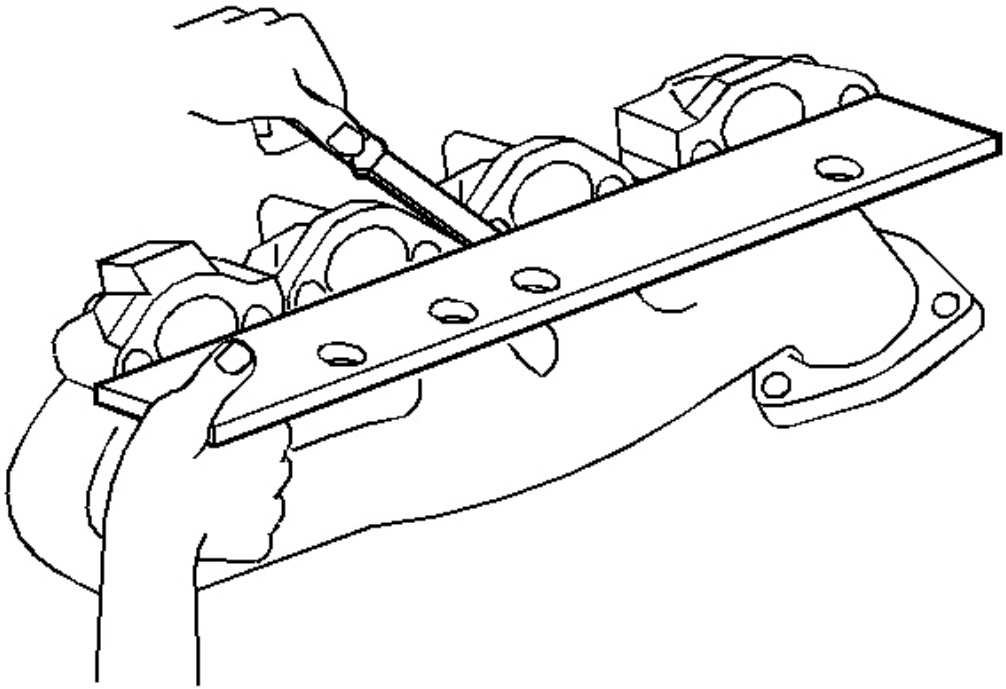

Fig. 270: Measuring The Exhaust Manifold Cylinder Head For Warpage
Courtesy of GENERAL MOTORS CORP.

10. Using a straight edge and a feeler gage, measure the exhaust manifold cylinder head deck for warpage.

    A exhaust manifold deck with warpage in excess of 0.25 mm (0.01 in), may cause an exhaust leak and may effect OBD II system performance. Exhaust manifolds not within specifications must be replaced.

COOLANT AIR BLEED PIPE CLEANING AND INSPECTION

cardiagn.com

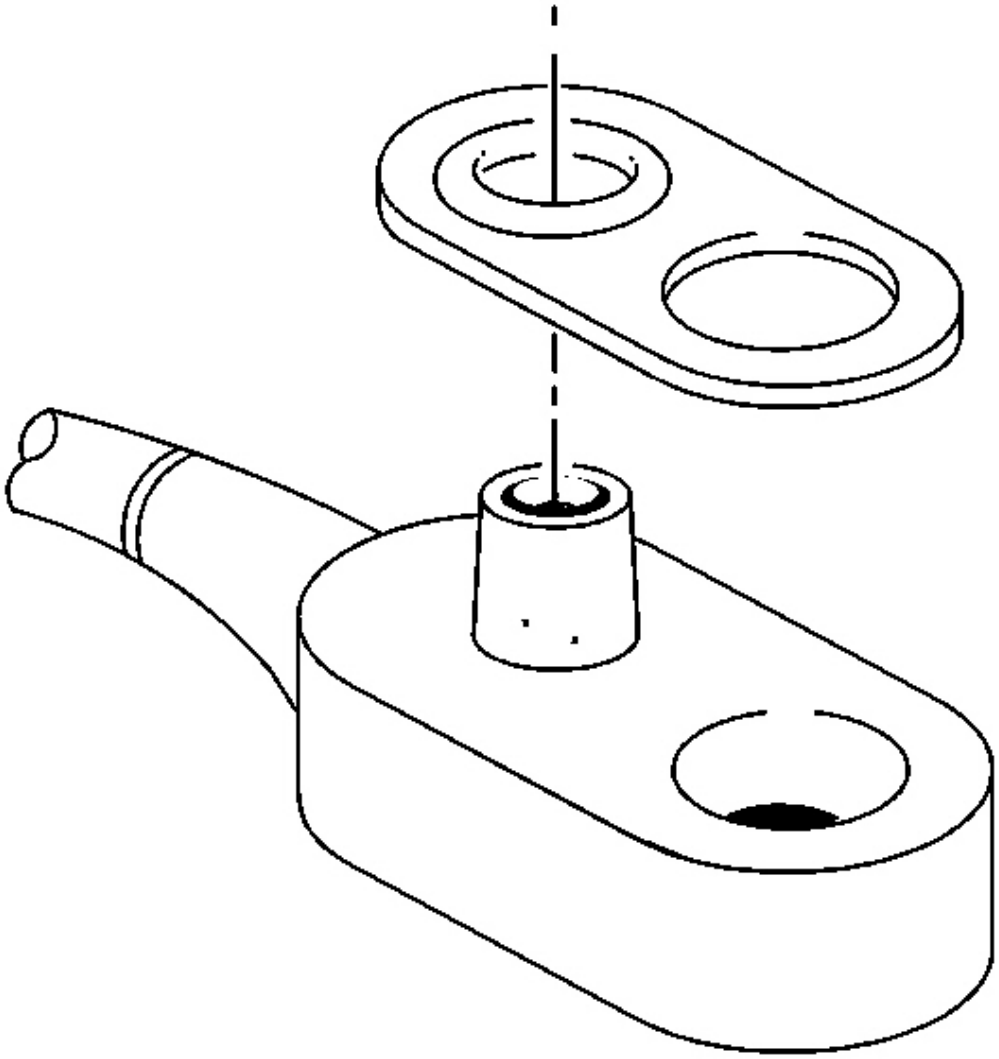

Fig. 271: View Of Pipe, Cover & Gasket
Courtesy of GENERAL MOTORS CORP.

IMPORTANT: Do not use the engine coolant air bleed pipe and cover gaskets again. Upon installation of the pipe and covers, install NEW gaskets.

1. Remove the sealing gaskets from the pipe.
2. Remove the sealing gaskets from the covers.

cardiagn.com

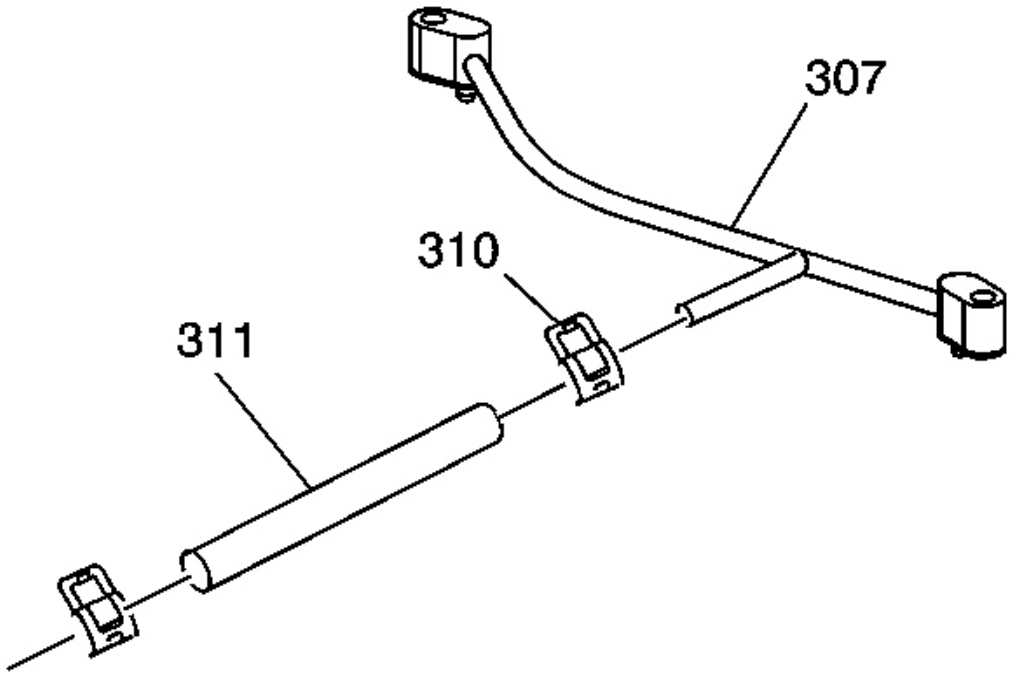

Fig. 272: Hose, Clamps & Pipe
Courtesy of GENERAL MOTORS CORP.

3. Clean the pipe (307), hose (311), and covers in solvent.

CAUTION: Refer to Safety Glasses Caution in Cautions and Notices.

4. Dry the pipe and covers with compressed air.
5. Inspect the pipe and covers for damage or restrictions.
6. Inspect the gasket and hose sealing surfaces for damage.
7. Inspect the hose (311) for restrictions, cracking or wear.

   The hose may be used again if it is not damaged.

cardiagn.com

REPAIR INSTRUCTIONS

WATER PUMP CLEANING AND INSPECTION

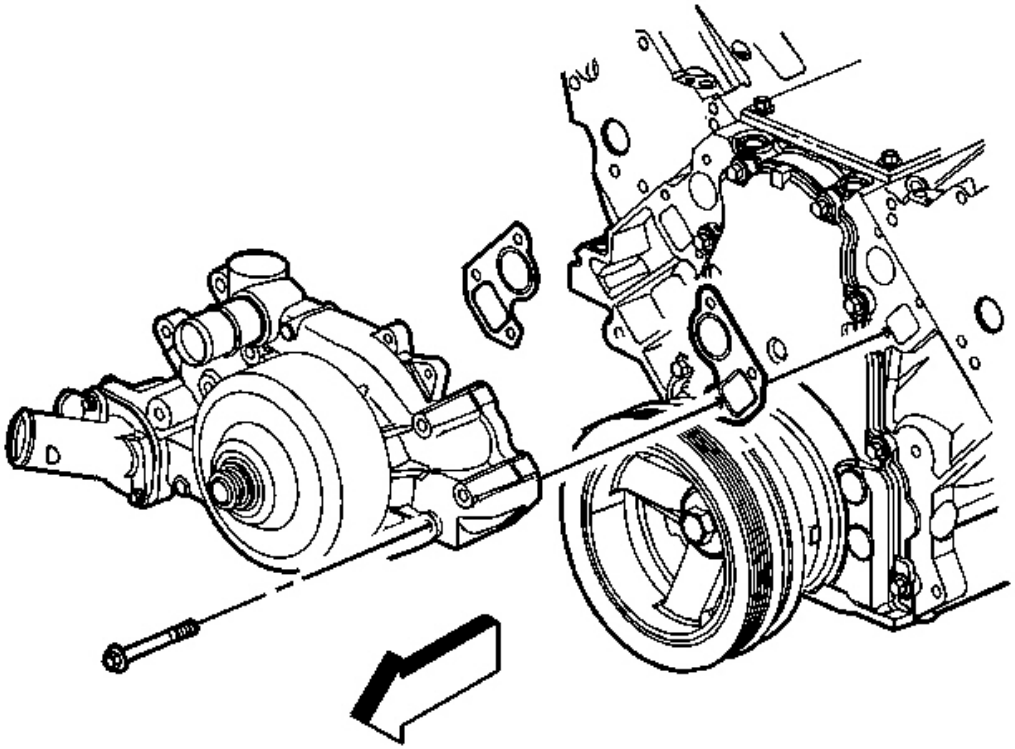

Fig. 1: Old Gasket & Water Pump Sealing
Courtesy of GENERAL MOTORS CORP.

1. Remove the old gasket from the water pump sealing surfaces. Refer to **Replacing Engine Gaskets** .
2. Clean all dirt and debris from the water pump housing.
3. Inspect the water pump for the following:
   - Gasket sealing surfaces for excessive scratches or gouging
   - Hose sealing surfaces for scratches or gouging
   - Restrictions within the internal coolant passages

cardiagn.com

- Excessive side-to-side play in the pulley shaft
- A loose belt pulley or a pulley with excessive wear or scoring on the belt tracking area
- Leakage at the water outlet housing or rear cover gasket
- Leakage at the water pump vent hole

  A stain around the vent hole is acceptable. If leakage occurs, such as dripping, with the engine running and the cooling system pressurized, replace the water pump.

THREAD REPAIR

Tools Required

- **J 42385-100** Head/Main Bolt Thread Repair Kit
- **J 42385-200** General Threads Kit
- **J 42385-300** Fixtures/Hardware Kit

General Thread Repair

cardiagn.com

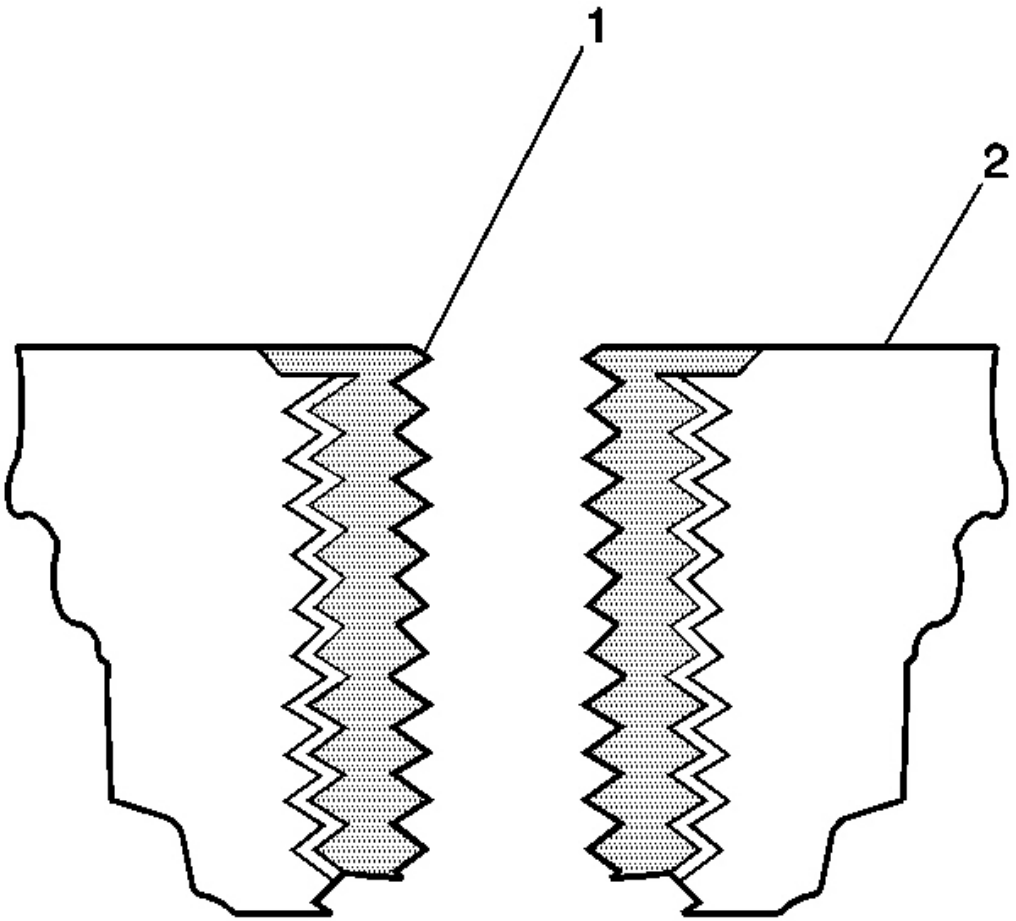

Fig. 2: View Of Bushing Type Insert & Base Material
Courtesy of GENERAL MOTORS CORP.

The thread repair process involves a solid, thin walled, self-locking, carbon steel, bushing type insert (1). During the bushing installation process, the driver tool expands the bottom external threads of the insert into the base material (2). This action mechanically locks the insert in place. Also, when installed to the proper depth, the flange of the insert will be seated against the counterbore of the repaired hole.

cardiagn.com

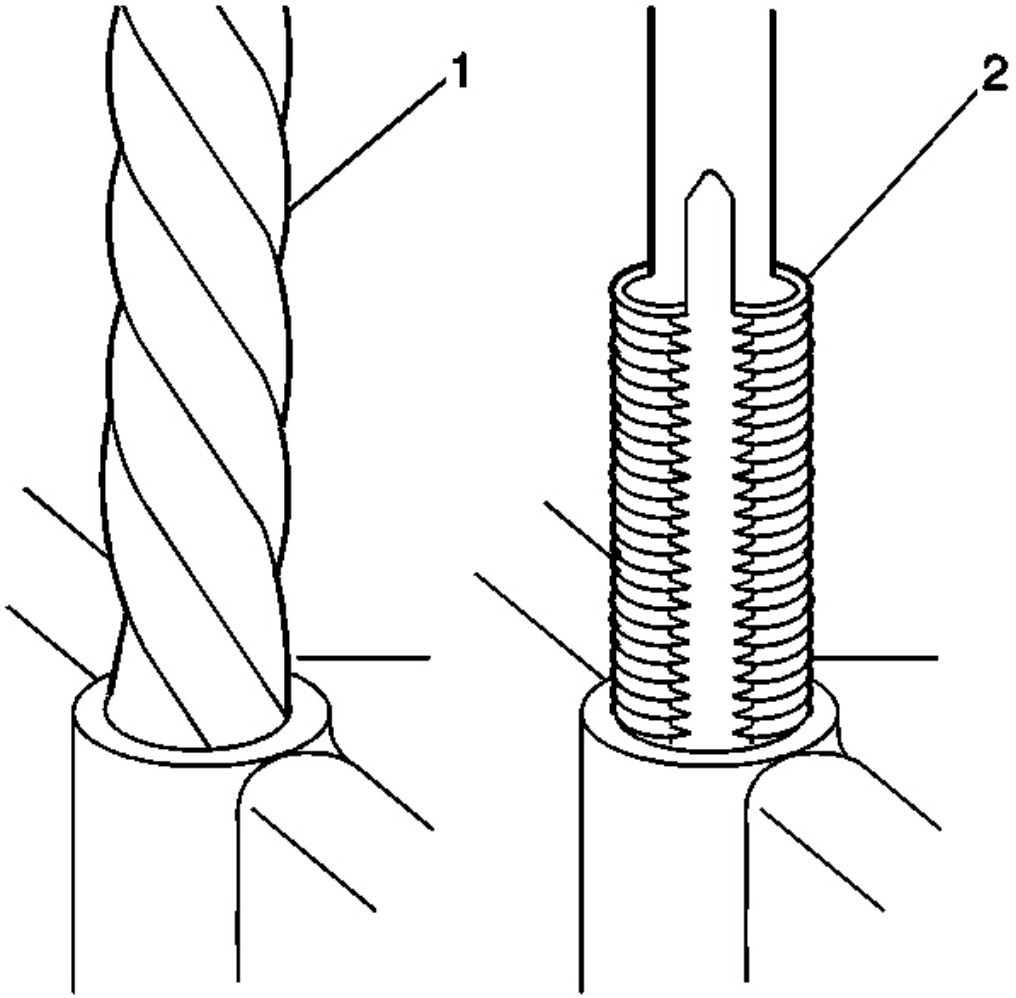

Fig. 3: Removing Damaged Threads
Courtesy of GENERAL MOTORS CORP.

CAUTION: Refer to Safety Glasses Caution in Cautions and Notices.

IMPORTANT:

- **The use of a cutting type fluid GM P/N 1052864 (Canadian P/N 992881), WD 40(R), or equivalent is recommended when performing the drilling, counterboring, and tapping procedures.**
- **Driver oil MUST be used on the installer driver tool.**

cardiagn.com

- **The tool kits are designed for use with either a suitable tap wrench or drill motor.**

1. Drill out the threads of the damaged hole (1).
    - M6 inserts require a minimum drill depth of 15 mm (0.59 in).
    - M8 inserts require a minimum drill depth of 20 mm (0.79 in).
    - M10 inserts require a minimum drill depth of 23.5 mm (0.93 in).
2. Using compressed air, clean out any chips.

cardiagn.com

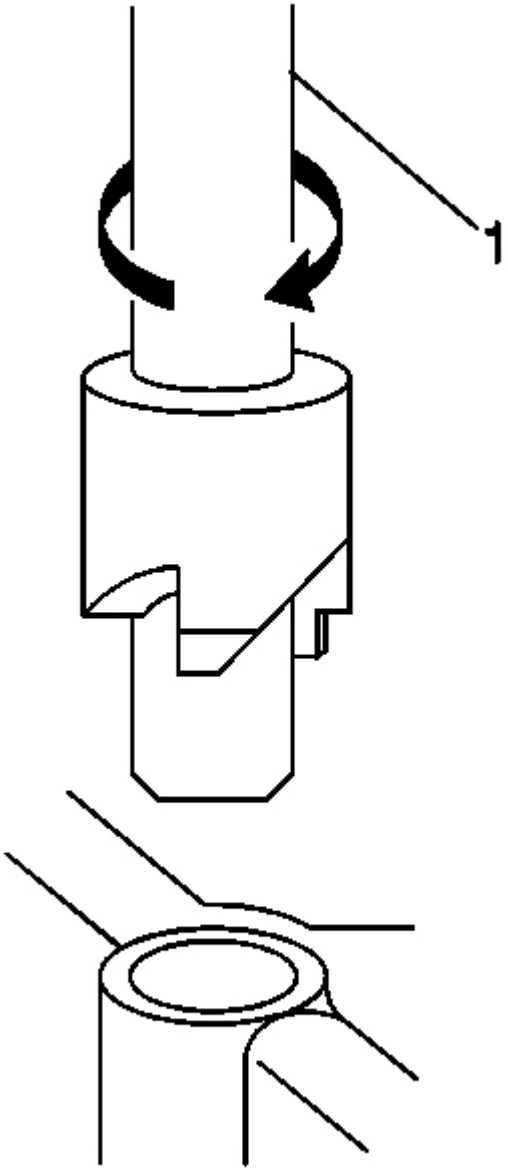

Fig. 4: View Of Counterbore Drill
Courtesy of GENERAL MOTORS CORP.

3. Counterbore the hole to the full depth permitted by the tool (1).
4. Using compressed air, clean out any chips.

cardiagn.com

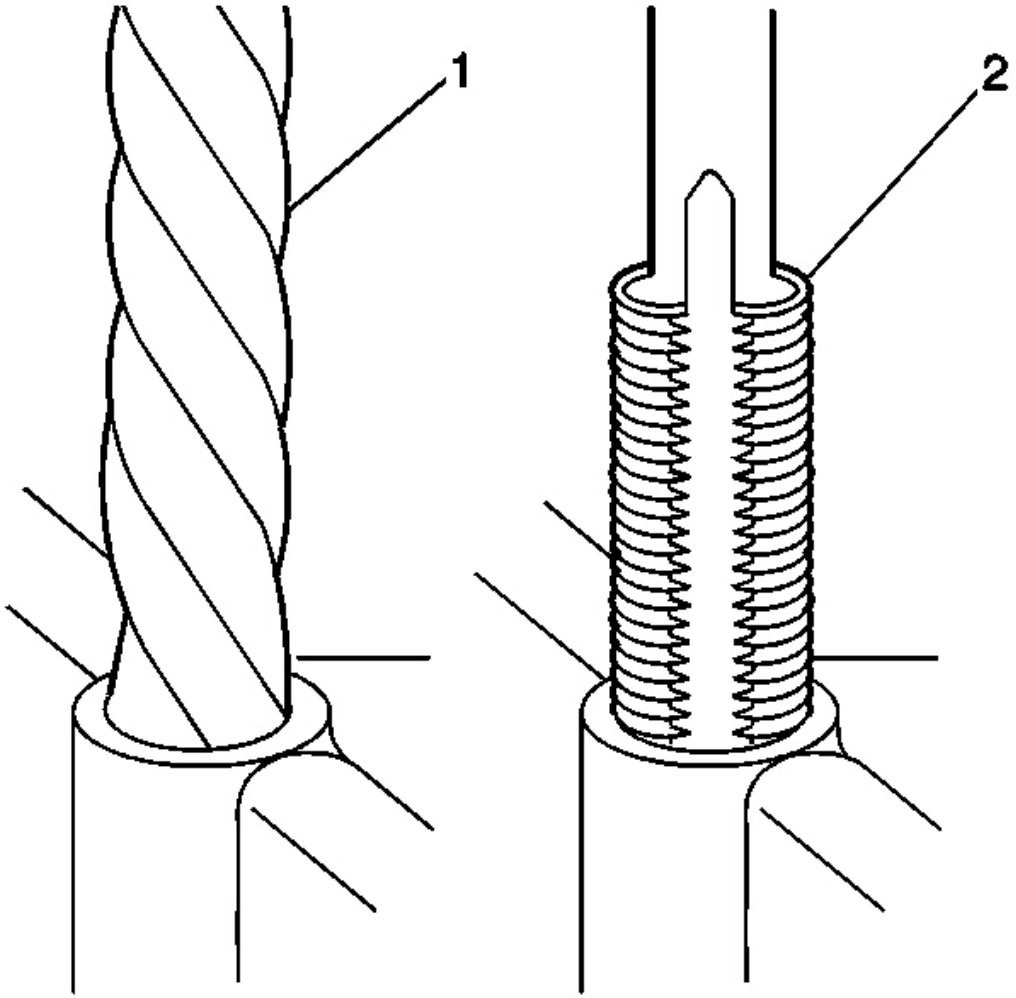

Fig. 5: Removing Damaged Threads
Courtesy of GENERAL MOTORS CORP.

5. Using a tap wrench (2), tap the threads of the drilled hole.
    - M6 inserts require a minimum tap depth of 15 mm (0.59 in).
    - M8 inserts require a minimum tap depth of 20 mm (0.79 in).
    - M10 inserts require a minimum tap depth of 23.5 mm (0.93 in).
6. Using compressed air, clean out any chips.
7. Spray cleaner GM P/N 12346139 (Canadian P/N 10953463), GM P/N 12377981 (Canadian P/N 10953463) or equivalent into the hole.
8. Using compressed air, clean any cutting oil and chips out of the hole.

cardiagn.com

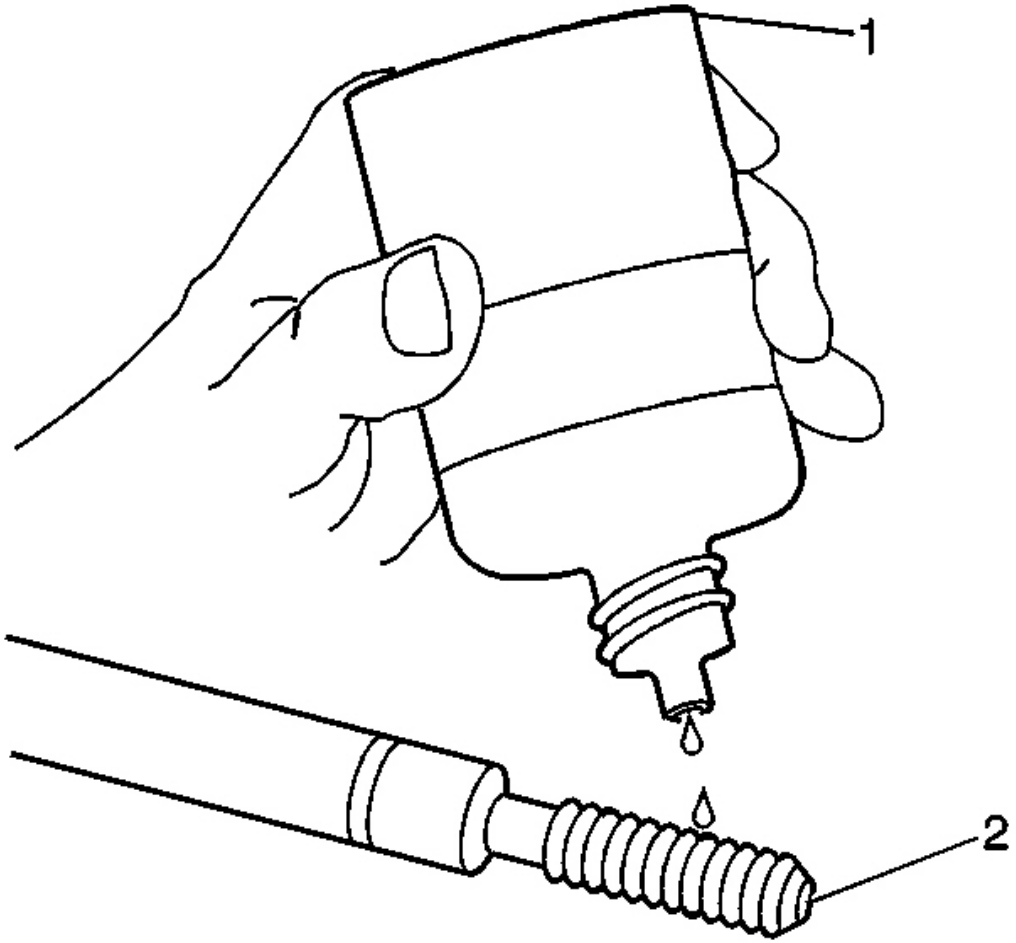

Fig. 6: Lubricating Installer Tool Using Driver Oil
Courtesy of GENERAL MOTORS CORP.

IMPORTANT: Do not allow oil or other foreign material to contact the outside diameter (OD) of the insert.

9. Lubricate the threads of the installer tool (2) with the driver oil (1).

cardiagn.com

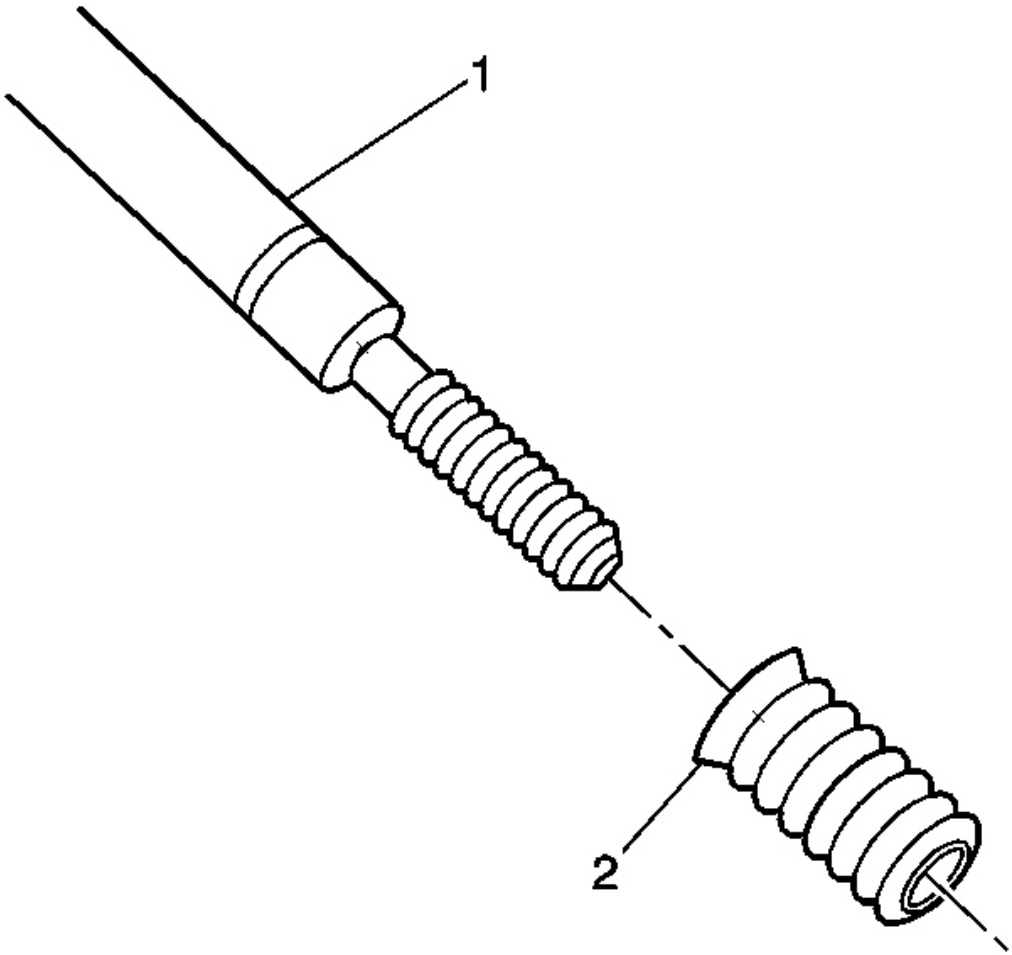

Fig. 7: View of Bushing Type Insert
Courtesy of GENERAL MOTORS CORP.

10. Install the insert (2) onto the driver tool (1).

cardiagn.com

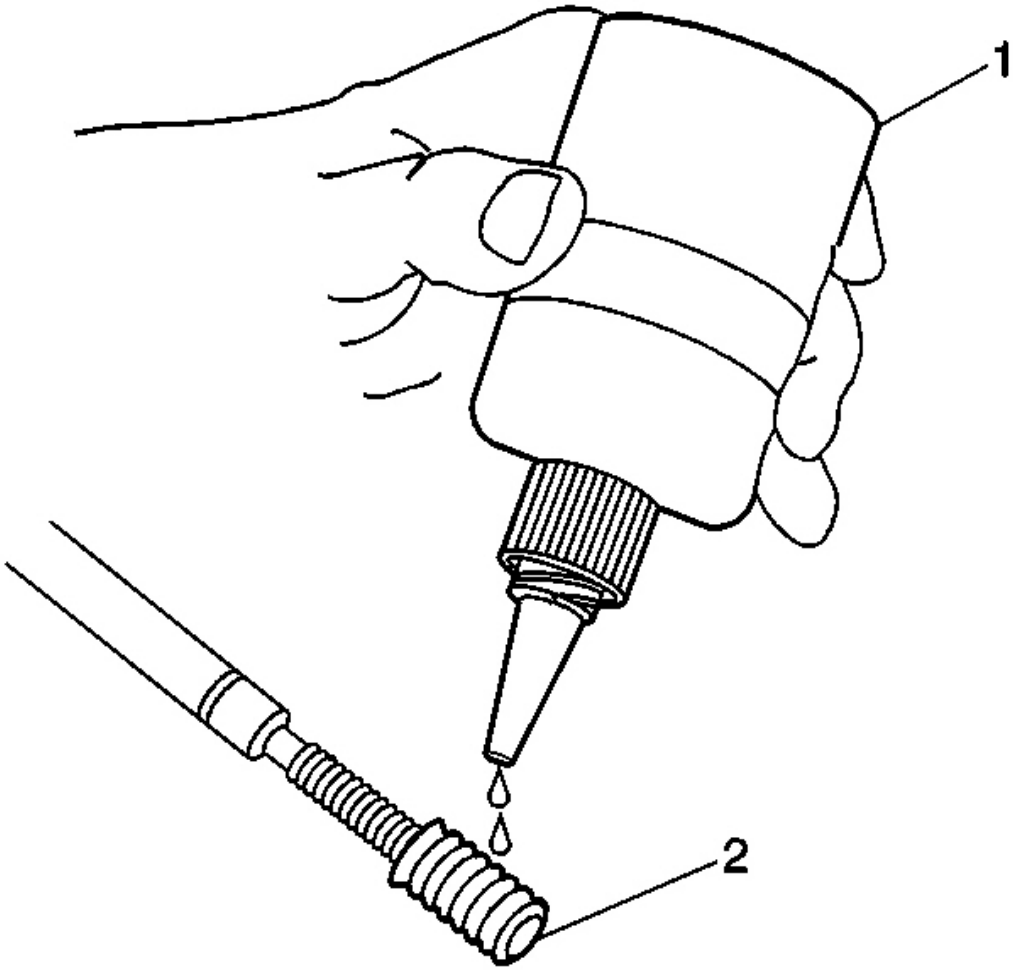

Fig. 8: Applying Threadlock LOCTITE(tm) 277, J 42385-109 To Insert
Courtesy of GENERAL MOTORS CORP.

11. Apply threadlock LOCTITE(tm) 277, J 42385-109 (1), or equivalent to the insert OD threads (2).

cardiagn.com

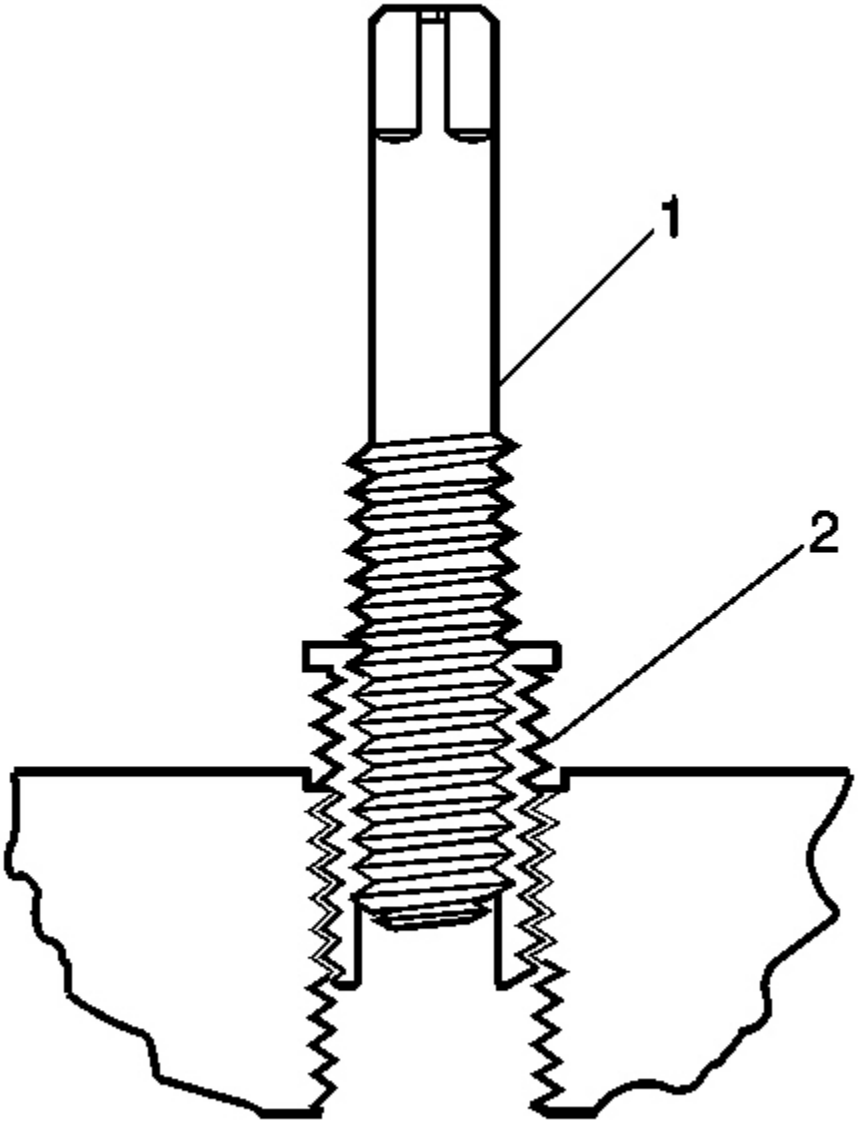

Fig. 9: Installing Insert Into Bolt Hole Using Installer Tool
Courtesy of GENERAL MOTORS CORP.

12. Install the insert (2) into the hole.

    Install the insert until the flange of the insert contacts the counterbored surface. Continue to rotate the installer tool (1) through the insert.

cardiagn.com

The installer tool will tighten up before screwing completely through the insert. This is acceptable. You are forming the bottom threads of the insert and mechanically locking the insert to the base material threads.

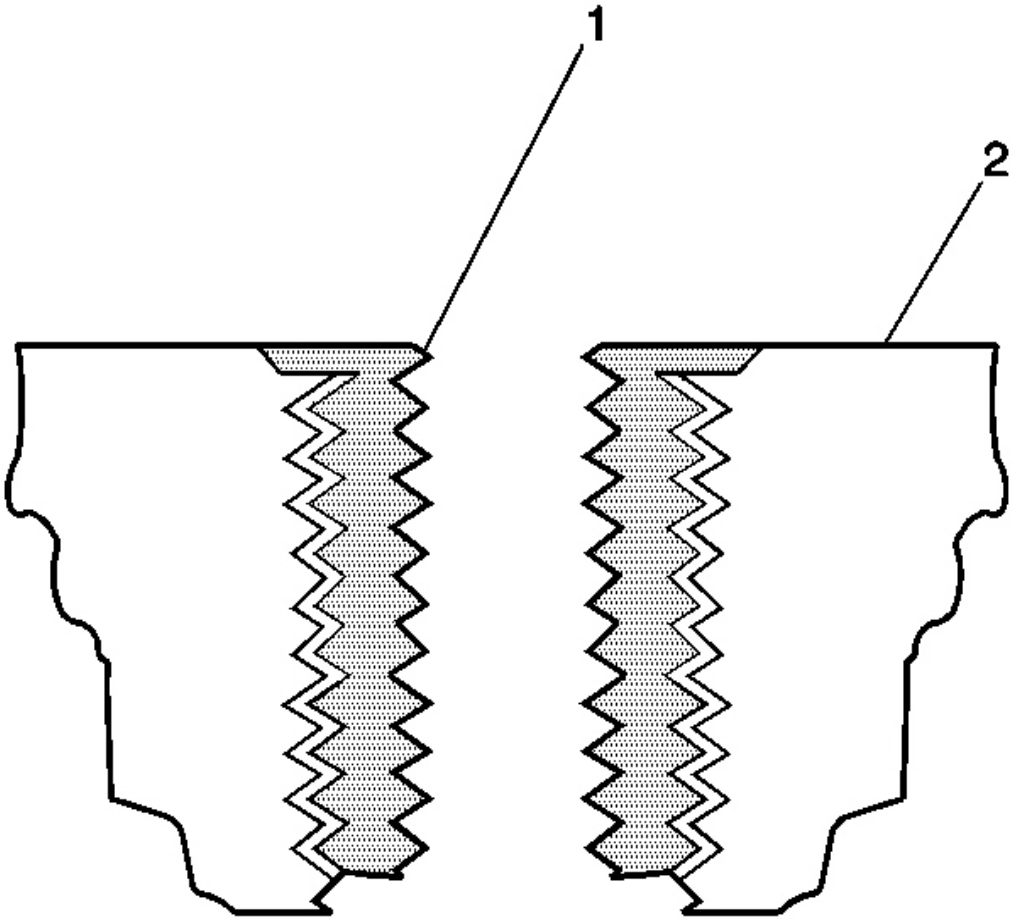

Fig. 10: View Of Bushing Type Insert & Base Material
Courtesy of GENERAL MOTORS CORP.

13. Inspect the insert for proper installation into the hole.

    A properly installed insert (1) will be either flush or slightly below flush with the surface of the base material (2).

Cylinder Head Bolt Hole Thread Repair

cardiagn.com

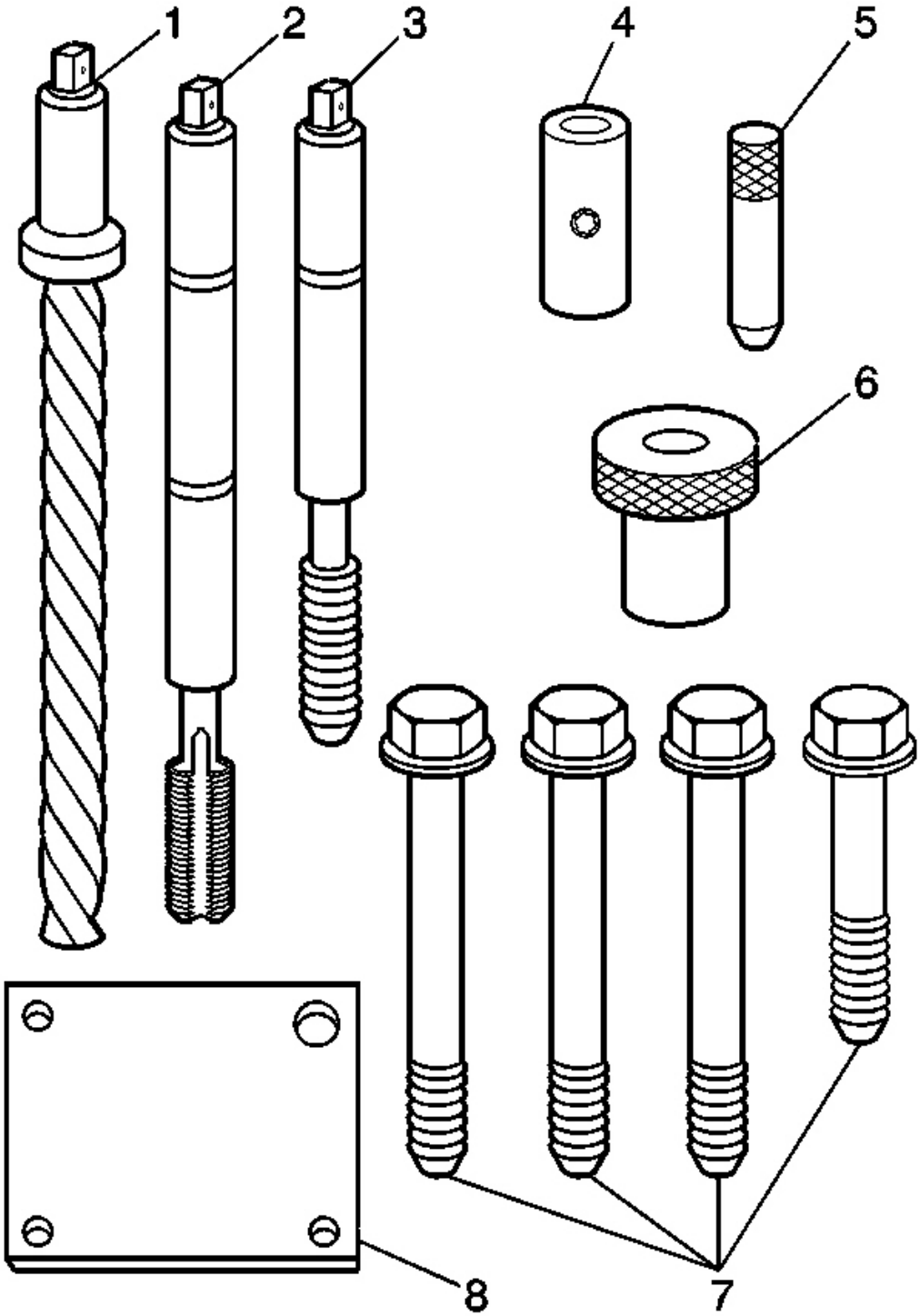

cardiagn.com

Fig. 11: View Of Cylinder Head Bolt Hole Thread Repair Kit
Courtesy of GENERAL MOTORS CORP.

1. The cylinder head bolt hole thread repair kit consists of the following items:
   - The drill (1)
   - The tap (2)
   - The installer (3)
   - The sleeve (4)
   - The alignment pin (5)
   - The bushing (6)
   - The bolts (7)
   - The fixture plate (8)

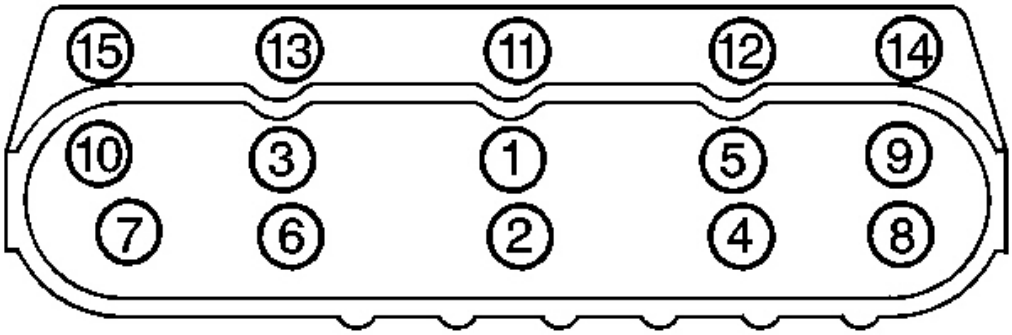

Fig. 12: Cylinder Head Bolt Tightening Sequence (Right)
Courtesy of GENERAL MOTORS CORP.

IMPORTANT: First design engine blocks have different drill and tap depths using both medium length 100 mm (3.94 in) and long 155 mm (6.1 in) M11 cylinder head bolts. Second design engine blocks use only the medium length 100 mm (3.94 in) bolt with a common drill and tap depth.

2. Measure the depth of the cylinder head bolt holes (1-10) to determine the proper drill and tap depths. Refer to **Thread Repair Specifications** .

cardiagn.com

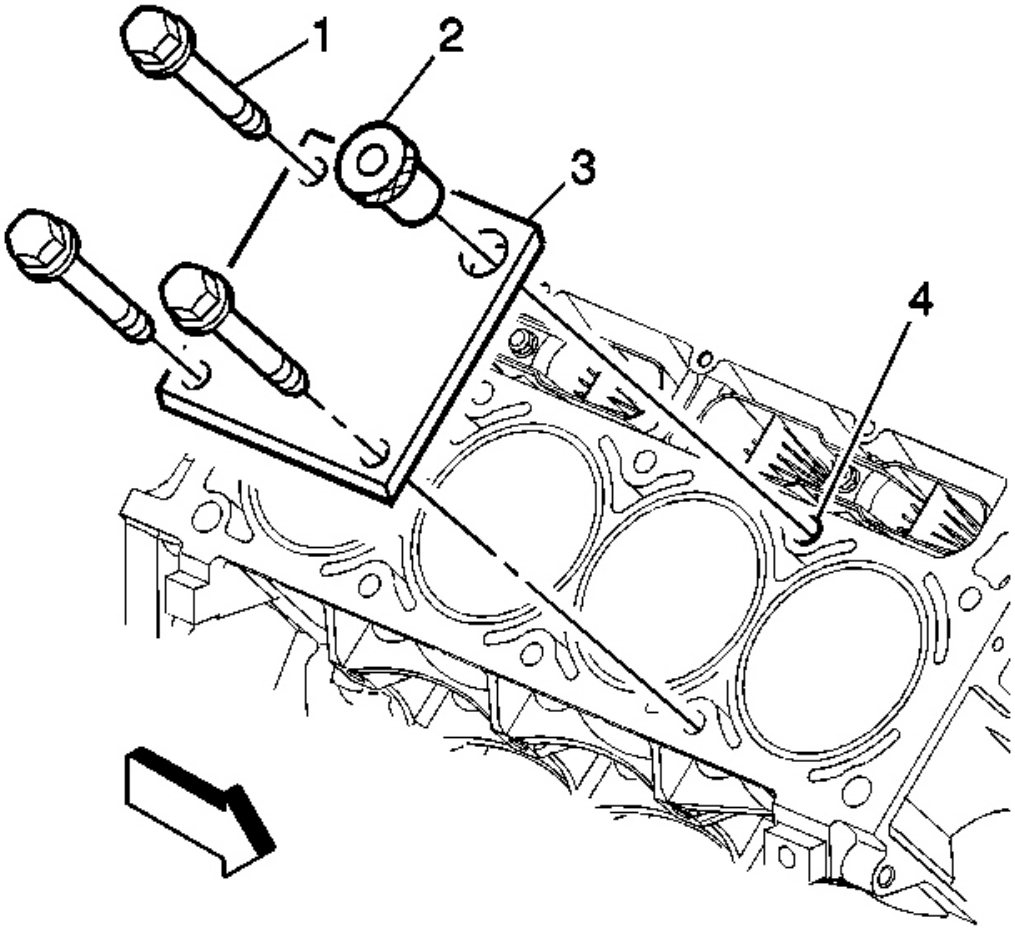

Fig. 13: View Of Fixture Plate, Bolts, Bushing & Cylinder Hole
Courtesy of GENERAL MOTORS CORP.

CAUTION: Refer to Safety Glasses Caution in Cautions and Notices.

IMPORTANT:

- **The use of a cutting type fluid GM P/N 1052864 (Canadian P/N 992881), WD 40(R), or equivalent is recommended when performing the drilling and tapping procedures.**
- **Driver oil MUST be used on the installer driver tool.**
- **The tool kits are designed for use with either a suitable tap wrench or drill motor.**

cardiagn.com

3. Install the fixture plate (3), bolts (1), and bushing (2) onto the engine block deck.

   Position the fixture plate and bushing over the hole that is to be repaired (4).

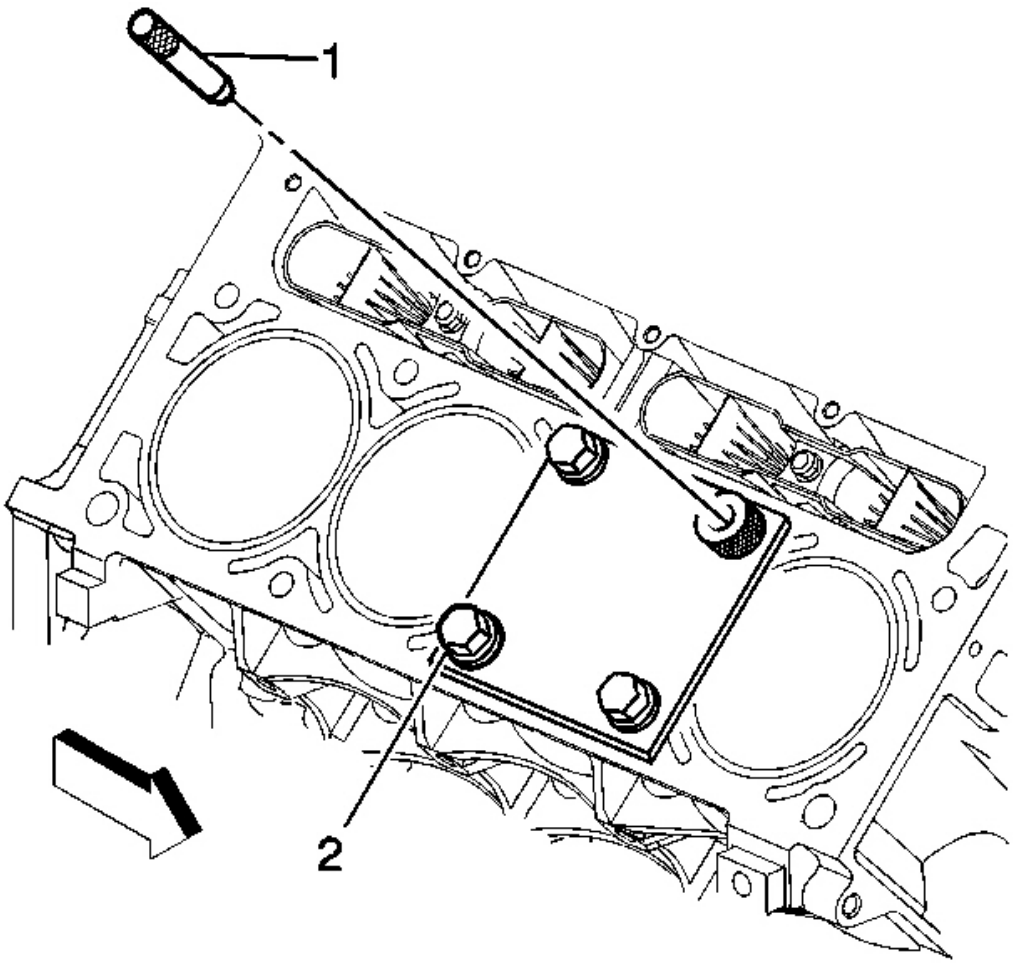

Fig. 14: View Of Alignment Pin & Fixture Retaining Bolt
Courtesy of GENERAL MOTORS CORP.

4. Position the alignment pin (1) through the bushing and into the hole.
5. With the alignment pin in the desired hole, tighten the fixture retaining bolts (2).
6. Remove the alignment pin from the hole.

cardiagn.com

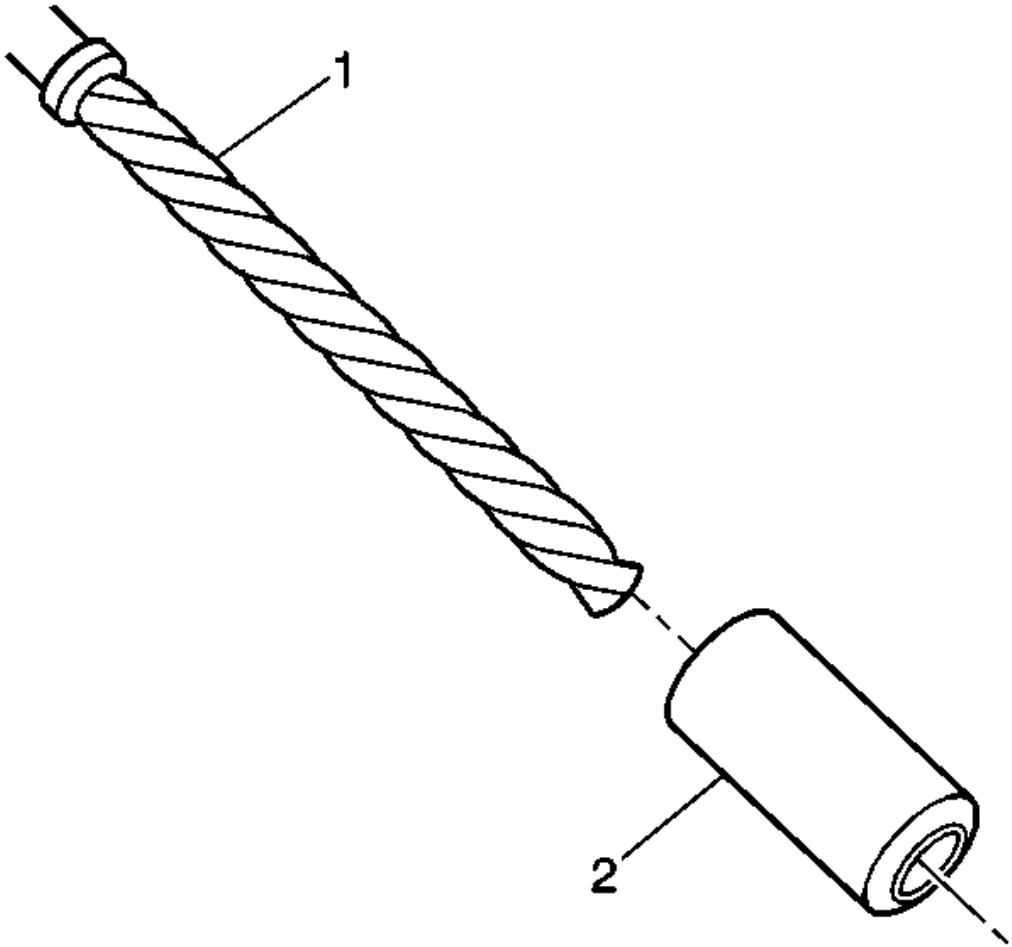

Fig. 15: Installing Sleeve Onto Drill
Courtesy of GENERAL MOTORS CORP.

7. Install the sleeve (2) onto the drill (1), if required.

cardiagn.com

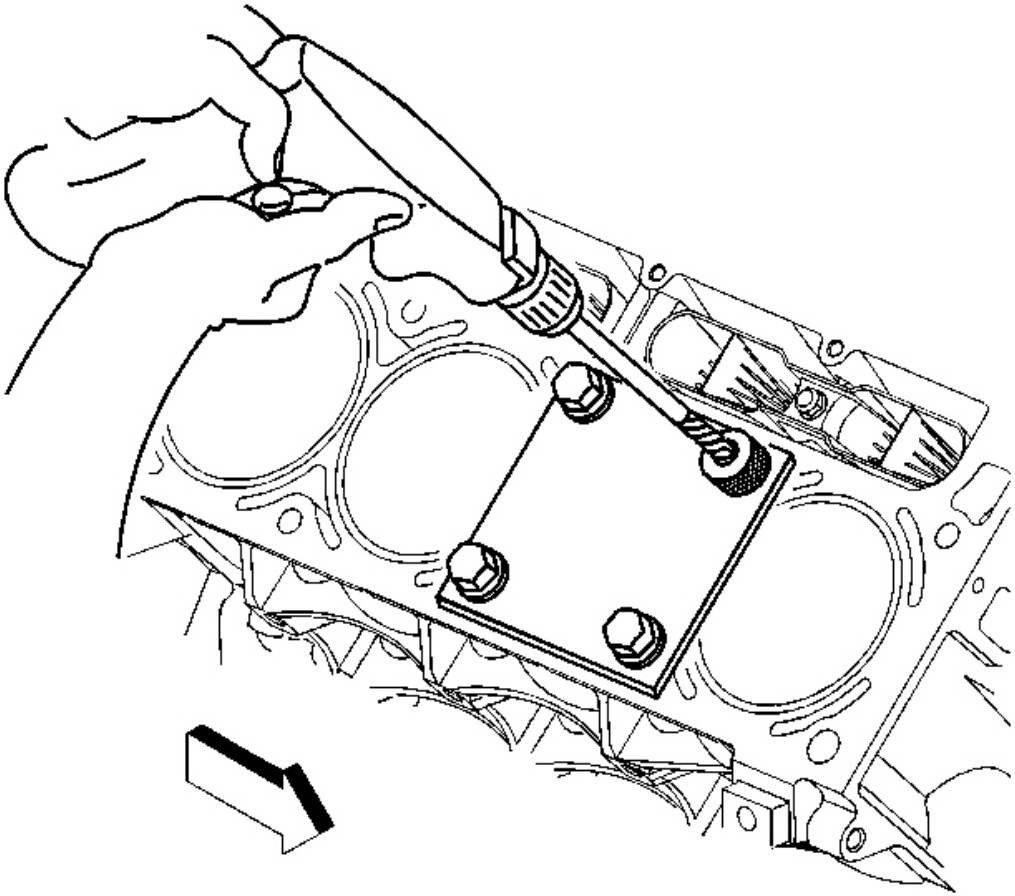

Fig. 16: Drilling Cylinder Head Bolt Hole
Courtesy of GENERAL MOTORS CORP.

IMPORTANT: During the reaming process, it is necessary to repeatedly remove the drill and clean the chips from the hole.

8. Drill out the threads of the damaged hole.

   Drill the hole until the stop collar of the drill bit or the sleeve contacts the bushing.

9. Using compressed air, clean out any chips.

cardiagn.com

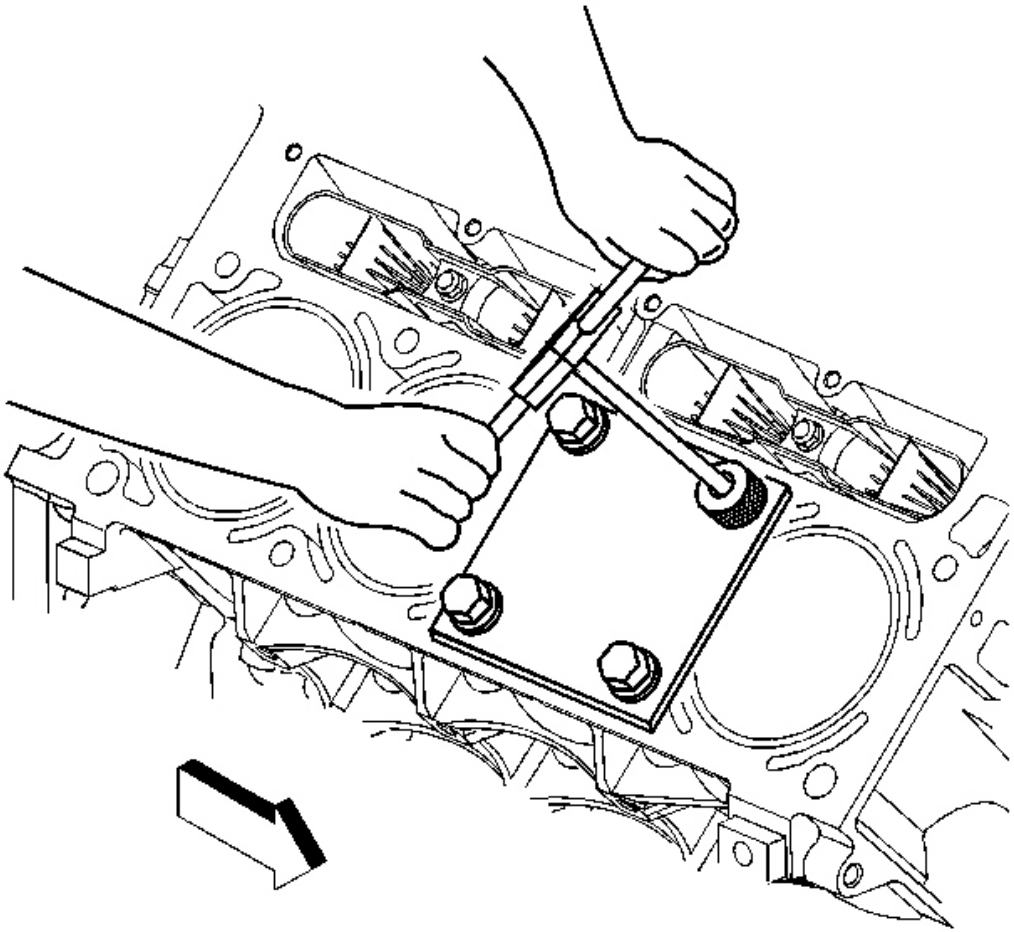

Fig. 17: Tapping Cylinder Head Drilled Hole Using Tap Wrench
Courtesy of GENERAL MOTORS CORP.

10. Using a tap wrench, tap the threads of the drilled hole.

cardiagn.com

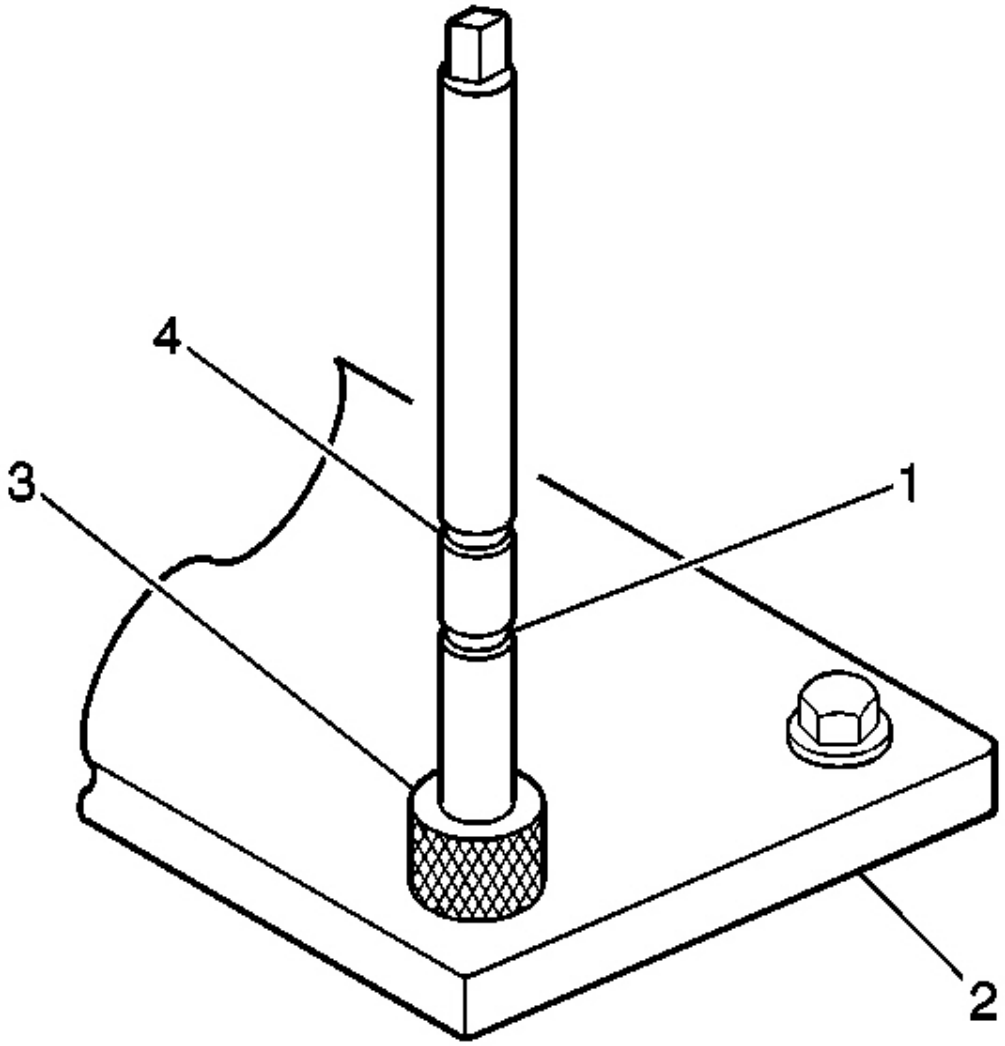

Fig. 18: View Of Tap Upper & Lower Marks, Fixture Plate Bushing
Courtesy of GENERAL MOTORS CORP.

11. In order to tap the new threads to the proper depth, rotate the tap into the hole until the marks (1 or 4) on the tap align with the top of the drill bushing (3).

    For the deeper cylinder head bolt holes, rotate the tap until the upper mark on the tap (4) aligns with the top of the drill bushing.

    For the shallower cylinder head bolt holes, rotate the tap until the lower mark on the tap (1) aligns with

cardiagn.com

the top of the drill bushing.

12. Remove the fixture plate (2), bushing (3), and bolts.
13. Using compressed air, clean out any chips.
14. Spray cleaner GM P/N 12346139 (Canadian P/N 10953463), GM P/N 12377981 (Canadian P/N 10953463) or equivalent into the hole.
15. Using compressed air, clean any cutting oil and chips out of the hole.

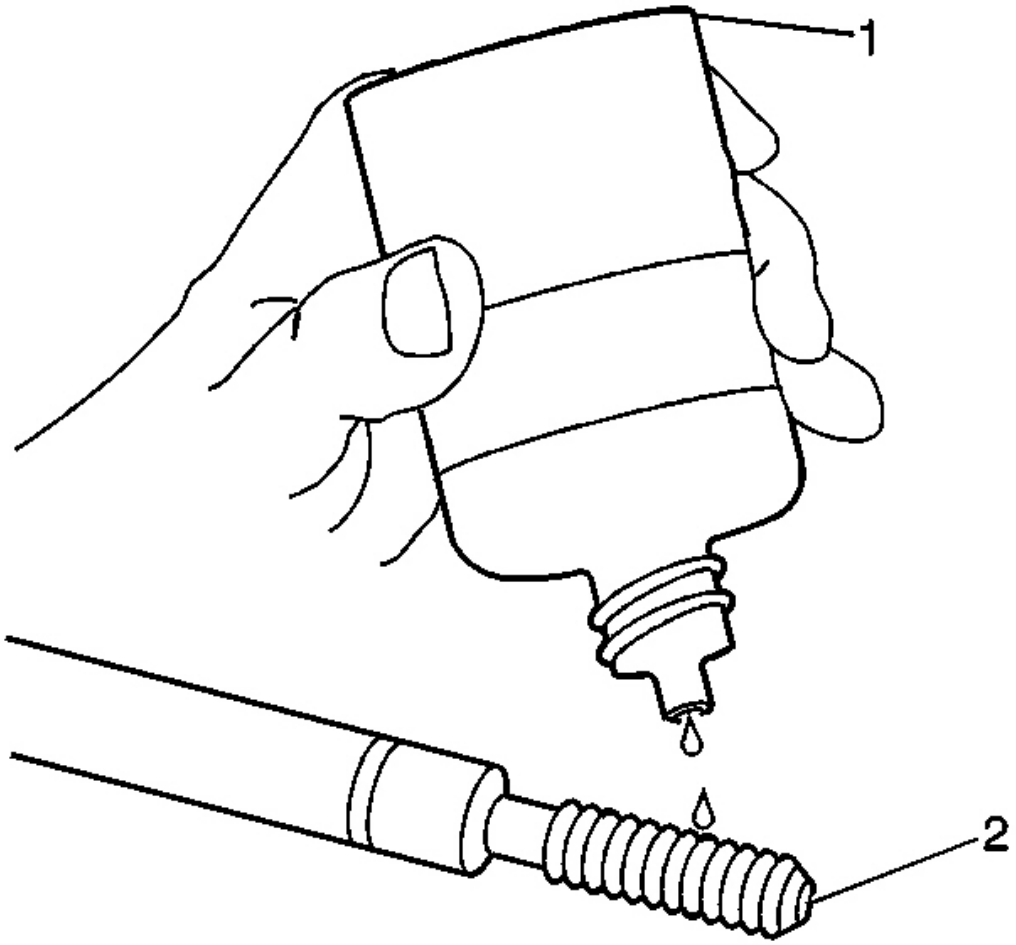

Fig. 19: Lubricating Installer Tool Using Driver Oil
Courtesy of GENERAL MOTORS CORP.

IMPORTANT: Do not allow oil or other foreign material to contact the outside diameter (OD) of the insert.

cardiagn.com

16. Lubricate the threads of the installer tool (2) with the driver oil (1).

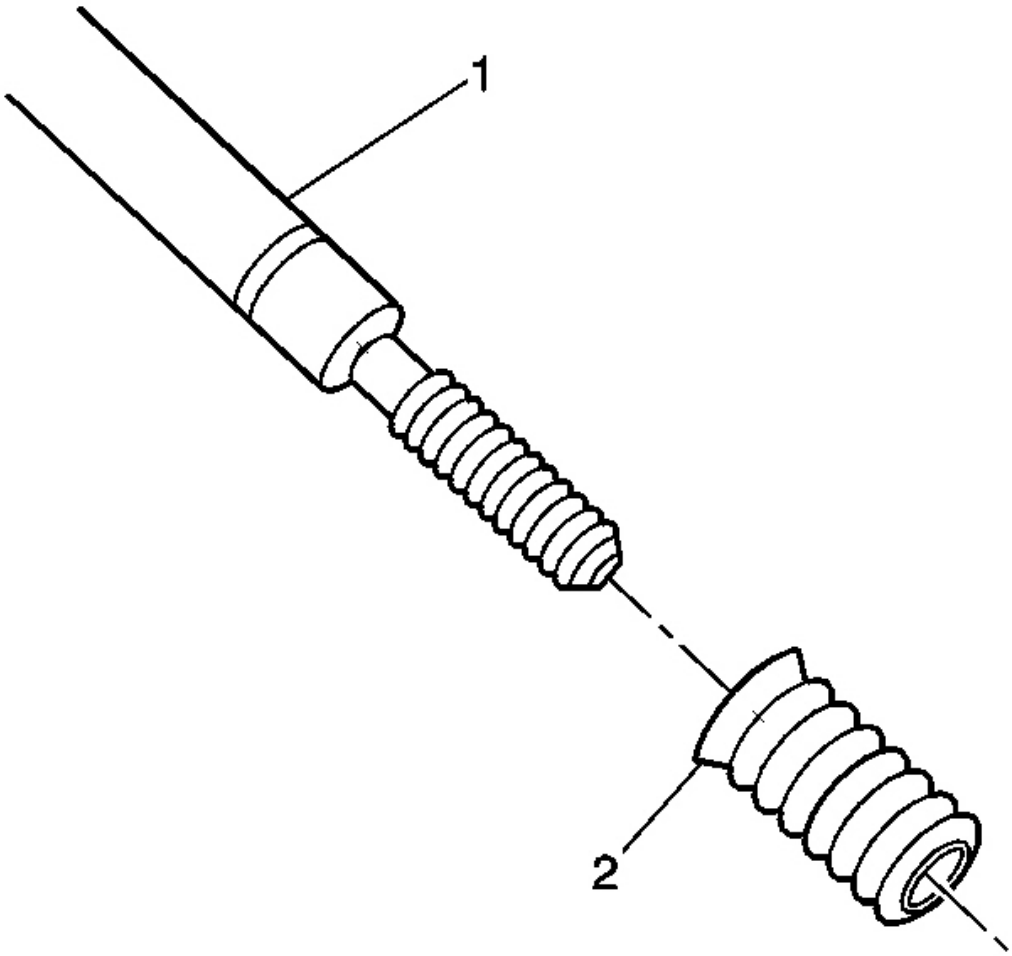

Fig. 20: View of Bushing Type Insert
Courtesy of GENERAL MOTORS CORP.

17. Install the insert (2) onto the driver tool (1).

cardiagn.com

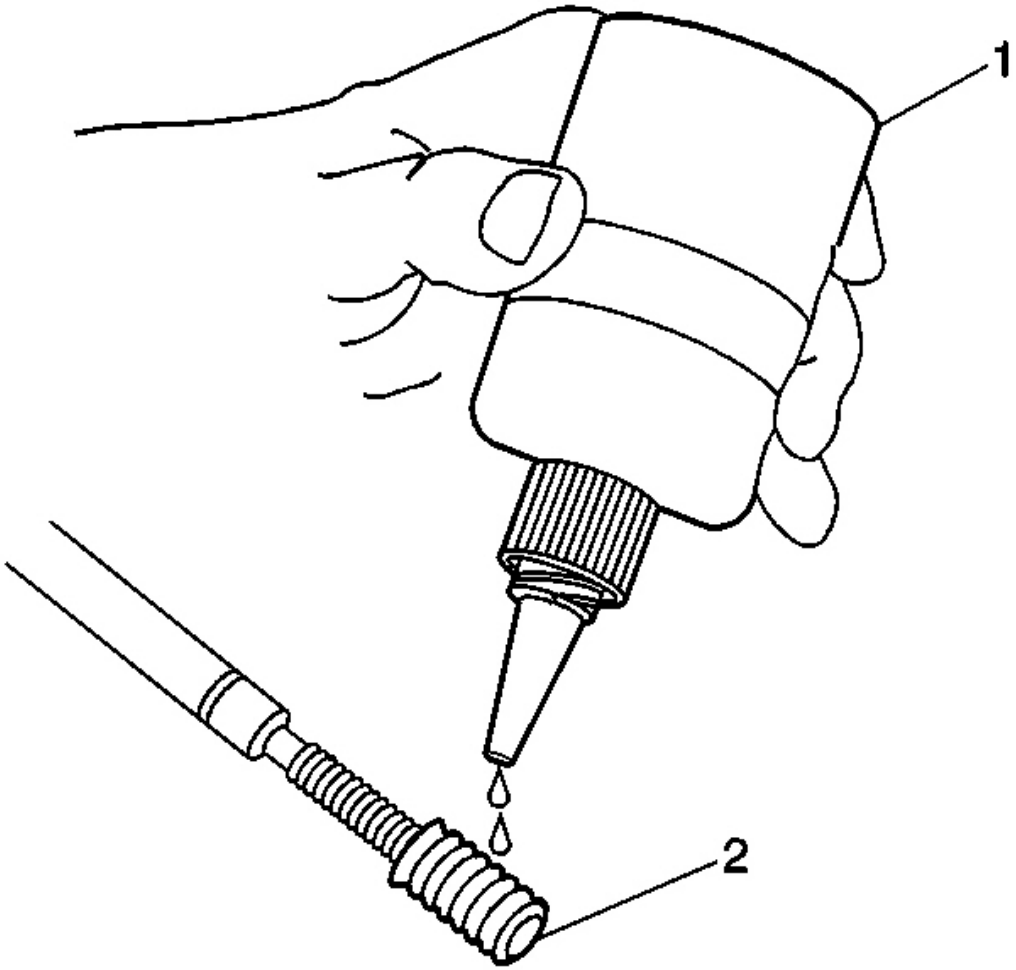

Fig. 21: Applying Threadlock LOCTITE(tm) 277, J 42385-109 To Insert
Courtesy of GENERAL MOTORS CORP.

18. Apply threadlock LOCTITE(tm) 277, J 42385-109 (1), or equivalent to the insert OD threads (2).

cardiagn.com

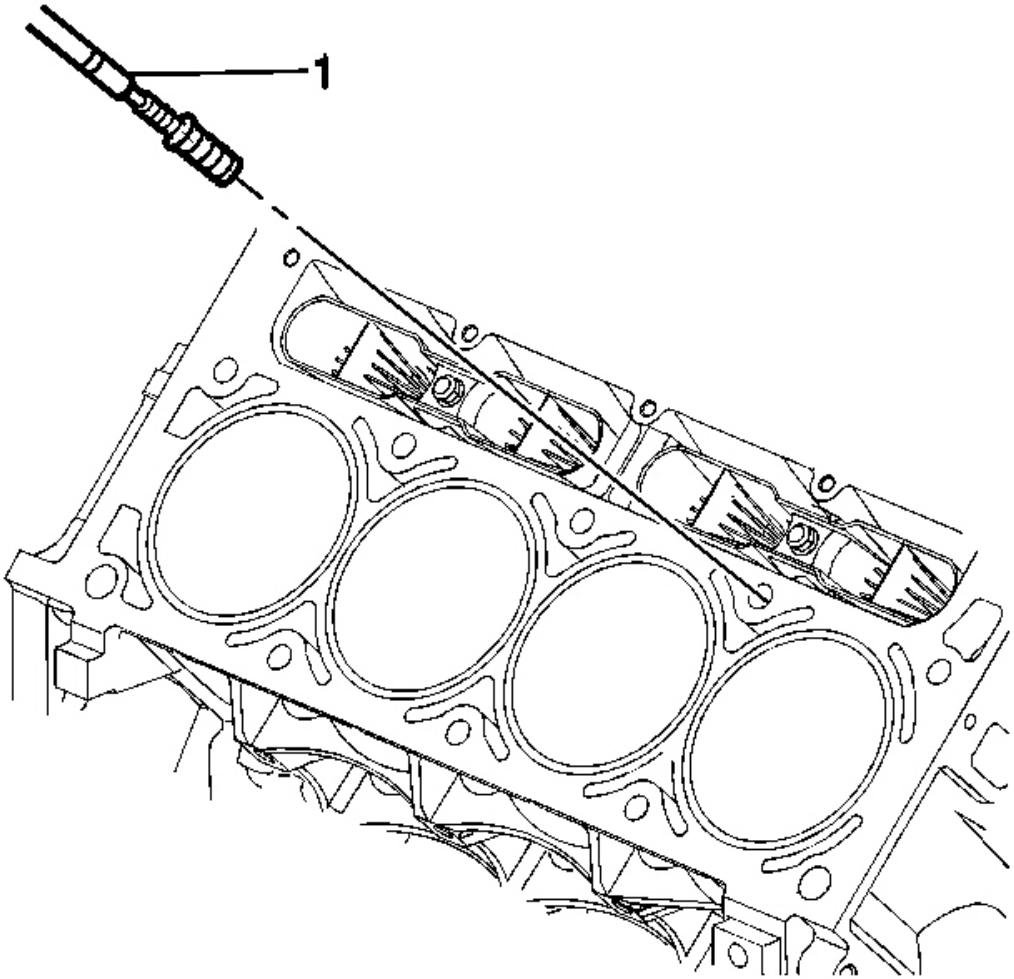

Fig. 22: Installing Insert & Driver Into Cylinder Bolt Hole
Courtesy of GENERAL MOTORS CORP.

19. Install the insert and driver (1) into the hole.

    Rotate the driver tool until the mark on the tool aligns with the deck surface of the engine block.

    The installer tool will tighten up before screwing completely through the insert. This is acceptable. You are forming the bottom threads of the insert and mechanically locking the insert to the base material threads.

Main Cap Bolt Hole Thread Repair

cardiagn.com

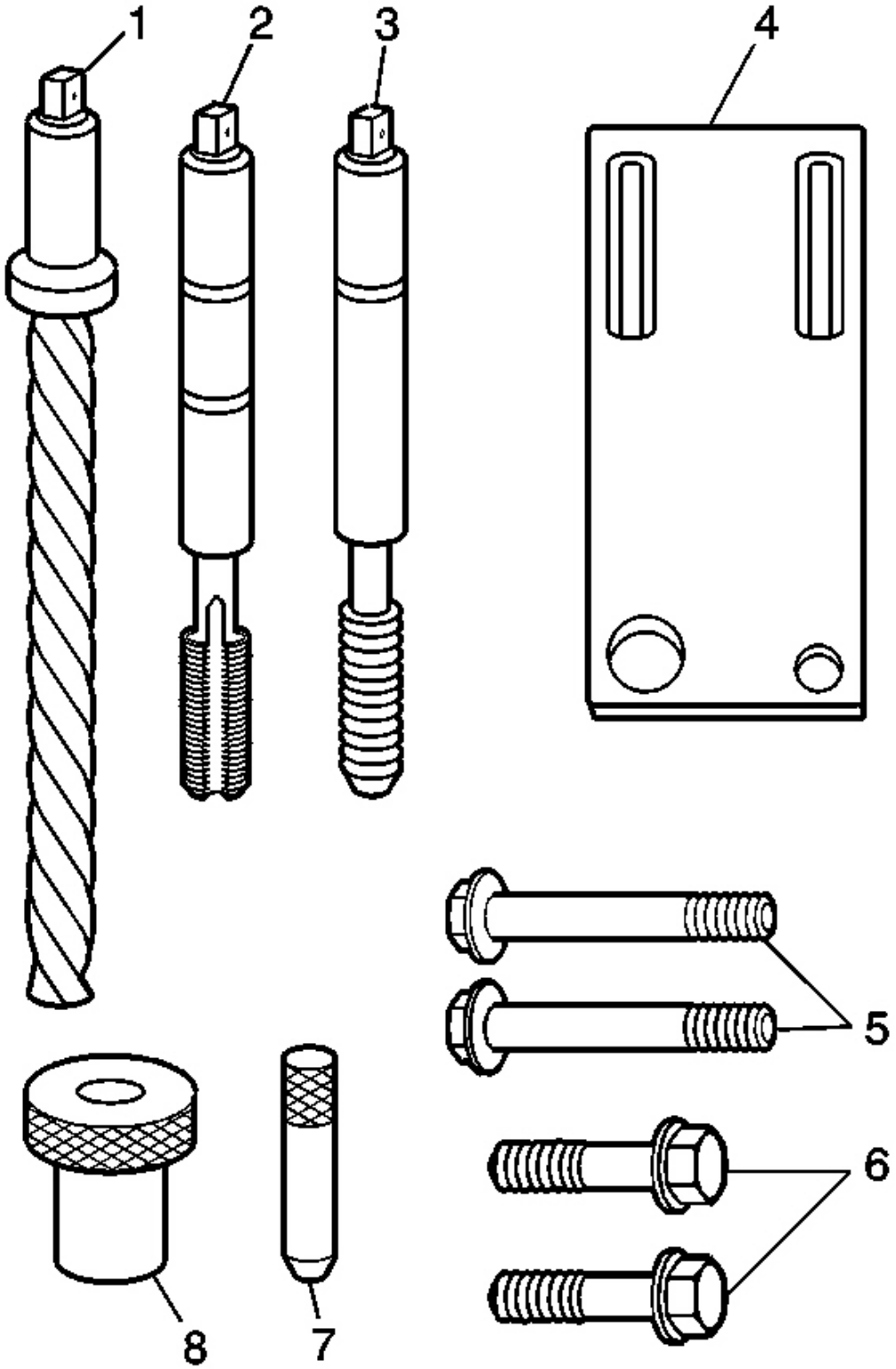

cardiagn.com

Fig. 23: Exploded View Of Main Cap Bolt Hole Thread Repair Kit
Courtesy of GENERAL MOTORS CORP.

1. The main cap bolt hole thread repair kit consists of the following items:
    - The drill (1)
    - The tap (2)
    - The installer (3)
    - The fixture plate (4)
    - The long bolts (5)
    - The short bolts (6)
    - The alignment pin (7)
    - The bushing (8)

cardiagn.com

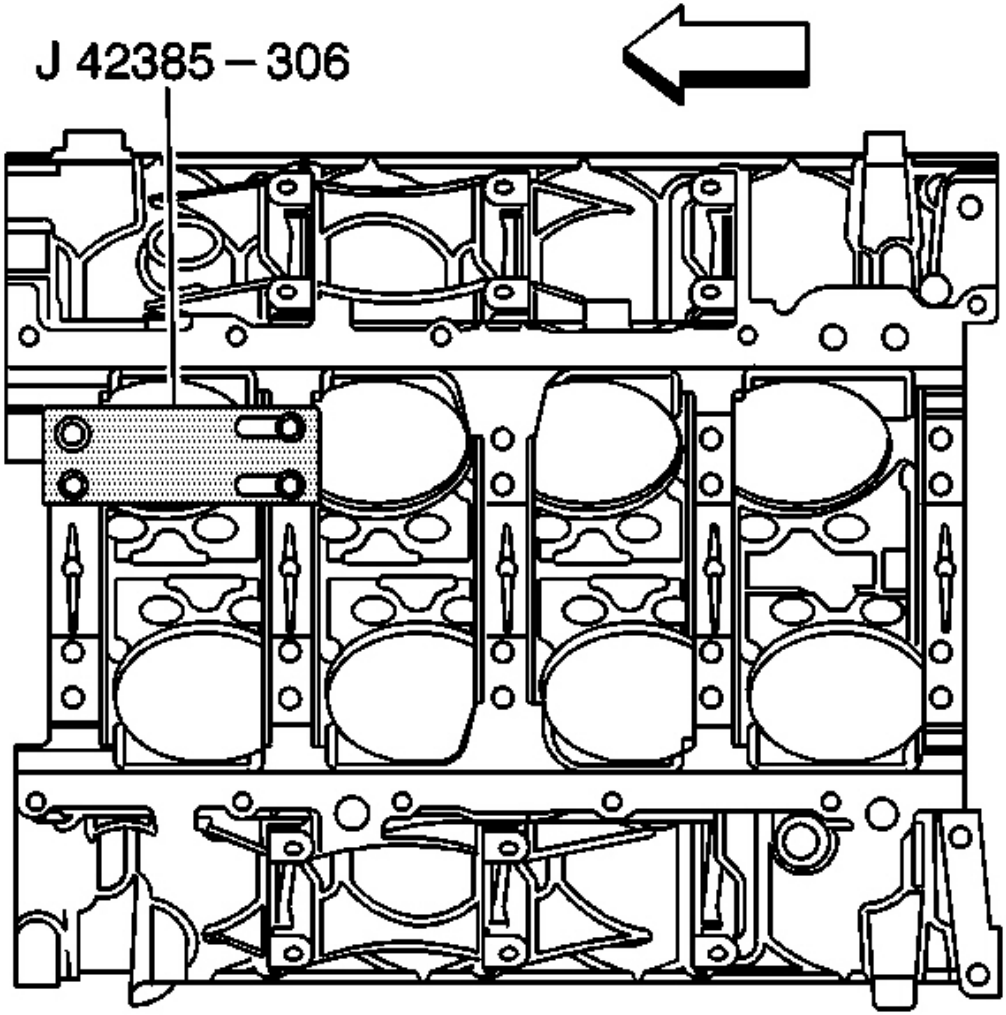

Fig. 24: View Of Fixture Plate, Bolt & Bushing
Courtesy of GENERAL MOTORS CORP.

2. Install the fixture plate, bolt, and bushing, onto the engine block.

   Position the fixture plate and bushing over the hole that is to be repaired.

3. Position the alignment pin in the desired hole and tighten the fixture retaining bolts.

cardiagn.com

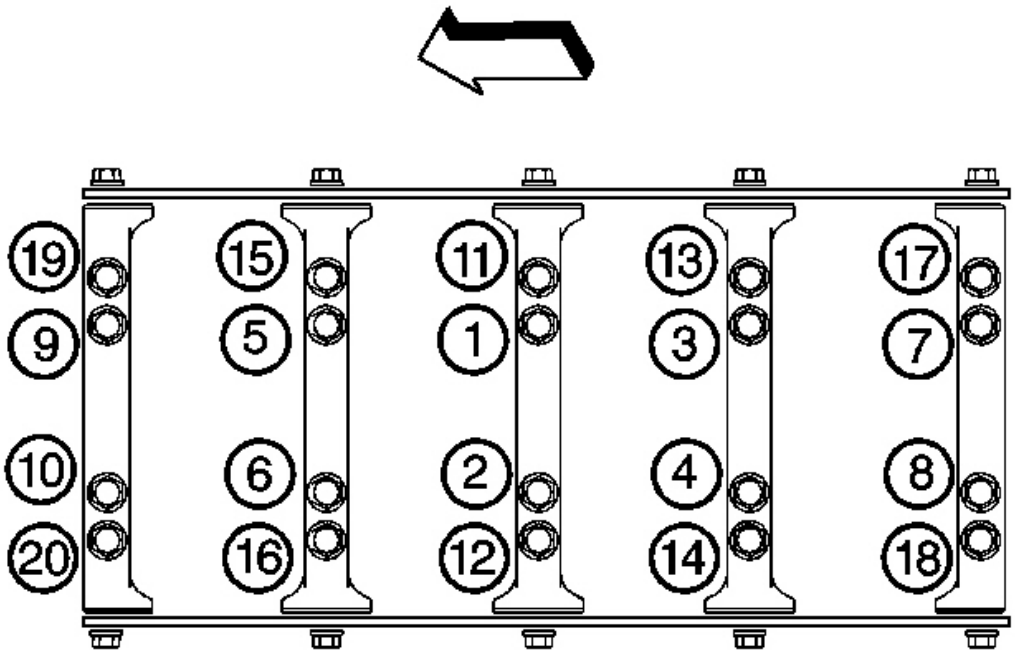

Fig. 25: Main Cap Bolt Hole Tightening Sequence
Courtesy of GENERAL MOTORS CORP.

4. Drill out the damaged hole.

   The outer bolt hole locations (11-20) have the shallower counterbores. Use sleeve J 42385-316 with the drill.

   Drill until the stop collar of the drill bit or the sleeve contacts the bushing.

5. Using compressed air, clean out any chips.

cardiagn.com

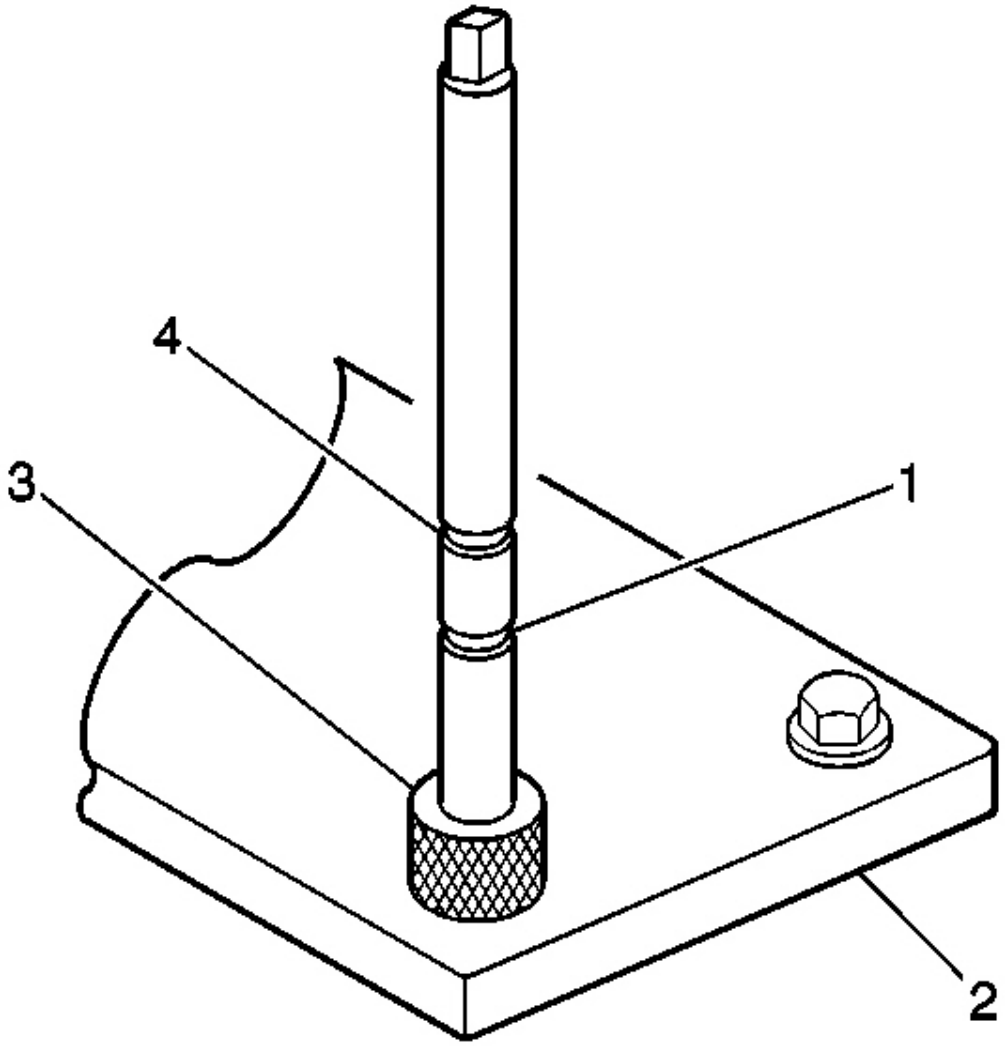

Fig. 26: View Of Tap Upper & Lower Marks, Fixture Plate Bushing
Courtesy of GENERAL MOTORS CORP.

6. Using a tap wrench, tap the threads of the drilled hole.

   In order to tap the new threads to the proper depth, rotate the tap into the hole until the mark on the tap aligns with the top of the bushing.

   For the deeper main cap holes (1-10), rotate the tap until the upper mark (4) on the tap aligns with the top of the bushing (3).

cardiagn.com

For the shallower main cap holes (11-20), rotate the tap until the lower mark (1) on the tap aligns with top of the bushing (3).

7. Using compressed air, clean out any chips.
8. Spray cleaner GM P/N 12346139 (Canadian P/N 10953463) or equivalent into the hole.
9. Using compressed air, clean any cutting oil and chips out of the hole.

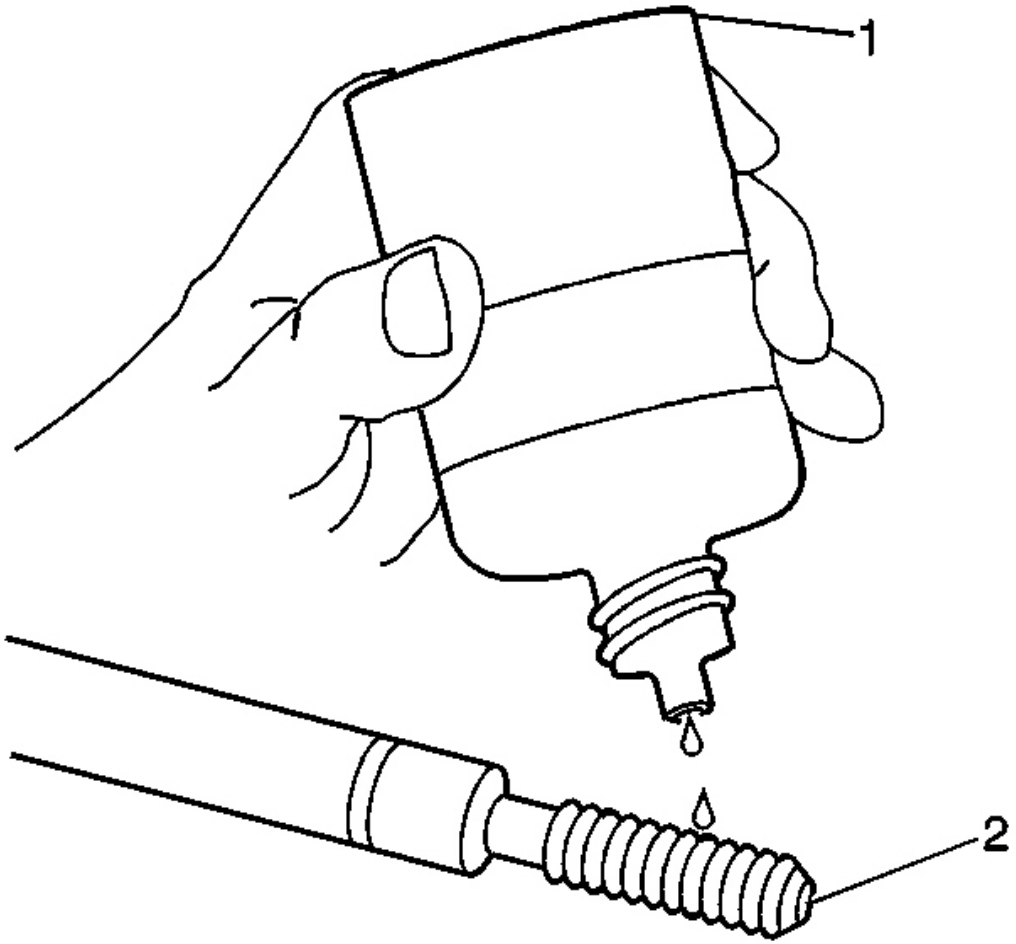

Fig. 27: Lubricating Installer Tool Using Driver Oil
Courtesy of GENERAL MOTORS CORP.

IMPORTANT: Do not allow oil or other foreign material to contact the outside diameter (OD) of the insert.

cardiagn.com

10. Lubricate the threads of the installer tool (2) with the driver oil (1).

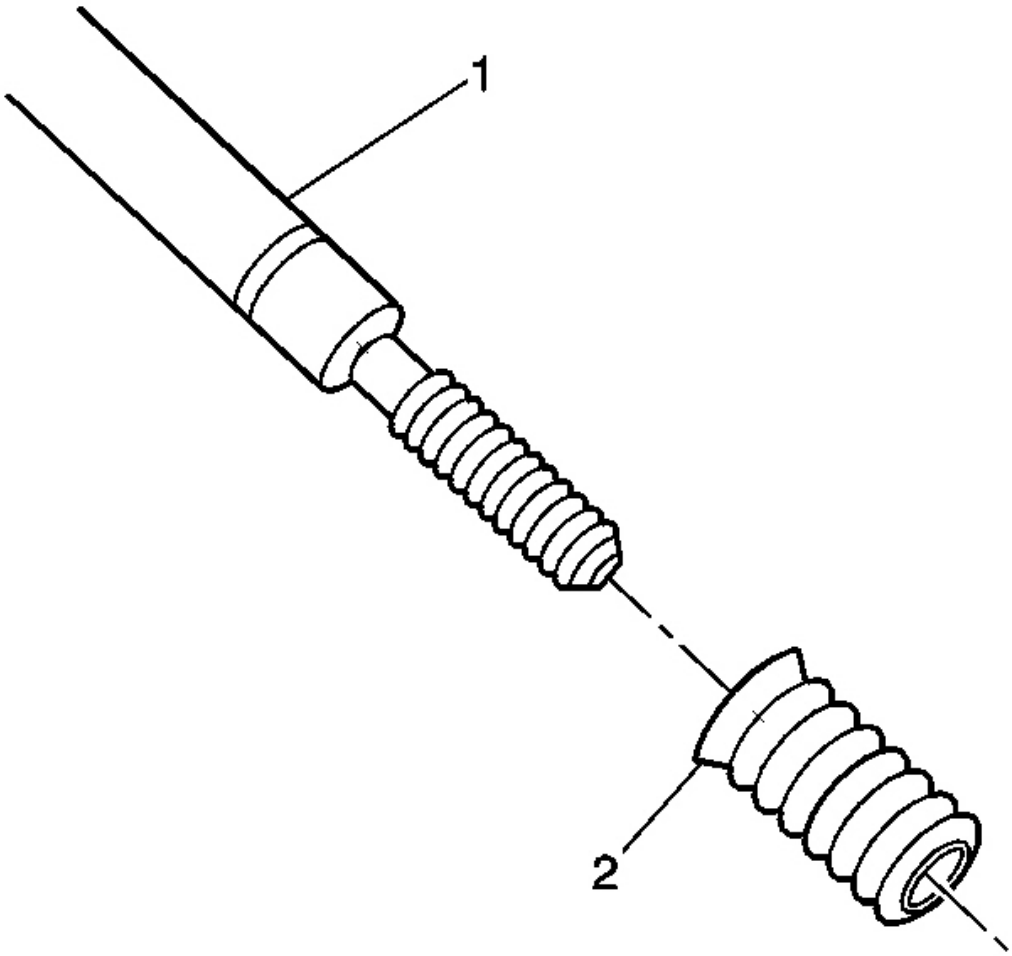

Fig. 28: View of Bushing Type Insert
Courtesy of GENERAL MOTORS CORP.

11. Install the insert (2) onto the driver tool (1).

cardiagn.com

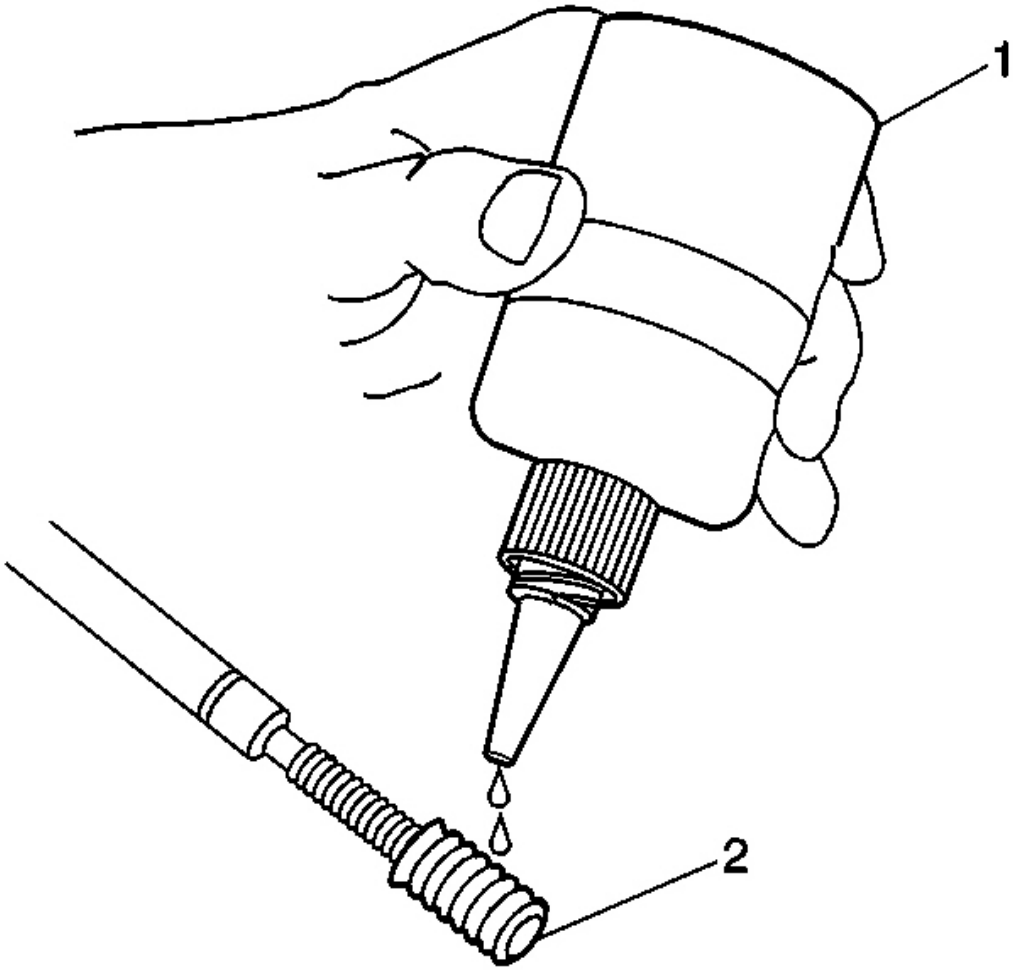

Fig. 29: Applying Threadlock LOCTITE(tm) 277, J 42385-109 To Insert
Courtesy of GENERAL MOTORS CORP.

12. Apply threadlock LOCTITE(tm) 277, J 42385-109 (1), or equivalent to the insert OD threads (2).

cardiagn.com

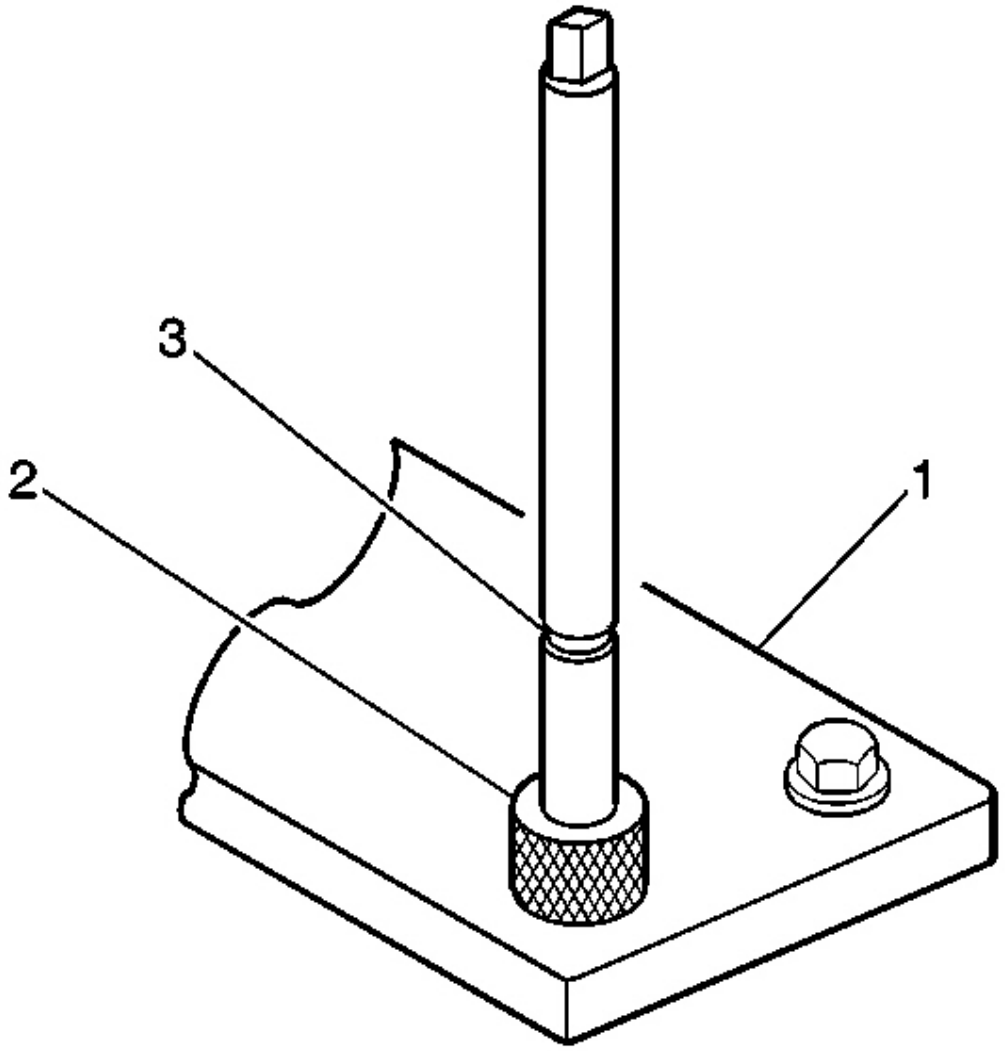

Fig. 30: Insert & Driver, Driver Tool & Top Of Bushing
Courtesy of GENERAL MOTORS CORP.

IMPORTANT: The fixture plate and bushing remains installed onto the engine block during the insert installation procedure.

13. Install the insert and driver (1) through the fixture plate and bushing and into the hole.

    Rotate the driver tool until the mark on the tool (3) aligns with the top of the bushing (2).

cardiagn.com

The installer tool will tighten up before screwing completely through the insert. This is acceptable. You are forming the bottom threads of the insert and mechanically locking the insert to the base material threads.

SERVICE PRIOR TO ASSEMBLY

- Dirt or debris will cause premature wear of the rebuilt engine. Clean all the components. Refer to **Cleanliness and Care** .
- Use the proper tools to measure components when checking for excessive wear. Components that are not within the manufacturers specifications must be repaired or replaced.
- When the components are installed into an engine, return the components to their original location, position and direction. Refer to **Separating Parts** .
- During assembly, lubricate all the moving parts with clean engine oil. This will provide initial lubrication when the engine is first started.

ENGINE PRELUBING

Tools Required

J 45299 Engine Preluber

cardiagn.com

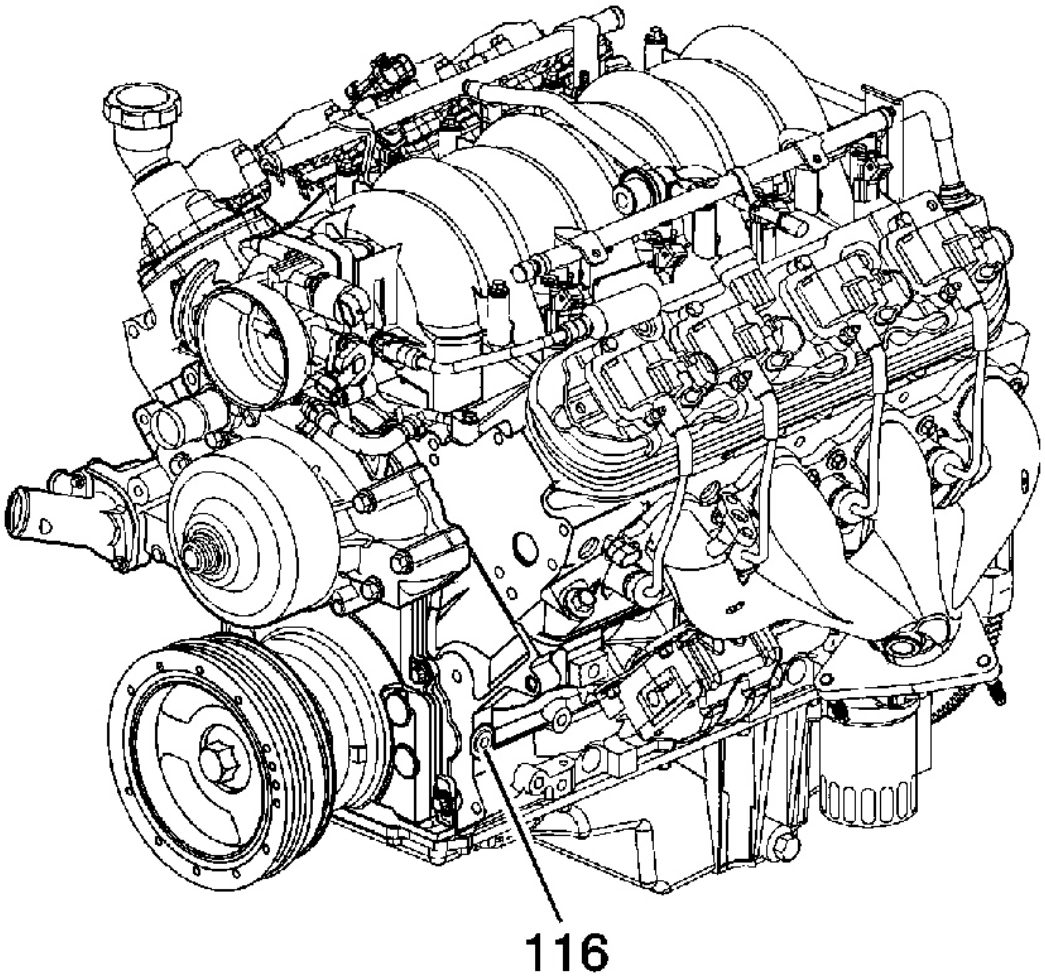

Fig. 31: Engine Oil Filter
Courtesy of GENERAL MOTORS CORP.

IMPORTANT: A constant and continuous flow of clean engine oil is required in order to properly prime the engine. Be sure to use an approved engine oil as specified in the owners manual.

1. Remove the engine oil filter and fill with clean engine oil.

NOTE: Refer to Fastener Notice in Cautions and Notices.

2. Install the oil filter.

Tighten: Tighten the oil filter to 30 N.m (22 lb ft).

cardiagn.com

3. Locate the engine block left front oil gallery plug (116).
4. Install the M16 x 1.5 adapter P/N 509375.

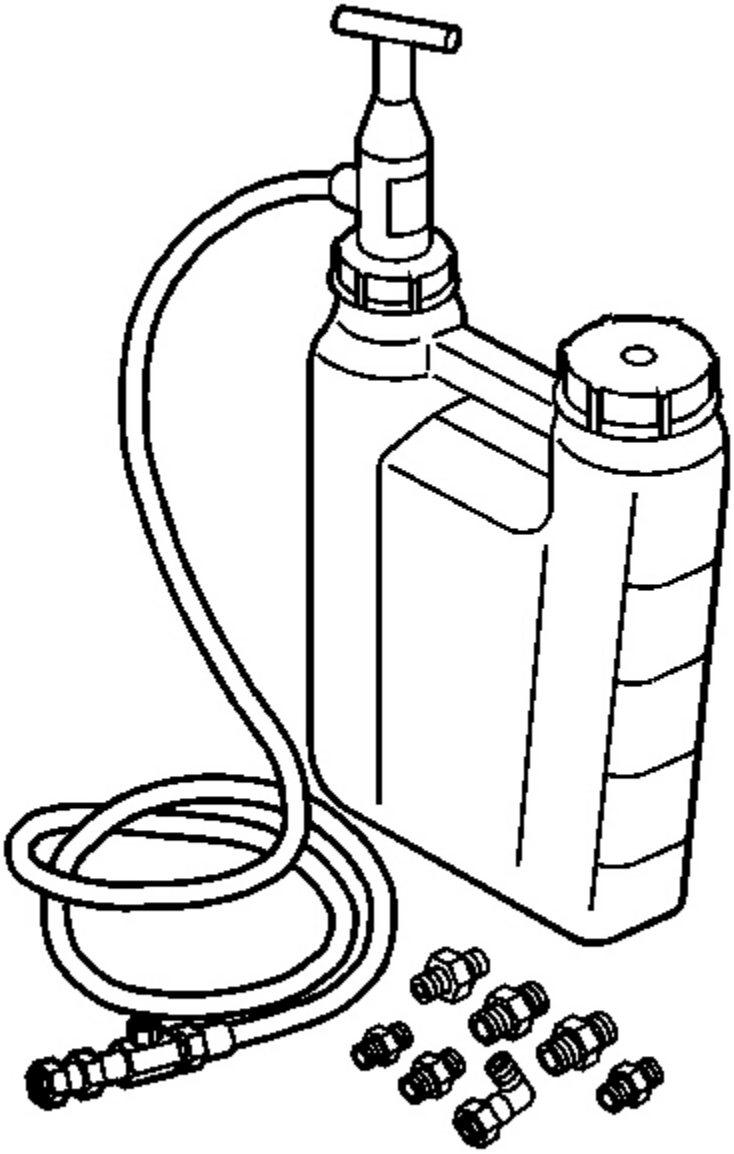

Fig. 32: Flexible Hose, Adapter & Gallery Plugs
Courtesy of GENERAL MOTORS CORP.

cardiagn.com

5. Install the flexible hose to the adapter and open the valve.
6. Pump the handle on the **J 45299** in order to flow a minimum of 1-1.9 liters (1-2 quarts) engine oil. Observe the flow of engine oil through the flexible hose and into the engine assembly.
7. Close the valve and remove the flexible hose and adapter from the engine.
8. Install the gallery plug to the engine.

   Tighten: Tighten the oil gallery plug to 60 N.m (44 lb ft).

9. Top-off the engine oil to the proper level.

ENGINE BLOCK PLUG INSTALLATION

Tools Required

J 41712 Oil Pressure Switch Socket

cardiagn.com

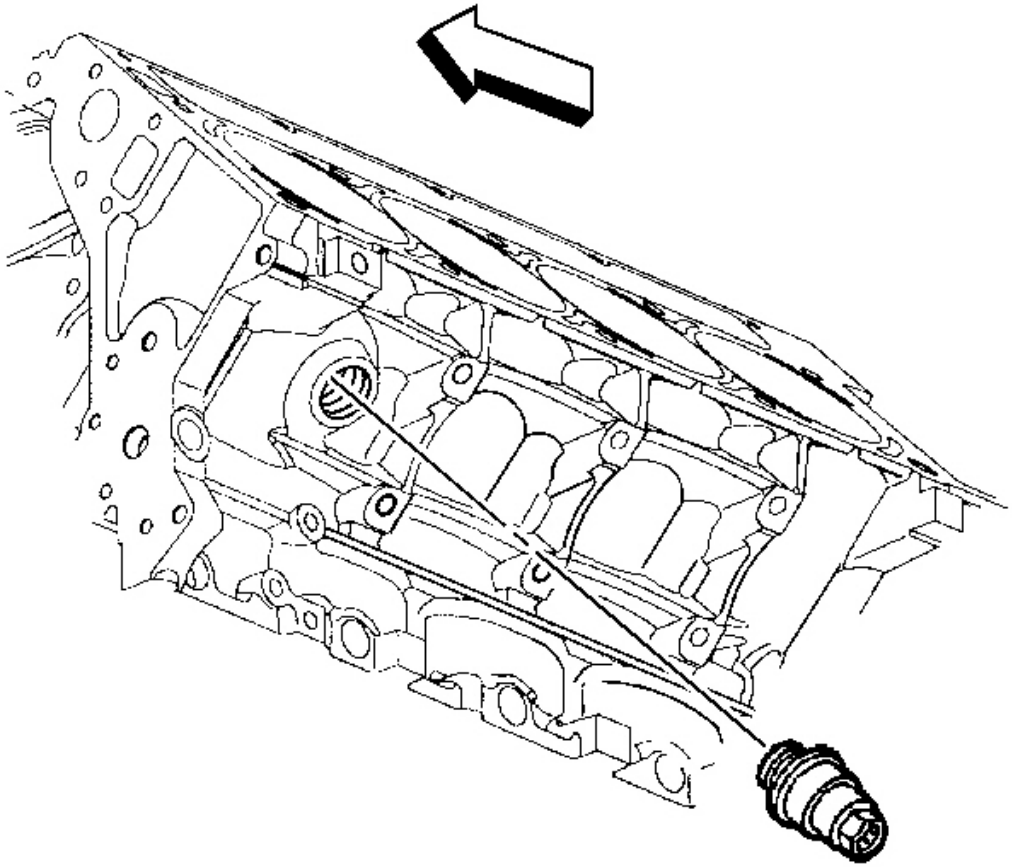

Fig. 33: View Of Engine Block Coolant Heater
Courtesy of GENERAL MOTORS CORP.

IMPORTANT:

- **Engine block plug, including oil gallery, and coolant, and coolant heater, sealing washers may be used again if not bent, scored or otherwise damaged.**
- **Apply the proper amount and type of sealant to the sealing washer as recommended in the service procedure.**

1. Apply a 3.175 mm (0.125 in) bead of sealant GM P/N 12346004 (Canadian P/N 10953480) or equivalent to the engine block coolant heater sealing washer, if applicable.

NOTE: **Refer to Fastener Notice in Cautions and Notices.**

cardiagn.com

2. Install the engine block coolant heater to the engine block, if applicable.

   Tighten: Tighten the block coolant heater to 40 N.m (30 lb ft).

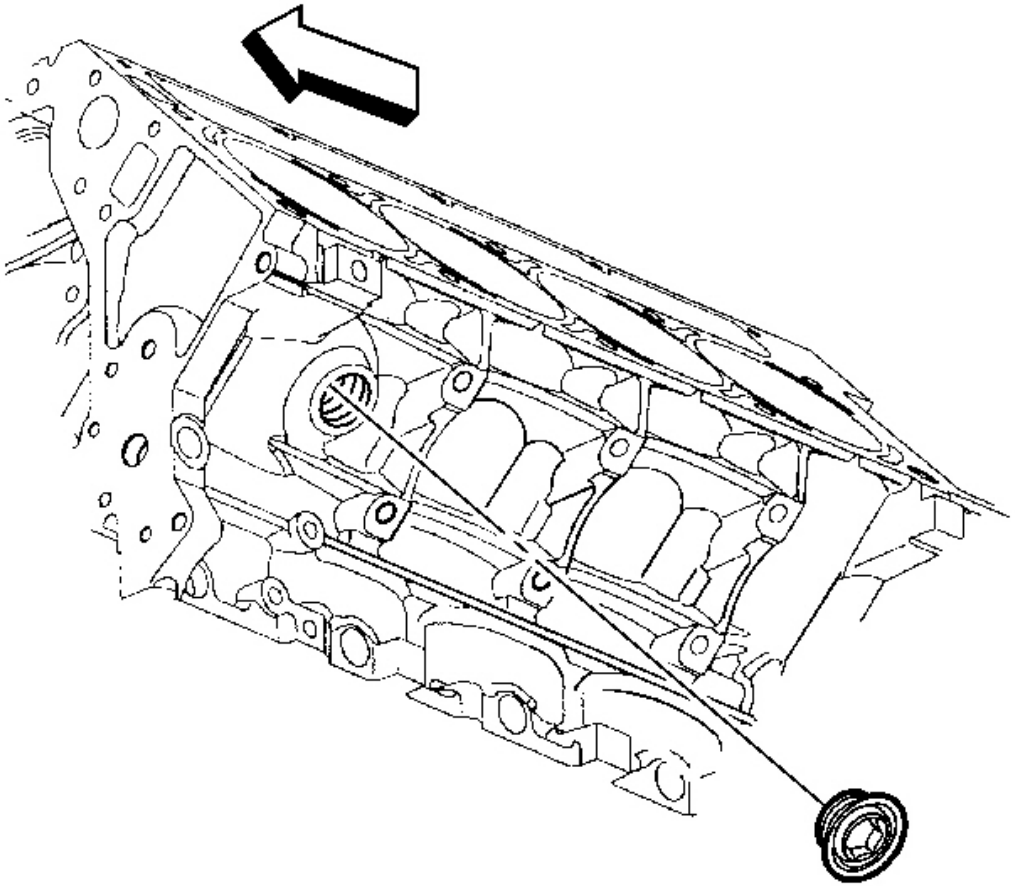

Fig. 34: View Of Engine Block Left Rear Coolant Drain Hole Plug
Courtesy of GENERAL MOTORS CORP.

3. Apply a 3.175 mm (0.125 in) bead of sealant GM P/N 12346004 (Canadian P/N 10953480) or equivalent to the engine block left side coolant drain hole plug sealing washer, if applicable.
4. Install the engine block left side coolant drain hole plug, if applicable.

   Tighten: Tighten the block left front coolant drain plug to 60 N.m (44 lb ft).

cardiagn.com

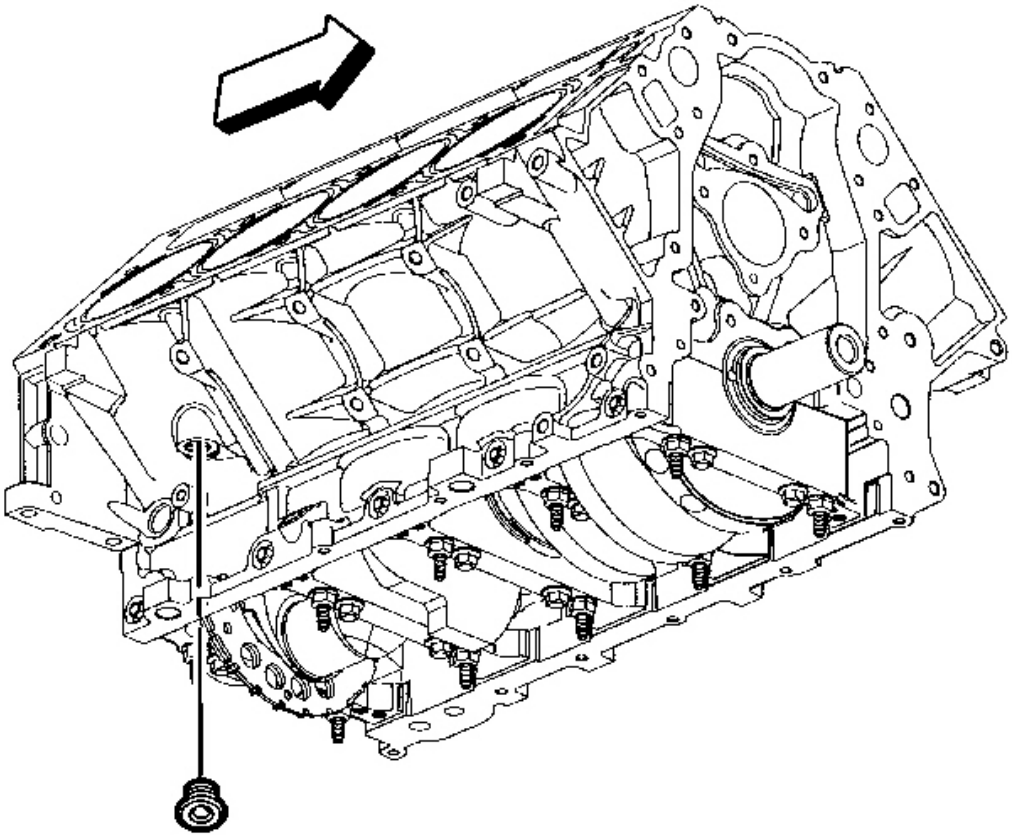

Fig. 35: Identifying Plug Location On Underside Of Block
Courtesy of GENERAL MOTORS CORP.

5. Apply a 3.175 mm (0.125 in) bead of sealant GM P/N 12346004 (Canadian P/N 10953480) or equivalent to the engine block right side coolant drain hole plug sealing washer.
6. Install the engine block right side coolant drain hole plug.

   Tighten: Tighten the block right side coolant drain hole plug to 60 N.m (44 lb ft).

cardiagn.com

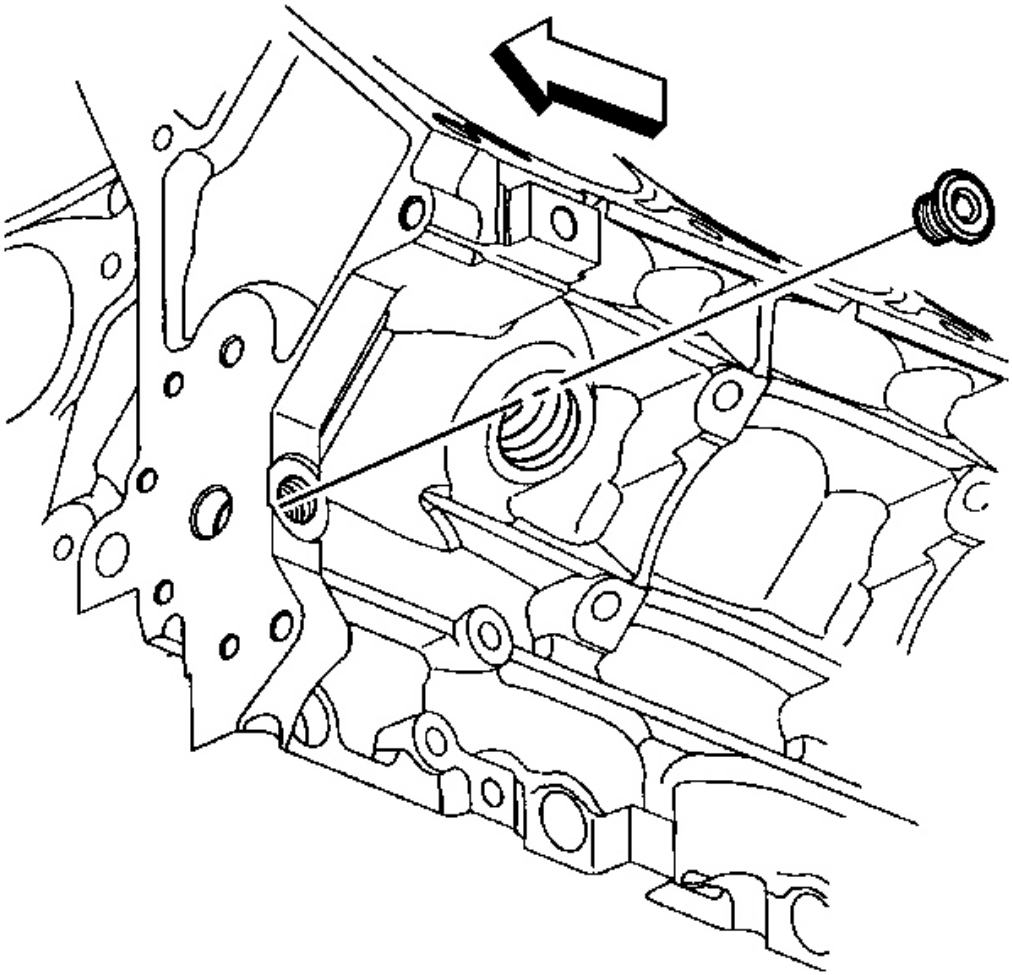

Fig. 36: View Of Engine Block Left Front Oil Gallery Plug
Courtesy of GENERAL MOTORS CORP.

7. Apply a 3.175 mm (0.125 in) bead of sealant GM P/N 12346004 (Canadian P/N 10953480) or equivalent to the engine block left front oil gallery plug sealing washer.
8. Install the engine block left front oil gallery plug.

   Tighten: Tighten the block left front oil gallery plug to 60 N.m (44 lb ft).

cardiagn.com

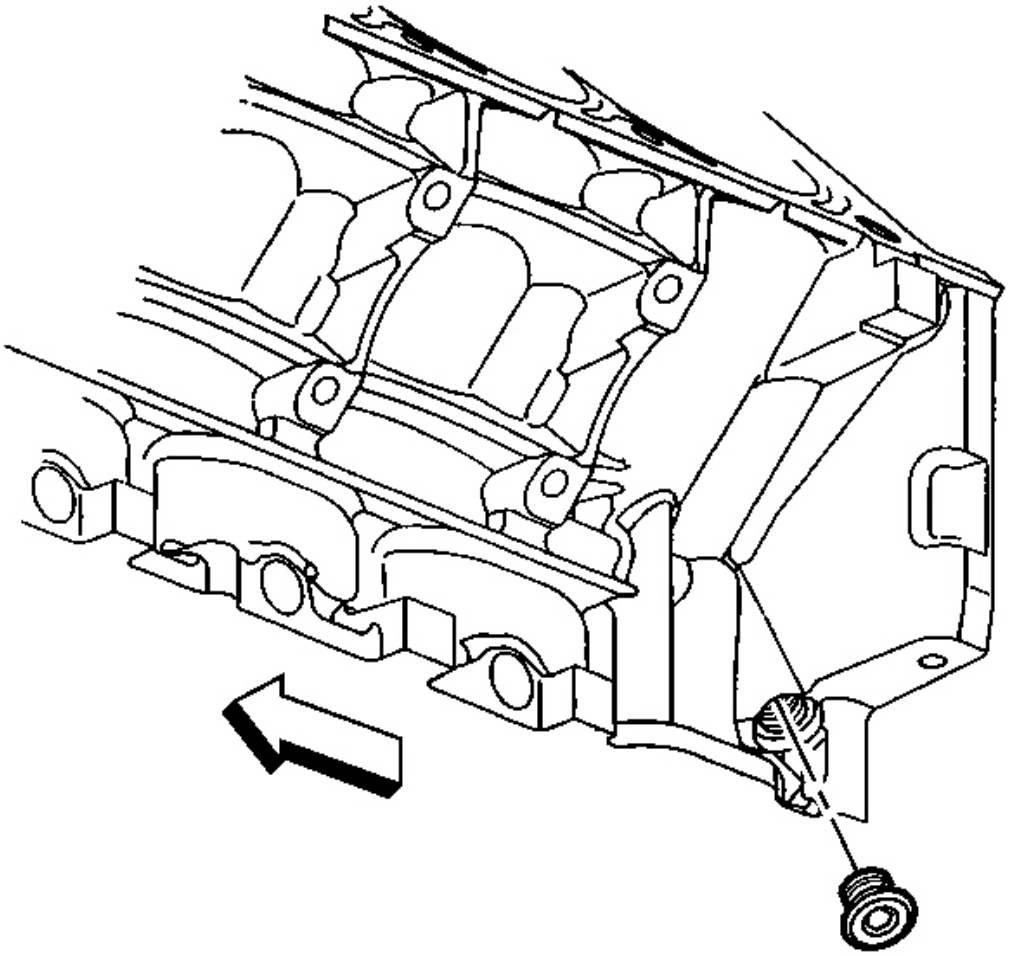

Fig. 37: View Engine Block Left Rear Oil Gallery Plug
Courtesy of GENERAL MOTORS CORP.

9. Apply a 3.175 mm (0.125 in) bead of sealant GM P/N 12346004 (Canadian P/N 10953480) or equivalent to the engine block left rear oil gallery plug sealing washer.
10. Install the engine block left rear oil gallery plug.

    Tighten: Tighten the block left rear oil gallery plug to 60 N.m (44 lb ft).

cardiagn.com

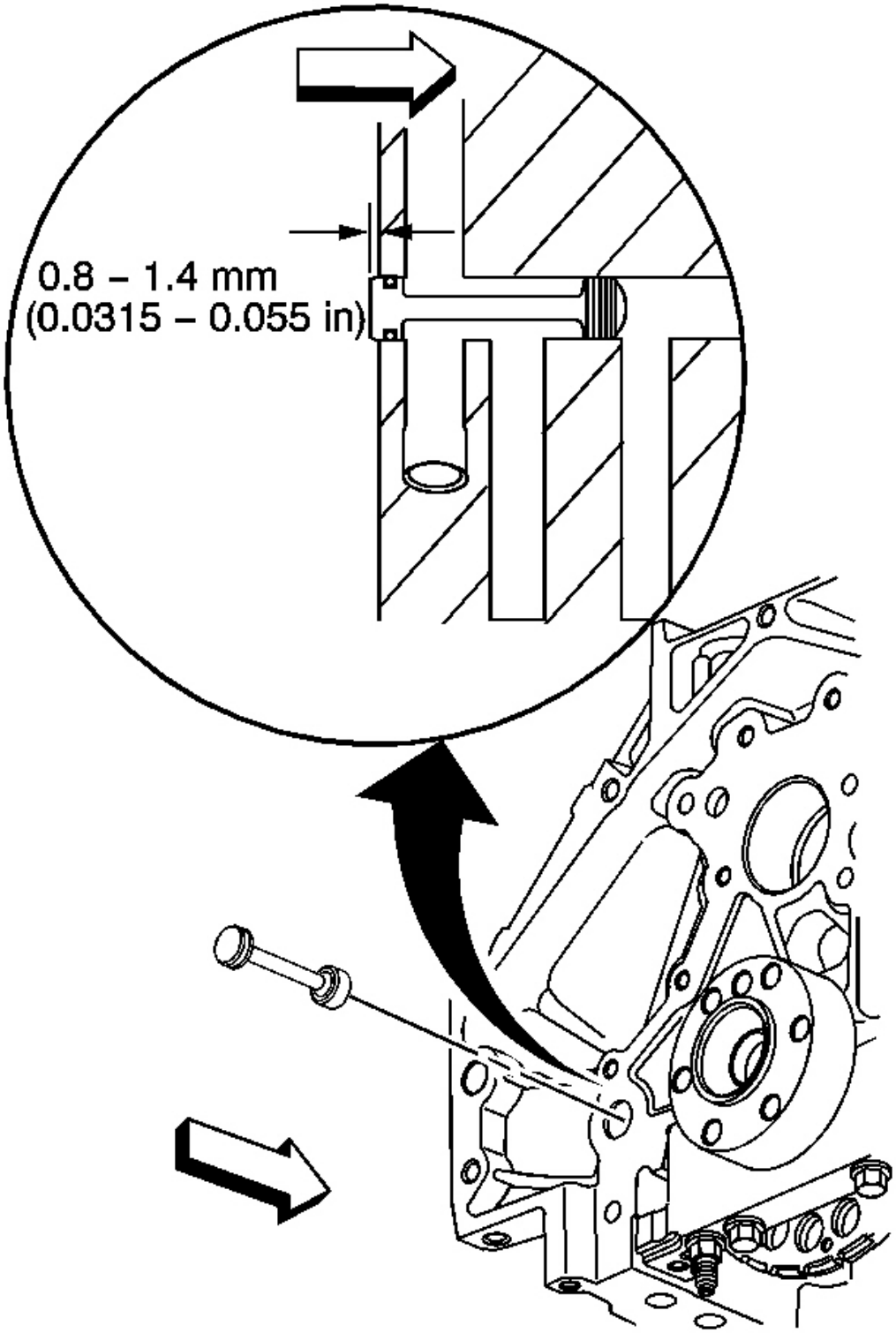

cardiagn.com

Fig. 38: View Of Engine Block Rear Oil Gallery Plug
Courtesy of GENERAL MOTORS CORP.

11. Inspect the engine block rear oil gallery plug and O-ring seal. If the O-ring seal on the plug is not cut or damaged, the rear oil gallery plug may be used again.
12. Lubricate the O-ring seal with clean engine oil.
13. Install the block rear oil gallery plug into the oil gallery bore. A properly installed block plug will protrude 0.8-1.4 mm (0.0315-0.055 in) beyond the rear face of the block.

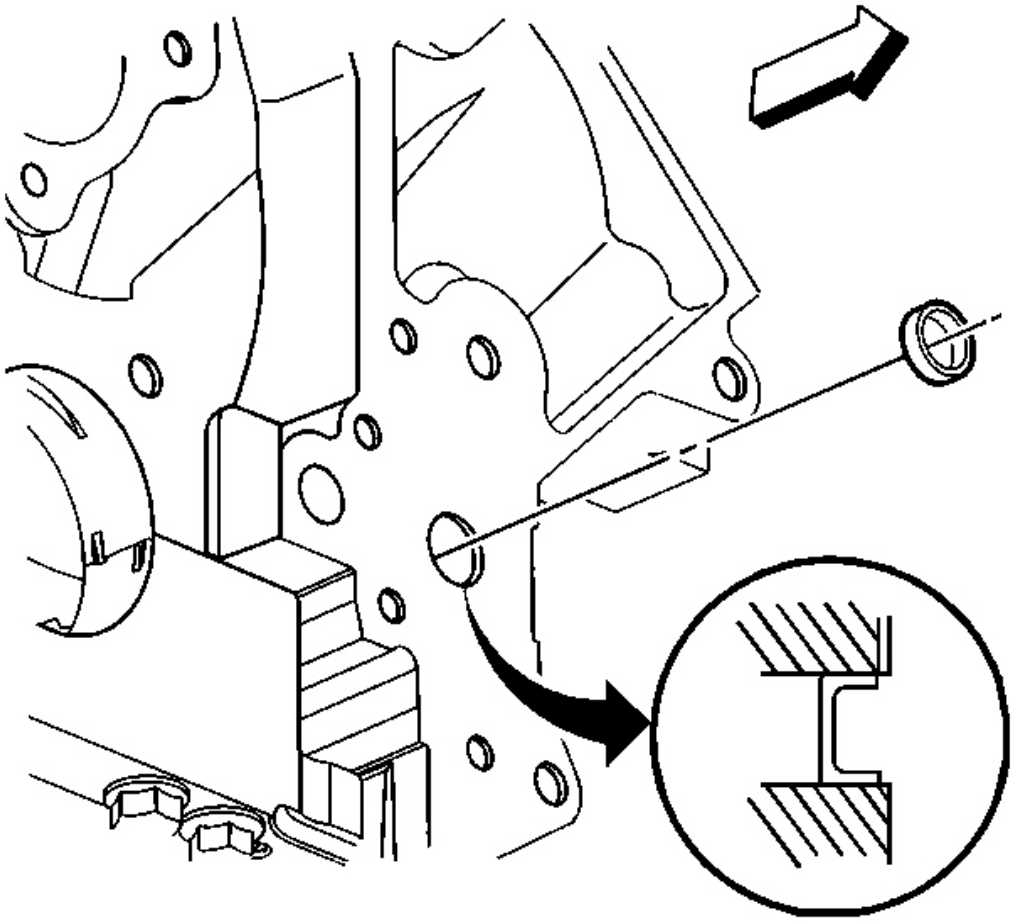

Fig. 39: View Of Engine Block Front Oil Gallery Plug
Courtesy of GENERAL MOTORS CORP.

IMPORTANT: The engine block front oil gallery plug should not be removed unless service is required.

cardiagn.com

14. Apply sealant GM P/N 12345382 (Canadian P/N 10953489) or equivalent to the sides of the NEW front oil gallery plug.
15. Install a NEW engine block front oil gallery plug, if required. Install the front oil gallery plug into the oil gallery bore 2.2-2.8 mm (0.0086-0.011 in) below flush.

    Do not install the plug more than the recommended depth.

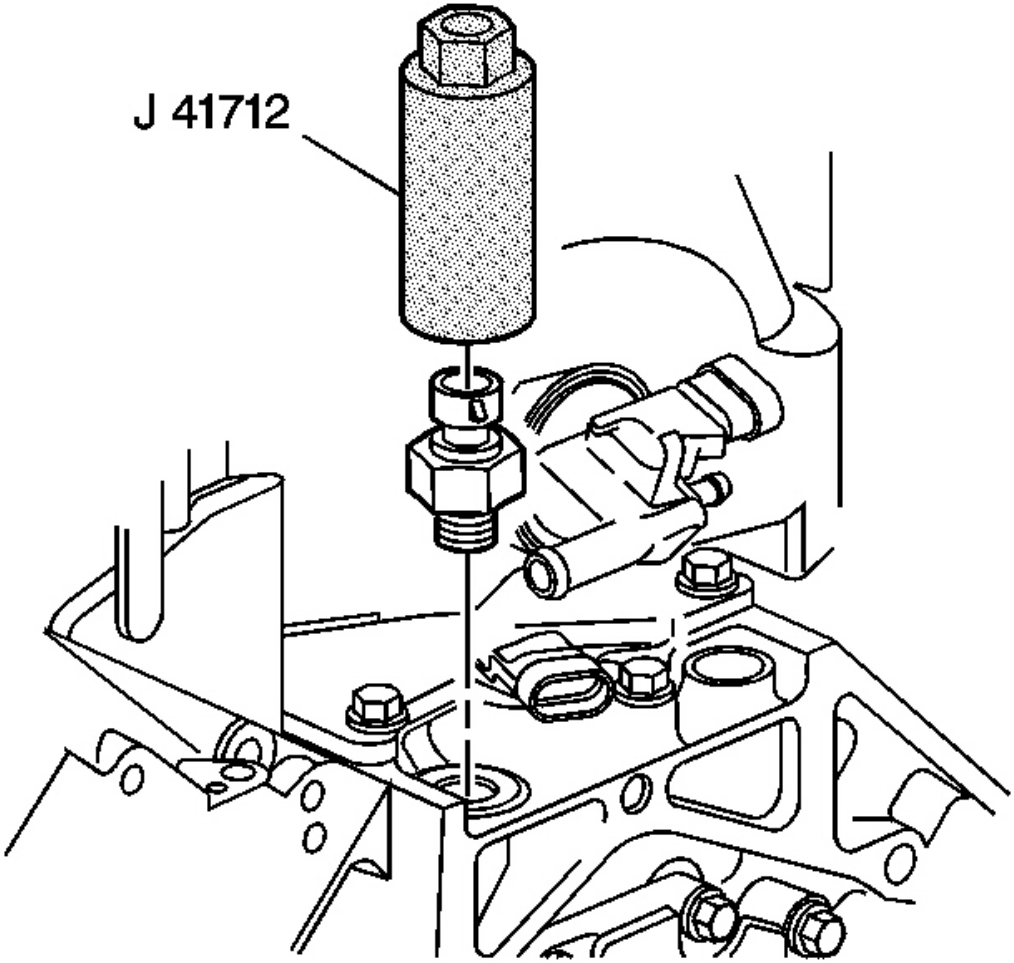

Fig. 40: Install J 41712 Oil Pressure Sensor
Courtesy of GENERAL MOTORS CORP.

16. Apply sealant GM P/N 12346004 (Canadian P/N 10953480) or equivalent to the threads of the oil pressure sensor.

cardiagn.com

17. Use the J 41712 or equivalent in order to install the oil pressure sensor, if required.

    Tighten: Tighten the oil pressure sensor to 20 N.m (15 lb ft).

CRANKSHAFT AND BEARINGS INSTALLATION

Tools Required

J 45059 Angle Meter

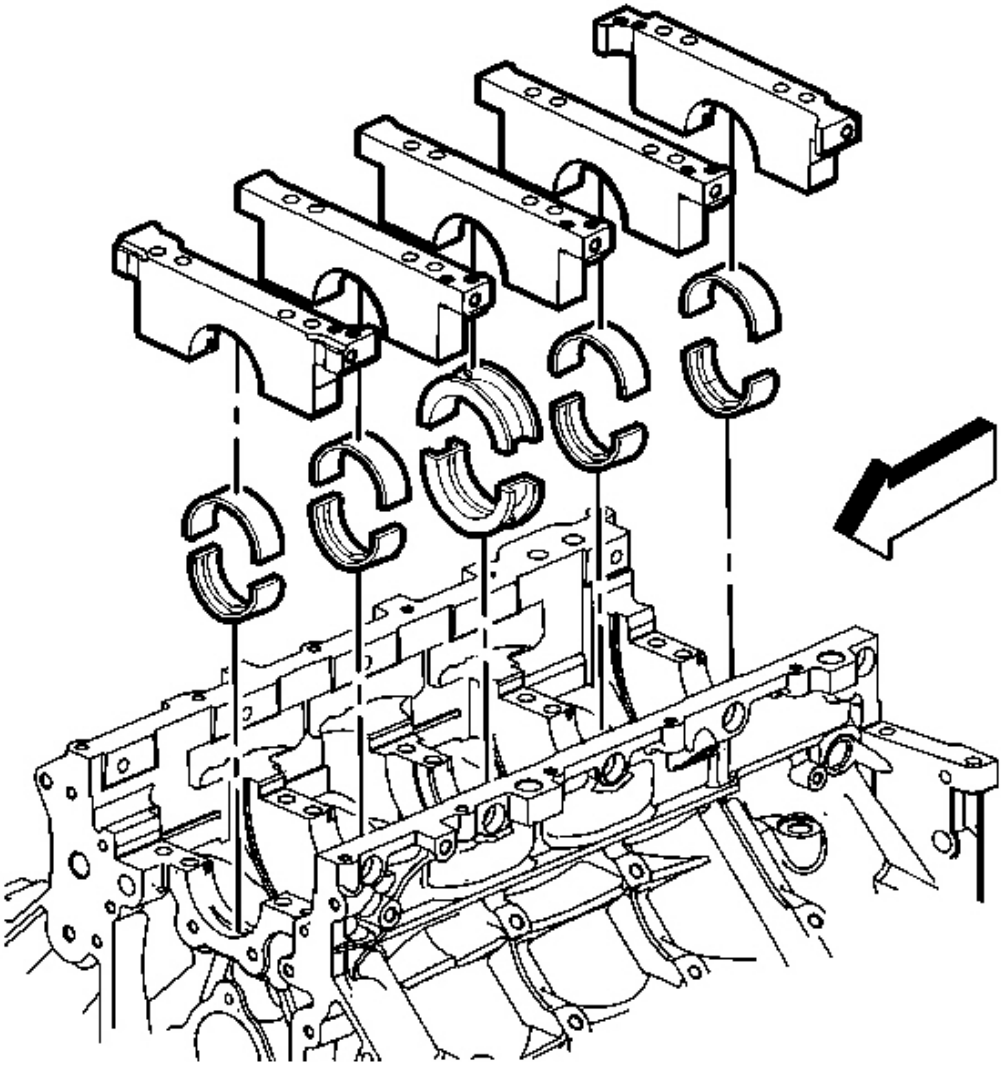

cardiagn.com

Fig. 41: View Of Crankshaft Bearings & Bearing Caps
Courtesy of GENERAL MOTORS CORP.

IMPORTANT:

- **Crankshaft bearing clearances are critical. Excessive crankshaft bearing clearance may effect crankshaft position (CKP) sensor signals and/or On-Board Diagnostics (OBD) II system performance.**
- **Crankshaft bearing caps must be installed to the proper location and direction.**
- **When installing the crankshaft bearings, align the locating tabs on the bearings with the locating notches in the engine block journal bore and the bearing cap.**
- **Always install crankshaft bearings with their machined partner. Do not file bearings or mix bearing halves.**
- **To prevent engine block oil leakage, install NEW M8 crankshaft bearing cap side bolts.**

  The crankshaft bearing cap M8 side bolts have a sealant patch applied to the bolt flange.

1. Install the crankshaft thrust bearings to the engine block and center bearing cap.
2. Install the remaining crankshaft bearings to the engine block and bearing caps.
3. Lubricate the bearing surfaces and crankshaft journals with clean engine oil.

cardiagn.com

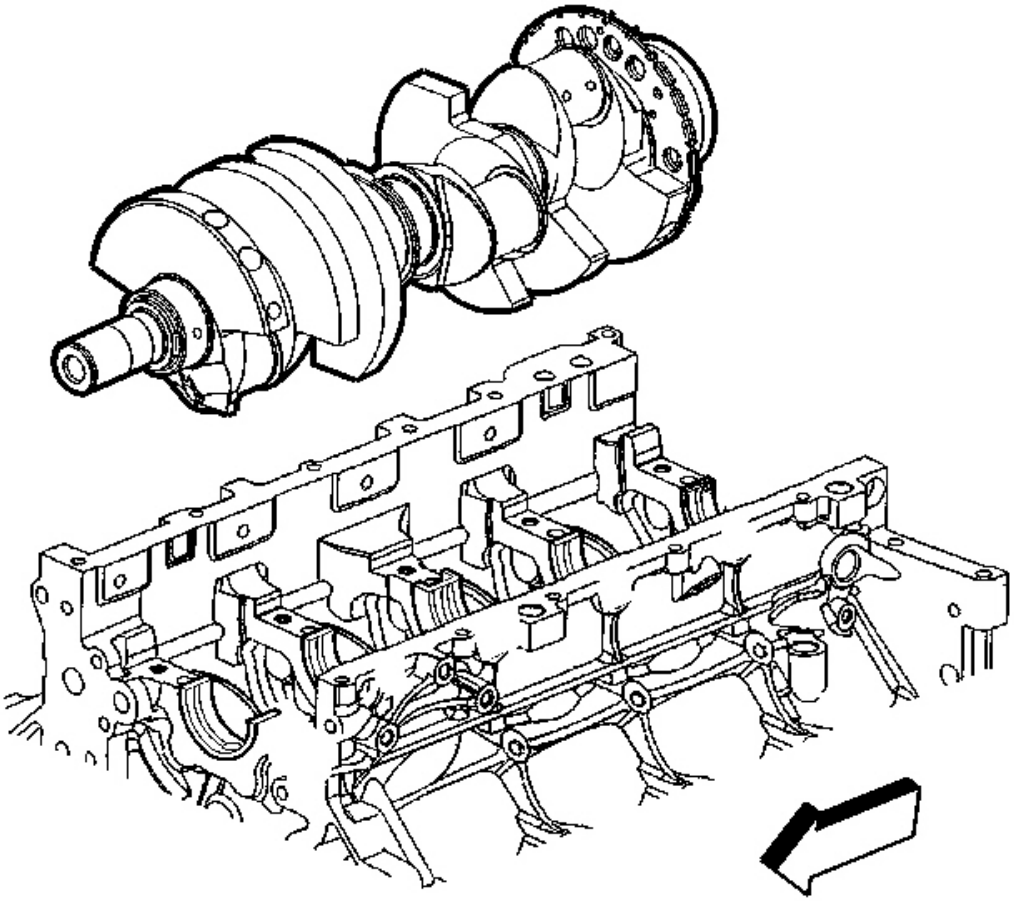

Fig. 42: View Of Crankshaft & Engine Block
Courtesy of GENERAL MOTORS CORP.

NOTE: **To maintain proper crankshaft end play, use extreme care during crankshaft installation. Avoid scoring or damaging the thrust bearing.**

4. Install the crankshaft.

cardiagn.com

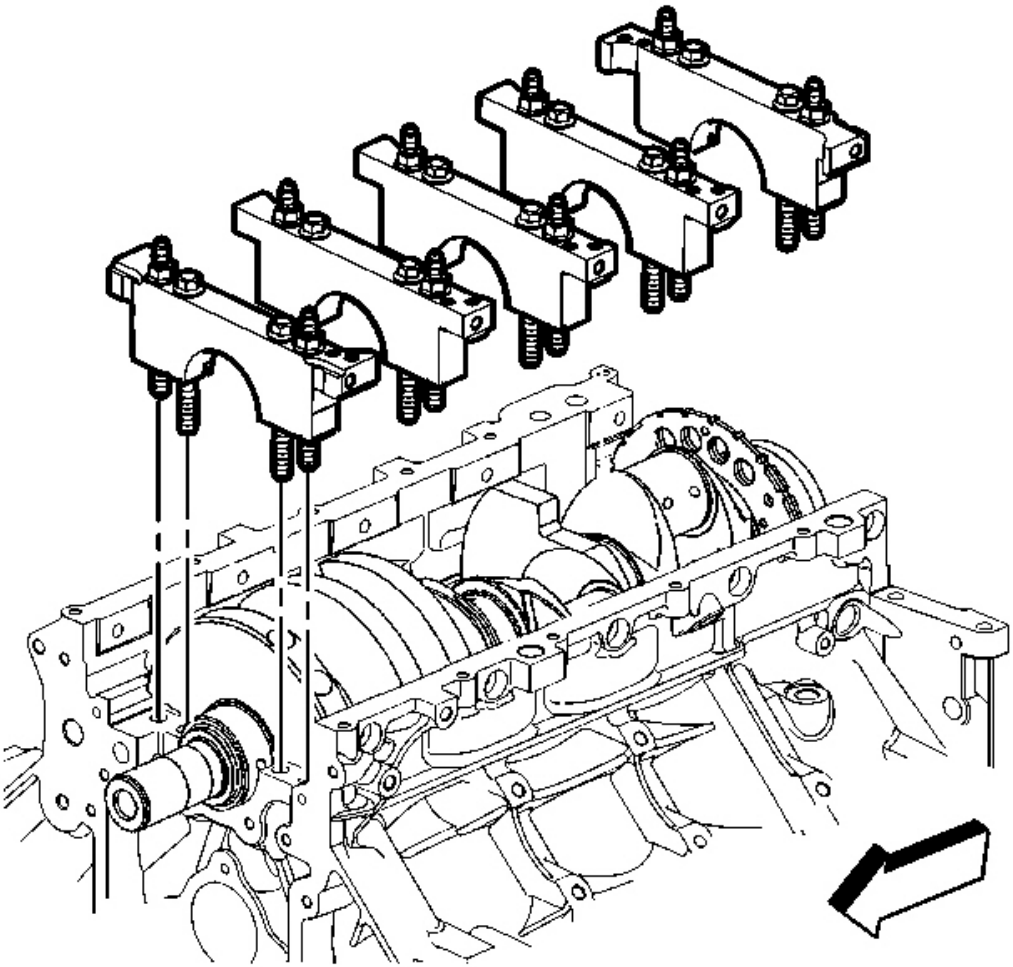

Fig. 43: View Of Bearing Caps
Courtesy of GENERAL MOTORS CORP.

IMPORTANT: The bearing caps must be installed in the proper location and direction.

5. Install the crankshaft bearing caps, with bearings, into the engine block.
6. Start the M10 bolts and studs.
7. Tap the bearing caps into place with a plastic-face hammer.

cardiagn.com

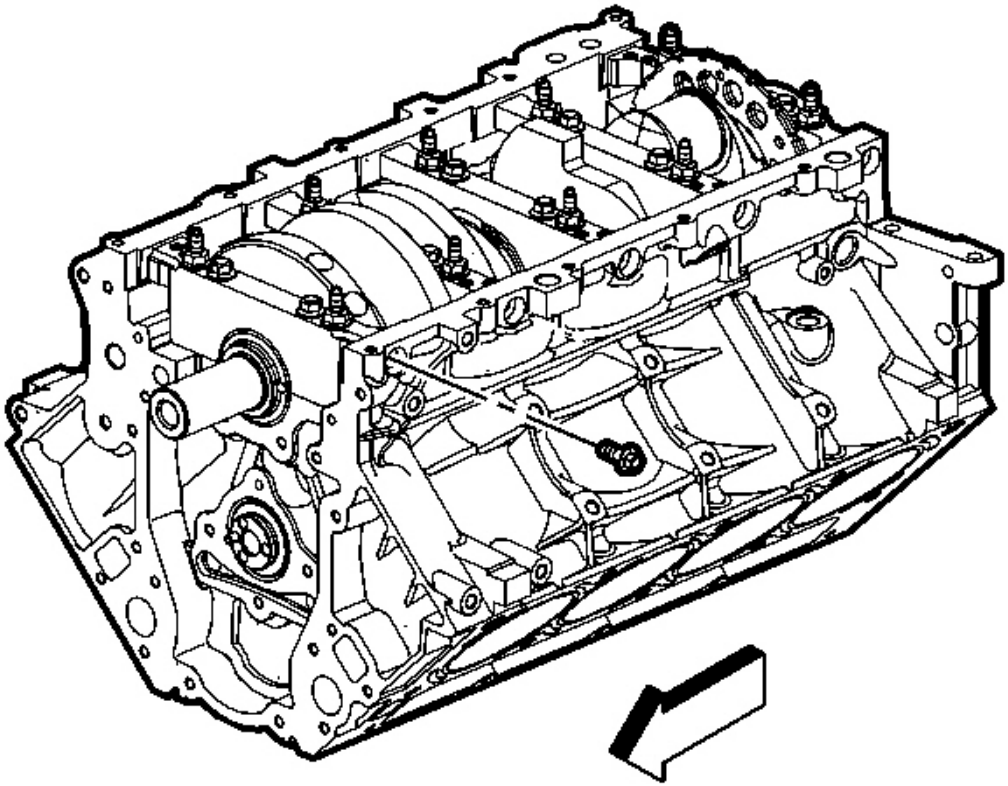

Fig. 44: View Of Bearing Cap Bolts & Studs
Courtesy of GENERAL MOTORS CORP.

8. Install the NEW M8 bearing cap side bolts.

cardiagn.com

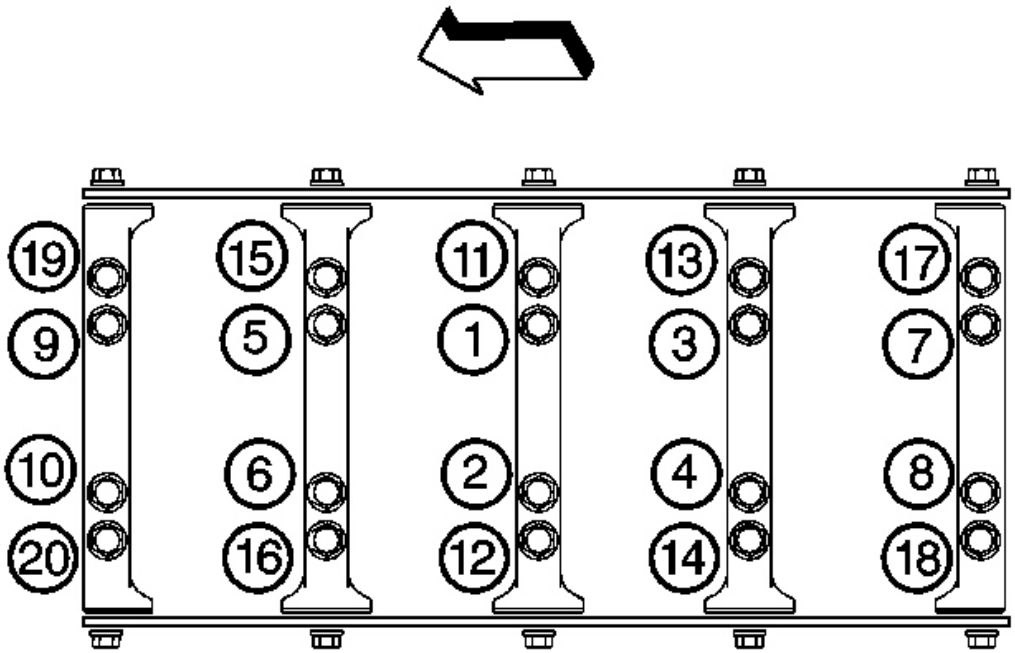

Fig. 45: Main Cap Bolt Hole Tightening Sequence
Courtesy of GENERAL MOTORS CORP.

NOTE: Refer to Fastener Notice in Cautions and Notices.

9. Tighten the bearing cap M10 bolts and studs.

   Tighten: Tighten the M10 bolts (1-10) a first pass in sequence to 20 N.m (15 lb ft).

IMPORTANT: To properly align the crankshaft thrust bearings, the final thrust of the crankshaft MUST be in the forward direction.

10. Using a plastic faced hammer, tap the crankshaft rearward then forward to align the thrust bearings.

    Tighten:
    1. Tighten the M10 bolts (1-10) a final pass in sequence 80 degrees using the **J 45059** .
    2. Tighten the M10 studs (11-20) a first pass in sequence to 20 N.m (15 lb ft).
    3. Tighten the M10 studs (11-20) a final pass in sequence 51 degrees using the **J 45059** .
    4. Tighten the M8 bolts to 25 N.m (18 lb ft).

cardiagn.com

Tighten the bolt on one side of the bearing cap and then tighten the bolt on the opposite side of the same bearing cap.

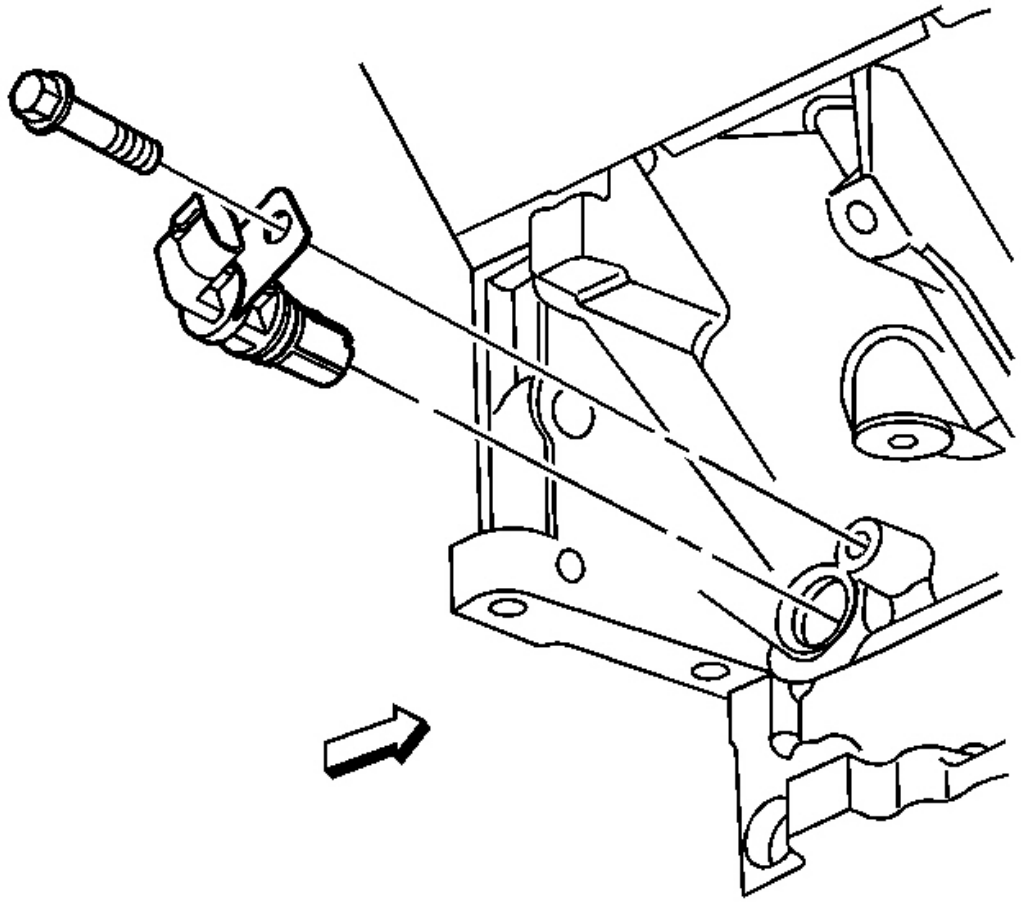

Fig. 46: View Of CKP Sensor & Bolt
Courtesy of GENERAL MOTORS CORP.

11. Install the CKP sensor.
    1. Inspect the CKP sensor O-ring seal. If the O-ring seal is not cut or damaged, it may be used.
    2. Coat the O-ring seal with clean engine oil.
    3. Install the sensor. Align the notch in the sensor retaining bracket with the bolt hole in the block.
    4. Install the sensor bolt.

       Tighten: Tighten the CKP sensor bolt to 25 N.m (18 lb ft).

cardiagn.com

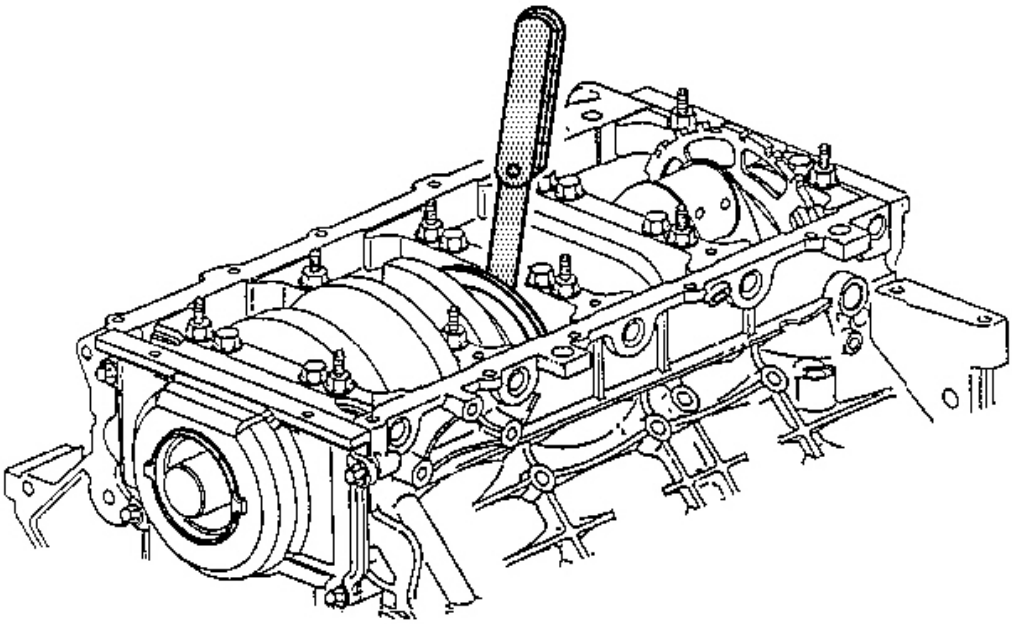

Fig. 47: Measuring Crankshaft End Play
Courtesy of GENERAL MOTORS CORP.

12. Measure the crankshaft end play.
    1. Thrust the crankshaft forward or rearward.
    2. Insert a feeler gage between the center crankshaft bearing and the bearing surface of the crankshaft and measure the bearing clearance.

       The proper crankshaft end play clearance is 0.04-0.2 mm (0.0015-0.0078 in).

    3. If the bearing clearance is not within specifications, inspect the thrust surfaces for nicks, gouges or raised metal. Minor imperfections may be removed with a fine stone.

PISTON, CONNECTING ROD, AND BEARING INSTALLATION

Tools Required

- **J 8037** Piston Ring Compressor
- **J 8087** Cylinder Bore Gage
- **J 41556** Connecting Rod Guide
- **J 45059** Angle Meter

cardiagn.com

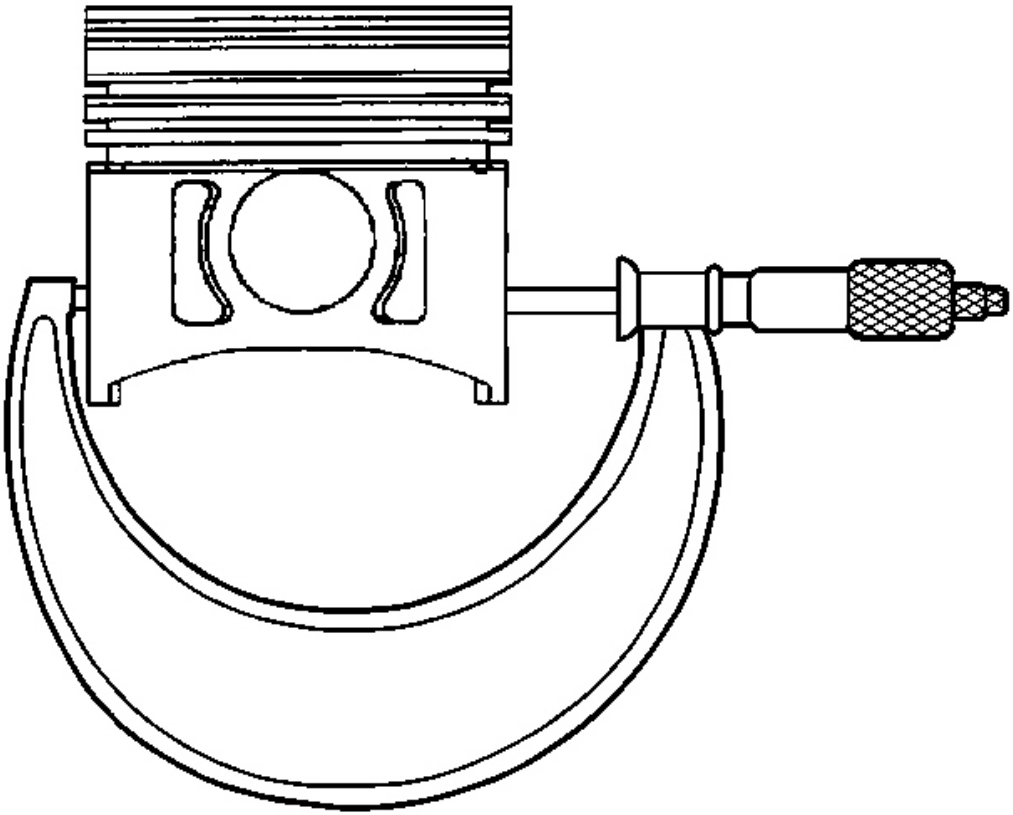

Fig. 48: Measuring Piston
Courtesy of GENERAL MOTORS CORP.

IMPORTANT: Measurements of all components should be taken with the components at normal room temperature. For proper piston fit, the engine block cylinder bores must not have excessive wear or taper. A used piston, pin, and connecting rod assembly may be installed if, after inspection is within specifications.

1. With a micrometer at a right angle, measure the piston outside diameter (OD). Measure the diameter 43 mm (1.69 in) from the top of the piston. Refer to **Engine Mechanical Specifications (LS1)** or **Engine Mechanical Specifications (LS6)** .
2. Record the piston OD.

cardiagn.com

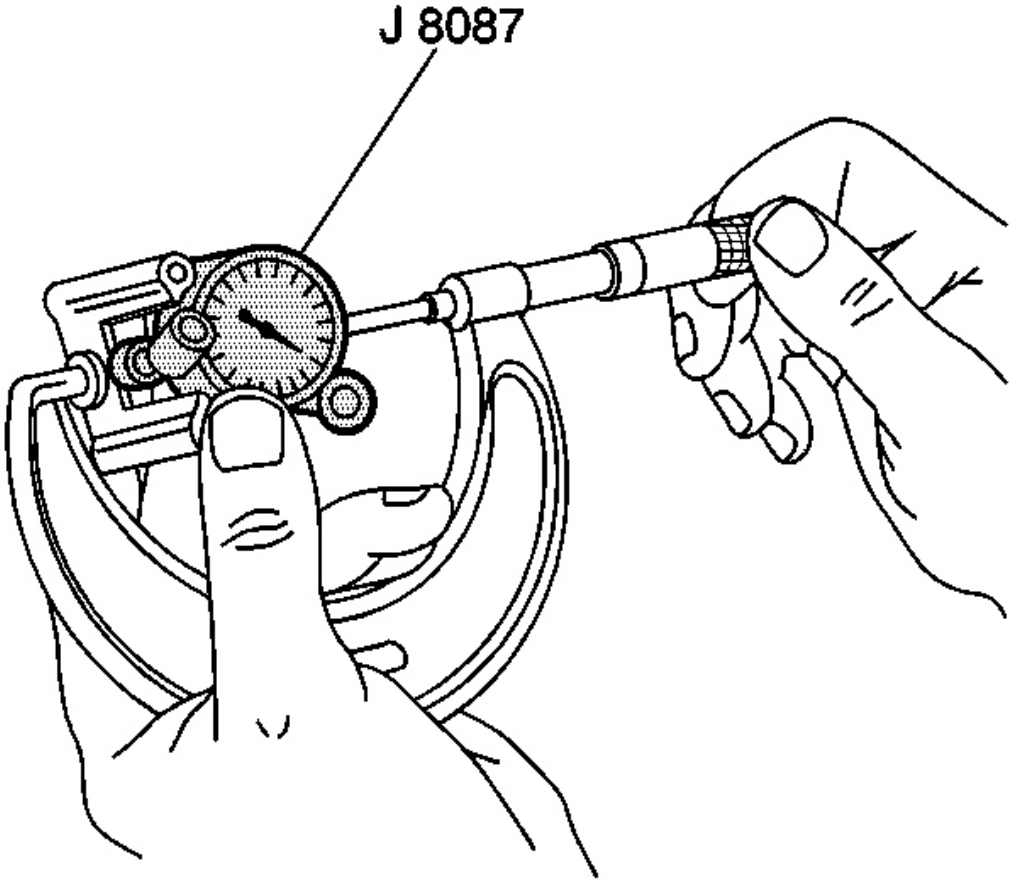

Fig. 49: Measuring J 8087 Dimension
Courtesy of GENERAL MOTORS CORP.

3. Adjust the micrometer to the recorded piston OD.
4. Insert the **J 8087** into the micrometer and zero the gage dial.

cardiagn.com

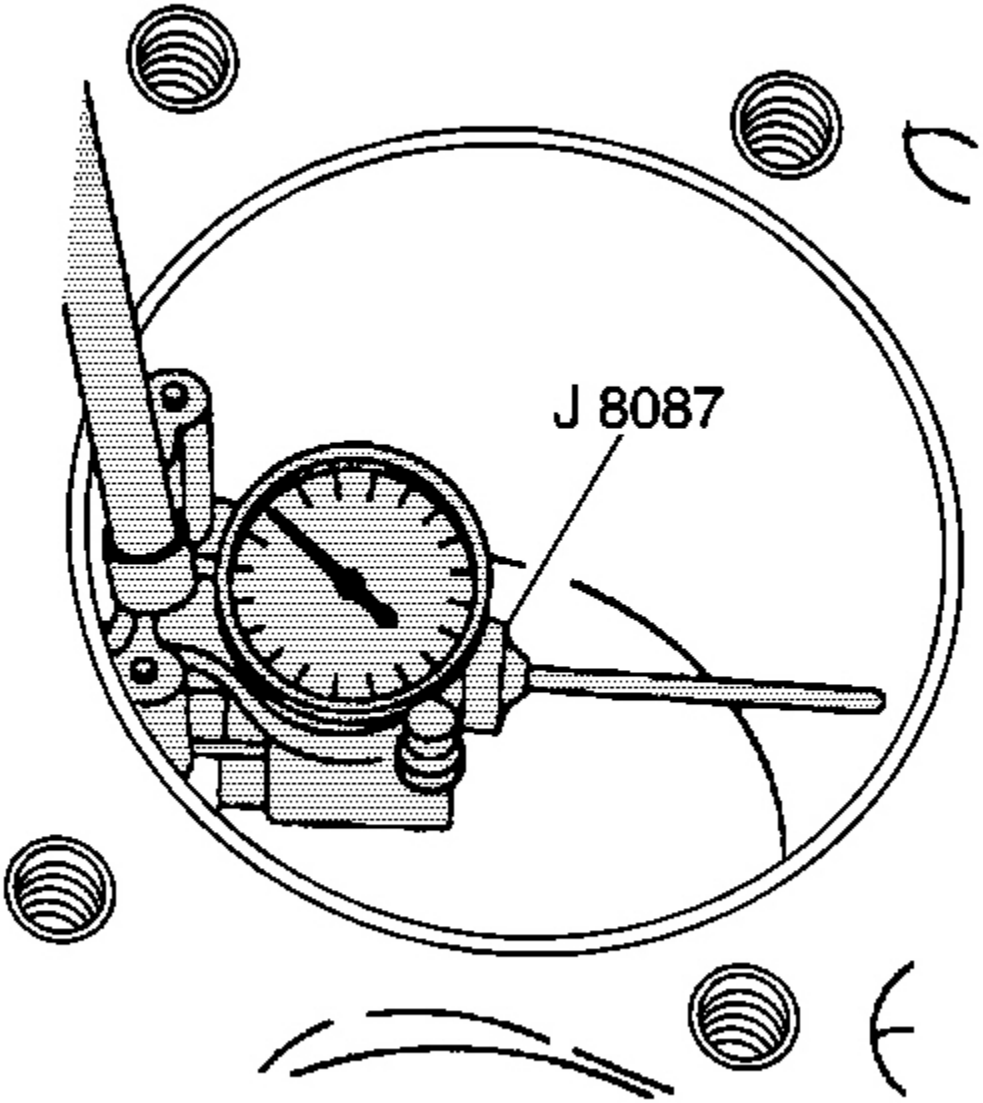

Fig. 50: Determining The Cylinder Bore Out-Of-Round Using J 8087
Courtesy of GENERAL MOTORS CORP.

5. Using the **J 8087** , measure the cylinder bore inside diameter (ID). Measure at a point 64 mm (2.5 in) from the top of the cylinder.
6. Record the cylinder bore ID.
7. Subtract the piston OD from the cylinder bore ID to determine the piston-to-bore clearance. Refer to

cardiagn.com

Engine Mechanical Specifications (LS1) or **Engine Mechanical Specifications (LS6)** .

8. If the proper clearance cannot be obtained, select another piston, pin, and connecting rod assembly and again measure the clearances. If the proper fit cannot be obtained, the cylinder bore may require honing for an oversize piston.

Piston, Pin, and Connecting Rod Installation

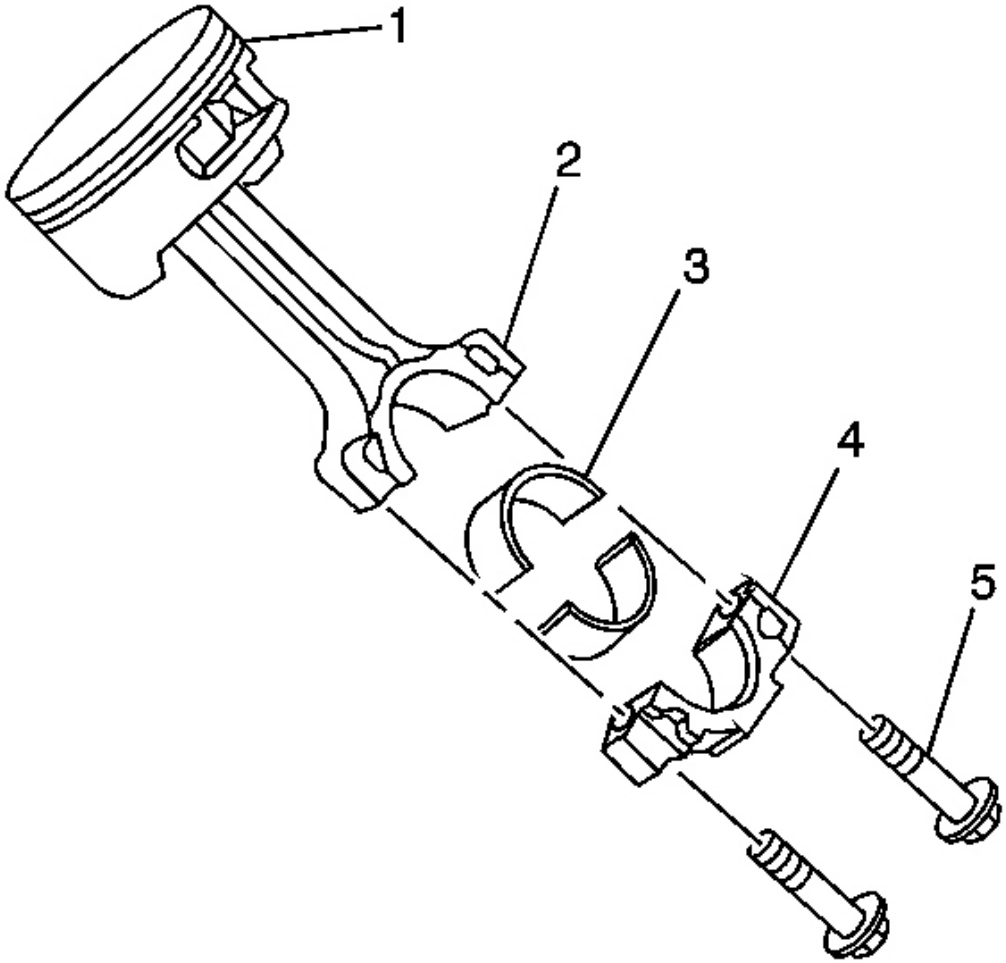

Fig. 51: View Of Piston & Connecting Rod Components
Courtesy of GENERAL MOTORS CORP.

1. Lightly lubricate the following components with clean engine oil:
   - Piston (1)

cardiagn.com

- Piston rings
- Cylinder bore
- Bearings (3) and bearing surfaces

2. Position the oil control ring end gaps a minimum of 25 mm (1.0 in) from each other.
3. Position the compression ring end gaps 180 degrees opposite each other.

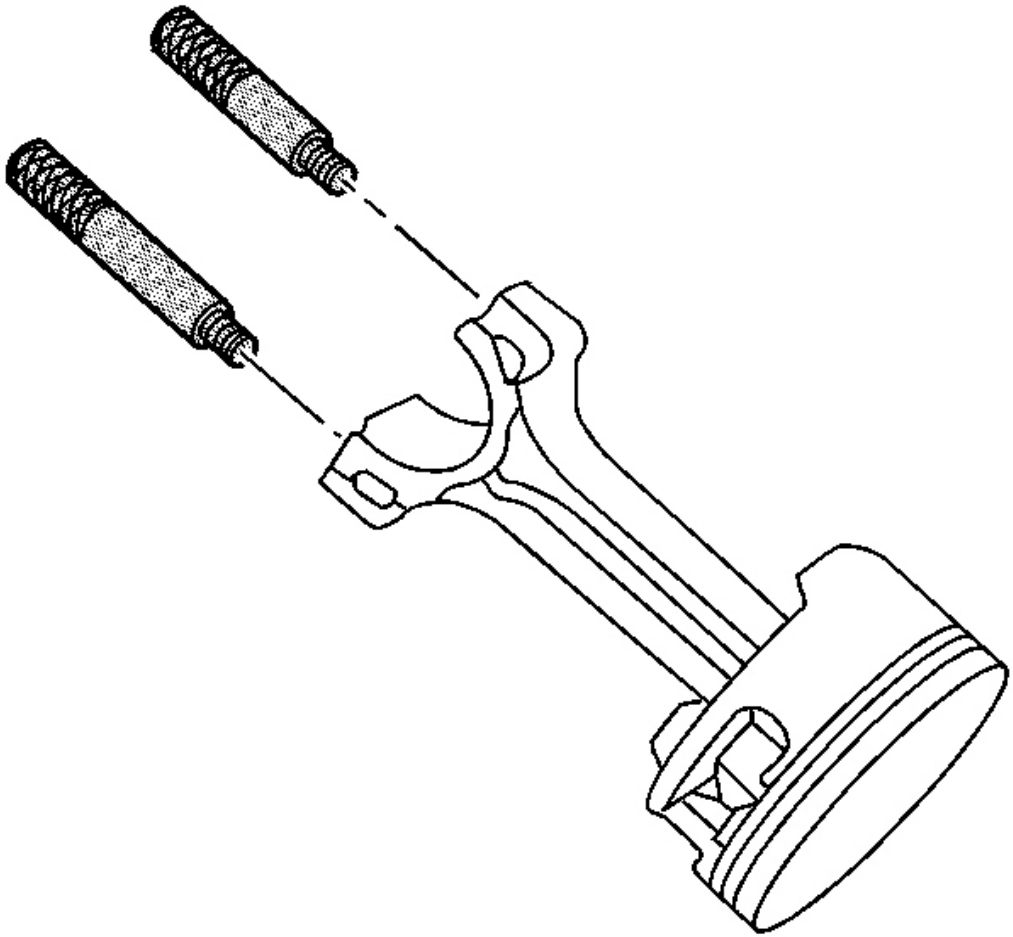

Fig. 52: View Of J 41556 & Connecting Rod
Courtesy of GENERAL MOTORS CORP.

4. Install the **J 41556** to the connecting rod.

cardiagn.com

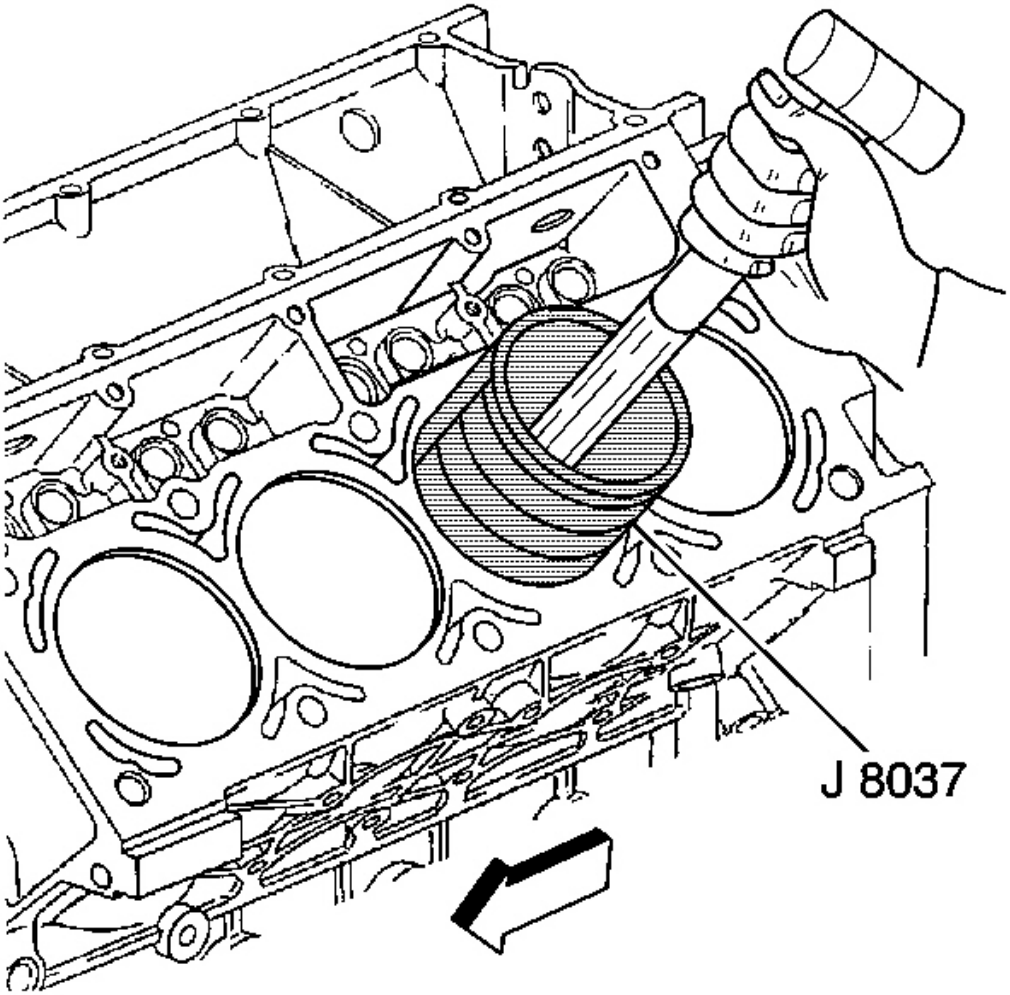

Fig. 53: Installing Piston Using J 8037
Courtesy of GENERAL MOTORS CORP.

5. Install the **J 8037** onto the piston and compress the piston rings.

IMPORTANT: The piston alignment mark MUST face the front of the engine block.

6. Install the piston, pin, and connecting rod assembly into the cylinder bore. Hold the piston ring compressor firmly against the engine block. Using a wooden hammer handle, lightly tap the top of the piston until all the piston rings have entered the cylinder bore.

cardiagn.com

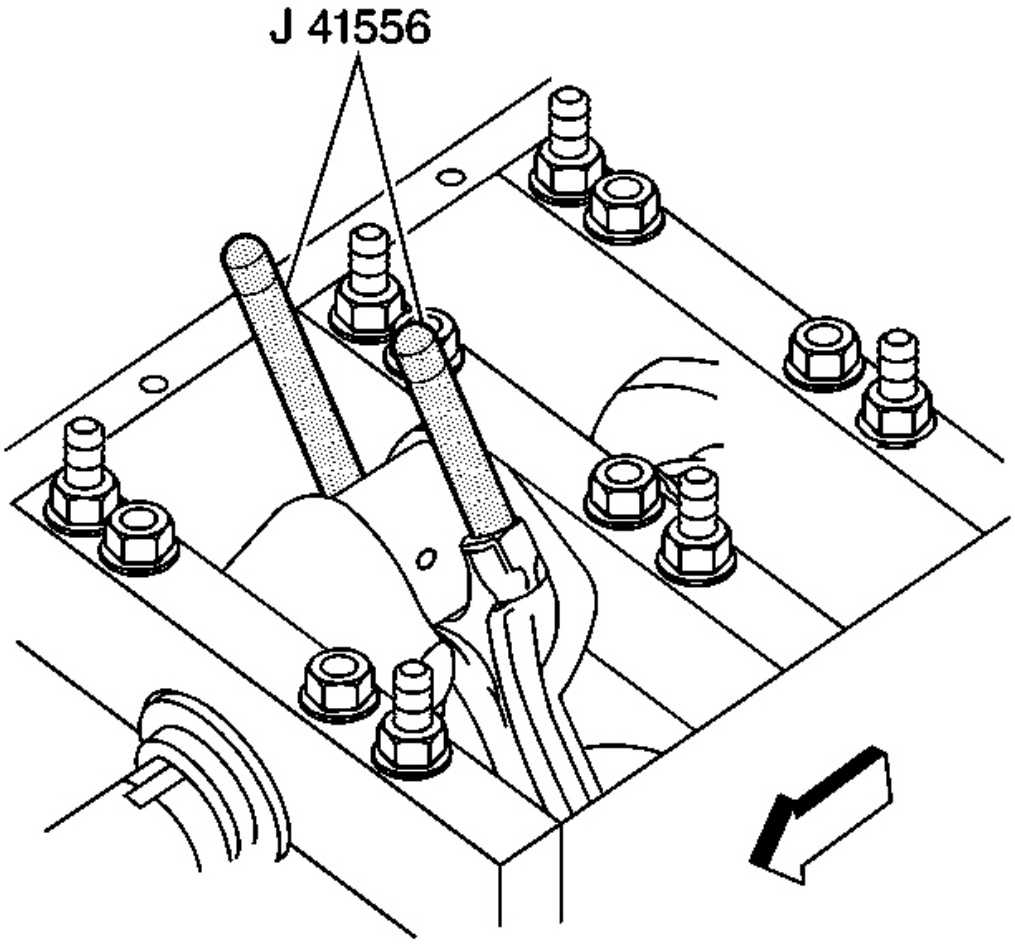

Fig. 54: View Of J 41556
Courtesy of GENERAL MOTORS CORP.

7. Use the **J 41556** to guide the connecting rod onto the crankshaft journal.
8. Remove the **J 41556** from the connecting rod.

cardiagn.com

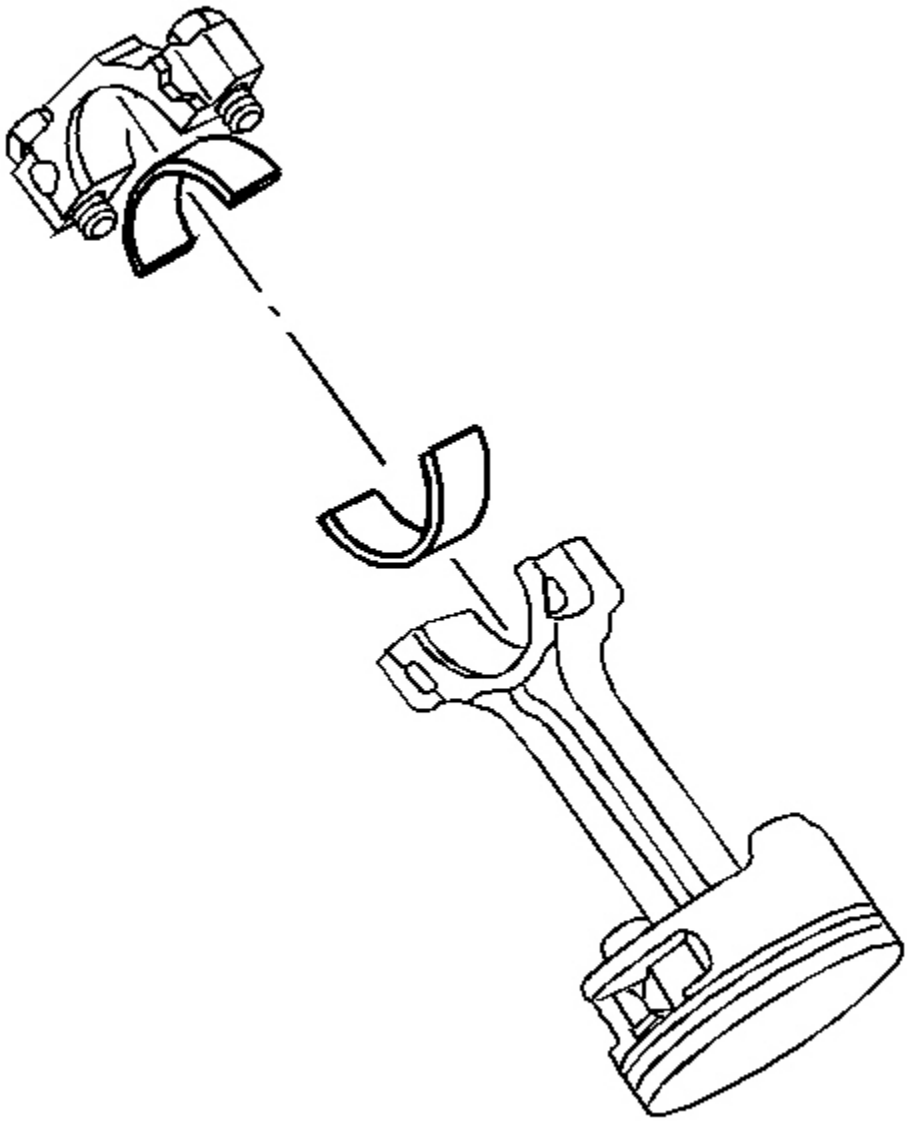

Fig. 55: View Of Connecting Rod & Bolts
Courtesy of GENERAL MOTORS CORP.

NOTE: **Use the correct fastener in the correct location. Replacement fasteners must be the correct part number for that application. Fasteners requiring replacement or fasteners requiring the use of thread locking compound or sealant are identified in the service procedure. Do not use paints,**

cardiagn.com

lubricants, or corrosion inhibitors on fasteners or fastener joint surfaces unless specified. These coatings affect fastener torque and joint clamping force and may damage the fastener. Use the correct tightening sequence and specifications when installing fasteners in order to avoid damage to parts and systems.

IMPORTANT: The connecting rod and cap must be assembled with the mating surfaces properly aligned.

9. Install the bearing cap, bearing half, and bolts.

Tighten:

1. Tighten the bolts a first pass to 20 N.m (15 lb ft).
2. Tighten the bolts a final pass to 75 degrees using the **J 45059** .

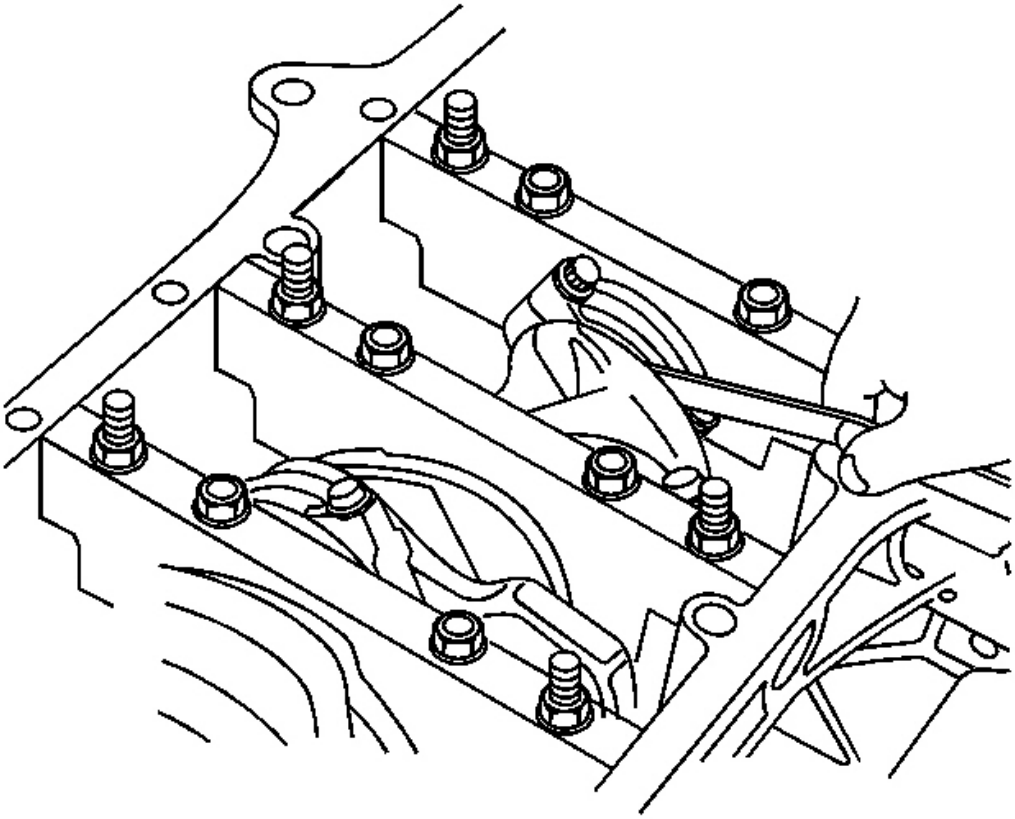

Fig. 56: Measuring The Connecting Rods For Proper Side Clearance

cardiagn.com

Courtesy of GENERAL MOTORS CORP.

10. Measure the connecting rods for the proper side clearance. Refer to **Engine Mechanical Specifications (LS1)** or **Engine Mechanical Specifications (LS6)** .

CAMSHAFT INSTALLATION

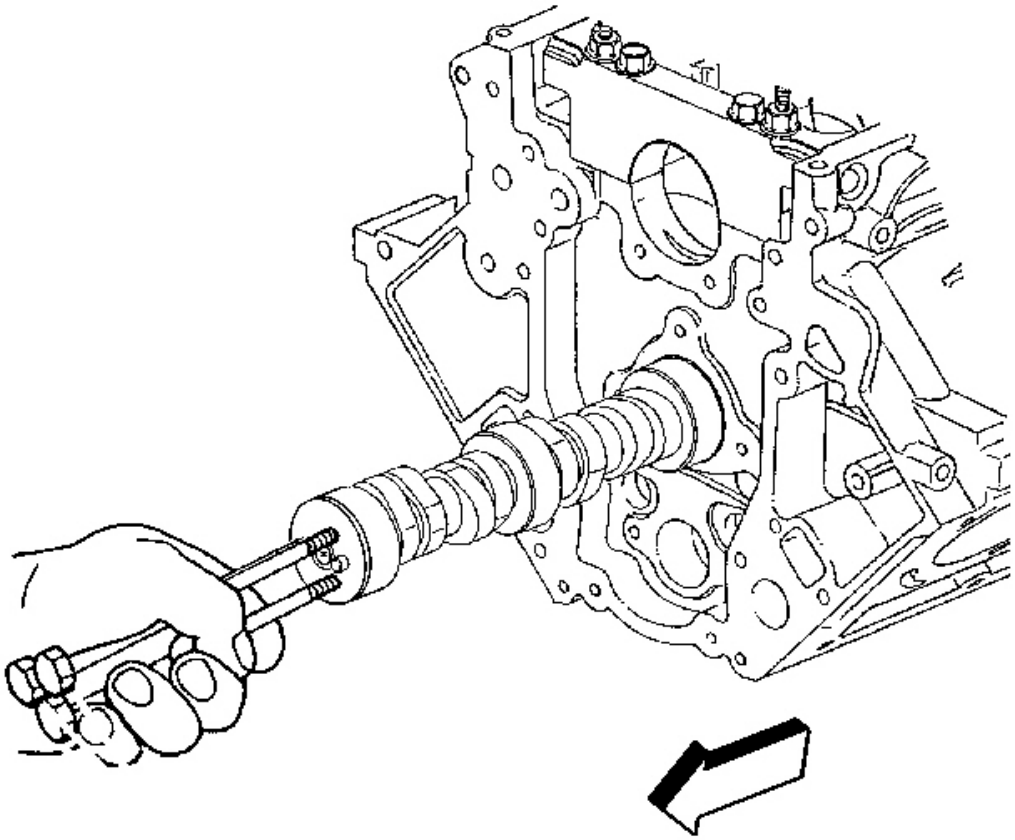

Fig. 57: View Of Bolts installed In Camshaft Front Bolt Holes
Courtesy of GENERAL MOTORS CORP.

IMPORTANT: If camshaft replacement is required, the valve lifters must also be replaced.

1. Lubricate the camshaft journals and the bearings with clean engine oil.
2. Install 3 M8 - 1.25 x 100 mm (M8 - 1.25 x 4.0 in) bolts into the camshaft front bolt holes.

cardiagn.com

NOTE: **All camshaft journals are the same diameter, so care must be used in removing or installing the camshaft to avoid damage to the camshaft bearings.**

3. Using the bolts as a handle, carefully install the camshaft into the engine block.
4. Remove the 3 bolts from the front of the camshaft.

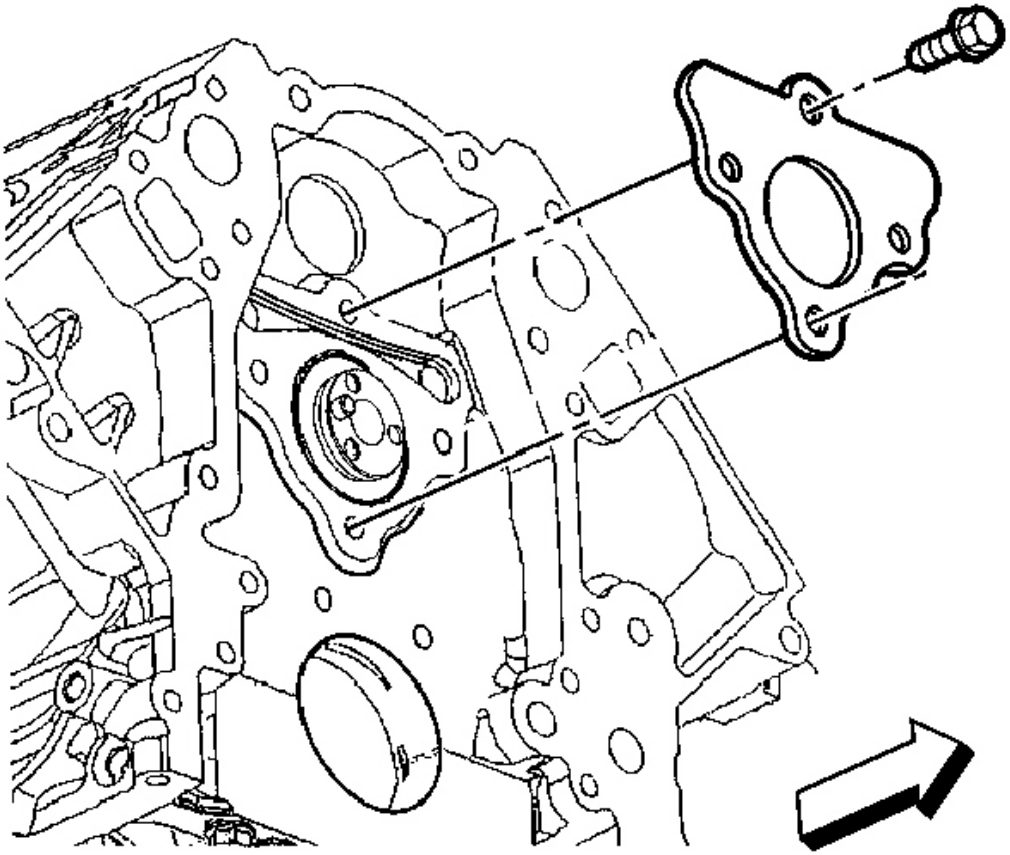

Fig. 58: View Of Camshaft Retainer & Bolts
Courtesy of GENERAL MOTORS CORP.

NOTE: **Refer to Fastener Notice in Cautions and Notices.**

IMPORTANT:

- **Install the retainer plate with the sealing gasket facing the engine block.**

cardiagn.com

- **The gasket surface on the engine block should be clean and free of dirt or debris.**

5. Install the camshaft retainer and the bolts.

   Tighten: Tighten the camshaft retainer bolts to 25 N.m (18 lb ft).

6. Inspect the camshaft sensor O-ring seal. If the O-ring seal is not cut or damaged, it may be used again.
7. Lubricate the O-ring seal with clean engine oil.

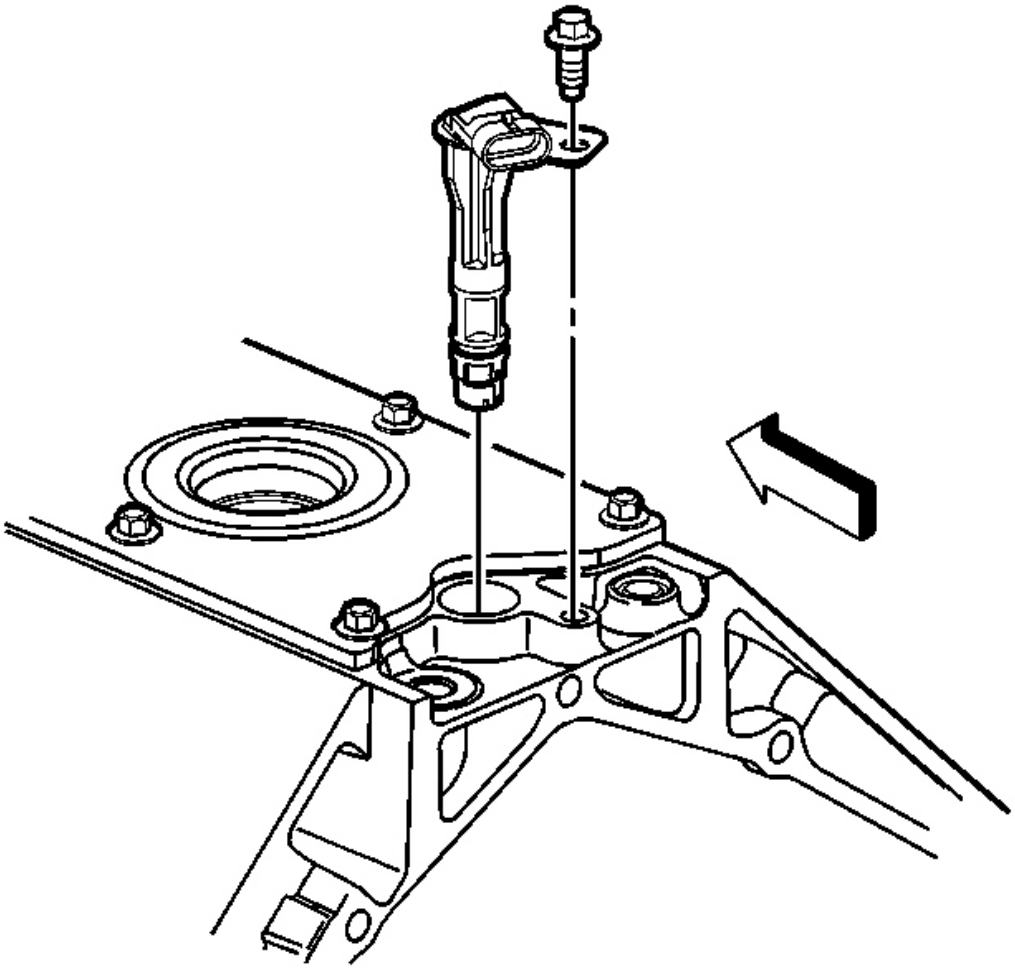

Fig. 59: View Of Camshaft Sensor & Bolt
Courtesy of GENERAL MOTORS CORP.

cardiagn.com

8. Install the camshaft position (CMP) sensor and bolt.

   Tighten: Tighten the CMP sensor bolt to 25 N.m (18 lb ft).

TIMING CHAIN AND SPROCKETS INSTALLATION

Tools Required

J 41665 Crankshaft Balancer and Sprocket Installer

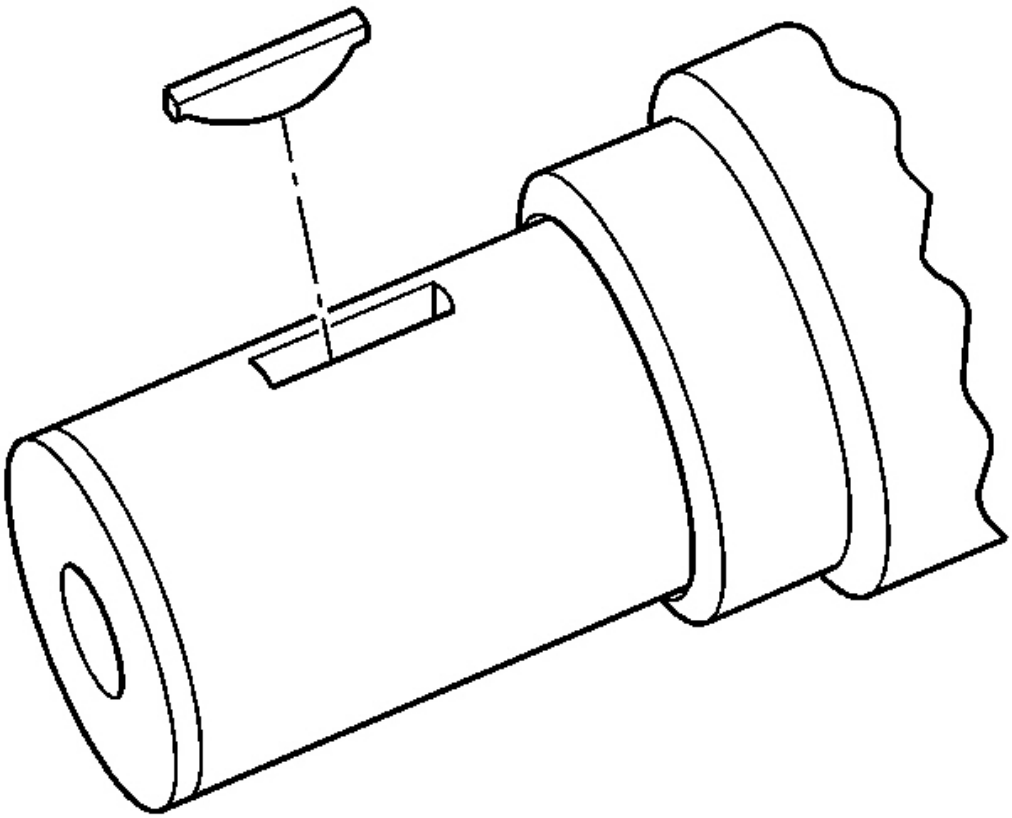

Fig. 60: View Of Crankshaft Sprocket Key
Courtesy of GENERAL MOTORS CORP.

1. Install the key into the crankshaft keyway, if previously removed.

cardiagn.com

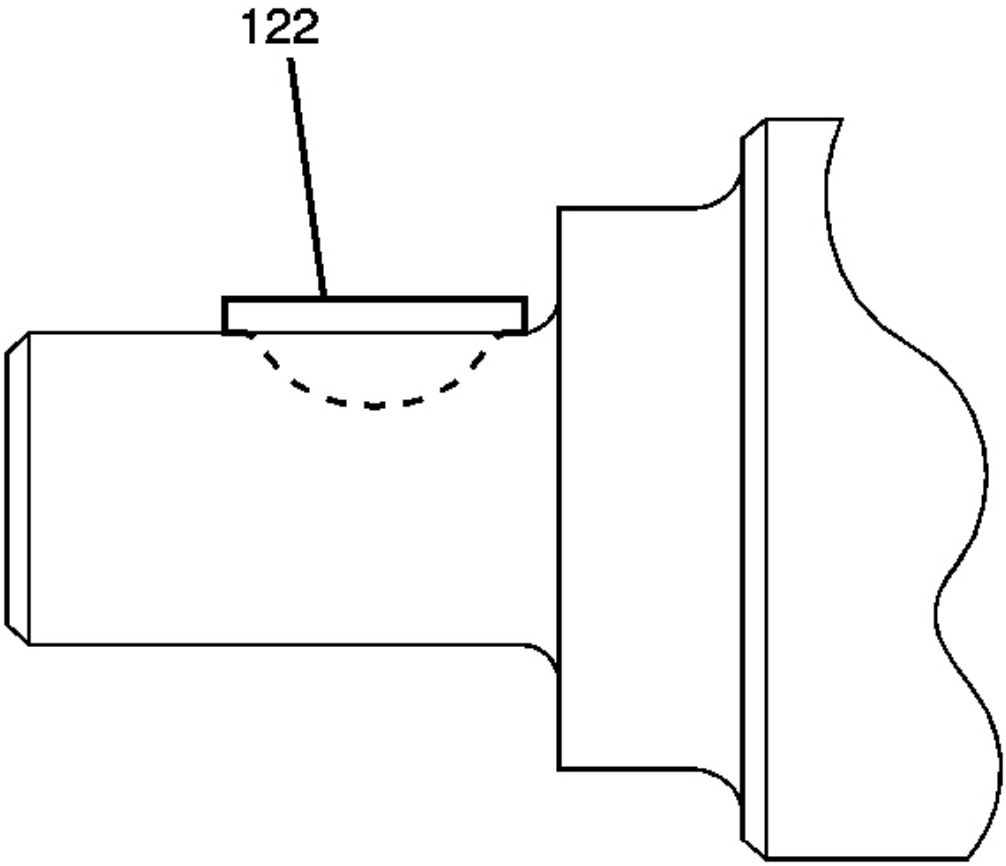

Fig. 61: View Of Installed Crankshaft Key
Courtesy of GENERAL MOTORS CORP.

2. Tap the key (122) into the keyway until both ends of the key bottom onto the crankshaft.

cardiagn.com

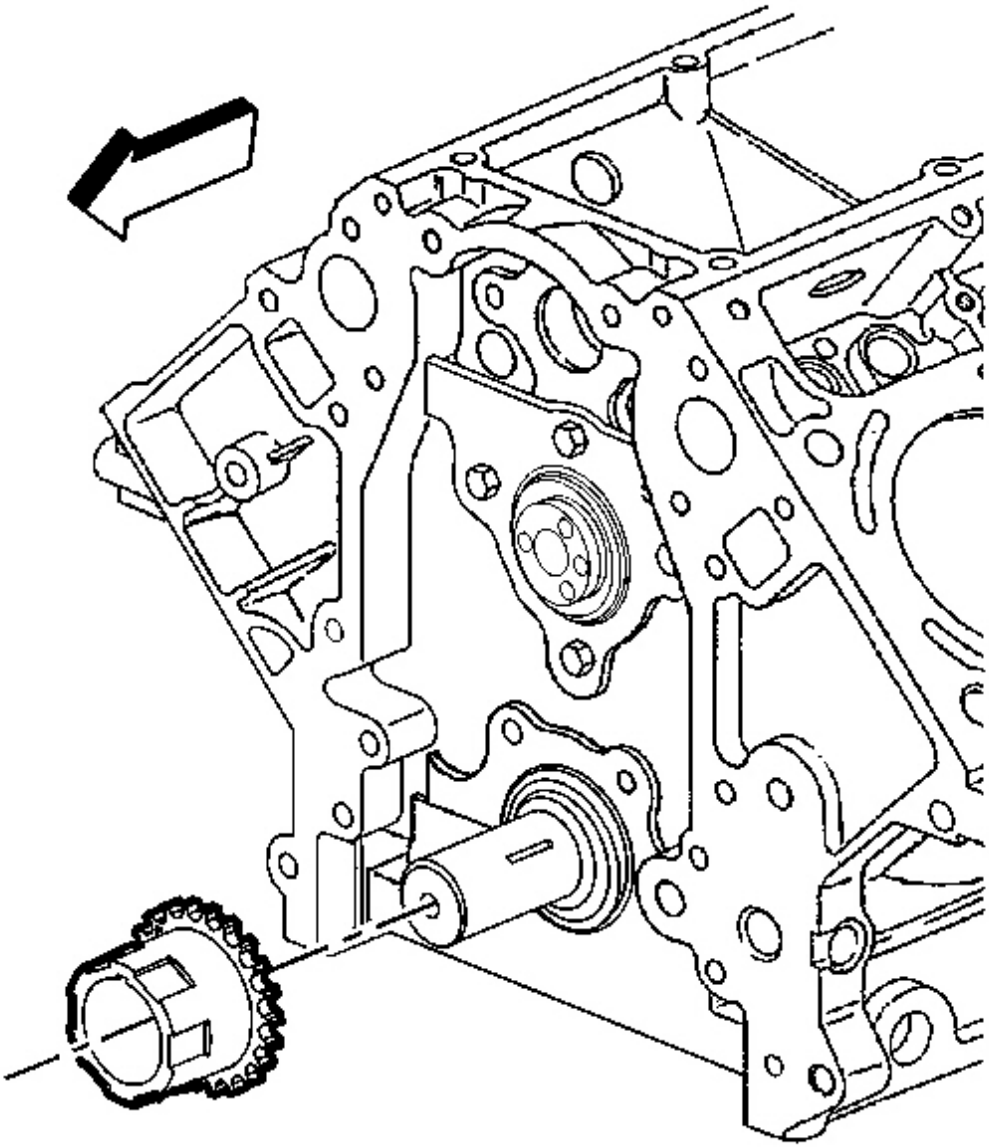

Fig. 62: View Of Crankshaft Sprocket
Courtesy of GENERAL MOTORS CORP.

3. Install the crankshaft sprocket onto the front of the crankshaft. Align the crankshaft key with the crankshaft sprocket keyway.

cardiagn.com

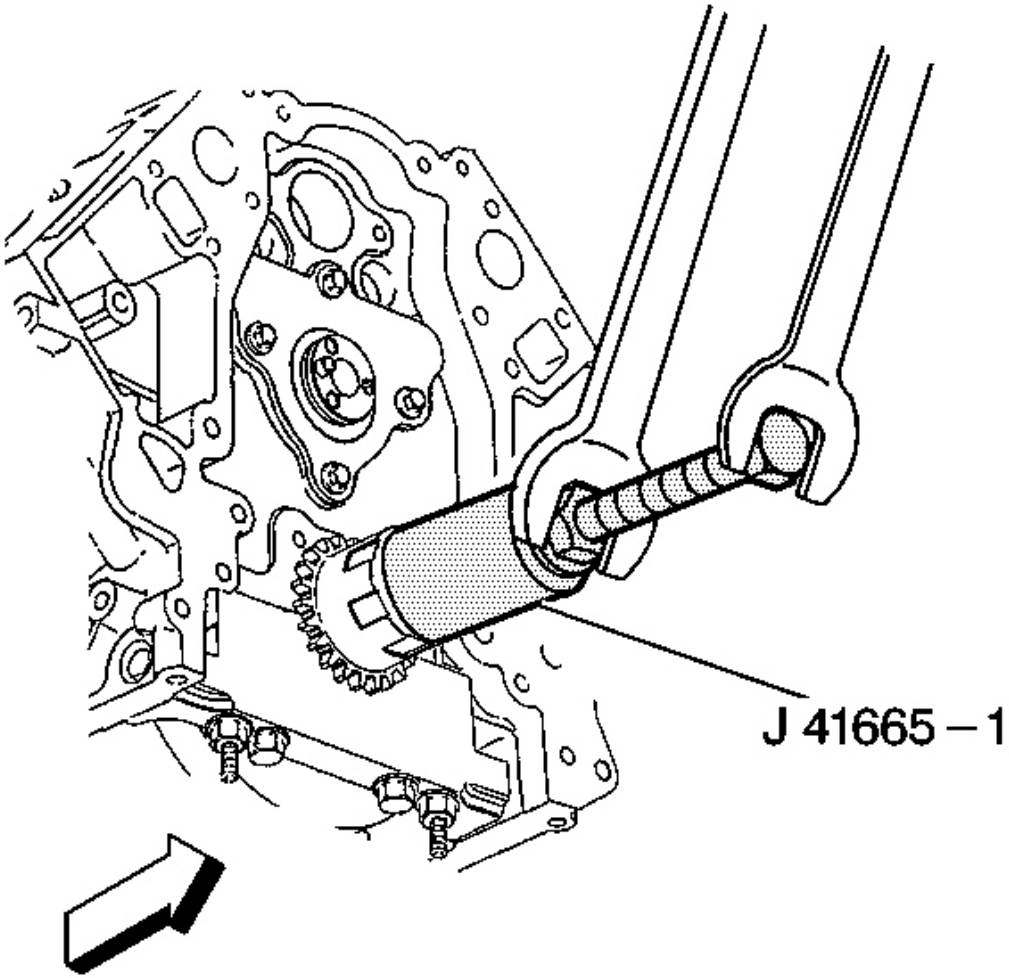

Fig. 63: Installing Crankshaft Sprocket Using J 41665
Courtesy of GENERAL MOTORS CORP.

4. Use the **J 41665** in order to install the crankshaft sprocket.

   Install the sprocket onto the crankshaft until fully seated against the crankshaft flange.

5. Rotate the crankshaft sprocket until the alignment mark is in the 12 o'clock position.

cardiagn.com

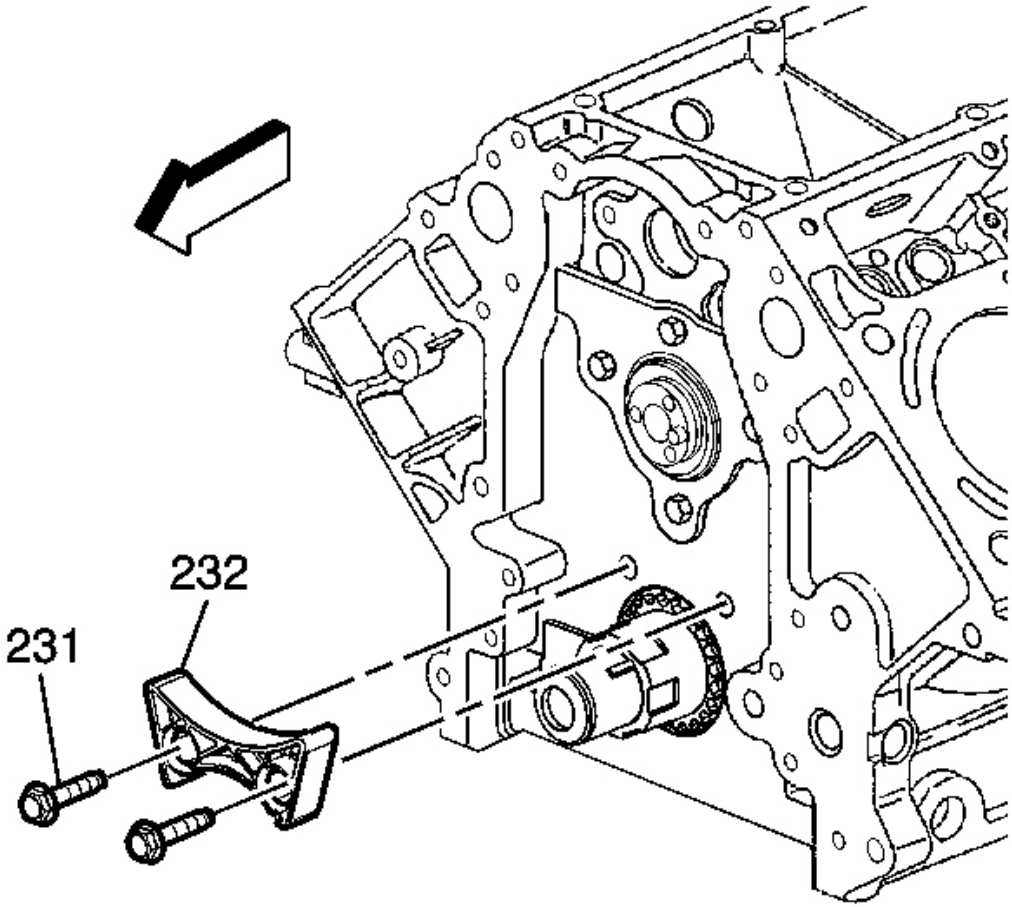

Fig. 64: Chain Dampener & Bolts
Courtesy of GENERAL MOTORS CORP.

NOTE: Refer to Fastener Notice in Cautions and Notices.

6. Install the chain dampener (232) and bolts (231).

   Tighten: Tighten the bolts to 35 N.m (26 lb ft).

cardiagn.com

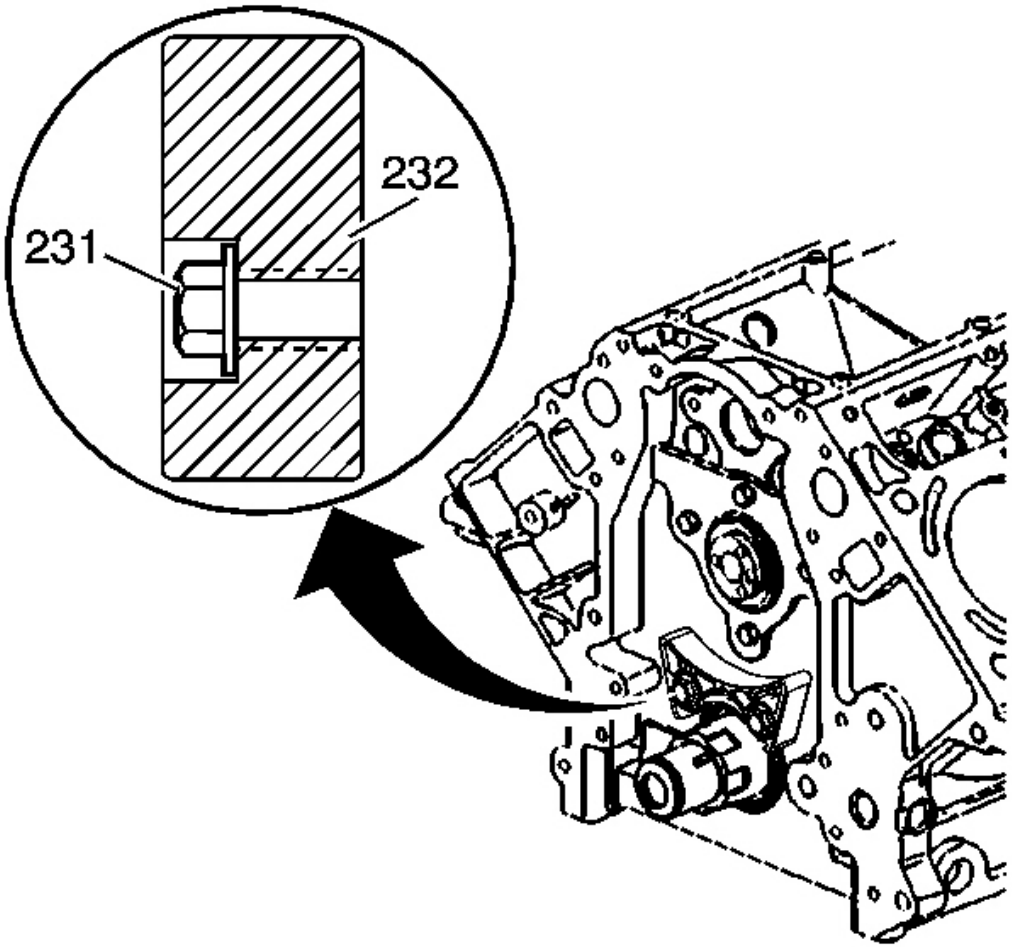

Fig. 65: Chain Dampener & Heads Of Bolts
Courtesy of GENERAL MOTORS CORP.

7. With the chain dampener properly installed, the heads of the bolts (231) should install to flush or below the face of the dampener (232).

cardiagn.com

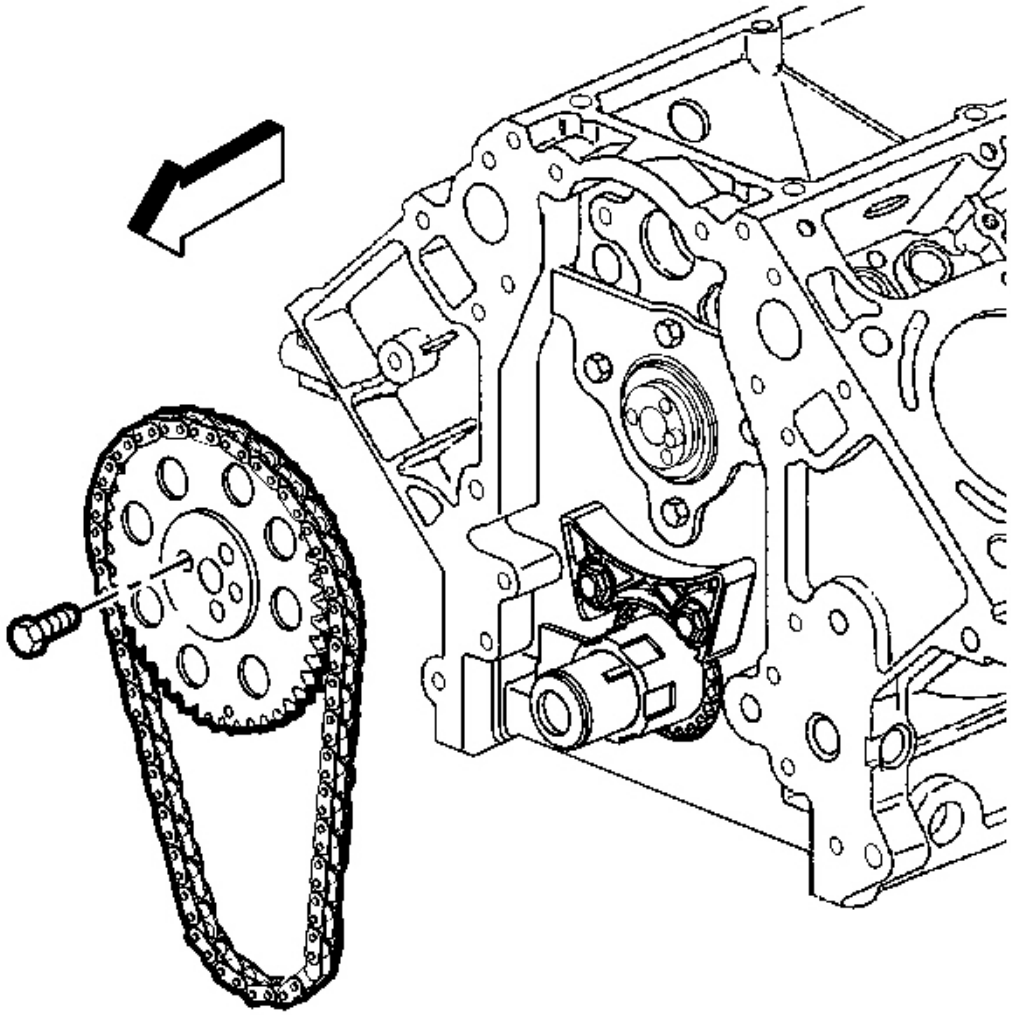

Fig. 66: Camshaft Sprocket & Timing Chain
Courtesy of GENERAL MOTORS CORP.

IMPORTANT:

- **Properly locate the camshaft sprocket locating pin with the camshaft sprocket alignment hole.**
- **The sprocket teeth and timing chain must mesh.**
- **The camshaft and the crankshaft sprocket alignment marks MUST be aligned properly.**
- **Locate the camshaft sprocket alignment mark in the 6 o'clock position.**

cardiagn.com

8. Install the camshaft sprocket and timing chain.

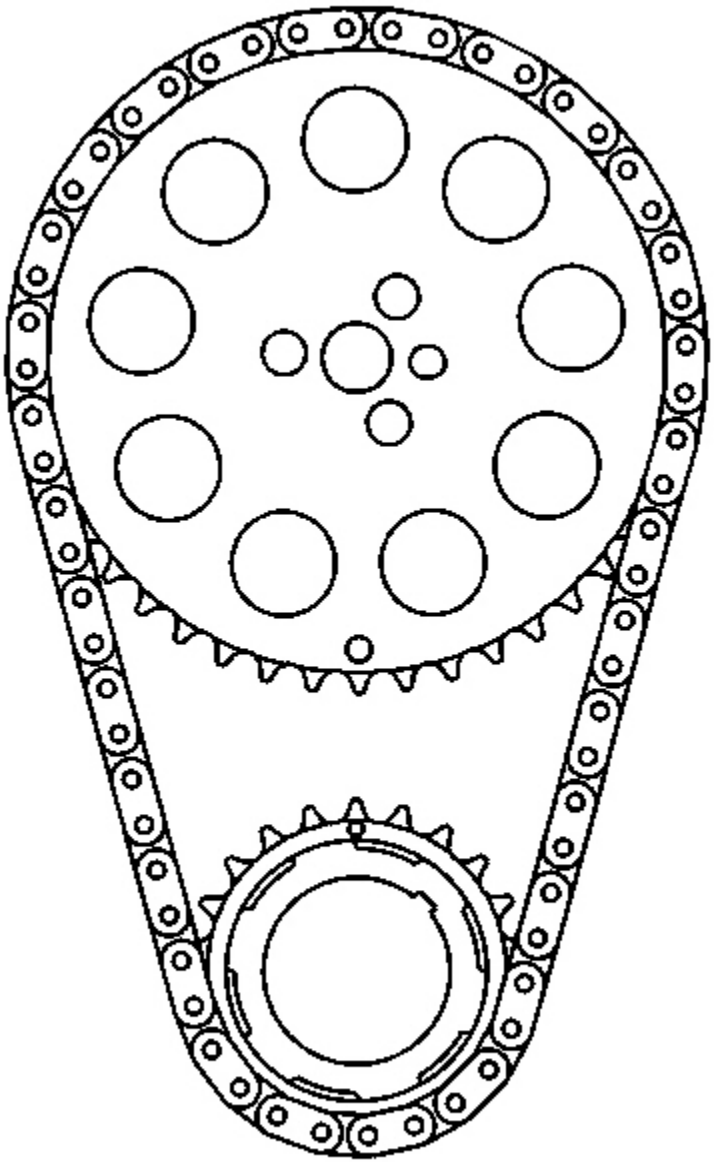

Fig. 67: View Of Camshaft & Crankshaft Sprockets Aligned
Courtesy of GENERAL MOTORS CORP.

9. If necessary, rotate the camshaft or crankshaft sprockets in order to align the timing marks.

cardiagn.com

10. Install the camshaft sprocket bolts.

    Tighten: Tighten the camshaft sprocket bolts to 35 N.m (26 lb ft).

OIL PUMP, PUMP SCREEN AND DEFLECTOR INSTALLATION

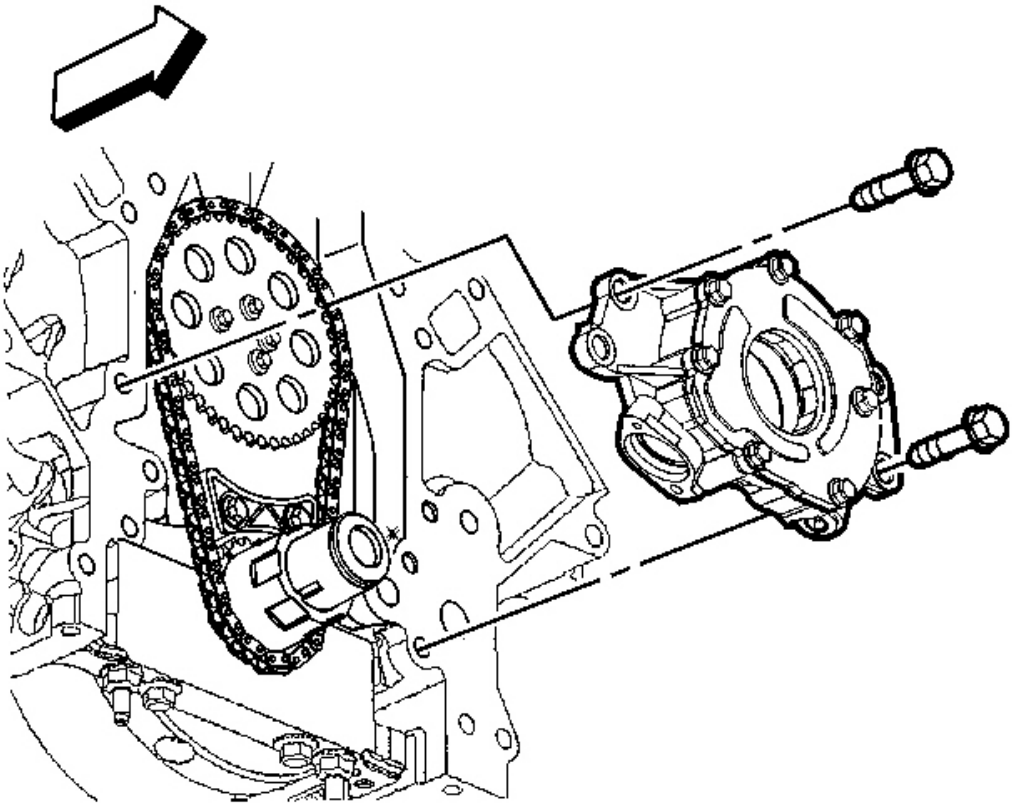

Fig. 68: Crankshaft Sprocket & Oil Pump Drive Gear
Courtesy of GENERAL MOTORS CORP.

IMPORTANT: Inspect the oil pump and engine block oil gallery passages. These surfaces must be clear and free of debris or restrictions.

1. Align the splined surfaces of the crankshaft sprocket and the oil pump drive gear and install the oil pump.
2. Install the oil pump onto the crankshaft sprocket until the pump housing contacts the face of the engine block.

cardiagn.com

NOTE: **Refer to Fastener Notice in Cautions and Notices.**

3. Install the oil pump bolts.

   Tighten: Tighten the oil pump bolts to 25 N.m (18 lb ft).

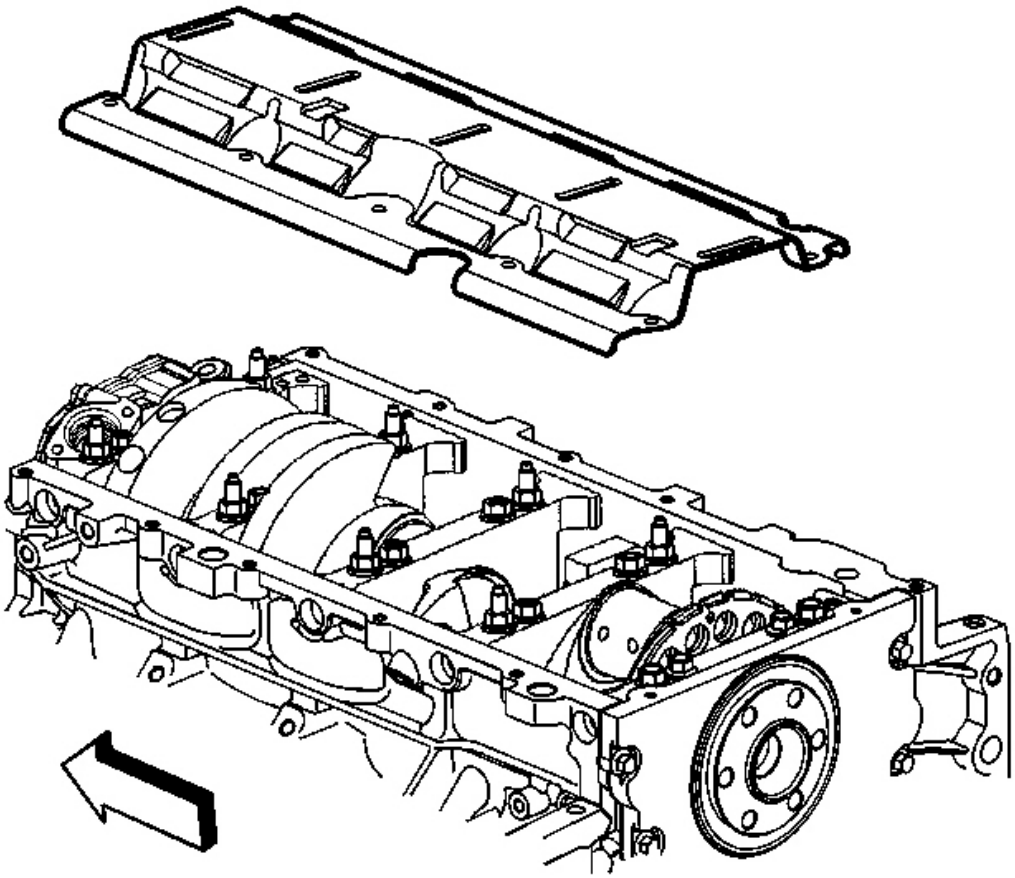

Fig. 69: Crankshaft Oil Deflector
Courtesy of GENERAL MOTORS CORP.

4. Install the crankshaft oil deflector.
5. Lubricate a NEW oil pump screen O-ring seal with clean engine oil.
6. Install the NEW O-ring seal onto the oil pump screen.

cardiagn.com

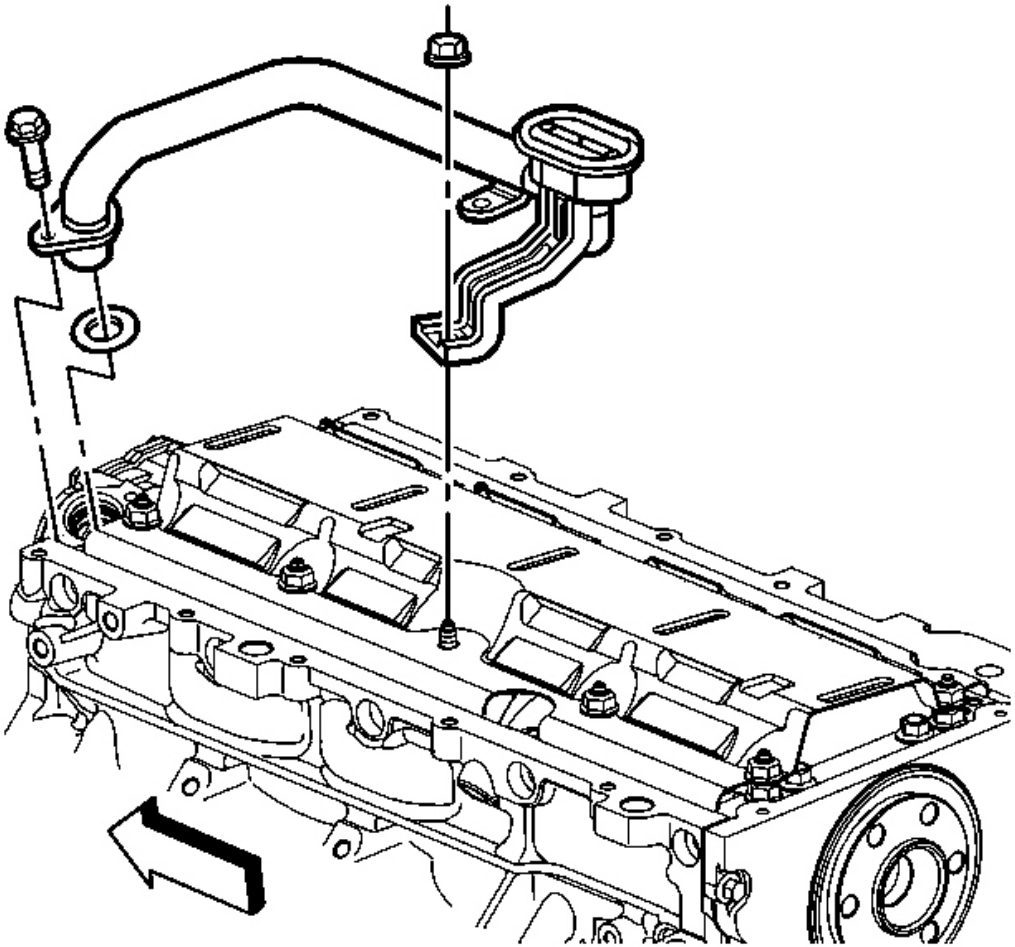

Fig. 70: View Of Oil Pump Screen
Courtesy of GENERAL MOTORS CORP.

IMPORTANT:

- **Push the oil pump screen tube completely into the oil pump prior to tightening the bolt. Do not allow the bolt to pull the tube into the pump.**
- **Align the oil pump screen mounting brackets with the correct crankshaft bearing cap studs.**

7. Install the oil pump screen.
8. Install the oil pump screen bolt and the deflector nuts.

Tighten:

cardiagn.com

1. Tighten the oil pump screen bolt to 12 N.m (106 lb in).
2. Tighten the crankshaft oil deflector nuts to 25 N.m (18 lb ft).

ENGINE REAR COVER INSTALLATION

Tools Required

- **J 41480** Front and Rear Cover Alignment - Oil Pan Surface
- **J 41476** Front and Rear Cover Alignment Tool - Crankshaft Oil Seal Area

cardiagn.com

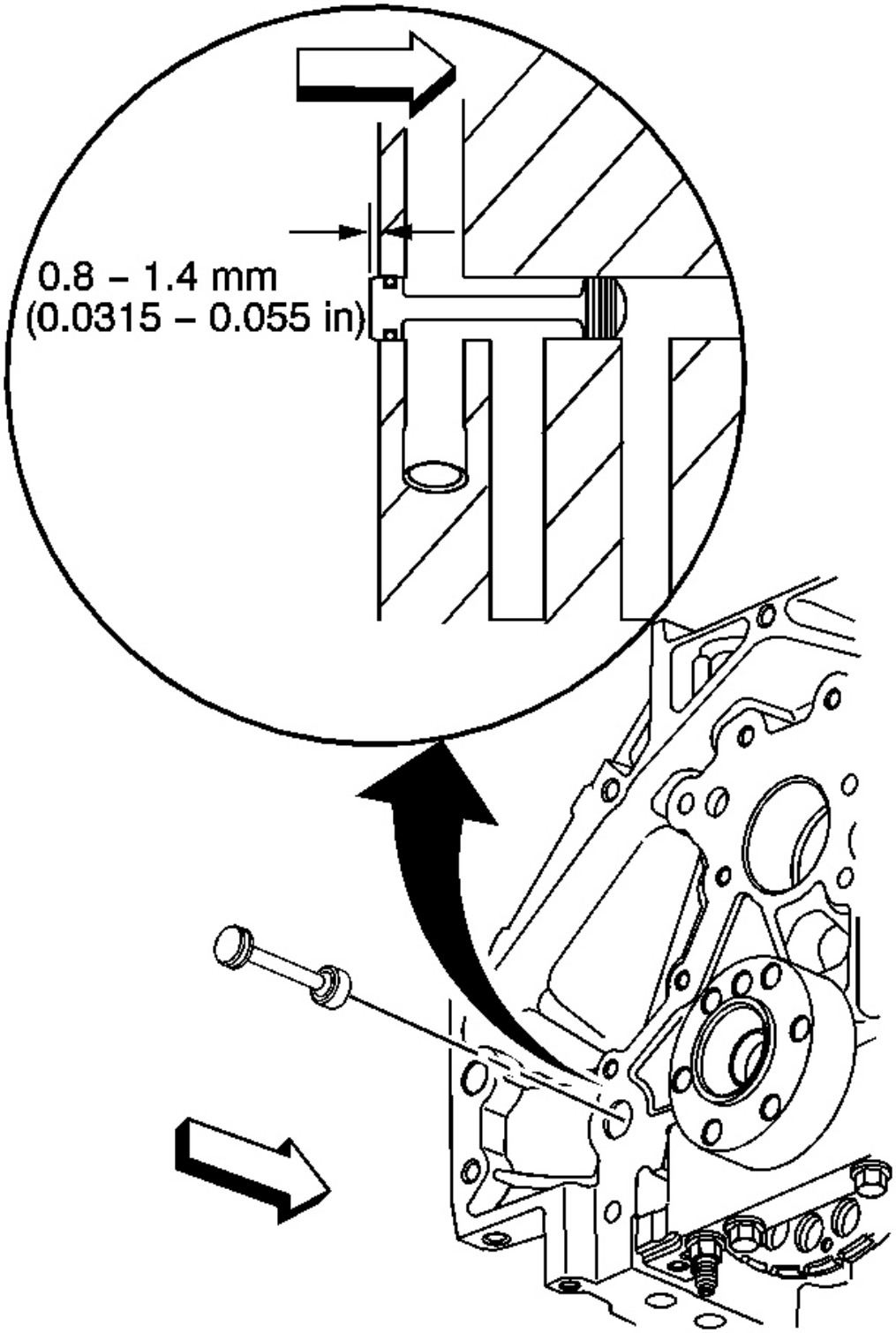

cardiagn.com

Fig. 71: View Of Engine Block Rear Oil Gallery Plug
Courtesy of GENERAL MOTORS CORP.

IMPORTANT:

- **Do not use the crankshaft rear oil seal or the engine rear cover gasket again.**
- **Do not apply any type sealant to the rear cover gasket, unless specified.**
- **The special tools in this procedure are used to properly align the engine rear cover at the oil pan surface and to center the crankshaft rear oil seal.**
- **The crankshaft rear oil seal will be installed after the rear cover has been installed and aligned. Install the rear cover without the crankshaft oil seal.**
  - **The crankshaft rear oil seal MUST be centered in relation to the crankshaft.**
  - **The oil pan sealing surface at the rear cover and engine block MUST be aligned within specifications.**
  - **An improperly aligned rear cover may cause premature rear oil seal wear and/or engine assembly oil leaks.**

1. Inspect the rear oil gallery plug for proper installation.

cardiagn.com

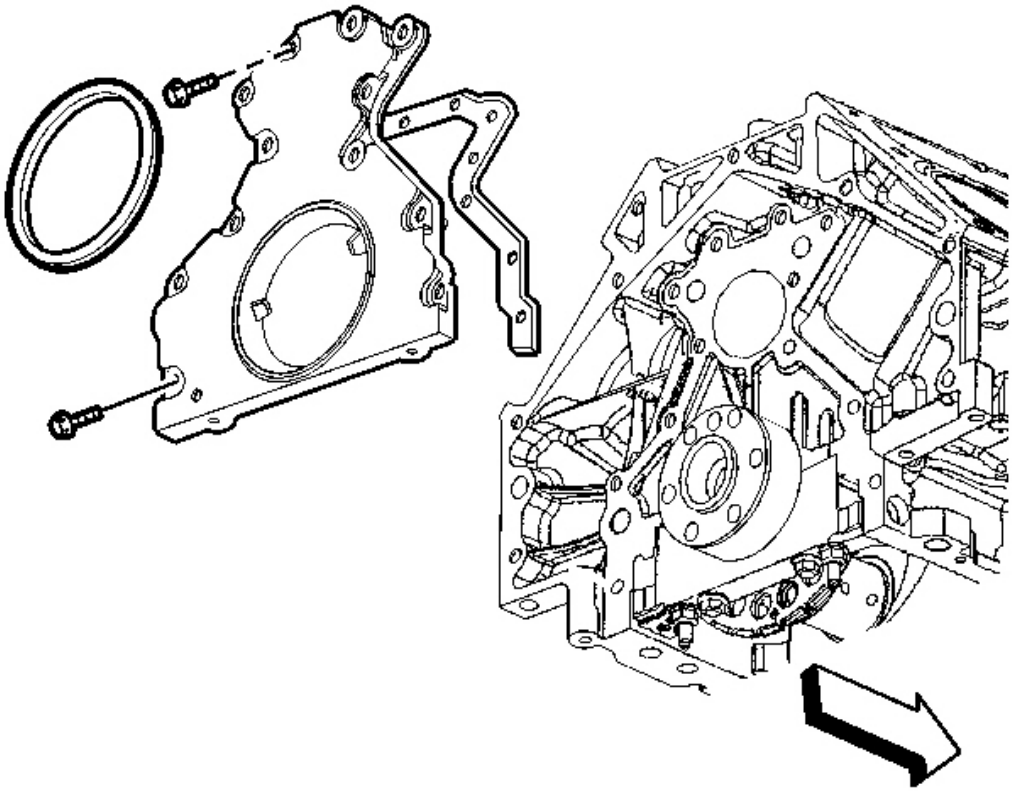

Fig. 72: View Of Rear Cover, Bolts & Gasket
Courtesy of GENERAL MOTORS CORP.

2. Install the rear cover gasket, rear cover and bolts.
3. Tighten the bolts finger tight. Do not overtighten.

cardiagn.com

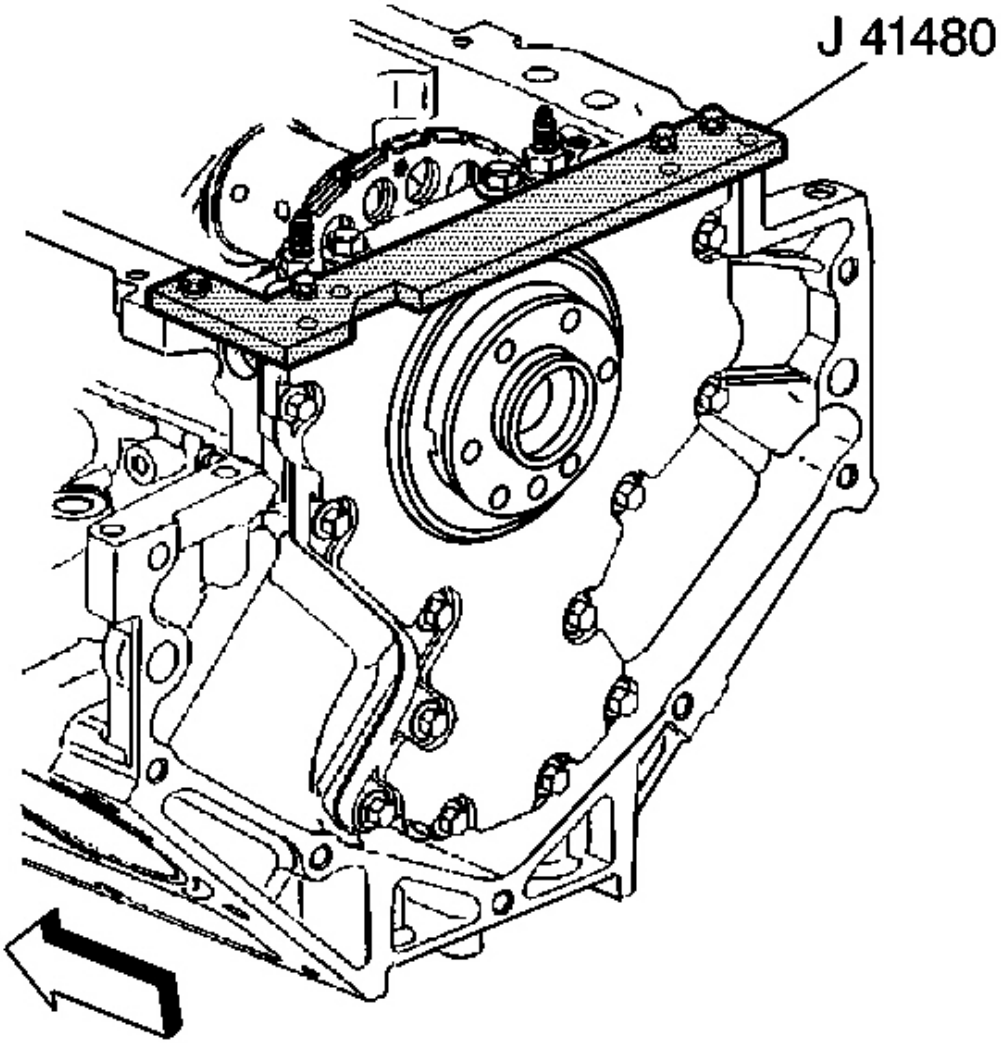

Fig. 73: View Of J 41480 & Bolts
Courtesy of GENERAL MOTORS CORP.

NOTE: **Refer to Fastener Notice in Cautions and Notices.**

IMPORTANT: **Start the J 41480 tool-to-rear cover bolts. Do not tighten the bolts at this time.**

4. Install the **J 41480** and bolts.

cardiagn.com

Tighten: Tighten the tool-to-engine block bolts to 25 N.m (18 lb ft).

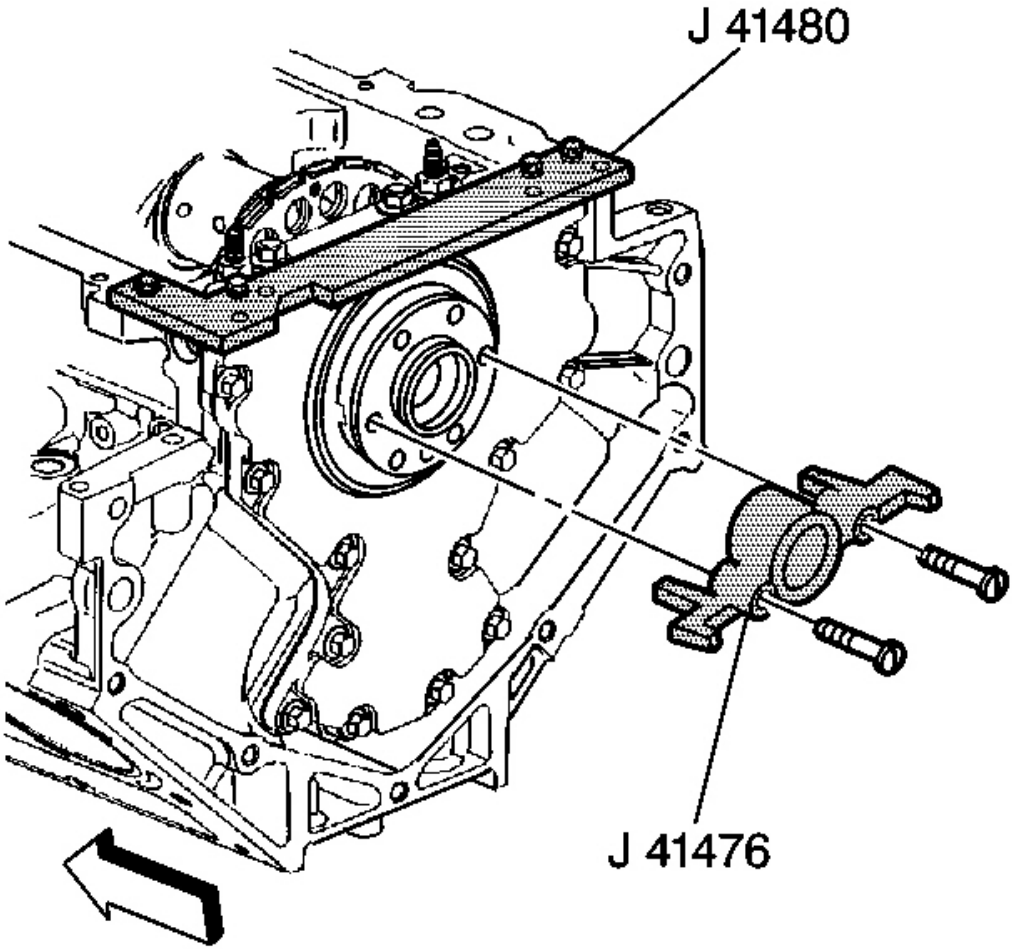

Fig. 74: View Of J 41480 & J 41476 Removed
Courtesy of GENERAL MOTORS CORP.

IMPORTANT: To properly align the rear cover, the J 41476 must be installed onto the rear of the crankshaft with the tool mounting bolts parallel to the oil pan surface.

5. Rotate the crankshaft until 2 opposing flywheel bolt holes are parallel to the oil pan surface.

cardiagn.com

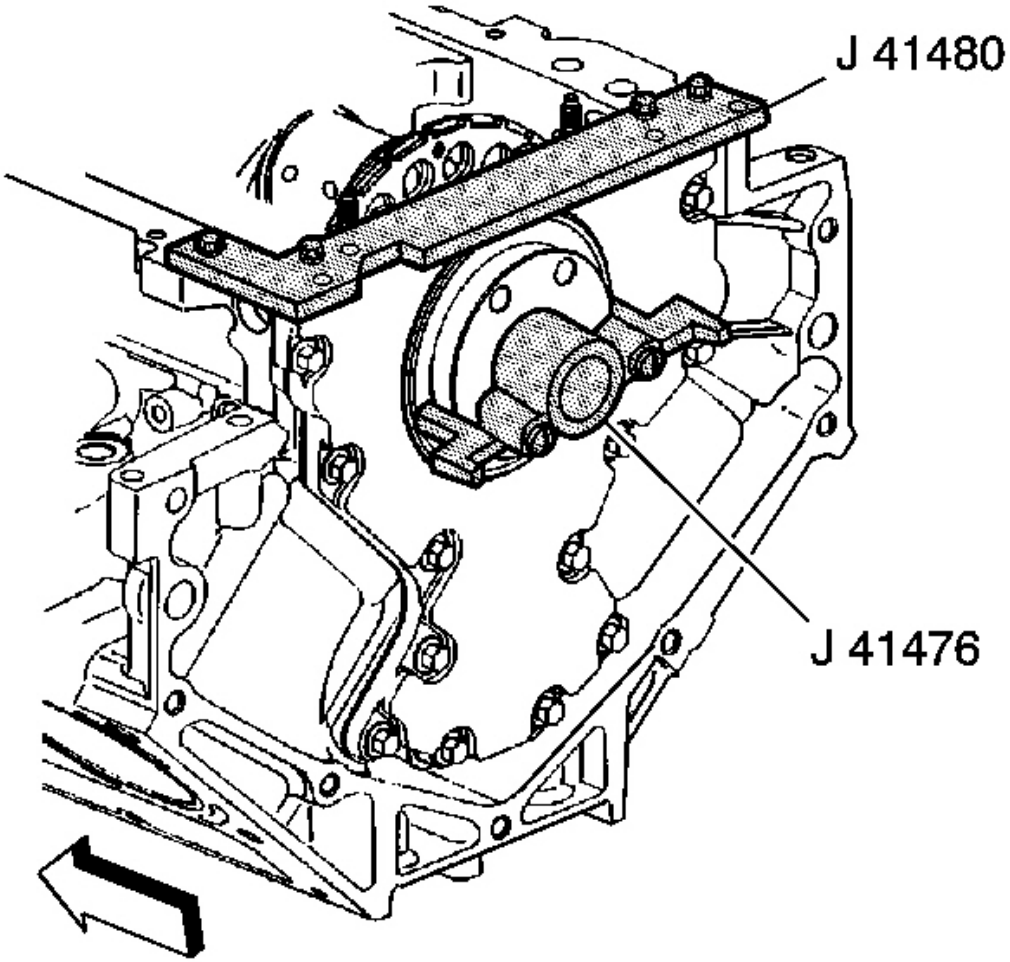

Fig. 75: View Of J 41480 & J 41476 Installed
Courtesy of GENERAL MOTORS CORP.

IMPORTANT: The tapered legs of the alignment tool must enter the rear cover oil seal bore.

6. Install the **J 41476** and bolts onto the rear of the crankshaft.

Tighten:

1. Tighten the tool mounting bolts until snug. Do not overtighten.
2. Tighten the **J 41480** tool-to-rear cover bolts evenly to 12 N.m (106 lb in).
3. Tighten the rear cover bolts to 25 N.m (18 lb ft).

cardiagn.com

7. Remove the tools.

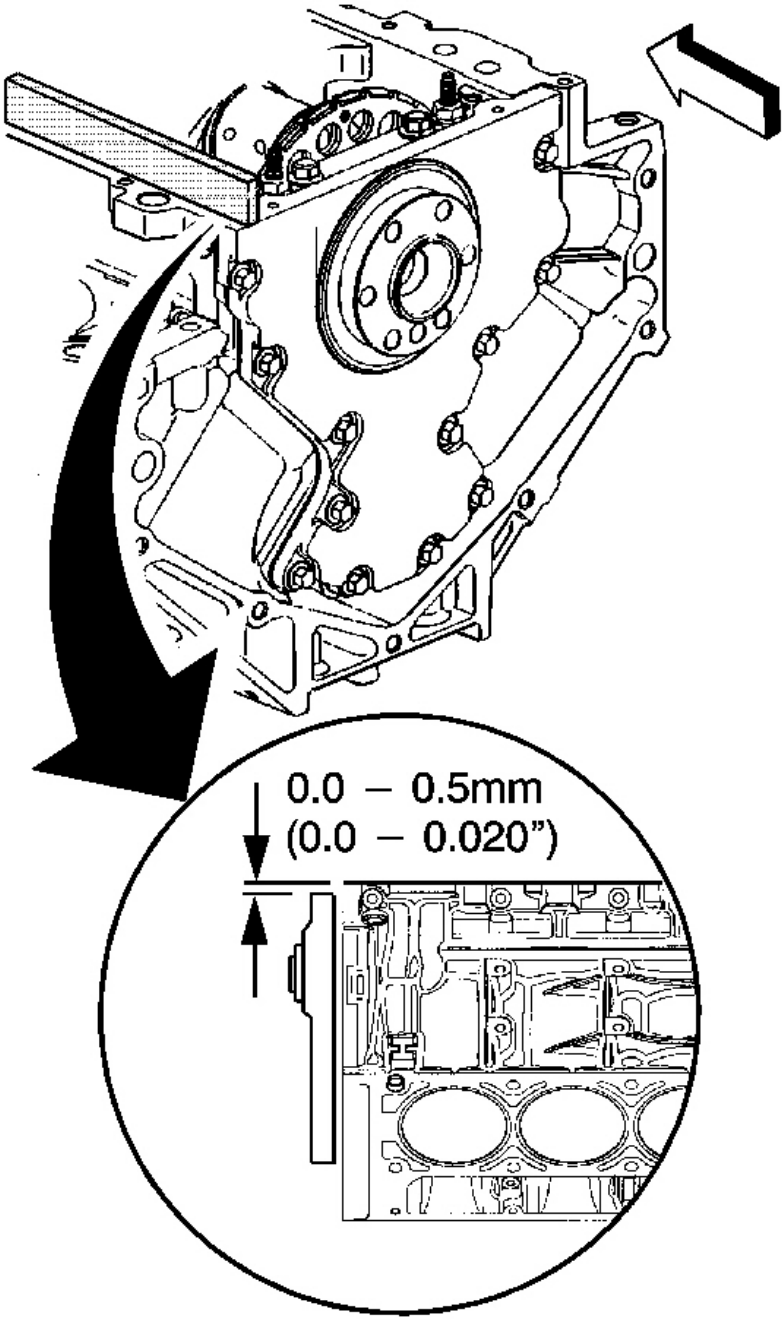

Fig. 76: Measuring The Rear Cover-To-Engine Block Oil Pan Surface For Flatness
Courtesy of GENERAL MOTORS CORP.

cardiagn.com

8. Measure the rear cover-to-engine block oil pan surface for flatness.
    1. Place a straight edge onto the engine block and rear cover oil pan sealing surfaces.

       Avoid contact with the portion of the gasket that protrudes into the oil pan surface.

    2. Insert a feeler gage between the rear cover and the straight edge. The cover must be flush with the oil pan or no more than 0.5 mm (0.02 in) below flush.
9. If the rear cover-to-engine block oil pan surface alignment is not within specifications, repeat the cover alignment procedure.
10. If the correct rear cover-to-engine block alignment at the oil pan surface cannot be obtained, replace the rear cover.

CRANKSHAFT REAR OIL SEAL INSTALLATION

Tools Required

J 41479 Crankshaft Rear Oil Seal Installer

cardiagn.com

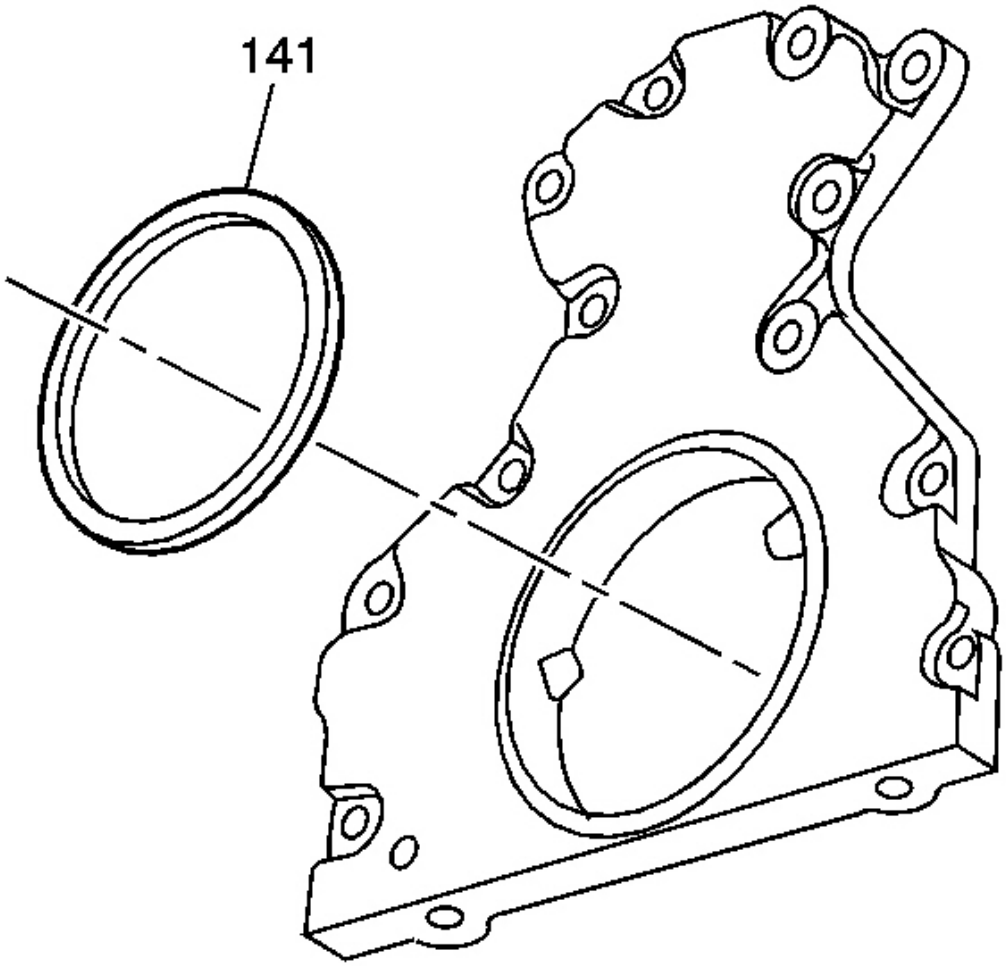

Fig. 77: View Of Crankshaft Rear Oil Seal
Courtesy of GENERAL MOTORS CORP.

IMPORTANT:

- **Do not lubricate the oil seal inside diameter (ID) or the crankshaft surface.**
- **Do not use the crankshaft rear oil seal again.**

1. Lubricate the outside diameter (OD) of the oil seal (141) with clean engine oil.

   DO NOT allow oil or other lubricants to contact the seal surface.

2. Lubricate the rear cover oil seal bore with clean engine oil.

cardiagn.com

DO NOT allow oil or other lubricants to contact the crankshaft surface.

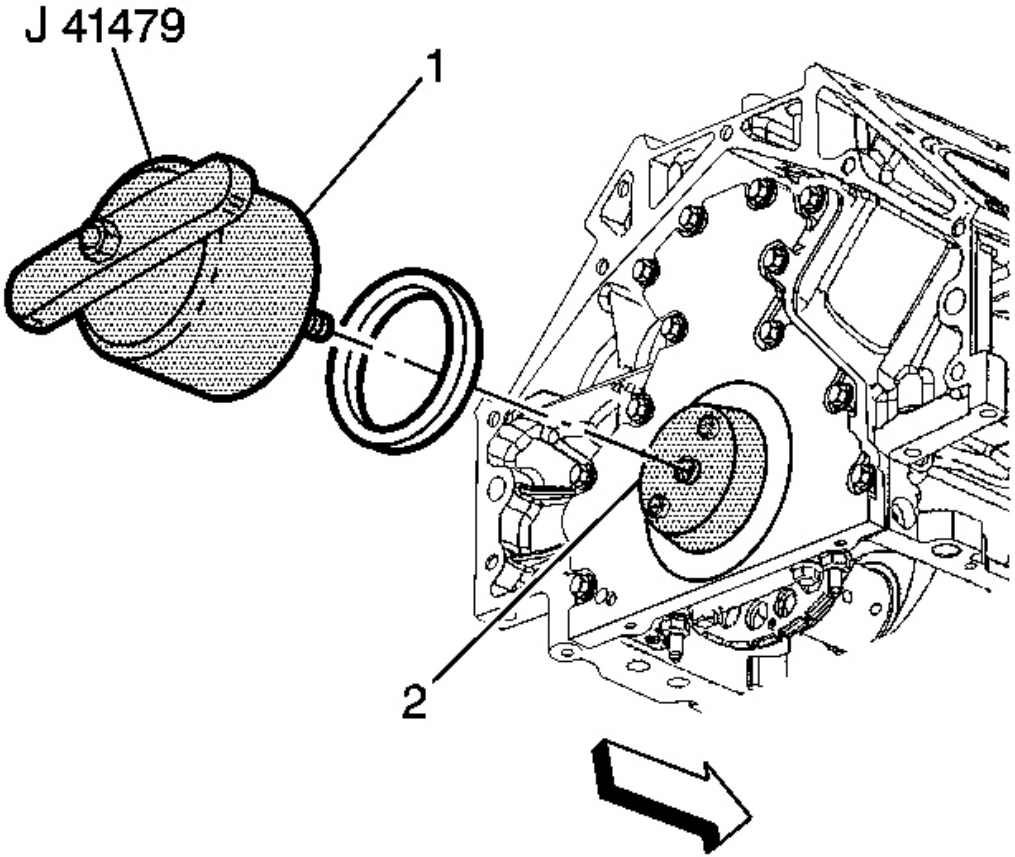

Fig. 78: View Of J 41479
Courtesy of GENERAL MOTORS CORP.

3. Install the **J 41479** cone (2) and bolts onto the rear of the crankshaft.
4. Tighten the bolts until snug. Do not overtighten.
5. Install the rear oil seal onto the tapered cone (2) and push the seal to the rear cover bore.
6. Thread the **J 41479** threaded rod into the tapered cone until the tool (1) contacts the oil seal.
7. Align the oil seal onto the tool (1).
8. Rotate the handle of the tool (1) clockwise until the seal enters the rear cover and bottoms into the cover bore.
9. Remove the tool.

ENGINE FRONT COVER INSTALLATION

cardiagn.com

Tools Required

- **J 41480** Front and Rear Cover Alignment - Oil Pan Surface
- **J 41476** Front and Rear Cover Alignment Tool - Crankshaft Oil Seal Area

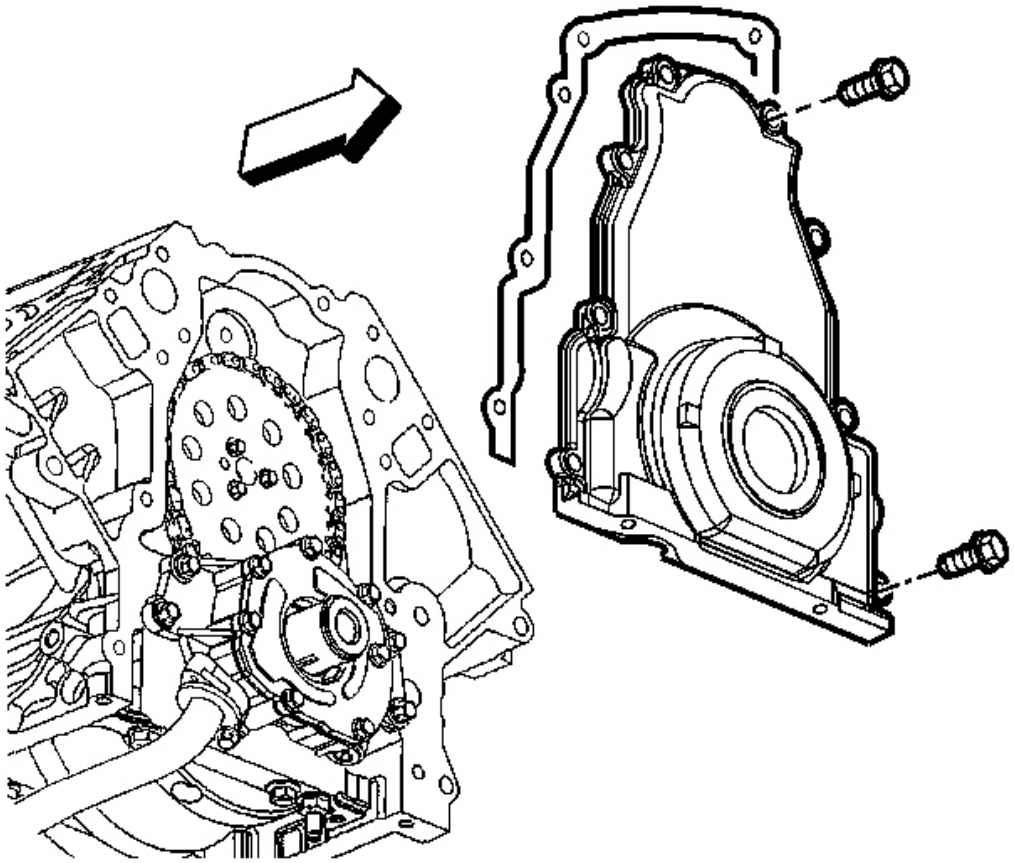

Fig. 79: View Of Front Cover & Gasket
Courtesy of GENERAL MOTORS CORP.

IMPORTANT:

- **Do not use the crankshaft oil seal or the engine front cover gasket again.**
- **Do not apply any type sealant to the front cover gasket, unless specified.**
- **The special tools in this procedure are used to properly align the engine front cover at the oil pan surface and to center the crankshaft front oil seal.**

cardiagn.com

- **All gasket surfaces should be free of oil or other foreign material during assembly.**

  The crankshaft front oil seal MUST be centered in relation to the crankshaft.

- **The oil pan sealing surface at the front cover and engine block MUST be aligned within specifications.**
- **An improperly aligned front cover may cause premature front oil seal wear and/or engine assembly oil leaks.**

1. Install the front cover gasket, cover, and bolts onto the engine.
2. Tighten the cover bolts finger tight. Do not overtighten.

cardiagn.com

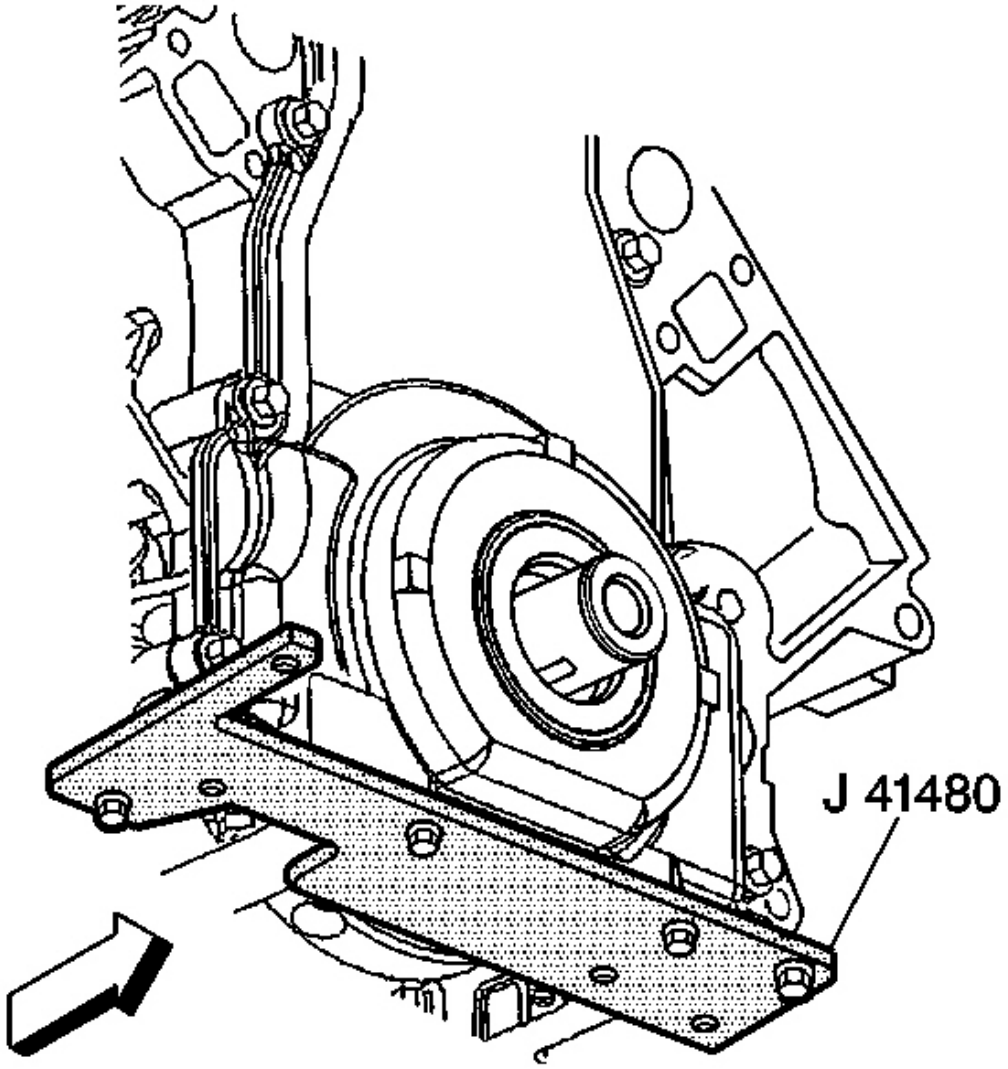

Fig. 80: View Of J 41480 Installed
Courtesy of GENERAL MOTORS CORP.

NOTE: **Refer to Fastener Notice in Cautions and Notices.**

IMPORTANT: Start the tool-to-front cover bolts. Do not tighten the bolts at this time.

3. Install the **J 41480** .

cardiagn.com

Tighten: Tighten the tool-to-engine block bolts to 25 N.m (18 lb ft).

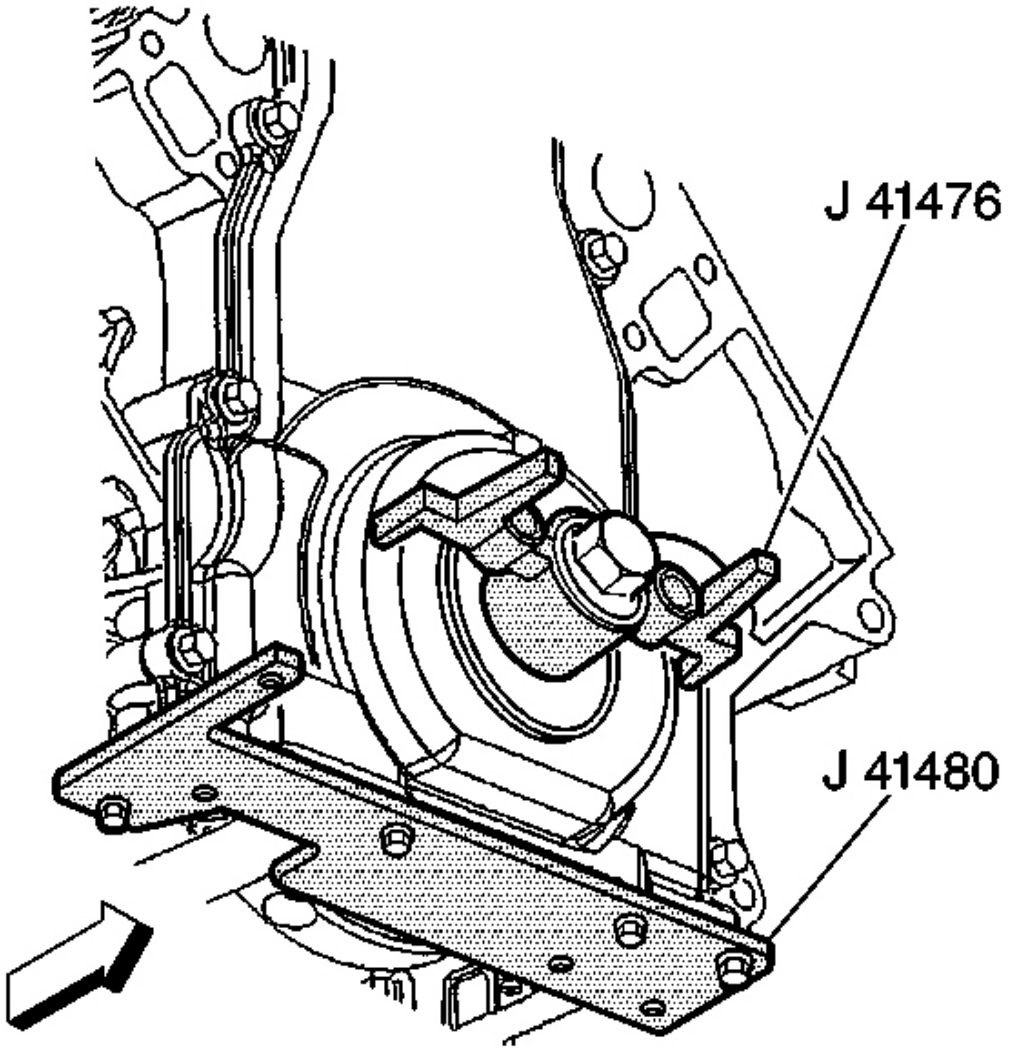

Fig. 81: View Of J 41476 & J 41480 Installed
Courtesy of GENERAL MOTORS CORP.

IMPORTANT: Align the tapered legs of the tool with the machined alignment surfaces on the front cover.

4. Install the **J 41476** .
5. Install the crankshaft balancer bolt.

cardiagn.com

Tighten:

1. Tighten the crankshaft balancer bolt by hand until snug. Do not overtighten.
2. Tighten the **J 41480** .
3. Tighten the engine front cover bolts to 25 N.m (18 lb ft).

6. Remove the tools.

cardiagn.com

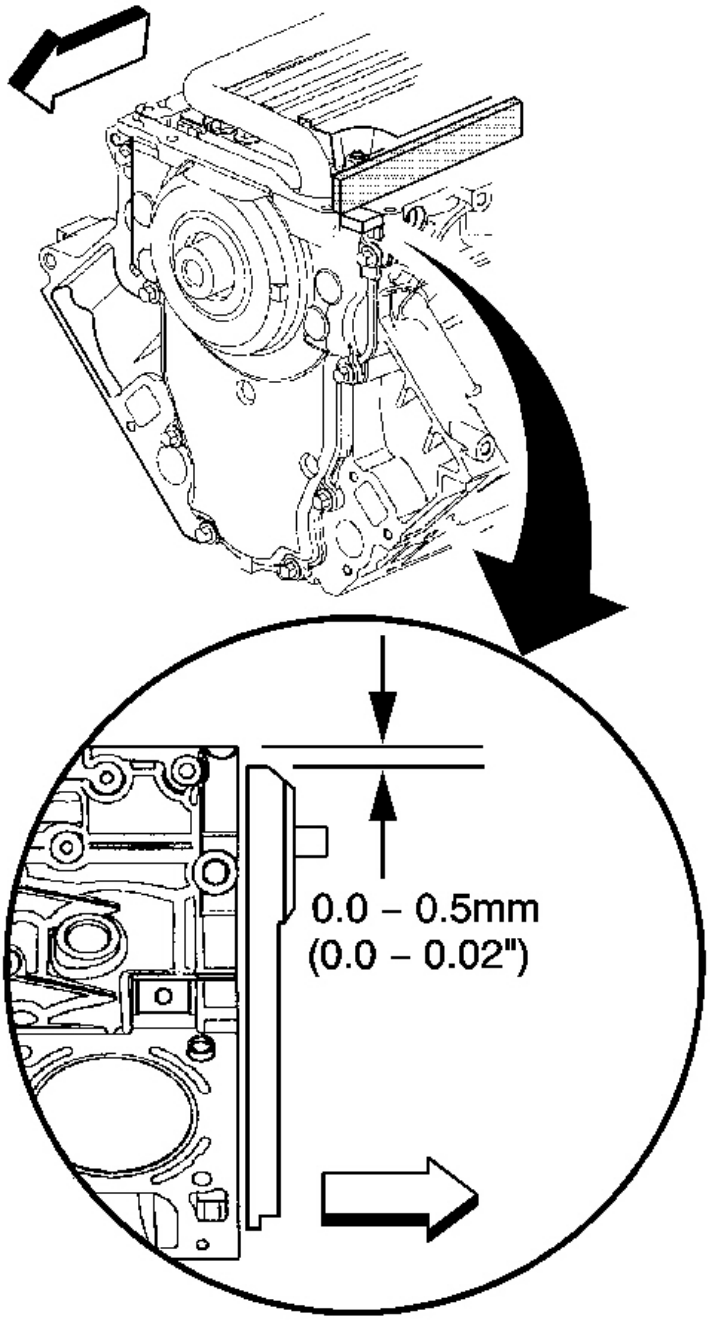

Fig. 82: Measuring The Oil Pan Surface Flatness, Front Cover-To-Engine Block
Courtesy of GENERAL MOTORS CORP.

7. Measure the oil pan surface flatness, front cover-to-engine block.

cardiagn.com

1. Place a straight edge across the engine block and front cover oil pan sealing surfaces.

   Avoid contact with the portion of the gasket that protrudes into the oil pan surface.

2. Insert a feeler gage between the front cover and the straight edge tool. The cover must be flush with the oil pan surface or no more than 0.5 mm (0.02 in) below flush.

8. If the front cover-to-engine block oil pan surface alignment is not within specifications, repeat the cover alignment procedure.
9. If the correct front cover-to-engine block alignment cannot be obtained, replace the front cover.

CRANKSHAFT FRONT OIL SEAL INSTALLATION

Tools Required

J 41478 Crankshaft Front Oil Seal Installer

cardiagn.com

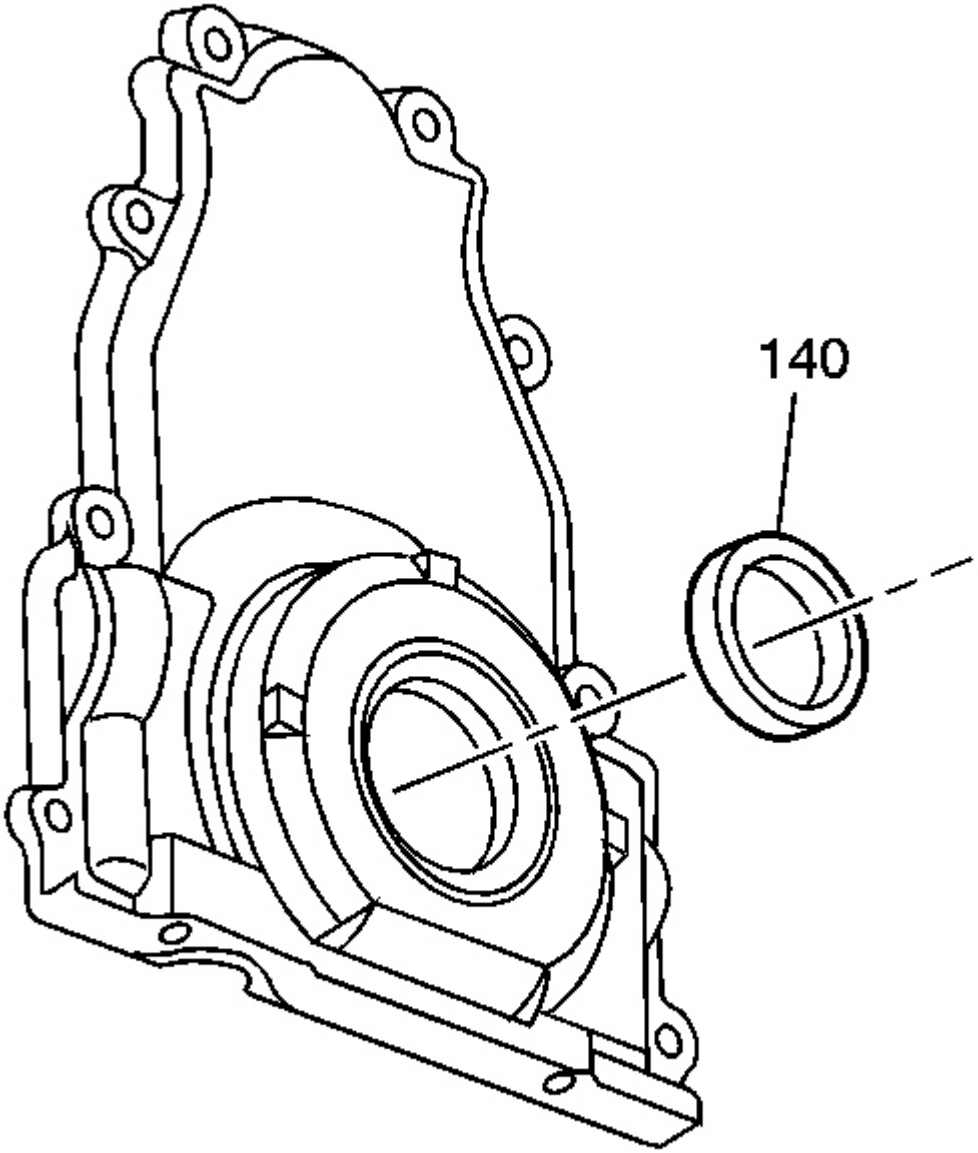

Fig. 83: View Of Crankshaft Front Oil Seal
Courtesy of GENERAL MOTORS CORP.

IMPORTANT:

- **Do not lubricate the oil seal sealing surface.**
- **Do not use the crankshaft front oil seal again.**

cardiagn.com

1. Lubricate the outer edge of the oil seal (140) with clean engine oil.
2. Lubricate the front cover oil seal bore with clean engine oil.

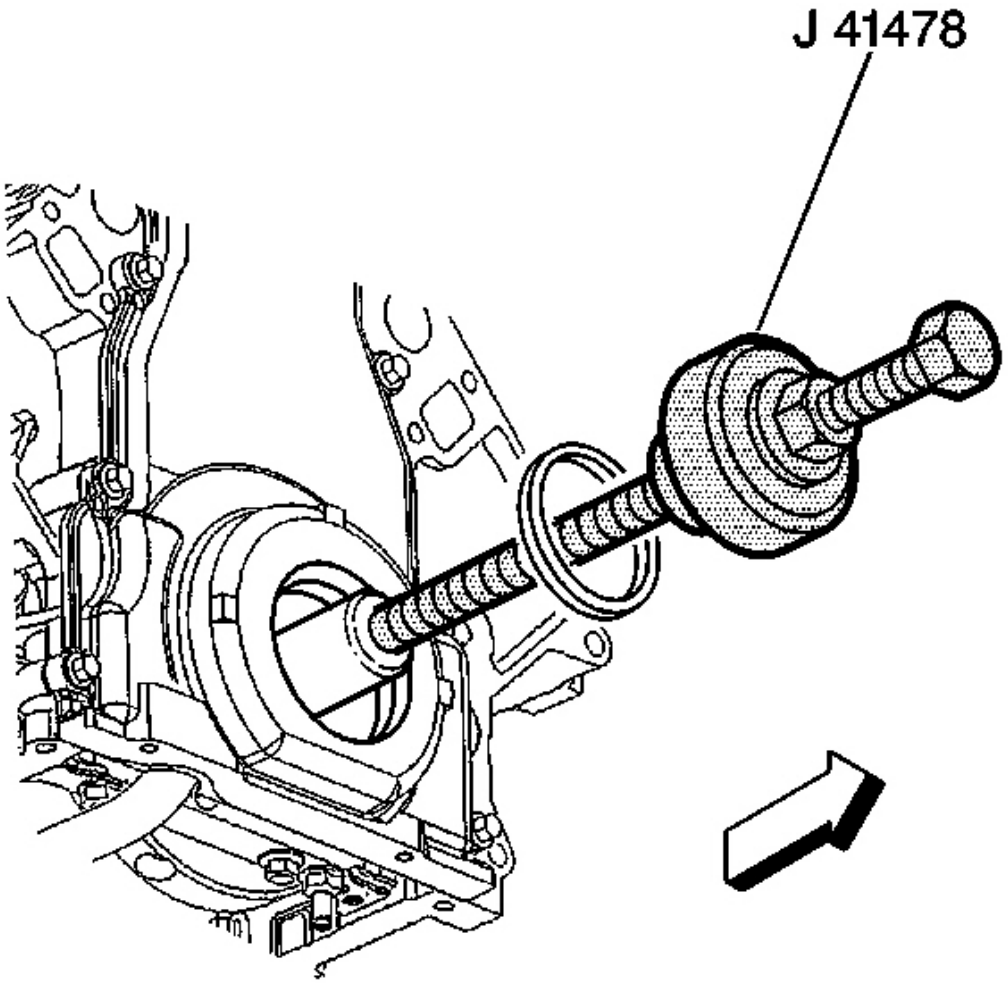

Fig. 84: View Of J 41478
Courtesy of GENERAL MOTORS CORP.

3. Install the crankshaft front oil seal onto the **J 41478** guide.
4. Install the **J 41478** threaded rod, with nut, washer, guide, and oil seal, into the end of the crankshaft.
5. Use the **J 41478** in order to install the oil seal into the cover bore.
    1. Use a wrench and hold the hex on the installer bolt.
    2. Use a second wrench and rotate the installer nut clockwise until the seal bottoms in the cover bore.

cardiagn.com

3. Remove the tool.
4. Inspect the oil seal for proper installation. The oil seal should be installed evenly and completely into the front cover bore.

OIL PAN INSTALLATION

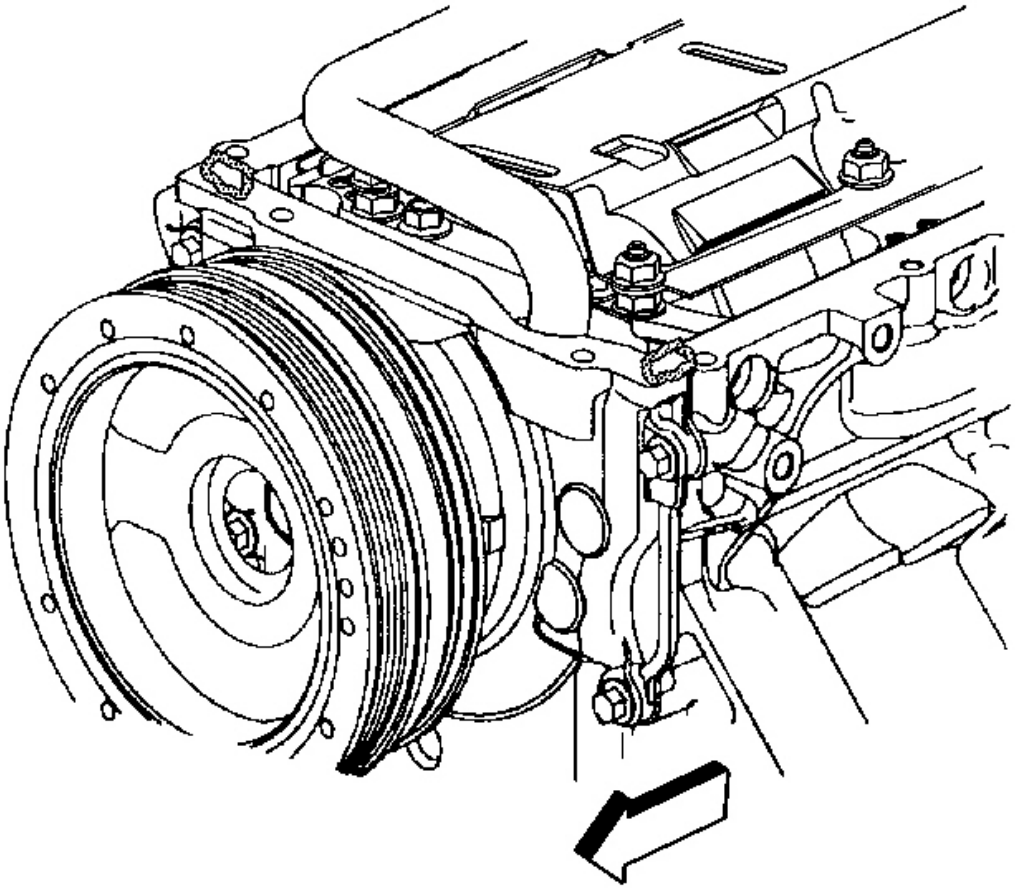

Fig. 85: Front Cover Gasket That Protrude & Oil Pan Surface
Courtesy of GENERAL MOTORS CORP.

IMPORTANT:

- **All gasket surfaces should be free of oil or other foreign material during assembly.**
- **The alignment of the structural oil pan is critical. The rear bolt hole locations of the oil pan provide mounting points for the transmission housing. To ensure the rigidity of the powertrain and correct**

cardiagn.com

transmission alignment, it is important that the rear of the block and the rear of the oil pan are flush or even. The rear of the oil pan must NEVER protrude beyond the engine block and transmission housing plane.

- **DO NOT use the oil pan gaskets again.**
- **It is not necessary to rivet the NEW gasket to the oil pan.**
- **It is not necessary to remove the oil level sensor prior to oil pan installation.**

1. Apply a 5 mm (0.2 in) bead of sealant GM P/N 12378190 or equivalent 20 mm (0.8 in) long to the engine block. Apply the sealant directly onto the tabs of the front cover gasket that protrude into the oil pan surface.

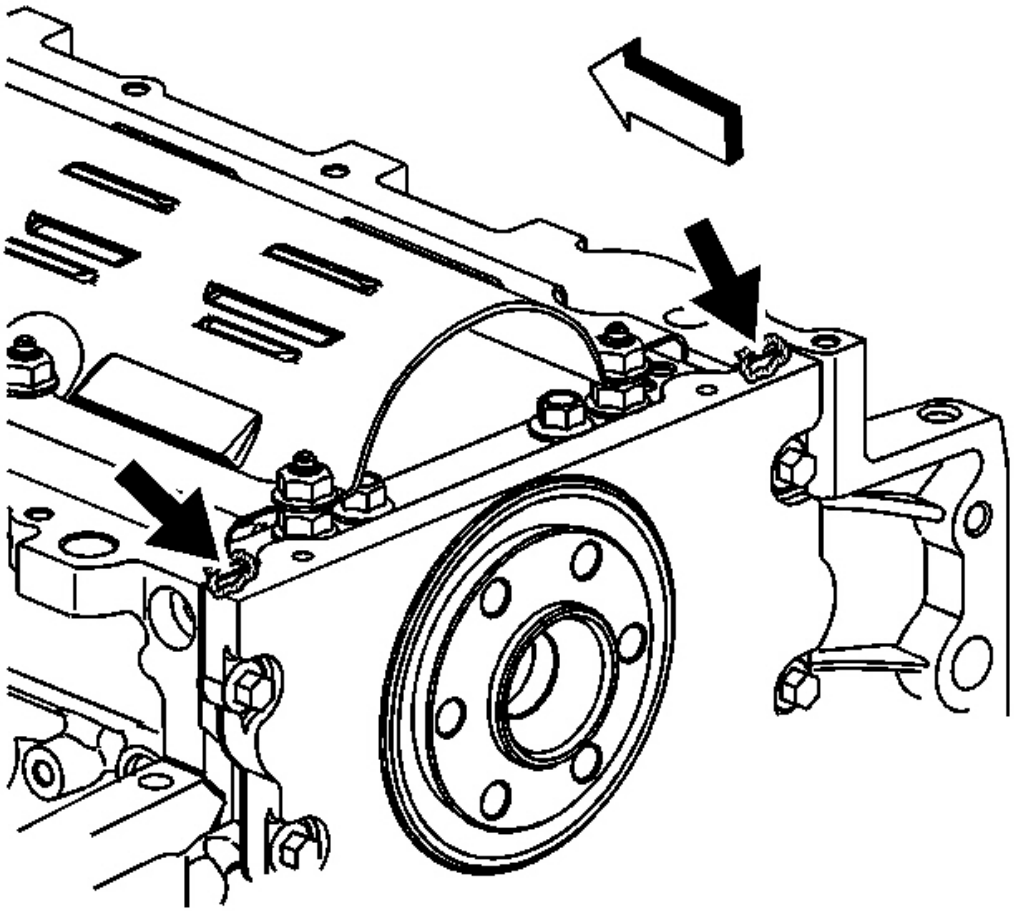

Fig. 86: View Of Sealant On Engine Rear Cover Gasket Tabs

cardiagn.com

Courtesy of GENERAL MOTORS CORP.

2. Apply a 5 mm (0.2 in) bead of sealant GM P/N 12378190 or equivalent 20 mm (0.8 in) long to the engine block. Apply the sealant directly onto the tabs of the rear cover gasket that protrude into the oil pan surface.

cardiagn.com

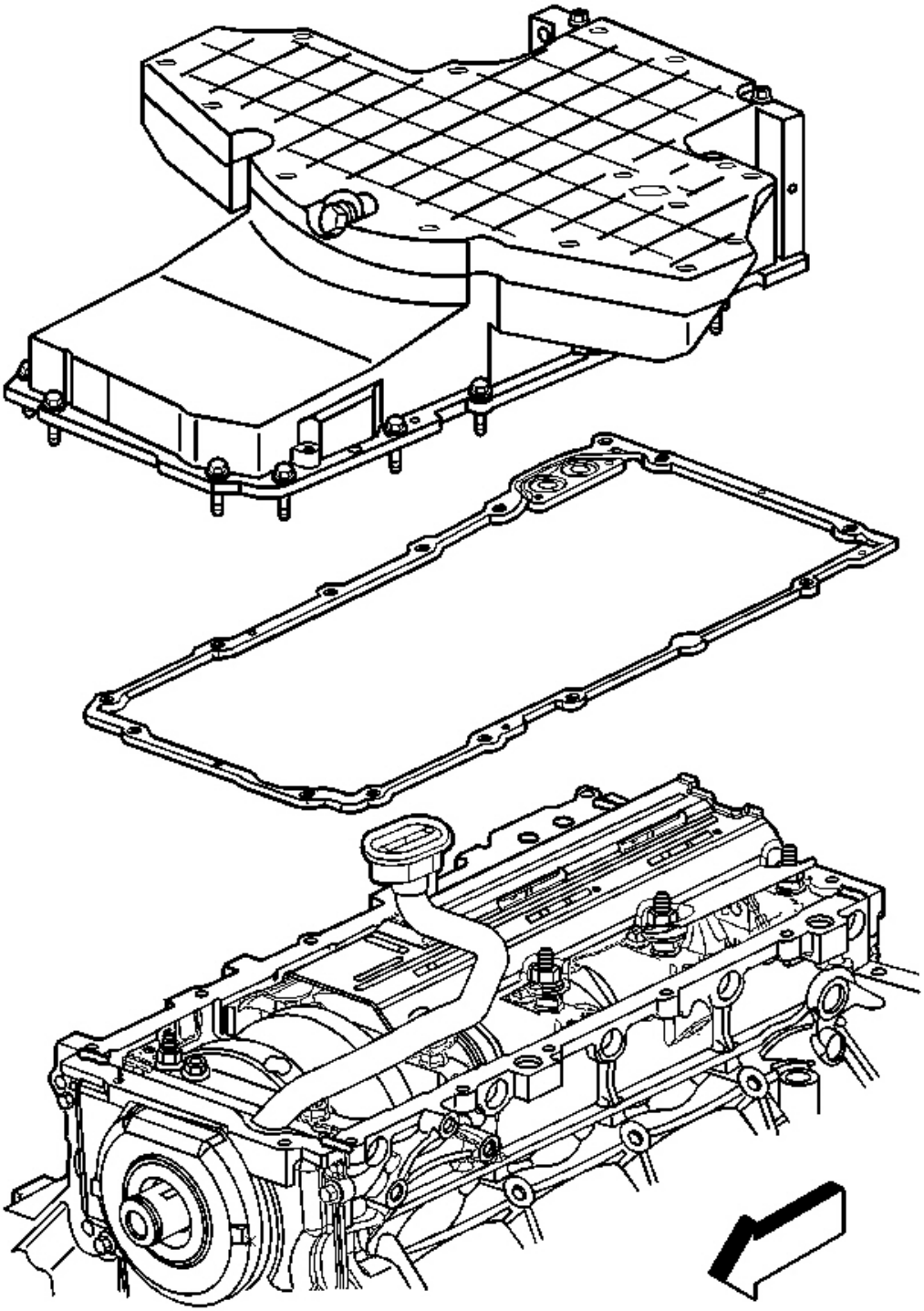

cardiagn.com

Fig. 87: Oil Pan, Upper Gasket, Bolts & Engine Block
Courtesy of GENERAL MOTORS CORP.

IMPORTANT: Be sure to align the oil gallery passages in the oil pan and engine block properly with the oil pan gasket.

3. Pre-assemble the oil pan gasket to the pan, upper.
    1. Install the gasket onto the oil pan, upper.
    2. Install the oil pan bolts to the pan and through the gasket.
4. Install the oil pan, upper, gasket and bolts to the engine block.
5. Tighten bolts finger tight. Do not overtighten.
6. Place a straight edge across the rear of the engine block and the rear of the oil pan at the transmission housing mounting surfaces.

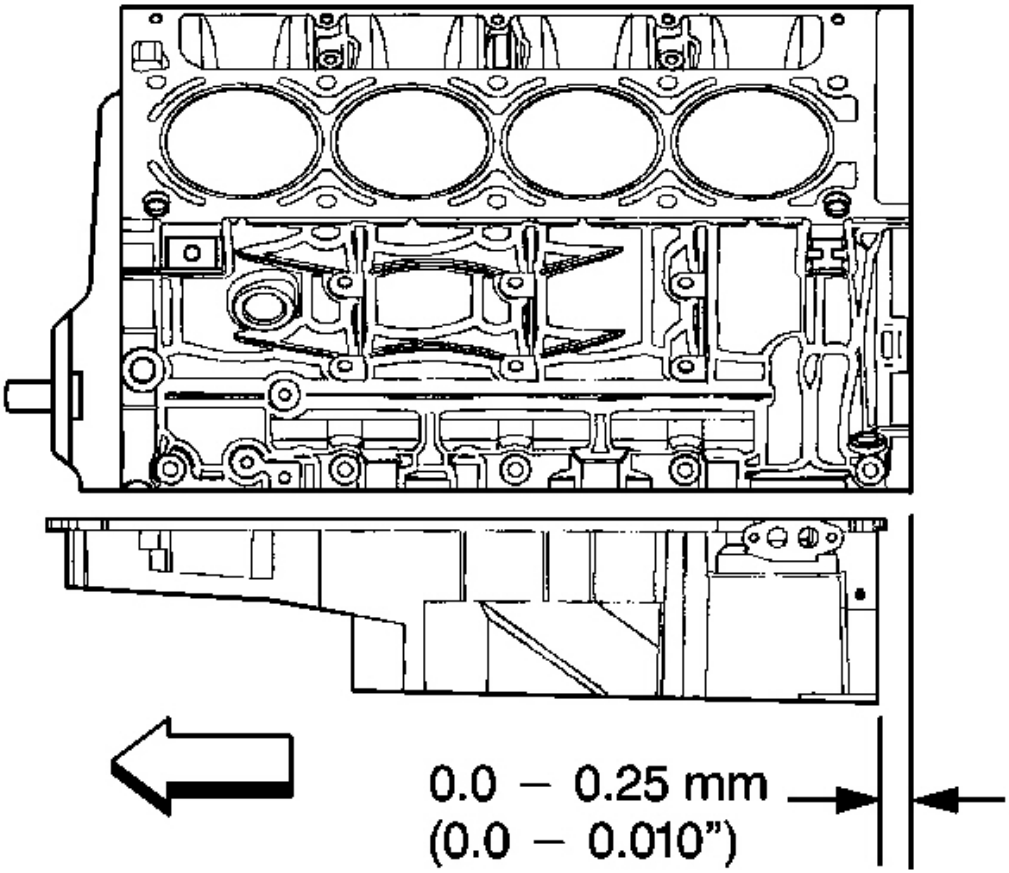

cardiagn.com

Fig. 88: Measuring The Oil Pan-To-Engine Block Alignment
Courtesy of GENERAL MOTORS CORP.

NOTE: Refer to Fastener Notice in Cautions and Notices.

7. Align the oil pan - upper - until the rear of engine block and rear of oil pan are flush or even.

   Tighten:
   1. Tighten the oil pan-to-block and oil pan-to-front cover bolts to 25 N.m (18 lb ft).
   2. Tighten the oil pan-to-rear cover bolts to 12 N.m (106 lb in).

8. Measure the oil pan-to-engine block alignment.
   1. Place a straight edge across the rear of the engine block and rear of oil pan at the transmission housing mounting surfaces.

      IMPORTANT: The rear of the oil pan must NEVER protrude beyond the engine block and transmission housing mounting surfaces.

   2. Insert a feeler gage between the straight edge and the oil pan transmission housing mounting surface and check to make sure that there is no more than a 0.25 mm (0.01 in) gap between the pan and straight edge.
   3. If the oil pan alignment is not within specifications, remove the oil pan and repeat the above procedure.

cardiagn.com

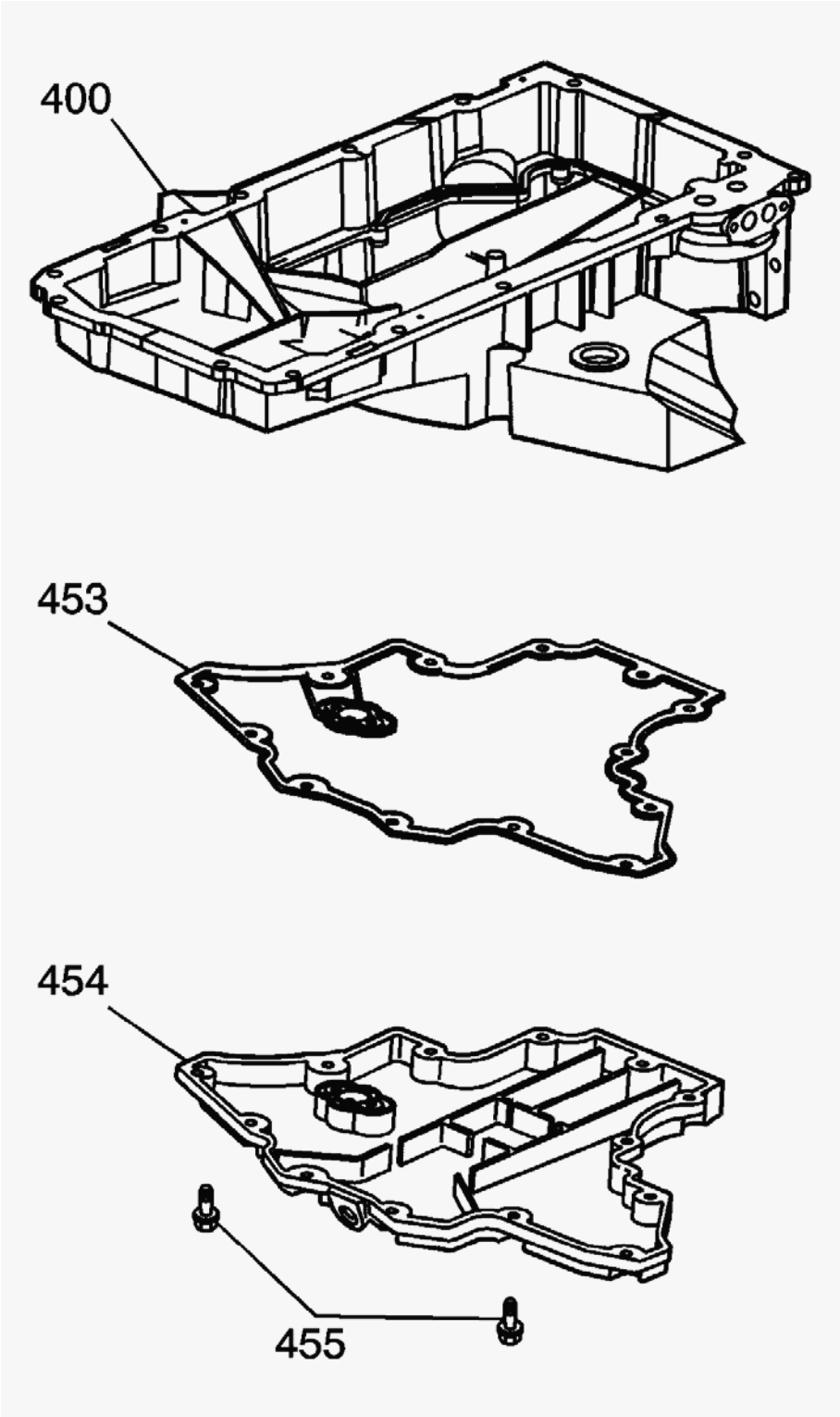

Fig. 89: Oil Pan, Lower & Gasket
Courtesy of GENERAL MOTORS CORP.

9. Install the oil pan, lower (454), and gasket (453).

cardiagn.com

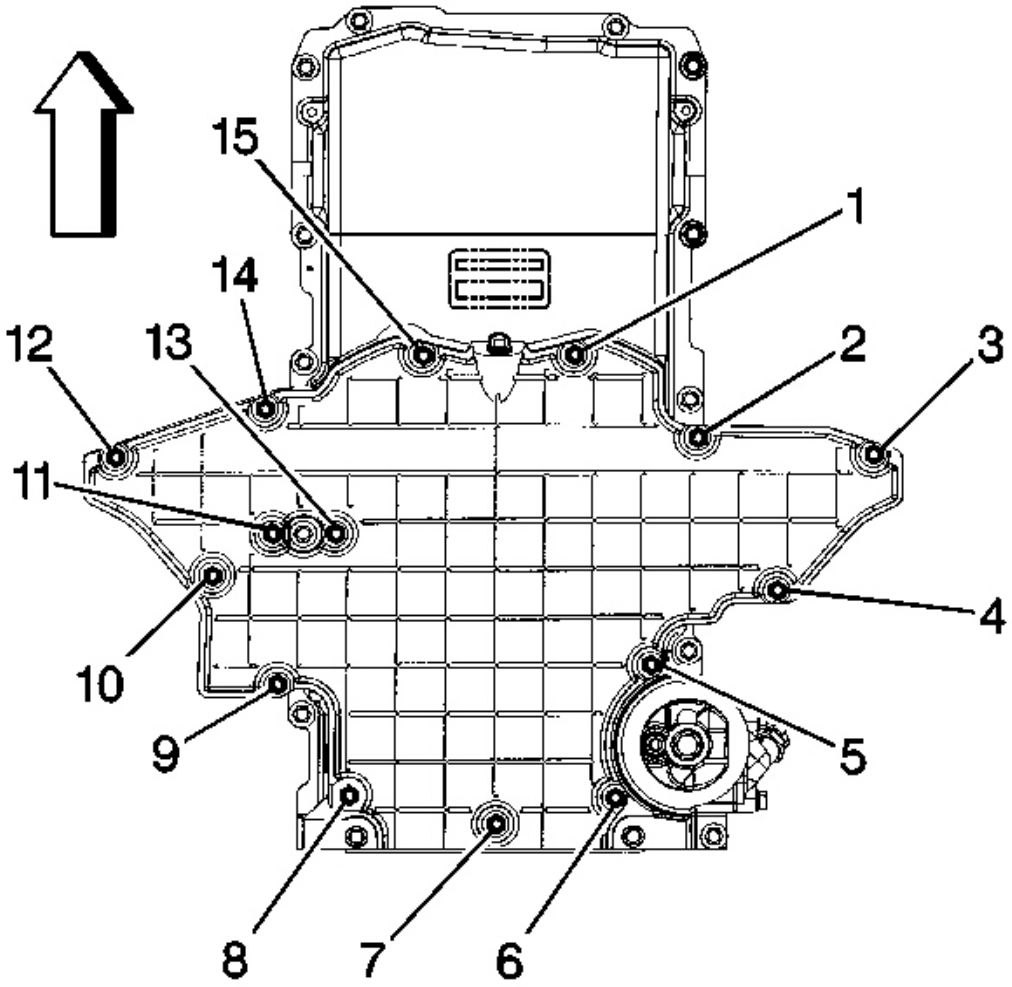

Fig. 90: Oil Pan & Lower Bolts
Courtesy of GENERAL MOTORS CORP.

10. Install the oil pan, lower bolts (1-15).

    Tighten: Tighten the oil pan, lower bolts to 12 N.m (106 lb in).

    Tighten the bolts in a crossing pattern, alternating from side to side.

cardiagn.com

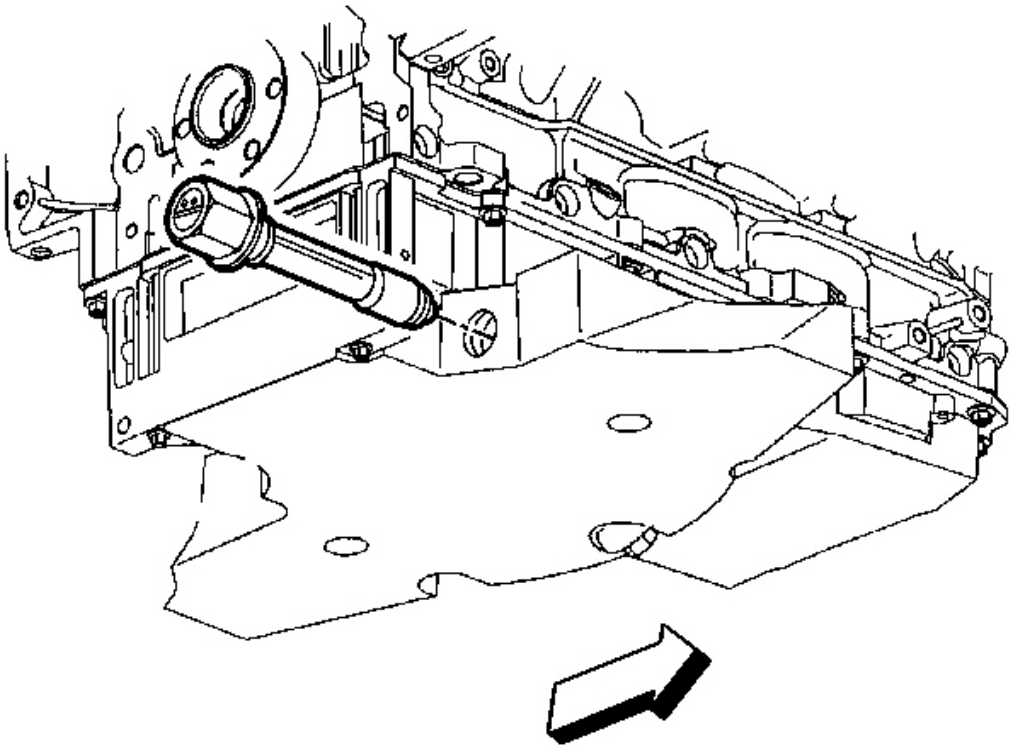

Fig. 91: Oil Level Sensor
Courtesy of GENERAL MOTORS CORP.

11. Install the oil level sensor.

    Tighten: Tighten the oil level sensor to 13 N.m (115 lb in).

cardiagn.com

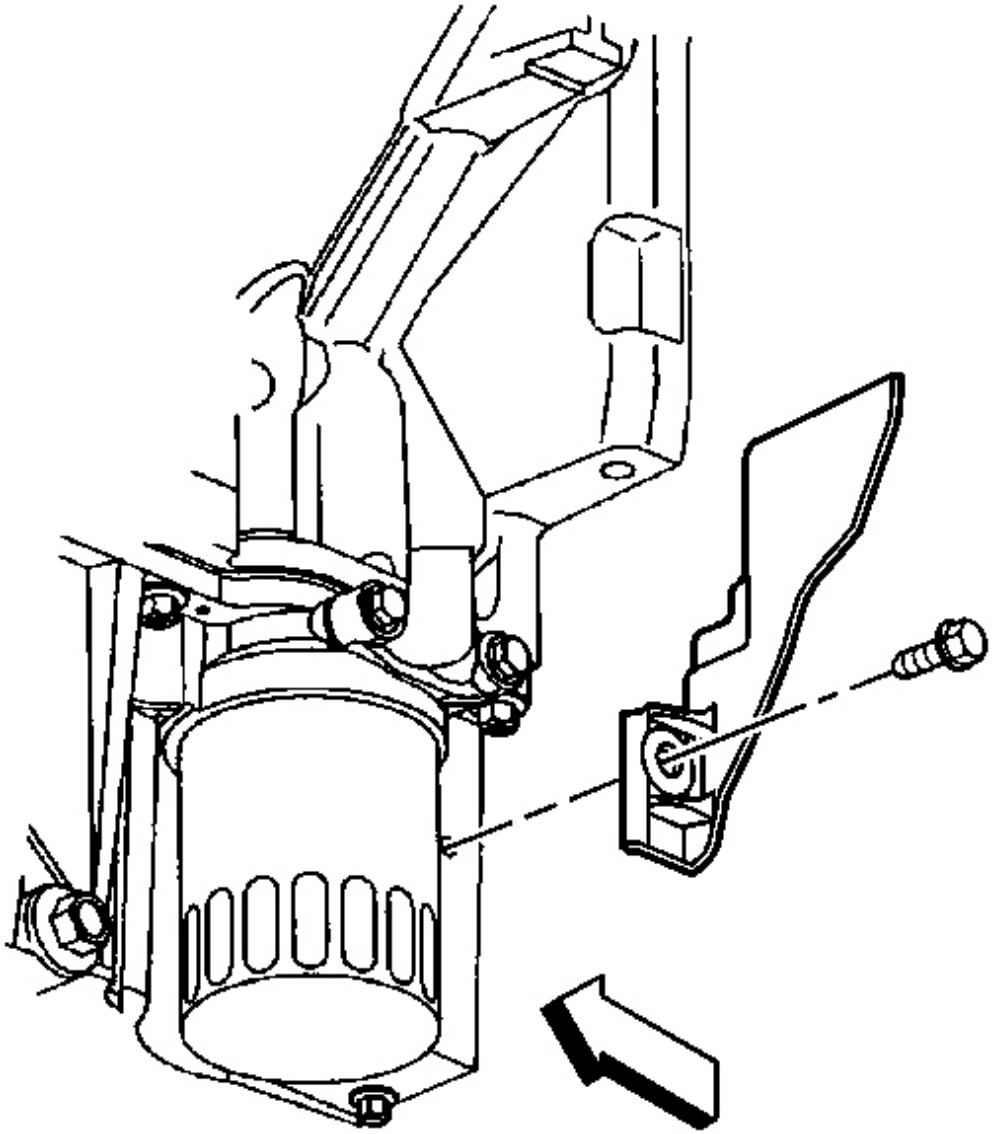

Fig. 92: View Of Left Closeout Cover & Bolt
Courtesy of GENERAL MOTORS CORP.

12. Install the left closeout cover and bolt.

    Tighten: Tighten the closeout cover bolt to 12 N.m (106 lb in).

cardiagn.com

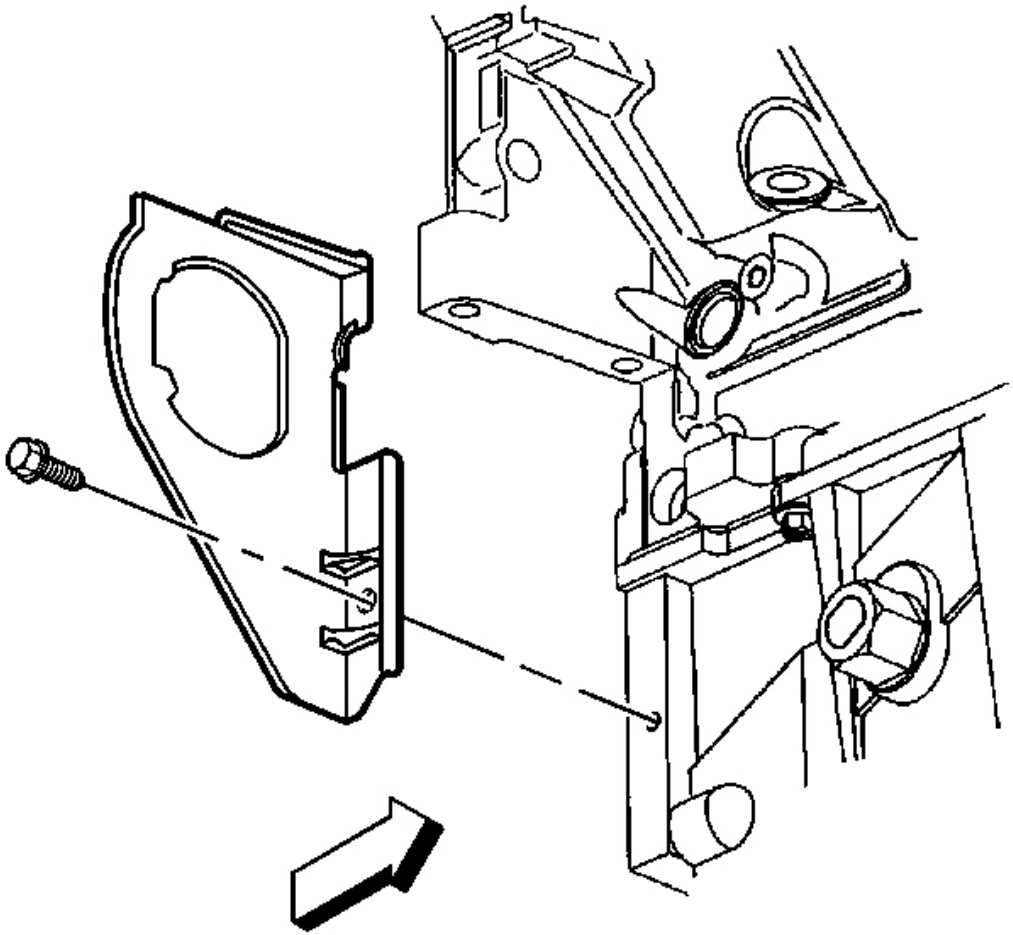

Fig. 93: View Of Right Closeout Cover & Bolt
Courtesy of GENERAL MOTORS CORP.

13. Install the right closeout cover and bolt.

    Tighten: Tighten the closeout cover bolt to 12 N.m (106 lb in).

OIL FILTER, ADAPTER, PAN COVER INSTALLATION

cardiagn.com

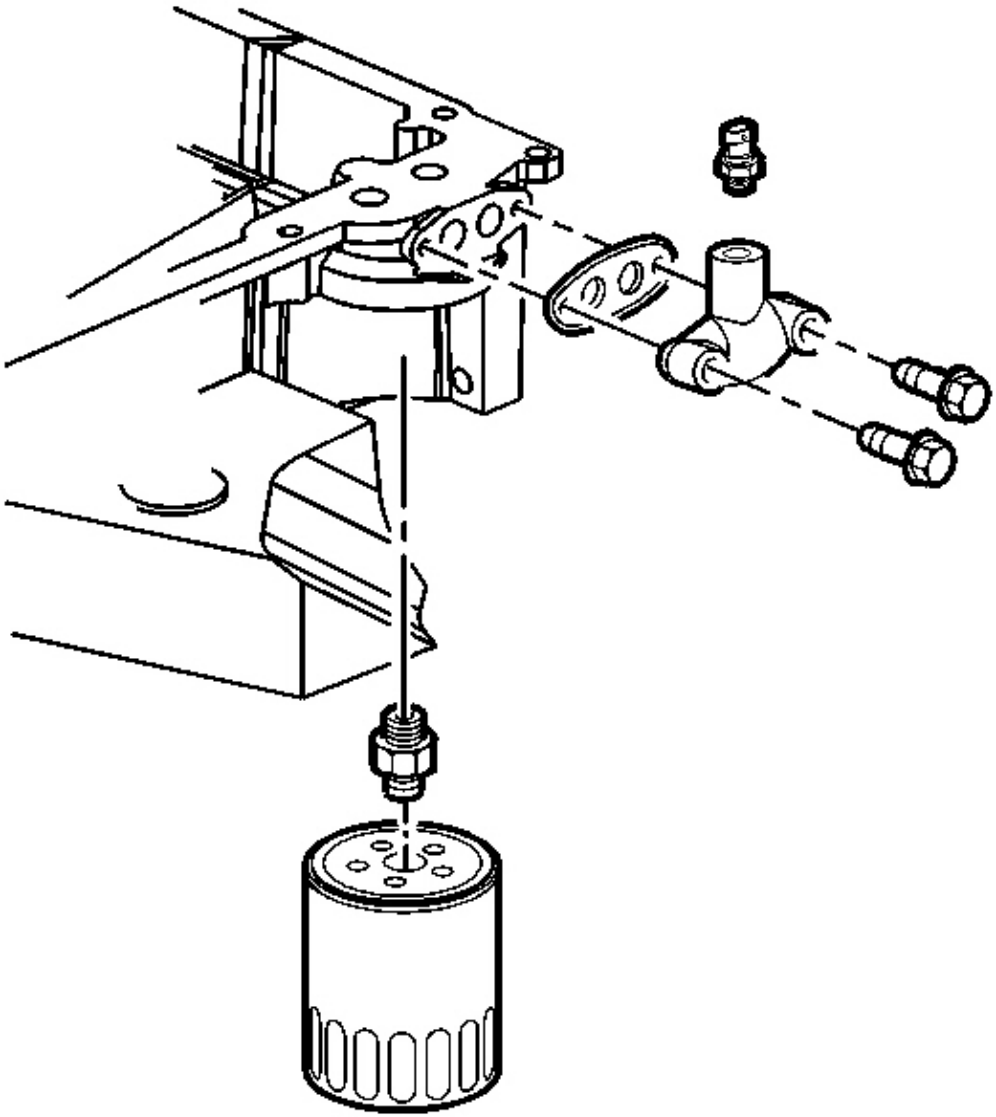

Fig. 94: Oil Pan Cover Gasket & Oil Temperature Sensor
Courtesy of GENERAL MOTORS CORP.

NOTE: Refer to Fastener Notice in Cautions and Notices.

1. Install a NEW oil pan cover gasket, the transfer cover and the bolts.

   Tighten: Tighten the oil pan cover bolts to 12 N.m (106 lb in).

cardiagn.com

2. Install the oil temperature sensor.

   Tighten: Tighten the oil temperature sensor to 20 N.m (15 lb ft).

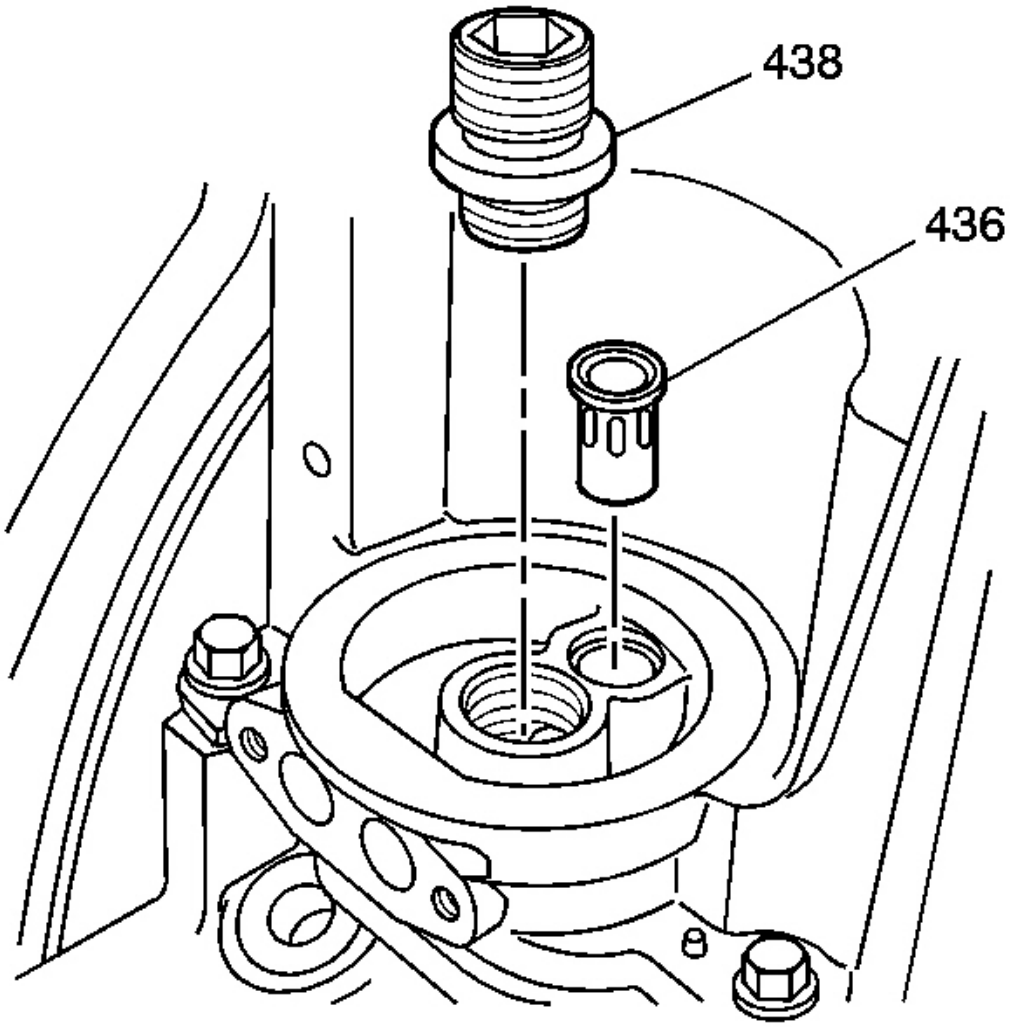

Fig. 95: View Of Oil Filter Fitting & Bypass Valve
Courtesy of GENERAL MOTORS CORP.

3. Install a new oil filter bypass valve (436) into the oil pan, if required.
4. Install the oil filter fitting (438).

   Tighten: Tighten the oil filter to 55 N.m (40 lb ft).

cardiagn.com

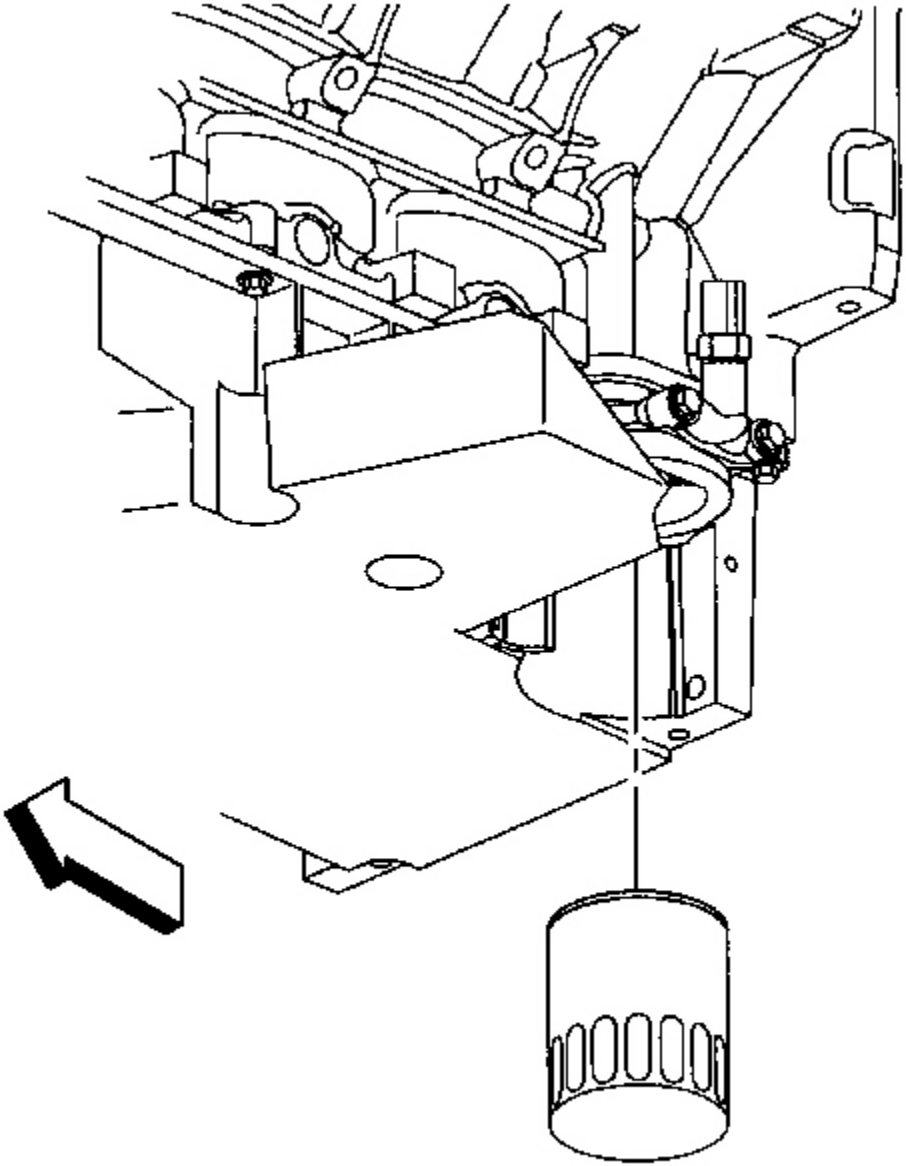

Fig. 96: Oil Filter
Courtesy of GENERAL MOTORS CORP.

5. Install the oil filter.

   Tighten: Tighten the oil filter to 30 N.m (22 lb ft).

cardiagn.com

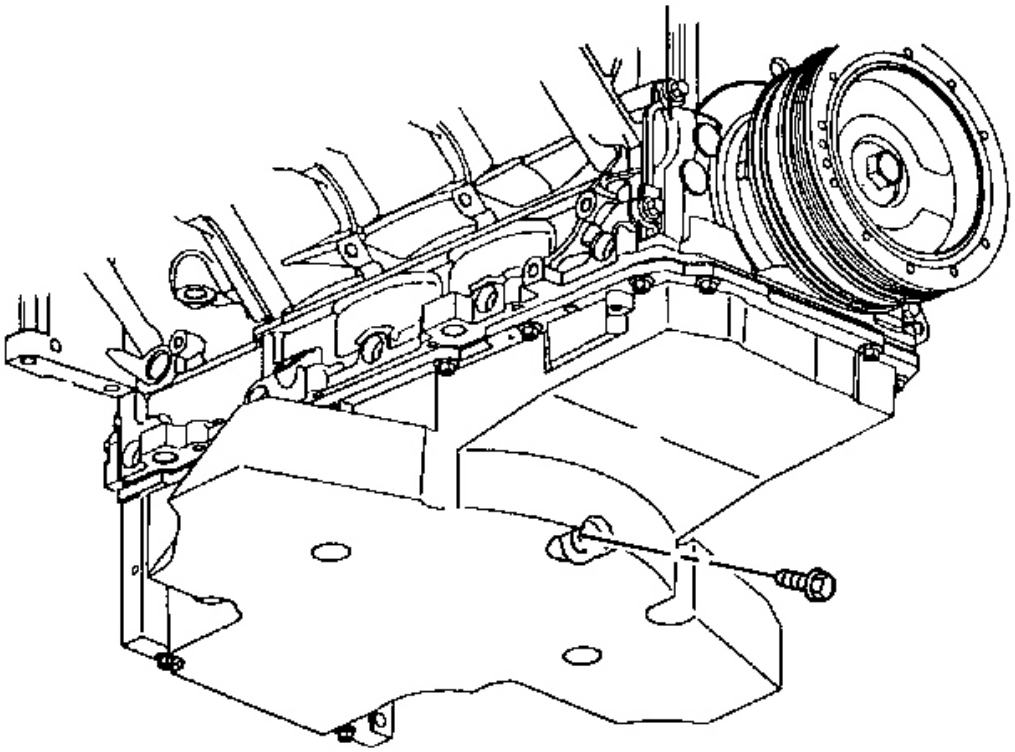

Fig. 97: Oil Pan Drain Plug
Courtesy of GENERAL MOTORS CORP.

6. Install the oil pan drain plug.

   Tighten: Tighten the oil pan drain plug to 25 N.m (18 lb ft).

VALVE LIFTER INSTALLATION

cardiagn.com

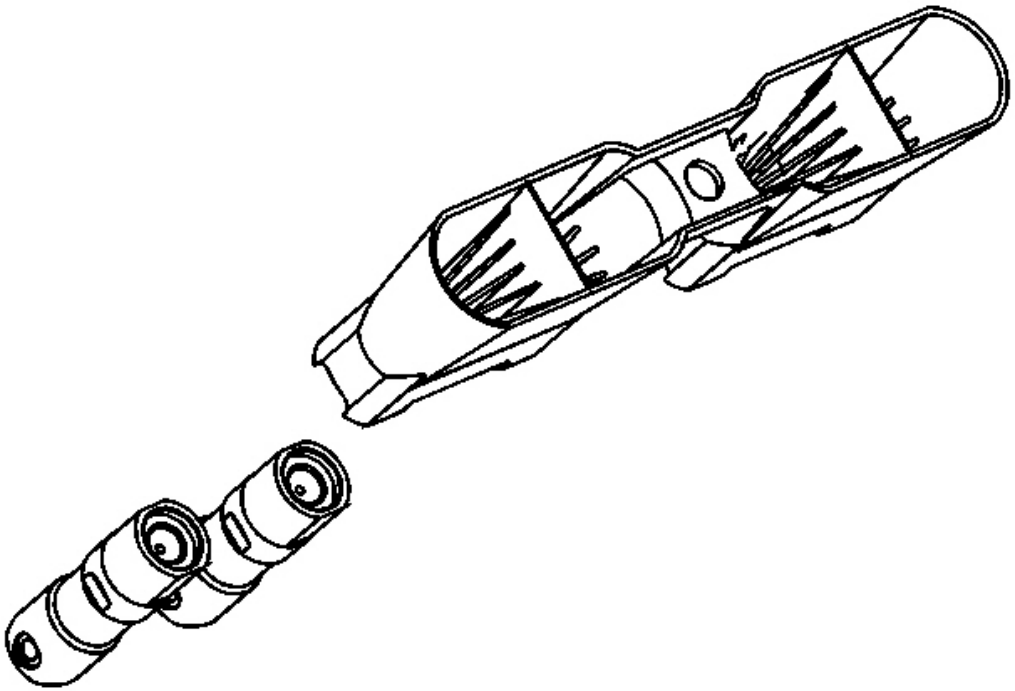

Fig. 98: View Of Valve Lifters Removed From Guide
Courtesy of GENERAL MOTORS CORP.

IMPORTANT:

- **When using the valve lifters again, install the lifters to their original locations.**
- **If camshaft replacement is required, the valve lifters must also be replaced.**

1. Lubricate the valve lifters and engine block valve lifter bores with clean engine oil.
2. Insert the valve lifters into the lifter guides.

   Align the flat area on the top of the lifter with the flat area in the lifter guide bore. Push the lifter completely into the guide bore.

cardiagn.com

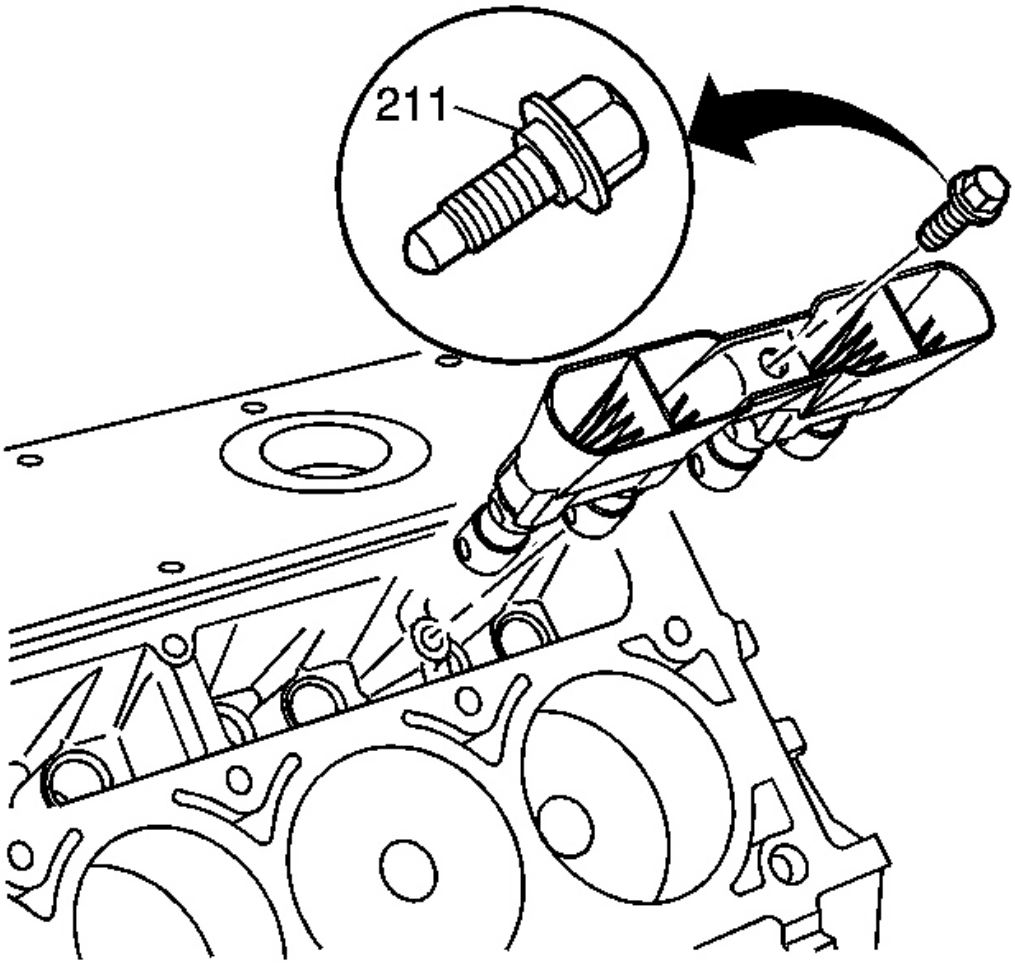

Fig. 99: View Of Valve Lifters, Guide & Guide Bolts
Courtesy of GENERAL MOTORS CORP.

3. Install the valve lifters and guide assembly to the engine block.

NOTE: **Refer to Fastener Notice in Cautions and Notices.**

4. Install the valve lifter guide bolt (211).

Tighten: Tighten the valve lifter guide bolt to 12 N.m (106 lb in).

CYLINDER HEAD INSTALLATION - LEFT

cardiagn.com

Tools Required

- **J 42385-100** Head/Main Bolt Thread Repair Kit
- **J 45059** Angle Meter

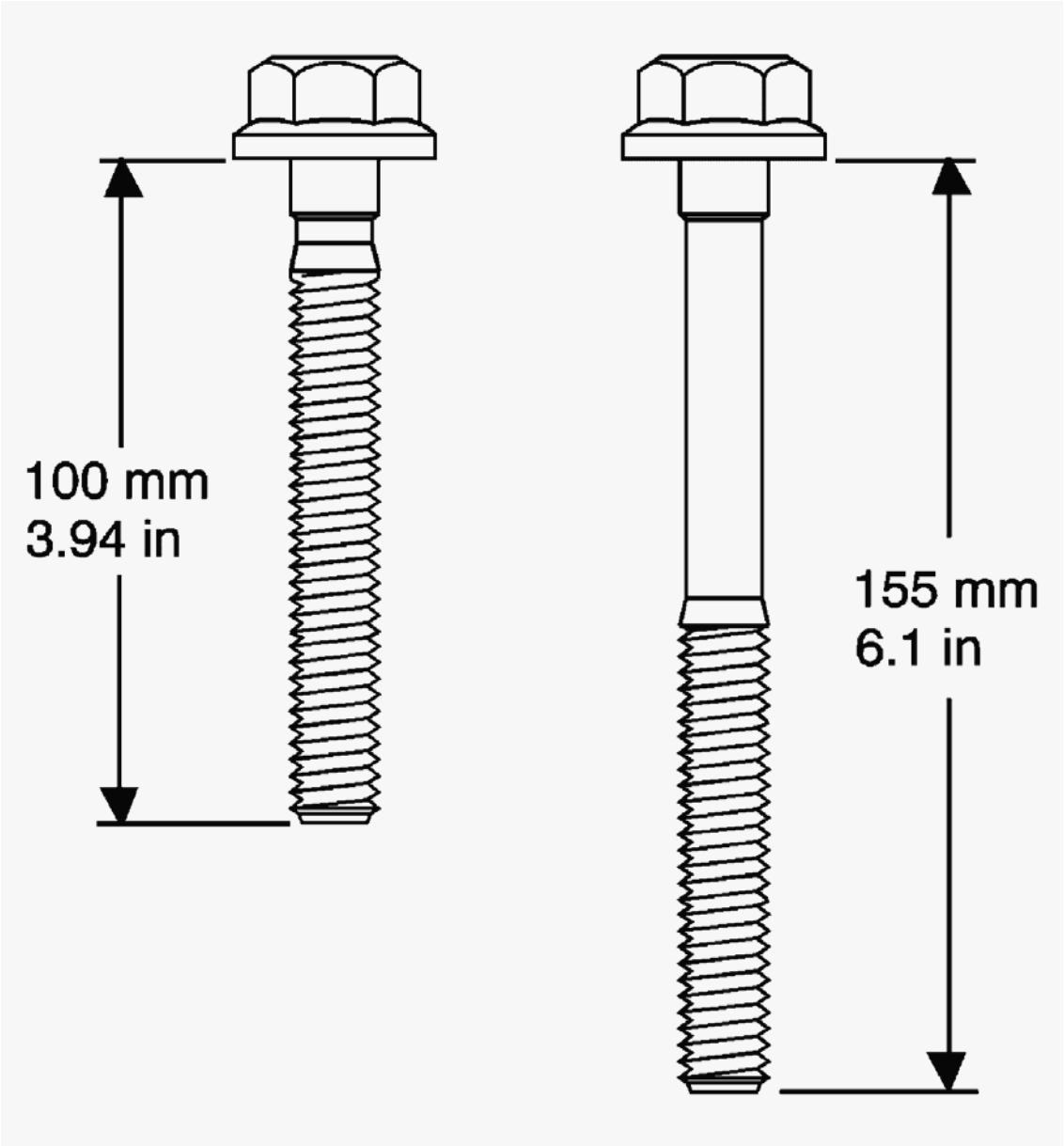

Fig. 100: View Of 100 mm & 155 mm Bolts
Courtesy of GENERAL MOTORS CORP.

CAUTION: Refer to Safety Glasses Caution in Cautions and Notices.

cardiagn.com

NOTE: **Clean all dirt, debris, and coolant from the engine block cylinder head bolt holes. Failure to remove all foreign material may result in damaged threads, improperly tightened fasteners or damage to components.**

IMPORTANT:

- **Do not use the cylinder head bolts again. Install NEW cylinder head bolts during assembly.**
- **Do not use any type sealant on the cylinder head gasket, unless specified.**
- **The cylinder head gaskets must be installed in the proper direction and position.**

1. Clean the engine block cylinder head bolt holes, if required.

   Thread repair tool J 42385-107 may be used to clean the threads of old threadlocking material.

2. Spray cleaner GM P/N 12346139, GM P/N 12377981 (Canadian P/N 10953463) or equivalent into the hole.
3. Clean the cylinder head bolt holes with compressed air.

IMPORTANT: **First design engine blocks have different drill and tap depths using both medium length 100 mm (3.94 in) and long 155 mm (6.1 in) M11 cylinder head bolts. Second design engine blocks use only the medium length 100 mm (3.94 in) bolt with a common drill and tap depth.**

4. Measure the depth of the cylinder head bolt holes (1-10) and select the correct length bolts as required.

cardiagn.com

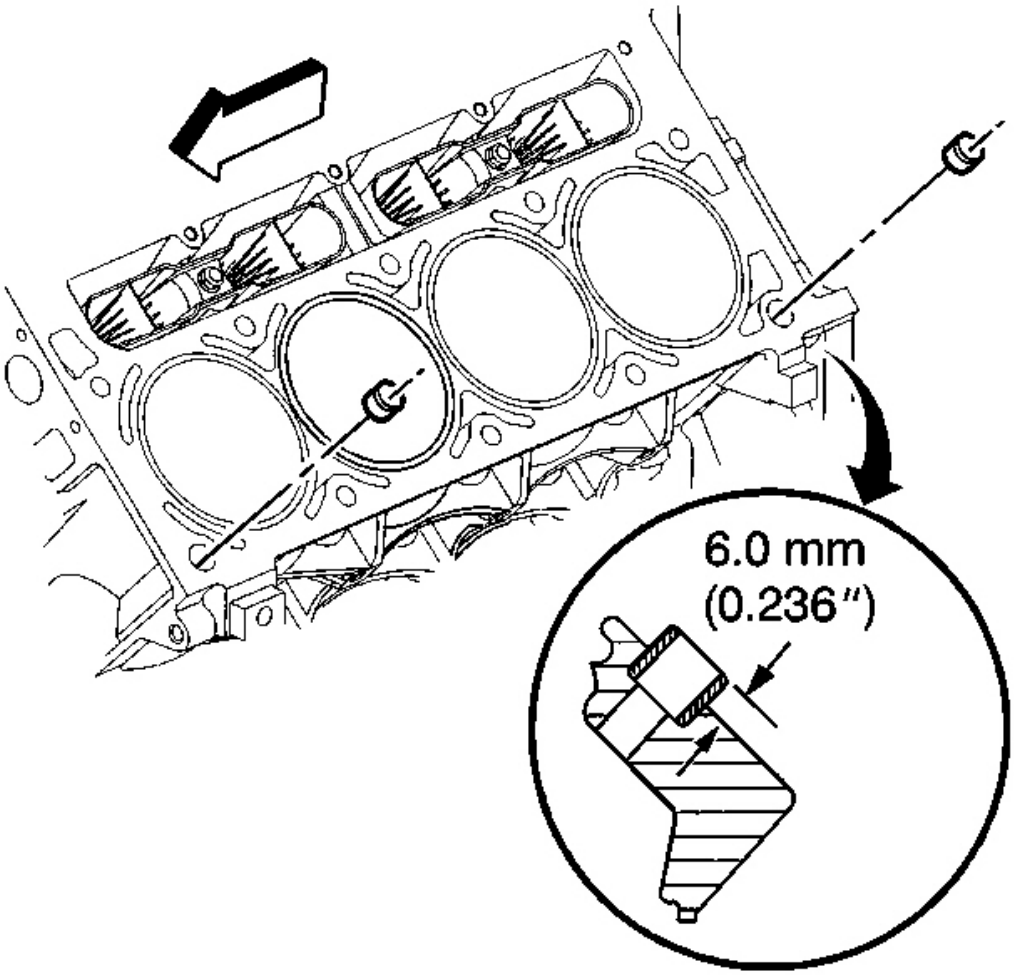

Fig. 101: View Of Cylinder Head Locating Pins Installation Position
Courtesy of GENERAL MOTORS CORP.

5. Check the cylinder head locating pins for proper installation.

cardiagn.com

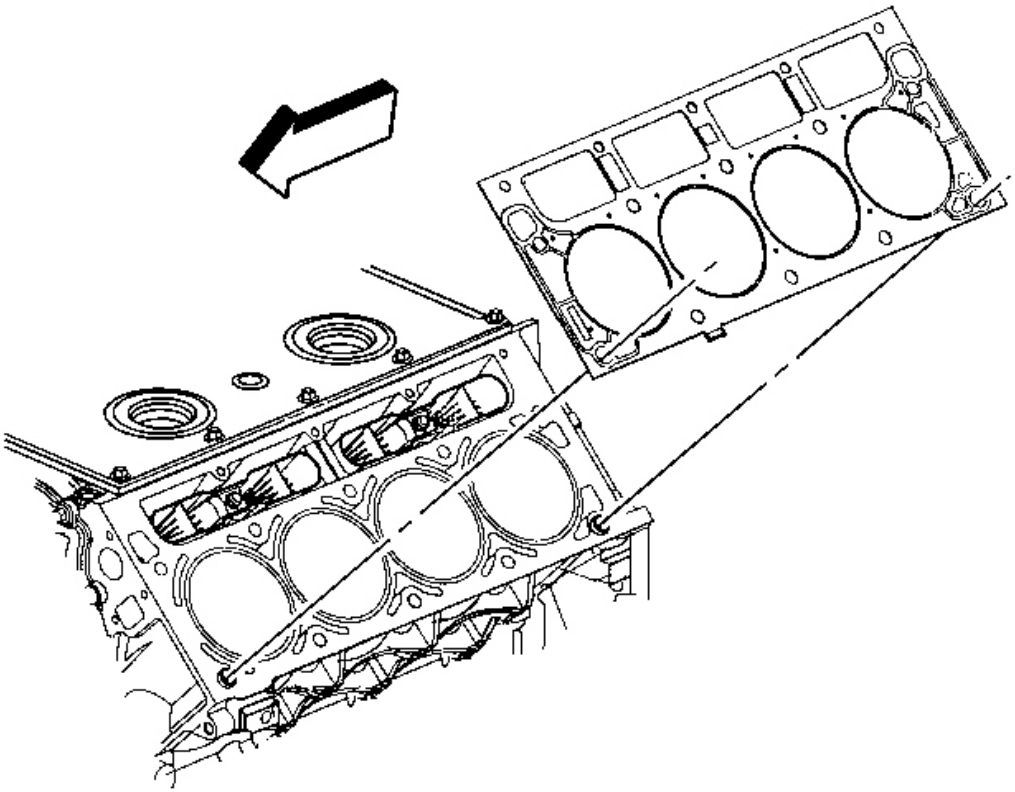

Fig. 102: View Of Cylinder Head Gasket (Left)
Courtesy of GENERAL MOTORS CORP.

6. Install the NEW left cylinder head gasket onto the locating pins.

cardiagn.com

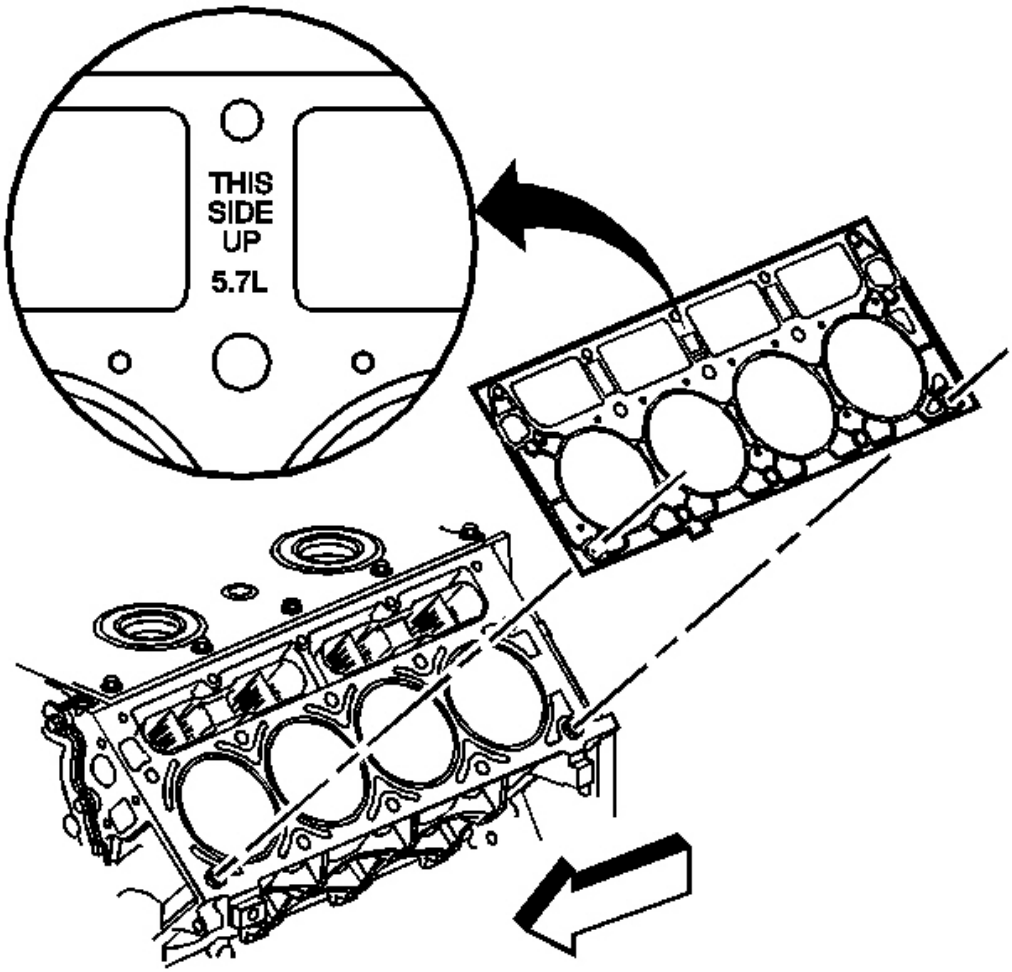

Fig. 103: Left Cylinder Head Gasket
Courtesy of GENERAL MOTORS CORP.

IMPORTANT: When properly installed, the tab on the left cylinder head gasket is located left of center, or closer to the front of the engine, and the words "This Side Up", and the engine displacement, is visible.

7. Inspect the gasket for proper installation.

cardiagn.com

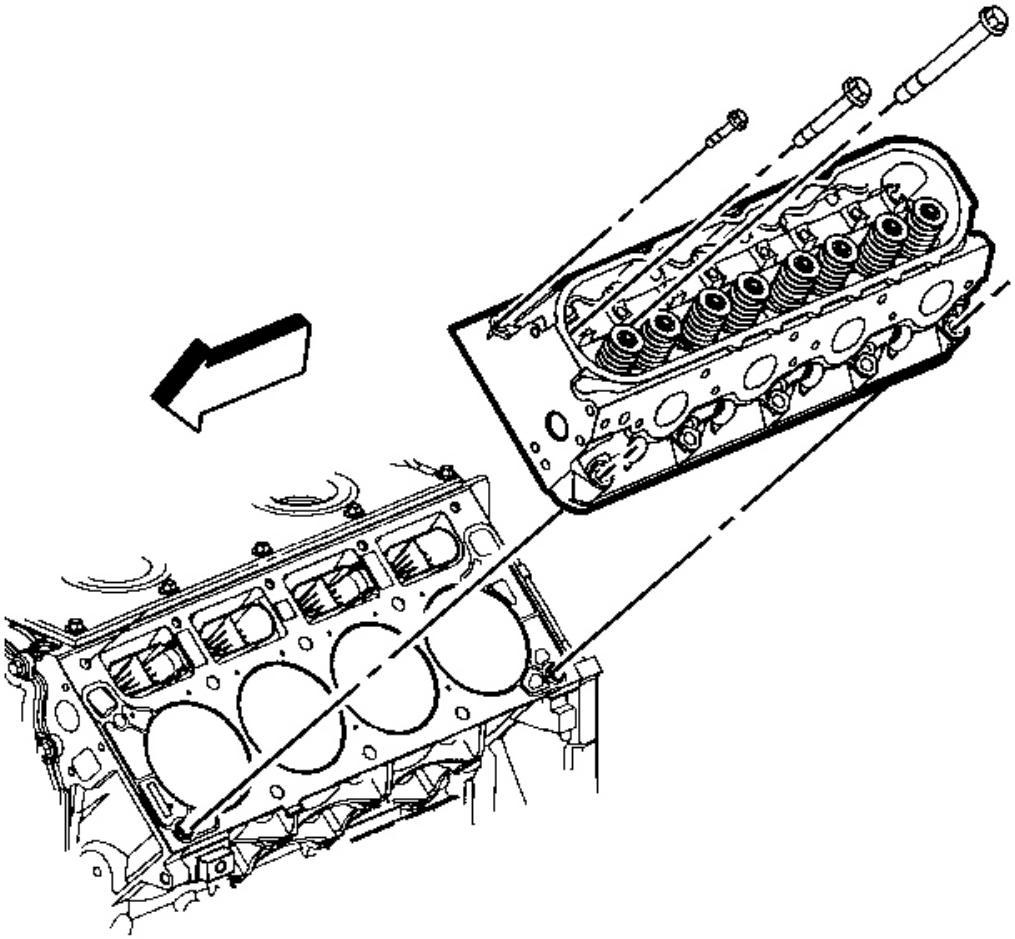

Fig. 104: View Of Cylinder Head & Bolts (Left)
Courtesy of GENERAL MOTORS CORP.

8. Install the cylinder head onto the locating pins and the gasket.
9. Install the NEW cylinder head bolts.

cardiagn.com

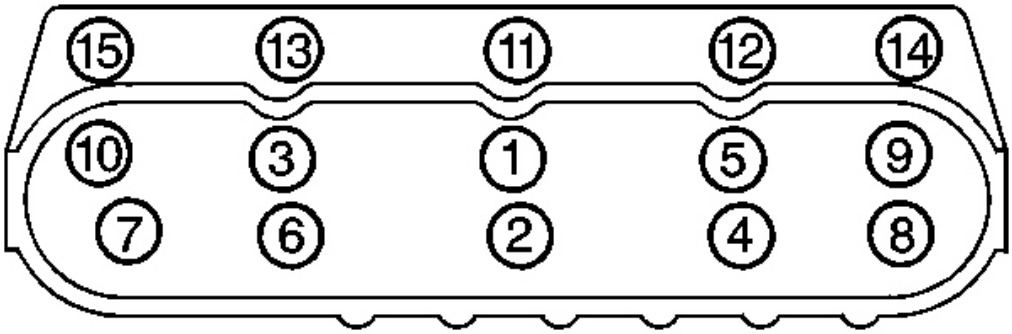

Fig. 105: Cylinder Head Bolt Tightening Sequence (Right)
Courtesy of GENERAL MOTORS CORP.

NOTE: Refer to Fastener Notice in Cautions and Notices.

10. Tighten the first design cylinder head bolts.

    Tighten:

    1. Tighten the first design M11 cylinder head bolts a first pass in sequence to 30 N.m (22 lb ft).
    2. Tighten the first design M11 cylinder head bolts a second pass in sequence to 90 degrees using the **J 45059** .
    3. Tighten the first design M11 cylinder head bolts (1,2,3,4,5,6,7,8) to 90 degrees and the M11 cylinder head bolts (9 and 10) to 50 degrees a final pass in sequence to using the **J 45059** .
    4. Tighten the M8 cylinder head bolts (11,12,13,14,15) to 30 N.m (22 lb ft). Begin with the center bolt (11) and alternating side-to-side, work outward tightening all of the bolts.

11. Tighten the second design engine block cylinder head bolts.

    Tighten:

    1. Tighten the second design M11 cylinder head bolts (1-10) a first pass in sequence to 30 N.m (22 lb ft).
    2. Tighten the second design M11 cylinder head bolts (1-10) a second pass in sequence to 90 degrees using the **J 45059** .
    3. Tighten the second design M11 cylinder head bolts (1-10) a final pass in sequence to 70 degrees using the **J 45059** .
    4. Tighten the M8 cylinder head bolts (11,12,13,14,15) to 30 N.m (22 lb ft). Begin with the center bolt (11) and alternating side-to-side, work outward tightening all of the bolts.

cardiagn.com

CYLINDER HEAD INSTALLATION - RIGHT

Tools Required

- **J 42385-100** Head/Main Bolt Thread Repair Kit
- **J 45059** Angle Meter

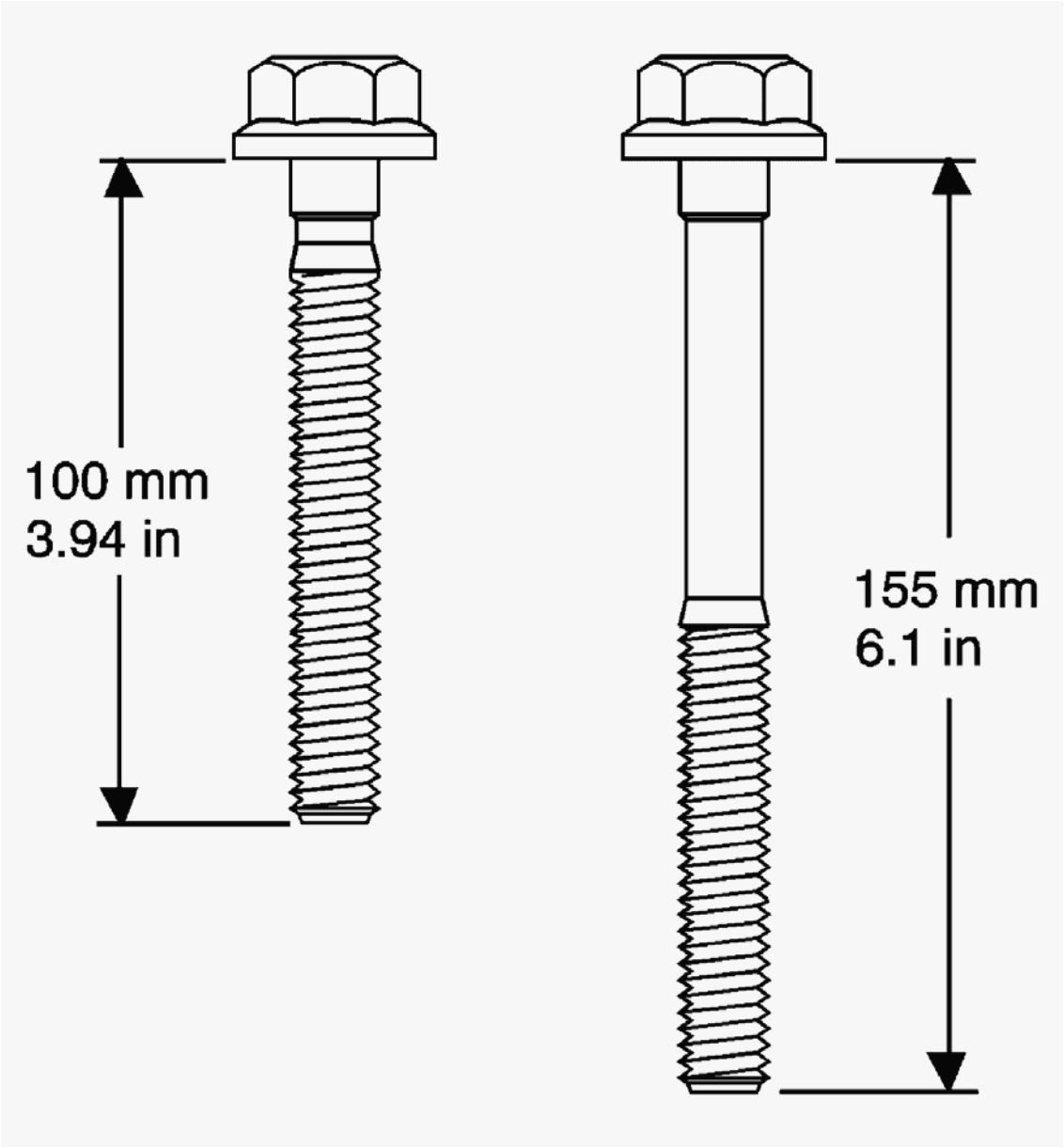

Fig. 106: View Of 100 mm & 155 mm Bolts
Courtesy of GENERAL MOTORS CORP.

CAUTION: Refer to Safety Glasses Caution in Cautions and Notices.

cardiagn.com

NOTE: **Clean all dirt, debris, and coolant from the engine block cylinder head bolt holes. Failure to remove all foreign material may result in damaged threads, improperly tightened fasteners or damage to components.**

IMPORTANT:

- **Do not use the cylinder head bolts again. Install NEW cylinder head bolts during assembly.**
- **Do not use any type sealant on the cylinder head gasket, unless specified.**
- **The cylinder head gaskets must be installed in the proper direction and position.**

1. Clean the engine block cylinder head bolt holes, if required.

   Thread repair tool J 42385-107 may be used to clean the threads of old threadlocking material.

2. Spray cleaner GM P/N 12346139, GM P/N 12377981 (Canadian P/N 10953463) or equivalent into the hole.
3. Clean the cylinder head bolt holes with compressed air.

IMPORTANT: **First design engine blocks have different drill and tap depths using both medium length 100 mm (3.94 in) and long 155 mm (6.1 in) M11 cylinder head bolts. Second design engine blocks use only the medium length 100 mm (3.94 in) bolt with a common drill and tap depth.**

4. Measure the depth of the cylinder head bolt holes (1-10) and select the correct length bolts as required.

cardiagn.com

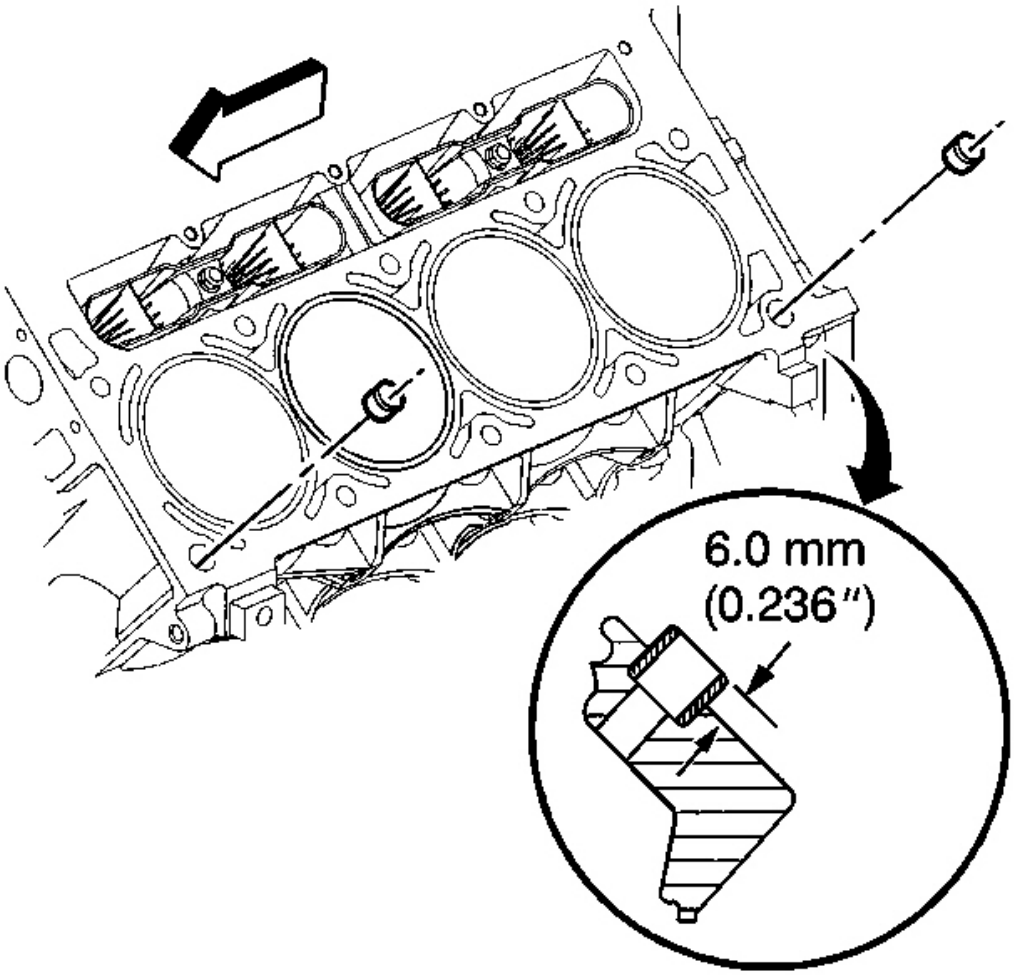

Fig. 107: View Of Cylinder Head Locating Pins Installation Position
Courtesy of GENERAL MOTORS CORP.

5. Check the cylinder head locating pins for proper installation.

cardiagn.com

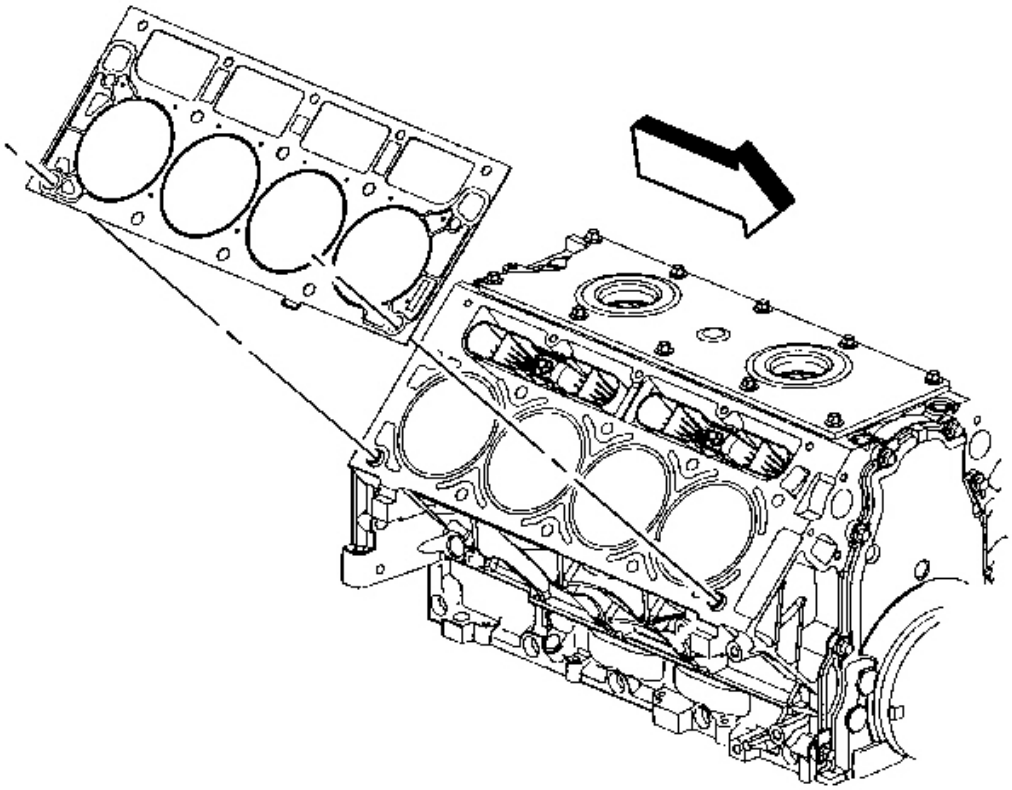

Fig. 108: View Of Cylinder Head Gasket (Right)
Courtesy of GENERAL MOTORS CORP.

6. Install the NEW right cylinder head gasket onto the locating pins.

cardiagn.com

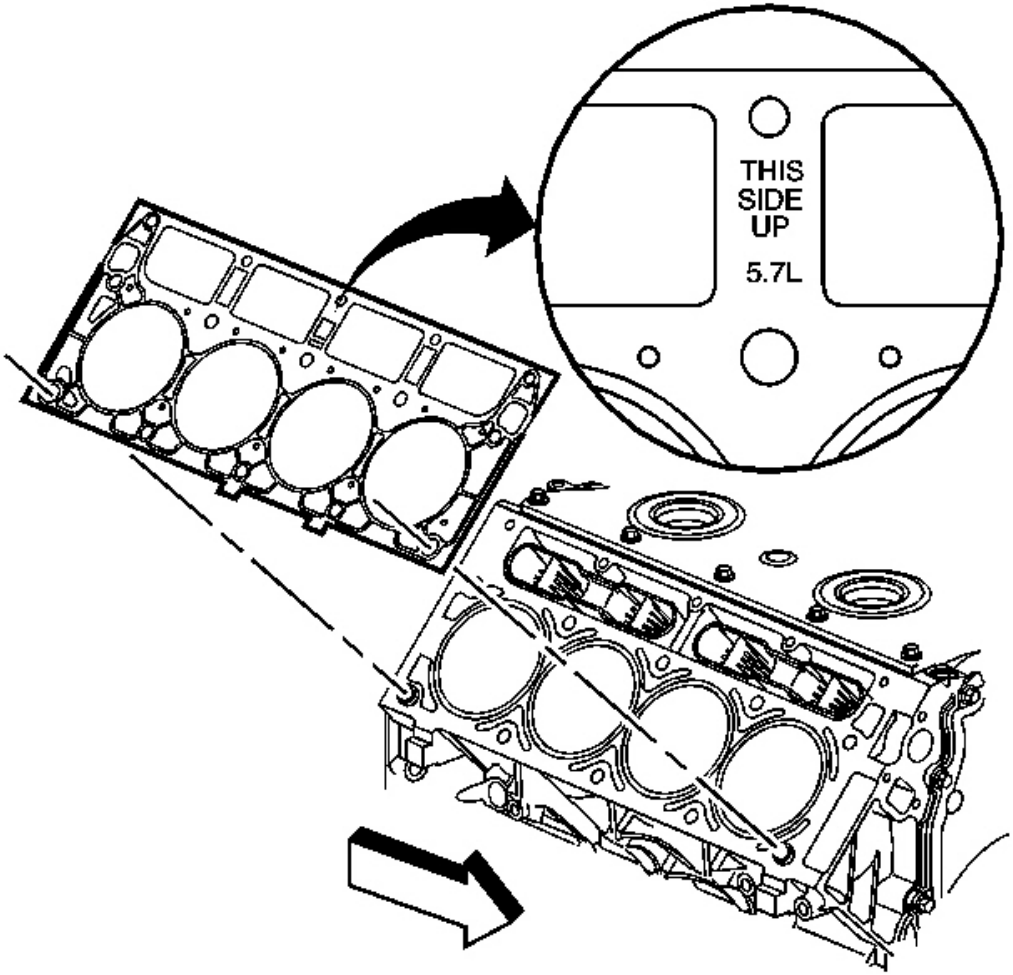

Fig. 109: Right Cylinder Head Gasket
Courtesy of GENERAL MOTORS CORP.

IMPORTANT: When properly installed, the tab on the right cylinder head gasket is located right of center, or closer to the front of the engine, and the words "This Side Up", and the engine displacement is visible.

7. Inspect the gasket for proper installation.

cardiagn.com

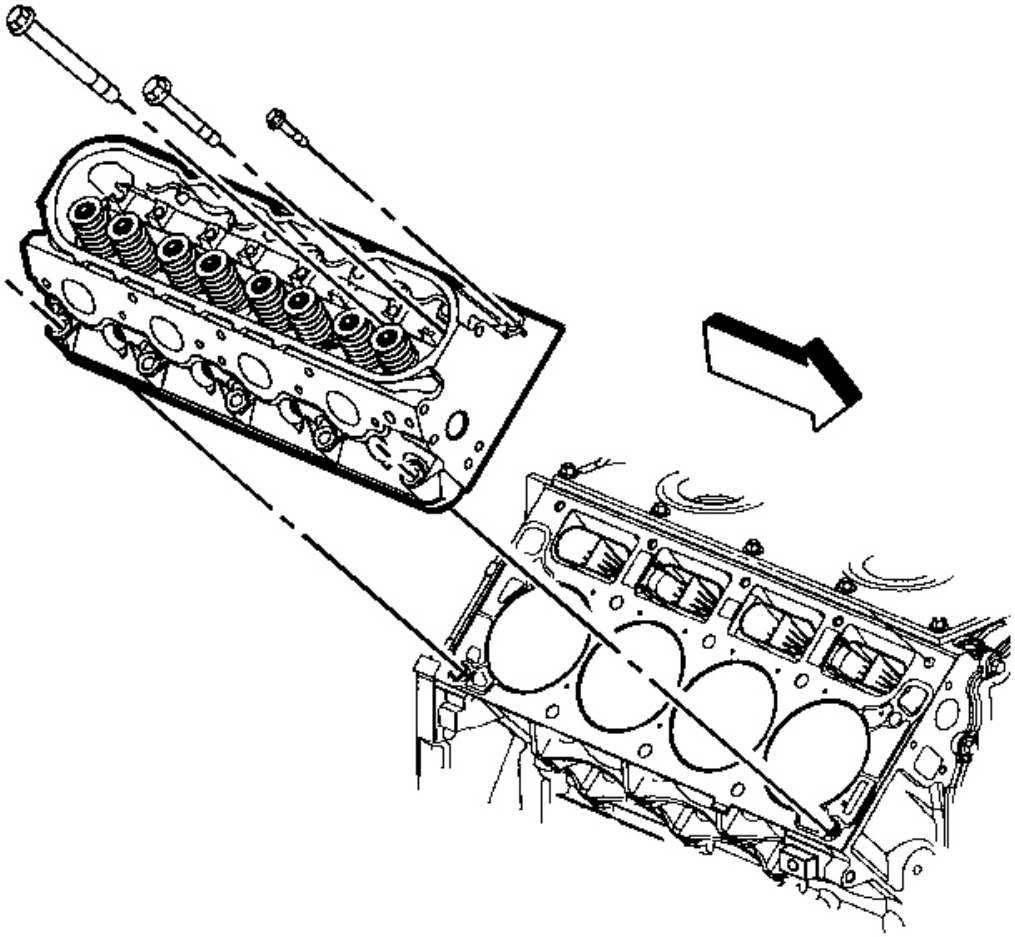

Fig. 110: View Of Cylinder Head & Bolts
Courtesy of GENERAL MOTORS CORP.

8. Install the cylinder head onto the locating pins and the gasket.
9. Install the NEW cylinder head bolts.

cardiagn.com

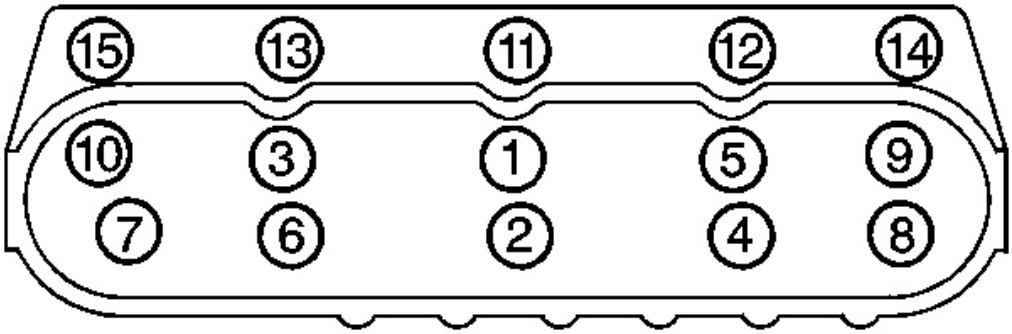

Fig. 111: Cylinder Head Bolt Tightening Sequence (Right)
Courtesy of GENERAL MOTORS CORP.

NOTE: Refer to Fastener Notice in Cautions and Notices.

10. Tighten the first design cylinder head bolts.

    Tighten:

    1. Tighten the first design M11 cylinder head bolts (1-10) a first pass in sequence to 30 N.m (22 lb ft).
    2. Tighten the first design M11 cylinder head bolts (1-10) a second pass in sequence to 90 degrees using the **J 45059** .
    3. Tighten the first design M11 cylinder head bolts (1,2,3,4,5,6,7,8) to 90 degrees and the M11 cylinder head bolts (9 and 10) to 50 degrees a final pass in sequence using the **J 45059** .
    4. Tighten the M8 cylinder head bolts (11,12,13,14,15) to 30 N.m (22 lb ft). Begin with the center bolt (11) and alternating side-to-side, work outward, tightening all of the bolts.

11. Tighten the second design engine block cylinder head bolts.

    Tighten:

    1. Tighten the second design M11 cylinder head bolts (1-10) a first pass in sequence to 30 N.m (22 lb ft).
    2. Tighten the second design M11 cylinder head bolts (1-10) a second pass in sequence to 90 degrees using the **J 45059** .
    3. Tighten the second design M11 cylinder head bolts (1-10) a final pass in sequence to 70 degrees using the **J 45059** .
    4. Tighten the M8 cylinder head bolts (11,12,13,14,15) to 30 N.m (22 lb ft). Begin with the center bolt (11) and alternating side-to-side, work outward, tightening all of the bolts.

cardiagn.com

VALVE ROCKER ARM AND PUSH ROD INSTALLATION

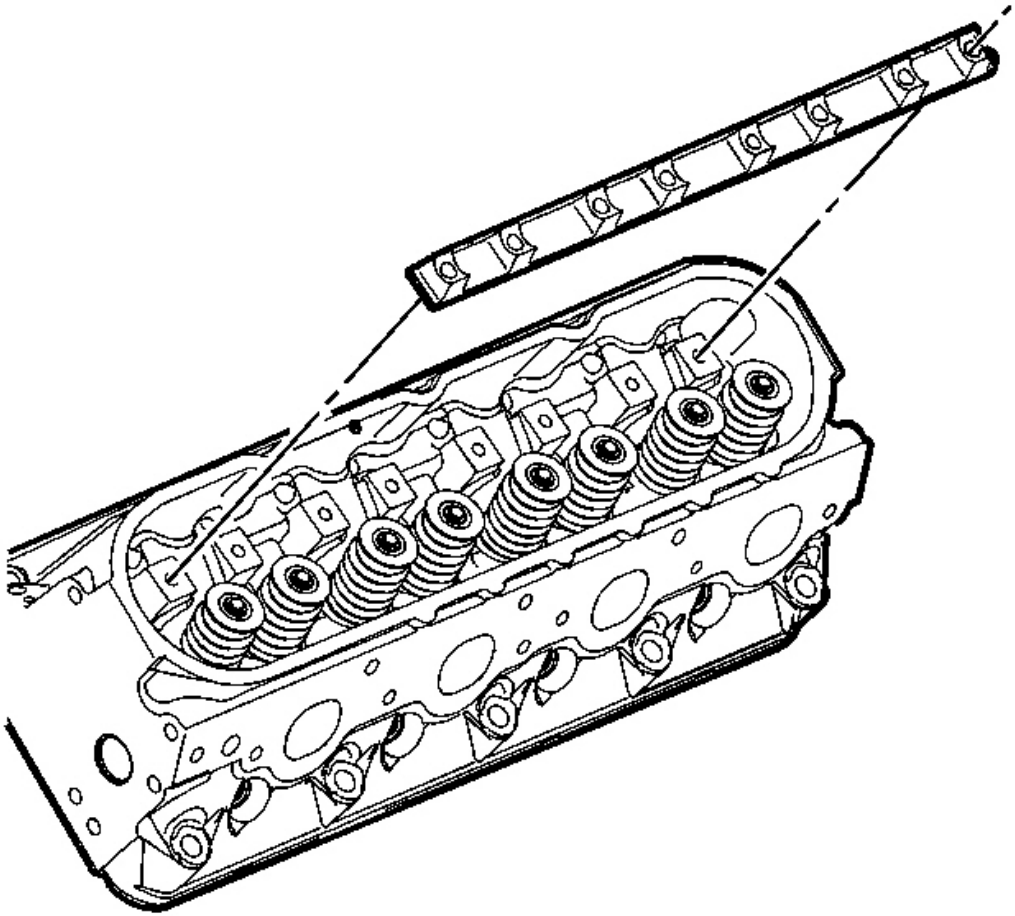

Fig. 112: View Of Valve Rocker Arm Pivot Support
Courtesy of GENERAL MOTORS CORP.

IMPORTANT:

- **When using the valve train components again, always install the components to the original location and position.**
- **Valve lash is net build, no valve adjustment is required.**

1. Lubricate the valve rocker arms and pushrods with clean engine oil.
2. Lubricate the flange of the valve rocker arm bolts with clean engine oil.

   Lubricate the flange or washer surface of the bolt that will contact the valve rocker arm.

cardiagn.com

3. Install the valve rocker arm pivot support.

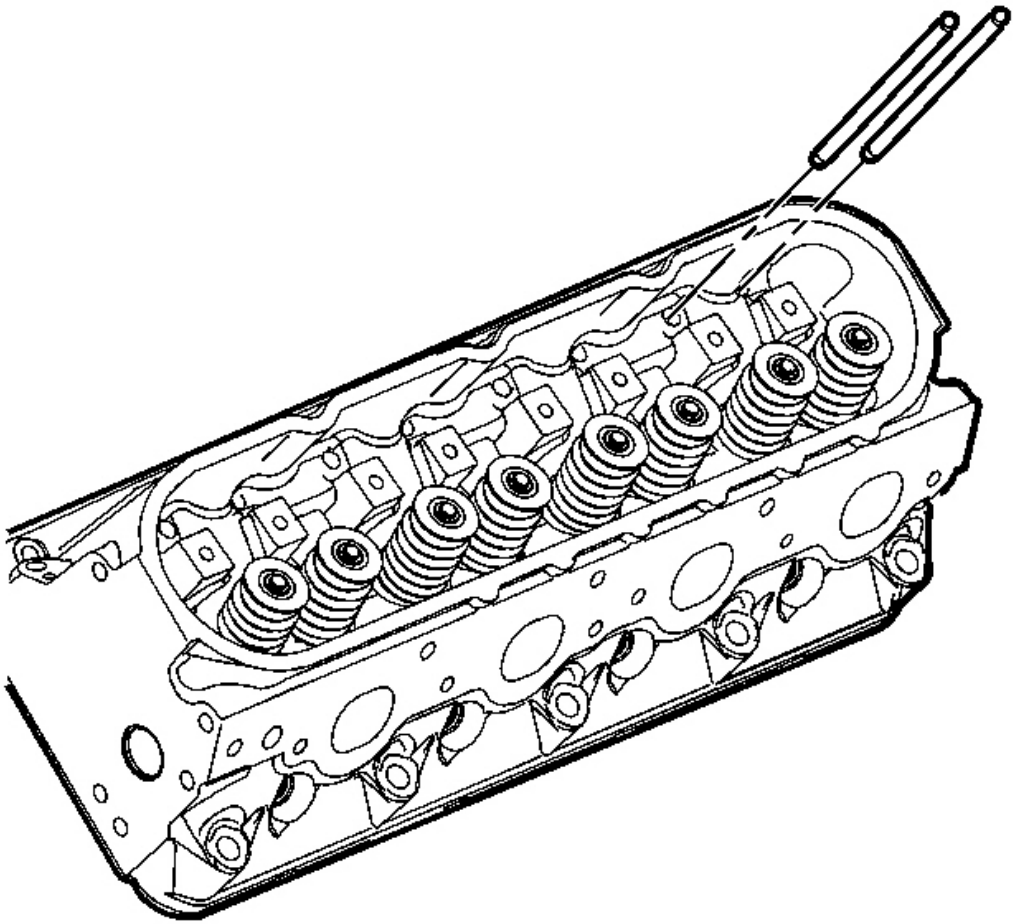

Fig. 113: View Of Pushrods
Courtesy of GENERAL MOTORS CORP.

IMPORTANT: Ensure that the pushrods seat properly to the valve lifter sockets.

4. Install the pushrods.

cardiagn.com

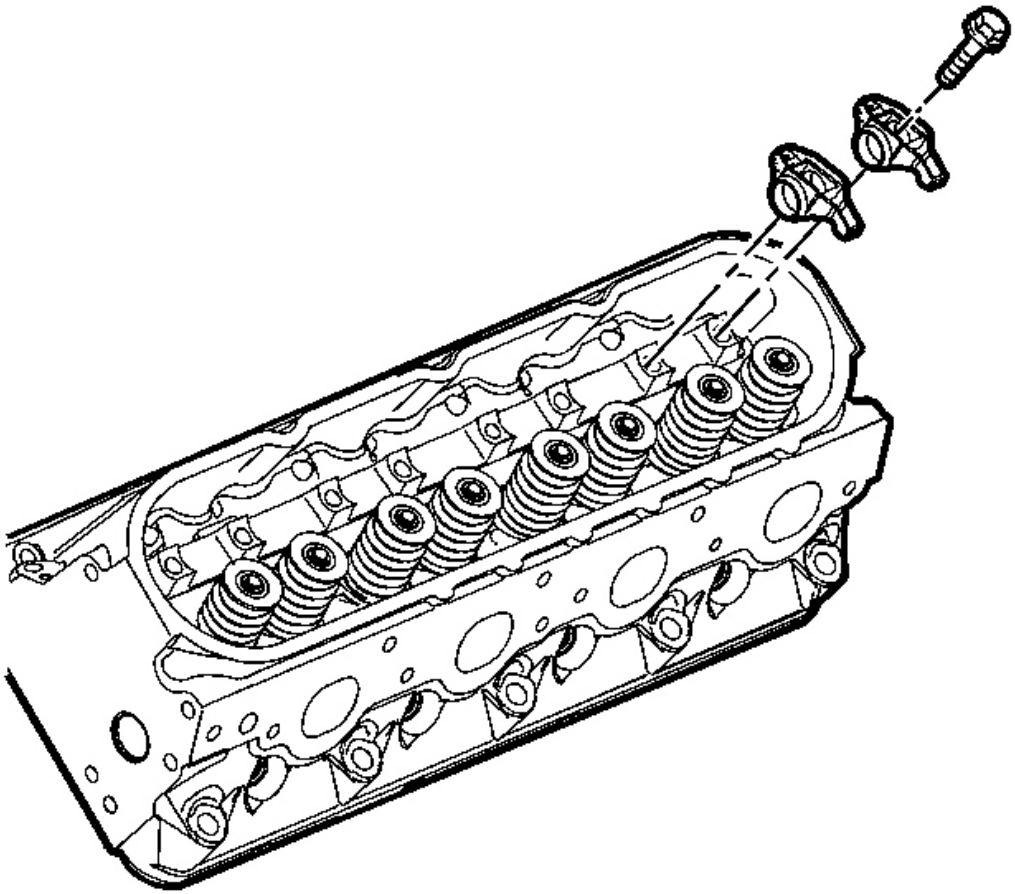

Fig. 114: View Of Valve Rocker Arms
Courtesy of GENERAL MOTORS CORP.

IMPORTANT:

- **Ensure that the pushrods seat properly to the ends of the rocker arms.**
- **DO NOT tighten the rocker arm bolts at this time.**

5. Install the rocker arms and bolts.

cardiagn.com

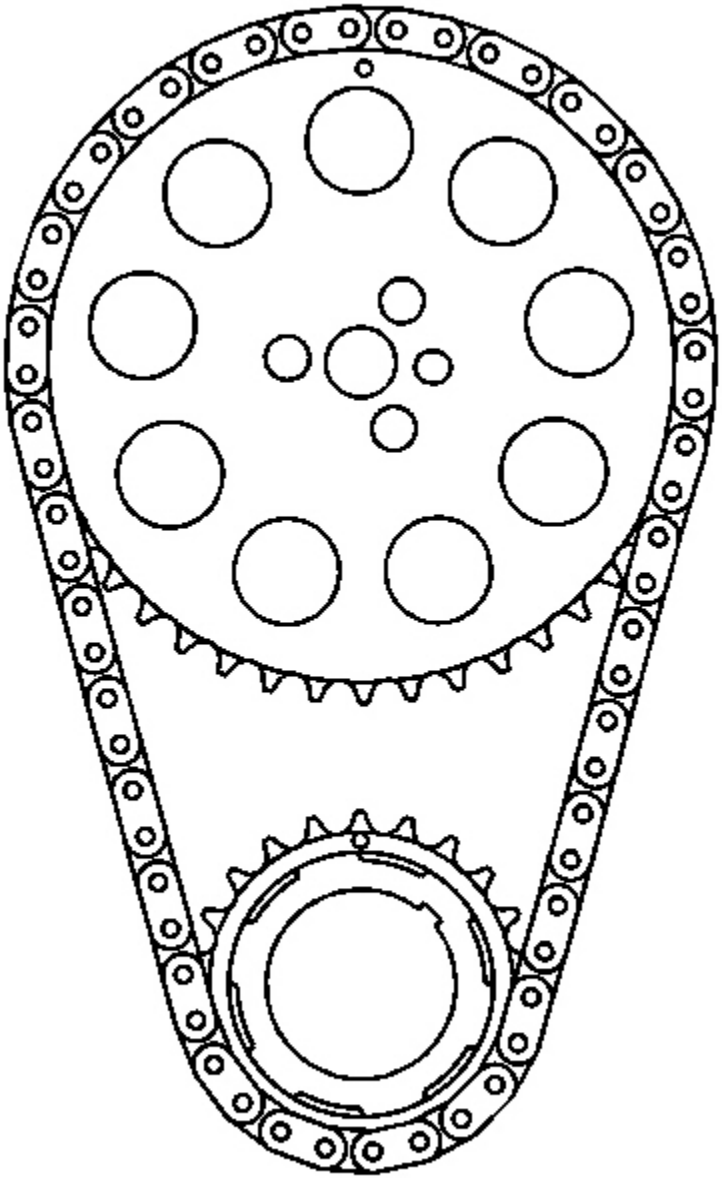

Fig. 115: View of Crankshaft
Courtesy of GENERAL MOTORS CORP.

6. Rotate the crankshaft until number one piston is at top dead center of compression stroke.

   In this position, cylinder number one rocker arms will be off lobe lift, and the crankshaft sprocket key

cardiagn.com

will be at the 1:30 position. If viewing from the rear of the engine, the additional crankshaft pilot hole, non-threaded, will be in the 10:30 position.

The engine firing order is 1, 8, 7, 2, 6, 5, 4, 3.

Cylinders 1, 3, 5 and 7 are left bank.

Cylinders 2, 4, 6, and 8 are right bank.

NOTE: Refer to Fastener Notice in Cautions and Notices.

7. With the engine in the number one firing position, tighten the following valve rocker arm bolts:

   Tighten:
   - Tighten exhaust valve rocker arm bolts 1, 2, 7, and 8 to 30 N.m (22 lb ft).
   - Tighten intake valve rocker arm bolts 1, 3, 4, and 5 to 30 N.m (22 lb ft).

8. Rotate the crankshaft 360 degrees.
9. Tighten the following valve rocker arm bolts:

   Tighten:
   - Tighten exhaust valve rocker arm bolts 3, 4, 5, and 6 to 30 N.m (22 lb ft).
   - Tighten intake valve rocker arm bolts 2, 6, 7, and 8 to 30 N.m (22 lb ft).

VALVE ROCKER ARM COVER INSTALLATION - LEFT

cardiagn.com

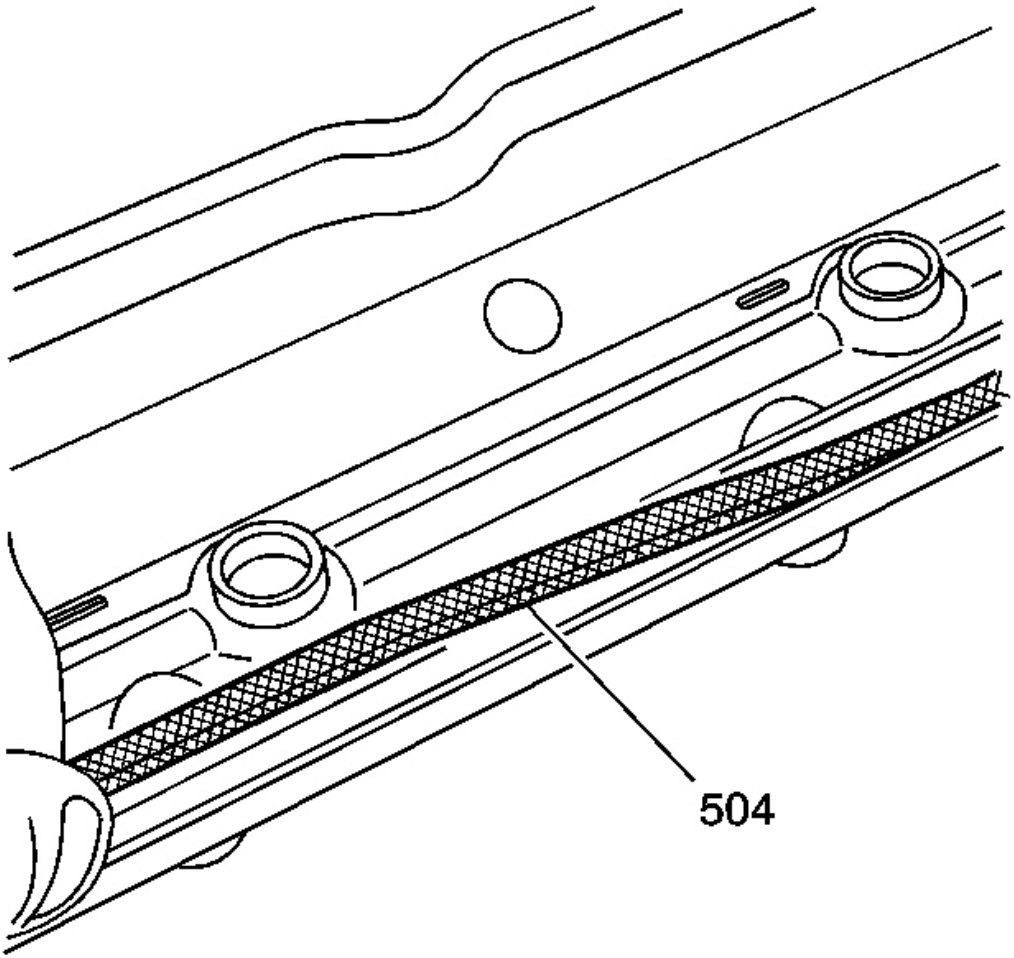

Fig. 116: View Of Valve Rocker Arm Cover Gasket
Courtesy of GENERAL MOTORS CORP.

IMPORTANT:

- **All gasket surfaces should be free of oil or other foreign material during assembly.**
- **DO NOT use the valve rocker arm cover gasket again.**
- **The valve rocker arm cover bolt grommets may be used again.**

1. Install a NEW cover gasket (504) into the valve rocker arm cover.

cardiagn.com

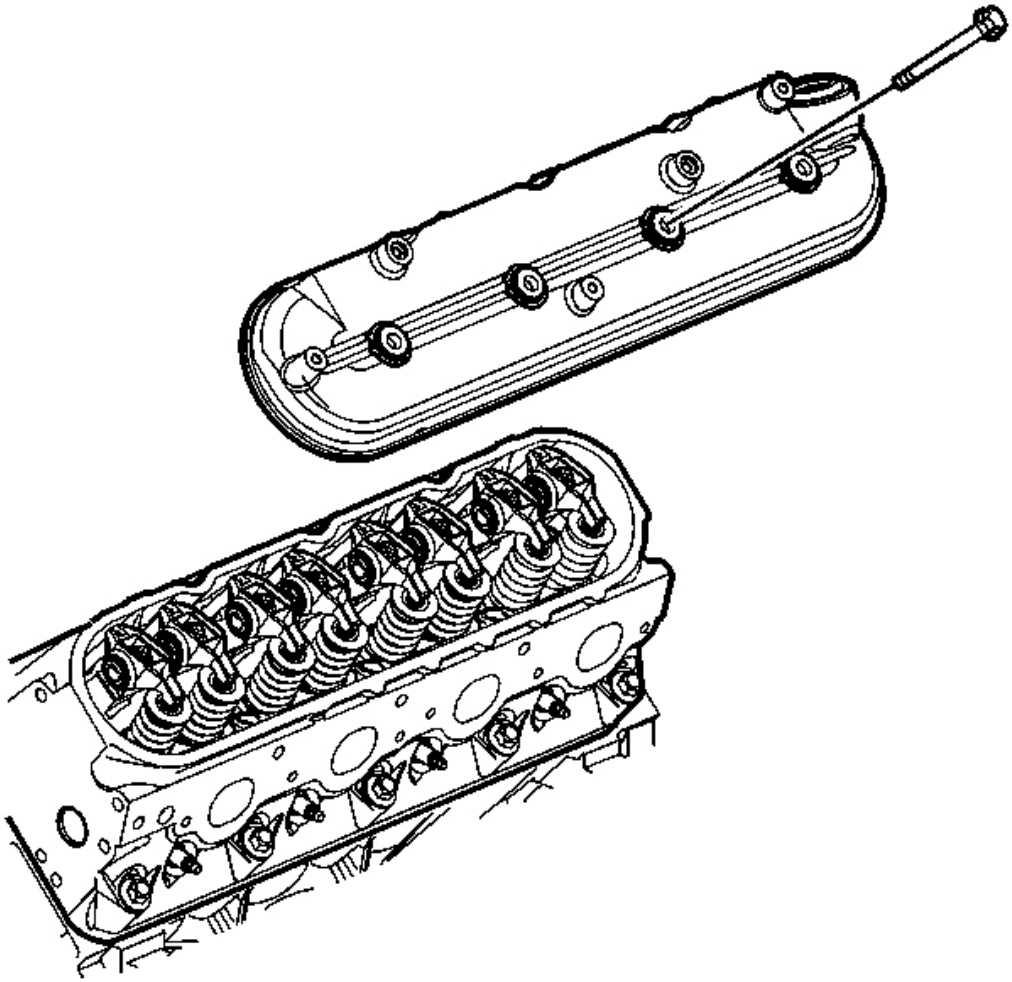

Fig. 117: Valve Cover To Cylinder Head View
Courtesy of GENERAL MOTORS CORP.

2. Install the valve rocker arm cover onto the cylinder head.

NOTE: **Refer to Fastener Notice in Cautions and Notices.**

3. Install the cover bolts with grommets.

Tighten: Tighten the valve rocker arm cover bolts to 12 N.m (106 lb in).

cardiagn.com

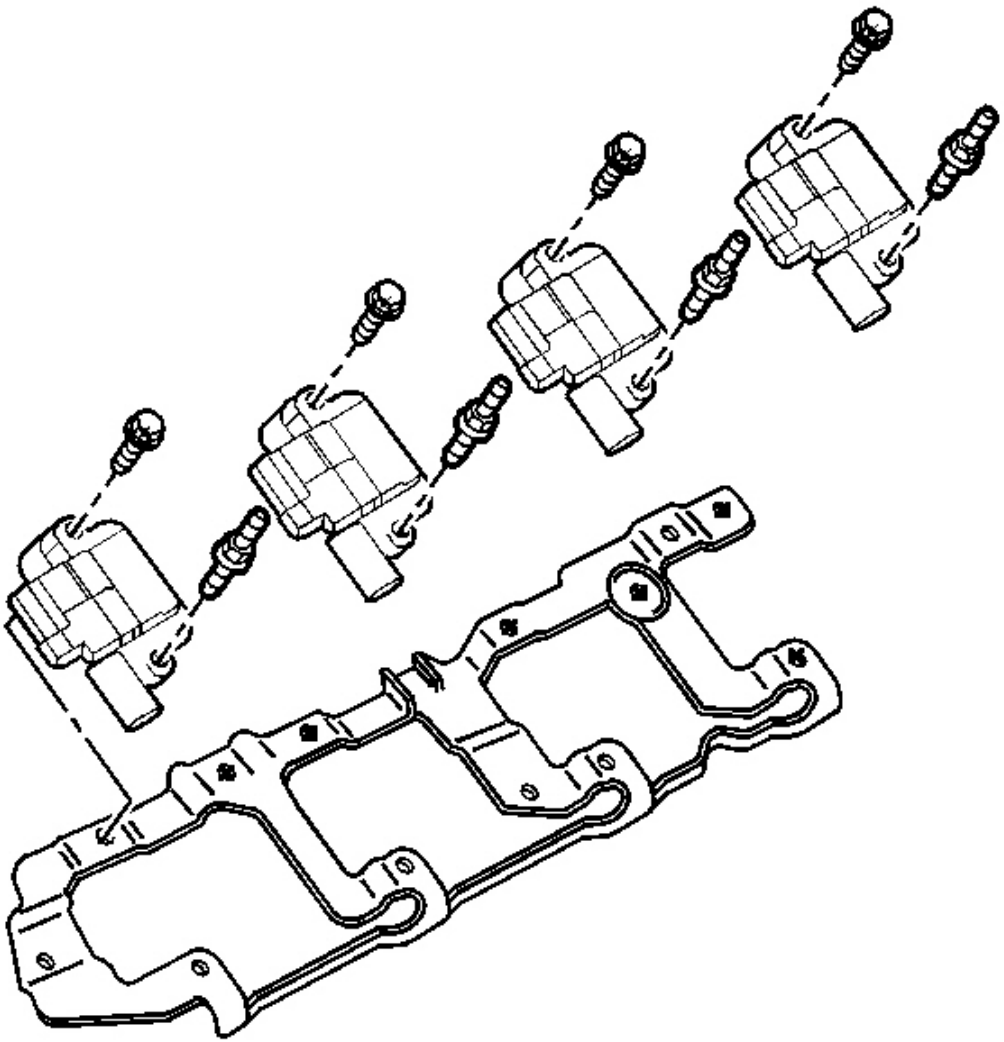

Fig. 118: View Of Ignition Coils
Courtesy of GENERAL MOTORS CORP.

4. Install the ignition coils, wire harness, and bolts onto the mounting bracket.

   Tighten: Tighten the ignition coil bolts to 12 N.m (106 lb in).

cardiagn.com

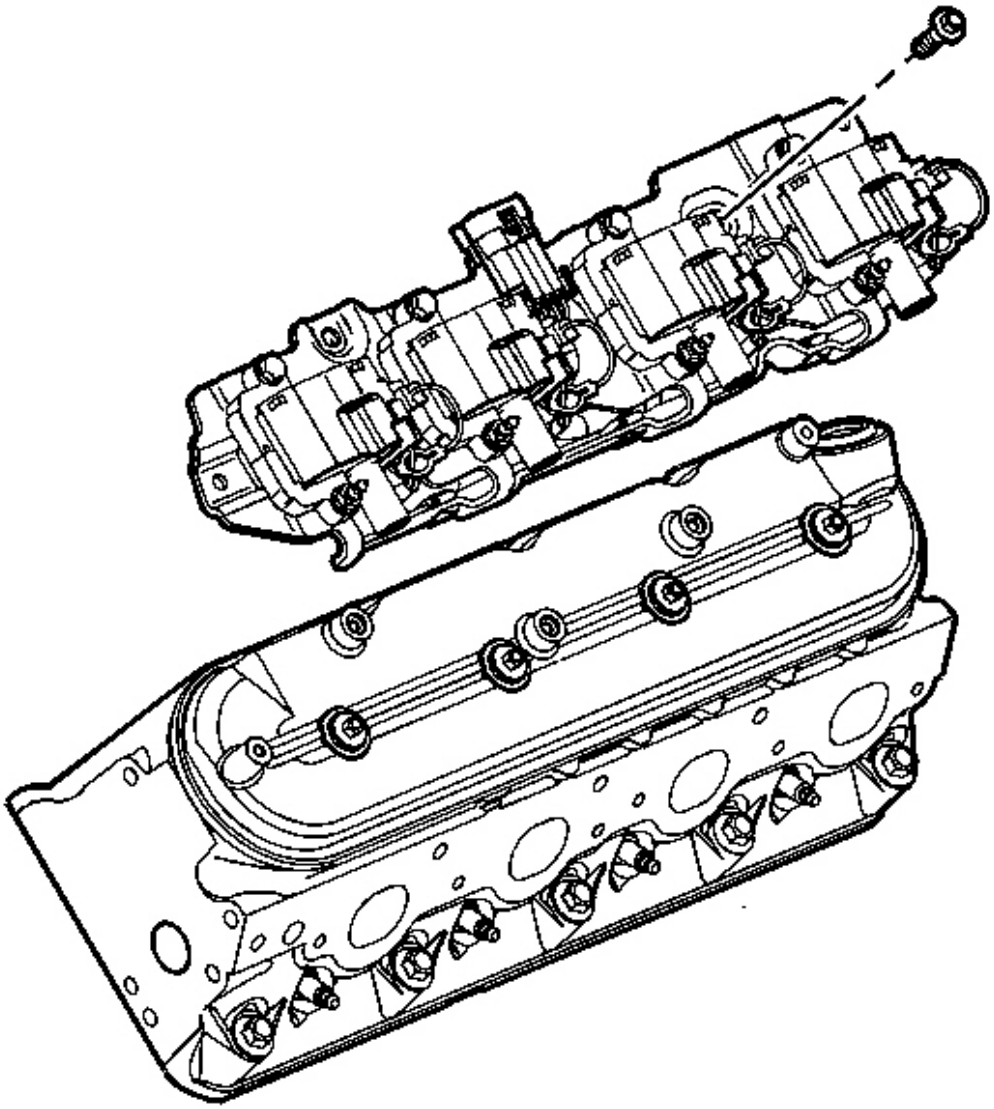

Fig. 119: Ignition Coil Bracket Bolts & Rocker Cover
Courtesy of GENERAL MOTORS CORP.

5. Apply threadlock GM P/N 12345382 (Canadian P/N 10953489) or equivalent to the threads of the bracket bolts.
6. Install the ignition coils and bracket assembly and bolts onto the rocker cover.

Tighten: Tighten the ignition coil bracket bolts to 12 N.m (106 lb in).

cardiagn.com

7. Install the crankcase ventilation hose.

VALVE ROCKER ARM COVER INSTALLATION - RIGHT

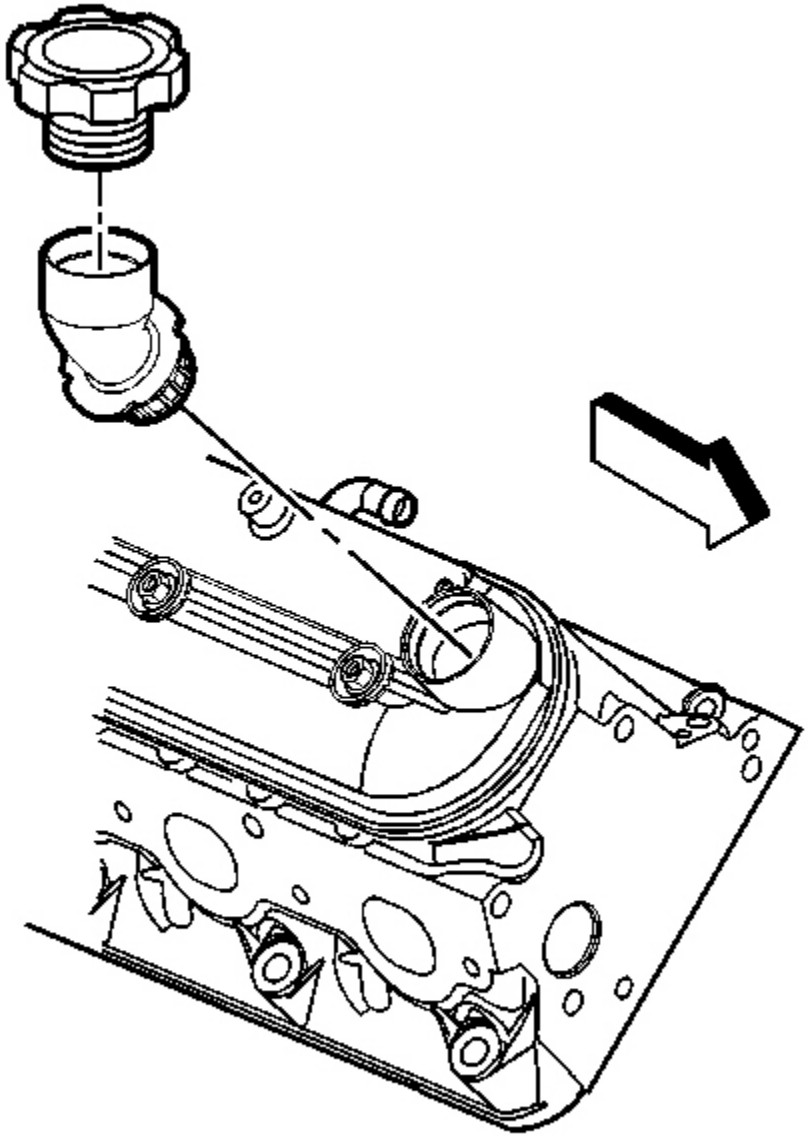

Fig. 120: View Of Oil Fill Tube
Courtesy of GENERAL MOTORS CORP.

cardiagn.com

IMPORTANT:

- **All gasket surfaces should be free of oil or other foreign material during assembly.**
- **DO NOT use the valve rocker arm cover gasket again.**
- **The valve rocker arm cover bolt grommets may be used again.**
- **If the oil fill tube has been removed from the valve rocker arm cover, install a NEW oil fill tube during assembly.**

1. Lubricate the O-ring seal of the NEW oil fill tube with clean engine oil.
2. Insert the NEW oil fill tube into the rocker arm cover and rotate the tube clockwise until locked in the proper position.
3. Install the oil fill cap into the tube and rotate clockwise until locked in the proper position.

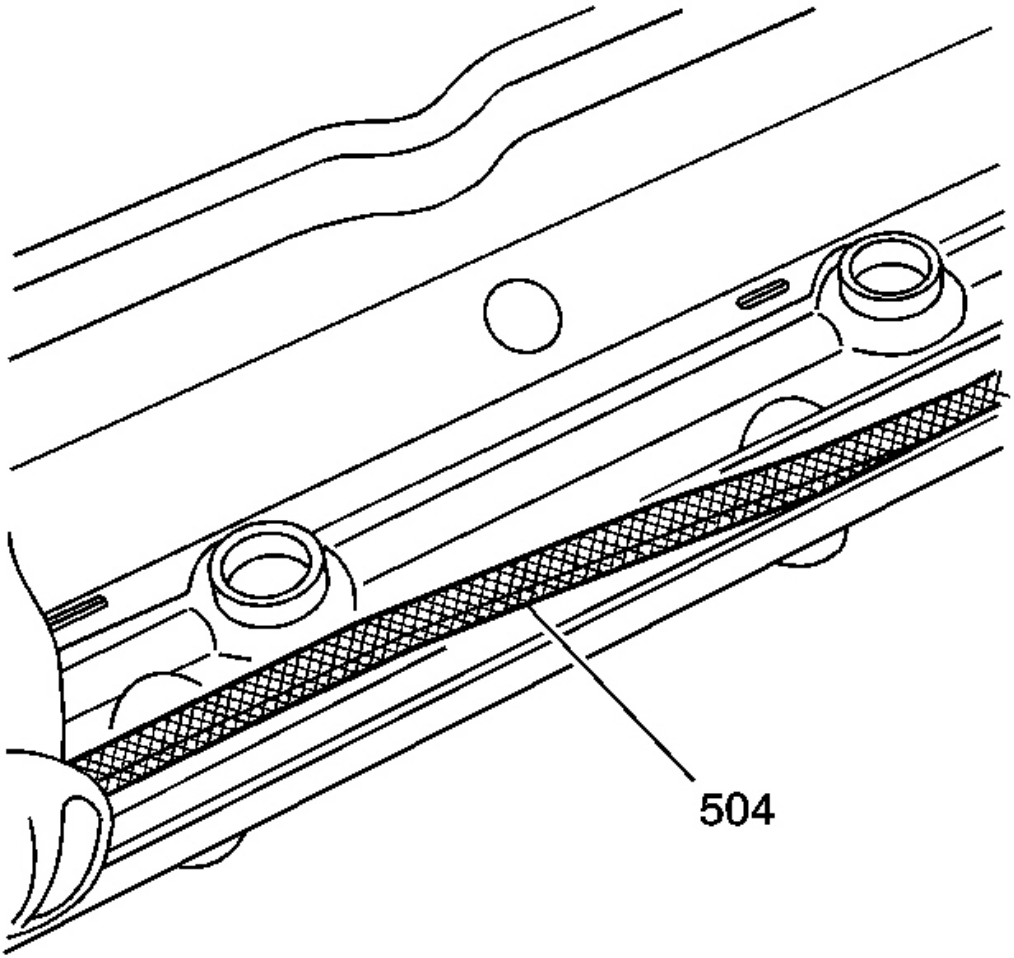

cardiagn.com

Fig. 121: View Of Valve Rocker Arm Cover Gasket
Courtesy of GENERAL MOTORS CORP.

4. Install a NEW gasket (504) into the valve rocker arm cover.

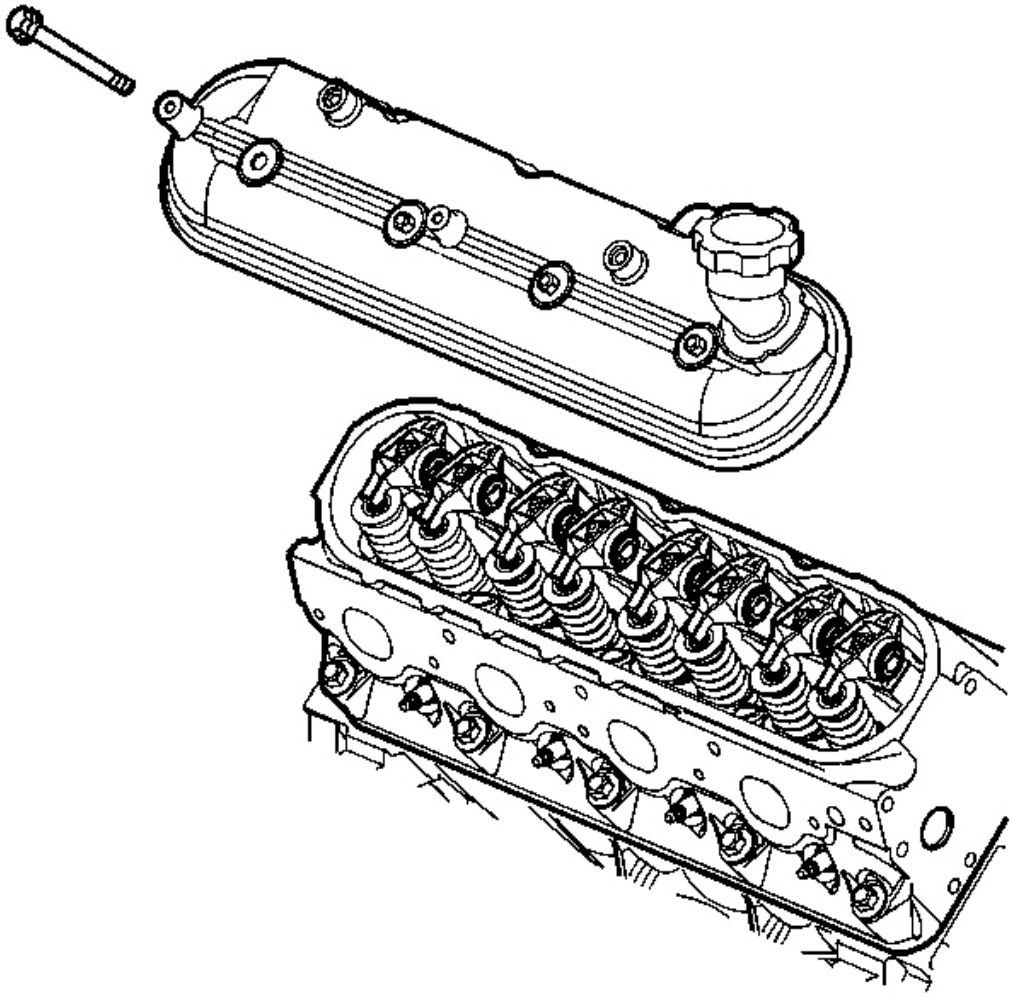

Fig. 122: View Of Valve Rocker Arm Cover & Bolts (Right)
Courtesy of GENERAL MOTORS CORP.

5. Install the valve rocker arm cover onto the cylinder head.

NOTE: Refer to Fastener Notice in Cautions and Notices.

cardiagn.com

6. Install the cover bolts with grommets.

   Tighten: Tighten the valve rocker arm cover bolts to 12 N.m (106 lb in).

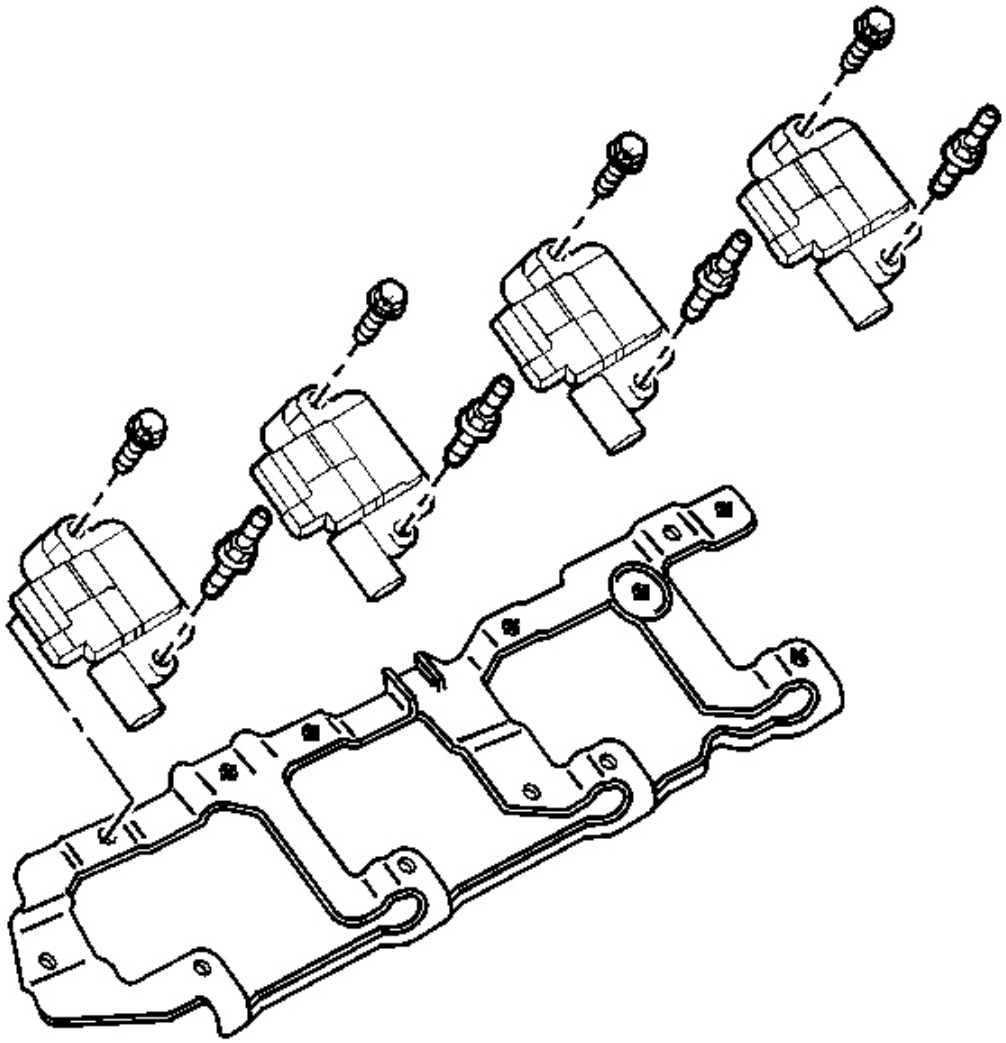

Fig. 123: View Of Ignition Coils
Courtesy of GENERAL MOTORS CORP.

7. Install the ignition coils, wire harness, and bolts onto the mounting bracket.

   Tighten: Tighten the ignition coil bolts to 12 N.m (106 lb in).

cardiagn.com

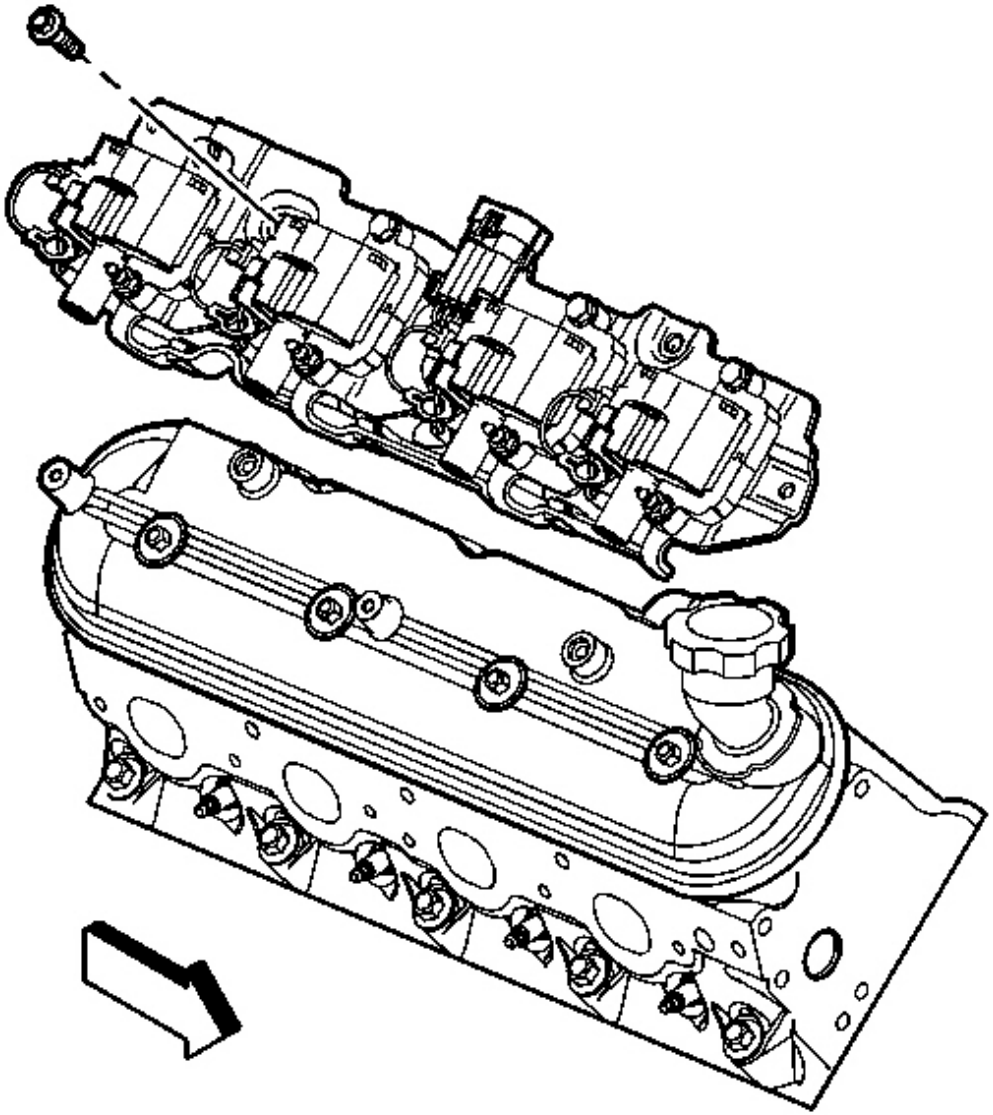

Fig. 124: Ignition Coil Bracket Bolts & Rocker Cover
Courtesy of GENERAL MOTORS CORP.

8. Apply threadlock GM P/N 12345382 (Canadian P/N 10953489) or equivalent to the threads of the bracket bolts.
9. Install the ignition coils and bracket assembly and bolts to the rocker cover.

Tighten: Tighten the ignition coil bracket bolts to 12 N.m (106 lb in).

cardiagn.com

10. Install the crankcase ventilation hoses to the cover.

ENGINE VALLEY COVER INSTALLATION

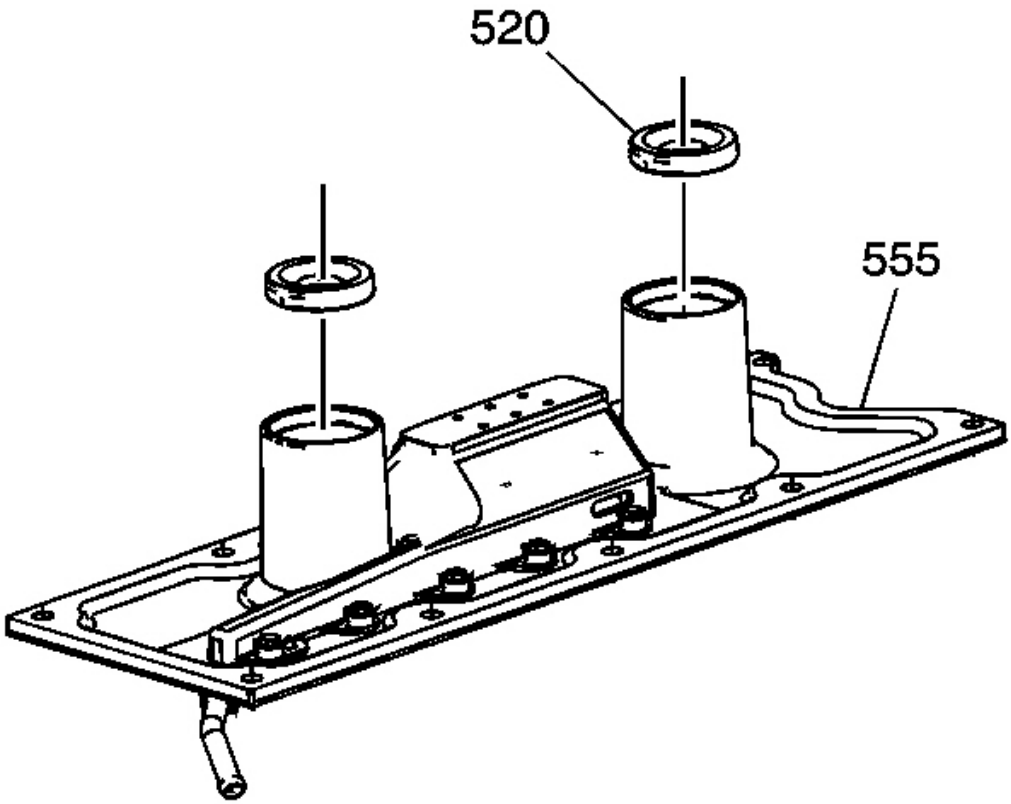

Fig. 125: Knock Sensor Oil Seals & Valley Cover
Courtesy of GENERAL MOTORS CORP.

IMPORTANT: All gasket surfaces should be free of oil or other foreign material during assembly.

1. Install NEW knock sensor oil seals (520) into the valley cover (555).

   Lubricate the seal surfaces with clean engine oil.

cardiagn.com

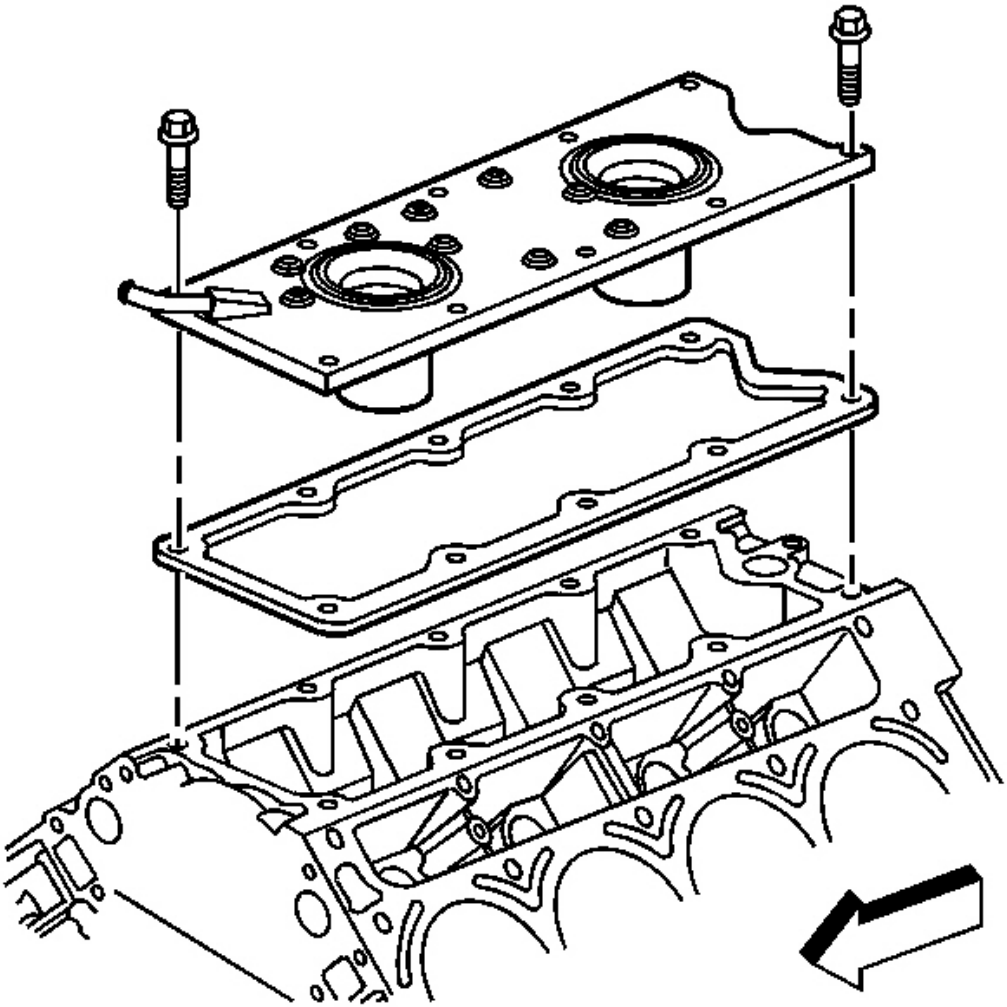

Fig. 126: Valley Cover & Gasket
Courtesy of GENERAL MOTORS CORP.

2. Install the valley cover and NEW gasket.

NOTE: **Refer to Fastener Notice in Cautions and Notices.**

3. Install the valley cover bolts.

Tighten: Tighten the valley cover bolts to 25 N.m (18 lb ft).

cardiagn.com

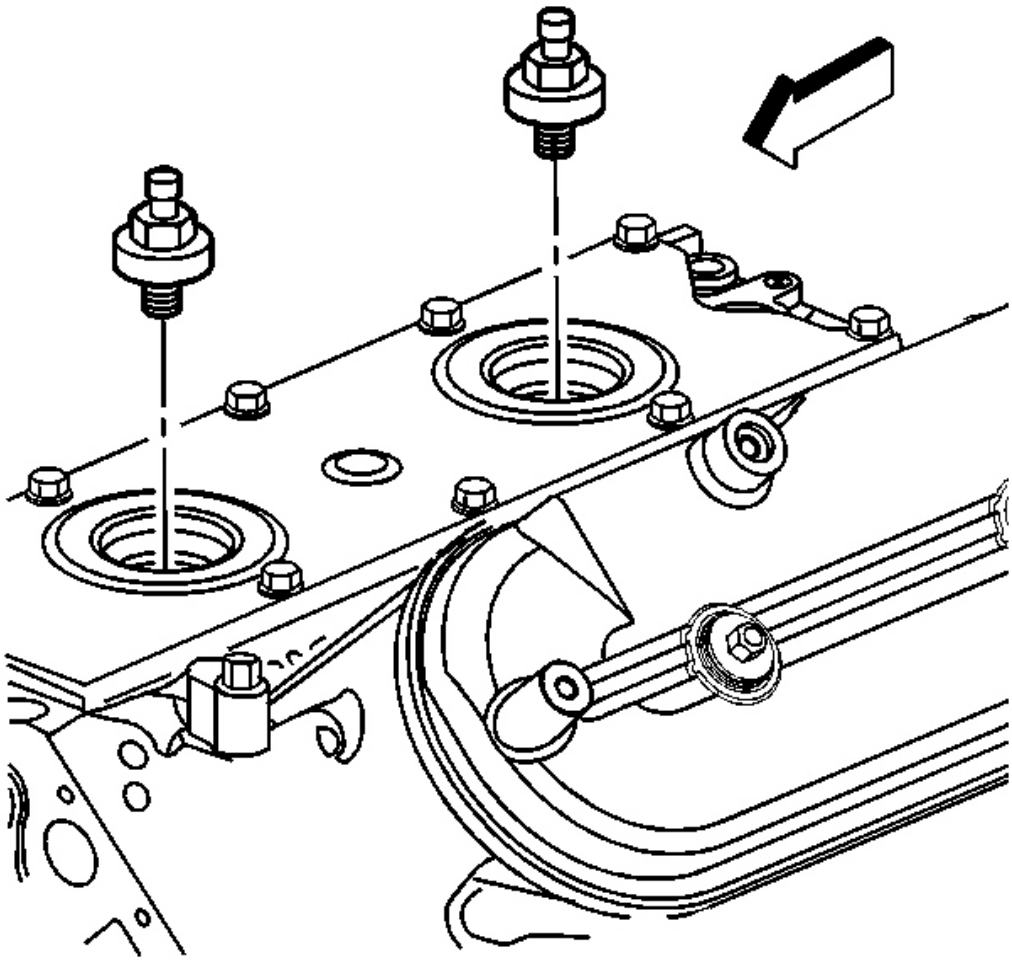

Fig. 127: View Of Knock Sensors
Courtesy of GENERAL MOTORS CORP.

4. Install the knock sensors.

   Tighten: Tighten the knock sensors to 20 N.m (15 lb ft).

cardiagn.com

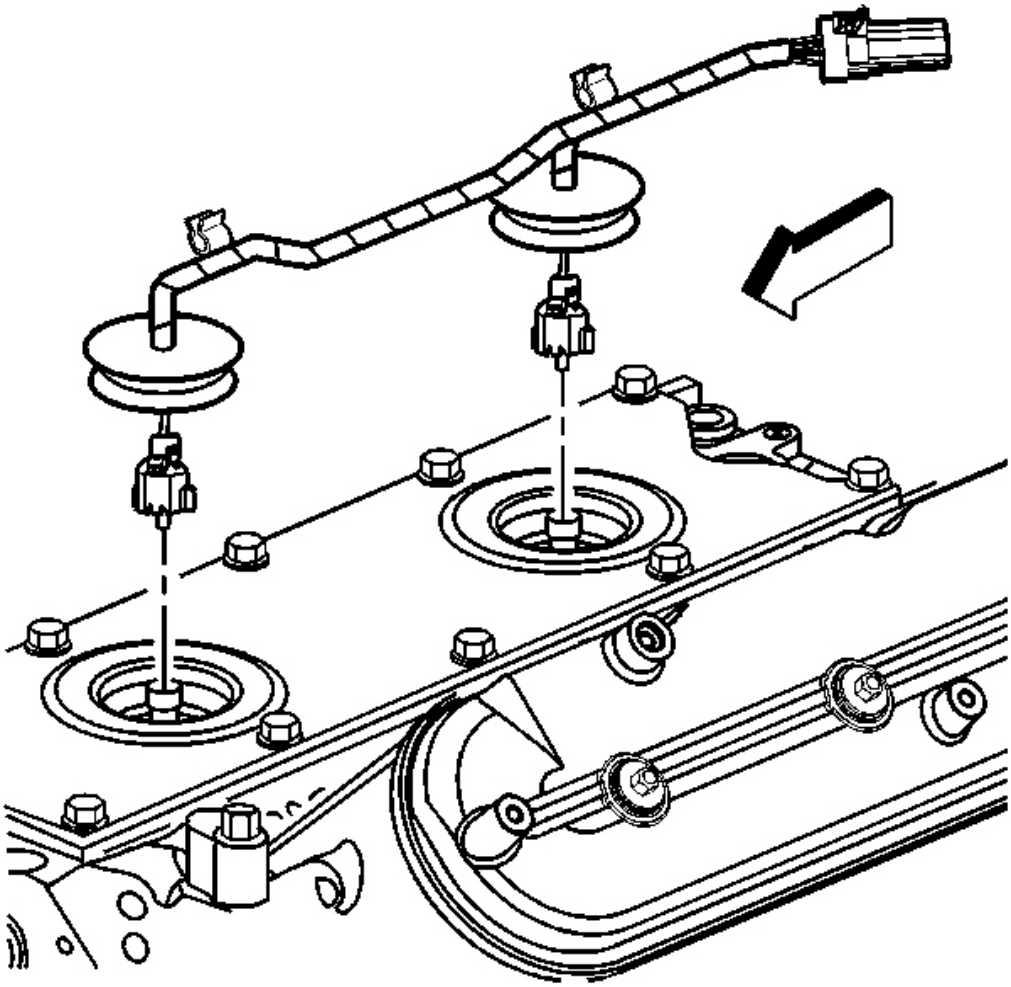

Fig. 128: View Of Knock Sensor Wire Harness
Courtesy of GENERAL MOTORS CORP.

5. Install the knock sensor wire harness.

COOLANT AIR BLEED PIPE INSTALLATION

cardiagn.com

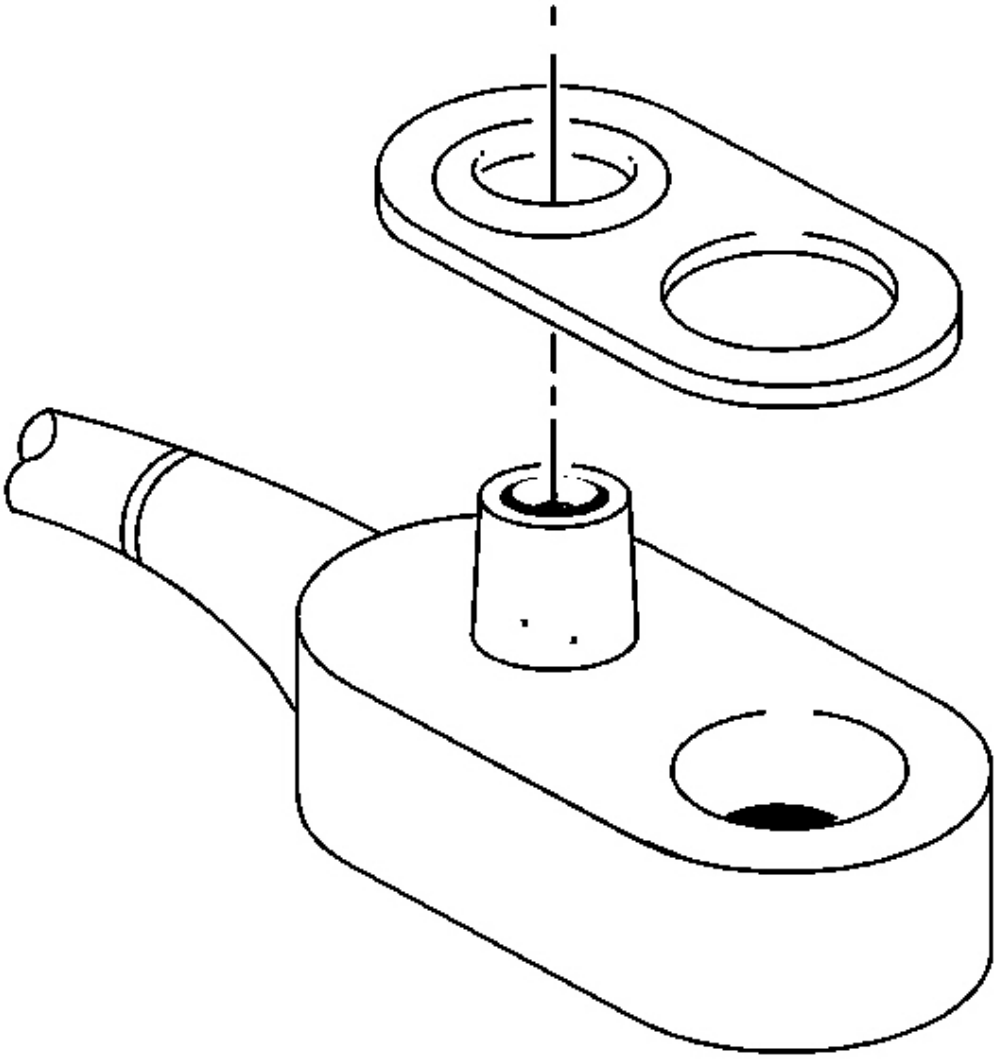

Fig. 129: View Of Pipe & Cover Gasket
Courtesy of GENERAL MOTORS CORP.

IMPORTANT:

- **Install the pipe gaskets properly onto the pipe and covers.**
- **Position the gasket O-ring seal onto the nipple portion of the pipe.**

1. Install the gaskets onto the engine coolant air bleed pipe and covers.

cardiagn.com

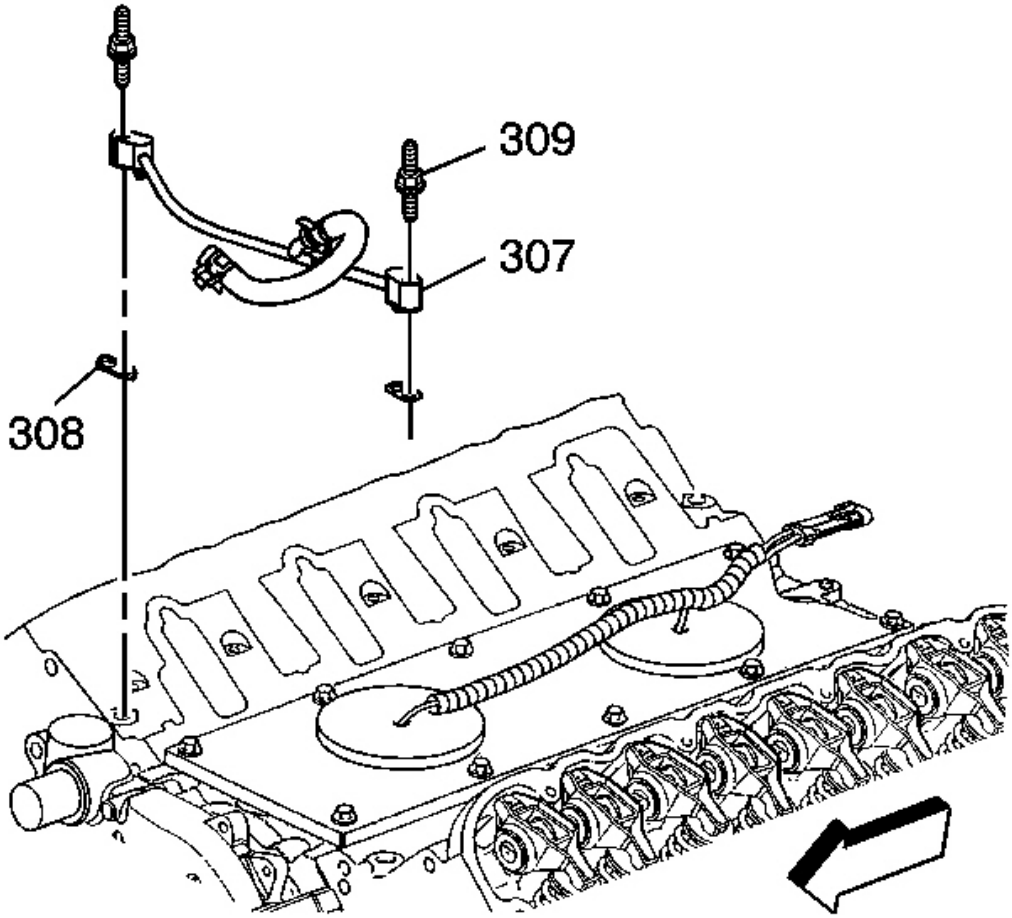

Fig. 130: Pipe, Gaskets & Cylinder Heads
Courtesy of GENERAL MOTORS CORP.

2. Install the pipe (307) and gaskets (308) onto the cylinder heads.

NOTE: **Refer to Fastener Notice in Cautions and Notices.**

3. Install the pipe studs (309).

   Install the two pipe studs to the front of the engine.

   Tighten: Tighten the pipe studs to 12 N.m (106 lb in).

cardiagn.com

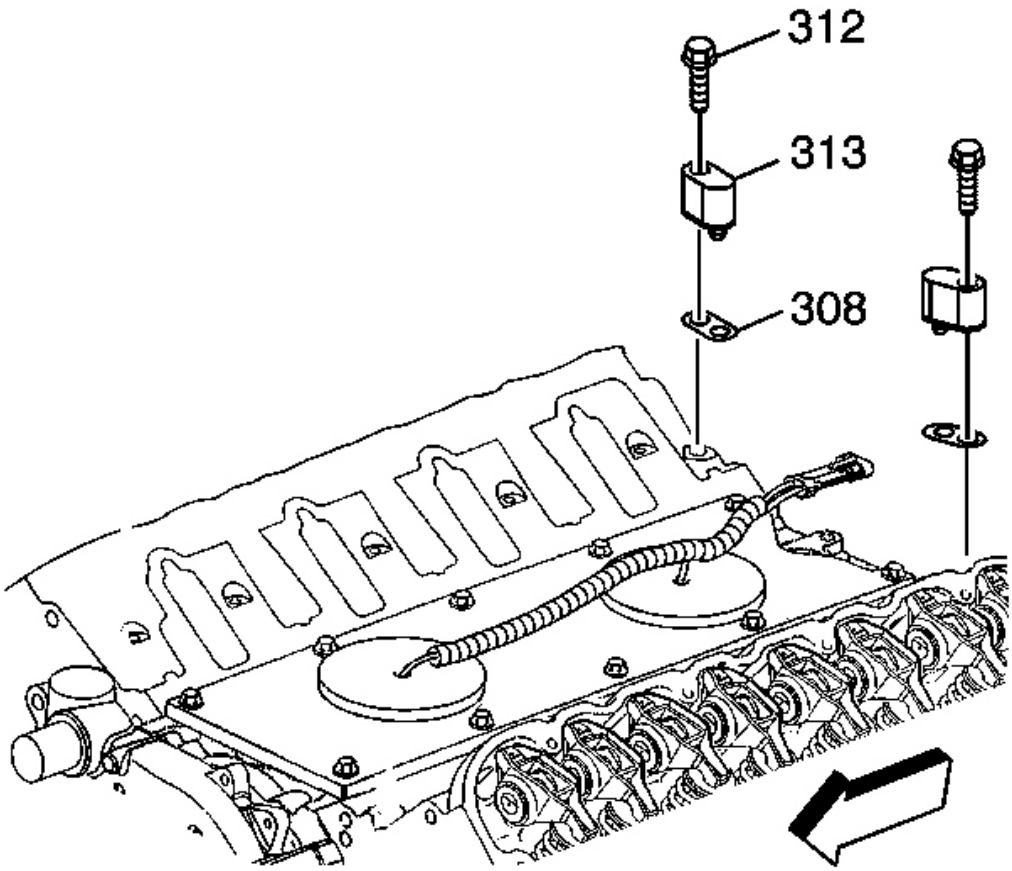

Fig. 131: View Of Engine Coolant Air Bleed Cover, Gasket & Bolts
Courtesy of GENERAL MOTORS CORP.

4. Install the covers (313), gaskets (308), and bolts (312) onto the rear of the engine.

   Tighten: Tighten the cover bolts to 12 N.m (106 lb in).

cardiagn.com

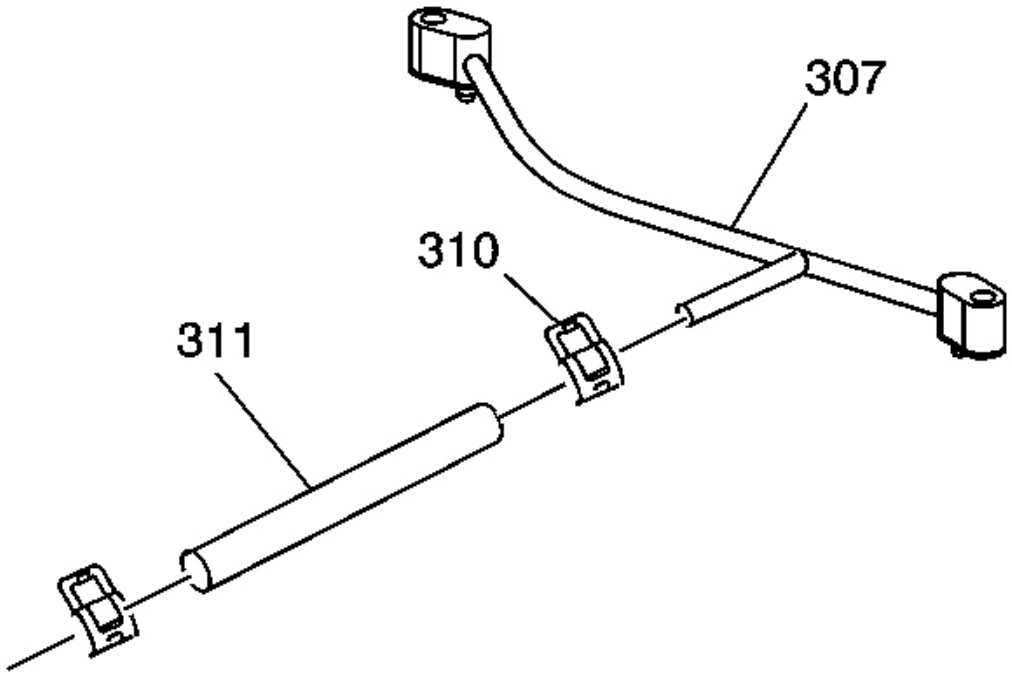

Fig. 132: Hose, Clamps & Pipe
Courtesy of GENERAL MOTORS CORP.

5. Install the hose (311) and clamps (310) onto the pipe (307).

INTAKE MANIFOLD INSTALLATION

cardiagn.com

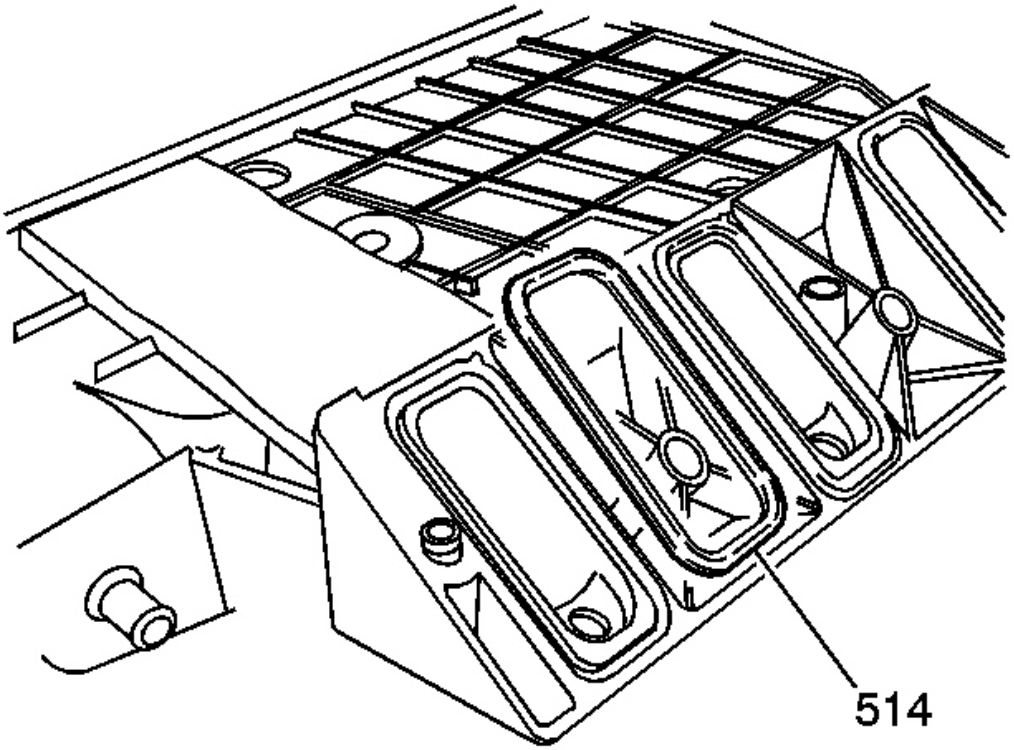

Fig. 133: Manifold-To-Cylinder Head Gaskets
Courtesy of GENERAL MOTORS CORP.

IMPORTANT:

- **The intake manifold, throttle body, fuel injection rail and fuel injectors may be removed as an assembly. If not servicing the individual components, install the intake manifold as a complete assembly.**
- **DO NOT use intake manifold gaskets again. Install NEW intake manifold-to-cylinder head gaskets.**

1. Install NEW intake manifold-to-cylinder head gaskets (514).

cardiagn.com

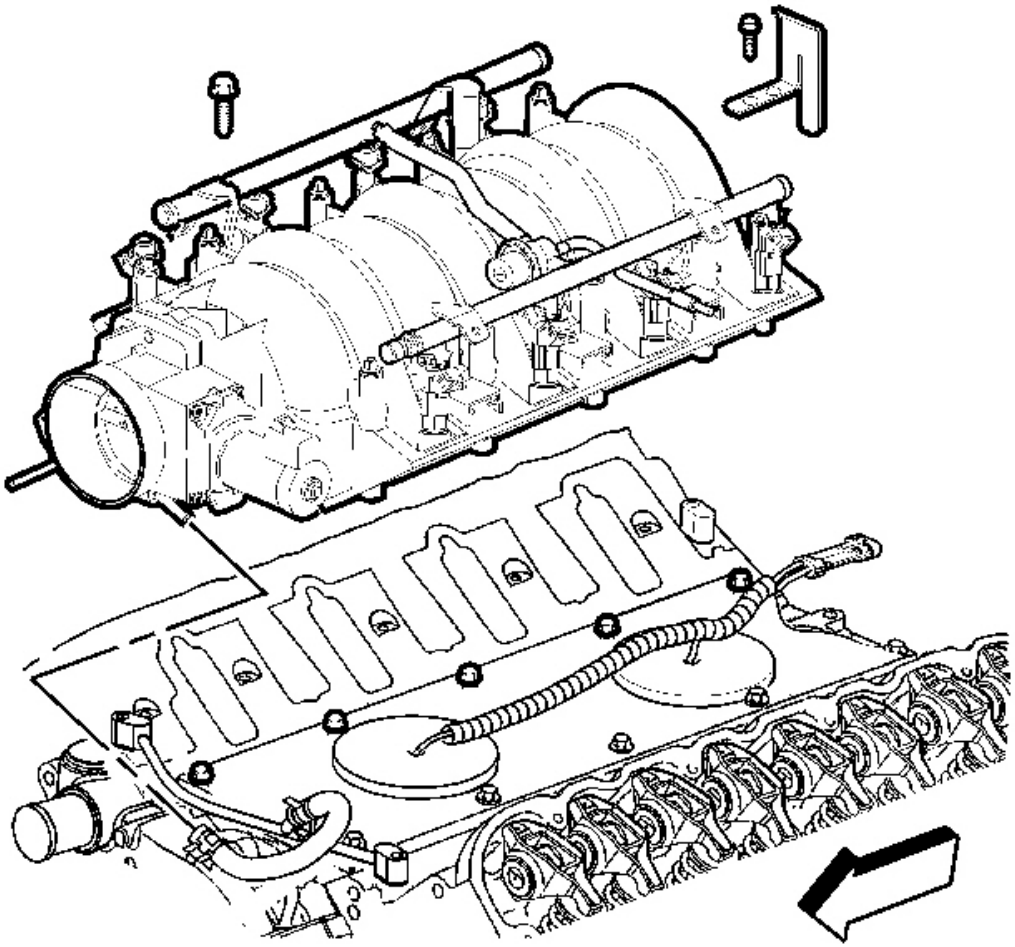

Fig. 134: Intake Manifold & Engine
Courtesy of GENERAL MOTORS CORP.

2. Install the intake manifold to the engine.

cardiagn.com

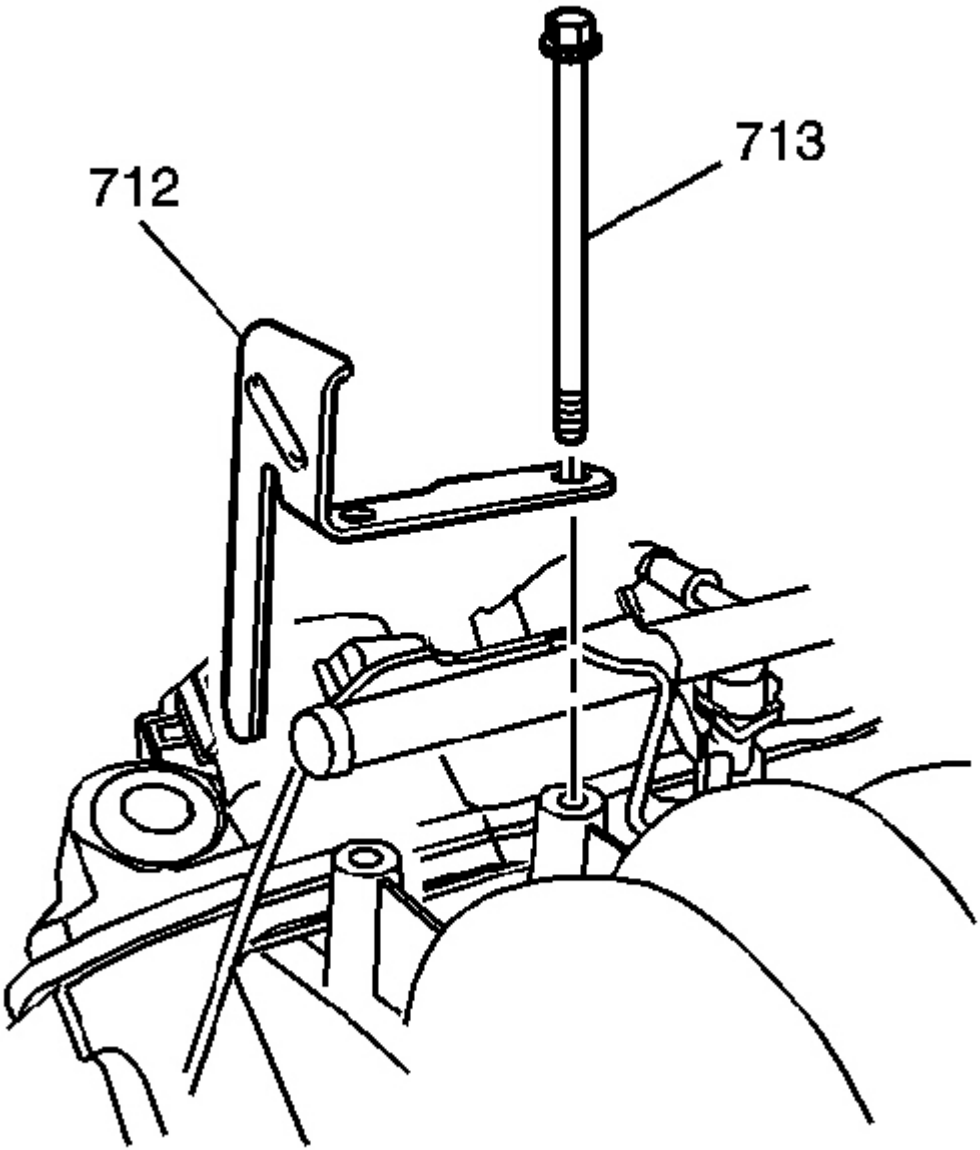

Fig. 135: Fuel Rail Stop Bracket
Courtesy of GENERAL MOTORS CORP.

3. Apply threadlock GM P/N 12345382 (Canadian P/N 10953489) or equivalent to the threads of the intake manifold bolts (713). Refer to **Sealers, Adhesives, and Lubricants** .
4. Install the fuel rail stop bracket (712).

cardiagn.com

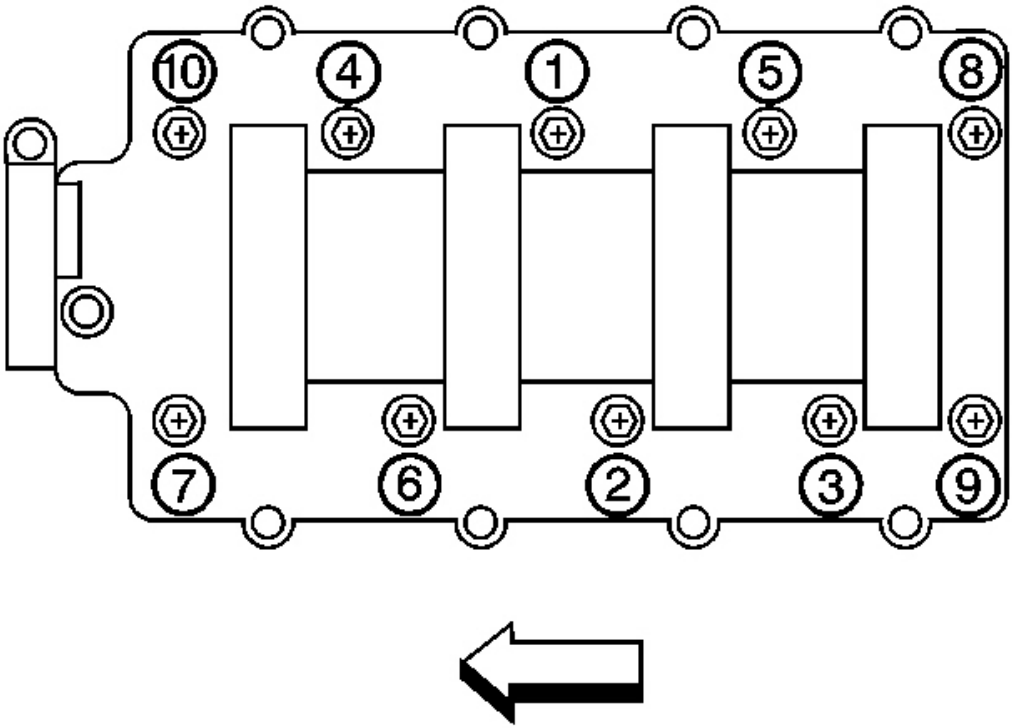

Fig. 136: Intake Manifold Bolt Tightening Sequence
Courtesy of GENERAL MOTORS CORP.

NOTE: Refer to Fastener Notice in Cautions and Notices.

5. Install the manifold bolts.

Tighten:

1. Tighten intake manifold bolts a first pass in sequence to 5 N.m (44 lb in).
2. Tighten intake manifold bolts a final pass in sequence to 10 N.m (89 lb in).

cardiagn.com

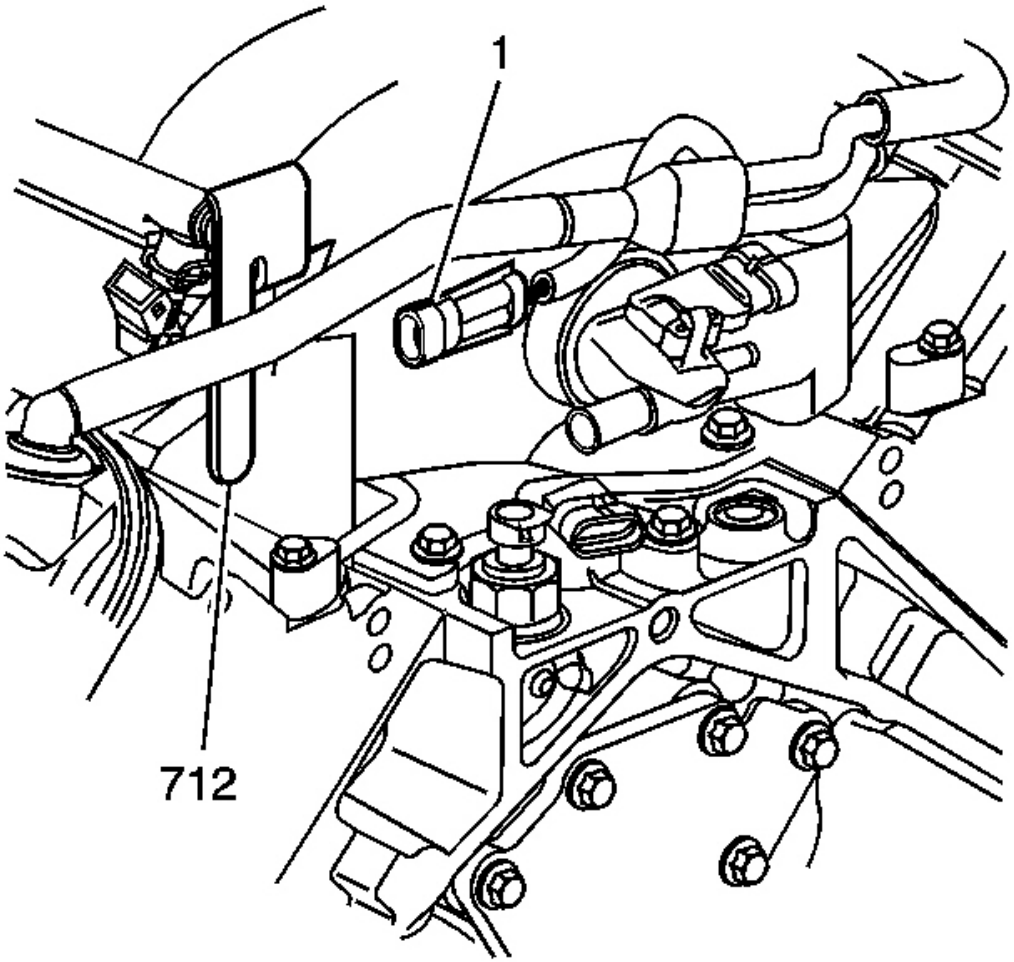

Fig. 137: Knock Sensor Wire Harness Connector & Fuel Rail Stop Bracket
Courtesy of GENERAL MOTORS CORP.

6. Install the knock sensor wire harness connector (1) onto the fuel rail stop bracket (712).

cardiagn.com

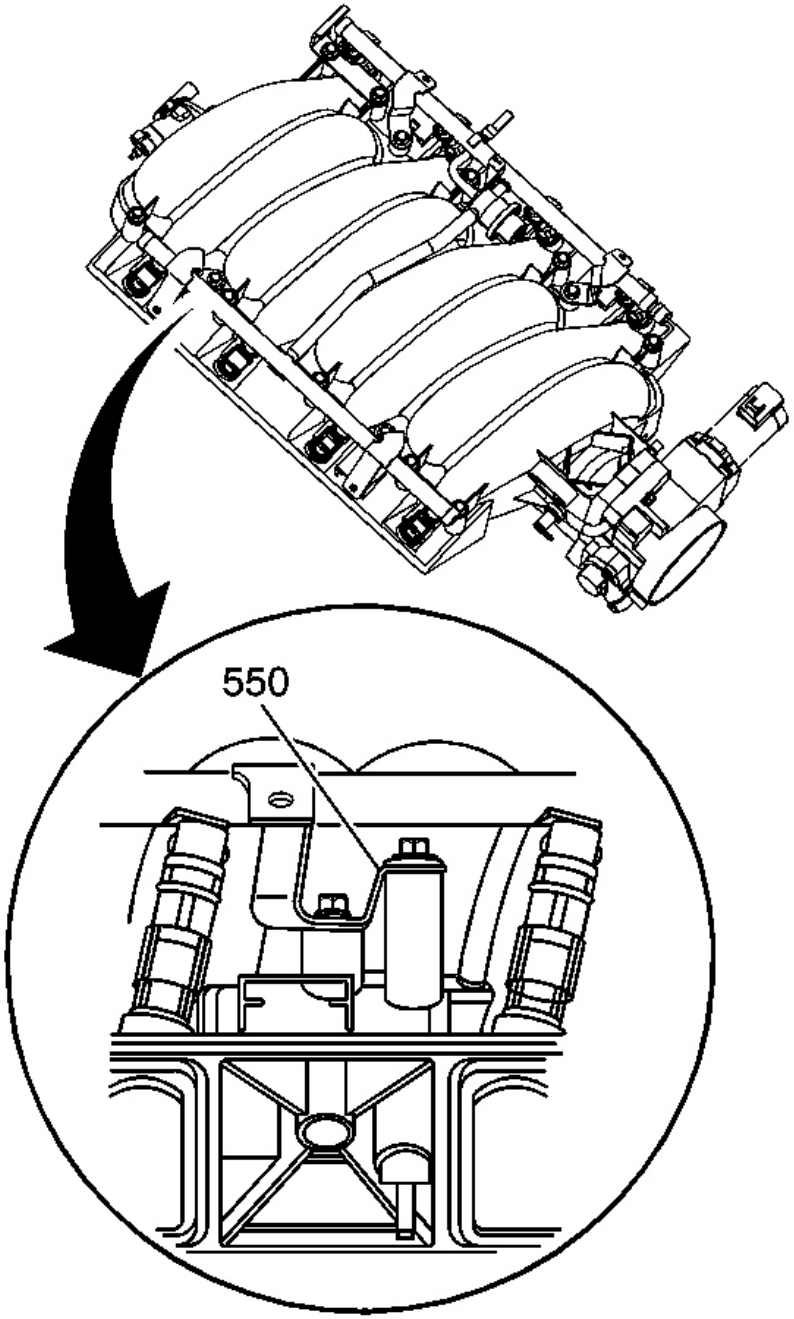

Fig. 138: Fuel Rail Ground Strap & Intake Manifold
Courtesy of GENERAL MOTORS CORP.

7. Note the location of the fuel rail ground strap (550) on the intake manifold.

cardiagn.com

The fuel rail ground strap must be installed during assembly.

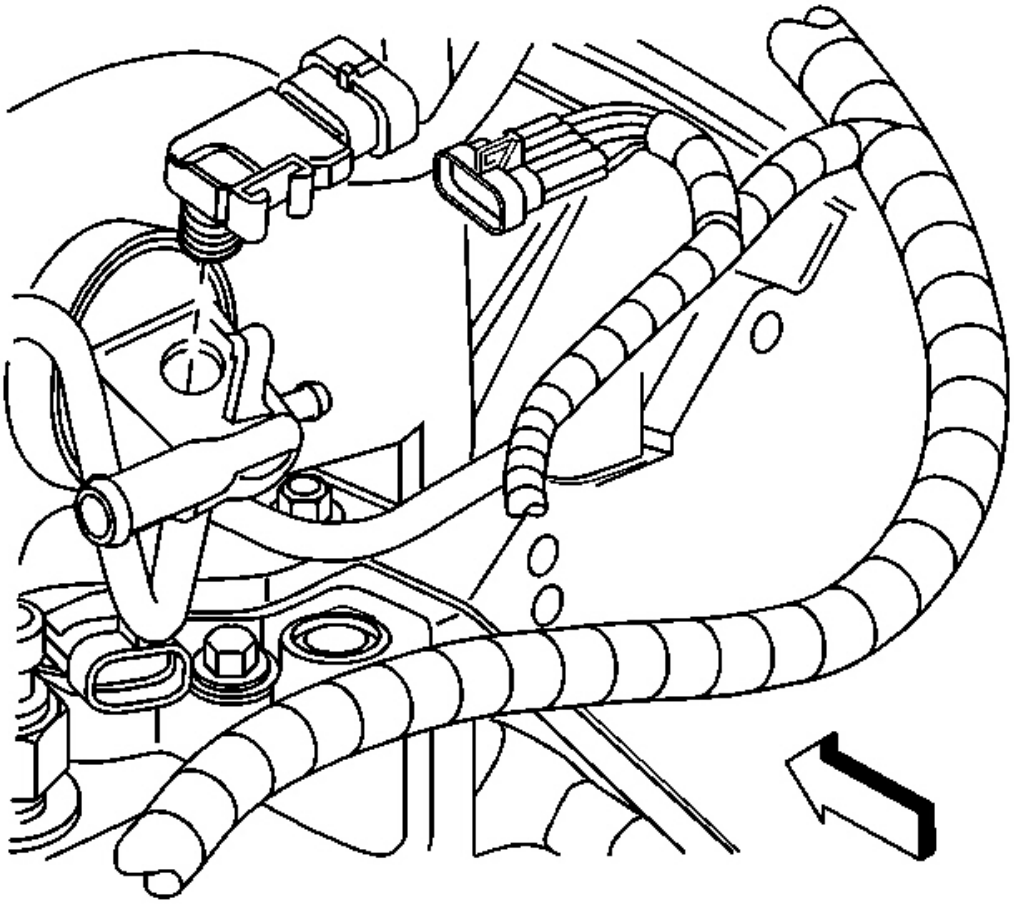

Fig. 139: Manifold Absolute Pressure (MAP) Sensor
Courtesy of GENERAL MOTORS CORP.

8. Install the manifold absolute pressure (MAP) sensor, if previously removed.

cardiagn.com

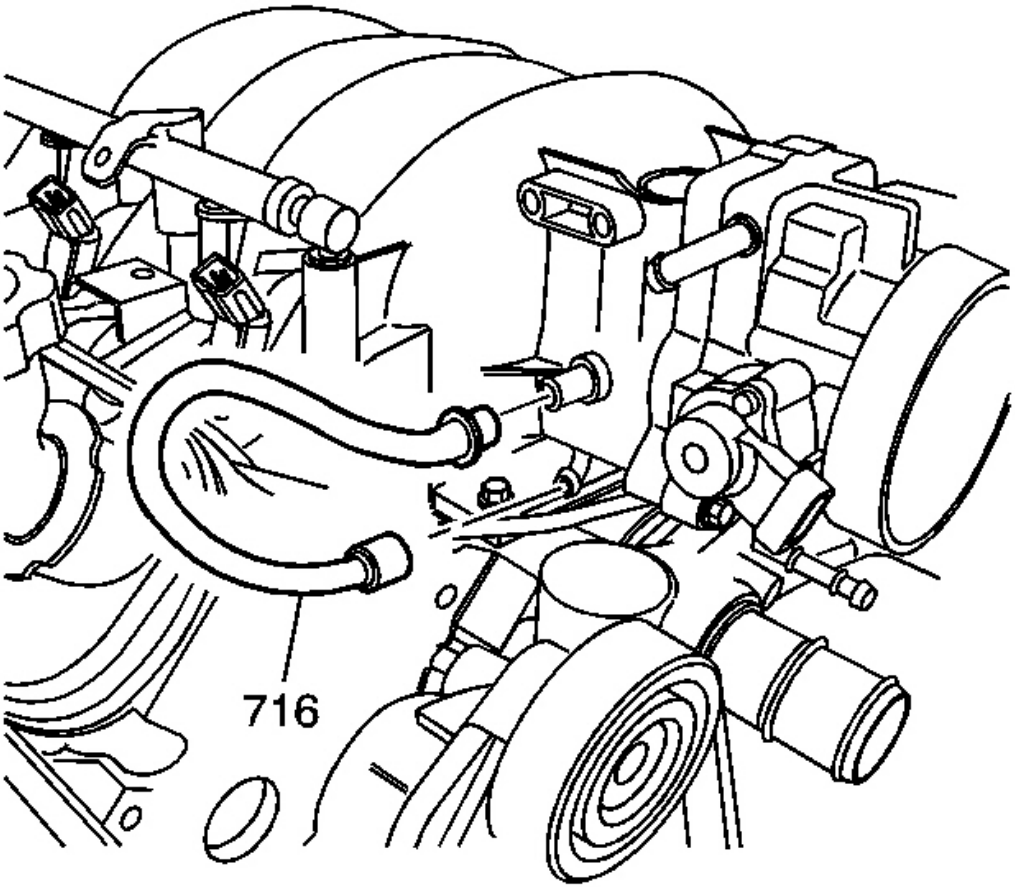

Fig. 140: PCV Dirty Air Pipe, Valley Cover & Intake Manifold
Courtesy of GENERAL MOTORS CORP.

9. Install the positive crankcase ventilation (PCV) pipe - dirty air (716) to the valley cover and intake manifold.

FUEL RAIL AND INJECTORS INSTALLATION

cardiagn.com

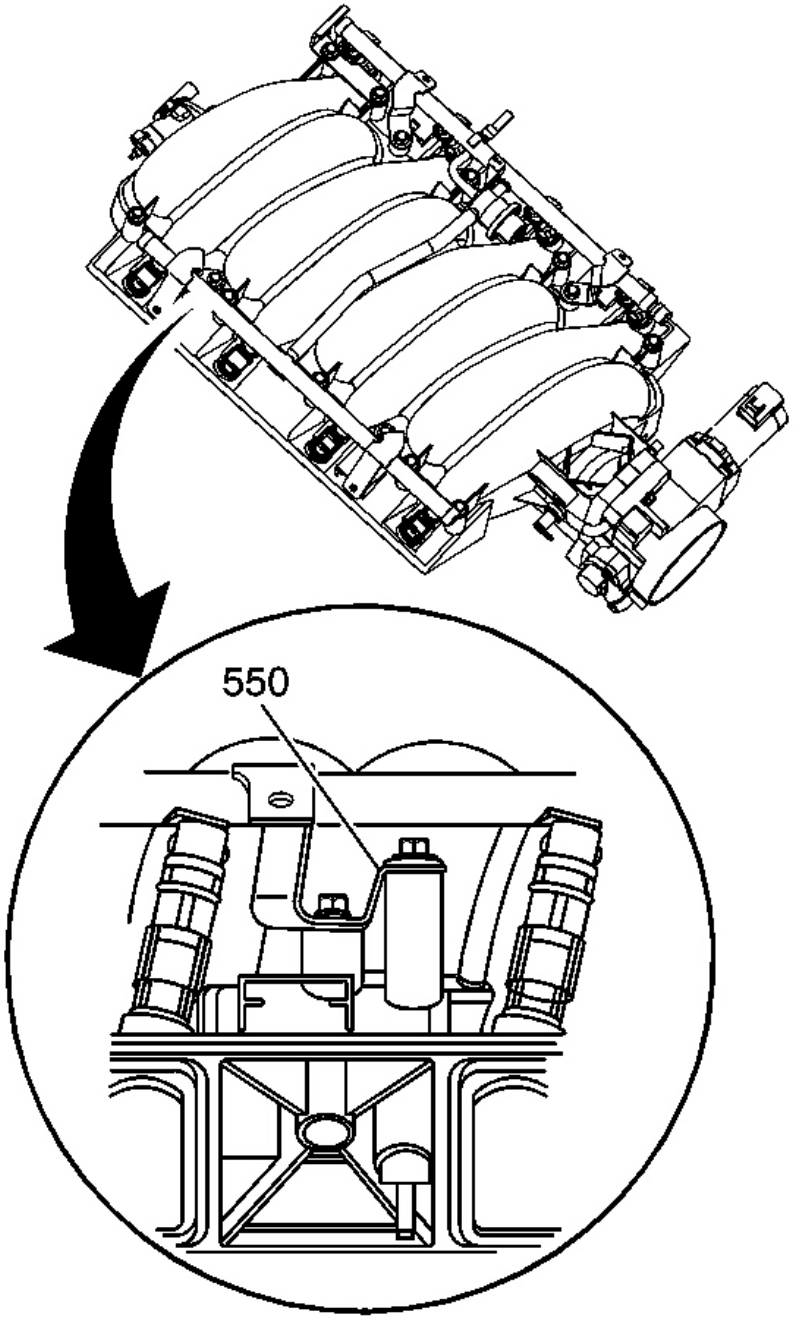

Fig. 141: Fuel Rail Ground Strap & Intake Manifold
Courtesy of GENERAL MOTORS CORP.

IMPORTANT: DO NOT use fuel injector O-ring seals again. Install NEW fuel injector O-

cardiagn.com

ring seals during assembly.

1. Lubricate the NEW fuel injector O-ring seals with clean engine oil.
2. Install the O-ring seals onto the fuel injectors.
3. Note the location of the fuel rail ground strap (550) on the intake manifold.

   The fuel rail ground strap must be installed during assembly.

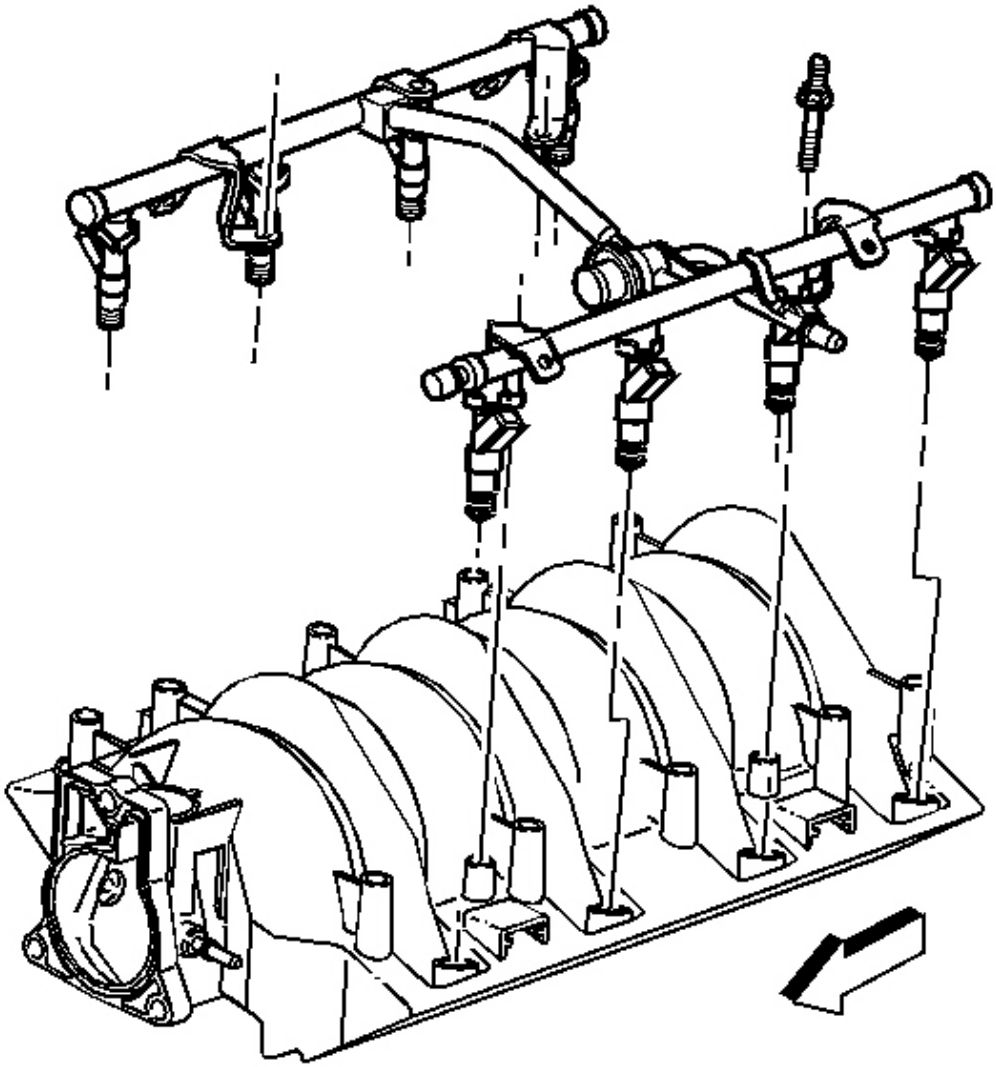

cardiagn.com

Fig. 142: Fuel Rail To Intake Mounting View
Courtesy of GENERAL MOTORS CORP.

4. Install the fuel rail, with fuel injectors, into the intake manifold.

   Press evenly on both sides of the fuel rail until all of the injectors are seated in their bores.

5. Apply a 5 mm (0.2 in) band of threadlock GM P/N 12345382 (Canadian P/N 10953489) or equivalent to the threads of the fuel rail bolts.

CAUTION: Refer to Fuel Rail Stop Bracket Installation Caution in Cautions and Notices.

NOTE: Refer to Fastener Notice in Cautions and Notices.

6. Install the fuel rail bolts.

   Tighten: Tighten the fuel rail bolts to 10 N.m (89 lb in).

THROTTLE BODY INSTALLATION

cardiagn.com

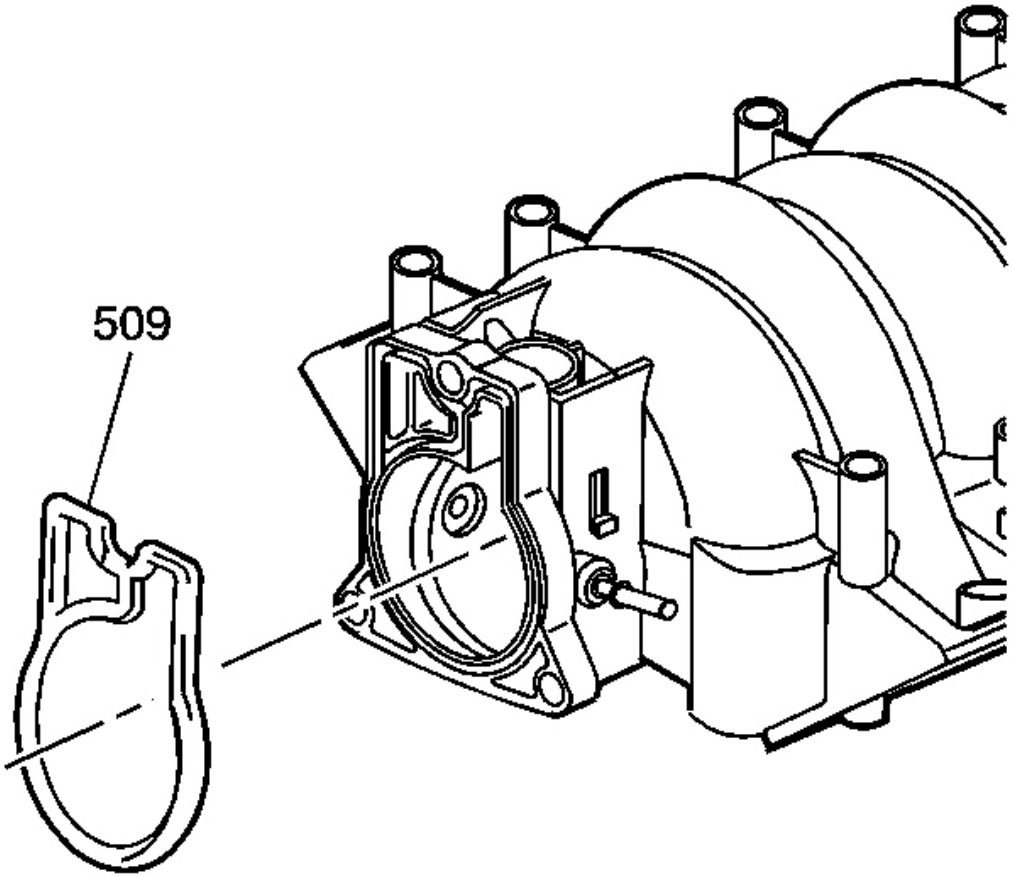

Fig. 143: Throttle Body Gasket & Intake Manifold
Courtesy of GENERAL MOTORS CORP.

NOTE: **Handle the electronic throttle control components carefully. Use cleanliness in order to prevent damage. Do not drop the electronic throttle control components. Do not roughly handle the electronic throttle control components. Do not immerse the electronic throttle control components in cleaning solvents of any type.**

IMPORTANT: **DO NOT use the throttle body gasket again. Install a NEW gasket during assembly.**

1. Install the throttle body gasket (509) to the intake manifold.

cardiagn.com

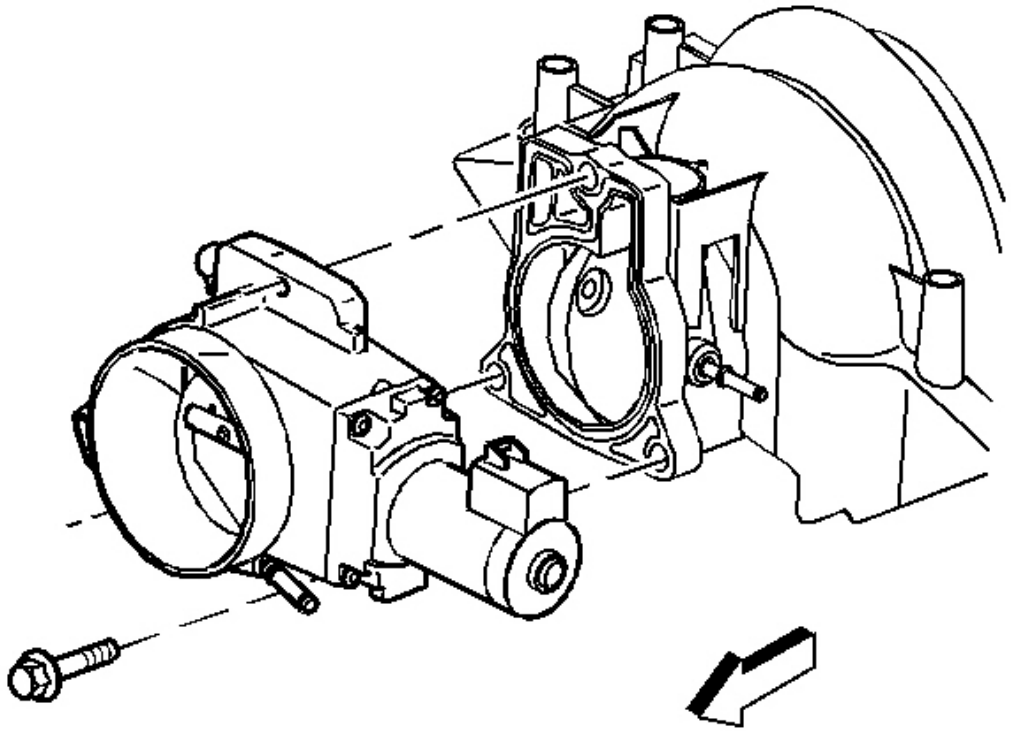

Fig. 144: View Of Throttle Body
Courtesy of GENERAL MOTORS CORP.

NOTE: Refer to Fastener Notice in Cautions and Notices.

2. Install the throttle body and bolts.

   Tighten: Tighten the throttle body bolts to 12 N.m (106 lb in).

3. Install the engine coolant air bleed hose and clamp.

WATER PUMP INSTALLATION

cardiagn.com

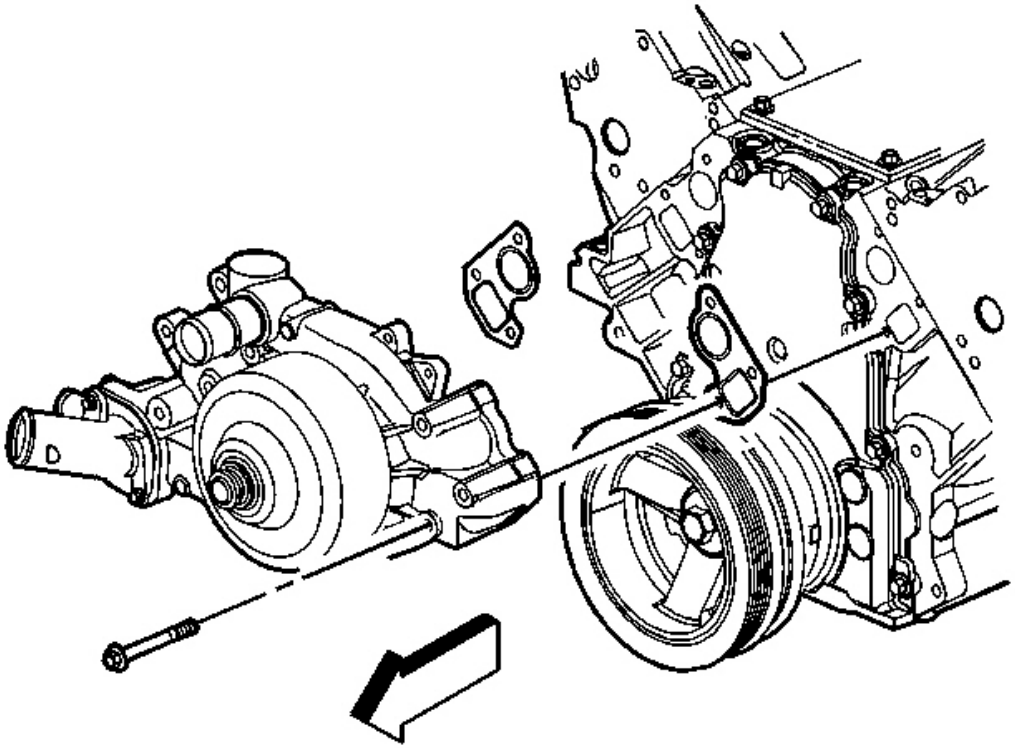

Fig. 145: Old Gasket & Water Pump Sealing
Courtesy of GENERAL MOTORS CORP.

NOTE: **DO NOT use cooling system seal tabs, or similar compounds, unless otherwise instructed. The use of cooling system seal tabs, or similar compounds, may restrict coolant flow through the passages of the cooling system or the engine components. Restricted coolant flow may cause engine overheating and/or damage to the cooling system or the engine components/assembly.**

IMPORTANT: **All gasket surfaces should be free of oil or other foreign material during assembly.**

1. Install the water pump and NEW gaskets.

NOTE: **Refer to Fastener Notice in Cautions and Notices.**

2. Install the water pump bolts.

cardiagn.com

Tighten:

1. Tighten the water pump bolts a first pass to 15 N.m (11 lb ft).
2. Tighten the water pump bolts a final pass to 30 N.m (22 lb ft).

EXHAUST MANIFOLD INSTALLATION - LEFT

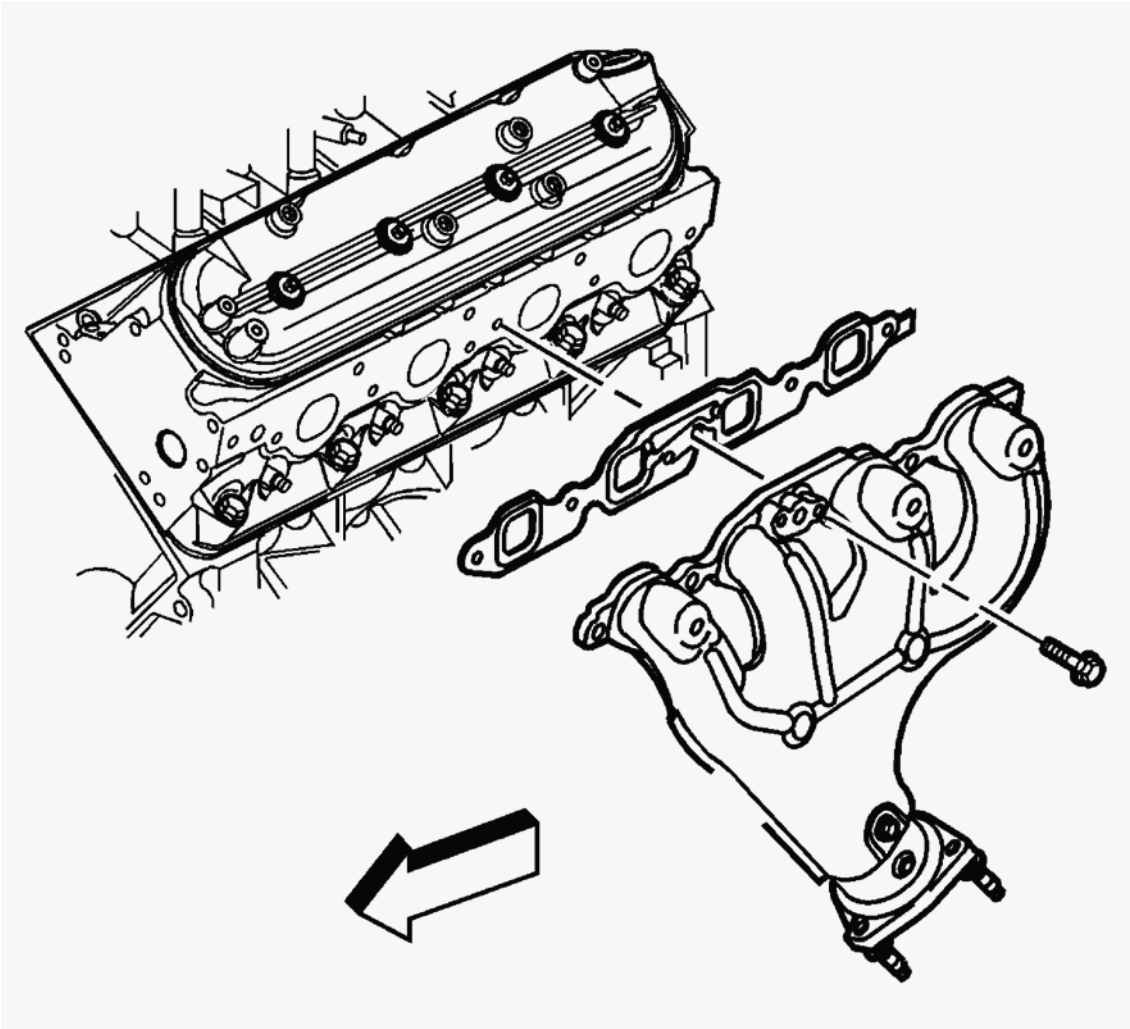

Fig. 146: Exhaust Manifold Gasket & Bolts
Courtesy of GENERAL MOTORS CORP.

IMPORTANT:

- **Tighten the exhaust manifold bolts as specified in the service procedure. Improperly installed and/or leaking exhaust manifold gaskets may effect vehicle emissions and/or On-Board Diagnostics (OBD) II system performance.**
- **The cylinder head exhaust manifold bolt hole threads must be clean and free of debris or threadlocking material.**

1. Apply a 5 mm (0.2 in) wide band of threadlock GM P/N 12345493 (Canadian P/N 10953488) or

cardiagn.com

equivalent to the threads of the exhaust manifold bolts.

2. Install the exhaust manifold and NEW exhaust manifold gasket.

NOTE: Refer to Fastener Notice in Cautions and Notices.

3. Install the exhaust manifold bolts.

   Tighten:

   1. Tighten the exhaust manifold bolts a first pass to 15 N.m (11 lb ft). Tighten the exhaust manifold bolts beginning with the center 2 bolts. Alternate from side-to-side, and work toward the outside bolts.
   2. Tighten the exhaust manifold bolts a final pass to 25 N.m (18 lb ft). Tighten the exhaust manifold bolts beginning with the center 2 bolts. Alternate from side-to-side, and work toward the outside bolts.

4. Using a flat punch, bend over the exposed edge of the exhaust manifold gasket at the rear of the left cylinder head.
5. Install the exhaust manifold heat shield and bolts, if required.

   Tighten: Tighten the heat shield bolts to 9 N.m (80 lb in).

cardiagn.com

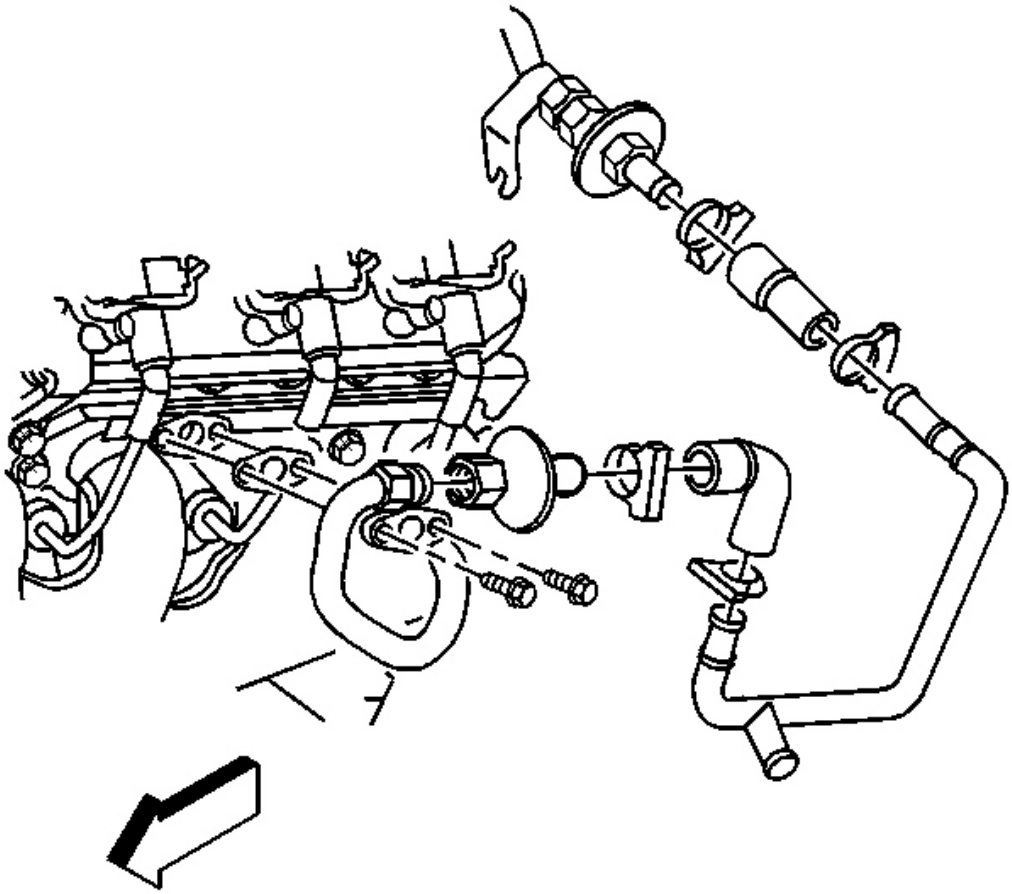

Fig. 147: AIR Pipe & Exhaust Manifold Bolts
Courtesy of GENERAL MOTORS CORP.

6. Install the air injection reaction (AIR) pipe, with check valve, NEW gasket, and bolts.

   Tighten: Tighten the AIR pipe to exhaust manifold bolts to 20 N.m (15 lb ft).

cardiagn.com

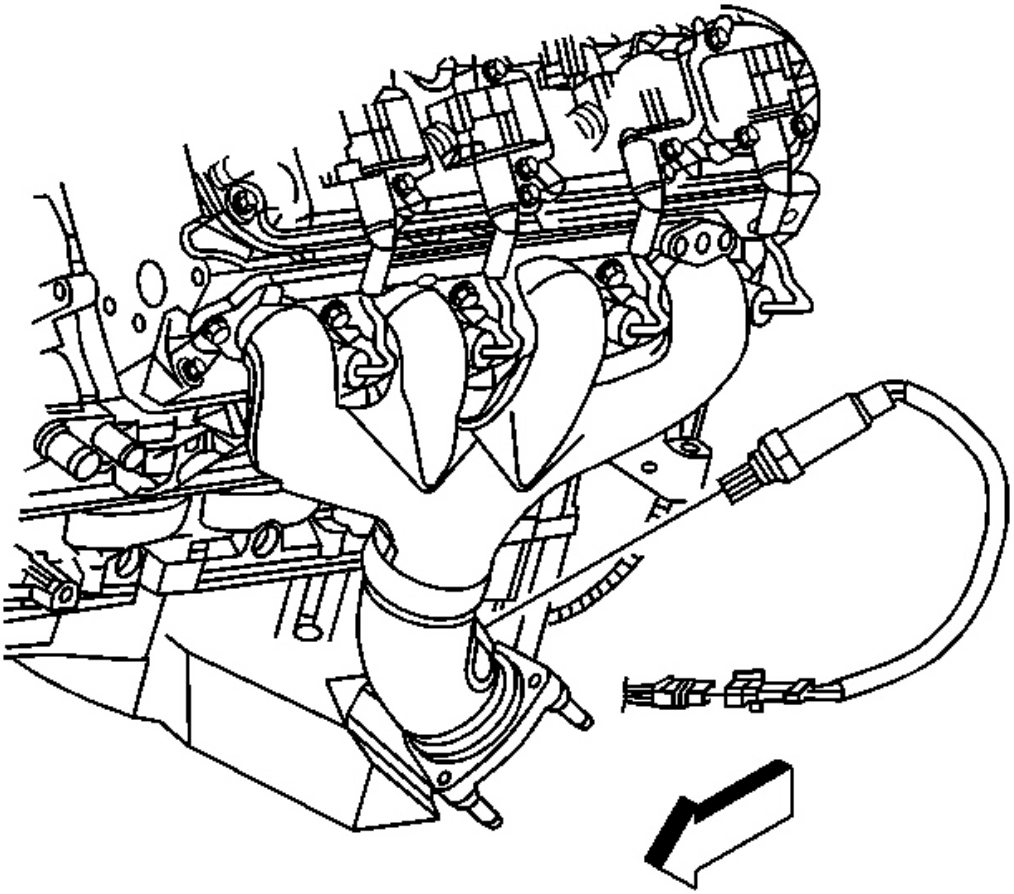

Fig. 148: Oxygen Sensor & Intake Manifold
Courtesy of GENERAL MOTORS CORP.

7. Install the oxygen sensor into the intake manifold.

   Tighten: Tighten the oxygen sensor to 42 N.m (30 lb ft).

EXHAUST MANIFOLD INSTALLATION - RIGHT

cardiagn.com

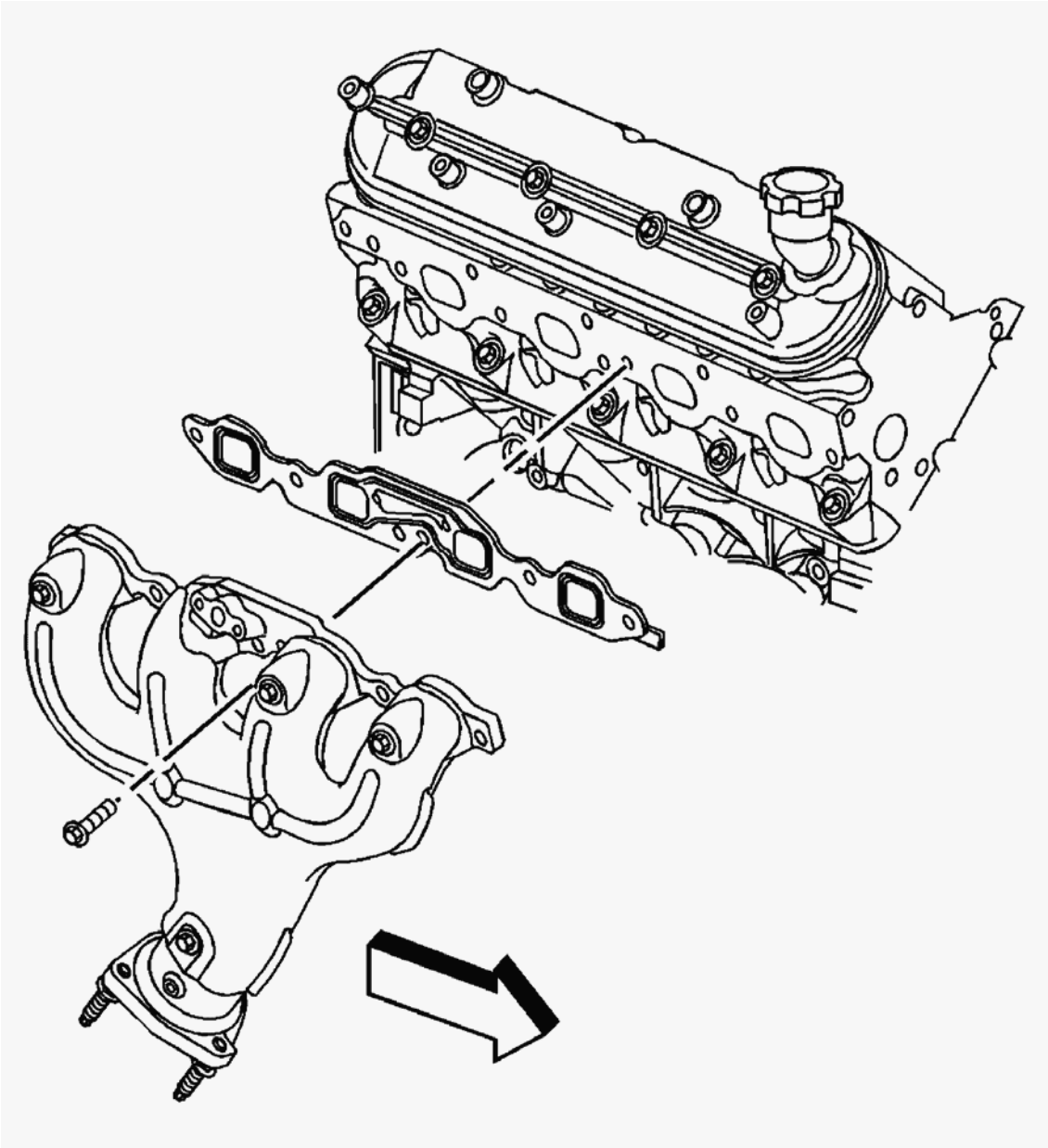

Fig. 149: Exhaust Manifold Gasket & Exhaust Manifold
Courtesy of GENERAL MOTORS CORP.

IMPORTANT:

- **Tighten the exhaust manifold bolts as specified in the service procedure. Improperly installed and/or leaking exhaust manifold gaskets may effect vehicle emissions and/or On-Board Diagnostics (OBD) II system performance.**
- **The cylinder head exhaust manifold bolt hole threads must be clean and free of debris or threadlocking material.**

1. Apply a 5 mm (0.2 in) wide band of threadlock GM P/N 12345493 (Canadian P/N 10953488) or

cardiagn.com

equivalent to the threads of the exhaust manifold bolts.

2. Install the exhaust manifold gasket and exhaust manifold.

NOTE: Refer to Fastener Notice in Cautions and Notices.

3. Install the exhaust manifold bolts.

Tighten:

1. Tighten the exhaust manifold bolts first pass to 15 N.m (11 lb ft). Tighten the exhaust manifold bolts beginning with the center 2 bolts. Alternate from side-to-side, and work toward the outside bolts.
2. Tighten the exhaust manifold bolts final pass to 25 N.m (18 lb ft). Tighten the exhaust manifold bolts beginning with the center 2 bolts. Alternate from side-to-side, and work toward the outside bolts.

4. Using a flat punch, bend over the exposed edge of the exhaust manifold gasket at the front of the right cylinder head.
5. Install the exhaust manifold heat shield and bolts, if required.

Tighten: Tighten the heat shield bolts to 9 N.m (80 lb in).

cardiagn.com

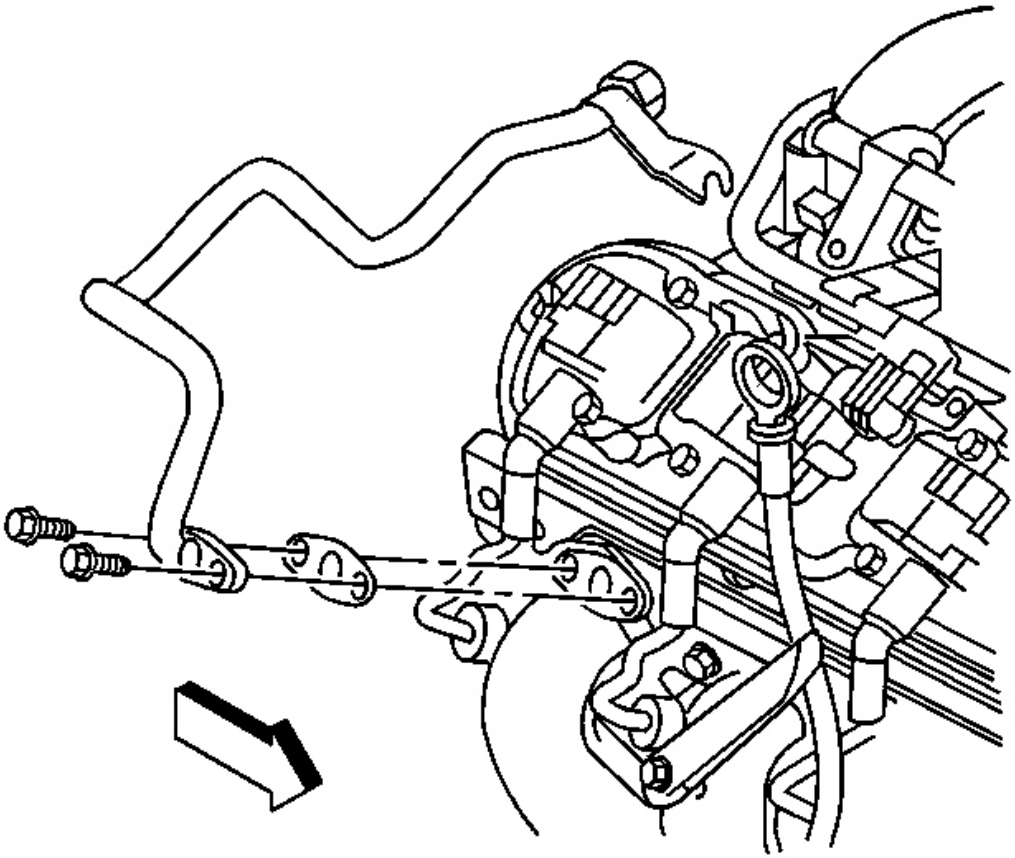

Fig. 150: Air Pipe, Check Valve, Gasket & Bolts
Courtesy of GENERAL MOTORS CORP.

6. Install the air injection reaction (AIR) pipe, with check valve, NEW gasket, and bolts.

cardiagn.com

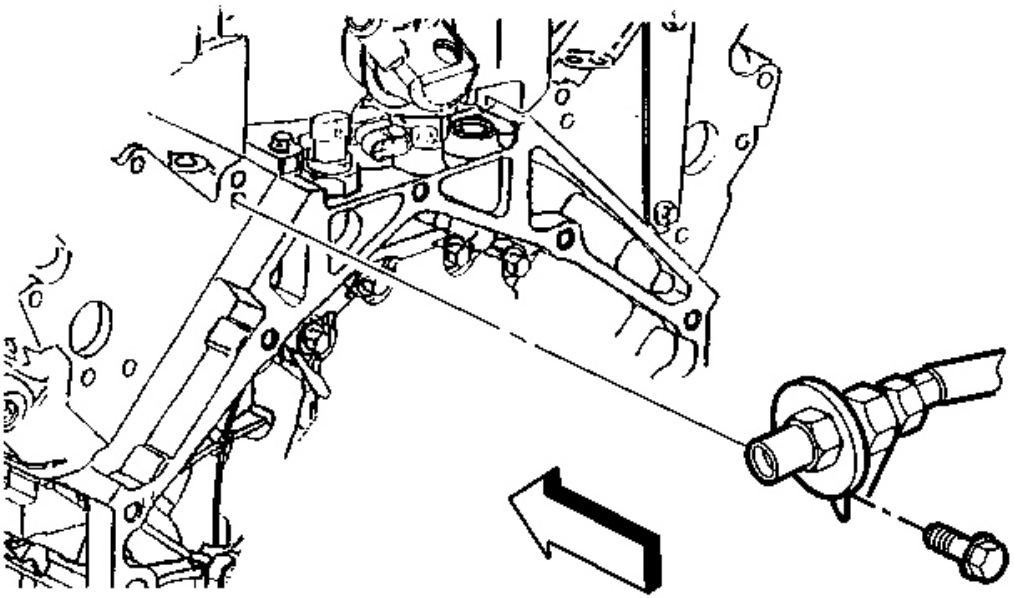

Fig. 151: AIR Tube Bolt To Left Rear Cylinder Head
Courtesy of GENERAL MOTORS CORP.

7. Install the AIR tube bolt to the left rear cylinder head.

   Tighten:
   1. Tighten the AIR pipe to exhaust manifold bolts to 20 N.m (15 lb ft).
   2. Tighten the AIR pipe to left cylinder head bolt to 20 N.m (15 lb ft).

8. Install the oxygen sensor into the intake manifold.

   Tighten: Tighten the oxygen sensor to 42 N.m (30 lb ft).

OIL LEVEL INDICATOR AND TUBE INSTALLATION

cardiagn.com

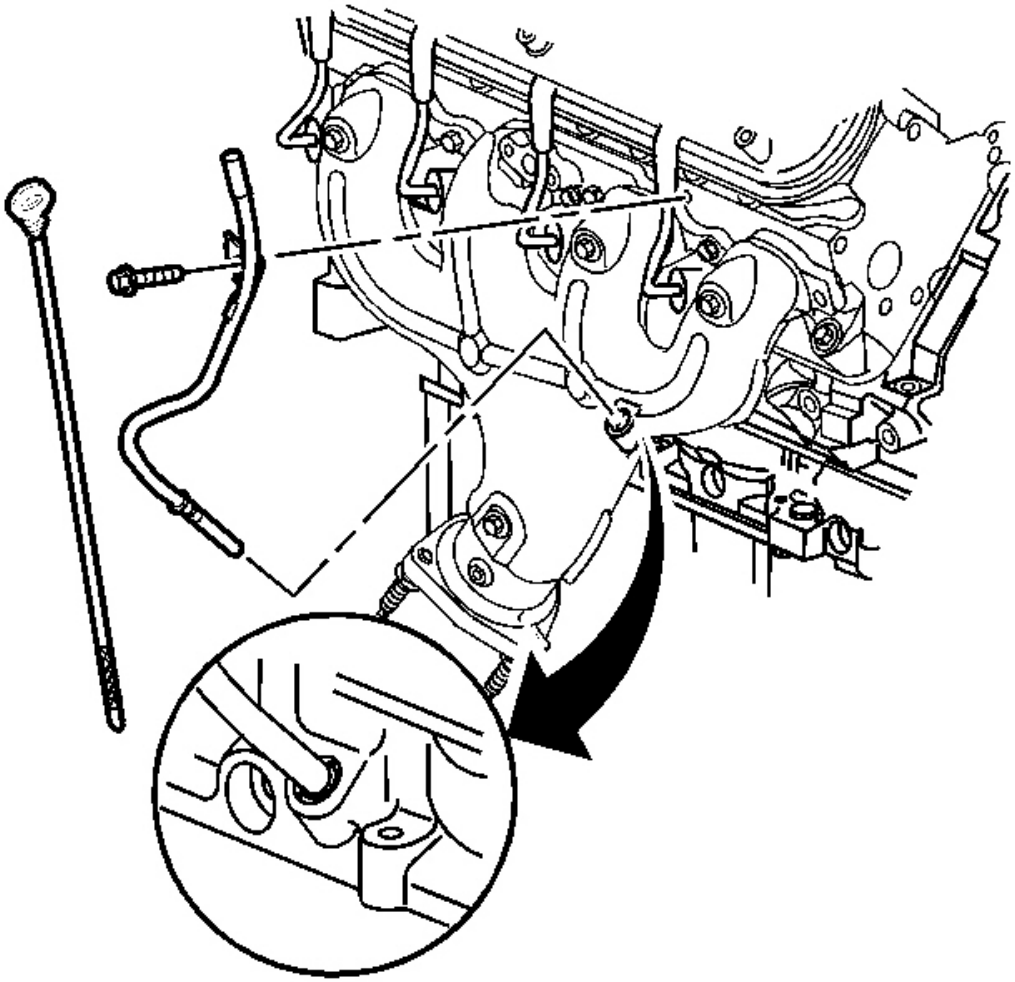

Fig. 152: O-Ring Seal, Oil Level Indicator Tube & Engine Block
Courtesy of GENERAL MOTORS CORP.

1. Inspect the O-ring seal for cuts or damage. If the oil level indicator tube O-ring seal is not cut or damaged, it may be used again.
2. Lubricate the O-ring seal with clean engine oil.
3. Install the O-ring seal onto the oil level indicator tube.
4. Install the oil level indicator tube into the engine block and rotate into proper position.

NOTE: Refer to Fastener Notice in Cautions and Notices.

5. Install the tube bolt to the right cylinder head.

cardiagn.com

Tighten: Tighten the oil level indicator tube bolt to 16 N.m (12 lb ft).

6. Install the oil level indicator into the tube.

CLUTCH PILOT BEARING INSTALLATION

Tools Required

J 38836 Pilot Bushing Installer/Clutch

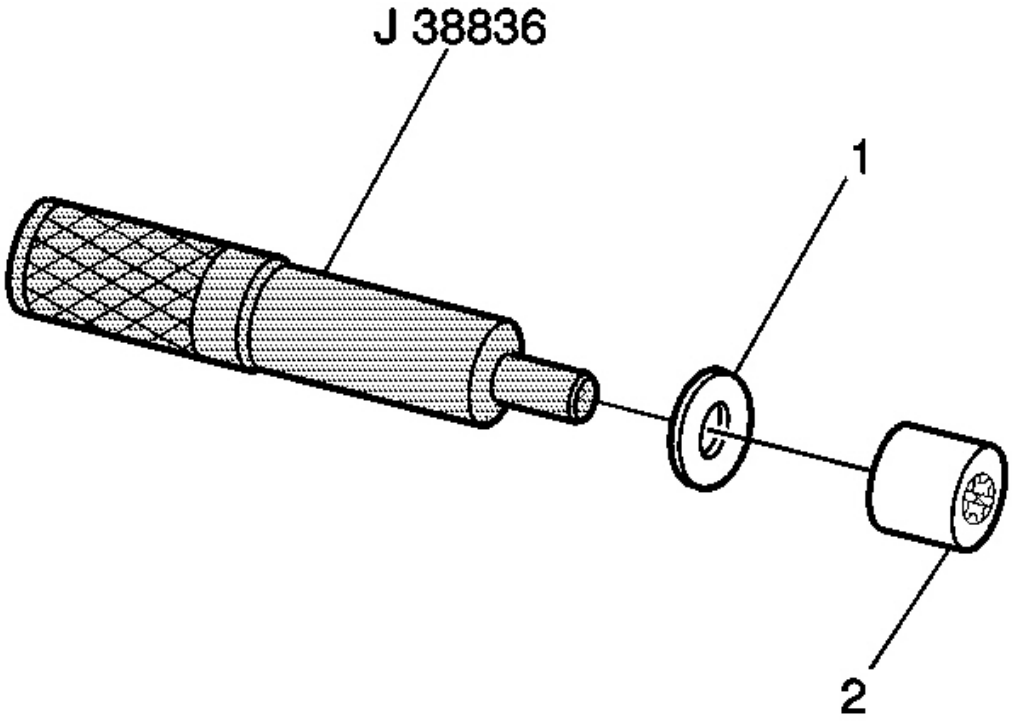

Fig. 153: 5/8 Inch Washer, Pilot Bearing &
Courtesy of GENERAL MOTORS CORP.

1. Install a 5/8 inch washer (1) onto the **J 38836** or equivalent.

   The washer serves as a stop against the crankshaft face and will assist in installing the bearing to the proper depth.

2. Install the new pilot bearing (2) onto the tool.

cardiagn.com

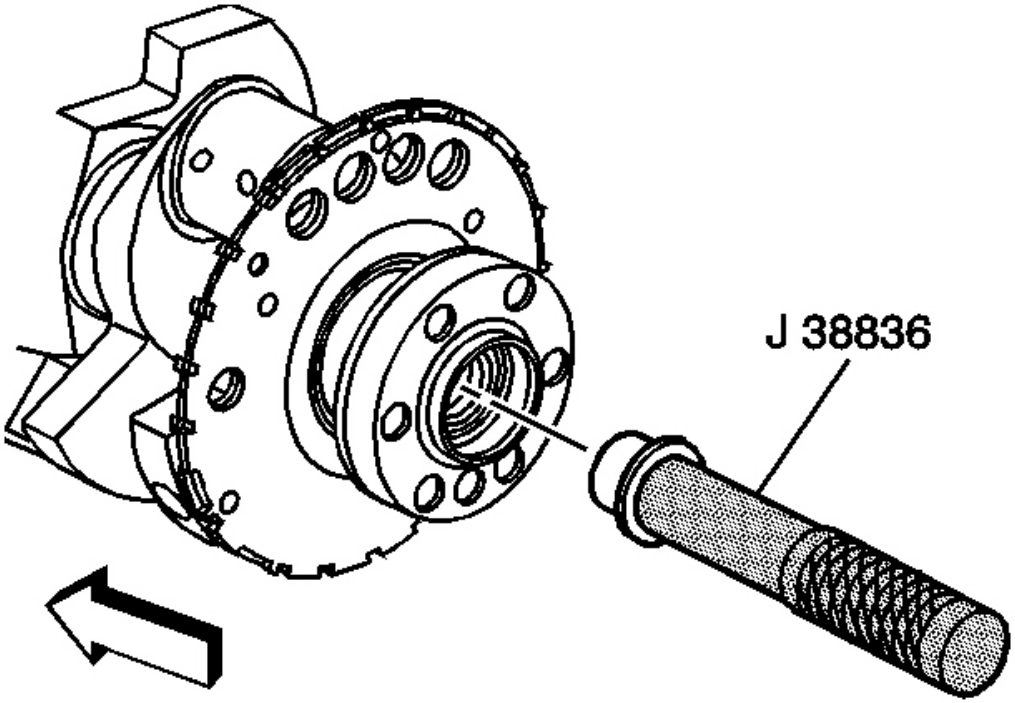

Fig. 154: J 38836 & Pilot Bearing
Courtesy of GENERAL MOTORS CORP.

3. Install the new pilot bearing into the crankshaft using the **J 38836** .

cardiagn.com

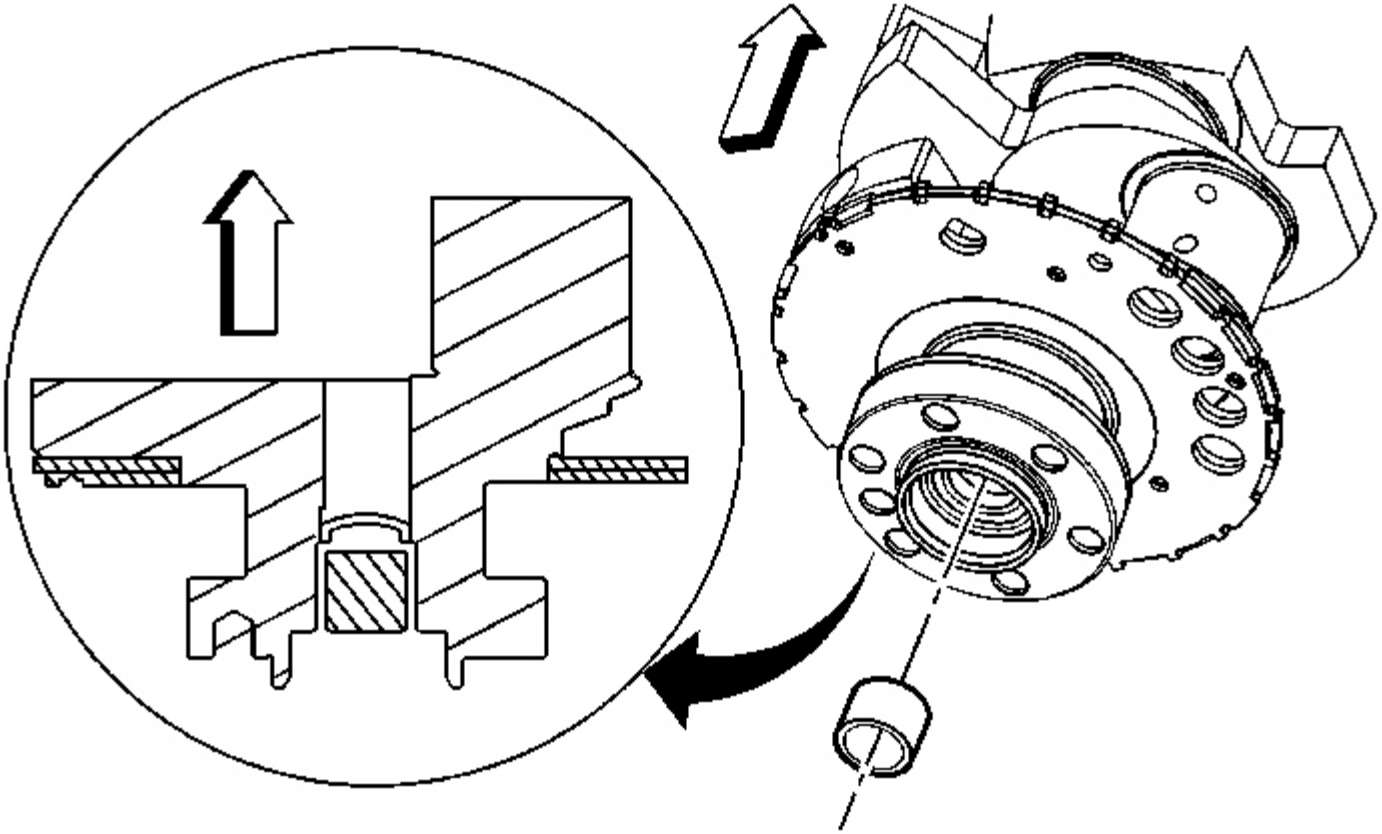

cardiagn.com

Fig. 155: Clutch Pilot Bearing & Rear Face Of Crankshaft
Courtesy of GENERAL MOTORS CORP.

4. Inspect the clutch pilot bearing for proper installation.

   A properly installed clutch pilot bearing will be installed until flush to the rear face of the crankshaft.

ENGINE FLYWHEEL INSTALLATION

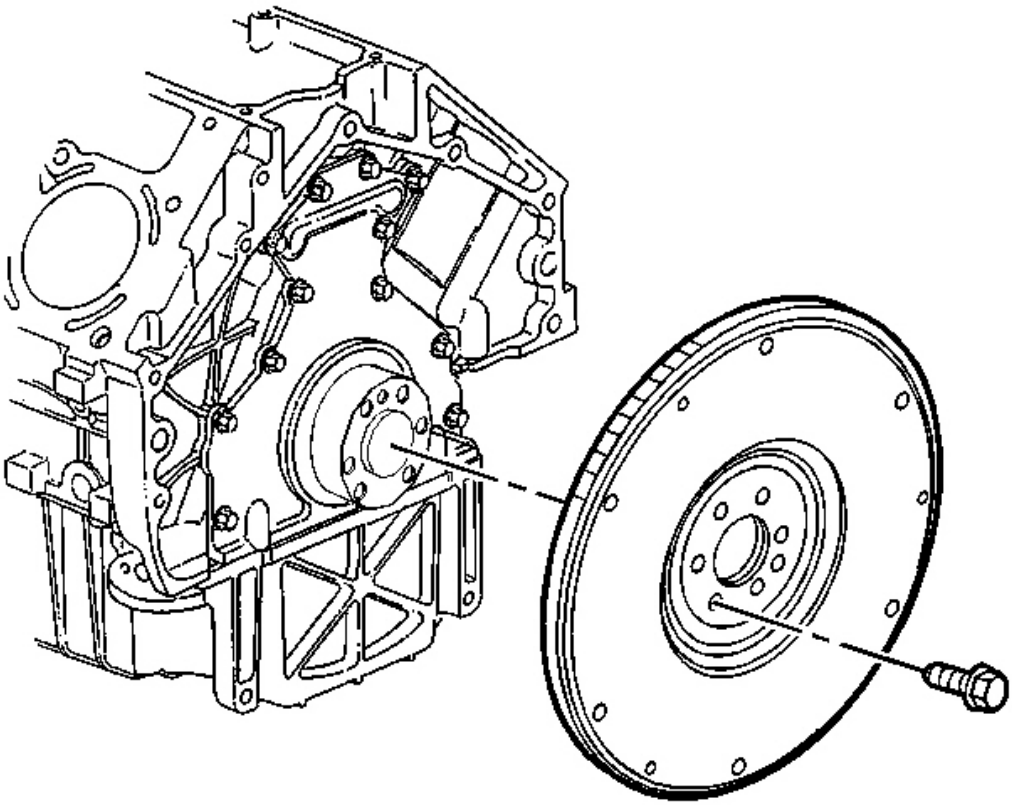

Fig. 156: View Of Engine Flywheel & Bolts (Manual Transmission)
Courtesy of GENERAL MOTORS CORP.

IMPORTANT:

- **For manual transmission applications, note the position and direction of the engine flywheel before removal. The flywheel does not use a locating pin for alignment. Mark or scribe the end of the crankshaft and the flywheel before component removal. The existing manual transmission engine flywheel must be installed to the**

cardiagn.com

original position and direction. The engine flywheel will not initially seat against the crankshaft flange, but will be pulled onto the crankshaft by the engine flywheel bolts. This procedure requires a three stage tightening process.

- **DO NOT remove the propshaft hub or flexplate from the automatic transmission engine flywheel. The flywheel, prop shaft hub, and flex plate are balanced as an assembly. If service is required, the entire flywheel assembly should be replaced.**

1. Install the manual transmission engine flywheel to the crankshaft. Refer to **Engine Balancing** .

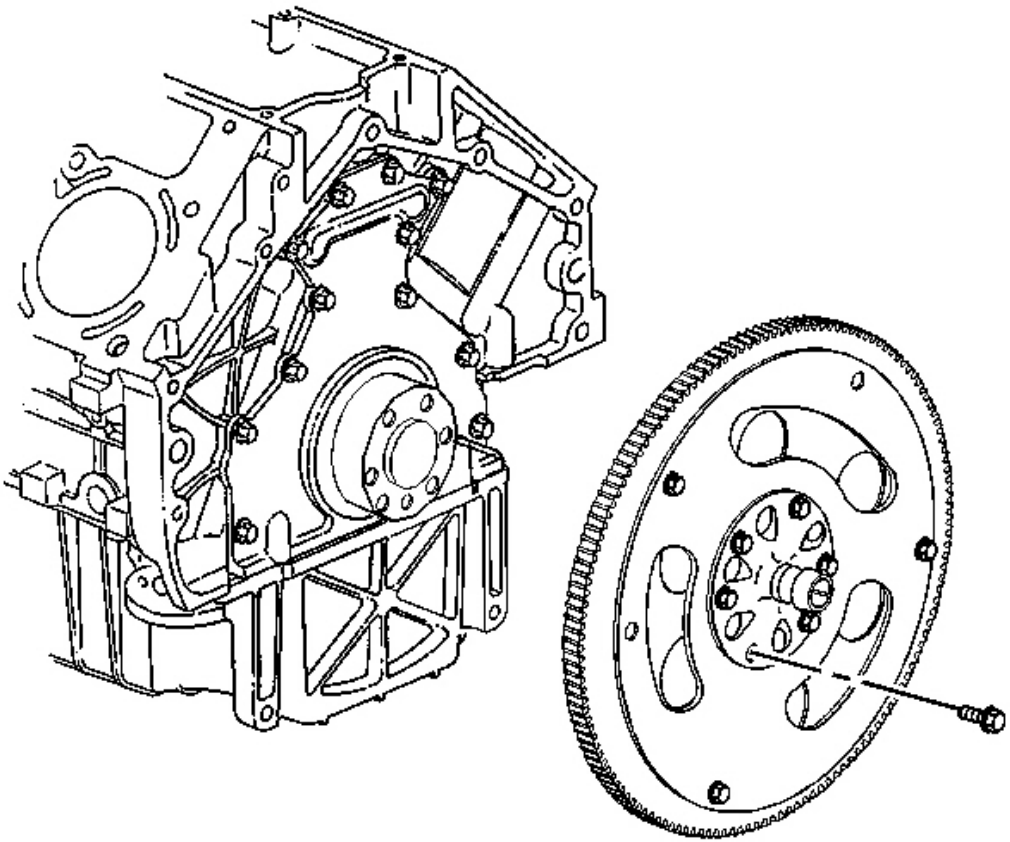

Fig. 157: Automatic Transmission Engine Flywheel & Crankshaft
Courtesy of GENERAL MOTORS CORP.

2. Install the automatic transmission engine flywheel to the crankshaft.

cardiagn.com

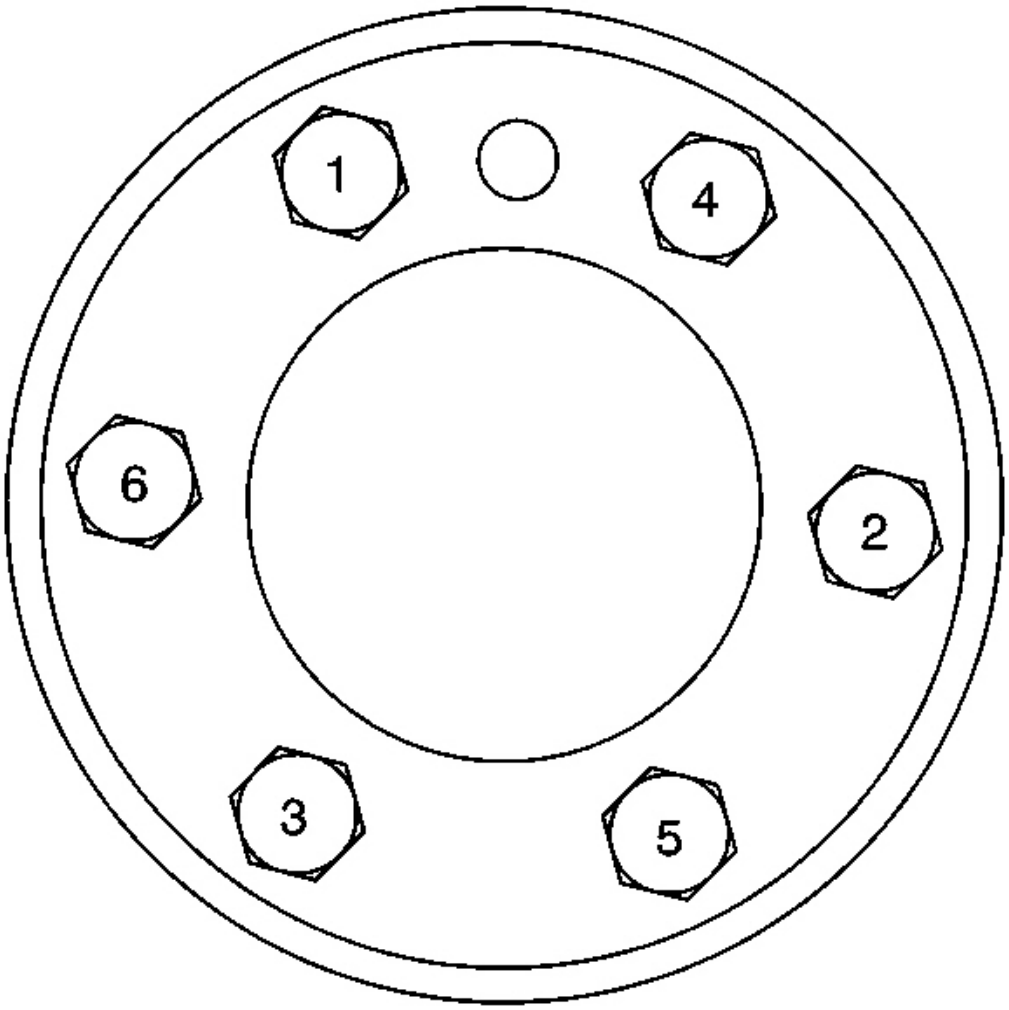

Fig. 158: Flywheel Bolt Tightening Sequence
Courtesy of GENERAL MOTORS CORP.

3. Apply threadlock GM P/N 12345382 (Canadian P/N 10953489) or equivalent to the threads of the flywheel bolts.

NOTE: **Refer to Fastener Notice in Cautions and Notices.**

4. Install the engine flywheel bolts.

Tighten:

cardiagn.com

1. Tighten the engine flywheel bolts first pass in sequence to 20 N.m (15 lb ft).
2. Tighten the engine flywheel bolts second pass in sequence to 50 N.m (37 lb ft).
3. Tighten the engine flywheel bolts final pass in sequence to 100 N.m (74 lb ft).

CRANKSHAFT BALANCER INSTALLATION

Tools Required

- **J 41665** Crankshaft Balancer and Sprocket Installer
- **J 42386-A** Flywheel Holding Tool
- **J 45059** Angle Meter

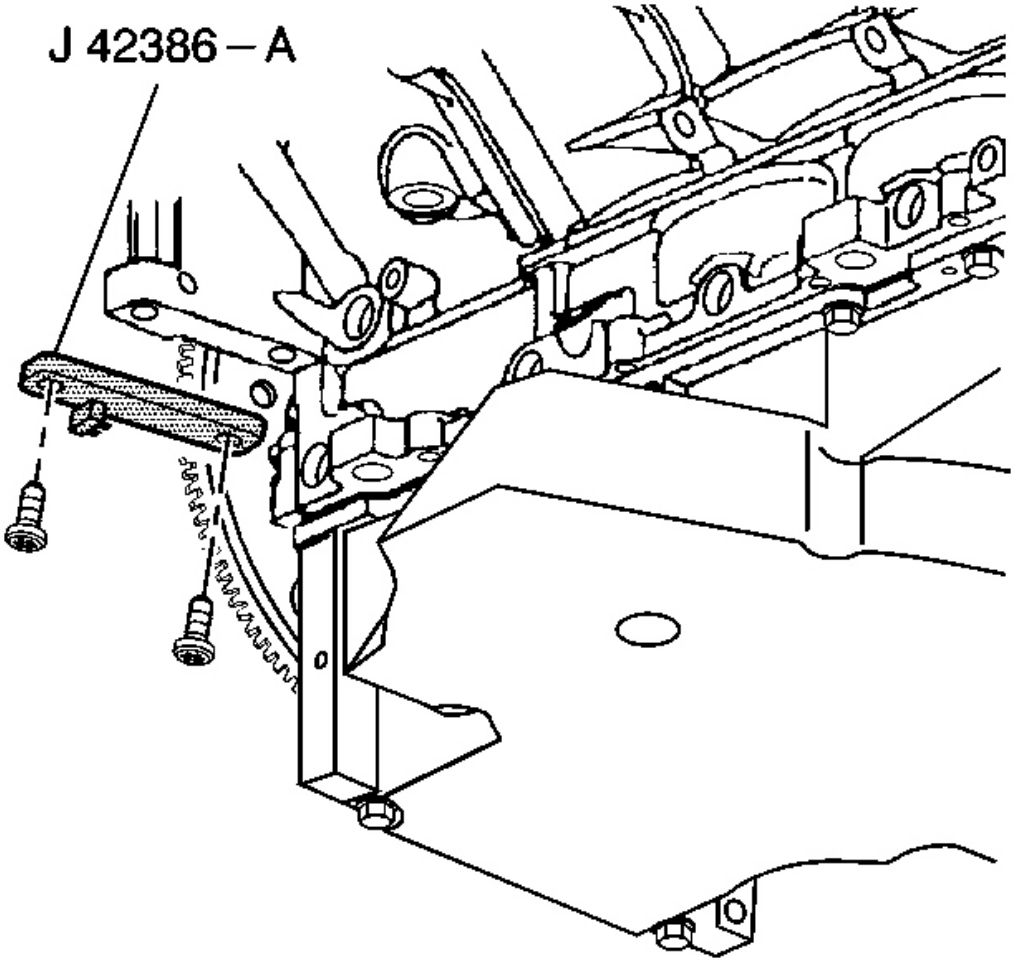

cardiagn.com

Fig. 159: Install J 42386 Crankshaft Balancer
Courtesy of GENERAL MOTORS CORP.

NOTE: **Refer to Fastener Notice in Cautions and Notices.**

IMPORTANT:

- **Note the position of the crankshaft balancer before removal, on manual transmission applications. The balancer does not use a key or keyway for positioning. Mark or scribe the end of the crankshaft and the balancer before removal. The crankshaft balancer must be installed to the original position. If replacing the crankshaft balancer, note the location of any existing balance weights, if applicable. Install new balance weights into the new crankshaft balancer, if applicable. Crankshaft balancer weights must be installed into the new balancer in the same location as the old balancer. A properly installed balance weight will be either flush or below flush with the face of the balancer.**
- **The crankshaft balancer installation and bolt tightening involves a 4 stage tightening process. The first pass ensures that the balancer is installed completely onto the crankshaft. The second, third and fourth passes tighten the new bolt to the proper torque.**
- **The used crankshaft balancer bolt will be used only during the first pass of the balancer installation procedure. Install a NEW crankshaft balancer bolt and tighten as described in the second, third and fourth passes of the balancer bolt tightening procedure.**
- **Ensure the teeth of the tool engage the engine flywheel teeth.**

1. Install the **J 42386-A** and bolts.

   Use 1 M10 - 1.5 x 120 mm and 1 M10 - 1.5 x 45 mm bolt for proper tool operation.

   Tighten: Tighten the **J 42386-A** bolts to 50 N.m (37 lb ft).

cardiagn.com

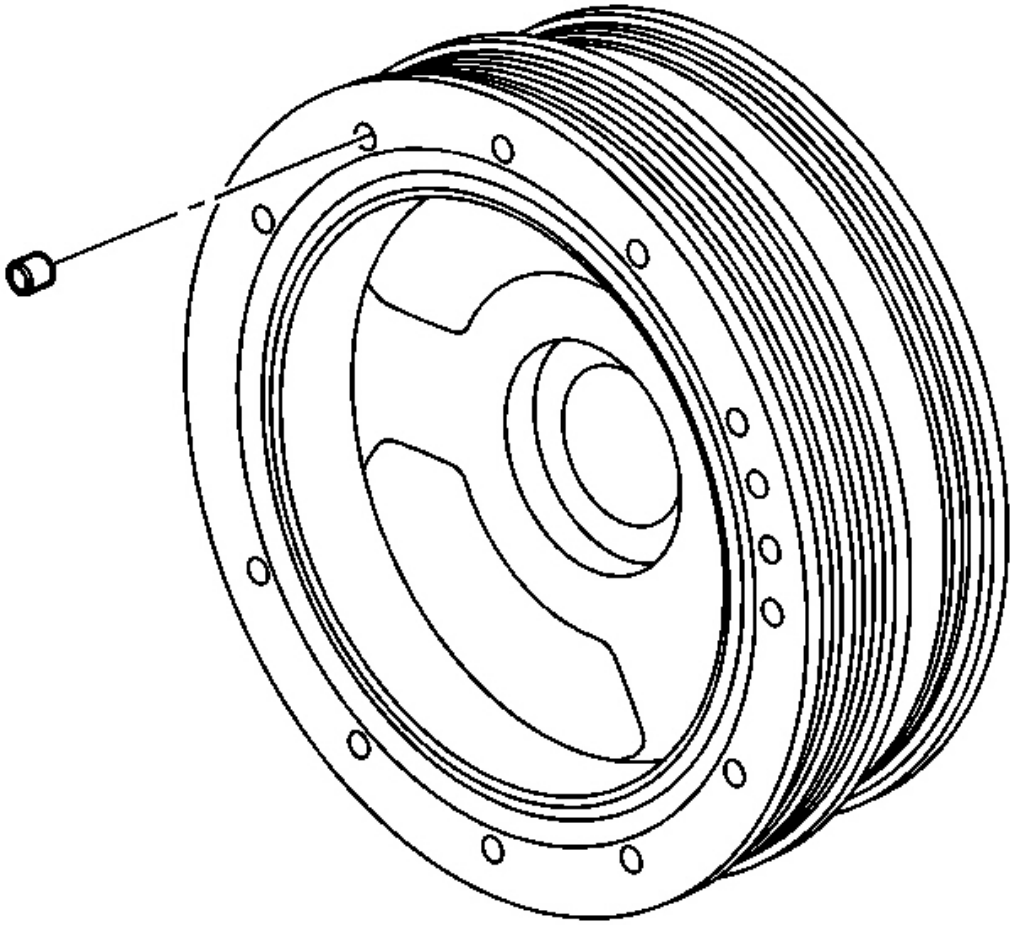

Fig. 160: Balance Weights
Courtesy of GENERAL MOTORS CORP.

2. Using the old balancer as a reference, mark or scribe the NEW balancer in the same location, if required.

   Install balance weights into the NEW balancer, if required. Refer to **Engine Balancing** and **Crankshaft Balancer Cleaning and Inspection** .

cardiagn.com

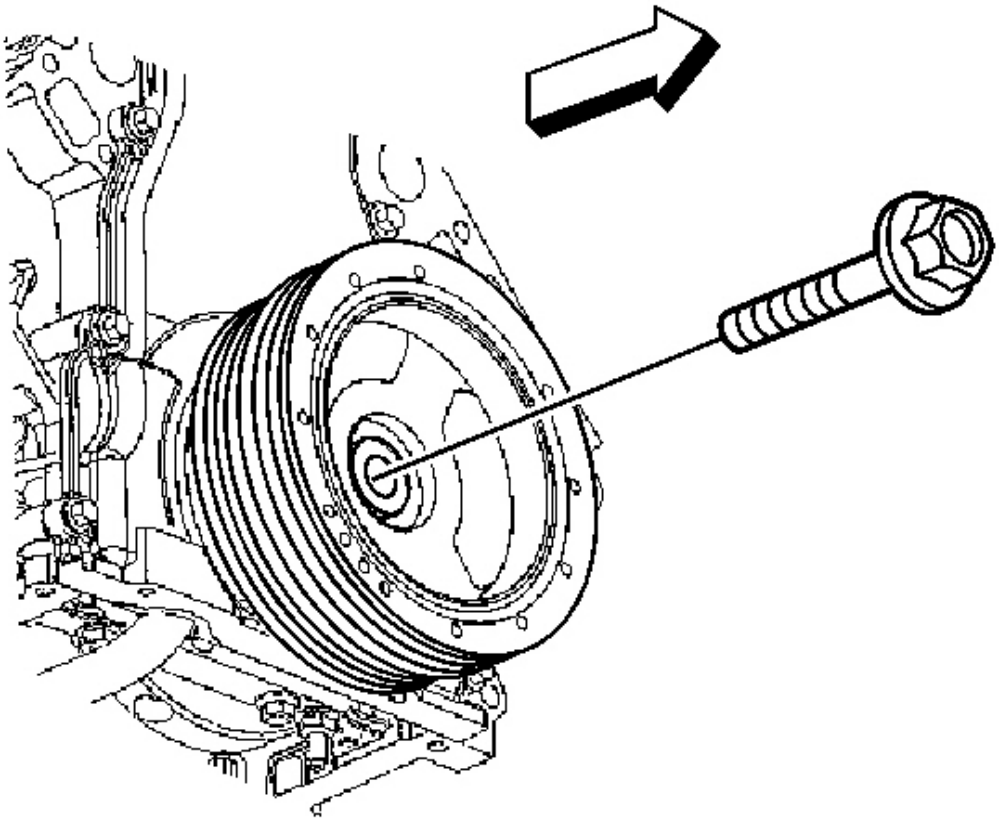

Fig. 161: Identifying Harmonic Balancer Bolt
Courtesy of GENERAL MOTORS CORP.

IMPORTANT:

- **Align the scribe mark on the balancer with the scribe mark on the crankshaft.**
- **The balancer should be positioned onto the end of the crankshaft, as straight as possible, prior to tool installation.**

3. Install the balancer onto the end of the crankshaft.

cardiagn.com

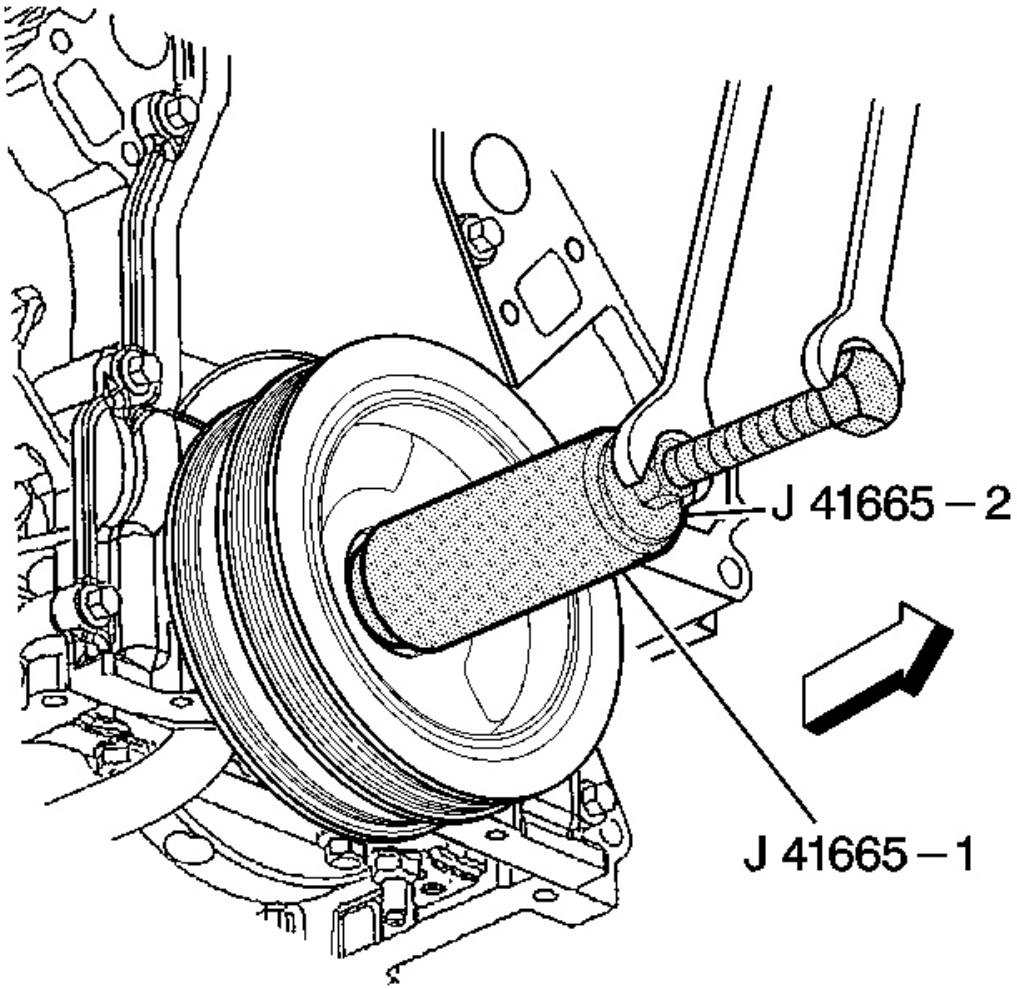

Fig. 162: View Of J 41665
Courtesy of GENERAL MOTORS CORP.

4. Use the **J 41665** in order to install the balancer.
    1. Assemble the threaded rod, nut, washer and installer.

       Insert the smaller end of the installer into the front of the balancer.

    2. Use a wrench and hold the hex end of the threaded rod.
    3. Use a second wrench and rotate the installation tool nut clockwise until the balancer is started onto crankshaft.
    4. Remove the tool and reverse the installation tool.

cardiagn.com

Position the larger end of the installer against the front of the balancer.

5. Use a wrench and hold the hex end of the threaded rod.
6. Use a second wrench and rotate the installation tool nut clockwise until the balancer is installed onto the crankshaft.
7. Remove the balancer installation tool.

cardiagn.com

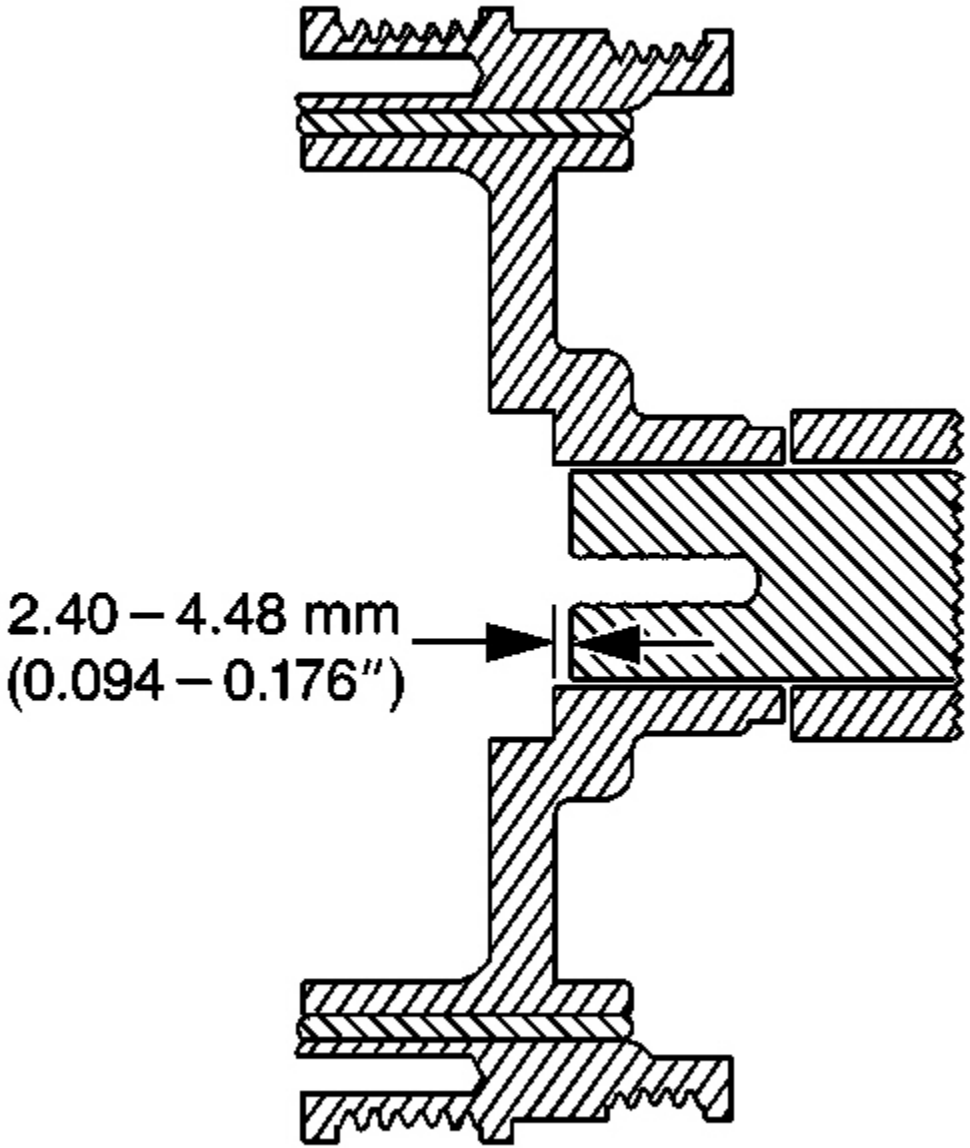

Fig. 163: View Of Balancer Proper Installation Position
Courtesy of GENERAL MOTORS CORP.

5. Install the used crankshaft balancer bolt.

   Tighten: Tighten the crankshaft balancer bolt to 330 N.m (240 lb ft).

cardiagn.com

6. Remove the used crankshaft balancer bolt.

IMPORTANT: The nose of the crankshaft should be recessed 2.40-4.48 mm (0.094-0.176 in) into the balancer bore.

7. Measure for a correctly installed balancer.

   If the balancer is not installed to the proper dimensions, install the **J 41665** and repeat the installation procedure.

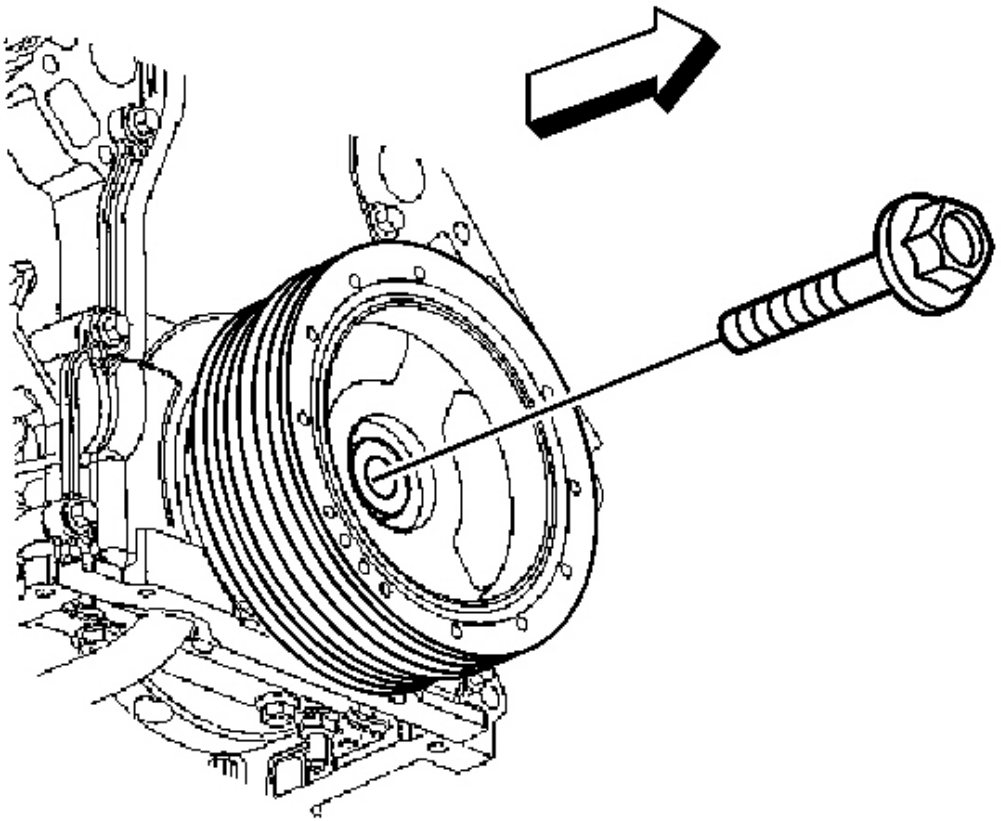

Fig. 164: Identifying Harmonic Balancer Bolt
Courtesy of GENERAL MOTORS CORP.

8. Install the NEW crankshaft balancer bolt.

   Tighten:

cardiagn.com

1. Tighten the crankshaft balancer bolt a first pass to 50 N.m (37 lb ft).
2. Tighten the crankshaft balancer bolt a second pass to 140 degrees using the **J 45059** .

9. Remove the **J 42386-A** .

cardiagn.com