Fastener Tightening Specifications

Application	Ref No.*	Quantity	Size	Specification	
				Metric	English
Case Extension to Case Assembly	16	6	M10x1.5x40	55 N·m	41 lb ft
Control Solenoid Valve Assembly and Control Valve Lower Body Assembly to Control Valve Upper Body Assembly	310	6	M5x0.8x55	8 N·m	71 lb in
Control Solenoid Valve Assembly and Control Valve Lower Body Assembly to Control Valve Upper Body Assembly	309	10	M5x0.8x45	8 N·m	71 lb in
Control Solenoid Valve Heat Sink to Valve Body	312	2	M5x0.8x53	8 N·m	71 lb in
Control Valve Upper Body Assembly to Control Valve Lower Body Assembly	301	12	M5x0.8x36	8 N·m	71 lb in
Control (with Body and Valve) Valve Assembly to Case Assembly	22	6	M5x0.8x73	8 N·m	71 lb in
Fluid Cooler Pipe Assembly to Transmission Case Bolt	--	--	--	22 N·m	16 lb ft
Fluid Pan Assembly to Case Assembly (6L50)	30	17	M6x1.0x20	9 N·m	80 lb in
Fluid Pan Assembly to Case Assembly (6L90)	30	18	M6x1.0x20	9 N·m	80 lb in
Fluid Pump Cover Assembly to Torque Converter Housing	231	13	M6x1.0x40	11 N·m	97 lb in
Front Prop Shaft Flange Bolt to Output Shaft	43	1	M12x1.25x80	105 N·m	77 lb ft
Input and Output Speed Sensor Assembly to Control Valve Upper Body Assembly	302	2	M6x1.0x20	12 N·m	106 lb in
Line Pressure Test Hole Plug to Torque Converter Housing	202	1	1/8-27 NPTF	11 N·m	97 lb in
Manual Shaft Detent Assembly to Valve Body	23	1	M6x1.0x14.5	12 N·m	106 lb in
Manual Shift Shaft Nut (AWD)	--	1	--	20 N·m	15 lb ft
Manual Shift Shaft Nut (RWD)	--	1	--	15 N·m	11 lb ft
Prop Shaft Trans Flange Nut to Output Shaft	39	1	M22x1.5x14	105 N·m	77 lb ft
Torque Converter Housing Assembly to Case Assembly (6L50)	3	8	M8x1.25x50	31 N·m	23 lb ft
Torque Converter Housing Assembly to Case Assembly (6L90)	3	9	M10x1.5x50	72 N·m	53 lb ft
Torque Converter to Flex Plate Bolts	--	--	--	63 N·m	46 lb ft
Transmission Control Lever Knob Screw	--	1	--	3 N·m	27 lb in
Transmission Mount Support to Body					

© 2010 General Motors Corporation. All rights reserved.

Bolts	--	--	--	60 N·m	44 lb ft
Transmission Mount to Transmission Bolts - AWD	--	--	--	110 N·m	81 lb ft
Transmission Mount to Transmission Bolts - RWD	--	--	--	60 N·m	44 lb ft
Transmission Mount Travel Restrictor Bolt	--	1	--	90 N·m	66 lb ft
Transmission Mount Nut	--	4	--	58 N·m	43 lb ft
Trans Oil Level Check Plug to Fluid Pan Assembly	31	1	M12x1.75	25 N·m	18 lb ft
Transmission Shift Control Linkage Adjustment Nut	--	1	--	9 N·m	80 lb in
Transmission Shift Control Nut	--	4	--	9 N·m	80 lb in
Transmission to Engine Bolts	--	--	--	50 N·m	37 lb ft
*Reference number refers to the component callout number in Disassembled Views					

Transmission General Specifications

Name	6L50	6L90
RPO Codes	MYB	MYD
Production Location	Ypsilanti, Michigan (USA)	Ypsilanti, Michigan (USA)
Transmission Drive	Rear Wheel Drive	Rear Wheel Drive
1st Gear Ratio	4.065	4.027
2nd Gear Ratio	2.371	2.364
3rd Gear Ratio	1.551	1.532
4th Gear Ratio	1.157	1.152
5th Gear Ratio	0.853	0.852
6th Gear Ratio	0.674	0.667
Reverse	3.200	3.064
Torque Converter Size - Diameter of Torque Converter Turbine	245/258 mm	300 mm
Pressure Taps	Line Pressure	Line Pressure
Transmission Fluid Type	DEXRON VI®	DEXRON VI®
Transmission Type: 6	Six Forward Gears	Six Forward Gears
Transmission Type: L	Longitude Mount	Longitude Mount
Transmission Type: 50	Product Series	Product Series
Position Quadrant	P, R, N, D, M	P, R, N, D, M
Case Material	Die Cast Aluminum	Die Cast Aluminum
Transmission Net Weight (Approximate)	90 kg (198 lb)	110 kg (243 lb)
Maximum Trailer Towing Capacity	Refer to applicable owner's manual	Refer to applicable owner's manual

Fluid Capacity Specifications (6L50)

Application	Specification	
	Metric	English
Pan Removal and Filter Replacement - Approximate Capacity	6.3 liters	6.7 quarts
Overhaul - Approximate Capacity	10.6 liters	11.2 quarts
Complete Trans System - Approximate Capacity	10.8 liters	11.4 quarts
Complete Trans System (Heavy Duty Cooling) - Approximate Capacity	11 liters	11.6 quarts

Fluid Pump Selective Specifications

Fluid Pump Selective Specifications

Size Classification	Thickness (mm)	Thickness (in)
Note: • Rotor and slide must be chosen from the same size classification as the oil pump body. • Allowable rotor and slide to fluid pump body end play is as follows: **Specification** • Slide to Fluid Pump Body End Play -- 0.020-0.051 mm (0.0008-0.0020 in) • Rotor to Fluid Pump Body End Play -- 0.020-0.051 mm (0.0008-0.0020 in) The fluid pump assembly has selective rotor and slide components. These components are chosen based on pump body dimensions. Fluid pump rotor and slide components are available in three size classifications (1, 2, 3) with the following tolerances:		
Rotor Selection		
1	17.948-17.961	0.7066-0.7071
2	17.961-17.974	0.7071-0.7076
3	17.974-17.987	0.7076-0.7081
Slide Selection		
1	17.948-17.961	0.7066-0.7071
2	17.961-17.974	0.7071-0.7076
3	17.974-17.987	0.7076-0.7081
Fluid Pump Body Depth		
1	17.98-17.994	0.7079-0.7084
2	17.994-18.007	0.7084-0.7089
3	18.007-18.033	0.7089-0.7100

Clutch Backing Plate Retaining Ring Specifications (6L50)

Table 1: 3-5 Reverse Clutch
Table 2: 1-2-3-4 Clutch
Table 3: 4-5-6 Clutch
Table 4: 2-6 Clutch
Table 5: Low/Reverse Clutch

3-5 Reverse Clutch

Clutch Pack Travel Specification - 1.20-1.74 mm (0.047-0.069 in)		
Retaining Ring Thickness		O.D. Color
Metric	English	
Note: After measuring clutch pack travel, determine if the measurement is within the specification. If the measurement is not within the specification, measure the thickness of the existing retaining ring, and then choose a thicker or thinner retaining ring that will bring the measurement within specification.		
2.24-2.34 mm	0.088-0.092 in	Purple - Purple
2.25-2.35 mm	0.089-0.093 in	Light Green - Light Green
2.47-2.57 mm	0.097-0.101 in	Gray - Gray
2.69-2.79 mm	0.106-0.110 in	Yellow - Yellow
2.91-3.01 mm	0.115-0.119 in	Orange - Orange
3.13-3.23 mm	0.123-0.127 in	Light Blue - Light Blue
3.35-3.45 mm	0.132-0.136 in	White - White
3.57-3.67 mm	0.141-0.144 in	Yellow - Purple
3.79-3.89 mm	0.149-0.153 in	Light Blue - Purple

1-2-3-4 Clutch

Clutch Pack Travel Specification - 1.50-1.98 mm (0.059-0.078 in)		
Retaining Ring Thickness		O.D. Color
Metric	English	
Note: After measuring clutch pack travel, determine if the measurement is within the specification. If the measurement is not within the specification, measure the thickness of the existing retaining ring, and then choose a thicker or thinner retaining ring that will bring the measurement within specification.		
2.25-2.35 mm	0.089-0.093 in	Light Green - Light Green
2.47-2.57 mm	0.097-0.101 in	Gray - Gray
2.69-2.79 mm	0.106-0.110 in	Yellow - Yellow
2.91-3.01 mm	0.115-0.119 in	Orange - Orange
3.13-3.23 mm	0.123-0.127 in	Light Blue - Light Blue
3.35-3.45 mm	0.132-0.136 in	White - White
3.57-3.67 mm	0.141-0.144 in	Yellow - Purple
3.79-3.89 mm		ue - Purple

4-5-6 Clutch

Clutch Pack Travel Specification - 1.17-1.76 mm (0.046-0.069 in)		
Retaining Ring Thickness		O.D. Color
Metric	English	
Note: After measuring clutch pack travel, determine if the measurement is within the specification. If the measurement is not within the specification, measure the thickness of the existing retaining ring, and then choose a thicker or thinner retaining ring that will bring the measurement within specification.		
2.24-2.34 mm	0.088-0.092 in	Purple - Purple
2.52-2.62 mm	0.099-0.103 in	Light Green - Light Green
2.80-2.90 mm	0.110-0.114 in	Gray - Gray
3.08-3.18 mm	0.121-0.125 in	Yellow - Yellow
3.36-3.46 mm	0.132-0.136 in	Orange - Orange
3.64-3.74 mm	0.143-0.147 in	Light Blue - Light Blue
3.92-4.02 mm	0.154-0.158 in	White - White
4.20-4.30 mm	0.165-0.169 in	Yellow - Purple

2-6 Clutch

Clutch Pack Travel Specification - 1.20-1.96 mm (0.047-0.077 in)		
Retaining Ring Thickness		O.D. Color
Metric	English	
Note: After measuring clutch pack travel, determine if the measurement is within the specification. If the measurement is not within the specification, measure the thickness of the existing retaining ring, and then choose a thicker or thinner retaining ring that will bring the measurement within specification.		
1.64-1.74 mm	0.065-0.069 in	Orange
1.92-2.02 mm	0.076-0.080 in	Yellow Stripe
2.20-2.30 mm	0.087-0.091 in	Light Blue Stripe
2.48-2.58 mm	0.098-0.102 in	Purple Stripe
2.76-2.86 mm	0.109-0.113 in	Green

Low / Reverse Clutch

Clutch Pack Travel Specification - 1.65-2.33 mm (0.065-0.092 in)		
Retaining Ring Thickness		O.D. Color
Metric	English	
Note: After measuring clutch pack travel, determine if the measurement is within the specification. If the measurement is not within the specification, measure the thickness of the existing retaining ring, and then choose a thicker or thinner retaining ring that will bring the measurement within specification.		
1.98-2.08 mm	0.078-0.082 in	Orange
2.28-2.38 mm	0.090-0.094 in	Yellow Stripe
2.58-2.68 mm	0.102-0.106 in	Light Blue Stripe
2.88-2.98 mm	0.113-0.117 in	Purple Stripe
3.18-3.28 mm	0.125-0.129 in	Green

Clutch Backing Plate Retaining Ring Specifications (6L90)

Table 1: 3-5 Reverse Clutch
Table 2: 1-2-3-4 Clutch
Table 3: 4-5-6 Clutch
Table 4: Low/Reverse Clutch

3-5 Reverse Clutch

Clutch Pack Travel Specification - 1.50-2.08 mm (0.059-0.082 in)		
Retaining Ring Thickness		O.D. Color
Metric	English	
Note: After measuring clutch pack travel, determine if the measurement is within the specification. If the measurement is not within the specification, measure the thickness of the existing retaining ring, and then choose a thicker or thinner retaining ring that will bring the measurement within specification.		
1.61-1.71 mm	0.063-0.067 in	Gray
1.88-1.98 mm	0.074-0.078 in	Light Green
2.15-2.25 mm	0.085-0.089 in	Yellow
2.42-2.52 mm	0.095-0.099 in	None
2.69-2.79 mm	0.106-0.110 in	Purple

1-2-3-4 Clutch

Clutch Pack Travel Specification - 1.79-2.25 mm (0.070-0.089 in)		
Retaining Ring Thickness		O.D. Color
Metric	English	
Note: After measuring clutch pack travel, determine if the measurement is within the specification. If the measurement is not within the specification, measure the thickness of the existing retaining ring, and then choose a thicker or thinner retaining ring that will bring the measurement within specification.		
2.42-2.52 mm	0.095-0.099 in	None
2.69-2.79 mm	0.106-0.110 in	Purple
2.96-3.06 mm	0.117-0.120 in	Light Blue
3.23-3.33 mm	0.127-0.131 in	Orange
3.50-3.60 mm	0.138-0.142 in	White

4-5-6 Clutch

Clutch Pack Travel Specification - 1.18-1.79 mm (0.059-0.082 in)		
Retaining Ring Thickness		O.D. Color
Metric	English	
Note: After measuring clutch pack travel, determine if the measurement is within the specification. If the measurement is not within the specification, measure the thickness of the existing retaining ring, and then choose a thicker or thinner retaining ring that will bring the measurement within specification.		

1.60-1.70 mm	0.063-0.067 in	Yellow
2.02-2.12 mm	0.080-0.083 in	None
2.44-2.54 mm	0.096-0.100 in	Purple

Low / Reverse Clutch

Clutch Pack Travel Specification - 1.56-2.22 mm (0.061-0.087 in)		
Retaining Ring Thickness		O.D. Color
Metric	English	
Note: After measuring clutch pack travel, determine if the measurement is within the specification. If the measurement is not within the specification, measure the thickness of the existing retaining ring, and then choose a thicker or thinner retaining ring that will bring the measurement within specification.		
1.85-1.95 mm	0.073-0.077 in	Yellow
2.26-2.36 mm	0.089-0.093 in	None
2.67-2.77 mm	0.105-0.109 in	Purple

Range Reference

Range Reference Table

Range	Park	Reverse	Neutral	Drive						
				1st Braking	1st	2nd	3rd	4th	5th	6th
1-2-3-4 Clutch	--	--	--	Applied	Applied	Applied	Applied	Applied	--	--
3-5 Reverse Clutch	--	Applied	--	--	--	--	Applied	--	Applied	--
4-5-6 Clutch	--	--	--	--	--	--	--	Applied	Applied	Applied
2-6 Clutch	--	--	--	--	--	Applied	--	--	--	Applied
Low and Reverse Clutch	Applied*	Applied	Applied*	Applied	--	--	--	--	--	--
Low Clutch Sprag	--	--	--	Holding	Holding	--	--	--	--	--
* = Applied with NO load										

Shift Solenoid Valve State and Gear Ratio

Gear	Shift SOL 1	Shift SOL 2	1-2-3-4 CL PC SOL 5 N.L.	2-6 CL PC SOL 4 N.L.	3-5 REV CL PC SOL 2 N.H.	LOW REV 4-5-6 CL PC SOL 3 N.H.	Gear Ratio
Park	ON	ON	OFF	OFF	OFF	ON	--
Reverse	ON	OFF	OFF	OFF	ON	ON	3.064
Neutral	ON	ON	OFF	OFF	OFF	ON	--
1st Braking	ON	ON	ON	OFF	OFF	ON	4.027
1st	OFF	ON	ON	OFF	OFF	OFF	4.027
2nd	OFF	ON	ON	ON	OFF	OFF	2.364
3rd	OFF	ON	ON	OFF	ON	OFF	1.532
4th	OFF	ON	ON	OFF	OFF	ON	1.152
5th	OFF	ON	OFF	OFF	ON	ON	0.852
6th	OFF	ON	OFF	ON	OFF	ON	0.667

For shift solenoids 1 and 2, "ON" = Solenoid Energized (Pressurized) "OFF" = Solenoid De-energized (No Pressure).

For pressure control solenoids, "ON" = Pressurized, "OFF" = No Pressure

Transmission Fluid Pressure Switch Logic

Transmission Fluid Pressure (TFP) Switch Logic

Gear	TFP Switch States			
	TFP SW1	*TFP SW3	TFP SW4	TFP SW5
Park	High	Low	Low	Low
Reverse	Low	Low	Low	Low
Neutral	High	Low	Low	Low
Drive 1st - Engine Braking	High	High	Low	Low
Drive 1st	High	High	Low	High
Drive 2nd	High	Low	Low	High
Drive 3rd	Low	High	Low	High
Drive 4th	High	High	Low	Low
Drive 5th	Low	High	High	Low
Drive 6th	High	High	High	Low
Drive 6th (Possible additional gear state)	High	Low	High	Low

High = 12V (Switch Open or Pressurized)

Low = 0V (Switch Closed or No Pressure)

Note: All TFP switches are normally closed (NC)

*TFP switch 2 does not exist

Transmission Internal Mode Switch Logic

Gear Selector Position	Signal A	Signal B	Signal C	Signal P
Park	LOW	HI	HI	LOW
Park/Reverse	LOW	LOW	HI	LOW
Reverse	LOW	LOW	HI	HI
Reverse/Neutral	HI	LOW	HI	HI
Neutral	HI	LOW	HI	LOW
Neutral/Drive 6	HI	LOW	LOW	LOW
Drive 6	HI	LOW	LOW	HI
Drive 6/Drive 4	LOW	LOW	LOW	HI
Drive 4	LOW	LOW	LOW	LOW
Drive 4/Drive 3	LOW	HI	LOW	LOW
Drive 3	LOW	HI	LOW	HI
Drive 3/Drive 2	HI	HI	LOW	HI
Drive 2	HI	HI	LOW	LOW
Open	HI	HI	HI	HI
Invalid	HI	HI	HI	LOW
Invalid	LOW	HI	HI	HI

HI = Ignition voltage

LOW = 0 volts

Component Location

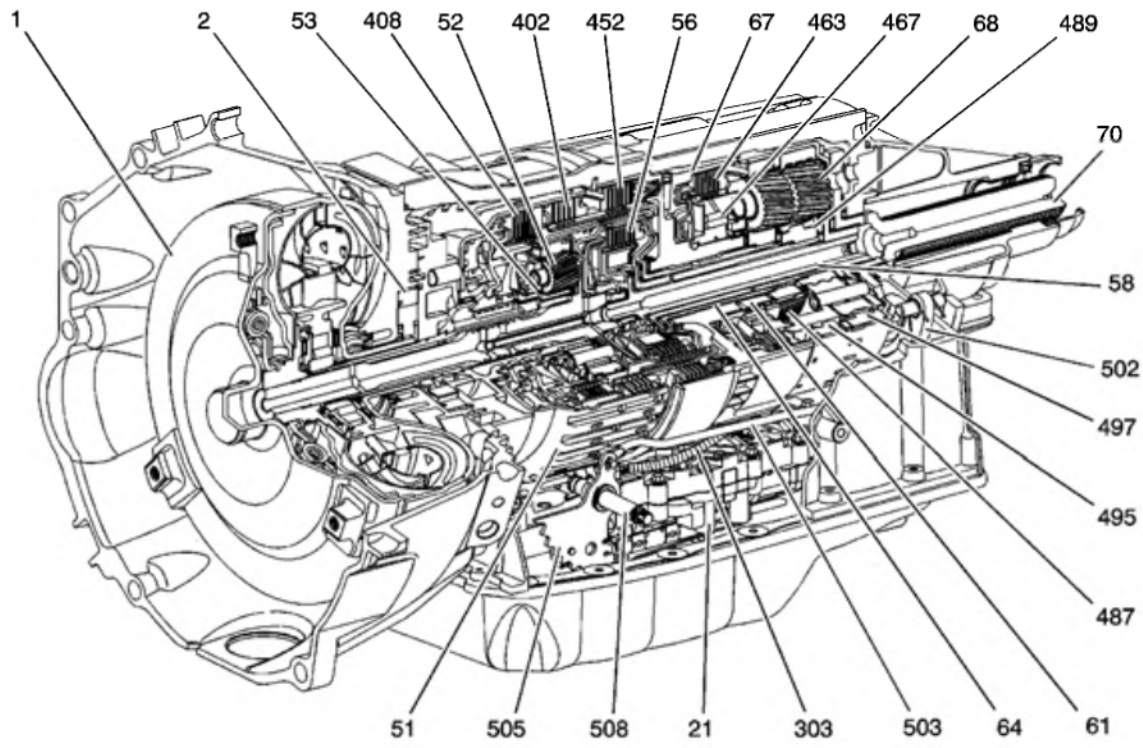

(1) Torque Converter Assembly
(2) Torque Converter (with Fluid Pump) Housing Assembly
(21) Control (with Body and Valve) Valve Assembly
(51) 1-2-3-4 and 3-5 Reverse Clutch Assembly
(52) Input Carrier Assembly
(53) Input Sun Gear
(56) 4-5-6 (w/Turbine Shaft) Clutch Assembly
(58) 4-5-6 Clutch (w/Output Carrier Shaft and Dampener) Hub Assembly
(61) 1-2-3-4 Clutch (w/Output Carrier Inner Sun Gear Shaft) Hub Assembly
(64) 2-6 and 3-5 Reverse Clutch (w/Output Carrier Outer Sun Gear Shaft) Hub Assembly
(67) Center (w/2-6 Low and Reverse Clutch) Support Assembly
(68) Output Carrier Assembly
(70) Output Shaft Assembly
(303) A/Trans Input and Output Speed Sensor Assembly
(402) 3-5 Reverse Clutch Plate Assembly
(408) 1-2-3-4 Clutch Plate Assembly
(452) 2-6 Clutch Plate Assembly
(463) Low and Reverse Clutch Plate Assembly

(467) Low Clutch Sprag Assembly
(487) Output Carrier Front Sun Gear
(489) Output Carrier Rear Sun Gear
(495) Output Carrier Internal Front Gear
(497) Output Carrier Internal Rear Gear
(502) Park Pawl
(503) Park Pawl Actuator Assembly
(505) Manual Shaft Detent Lever Assembly
(508) Manual Shift Shaft

Bushing, Bearing, and Washer Locations (6L50)

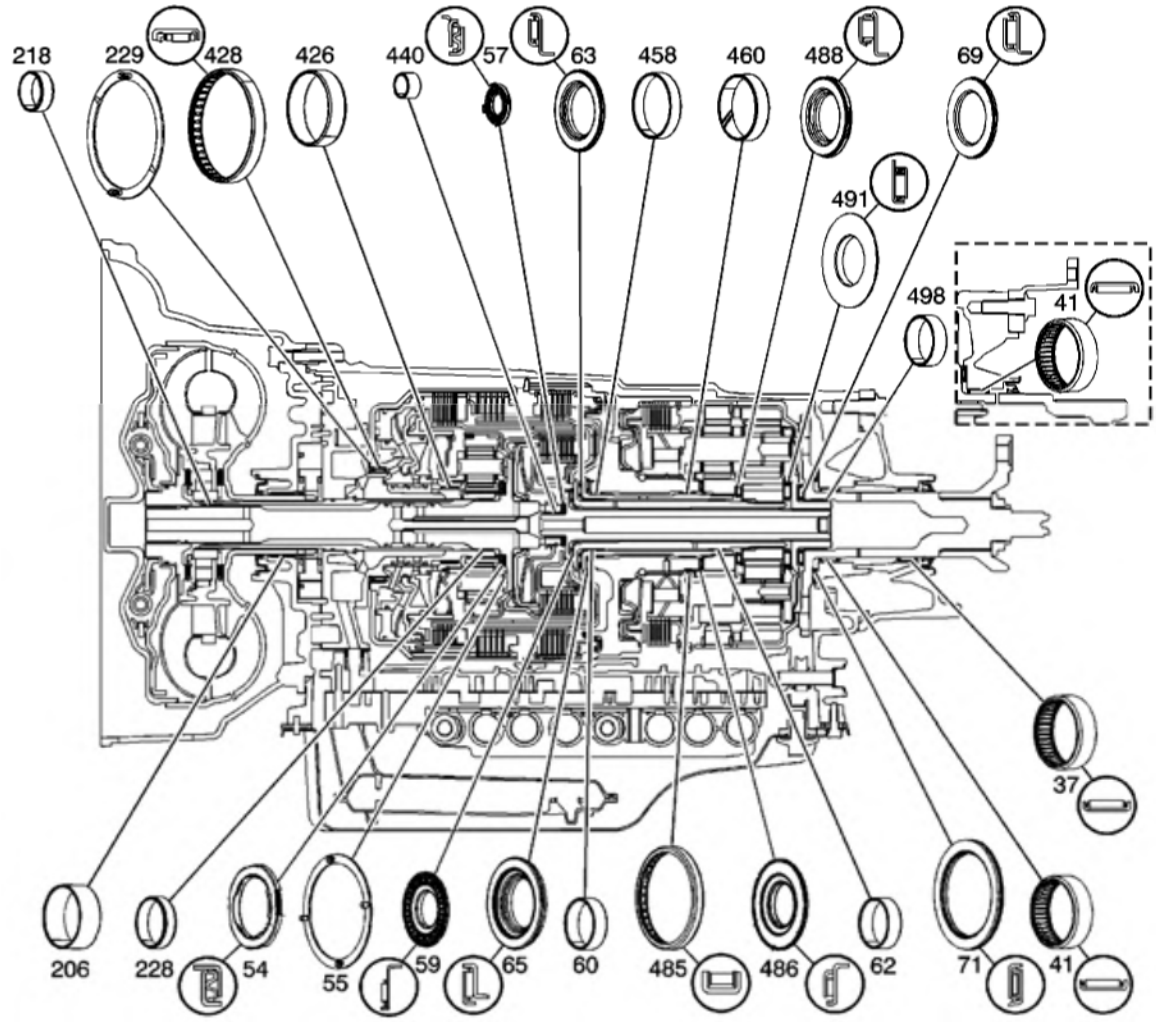

(37) Output Shaft Bearing Assembly - 2WD Models Only
(41) Output Shaft Bearing Assembly - Case
(54) Input Sun Gear Thrust Bearing
(55) Input Sun Gear Thrust Washer
(57) Turbine Shaft Thrust Bearing Assembly
(59) 4-5-6 Clutch Hub Thrust Bearing Assembly
(60) Output Carrier Inner Sun Gear Shaft (Front) Bushing
(62) Output Carrier Inner Sun Gear Shaft Bushing
(63) 1-2-3-4 Clutch Hub Thrust Bearing Assembly
(65) 2-6 and 3-5 Reverse Clutch Hub Thrust Bearing Assembly
(69) Output Carrier Thrust Bearing Assembly
(71) Output Shaft Thrust Bearing Assembly

(206) Torque Converter Bushing
(218) Turbine Shaft Front Bushing
(228) Turbine Shaft Rear Bushing
(229) 1-2-3-4 and 3-5 Reverse Clutch Housing Thrust Washer
(426) 1-2-3-4 and 3-5 Reverse Clutch Housing Rear Bushing
(428) 1-2-3-4 and 3-5 Reverse Clutch Bearing Assembly
(440) Output Carrier Shaft Housing Bushing
(458) Output Carrier Outer Sun Gear Shaft (Front) Bushing
(460) Output Carrier Outer Sun Gear Shaft Rear Bushing
(485) Center Support Roller Bearing Assembly
(486) Output Carrier Front Sun Gear Thrust Bearing Assembly
(488) Output Carrier Front Sun Gear Rear Thrust Bearing Assembly
(491) Output Carrier Rear Sun Gear Thrust Bearing - Captured
(498) Output Carrier Bushing

Bushing, Bearing, and Washer Locations (6L90)

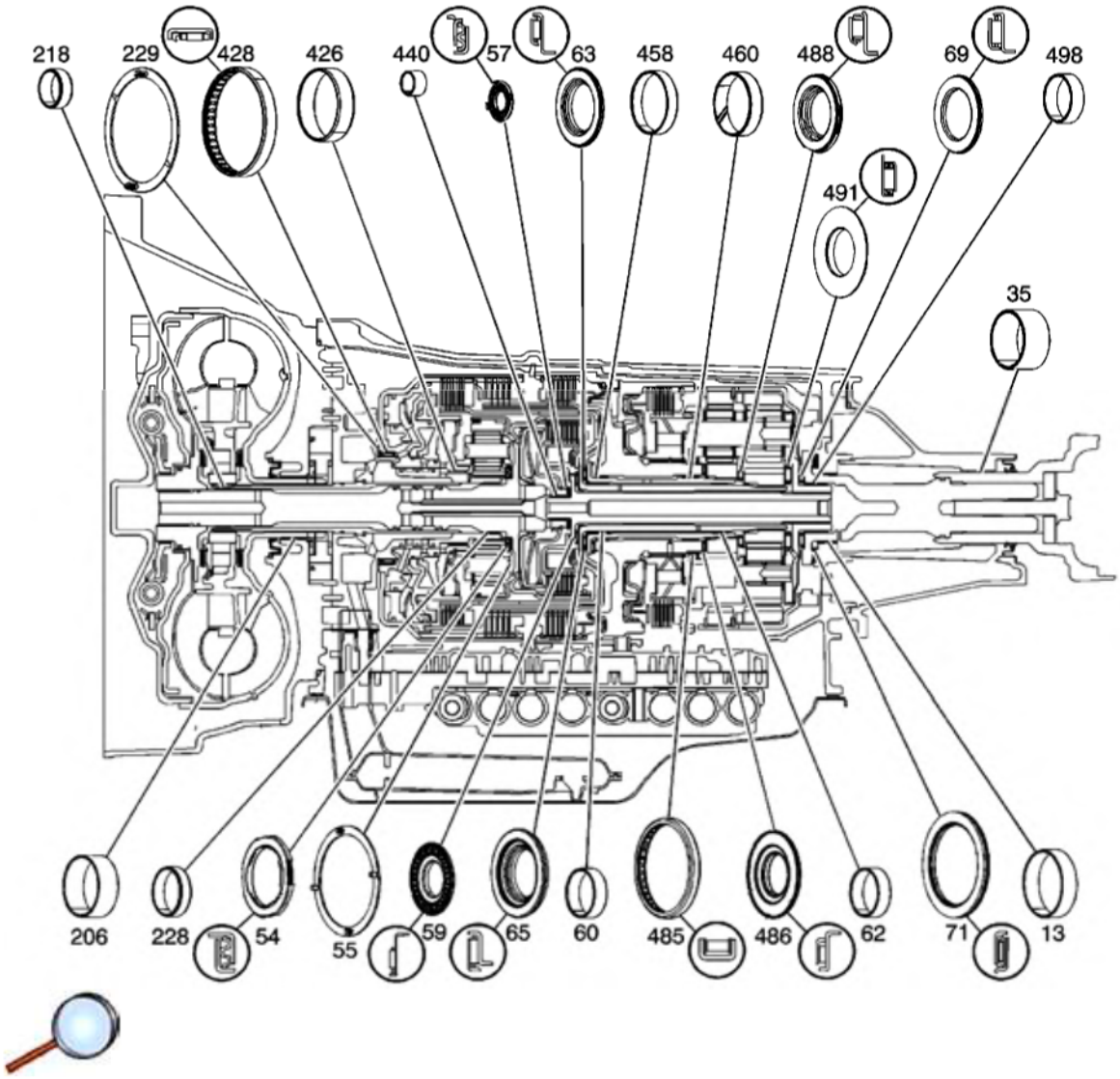

(13) Output Shaft Bushing
(35) Prop Shaft Front Slip Yoke Bushing
(54) Input Sun Gear Thrust Bearing
(55) Input Sun Gear Thrust Washer
(57) Turbine Shaft Thrust Bearing Assembly
(59) 4-5-6 Clutch Hub Thrust Bearing Assembly
(60) Output Carrier Inner Sun Gear Shaft (Front) Bushing
(62) Output Carrier Inner Sun Gear Shaft Bushing
(63) 1-2-3-4 Clutch Hub Thrust Bearing Assembly
(65) 2-6 and 3-5 Reverse Clutch Hub Thrust Bearing Assembly
(69) Output Carrier Thrust Bearing Assembly
(71) Output Shaft Thrust Bearing Assembly

(206) Torque Converter Bushing
(218) Turbine Shaft Front Bushing
(228) Turbine Shaft Rear Bushing
(229) 1-2-3-4 and 3-5 Reverse Clutch Housing Thrust Washer
(426) 1-2-3-4 and 3-5 Reverse Clutch Housing Rear Bushing
(428) 1-2-3-4 and 3-5 Reverse Clutch Bearing Assembly
(440) Output Carrier Shaft Housing Bushing
(458) Output Carrier Outer Sun Gear Shaft (Front) Bushing
(460) Output Carrier Outer Sun Gear Shaft Rear Bushing
(485) Center Support Roller Bearing Assembly
(486) Output Carrier Front Sun Gear Thrust Bearing Assembly
(488) Output Carrier Front Sun Gear Rear Thrust Bearing Assembly
(491) Output Carrier Rear Sun Gear Thrust Bearing - Captured
(498) Output Carrier Bushing

Seal Locations (6L50)

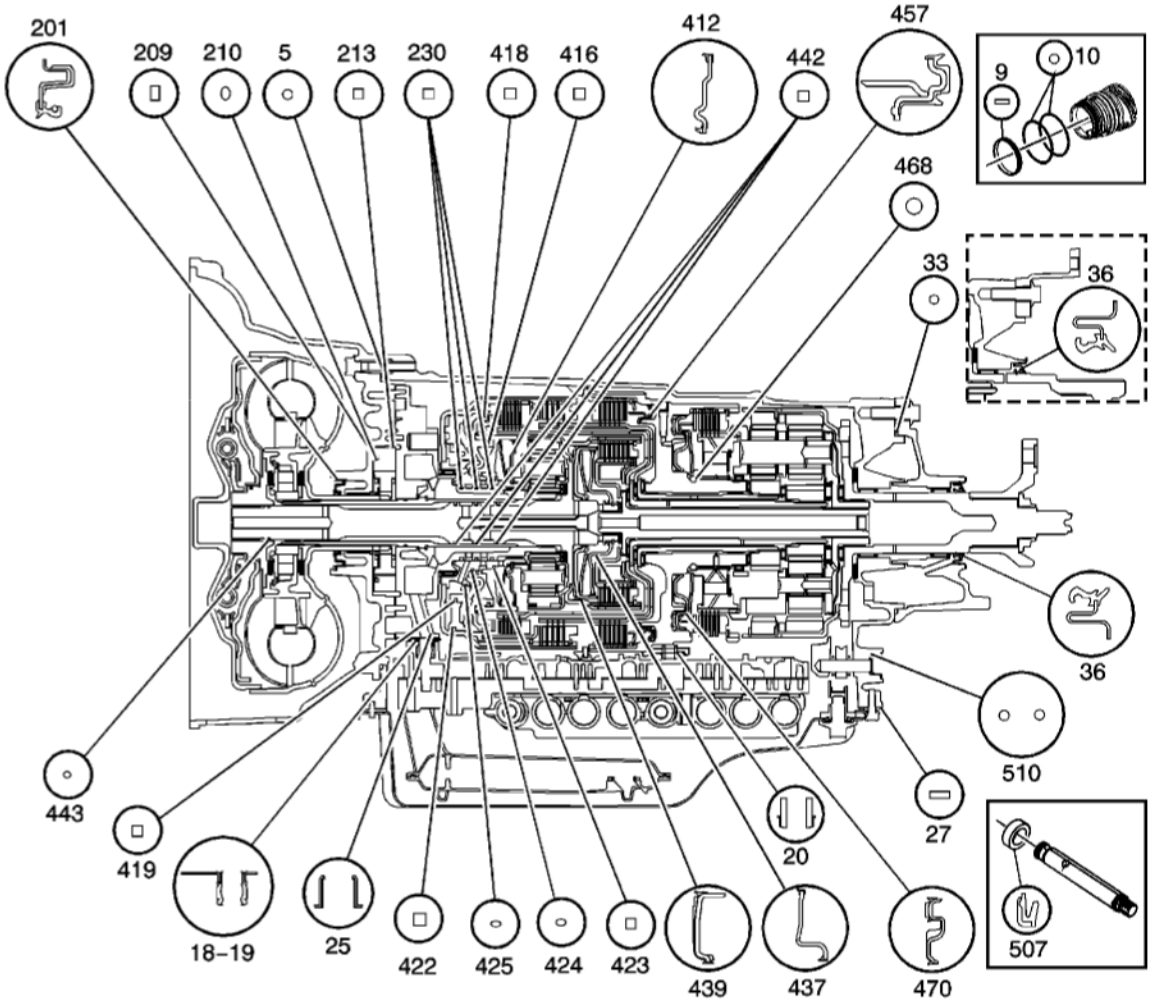

(5) A/Trans Fluid Pump Seal
(9) A/Trans Connector Seal
(10) A/Trans Connector (O-ring) Seal
(18) A/Trans Fluid Pump Seal Assembly
(19) A/Trans Fluid Pump Seal Assembly
(20) Center Support Fluid Passage Seal Assembly
(25) A/Trans Fluid Filter Seal Assembly
(27) A/Trans Fluid Pan Gasket
(33) A/Trans Case Extension Seal - 2WD Models Only
(36) Output Shaft Seal Assembly
(201) Torque Converter Fluid Seal Assembly
(209) A/Trans Fluid Pump Slide Fluid Seal Ring

(210) A/Trans Fluid Pump Slide (O-ring) Seal
(213) A/Trans Fluid Pump Slide Seal
(230) 1-2-3-4 and 3-5 Reverse Clutch Fluid Seal Ring
(412) 1-2-3-4 Clutch Piston Dam Assembly
(416) 1-2-3-4 Clutch Piston Seal
(418) 3-5 Reverse Clutch Piston Dam (O-ring) Seal
(419) 3-5 Reverse Clutch Piston Inner Seal
(422) 3-5 Reverse Clutch Piston Outer Seal
(423) 1-2-3-4 Clutch Piston Inner Seal
(424) 1-2-3-4 Clutch Piston Housing Seal
(425) 1-2-3-4 Clutch Piston Housing Seal
(437) 4-5-6 Clutch Piston Dam Assembly
(439) 4-5-6 Clutch Piston Assembly
(442) Turbine Shaft Fluid Seal Ring
(443) Turbine Shaft (O-ring) Seal
(457) 2-6 Clutch Piston Assembly
(468) Low Clutch Sprag Seal
(470) Low and Reverse Clutch Piston Assembly
(507) Manual Shift Shaft Seal
(510) Park Pawl Actuator Guide (O-ring) Seal

Seal Locations (6L90)

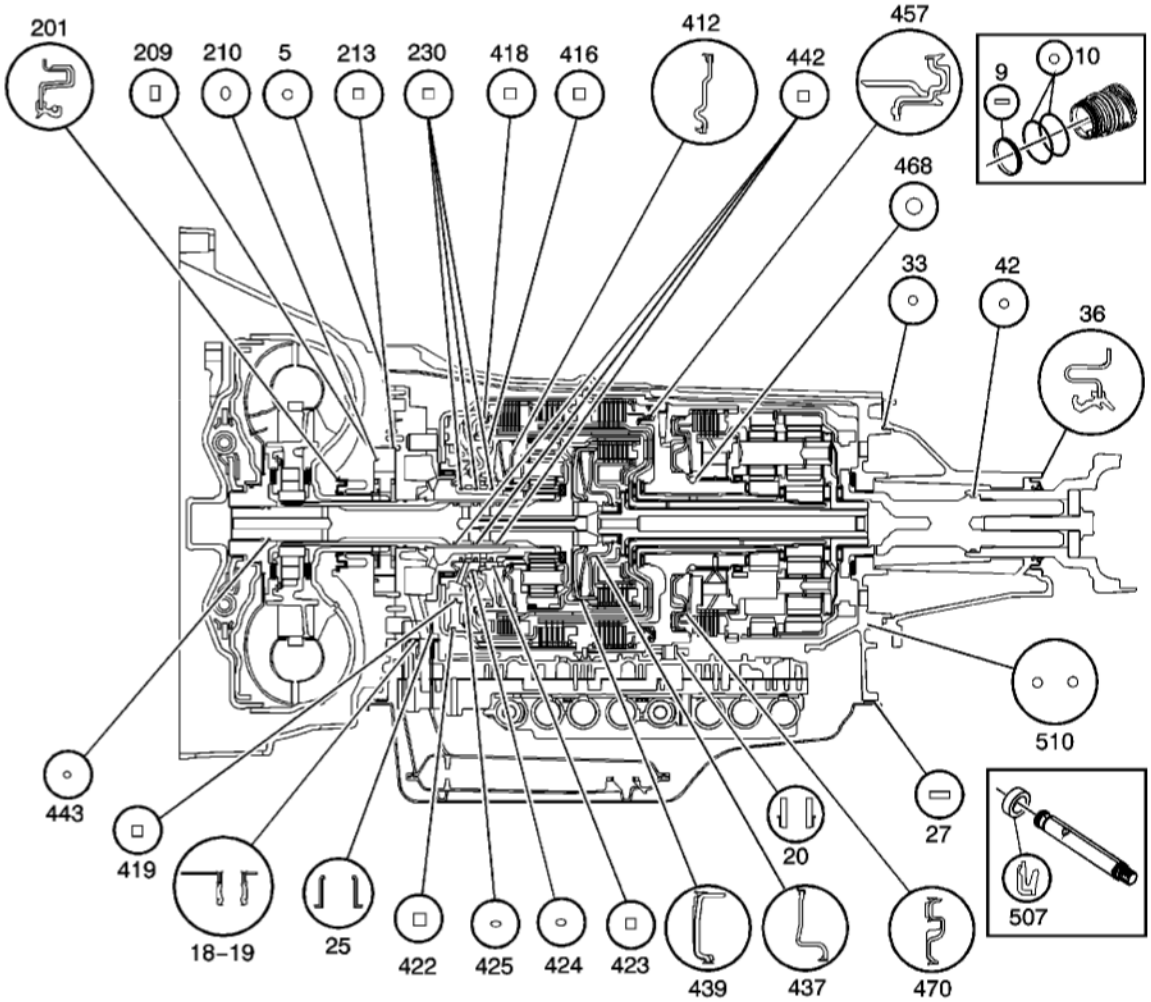

(5) A/Trans Fluid Pump Seal
(9) A/Trans Connector Seal
(10) A/Trans Connector (O-ring) Seal
(18) A/Trans Fluid Pump Seal Assembly
(19) A/Trans Fluid Pump Seal Assembly
(20) Center Support Fluid Passage Seal Assembly
(25) A/Trans Fluid Filter Seal Assembly
(27) A/Trans Fluid Pan Gasket
(33) A/Trans Case Extension Seal
(36) Prop Shaft Front Slip Yoke Oil Seal
(42) Prop Shaft Trans Flange Seal
(201) Torque Converter Fluid Seal Assembly

(209) A/Trans Fluid Pump Slide Fluid Seal Ring
(210) A/Trans Fluid Pump Slide (O-ring) Seal
(213) A/Trans Fluid Pump Slide Seal
(230) 1-2-3-4 and 3-5 Reverse Clutch Fluid Seal Ring
(412) 1-2-3-4 Clutch Piston Dam Assembly
(416) 1-2-3-4 Clutch Piston Seal
(418) 3-5 Reverse Clutch Piston Dam (O-ring) Seal
(419) 3-5 Reverse Clutch Piston Inner Seal
(422) 3-5 Reverse Clutch Piston Outer Seal
(423) 1-2-3-4 Clutch Piston Inner Seal
(424) 1-2-3-4 Clutch Piston Housing Seal
(425) 1-2-3-4 Clutch Piston Housing Seal
(437) 4-5-6 Clutch Piston Dam Assembly
(439) 4-5-6 Clutch Piston Assembly
(442) Turbine Shaft Fluid Seal Ring
(443) Turbine Shaft (O-ring) Seal
(457) 2-6 Clutch Piston Assembly
(468) Low Clutch Sprag Seal
(470) Low and Reverse Clutch Piston Assembly
(507) Manual Shift Shaft Seal
(510) Park Pawl Actuator Guide (O-ring) Seal

Ball Check Valve Locations

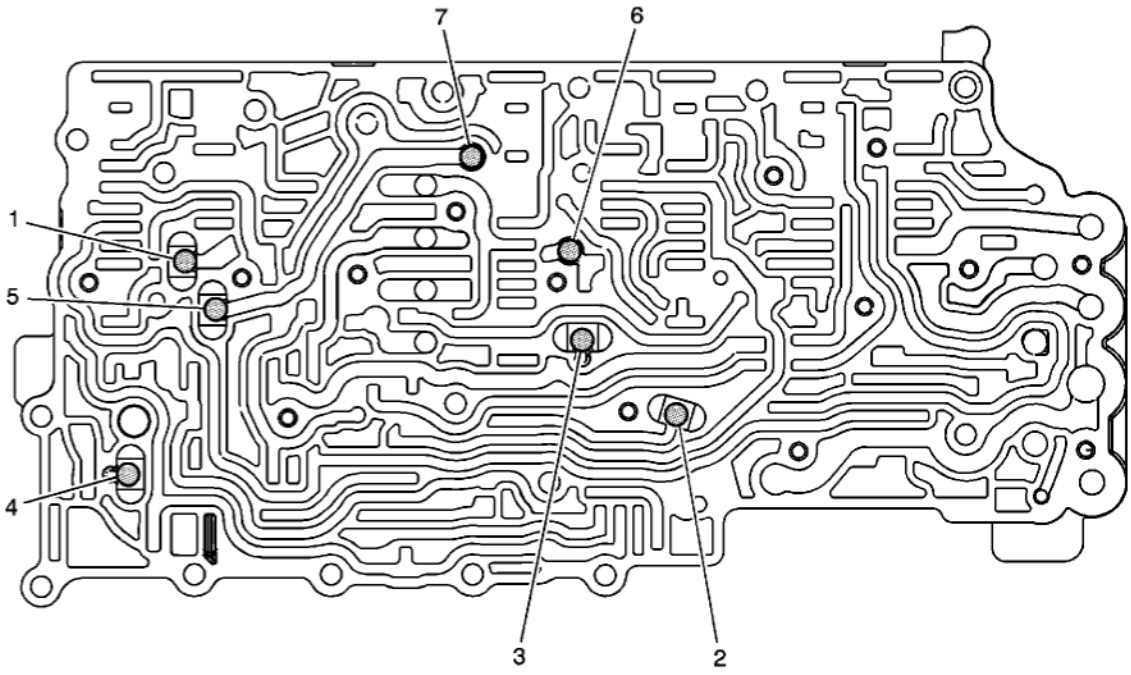

I.D.	Input Oil	Input Oil	Output Oil
1	Drive 1-6	DRV B	CB26/C1234 FD
2	Sol 1	Reverse (Park)	CSV2 Enable
3	Sol 2	C456	CSV3 Enable
4	PS4	C456	CSV2 Latch
5	Drive 1-6	C35R Rev FD	C35R Supply
6	CB26/C1234 FD	--	C1234 FD
7	C35R Supply	--	C35R FD