Congratulations! Your selection of a 2001 Acura MDX was a wise investment. It will give you years of driving pleasure.

One of the best ways to enhance the enjoyment of your new Acura is to read this manual. In it, you will learn how to operate its driving controls and convenience items. Afterwards, keep this owner's manual in your vehicle so you can refer to it at any time.

Several warranties protect your new Acura. Read the warranty booklet thoroughly so you understand the coverages and are aware of your rights and responsibilities.

Maintaining your vehicle according to the schedules given in this manual helps to keep your driving trouble-free while it preserves your investment. When your vehicle needs maintenance, keep in mind that your Acura dealer's staff is specially trained in servicing the many systems unique to your Acura. Your Acura dealer is dedicated to your satisfaction and will be pleased to answer any questions and concerns.

California Proposition 65 Warning

WARNING: This product contains or emits chemicals known to the State of California to cause cancer and birth defects or other reproductive harm.

As you read this manual, you will find information that is preceded by a NOTICE symbol. This information is intended to help you avoid damage to your Acura, other property, or the environment.

A Few Words About Safety

Your safety, and the safety of others, is very important. And operating this vehicle safely is an important responsibility.

To help you make informed decisions about safety, we have provided operating procedures and other information on labels and in this manual. This information alerts you to potential hazards that could hurt you or others.

Of course, it is not practical or possible to warn you about all the hazards associated with operating or maintaining your vehicle. You must use your own good judgement.

You will find this important safety information in a variety of forms, including:

- **Safety Labels** — on the vehicle.
- **Safety Messages** — preceded by a safety alert symbol ⚠ and one of three signal words: **DANGER**, **WARNING**, or **CAUTION**. These signal words mean:

⚠ DANGER	You WILL be KILLED or SERIOUSLY HURT if you don't follow instructions.
⚠ WARNING	You CAN be KILLED or SERIOUSLY HURT if you don't follow instructions.
⚠ CAUTION	You CAN be HURT if you don't follow instructions.

- **Safety Headings** — such as Important Safety Reminders or Important Safety Precautions.
- **Safety Section** — such as Driver and Passenger Safety.
- **Instructions** — how to use this vehicle correctly and safely.

This entire book is filled with important safety information — please read it carefully.

Your MDX has higher ground clearance than a passenger vehicle designed for use only on pavement. Higher ground clearance has many advantages for off-highway driving. It allows you to travel over bumps, obstacles, and rough terrain. It also provides good visibility so you can anticipate problems earlier.

These advantages come at some cost. Because your vehicle is taller and rides higher off the ground, it has a high center of gravity. This means your vehicle can tip or roll over if you make abrupt turns. Utility vehicles have a significantly higher rollover rate than other types of vehicles. In a rollover crash, an unbelted person is significantly more likely to die than a person wearing a seat belt. As a reminder, make sure you and your passengers always wear seat belts.

For information on how to reduce the risk of rollover, read "Driving Guidelines" on page 208 of this manual and the *Off-Highway Guidelines* section on page 240 . Failure to operate this vehicle correctly may result in loss of control or an accident.

Contents

Turn to the beginning of each section for a complete list of subjects.

Your Vehicle at a Glance..... 2

Driver and Passenger Safety..... 5
Important information about the proper use and care of your vehicle's seat belts, an overview of the Supplemental Restraint System, and valuable information on how to protect children with child restraints.

Instruments and Controls 57
Explains the purpose of each instrument panel indicator and gauge, and how to use the controls on the dashboard and steering column.

Comfort and Convenience Features..... 141
How to operate the heating and air conditioning system, and the audio system.

Before Driving 193
What gasoline to use, how to break-in your new vehicle, and how to load luggage and other cargo.

Driving..... 207
The proper way to start the engine, shift the transmission, and park; plus what you need to know if you're planning to tow a trailer.

Maintenance 247
The Maintenance Schedule shows you when you need to take your vehicle to the dealer. There is also a list of things to check and instructions on how to check them.

Appearance Care..... 305
Tips on cleaning and protecting your vehicle. Also some things to look for if your vehicle ever needs body repairs.

Taking Care of the Unexpected 313
This section covers several problems motorists sometimes experience, and details how to handle them.

Technical Information..... 339
ID numbers, dimensions, capacities, and technical information.

Warranty and Customer Relations (U.S. and Canada only)..... 353
A summary of the warranties covering your new Acura, and how to contact us for any reason. Refer to your warranty manual for detailed information.

Authorized Manuals (U.S. only) 358
How to order manuals and other technical literature.

Index I

Service Information Summary
A summary of information you need when you pull up to the fuel pump.

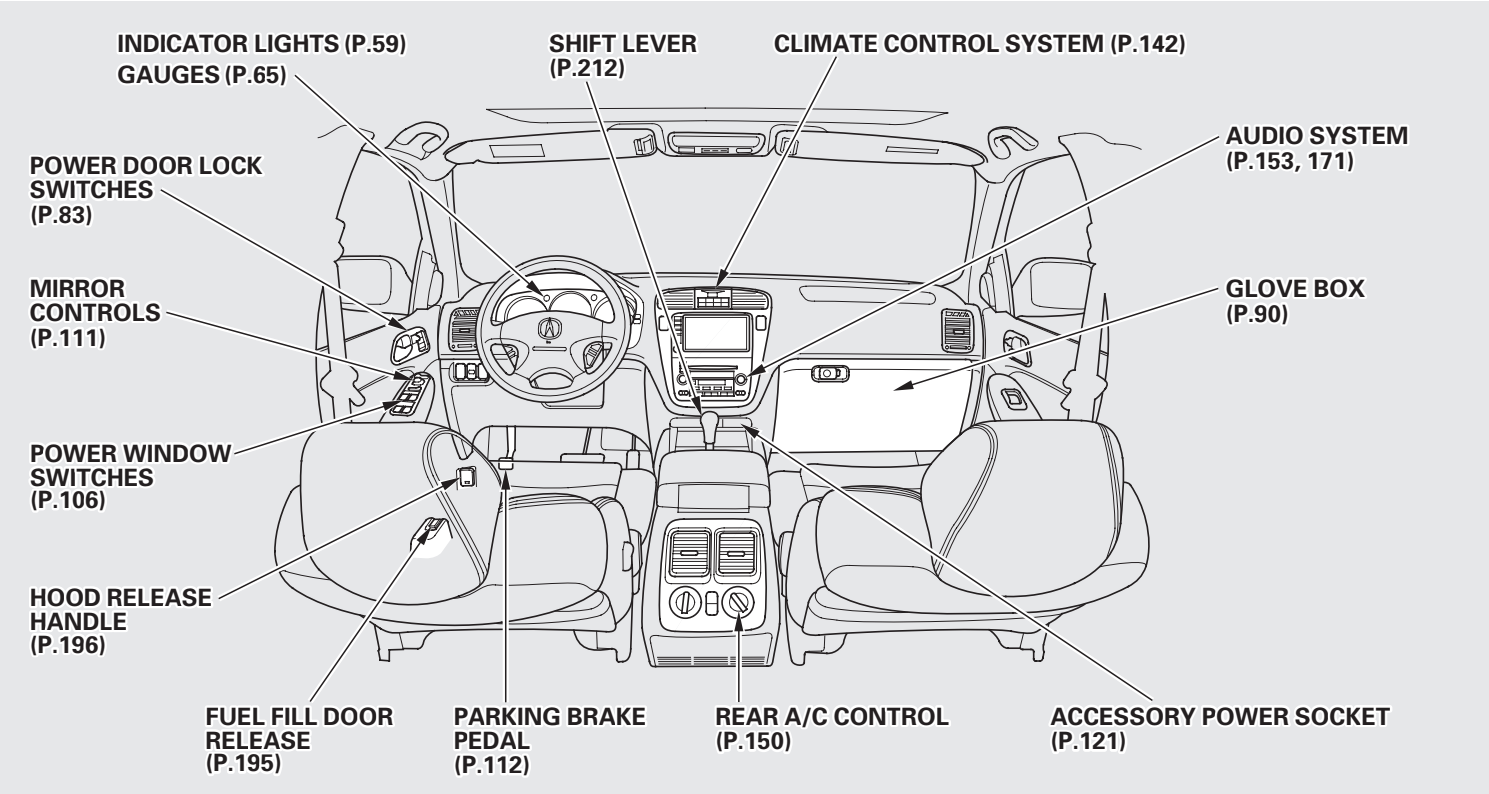
INDICATOR LIGHTS (P.59)
GAUGES (P.65)
SHIFT LEVER (P.212)
CLIMATE CONTROL SYSTEM (P.142)
AUDIO SYSTEM (P.153, 171)
POWER DOOR LOCK SWITCHES (P.83)
MIRROR CONTROLS (P.111)
GLOVE BOX (P.90)
POWER WINDOW SWITCHES (P.106)
HOOD RELEASE HANDLE (P.196)
FUEL FILL DOOR RELEASE (P.195)
PARKING BRAKE PEDAL (P.112)
REAR A/C CONTROL (P.150)
ACCESSORY POWER SOCKET (P.121)

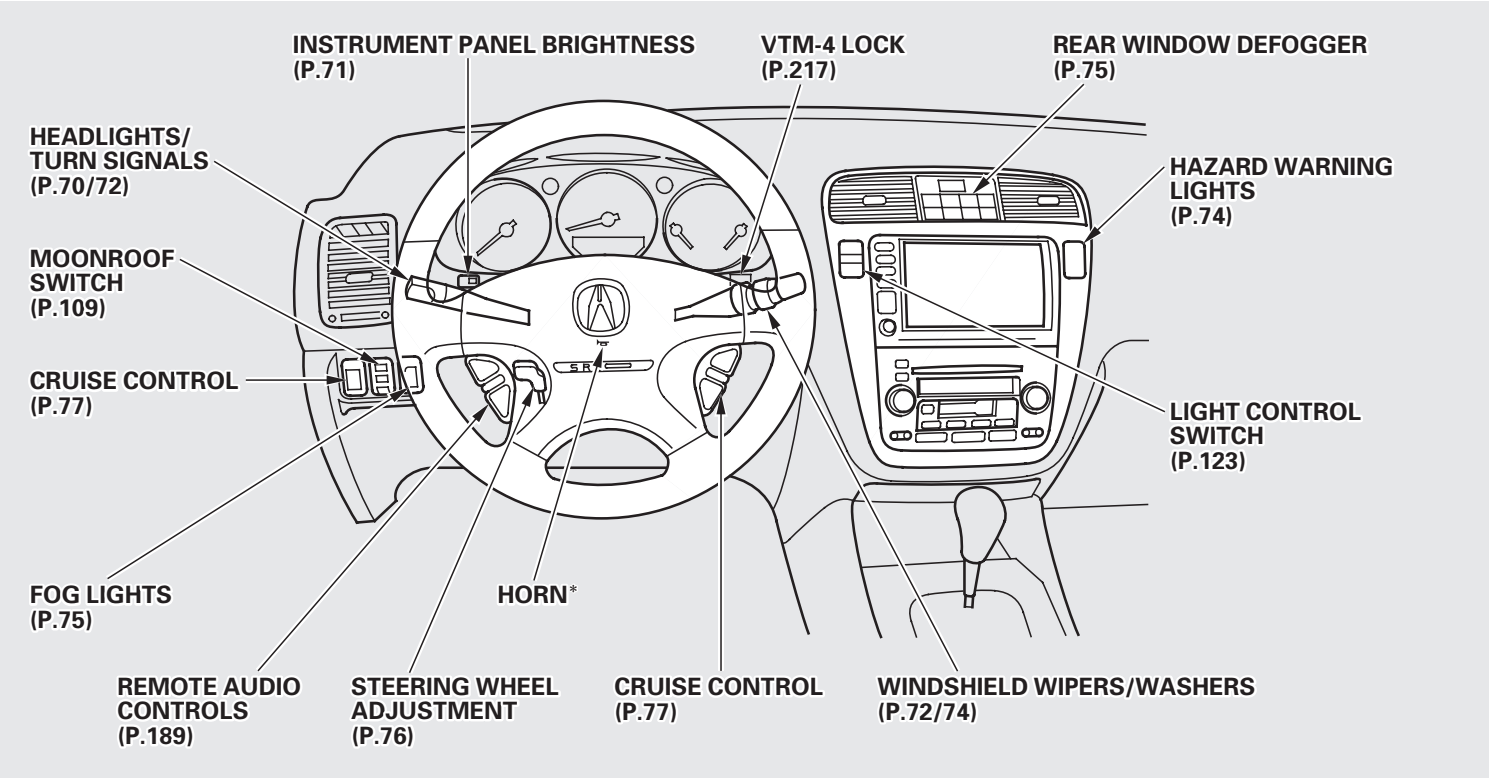

*: To use the horn, press the pad around the "A" logo.

This section gives you important information about how to protect yourself and your passengers. It shows you how to use seat belts properly. It explains your Supplemental Restraint System. And it tells you how to properly restrain infants and children in your vehicle.

Important Safety Precautions 6
Your Vehicle's Safety Features..... 7
Seat Belts 8
Airbags 9
Seats & Seat-Backs..... 10
Head Restraints 10
Door Locks 10
Pre-Drive Safety Checklist 11
Protecting Adults 12
1. Close and Lock the Doors 12
2. Adjust the Front Seats 12
3. Adjust the Seat-Backs 13
4. Adjust the Head Restraints 14
5. Fasten and Position the Seat Belts 15
6. Adjust the Steering Wheel 18
7. Maintain a Proper Sitting Position 18
Advice for Pregnant Women..... 19
Additional Safety Precautions.... 19
Protecting Children 21
All Children Must Be Restrained 21
Children Should Sit in the Back Seat 22
The Passenger's Airbag Poses Serious Risks to Children 22
If You Must Drive with Several Children 24
If a Child Requires Close Attention 24
Additional Safety Precautions.... 24
General Guidelines for Using Child Seats..... 25
Protecting Infants 29
Protecting Small Children 34
Protecting Larger Children 38
Using Child Seats with Tethers..... 42
Additional Information About Your Seat Belts 44
Seat Belt System Components... 44
Lap/Shoulder Belt 44
Automatic Seat Belt Tensioners..... 46
Seat Belt Maintenance 47
Additional Information About Your Airbags..... 48
SRS Components 48
How Your Front Airbags Work..... 48
How Your Side Airbags Work.... 50
How the SRS Indicator Light Works..... 51
How The Side Airbag Indicator Light Works 52
Airbag Service 53
Additional Safety Precautions.... 53
Carbon Monoxide Hazard 54
Safety Labels 55

Important Safety Precautions

You'll find many safety recommendations throughout this section, and throughout this manual. The recommendations on this page are the ones we consider to be the most important.

Always Wear Your Seat Belt
A seat belt is your best protection in all types of collisions. Airbags supplement seat belts, but airbags are designed to inflate only in a moderate to severe frontal collision. So even though your vehicle is equipped with airbags, make sure you and your passengers always wear your seat belts, and wear them properly. (See page 15 .)

Restrain All Children
Children are safest when they are properly restrained in a back seat, not the front seat. A child who is too small for a seat belt must be properly restrained in a child safety seat. (See page 21 .)

Be Aware of Airbag Hazards
While airbags can save lives, they can cause serious or fatal injuries to occupants who sit too close to them, or are not properly restrained. Infants, young children, and short adults are at the greatest risk. Be sure to follow all instructions and warnings in this manual. (See page 9 .)

Don't Drink and Drive
Alcohol and driving don't mix. Even one drink can reduce your ability to respond to changing conditions, and your reaction time gets worse with every additional drink. So don't drink and drive, and don't let your friends drink and drive, either.

Control Your Speed
Excessive speed is a major factor in crash injuries and deaths. Generally, the higher the speed the greater the risk, but serious accidents can also occur at lower speeds. Never drive faster than is safe for current conditions, regardless of the maximum speed posted.

Keep Your Vehicle in Safe Condition
Having a tire blowout or a mechanical failure can be extremely hazardous. To reduce the possibility of such problems, check your tire pressures and condition frequently, and perform all regularly scheduled maintenance. (See page 250 .)

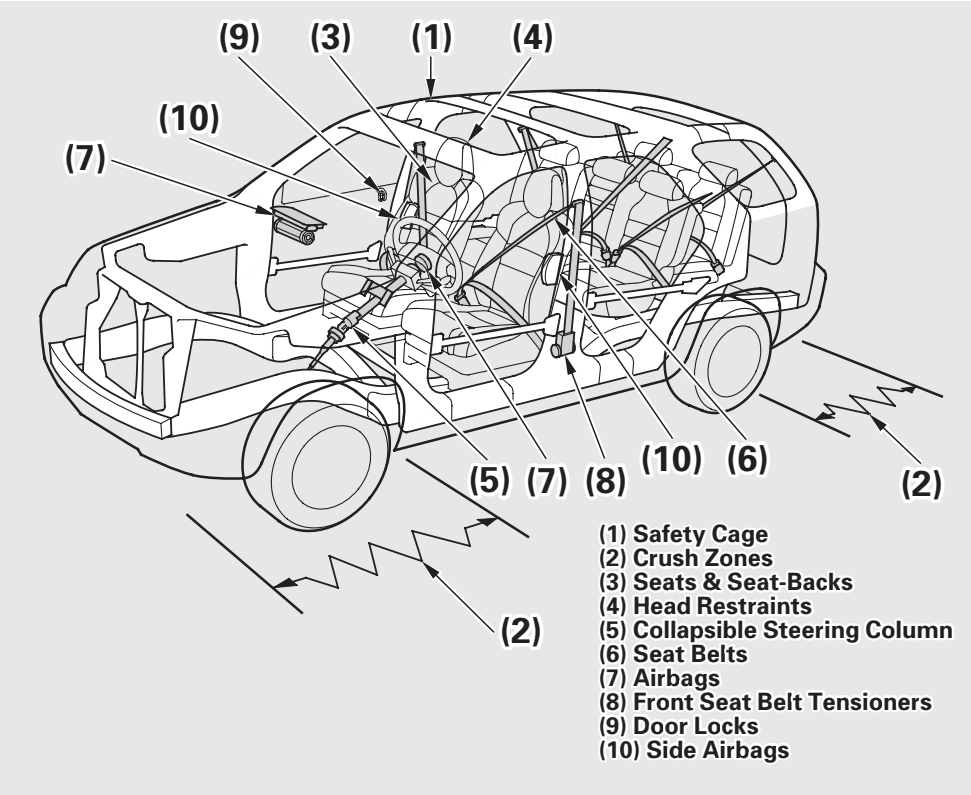

Your vehicle is equipped with many features that work together to protect you and your passengers during a crash.
Some safety features do not require any action on your part. These include a strong steel framework that forms a safety cage around the passenger compartment; front and rear crush zones that are designed to crumple and absorb energy during a crash; a collapsible steering column; and seat belt tensioners that automatically tighten the front seat belts in the event of a crash.

These safety features are designed to reduce the severity of injuries in a crash. However, you and your passengers can't take full advantage of these safety features unless you remain sitting in a proper position and ***always wear your seat belts properly.*** In fact, some safety features can contribute to injuries if they are not used properly.

Seat Belts

For your safety, and the safety of your passengers, your vehicle is equipped with seat belts in all seating positions.

Your seat belt system also includes a light on the instrument panel to remind you and your passengers to fasten your seat belts.

Why Wear Seat Belts

Seat belts are the single most effective safety device for adults and larger children. (Infants and smaller children must be properly restrained in child seats.)

Not wearing a seat belt properly increases the chance of serious injury or death in a crash, even though your vehicle has airbags.

In addition, most states and all Canadian provinces require you to wear seat belts.

⚠WARNING

Not wearing a seat belt properly increases the chance of serious injury or death in a crash, even if you have airbags.

Be sure you and your passengers always wear seat belts and wear them properly.

When properly worn, seat belts:

- Keep you connected to the vehicle so you can take advantage of the vehicle's built-in safety features.
- Help protect you in almost every type of crash, including frontal, side, and rear impacts and rollovers.
- Help keep you from being thrown against the inside of the vehicle and against other occupants.
- Keep you from being thrown out of the vehicle.
- Help keep you in a good position should the airbags ever deploy. A good position reduces the risk of injury from an inflating airbag, and allows you to get the best advantage from the airbag.

Of course, seat belts cannot completely protect you in every crash. But in most cases, seat belts can reduce your risk of serious injury.

What you should do: Always wear your seat belt, and make sure you wear it properly.

Airbags

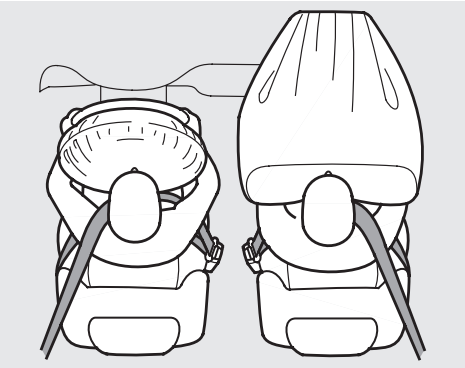

Your vehicle has a Supplemental Restraint System (SRS) with front airbags to help protect the heads and chests of the driver and a front seat passenger during a moderate to severe frontal collision.

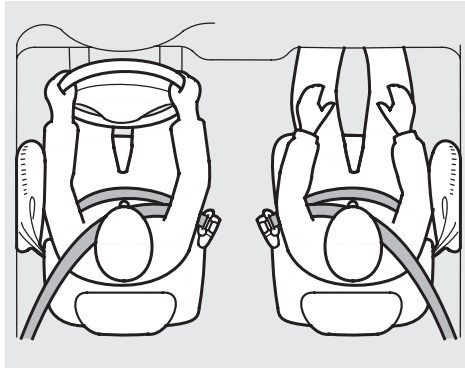

Your vehicle also has side airbags to help protect the upper torso of the driver or a front seat passenger during a moderate to severe side impact.

The most important things you need to know about your airbags are:

- ***Airbags do not replace seat belts.*** They are designed to supplement the seat belts.
- ***Airbags offer no protection in rear impacts, rollovers, or minor frontal or side collisions.***
- ***Airbags can pose serious hazards.*** To do their job, airbags must inflate with tremendous force and speed. So while airbags help save lives, they can cause minor injuries, or more serious or even fatal injuries if occupants are not properly restrained or sitting properly.

What you should do: Always wear your seat belt properly, and sit upright and as far back as possible from the steering wheel or dashboard.

Seats & Seat-Backs
Your vehicle's seats are designed to keep you in a comfortable, upright position so you can take full advantage of the protection offered by seat belts and the energy absorbing materials in the seats.

How you adjust your seats and seat-backs can also affect your safety. For example, sitting too close to the steering wheel or dashboard increases the risk of you or your passenger being injured by striking the inside of the vehicle, or by an inflating airbag.

Reclining a seat-back too far reduces the seat belt's effectiveness and increases the chance that the seat's occupant will slide under the seat belt in a crash and be seriously injured.

What you should do: Move the front seats as far back as possible, and keep adjustable seat-backs in an upright position whenever the vehicle is moving.

Head Restraints
Head restraints can help protect you from whiplash and other injuries. For maximum protection, the back of your head should rest against the center of the head restraint.

Door Locks
Keeping your doors locked reduces the chance of being thrown out of the vehicle during a crash. It also helps prevent occupants from accidentally opening a door and falling out, and outsiders from unexpectedly opening your doors.

Pre-Drive Safety Checklist
To make sure you and your passengers get the maximum protection from your vehicle's safety features, check the following each time before you drive away:

- All adults, and children who have outgrown child safety seats, are wearing their seat belts and wearing them properly (see page 15).
- Any infant or small child is properly restrained in a child seat in a back seat (see page 22).
- Front seat occupants are sitting upright and as far back as possible from the steering wheel and dashboard (see page 12).
- Seat-backs are upright (see page 13).
- Head restraints are properly adjusted (see page 14).
- All doors and the tailgate are closed and locked (see page 12).
- All cargo is properly stored or secured (see page 203).

The rest of this section gives more detailed information about how you can maximize your safety.

Remember, however, that no safety system can prevent all injuries or deaths that can occur in severe crashes, even when seat belts are properly worn and the airbags deploy.

Protecting Adults

Introduction
The following pages provide instructions on how to properly protect the driver and other adult occupants.

These instructions also apply to children who have outgrown child seats and are large enough to wear lap/shoulder belts. (See page 38 for important additional guidelines on how to properly protect larger children.)

1.Close and Lock the Doors
After everyone has entered the vehicle, be sure the doors and tailgate are closed and locked.

Your vehicle has a door and tailgate monitor light on the instrument panel to indicate when a specific door or the tailgate is not tightly closed.

For safety, locking the doors reduces the chance that a passenger, especially a child, will open a door while the vehicle is moving and accidentally fall out. It also reduces the chance of someone being thrown out of the vehicle during a crash.

For security, locked doors can prevent an outsider from unexpectedly opening a door when you come to a stop.

See page 83 for how to lock the doors.

2.Adjust the Front Seats

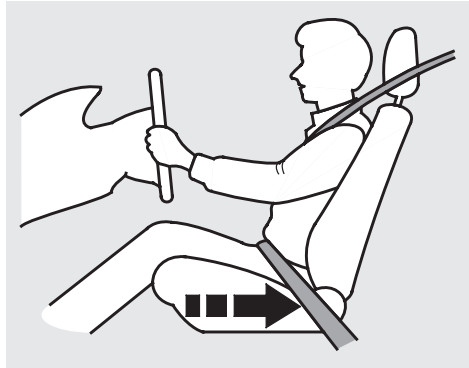

Any driver who sits too close to the steering wheel is at risk of being seriously injured or killed by striking the steering wheel, or from being struck by an inflating airbag during a crash.

To reduce the chance of injury, wear your seat belt properly, sit upright with your back against the seat, and move the seat as far back as possible from the steering wheel while still maintaining full control of the vehicle. Also make sure your front seat passenger moves the seat as far to the rear as possible.

⚠WARNING

Sitting too close to a front airbag can result in serious injury or death if the front airbags inflate.

Always sit as far back from the front airbags as possible.

Most shorter drivers can get far enough away from the steering wheel and still reach the pedals. However, if you are concerned about sitting too close, we recommend that you investigate whether some type of adaptive equipment may help.

Once your seat is adjusted correctly, rock it back and forth to make sure the seat is locked in position.

See page 96 for how to adjust the front seats.

3.Adjust the Seat-Backs

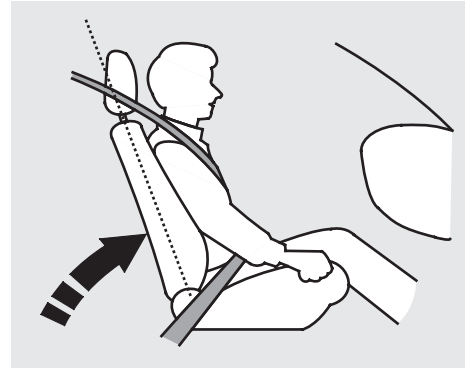

Adjust the driver's seat-back to a comfortable, upright position, leaving ample space between your chest and the airbag cover in the center of the steering wheel. If you sit too close to the steering wheel, you could be injured if the airbag inflates.

CONTINUED

A front passenger should also adjust the seat-back to an upright position, but as far from the dashboard as possible. A passenger who sits too close to the dashboard could be injured if the airbag inflates.

Reclining a seat-back so that the shoulder part of the belt no longer rests against the occupant's chest reduces the protective capability of the belt. It also increases the chance of sliding under the belt in a crash and being seriously injured. The farther a seat-back is reclined, the greater the risk of injury.

⚠ WARNING

Reclining the seat-back too far can result in serious injury or death in a crash.

Adjust the seat-back to an upright position and sit well back in the seat.

See page 99 for how to adjust seat-backs.

4. Adjust the Head Restraints

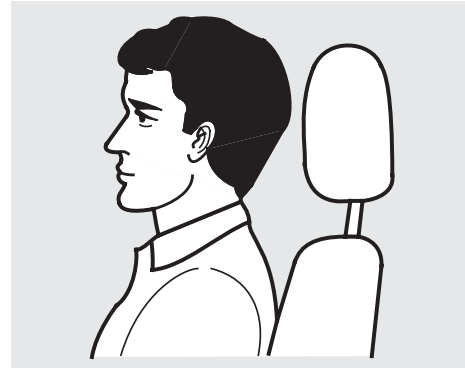

Before driving, make sure everyone with an adjustable head restraint has properly positioned the head restraint. The restraint should be positioned so the back of the occupant's head rests against the center of the restraint. A taller person should adjust the restraint as high as possible.

⚠ WARNING

Improperly positioning head restraints reduces their effectiveness and you can be seriously injured in a crash.

Make sure head restraints are in place and positioned properly before driving.

Properly adjusted head restraints will help protect occupants from whiplash and other crash injuries.

See page 104 for how to adjust the head restraints.

5. Fasten and Position the Seat Belts

Insert the latch plate into the buckle, then tug on the belt to make sure the belt is securely latched. Also check that the belt is not twisted, because a twisted belt can cause serious injuries in a crash.

In the second row center seat and the third row seats, be sure the detachable anchors are also latched (see page 104).

Check that the seat belt is not twisted, because a twisted belt can cause serious injuries in a crash.

Position the lap part of the belt as low as possible across your hips, then pull up on the shoulder part of the belt so the lap part fits snugly. This lets your strong pelvic bones take the force of a crash and reduces the chance of internal injuries.

CONTINUED

If necessary, pull up on the belt again to remove any slack from the shoulder part, then check that the belt rests across the center of your chest and over your shoulder. This spreads the forces of a crash over the strongest bones in your upper body.

⚠ WARNING

Improperly positioning the seat belts can cause serious injury or death in a crash.

Make sure all seat belts are properly positioned before driving.

If the seat belt touches or crosses your neck, or if it crosses your arm instead of your shoulder, you need to adjust the seat belt anchor height.

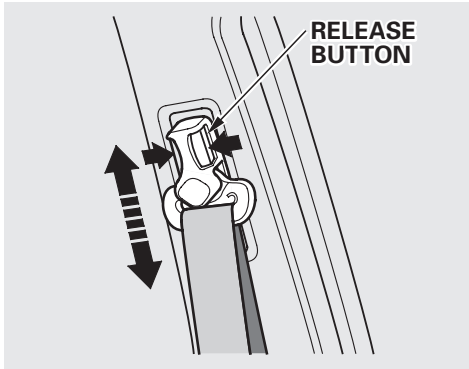

To adjust the height of a front seat belt anchor, squeeze the two release buttons and slide the anchor up or down as needed (it has four positions).

Never place the shoulder portion of a lap/shoulder belt under your arm or behind your back. This could cause very serious injuries in a crash.

If a seat belt does not seem to work as it should, it may not protect the occupant in a crash. ***No one should sit in a seat with an inoperative seat belt.*** Anyone using a seat belt that is not working properly can be seriously injured or killed. Have your Acura dealer check the belt as soon as possible.

See page 44 for additional information about your seat belt system and how to take care of your belts.

6. Adjust the Steering Wheel

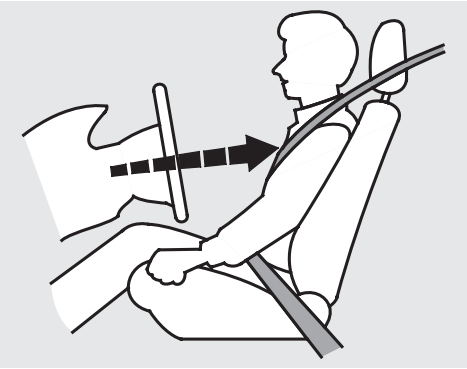

Adjust the steering wheel, if needed, so that the wheel points toward your chest, not toward your face.

Pointing the steering wheel toward your chest provides optimal protection from the airbag.

See page 76 for how to adjust the steering wheel.

7. Maintain a Proper Sitting Position

After all occupants have adjusted their seats and put on seat belts, it is very important that they continue to sit upright, well back in their seats, with their feet on the floor, until the vehicle is parked and the engine is off.

Sitting improperly can increase the chance of injury during a crash. For example, if an occupant slouches, lies down, turns sideways, sits forward, leans forward or sideways, or puts one or both feet up, the chance of injury during a crash is greatly increased.

In addition, an occupant who is out of position in the front seat can be seriously or fatally injured by striking interior parts of the vehicle, or by being struck by an inflating front airbag. Being struck by an inflating side airbag can result in possibly serious injuries.

⚠ WARNING

Sitting improperly or out of position can result in serious injury or death in a crash.

Always sit upright, well back in the seat, with your feet on the floor.

Remember, to get the best protection from your vehicle's airbags and other safety features, you must sit properly and wear your seat belt properly.

Advice for Pregnant Women

Because protecting the mother is the best way to protect her unborn child, a pregnant woman should always wear a seat belt whenever she drives or rides in a vehicle.

Remember to keep the lap portion of the belt as low as possible across your hips.

Pregnant women should also sit upright and as far back as possible from the steering wheel or dashboard. This will reduce the risk of injuries to both the mother and her unborn child that can be caused by a crash or an inflating airbag.

Each time you have a check-up, ask your doctor if it's okay for you to drive.

Additional Safety Precautions

- ***Never let passengers ride in the cargo area or on top of a folded-down back seat.*** All passengers must sit in locked, upright seats and be properly restrained by seat belts.

- ***Passengers should not stand up or change seats while the vehicle is moving.*** A passenger who is not wearing a seat belt during a crash or emergency stop can be thrown against the inside of the vehicle, against other occupants, or out of the vehicle.

- ***Two people should never use the same seat belt.*** If they do, they could be very seriously injured in a crash.

CONTINUED

- ***Do not put any accessories on seat belts.*** Devices intended to improve occupant comfort or reposition the shoulder part of a seat belt can severely compromise the protective capability of the seat belt and increase the chance of serious injury in a crash.

- ***Do not place hard or sharp objects between yourself and a front airbag.*** Carrying hard or sharp objects on your lap, or driving with a pipe or other sharp object in your mouth, can result in injuries if your front airbag inflates.

- ***Do not attach or place objects on the front airbag covers.*** Any object attached to or placed on the covers marked "SRS AIRBAG" in the center of the steering wheel and on top of the dashboard could interfere with the proper operation of the airbags. Or, if the airbags inflate, the objects could be propelled inside the car and hurt someone.

- ***Do not attach hard objects on or near a front door.*** If a side airbag inflates, a cup holder or other hard object attached on or near the door could be propelled inside the car and hurt someone.

- ***Keep your hands and arms away from the airbag covers.*** If your hands or arms are close to the airbag covers in the center of the steering wheel and on top of the dashboard, they could be injured if the airbags inflate.

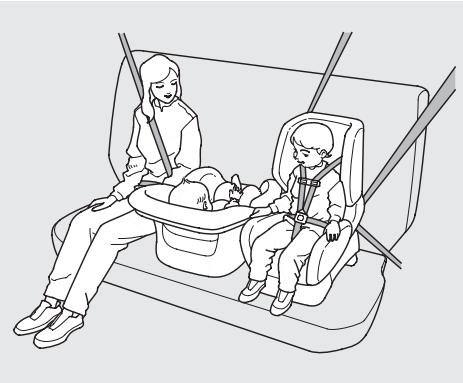

Children depend on adults to protect them. However, despite their best intentions, many parents and other adults may not know how to *properly* protect young passengers.

So if you have children, or if you ever need to drive with a grandchild or other children in your vehicle, be sure to read this section.

⚠WARNING

Children who are unrestrained or improperly restrained can be seriously injured or killed in a crash.

Any child too small for a seat belt should be properly restrained in a child seat. A larger child should be properly restrained with a seat belt.

All Children Must Be Restrained

Each year, many children are injured or killed in vehicle crashes because they are either unrestrained or not properly restrained. In fact, vehicle accidents are the number one cause of death of children ages 12 and under.

To reduce the number of child deaths and injuries, every state and Canadian province requires that infants and children be restrained whenever they ride in a vehicle.

Any child who is too small to wear a seat belt should be properly restrained in a child seat. (See page 25 .)

A larger child should always be restrained with a seat belt. (See page 38 .)

Children Should Sit in the Back Seat
According to accident statistics, children of all ages and sizes are safer when they are restrained in the back seat, not the front seat. The National Highway Traffic Safety Administration and Transport Canada recommend that all children ages 12 and under be properly restrained in a back seat.

In a back seat, children are less likely to be injured by striking hard interior parts during a collision or hard braking. Also, children cannot be injured by an inflating airbag when they ride in the back.

The Passenger's Front Airbag Poses Serious Risks to Children
Front airbags have been designed to help protect adults in a moderate to severe frontal collision. To do this, the passenger's front airbag is quite large, and it inflates with tremendous speed.

Infants
Never put a rear-facing child seat in the front seat of a vehicle equipped with a passenger's front airbag. If the airbag inflates, it can hit the back of the child seat with enough force to kill or very seriously injure an infant.

Small Children
Placing a forward-facing child seat in the front seat of a vehicle equipped with a passenger's airbag can be hazardous. If the vehicle seat is too far forward, or the child's head is thrown forward during a collision, an inflating airbag can strike the child with enough force to kill or very seriously injure a small child.

Larger Children
Children who have outgrown child seats are also at risk of being injured or killed by an inflating passenger's airbag. Whenever possible, larger children should sit in a back seat, properly restrained with a seat belt. (See page 38 for important information about protecting larger children.)

U.S. Models

To remind you of the passenger's airbag hazards, and that children must be properly restrained in a back seat, your vehicle has warning labels on the dashboard and on the driver's and front passenger's visors. Please read and follow the instructions on these labels.

⚠ WARNING

DEATH or SERIOUS INJURY can occur

- Children 12 and under can be killed by the air bag
- The BACK SEAT is the SAFEST place for children
- NEVER put a rear-facing child seat in the front
- Sit as far back as possible from the air bag
- ALWAYS use SEAT BELTS and CHILD RESTRAINTS

⚠ WARNING

Children Can Be KILLED or INJURED by Passenger Air Bag

The back seat is the safest place for children 12 and under. Make sure all children use seat belts or child seats.

Canadian Models

To remind you of the airbag hazards, your vehicle has warning labels on the driver's and front passenger's visors. Please read and follow the instructions on these labels.

CAUTION
TO AVOID SERIOUS INJURY:

- FOR MAXIMUM SAFETY PROTECTION IN ALL TYPES OF CRASHES, YOU MUST ALWAYS WEAR YOUR SAFETY BELT.
- DO NOT INSTALL REARWARD-FACING CHILD SEATS IN ANY FRONT PASSENGER SEAT POSITION.
- DO NOT SIT OR LEAN UNNECESSARILY CLOSE TO THE AIR BAG.
- DO NOT PLACE ANY OBJECTS OVER THE AIR BAG OR BETWEEN THE AIR BAG AND YOURSELF.
- SEE THE OWNER'S MANUAL FOR FURTHER INFORMATION AND EXPLANATIONS.

PRÉCAUTION:
POUR EVITER DES BLESSURES GRAVES:

- POUR PROFITER D'UNE PROTECTION MAXIMALE LORS D'UNE COLLISION BOUCLEZ TOUJOURS VOTRE CEINTURE DE SECURITE.
- N'INSTALLEZ JAMAIS UN SIEGE POUR ENFANTS FAISANT FACE A L'ARRIERE SUR LE SIEGE DU PASSAGER AVANT.
- NE VOUS APPUYEZ PAS ET NE VOUS ASSEYEZ PAS PRES DU COUSSIN GONFLABLE.
- NE DEPOSEZ AUCUN OBJET SUR LE COUSSIN GONFLABLE OU ENTRE LE COUSSIN GONFLABLE ET VOUS.
- LISEZ LE GUIDE UTILISATEUR POUR DE PLUS AMPLES RENSEIGNEMENTS.

If You Must Drive with Several Children

Your vehicle has two rows of back seats where children can be properly restrained.

If you ever have to carry a group of children (when carpooling for example), and a child must ride in front:

- Place the largest child in the front seat, provided the child is large enough to wear a seat belt properly (see page 38).
- Move the vehicle seat as far to the rear as possible (see page 12).
- Have the child sit upright and well back in the seat (see page 18).
- Make sure the seat belt is properly positioned and secured (see page 15).

If a Child Requires Close Attention

Many parents say they prefer to put an infant or small child in the front passenger seat so they can watch the child, or because the child requires attention.

Placing a child in the front seat exposes the child to hazards from the passenger's front airbag, and paying close attention to a child distracts the driver from the important tasks of driving, placing both of you at risk.

If a child requires physical attention or frequent visual contact, we strongly recommend that another adult ride with the child in a back seat. The back seat is far safer for a child than the front.

Additional Safety Precautions

- ***Use childproof door locks to prevent children from opening the doors.*** Using this feature will prevent children from opening the doors and accidentally falling out (see page 89).
- ***Use the main power window switch to prevent children from opening the rear windows.*** Using this feature will prevent children from playing with the windows, which could expose them to hazards or distract the driver (see page 107).

- ***Do not leave children alone in your vehicle.*** Leaving children without adult supervision is illegal in most states and Canadian provinces, and can be very hazardous. For example, infants and small children left in a vehicle on a hot day can die from heatstroke. And children left alone with the key in the ignition can accidentally set the vehicle in motion, possibly injuring themselves or others.

General Guidelines for Using Child Seats

The following pages give general guidelines for selecting and installing child seats for infants and small children.

Selecting a Child Seat

To provide proper protection, a child seat should meet three requirements:

1. ***The child seat should meet safety standards.*** The child seat should meet Federal Motor Vehicle Safety Standard 213 (FMVSS 213) or Canadian Motor Vehicle Safety Standard 213 (CMVSS 213). Look for the manufacturer's statement of compliance on the box and seat.

2. ***The child seat should be of the proper type and size to fit the child.***

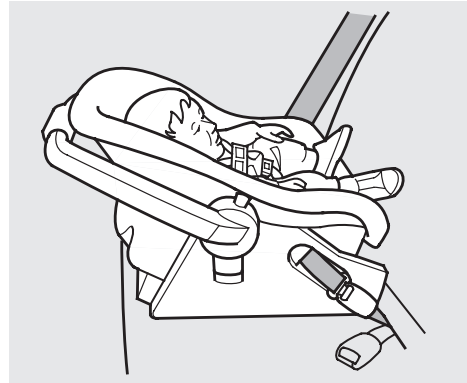

Infants: Children up to about one year old should be restrained in a rear-facing, reclining child seat. Only a rear-facing seat provides the proper support to protect an infant's head, neck, and back. See page 30 for additional information on protecting infants.

CONTINUED

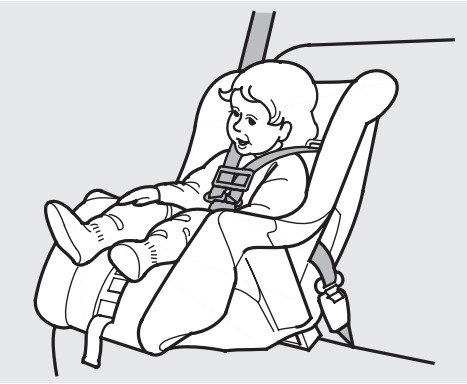

Small Children: A child who is too large for a rear-facing child seat, and who can sit up without support, should be restrained in a forward-facing child seat. See page 34 for additional information on protecting small children.

3. The child seat should fit the vehicle seating position (or positions) where it will be used.

Due to variations in the design of child seats, vehicle seats, and seat belts, all child seats will not fit all vehicle seating positions.

However, Acura is confident that one or more child seat models can fit and be properly installed in all recommended seating positions in your vehicle.

Before purchasing a child seat, we recommend that parents test the child seat in the specific vehicle seating position (or positions) where they intend to use the seat. If a previously purchased child seat does not fit, you may need to buy a different one that will fit.

Placing a Child Seat
This page briefly summarizes Acura's recommendations on where to place rear-facing and forward-facing child seats in your vehicle.

Airbags Pose Serious Risks to Children

The passenger's front airbag inflates with enough force to kill or seriously injure an infant in a rear-facing child seat.

A small child in a forward-facing child seat is also at risk. If the vehicle seat is too far forward, or the child's head is thrown forward during a collision, an inflating airbag can kill or seriously injure the child.

If a small child must ride in the front, follow the instructions provided in this section.

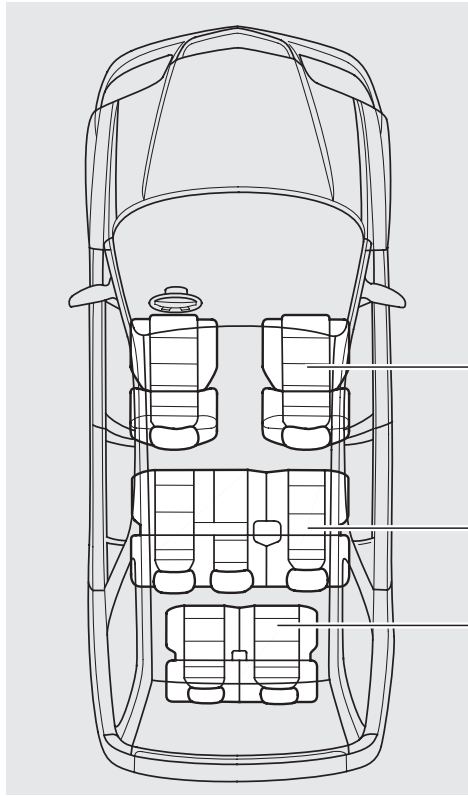

Front Passenger's Seat
Infants: Never in the front seat, due to the passenger's airbag hazard.

Small children: Not recommended, due to the passenger's airbag hazard. If a small child must ride in front, move the vehicle seat to the rear-most position and secure a front-facing child seat with the seat belt (see page 35).

Back Seats
Infants: Recommended positions. Properly secure a rear-facing child seat (see page 30).

Small children: Recommended positions. Properly secure a front-facing child seat (see page 36).

CONTINUED

Installing a Child Seat
After selecting a proper child seat, and a good position to install the seat, there are three main steps in installing the seat:

1. ***Secure the child seat to the vehicle with a seat belt.*** All child seats must be secured to the vehicle with the lap part of a lap/shoulder belt. A child whose seat is not properly secured to the vehicle can be endangered in a crash. See pages 31 and 36 for instructions on how to secure child seats in this vehicle.

2. ***Make sure the child seat is firmly secured.*** After installing a child seat, push and pull the seat forward and from side to side to verify that it is secure.

To provide security during normal driving maneuvers as well as during a collision, we recommend that parents secure a child seat as firmly as possible.

However, a child seat does not need to be "rock solid." In some vehicles or seating positions, it may be difficult to install a child seat so that it does not move at all. Some side-to-side or back-and-forth movement can be expected and should not reduce the child seat's effectiveness.

If the child seat is not secure, try installing it in a different seating position, or use a different style of child seat that can be firmly secured in the desired seating position.

3. ***Secure the child in the child seat.*** Make sure the child is properly strapped in the child seat according to the child seat maker's instructions. A child who is not properly secured in a child seat can be thrown out of the seat in a crash and be seriously injured.

Storing a Child Seat
When you are not using a child seat, either remove it and store it in a safe place, or make sure it is properly secured. An unsecured child seat can be thrown around the vehicle during a crash or sudden stop and injure someone.

Protecting Infants

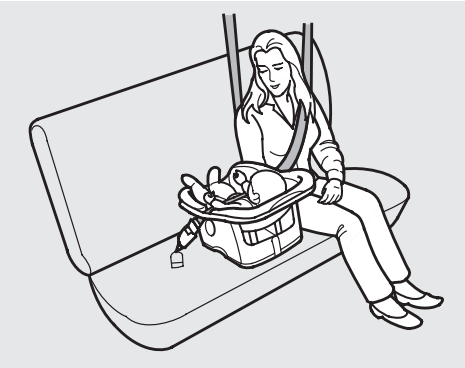

Child Seat Type
Only a rear-facing child seat provides proper support for a baby's head, neck, and back. Infants up to about one year of age must be restrained in a rear-facing child seat.

Two types of seats may be used: a seat designed exclusively for infants, or a convertible seat used in the rear-facing, reclining mode.

⚠WARNING

Placing a rear-facing child seat in the front seat can result in serious injury or death if the airbags inflate.

Always place a rear-facing child seat in the back seat, not the front.

We recommend that an infant be restrained in a rear-facing child seat until the infant reaches the seat maker's weight or height limit and is able to sit up without support.

Rear-Facing Child Seat Placement
In this vehicle, a rear-facing child seat can be placed in any seating position in a back seat, but not in the front seat.

Never put a rear-facing child seat in the front seat. If the passenger's airbag inflates, it can hit the back of the child seat with enough force to kill or seriously injure an infant. If an infant must be closely watched, we recommend that another adult sit in a back seat with the baby.

Do not put a rear-facing child seat in a forward-facing position. If placed facing forward, an infant could be very seriously injured during a frontal collision.

CONTINUED

Installing a Rear-Facing Child Seat with a Lap/Shoulder Belt

The lap/shoulder belts in the back seats have a locking mechanism that must be activated to secure a child seat.

The following pages provide instructions on how to secure a rear-facing child seat with this type of seat belt.

1. Before installing a child seat in the center seat of the second row or either of the third row seats, make sure the seat belt detachable anchor is latched (see page 104).

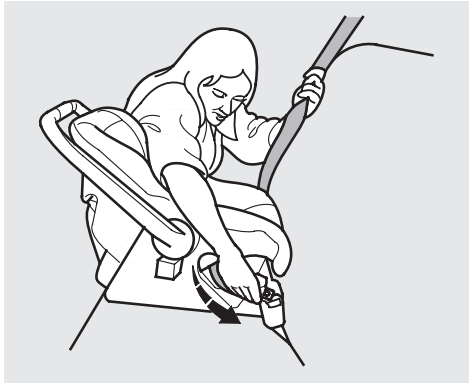

2. With the child seat in the desired back seating position, route the belt through the child seat according to the seat maker's instructions, then insert the latch plate into the buckle.

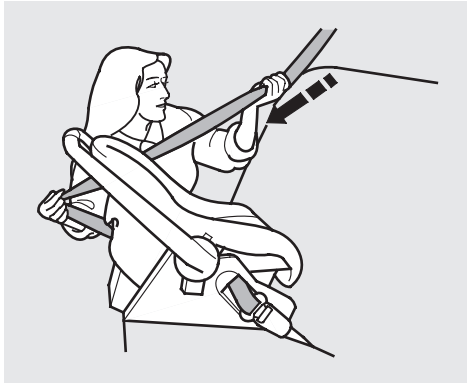

3. To activate the lockable retractor, slowly pull the shoulder part of the belt all the way out until it stops, then let the belt feed back into the retractor (you might hear a clicking noise as the belt retracts).

4. After the belt has retracted, tug on it. If the belt is locked, you will not be able to pull it out. If you can pull the belt out, it is not locked and you will need to repeat these steps.

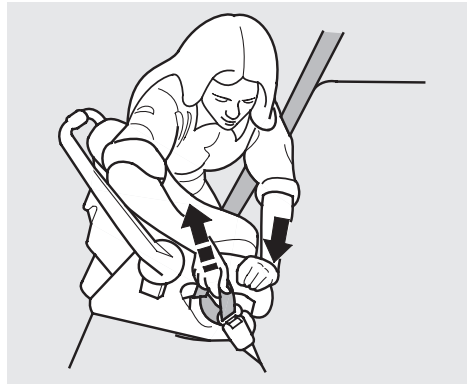

5. After confirming that the belt is locked, grab the shoulder part of the belt near the buckle and pull up to remove any slack from the lap part of the belt. Remember, if the lap part of the belt is not tight, the child seat will not be secure. To remove slack, it may help to put weight on the child seat, or push on the back of the seat, while pulling up on the belt.

6. Push and pull the child seat forward and from side to side to verify that it is secure enough to stay upright during normal driving maneuvers. If the child seat is not secure, unlatch the belt, allow it to retract fully, then repeat these steps.

CONTINUED

To deactivate the locking mechanism and remove a child seat, unlatch the buckle, unroute the seat belt, and let the belt fully retract.

Rear-Facing Child Seat Installation Tips

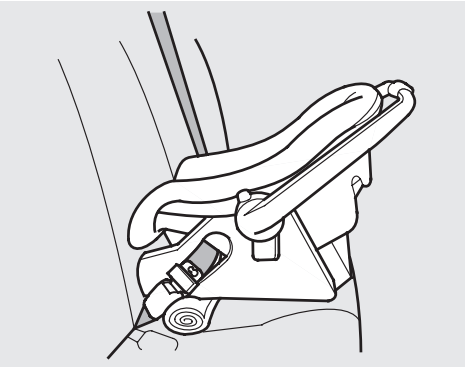

For proper protection, an infant must ride in a reclined, or semi-reclined position. To determine the proper reclining angle, check with the baby's doctor or follow the seat maker's recommendations.

To achieve the desired reclining angle, it may help to put a rolled up towel under the toe of the child seat, as shown.

When properly installed, a rear-facing child seat may prevent the driver or a front-seat passenger from moving the seat as far back as recommended (see page 12). Or it may prevent them from locking the seat-back in the desired upright position (see page 13).

In either case, we recommend that you place the child seat in another back seating position, or leave the affected seat unoccupied. If the problem cannot be solved, you may wish to get a smaller rear-facing child seat.

Additional Precautions for Infants

- ***Never hold an infant on your lap.*** If you are not wearing a seat belt in a crash, you could be thrown forward into the dashboard and crush the infant.

  If you are wearing a seat belt, the infant can be torn from your arms during a crash. For example, if your vehicle crashes into a parked vehicle at 30 mph (48 km/h), a 20-lb (9 kg) infant will become a 600-lb (275 kg) force, and you will not be able to hold on.

- ***Never put a seat belt over yourself and an infant.*** During a crash, the belt could press deep into the infant and cause very serious injuries.

Protecting Small Children

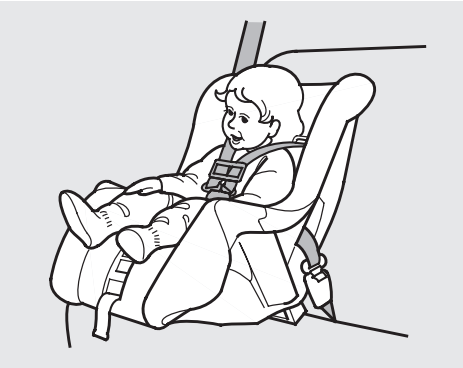

Child Seat Type
A child who can sit up without support, and who fits within the child seat maker's weight and height limits, should be restrained in a forward-facing, upright child seat.

Of the different seats available, we recommend those that have a five-point harness system as shown.

We also recommend that a small child stay in the child seat as long as possible, until the child reaches the weight or height limit for the seat.

Child Seat Placement
In this vehicle, the best place to install a forward-facing child seat is in one of the seating positions in a back seat.

Placing a forward-facing child seat in the front seat of a vehicle equipped with a passenger's airbag can be hazardous. If the vehicle seat is too far forward, or the child's head is thrown forward during a collision, an inflating passenger's airbag can strike the child with enough force to cause very serious or fatal injuries. If a small child must be closely watched, we recommend that another adult sit in a back seat with the child.

⚠ WARNING

Improperly placing a forward-facing child seat in the front seat can result in serious injury or death if the airbags inflate.

If you must place a forward-facing child seat in front, move the vehicle seat as far back as possible and properly restrain the child.

If it is necessary to put a forward-facing child seat in the front, move the vehicle seat as far to the rear as possible, be sure the child seat is firmly secured to the vehicle, and the child is properly strapped in the seat.

Installing a Child Seat with a Lap/ Shoulder Belt

The lap/shoulder belts in the outer back and front passenger seating positions have a locking mechanism that must be activated to secure a child seat.

The following pages provide instructions on how to secure a forward-facing child seat with this type of seat belt.

1. Before installing a child seat in the center seat of the second row or either of the third row seats, make sure the seat belt detachable anchor is latched (see page 104).

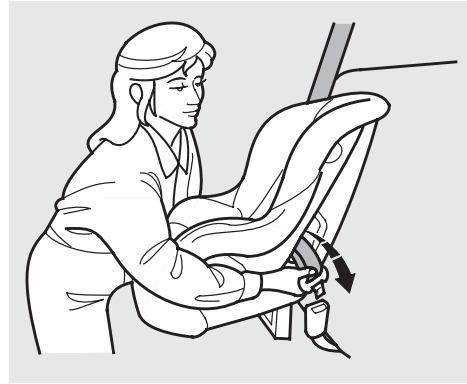

2. With the child seat in the desired seating position, route the belt through the child seat according to the seat maker's instructions, then insert the latch plate into the buckle.

CONTINUED

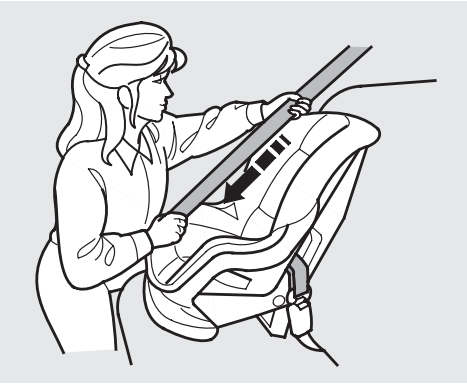

3. To activate the lockable retractor, slowly pull the shoulder part of the belt all the way out until it stops, then let the belt feed back into the retractor (you might hear a clicking noise as the belt retracts).

4. After the belt has retracted, tug on it. If the belt is locked, you will not be able to pull it out. If you can pull the belt out, it is not locked and you will need to repeat these steps.

5. After confirming that the belt is locked, grab the shoulder part of the belt near the buckle and pull up to remove any slack from the lap part of the belt. Remember, if the lap part of the belt is not tight, the child seat will not be secure. It may help to put weight on the child seat, or push on the back of the seat, while pulling up on the belt.

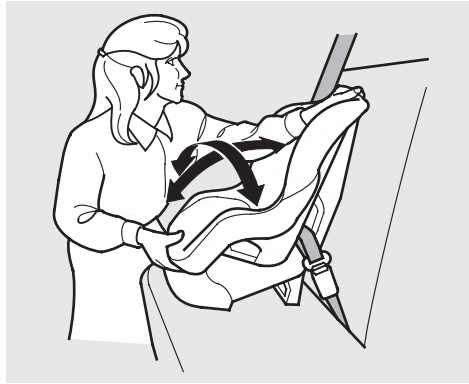

6. Push and pull the child seat forward and from side to side to verify that it is secure enough to stay upright during normal driving maneuvers. If the child seat is not secure, unlatch the belt, allow it to retract fully, then repeat these steps.

To deactivate the locking mechanism in order to remove a child seat, unlatch the buckle, unroute the seat belt, and let the belt fully retract.

CONTINUED

Additional Precautions for Small Children

- ***Never hold a small child on your lap.*** If you are not wearing a seat belt in a crash, you could be thrown forward into the dashboard and crush the child.

  If you are wearing a seat belt, the child can be torn from your arms during a crash. For example, if your vehicle crashes into a parked vehicle at 30 mph (48 km/h), a 30-lb (14 kg) child will become a 900-lb (410 kg) force, and you will not be able to hold on.

- ***Never put a seat belt over yourself and a child.*** During a crash, the belt could press deep into the child and cause very serious injuries.

Protecting Larger Children

When a child reaches the recommended weight or height limit for a forward-facing child seat, the child should sit in the back seat and wear a lap/shoulder belt.

If a child is too short for the shoulder part of the belt to properly fit, we recommend that the child use a booster seat until the child is tall enough to use the seat belt without a booster.

The following pages give instructions on how to check proper seat belt fit, what kind of booster seat to use if one is needed, and important precautions for a child who must sit in the front seat.

⚠ WARNING

Allowing a larger child to sit improperly in the front seat can result in injury or death if the passenger's front airbag inflates.

If a larger child must sit in front, make sure the child moves the seat as far back as possible and wears the seat belt properly.

Checking Seat Belt Fit

To determine if a lap/shoulder belt properly fits a child, have the child put on the seat belt. Follow the instructions on page 15 . Then check how the belt fits.

If the shoulder part of the belt rests over the child's collarbone and against the center of the chest, as shown, the child is large enough to wear the seat belt.

However, if the belt touches or crosses the child's neck, the child needs to use a booster seat.

Do not let a child wear a seat belt across the neck. This could result in serious neck injuries during a crash.

Do not let a child put the shoulder part of a seat belt behind the back or under the arm. This could cause very serious injuries during a crash. It also increases the chance that the child will slide under the belt in a crash and be injured.

Do not put any accessories on a seat belt. Devices intended to improve occupant comfort or reposition the shoulder part of a seat belt, severely compromise the protective capability of the seat belt and increase the chance of serious injury in a crash.

Two children should never use the same seat belt. If they do, they could be very seriously injured in a crash.

CONTINUED

Using a Booster Seat

If a child needs a booster seat, we recommend choosing a style that allows the child to use the lap/shoulder belt directly, without a shield, as shown.

Whichever style you select, follow the booster seat maker's instructions.

A child may continue using a booster seat until the tops of the ears are even with the top of the seat-back. A child of this height should be tall enough to use the lap/shoulder belt without a booster.

When Can a Larger Child Sit in Front
The National Highway Traffic Safety Administration and Transport Canada recommend that all children ages 12 and under be properly restrained in a back seat.

The back seat is the safest place for a child of any age or size.

In addition, the passenger's front airbag poses serious risks to children. If the seat is too far forward, or the child's head is thrown forward during a collision, or the child is unrestrained or out of position, an inflating front airbag can kill or seriously injure the child.

The side airbag also poses risks. If any part of a larger child's body is in the path of a deploying airbag, the child could receive possibly serious injuries.

Of course, children vary widely. And while age may be one indicator of when a child can safely ride in the front, there are other important factors you should consider.

Physical Size
Physically, a child must be large enough for the lap/shoulder belt to properly fit over the hips, chest, and shoulder (see pages 15 and 39). If the seat belt does not fit properly, the child should not sit in the front.

Maturity
To safely ride in front, a child must be able to follow the rules, including sitting properly and wearing the seat belt properly throughout a ride.

If you decide that a child can safely ride up front, be sure to:

- Carefully read the owner's manual and make sure you understand all seat belt instructions and all safety information.
- Move the vehicle seat to the rear-most position.
- Have the child sit up straight, back against the seat, and feet on or near the floor.
- Check that the child's seat belt is properly positioned and secured.
- Supervise the child. Even mature children sometimes need to be reminded to fasten the seat belts or sit properly.

Using Child Seats with Tethers
Your vehicle has attachment points for a tether-style child seat to be installed on the second or third row as shown.

Since a tether can provide additional security, we recommend using a tether whenever one is required or available.

Second Seat Installation:

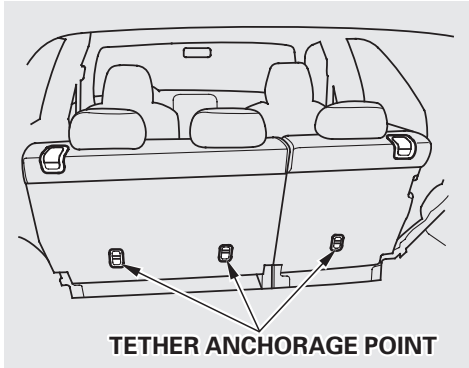

Each second row seat has a tether anchorage point behind the seat back.

Third Seat Installation:

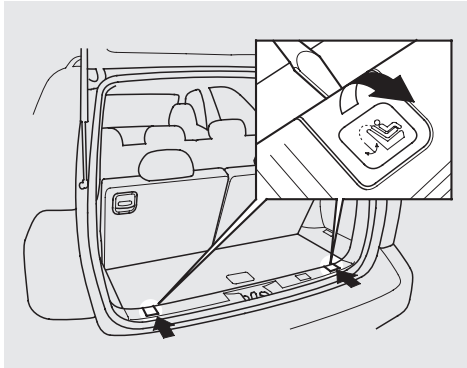

There are two anchorage points on the tailgate sill. Select the anchorage point you want to use, and remove the cover with a small flat-tipped screwdriver or fingernail file.

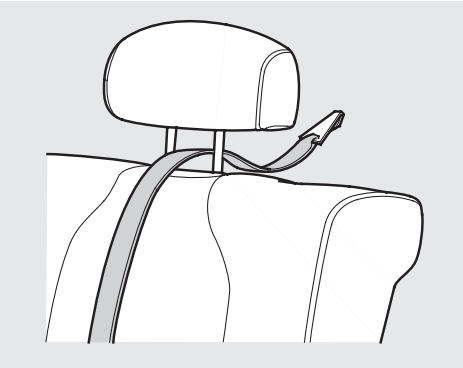

Lift the head restraint, then route the tether strap over the seat-back between the legs of the head restraint.

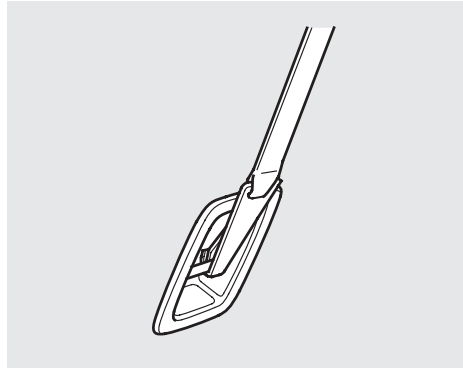

Attach the tether strap hook to the tether attachment point and tighten the strap according to the child seat maker's instructions. Make sure the strap is not twisted.

Additional Information About Your Seat Belts

Seat Belt System Components
Your seat belt system includes lap/shoulder belts in all seven seating positions. The front seat belts are also equipped with automatic seat belt tensioners.

The seat belt system also includes a light on the instrument panel to remind you and your passengers to fasten your belts. If the driver's seat belt is not fastened before the ignition is turned ON (II), the light will come on and a beeper will also sound. The beeper will stop after a few seconds, but the light will stay on until the driver's seat belt is fastened.

Lap/Shoulder Belt

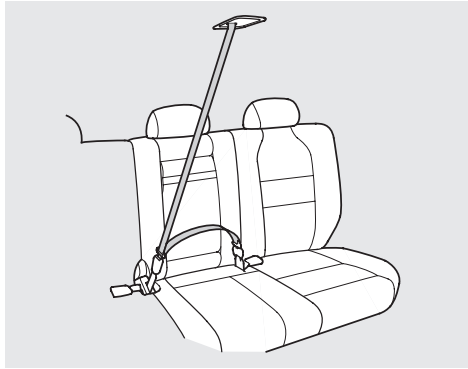

The lap/shoulder belts in the center seat of the second row and both of the third row seats are equipped with a detachable anchor that has two parts: a small latch plate and a buckle.

The detachable anchor should normally be latched whenever the seats-backs are in an upright position. For more information about the detachable anchors, see page 104 .

The lap/shoulder belts goes over your shoulder, across your chest, and across your hips.

To fasten the belt, insert the latch plate into the buckle, then tug on the belt to make sure the buckle is latched.

To unlock the belt, push the red PRESS button on the buckle. Guide the belt across your body so that it retracts completely. After exiting the vehicle, be sure the belt is out of the way and will not get closed in the door.

All seat belts have an emergency locking retractor. In normal driving, the retractor lets you move freely in your seat while it keeps some tension on the belt. During a collision or sudden stop, the retractor automatically locks the belt to help restrain your body.

The seat belts in all seating positions except the driver's have an additional locking mechanism that must be activated to secure a child seat. (See pages 30 and 35 for instructions on how to secure child seats with this type of seat belt.)

If the shoulder part of the belt is pulled all the way out, the locking mechanism will activate. The belt will retract, but it will not allow the passenger to move freely.

To deactivate the locking mechanism, unlatch the buckle and let the seat belt fully retract. To refasten the belt, pull it out only as far as needed.

See page 15 for instructions on how to wear the lap/shoulder belt properly.

Additional Information About Your Seat Belts

Automatic Seat Belt Tensioners

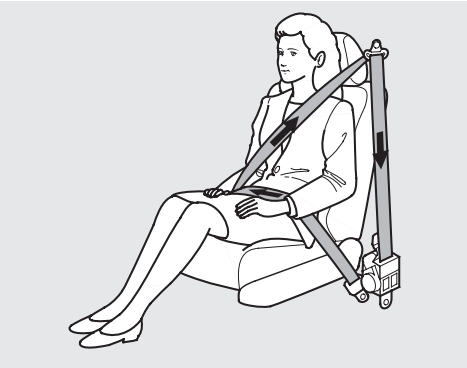

Your Acura has automatic seat belt tensioners for added protection during a moderate to severe frontal collision.

If your airbags inflate, the tensioners immediately tighten the front seat belts to help hold the occupants in place. The belts will remain tight until you unbuckle them in the normal way.

SRS The SRS indicator light will come on if there is a problem with your automatic seat belt tensioners (see page 51).

Seat Belt Maintenance
For safety, you should check the condition of your seat belts regularly.

Pull each belt out fully and look for frays, cuts, burns, and wear. Check that the latches work smoothly and that the lap/shoulder belts retract easily. Any belt not in good condition or not working properly will not provide good protection and should be replaced as soon as possible.

U.S. Models
Acura provides a lifetime warranty on seat belts. Acura will repair or replace any seat belt component that fails to function properly during normal use. Please see your *Acura Warranty Information* booklet for details.

If a seat belt is worn during a crash, you should have your dealer inspect the belt, and replace it if necessary. A belt that has been worn during a crash may not provide the same level of protection in a subsequent crash. The dealer should also inspect the anchors for damage and replace them if needed.

⚠ WARNING

Not checking or maintaining seat belts can result in serious injury or death if the seat belts do not work properly when needed.

Check your seat belts regularly and have any problem corrected as soon as possible.

Automatic seat belt tensioners that deployed during a crash must be replaced.

For information on how to clean your seat belts, see page 309.

Additional Information About Your Airbags

SRS Components
Your Supplemental Restraint System (SRS) includes:

- Two front airbags. The driver's airbag is stored in the center of the steering wheel; the front passenger's airbag is stored in the dashboard. Both are marked "SRS AIRBAG."
- Automatic seat belt tensioners (see page 46).
- Sensors that can detect a moderate to severe frontal collision.
- A sophisticated electronic system that continually monitors and records information about the sensors, the control unit, the airbag activators, and driver and passenger seat belt use when the ignition is ON (II).
- An indicator light on the instrument panel that alerts you to a possible problem with the system (see page 51).
- Emergency backup power in case your vehicle's electrical system is disconnected in a crash.

How Your Front Airbags Work

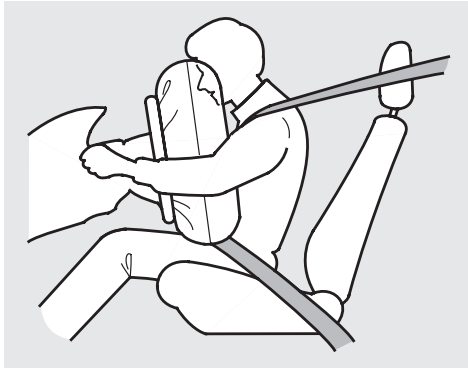

If you ever have a moderate to severe frontal collision, the sensors will detect the vehicle's rapid deceleration. If the rate of deceleration is high enough, the control unit will instantly inflate the front airbags.

During a frontal crash, your seat belts help restrain your lower body and torso. Your airbag provides a cushion to help restrain and protect your head and chest.

Since both airbags use the same sensors, both airbags normally inflate at the same time. However, it is possible for only one airbag to inflate.

This can occur when the severity of a collision is at the margin, or threshold, that determines whether or not the airbags will deploy. In such cases, the seat belt will provide sufficient protection, and the supplemental protection offered by the airbag would be minimal.

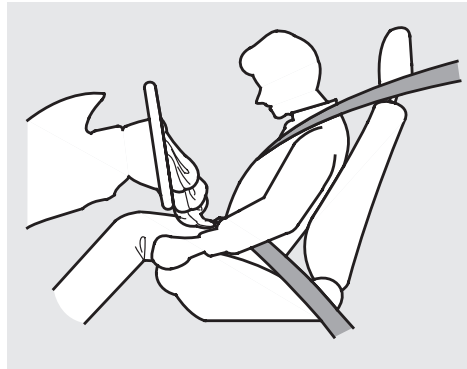

After inflating, the airbags immediately deflate, so they won't interfere with the driver's visibility, or the ability to steer or operate other controls.

The total time for inflation and deflation is approximately one-tenth of a second, so fast that most occupants are not aware that the airbags deployed until they see them lying in their laps.

After a crash, you may see what looks like smoke. This is actually powder from the airbag's surface. Although the powder is not harmful, people with respiratory problems may experience some temporary discomfort. If this occurs, get out of the vehicle as soon as it is safe to do so.

U.S. Owners
For additional information on how your airbags work, see the booklet titled *SRS: What You Need to Know About Airbags* that came with your owner's manual.

Canadian Owners
For additional information on how your airbags work, ask your dealer for a copy of the booklet titled *SRS: What You Need to Know About Airbags*.

How Your Side Airbags Work

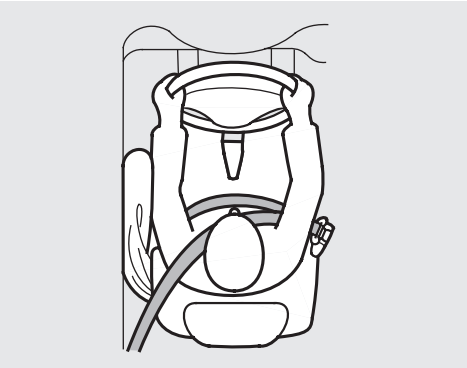

Your vehicle is equipped with side airbags for the driver and a front seat passenger. The airbags are stored in the outer edges of the front seat-backs, and both are marked "SIDE AIRBAG."

If you ever have a moderate to severe side impact, the sensors will detect rapid deceleration and signal the control unit to instantly inflate either the driver's or the passenger's side airbag.

Only one airbag will deploy during a side impact. If the impact is on the passenger's side, the passenger's side airbag will deploy even if there is no passenger.

To get the best protection from the side airbags, front seat occupants should wear their seat belts and sit upright and well back in their seats.

How the SRS Indicator Light Works

SRS

The SRS indicator light alerts you to a potential problem with your front airbags and automatic seat belt tensioners.

This light will also alert you to a potential problem with your side airbags or passenger's side airbag automatic cutoff system (see page 52).

When you turn the ignition ON (II), this indicator will light briefly then go out. This tells you that the system is working properly.

If the light comes on at any other time, or does not come on at all, you should have the system checked by your dealer. For example:

- If the SRS indicator light does not come on after you turn the ignition ON (II).
- If the light stays on after the engine starts.
- If the light comes on or flashes on and off while you drive.

If you see any of these indications, your front or side airbags may not deploy, your passenger's side airbag automatic cutoff system may not work properly, or your seat belt tensioners may not work when you need them. See your Acura dealer as soon as possible.

⚠ WARNING

Ignoring the SRS indicator light can result in serious injury or death if the airbags, cutoff system, or tensioners do not work properly.

Have your vehicle checked by a dealer as soon as possible if the SRS light alerts you to a potential problem.

How The Side Airbag Indicator Light Works

SIDE AIRBAG This light alerts you that the passenger's side airbag has been automatically shut off.

To reduce the risk of injury from an inflating side airbag, your vehicle has an automatic cutoff system for the passenger's side airbag.

Although Acura does not encourage children to ride in the front, this system is designed to shut off the side airbag if a child leans sideways and the child's head is in the side airbag deployment path.

If a small-statured adult leans sideways, or larger adult slouches and leans sideways into the deployment path of the side airbag, the system may also shut off the side airbag.

If the side airbag indicator light comes on, you should have the passenger sit upright. Once the passenger is out of the deployment path of the side airbag, the system will turn the airbag back on and the light will go out.

A front seat passenger should not use a cushion or other object as a backrest. It may prevent the cutoff system from working properly.

When you turn the ignition ON (II), the indicator should light briefly and go out (see page 60). If it doesn't light, stays on, or comes on while driving without a passenger in the front seat, have the system checked.

Airbag Service

Your front and side airbag systems are virtually maintenance-free, and there are no parts you can safely service. However, you must have your vehicle serviced if:

- ***Your airbags ever inflate.*** Any airbag that has deployed must be replaced along with the control unit, automatic seat belt tensioners and other related parts. Do not try to remove or replace any airbag by yourself. This must be done by a Honda dealer or a knowledgeable body shop.

- ***The SRS indicator light alerts you to a problem.*** Take your vehicle to an authorized Acura dealer as soon as possible. If you ignore this indication, the airbags might not inflate when you need them.

Additional Safety Precautions

- ***Do not attempt to deactivate your airbags.*** Together, airbags and seat belts provide the best protection.

- ***Do not tamper with airbag components or wiring for any reason.*** Tampering could cause the airbags to deploy, possibly causing very serious injury.

- ***Do not expose the front seat-backs to water.*** If rain or spilled water soaks into a seat-back, it can prevent the side airbag system from working properly.

- ***Do not cover or replace front seat-back covers without consulting an Acura dealer.*** Improperly replacing or covering front seat-back covers can prevent your side airbags from inflating during a collision.

See page 202 for further information and precautions relating to your airbags.

Carbon Monoxide Hazard

Your vehicle's exhaust contains carbon monoxide gas. You should have no problem with carbon monoxide entering the vehicle in normal driving if you maintain your vehicle properly.
Have the exhaust system inspected for leaks whenever:

- The vehicle is raised for an oil change.
- You notice a change in the sound of the exhaust.
- The vehicle was in an accident that may have damaged the underside.

⚠ WARNING

Carbon monoxide gas is toxic. Breathing it can cause unconsciousness and even kill you.

Avoid any enclosed areas or activities that expose you to carbon monoxide.

High levels of carbon monoxide can collect rapidly in enclosed areas, such as a garage. Do not run the engine with the garage door closed. Even with the door open, run the engine only long enough to move the vehicle out of the garage.

With the tailgate open, air flow can pull exhaust gas into your vehicle's interior and create a hazardous condition. If you must drive with the tailgate open, open all the windows and set the heating and cooling system/climate control system as shown below.

If you must sit in your parked vehicle, even in an unconfined area, with the engine running, adjust the heating and cooling system/climate control system as follows:

1. Select the Fresh Air mode.
2. Select the mode.
3. Turn the fan on high speed.
4. Set the temperature control to a comfortable setting.

These labels are in the locations shown. They warn you of potential hazards that could cause serious injury. Read these labels carefully.

If a label comes off or becomes hard to read, contact your Acura dealer for a replacement.

DASHBOARD

U.S. models only

WARNING

Children Can Be KILLED or INJURED by Passenger Air Bag

The back seat is the safest place for children 12 and under.
Make sure all children use seat belts or child seats.

SUN VISOR

U.S. models

WARNING

DEATH or SERIOUS INJURY can occur

- Children 12 and under can be killed by the air bag
- The BACK SEAT is the SAFEST place for children
- NEVER put a rear-facing child seat in the front
- Sit as far back as possible from the air bag
- ALWAYS use SEAT BELTS and CHILD RESTRAINTS

Canadian models

CAUTION
TO AVOID SERIOUS INJURY:
- FOR MAXIMUM SAFETY PROTECTION IN ALL TYPES OF CRASHES, YOU MUST ALWAYS WEAR YOUR SAFETY BELT.
- DO NOT INSTALL REARWARD-FACING CHILD SEATS IN ANY FRONT PASSENGER SEAT POSITION.
- DO NOT SIT OR LEAN UNNECESSARILY CLOSE TO THE AIR BAG.
- DO NOT PLACE ANY OBJECTS OVER THE AIR BAG OR BETWEEN THE AIR BAG AND YOURSELF.
- SEE THE OWNER'S MANUAL FOR FURTHER INFORMATION AND EXPLANATIONS.

PRÉCAUTION:
POUR EVITER DES BLESSURES GRAVES:
- POUR PROFITER D'UNE PROTECTION MAXIMALE LORS D'UNE COLLISION BOUCLEZ TOUJOURS VOTRE CEINTURE DE SECURITE.
- N'INSTALLEZ JAMAIS UN SIEGE POUR ENFANTS FAISANT FACE A L'ARRIERE SUR LE SIEGE DU PASSAGER AVANT.
- NE VOUS APPUYEZ PAS ET NE VOUS ASSEYEZ PAS PRES DU COUSSIN GONFLABLE.
- NE DEPOSEZ AUCUN OBJET SUR LE COUSSIN GONFLABLE OU ENTRE LE COUSSIN GONFLABLE ET VOUS.
- LISEZ LE GUIDE UTILISATEUR POUR DE PLUS AMPLES RENSEIGNEMENTS.

HOOD

WARNING

The airbag inflator is explosive and, if accidentally deployed, can seriously hurt you.
Follow Service Manual instructions carefully.

ATTENTION

Le gonfleur SRS est explosible, et s'il se déploie accidentellement, il risque de provoquer des blessures graves ou de tuer.
Suivre attentivement les instructions du manuel d'entretien.

RADIATOR CAP

DANGER
WARNUNG
危 険
▶ NEVER OPEN WHEN HOT.
Hot coolant will scald you.
▶ N'OUVREZ PAS QUAND CHAUD.
▶ NICHT BEI HEISSEM MOTOR ÖFFNEN.
▶熱い時あけないで下さい。
▶ 高温时,请勿打开。
1.1

BATTERY LABEL

WARNING: HIGHER ROLLOVER RISK

Avoid Abrupt Maneuvers and Excessive Speed.

Always Buckle Up.

See Owner's Manual For Further Information.

This section gives information about the controls and displays that contribute to the daily operation of your Acura. All the essential controls are within easy reach.

Control Locations 58
Indicator Lights..... 59
Gauges 65
Controls Near the Steering Wheel 69
Headlights 70
Automatic Lighting Off Feature..... 71
Daytime Running Lights..... 71
Instrument Panel Brightness..... 71
Turn Signals 72
Windshield Wipers 72
Windshield Washers 74
Rear Window Wiper and Washer..... 74
Hazard Warning..... 74
Rear Window Defogger 75
Fog Light 75
Steering Wheel Adjustment 76
Steering Wheel Controls 77
Cruise Control..... 77
Remote Audio Controls 80
Keys and Locks..... 80
Keys..... 80
Immobilizer System..... 81
Ignition Switch 82
Power Door Locks..... 83
Remote Transmitter..... 85
Childproof Door Locks 89
Glove Box 90
HomeLink Universal Transmitter 91
Seats 96
Power Seat Adjustments..... 96
Driver's Lumbar Support..... 97
Manual Seat Adjustments..... 98
Second and Third Row seat Adjustments 99
Head Restraints 100
Rear Seat Access 101
Folding the Second Seat 101
Folding the Third Seat..... 102
Detachable Anchors..... 104
Seat Heaters 105
Power Windows 106
Moonroof 109
Mirrors..... 110
Parking Brake 112
Driving Position Memory System..... 113
Beverage Holder..... 116
Console Compartment 118
Rear Compartment..... 118
Cargo Hooks 118
Sunglasses Holder 119
Sun Visor..... 120
Vanity Mirror 120
Accessory Power Sockets..... 121
Coin Box 122
Coat Hook..... 122
Interior Lights..... 123
Trip Computer 127
(Without Navigation System) .. 127
(With Navigation System) 137

Control Locations

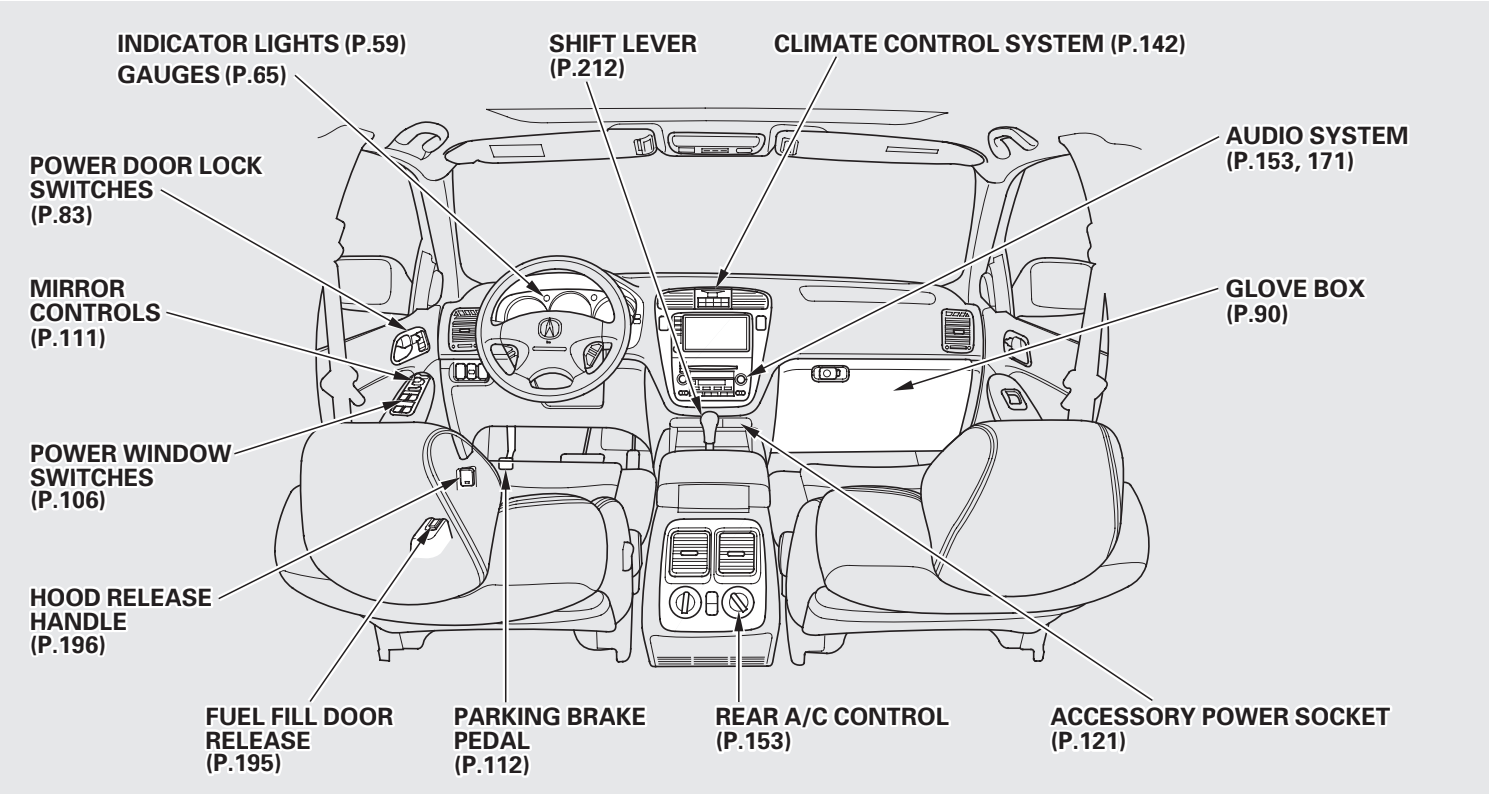

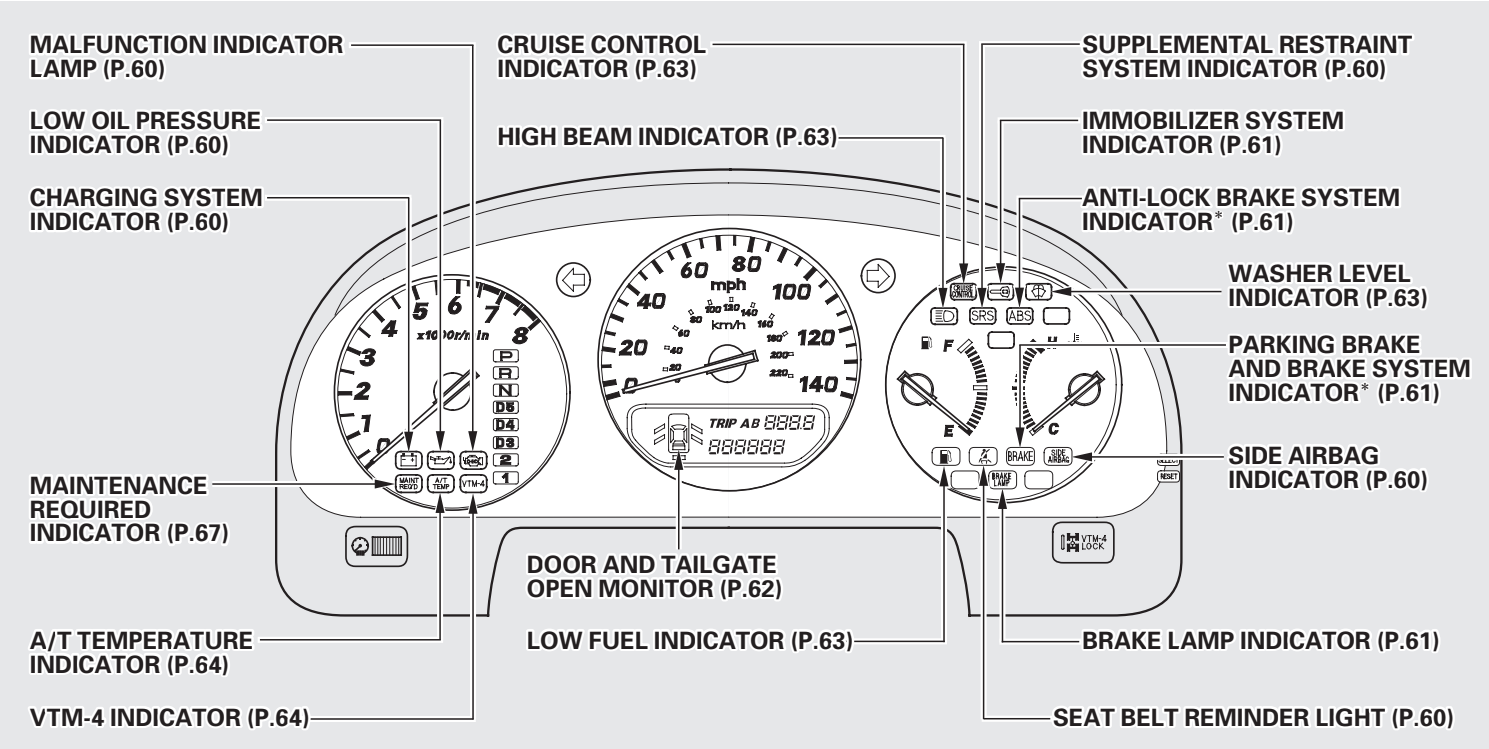

* The U.S. instrument panel is shown. Differences for the Canadian models are noted in the text.

CONTINUED

Indicator Lights

The instrument panel has many indicators to give you important information about your vehicle.

Malfunction Indicator Lamp

See page 329 .

Seat Belt Reminder Light

This indicator lights when you turn the ignition switch ON (II). It is a reminder to you and your passengers to protect yourselves by fastening the seat belts. A beeper also sounds if you have not fastened your seat belt.

If you do not fasten your seat belt, the beeper will stop after a few seconds but the light stays on until you do. Both the light and the beeper stay off if you fasten your seat belt before turning on the ignition.

Low Oil Pressure Indicator

The engine can be severely damaged if this light flashes or stays on when the engine is running. For complete information, see page 327 .

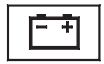

Charging System Indicator

If this light comes on when the engine is running, the battery is not being charged. For complete information, see page 328 .

Supplemental Restraint System Indicator

This indicator lights when you turn the ignition switch ON (II). If it comes on at any other time, it indicates a potential problem with your front airbags. This light will also alert you to a potential problem with your side airbags, passenger's side airbag automatic cutoff system or automatic seat belt tensioners. For complete information, see page 51.

Side Airbag Indicator

This indicator lights when you turn the ignition switch ON (II). If it comes on at any other time, it indicates that the passenger's side airbag has automatically shut off. For complete information, see page 52 .

U.S. Canada

Parking Brake and Brake System Indicator

This light has two functions:

1. It comes on when you turn the ignition switch ON (II). It is a reminder to check the parking brake. Driving with the parking brake applied can damage the brakes and tires.

2. If the indicator remains lit after you have fully released the parking brake while the engine is running, or if it comes on while driving, it can indicate a problem in the brake system. For complete information, see page 331.

U.S. Canada

Anti-lock Brake System (ABS) Indicator

This light normally comes on for a few seconds when you turn the ignition switch ON (II), and when the ignition switch is turned to START (III). If this light comes on at any other time, there is a problem in the ABS. If this happens, take the vehicle to your dealer to have it checked. With the light on, your vehicle still has normal braking ability but no anti-lock. For complete information, see page 221 .

Immobilizer System Indicator

This indicator comes on for a few seconds when you turn the ignition switch ON (II). It will then go off if you have inserted a properly-coded ignition key. If it is not a properly-coded key, the indicator will blink and the engine will not start (see page 81).

This indicator also blinks several times when you turn the ignition switch from ON (II) to ACCESSORY (I) or LOCK (0).

Turn Signal and Hazard Warning Indicators

The left or right turn signal light blinks when you signal a lane change or turn. If the light does not blink or blinks rapidly, it usually means one of the turn signal bulbs is burned out (see page 296). Replace the bulb as soon as possible, since other drivers cannot see that you are signalling.

When you turn on the Hazard Warning switch, both turn signal lights blink. All turn signals on the outside of the vehicle should flash.

Brake Lamp Indicator

If a brake light does not work, the **BRAKE LAMP** indicator comes on when you push the brake pedal with the ignition switch ON (II).

A burned out brake light is a hazard when drivers behind you cannot tell you are braking. Have your brake lights repaired right away.

Door and Tailgate Open Monitor

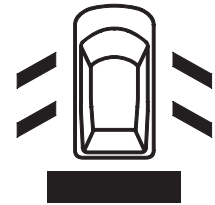

The appropriate light comes on in this display if the tailgate or any door is not closed tightly.

All the lights in the monitor display come on for a few seconds when you turn the ignition switch ON (II).

DRL "Daytime Running Lights" Indicator

Canadian models only

This indicator lights when you turn the ignition switch to ON (II) with the headlight switch off and the parking brake set. It should go off if you turn on the headlights or release the parking brake. If it comes on at any other time, it means there is a problem with the DRL. There may also be a problem with the high beam headlights.

CRUISE CONTROL Cruise Control Indicator

This lights when you set the cruise control. See page 77 for information on operating the cruise control.

High Beam Indicator

This light comes on with the high beam headlights. See page 70 for information on the headlight controls.

On Canadian models, this indicator comes on with reduced brightness when the Daytime Running Lights (DRL) are on (see page 71).

Low Fuel Indicator

This light comes on as a reminder that you must refuel soon.

Washer Level Indicator

This light comes on when the washer fluid level is low. Add washer fluid when you see this light come on (see page 270).

A/T TEMP

A/T Temperature Indicator
This indicator monitors the temperature of the automatic transmission fluid. The indicator should come on for a few seconds when you turn the ignition switch ON (II). If it comes on while driving, it indicates the transmission fluid temperature is too high. Pull to the side of the road when it is safe, shift to Park, and let the engine idle until the indicator goes out.

NOTICE

Continuing to drive with the A/T Temperature indicator lit may cause serious damage to the transmission.

VTM-4

VTM-4 Indicator
This light normally comes on for a few seconds when you turn the ignition switch ON (II). If this light comes on at any other time, there is a problem in the 4WD system. Take the vehicle to your dealer to have it checked.

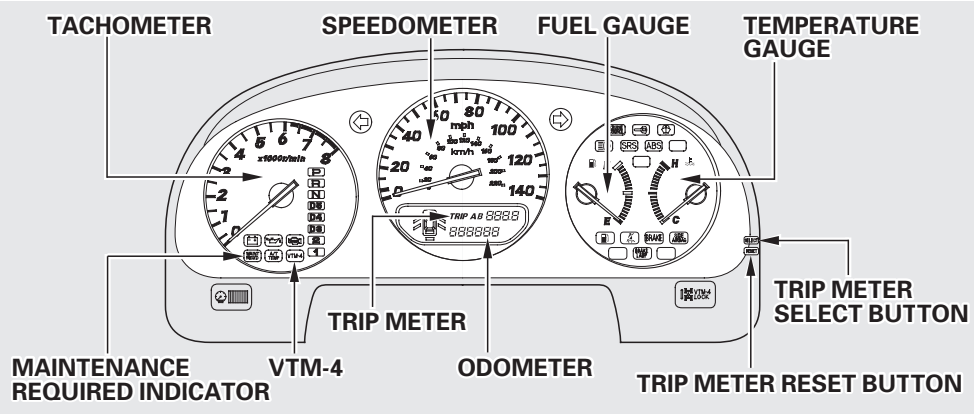

Speedometer

U.S. Models

This shows your speed in miles per hour (mph). The smaller inner numbers are the speed in kilometers per hour (km/h).

Canadian Models

This shows your speed in kilometers per hour (km/h). The smaller inner numbers are the speed in miles per hour (mph).

Tachometer

The tachometer shows the engine speed in revolutions per minute (rpm). To protect the engine from damage, never drive with the tachometer needle in the red zone.

Odometer

The odometer shows the total distance your vehicle has been driven. It measures miles in U.S. models and kilometers in Canadian models.

It is illegal under U.S. federal law and Canadian provincial regulations to disconnect, reset, or alter the odometer with the intent to change the number of miles or kilometers indicated.

Trip Meter

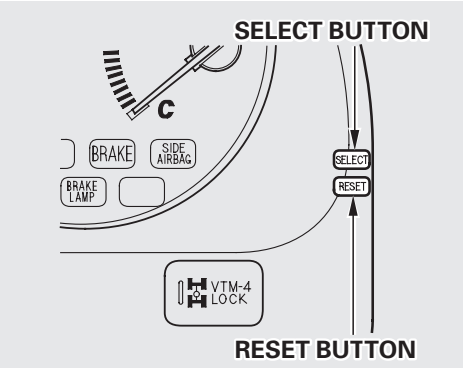

This meter shows the number of miles (U.S.) or kilometers (Canada) driven since you last reset it.

There are two trip meters: Trip A and Trip B. Switch between these displays by pressing the Select button repeatedly. Each trip meter works independently, so you can keep track of two different distances. When you turn the ignition switch ON (II), what you last selected is displayed.

To reset a trip meter, display it, and then press and hold the Reset button until the number resets to “0.0”. Both trip meters will reset if the vehicle’s battery goes dead or is disconnected.

Temperature Gauge

This shows the temperature of the engine’s coolant. During normal operation, the pointer should rise from the bottom blue mark to about the middle of the gauge. In severe driving conditions, such as very hot weather or a long period of uphill driving, the pointer may rise to the upper white mark. If it reaches the red (Hot) mark, pull safely to the side of the road. Turn to page 325 for instructions and precautions on checking the engine’s cooling system.

Fuel Gauge

This shows how much fuel you have. It is most accurate when the vehicle is on level ground. It may show slightly more or less than the actual amount when you are driving on curvy or hilly roads.

The needle returns to the bottom after you turn off the ignition. The gauge shows the fuel level reading immediately after you turn the ignition switch back ON (II).

Maintenance Required Indicator

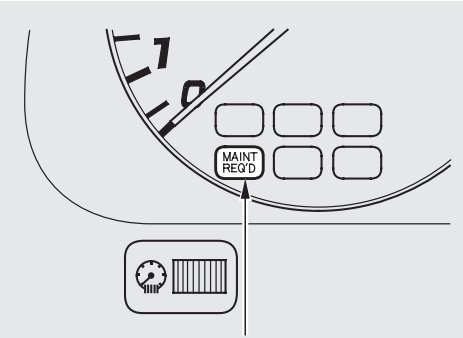

MAINTENANCE REQUIRED INDICATOR

This indicator reminds you that it is time to take your vehicle in for scheduled maintenance.
Refer to the Maintenance Schedules for Normal and Severe Driving Conditions on pages 252 .

For the first 6,000 miles (9,600 km) after the Maintenance Required Indicator is reset, it will come on for two seconds when you turn the ignition switch ON (II).

Between 6,000 miles (9,600 km) and 7,500 miles (12,000 km) this indicator will light for two seconds when you first turn the ignition switch ON (II), and then flash for ten seconds.

If you exceed 7,500 miles (12,000 km) without having the scheduled maintenance performed, this indicator will remain on as a constant reminder.

Your dealer will reset this indicator after completing the scheduled maintenance. If this maintenance is done by someone other than your Acura dealer, reset the indicator as follows.

CONTINUED

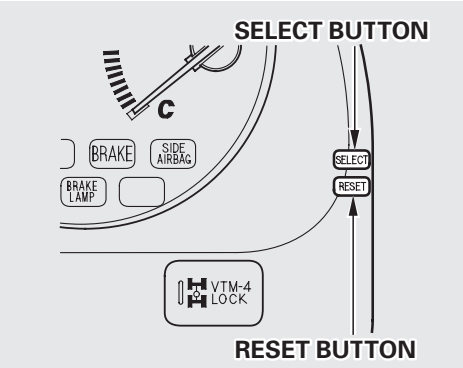

1. Turn off the engine.

2. Press and hold the select and reset buttons on the instrument panel, then turn the ignition switch ON (II).

3. Hold the buttons for approximately ten seconds until the indicator resets.

The two levers on the steering column contain controls for driving features you use most often. The left lever controls the turn signals, headlights, and high beams. The right lever controls the windshield washers and wipers.

The switches for the hazard warning lights and rear window defogger are located to the right of the steering column.

The controls under the left air vent are for the cruise control, the moonroof and the fog lights.

The tilt adjustment lever on the underside of the steering column allows you to tilt the steering wheel.

* To use the horn, press the pad around the "A" logo.

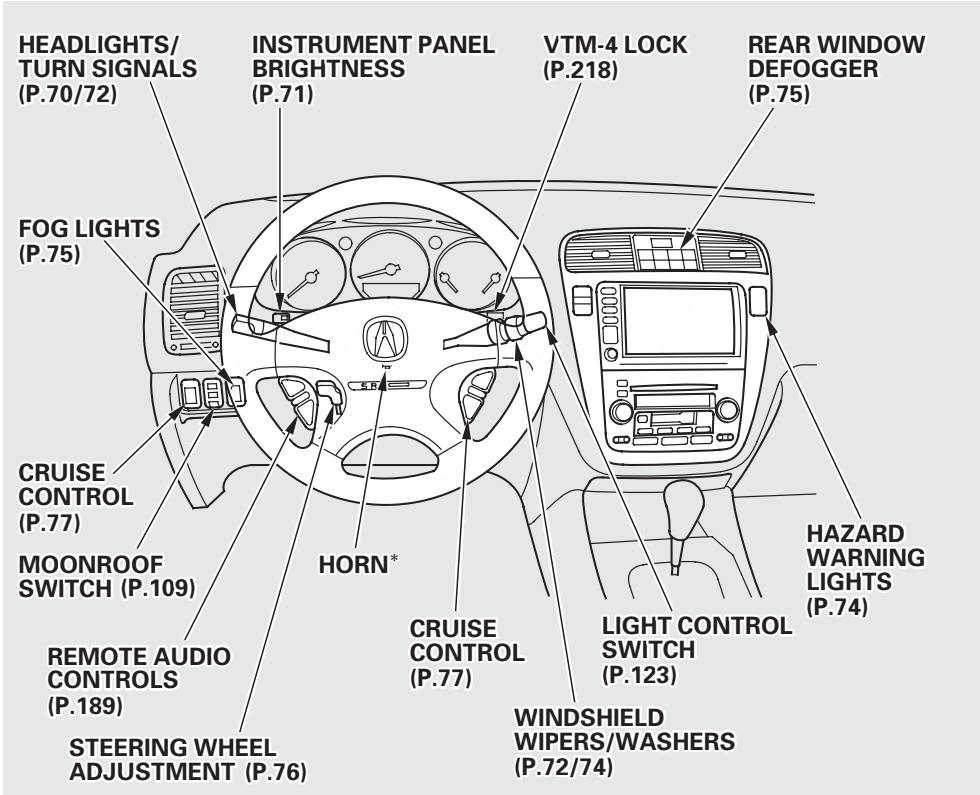

Headlights

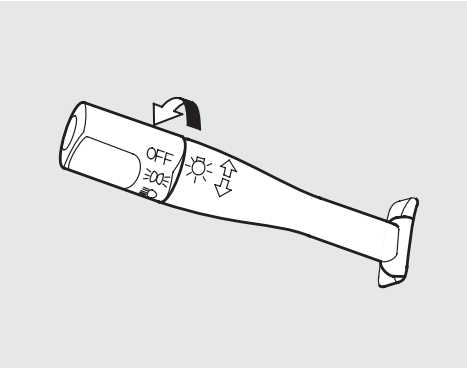

The rotating switch on the left lever controls the lights. Turning this switch to the " " position turns on the parking lights, taillights, instrument panel lights, side-marker lights, and rear license plate lights. Turning the switch to the " " position turns on the headlights.

If you leave the lights on with the ignition switch in ACCESSORY (I) or LOCK (0), you will hear a reminder chime when you open the driver's door.

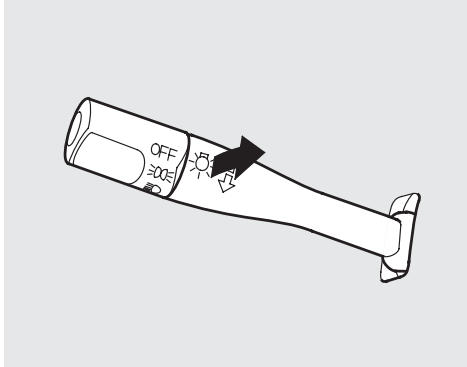

To change between low beams and high beams, pull the turn signal lever until you hear a click, then let go. The blue high beam indicator will light (see page 63).

To flash the high beams, pull the turn signal lever back lightly, then release it. The high beams will come on and go off.

The high beams will stay on for as long as you hold the lever back, no matter what position the headlight switch is in.

Automatic Lighting Off Feature
The Automatic Lighting Off feature turns off the headlights, fog lights, parking lights, taillights, side marker lights, license plate lights and instrument panel lights within 15 seconds of removing the key from the ignition switch and closing the driver's door.

This feature activates if you leave the headlight switch in the or position, remove the key, open, then close the driver's door.
If you remove the key from the ignition switch with the headlight switch on, but do not open the door and get out, the lights will turn off after 10 minutes.

The lights will turn on again when you unlock or open the driver's door. If you unlock the door, but do not open it within 15 seconds, the lights will go off. With the driver's door open, you will hear a lights-on reminder chime.

Daytime Running Lights (Canadian Models)
With the headlight switch off, the high beam headlights come on with reduced brightness when you turn the ignition switch to ON (II) and release the parking brake. They remain on until you turn the ignition off, even if you set the parking brake.

The headlights revert to normal operation when you turn them on with the switch.

Instrument Panel Brightness

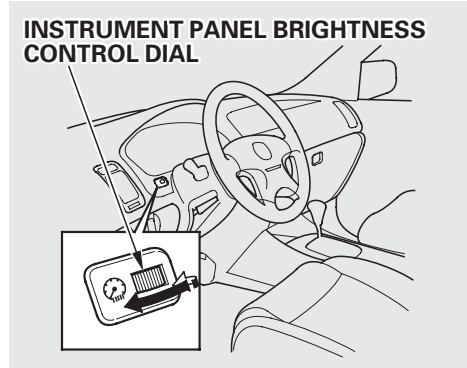

The dial on the instrument panel controls the brightness of the instrument panel lights. Turn the dial to adjust the brightness.

Turn Signals

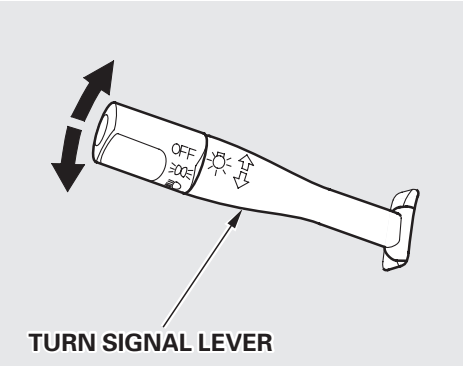

Signal a turn or lane change with this lever. Push down on the lever to signal a left turn, and up to signal a right turn. If you push it up or down all the way, the turn signal continues to blink even when you release the lever. It shuts off automatically as you complete the turn.

To signal a lane change, push lightly on the turn signal lever in the proper direction and hold it. The lever will return to the center position as soon as you release it.

Windshield Wipers

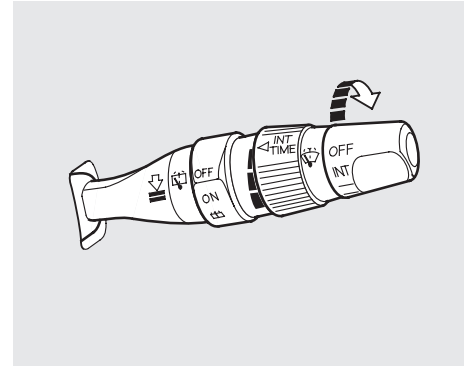

The right lever controls the windshield wipers and washers. The rotary switch at the end of the lever has three positions:

INT: intermittent
— : low speed
═ : high speed

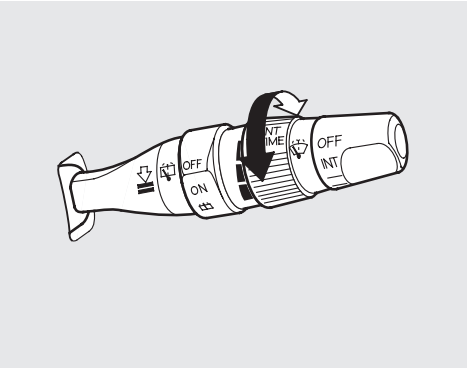

In intermittent, the wipers operate every few seconds. You can vary how often the wipers sweep the windshield by turning the INT TIME ring next to the rotary switch. The sweep interval will change slightly with speed; getting shorter as you drive faster. In low speed intermittent and high speed driving, the wipers run continuously.

If you turn the INT TIME ring to the shortest delay, the wipers will change from intermittent to low speed operation when vehicle speed exceeds 12 mph (20 km/h).

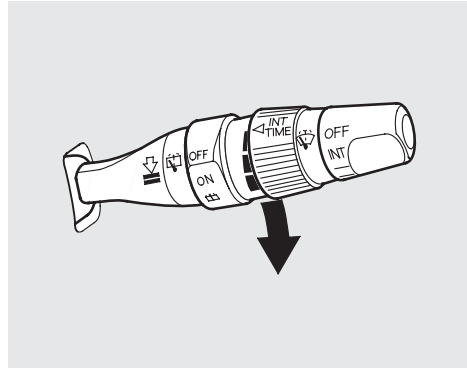

To operate the wipers in mist mode, push the control lever down. The wipers run at high speed until you release the lever. This gives you a quick way to clear the windshield.

Windshield Washers

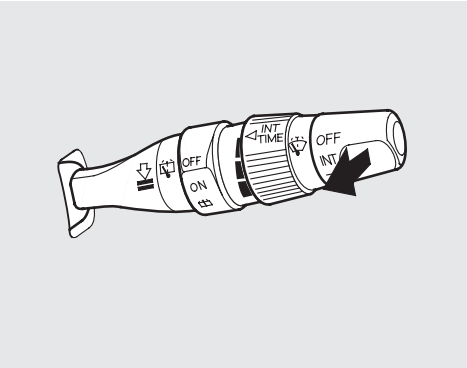

To clean the windshield, pull back on the wiper control lever. The washers spray until you release the lever. The wipers run at low speed while you're pulling the lever, then complete one more sweep of the windshield after you release it.

Rear Window Wiper and Washer

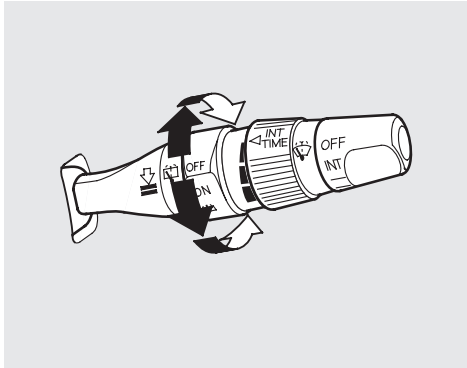

The rear window wiper switch is located next to the windshield wiper switch.

To activate the rear windshield wiper, turn the switch "ON". If you wish to use the wiper and washer, turn and hold the switch one position up from "ON".

Hazard Warning

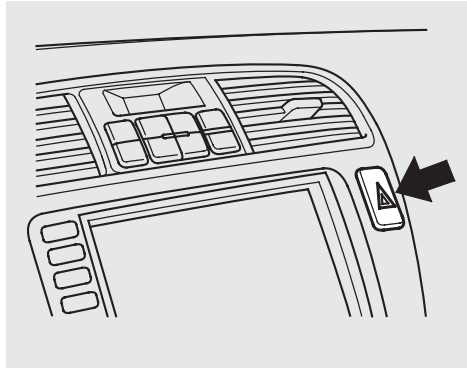

Push the red button to the right of the display to turn on the hazard warning lights (four-way flashers). This causes all four outside turn signals and both indicators in the instrument panel to flash. Use the hazard warning lights if you need to park in a dangerous area near heavy traffic, or if your vehicle is disabled.

Rear Window Defogger

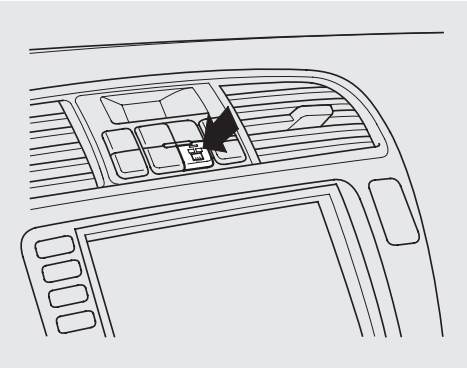

The rear window defogger will clear fog, frost, and thin ice from the window. Push the defogger button to turn it on and off. The light above the button lights to show the defogger is on. If you do not turn it off, the defogger will shut itself off after about 15 minutes. It also shuts off when you turn off the ignition. You have to turn it on again when you restart the vehicle.

Make sure the rear window is clear and you have good visibility before starting to drive.

The defogger wires on the inside of the rear window can be accidentally damaged. When cleaning the glass, always wipe side to side.

Fog Lights

Turn the fog lights on and off by pressing the button. The indicator in the button lights to show the fog lights are on.

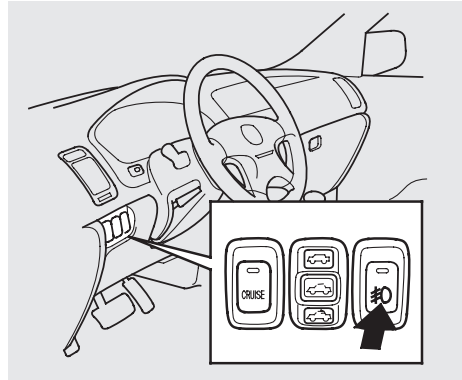

You can use the fog lights only when the headlights are on low beam. They will go off when you turn the headlights off or onto high beam.

Steering Wheel Adjustment

See page 18 for important safety information about how to properly position the steering wheel.

Make any steering wheel adjustment before you start driving.

⚠ WARNING

Adjusting the steering wheel position while driving may cause you to lose control of the vehicle and be seriously injured in a crash.

Adjust the steering wheel only when the vehicle is stopped.

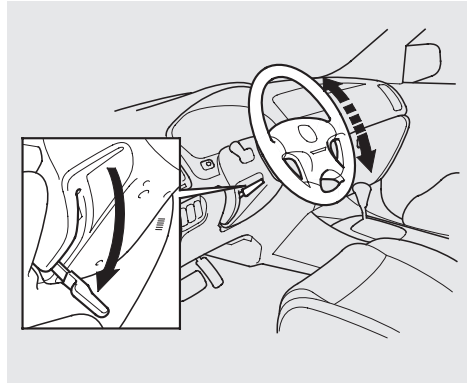

To adjust the steering wheel upward or downward:

1. Push the lever under the steering column all the way down.
2. Move the steering wheel to the desired position, making sure the wheel points toward your chest, not toward your face. Make sure you can see the instrument panel gauges and the indicator lights.
3. Push the lever up to lock the steering wheel in that position.
4. Make sure you have securely locked the steering wheel in place by trying to move it up and down.

Cruise Control

Cruise control allows you to maintain a set speed above 25 mph (40 km/h) without keeping your foot on the accelerator pedal. It should be used for cruising on straight, open highways. It is not recommended for conditions such as city driving, winding roads, slippery roads, heavy rain, or bad weather. You should have full control of the vehicle under those conditions.

⚠WARNING

Improper use of the cruise control can lead to a crash.

Use the cruise control only when traveling on open highways in good weather.

Using the Cruise Control

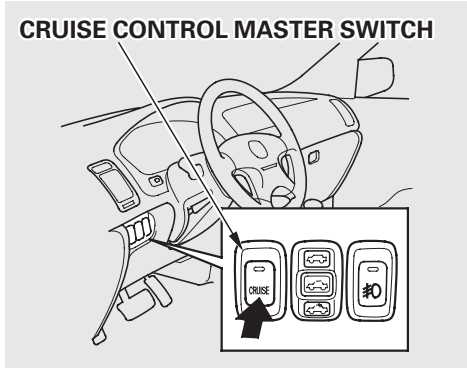

1. Push in the Cruise Control Master Switch to the left of the steering column. The indicator in the switch will light.

2. Accelerate to the desired cruising speed above 25 mph (40 km/h).

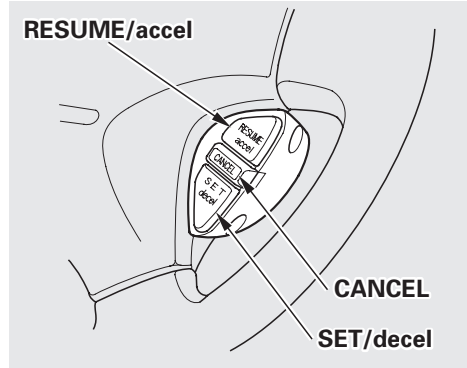

3. Press and release the SET/decel button on the steering wheel. The CRUISE CONTROL light on the instrument panel comes on to show the system is now activated.

CONTINUED

The cruise control may not hold the set speed when you are going up and down hills. If your speed increases going down a hill, use the brakes to slow down to the desired speed. This will cancel the cruise control. To resume the set speed, press the RESUME/accel button. The CRUISE CONTROL light on the instrument panel comes on.

When climbing a steep hill, the automatic transmission may downshift to hold the set speed.

Changing the Set Speed

You can increase the set cruising speed in any of these ways:

- Press and hold the RESUME/accel button. The vehicle will accelerate. When you reach the desired cruising speed, release the button.
- Push on the accelerator pedal. Accelerate to the desired cruising speed and press the SET/decel button.
- To increase your speed in very small amounts, tap the RESUME/accel button repeatedly. Each time you do this, your vehicle will speed up about 1 mph (1.6 km/h).

You can decrease the set cruising speed in any of these ways:

- Press and hold the SET/decel button. The vehicle will decelerate. Release the button when you reach the desired speed.
- To slow down in very small amounts, tap the SET/decel button repeatedly. Each time you do this, your vehicle will slow down about 1 mph (1.6 km/h).
- Tap the brake pedal lightly with your foot. The CRUISE CONTROL light on the instrument panel will go out. When the vehicle slows to the desired speed, press the SET/decel button. The vehicle will then maintain the desired speed.

Even with the cruise control turned on, you can still use the accelerator pedal to speed up for passing. After completing the pass, take your foot off the accelerator pedal. The vehicle will return to the set cruising speed.

Resting your foot on the brake pedal will cause the cruise control to cancel.

Cancelling the Cruise Control

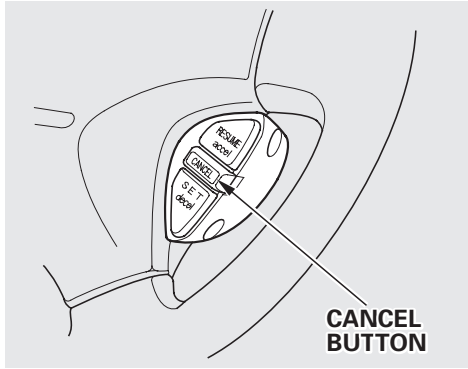

You can cancel the cruise control in any of these ways:

- Tap the brake pedal.
- Push the CANCEL button on the steering wheel.
- Press the Cruise Control Master Switch.

When you push the CANCEL button, or tap the brake pedal, the CRUISE CONTROL light on the instrument panel will go out and the vehicle will begin to slow down. You can use the accelerator pedal in the normal way. The system remembers the previously-set cruising speed. To return to that speed, accelerate to above 25 mph (40 km/h) and then press and release the RESUME/ accel button. The CRUISE CONTROL light comes on. The vehicle will accelerate to the same cruising speed as before.

Pressing the Cruise Control Master Switch turns the system completely off and erases the previous cruising speed from memory. To use the system again, refer to ***Using the Cruise Control***.

Remote Audio Controls

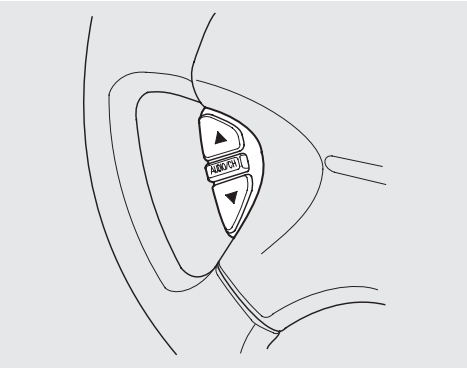

These buttons let you control some functions of the audio system without removing your hands from the wheel. Refer to page 189 for a complete explanation.

Keys

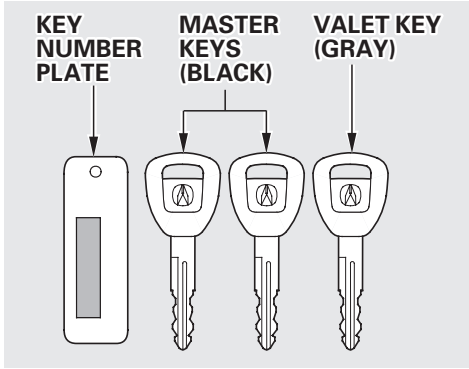

Your vehicle comes with two master keys and a valet key.
The master key fits all the locks on your vehicle:
- Ignition
- Driver's Door
- Glove box

The valet key works only in the ignition and the door locks. You can keep the glove box locked when you leave your vehicle and valet key at a parking facility.

You should have received a key number tag with your keys. You will need this key number if you ever have to get a lost key replaced. Keep the tag stored in a safe place. If you need to replace a key, use only an Acura-approved key blank.

These keys contain electronic circuits that are activated by the Immobilizer System. They will not work to start the engine if the circuits are damaged.

- Protect the keys from direct sunlight, high temperature, and high humidity.
- Do not drop the keys or set heavy objects on them.
- Keep the keys away from liquids. If they get wet, dry them immediately with a soft cloth.

The keys do not contain batteries. Do not try to take them apart.

Remote Transmitter
Your vehicle also comes with two remote transmitters; see page 85 for an explanation of their operation.

Immobilizer System
The Immobilizer System protects your vehicle from theft. A properly-coded master or valet key must be used in the ignition switch for the engine to start. If an improperly-coded key (or other device) is used, the engine's fuel system is disabled.

When you turn the ignition switch to ON (II), the Immobilizer System indicator should come on for a few seconds, then go out. If the indicator starts to blink, it means the system does not recognize the coding of the key. Turn the ignition switch to LOCK (0), remove the key, reinsert it, and turn the switch to ON (II) again.

The system may not recognize your key's coding if another immobilizer key or other metal object is near the ignition switch when you insert the key. To make sure the system recognizes the key code:

- Do not keep other immobilizer keys on the same key ring.
- Use a plastic or leather key fob, not metal.
- Keep other keys away from your vehicle's key and the ignition switch while trying to start the engine.

If the system repeatedly does not recognize the coding of your key, contact your Acura dealer.
This indicator will also blink several times when you turn the ignition switch from ON (II) to ACCESSORY (I) or LOCK (0).
Do not attempt to alter this system or add other devices to it. Electrical problems could result that may make your vehicle undriveable.
If you have lost your key and you cannot start the engine, contact your Acura dealer.

CONTINUED

As required by the FCC:
This device complies with Part 15 of the FCC rules. Operation is subject to the following two conditions: (1) This device may not cause harmful interference, and (2) this device must accept any interference received, including interference that may cause undesired operation.

Changes or modifications not expressly approved by the party responsible for compliance could void the user's authority to operate the equipment.

This device complies with Industry Canada Standard RSS-210.
Operation is subject to the following two conditions: (1) this device may not cause interference, and (2) this device must accept any interference that may cause undesired operation of the device.

Ignition Switch

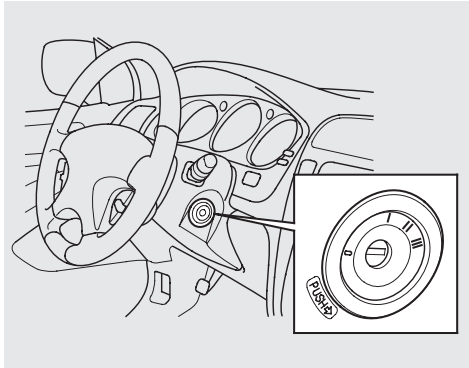

The ignition switch is on the right side of the steering column. It has four positions:
- LOCK (0)
- ACCESSORY (I)
- ON (II)
- START (III)

LOCK (0) — You can insert or remove the key only in this position. To switch from ACCESSORY to LOCK, you must push the key in slightly as you turn it. The shift lever must also be in Park. The anti-theft lock will lock the steering column when you remove the key.

If the front wheels are turned, the anti-theft lock may sometimes make it difficult to turn the key from LOCK to ACCESSORY. Firmly turn the steering wheel to the left or to the right as you turn the key.

ACCESSORY (I) — In this position, you can operate the audio system and the accessory power socket.

ON (II) — This is the normal key position when driving. All features and accessories on the vehicle are usable. Several of the lights on the instrument panel come on as a test when you turn the ignition switch from ACCESSORY to ON.

START (III) — Use this position only to start the engine. The switch returns to ON (II) when you let go of the key.

The engine will not start if the Immobilizer System does not recognize the key's coding (see page 81).

You will hear a reminder beeper if you leave the key in the ignition switch in the LOCK (0) or ACCESSORY (I) position and open the driver's door. Remove the key to turn off the beeper.

Power Door Locks

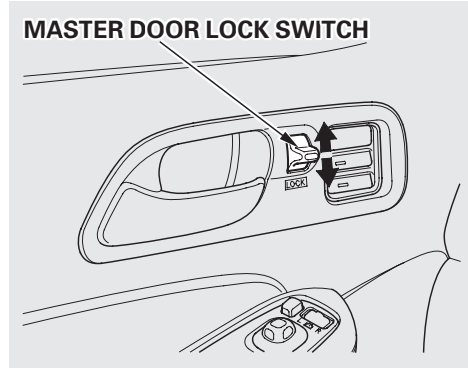

Each front door has a master door lock switch. Either switch locks and unlocks all doors and the tailgate. Push the switch down to lock all doors and the tailgate, and up to unlock them.

CONTINUED

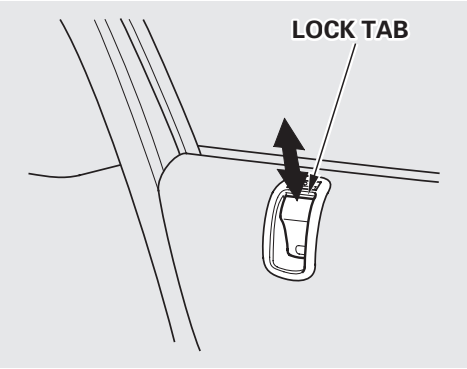

Each door has a lock tab on the top. When you push down the lock tab on the driver's door, all the doors and the tailgate lock. Pulling up the lock tab on the driver's door unlocks only that door. The lock tabs on the other doors lock and unlock only that door.

To lock the front passenger's door when getting out of the vehicle, push the lock tab down and close the door. To lock the driver's door, along with the remaining doors and the tailgate, push the lock tab down or push the master switch down, then close the door.

All doors and the tailgate can be locked from the outside by using the key in the driver's door. To unlock only the driver's door from the outside, turn the key and release it. If you turn the key and hold it, all doors and the tailgate will unlock. All four doors and the tailgate will unlock when you unlock the passenger's door with the key.

Lockout Prevention

If you forget and leave the key in the ignition switch, Lockout Prevention will not allow you to lock the driver's door. With the driver's door open and the key in the ignition, both master door lock switches are disabled. However, if the driver's door is not open, the master door lock switches are not disabled. Pushing the switch down on the open passenger's door will lock all doors. If you try to lock an open driver's door by pushing down the lock tab, the tabs on all doors pop out. Pushing down the lock tab on the passenger's door only locks that door.

Remote Transmitter

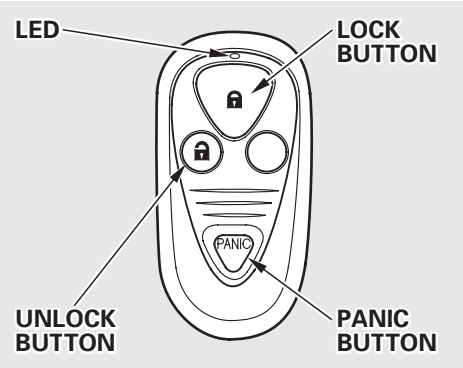

You can lock and unlock your vehicle with the remote transmitter. When you push the LOCK button, all doors and the tailgate lock. The parking lights, side marker lights, taillights and instrument panel lights flash once.

When you push the LOCK button a second time within 5 seconds after you have locked the doors, you will hear a beep to verify that the security system has set.

When you push the UNLOCK button once, only the driver's door unlocks. The remaining doors and the tailgate unlock when you push the button a second time. The parking lights, side marker lights, taillights and instrument panel lights flash twice when you push the button.

When you press the UNLOCK button, the front and rear individual map lights and the cargo area light, depending on their switch positions, will come on (see page 123). If you do not open any door or the tailgate, the lights stay on for about 10 seconds, then go out. If you relock the doors and the tailgate with the remote transmitter before 10 seconds have elapsed, the lights will go off immediately.

If you unlock the doors and the tailgate with the remote transmitter, but do not open any door or the tailgate within 30 seconds, all doors and the tailgate automatically relock.

You cannot lock the doors and the tailgate with the remote transmitter if any door or the tailgate is not fully closed. You cannot lock or unlock the doors and the tailgate with the key in the ignition switch.

CONTINUED

Panic Mode

Panic mode allows you to remotely activate your vehicle's horn and lights to attract attention. When activated, the horn will sound, and the headlights, parking lights, side marker lights, taillights and instrument panel lights will flash for about 30 seconds. To activate panic mode, press and hold the PANIC button for about one second.

To cancel Panic mode before 30 seconds, press any button on the remote transmitter. You can also turn the ignition switch to ON (II).

Panic mode will not activate if the key is in the ON (II) position.

Replacing the Battery

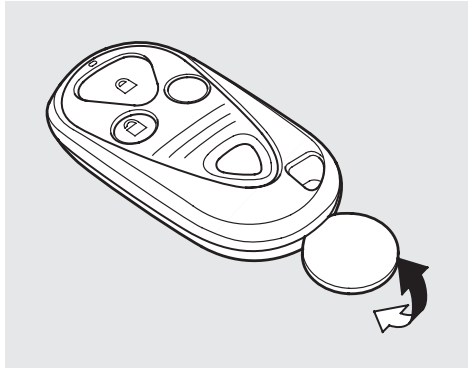

When the remote transmitter's battery begins to get weak, it may take several pushes on the button to lock or unlock the doors and the tailgate, and the LED will get dim. Replace the battery as soon as possible.

Battery type: CR2025

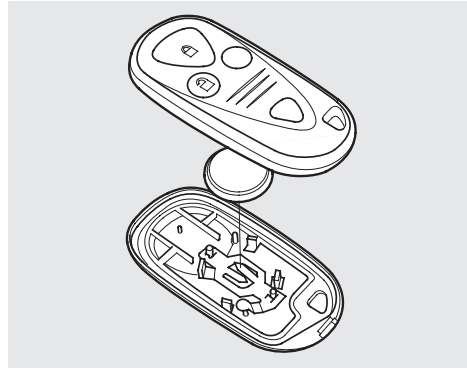

To replace the battery, place a cloth on the edge of the transmitter and remove the upper half by carefully prying on the edge with a small flat-tip screwdriver.

Remove the old battery and note the polarity. Make sure the polarity of the new battery is the same (+ side facing up), then insert it in the transmitter.

Snap the two halves of the transmitter case back together.

Transmitter Care

Avoid severe shock to the transmitter, such as dropping or throwing it. Also, protect it from extreme hot or cold temperatures.

Clean the transmitter case with a soft cloth. Do not use strong cleaners or solvents that could harm the case. Immersing the transmitter in any liquid will harm the transmitter and cause it to not function properly.

If you lose a transmitter, you will need to have the replacement programmed to your vehicle's system by your Acura dealer. Any other transmitters you have will also need to be reprogrammed.

As required by the FCC:
This device complies with Part 15 of the FCC rules. Operation is subject to the following two conditions: (1) This device may not cause harmful interference, and (2) this device must accept any interference received, including interference that may cause undesired operation.

Changes or modifications not expressly approved by the party responsible for compliance could void the user's authority to operate the equipment.

This device complies with Industry Canada Standard RSS-210.
Operation is subject to the following two conditions: (1) this device may not cause interference, and (2) this device must accept any interference that may cause undesired operation of the device.

CONTINUED

Recalling a Memorized Driving Position
On Touring Model

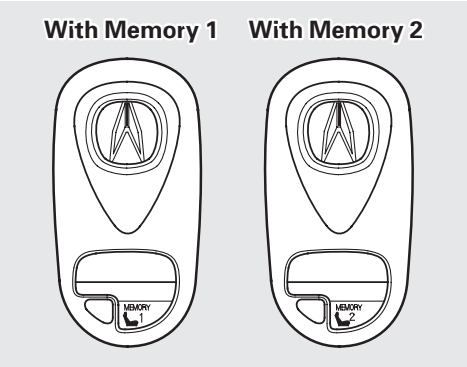

The remote transmitters will also activate the Driving Position Memory System (see page 113). When you open the driver's door after unlocking it with the remote transmitter, you will hear a beep. The driver's seat and outside mirrors move to the positions stored in that memory location. You will hear two beeps when the movement is complete.

If the seat and mirrors are already in the proper positions, you will hear three beeps when you open the door.

The driving position memory activated (Memory 1, Memory 2) is shown on the back of each transmitter. Make sure you store your desired driving position in the memory that is activated by the transmitter you normally carry.

You can turn the driving position memory activation off and on. To turn it off, press and hold the LOCK and UNLOCK buttons at the same time for about one second. The LED in the remote transmitter will blink twice. Then release the buttons.

To turn it back on, repeat this procedure. The LED will come on for one second to indicate the feature has been turned on.

Childproof Door Locks

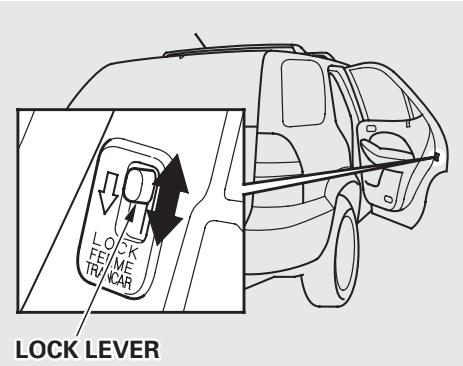

The childproof door locks are designed to prevent children seated in the rear from accidentally opening the rear doors. Each rear door has a lock lever near the edge. With the lever in the LOCK position, the door cannot be opened from the inside regardless of the position of the lock tab. To open the door, pull the lock tab up and use the outside door handle.

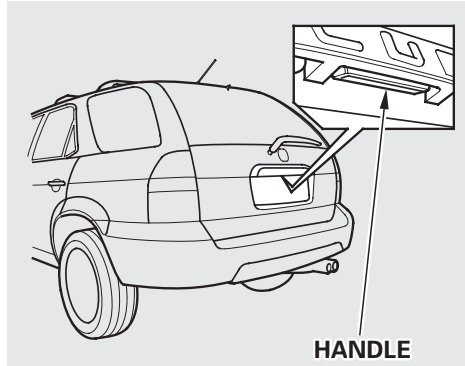

To open the tailgate, pull the handle, then lift up the tailgate.

To close the tailgate, use the inner handle to pull the tailgate down, then press down on the back edge.

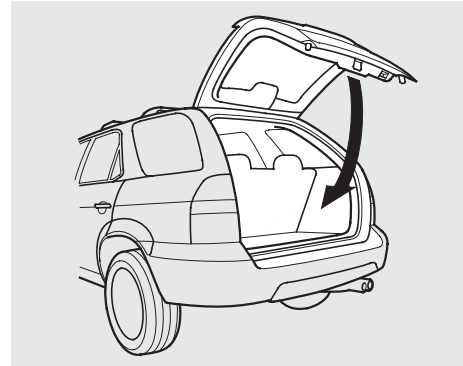

See page 204 for information on cargo loading. Keep the tailgate closed at all times while driving to avoid damaging the tailgate, and to prevent exhaust gas from getting into the interior. See **Carbon Monoxide Hazard** on page 54 .

Glove Box

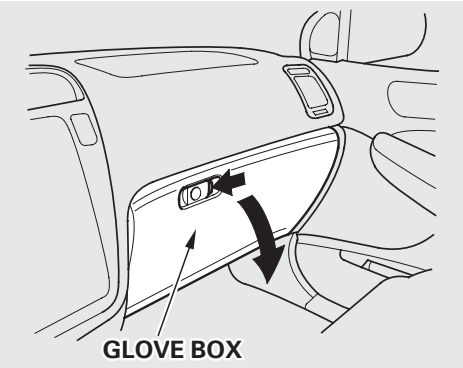

Open the glove box by squeezing the handle. Close it with a firm push. Lock or unlock the glove box with the master key.

⚠ WARNING

An open glove box can cause serious injury to your passenger in a crash, even if the passenger is wearing the seat belt.

Always keep the glove box closed while driving.

The HomeLink Universal Transmitter built into your vehicle can be programmed to operate remotely-controlled devices around your home, such as garage doors, lighting, or home security systems. It can replace up to three remote transmitters.

Customer Assistance
If you have problems with training the HomeLink Universal Transmitter, or would like information on home products that can be operated by the transmitter, call (800) 355-3515. On the Internet, go to www.homelink.jci.com.

Important Safety Precautions
Always refer to the operating instructions and safety information that came with your garage door opener or other equipment you intend to operate with the HomeLink Universal Transmitter. If you do not have this information, you should contact the manufacturer of the equipment.

While training or using the transmitter, make sure you have a clear view of the garage door or gate, and that no one will be injured by its movement.

General Information
If you are training the transmitter to operate a garage door or gate, it is recommended that you unplug the motor for that device during training. Repeatedly pressing the remote control button could burn out the motor.

The HomeLink transmitter stores the code in a permanent memory. There should be no need to retrain the transmitter if your vehicle's battery goes dead or is disconnected.

If your garage door opener was manufactured before April 1982, you may not be able to program the HomeLink Universal Transmitter to operate it. Garage door openers manufactured before that date do not have a safety feature that causes them to stop and reverse if an obstacle is detected during closing, increasing the risk of injury. If you have questions, call (800) 355-3515.

Training the Transmitter
Before you can use the HomeLink Universal Transmitter to operate devices around your home, it must "learn" the proper codes. For example, to train the transmitter to open and close the garage door:

Before you begin — If you just took delivery of your vehicle and have not trained any of the buttons in the HomeLink transmitter before, you should erase any previously learned codes before training the first button. To do this, press and hold the two outside buttons on the HomeLink transmitter for about 20 seconds, until the red light flashes. Release the buttons, then proceed to Step 1.

If you are training the second or third buttons, go directly to Step 1.

1. Unplug the garage door opener motor from the house current.

2. Hold the end of the garage door opener remote control 2 to 5 inches from the HomeLink transmitter. Make sure you are not blocking your view of the red light in the transmitter.

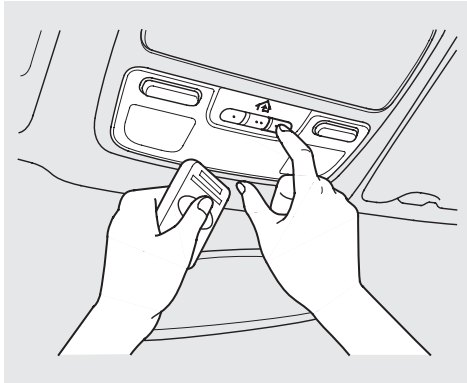

3. Select the transmitter button you want to train.

4. Press the button on the remote control and the button on the transmitter at the same time. Hold down both buttons.

Canadian Owners:
The remote control you are training from may stop transmitting after two seconds. This is not long enough for the HomeLink transmitter to learn the code. Release and press the button on the remote control every two seconds until the transmitter has learned the code.

5. The red light in the transmitter should begin flashing. It will flash slowly at first, then rapidly.

6. When the red light flashes rapidly, release both buttons. The transmitter should have learned the code from the remote control.

7. Plug in the garage door opener motor, then test the transmitter button by pushing it. It should operate the garage door.

   If the button does not work, repeat this procedure to train it again. If it still does not work, you may have a variable or rolling code garage door opener. Test this by pressing and holding the HomeLink transmitter button you just trained. If the red light blinks for two seconds, then stays on, you have a rolling code garage door opener. You may be able to verify this with the manufacturer's documentation. Go to "Training With a Rolling Code System."

8. Repeat these steps to train the other two transmitter buttons to operate any other remotely-controlled devices around your home (lighting, automatic gate, security system, etc.).

Training With a Rolling Code System
For security purposes, newer garage door opening systems use a "rolling" or variable code. Information from the remote control and the garage door opener are needed before the HomeLink transmitter can operate the garage door opener.

The"Training the Transmitter" procedure trains the HomeLink transmitter to the proper garage door opener code. The following procedure synchronizes the HomeLink transmitter to the garage door opener so they send and receive the correct codes.

CONTINUED

It may be helpful to have someone assist you with this procedure.

1. Make sure you have properly completed the “Training the Transmitter” procedure.

2. Find the “Training” button on your garage door opener unit. The location will vary, depending on the manufacturer. The manufacturer’s documentation may help.

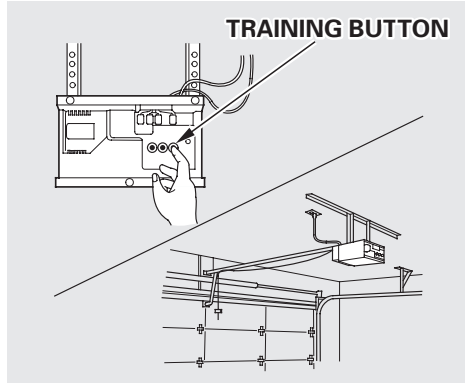

3. Press the Training button on the garage door opener unit until the light next to the button comes on, then release it. The light may blink, or come on and stay on. You then have approximately 30 seconds to complete the following steps.

4. Press and release the button on the HomeLink transmitter. (The same button you trained with the “Training the Transmitter” procedure.)

5. Press and release the HomeLink transmitter button again. This should turn off the training light on the garage door opener unit. (Some systems may require you to press and release the button up to three times.)

6. Press the transmitter button again. It should operate the garage door.

Retraining a Button
To train an already programmed transmitter button to operate a new device:

1. Select the transmitter button you want to train.

2. Press and hold the transmitter button until the red light begins to flash slowly (approximately 20 seconds).

3. While continuing to hold the transmitter button, place the remote control for the device 1 to 3 inches from the HomeLink transmitter.

4. Press and hold the button on the remote control. Hold both buttons until the red light begins to flash rapidly.

5. Release both buttons. The transmitter should now be trained to operate the device.

Erasing Codes
To erase the codes stored in all three buttons, press and hold the two outside buttons until the red light begins to flash, then release the buttons.

You should erase all three codes before selling the vehicle.

As required by the FCC:
This device complies with Part 15 of the FCC rules. Operation is subject to the following two conditions: (1) This device may not cause harmful interference, and (2) this device must accept any interference received, including interference that may cause undesired operation.

Changes or modifications not expressly approved by the party responsible for compliance could void the user's authority to operate the equipment.

This device complies with Industry Canada Standard RSS-210.
Operation is subject to the following two conditions: (1) this device may not cause interference, and (2) this device must accept any interference that may cause undesired operation of the device.

Power Seat Adjustments

See pages 12 — 13 for important safety information and warnings about how to properly position seats and seat-backs.

Your Acura has power adjustments for the driver's seat. The two power seat adjustment switches are on the outside edge of the seat bottom.

The Touring model also has power adjustments for the front passenger's seat.

The passenger's seat on the Base model, and the second and third row seats in both models, have manual adjustments.

You can adjust the seat with the ignition switch in any position. Make all seat adjustments before you start driving.

The long horizontal switch adjusts the seat bottom in several directions. The short vertical switch adjusts the seat-back angle.

Push the horizontal switch forward or backward to move the seat forward or backward.

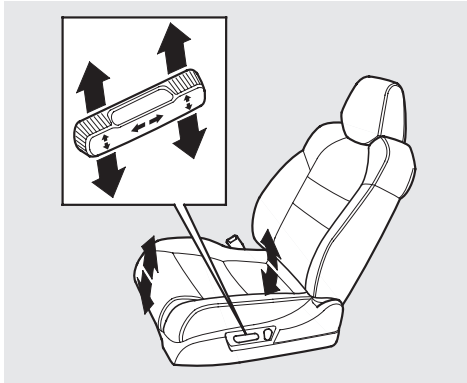

Pull up or push down on the front of the switch to move the seat bottom's front edge up or down. Pull up or push down on the rear of the switch to move the rear of the seat bottom up or down.

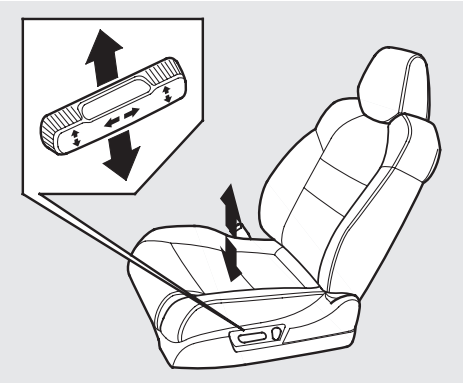

Pull the center of the horizontal switch up to raise the seat. Push it down to lower the seat.

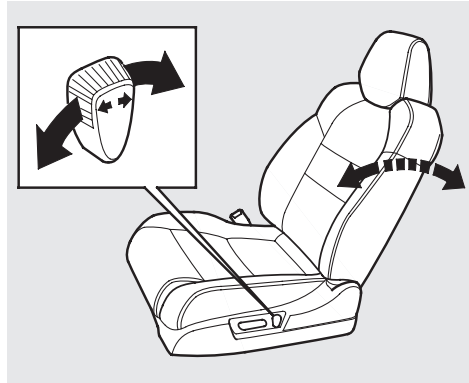

Adjust the seat-back angle by pushing the rear switch in the direction you want to move.

Driver's Lumbar Support

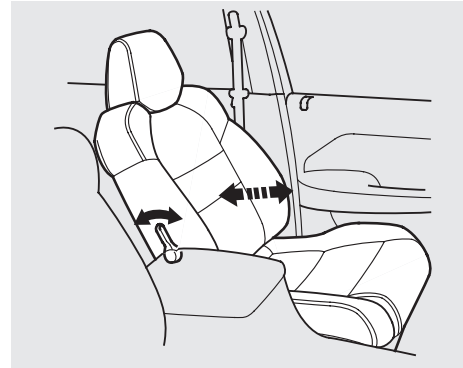

Vary the lumbar support by moving the lever on the right side of the seat-back. Pivot the lever forward until it stops, then let it return. Doing this several times adjusts the lumbar support through its full range.

Manual Seat Adjustments

See pages 12 — 13 for important safety information and warnings about how to properly position seats and seat-backs.

Make all seat adjustments before you start driving.

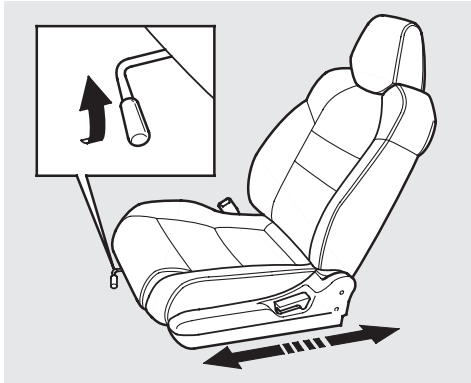

To adjust the seat forward and backward, pull up on the lever under the seat cushion's front edge. Move the seat to the desired position and release the lever. Try to move the seat to make sure it is locked in position.

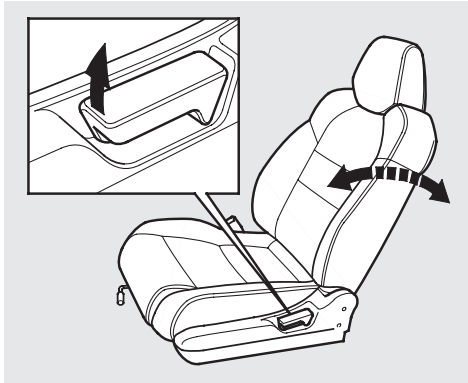

To change the seat-back angle of the front seats, pull up on the lever on the outside of the seat bottom.

Second and Third Row Seat Adjustments

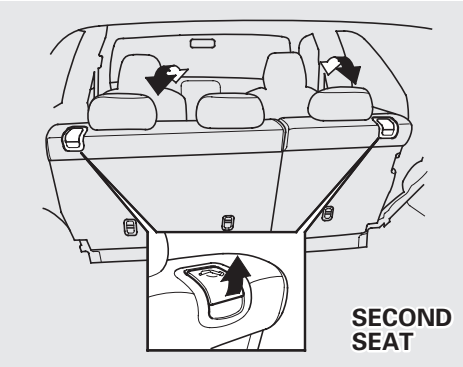

To change the seat-back angle of the seats in the second row, pull up on the handle on the outside of the seat-back.

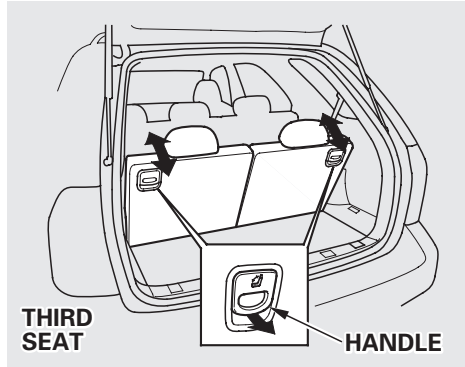

To adjust the seat-back angle of the third seat, pull on the handle on the back of the seat-back, move the seat-back to the desired position, and release the handle. Let the seat-back latch in the new position.

Head Restraints

See page 14 for important safety information and a warning about how to properly position the head restraints.

Your vehicle is equipped with head restraints in all seating positions. The head restraints help protect you and your passengers from whiplash and other injuries. They are most effective when you adjust them so the back of the occupant's head rests against the center of the restraint. A taller person should adjust the restraint as high as possible.

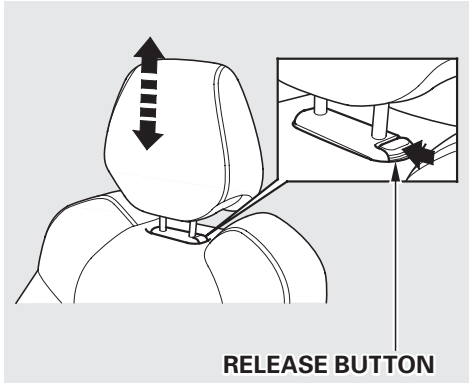

The head restraints adjust for height. You need both hands to adjust the restraint. Do not attempt to adjust it while driving. To raise it, pull upward. To lower the restraint, push the release button sideways and push the restraint down.

To remove a head restraint for cleaning or repair, pull it up as far as it will go. Push the release button and pull the restraint out of the seat-back.

Rear Seat Access

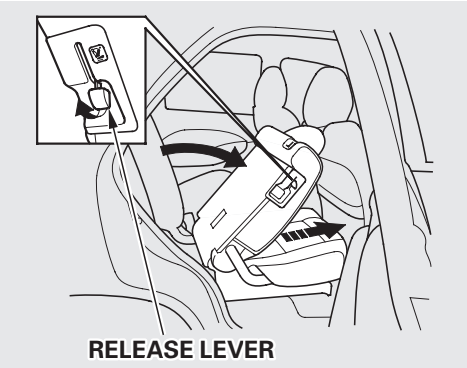

To get into the third row seats, pull up on the lever on the side of the passenger's side second row seat-back. The seat-back will tilt forward, and the seat will slide forward.

After you return the seat-back to the upright position, push the whole seat backwards until it latches. Make sure the seat is fully latched before sitting in it.

Folding the Second Seat

The left and right halves of the second seat can be folded up separately to create more cargo space.

1. If you are folding the left half of the seat, use the ignition key to release the seat belt from the detachable anchor. Allow the seat belt to retract into the roof. Insert the latch plate into the roof holder.

2. Lower the head restraint to its lowest position.

3. Pull up on the handle on the outside of the seat-back.

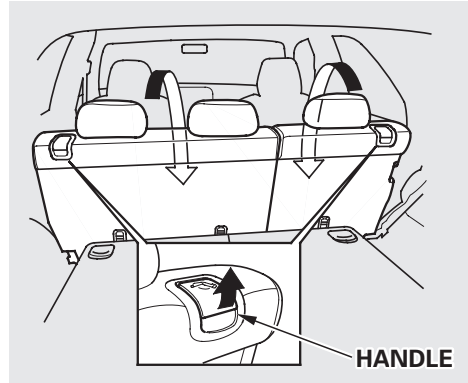

4. Fold the seat-back forward.

Reverse this procedure to return the seat to the upright position. Make sure that the seat is locked securely before driving.

(Left half) Remove the seat belt from its holder in the roof, and connect it to the detachable anchor (see page 104).

Folding the Third Seat

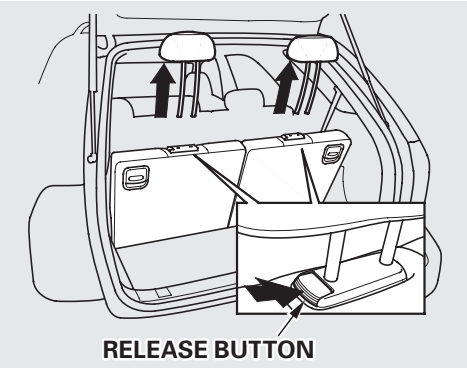

To create more cargo space, you can fold the third seat forward.
To fold the third seat:

1. Remove the head restraints by pushing the release buttons and pulling the restraints out.

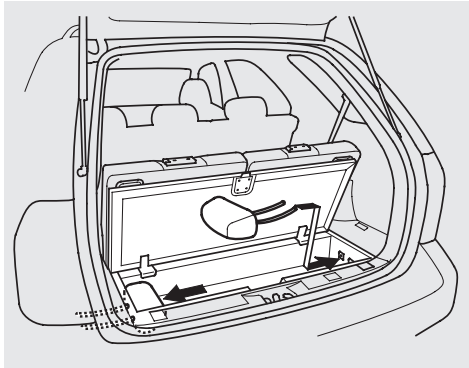

2. Store the head restraints in the storage compartment under the cargo area floor. Insert the shafts of the head restraints into the holes in the sides of the storage compartment.

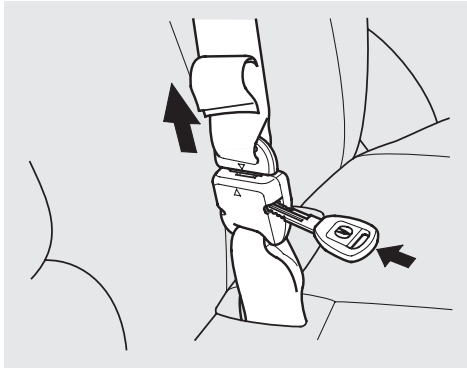

3. Use the ignition key to release the seat belt from the detachable anchor.

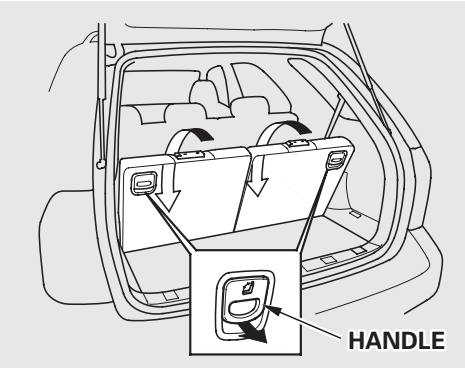

4. Unlock the seat-back by pulling the handle. Push the seat-back forward.

Make sure the center lap/shoulder belt is stored in the holder and the outer shoulder belts are positioned on each hook whenever the third seat is folded.

Reverse this procedure to return the seat to the upright position. Make sure that the seat is locked securely before driving.

Reinstall the head restraints. Reconnect the seat belts to the detachable anchors.

Make sure all items in the cargo area are secured. Loose items can fly forward and cause injury if you have to brake hard. See **Carrying Cargo** on page 203.

Detachable Anchors

The seat belts in the center seat of the second row and in both of the third row seats are equipped with a detachable seat belt anchor which allows the seat belt to be unlatched when the seats are folded down.

⚠ WARNING

Using a seat belt with the detachable anchor unlatched increases the chance of serious injury or death in a crash.

Before using the seat belt, make sure the detachable anchor is correctly latched.

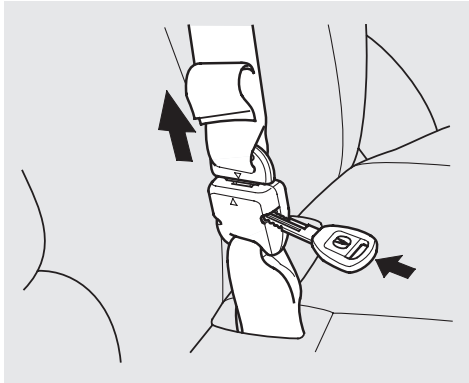

To unlatch the detachable anchor before folding down a seat-back, insert a key into the slot on the side of the small buckle and allow the seat belt to retract.

Once the seat belt has completely retracted, secure the latch plates. In the second row, the latch plates should be placed into their holding slots in the ceiling. In the third row, the small latch plate should be clipped to the seat belt webbing.

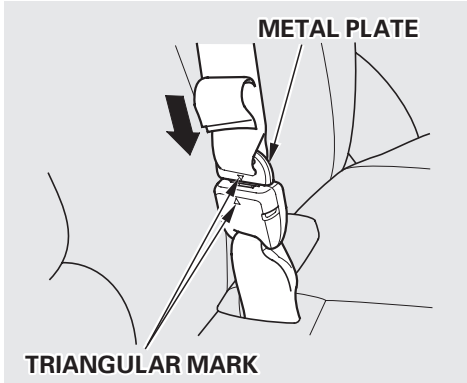

When the seat-back is returned to its upright position, be sure to latch the detachable anchor by lining up the triangle marks on the small latch plate and buckle and inserting the plate into the buckle. Tug on the seat belt to make sure the detachable anchor is securely attached.

Seat Heaters

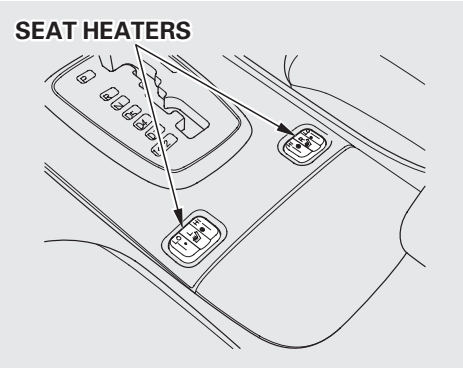

Both front seats are equipped with seat heaters. The ignition switch must be ON (II) to use them. Push the front of the switch, HI, to rapidly heat up the seat. After the seat reaches a comfortable temperature, select LO by pushing the back of the switch. This will keep the seat warm.

The HI or LO indicator lights and remains lit until you turn it off by pushing the opposite side of the switch lightly. The indicator will turn off.

In HI, the heater turns off when the seat gets warm, and turns back on after the seat's temperature drops. It continues to cycle as long as you leave it set on HI. The HI indicator remains lit as a reminder that you have the heater on.

In LO, the heater runs continuously. It does not cycle with temperature changes.

Because of the sensors for the side airbag system, there is no heater in the passenger's seat-back.

Follow these precautions whenever you use the seat heaters:

- Use the HI setting only to heat the seats quickly. Select the LO setting when the seats feel warm. The HI setting draws large amounts of current from the battery.
- Do not use the seat heaters, even on the LO setting, if the engine is left idling for an extended period. They can weaken the battery, causing hard starting.

Power Windows

Your vehicle's windows are electrically-powered. Turn the ignition switch to ON (II) to raise or lower any window.

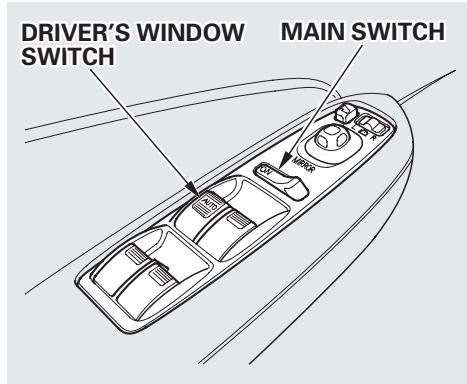

Each door has a switch that controls its window. To open the window, push the switch down and hold it. Release the switch when you want the window to stop. Close the window by pulling back on the switch and holding it.

The driver's door armrest has a master power window control panel. To open any of the passenger's windows, push down on the switch and hold it down until the window reaches the desired position. To close the window, pull back on the window switch. Release the switch when the window gets to the position you want.

⚠WARNING

Closing a power window on someone's hands or fingers can cause serious injury.

Make sure your passengers are away from the windows before closing them.

The master control panel also contains these extra features:

AUTO — To open the driver's window fully, push the window switch firmly down and release it. The window automatically goes all the way down. To stop the window from going all the way down, pull back on the window switch briefly.

To open the driver's window only partially, push the window switch down lightly and hold it. The window will stop as soon as you release the switch.

The AUTO function only works to lower the driver's window. To raise the window, you must pull back on the window switch and hold it until the window reaches the desired position.

The MAIN switch controls power to the front passenger's window and the rear power windows. With this switch off, the passenger's windows cannot be raised or lowered. The MAIN switch does not affect the driver's window. Keep the MAIN switch off when you have children in the vehicle so they do not injure themselves by operating the windows unintentionally.

CONTINUED

Power Windows

The power window system has a key-off delay function. The windows will still operate for up to ten minutes after you turn off the ignition. Opening either front door cancels the delay function. You must turn the ignition switch ON (II) again before you can operate the windows.

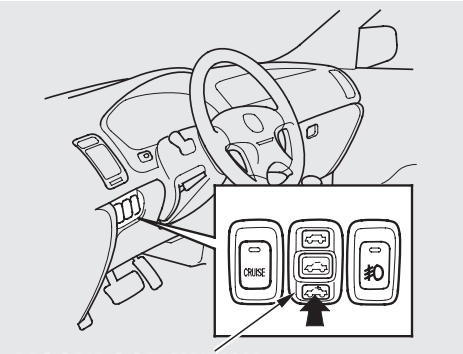

MOONROOF SWITCH

The moonroof has two positions: it can be tilted up in the back for ventilation, or it can be slid back into the roof. Use the switch under the left dashboard vent to operate the moonroof. The ignition switch must be ON (II).

To tilt up the back of the moonroof, press and hold the center button ( ). To close the moonroof, press and hold the top of the switch ( ). To open the moonroof, press and hold the bottom of the switch ( ). Release the switch when the moonroof gets to the desired position. Make sure everyone's hands are away from the moonroof before opening or closing it.

⚠WARNING

Opening or closing the moonroof on someone's hands or fingers can cause serious injury.

Make sure all hands and fingers are clear of the moonroof before opening or closing it.

The moonroof has a key-off delay. You can still open and close the moonroof for up to ten minutes after you turn off the ignition. The key-off delay cancels as soon as you open either front door. You must then turn the ignition ON (II) for the moonroof to operate.

NOTICE

If you try to open the moonroof in below-freezing temperatures, or when it is covered with snow or ice, you can damage the moonroof panel or motor.

Mirrors

Keep the inside and outside mirrors clean and adjusted for best visibility. Be sure to adjust the mirrors before you start driving.

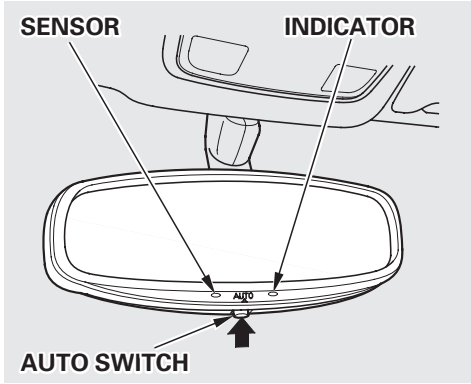

The inside mirror can automatically darken to reduce glare. To turn on this feature, press the button on the bottom of the mirror. The AUTO indicator comes on as a reminder. When it is on, the mirror darkens when it senses the headlights of a vehicle behind you, then returns to normal visibility when the lights are gone. Press the button again to turn off this sensing.

Adjusting the Power Mirrors

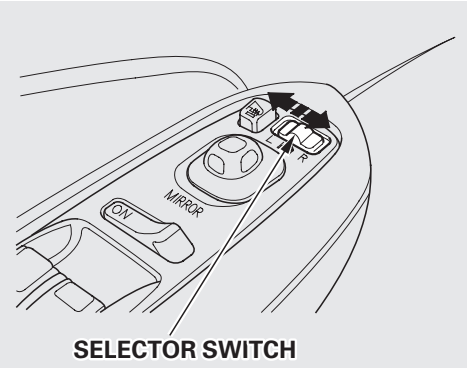

Adjust the outside mirrors with the adjustment switch on the left side of the dashboard:

1. Turn the ignition switch ON (II).

2. Move the selector switch to L (driver's side) or R (passenger's side).

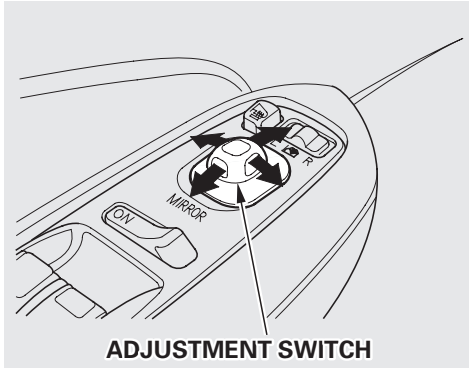

3. Push the appropriate edge of the adjustment switch to move the mirror right, left, up, or down.

4. When you finish, move the selector switch to the center (off) position. This turns off the adjustment switch so you can't move a mirror out of position by accidentally bumping the switch.

Touring Model

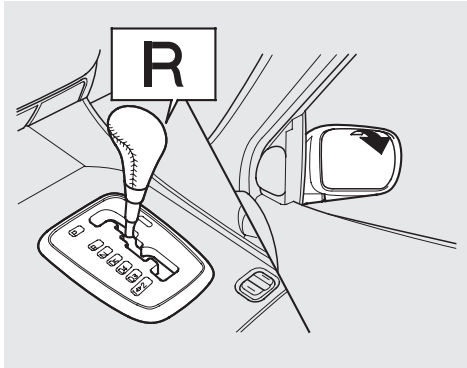

With the selector switch in the center (off) position, the passenger's side mirror will pivot downward slightly when you shift the transmission into reverse. This will give you a better view of the side of the vehicle while parallel parking. The mirror returns to its original position when you take the transmission out of reverse.

CONTINUED

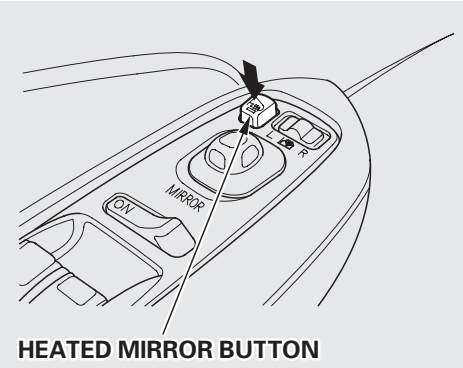

HEATED MIRROR BUTTON

The outside mirrors are heated to remove fog and frost. With the ignition switch ON (II), turn on the heaters by pressing the button. The light in the button comes on as a reminder. Press the button again to turn the heaters off.

Parking Brake

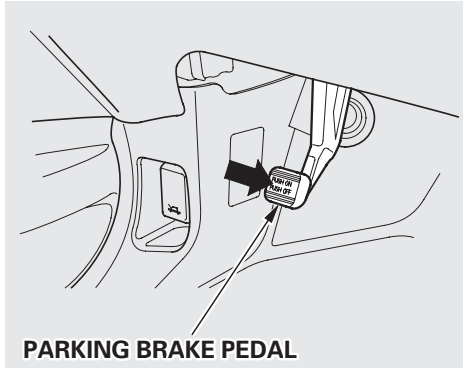

PARKING BRAKE PEDAL

To apply the parking brake, push the parking brake pedal down with your foot. To release the parking brake, push on the pedal again. The parking brake light on the instrument panel should go out when the parking brake is fully released with the engine running. (see page 58 .)

NOTICE

Driving the vehicle with the parking brake applied can damage the rear brakes and axles.

Touring Model
Your Acura has a memory feature for the driver's seat and outside mirror positions.

Seat and outside mirror positions, for two different drivers or driving conditions, can be stored in separate memories. You select a memorized position by pushing the appropriate button or using the appropriate remote transmitter (Memory 1 or Memory 2).

Storing a Driving Position in Memory
Store a driving position as explained in this section only when the vehicle is parked.

1. Turn the ignition switch ON (II). You cannot add a new driving position in the memory unless the ignition switch is ON (II). You can recall a memorized position with the ignition switch in any position.

2. Adjust the seat to a comfortable position (see page 93).
   Adjust the outside mirrors for best visibility (see page 98).

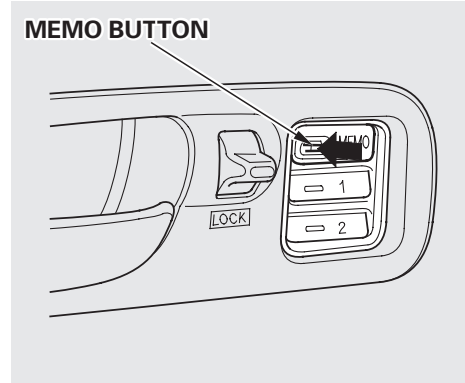

3. Press and release the MEMO button on the control panel. You will hear a beep. Immediately press and hold one of the memory buttons (1 or 2) until you hear two beeps. The indicator light in the memory button will come on. The current positions of the driver's seat and outside mirrors are now stored.

CONTINUED

Driving Position Memory System

Doing any of the following after pressing the MEMO button will cancel the storing procedure.

- Not pressing a memory button within 5 seconds.
- Readjusting the seat position.
- Readjusting the outside mirror position.

Each memory button stores only one driving position. Storing a new position erases the previous setting stored in that button's memory. If you want to add a new position while retaining the current one, use the other memory button.

All stored driving positions will be lost if your vehicle's battery goes dead or is disconnected.

Selecting a Memorized Position

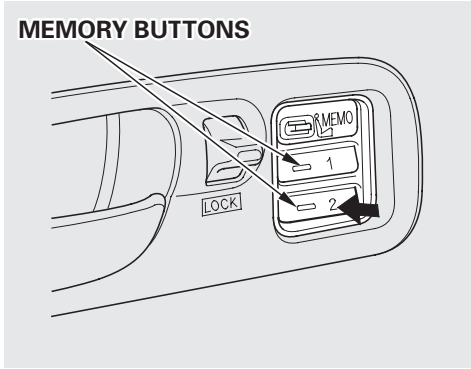

You can select memorized positions as follows.

1. Make sure the parking brake is set and the shift lever is in Park.
2. Press the desired memory button (1 or 2) until you hear a beep, then release the button.

The system will move the seat and outside mirrors to the memorized positions. The indicator light in the selected memory button will flash during movement. When the adjustments are complete, you will hear two beeps and the indicator light will remain on.

To stop the system's automatic adjustment;

- Press any button on the control panel: MEMO, 1 or 2.
- Push any of the adjustment switches for the seat.
- Shift out of Park.
- Adjust the outside mirrors.

If desired, you can use the adjustment switches to change the positions of the seat or outside mirrors after they are in their memorized position. If you change the memorized position, the indicator light in the memory button will go out. To keep this driving position for later use, you must store it in the driving position memory.

Beverage Holders

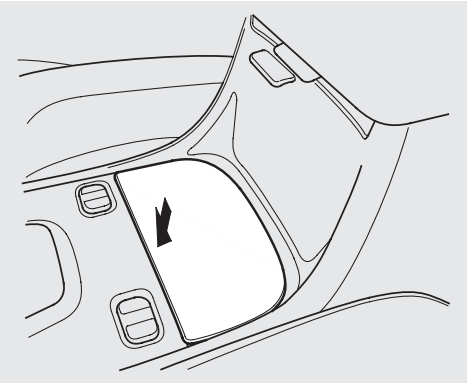

To open the beverage holder, push on the lid.

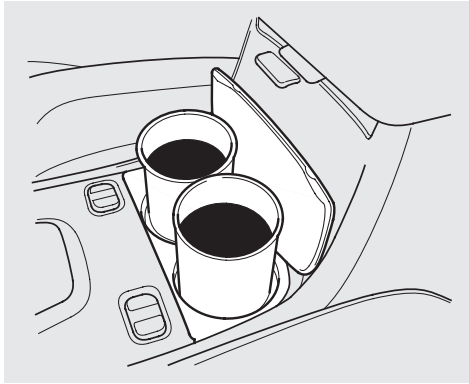

Be careful when you are using the beverage holder. A spilled liquid that is very hot can scald you or your passengers. Liquid can also spill from the rear door pocket beverage holders when you close the rear doors. Use only resealable containers in the door pockets.

Spilled liquids can also damage the upholstery, carpeting, and electrical components in the interior.

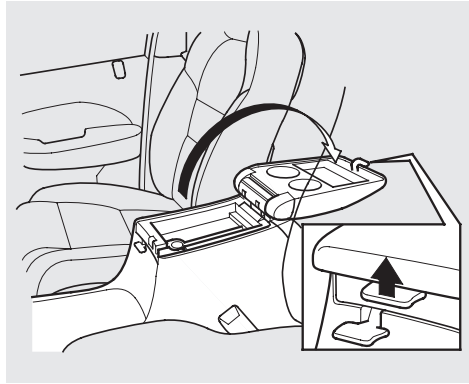

Your vehicle is equipped with a flip-over center console lid that provides a tray and beverage holders for the second seat passengers.

To open the beverage holder for the second row passengers, pull up the center lever on the center console and lift the lid.

To close, pivot the lid forward and push it down until it latches.

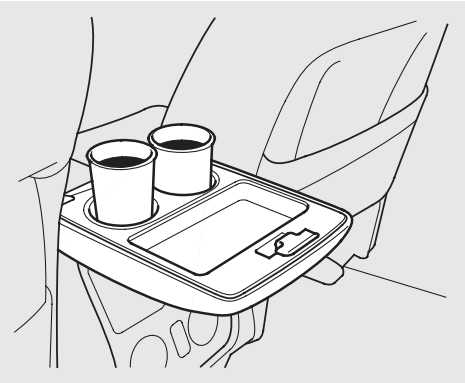

Second Seat Center Armrest

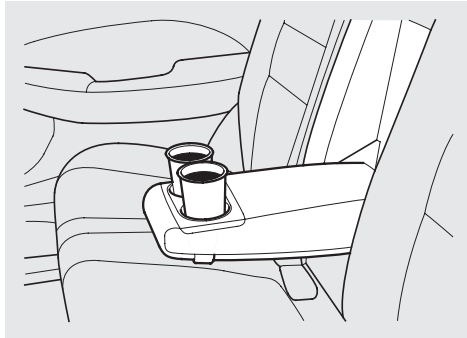

The second row seat also has a beverage holder in the center armrest. To use it, pivot the armrest down.

Third Row Seat Arm Rest

Rear Door Pocket

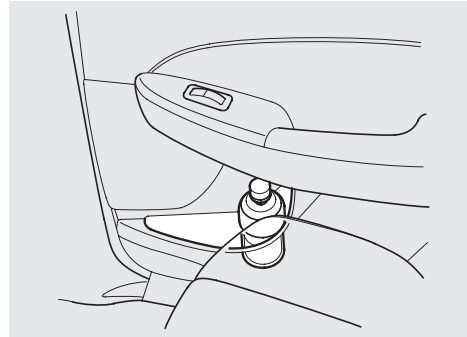

Console Compartment, Rear Compartment, Cargo Hooks

Console Compartment

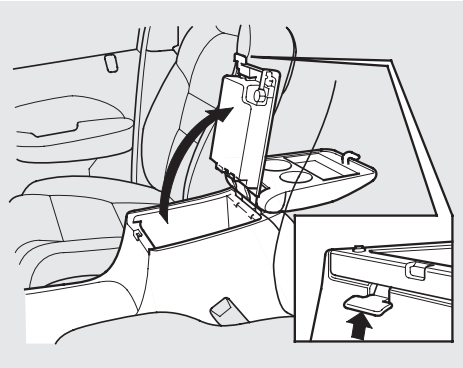

To open the console compartment, pull up on the lever and lift the lid. To close, lower the lid and push it down until it latches.

Rear Compartment

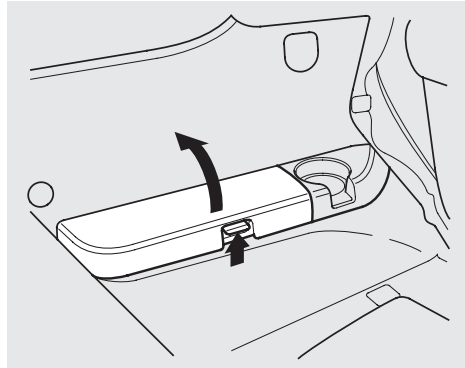

Storage compartments are located in the armrests for the third row seat. To open a compartment, pull the lever and lift the lid. To close, lower the lid and push it down until it laches.

Cargo Hooks

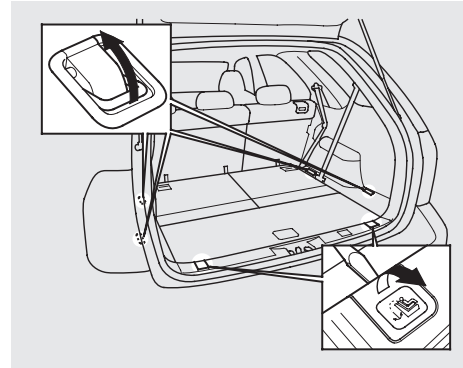

The hooks on the floor of the cargo area enable you to tie down items stored in the back. Make sure all stored items are secured before driving.

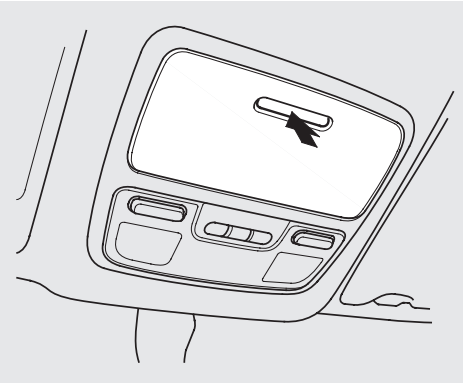

To open the sunglasses holder, push on the front edge. It will unlatch and swing down. To close it, push it until it latches. Make sure the holder is closed while you are driving.

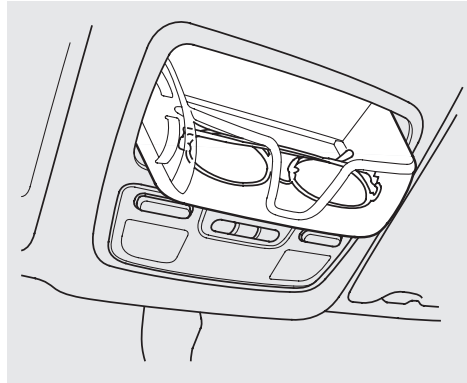

Some larger styles of sunglasses may not fit in the holder.

Sun Visor, Vanity Mirror

Sun Visor

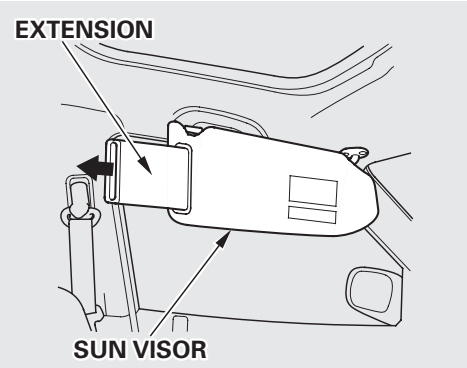

To use the sun visor, pull it down. You can also use the sun visor at the side window. Remove the support rod from the clip and swing the sun visor toward the side window. In this position, the sun visor can be extended by sliding out the extension.

Make sure you put the sun visor back in place when you are getting into or out of the vehicle. Do not use the sun visor extension over the rear view mirror.

Vanity Mirror

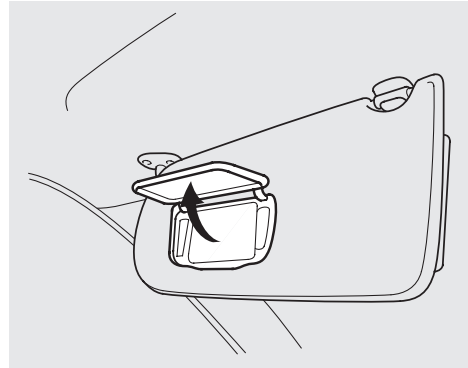

To use a vanity mirror on the back of the sun visor, pull up the cover.

The light beside the mirror comes on only when the parking lights or headlights are on.

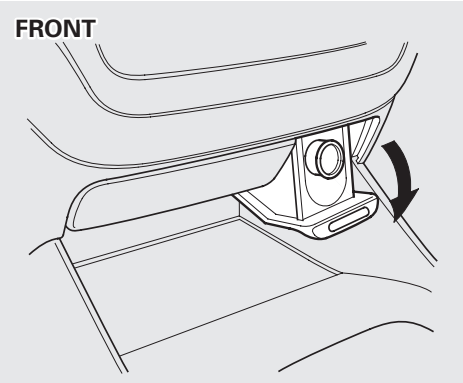

Your vehicle has three accessory power sockets. The front accessory power socket is located under the audio system. The second socket is located in the center console compartment. The rear socket is behind the third seat on the driver's side.

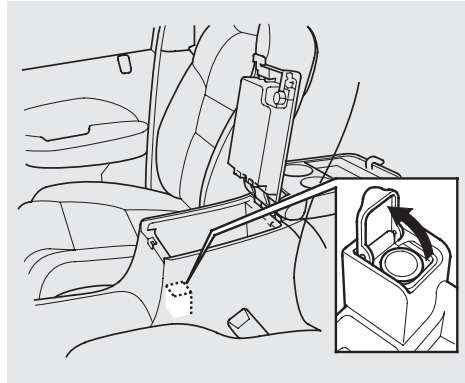

To use the socket in the console compartment, pull the cover up.

To use an accessory power socket, the ignition switch must be in ACCESSORY (I) or ON (II).

These sockets are intended to supply power for 12 volt DC accessories that are rated 120 watts or less (10 amps).

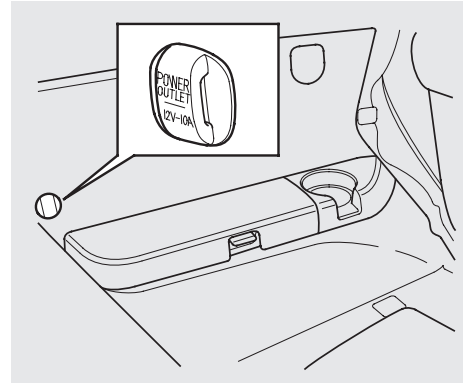

When both the front and console sockets are being used, the combined power rating of both accessories should be 120 watts or less (10 amps).

The rear socket has a maximum power rating of 120 watts (10 amps.)

All three positions will not power an automotive type cigarette lighter element.

Coin Box, Coat Hook

Coin Box

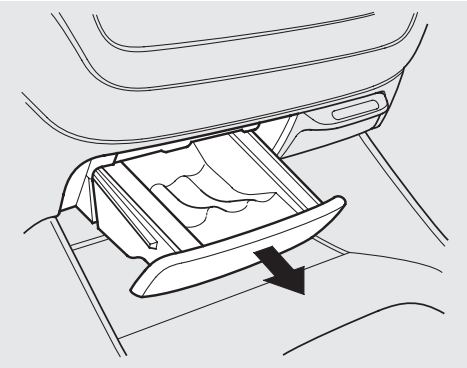

The coin box is located under the audio system. To open the coin box, pull the bottom edge. Close it with a firm push.

Coat Hook

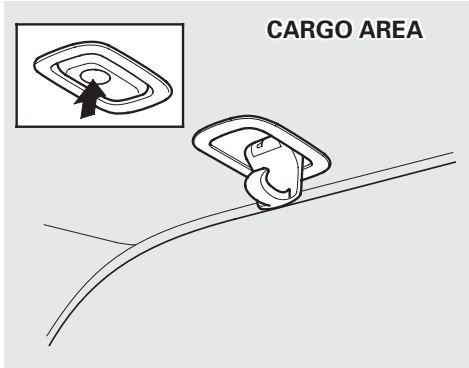

To use a coat hook, push on the lid. Close it with a firm push.

Make sure the coat hook is closed when you are not using it. This hook is not designed for large or heavy items.

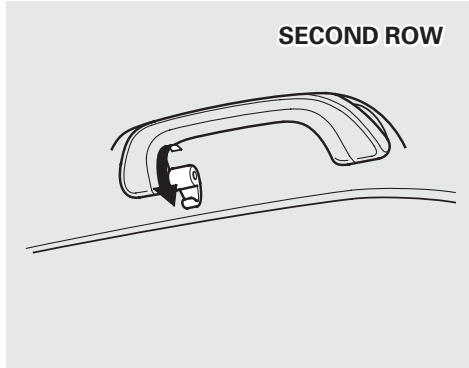

To use this coat hook, rotate the hook down. Close it with a firm.

Light Control Switch

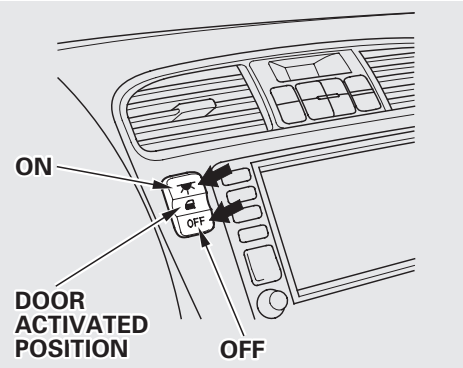

The light control switch controls the interior lights: the individual map lights by the sun visors, the individual map lights above the second row passengers, and the cargo area light. This switch has three positions: OFF, Door Activated, and ON.

When this switch is in the OFF position:

- None of the lights come on when a door or the tailgate is opened.
- The individual map lights in the front can be turned on and off with the switches next to the lights.
- The individual map lights in the second row cannot be turned on.
- The cargo area light (3rd row) cannot be turned on.

When the switch is in the Door Activated position:

- The individual map lights in the front come on when any door or the tailgate is opened. When the doors and the tailgate are closed, each light can be turned on and off with the switch next to the light.
- The individual map lights in the second row come on when any door or the tailgate is opened. When the doors and the tailgate are closed, each light can be turned on and off with the switch next to the light.

CONTINUED

- The cargo area (3rd row) light comes on when any door or the tailgate is opened if the switch in the light is in the door activated (center) position. When the doors and the tailgate are closed, it can be turned on with the switch in the light.

When the switch is in the ON position:

- All the individual map lights come on and stay on as long as the switch remains in the ON position.
- The cargo (3rd row) area light comes on and stays on if the switch in the light is in the door activated (center) position.

The lights go out about six seconds after all the doors and the tailgate are closed.

With the light control switch in the Door Activated position, all the individual map lights and the cargo area light (with the switch in the center position) come on when you unlock the door with the remote transmitter (see page 123).

With any door or the tailgate left open, the lights stay on about three minutes, then go out.

Individual Map Lights

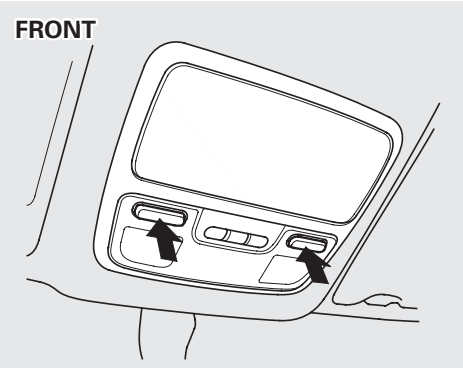

Turn on the front and second row individual map lights by pushing the button next to each light. Push the button again to turn it off. You can also operate these lights with the light control switch (see page 123).

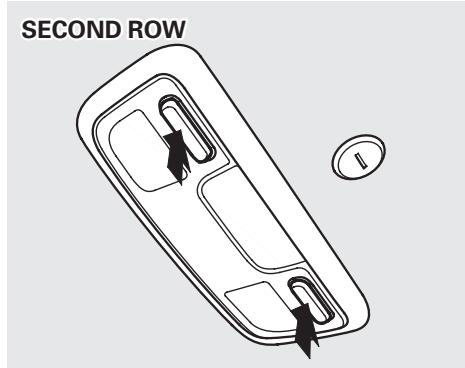

Cargo Area Light

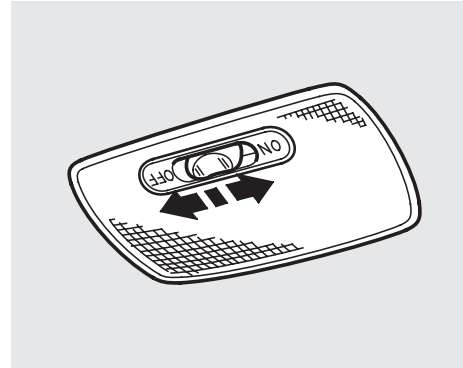

The cargo area light has a three-position switch. In the OFF position, the light does not come on. In the center position, it comes on when you open the tailgate or doors. In the ON position, it stays on continuously.

This light also works with the light control switch (see page 123).

Tailgate Light

The light in the tailgate has an on-off switch to control if the light comes on when the tailgate is opened.

Ignition Switch Light

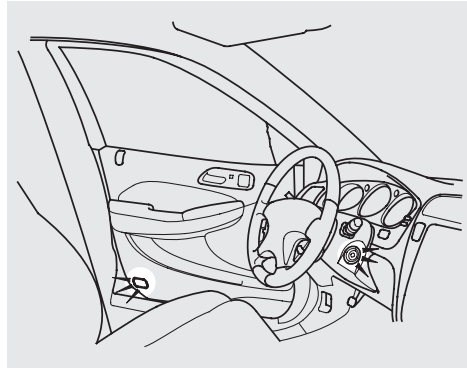

The ignition switch light comes on when you open the driver's door, and stays on several seconds after you close the door.

(Without Navigation System)
The Trip Computer displays the following information. The ignition switch must be in Accessory or ON.

- Clock
- Direction of travel
- Outside temperature
- Instantaneous fuel mileage
- The Range, or estimated distance you can travel on the fuel remaining in the tank. This distance is estimated from the fuel economy you have gotten over the last several miles, so it will vary with changes in speed, traffic, etc.

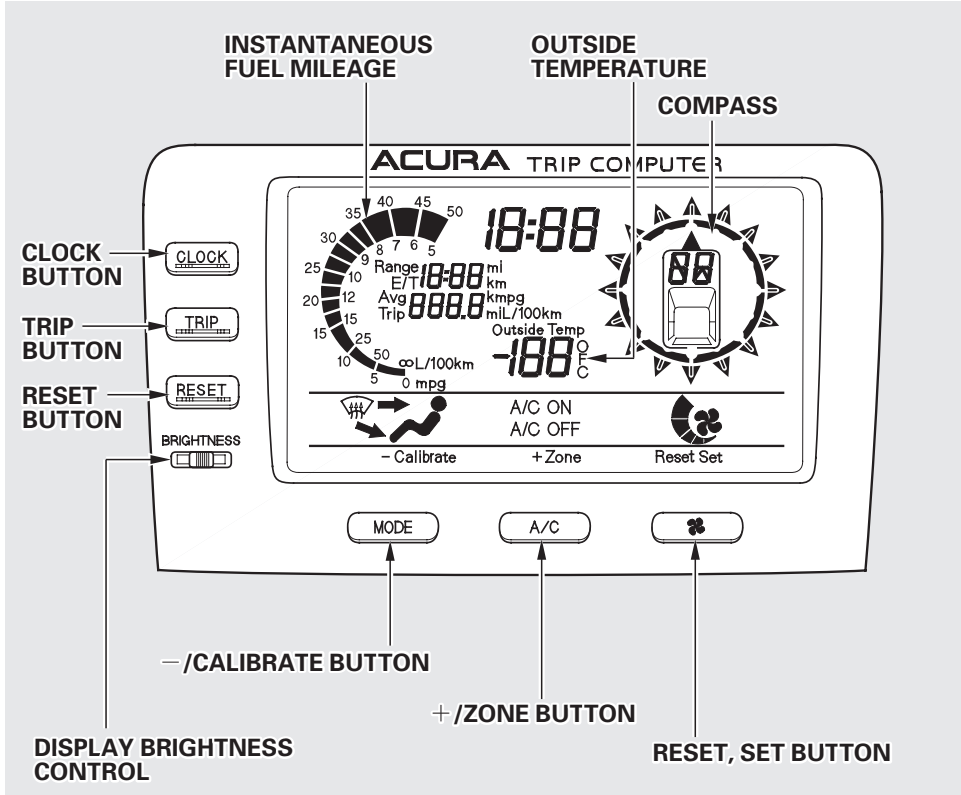

- The Avg display shows you the average fuel economy since you last reset the display.
- The E/T is the elapsed time that the ignition has been on. It automatically resets to 0.0 when it reaches twelve hours. This display can be reset at any time.
- The Trip display shows you the total distance you have driven since it was last reset. When it passes 999.9, it stops displaying tenths and goes to 1000. When it passes 9999, it clears to 0.0.

The display also has manual functions for the Climate Control System. Refer to page 145 .

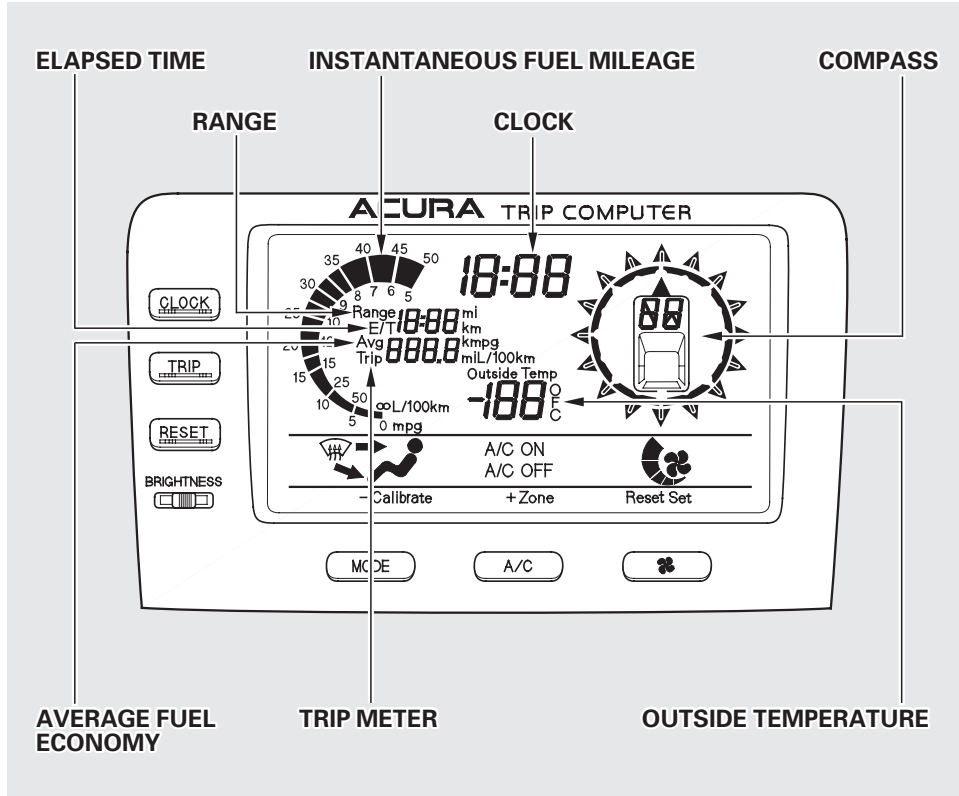

Changing and Resetting the Display
The display shows either the range and Avg fuel economy, or the E/T and Trip odometer. To change between these, press and release the TRIP button.

To reset the Avg fuel economy, E/T, and Trip odometer, press and hold the RESET button until you hear a beep.

Changing Units of Measurement
The outside temperature, fuel economy, range, and trip odometer can be displayed in either English or Metric units. To change between units, press the TRIP button and hold it for five seconds.

Setting the Clock

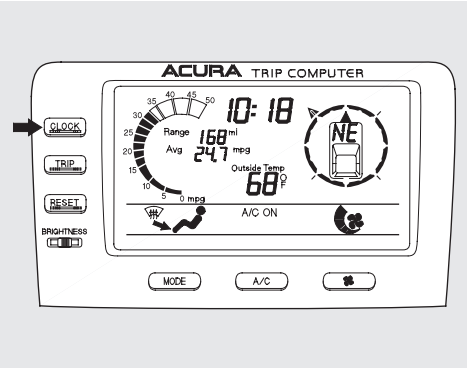

To set the clock:

1. Push the CLOCK button. The hours digits will start blinking. If you want to only set the minutes, go to step 4.

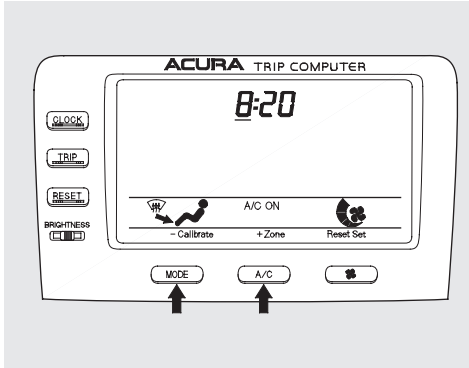

2. To change the hours to a lower number, press and hold the MODE button. To change the hours to a higher number, press and hold the A/C button.

3. When the hours reach the desired number, release the button.

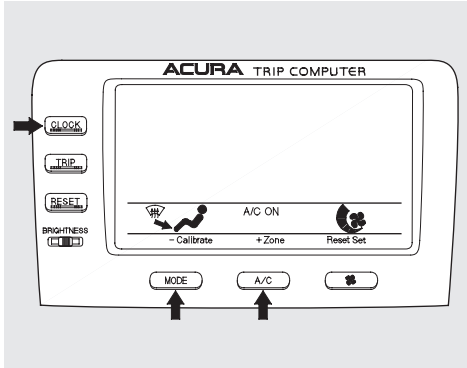

4. To set the minutes, press the CLOCK button again. The minutes digits will start blinking.

5. Use the MODE or A/C button to set the minutes to the desired number.

6. Press the CLOCK button again. The clock will return to its normal display.

You can also quickly set the time to the nearest hour. Press the CLOCK button, then press the RESET button. If the displayed time is before the half hour, it will reset back to the previous hour. If the displayed time is after the half hour, it will reset forward to the next hour.

For example:
1:06 will reset to 1:00
1:52 will reset to 2:00

Compass Operation
The compass shows your direction of travel. It indicates eight directions.

Compass operation can be affected by driving near power lines or stations, across bridges, through tunnels, over railroad crossings, past large vehicles, or driving near large objects that can cause a magnetic disturbance.

It can also be affected by accessories such as antennas and roof racks that are mounted by magnets.

Compass Calibration
The compass is self-calibrating. If you see "— —" in the direction display and "Calibrate" is blinking, the compass is self-calibrating.

The compass may need to be manually calibrated after exposure to a strong magnetic field. If the compass seems to be continually showing the wrong direction and is not self-calibrating, do the following.

NOTE: You should do this procedure in an open area, away from buildings, power lines, and other vehicles.

CONTINUED

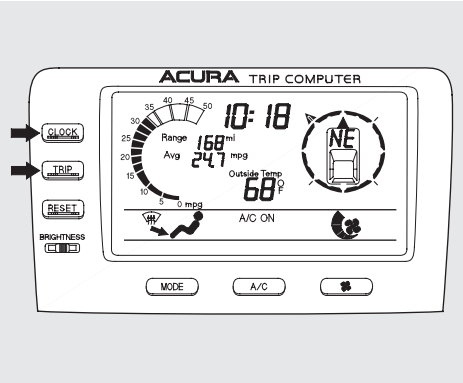

1. Press and hold the CLOCK and TRIP buttons until the display changes (about 1 second).

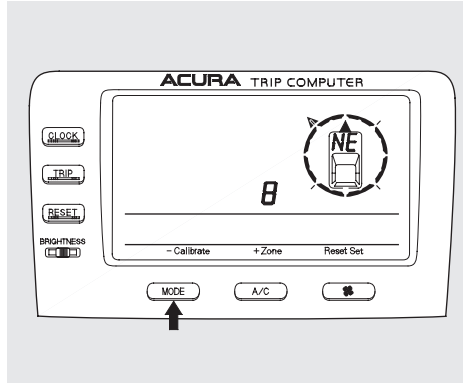

2. Press the Calibrate (MODE) button.

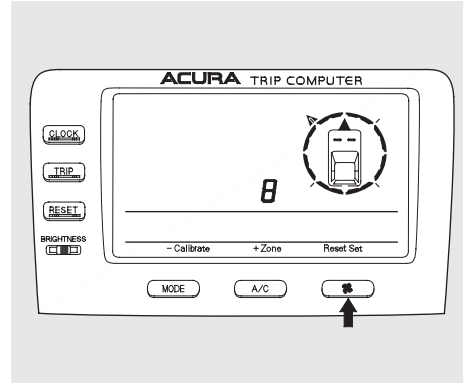

Press the Set ( ) button. “Calibrate” will start blinking, and the direction display will change to “— —”.

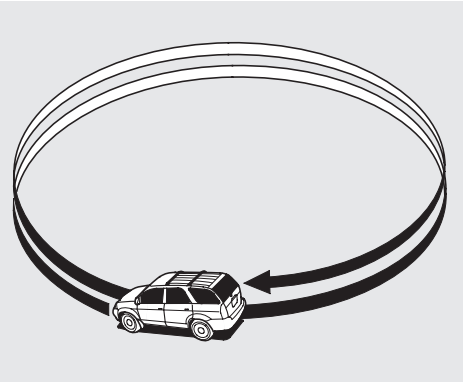

Drive the vehicle slowly in two complete circles.

When the display goes from "— —" to an actual heading, the unit is calibrated.

Press the CLOCK, TRIP, or RESET button to complete the calibration and return the display to normal.

Compass Zone Selection

In most areas, there is a variation between magnetic north and true north. Zone selection is required so the compass can compensate for this variation. To check and select the zone set into the compass, do the following.

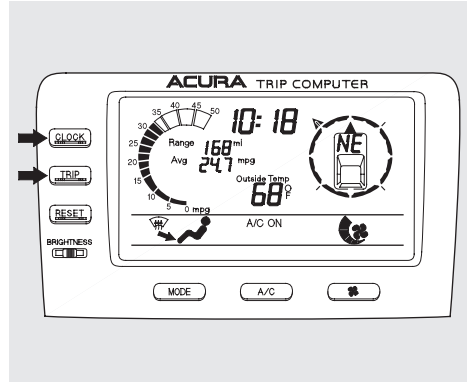

1. Press and hold the CLOCK and TRIP buttons until the display changes (about 1 second).

CONTINUED

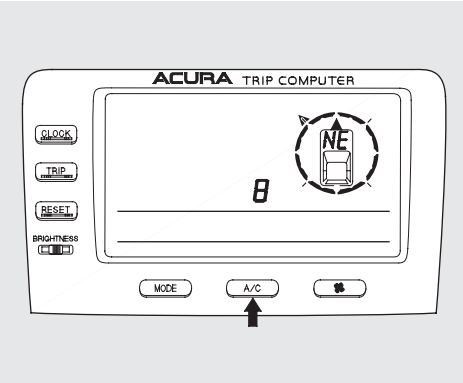

2. Press the Zone (A/C) button. The zone the compass is currently set to is displayed.

3. Find the zone for your area on the map.

4. If the zone is incorrect, press and hold the MODE button to get the number to count down, or the A/C button to get the number to count up. If the zone is correct, continue to step 5.

5. Press the button to set the zone selection.

6. Press the CLOCK, TRIP or RESET button to exit the zone selection and return display to normal.

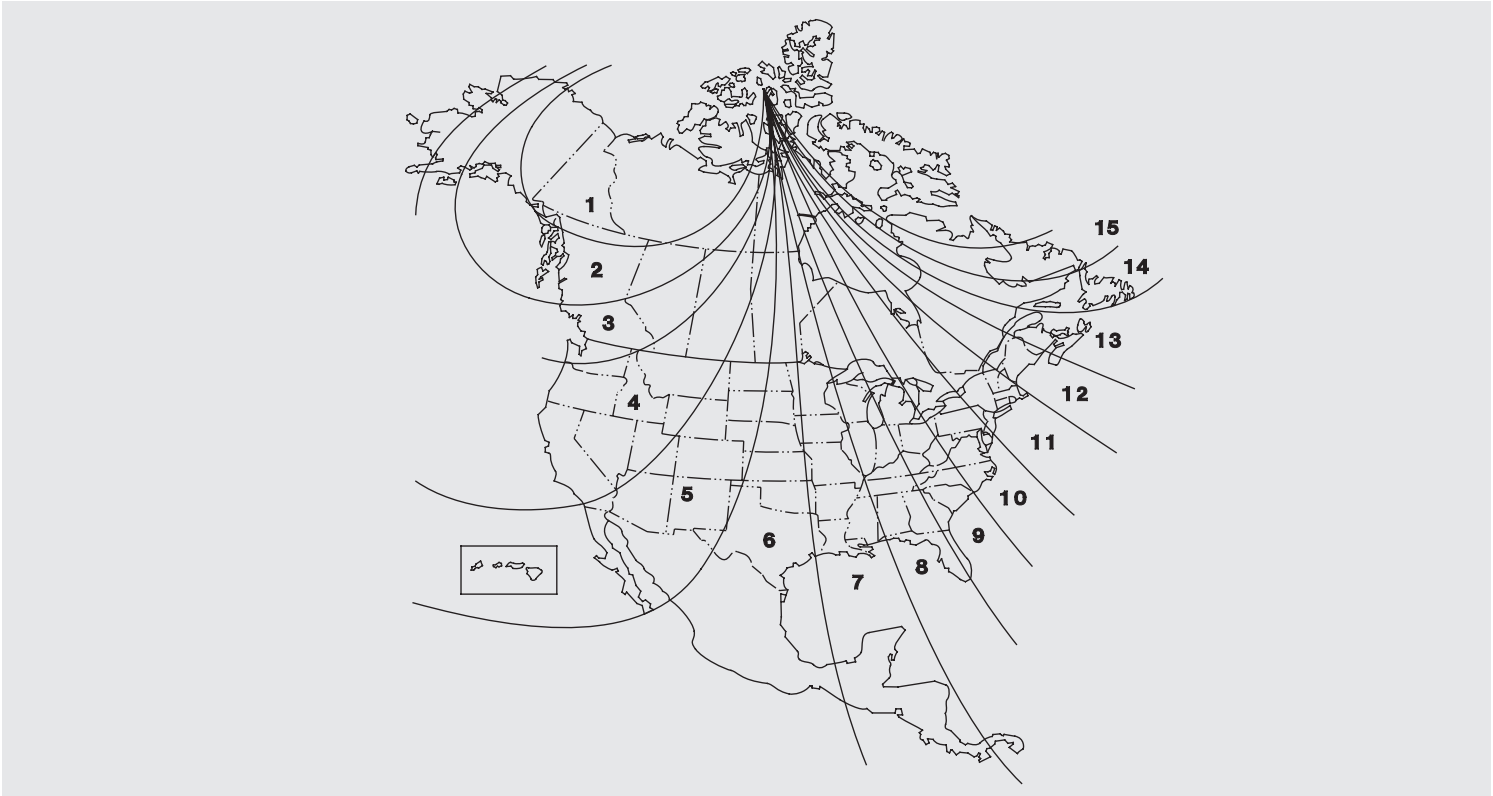
1
2
3
4
5
6
7
8
9
10
11
12
13
14
15

BRIGHTNESS control
The Brightness control has seven positions. In the middle five positions the display will dim when you turn on the parking lights or headlights.

Moving the control to the far left position turns off the display. It will come back on for several seconds if you press any of the buttons.

In the far right (maximum brightness) position, the display will not dim when you turn on the parking lights.

Cleaning the Display
Always use a soft cloth and mild glass/plastic cleaner (such as cleaners for computer monitor screens) to clean the display.

When you wipe the screen, some black lines may appear because of static electricity build-up. This is normal. They will disappear in five to ten minutes.

(With Navigation System)
The Trip Computer displays the following information. To switch to this display, press the A/C-Trip button.

- Clock
- Outside Temperature.
- Instantaneous fuel mileage.
- The Range, or estimated distance you can travel on the fuel remaining in the tank. This distance is estimated from the fuel economy you have gotten over the last several miles, so it will vary with changes in speed, traffic, etc.
- The Avg display shows you the average fuel economy since you last reset the display.

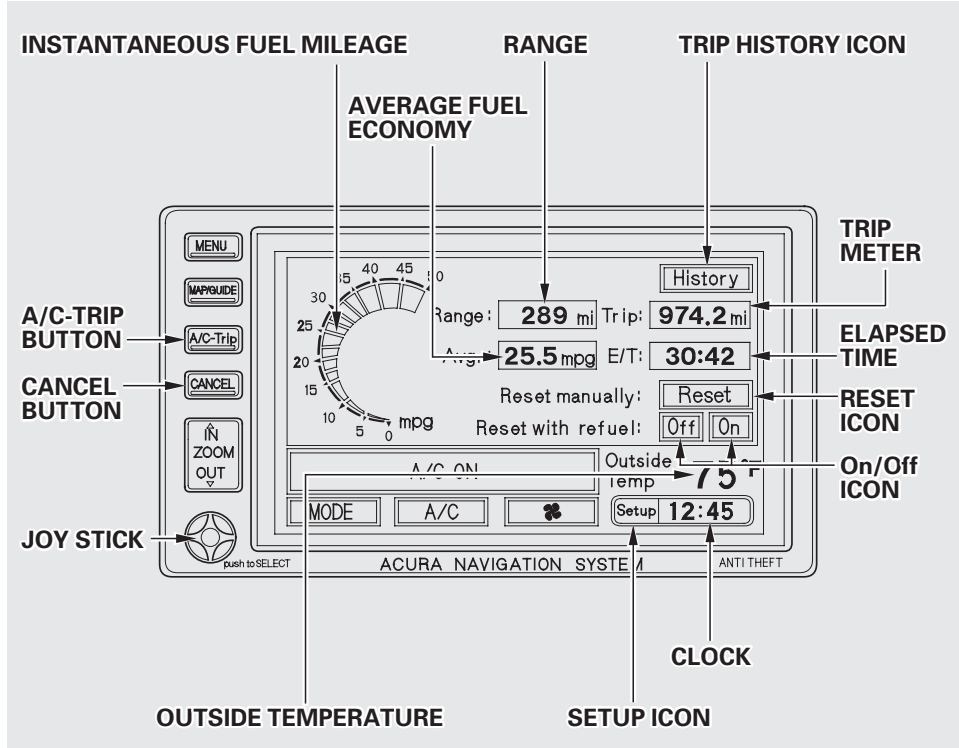

CONTINUED

- The E/T is the elapsed time that the ignition has been on. This display can be reset at any time.

- The Trip display shows you the total distance you have driven since it was last reset. When it passes 999.9, it stops displaying tenths and goes to 1000. When it passes 9999, it clears to 0.0.

  The display also has manual functions for the Climate Control System. Refer to page 145 .

Resetting the Display
The Trip, Avg and E/T displays can be reset in either of two ways.

To reset the displays manually, either touch the "Reset" box or move the highlighting to the "Reset" box with the joystick, then push in on the joystick.

You can also have the system reset the displays automatically when you refuel the vehicle. Turn this feature on by touching the box, or by selecting it with the joystick.

Trip History

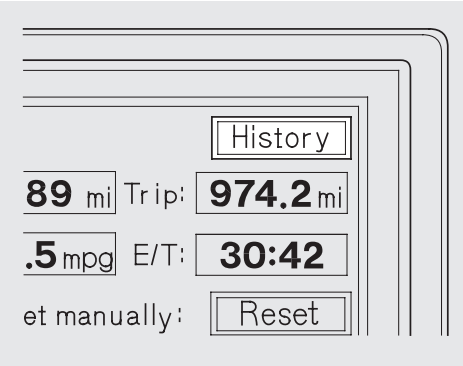

Every time the displays are reset by either of the above methods, the screen information is stored by the system. To see the history of the last five trips, select the History box with the joystick or by touch.

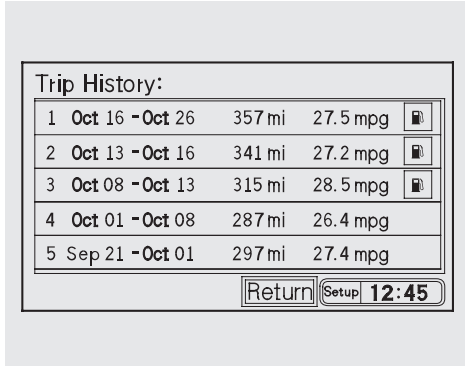

If the fuel pump icon is displayed, it means the displays were recorded and reset automatically when the vehicle was refueled.

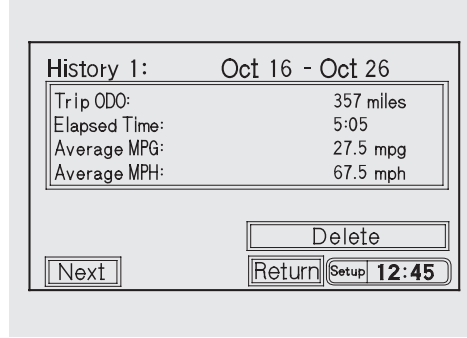

To see more detailed information about a trip, select the desired trip by touching it with your finger, or by highlighting it with the joystick, then pushing in on the joystick.
To remove the displayed trip history from the list, select the “Delete” box.
To see details of the next trip in the list, select the “Next” box.
To return to the Trip History list, select the “Return” box. To return to the Trip Computer display, select “Return” again.

The heating and air conditioning systems in your Acura provide a comfortable driving environment in all weather conditions.

The standard audio system has many features. This section describes those features and how to use them. (If you selected an optional audio system, refer to the operating instructions that came with it.)

Your Acura has an anti-theft audio system that requires a code number to enable it.

Climate Control System 142
Fully-automatic Operation 144
Semi-automatic Operation 145
Mode Button/Mode Icons 147
Sunlight Sensor/ Temperature Sensor 149
Rear A/C Unit 150
Audio System 153
AM/FM/Cassette/CD changer Audio System 153
Operating the Radio 154
Adjusting the Sound 157
Audio System Lighting 158
Operating the Cassette Player 159
Tape Search Functions 160
Operating the CD Changer 163
CD Changer Error Indications 170
Audio System 171
AM/FM/Cassette/CD Stereo Audio System 171
Operating the Radio 172
Adjusting the Sound 176
Audio System Lighting 177
Radio Frequencies 177
Radio Reception 177
Operating the CD Player 179
Operating the CD Changer 181
Protecting Compact Discs 182
CD Player Error Indications 183
CD Changer Error Indications 184
Operating the Cassette Player 185
Tape Search Functions 186
Caring for the Cassette Player 188
Remote Audio Controls 189
Theft Protection 190
Security System 191

Climate Control System

The automatic climate control system in your Acura picks the proper combination of air conditioning, heating, and ventilation to maintain the interior temperature you select. The system also adjusts the fan speed and air flow levels.

Your vehicle also has a rear A/C unit that allows the rear passengers to adjust the heating, cooling, and air flow (see page 150).

The direction of air flow from the vents in the center and each corner of the dashboard is adjustable. Move the tab in the center of each vent up-and-down and side-to-side.

The vents in the corners of the dashboard can be opened and closed with the dials underneath them.

CENTER VENTS

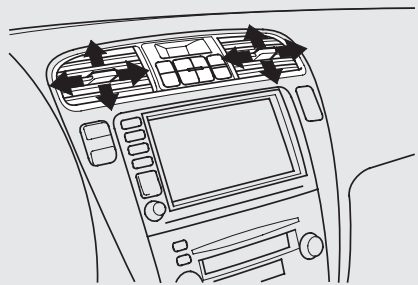

The climate control system draws air through the exterior vents at the bottom of the windshield. Keep these vents clear of leaves and other debris.

CORNER VENT

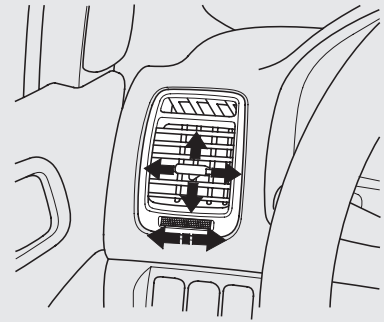

For the climate control system to provide heating and cooling, the engine must be running.

REAR CENTER VENT

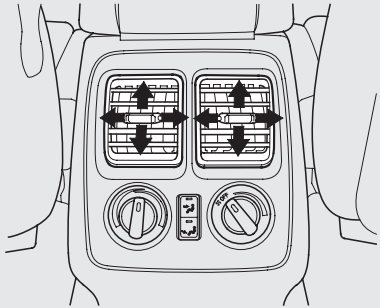

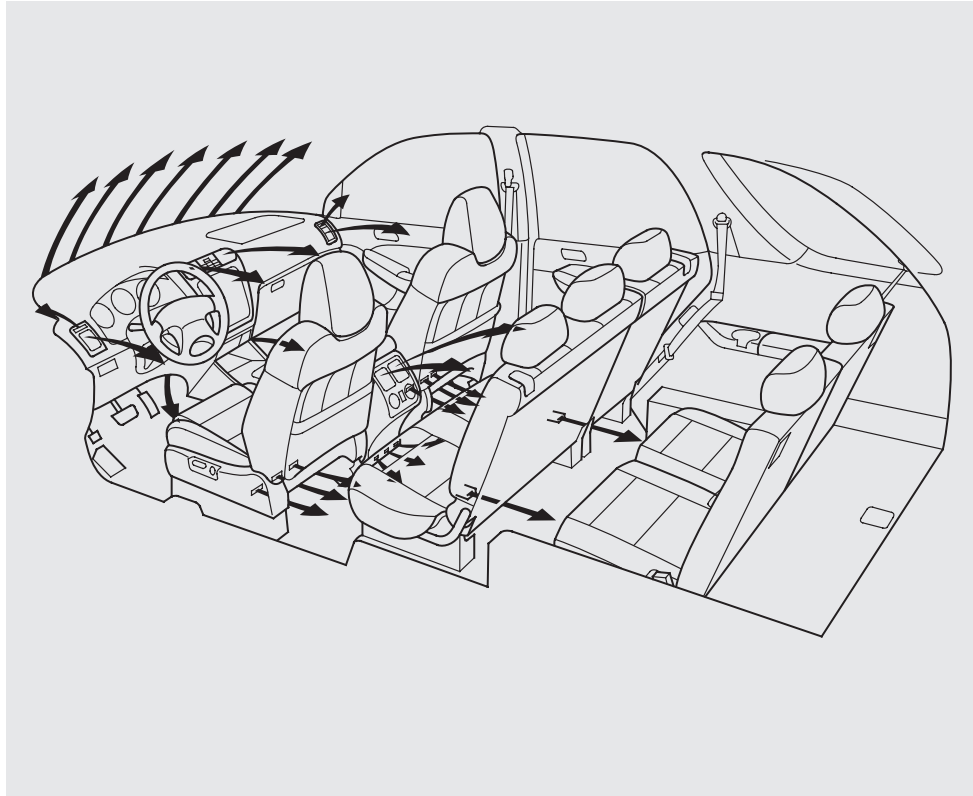

Fully-automatic Operation
To put the Automatic Climate Control in fully-automatic mode, press the AUTO button. Then set the desired temperature by pressing either side of the TEMP button: ▲ to raise the temperature above the displayed value, or ▼ to lower the temperature.

The system automatically selects the proper mix of conditioned and/or heated air that will, as quickly as possible, raise or lower the interior temperature from its current level to the set temperature.

When you set the temperature to its lower limit (60℉/18℃) or its upper limit (90℉/32℃), the system runs at full cooling or heating only. It does not regulate the interior temperature. When the temperature is set between the lower and upper limits, the system regulates the interior temperature to the set value.

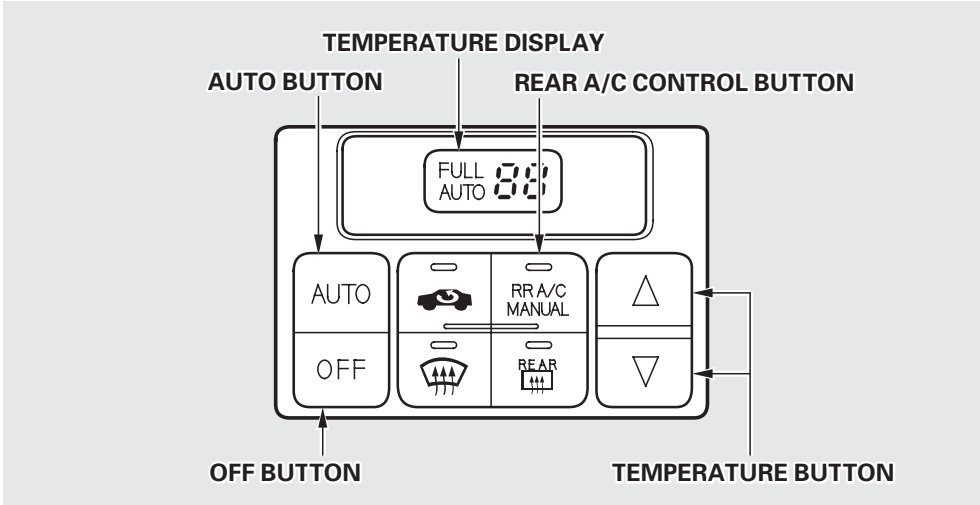

In cold weather, the fan will not come on automatically until the vehicle has been driven for a short time and the heater starts to develop warm air.

Pressing the OFF button shuts the climate control system completely off. Keep the system completely off only for short periods. To keep stale air and mustiness from collecting, you should have the fan running at all times.

Semi-automatic Operation
You can manually select various functions of the Climate Control system when it is in FULL AUTO. All other features remain automatically controlled. Some of these functions appear in the Trip Computer/Navigation System display with the Navigation System. Press the A/C-Trip button next to the display to show these functions.

Air Conditioning (A/C) Buttons
Pressing the A/C button or touching the A/C icon turns the air conditioning on and off. You will see A/C ON or A/C OFF displayed.

When you turn the A/C off, the system cannot regulate the inside temperature if you set it below the outside temperature. With the A/C on, use the temperature buttons to adjust the temperature of the air flow to a comfortable setting.

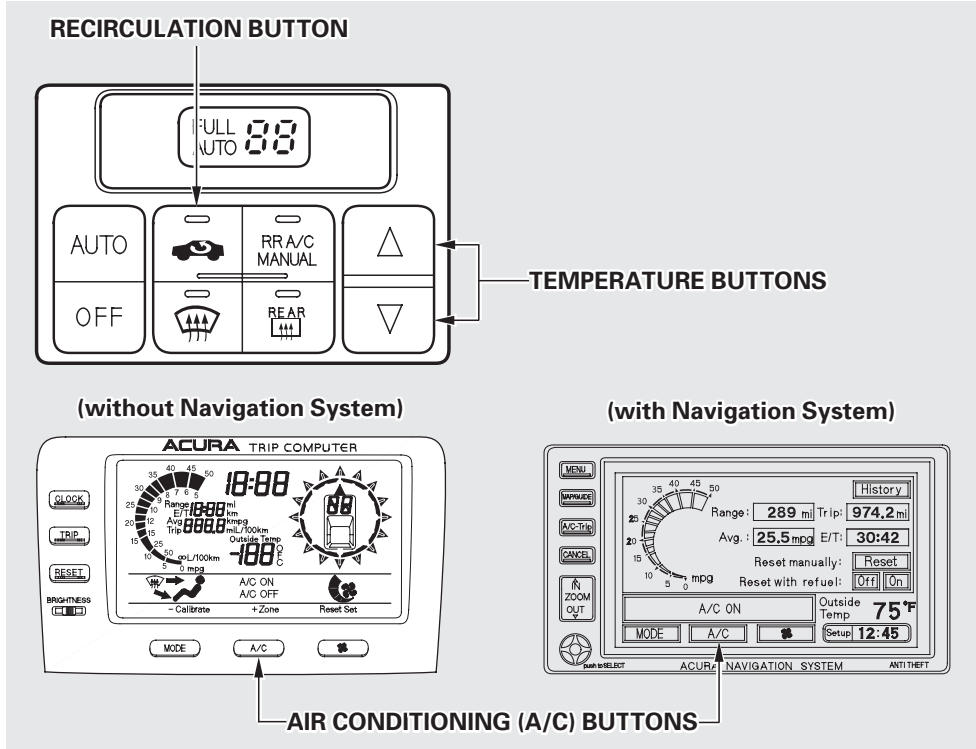

CONTINUED

Recirculation Button
This button controls the source of the air going into the system. When the indicator above this button is lit, air from the vehicle's interior is sent through the system again (Recirculation mode). When the indicator is off, air is brought in from outside the vehicle (Fresh Air mode).
You can, for example, manually put the system in recirculation mode when driving through an area of smoke or fumes.

Fan Speed Icon/Fan Speed Button
You can manually select the fan speed with the fan speed button/fan speed icon. Pressing the button or touching the icon repeatedly makes the fan run faster. The fan speed is shown by bars in the display. If the fan is at its highest speed, pressing the button or touching the icon again takes it to its lowest speed.

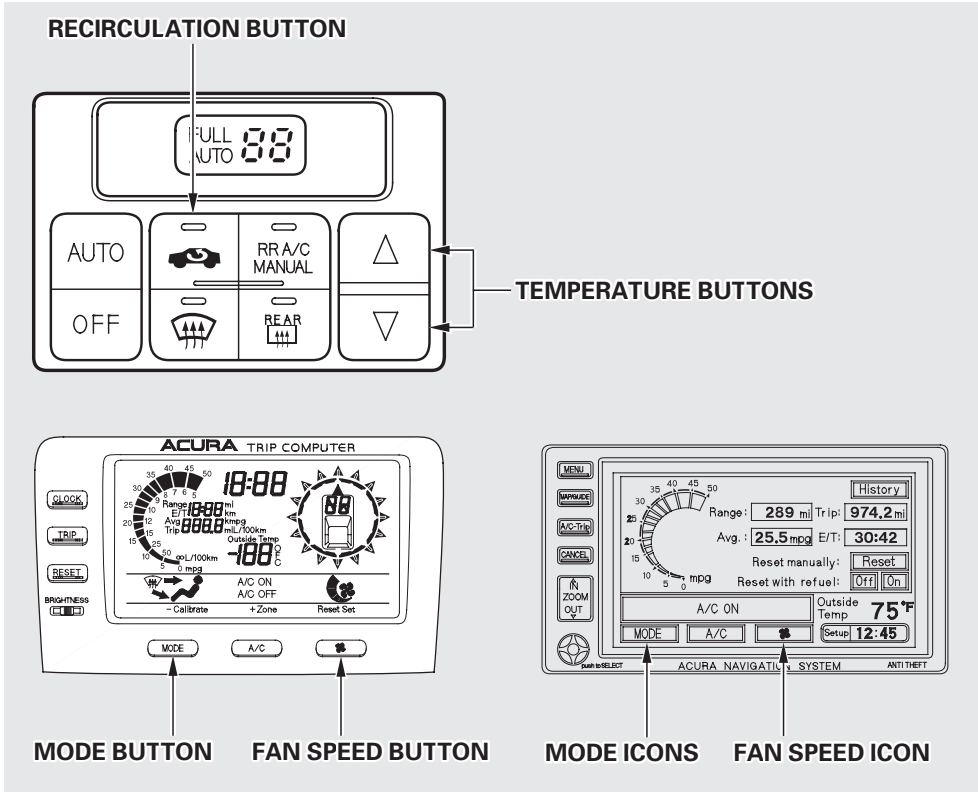

Mode Button/Mode Icons
Use the MODE Button or MODE icon to select the vents the air flows from. Some air will flow from the dashboard corner vents in all modes. Each time you press the MODE button or touch the icon, the display shows the mode selected. Press (touch) four times to see all the modes.

The main air flow is divided between the floor vents and defroster vents at the base of the windshield.

The main air flow comes from the floor vents.

The main air flow is divided between the dashboard vents and the floor vents.

The main air flow comes from the dashboard vents.

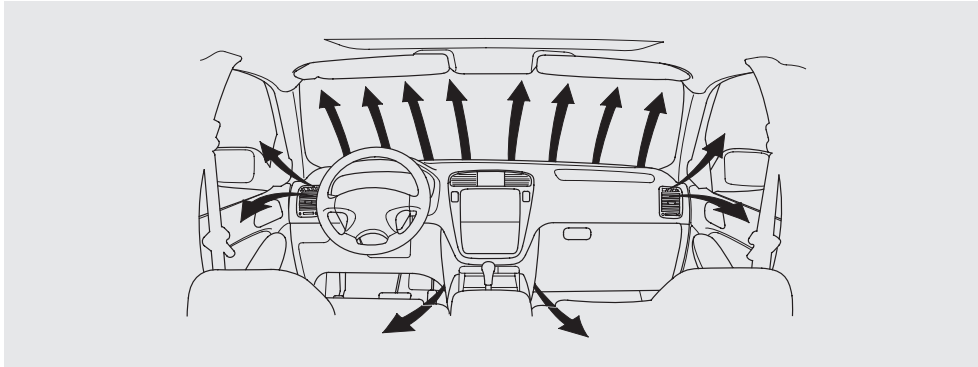

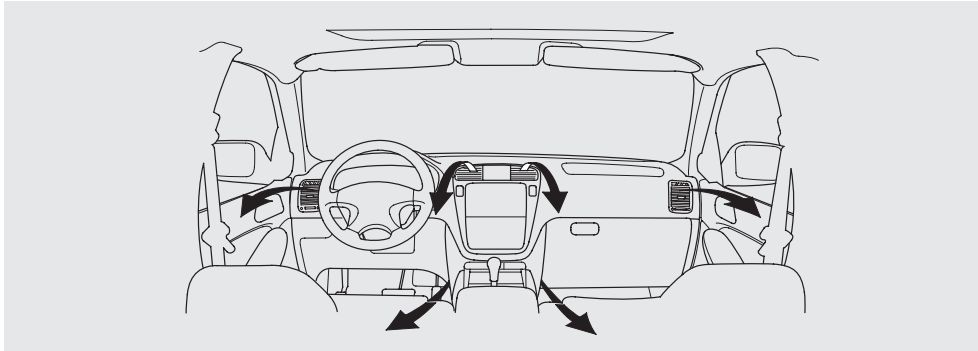

CONTINUED

The button directs the main air flow to the windshield for faster defrosting. It also overrides any MODE selection you may have made.

When you select , the A/C turns on automatically and the system selects Fresh Air mode. For faster defrosting, manually set the fan speed to high. You can also increase air flow to the windshield by closing the side vents in the dashboard.

When you turn off by pressing the button again, the system returns to its former settings.

Rear Window Defogger Button
This button turns the rear window defogger on and off (see page 75).

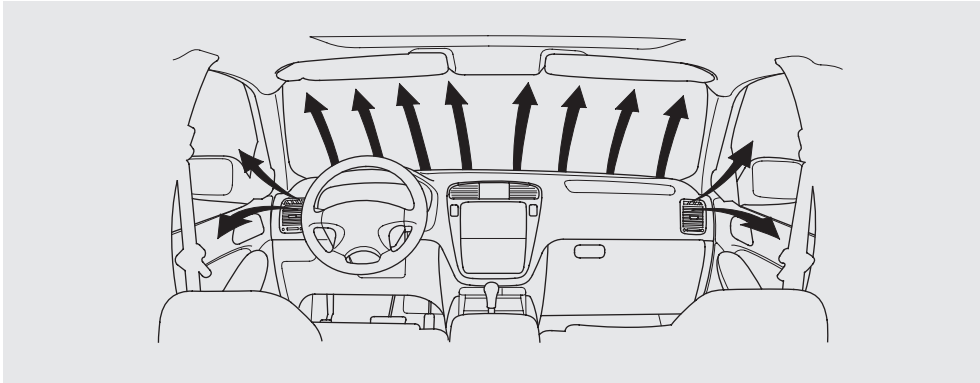

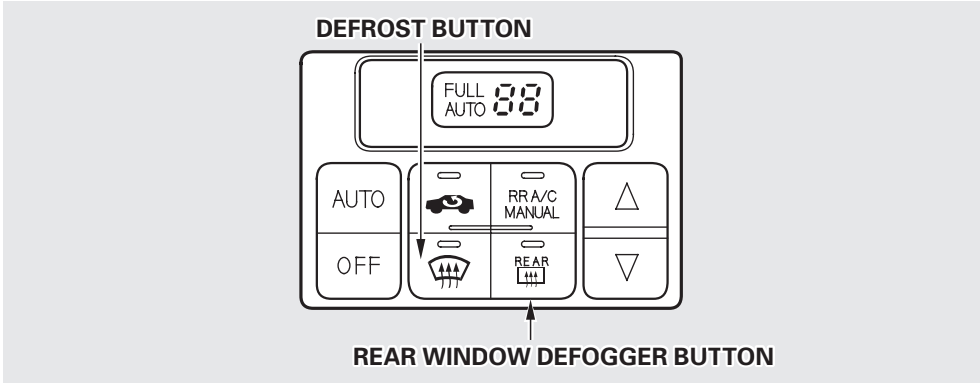

Sunlight Sensor/Temperature Sensor

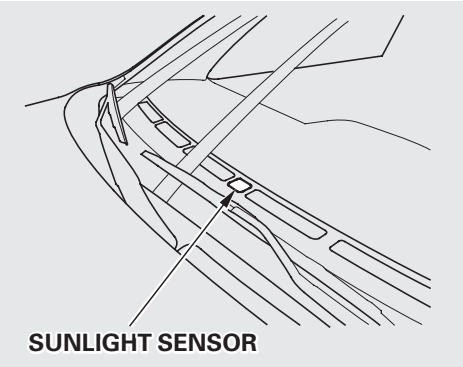

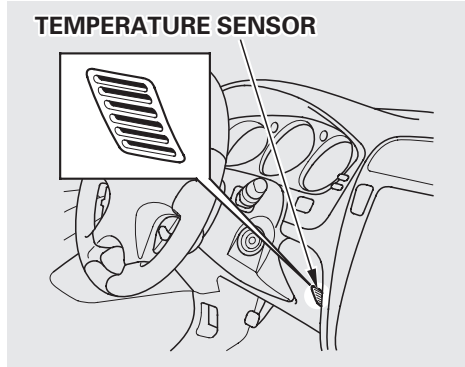

The climate control system has two sensors. A sunlight sensor is located in the top of the dashboard and a temperature sensor is next to the steering column. Do not cover the sensors or spill any liquid on them.

Rear A/C Unit

Your vehicle has two controls for the rear A/C unit. The rear A/C control button is located on the climate control panel, and the rear A/C passenger control panel is on the back of the center console.

You can adjust the heating, cooling, and air flow of the rear A/C unit with these control dials.

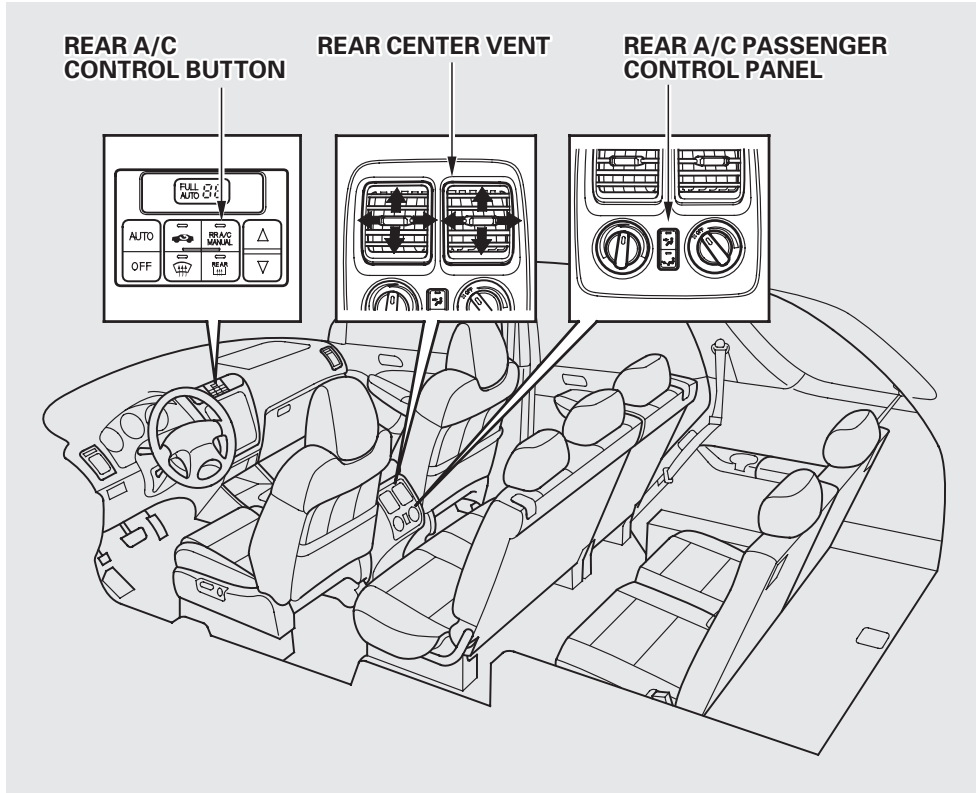

Rear A/C Control Button

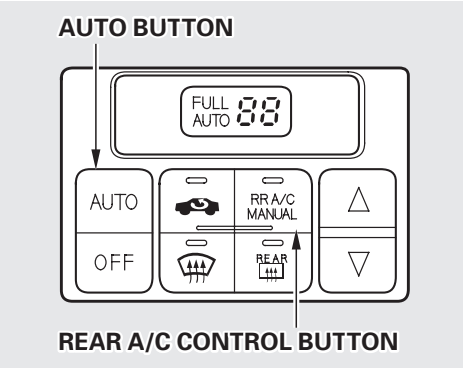

When the system is in FULL AUTO, the rear A/C passenger control panel cannot be used. The system will cycle on and off automatically to bring the interior to the set temperature.

To enable the rear A/C passenger control panel, press the RR A/C Manual button on the control panel. The light in the button will come on.

Rear A/C Passenger Control Panel

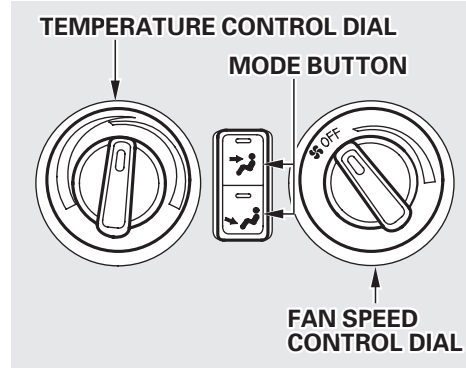

When the rear A/C passenger control panel is enabled, the passenger in the second row can use the rear A/C passenger control panel to adjust the fan speed and air flow.

Fan Speed Control Dial

The fan speed control dial changes the speed of the rear fan; turn it clockwise to increase fan speed and air flow.

CONTINUED

Temperature Control Dial
Turning this dial clockwise increases the temperature of the air flow.

Mode Button
Use the MODE buttons to select the vents the air flows from.

With the button selected, heated air flows from the rear lower vents.

With the button selected cooled air flows from the rear upper vents.

AM/FM/Cassette/CD Changer Audio System

Touring Model

Your Acura's audio system provides clear reception on both AM and FM bands, while the preset buttons allow you to easily select your favorite stations.

The cassette system features Dolby B* noise reduction, automatic sensing of chromium-dioxide (CrO_2) tape, and autoreverse for continuous play.

* Dolby noise reduction manufactured under license from Dolby Laboratories Licensing Corporation. "DOLBY" and the double-D symbol ▯▯ are trademarks of Dolby Laboratories Licensing Corporation.

The in-dash CD changer holds up to six discs. You operate the CD changer with the same controls used for the radio. See page 163 for CD changer operation.

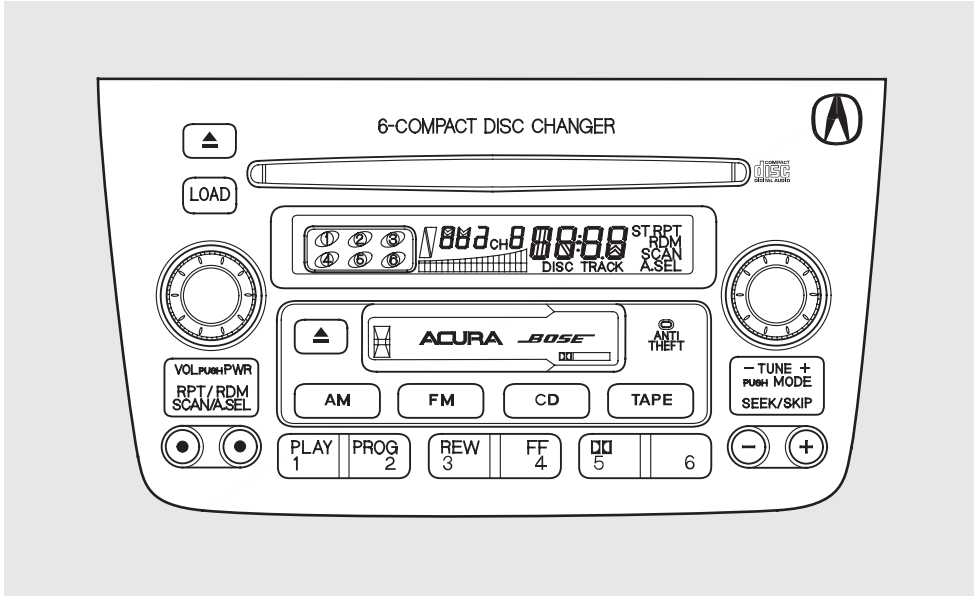

The anti-theft feature will disable the system if it is disconnected from the car's battery. To get the system working again, you must enter a code number (see page 190).

Operating the Radio
The ignition switch must be in ACCESSORY (I) or ON (II) to operate the audio system. Turn the system on by pressing the PWR/ VOL knob or the AM or FM button. Adjust the volume by turning the knob.

The band and frequency that the radio was last tuned to is displayed. To change bands, press the AM or FM button. On the FM band, ST will be displayed if the station is broadcasting in stereo. Stereo reproduction on AM is not available.

You can use any of four methods to find radio stations on the selected band: TUNE, SEEK, SCAN or the Preset buttons.

TUNE — Use the TUNE knob to tune the radio to a desired frequency. Turn the TUNE knob to the right to tune to a higher frequency, or to the left to tune to a lower frequency. Turn the knob right or left until the display reaches the desired frequency.

SEEK — The SEEK function searches the band for a station with a strong signal. To activate it, press either SEEK button (⊖ or ⊕), then release it. Depending on which SEEK button you press, the system scans upward or downward from the current frequency. It stops when it finds a station with a strong signal.

SCAN — The SCAN function samples all the stations with strong signals on the selected band. To activate it, press the SCAN button, then release it. When the system is in the SCAN mode, SCAN shows in the display. The system will scan up the band for a station with a strong signal. When it finds one, it will stop and play that station for approximately five seconds. If you do nothing, the system will then scan for the next strong station and play that for five seconds. When it plays a station that you want to continue listening to, press the SCAN button again.

Preset — You can store the frequencies of your favorite radio stations in the six preset buttons. Each button will store one frequency on the AM band, and two frequencies on the FM band.

To store a frequency:

1. Select the desired band, AM or FM. FM1 and FM2 let you store two frequencies with each Preset button.

2. Use the TUNE or SEEK function to tune the radio to a desired station.

3. Pick the Preset button you want for that station. Press the button and hold it until you hear a beep.

4. Repeat steps 1 to 3 to store a total of six stations on AM and twelve on FM.

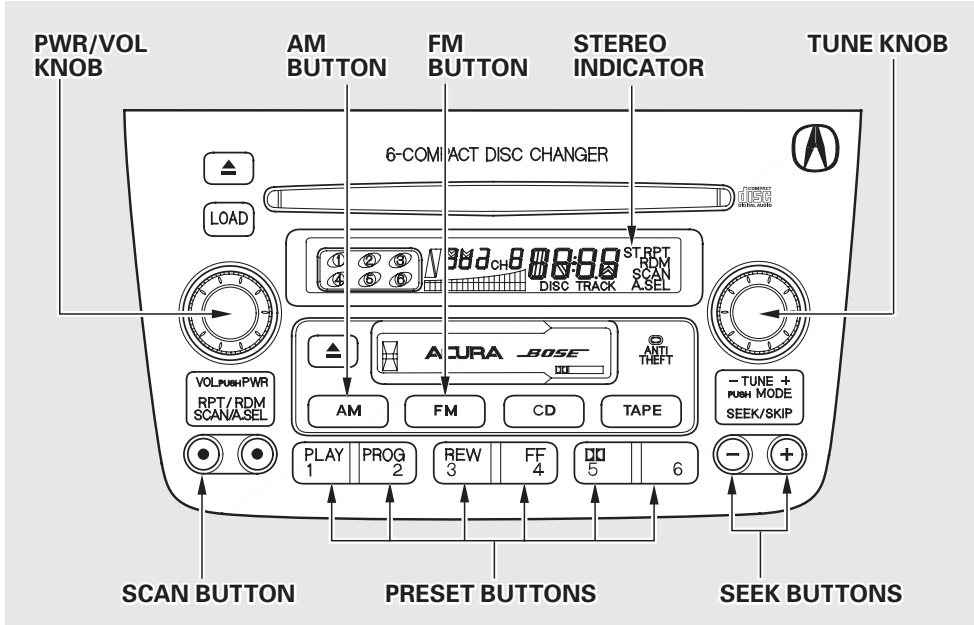

Once a station's frequency is stored, simply press and release the proper Preset button to tune to it.

The preset frequencies will be lost if your car's battery goes dead, is disconnected, or the radio fuse is removed.

CONTINUED

AUTO SELECT — If you are traveling far from home and can no longer receive the stations you preset, you can use the Auto Select feature to find stations in the local area.

To activate Auto Select, press the A. SEL button. A. SEL will flash in the display, and the system will go into scan mode for several seconds. It automatically scans both bands, looking for stations with strong signals. It stores the frequencies of six AM stations and twelve FM stations in the preset buttons. You can then use the preset buttons to select those stations.

If you are in a remote area, Auto Select may not find six strong AM stations or twelve strong FM stations. If this happens, you will see a "0" displayed when you press any preset button that does not have a station stored.

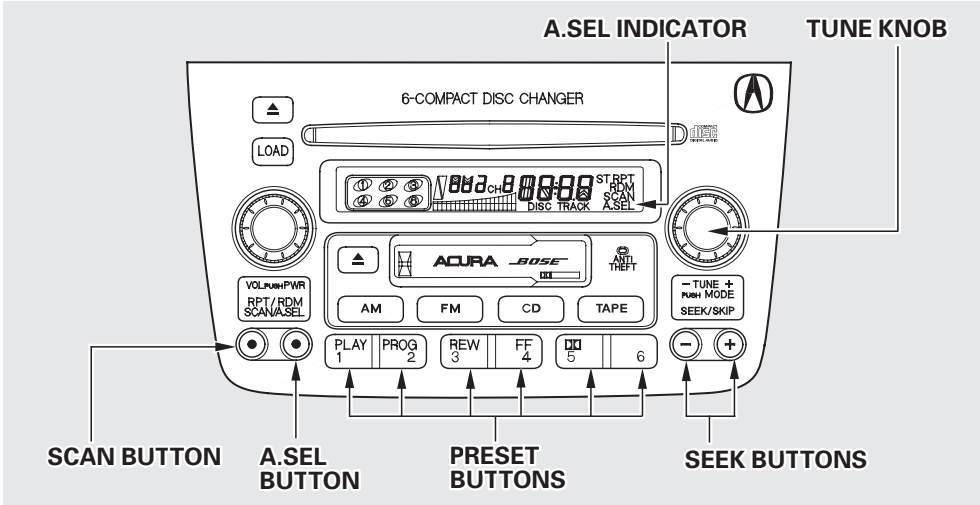

If you do not like the stations Auto Select has stored, you can store other frequencies in the preset buttons. Use the TUNE, SEEK, or SCAN function to find the desired frequencies, then store them in the selected preset buttons as described previously.

Auto Select does not erase the frequencies that you preset previously. When you return home, turn off Auto Select by pressing the A. SEL button. The preset buttons will then select the frequencies you originally set.

Adjusting the Sound
Bass, Treble, Balance, and Fader are each adjustable. You select which of these you want to adjust by pressing the TUNE knob. The mode changes from BAS to TRE to FAD to BAL, and then back to the selected audio mode, each time you press the TUNE knob.

Treble/Bass — Use these modes to adjust the tone to your liking. Select TRE or BAS by pressing the TUNE knob. Adjust the desired mode by turning the TUNE knob. The level indicators on the display show you the range.

Balance/Fader — These two modes adjust the strength of the sound coming from each speaker. BAL adjusts the side-to-side strength, while FAD adjusts the front-to-back strength.

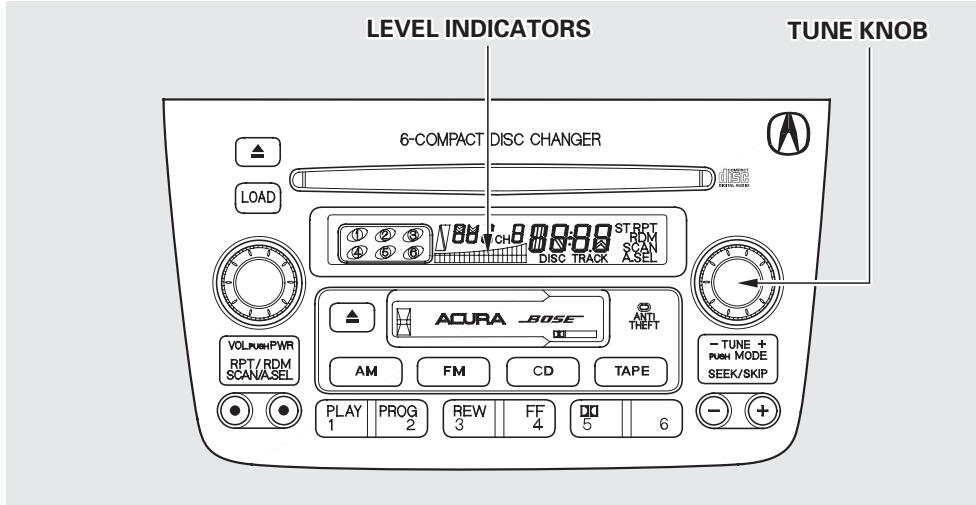

Select BAL or FAD by pressing the TUNE knob. Adjust the Balance or Fader to your liking by turning the TUNE knob. The level indicators on the display show you the range.

The system will automatically return the display to the selected audio mode about five seconds after you stop adjusting a mode with the TUNE knob.

Audio System Lighting
You can use the instrument panel brightness control dial to adjust the illumination of the audio system (see page 71). The audio system illuminates when the parking lights are on, even if the radio is turned off.

Radio Frequencies and Reception
For information, see page 177 .

Operating the Cassette Player
The ignition switch must be in ACCESSORY (I) or ON (II).
Make sure the tape opening on the cassette is facing to the right, then insert the cassette most of the way into the slot. The system will pull it in the rest of the way, and begin to play.

The tape direction indicator will light to show you which side of the cassette is playing. The ▲ indicates the side you inserted facing upward is now playing. If you want to play the other side, press the PROG button.

Dolby noise reduction turns on when you insert a cassette. If the tape was not recorded with Dolby noise reduction, turn it off by pressing the button.

Dolby remains off until you turn it on by pressing the button again.

When the system reaches the end of the tape, it will automatically reverse direction and play the other side. If you want to remove the cassette from the drive, press the EJECT button.

You can remove the cassette with the ignition switch in any position, even if the audio system is turned off.

If you turn the system off while a tape is playing, either with the PWR/VOL knob or by turning off the ignition, the cassette will remain in the drive. When you turn the system back on, the tape will begin playing where it left off.

To switch to the radio or CD changer while listening to a tape, press the AM, FM or CD button. To change back to the cassette player, press the TAPE button.

Tape Search Functions

With a cassette playing, you can use the FF, REW, SKIP, or REPEAT function to find a desired program.

FF/REW — Fast Forward and Rewind move the tape rapidly. To rewind the tape, push the REW button. You will see REW in the display. To fast forward the tape, push the FF button. You will see FF displayed. Press the FF, REW or PLAY button to take the system out of rewind or fast forward. When the system reaches the end of the tape, it reverses direction and begins to play.

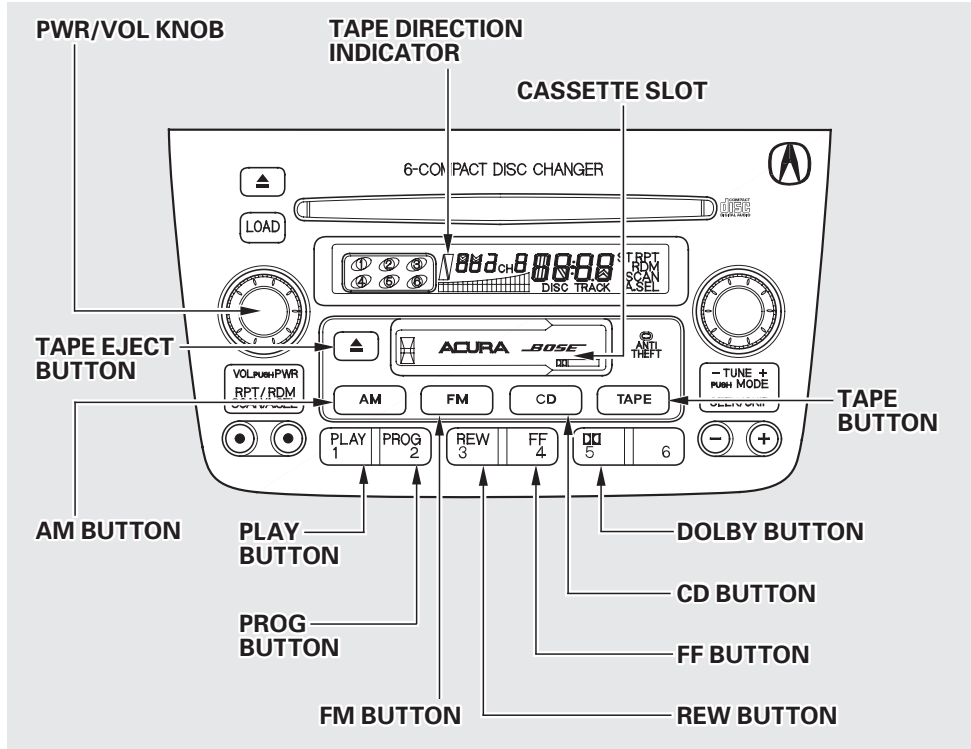

SKIP — The SKIP function allows you to find the beginning of a song or passage. To skip to the beginning of a song or passage currently playing, push the ⊖ button. You will see REW flashing in the display as the tape rewinds. To skip to the beginning of the next song, push the ⊕ button. You will see FF flashing in the display as the tape fast forwards. When the system finds the beginning of a song or passage, it goes back to PLAY.

To stop the SKIP function before it finds the beginning of a song or passage, press either of the SKIP buttons (⊖ or ⊕).

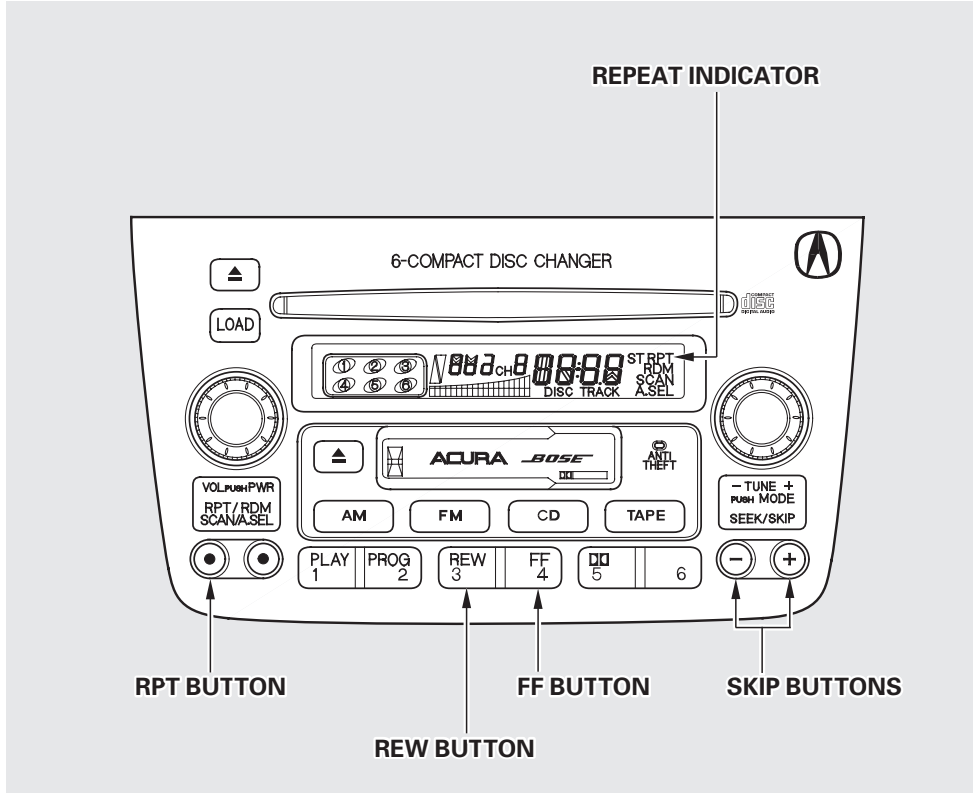

REPEAT — The Repeat function continuously replays the current song or passage. Press the RPT button to activate it; you will see RPT displayed as a reminder. When the system reaches the end of the song or passage currently playing, it will automatically go into rewind. When it senses the beginning of the same song or passage, the system returns to PLAY mode. It will continue to repeat this same program until you deactivate REPEAT by pressing the button again.
Pressing the REW or FF button, or either of the SKIP buttons, also turns off REPEAT.

The SKIP and REPEAT functions use silent periods on the tape to find the end of a song or passage. These features may not work to your satisfaction if there is almost no gap between selections, a high noise level between selections, or a silent period in the middle of a selection.

Caring for the Cassette Player
Damaged cassettes can jam inside the drive or cause other problems. See page 188 for information on cassette care and protection.

Operating the CD Changer
Your Acura's audio system has an in-dash CD changer that holds up to six discs, providing several hours of continuous entertainment. You operate this CD changer with the same controls used for the radio and cassette player.

To load the CDs or operate the CD changer, the ignition switch must be in ACCESSORY (I) or ON (II).

Load and play only standard round discs. Odd-shaped CDs may jam in the drive or cause other problems. You cannot load and play 3-inch (8-cm) discs in this system.

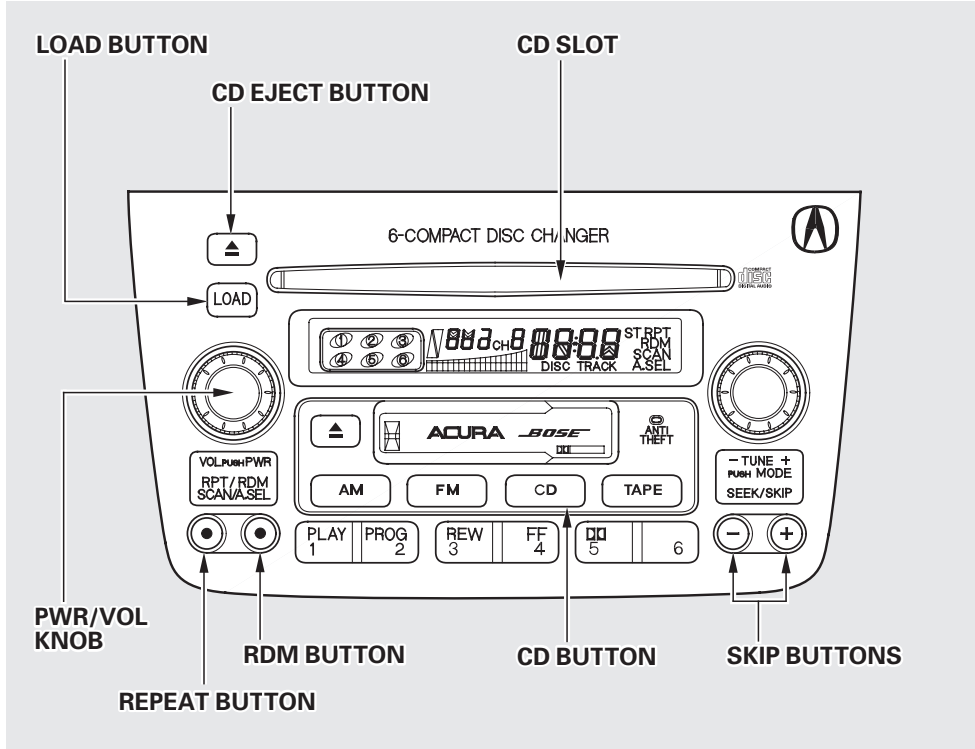

CONTINUED

Loading CDs in the Changer
To load multiple CDs in one operation:

1. Press and hold the Load button until you hear a beep and see "_ _ _ _" in the display, then release the button.

2. On the left side of the display, the CD Loaded indicator for an empty position will begin blinking.

3. When you see LOAd in the display, insert the disc into the CD slot. Insert it only about halfway, the drive will pull it in the rest of the way. You will again see the dashes in the display as the CD is loaded.

4. When LOAd appears again in the display, insert the next disc into the CD slot. Do no try to insert a disc until LOAd appears. You could damage the audio unit.

5. Repeat this until all six positions are loaded. The system will then begin playing the last CD loaded.

If you are not loading CDs into all six positions, press the Load button again after the last CD has loaded. The system will begin playing the last CD loaded.

If you stop loading CDs before all six positions are filled, and you do not press the Load button, the system will wait for ten seconds, then stop the load operation and begin playing the last CD loaded.

To load a single CD:

1. Press and release the Load button.

2. When the CD Loaded indicator for an empty position starts to blink, and you see LOAd in the display, insert the disc into the CD slot. Insert it only about halfway, the drive will pull it in the rest of the way.

3. The system will load the CD, and begin playing it.

If you press the Load button while a CD is playing, the system will stop playing that CD and start the loading sequence. It will then play the CD just loaded.

You can also load a CD into an empty position while a CD is playing by pressing the appropriate preset button. Select an empty position (the CD Loaded indicator is off), and press the preset button for that position (1 to 6). The system will stop playing the current CD and start the loading sequence. It will then play the CD just loaded.

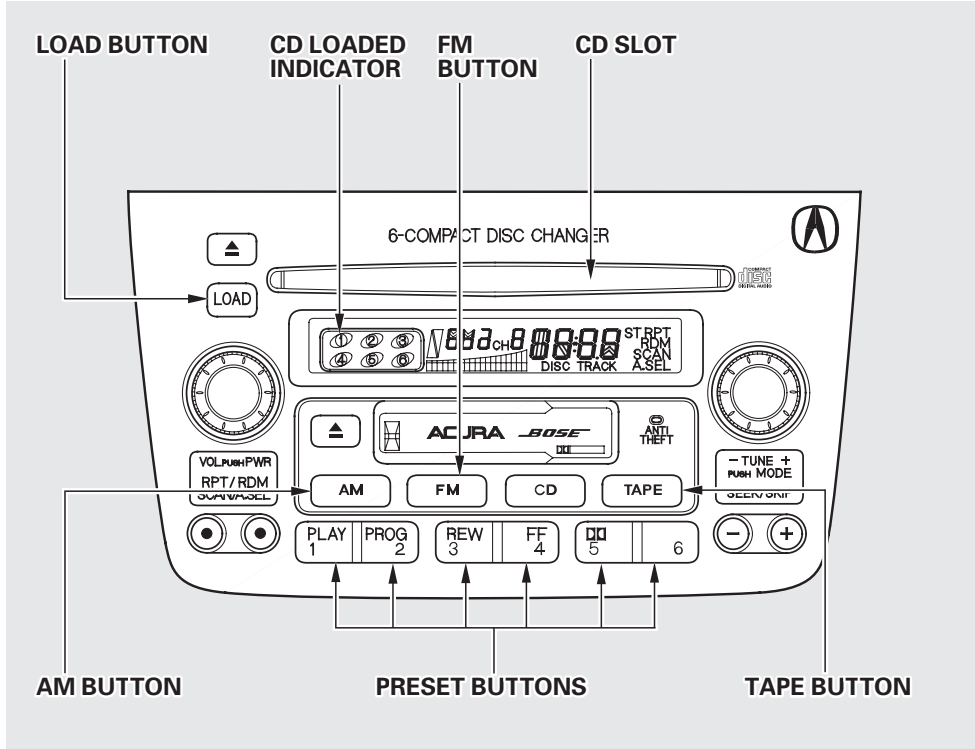

CONTINUED

Operation
Select the CD changer by pressing the CD button. You will see "Cd" in the display. The system will begin playing the last selected disc in the CD changer. You will see the disc and track numbers displayed.

When that disc ends, the next disc in the CD changer is loaded and played. After the last disc finishes, the system returns to disc 1.

To select a different disc, press the appropriate Preset button (1 – 6). If you select an empty position in the CD changer, the system will go into the loading sequence (see page 164).

You can use the SKIP buttons while a disc is playing to select passages and change tracks.

To move rapidly within a track, press and hold the appropriate SKIP button. You will hear a beep and the system will continue to move. Press the ⊕ button to move forward, or the ⊖ button to move backward. Release the button when the system reaches the point you want.

Each time you press the ⊕ button and release it, the system skips forward to the beginning of the next track. Press and release the ⊖ button to skip backward to the beginning of the current track. Press and release it again to skip to the beginning of the previous track.

REPEAT – To activate the Repeat feature, press and release the RPT button. You will see RPT in the display as a reminder. The system continuously replays the current track. Press the RPT button again to turn it off. Pressing either of the SKIP buttons also turns off the repeat feature.

RANDOM PLAY – This feature, when activated, plays the tracks within a CD in random order, rather than in the order they are recorded on the CD. To activate Random Play, press the RDM button. You will see RDM in the display. The system will then select and play tracks randomly. This continues until you deactivate Random Play by pressing the RDM button again, or you select a different CD with a preset button.

To take the system out of CD mode, press the AM or FM button, or insert a cassette in the player. If a tape is already in the cassette player, press the TAPE button. When you return to CD mode by pressing the CD button, play will continue at the same point that it left off.

If you turn the system off while a CD is playing, either with the PWR/VOL knob or the ignition switch, play will continue at the same point when you turn it back on.

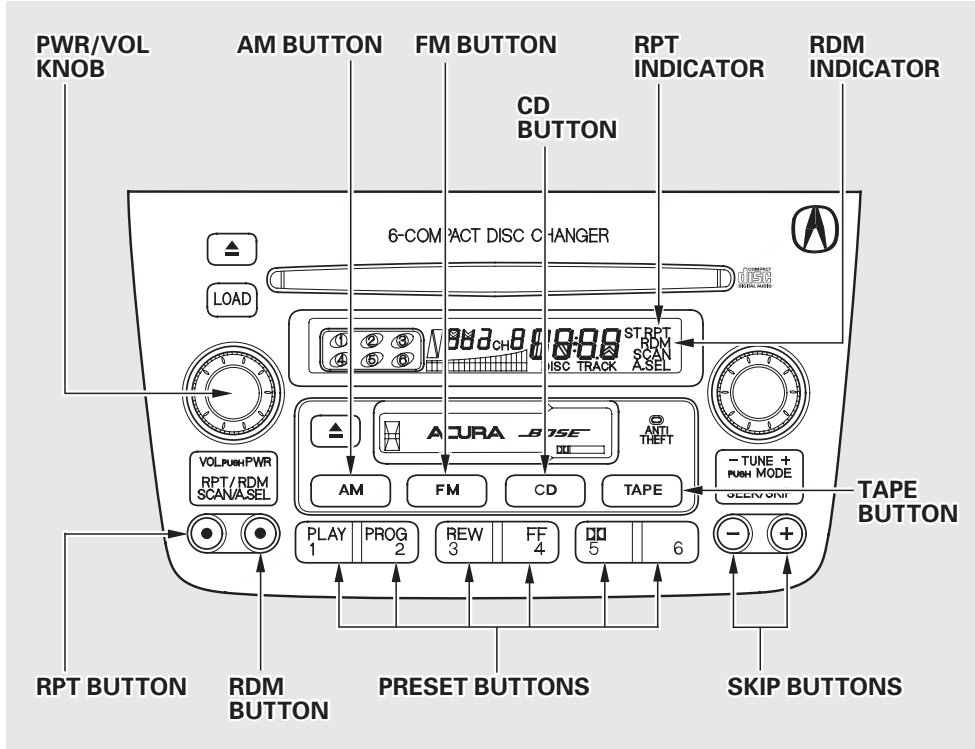

CONTINUED

Removing CDs from the Changer
To remove the disc that is currently playing, press the Eject button. You will see "EJEC" in the display. When you remove the disc from the slot, the system automatically begins the Load sequence so you can load another CD in that position. If you do not load another CD, after ten seconds the system begins playing the next disc in the changer. If the changer is empty, the system selects the previous mode (AM, FM, or Tape).

If you do not remove the disc from the slot, the system will reload the disc after ten seconds and begin playing it.

To remove a different CD from the changer, first select it with the appropriate preset button. When that CD begins playing, press the Eject button.

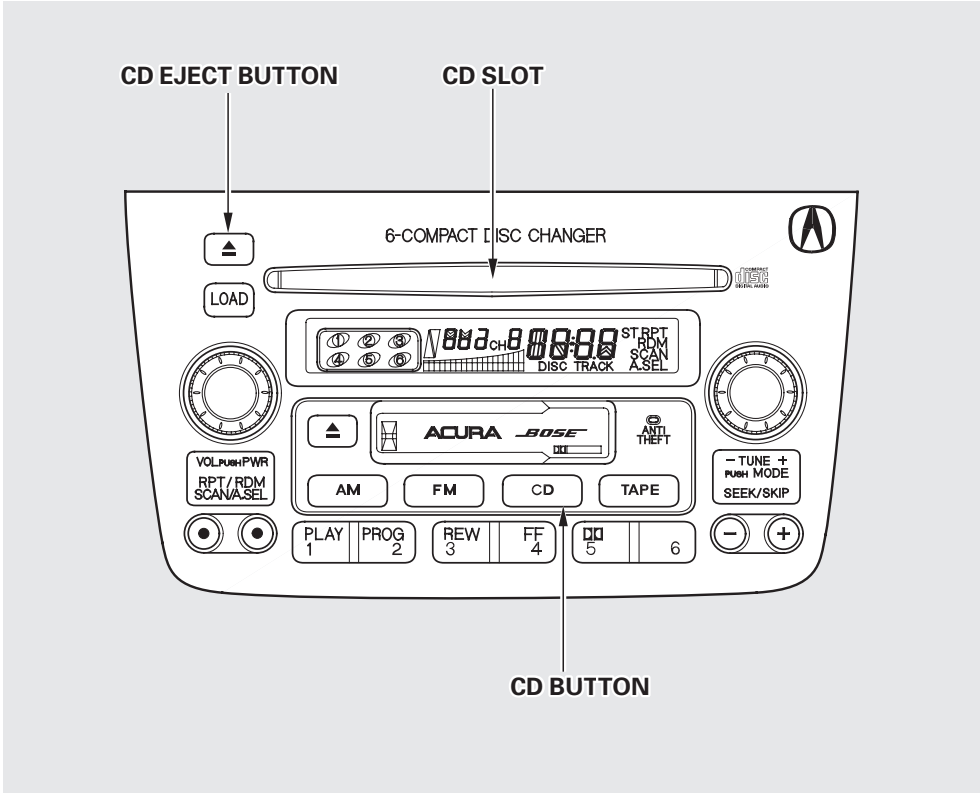

If you press the Eject button while listening to the radio or tape, or with the audio system turned off, the disc that was last selected is ejected. After that disc is ejected, pressing the Eject button again will eject the next disc in the numerical order. By doing this six times, you can remove all the CDs from the changer.

In any mode, if you press the Eject button and hold it until you hear a beep, the system will eject all of the discs in the changer.

You can also eject discs when the ignition switch is off. The disc that was last selected is ejected first. You can eject up to six discs, one at a time.

Protecting Compact Discs
For information on how to handle and protect compact discs, see page 182.

CD Changer Error Indications

If you see an error indication in the display while operating the CD changer, find the cause in the chart to the right. If you cannot clear the error indication, take the vehicle to your Acura dealer.

Indication	Cause	Solution
Cd ErE0	Disc-changer malfunction.	Consult your Acura dealer.
Cd Er-H	High temperature.	Will disappear when the temperature returns to normal.
Cd1 E01	Disc-changer malfunction.	Consult your Acura dealer.
Cd1 ---H	High temperature.	Will disappear when the temperature returns to normal.
Cd1 EEE	Misconnection or disconnection of optional under front seat CD changer.	See your Acura dealer.
Cd1 --- -	No CD magazine in the optional under front seat CD changer.	Insert a CD magazine.
Cd1 0 DISC	No CD in magazine.	Insert a CD in magazine.

AM/FM/Cassette/CD Stereo Audio System

On Standard Model

Your Acura's audio system provides clear reception on both AM and FM bands, while the preset buttons allow you to easily select your favorite stations.

The anti-theft feature will disable the system if it is disconnected from the vehicle's battery. To get the system working again, you must enter a code number (see page 190).

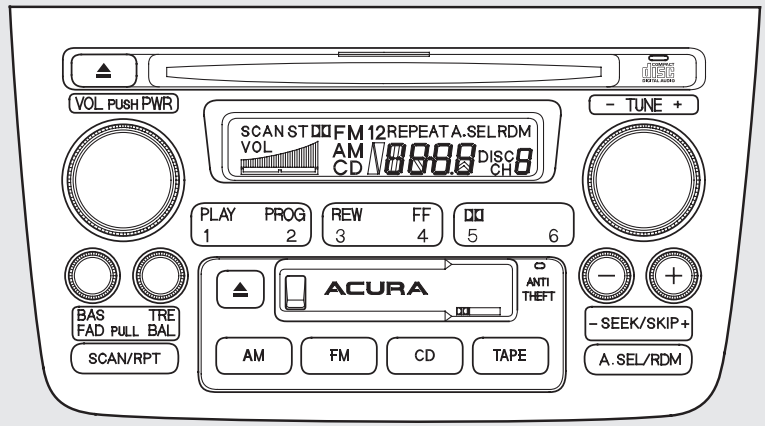

Operating the Radio
The ignition switch must be in ACCESSORY (I) or ON (II) to operate the audio system. Turn the system on by pushing the PWR/ VOL knob. Adjust the volume by turning the same knob.

The band and frequency that the radio was last tuned to is displayed. To change bands, press the AM or FM button. On the FM band, ST will be displayed if the station is broadcasting in stereo. Stereo reproduction on AM is not available.

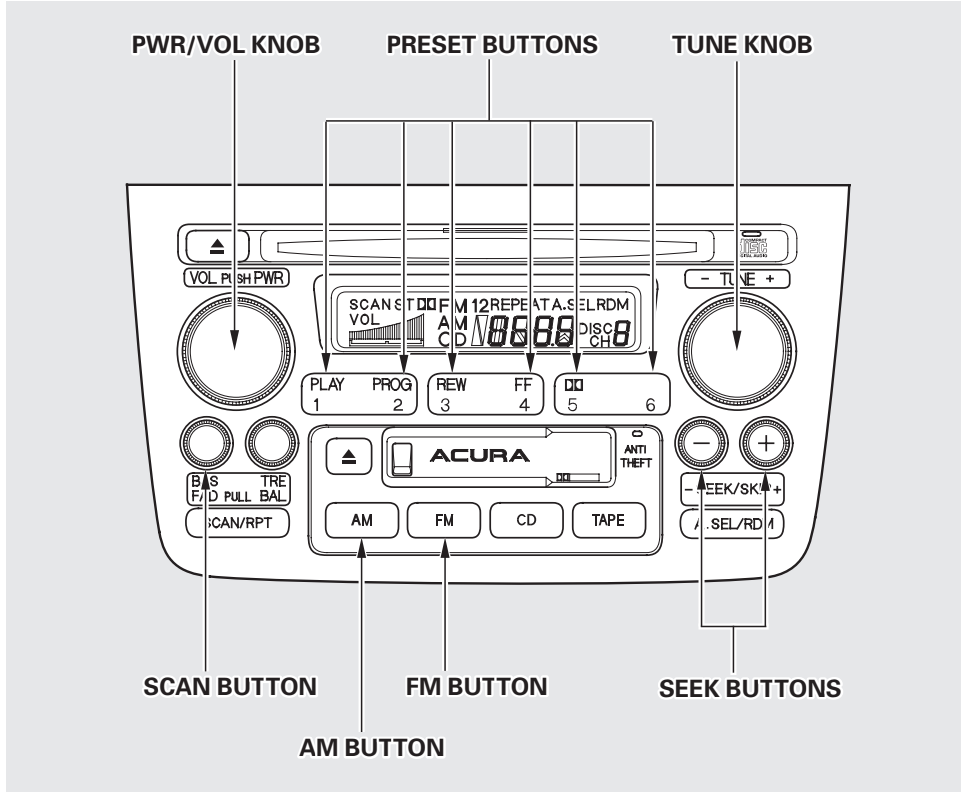

You can use any of four methods to find radio stations on the selected band: TUNE, SEEK, SCAN or the Preset buttons.

TUNE — Use the TUNE knob to tune the radio to a desired frequency. Turn the knob clockwise to tune to a higher frequency, or counterclockwise to tune to a lower frequency.

SEEK — The SEEK function searches the band for a station with a strong signal. To activate it, press either SEEK button (⊖ or ⊕), then release it. Depending on which SEEK button you press, the system scans upward or downward from the current frequency. It stops when it finds a station with a strong signal.

SCAN — The SCAN function samples all the stations with strong signals on the selected band. To activate it, press the SCAN button, then release it. The system will scan up the band for a station with a strong signal. When it finds one, it will stop and play that station for approximately five seconds. If you do nothing, the system will then scan for the next strong station and play that for five seconds. When it plays a station that you want to continue listening to, press the SCAN button again.

Preset — You can store the frequencies of your favorite radio stations in the six preset buttons. Each button will store one frequency on the AM band, and two frequencies on the FM band.

To store a frequency:

1. Select the desired band, AM or FM. FM1 and FM2 let you store two frequencies with each Preset button.
2. Use the TUNE or SEEK function to tune the radio to a desired station.
3. Pick the Preset button you want for that station. Press the button and hold it until you hear a beep.
4. Repeat steps 1 to 3 to store a total of six stations on AM and twelve on FM.

Once a station's frequency is stored, simply press and release the proper preset button to tune to it.
The preset frequencies will be lost if your vehicle's battery goes dead, is disconnected, or the radio fuse is removed.

AUTO SELECT — If you are traveling far from home and can no longer receive the stations you preset, you can use the Auto Select feature to find stations in the local area.

To activate Auto Select, press the A. SEL button. A. SEL will flash in the display, and the system will go into scan mode for several seconds. It automatically scans both bands, looking for stations with strong signals. It stores the frequencies of six AM stations and twelve FM stations in the preset buttons. You can then use the preset buttons to select those stations.

If you are in a remote area, Auto Select may not find six strong AM stations or twelve strong FM stations. If this happens, you will see a "0" displayed when you press any preset button that does not have a station stored.

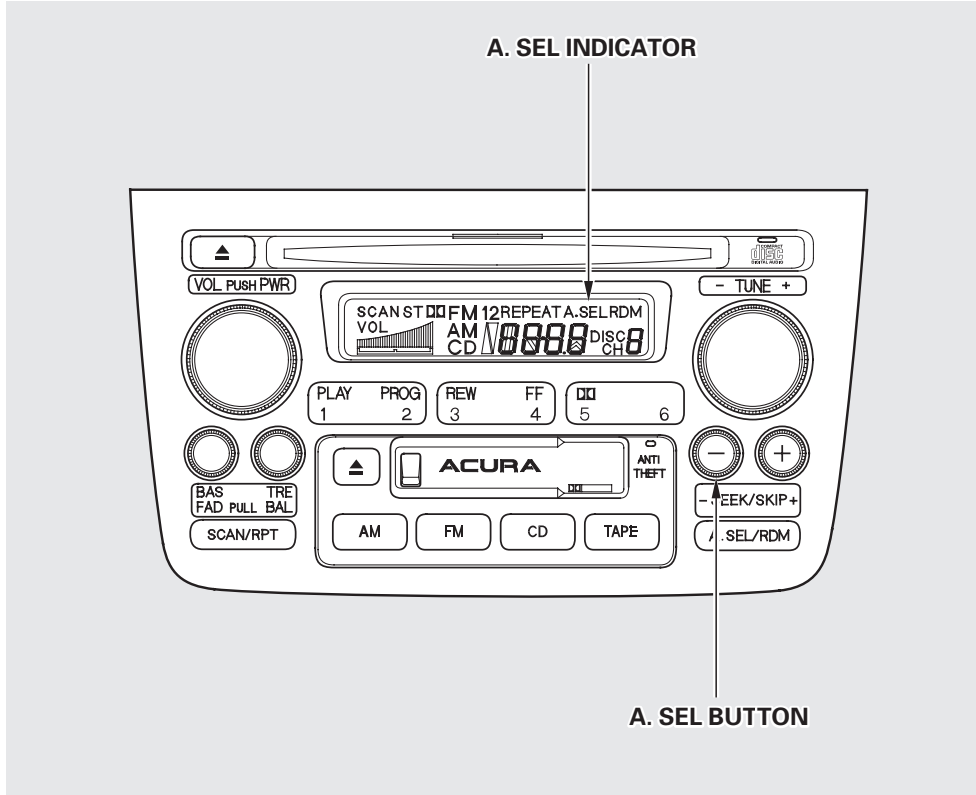

If you do not like the stations Auto Select has stored, you can store other frequencies in the preset buttons. Use the TUNE, SEEK, or SCAN function to find the desired frequencies, then store them in the selected preset buttons as described previously.

Auto Select does not erase the frequencies that you preset pre-viously. When you return home, turn off Auto Select by pressing the A. SEL button. The preset buttons will then select the frequencies you originally set.

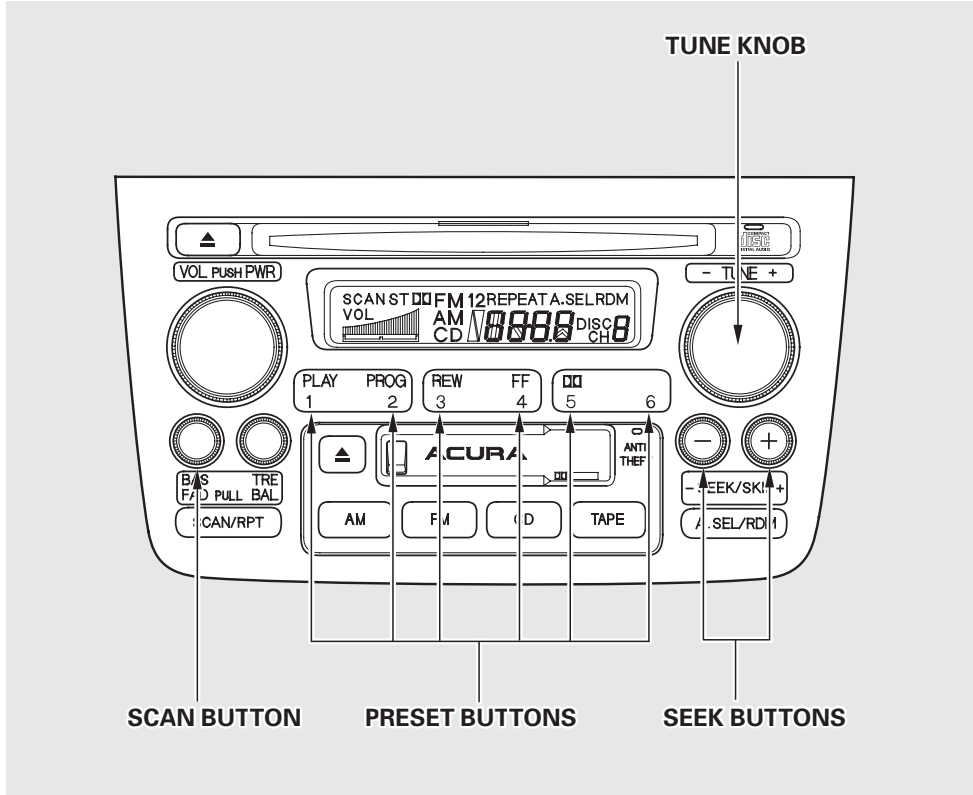

Adjusting the Sound Balance/Fader — These two controls adjust the strength of the sound coming from each speaker. The Balance control adjusts the side-to-side strength, while the Fader control adjusts the front-to-back strength.

To adjust the fader, push on the BASS/FADER control knob to get it to pop out. Pull it out slightly farther, and adjust the front-to-back sound to your liking. Push the knob back in when you are done so you cannot change the setting by accidentally bumping it.

To adjust the balance, push on the TREBLE/BALANCE control knob to get it to pop out. Pull it out slightly farther, and adjust the side-to-side sound to your liking. Push the knob back in when you are done so you cannot change the setting by accidentally bumping it.

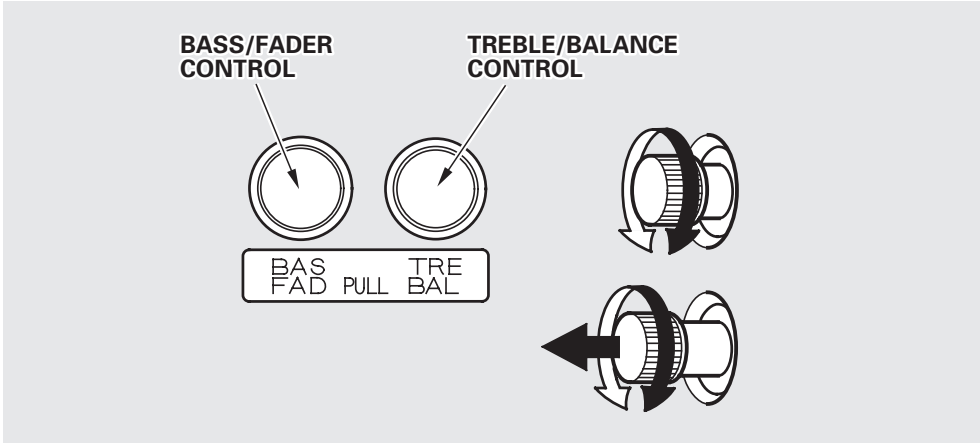

Treble/Bass — Use these controls to adjust the tone to your liking.

To adjust the Treble level, push on the TREBLE/BALANCE control knob to get it to pop out. Without pulling it out farther, turn the knob to adjust the treble level. Push the knob back in when you are done so you cannot change the setting by accidentally bumping it.

To adjust the Bass level, push on the BASS/FADER control knob to get it to pop out. Without pulling it out farther, turn the knob to adjust the bass level. Push the knob back in when you are done so you cannot change the setting by accidentally bumping it.

Audio System Lighting
You can use the instrument panel brightness control knob to adjust the illumination of the audio system (see page 64). The audio system illuminates when the parking lights are on, even if the radio is turned off.

Radio Frequencies
Your Acura's radio can receive the complete AM and FM bands. Those bands cover these frequencies:

AM band:
530 to 1,710 kilohertz
FM band:
87.7 to 107.9 megahertz

Radio stations on the AM band are assigned frequencies at least ten kilohertz apart (530, 540, 550). Stations on the FM band are assigned frequencies at least 0.2 megahertz apart (87.9, 88.1, 88.3). Stations must use these exact frequencies. It is fairly common for stations to round-off the frequency in their advertising, so your radio could display a frequency of 100.9 even though the announcer may identify the station as "FM101."

Radio Reception
How well your Acura's radio receives stations is dependent on many factors, such as the distance from the station's transmitter, nearby large objects, and atmospheric conditions.

A radio station's signal gets weaker as you get farther away from its transmitter. If you are listening to an AM station, you will notice the sound volume becoming weaker, and the station drifting in and out. If you are listening to an FM station, you will see the stereo indicator flickering off and on as the signal weakens. Eventually, the stereo indicator will go off and the sound will fade completely as you get out of range of the station's signal.

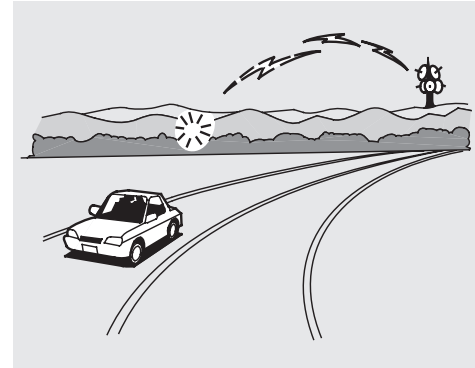

Driving very near the transmitter of a station that is broadcasting on a frequency close to the frequency of the station you are listening to can also affect your radio's reception. You may temporarily hear both stations, or hear only the station you are close to.

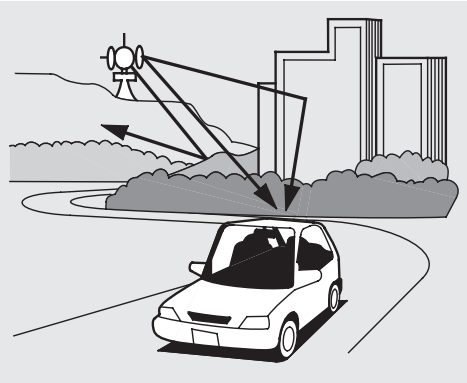

Radio signals, especially on the FM band, are deflected by large objects such as buildings and hills. Your radio then receives both the direct signal from the station's transmitter, and the deflected signal. This causes the sound to distort or flutter. This is a main cause of poor radio reception in city driving.

Radio reception can be affected by atmospheric conditions such as thunderstorms, high humidity, and even sunspots. You may be able to receive a distant radio station one day and not receive it the next day because of a change in conditions.

Electrical interference from passing vehicles and stationary sources can cause temporary reception problems.

As required by the FCC:
Changes or modifications not expressly approved by the party responsible for compliance could void the user's authority to operate the equipment.

Operating the CD Player
You operate the CD player with the same controls used for the radio.

With the system on, insert the disc into the CD slot. Push the disc in halfway, the drive will pull it in the rest of the way and begin to play. The number of the track that is playing is shown in the display.

You can also play 3-inch (8-cm) discs without using an adapter ring. In all cases, play only standard round discs. Odd-shaped CDs may jam in the drive or cause other problems.

When the system reaches the end of the disc, it will return to the beginning and play that disc again.

You can switch to the radio while a CD is playing by pressing the AM or FM button. Press the CD button to return to playing the CD. The CD will begin playing where it left off.

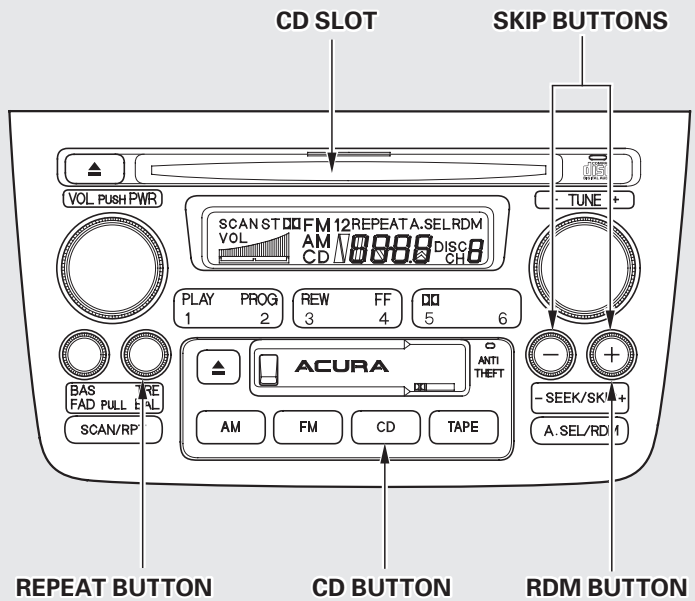

If you turn the system off while a CD is playing, either with the PWR/VOL knob or by turning off the ignition, the disc will stay in the drive. When you turn the system back on, the CD will begin playing where it left off.

Press the eject button to remove the disc from the drive.

If you eject the disc, but do not remove it from the slot, the system will automatically reload the disc after 15 seconds and put the CD player in pause mode. To begin playing the disc, press the CD button.

You can use the SKIP buttons while a disc is playing to select passages and change tracks.

To move rapidly within a track, press and hold an appropriate SKIP button. Press the ⊕ button to move forward, or the ⊖ button to move backward. Release the button when the system reaches the point you want.

Each time you press the ⊕ button and release it, the system skips forward to the beginning of the next track. Press and release the ⊖ button to skip backward to the beginning of the current track. Press and release it again to skip to the beginning of the previous track.

REPEAT — To activate the Repeat feature, press and release the Repeat button. You will see REPEAT in the display. The system continuously replays the current track. Press the Repeat button again to turn it off.

RANDOM PLAY — This feature, when activated, plays the tracks on the CD in random order, rather than in the order they are recorded on the CD. To activate Random Play, press the RDM button. You will see RDM in the display. The system will then select and play tracks randomly. This continues until you deactivate Random Play by pressing the RDM button again.

Operating the CD Changer (Optional)
A Compact Disc changer is available for your vehicle. It holds up to six discs, providing several hours of continuous entertainment. You operate this CD changer with the same controls used for the in-dash CD player.

Load the desired CDs in the magazine and load the magazine in the changer according to the instructions that came with the unit. Play only standard round discs. Odd-shaped CDs may jam in the drive or cause other problems.

To select the CD changer, press the CD button. The disc and track numbers will be displayed.

To select a different disc, press the appropriate preset button (1–6). If you select an empty slot in the magazine, the changer will, after finding that slot empty, try to load the CD in the next slot. This continues until it finds a CD to load and play.

If you load a CD in the in-dash player while the changer is playing a CD, the system will stop the changer and begin playing the in-dash CD. To select the changer again, press the CD button. Play will begin where it left off. Use the CD button to switch between the player and the changer.

If you eject the in-dash CD while it is playing, the system will automatically switch to the CD changer and begin play where it left off. If there are no CDs in the changer, the display will flash. You will have to select another mode (AM or FM) with the FM or AM button.

When you switch back to CD mode, the system selects the same unit (in-dash or changer) that was playing when you switched out of CD mode.

To use the SKIP, REPEAT, and RANDOM functions, refer to the in-dash player operating instructions.

Protecting Compact Discs

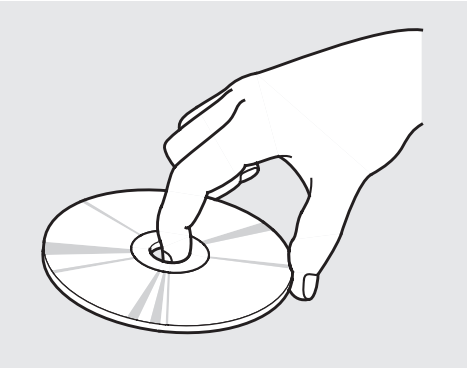

Handle a CD by its edges; never touch either surface. Contamination from fingerprints, liquids, felt-tip pens, and labels can cause the CD to not play properly, or possibly jam in the drive.

When a CD is not being played, store it in its case to protect it from dust and other contamination. To prevent warpage, keep CDs out of direct sunlight and extreme heat.

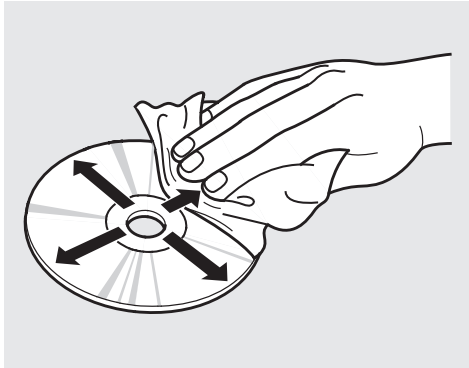

To clean a disc, use a clean soft cloth. Wipe across the disc from the center to the outside edge.

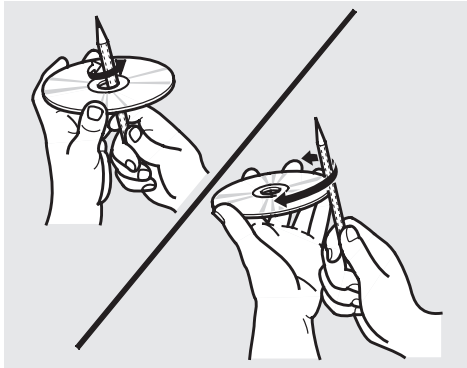

A new CD may be rough on the inner and outer edges. The small plastic pieces causing this roughness can flake off and fall on the recording surface of the disc, causing skipping or other problems. Remove these pieces by rubbing the inner and outer edges with the side of a pencil or pen.

Never try to insert foreign objects in the CD player or the magazine.

CD Player Error Indications

If you see an error indication in the display while operating the CD player, find the cause in the chart to the right. If you cannot clear the error indication, take the vehicle to your Acura dealer.

Indication	Cause	Solution
CD PE0	FOCUS/CLV Error Data Read Error Search Error	Press the EJECT button and pull out the disc. Check if the disc is inserted correctly in the CD player. Make sure the disc is not scratched or damaged.
CD PE1	Mechanical Error	Press the EJECT button and pull out the disc. Check the disc for damage or deformation. If the CD cannot be pulled out or the error indication does not disappear after the disc is ejected, see your Acura dealer. Do not try to force the disc out of the player.
CD PE2	Control Error LSI Error	Consult your Acura dealer.

CD Changer Error Indications

If you see an error indication in the display while in CD mode, find the cause in the chart to the right. If you cannot clear the error indication, take the vehicle to your Acura dealer.

Indication	Cause	Solution
CD E01	Disc-changer malfunction.	Consult your Acura dealer.
CD E02	Disc is in changer mechanism.	Press the magazine eject button, and insert an empty magazine.
CD E03 CD E04 CD E05	Disc-changer malfunction.	If the code disappears within a few seconds, unit is OK. If it does not, consult your Acura dealer.
CD E06	Disc-changer malfunction.	Press the magazine eject button and pull out the magazine, check for error indication. Insert the magazine again. If the magazine can not be pulled out, consult your Acura dealer.
CD E07	CD magazine ejection impossible.	Press the magazine eject button. If the magazine does not eject, consult your Acura dealer.
CD ---H	High temperature.	Will disappear when the temperature returns to normal.
CD EEE	Misconnection or disconnection of CD changer.	See your Acura dealer.
CD --- -	No CD magazine in the CD changer.	Insert CD magazine.
CD DISC 0	No CD in magazine.	Insert CD in magazine.

Operating the Cassette Player

The cassette system features Dolby B* noise reduction, automatic sensing of chromium-dioxide (CrO_2) tape, and autoreverse for continuous play.

Make sure the tape opening on the cassette is facing to the right, then insert the cassette most of the way into the slot. The system will pull it in the rest of the way, and begin to play.

* Dolby noise reduction manufactured under license from Dolby Laboratories Licensing Corporation. "DOLBY" and the double-D symbol ▯▯ are trademarks of Dolby Laboratories Licensing Corporation.

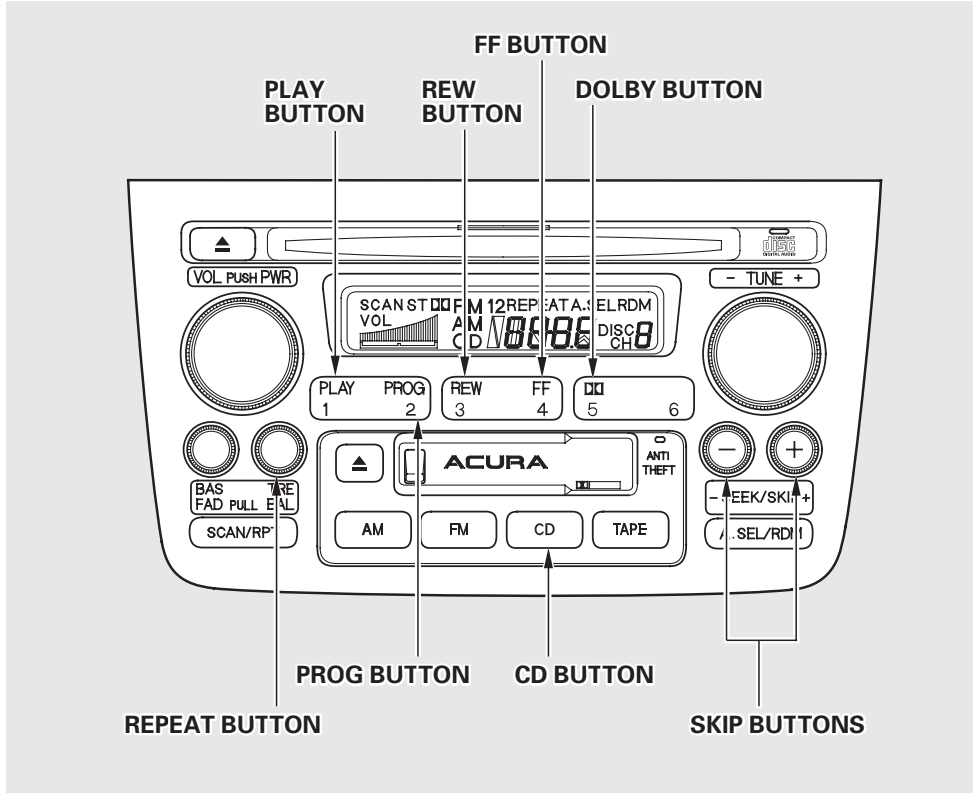

The tape direction indicator will light to show you which side of the cassette is playing. The ▲ indicates the side you inserted facing upward is now playing. If you want to play the other side, press the PROG button.

Dolby noise reduction turns on when you insert a cassette. If the tape was not recorded with Dolby noise reduction, turn it off by pressing the NR button.

When the system reaches the end of the tape, it will automatically reverse direction and play the other side. If you want to remove the cassette from the drive, press the EJECT button.

If you turn the system off while a tape is playing, either with the PWR/VOL knob or by turning off the ignition, the cassette will remain in the drive. When you turn the system back on, the tape will begin playing where it left off.

To switch to the radio or CD player while a tape is playing, press the AM, FM or CD button. To change back to the cassette player, push the TAPE button.

Tape Search Functions
With a cassette playing, you can use the FF, REW, SKIP, or REPEAT function to find a desired program.

FF/REW — Fast Forward and Rewind move the tape rapidly. To rewind the tape, push the REW button. You will see REW in the display. To fast forward the tape, push the FF button. You will see FF displayed. Press the PLAY button to take the system out of rewind or fast forward. If the system reaches the end of the tape while in fast forward or rewind, it automatically stops that function, reverses direction, and begins to play.

SKIP — The SKIP function allows you to find the beginning of a song or passage. To skip to the beginning of a song or passage currently playing, push the ⊖ button. You will see REW flashing in the display as the tape rewinds. To skip to the beginning of the next song, push the ⊕ button. You will see FF flashing in the display as the tape fast forwards. When the system finds the beginning of a song or passage, it goes back to PLAY.

REPEAT — The Repeat function continuously replays the current song or passage. Press the REPEAT button to activate it; you will see REPEAT displayed as a reminder. When the system reaches the end of the song or passage currently playing, it will automatically go into rewind. When it senses the beginning of the same song or passage, the system returns to PLAY mode. It will continue to repeat this same program until you deactivate REPEAT by pressing the button again.

The SKIP and REPEAT functions use silent periods on the tape to find the end of a song or passage. These features may not work to your satisfaction if there is almost no gap between selections, a high noise level between selections, or a silent period in the middle of a selection.

Caring for the Cassette Player
The cassette player picks up dirt and oxides from the tape. This contamination builds up over time and causes the sound quality to degrade. To prevent this, you should clean the player after every 30 hours of use. Your dealer has a cleaning kit available.

If you do not clean the cassette player regularly, it may eventually become impossible to remove the contamination with a normal cleaning kit.

Use 100-minute or shorter cassettes. Cassettes longer than that use thinner tape that may break or jam the drive.

Look at the cassette before you insert it. If the tape is loose, tighten it by turning a hub with a pencil or your finger.

If the label is peeling off, remove it from the cassette or it could cause the cassette to jam in the player. Never try to insert a warped or damaged cassette in the player.

When they are not in use, store cassettes in their cases to protect them from dust and moisture. Never place cassettes where they will be exposed to direct sunlight, high heat, or high humidity. If a cassette is exposed to extreme heat or cold, let it reach a moderate temperature before inserting it in the player.

Never try to insert foreign objects into the cassette player.

Remote Audio Controls

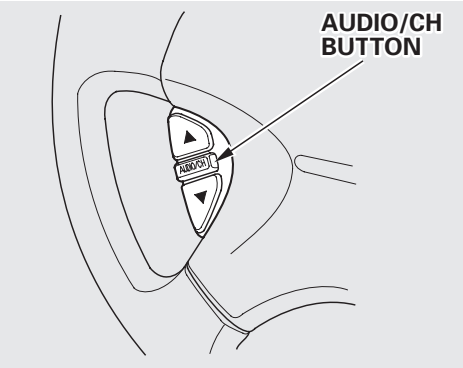

Two controls for the audio system are mounted in the steering wheel hub. These let you control basic functions without removing your hand from the wheel.

The top and bottom buttons adjust the volume up (▲) or down (▼). Press the proper button and hold it until the desired volume is reached, then release it.

The AUDIO/CH button has three functions, depending on whether you are listening to the radio, or playing a cassette or CD.

If you are listening to the radio, use the AUDIO/CH button to change stations. Each time you press this button, the system advances to the next preset station on the band you are listening to. You will see the number of the selected Preset button in the display. To change bands, press the AM or FM button on the audio system's front panel.

If you are playing a cassette, use the AUDIO/CH button to advance to the next selection. You will see "FF" blinking in the display when you press the AUDIO/CH button. The system fast forwards until it senses a silent period, then goes back to PLAY.

If you are playing a CD, the system skips to the beginning of the next track each time you push the AUDIO/CH button. You will see the disc and track number in the display.

Theft Protection
Your vehicle's audio system will disable itself if it is disconnected from electrical power for any reason. To make it work again, the user must enter a specific five-digit code in the Preset buttons. Because there are hundreds of number combinations possible from five digits, making the system work without knowing the exact code is nearly impossible.

You should have received a card that lists your audio system's code number and serial number. It is best to store this card in a safe place at home. In addition, you should write the audio system's serial number in this Owner's Manual. If you should happen to lose the card, you must obtain the code number from your Acura dealer. To do this, you will need the system's serial number.

If your vehicle's battery is disconnected or goes dead, the audio system will disable itself. If this happens, you will see "Code" in the frequency display the next time you turn on the system. Use the Preset buttons to enter the five-digit code. If it is entered correctly, the radio will start playing.

If you make a mistake entering the code, do not start over or try to correct your mistake. Complete the five-digit sequence, then enter the correct code. You have ten tries to enter the correct code. If you are unsuccessful in ten attempts, you must then leave the system on for one hour before trying again.

You will have to store your favorite stations in the Preset buttons after the system begins working. Your original settings were lost when power was disconnected.

The security system helps to protect your vehicle and valuables from theft. The horn sounds and a combination of headlights, parking lights, side marker lights and taillights flashes if someone attempts to break into your vehicle or remove the radio. This alarm continues for two minutes, then the system resets. To reset an alarming system before the two minutes have elapsed, unlock the driver's front door with the key or the remote transmitter.

The security system sets automatically fifteen seconds after you lock the doors, hood, and trunk. For the system to activate, you must lock the doors from the outside with the key, lock tab, door lock switch, or remote transmitter. The security system light next to the driver's door lock starts blinking immediately to show you the system is setting itself.

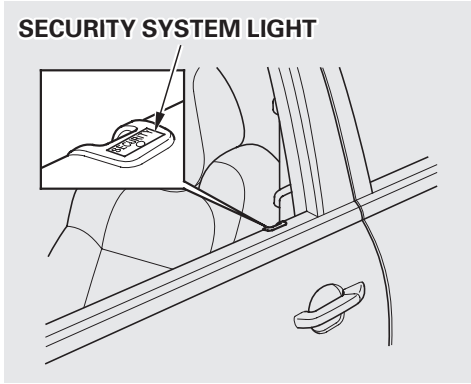

Once the security system is set, opening any door (without using the key or the remote transmitter), or the hood, will cause it to alarm. It also alarms if the radio is removed from the dashboard or the wiring is cut.

The security system will not set if the hood, tailgate, or any door is not fully closed. If the system will not set, check the Door Lamp Monitor on the instrument panel (see page 56), to see if the doors and tailgate are fully closed. Since it is not part of the monitor display, manually check the hood.

Do not attempt to alter this system or add other devices to it.

Before you begin driving your Acura, you should know what gasoline to use, and how to check the levels of important fluids. You also need to know how to properly store luggage or packages. The information in this section will help you. If you plan to add any accessories to your vehicle, please read the information in this section first.

Break-in Period 194
Gasoline 194
Service Station Procedures 195
Filling the Fuel Tank..... 195
Opening the Hood 196
Oil Check..... 198
Engine Coolant Check 199
Fuel Economy 200
Vehicle Condition 200
Driving Habits..... 200
Accessories and Modifications 201
Carrying Cargo 203
Load Limit 204

Break-in Period
Help assure your vehicle's future reliability and performance by paying extra attention to how you drive during the first 600 miles (1,000 km). During this period:

- Avoid full-throttle starts and rapid acceleration.
- Do not change the oil until the recommended time or mileage interval shown in the maintenance schedule.
- Avoid hard braking. New brakes need to be broken-in by moderate use for the first 200 miles (300 km).

You should follow these same recommendations with an overhauled or exchanged engine, or when the brakes are replaced.

We also recommend that you do not tow a trailer during the first 500 miles (800 km).

Gasoline
Your Acura is designed to operate on premium unleaded gasoline with a pump octane number of 91 or higher.

Use of a lower octane gasoline can cause occasional, metallic knocking noises in the engine and will result in decreased engine performance.

We recommend gasolines containing detergent additives that help prevent fuel system and engine deposits.

Using gasoline containing lead will damage your vehicle's emissions controls. This contributes to air pollution.

In Canada, some gasolines contain an octane-enhancing additive called MMT. If you use such gasolines, your emissions control system performance may deteriorate and the Malfunction Indicator Lamp on your instrument panel may turn on. If this happens, contact your authorized Acura dealer for service.

Filling the Fuel Tank

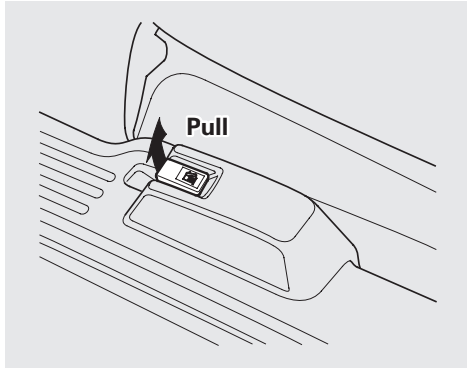

1. Because the fuel fill cap is on the driver's side of the vehicle, park with that side closest to the service station pumps.

2. Open the fuel fill door by pulling on the handle to the left of the driver's seat.

⚠ WARNING

Gasoline is highly flammable and explosive. You can be burned or seriously injured when handling fuel.

- Stop the engine and keep heat, sparks, and flame away.
- Handle fuel only outdoors.
- Wipe up spills immediately.

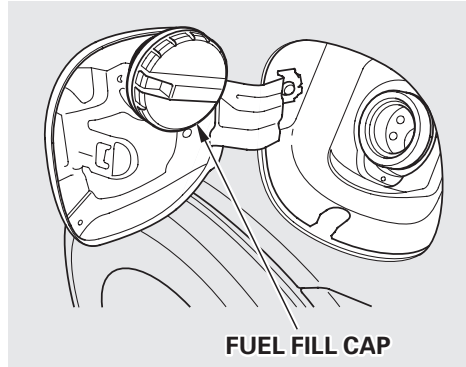

CONTINUED

3. Remove the fuel fill cap slowly. You may hear a hissing sound as pressure inside the tank escapes. Place the cap in the holder on the fuel fill door.

4. Stop filling the tank after the fuel nozzle automatically clicks off. Do not try to "top off" the tank, leave some room for the fuel to expand with temperature changes.

5. Screw the fuel fill cap back on, tighten it until it clicks several times. If you do not properly tighten the cap, the Malfunction Indicator Lamp may come on (see page 329).

6. Push the fuel fill door closed until it latches.

Opening the Hood

1. Shift to Park or Neutral and set the parking brake. Pull the hood release handle located under the lower left corner of the dashboard. The hood will pop up slightly.

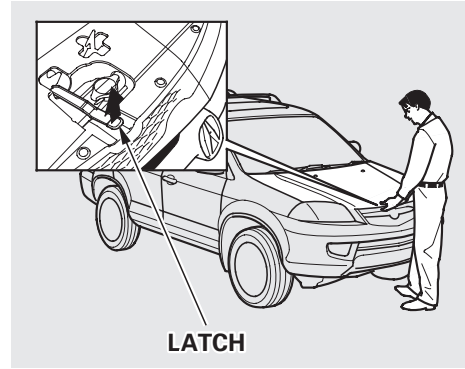

2. Standing in front of the vehicle, put your fingers under the front edge of the hood to the left of center. Slide your hand to the left until you feel the hood latch handle. Push this handle up until it releases the hood. Lift the hood.

If you can open the hood without lifting the hood latch handle, or the hood latch handle moves stiffly or does not spring back as before, the mechanism should be cleaned and lubricated (see page 277).

3. Lift the hood up most of the way. The hydraulic supports will lift it up the rest of the way and hold it up.

To close the hood, lower it to about a foot (30 cm) above the fender, then press down firmly with your hands. After closing the hood, make sure it is securely latched.

CONTINUED

Oil Check

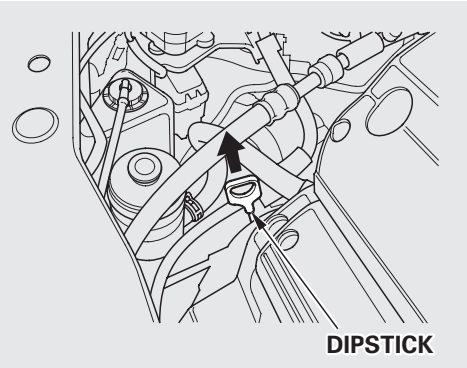

Check the engine oil level every time you fill the vehicle with fuel. Wait a few minutes after turning the engine off before you check the oil.

1. Remove the dipstick (orange handle).

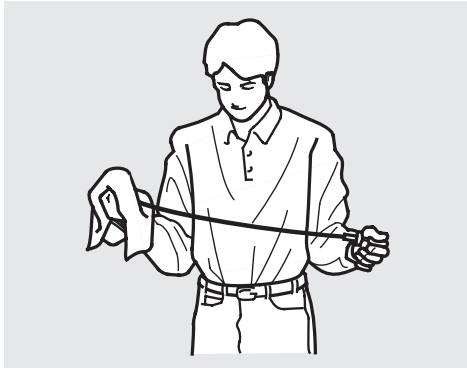

2. Wipe the dipstick with a clean cloth or paper towel.

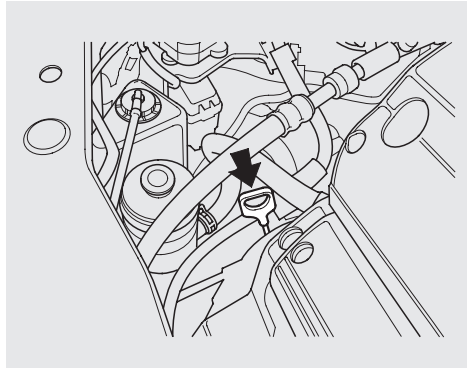

3. Insert it all the way back in its tube.

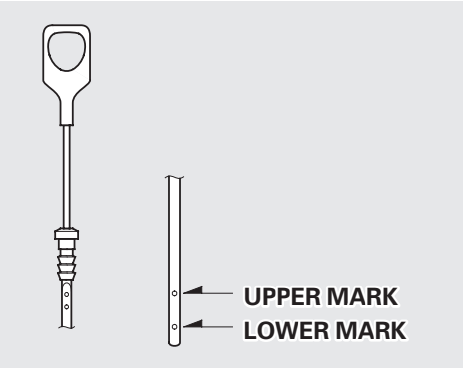

4. Remove the dipstick again and check the level. It should be between the upper and lower marks.

If it is near or below the lower mark, see **Adding Oil** on page 261 .

Engine Coolant Check

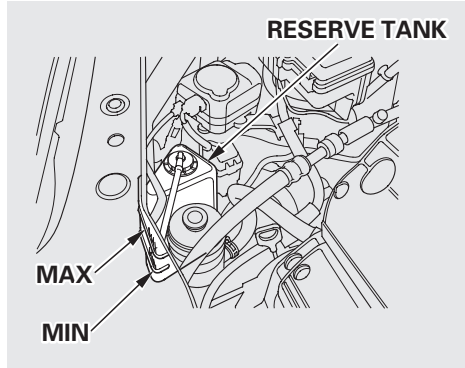

Look at the coolant level in the radiator reserve tank. Make sure it is between the MAX and MIN lines. If it is below the MIN line, see **Adding Engine Coolant** on page 265 for information on adding the proper coolant.

Refer to **Owner Maintenance Checks** on page 259 for information on checking other items in your Acura.

Fuel Economy

The condition of your vehicle and your driving habits are the two most important things that affect the fuel mileage you get.

Vehicle Condition
Always maintain your vehicle according to the maintenance schedule. This will keep it in top operating condition.

An important part of that maintenance is the **Owner Maintenance Checks** (see page 259). For example, an underinflated tire causes more "rolling resistance," which uses fuel. It also wears out faster, so check the tire pressure at least monthly.

In winter, the build-up of snow on your vehicle's underside adds weight and rolling resistance. Frequent cleaning helps your fuel mileage and reduces the chance of corrosion.

Driving Habits
You can improve fuel economy by driving moderately. Rapid acceleration, abrupt cornering, and hard braking use more fuel.

Always drive in the highest gear that allows the engine to run and accelerate smoothly.

Depending on traffic conditions, try to maintain a constant speed. Every time you slow down and speed up, your vehicle uses extra fuel. Use the cruise control, when appropriate, to increase fuel economy.

A cold engine uses more fuel than a warm engine. It is not necessary to "warm-up" a cold engine by letting it idle for a long time. You can drive away in about a minute, no matter how cold it is outside. The engine will warm up faster, and you get better fuel economy. To cut down on the number of "cold starts," try to combine several short trips into one.

The air conditioning puts an extra load on the engine which makes it use more fuel. Turn off the A/C to cut down on air conditioning use. Use the flow-through ventilation when the outside air temperature is moderate.

Modifying your vehicle, or installing some non-Acura accessories, can make your vehicle unsafe. Before you make any modifications or add any accessories, be sure to read the following information.

Accessories
Your dealer has Genuine Acura accessories that allow you to personalize your vehicle. These accessories have been designed and approved for your vehicle, and are covered by warranty.

Non-Acura accessories are usually designed for universal applications. Although aftermarket accessories may fit on your vehicle, they may not meet factory specifications, and could adversely affect your vehicle's handling and stability. (See "Modifications" on the page 202 for additional information.)

⚠ WARNING

Improper accessories or modifications can affect your vehicle's handling, stability and performance, and cause a crash in which you can be hurt or killed.

Follow all instructions in this owner's manual regarding accessories and modifications.

When properly installed, cellular phones, alarms, two-way radios, and low-powered audio systems should not interfere with your vehicle's computer-controlled systems, such as the SRS and anti-lock brake system.

However, if electronic accessories are improperly installed, or exceed your vehicle's electrical system capacity, they can interfere with the operation of your vehicle, or even cause the airbags to deploy.

Before installing any accessory:

- Make sure the accessory does not obscure any lights, or interfere with proper vehicle operation or performance.
- Be sure electronic accessories do not overload electrical circuits (see page 336).
- Have the installer contact your Acura dealer for assistance before installing any electronic accessory.

If possible, have your dealer inspect the final installation.

Modifications
Do not remove any original equipment or modify your vehicle in any way that would alter its design or operation. This could make your vehicle unsafe and illegal to drive.

For example, do not make any modifications that would change the ride height of your vehicle, or install wheels and tires with a different overall diameter.

Such modifications can adversely affect handling, and interfere with the operation of the vehicle's anti-lock brakes and other systems.

In addition, any modifications that decrease ground clearance increase the chance of undercarriage parts striking a curb, speed bump, or other raised object, which could cause your airbags to deploy.

Do not modify your steering wheel or any other part of your Supplemental Restraint System. Modifications could make the system ineffective.

Additional Safety Precaution
Do not attach or place objects on the airbag covers. Any object attached to or placed on the covers marked "SRS AIRBAG," in the center of the steering wheel and on top of the dashboard, could interfere with the proper operation of the airbags. Or, if the airbags inflate, the objects could be propelled inside the vehicle and hurt someone.

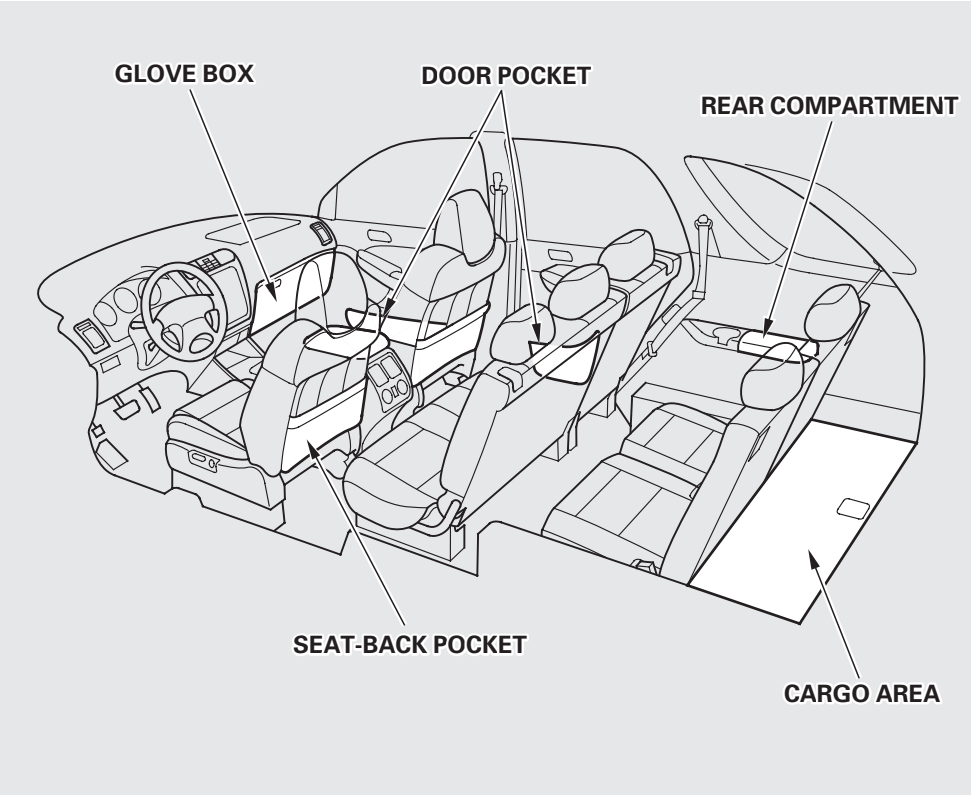

Your vehicle has several convenient storage areas so you can stow cargo safely.

The glove box, and the pockets in the front doors and seat-backs, are designed for small, lightweight items. The cargo area is intended for larger, heavier items. The second and third row seats can be folded flat to allow you to carry more cargo or longer items.

However, carrying too much cargo, or improperly storing it, can affect your vehicle's handling, stability and operation and make it unsafe. Before carrying any type of cargo, be sure to read the following pages.

Load Limit
The maximum load for your vehicle is 1,267 lbs (575 kg).

This figure includes the total weight of all occupants, cargo, accessories, and the tongue weight if you are towing a trailer.

To figure out how much cargo you can carry:

- Add up the weight of all occupants.
- If you are towing a trailer, add the tongue weight to the number above.
- Subtract the total from 1,267 lbs (575 kg).

The final number is the total weight of cargo you can carry.

When you load luggage, the total weight of the vehicle, all passengers, cargo, and trailer tongue load must not exceed the Gross Vehicle Weight Rating (GVWR). The load for the front and rear axles also must not exceed the Gross Axle Weight Rating (GAWR). The GVWR and GAWR are printed on the tire information label attached to the driver's doorjamb (see page 322).

⚠ WARNING

Overloading or improper loading can affect handling and stability and cause a crash in which you can be hurt or killed.

Follow all load limits and other loading guidelines in this manual.

Carrying Items in the Passenger Compartment

- Store or secure all items that could be thrown around and hurt someone during a crash.
- Be sure items placed on the floor behind the front seats cannot roll under the seats and interfere with the driver's ability to operate the pedals, or with the proper operation of the seats.
- Keep the glove box closed while driving. If the lid is open, a passenger could injure their knees during a crash or sudden stop.

Carrying Cargo in the Cargo Area or on a Roof Rack

- Distribute cargo evenly on the floor of the cargo area, placing the heaviest items on the bottom and as far forward as possible. Tie down items that could be thrown about the vehicle during a crash or sudden stop.

- If you carry large items that prevent you from closing the tailgate, exhaust gas can enter the passenger area. To avoid the possibility of **carbon monoxide poisoning**, follow the instructions on page 54 .

- If you can carry any items on a roof rack, be sure the total weight of the rack and the items on it does not exceed 165 lb.

If you use an accessory roof rack, the roof rack weight limit may be lower. Refer to the information that came with your roof rack.

Optional Separation Net

The separation net can be used to hold back soft, lightweight items stored in the cargo area. Heavy items should be properly secured on the floor of the cargo area. The net may not prevent heavy items from being thrown forward in a crash or a sudden stop.

Optional Cargo Cover

The cargo cover can be used to cover the cargo area behind the third row seats. When the third row seats are folded down, the cargo cover can be installed in a forward position and extended over the larger cargo area. Do not install the cargo cover in the forward position if the third row seats are not folded down.

Driving

This section gives you tips on starting the engine under various conditions, and how to operate the automatic transmission. It also includes important information on parking your vehicle, the braking system, the Traction Control System, and facts you need if you are planning to tow a trailer.

Driving Guidelines 208
Preparing to Drive 209
Starting the Engine 210
Starting in Cold Weather at High Altitude 210
Automatic Transmission 211
Shift Lever Position Indicator .. 211
Shift Lever Positions 212
Engine Speed Limiter 215
Shift Lock Release 215
Variable Torque Management 4WD System 217
VTM-4 Lock 218
Parking 219
The Braking System 220
Brake Wear Indicators 220
Brake System Design 221
Anti-lock Brakes 221
Important Safety Reminders 222
ABS Indicator 222
Driving in Bad Weather 224
Towing a Trailer 226
Towing Your Vehicle Behind a Motorhome 238
Off-Highway Guidelines 240

Driving Guidelines

Your MDX has higher ground clearance than a passenger vehicle designed for use only on pavement. Higher ground clearance has many advantages for off-highway driving. It allows you to travel over bumps, obstacles, and rough terrain. It also provides good visibility so you can anticipate problems earlier.

These advantages come at some cost. Because your vehicle is taller and rides higher off the ground, it has a high center of gravity. This means that your vehicle can tip or roll over if you make abrupt turns. Utility vehicles have a significantly higher rollover rate than other types of vehicles.

To prevent the risk of rollover or loss of control:

- Take corners at slower speeds than you would with a passenger vehicle.
- Avoid sharp turns and abrupt maneuvers whenever possible.
- Do not modify your vehicle in any way that would raise the center of gravity.
- Do not carry heavy cargo on the roof.

See page 240 for additional guidelines for driving off-highway.

You should do the following checks and adjustments every day before you drive your vehicle.

1. Make sure all windows, mirrors, and outside lights are clean and unobstructed. Remove frost, snow, or ice.

2. Check that the hood and tailgate are fully closed.

3. Visually check the tires. If a tire looks low, use a gauge to check its pressure.

4. Check that any items you may be carrying with you inside are stored properly or fastened down securely.

5. Check the adjustment of the seat (see page 98).

6. Check the adjustment of the inside and outside mirrors (see page 110).

7. Check the adjustment of the steering wheel (see page 76).

8. Make sure the doors and tailgate are securely closed and locked.

9. Fasten your seat belt. Check that your passengers have fastened their seat belts (see page 15).

10. Turn the ignition switch ON (II). Check the indicator lights in the instrument panel.

11. Start the engine (see page 210).

12. Check the gauges and indicator lights in the instrument panel (see page 57).

Starting the Engine

1. Apply the parking brake.

2. In cold weather, turn off all electrical accessories to reduce the drain on the battery.

3. Make sure the shift lever is in Park. Press on the brake pedal.

4. Without touching the accelerator pedal, turn the ignition key to the START (III) position. If the engine does not start right away, do not hold the key in START (III) for more than 15 seconds at a time. Pause for at least 10 seconds before trying again.

5. If the engine does not start within 15 seconds, or starts but stalls right away, repeat step 4 with the accelerator pedal pressed half-way down. If the engine starts, release pressure on the accelerator pedal so the engine does not race.

6. If the engine still does not start, press the accelerator pedal all the way down and hold it there while starting in order to clear flooding. As before, keep the ignition key in the START (III) position for no more than 15 seconds. Return to step 5 if the engine does not start. If it starts, lift your foot off the accelerator pedal so the engine does not race.

Starting in Cold Weather at High Altitude (Above 8,000 feet/ 2,400 meters)

An engine is harder to start in cold weather. The thinner air found at high altitude above 8,000 feet (2,400 meters) adds to the problem.
Use the following procedure:

1. Turn off all electrical accessories to reduce the drain on the battery.

2. Push the accelerator pedal half-way to the floor and hold it there while starting the engine. Do not hold the ignition key in START (III) for more than 15 seconds. When the engine starts, release the accelerator pedal gradually as the engine speeds up and smooths out.

3. If the engine fails to start in step 2, push the accelerator pedal to the floor and hold it there while you try to start the engine for no more than 15 seconds. If the engine does not start, return to step 2.

Your Acura's transmission has five forward speeds, and is electronically controlled for smoother shifting. It also has a "lock-up" torque converter for better fuel economy. You may feel what seems like another shift when the converter locks.

Shift Lever Position Indicator

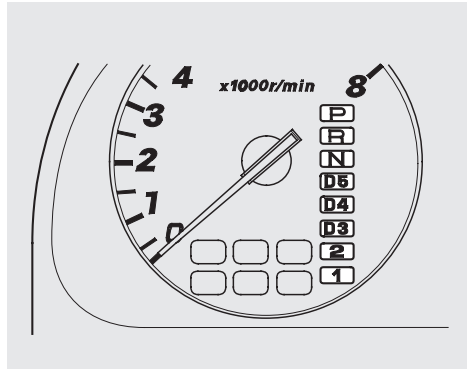

This indicator on the instrument panel shows which position the shift lever is in.

The "D5" indicator comes on for a few seconds when you turn the ignition switch ON (II). If it flashes while driving (in any shift position), it indicates a possible problem in the transmission. Avoid rapid acceleration and have the transmission checked by an authorized Acura dealer as soon as possible.

The malfunction indicator lamp may come on along with the "D5" indicator if there is a problem in the automatic transmission control system.

Shift Lever Positions

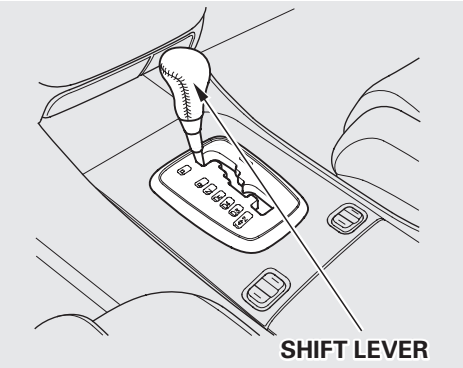

The shift lever has eight positions. It must be in Park or Neutral to start the engine. When you are stopped in D5, D4, D3, 2, 1, N or R, press firmly on the brake pedal, and keep your foot off the accelerator pedal.

To shift from:	Do this:
P to R	Press the brake pedal, then move the shift lever.
R to N N to D5 D5 to D4 D4 to D3 D3 to 2 2 to 1 1 to 2 2 to D3 D3 to D4 D4 to D5 D5 to N N to R R to P	Move the lever.

You cannot shift out of Park with the brake pedal depressed when the ignition switch is in LOCK (0) or ACCESSORY (I).

Park (P) — This position mechanically locks the transmission. Use Park whenever you are turning off or starting the engine. To shift out of Park, you must press on the brake pedal and have your foot off the accelerator pedal.

If you have done all of the above and still cannot move the lever out of Park, see Shift Lock Release on page 215.

To avoid transmission damage, come to a complete stop before shifting into Park. The shift lever must be in Park before you can remove the key from the ignition switch.

CONTINUED

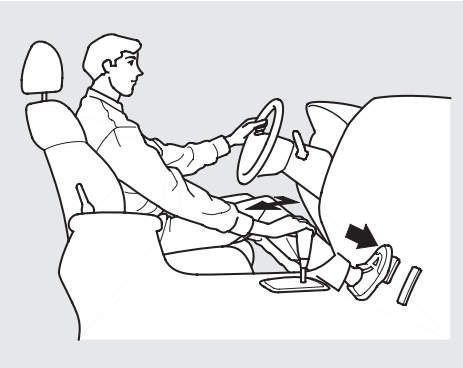

Reverse (R) — To shift to Reverse from Park, see the explanation under Park. To shift to Reverse from Neutral, come to a complete stop and then shift.

Your car has a reverse lockout so you cannot accidentally shift to Reverse from Neutral or any other driving position when the vehicle speed exceeds 7 — 9 mph (12 — 14 km/h).

If you cannot shift to Reverse when the car is stopped, press the brake pedal and slowly shift to Neutral, and then to Reverse.

If there is a problem in the reverse lockout system, or your vehicle's battery is disconnected or goes dead, you cannot shift to Reverse. (Refer to Shift Lock Release on page 215).

Neutral (N) — Use Neutral if you need to restart a stalled engine, or if it is necessary to stop briefly with the engine idling. Shift to Park position if you need to leave the vehicle for any reason. Press on the brake pedal when you are moving the shift lever from Neutral to another gear.

Drive (D5) — Use this position for your normal driving. The transmission automatically selects a suitable gear for your speed and acceleration. You may notice the transmission shifting up at higher speeds when the engine is cold. This helps the engine warm up faster.

Drive (D4, D3) — These positions are similar to D5, except when you select the D4 position, only the first four gears are selected. When you select D3, only the first three gears are selected. D4 can also keep the transmission from cycling between fourth and fifth gears in stop-and-go driving, and D3 can keep the transmission from cycling between third and fourth gears.

Use D4 when you are towing a trailer. Use D3 to provide engine braking when going down a steep hill. D3 gives you more power and increased engine braking.

For faster acceleration when in D3, D4 or D5, you can get the transmission to automatically downshift by pushing the accelerator pedal to the floor. The transmission will shift down one or two gears, depending on your speed.

Second (2) — This position locks the transmission in second gear. It does not downshift to first gear when you come to a stop. Second gives you more power when climbing, and increased engine braking when going down steep hills. Use second gear when starting out on a slippery surface or in deep snow. It will help reduce wheelspin.

First (1) — With the lever in this position, the transmission locks in First gear.

If you shift into First position when the vehicle speed is above 31 mph (50 km/h), the transmission shifts into Second gear first to avoid sudden engine braking.

Engine Speed Limiter
If you exceed the maximum speed for the gear you are in, the engine speed will enter into the tachometer's red zone. If this occurs, you may feel the engine cut in and out. This is caused by a limiter in the engine's computer controls. The engine will run normally when you reduce the RPM below the red zone.

Shift Lock Release
This allows you to move the shift lever out of Park if the normal method of pushing on the brake pedal does not work. This procedure also releases the Reverse Lockout.

1. Set the Parking brake.

2. Make sure the key is in the ignition switch LOCK (0) position.

   To release the Reverse Lockout, make sure the key is in the ACCESSORY (I) position.

CONTINUED

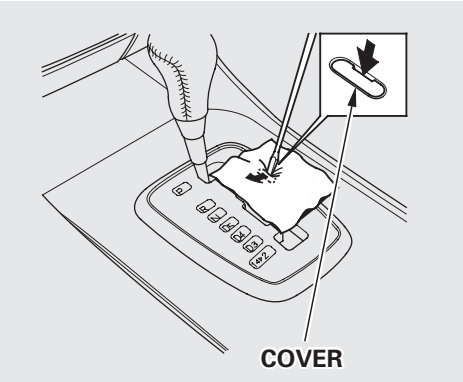

3. Put a cloth on the edge of the Shift Lock Release slot cover next to the shift lever.
   Use a small flat-tipped screwdriver or small metal plate (neither are included in the tool kit) to remove the cover. Carefully pry off the edge of the cover.

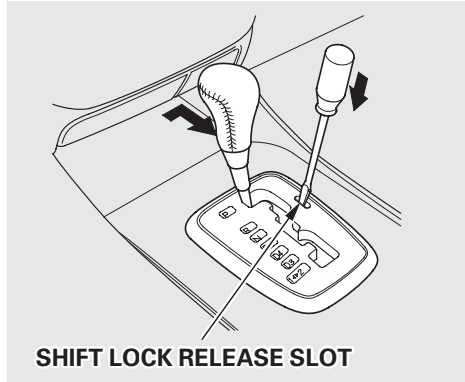

4. Insert a screwdriver in the Shift Lock Release slot.

5. Push down on the screwdriver while you press the release button and move the shift lever out of Park to Neutral.

   To release the Reverse Lockout, move the shift lever from Neutral to Reverse, then Park.

6. Remove the screwdriver from the shift lock release slot, then install a new cover.
   Depress the brake pedal and restart the engine.

If you need to use the Shift Lock Release, it means your vehicle is developing a problem. Have the vehicle checked by your Acura dealer.

The Variable Torque Management 4WD System (VTM-4) automatically transfers varying amounts of engine torque to the rear wheels under low traction conditions.

VTM-4 Lock

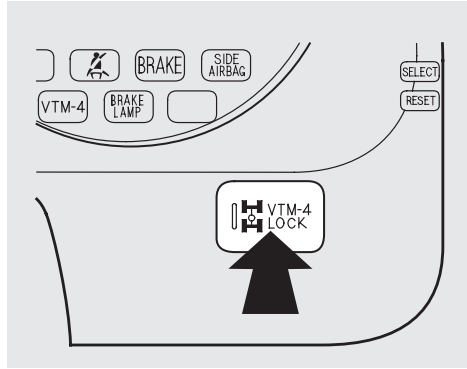

If more traction is needed when your MDX is stuck or is likely to become stuck, you can use the VTM-4 Lock button to increase torque to the rear wheels. As soon as this feature is no longer needed, press the VTM-4 Lock button again to disengage the VTM-4 Lock.

NOTICE

Do not use the VTM-4 Lock button on dry, paved roads. Driving on dry, paved roads with VTM-4 Lock ON may damage the rear differential when making a turn. Strange noises and vibration can also result.

To engage the VTM-4 Lock:
1. The vehicle speed must be stopped.
2. Move the shift lever to first (1), second (2) or reverse (R) gear.
3. Press the VTM-4 Lock button. The light in the button will come on.

To get unstuck, apply light pressure to the accelerator pedal. Do not spin the front tires for more than a few seconds. Because of the amount of torque applied to the rear tires, they should not spin. This is normal. If you are not able to get the vehicle to move, apply the brakes to stop the wheels, then reverse direction.

The VTM-4 Lock will temporarily disengage when the vehicle speed exceeds 18 mph (30 km/h). It will automatically engage again as the speed slows below 18 mph (30 km/h). The light in the VTM-4 Lock button will remain on the whole time.

NOTICE

Do not continuously spin the front tires of your MDX. Continuously spinning the front tires can cause transmission or rear differential damage.

To disengage the VTM-4 Lock, do one of the following:

- Press the VTM-4 Lock button.
- Move the shift lever to D3, D4 or D5.
- Turn the ignition to OFF (0).

When you restart your MDX, the VTM-4 Lock feature will be off.

Always use the parking brake when you park your vehicle. The indicator on the instrument panel shows that the parking brake is not fully released; it does not indicate that the parking brake is firmly set. Make sure the parking brake is set firmly or your vehicle may roll if it is parked on an incline.

Set the parking brake before you put the transmission in Park. This keeps the vehicle from moving and putting pressure on the parking mechanism in the transmission — making it easier to move the shift lever out of Park when you want to drive away.

If the vehicle is facing uphill, turn the front wheels away from the curb.

If the vehicle is facing downhill, turn the front wheels toward the curb.

Make sure the parking brake is fully released before driving away. Driving with the parking brake partially set can overheat or damage the rear brakes.

Parking Tips

- Make sure the moonroof and the windows are closed.
- Turn off the lights.
- Place any packages, valuables, etc., in the cargo area or take them with you.
- Lock the doors with the key or the remote transmitter.
- Never park over dry leaves, tall grass, or other flammable materials. The three way catalytic converter gets very hot, and could cause these materials to catch on fire.

The Braking System

Your Acura is equipped with disc brakes at all four wheels. A power assist helps reduce the effort needed on the brake pedal. The ABS helps you retain steering control when braking very hard.

Put your foot on the brake pedal only when you intend to brake. Resting your foot on the pedal keeps the brakes applied lightly, causing them to build up heat. Heat build-up can reduce how well your brakes work. It also keeps your brake lights on all the time, confusing drivers behind you.

Constant application of the brakes when going down a long hill builds up heat and reduces their effectiveness. Use the engine to assist the brakes by downshifting to a lower gear and taking your foot off the accelerator pedal.

Check your brakes after driving through deep water. Apply the brakes moderately to see if they feel normal. If not, apply them gently and frequently until they do. Since a longer distance is needed to stop with wet brakes, be extra cautious and alert in your driving.

Brake Wear Indicators

All four brakes have audible brake wear indicators.

When the brake pads need replacing, you will hear a distinctive metallic "screeching" sound when you apply the brakes. If you do not have the brake pads replaced, they will begin screeching all the time.

Your brakes may sometimes squeal or squeak when you apply them lightly. Do not confuse this with the brake wear indicators. They make a very audible "screeching."

Brake System Design
The hydraulic system that operates the brakes has two separate circuits. Each circuit works diagonally across the vehicle (the left-front brake is connected with the right-rear brake, etc.). If one circuit should develop a problem, you will still have braking at two wheels.

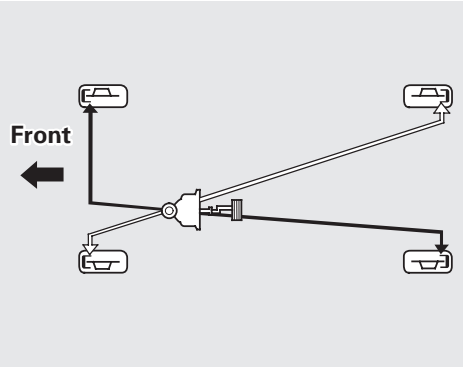

Anti-lock Brakes
Your vehicle has an Anti-lock Brake System (ABS) as standard equipment. ABS helps to prevent the wheels from locking up and skidding during hard braking, allowing you to retain steering control.

When the front tires skid, you lose steering control; the vehicle continues straight ahead even though you turn the steering wheel. The ABS helps to prevent lock-up and helps you retain steering control by pumping the brakes rapidly; much faster than a person can do it.

The ABS also balances the front-to rear braking distribution according to vehicle loading.

You should never pump the brake pedal, this defeats the purpose of the ABS. Let the ABS work for you by always keeping firm, steady pressure on the brake pedal as you steer away from the hazard. This is sometimes referred to as *"stomp and steer."*

You will feel a pulsation in the brake pedal when the ABS activates, and you may hear some noise. This is normal, it is the ABS rapidly pumping the brakes.

Activation varies with the amount of traction your tires have. On dry pavement, you will need to press on the brake pedal very hard before you activate the ABS. However, you may feel the ABS activate immediately if you are trying to stop on snow or ice.

Important Safety Reminders

ABS does not reduce the time or distance it takes to stop the vehicle, it only helps with steering control during braking. You should always maintain a safe following distance from other vehicles.

ABS will not prevent a skid that results from changing direction abruptly, such as trying to take a corner too fast or making a sudden lane change. Always drive at a safe, prudent speed for the road and weather conditions.

ABS cannot prevent a loss of stability. Always steer moderately when you are braking hard. Severe or sharp steering wheel movement can still cause your vehicle to veer into oncoming traffic or off the road.

A vehicle with ABS may require a longer distance to stop on loose or uneven surfaces, such as gravel or snow, than a vehicle without anti-lock. Slow down and allow a greater distance between vehicles under those conditions.

ABS Indicator

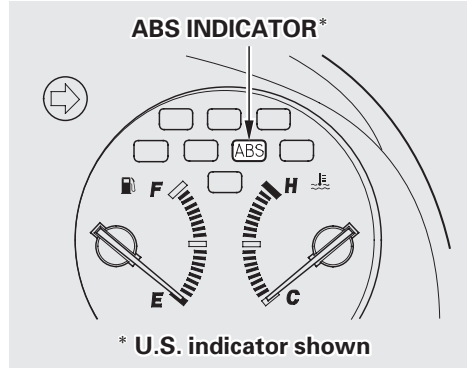

The ABS is self-checking. If anything goes wrong, the ABS indicator on the instrument panel comes on (see page 59). This means the anti-lock function of the braking system has shut down. The brakes still work like a conventional system without anti-lock, providing normal stopping ability. You should have the dealer inspect your vehicle as soon as possible.

If the ABS indicator and the brake system indicator come on together, and the parking brake is fully released, the front-to-rear braking distribution system may also shut down.

Test your brakes as instructed on page 331 . If the brakes feel normal, drive slowly and have your vehicle repaired by your dealer as soon as possible. Avoid sudden hard braking which could cause the rear wheels to lock up and possibly lead to a loss of control.

Driving in Bad Weather

Rain, fog, and snow conditions require a different driving technique because of reduced traction and visibility. Keep your vehicle well-maintained and exercise greater caution when you need to drive in bad weather. The cruise control should not be used in these conditions.

Driving Technique — Always drive slower than you would in dry weather. It takes your vehicle longer to react, even in conditions that may seem just barely damp. Apply smooth, even pressure to all the controls. Abrupt steering wheel movements or sudden, hard application of the brakes can cause loss of control in wet weather. Be extra cautious for the first few miles (kilometers) of driving while you adjust to the change in driving conditions. This is especially true in snow. A person can forget some snow-driving techniques during the summer months. Practice is needed to relearn those skills.

Exercise extra caution when driving in rain after a long dry spell. After months of dry weather, the first rains bring oil to the surface of the roadway, making it slippery.

Visibility — Being able to see clearly in all directions and being visible to other drivers are important in all weather conditions. This is more difficult in bad weather. To be seen more clearly during daylight hours, turn on your headlights.

Inspect your windshield wipers and washers frequently. Keep the windshield washer reservoir full of the proper fluid. Have the windshield wiper blades replaced if they start to streak the windshield or leave parts unwiped. Use the defrosters and air conditioning to keep the windows from fogging up on the inside (see page 148).

Traction — Check your tires frequently for wear and proper pressure. Both are important in preventing "hydroplaning" (loss of traction on a wet surface). In the winter, mount snow tires on all four wheels for the best handling.

Watch road conditions carefully, they can change from moment to moment. Wet leaves can be as slippery as ice. "Clear" roads can have patches of ice. Driving conditions can be very hazardous when the outside temperature is near freezing. The road surface can become covered with areas of water puddles mixed with areas of ice, so your traction can change without warning.

Be careful when downshifting. If traction is low, you can lock up the drive wheels for a moment and cause a skid.

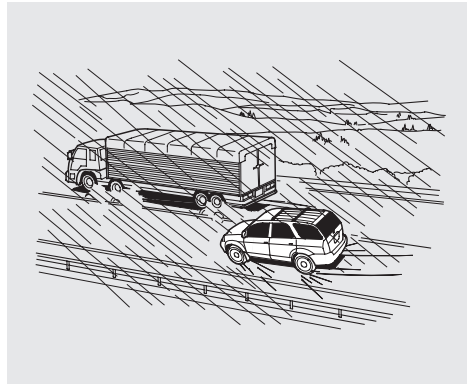

Be very cautious when passing, or being passed by other vehicles. The spray from large vehicles reduces your visibility, and the wind buffeting can cause you to lose control.

Towing a Trailer

Your MDX has been designed to tow a trailer, as well as for carrying passengers and their cargo.

To safely tow a trailer, you should observe the load limits, use the proper equipment, and follow the guidelines in this section.

Be sure to read the *Off-Highway Guidelines* section on page 240 if you plan to tow off paved surfaces.

⚠WARNING

Exceeding any load limit or improperly loading your vehicle and trailer can cause a crash in which you can be seriously hurt or killed.

Check the loading of your vehicle and trailer carefully before starting to drive.

Load Limits

- **Total Trailer Weight:** The maximum weight you can tow depends on several factors. See page 228 for limits for your towing situation. Towing a load that is too heavy can seriously affect your vehicle's handling and performance.

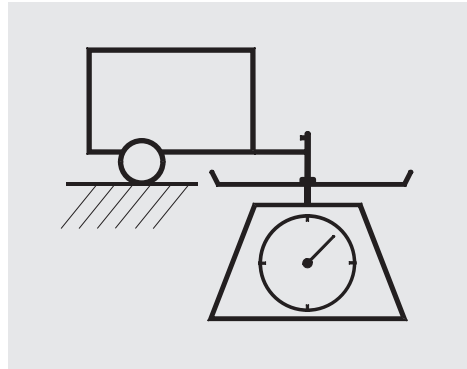

- **Tongue Load:** The weight that the tongue of a fully loaded trailer puts on the hitch should be 5 to 10 percent of total trailer weight for boat trailers, and 8 to 15 percent of total trailer weight for all other trailers. See page 228 for limits for your towing situation.

Too much tongue load reduces front-tire traction and steering control. Too little tongue load can make the trailer unstable and cause it to sway.

Gross Vehicle Weight Rating (GVWR):
The maximum allowable weight of the vehicle, all occupants, all cargo and the tongue load is 5690 lbs (2580 kg).

Gross Axle Weight Rating (GAWR):
The maximum allowable weights on the vehicle axles are 2865 lbs (1300 kg) on the front axle, and 2920 lbs (1325 kg) on the rear axle.

Gross Combined Weight Rating (GCWR):
The maximum allowable weight of the fully loaded vehicle and trailer is 9700 lbs (4410 kg) with the proper hitch and fluid coolers. (See page 232 for information about fluid coolers.)

The GCWR must be reduced 2 percent for every 1,000 feet (305 meters) of elevation.

Total Trailer Weight and Tongue Load Limits: BOAT TRAILERS

Number of Occupants*	Equipped with transmission cooler and power steering fluid cooler	
	Max. Trailer Weight	Max. Tongue Load
2	4500 lbs (2045 kg)	450 lbs (205 kg)
3	4500 lbs (2045 kg)	410 lbs (185 kg)
4	4500 lbs (2045 kg)	310 lbs (140 kg)
5	4000 lbs (1820 kg)	215 lbs (100 kg)
6	1700 lbs (770 kg)	90 lbs (40 kg)
7	Towing is Not Recommended	

Total Trailer Weight and Tongue Load Limits: OTHER TYPES OF TRAILERS

Number of Occupants*	Equipped with transmission cooler and power steering fluid cooler	
	Max. Trailer Weight	Max. Tongue Load
2	3500 lbs (1590 kg)	450 lbs (205 kg)
3	3500 lbs (1590 kg)	410 lbs (185 kg)
4	3000 lbs (1365 kg)	310 lbs (140 kg)
5	2000 lbs (910 kg)	215 lbs (100 kg)
6	1000 lbs (455 kg)	90 lbs (40 kg)
7	Towing is Not Recommended	

* The corresponding weight limits assume occupants fill seats from the front of the vehicle to the back, each occupant weighs 150 lbs (70 kg) and each has 15 lbs (7 kg) of luggage in the cargo area.

Estimating Loads

The best way to confirm that all loads are within limits is to check them at a public scale.

To help ensure a safe drive to a scale, or if you cannot get to a public scale to check the weights of your rig, we recommended that you estimate your total trailer weight and tongue load as described below.

Total Trailer Weight

To estimate your total trailer weight, add the weight of the trailer (as quoted by the trailer manufacturer) together with everything in or on the trailer. Then refer to the tables on page 228 to confirm that you do not exceed the limit for your conditions.

Tongue Load

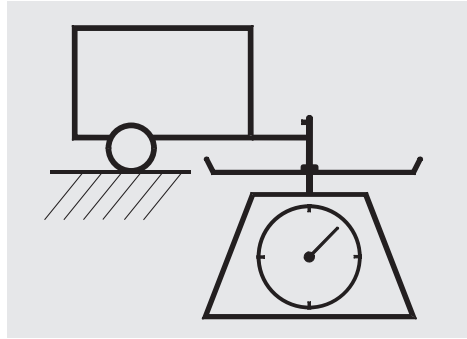

To estimate tongue load:

1. Park the vehicle on level ground.
2. Measure from the ground to the bottom of the trailer hitch. Write this number down.
3. Connect the fully loaded trailer to the hitch.
4. Measure again from the ground to the same spot on the bottom of the hitch.
5. Subtract the result from Step 4 from the result in Step 2 and refer to the chart (Fig. 1).

Fig. 1

If the difference is:

1½”= 150 lbs (68 kg)
2¼”= 250 lbs (114 kg)
3”= 350 lbs (159 kg)
3¾”= 450 lbs (204 kg)
4”= over 450 lbs

If the difference is more than 4”, you have too much tongue load at the rear. Move or remove cargo from the trailer and the vehicle, and measure again.

If the estimated total trailer weight and tongue load do not exceed the limits for your towing situation (see page 230), carefully drive your trailer to a public scale. Be sure your vehicle and trailer are fully loaded, with all occupants and cargo you plan to take on the road.

Checking Loads
The best way to confirm that your vehicle and trailer loads are within limits is to have them checked at a public scale. The vehicle and trailer should be fully loaded, and all occupants should stay in the vehicle.

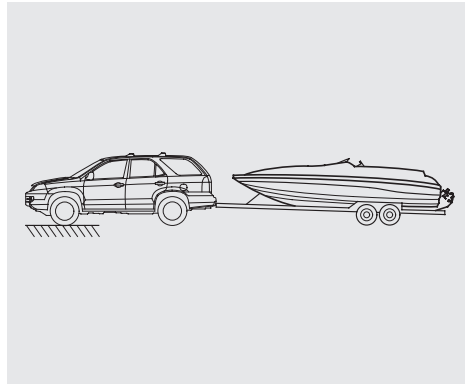

1. Check the front gross axle weight.
   Limit: 2865 lbs (1300 kg)

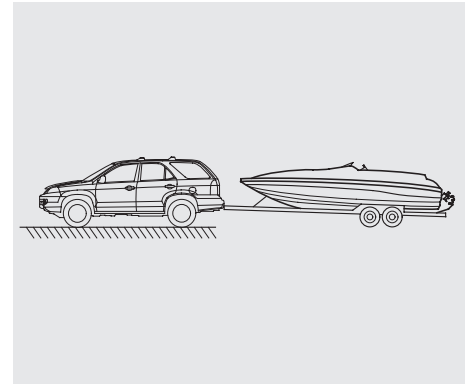

2. Check the gross vehicle weight.
   Limit: 5690 lbs (2580 kg)

3. If you cannot weigh the rear axle directly, calculate the rear gross axle weight. Subtract the weight in Step 1 from the weight in Step 2.
   Limit: 2920 lbs (1325 kg)

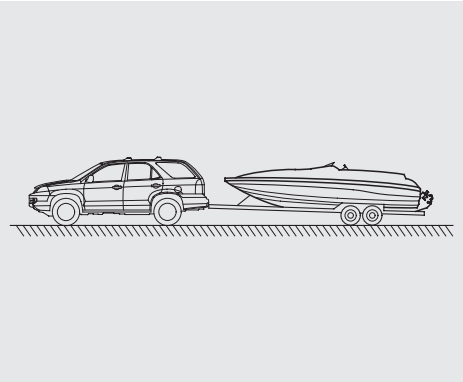

4. Check the gross combined weight.
   Limit: 9700 lbs (4410 kg)

   Gross combined weight should be decreased 2% for every 1000 feet of elevation.

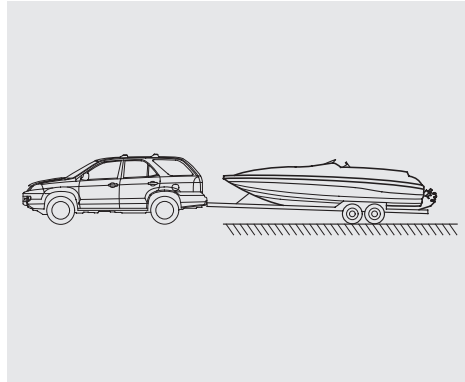

5. Check the weight of the hitched trailer. Write this number down.

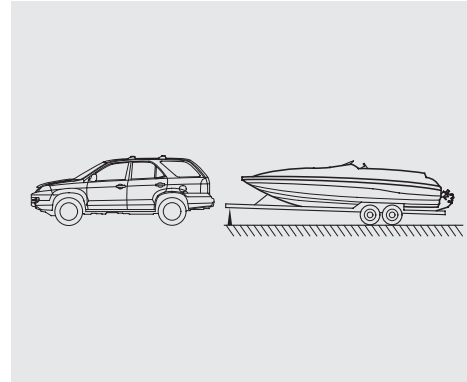

6. Check the weight of the unhitched trailer. Limit: See page 228 .

7. Calculate the tongue load.
   Subtract the weight in Step 5 from the weight in step 6.
   Limit: See page 228 .
   Range: 5-10% for boat trailers
   8-15% for other trailers

Towing a Trailer

Towing Equipment and Accessories

Towing generally requires a variety of supplemental equipment. To ensure the best quality, we recommend that you purchase Acura equipment whenever possible. Your dealer offers a trailer package that includes a hitch, a ball mount, a wiring harness, a transmission fluid cooler and a heavy-duty power steering fluid cooler.

Discuss any additional needs with your trailer sales or rental agency, and make sure all equipment is properly installed and maintained. Since local requirements may vary, check with appropriate state authorities to be sure that your equipment will meet all regulations in the areas where you plan to tow.

Hitch

We strongly recommend that you have your Acura dealer install a genuine Acura hitch and the required fluid coolers. Using non-Acura equipment may result in serious damage to your vehicle.

Weight Distributing Hitch

A weight distributing hitch is not recommended for use with your MDX as an improperly adjusted weight distributing hitch may reduce handling stability and braking performance.

Safety Chains

Always use safety chains when you tow a trailer. Make sure the chains are secured to the trailer and hitch, and that they cross under the tongue so they can catch the trailer if it becomes unhitched. Leave enough slack to allow the trailer to turn corners easily, but do not let the chains drag on the ground.

Sway Control

This device is recommended if your trailer tends to sway. Your trailer maker can tell you what kind of sway control you need and how to install it.

Transmission Fluid Cooler and Power Steering Fluid Cooler

To help prevent overheating, a heavy-duty transmission fluid cooler and a heavy-duty power steering fluid cooler are required for trailer towing. These coolers are available only from your Acura dealer.

Trailer Brakes
Acura requires that any trailer with a total trailer weight of 1000 lbs (455 kg) or more have its own brakes.

There are two common types of trailer brakes: surge and electric. Surge brakes are common for boat trailers, since the brakes will get wet.

Electric brakes must be electronically actuated. Do not attempt to tap into your vehicle's hydraulic system. Any attempt to attach trailer brakes to your vehicle's hydraulic system will lower braking effectiveness and create a potential hazard.

See your Acura dealer for more information about powering the electric brake activation system.

Trailer Lights
All states and Canadian provinces require some type of trailer lights. Check requirements for the areas where you plan to tow.

To get to your vehicle's trailer lighting connector, open the tailgate, remove the cargo cover, then remove the rear panel trim. The connector is on the left side. We recommend that you have your Acura dealer install an Acura wiring harness and converter. This harness has been designed and tested for your vehicle.

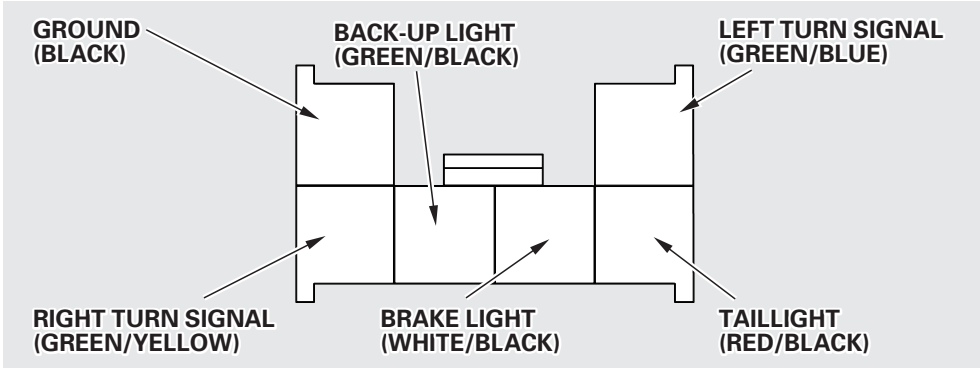

If you use a non-Acura trailer lighting harness and converter, you can get the mating connector and pins that mate with the connector in your vehicle from your Acura dealer.

Since lighting and wiring vary in trailer type and brand, you should also have a qualified mechanic install a suitable connector between the vehicle and the trailer.

Trailer Mirrors
Many states and provinces require special exterior mirrors when towing a trailer. Even if they don't, you should install special mirrors if you cannot clearly see behind you, or if the trailer creates a blind spot.

Spare Tires
When towing a trailer, we recommend that you carry a full-size spare wheel and tire for your vehicle. Using the compact spare that came with the MDX may adversely affect vehicle handling.
See page 343 for proper tire size, page 320 for how to store a full-sized wheel and tire, and page 315 for information on changing a flat tire.
Remember to unhitch the trailer before changing a flat.
We also recommend that you carry a full-size spare wheel and tire for your trailer. Ask your trailer sales or rental agency where and how to store the spare.

Pre-Tow Checklist
When preparing to tow, and before driving away, be sure to check the following:

- The vehicle has been properly serviced, and the brakes, suspension and cooling system are in good operating condition. If you tow frequently, follow the Severe Conditions maintenance schedule.
- The trailer has been properly serviced and is in good condition.
- All weights and loads are within limits (see pages 226 and 228).
- The hitch, safety chains, and any other attachments are secure.
- All items on and in the trailer are properly secured and cannot shift while you drive.
- The lights and brakes on your vehicle and the trailer are working properly.
- Your vehicle tires and spare are in good condition and properly inflated (see page 287).
- The trailer tires and spare are in good condition and inflated as recommended by the trailer maker.

Driving Safely With a Trailer
The added weight, length, and height of a trailer will affect your vehicle's handling and performance, so driving with a trailer requires some special driving skills and techniques.

For your safety and the safety of others, take time to practice driving maneuvers before heading for the open road, and follow the guidelines discussed below.

Break-In Period
Avoid towing a trailer during your vehicle's first 500 miles (see page 194).

Towing Speed
Drive slower than normal in all driving situations. Obey all local speed limits for vehicles with trailers. To keep the transmission from frequently upshifting and downshifting, drive in D4. When driving with a fix-sided (e.g, camper, utility) trailer, do not exceed 55 mph (88 km/h). At higher speeds, the trailer may sway or affect vehicle handling.

Making Turns and Braking
Make turns more slowly and wider than normal. The trailer tracks a smaller arc than your vehicle, and it can hit or run over something the vehicle misses. Allow more time and distance for braking. When you need to slow down, slowly lift your foot off the throttle and gradually apply the brakes. Do not brake or turn suddenly as this could cause the trailer to jackknife or turn over.

Driving on Hills
When climbing hills, closely watch your temperature gauge. If it nears the red (Hot) mark, turn the air conditioning off, reduce speed and, if necessary, pull to the side of the road to let the engine cool.

If the transmission shifts frequently while going up a hill, shift down one gear.

If you must stop when facing uphill, use the foot brake or parking brake. Do not try to hold the vehicle in place by pressing on the accelerator, as this can cause the automatic transmission to overheat.

When driving down hills, reduce your speed and shift down to D3. Do not "ride" the brakes, and remember it will take longer to slow down and stop when towing a trailer.

Handling Crosswinds and Turbulence
Crosswinds and air turbulence caused by passing trucks can disrupt your steering and cause your trailer to sway. When being passed by a truck or other large vehicle, keep a constant speed and steer straight ahead. Do not try to make quick steering or braking corrections.

Backing Up
Always drive slowly and have someone guide you when backing up. Grip the *bottom* of the steering wheel; then turn the wheel to the left to get the trailer to move to the left, and turn the wheel right to move the trailer to the right.

Parking
Follow all normal precautions when parking, including putting the transmission in PARK and firmly setting the parking brake when you have finished parking.

Do not park on an incline unless it is unavoidable. If you must park on an incline, turn the vehicle wheels toward the curb on a downhill and away from the curb on an uphill. After parking, place wheel chocks at each trailer tire, on the downhill side.

Retrieving a Boat
If the vehicle wheels slip when retrieving a boat from the water, shift to first gear and turn on VTM-4 Lock (see page 218).

Disengage VTM-4 Lock as soon as the boat is out of the water to prevent damage to the VTM-4 system.

Towing Your Vehicle Behind a Motorhome

Your MDX can be towed behind a motorhome at legal highway speeds up to 65 mph (100 km/h). Do not exceed 65 mph (100 km/h). Otherwise, severe transmission damage will occur. To avoid damage to the 4WD system, it must be towed with all four wheels on the ground (flat towing).

When purchasing a tow bar, make sure you select a reputable manufacturer and installer. Follow the manufacturer's attachment instructions carefully.

After attaching the tow bar to your motorhome, do the following to prepare your MDX for "flat towing":

When preparing to tow your MDX, check the transmission fluid level (see page 271). Maintaining the correct level is very important. *Do not overfill.* Do the following every day immediately before you begin towing. Follow the procedure exactly. Otherwise, severe automatic transmission damage will occur.

- Start the engine.
- Press on the brake pedal. Shift the lever through all the positions (P, R, N, D, 2, 1)
- Shift to D, then to N. Let the engine run for three minutes, then turn off the engine.
- Release the parking brake.
- Leave the ignition switch in ACCESSORY (I) so the steering wheel does not lock. Make sure the radio and any items plugged into the accessory power sockets are turned off so you do not run down the battery.

Extended Towing

If you tow more than 8 hours in one day, you should repeat the above procedure at least every 8 hours. (when you stop for fuel, etc.)

NOTICE

The steering system can be damaged if the steering wheel is locked. Leave the ignition switch in Accessory (I), and make sure the steering wheel turns freely before you begin towing.

NOTICE

Improper towing preparation will damage the transmission. Follow the above procedure exactly. If you cannot shift the transmission or start the engine, your vehicle must be transported on a flat-bed or trailer.

Replace the transmission fluid every two years or 30,000 miles (48,000 km), whichever comes first.

Off-Highway Guidelines

General Information
Your MDX has been designed primarily for use on pavement. But its higher ground clearance and new four-wheel drive VTM-4 system allow you to occasionally travel on unpaved roads, to campgrounds, picnic sites, and similar locations. It is not designed for trailblazing, mountain climbing, or other challenging off-road activities.

If you decide to drive on unpaved roads, you will find that it requires somewhat different driving skills. Your MDX will also handle somewhat differently than it does on pavement. So be sure to read this owner's manual, pay special attention to the precautions and tips in this section, and get acquainted with your vehicle before you leave the pavement.

Important Safety Precautions
Remember that your MDX has higher ground clearance and a higher center of gravity than passenger vehicles designed for use only on pavement. This means your vehicle can more easily tip or roll over if you make abrupt turns or drive on slopes.

Utility vehicles have a significantly higher rollover rate than other types of vehicles. To avoid loss of control or rollover, be sure to follow all recommendations and precautions on page 208 and in this section.

Seat belts are just as important off-road as on paved roads. Wherever you drive, make sure you and your passengers always wear seat belts. If children or infants are along for the ride, see that they are properly secured. In a rollover crash, an unbelted person is more likely to die than a person wearing a seat belt.

⚠ WARNING

Improperly operating this vehicle on or off-pavement can cause an accident or rollover in which you and your passengers could be seriously injured or killed.

- Follow all instructions and guidelines in the owner's manual.
- Keep your speed low and don't drive faster than conditions permit.

On many unpaved roads, you won't find lane markers, traffic signals, or signs to warn you of possible trouble ahead. It's up to you to continually assess the situation and drive within limits.

The route presents limits (some roads are too steep and bumpy for example). You have limits (in driving skills and comfort). And your vehicle also has limits (traction, stability, and power, for instance).

Driving off-highway can be hazardous if you fail to recognize limits and take proper precautions. For example, you can have an accident or rollover during maneuvers such as turning, driving on hills, or over large obstacles.

Be sure to store cargo properly, and do not exceed your MDX's cargo load limits (see pages 204 and 226).

Off-Highway Guidelines

Driving Tips
The following pages contain practical tips on basic off-highway operation.

Check Out Your Vehicle
Driving off-highway can be hard on a vehicle. Before you leave the pavement, be sure all scheduled maintenance and service has been done, and that you have inspected your vehicle. Pay special attention to the condition of the tires, and use a gauge to check the tire pressures.

After you return to the pavement, carefully inspect your vehicle to make sure there is no damage that could make driving it unsafe. Check the tires for damage and for proper pressure.

Controlling Speed
Off-highway, the general rule is to keep your speed low. Of course, you'll need enough speed to keep moving forward. But at higher speeds, you have less time to assess conditions and make good decisions. There's also a greater chance of sliding if you brake or turn too quickly on wet soil, gravel, or ice. In any situation, never go faster than conditions allow.

Accelerating and Braking
For better traction on all surfaces, accelerate slowly and gradually build up speed. If you try to start too fast on wet soil, mud, snow, or ice, you might not have enough traction to get underway. You may even dig yourself into a hole. Starting with the shift lever in second gear (2) will help get you to a smooth start on snow and ice.

Generally, the best off-pavement braking technique is to gently depress the brake pedal, then increase pressure as more braking is needed. Avoid hard braking. Keep in mind that you will usually need more time and distance to brake to a stop on unpaved surfaces.

If you need to brake hard because of an emergency, apply steady, even pressure to the brake pedal. Do not pump the brakes; let the anti-lock braking system pump them for you. If you pump the brakes, the anti-lock cannot work as efficiently, and your stopping distance may be increased.

Test your brakes from time to time to make sure they are operating properly. This will also give you a feel for how much traction you have on a given surface.

Turning
Off-highway, the basic turning technique is to drive at low speed and gradually adjust the amount of steering to suit the surface.

You should have no problem making sharp turns at low speed on level ground. But never make an abrupt turn at higher speeds, on or off pavement. With a higher center of gravity, your vehicle can more easily tip or roll over.

Driving on Slopes
Before driving up or down a hill, stop and assess the situation. If you can't clearly see all road conditions (good traction, no bumps, holes or other obstacles, a safe way out, etc.) walk the slope before you drive on it. If you have any doubt about whether you can safely drive on the slope, *don't do it*. Find another route.

If you are driving up a hill and find that you cannot continue (because of the steepness, a large obstacle, etc.), *do not try to turn around*. Your vehicle could roll over. Slowly back down the hill, following the same route you took up the hill.

Avoiding Obstacles
Bumps, holes, rocks, and other obstacles can be hazardous. Debris in the road can damage your suspension or other components. Even small rocks can cut your tires.

More important, because your vehicle has a high center of gravity, driving over a large obstacle, or allowing a wheel to drop into a deep hole, can cause your vehicle to tip or roll over.

Drive slow enough to observe obstacles ahead and maneuver around them. If you can't avoid a serious obstacle, turn around and look for a better route.

Crossing a Stream

Before driving through water, stop and make sure that:

- The water is never deep enough to cover your wheel hubs, axles or exhaust pipe. You could stall, and not be able to restart the engine. The water could also damage important vehicle components.
- The water is not flowing too fast. Deep rushing water can sweep you downstream. Even very shallow rushing water can wash the ground from under your tires and cause you to lose traction and possibly roll over.
- The banks are sloped so you can drive out.
- The banks and surface under the water provide good traction. The water may hide hazards such as rocks, holes, or mud.

If you decide it's safe to drive through water, choose a suitable speed and engage VTM-4 Lock (see page 217), then proceed without shifting or changing speed. Do not stop the vehicle or shut off the engine while trying to cross a stream. After driving through water, test your brakes. If the brakes got wet, drive slowly while gently pumping the brakes until they operate normally.
If the water is deeper than the wheel hubs, some additional service to the engine, transmission and differential may be required. This service is not covered by your warranties.

If You Get Stuck

If you get stuck, engage the VTM-4 Lock mode (see page 218). Carefully try to go in the direction (forward or reverse) that you think will give you the best chance of getting unstuck.

Do not spin the tires at high speeds. It will not help you get out and may cause damage to the transmission or the VTM-4 system.

If you are unable to free yourself, you will need to be pulled out by another vehicle. Your MDX is equipped with front and rear tow hooks designed for this purpose.

Use a nylon strap to attach the MDX to the recovery vehicle and carefully take out the slack in the strap. Once the strap is tight, the recovery vehicle should apply force. Remember that the recovery vehicle needs good traction to avoid becoming stuck, too.

You should never use a jack to try getting unstuck. A jack only works on firm, level ground. Also, your vehicle could easily slip off the jack and hurt you or someone else.

Towing a Trailer

You may be able to safely tow a light weight trailer (such as a motorcycle trailer or small tent trailer) off-road if you follow these guidelines:

- Do not exceed a trailer weight of 1,000 pounds (including cargo) or a tongue weight of 100 pounds. (Tongue weight should be about 10% of the trailer weight.)

CONTINUED

Off-Highway Driving Guidelines

- Try to stay on smooth, level dirt roads, and avoid driving in hilly terrain.
- Allow extra room for starting, stopping, and turning.
- Slow down if you encounter bumps or other obstacles.

This section explains why it is important to keep your vehicle well maintained and to follow basic maintenance safety precautions.

This section also includes Maintenance Schedules for normal driving and severe driving conditions, a Maintenance Record, and instructions for simple maintenance tasks you may want to take care of yourself.

If you have the skills and tools to perform more complex maintenance tasks on your Acura, you may want to purchase the Service Manual. See page 358 for information on how to obtain a copy, or see your Acura dealer.

Maintenance Safety 248
Important Safety Precautions .. 249
Maintenance Schedule 250
Required Maintenance Record 258
Owner Maintenance Checks 259
Fluid Locations 260
Engine Oil 261
Adding Oil 261
Recommended Oil 261
Synthetic Oil 262
Additives 263
Changing the Oil and Filter 263
Cooling System 265
Adding Engine Coolant 265
Replacing Engine Coolant 267
Windshield Washers 270
Automatic Transmission Fluid 271
Differential Fluid 272
Brake Fluid 273
Brake System 273
Power Steering 275
Air Cleaner Element 275
Hood Latch 277
Spark Plugs 277
Replacement 277
Specifications 279
Battery 280
Wiper Blades 282
Air Conditioning System 284
Dust and Pollen Filter 285
Drive Belts 285
Timing Belt 286
Tires 286
Inflation 286
Inspection 288
Maintenance 289
Tire Rotation 289
Replacing Tires and Wheels 290
Wheels and Tires 291
Winter Driving 291
Snow Tires 292
Tire Chains 292
Lights 293
Headlight Aiming 295
Replacing Bulbs 295
Storing Your Vehicle 303

Maintenance Safety

Regularly maintaining your vehicle is the best way to protect your investment. Proper maintenance is essential to your safety and the safety of your passengers. It will also reward you with more economical, trouble-free driving and help reduce air pollution.

⚠ WARNING

Improperly maintaining this vehicle or failing to correct a problem before driving can cause a crash in which you can be seriously hurt or killed.

Always follow the inspection and maintenance recommendations and schedules in this owner's manual.

This section includes instructions for simple maintenance tasks, such as checking and adding oil. Any service items not detailed in this section should be performed by an Acura technician or other qualified mechanic.

Some of the most important safety precautions are given here. However, we cannot warn you of every conceivable hazard that can arise in performing maintenance. Only you can decide whether or not you should perform a given task.

⚠ WARNING

Failure to properly follow maintenance instructions and precautions can cause you to be seriously hurt or killed.

Always follow the procedures and precautions in this owner's manual.

Important Safety Precautions
Before you begin any maintenance, make sure your vehicle is parked on level ground and that the parking brake is set. Also, be sure the engine is off. This will help to eliminate several potential hazards:

- **Carbon monoxide poisoning from engine exhaust.** Be sure there is adequate ventilation whenever you operate the engine.
- **Burns from hot parts.** Let the engine and exhaust system cool before touching any parts.
- **Injury from moving parts.** Do not run the engine unless instructed to do so.

Read the instructions before you begin, and make sure you have the tools and skills required.

To reduce the possibility of fire or explosion, be careful when working around gasoline or batteries. Use a commercially available degreaser or parts cleaner, not gasoline, to clean parts. Keep cigarettes, sparks, and flames away from the battery and all fuel-related parts.

You should wear eye protection and protective clothing when working near the battery or when using compressed air.

Maintenance Schedule

The Maintenance Schedule specifies how often you should have your vehicle serviced and what things need attention. It is essential that you have your vehicle serviced as scheduled to retain its high level of safety, dependability, and emissions control performance.

The services and time or distance intervals shown in the maintenance schedule assume you will use your vehicle as normal transportation for passengers and their possessions. You should also follow these recommendations:

- Avoid exceeding your vehicle's load limit. This puts excess stress on the engine, brakes, and many other parts of your vehicle. The load limit is shown on the tire information label on the driver's doorjamb.
- Operate your vehicle on reasonable roads within the legal speed limit.
- Drive your vehicle regularly over a distance of several miles (kilometers).
- Always use unleaded gasoline with the proper octane rating (see page 194).

Which Schedule to Follow:
Service your vehicle according to the time and mileage periods on one of the Maintenance Schedules on the following pages. Select the schedule for "Severe Conditions" if most of your driving is done under one or more of the conditions listed on that page. Otherwise, follow the schedule for "Normal Conditions."

Your authorized Acura dealer knows your vehicle best and can provide competent, efficient service. However, service at a dealer is not mandatory to keep your warranties in effect. Maintenance may be done by any qualified service facility or person who is skilled in this type of automotive service. Keep all the receipts as proof of completion, and have the person who does the work fill out the Maintenance Record. Check your warranty booklet for more information.

We recommend the use of Genuine Acura parts and fluids whenever you have maintenance done. These are manufactured to the same high-quality standards as the original components, so you can be confident of their performance and durability.

U.S. Vehicles:
Maintenance, replacement or repair of emissions control devices and systems may be done by any automotive repair establishment or individual using parts that are "certified" to EPA standards.

According to state and federal regulations, failure to perform maintenance on the items marked with # will not void your emissions warranties. However, Acura recommends that all maintenance services be performed at the recommended time or mileage period to ensure long-term reliability.

Service at the indicated distance or time — whichever comes first.	miles x 1,000	7.5	15	30	45	60	75	90	105	120
	km x 1,000	12	24	48	72	96	120	144	168	192
	months	6	12	24	36	48	60	72	84	96
Replace engine oil		Replace every 7,500 miles (12,000 km) or 12 months								
Replace engine oil filter			●	●	●	●	●	●	●	●
Check engine oil and coolant		Check oil and coolant at each fuel stop								
Replace air cleaner element				●		●		●		●
Inspect valve clearance		Adjust only if noisy							●	
Replace spark plugs									●	
Replace timing belt#, and inspect water pump									●	
Inspect and adjust drive belts				●		●		●		●
Inspect idle speed#									●	
Replace engine coolant		At 120,000 miles (192,000 km) or 120 months, then every 60,000 miles (96,000 km) or 60 months								
Replace transmission fluid					●		●		●	
Replace VTM-4 rear differential fluid		●□1		●		●		●		●
Inspect front and rear brakes			●	●	●	●	●	●	●	●
Replace brake fluid		Every 3 years								
Check parking brake adjustment			●	●	●	●	●	●	●	●
Replace dust and pollen filter				●		●		●		●
Rotate tires (Check tire inflation and condition at least once per month)		Rotate tires every 7,500 miles (12,000 km)								
Visually inspect the following items:										
Tie rod ends, steering gear box, and boots Suspension components Driveshaft boots Brake hoses and lines (including ABS) All fluid levels and condition of fluids Cooling system hoses and connections Exhaust system# Fuel lines and connections#			●	●	●	●	●	●	●	●

#: See information on maintenance and emissions warranty, last column, page 251.

□1: Necessary for proper break-in of the VTM-4 rear differential.

U.S. Owners

Follow the Normal Conditions Maintenance Schedule if the severe driving conditions specified in the Severe Conditions Maintenance Schedule do not apply.

NOTE: If you only *OCCASIONALLY* drive under a "severe" condition, you should follow the Normal Conditions Maintenance Schedule.

Canadian Owners

Follow the Maintenance Schedule for Severe Conditions.

Service at the indicated distance or time, whichever comes first. Do the items in **A, B, C** as required for each distance/time interval. Follow this schedule if the severe driving conditions described in the Severe Conditions Schedule on the next page do not apply.
Canadian owners: Follow the schedule for Severe Conditions.

7,500 mi/12,000 km	Do items in A, E.□1
15,000 mi/24,000 km/1 yr	Do items in A, B.
22,500 mi/36,000 km	Do items in A.
30,000 mi/48,000 km/2 yrs	Do items in A, B, C, E.
37,500 mi/60,000 km	Do items in A.
45,000 mi/72,000 km/3 yrs	☐Replace transmission fluid. Do items in A, B, D.
52,500 mi/84,000 km	Do items in A.
60,000 mi/96,000 km/4 yrs	Do items in A, B, C, E.
67,500 mi/108,000 km	Do items in A.
75,000 mi/120,000 km/5 yrs	☐Replace transmission fluid. Do items in A, B.
82,500 mi/132,000 km	Do items in A.
90,000 mi/144,000 km/6 yrs	Do items in A, B, C, D, E.
97,500 mi/156,000 km	Do items in A.
105,000 mi/168,000 km/7 yrs	☐Replace timing belt#, and inspect water pump. ☐Replace transmission fluid. ☐Inspect idle speed#. ☐Inspect valve clearance. ☐Replace spark plugs. Do items in A, B.
112,500 mi/180,000 km	Do items in A.
120,000 mi/192,000 km/8 yrs	Do items in A, B, C, E.
At 120,000 miles (192,000 km) or 120 months, then every 60,000 miles (96,000 km) or 60 months	☐Replace engine coolant.

A	☐Replace engine oil. ☐Rotate tires (follow pattern on page 289).
B	☐Replace engine oil filter. ☐Inspect front and rear brakes. ☐Check parking brake adjustment. ☐Inspect tie rod ends, steering gearbox and boots. ☐Inspect suspension components. ☐Inspect driveshaft boots. ☐Inspect brake hoses and lines (including ABS). ☐Check all fluid levels, condition of fluids, and check for leaks. ☐Inspect cooling system hoses and connections. ☐Inspect exhaust system#. ☐Inspect fuel lines and connections#.
C	☐Replace air cleaner element. ☐Inspect and adjust drive belts. ☐Replace dust and pollen filter.
D	☐Replace brake fluid every 3 years (independent of mileage).
E	☐Replace rear differential fluid.

: See information on maintenance and emissions warranty, last column, page 251.
□1: Necessary for proper break-in of the VTM-4 rear differential.

NOTE:
- Check engine oil and coolant at each fuel stop.
- Check and adjust valve clearance, cold engine, only if noisy.

Service at the indicated distance or time — whichever comes first.	miles x 1,000	7.5	15	30	45	60	75	90	105	120
	km x 1,000	12	24	48	72	96	120	144	168	192
	months	6	12	24	36	48	60	72	84	96
Replace engine oil and oil filter		Replace every 3,750 miles (6,000 km) or 6 months								
Check engine oil and coolant		Check oil and coolant at each fuel stop								
Replace air cleaner element — Use normal schedule except in dusty conditions			●	●	●	●	●	●	●	●
Inspect valve clearance		Adjust only if noisy							●	
Replace spark plugs									●	
Replace timing belt#, *1 and inspect water pump									●	
Inspect and adjust drive belts				●		●		●		●
Inspect idle speed#									●	
Replace engine coolant		At 120,000 miles (192,000 km) or 120 months, then every 60,000 miles (96,000 km) or 60 months								
Replace transmission fluid				●		●		●		●
Replace VTM-4 rear differential fluid □3		● □4	●	●	●	●	●	●	●	●
Inspect front and rear brakes		Inspect every 7,500 miles (12,000 km) or 6 months								
Replace brake fluid		Every 3 years								
Check parking brake adjustment			●	●	●	●	●	●	●	●
Replace dust and pollen filter*2				●		●		●		●
Lubricate all hinges, locks and latches, include the hood			●	●	●	●	●	●	●	●
Rotate tires (Check tire inflation and condition at least once per month)		Rotate tires every 7,500 miles (12,000 km)								
Visually inspect the following items:										
Tie rod ends, steering gear box, and boots Suspension components Driveshaft boots		Every 7,500 miles (12,000 km) or 6 months								
Brake hoses and lines (including ABS) All fluid levels and conditions of fluids Cooling system hoses and connections Exhaust system# Fuel lines and connections# Lights and controls Vehicle underbody			●	●	●	●	●	●	●	●

U.S. Owners

Follow the Severe Conditions Maintenance Schedule if you drive your vehicle *MAINLY* under one or more of the following conditions:

- Driving less than 5 miles (8 km) per trip or, in freezing temperatures, driving less than 10 miles (16 km) per trip.
- Driving in extremely hot [over 90°F (32°C)] conditions.
- Extensive idling or long periods of stop-and-go driving.
- Trailer towing, driving with a roof top carrier, or driving in mountainous conditions.
- Driving on muddy, dusty, or de-iced roads.

□1: Refer to page 286 for replacement information under special driving conditions.
□2: Refer to page 285 for replacement information under special driving conditions.
□3: Follow this schedule for rear differential fluid replacement if you use your vehicle for off-highway driving, trailer towing, or mainly in stop-and-go driving. Otherwise, use the fluid replacement schedule in the Maintenance Schedule for Normal Conditions.
□4: Necessary for proper break-in of the VTM-4 rear differential.
: See page 251.

Canadian Owners

Follow the Maintenance Schedule for Severe Conditions.

Use this schedule if your vehicle is MAINLY driven in any of the following Severe Conditions, or normally driven in Canada; otherwise use the Normal Schedule. Service at the indicated distance or time, whichever comes first. Do the items in **A, B, C, D** as required for each distance/time.

Severe Conditions:

- Driving less than 5 miles (8 km) per trip or, in freezing temperatures, driving less than 10 miles (16 km) per trip.
- Driving in extremely hot (over 90°F/32°C) conditions.
- Extensive idling or long periods of stop-and-go driving.
- Trailer towing, driving with a roof rack, or driving in mountainous conditions.
- Driving on muddy, dusty, or de-iced roads.

3,750 mi/6,000 km	Do items in A.
7,500 mi/12,000 km/6 mos	Do items in A, B, F.[4]
11,250 mi/18,000 km	Do items in A.
15,000 mi/24,000 km/1 yr	Do items in A, B, C, F.
18,750 mi/30,000 km	Do items in A.
22,500 mi/36,000 km/1½ yrs	Do items in A, B.
26,250 mi/42,000 km	Do items in A.
30,000 mi/48,000 km	Do items in A, B, C, D, F.
33,750 mi/54,000 km	Do items in A.
37,500 mi/60,000 km	Do items in A, B.
41,250 mi/66,000 km	Do items in A.
45,000 mi/72,000 km/3 yrs	Do items in A, B, C, E, F.
48,750 mi/78,000 km	Do items in A.
52,500 mi/84,000 km	Do items in A, B.

A	☐Replace engine oil and filter.
B	☐Inspect front and rear brakes. ☐Rotate tires (follow pattern on page 289). ☐Inspect tie rod ends, steering gearbox and boots. ☐Inspect suspension components. ☐Inspect driveshaft boots.
C	☐Replace air cleaner element ☐Check parking brake adjustment. ☐Lubricate all hinges, locks and latches, with multipurpose grease. ☐Inspect brake hoses and lines (including ABS). ☐Check all fluid levels, condition of fluids, and check for leaks. ☐Inspect cooling system hoses and connections. ☐Inspect exhaust system#. ☐Inspect fuel lines and connections#. ☐Check all lights. ☐Inspect the underbody.

CONTINUED

56,250 mi/90,000 km	Do items in A.
60,000 mi/96,000 km/4 yrs	Do items in A, B, C, D, F.
63,750 mi/102,000 km	Do items in A.
67,500 mi/108,000 km	Do items in A, B.
71,250 mi/114,000 km	Do items in A.
75,000 mi/120,000 km/5 yrs	Do items in A, B, C, F.
78,750 mi/126,000 km	Do items in A.
82,500 mi/132,000 km	Do items in A, B.
86,250 mi/138,000 km	Do items in A.
90,000 mi/144,000 km/6 yrs	Do items in A, B, C, D, E, F.
93,750 mi/150,000 km	Do items in A.
97,500 mi/156,000 km	Do items in A, B.
101,250 mi/162,000 km	Do items in A.
105,000 mi/168,000 km/7 yrs	☐Replace timing belt*1, #, and inspect water pump. ☐Inspect valve clearance. ☐Replace spark plugs. ☐Inspect idle speed#. Do items in A, B, C, F.
108,750 mi/174,000 km	Do items in A.
112,500 mi/180,000 km	Do items in A, B.
116,250 mi/186,000 km	Do items in A.
120,000 mi/192,000 km/8 yrs	Do items in A, B, C, D, F.
At 120,000 miles (192,000 km) or 120 months, then every 60,000 miles (96,000 km) or 60 months	☐Replace engine coolant.

D	☐Inspect and adjust drive belts. ☐Replace transmission fluid. ☐Replace dust and pollen filter*2
E	☐Replace brake fluid every 3 years (independent of mileage).
F	☐Replace rear differential fluid.□3

: See information on maintenance and emissions warranty, last column, page 251.

□1: See timing belt on page 286 to determine need for replacement.

□2: See Dust and Pollen Filter on page 286 for replacement information under special driving conditions.

□3: Follow this schedule for rear differential fluid replacement if you use your vehicle for off-highway driving, trailer towing, or mainly in stop-and-go driving. Otherwise, use the fluid replacement schedule in the Maintenance Schedule for Normal Conditions.

□4: Necessary for proper break-in of the VTM-4 rear differential.

NOTE:
- Check engine oil and coolant at each fuel stop.
- Check and adjust valve clearance, cold engine, only if noisy.

Required Maintenance Record (for Normal and Severe Schedules)

You or the servicing dealer can record all completed maintenance here, whether you follow the schedule for normal conditions (page 252) or severe conditions (page 254). Keep the receipts for all work done on your vehicle.

3,750 mi 6,000 km	Signature or dealer stamp	mi/km Date
7,500 mi 12,000 km (or 6 mo)		mi/km Date
11,250 mi 18,000 km		mi/km Date
15,000 mi 24,000 km (or 1 year)		mi/km Date
18,750 mi 30,000 km		mi/km Date
22,500 mi 36,000 km (or 1½ years)		mi/km Date
26,250 mi 42,000 km		mi/km Date
30,000 mi 48,000 km (or 2 years)		mi/km Date

33,750 mi 54,000 km	Signature or dealer stamp	mi/km Date
37,500 mi 60,000 km (or 2½ years)		mi/km Date
41,250 mi 66,000 km		mi/km Date
45,000 mi 72,000 km (or 3 years)		mi/km Date
48,750 mi 78,000 km		mi/km Date
52,500 mi 84,000 km (or 3½ years)		mi/km Date
56,250 mi 90,000 km		mi/km Date
60,000 mi 96,000 km (or 4 years)		mi/km Date

CONTINUED

Required Maintenance Record (for Normal and Severe Schedules)

63,750 mi 102,000 km	Signature or dealer stamp	mi/km Date
67,500 mi 108,000 km (or 4½ years)		mi/km Date
71,250 mi 114,000 km		mi/km Date
75,000 mi 120,000 km (or 5 years)		mi/km Date
78,750 mi 126,000 km		mi/km Date
82,500 mi 132,000 km (or 5½ years)		mi/km Date
86,250 mi 138,000 km		mi/km Date
90,000 mi 144,000 km (or 6 years)		mi/km Date

93,750 mi 150,000 km	Signature or dealer stamp	mi/km Date
97,500 mi 156,000 km (or 6½ years)		mi/km Date
101,250 mi 162,000 km		mi/km Date
105,000 mi 168,000 km (or 7 years)		mi/km Date
108,750 mi 174,000 km		mi/km Date
112,500 mi 180,000 km (or 7½ years)		mi/km Date
116,250 mi 186,000 km		mi/km Date
120,000 mi 192,000 km (or 8 years)		mi/km Date

You should check the following items at the specified intervals. If you are unsure of how to perform any check, turn to the page given.

- Engine oil level — Check every time you fill the fuel tank. See page 198 .
- Engine coolant level — Check the radiator reserve tank every time you fill the fuel tank. See page 199 .
- Automatic transmission — Check the fluid level monthly. See page 271 .
- Brakes — Check the fluid level monthly. See page 273 .
- Tires — Check the tire pressure monthly. Examine the tread for wear and foreign objects. See page 286 .
- Lights — Check the operation of the headlights, parking lights, taillights, high-mount brake light, turn signals, brake lights, and license plate light monthly. See page 293 .

Fluid Locations

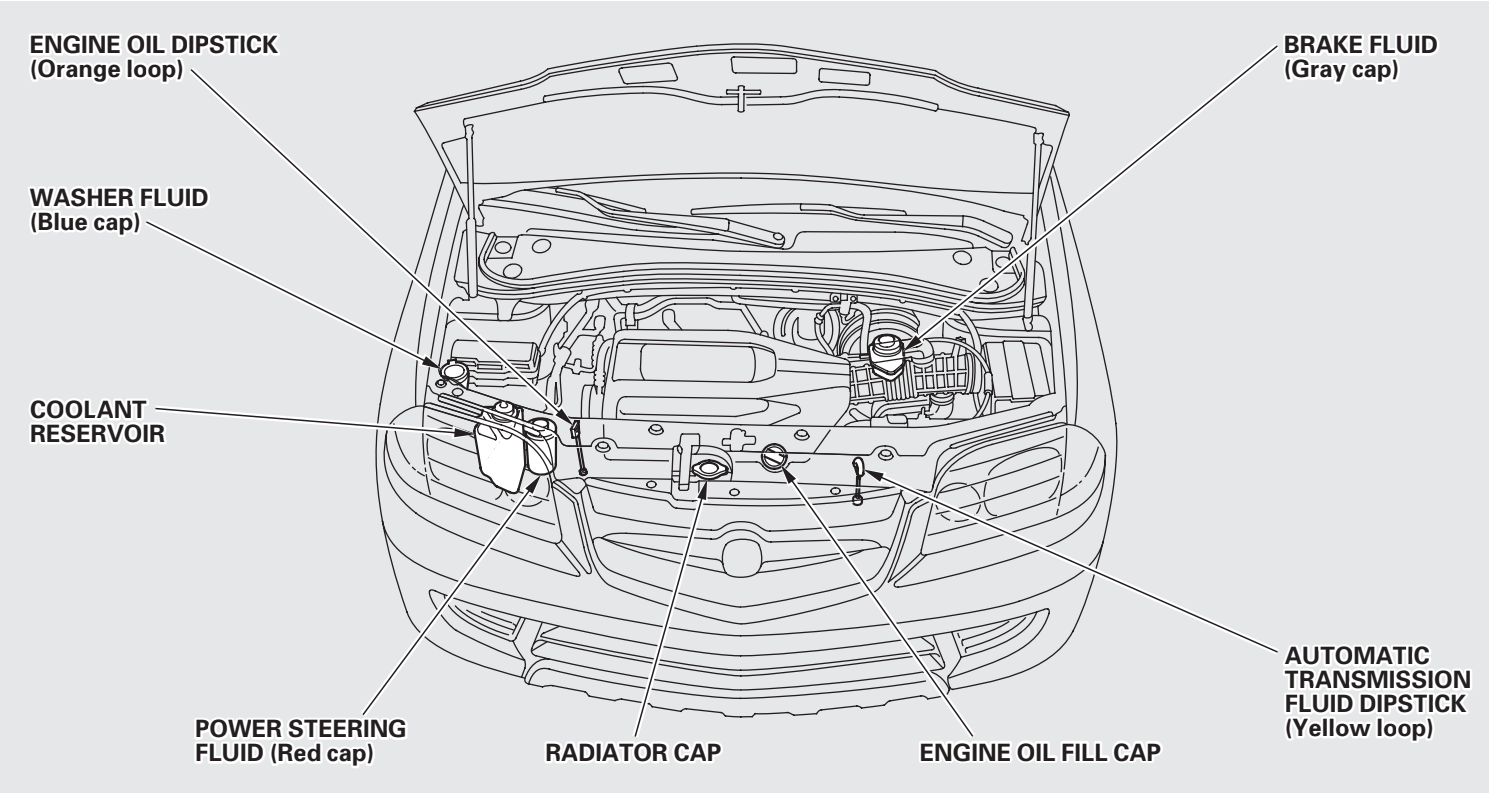

Adding Oil

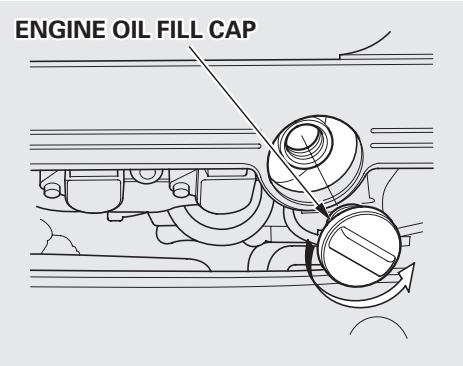

To add oil, unscrew and remove the engine oil fill cap on top of the valve cover. Pour in the oil, and install the engine oil fill cap. Tighten it securely. Wait a few minutes and recheck the oil level. Do not fill above the upper mark; you could damage the engine.

Recommended Oil

Oil is major contributor to your engine's performance and longevity. Always use a premium-grade detergent oil displaying the API Certification Seal. This seal indicates the oil is energy conserving, and that it meets the American Petroleum Institute's latest requirements. It is highly recommended that you use Honda Motor Oil in your vehicle for as long as you own it.

Make sure the API Certification Seal says "For Gasoline Engines."

API CERTIFICATION SEAL

CONTINUED

The numbers on the container's label tell you the oil's viscosity or weight. Select the oil for your vehicle according to this chart.

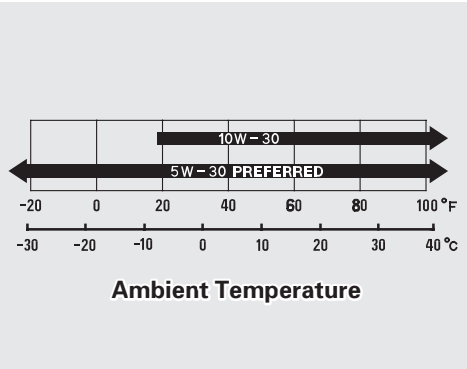

An oil with a viscosity of 5W-30 is preferred for improved fuel economy and year-round protection in your Acura. You may use a 10W-30 oil if the temperature in your area never goes below 20°F (–7°C).

Synthetic Oil

You may use a synthetic motor oil if it meets the same requirements given for a conventional motor oil: it displays the API Certification Seal, and it is the proper weight as shown on the chart. When using synthetic oil, you must follow the oil and filter change intervals given in the maintenance schedule.

Additives

Your Acura does not need any oil additives. Purchasing additives for the engine or transmission will not increase your vehicle's performance or longevity. It only increases the cost of operating your vehicle.

Changing the Oil and Filter
Always change the oil and filter according to the time and distance (miles/kilometers) recommendations in the maintenance schedule. The oil and filter collect contaminants that can damage your engine if they are not removed regularly.

Changing the oil and filter requires special tools and access from underneath the vehicle. The vehicle should be raised on a service station-type hydraulic lift for this service. Unless you have the knowledge and proper equipment, you should have this maintenance done by a skilled mechanic.

1. Run the engine until it reaches normal operating temperature, then shut it off.

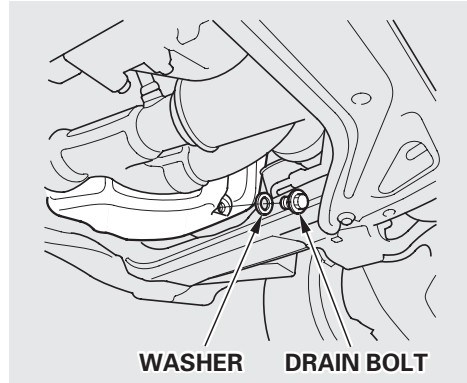

2. Open the hood and remove the engine oil fill cap. Remove the oil drain bolt and washer from the bottom of the engine. Drain the oil into an appropriate container.

CONTINUED

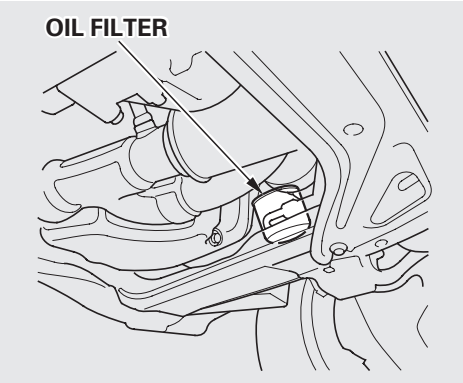

3. Remove the oil filter and let the remaining oil drain. A special wrench (available from your Honda dealer) is required to remove the filter.

4. Install a new oil filter according to instructions that come with it.

5. Put a new washer on the drain bolt, then reinstall the drain bolt.
   Tighten it to:
   29 lbf·ft (39 N·m , 4.0 kgf·m)

6. Refill the engine with the recommended oil.
   Engine oil change capacity (including filter):
   5.0 US qt (4.7 ℓ , 4.1 Imp qt)

7. Replace the engine oil fill cap. Start the engine. The oil pressure indicator light should go out within five seconds. If it does not, turn off the engine and reinspect your work.

8. Let the engine run for several minutes and check the drain bolt and oil filter for leaks.

9. Turn off the engine, let it sit for several minutes, then check the oil level. If necessary, add oil to bring the level to the upper mark on the dipstick.

NOTICE

Improper disposal of engine oil can be harmful to the environment. If you change your own oil, please dispose of the used oil properly. Put it in a sealed container and take it to a recycling center. Do not discard it in a trash bin or dump it on the ground.

Adding Engine Coolant

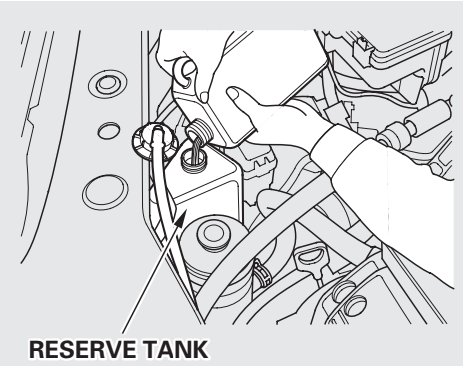

If the coolant level in the reserve tank is at or below the MIN line, add coolant to bring it up to the MAX line. Inspect the cooling system for leaks. This coolant should always be a mixture of 50 percent antifreeze and 50 percent water. Never add straight antifreeze or plain water.

Always use Honda All Season Antifreeze/Coolant Type 2. This coolant is pre-mixed with 50 percent antifreeze and 50 percent water. It does not require any additional mixing.
It is not recommended to use non-Honda coolant or water only. This may cause deposits or corrosion in the cooling system.

If it is not available, you may use another major-brand non-silicate coolant as a temporary replacement. Make sure it is a high-quality coolant recommended for aluminum engines. However, continued use of any non-Honda coolant can result in corrosion, causing the cooling system to malfunction or fail. Have the cooling system flushed and refilled with Honda antifreeze/coolant as soon as possible.

If the reserve tank is completely empty, you should also check the coolant level in the radiator.

⚠ WARNING

Removing the radiator cap while the engine is hot can cause the coolant to spray out, seriously scalding you.

Always let the engine and radiator cool down before removing the radiator cap.

CONTINUED

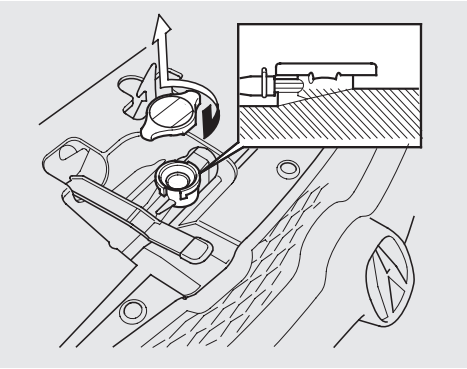

1. Make sure the engine and radiator are cool.

2. Turn the radiator cap counter-clockwise, without pressing down on it, until it stops. This relieves any pressure remaining in the cooling system.

3. Remove the radiator cap by pushing down and turning counterclockwise.

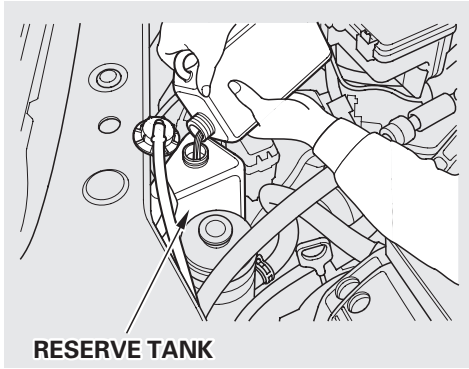

4. The coolant level should be up to the base of the filler neck. Add coolant if it is low.

5. Put the radiator cap back on. Tighten it fully.

6. Pour coolant into the reserve tank. Fill it to halfway between the MAX and MIN marks. Put the cap back on the reserve tank.

Do not add any rust inhibitors or other additives to your vehicle's cooling system. They may not be compatible with the coolant or engine components.

Replacing Engine Coolant
The cooling system should be completely drained and refilled with new coolant according to the time and distance recommendations in the maintenance schedule. Only use Honda All Season Antifreeze/ Coolant Type 2.

Draining the coolant requires access to the underside of the vehicle. Unless you have the tools and knowledge, you should have this maintenance done by a skilled mechanic.

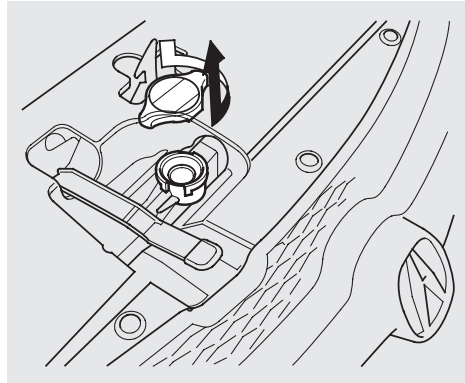

1. Turn the ignition ON (II). Set the Climate control system to 90℉(32 ℃). Turn the ignition off.
   Open the hood. Make sure the engine and radiator are cool to the touch.

2. Remove the radiator cap.

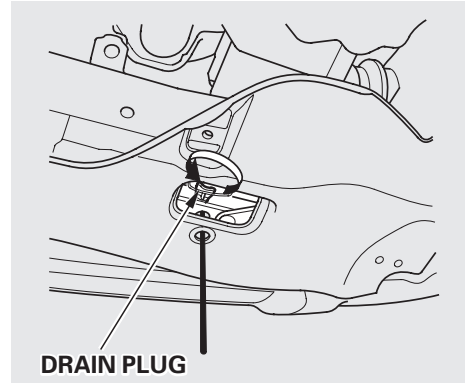

3. Loosen the drain plug on the bottom of the radiator. The coolant will drain through the splash guard.

CONTINUED

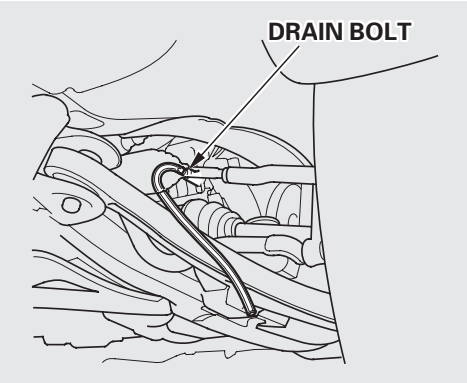

4. Install a rubber hose on the drain bolt in the back of the engine block. Loosen the drain bolt.

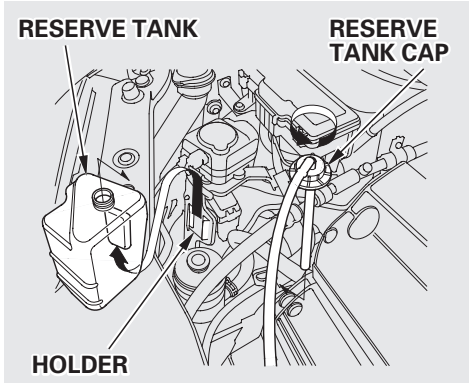

5. Remove the reserve tank from its holder by pulling it straight up. Drain the coolant, then put the tank back in its holder.

6. When the coolant stops draining, tighten the drain plug at the bottom of the radiator.

7. Tighten the drain bolt at the rear of the engine cylinder block securely.
   Tightening torque:
   7 lbf·ft (10 N·m , 1.0 kgf·m)

8. Mix the recommended antifreeze with an equal amount of purified or distilled water in a clean container. The cooling system capacity is:
   2.01 US gal (7.6 ℓ , 1.67 Imp gal)

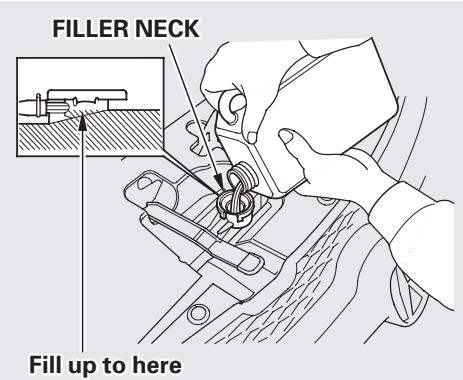

9. Pour coolant into the radiator up to the base of the filler neck.

10. Fill the reserve tank to the MAX mark. Install the reserve tank cap.

11. Install the radiator cap, and tighten it to the first stop.

12. Start the engine and let it run until the radiator cooling fan comes on at least twice. Then stop the engine.

13. Remove the radiator cap. Fill the radiator with coolant up to the base of the filler neck.

14. Install the radiator cap, and tighten it fully.

Windshield Washers

The low washer level indicator will light when the level is low (see page 63).

Fill the reservoir with a good-quality windshield washer fluid. This increases the cleaning capability and prevents freezing in cold weather.

When you refill the reservoir, clean the edges of the windshield wiper blades with windshield washer fluid on a clean cloth. This will help to condition the blade edges.

NOTICE

Do not use engine antifreeze or a vinegar/water solution in the windshield washer reservoir.

Antifreeze can damage your vehicle's paint, while a vinegar/water solution can damage the windshield washer pump.

Use only commercially-available windshield washer fluid.

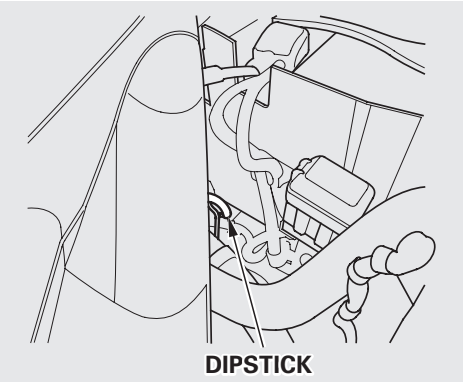

Check the fluid level with the engine at normal operating temperature.

1. Park the vehicle on level ground. Shut off the engine.

2. Remove the dipstick (yellow loop) from the transmission and wipe it with a clean cloth.

3. Insert the dipstick all the way into the transmission.

4. Remove the dipstick and check the fluid level. It should be between the upper and lower marks.

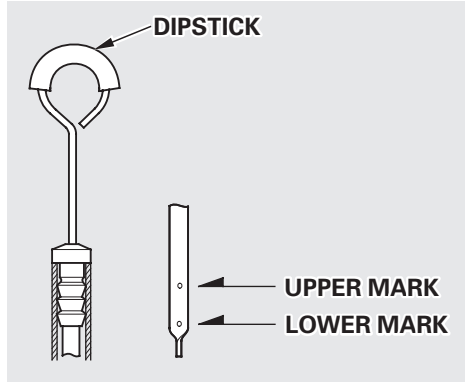

5. If the level is below the lower mark, remove the fill plug and add fluid to bring it to the upper mark. Always use Honda ATF-Z1 (Automatic Transmission Fluid). If it is not available, you may use a DEXRON® III automatic transmission fluid as a temporary replacement. However, continued use can affect shift quality. Have the transmission drained and refilled with Honda ATF-Z1 as soon as it is convenient.

   To thoroughly flush the transmission, the technician should drain and refill it with Honda ATF-Z1, then drive the vehicle a short distance. Do this three times. Then drain and refill the transmission a final time.

6. Insert the dipstick all the way back in the transmission.

The transmission should be drained and refilled with new fluid according to the time and distance recommendations in the maintenance schedule.

If you are not sure how to add fluid, contact your Acura dealer.

Differential Fluid

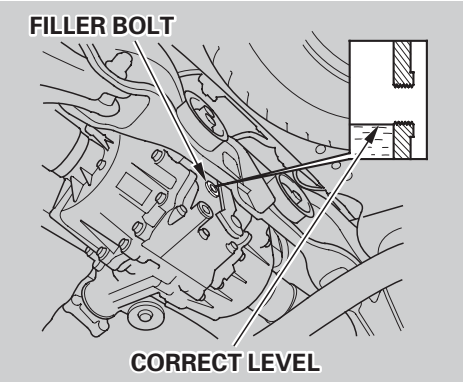

Check the fluid level with the differential at normal operating temperature and the vehicle sitting on level ground. Remove the differential fluid filler bolt and washer and carefully feel inside the bolt hole with your finger. The fluid level should be up to the edge of the bolt hole. If it is not, slowly add VTM-4 Differential Fluid until it starts to run out of the hole.

Put a new washer on the filler bolt, then reinstall the filler bolt. Tighten it securely. Tightening torque:
33 lbf·ft (45 N·m , 4.6 kgf·m)

The differential should be drained and refilled with new fluid according to the time and distance recommendations in the maintenance schedule.

Check the fluid level in the brake fluid reservoir monthly.

The brake fluid should be replaced according to the time and distance recommendations in the maintenance schedule.

Always use Honda Heavy Duty Brake Fluid DOT 3. If it is not available, you should use only DOT 3 or DOT 4 fluid, from a sealed container, as a temporary replacement. However, the use of any non-Honda brake fluid can cause corrosion and decrease the life of the system. Have the brake system flushed and refilled with Honda Heavy Duty Brake Fluid DOT 3 as soon as possible.

Brake fluid marked DOT 5 is not compatible with your vehicle's braking system and can cause extensive damage.

Brake System

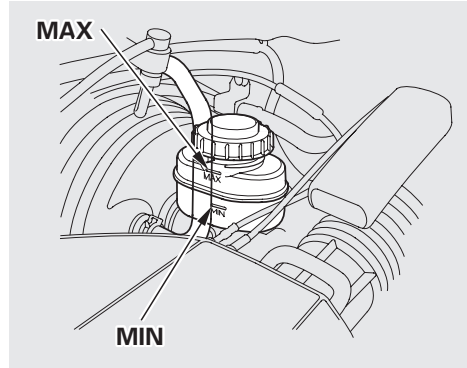

The fluid level should be between the MIN and MAX marks on the side of the reservoir. If the level is at or below the MIN mark, your brake system needs attention. Have the brake system inspected for leaks or worn brake pads.

Power Steering

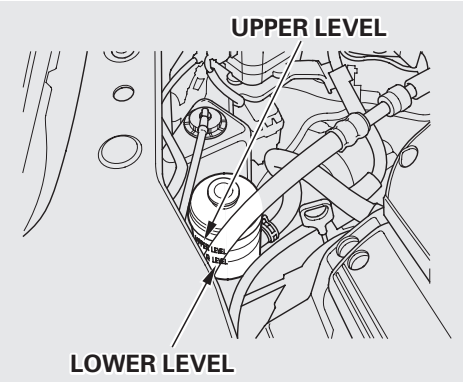

Check the level when the engine is cold. Look at the side of the reservoir. The fluid should be between the UPPER LEVEL and LOWER LEVEL. If it is below the LOWER LEVEL, add power steering fluid to the UPPER LEVEL.

Always use Honda Power Steering Fluid. If it is not available, you may use another power steering fluid as an emergency replacement. However, continued use can cause increased wear and poor steering in cold weather. Have the power steering system flushed and refilled with Honda PSF as soon as possible.

A low power steering fluid level can indicate a leak in the system. Check the fluid level frequently and have the system inspected as soon as possible.

NOTICE

Turning the steering wheel to full left or right lock and holding it there can damage the power steering pump.

The air cleaner element should be replaced according to the time and distance recommendations in the maintenance schedule.

Replacement

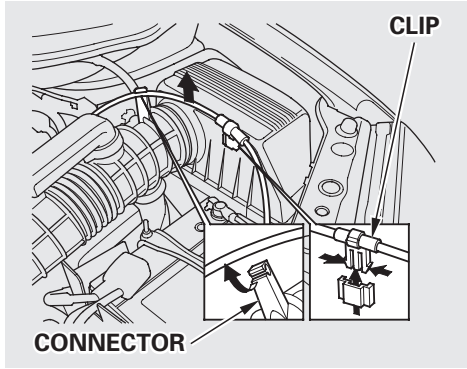

The air cleaner element is inside the air cleaner housing on the driver's side of the engine compartment.
To replace it:

1. Disconnect the cable from the air cleaner housing cover by pushing the plastic clip and pulling on it. Remove the cable from connector.

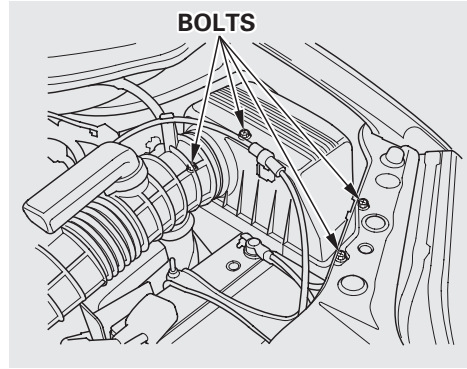

2. Loosen the four bolts with a Phillips-head screwdriver.

CONTINUED

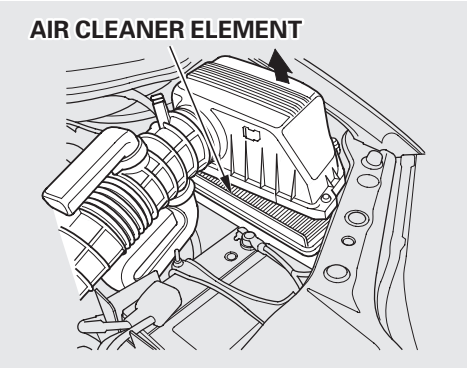

3. Remove the old air cleaner element.

4. Carefully clean the inside of the air cleaner housing with a damp rag.

5. Place the new air cleaner element in the air cleaner housing.

6. Reinstall the air cleaner housing cover. Tighten the four bolts. Reinstall the clip on the cover. Clamp the cable with the connector.

Hood Latch

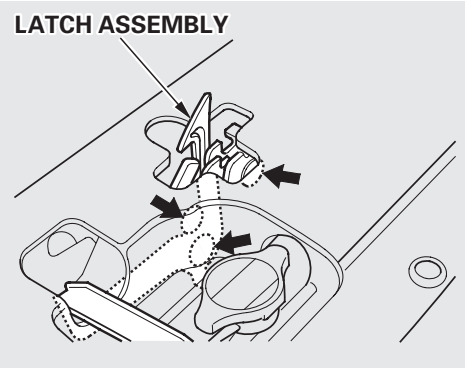

Clean the hood latch assembly with a mild cleaner, then lubricate it with a multipurpose grease. Lubricate all the moving parts (as shown), including the pivot. Follow the time and distance recommendations in the Maintenance Schedule. If you are not sure how to clean and grease the latch, contact your Acura dealer.

Spark Plugs

The spark plugs in your vehicle are a special platinum-tipped design for longer life. The spark plugs should be replaced according to the time and distance recommendations in the maintenance schedule.

Replacement

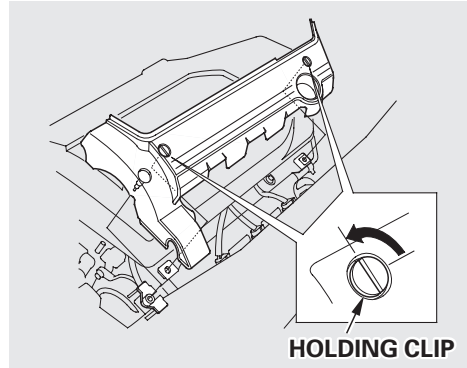

1. Loosen the two holding clips by turning the heads one-quarter turn counterclockwise with a flat-tipped screwdriver. Remove the cover on the front cylinder bank by pulling it straight up.

2. Clean up any dirt and oil that have collected around the ignition coils.

CONTINUED

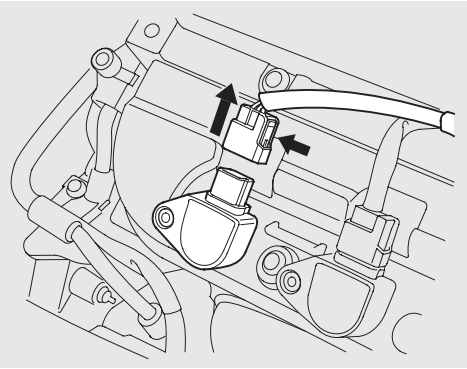

3. Disconnect the wire connector from the ignition coil by pushing on the lock tab and pulling on the connector. Pull on the plastic connector, not the wires.

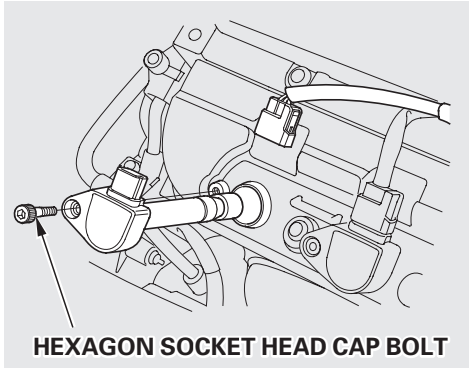

4. Use a wrench to remove the hexagon socket head cap bolt holding the ignition coil. Remove the ignition coil by pulling it straight out.

5. Remove the spark plug with a five-eighths inch (16 mm) spark plug socket.

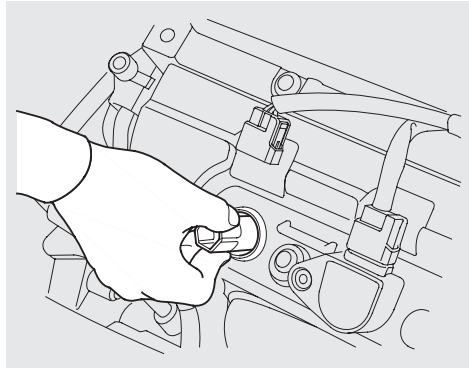

6. Put the new spark plug into the socket; then screw it into the hole. Screw it in by hand so you do not crossthread it.

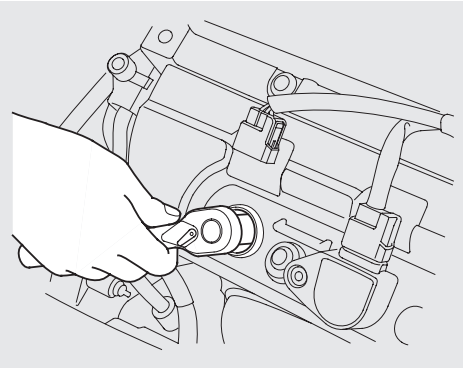

7. Torque the spark plug. (If you do not have a torque wrench, tighten the spark plug two-thirds of a turn after it contacts the cylinder head.)
   Tightening torque:
   13 lbf·ft (18 N·m , 1.8 kgf·m)

NOTICE

Tighten the spark plugs carefully. A spark plug that is too loose can overheat and damage the engine. Overtightening can cause damage to the threads in the cylinder head.

8. Install the ignition coil. Reinstall the hexagon socket head cap bolt.

9. Push the wire connector onto the ignition coil. Make sure it locks in place.

10. Repeat this procedure for the other five spark plugs.

11. Reinstall the cover on the front cylinder bank while putting its mounting clip in the hole on the passenger's side. Secure the cover by turning the heads of the two holding clips one-quarter turn clockwise with a flat-tipped screwdriver.

Specifications:

NGK: PZFR5F-11
DENSO: PKJ16CR-L11

Spark Plug Gap:
0.04 in (1.1 mm) $^{+0}_{-0.1\,mm}$

Battery

Check the condition of your vehicle's battery monthly. You should check the color of the test indicator window, and for corrosion on the terminals.

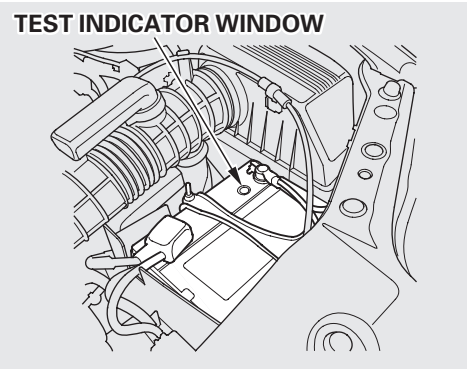

Check the battery condition by looking at the test indicator window on the battery.
The label on the battery explains the test indicator's colors.

Check the battery terminals for corrosion (a white or yellowish powder). To remove it, cover the terminals with a solution of baking soda and water. It will bubble up and turn brown. When this stops, wash it off with plain water. Dry off the battery with a cloth or paper towel. Coat the terminals with grease to help prevent future corrosion.

WARNING: Battery posts, terminals and related accessories contain lead and lead compounds. **Wash hands after handling.**

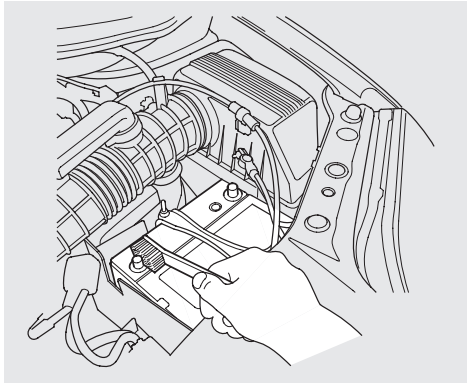

If the terminals are severely corroded, clean them with baking soda and water. Then use a wrench to loosen and remove the cables from the terminals. Always disconnect the negative (−) cable first and reconnect it last. Clean the battery terminals with a terminal cleaning tool or wire brush. Reconnect and tighten the cables, then coat the terminals with grease.

If you need to connect the battery to a charger, disconnect both cables to prevent damage to the vehicle's electrical system.

⚠WARNING

The battery gives off explosive hydrogen gas during normal operation.

A spark or flame can cause the battery to explode with enough force to kill or seriously hurt you.

Wear protective clothing and a face shield, or have a skilled mechanic do the battery maintenance.

If your vehicle's battery is disconnected or goes dead, the audio system will disable itself. The next time you turn on the radio you will see " CODE " in the frequency display. Use the Preset buttons to enter the five-digit code (see page 186).

NOTICE

Charging the battery with the cables connected can seriously damage your vehicle's electronic controls. Detach the battery cables before connecting the battery to a charger.

Wiper Blades

Check the condition of the wiper blades at least every six months. Look for signs of cracking in the rubber, or areas that are getting hard. Replace the blades if you find these signs, or they leave streaks and unwiped areas when used.

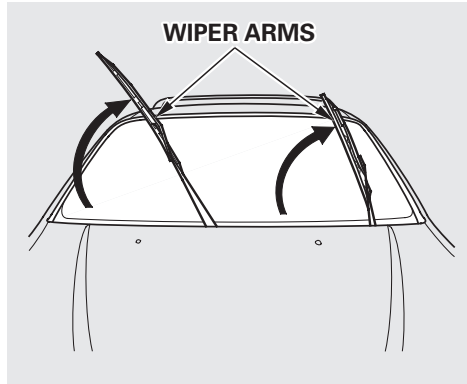

To replace a wiper blade:

1. Raise the wiper arm off the window.
   Windshield: Raise the driver's side first, then the passenger's side.

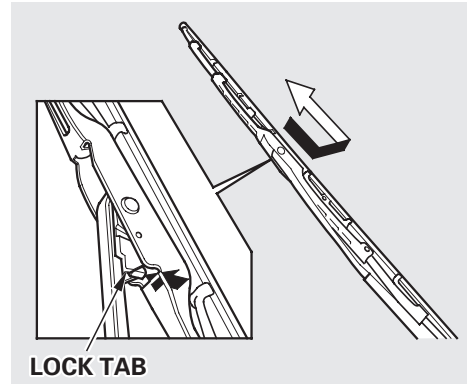

2. Front only:
   Disconnect the blade assembly from the wiper arm by pushing in the lock tab. Hold it in while you push the blade assembly toward the base of the arm.

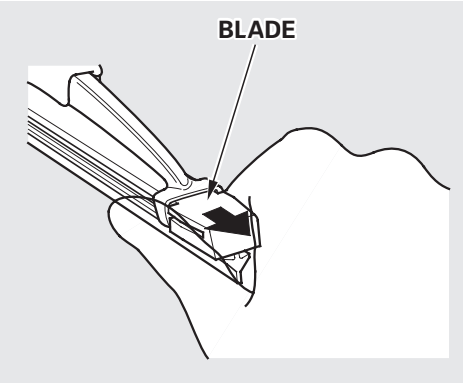

3. Remove the blade from its holder by grasping the tabbed end of the blade. Pull firmly until the tabs come out of the holder.

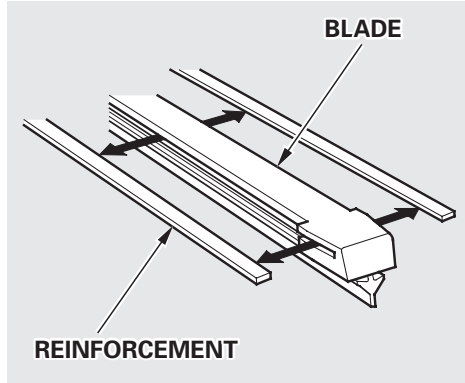

4. Examine the new wiper blades. If they have no plastic or metal reinforcement along the back edge, remove the metal reinforcement strips from the old wiper blade and install them in the slots along the edge of the new blade.

5. Slide the new wiper blade into the holder until the tabs lock.

6. Front only:
   Slide the wiper blade assembly onto the wiper arm. Make sure it locks in place.

7. Lower the wiper arm down against the window.
   Windshield: Lower the passenger's side first, then the driver's side.

Air Conditioning System

Your vehicle's air conditioning is a sealed system. Any major maintenance, such as recharging, should be done by a qualified mechanic. You can do a couple of things to make sure the air conditioning works efficiently.

Periodically check the engine's radiator and air conditioning condenser for leaves, insects, and dirt stuck to the front surface. These block the air flow and reduce cooling efficiency. Use a light spray from a hose or a soft brush to remove them.

NOTICE

The condenser and radiator fins bend easily. Only use a low-pressure spray or soft-bristle brush to clean them.

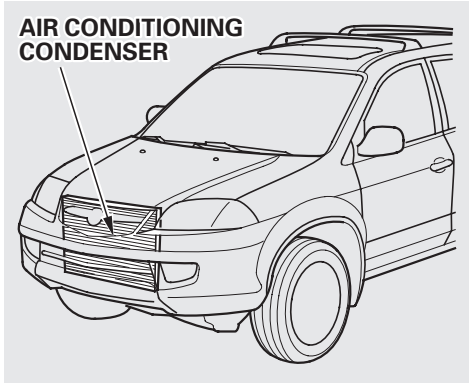

Run the air conditioning at least once a week during the cold weather months. Run it for at least ten minutes while you are driving at a steady speed with the engine at normal operating temperature. This circulates the lubricating oil contained in the refrigerant.

If the air conditioning does not get as cold as before, have your dealer check the system. Recharge the system with Refrigerant HFC-134a (R-134a). (See Specifications on page 322 .)

NOTICE

Whenever you have the air conditioning system serviced, make sure the service facility uses a refrigerant recycling system. This system captures the refrigerant for reuse. Releasing refrigerant into the atmosphere can damage the environment.

Dust and Pollen Filter

The Dust and Pollen filter removes pollen and dust that is brought in from the outside through the heating and cooling system/climate control system.

This filter should be replaced every 30,000 miles (48,000 km) under normal conditions. It should be replaced every 15,000 miles (24,000 km) if you drive primarily in urban areas that have high concentrations of soot in the air from industry and diesel-powered vehicles. Replace it more often if air flow from the climate control system becomes less than usual. Have the air conditioning filter replaced by your Acura dealer.

Drive Belts

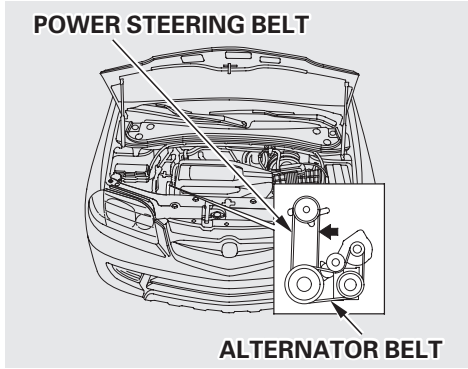

Check the condition of the two drive belts (power steering belt and alternator belt). Examine the edges of each belt for cracks or fraying.

Check the tension of the power steering belt by pushing on it with your thumb midway between the pulleys.

The belt should have the following "play" or deflection.

Power steering belt:
0.51 – 0.65 in (13.0 – 16.5 mm)

If you see signs of wear or looseness, have your dealer adjust or replace the belts.

Timing Belt

The timing belt should normally be replaced at the intervals shown in the maintenance schedule.

Replace the belt at 60,000 miles (U.S.) or 100,000 km (Canada) if you regularly drive your vehicle in one or more of these conditions:

- In very high temperatures (over 110℉, 43℃).
- In very low temperatures (under −20℉, −29℃).
- Frequently tow a trailer.

Tires

To safely operate your vehicle, your tires must be the proper type and size, in good condition with adequate tread, and correctly inflated. The following pages give more detailed information on how and when to check air pressure, how to inspect your tires for damage and wear, and what to do when your tires need to be replaced.

⚠ WARNING

Using tires that are excessively worn or improperly inflated can cause a crash in which you can be seriously hurt or killed.

Follow all instructions in this owner's manual regarding tire inflation and maintenance.

Inflation

Keeping the tires properly inflated provides the best combination of handling, tread life and riding comfort. Underinflated tires wear unevenly, adversely affect handling and fuel economy, and are more likely to fail from being overheated. Overinflated tires can make your vehicle ride more harshly, are more prone to damage from road hazards, and wear unevenly.

We recommend that you visually check your tires every day. If you think a tire might be low, check it immediately with a tire gauge.

Use a gauge to measure the air pressure at least once a month. Even tires that are in good condition may lose one to two psi (10 to 20 kPa, 0.1 to 0.2 kgf/cm²) per month. Remember to check the spare tire at the same time you check all the other tires.

Check the pressure in the tires when they are cold. This means the vehicle has been parked for at least three hours. If you have to drive the vehicle before checking the tire pressure, the tires can still be considered "cold" if you drive less than 1 mile (1.6 km).

If you check the pressure when the tires are hot (the vehicle has been driven several miles), you will see readings 4 to 6 psi (30 to 40 kPa, 0.3 to 0.4 kgf/cm²) higher than the cold reading. This is normal. Do not let air out to match the specified cold pressure. The tire will be underinflated.

You should get your own tire pressure gauge and use it whenever you check your tire pressures. This will make it easier for you to tell if a pressure loss is due to a tire problem and not due to a variation between gauges.

Recommended Tire Pressures for Normal Driving

The following chart shows the recommended cold tire pressures for most normal driving conditions and speeds. Tire pressures for high speed driving are the same as for normal driving.

Tire Size	Cold Tire Pressure for Normal Driving
P235/65R17 103T	32 psi (220 kPa , 2.2 kgf/cm²)

The compact spare tire pressure is: 60 psi (420 kPa , 4.2 kgf/cm²)

CONTINUED

These pressures are also given on the tire information label on the driver's doorjamb.

Tubeless tires have some ability to self-seal if they are punctured. However, because leakage is often very slow, you should look closely for punctures if a tire starts losing pressure.

Inspection
Every time you check inflation, you should also examine the tires for damage, foreign objects, and wear. You should look for:

- Bumps or bulges in the tread or side of the tire. Replace the tire if you find either of these conditions.
- Cuts, splits, or cracks in the side of the tire. Replace the tire if you can see fabric or cord.
- Excessive tread wear.

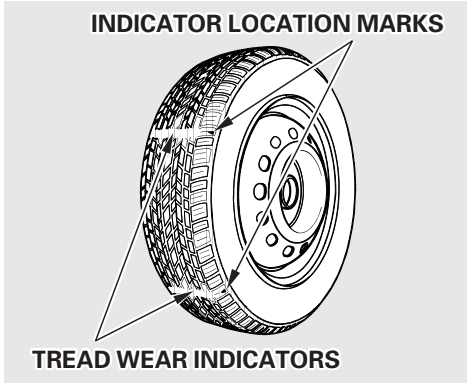

Your vehicle's tires have wear indicators molded into the tread. When the tread wears down to that point, you will see a 1/2 inch (12.7 mm) wide band running across the tread. This shows there is less than 1/16 inch (1.6 mm) of tread left on the tire. A tire that is this worn gives very little traction on wet roads. You should replace the tire if you can see the tread wear indicator in three or more places around the tire.

Maintenance
In addition to proper inflation, correct wheel alignment helps to decrease tire wear. If you find a tire is worn unevenly, have your dealer check the wheel alignment.

The tires were properly balanced by the factory. They may need to be rebalanced at some time before they are worn out. Have your dealer check the tires if you feel a consistent vibration while driving. A tire should always be rebalanced if it is removed from the wheel for repair.

Make sure the installer balances the wheels when you have new tires installed. This increases riding comfort and tire life. Your vehicle's original tires were dynamic or "spin" balanced at the factory. For best results, have the installer perform a dynamic balance.

NOTICE

Improper wheel weights can damage your vehicle's aluminum wheels. Use only Genuine Acura wheel weights for balancing.

Tire Rotation

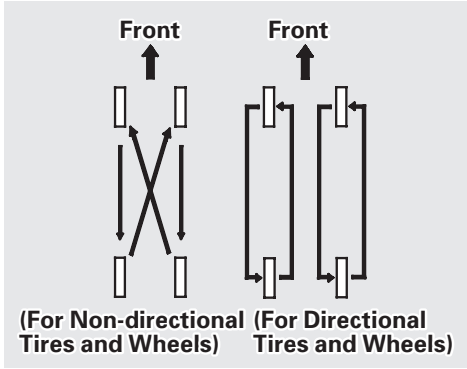

To help increase tire life and distribute wear more evenly, you should have the tires rotated every 7,500 miles (12,000 km). Move the tires to the positions shown in the chart each time they are rotated.

CONTINUED

When shopping for replacement tires, you may find that some tires are "directional." This means they are designed to rotate only in one direction. If you use directional tires, they should be rotated only front-to-back.

Replacing Tires and Wheels

The tires that came with your vehicle were selected to match the performance capabilities of the vehicle while providing the best combination of handling, ride comfort, and long life. You should replace them with radial tires of the same size, load range, speed rating, and maximum cold tire pressure rating (as shown on the tire's sidewall). Mixing radial and bias-ply tires on your vehicle can reduce its braking ability, traction, and steering accuracy.

⚠ WARNING

Installing improper tires on your vehicle can affect handling and stability. This can cause a crash in which you can be seriously hurt or killed.

Always use the size and type of tires recommended in this owner's manual.

It is best to replace all four tires at the same time. If that is not possible or necessary, then replace the two front tires or the two rear tires as a pair. Replacing just one tire can seriously affect your vehicle's handling.

The ABS works by comparing the speed of the wheels. When replacing tires, use the same size originally supplied with the vehicle. Tire size and construction can affect wheel speed and may cause the system to work inconsistently.

If you ever need to replace a wheel, make sure the wheel's specifications match those of the original wheel that came on your vehicle. Replacement wheels are available at your Acura dealer.

Wheels and Tires

Wheel:
17 x 6 1/2 JJ

Tire:
P235/65R17 103T

See page 344 for information about DOT Tire Quality Grading.

Winter Driving

Tires that are marked "M+S" or "All Season" on the sidewall have an all-weather tread design. They should be suitable for most winter driving conditions. Tires without these markings are designed for optimum traction in dry conditions. They may not provide adequate performance in winter driving.
For the best performance in snowy or icy conditions, you should install snow tires or tire chains. They may be required by local laws under certain conditions.

CONTINUED

Snow Tires

If you mount snow tires on your Acura, make sure they are radial tires of the same size and load range as the original tires. Mount snow tires on all four wheels to balance your vehicle's handling in all weather conditions. Keep in mind the traction provided by snow tires on dry roads may not be as high as your vehicle's original-equipment tires. You should drive cautiously even when the roads are clear. Check with the tire dealer for maximum speed recommendations.

Tire Chains

Because your Acura has limited tire clearance, mount only SAE Class "S" cable-type traction devices, with rubber chain tensioners, on the front tires. Use traction devices only when required by driving conditions or local laws. Make sure they are the correct size for your tires.

Metal link-type "chains" should not be used. No matter how tight they seem to be installed, they can come into contact with the body and suspension, causing serious damage.

When installing cables, follow the manufacturer's instructions and mount them as tightly as you can. Drive slowly with them installed. If you hear them coming in contact with the body or chassis, stop and investigate. Make sure the cables are installed tightly, and that they are not contacting the brake lines or suspension.

Remove them as soon as you begin driving on cleared roads.

NOTICE

Traction devices that are the wrong size or improperly installed can damage your vehicle's brake lines, suspension, body, and wheels. Stop driving if they are hitting any part of the vehicle.

Check the operation of your vehicle's exterior lights at least once a month. A burned out bulb can create an unsafe condition by reducing your vehicle's visibility and the ability to signal your intentions to other drivers.

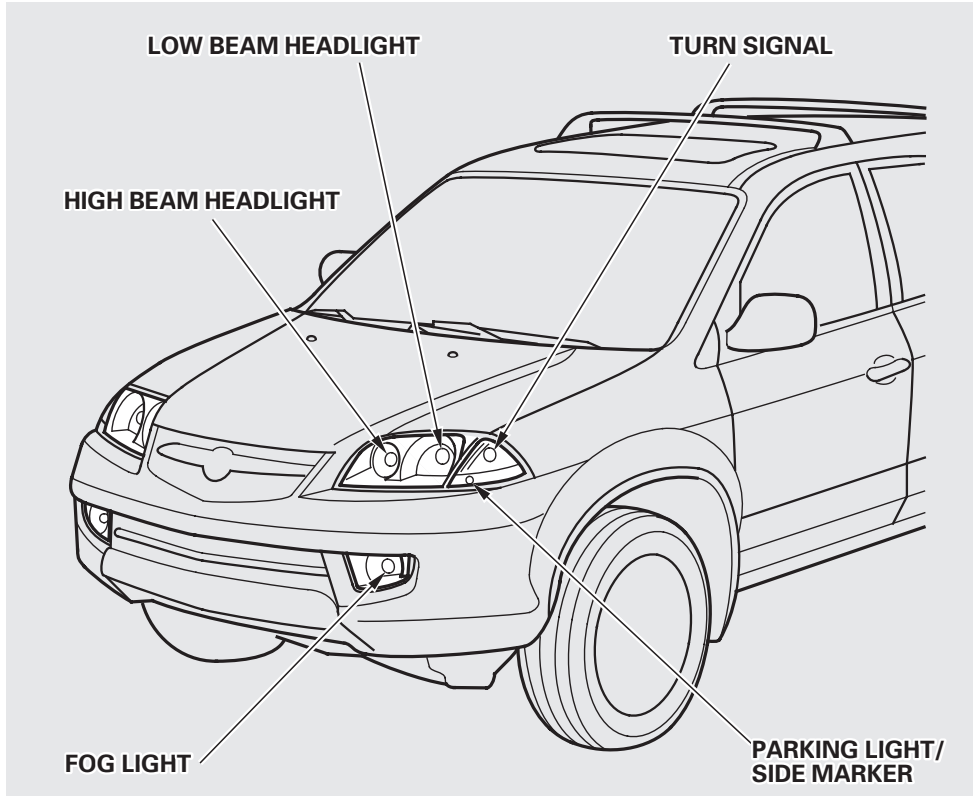

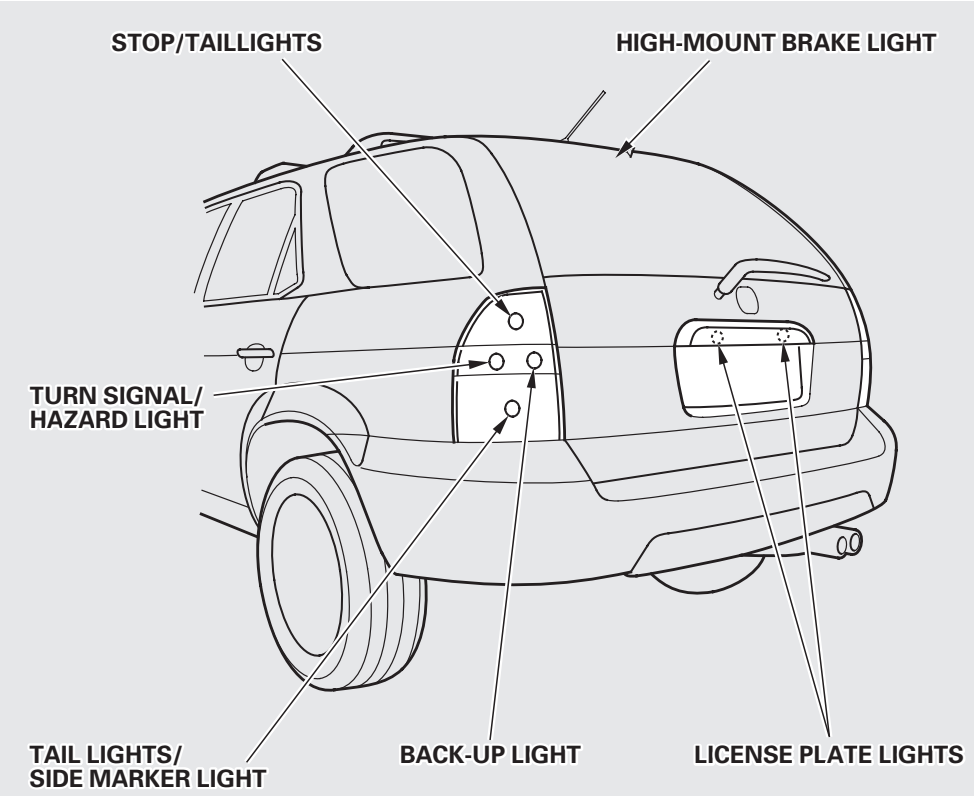

Check the following:

- Headlights (low and high beam)
- Parking lights
- Taillights
- Brake lights
- High-mount brake light
- Turn signals
- Back-up lights
- Hazard light function
- License plate light
- Side marker lights
- Daytime running lights (Canadian models)

If you find any bulbs are burned out, replace them as soon as possible. Refer to the chart on page 343 to determine what type of replacement bulb is needed.

Headlight Aiming

The headlights were properly aimed when your vehicle was new. If you regularly carry heavy items in the cargo area or pull a trailer, readjustment may be required. Adjustment of the headlights should be performed by a Acura technician or other qualified mechanic.

Replacing a Headlight Bulb

Your vehicle has halogen headlight bulbs, two on each side. When replacing a bulb, handle it by its steel base and protect the glass from contact with your skin or hard objects. If you touch the glass, clean it with denatured alcohol and a clean cloth.

NOTICE

Halogen headlight bulbs get very hot when lit. Oil, perspiration, or a scratch on the glass can cause the bulb to overheat and shatter.

1. Open the hood.

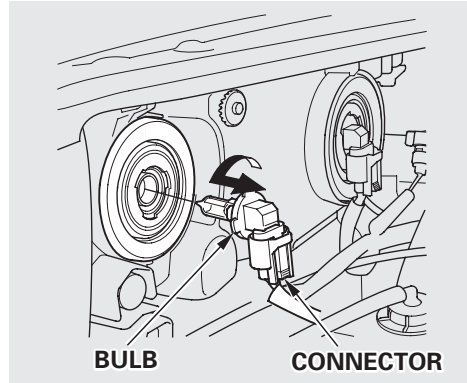

2. Remove the bulb by turning it approximately one-quarter turn counterclockwise.

CONTINUED

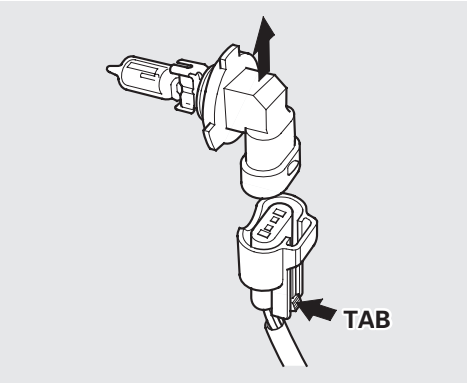

3. Remove the electrical connector from the bulb by squeezing the connector to unlock the tab, then slide the connector off the bulb.
4. Push the electrical connector onto the new bulb.
5. Insert the new bulb into the hole and turn it one-quarter turn clockwise to lock it in place.
6. Turn on the headlights to test the new bulb.

Replacing Front Turn Signal/ Parking and Side Marker Light Bulbs

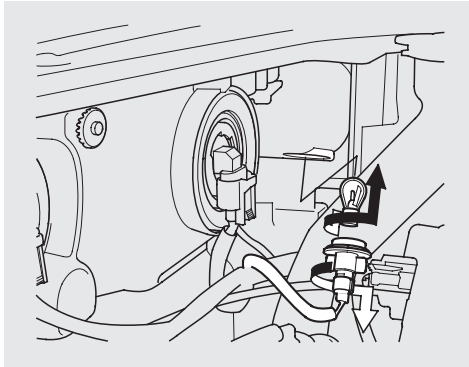

1. Remove the socket from the headlight assembly by turning it one-quarter turn counterclockwise.

2. To remove the front turn signal bulb, push it in slightly and turn it counterclockwise. To remove the side marker bulb, pull it straight out of its socket.

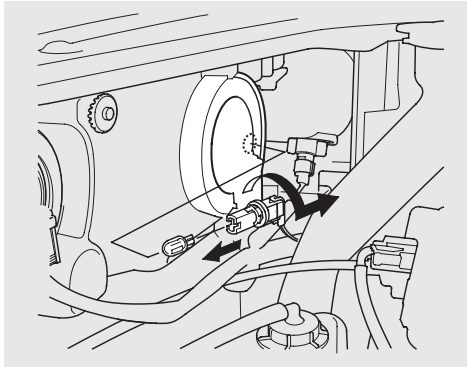

3. Install the new bulb into the socket.

4. Insert the socket back into the headlight assembly. Turn it clockwise to lock it in place.

5. Test the lights to make sure the new bulb is working.

Replacing a Fog Light Bulb
Your car uses halogen fog light bulbs. See page 295 for information on replacing a halogen bulb.

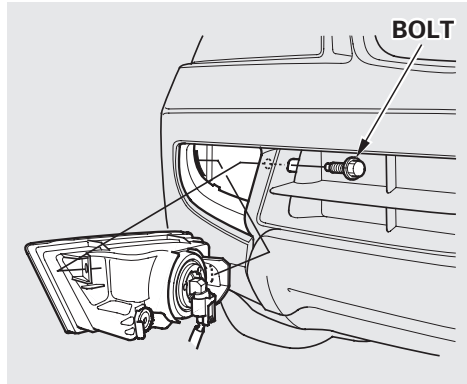

1. Use a wrench to loosen the light assembly's mounting bolt.

2. Remove the light assembly from the bumper.

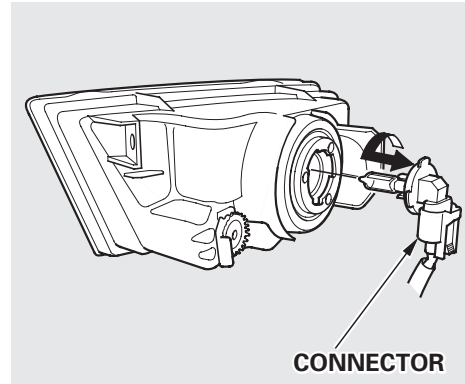

3. Remove the bulb by turning it approximately one-quarter turn counterclockwise.

4. Remove the electrical connector from the bulb by squeezing the connector to unlock the tab, then slide the connector off the bulb.

5. Push the electrical connector onto the new bulb.

CONTINUED

6. Insert the new bulb into the hole and turn it one-quarter turn clockwise to lock it in place.

7. Turn on the headlights to test the new bulb.

8. Put the light assembly into the bumper. Tighten the mounting bolt.

Replacing Rear Bulbs

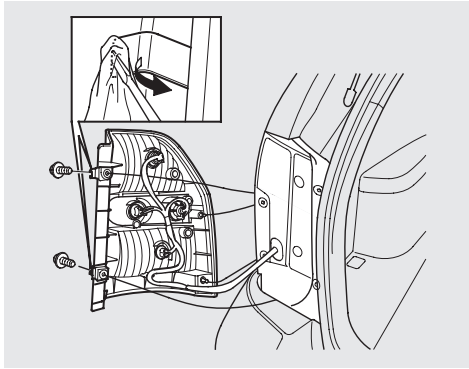

1. Open the tailgate. Use a screwdriver protected with a cloth to pry open the two covers.

2. Remove the two screws and remove the rear light assembly from the rear pillar.

3. Determine which of the four bulbs is burned out: stop/taillight, turn signal/hazard lights, side marker light, or back-up light.

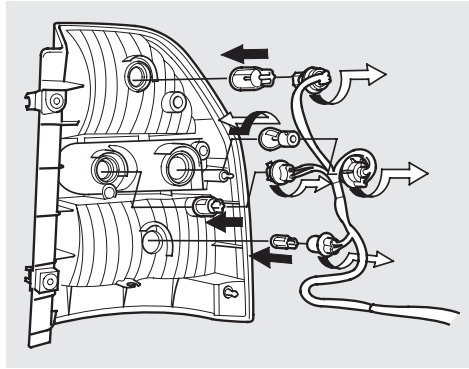

4. Remove the socket by turning it one-quarter turn counterclockwise.

5. Remove the burned out bulb. To remove the stop/taillight, back-up or side marker light bulb, pull the bulb straight out of its socket. To remove the turn signal/hazard light bulb, push it in and turn it counterclockwise until it unlocks.

6. Install the new bulb into the socket.

7. Push the socket into the light assembly and turn it clockwise until it locks.

8. Test the lights to make sure the new bulb is working.

9. Install the rear light assembly in the body.Tighten the two screws. Snap the covers back into position.

Replacing a High-mount Brake Light Bulb

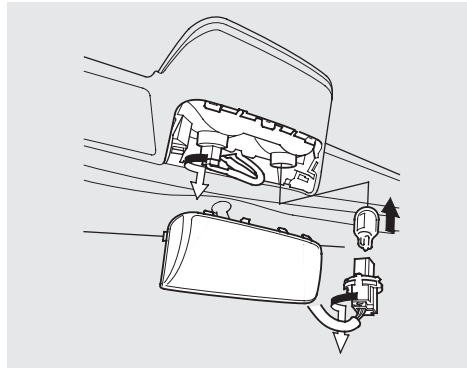

1. Remove the light assembly cover by prying carefully with a cloth-covered screwdriver in the notches along the top edge.Then pivot the cover out and down.

2. Remove the socket from the light assembly by turning it one-quarter turn counterclockwise.

3. Pull the bulb straight out of its socket.
   Push the new bulb straight into the socket until it bottoms.

4. Test the light to make sure the new bulb is working.

5. Put the socket back into the light assembly and turn it clockwise to lock it in place.

6. Place the cover back into the light assembly. Push it up until it locks in place.

Replacing a Rear License Plate Bulb

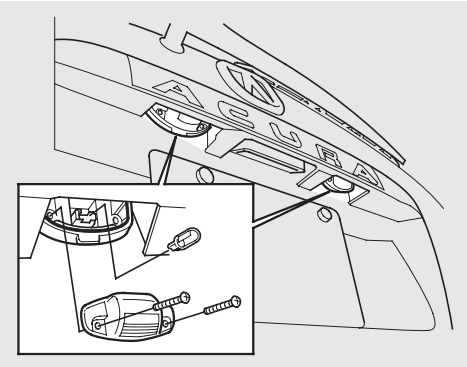

1. Use a small phillips screwdriver to remove the lens from the license plate light assembly.
2. Remove the bulb by pulling it straight out. Push the new bulb into the socket.
3. Reinstall the lens.

Replacing Bulbs in the Interior Lights

The individual map lights, cargo area light, tailgate light, and the vanity mirror lights come apart the same way. They do not all use the same bulb.

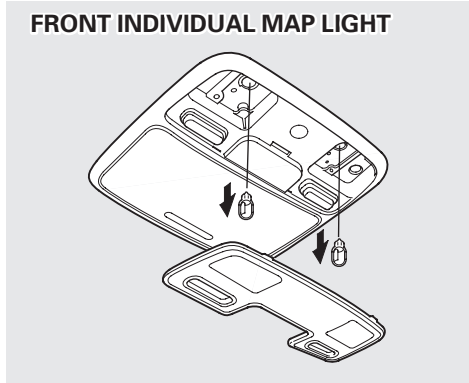

1. Remove the lens by carefully prying on the edge of the lens with a fingernail file or a small flat-tip screwdriver. Do not pry on the edge of the housing around the lens.

Front individual map light:
Pry on the front edge in front of both map lights.

Rear individual map light:
Pry on the rear edge of the lens in the middle.

Cargo area light:
Pry on the rear edge to the left and right of center.

Tailgate light:
Pry on the upper edge to the left and right of center.

REAR INDIVIDUAL MAP LIGHT

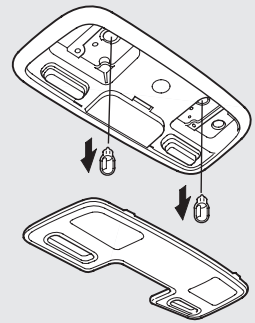

2. Remove the bulb by pulling it straight out of its metal tabs.

CARGO AREA LIGHT

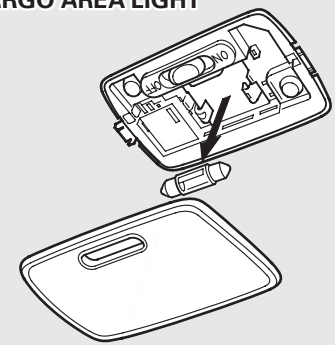

3. Push the new bulb into the metal tabs. Snap the lens back in place.

CONTINUED

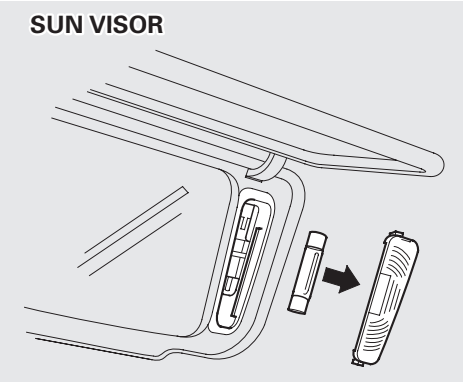
SUN VISOR

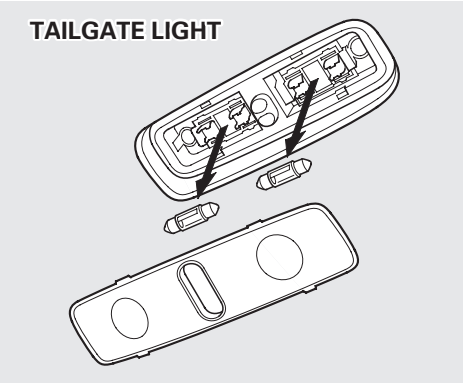
TAILGATE LIGHT

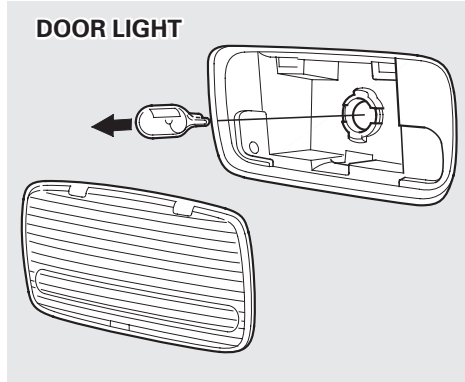
DOOR LIGHT

If you need to park your vehicle for an extended period (more than one month), there are several things you should do to prepare it for storage. Proper preparation helps prevent deterioration and makes it easier to get your vehicle back on the road. If possible, store your vehicle indoors.

- Fill the fuel tank.
- Change the engine oil and filter (see page 263).
- Wash and dry the exterior completely.
- Clean the interior. Make sure the carpeting, floor mats, etc. are completely dry.
- Leave the parking brake off. Put the transmission in Park.
- Block the rear wheels.
- If the vehicle is to be stored for a longer period, it should be supported on jackstands so the tires are off the ground.
- Leave one window open slightly (if the vehicle is being stored indoors).
- Disconnect the battery.
- Support the front and rear wiper blade arms with a folded towel or rag so they do not touch the windshield.
- To minimize sticking, apply a silicone spray lubricant to all door and tailgate seals. Also, apply a vehicle body wax to the painted surfaces that mate with the door and tailgate seals.
- Cover the vehicle with a “breathable” cover, one made from a porous material such as cotton. Nonporous materials, such as plastic sheeting, trap moisture, which can damage the paint.
- If possible, run the engine for a while periodically (preferably once a month).

If you store your vehicle for 12 months or longer, have your Acura dealer perform the inspections called for in the 24 months/30,000 miles (48,000 km) maintenance schedule (Normal Conditions) as soon as you take it out of storage (see page 253). The replacements called for in the maintenance schedule are not needed unless the vehicle has actually reached that time or mileage.

Appearance Care

Regular cleaning and polishing of your Acura helps to keep it "new" looking. This section gives you hints on how to clean your vehicle and preserve its appearance: the paint, brightwork, wheels and interior. Also included are several things you can do to help prevent corrosion.

Exterior Care 306
- Washing 306
- Waxing 307
- Aluminum Wheels 307
- Paint Touch-up 307

Interior Care 308
- Carpeting 308
- Floor Mats 308
- Fabric 309
- Vinyl 309
- Seat Belts 309
- Windows 310
- Air Fresheners 310

Corrosion Protection 311

Body Repairs 312

Washing
Frequent washing helps preserve your vehicle's beauty. Dirt and grit can scratch the paint, while tree sap and bird droppings can permanently ruin the finish.

Wash your vehicle in a shady area, not in direct sunlight. If the vehicle is parked in the sun, move it into the shade and let the exterior cool down before you start.

Only use the solvents and cleaners recommended in this Owner's Manual.

NOTICE

Chemical solvents and strong cleaners can damage the paint, metal, and plastic on your vehicle.

- Rinse the vehicle thoroughly with cool water to remove loose dirt.
- Fill a bucket with cool water. Mix in a mild detergent, such as dishwashing liquid or a product made especially for car washing.
- Wash the vehicle using the water and detergent solution and a soft-bristle brush, sponge, or soft cloth. Start at the top and work your way down. Rinse frequently.
- Check the body for road tar, tree sap, etc. Remove these stains with tar remover or turpentine. Rinse it off immediately so it does not harm the finish. Remember to re-wax these areas, even if the rest of the vehicle does not need waxing.
- When you have washed and rinsed the whole exterior, dry it with a chamois or soft towel. Letting it air-dry will cause dulling and water spots.

As you dry the vehicle, inspect it for chips and scratches that could allow corrosion to start. Repair them with touch-up paint (see page 307).

NOTICE

The radio antenna on your vehicle does not need to be removed when you use a "drive-through" car wash. However, if you remove the antenna, make sure to reinstall it and tighten it securely using an appropriate tool.

Waxing
Always wash and dry the whole vehicle before waxing it. You should wax your vehicle, including the metal trim, whenever water sits on the surface in large patches. It should form into beads or droplets after waxing.

You should use a quality liquid or paste wax. Apply it according to the instructions on the container. In general, there are two types of products:

Waxes — A wax coats the finish and protects it from damage by exposure to sunlight, air pollution, etc. You should use a wax on your Acura when it is new.

Polishes — Polishes and cleaner/waxes can restore the shine to paint that has oxidized and lost some of its shine. They normally contain mild abrasives and solvents that remove the top layer of the finish. You should use a polish on your Acura if the finish does not have its original shine after using a wax.

Cleaning tar, insects, etc. with removers also takes off the wax. Remember to re-wax those areas, even if the rest of the vehicle does not need waxing.

Aluminum Wheels
Clean your Acura's aluminum alloy wheels as you do the rest of the exterior. Wash them with the same solution, and rinse them thoroughly.

The wheels have a protective clear-coat that keeps the aluminum from corroding and tarnishing. Using harsh chemicals, including some commercial wheel cleaners, or stiff brushes can damage this clear-coat. Only use a mild detergent and soft brush or sponge to clean the wheels.

Paint Touch-up
Your dealer has touch-up paint to match your vehicle's color. The color code is printed on a sticker on the driver's doorjamb. Take this code to your dealer so you are sure to get the correct color.

Inspect your vehicle frequently for chips or scratches in the paint. Repair them right away to prevent corrosion of the metal underneath. Use the touch-up paint only on small chips and scratches. More extensive paint damage should be repaired by a professional.

Carpeting
Vacuum the carpeting frequently to remove dirt. Ground-in dirt will make the carpet wear out faster. Periodically shampoo the carpet to keep it looking new. Use one of the foam-type carpet cleaners on the market. Follow the instructions that come with the cleaner, applying it with a sponge or soft brush. Keep the carpeting as dry as possible by not adding water to the foam.

Floor Mats

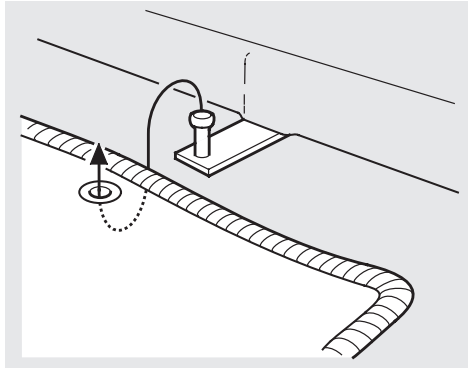

The Genuine Acura driver's floor mat that came with your vehicle was designed to be hooked over the floor mat anchor. This keeps the floor mat from sliding forward and possibly interfering with the pedals.

If you remove the floor mat, make sure to re-anchor it when you put it back in your vehicle.

If you replace it, use a genuine Acura floor mat that is designed to be used with the floor mat anchor in your vehicle.

If you use a non-Acura floor mat in the driver's footwell, make sure it fits properly and that it can be used with the floor mat anchor.

Do not put additional floor mats on top of the anchored mat, otherwise the additional mats may slide forward and interfere with the pedals.

Fabric
Vacuum dirt and dust out of the material frequently. For general cleaning, use a solution of mild soap and lukewarm water, letting it air dry. To clean off stubborn spots, use a commercially-available fabric cleaner. Test it on a hidden area of the fabric first, to make sure it does not bleach or stain the fabric. Follow the instructions that come with the cleaner.

Vinyl
Remove dirt and dust with a vacuum cleaner. Wipe the vinyl with a soft cloth dampened in a solution of mild soap and water. Use the same solution with a soft-bristle brush on more difficult spots. You can also use commercially-available spray or foam-type vinyl cleaners.

Leather
Vacuum dirt and dust from the leather frequently. Pay particular attention to the pleats and seams. Clean the leather with a soft cloth dampened with clear water, then buff it with a clean, dry cloth. If further cleaning is needed, use a soap specifically for leather, such as saddle soap. Apply this soap with a damp, soft cloth. Wipe down and buff as described above.

Seat Belts

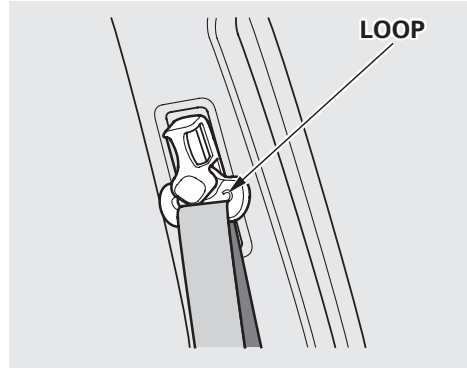

If your seat belts get dirty, you can use a soft brush with a mixture of mild soap and warm water to clean them. Do not use bleach, dye, or cleaning solvents. They can weaken the belt material. Let the belts air-dry before you use the vehicle.

CONTINUED

Dirt build-up in the loops of the seat belt anchors can cause the belts to retract slowly. Wipe the insides of the loops with a clean cloth dampened in mild soap and warm water or isopropyl alcohol.

Windows

Clean the windows, inside and out, with a commercially-available glass cleaner. You can also use a mixture of one part white vinegar to ten parts water. This will remove the haze that builds up on the inside of the windows. Use a soft cloth or paper towels to clean all glass and clear plastic surfaces.

NOTICE

The rear window defogger wires are bonded to the inside of the glass. Wiping vigorously up-and-down can dislodge and break the defogger wires. When cleaning the rear window, use gentle pressure and wipe side-to-side.

Air Fresheners

If you want to use an air freshener/deodorizer in the interior of your vehicle, it is best to use a solid type. Some liquid air fresheners contain chemicals that may cause parts of the interior trim and fabric to crack or discolor.

If you use a liquid air freshener, make sure you fasten it securely so it does not spill as you drive.

Two factors normally contribute to causing corrosion in your vehicle:

1. Moisture trapped in body cavities. Dirt and road salt that collects in hollows on the underside of the vehicle stays damp, promoting corrosion in that area.

2. Removal of paint and protective coatings from the exterior and underside of the vehicle.

Many corrosion-preventive measures are built into your Acura. You can help keep your vehicle from corroding by performing some simple periodic maintenance:

- Repair chips and scratches in the paint as soon as you discover them.

- Inspect and clean out the drain holes in the bottom of the doors and body.

- Check the floor coverings for dampness. Carpeting and floor mats may remain damp for a long time, especially in winter. This dampness can eventually cause the floor panels to corrode.

- Use a high-pressure spray to clean the underside of your vehicle. This is especially important in areas that use road salt in winter. It is also a good idea in humid climates and areas subject to salt air. Be careful of the ABS wheel sensors and wiring at each wheel.

- Have the corrosion-preventive coatings on the underside of your vehicle inspected and repaired periodically.

Body Repairs

Body repairs can affect your vehicle's resistance to corrosion. If your vehicle needs repairs after a collision, pay close attention to the parts used in the repair and the quality of the work.

Make sure the repair facility uses Genuine Acura replacement body parts. Some companies make sheet metal pieces that seem to duplicate the original Acura body parts, but are actually inferior in fit, finish, and corrosion resistance. Once installed, they do not give the same high-quality appearance.

When reporting your collision to the insurance company, tell them you want Genuine Acura parts used in the repair. Although most insurers recognize the quality of original parts, some may try to specify that the repairs be done with other available parts. You should investigate this before any repairs have begun.

Take your vehicle to your authorized Acura dealer for inspection after the repairs are completed. Your dealer can make sure that quality materials were used, and that corrosion-preventive coatings were applied to all repaired and replaced parts.

This section covers the more-common problems that motorists experience with their vehicles. It gives you information about how to safely evaluate the problem and what to do to correct it. If the problem has stranded you on the side of the road, you may be able to get going again. If not, you will also find instructions on getting your vehicle towed.

Compact Spare Tire..... 314
Changing a Flat Tire 315
If Your Engine Won't Start..... 322
Nothing Happens or the Starter Motor Operates Very Slowly..... 322
The Starter Operates Normally 322
Jump Starting 323
If Your Engine Overheats..... 325
Low Oil Pressure Indicator 327
Charging System Indicator..... 328
Malfunction Indicator Lamp 329
Brake System Indicator 331
Fuses 322
Checking and Replacing 333
Emergency Towing 338

Compact Spare Tire

Your vehicle has a compact spare tire that takes up less space. Use this spare tire as a temporary replacement only. Get your regular tire repaired or replaced and put it back on your vehicle as soon as you can.

Check the inflation pressure of the compact spare tire every time you check the other tires. It should be inflated to:
60 psi (420 kPa , 4.2 kgf/cm^2)

Follow these precautions whenever you are using the compact spare tire:

- Do not exceed 50 mph (80 km/h) under any circumstances.
- This tire gives a harsher ride and less traction on some road surfaces than the regular tire. Use greater caution while driving on this tire.
- Do not mount snow chains on the compact spare.
- Do not use the compact spare tire if you are towing a trailer.
- The wheel of the compact spare tire is designed especially to fit your vehicle. Do not use your spare tire on another vehicle unless it is the same make and model.

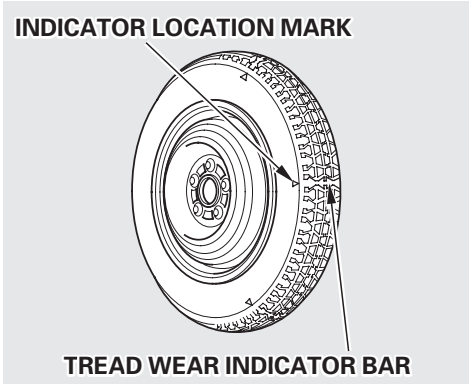

The compact spare tire has a shorter tread life than a regular tire. Replace it when you can see the tread wear indicator bars. The replacement should be the same size and design tire, mounted on the same wheel. The compact spare tire is not designed to be mounted on a regular wheel, and the compact wheel is not designed for mounting a regular tire.

If you have a flat tire while driving, stop in a safe place to change it. Stopping in traffic or on the shoulder of a busy road is dangerous. Drive slowly along the shoulder until you get to an exit or an area to stop that is far away from the traffic lanes.

⚠ WARNING

The vehicle can easily roll off the jack, seriously injuring anyone underneath.

Follow the directions for changing a tire exactly, and never get under the vehicle when it is supported only by the jack.

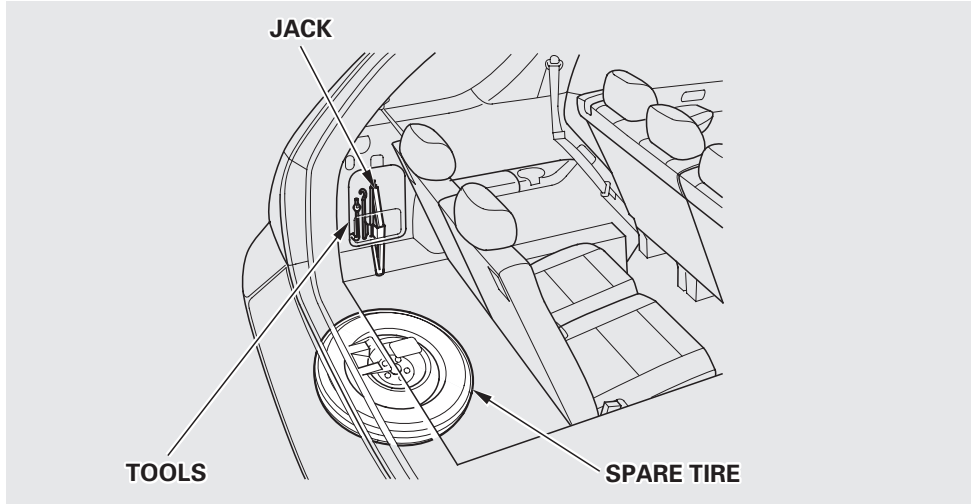

1. Park the vehicle on firm, level and non-slippery ground away from traffic. Put the transmission in Park. Apply the parking brake.
2. Turn on the hazard warning lights and turn the ignition switch to LOCK (0). Have all the passengers get out of the vehicle while you change the tire.

CONTINUED

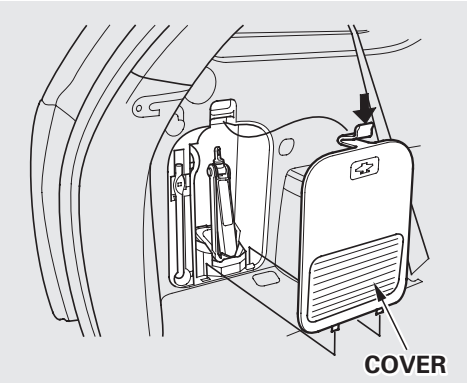

3. Open the tailgate.

4. The tools and jack are behind a cover in the cargo area on the driver's side. Remove the cover by pushing the top of the cover.

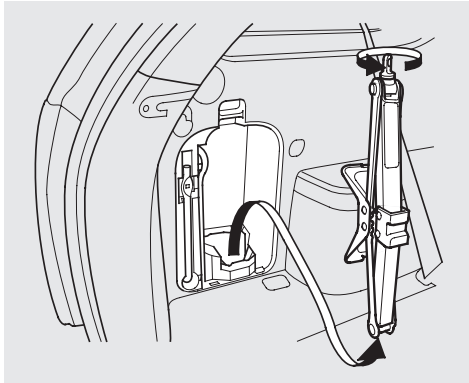

5. Take the tools out of the storage compartment.

6. Turn the jack's end bracket counterclockwise to loosen it, then remove the jack.

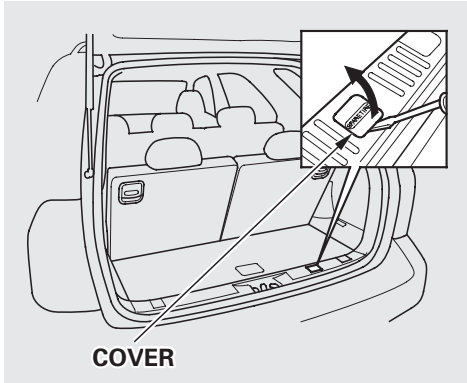

7. The spare tire is stored underneath the rear cargo area. Remove the plastic cover on the cargo area lining to access the shaft for the spare tire hoist.

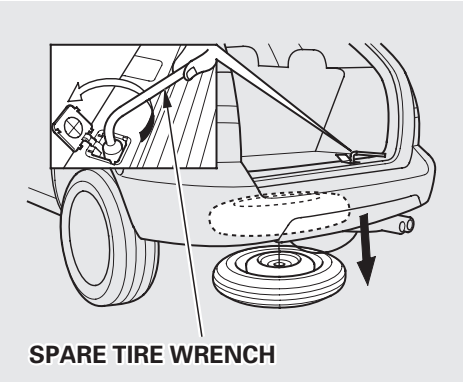

8. Put the wheel nut wrench on the hoist shaft.Turn the wrench counterclockwise to lower the spare tire on the ground.

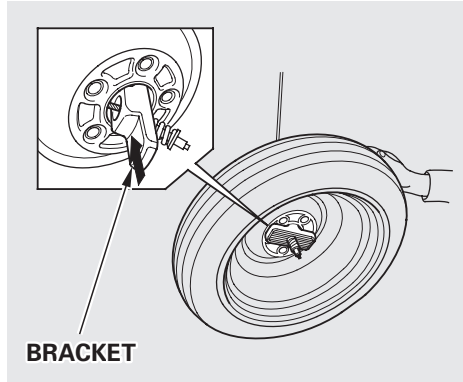

9. Keep turning the wheel wrench to create slack in the cable.

10. Remove the bracket from the spare tire.

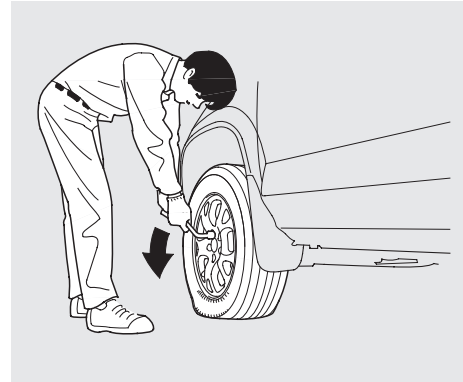

11. Loosen the five wheel nuts 1/2 turn with the wheel wrench.

CONTINUED

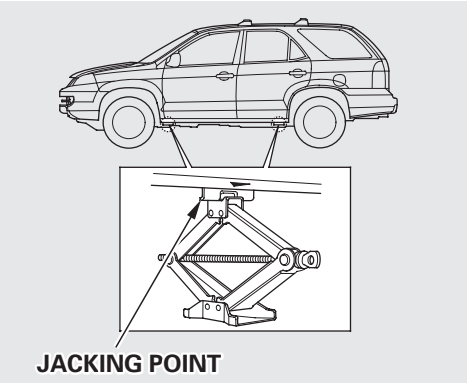

12. Locate the jacking point nearest the tire you need to change. It is pointed to by a △ mark molded into the underside of the body. Place the jack under the jacking point. Turn the end bracket clockwise until the top of the jack contacts the jacking point. Make sure the jacking point tab is resting in the jack notch.

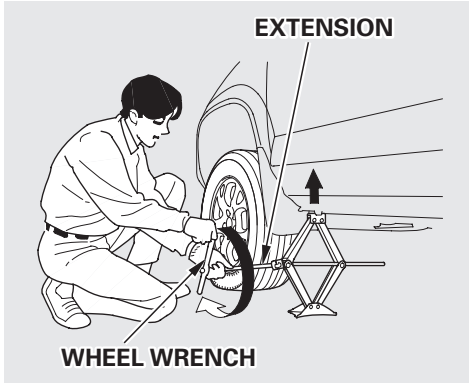

13. Use the extension and wheel wrench as shown to raise the vehicle until the flat tire is off the ground.

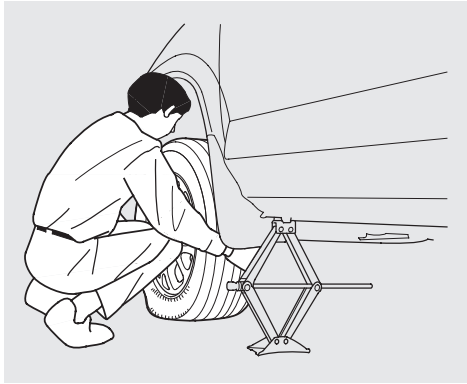

14. Remove the wheel nuts and flat tire. Temporarily place the flat tire on the ground with the outside surface of the wheel facing up. You could scratch the wheel if you put it face down.

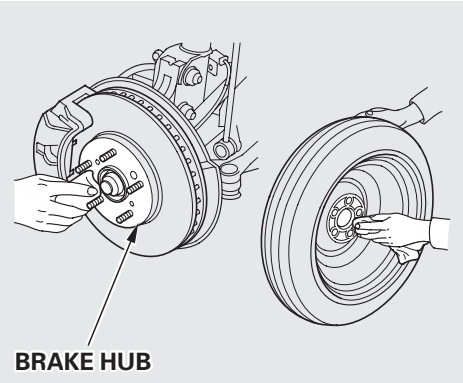

15. Before mounting the spare tire, wipe any dirt off the mounting surface of the wheel and hub with a clean cloth. Wipe the hub carefully, it may be hot from driving.

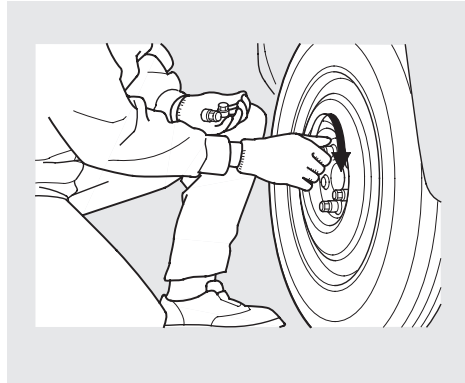

16. Put on the spare tire. Put the wheel nuts back on finger-tight, then tighten them in a crisscross pattern with the wheel wrench until the wheel is firmly against the hub. Do not try to tighten them fully.

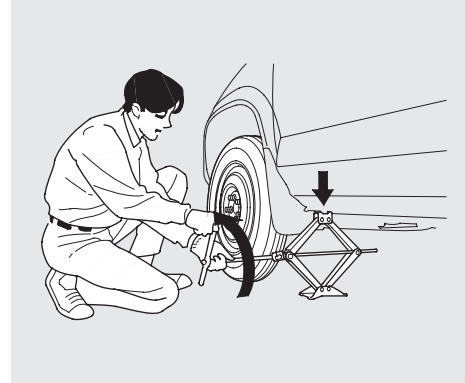

17. Lower the vehicle to the ground and remove the jack.

CONTINUED

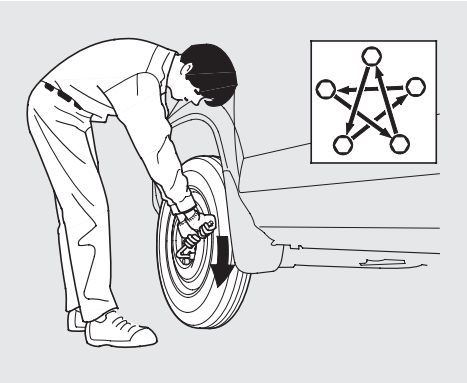

18. Tighten the wheel nuts securely in the same crisscross pattern. Have the wheel nut torque checked at the nearest automotive service facility.
    Tighten the wheel nuts to:
    80 lbf·ft (108 N·m , 11 kgf·m)

19. Remove the center cap from the flat tire.

20. Place the flat tire face up under the hoist.

21. Insert the hoist bracket into the center hole of the flat tire.

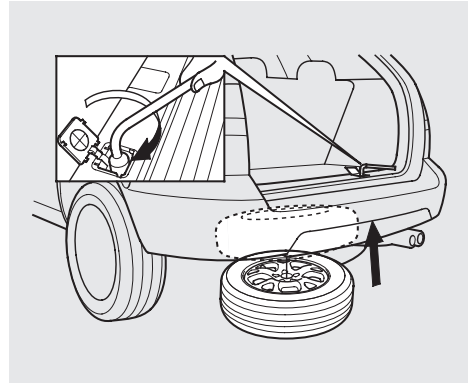

22. Slowly turn the wheel wrench clockwise to take up the slack of the hoist cable. Make sure the bracket is seated in the center hole of the spare tire.

23. Turn the wheel wrench clockwise until the flat tire rests against the underbody of the vehicle and you hear the hoist click.

NOTICE

Always raise the spare tire hoist, even if you are not stowing a tire. If the hoist is left down, it will be damaged during driving and need to be replaced.

25. Store the jack in its holder. Turn the jack's end bracket to lock it in place. Store the tools, and install the cover.

If Your Engine Won't Start

Diagnosing why your engine won't start falls into two areas, depending on what you hear when you turn the key to START (III):

- You hear nothing, or almost nothing. The engine's starter motor does not operate at all, or operates very slowly.
- You can hear the starter motor operating normally, or the starter motor sounds like it is spinning faster than normal, but the engine does not start up and run.

Nothing Happens or the Starter Motor Operates Very Slowly
When you turn the ignition switch to START (III), you do not hear the normal noise of the engine trying to start. You may hear a clicking sound or series of clicks, or nothing at all. Check these things:

- Check the transmission interlock. The transmission must be in Park or Neutral or the starter will not operate.
- Turn the ignition switch to ON (II). Turn on the headlights and check their brightness. If the headlights are very dim or don't light at all, the battery is discharged. See **Jump Starting** on page 323 .
- Turn the ignition switch to START (III). If the headlights do not dim, check the condition of the fuses. If the fuses are OK, there is probably something wrong with the electrical circuit for the ignition switch or starter motor. You will need a qualified technician to determine the problem. (See **Emergency Towing** on page 338 .)

  If the headlights dim noticeably or go out when you try to start the engine, either the battery is discharged or the connections are corroded. Check the condition of the battery and terminal connections (see page 280). You can then try jump starting the vehicle from a booster battery (see page 323).

The Starter Operates Normally
In this case, the starter motor's speed sounds normal, or even faster than normal, when you turn the ignition switch to START (III), but the engine does not run.

- Are you using the proper starting procedure? Refer to **Starting the Engine** on page 210 .

- Your vehicle has the Immobilizer System. You should use a properly-coded master or valet key to start the engine (see page 81). A key that is not properly coded will cause the immobilizer system indicator in the dash panel to blink rapidly.

- Do you have fuel? Turn the ignition switch to ON (II) for a minute and watch the fuel gauge. The low fuel level warning light may not be working, so you were not reminded to fill the tank.

- There may be an electrical problem, such as no power to the fuel pump. Check all the fuses (see page 336).

If you find nothing wrong, you will need a qualified technician to find the problem. See **Emergency Towing** on page 338 .

Jump Starting

If your vehicle's battery has run down, you may be able to start the engine by using a booster battery. Although this seems like a simple procedure, you should take several precautions.

⚠WARNING

A battery can explode if you do not follow the correct procedure, seriously injuring anyone nearby.

Keep all sparks, open flames, and smoking materials away from the battery.

You cannot start your Acura by pushing or pulling it.

To jump start your vehicle, follow these directions closely:

1. Open the hood and check the physical condition of the battery (see page 280). In very cold weather, check the condition of the electrolyte. If it seems slushy or like ice, do not try jump starting until it thaws.

NOTICE

If a battery sits in extreme cold, the electrolyte inside can freeze. Attempting to jump start with a frozen battery can cause it to rupture.

2. Turn off all the electrical accessories: heater, A/C, climate control, stereo system, lights, etc. Put the transmission in Neutral or Park and set the parking brake.

CONTINUED

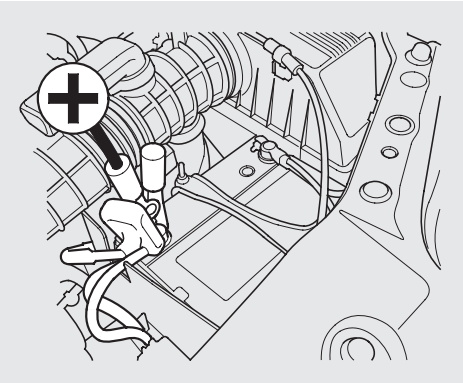

3. Connect one jumper cable to the positive (+) terminal on your Acura's battery. Connect the other end to the positive (+) terminal on the booster battery.

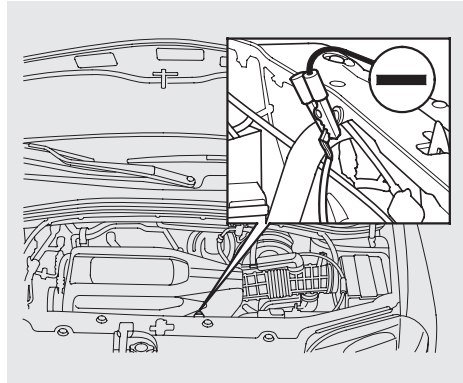

4. Connect the second jumper cable to the negative (−) terminal on the booster battery. Connect the other end to the grounding strap as shown. Do not connect this jumper cable to any other part of the engine.

5. If the booster battery is in another vehicle, have an assistant start that vehicle and run it at a fast idle.

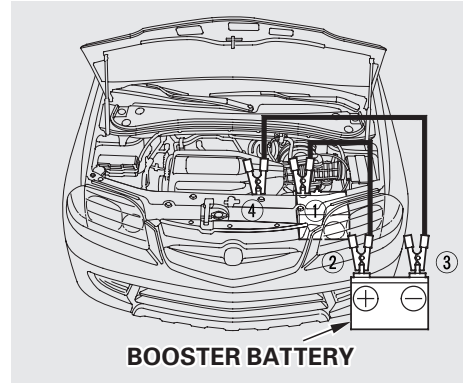

6. Start your vehicle. If the starter motor still operates slowly, check the jumper cable connections to make sure they have good metal-to-metal contact.

7. Once your vehicle is running, disconnect the negative cable from your vehicle, then from the booster battery. Disconnect the positive cable from your vehicle, then the booster battery.

Keep the ends of the jumper cables away from each other and any metal on the vehicle until all are disconnected. Otherwise, you may cause an electrical short.

If Your Engine Overheats

The pointer of your vehicle's temperature gauge should stay in the midrange under most conditions. It may go higher if you are driving up a long steep hill on a very hot day. If it climbs to the red mark, you should determine the reason.

NOTICE

Driving with the temperature gauge pointer at the red mark can cause serious damage to your engine.

Your vehicle can overheat for several reasons, such as lack of coolant or a mechanical problem. The only indication may be the temperature gauge climbing to or above the red mark. Or you may see steam or spray coming from under the hood. In either case, you should take immediate action.

⚠ WARNING

Steam and spray from an overheated engine can seriously scald you.

Do not open the hood if steam is coming out.

1. Safely pull to the side of the road. Put the transmission in Neutral or Park and set the parking brake. Turn off the heating and cooling/climate control system and all other accessories. Turn on the hazard warning indicators.

2. If you see steam and/or spray coming from under the hood, turn off the engine.

3. If you do not see steam or spray, leave the engine running and watch the temperature gauge. If the high heat is due to overloading (climbing a long, steep hill on a hot day with the A/C running, for example), the engine should start to cool down almost immediately. If it does, wait until the temperature gauge comes down to the midpoint then continue driving.

CONTINUED

4. If the temperature gauge stays at the red mark, turn off the engine.

5. Wait until you see no more signs of steam or spray, then open the hood.

6. Look for any obvious coolant leaks, such as a split radiator hose. Everything is still extremely hot, so use caution. If you find a leak, it must be repaired before you continue driving (see **Emergency Towing** on page 338).

7. If you don't find an obvious leak, check the coolant level in the radiator reserve tank (see page 193). If the level is below the MIN mark, add coolant to halfway between the MIN and MAX marks.

8. If there was no coolant in the reserve tank, you may also have to add coolant to the radiator. Let the engine cool down until the pointer reaches the middle of the temperature gauge, or lower, before checking the radiator.

⚠WARNING

Removing the radiator cap while the engine is hot can cause the coolant to spray out, seriously scalding you.

Always let the engine and radiator cool down before removing the radiator cap.

9. Using gloves or a large heavy cloth, turn the radiator cap counterclockwise, without pushing down, to the first stop. This releases any remaining pressure in the cooling system. After the pressure releases, push down on the cap and turn it until it comes off.

10. Start the engine and set the temperature control dial to maximum (climate control to FULL AUTO at 90℉/32℃). Add coolant to the radiator up to the base of the filler neck. If you do not have the proper coolant mixture available, you can add plain water. Remember to have the cooling system drained and refilled with the proper mixture as soon as you can.

11. Put the radiator cap back on tightly. Run the engine and watch the temperature gauge. If it goes back to the red mark, the engine needs repair. (See **Emergency Towing** on page 338.)

12. If the temperature stays normal, check the coolant level in the radiator reserve tank. If it has gone down, add coolant to the MAX mark. Put the cap back on tightly.

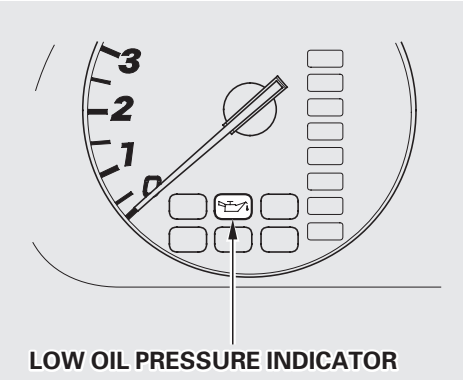

LOW OIL PRESSURE INDICATOR

This indicator should light when the ignition switch is ON (II), and go out after the engine starts. It should never come on when the engine is running. If it starts flashing, it indicates that the oil pressure dropped very low for a moment, then recovered. If the indicator stays on with the engine running, it shows that the engine has lost oil pressure and serious engine damage is possible. In either case, you should take immediate action.

NOTICE

Running the engine with low oil pressure can cause serious mechanical damage almost immediately. Turn off the engine as soon as you can safely get the vehicle stopped.

1. Safely pull off the road and shut off the engine. Turn on the hazard warning indicators.

2. Let the vehicle sit for a minute. Open the hood and check the oil level (see page 192). Although oil level and oil pressure are not directly connected, an engine that is very low on oil can lose pressure during cornering and other driving maneuvers.

3. If necessary, add oil to bring the level back to the full mark on the dipstick (see page 198).

4. Start the engine and watch the oil pressure indicator. If the light does not go out within ten seconds, turn off the engine. There is a mechanical problem that needs to be repaired before you can continue driving. (See **Emergency Towing** on page 338 .)

Charging System Indicator

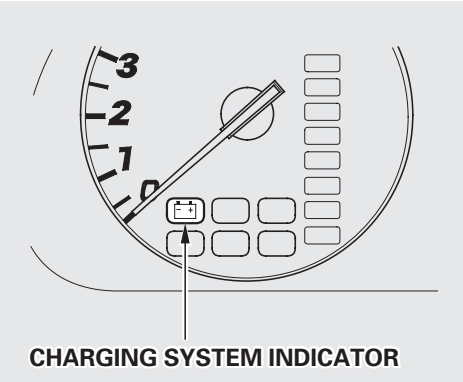

This indicator should come on when the ignition switch is ON (II), and go out after the engine starts. If it comes on brightly when the engine is running, it indicates that the charging system has stopped charging the battery.

Immediately turn off all electrical accessories: radio, heater, A/C, climate control, rear defogger, cruise control, etc. Try not to use other electrically-operated controls such as the power windows. Keep the engine running and take extra care not to stall it. Starting the engine will discharge the battery rapidly.

By eliminating as much of the electrical load as possible, you can drive several miles (kilometers) before the battery is too discharged to keep the engine running. Drive to a service station or garage where you can get technical assistance.

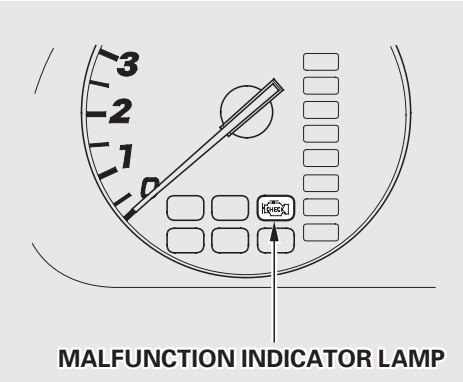

This indicator comes on when you turn the ignition switch ON (II) and goes off after the engine starts. If it comes on at any other time, it indicates one of the engine's emissions control systems may have a problem. Even though you may feel no difference in your vehicle's performance, it can reduce your fuel economy and cause your vehicle to put out excessive emissions. Continued operation may cause serious damage.

If you have recently refueled your vehicle, the cause of this indicator coming on could be a loose or missing fuel fill cap. Check the cap and tighten it until it clicks several times. Replace the fuel fill cap if it is missing. Tightening the cap will not make the indicator turn off immediately; it takes at least three driving trips.

If the indicator remains on past three driving trips, or the fuel cap was not loose or missing, have the vehicle checked by the dealer as soon as possible. Drive moderately until the dealer has inspected the problem. Avoid full-throttle acceleration and driving at high speed.

You should also have the dealer inspect your vehicle if this indicator comes on repeatedly, even though it may turn off as you continue driving.

NOTICE

If you keep driving with the malfunction indicator lamp on, you can damage your vehicle's emissions controls and engine. Those repairs may not be covered by your vehicle's warranties.

This indicator may also come on along with the "D5" indicator.

Readiness Codes

Your vehicle has certain "readiness codes" that are part of the on-board diagnostics for the emissions systems. In some states, part of the emissions testing is to make sure these codes are set. If they are not set, the test cannot be completed.

If your vehicle's battery has been disconnected or gone dead, these codes are erased. It takes several days of driving under various conditions to set the codes again.

If possible, do not take your vehicle for a state emissions test until the readiness codes are set. To check if they are set, turn the ignition ON (II), but do not start the engine. The Malfunction Indicator Lamp will come on for 20 seconds. If it then goes off, the readiness codes are set. If it blinks 5 times, the readiness codes are not set. Refer to State Emissions Testing for more information. (See page 349 .)

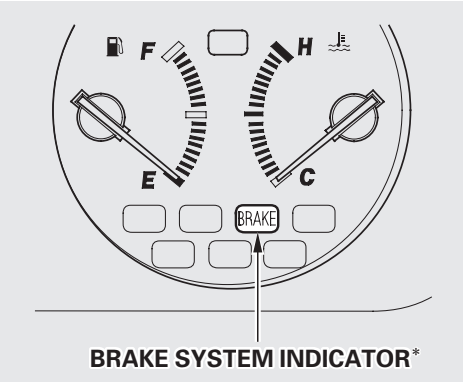

The Brake System Indicator comes on when you turn the ignition ON (II). If the parking brake is not set, it goes off after you start the engine. If the parking brake is set, it goes off when you fully release the parking brake with the engine running.

If it comes on at any other time, it indicates a problem with the vehicle's brake system. In most cases, the problem is a low fluid level in the brake fluid reservoir. Press lightly on the brake pedal to see if it feels normal. If it does, check the brake fluid level the next time you stop at a service station (see page 250). If the fluid level is low, take the vehicle to your dealer and have the brake system inspected for leaks or worn brake pads.

However, if the brake pedal does not feel normal, you should take immediate action. Because of the brake system's dual-circuit design, a problem in one part of the system will still give you braking at two wheels. You will feel the brake pedal go down much farther before the vehicle begins to slow down, and you will have to press harder on the pedal. The distance needed to stop will be much longer.

Slow down by shifting to a lower gear, and pull to the side of the road when it is safe. Because of the longer distance needed to stop, it is hazardous to drive the vehicle. You should have it towed, and repaired as soon as possible. (See **Emergency Towing** on page 338 .)

If you must drive the vehicle a short distance in this condition, drive slowly and cautiously.

Fuses

All the electrical circuits in your vehicle have fuses to protect them from a short circuit or overload. These fuses are located in three fuse boxes.

DRIVER'S SIDE INTERIOR

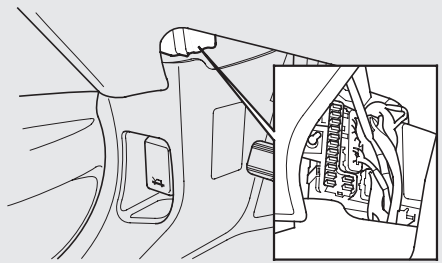

The interior fuse boxes are located underneath the dashboard on each side.

PASSENGER'S SIDE INTERIOR

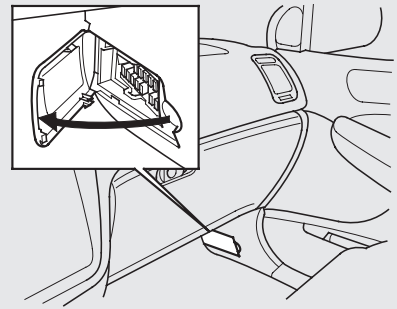

To open the fuse box on the passenger's side, pull the right edge of the cover.

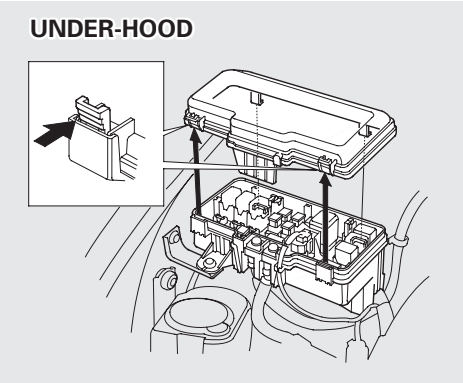

The primary under-hood fuse box is located in the back of the engine compartment on the passenger's side. To open it, push the tabs as shown.

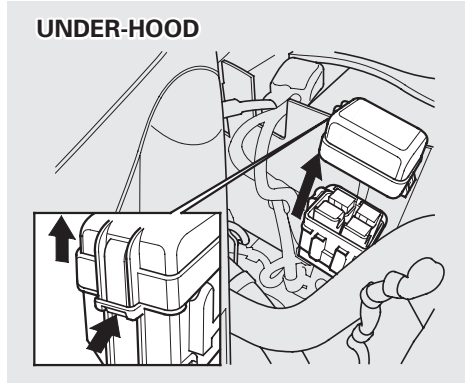

The secondary fuse box is in the engine compartment next to the battery.

Checking and Replacing Fuses

If something electrical in your vehicle stops working, the first thing you should check for is a blown fuse. Determine from the chart on pages 336 and 337 , or the diagram on the fuse box lid (the diagram for the driver's side interior fuse box is on the kick panel below the fuse box), which fuse or fuses control that component. Check those fuses first, but check all the fuses before deciding that a blown fuse is not the cause. Replace any blown fuses and check the component's operation.

1. Turn the ignition switch to LOCK (0). Make sure the headlights and all other accessories are off.

2. Remove the cover from the fuse box.

CONTINUED

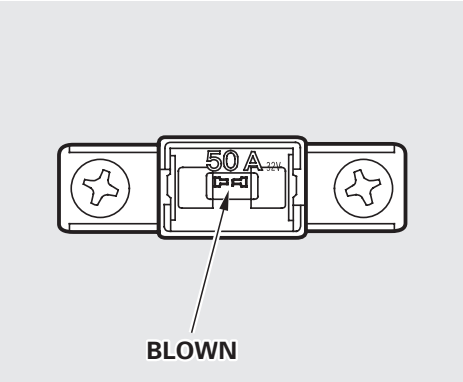

3. Check each of the large fuses in the primary under-hood fuse box by looking through the top at the wire inside. Removing these fuses requires a Phillips-head screw-driver.

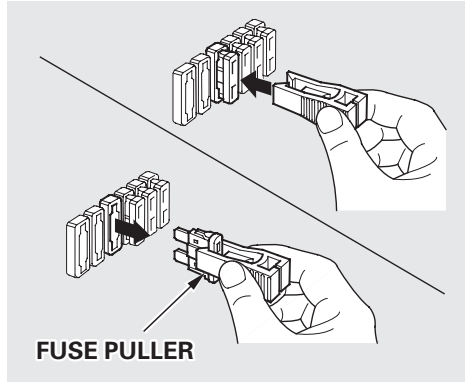

4. Check the smaller fuses in the under-hood fuse box and all the fuses in the interior fuse boxes by pulling out each fuse with the fuse puller provided in the primary under-hood fuse box.

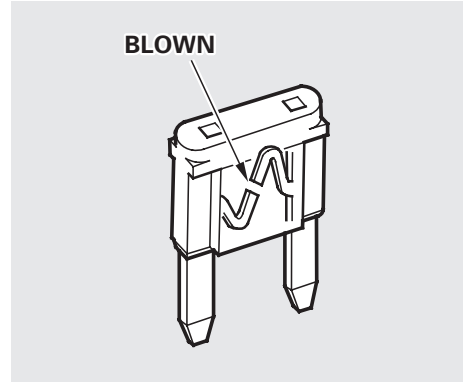

5. Look for a burned wire inside the fuse. If it is burned, replace it with one of the spare fuses of the same rating or lower.

If you cannot drive the vehicle without fixing the problem, and you do not have a spare fuse, take a fuse of the same rating or a lower rating from one of the other circuits. Make sure you can do without that circuit temporarily (such as the accessory power socket or radio).

If you replace the blown fuse with a spare fuse that has a lower rating, it might blow out again. This does not indicate anything wrong. Replace the fuse with one of the correct rating as soon as you can.

NOTICE

Replacing a fuse with one that has a higher rating greatly increases the chances of damaging the electrical system. If you do not have a replacement fuse with the proper rating for the circuit, install one with a lower rating.

6. If the replacement fuse of the same rating blows in a short time, there is probably a serious electrical problem in your vehicle. Leave the blown fuse in that circuit and have your vehicle checked by a qualified mechanic.

If the radio fuse is removed, the audio system will disable itself. The next time you turn on the radio you will see " CODE " in the frequency display. Use the Preset buttons to enter the five-digit code (see page 190).

CONTINUED

Fuses

PRIMARY UNDER-HOOD FUSE BOX

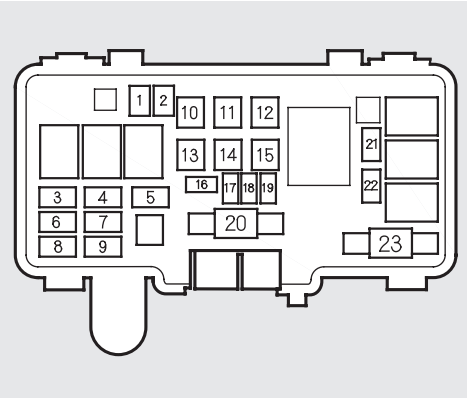

No.	Amps.	Circuits Protected
1	20 A	Spare Fuse
2	30 A	Spare Fuse
3	20 A	Right Headlight
4	20 A	ACG S
5	15 A	Hazard
6	—	Not used
7	20 A	Stop
8	20 A	Left Headlight
9	20 A	Radio
10	40 A	Power Window Motor
11	30 A	Rear A/C
12	30 A	Rear Defroster
13	40 A	Back Up, ACC

No.	Amps.	Circuits Protected
14	40 A	Power Seat
15	40 A	Heater Motor
16	30 A	Cooling Fan
17	7.5 A	Spare Fuse
18	10 A	Spare Fuse
19	15 A	Spare Fuse
20	120 A	Battery
21	30 A	Condenser Fan
22	7.5 A	MG Clutch
23	50 A	IGI Main
24	20 A	Fog Lights

SECONDARY UNDER-HOOD FUSE BOX

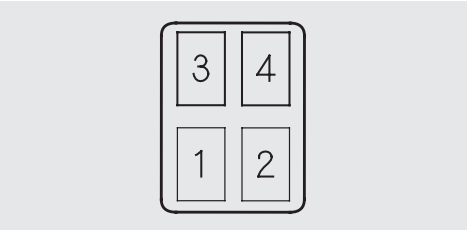

No.	Amps.	Circuits Protected
1	40 A	ABS Motor
2	20 A	ABS F/S
3	20 A	Rear ACC Socket
4	20 A	4WD

INTERIOR FUSE BOX

Driver's Side

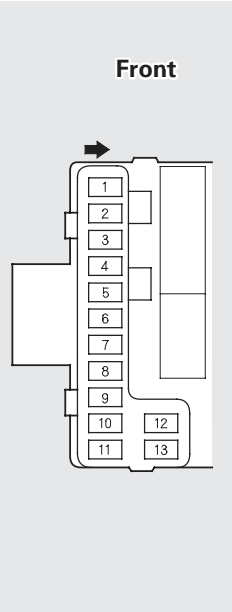

No.	Amps.	Circuits Protected
1	15 A	Fuel Pump
2	10 A	SRS
3	7.5 A	Heater Control, A/C Clutch Relay, Cooling Fan Relay
4	7.5 A	Power Mirror
5	10 A	Daytime Running Light*/Rear Wiper
6	15 A	ECU (PCM), Cruise Control
7	7.5 A	OPDS
8	7.5 A	ACC Relay
9	10 A	Back-up Lights, Instrument Lights
10	7.5 A	Turn Signals
11	15 A	IG Coil
12	30 A	Front Wiper
13	7.5 A	Starter Signal

∗ : On Canadian models

Passenger's Side

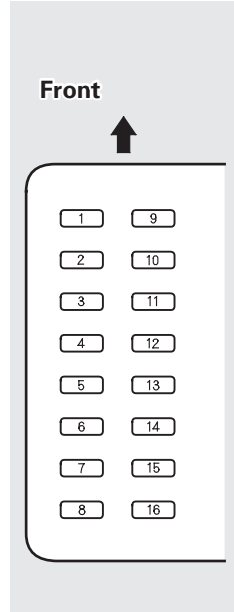

No.	Amps.	Circuits Protected
1	30 A	Sun Roof
2	20 A	Driver's Power Seat Reclining
3	20 A	Passenger's Power Seat Sliding
4	20 A	Driver's Power Seat Sliding
5	20 A	Passenger's Power Seat Reclining
6	10 A	Daytime Running Light*
7	20 A	Driver's side Rear Power Window
8	20 A	Front Passenger's Power Window
9	15 A	Front Accessory Socket
10	15 A	Small Light
11	10 A	Interior Light, Radio
12	20 A	Power Door Lock
13	7.5 A	Back Up
14	20 A	Heated Seat
15	20 A	Driver's Power Window
16	20 A	Passenger's Side Rear Power Window

∗1 : Canadian models

Emergency Towing

If your vehicle needs to be towed, call a professional towing service or, if you belong to one, an organization that provides roadside assistance. Never tow your vehicle behind another vehicle with just a rope or chain. It is very dangerous.

There are three popular types of professional towing equipment.

Flat-bed Equipment — The operator loads your vehicle on the back of a truck. **This is the only way to transport your vehicle.** Any other method of towing will damage the drive system. When you contact the towing agency, inform them that a flat-bed is required.

NOTICE

Towing a MDX with only two tires on the ground will damage parts of the 4WD system. It should be transported on a flat-bed truck or trailer.

Wheel Lift Equipment — The tow truck uses two pivoting arms that go under the tires (front or rear) and lift them off the ground. The other two tires remain on the ground. **Never tow your vehicle with wheel lift equipment.**

Sling-type Equipment — The tow truck uses metal cables with hooks on the ends. These hooks go around parts of the frame or suspension and cables lift that end of the vehicle off the ground. Your vehicle's suspension and body can be seriously damaged. **This method of towing your MDX is unacceptable.**

Refer to **Towing Your Vehicle Behind a Motorhome** on page 238 for non-emergency towing information.

Technical Information

The diagrams in this section give you the dimensions and capacities of your Acura, and the locations of the identification numbers. It also includes information you should know about your vehicle's tires and emissions control systems.

Identification Numbers 340
Specifications 342
DOT Tire Quality Grading 344
Uniform Tire Quality Grading 344
Treadwear 344
Traction..... 344
Temperature 345
Oxygenated Fuels..... 346
Driving in Foreign Countries 347
Emissions Controls..... 348
The Clean Air Act..... 348
Crankcase Emissions Control System..... 348
Evaporative Emissions Control System..... 348
Exhaust Emissions Controls 349
PGM-FI System 349
Ignition Timing Control System..... 349
Exhaust Gas Recirculation (EGR) System..... 349
Three Way Catalytic Converter..... 349
Replacement Parts..... 349
Three Way Catalytic Converter... 350
State Emissions Testing 351
Testing of Readiness Codes..... 351

Identification Numbers

Your vehicle has several identifying numbers located in various places.

The Vehicle Identification Number (VIN) is the 17-digit number your Acura dealer uses to register your vehicle for warranty purposes. It is also necessary for licensing and insuring your vehicle. The easiest place to find the VIN is on a plate fastened to the top of the dashboard. You can see it by looking through the windshield on the driver's side. It is also on the Certification label attached to the driver's doorjamb, and is stamped on the engine compartment bulkhead. The VIN is also provided in bar code on the Certification label.

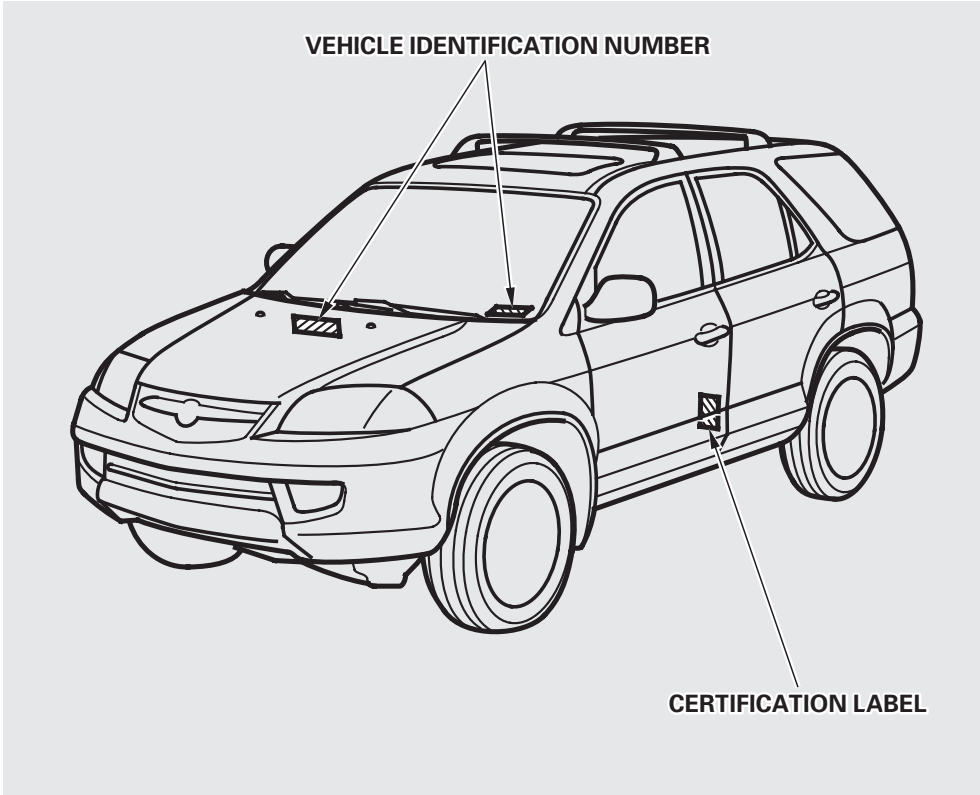

The Engine Number is stamped into the engine block. It is on the front.

The Transmission Number is on a label on top of the transmission.

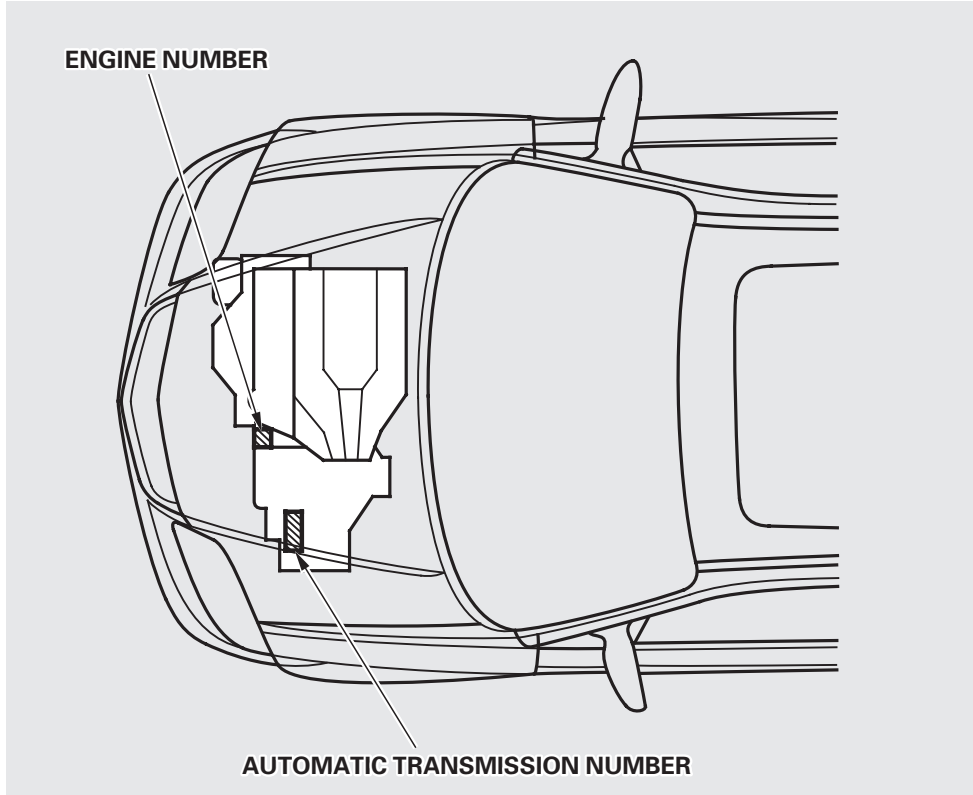

Specifications

Dimensions

Length		188.5 in (4,789 mm)
Width		76.3 in (1,938 mm)
Height	Standard	68.7 in (1,744 mm)
	Premium	71.3 in (1,811 mm)
Wheelbase		106.3 in (2,700 mm)
Track	Front	66.3 in (1,685 mm)
	Rear	66.5 in (1,690 mm)

Weights

Gross vehicle weight rating	See the tire information label attached to the driver's doorjamb.
Gross combined weight*2 rating (GCWR)	9,700 lbs (4,400 kg)*1

*1 : Equipped with transmission fluid cooler and power steering fluid cooler.
*2 : The GCWR must be reduced 2 percent for every 1,000 feet (305 meters) of elevation.

Air Conditioning

Refrigerant type	HFC-134a (R-134a)
Charge quantity	24.7－26.5 oz (700－750 g)
Lubricant type	ND-OIL8

Capacities

Fuel tank		Approx. 19.3 US gal (73 ℓ , 16.1 Imp gal)
Engine coolant	Change*1	2.01 US gal (7.6 ℓ , 1.67 Imp gal)
	Total	2.30 US gal (8.7 ℓ , 1.91 Imp gal)
Engine oil	Change*2 Including filter	5.0 US qt (4.7 ℓ , 4.1 Imp qt)
	Without filter	4.5 US qt (4.3 ℓ , 3.8 Imp qt)
	Total	5.8 US qt (5.5 ℓ , 4.8 Imp qt)
Automatic transmission fluid	Change	4.0 US qt (3.8 ℓ , 3.3 Imp qt)
	Total	9.0 US qt (8.5 ℓ , 7.5 Imp qt)
Rear differential fluid	Change	3.0 US qt (2.8 ℓ , 2.5 Imp qt)
Windshield washer reservoir		4.8 US qt (4.5 ℓ , 4.0 Imp qt)

*1 : Including the coolant in the reserve tank and that remaining in the engine.
Reserve tank capacity:
0.16 US gal (0.6 ℓ , 0.13 Imp gal)
*2 : Excluding the oil remaining in the engine.

Lights

Headlights	High	12 V — 60 W (HB3)
	Low	12 V — 51 W (HB4)
Front side marker lights		12 V — 3 CP
Front turn signal lights/ Parking lights		12 V — 50 CP
Fog light		12 V — 51 W (HB4)
Rear side marker lights		12 V — 2 CP (3.8 W)
Rear turn signal/hazard lights		12 V — 24 CP (27 W)
Stop/Taillights		12 V — 21 W/5 W
Backup lights		12 V — 21 CP (18 W)
License plate lights		12 V — 3 CP
High-mount brake light		12 V — 21 W
Individual map lights	Front	12 V — 5 W
	Rear	12 V — 7 W
Cargo area light		12 V — 8 W
Tailgate light		12 V — 5 W
Vanity mirror light		12 V — 1.1 W
Door light		12 V — 3.8 W

Battery

Capacity	12 V — 65 AH/20 HR

Fuses

Interior	Driver's side	See page 337 or the fuse label attached to the dashboard.
	Passenger's side	See page 337 or the fuse label attached to the inside of the fuse box door under the dashboard.
Under-hood		See page 336 or the fuse box cover.

Engine

Type	Water cooled 4-stroke SOHC, 6-cylinder V6 gasoline engine
Bore x Stroke	3.50 x 3.66 in (89.0 x 93.0 mm)
Displacement	211.8 cu-in (3,471 cm^3)
Compression ratio	10.0 : 1
Spark plugs	See spark plug maintenance section page 279 .

Alignment

Toe-in	Front	0.00 in (0.0 mm)
	Rear	0.00 in (0.0 mm)
Camber	Front	—0°50′
	Rear	—0°50′
Caster	Front	1°88′

Tires

Size	Front/Rear	P235/65R17 103T
	Spare	T155/90D16 110M
Pressure	Front/Rear	32 psi (220 kPa , 2.2 kgf/cm^2)
	Spare	60 psi (420 kPa , 4.2 kgf/cm^2)

DOT Tire Quality Grading (U.S. Vehicles)

The tires on your vehicle meet all U.S. Federal Safety Requirements. All tires are also graded for treadwear, traction, and temperature performance according to Department of Transportation (DOT) standards. The following explains these gradings.

Uniform Tire Quality Grading

Quality grades can be found where applicable on the tire sidewall between the tread shoulder and the maximum section width. For example:

Treadwear 200
Traction AA
Temperature A

All passenger car tires must conform to Federal Safety Requirements in addition to these grades.

Treadwear
The treadwear grade is a comparative rating based on the wear rate of the tire when tested under controlled conditions on a specified government test course. For example, a tire graded 150 would wear one and one-half (1 1/2) times as well on the government course as a tire graded 100. The relative performance of tires depends upon the actual conditions of their use, however, and may depart significantly from the norm due to variations in driving habits, service practices and differences in road characteristics and climate.

Traction – AA, A, B, C
The traction grades, from highest to lowest, are AA, A, B, and C. Those grades represent the tire's ability to stop on wet pavement as measured under controlled conditions on specified government test surfaces of asphalt and concrete. A tire marked C may have poor traction performance.
Warning: The traction grade assigned to this tire is based on straight-ahead braking traction tests, and does not include acceleration, cornering, hydroplaning, or peak traction characteristics.

Temperature — A, B, C
The temperature grades are A (the highest), B, and C, representing the tire's resistance to the generation of heat and its ability to dissipate heat when tested under controlled conditions on a specified indoor laboratory test wheel. Sustained high temperature can cause the material of the tire to degenerate and reduce tire life, and excessive temperature can lead to sudden tire failure. The grade C corresponds to a level of performance which all passenger car tires must meet under the Federal Motor Vehicle Safety Standard No. 109. Grades B and A represent higher levels of performance on the laboratory test wheel than the minimum required by law.

Warning: The temperature grade for this tire is established for a tire that is properly inflated and not overloaded. Excessive speed, underinflation, or excessive loading, either separately or in combination, can cause heat buildup and possible tire failure.

Oxygenated Fuels

Some conventional gasolines are being blended with alcohol or an ether compound. These gasolines are collectively referred to as oxygenated fuels. To meet clean air standards, some areas of the United States and Canada use oxygenated fuels to help reduce emissions.

If you use an oxygenated fuel, be sure it is unleaded and meets the minimum octane rating requirement.

Before using an oxygenated fuel, try to confirm the fuel's contents. Some states/provinces require this information to be posted on the pump.

The following are the U.S. EPA and Canadian CGSB approved percentages of oxygenates:

ETHANOL (ethyl or grain alcohol)
You may use gasoline containing up to 10 percent ethanol by volume. Gasoline containing ethanol may be marketed under the name "Gasohol."

MTBE (Methyl Tertiary Butyl Ether)
You may use gasoline containing up to 15 percent MTBE by volume.

METHANOL (methyl or wood alcohol)
Your vehicle was not designed to use fuel that contains methanol. Methanol can corrode metal parts in the fuel system, and also damage plastic and rubber components. This damage would not be covered by your warranties.

If you notice any undesirable operating symptoms, try another service station or switch to another brand of gasoline.

Fuel system damage or performance problems resulting from the use of an oxygenated fuel containing more than the percentages of oxygenates given above are not covered under warranty.

If you are planning to take your Acura outside the U.S., contact the tourist bureaus in the areas you will be traveling in to find out about the availability of unleaded gasoline with the proper octane rating.

If unleaded gasoline is not available, be aware that using leaded gasoline in your Acura will affect performance and fuel mileage, and damage its emissions controls. It will no longer comply with U.S. and Canadian emissions regulations, and will be illegal to operate in North America. To bring your vehicle back into compliance will require the replacement of several components, such as the oxygen sensors and the three way catalytic converter. These replacements are not covered under warranty.

Emissions Controls

The burning of gasoline in your vehicle's engine produces several by-products. Some of these are carbon monoxide (CO), oxides of nitrogen (NOx) and hydrocarbons (HC). Gasoline evaporating from the tank also produces hydrocarbons. Controlling the production of NOx, CO, and HC is important to the environment. Under certain conditions of sunlight and climate, NOx and HC react to form photochemical "smog." Carbon monoxide does not contribute to smog creation, but it is a poisonous gas.

The Clean Air Act
The United States Clean Air Act* sets standards for automobile emissions. It also requires that automobile manufacturers explain to owners how their emissions controls work and what to do to maintain them. This section summarizes how the emissions controls work. Scheduled maintenance is on page 230 .

* In Canada, Acura vehicles comply with the Canadian Motor Vehicle Safety Standards (CMVSS) for Emissions valid at the time they are manufactured.

Crankcase Emissions Control System
Your vehicle has a Positive Crankcase Ventilation System. This keeps gasses that build up in the engine's crankcase from going into the atmosphere. The Positive Crankcase Ventilation valve routes them from the crankcase back to the intake manifold. They are then drawn into the engine and burned.

Evaporative Emissions Control System
As gasoline evaporates in the fuel tank, an evaporative emissions control canister filled with charcoal adsorbs the vapor. It is stored in this canister while the engine is off. After the engine is started and warmed up, the vapor is drawn into the engine and burned during driving.

Onboard Refueling Vapor Recovery
The Onboard Refueling Vapor Recovery (ORVR) system captures the fuel vapors during refueling. The vapors are adsorbed in a canister filled with activated carbon. While driving, the fuel vapors are drawn into the engine and burned off.

Exhaust Emissions Controls

The exhaust emissions controls include four systems: PGM-FI, Ignition Timing Control, Exhaust Gas Recirculation and Three Way Catalytic Converter. These four systems work together to control the engine's combustion and minimize the amount of HC, CO, and NOx that comes out the tailpipe. The exhaust emissions control systems are separate from the crankcase and evaporative emissions control systems.

PGM-FI System

The PGM-FI System uses sequential multiport fuel injection.
It has three subsystems: Air Intake, Engine Control, and Fuel Control. The Powertrain Control Module (PCM) uses various sensors to determine how much air is going into the engine. It then controls how much fuel to inject under all operating conditions.

Ignition Timing Control System

This system constantly adjusts the ignition timing, reducing the amount of HC, CO and NOx produced.

Exhaust Gas Recirculation (EGR) System

The Exhaust Gas Recirculation (EGR) system takes some of the exhaust gas and routes it back into the intake manifold. Adding exhaust gas to the air/fuel mixture reduces the amount of NOx produced when the fuel is burned.

Three Way Catalytic Converter

The three way catalytic converter is in the exhaust system. Through chemical reactions, it converts HC, CO, and NOx in the engine's exhaust to carbon dioxide (CO_2), dinitrogen (N_2), and water vapor.

Replacement Parts

The emissions control systems are designed and certified to work together in reducing emissions to levels that comply with the Clean Air Act. To make sure the emissions remain low, you should use only new Genuine Acura replacement parts or their equivalent for repairs. Using lower quality parts may increase the emissions from your vehicle.

The emissions control systems are covered by warranties separate from the rest of your vehicle. Read your warranty manual for more information.

Three Way Catalytic Converter

The three way catalytic converter contains precious metals that serve as catalysts, promoting chemical reactions to convert the exhaust gasses without affecting the metals. The catalytic converter is referred to as a three-way catalyst, since it acts on HC, CO, and NOx. A replacement unit must be an original Acura part or its equivalent.

The three way catalytic converter must operate at a high temperature for the chemical reactions to take place. It can set on fire any combustible materials that come near it. Park your vehicle away from high grass, dry leaves, or other flammables.

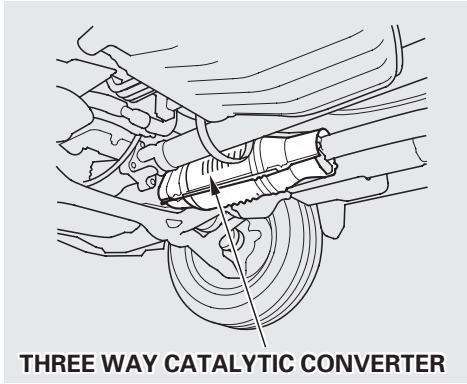
THREE WAY CATALYTIC CONVERTER

A defective three way catalytic converter contributes to air pollution, and can impair your engine's performance. Follow these guidelines to protect your vehicle's three way catalytic converter.

- Always use unleaded gasoline. Even a small amount of leaded gasoline can contaminate the catalyst metals, making the three way catalytic converter ineffective.
- Keep the engine tuned-up.
- Have your vehicle diagnosed and repaired if it is misfiring, backfiring, stalling, or otherwise not running properly.

Testing of Readiness Codes
If you take your vehicle for a state emissions test shortly after the battery has been disconnected or gone dead, it may not complete the test. This is because of certain "readiness codes" that must be set in the on-board diagnostics for the emissions systems. These codes are erased when the battery is disconnected, and set again only after several days of driving under a variety of conditions.

If the testing facility determines that the readiness codes are not set, you will be requested to return at a later date to complete the test. If you must get the vehicle re-tested within the next two or three days, you can condition the vehicle for re-testing by doing the following.

- Make sure the gas tank is nearly, but not completely, full (around 3/4).
- Make sure the vehicle has been parked with the engine off for 8 hours or more.
- Make sure the ambient temperature is between 20° and 95°F.
- Without touching the accelerator pedal, start the engine and let it idle for 20 seconds.
- Keep the vehicle in Park . Increase the engine speed to 2,000 rpm and hold it there until the temperature gauge rises to at least 1/4 of the scale (approximately 3 minutes).
- Select a nearby lightly traveled major highway where you can maintain a speed of 50 to 60 mph for at least 20 minutes. Drive on the highway in D5. Do not use the cruise control. When traffic allows, drive for 90 seconds without moving the accelerator pedal. (Vehicle speed may vary slightly; this is okay.) If you cannot do this for a continuous 90 seconds because of traffic conditions, drive for at least 30 seconds, then repeat it two more times (for a total of 90 seconds).

- Then drive in city/suburban traffic for at least 10 minutes. When traffic conditions allow, let the vehicle coast for several seconds without using the accelerator pedal or the brake pedal.

  If the testing facility determines the readiness codes are still not set, see your Acura dealer.

Warranty and Customer Relations

Customer Relations Information 354
Canada Zone Office Map 355
Warranty Coverages 356
Reporting Safety Defects (U.S. Vehicles) 357
Authorized Manuals 358

Customer Relations Information

Acura dealership personnel are trained professionals. They should be able to answer all your questions. If you encounter a problem that your dealership does not solve to your satisfaction, please discuss it with the dealership's management. The Service Manager or General Manager can help. Almost all problems are solved in this way.

If you are dissatisfied with the decision made by the dealership's management, contact the Acura Customer Relations Office.

U.S. Owners:
Acura Automobile Division
Client Services Office
American Honda Motor Co., Inc.
1919 Torrance Blvd.
Torrance, CA 90501-2746

or telephone: (800) 382-2238

In Puerto Rico and the U.S. Virgin Islands:

Vortex Motor Corp.
Bella International
P.O. Box 190816
San Juan, PR 00919-0816
(787) 250-4327

Canadian Owners:
Refer to the Map on the next page.

When you call or write, please give us this information:

- Vehicle Identification Number (see page 340)
- Name and address of the dealer who services your vehicle
- Date of purchase
- Mileage on your vehicle
- Your name, address, and telephone number
- A detailed description of the problem
- Name of the dealer who sold the vehicle to you

Canada Zone Office Map

CUSTOMER RELATIONS
RELATIONS AVEC LA CLIENTÈLE

Honda Canada Inc.
715 Milner Avenue
Toronto, ON
M1B 2K8

Tel: 1-888-9-ACURA-9

Fax: Toll-free 1-877-939-0909
Toronto (416) 287-4776

Warranty Coverages

U.S. Owners
Your new Acura is covered by these warranties:

New Car Limited Warranty — covers your new vehicle, except for the battery, emissions control systems and accessories, against defects in materials and workmanship.

Emissions Control Systems Defects Warranty and Emissions Performance Warranty — these two warranties cover your vehicle's emissions control systems. Time, mileage, and coverage are conditional. Please read the warranty manual for exact information.

Original Equipment Battery Limited Warranty — this warranty gives up to 100 percent credit toward a replacement battery.

Seat Belt Limited Warranty — a seat belt that fails to function properly is covered for the useful life of the vehicle.

Rust Perforation Limited Warranty — all exterior body panels are covered for rust-through from the inside for the specified time period with no mileage limit.

Accessory Limited Warranty — Genuine Acura Accessories are covered under this warranty. Time and mileage limits depend on the type of accessory and other factors. Please read your warranty manual for details.

Replacement Parts Limited Warranty — covers all Genuine Acura replacement parts against defects in materials and workmanship.

Replacement Battery Limited Warranty — provides prorated coverage for a replacement battery purchased from an Acura dealer.

Replacement Muffler Lifetime Limited Warranty — provides coverage for as long as the purchaser of the muffler owns the vehicle.

Restrictions and exclusions apply to all these warranties. Please read the 2001 Acura Warranty Information booklet that came with your car for precise information on warranty coverages. Your Acura's original tires are covered by their manufacturer. Tire warranty information is in a separate booklet.

Canadian Owners
Please refer to the 2001 Warranty Manual that came with your car.

If you believe that your vehicle has a defect which could cause a crash or could cause injury or death, you should immediately inform the National Highway Traffic Safety Administration (NHTSA) in addition to notifying Acura Automobile Division, American Honda Motor Co., Inc.

If NHTSA receives similar complaints, it may open an investigation, and if it finds that a safety defect exists in a group of vehicles, it may order a recall and remedy campaign. However, NHTSA cannot become involved in individual problems between you, your dealer, or Acura Automobile Division, American Honda Motor Co., Inc.

To contact NHTSA, you may either call the Auto Safety Hotline toll-free at 1-800-424-9393 (or 366-0123 in Washington D.C. area) or write to: NHTSA, U.S. Department of Transportation, Washington, D.C. 20590. You can also obtain other information about motor vehicle safety from the Hotline.

Purchasing Factory Authorized Manuals (U.S. only)

The following publications covering the operation and servicing of your vehicle can be obtained from Helm Incorporated, either by filling out the attached form or, for credit card holders, calling the toll-free phone number on the form. For manuals prior to the year shown below, contact Helm Incorporated, P.O. Box 07280, Detroit, Michigan 48207, or call 1-800-782-4356.

Publication Form Number	Form Description	Price Each*
61S3V00	2001 Acura MDX Service Manual	$65.00
61S3V00EL	2001 Acura MDX Electrical Troubleshooting Manual	$43.00
61S3V30	2001 Acura MDX Body Repair Manual	$40.00
31S3V600	2001 Acura MDX Owner's Manual	$35.00
31S3V800	2001 Acura MDX Navigation System Owner's Manual	$27.00
ACU-R	Order Form for Previous Years- Indicate Year and Model Desired	FREE

* Prices are subject to change without notice and without incurring obligation.

Valid only for sales within the U.S. Canadian owners should contact their authorized Acura dealer.

ORDER TOLL FREE: 1-800-782-4356

(NOTE: For Credit Card Holder Orders Only)

Monday-Friday 8:00 A.M. – 6:00 P.M. EST

MINIMUM CREDIT CARD PURCHASE $10.00

OR

By completing this form you can order the materials desired. You can pay by check or money order, or charge to your credit card. Mail to Helm Incorporated at the address shown on the back of the order form.

2001 ACU	PUBLICATION NUMBER	VEHICLE MODEL		Qty	Price Each*	Total Price
		Name	Year			

* Prices are subject to change without notice and without incurring obligation.

Orders are mailed within 10 days. Please allow adequate time for delivery.

TOTAL MATERIAL	
Mich. Purchases Add 6% Sales Tax	
HANDLING CHARGE	$6.00
GRAND TOTAL	

SHIP TO

NOTE: Dealers and Companies please provide dealer or company name, and also the name of the person to whose attention the shipment should be sent. For purchases outside U.S.A. please write to the address shown below for a quotation.

Customer Name _____ Attention _____

Street Address — No P.O. Box Number _____ Apartment Number _____

City _____ State & Zip Code _____

Daytime Telephone Number ( ) _____

PAYMENT

☐ Check or money order enclosed payable to Helm Inc — U.S. funds only. Do not send cash

☐ Master Card ☐ VISA ☐ Check here if your billing address is different from the shipping address shown above.

Account Number Expiration: Mo. Yr.

☐☐☐☐ ☐☐☐☐ ☐☐☐☐ ☐☐☐☐ ☐☐ – ☐☐

CUSTOMER SIGNATURE _____ DATE _____

These Publications cannot be returned for credit without receiving advance authorization within 14 days of delivery. On returns, a restocking fee may be applied against the original order.

HELM P.O. BOX 07280·DETROIT, MICHIGAN 48207·1-800-782-4356

Service Manual:
This manual covers maintenance and recommended procedures for repair to engine and chassis components. It is written for the Journeyman mechanic, but is simple enough for most mechanically-inclined owners to understand.

Electrical Troubleshooting Manual:
This manual complements the Service Manual by providing in-depth troubleshooting information for each electrical circuit in your vehicle.

Body Repair Manual:
This manual describes the procedures involved in the replacement of damaged body parts.

A

Accessories and Modifications 201
Accessories 201
Additional Safety Precaution 202
Modifications 202
ACCESSORY (Ignition Key Position) 83
Accessory Power Sockets 121
Additives, Engine Oil 263
Airbag (SRS) 9, 49
Air Cleaner Element 275
Air Conditioning System 142
Maintenance 284
Rear A/C Control 150
Usage 144
Air Outlets (Vents) 142
Air Pressure, Tires 286
Alcohol in Gasoline 346
Aluminum Wheels, Cleaning 307
Antifreeze 265
Anti-lock Brakes (ABS)
Indicator Light 61, 222
Operation 221
Anti-theft, Audio System 190
Anti-theft Steering Column Lock .. 82
Appearance Care 305
Audio System 153, 171
Automatic Seat Belt Tensioners 46
Automatic Lighting Off Feature 71
Automatic Speed Control 77
Automatic Transmission 211
Capacity, Fluid 342
Checking Fluid Level 271
Shifting 212
Shift Lever Position Indicator .. 211
Shift Lever Positions 212
Shift Lock Release 215

B

Battery
Charging System Indicator 60, 328
Jump Starting 323
Maintenance 280
Specifications 343
Before Driving 193
Belts, Seat 8, 44
Beverage Holders 116
Body Repair 312
Brakes
Anti-lock System (ABS) 222
Break-in, New Linings 194
Fluid 273
Bulb Replacement 298
Parking 112
System Indicator 61, 331
Wear Indicators 220
Braking System 220
Break-in, New Vehicle 194
Brightness Control, Instruments ... 71
Brights, Headlights 70
Bulb Replacement
Back-up Lights 298
Brake Lights 298
Cargo Area Light 301
Front Parking Lights 296
Front Side Marker Lights 296
Headlights 295
High-mount Brake Light 299
Individual Map Lights 300
License Plate Light 300
Rear Bulbs 298
Specifications 343
Turn Signal Lights 296, 298

CONTINUED

Bulbs, Halogen 295

C

Cancel Button 79
Capacities Chart 342
Carbon Monoxide Hazard 54
Cargo Area Light 301
Carrying Cargo 203
Cassette Player
  Care 188
  Operation 159, 188
CAUTION, Explanation of ii
CD Changer 163
CD Player 179
Certification Label 340
Chains 292
Change Oil
  How to 263
  When to 252
Changing a Flat Tire 315
Changing Engine Coolant 267
Charging System Indicator 60, 328
Checklist, Before Driving 193
Childproof Door Locks 89
Child Safety 21
Child Seats 21
  Tether Anchorage Points 42
Cleaner Element, Air 275
Cleaning
  Aluminum Wheels 307
  Carpeting 308
  Exterior 306
  Fabric 309
  Interior 308
  Seat Belts 309
  Vinyl 309
  Windows 310
Climate Control System 142
Coat Hook 122
Code, Audio System 190
CO in the Exhaust 348
Coin Box 122
Cold Weather, Starting in 210
Compact Spare 314
Consumer Information* 354
Controls, Instruments and 57
Coolant
  Adding 265
  Checking 199
  Proper Solution 265
  Replacing 267
  Temperature Gauge 66
Corrosion Protection 311
Crankcase Emissions Control
  System 349
Cruise Control Operation 77
Customer Relations Office 354

D

DANGER, Explanation of ii
Dashboard 2, 58
Daytime Running Lights 71
Defects, Reporting Safety 357
Defogger, Rear Window 75
Defrosting the Windows 148
Dimensions 342
Dimming the Headlights 70
Dipstick
  Automatic Transmission 271
  Engine Oil 198
Directional Signals 72
Disc Brake Wear Indicators 220
Disposal of Used Oil 264
Doors
  Locking and Unlocking 83
  Lockout Prevention 84

Power Door Locks 83
DOT Tire Quality Grading 344
Drive Belts 285
Driver and Passenger Safety 5
Driving 207
Economy 200
In Bad Weather 224
In Foreign Countries 347
Dust and Pollen Filter 285

E

Economy, Fuel 200
Emergencies on the Road 313
Battery, Jump Starting 323
Emergencies on the Road
Brake System Indicator 331
Changing a Flat Tire 315
Charging System Indicator 328
Checking the Fuses 322
Low Oil Pressure Indicator 327
Malfunction Indicator Lamp 329
Overheated Engine 325
Emergency Brake 219
Emergency Flashers 74
Emergency Towing 338
Emissions Controls 348
Engine
Coolant Temperature Gauge 66
Drive Belts 285
Malfunction Indicator
Lamp 60, 329
Oil Pressure Indicator 60, 327
Oil, What Kind to Use 261
Overheating 325
Specifications 343
Speed Limiter 215
Starting 210
Ethanol in Gasoline 346
Evaporative Emissions Controls 348
Exhaust Fumes 54
Exhaust Gas Recirculation
System 349
Expectant Mothers, Use of Seat
Belts by 19
Exterior, Cleaning the 306

F

Fabric, Cleaning 309
Fan, Interior 146
Features, Comfort and
Convenience 141
Filling the Fuel Tank 195
Filters
Air 275
Air Conditioning 285
Oil 263
Flashers, Hazard Warning 74
Flat Tire, Changing a 315
Fluids
Automatic Transmission 271
Brake 273
Power Steering 275
Windshield Washer 270
FM Stereo Radio
Reception 177
Fog Lights 75
Folding the Third Seat 102
Foreign Countries, Driving in 347
Four-way Flashers 74

CONTINUED

Fuel 195
Fill Door and Cap 195
Gauge 66
Octane Requirement 194
Oxygenated 346
Reserve Indicator 63
Tank, Filling the 195
Fuses, Checking the 333

G

Gas Mileage, Improving 200
Gasohol 324
Gasoline 194
Fuel Reserve Indicator 63
Gauge 66
Octane Requirement 194
Tank, Filling the 195
Gas Station Procedures 195
Gauges
Engine Coolant Temperature 66
Fuel 66
Speedometer 65
Tachometer 65
GAWR (Gross Axle Weight Rating) 227
GCWR (Gross Combined Weight Rating) 227
Gearshift Lever Positions 211
Glass Cleaning 310
Glove Box 90
GVWR (Gross Vehicle Weight Rating) 227

H

Halogen Headlight Bulbs 295
Hazard Warning Flashers 74
Headlights 70
Aiming 295
Automatic Lighting Off 71
Daytime Running Lights 71
High Beam Indicator 63
High Beams, Turning on 70
Low Beams, Turning on 70
Reminder Chime 70
Replacing Halogen Bulbs 295
Turning on 70
Head Restraints 100
Heated Mirror 112
Heating and Cooling 142
High Altitude, Starting at 210
High-Low Beam Switch 70
HomeLink Universal Transmitter 91
Hood Latch 277
Hood, Opening the 196
Horn 69
Hydroplaning 224

I

Identification Number, Vehicle 340
Ignition
Keys 80
Switch 82
Timing Control System 349
Immobilizer System 81
Important Safety Precautions 6
Indicators, Instrument Panel 59
Individual Map Lights 125
Infant Restraint 29
Infant Seats 29
Inflation, Proper Tire 286
Inside Mirror 110
Inspection, Tire 288
Instrument Panel 2, 58
Instrument Panel Brightness 71

Interior Cleaning 308
Interior Lights 123
Introduction i

J

Jacking up the Vehicle 318
Jack, Tire 315
Jump Starting 323

K

Keys 80

L

Label, Certification 340
Lane Change, Signaling 72
Lap/Shoulder Belts 15, 44
Light Control Switch 123
Lights
  Bulb Replacement 293
  Indicator 59
  Interior 123
  Parking 70
  Turn Signal 72
Load Limits 204
LOCK (Ignition Key Position) 82
Locks
  Anti-theft Steering Column 82
  Fuel Fill Door 195
  Glove Box 90
  Lockout Prevention 84
  Power Door 83
Low Coolant Level 199
Low Fuel Indicator 63
Low Oil Pressure Indicator 60, 327
Lubricant Specifications Chart 342
Luggage 203

M

Maintenance 247
  Owner Maintenance Checks.... 259
  Record 257-258
  Required Indicator 67
  Safety 248
  Schedule 252-256
Malfunction Indicator Lamp 329
Manual Seat Adjustments 98
Meters, Gauges 59
Methanol in Gasoline 346
Mirrors, Adjusting 110

N

Neutral Gear Position 213
New Vehicle Break-in 194
NOTICE, Explanation of i
Numbers, Identification 340

O

Octane Requirement, Gasoline 194
Odometer 65
Odometer, Trip 65
Oil
  Change, How to 263
  Change, When to 252
  Checking Engine 198
  Pressure Indicator 60, 327
  Selecting Proper Viscosity
    Chart 262
ON (Ignition Key Position) 83
Operation in Foreign Countries... 347
Outside Mirrors 110

CONTINUED

Overheating, Engine 325
Owner Maintenance Checks..... 259
Oxygenated Fuels..... 346

P

Paint Touch-up..... 307
Panel Brightness Control 71
Park Gear Position..... 212
Parking..... 219
Parking Brake 112
Parking Lights..... 70
Parking Over Things that Burn... 219
PGM-FI System..... 349
Polishing and Waxing 307
Power Seat Adjustments..... 96
Pre-Drive Safety Checklist 11
Pregnancy, Using Seat Belts..... 19
Protecting Adults..... 12
  Additional Safety Precautions.... 19
  Advice for Pregnant Women..... 19
Protecting Children..... 21
  Protecting Infants..... 29
  Protecting Larger Children..... 38
  Protecting Small Children 34
  Using Child Seats with Tethers..... 42

R

Radiator Overheating..... 325
Radio/CD Sound System..... 153, 171
Rear A/C Unit..... 150
Rear Compartment..... 118
Rear Lights, Bulb Replacement... 298
Rear View Mirror..... 110
Rear Window Defogger..... 75
Rear Window Wiper and Washer.. 74
Reclining the Seat Backs..... 98, 99
Reclining the Second Seats 97
Reclining the Third Seat..... 97
Reminder Lights..... 60
Remote Audio Controls..... 189
Remote Transmitter..... 85
Removing the Second Seats..... 60
Replacement Information
  Air Cleaner Element..... 275
  Coolant..... 267
  Engine Oil and Filter..... 263
  Fuses..... 322
  Light Bulbs..... 295
  Schedule 252
  Spark Plugs..... 277
  Timing Belt..... 286
  Tires 290
  Wiper Blades..... 282
Replacing Seat Belts After a Crash..... 47
Reserve Tank, Engine Coolant 199
Reverse Gear Position..... 213
Rotation, Tire 289

S

Safety Belts..... 8, 44
Safety Defects, Reporting* 357
Safety Features 7
  Air bags..... 9
  Door Locks..... 10
  Head Restraints 10
  Seat Belts..... 8
  Seats & Seat-Backs..... 10
Safety Labels, Location of 55
Safety Messages..... ii
Seat Belts..... 8, 44
  Additional Information..... 44

Automatic Seat Belt Tensioners ... 46
Cleaning ... 309
Lap/Shoulder Belt ... 44
Maintenance ... 47
Reminder Light and Beeper ... 44, 60
System Components ... 44
Use During Pregnancy ... 19
Wearing a Lap/Shoulder Belt ... 15
Seats ... 96
Folding the Third Seat ... 102
Head Restraints ... 100
Reclining the Second Seat ... 97
Reclining the Third Seat ... 97
Rear Seat Access ... 101
Serial Number ... 340
Service Intervals ... 250
Service Manual* ... 358
Service Station Procedures ... 195
Shifting the Automatic Transmission ... 212
Shift Lever Position Indicator ... 211
Shift Lock Release ... 215
Side Marker Lights, Bulb Replacement in ... 296
Signaling Turns ... 72
Snow Tires ... 292
Solvent-type Cleaners ... 306
Sound System ... 153, 171
Spare Tire
Inflating ... 314
Specifications ... 342
Spark Plugs ... 277
Specifications Charts ... 342
Speed Control ... 77
Speedometer ... 65
SRS, Additional Information ... 48
Additional Safety Precautions ... 53
How the Automatic Seat Belt Tensioners Work ... 46
How the SRS Indicator Works ... 52
How Your Front Airbags Work ... 48
SRS Components ... 48
SRS Service ... 53
SRS Indicator ... 46, 51
START (Ignition Key Position) ... 83
Starting the Engine ... 210
In Cold Weather at High Altitude ... 210
With a Dead Battery ... 323
State Emissions Testing ... 351
Steam Coming from Engine ... 325
Steering Wheel
Adjustment ... 76
Anti-theft Column Lock ... 82
Stereo Sound System ... 153, 171
Storing Your Vehicle ... 303
Sunglasses Holder ... 119
Sun Visor ... 120
Supplemental Restraint System
Servicing ... 53
SRS Indicator ... 46, 51
System Components ... 48
Synthetic Oil ... 262

T

Tachometer ... 65
Taillights, Changing Bulbs in ... 298
Taking Care of the Unexpected ... 313
Tape Player ... 159

CONTINUED

Technical Descriptions
DOT Tire Quality Grading 344
Emissions Control Systems..... 348
Oxygenated Fuels..... 346
Three Way Catalytic Converter..... 350
Temperature Gauge 65
Tensioners, Seat Belts 46
Testing of Readiness Codes..... 351
Theft Protection..... 190
Three Way Catalytic Converter... 350
Timing Belt..... 285
Tire Chains 292
Tire, How to Change a Flat 315
Tires 286
Air Pressure 286
Balancing 289
Checking Wear 288
Compact Spare 314
DOT Tire Quality Grading 344
Inflation 286
Inspection 288
Replacing 290
Rotating..... 289
Snow 292
Specifications 343
Tire Chains 292
Towing
A Trailer..... 226
Emergency Wrecker 338
Your Vehicle Behind a Motorhome..... 238
Transmission
Checking Fluid Level 271
Fluid Selection..... 271
Identification Number..... 340
Shifting the Automatic 211
Treadwear 344
Trip Meter 66
Turn Signals 72
Tools, Tire Changing 315

U

Underside, Cleaning..... 311
Unexpected, Taking Care of the 313
Uniform Tire Quality Grading 344
Unleaded Gasoline..... 194
Upholstery Cleaning..... 309
Used Oil, How to Dispose of 264

V

Vanity Mirror 120
Vehicle Capacity Load 204
Vehicle Dimensions..... 342
Vehicle Identification Number..... 341
Vehicle Storage 303
Ventilation 142
VIN 340
Vinyl Cleaning 309
Viscosity, Oil..... 262
VTM-4 Lock 218

W

WARNING, Explanation of ii
Warning Labels, Location of 65
Warranty Coverages* 356
Washer, Windshield
Checking the Fluid Level 270
Level Indicator 63
Operation 74
Washing 306
Waxing and Polishing 307
Wheels
Adjusting the Steering 76

Alignment and Balance 289
Compact Spare 314
Wrench 315
Windows
Cleaning 310
Operating the Power 106
Rear, Defogger 75
Windshield
Cleaning 310
Defroster 148
Washers 74
Wipers, Windshield
Changing Blades 282
Operation 72
Rear Windshield Wiper and Washer 74
Worn Tires 288
Wrecker, Emergency Towing 338

* : U.S. and Canada only

Service Information Summary

Gasoline:
Premium unleaded gasoline, pump octane number of 91 or higher.

Fuel Tank Capacity:
19.3 US gal (73 ℓ , 16.1 Imp gal)

Recommended Engine Oil:
API Service SJ ''Energy Conserving'' oil, SAE 5W-30 viscosity (see page 261).

Oil change capacity (including filter):
5.0 US qt (4.7 ℓ , 4.1 Imp qt)

Automatic Transmission Fluid:
Honda ATF-Z1 (Automatic Transmission Fluid) preferred, or a DEXRON® III ATF as a temporary replacement (see page 271).

Power Steering Fluid:
Honda Power Steering Fluid preferred, or another brand of power steering fluid as a temporary replacement. Do not use ATF (see page 274).

Brake Fluid:
Honda Heavy Duty Brake Fluid DOT 3 preferred, or a DOT 3 or DOT 4 brake fluid as a temporary replacement (see page 273).

Rear Differential Fluid:
VTM-4 Differential Fluid (see page 272).

Tire Pressure (measured cold):
Front/Rear:
32 psi (220 kPa , 2.2 kgf/cm^2)
Compact Spare Tire:
60 psi (420 kPa , 4.2 kgf/cm^2)