Service.

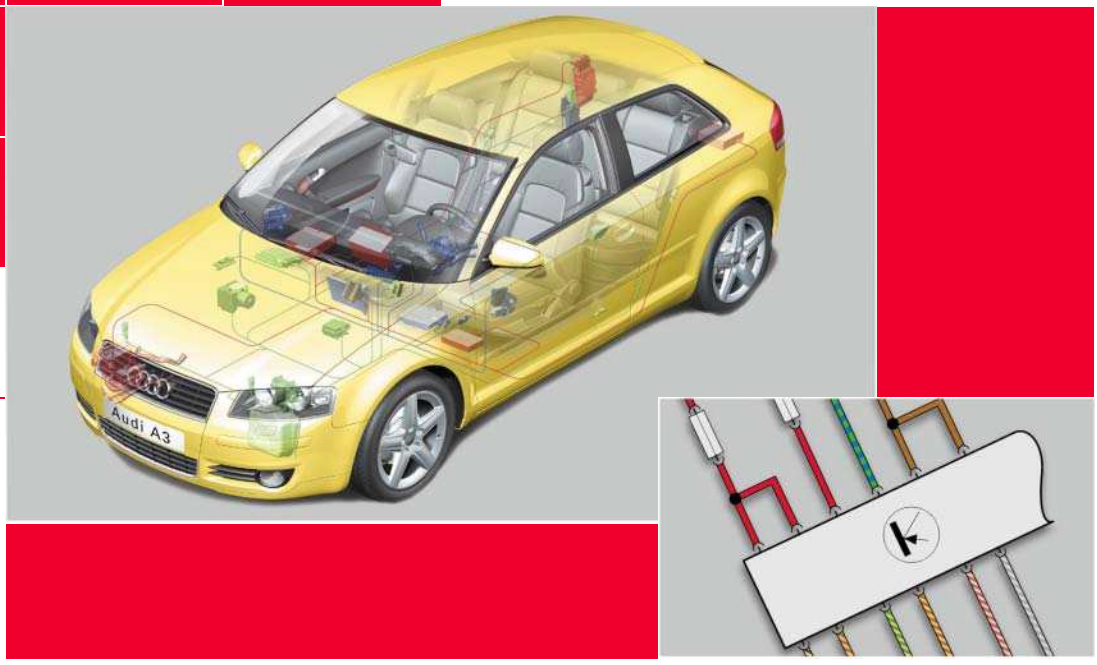

Audi A3 '04 Electrical System

Self Study Programme 312

For internal use only

The Audi A3 '04, top quality equipment features - now available for the compact class as well

The Audi A3 '04 can boast a whole range of details which used to be the sole domain of the more luxurious classes. Such features include new pre-fitted components for mobile phone installation with voice control, thus allowing drivers to keep both hands on the wheel.

A new dimension in telephone quality for this class of vehicle is achieved by way of echo compensation and speed-dependent volume control (GALA).

Even the basic sound system offers a centre loudspeaker in the middle of the dash panel to enhance the acoustic effect and natural sound reproduction.

This sound quality can be improved still further with the BOSE sound system, featuring 6-channel actuation and a total output of 222 W.

The standard of control unit networking has also been raised to that of the mid-range category. The number of interlinked control units is more than twice that of the Audi A3 '97, thus equipping the compact class with a whole range of top quality functions.

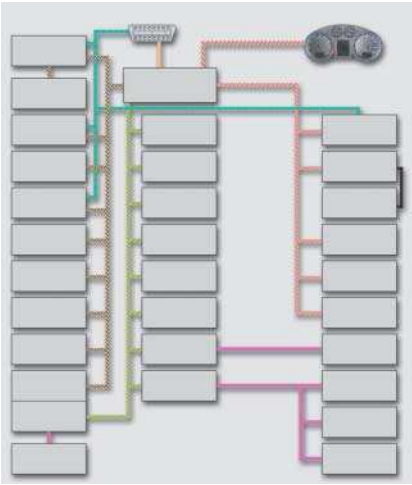

Contents

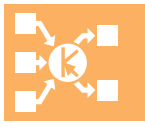

Page

Control Units

Exploded view of control unit fitting locations 4
BUS topology 6
Data bus diagnostic interface J533 (gateway) 8
Onboard power supply control unit J519 12
Convenience system central control unit J393 20
Interior monitor (IM) 21
Anti-theft alarm (ATA) 22
Alarm horn H12 23
Anti-theft/tilt system control unit J529 24
Door control units J386 and J387 26
Parking aid control unit J446 29
Steering column electronics control unit J527 32
Trailer detector control unit J345 34
Control unit with display in dash panel insert J285 36
Radio controlled clock 42

Distributed Functions

Hazard warning system 45
Left turn signal. 46
Triggering of anti-theft alarm. 48

Infotainment

General outline of infotainment system 50
Sound systems 52
Radios and CD changer. 54
Aerial system 55
Pre-fitted components for mobile phone installation 56
Navigation system 4 58

Passenger Protection

Safety systems. 60
Airbag control unit J234 62
Front airbag crash sensors G283, G284 (upfront sensors) 63
Airbag warning lamp K75 63
Seat belts 64
Active head restraints 65
Battery cut-off relay J655 66

The Self Study Programme contains information on design features and functions.

The Self Study Programme is not intended as a Workshop Manual.
Values given are only intended to help explain the subject matter and relate to the software version applicable when the SSP was compiled.

Use should always be made of the latest technical publications when performing maintenance and repair work.

New Note

Attention Note

Control Units

Exploded view of control unit fitting locations

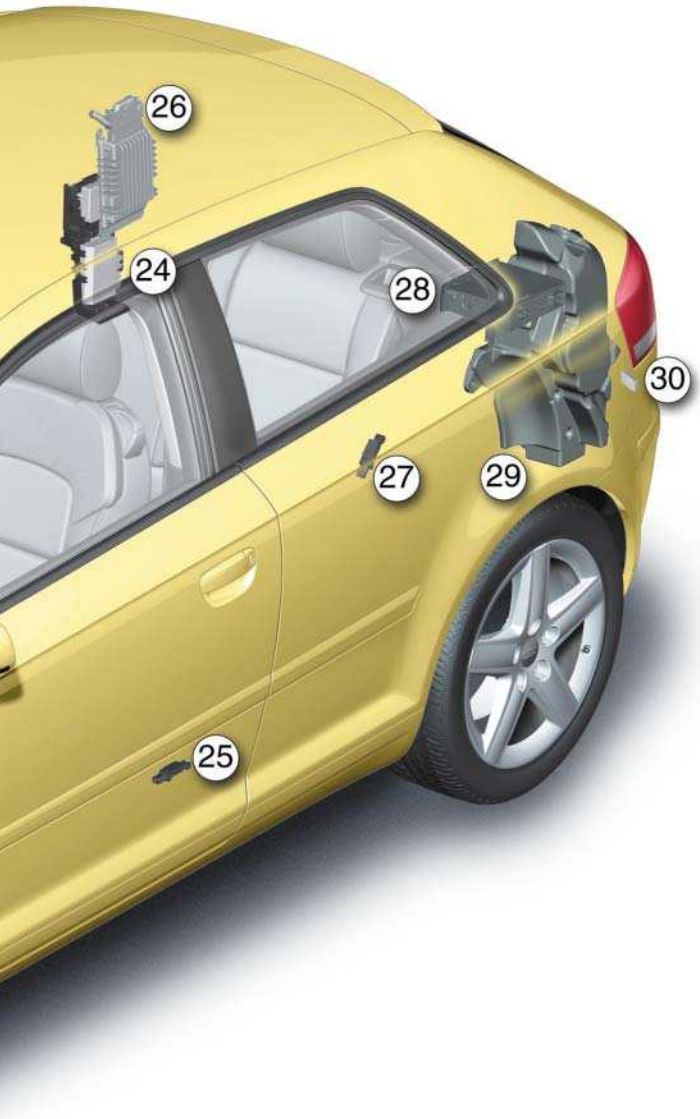

312_011

1 Garage door operation control unit J530
2 Front airbag crash sensor, front passenger side G284
3 Additional heater control unit J364
4 ABS with EDL control unit J104
5 Front airbag crash sensor, driver side G283
6 Engine control unit J623
7 Power steering control unit J500
8 Automatic gearbox control unit (only 02E, Mechatronic) J217
9 Door control unit, front passenger side J387
10 Anti-theft/tilt system control unit J529
11 Airbag control unit J234
12 Data bus diagnostic interface J533
13 Headlight range control unit J431
14 Additional air heater control unit J604
15 Side airbag crash sensor, front passenger side G180
16 Onboard power supply control unit J519
17 ESP sensor unit G419
18 Automatic gearbox control unit (09G only) J217
19 Steering column electronics control unit J527
20 Telephone transmitter and receiver unit R36
21 Rear side airbag crash sensor, front passenger side G257
22 Door control unit, driver side J386
23 Rear parking aid warning buzzer H15
24 Mount with
Parking aid control unit J446
Trailer detector control unit J345
Convenience system central control unit J393
25 Side airbag crash sensor, driver side G179
26 Amplifier R12
27 Rear side airbag crash sensor, driver side G256
28 Navigation system with CD drive control unit J401
29 Amplifier with bass loudspeaker (on left in luggage compartment) R44
30 Radio controlled clock receiver J489

Control Units

BUS topology

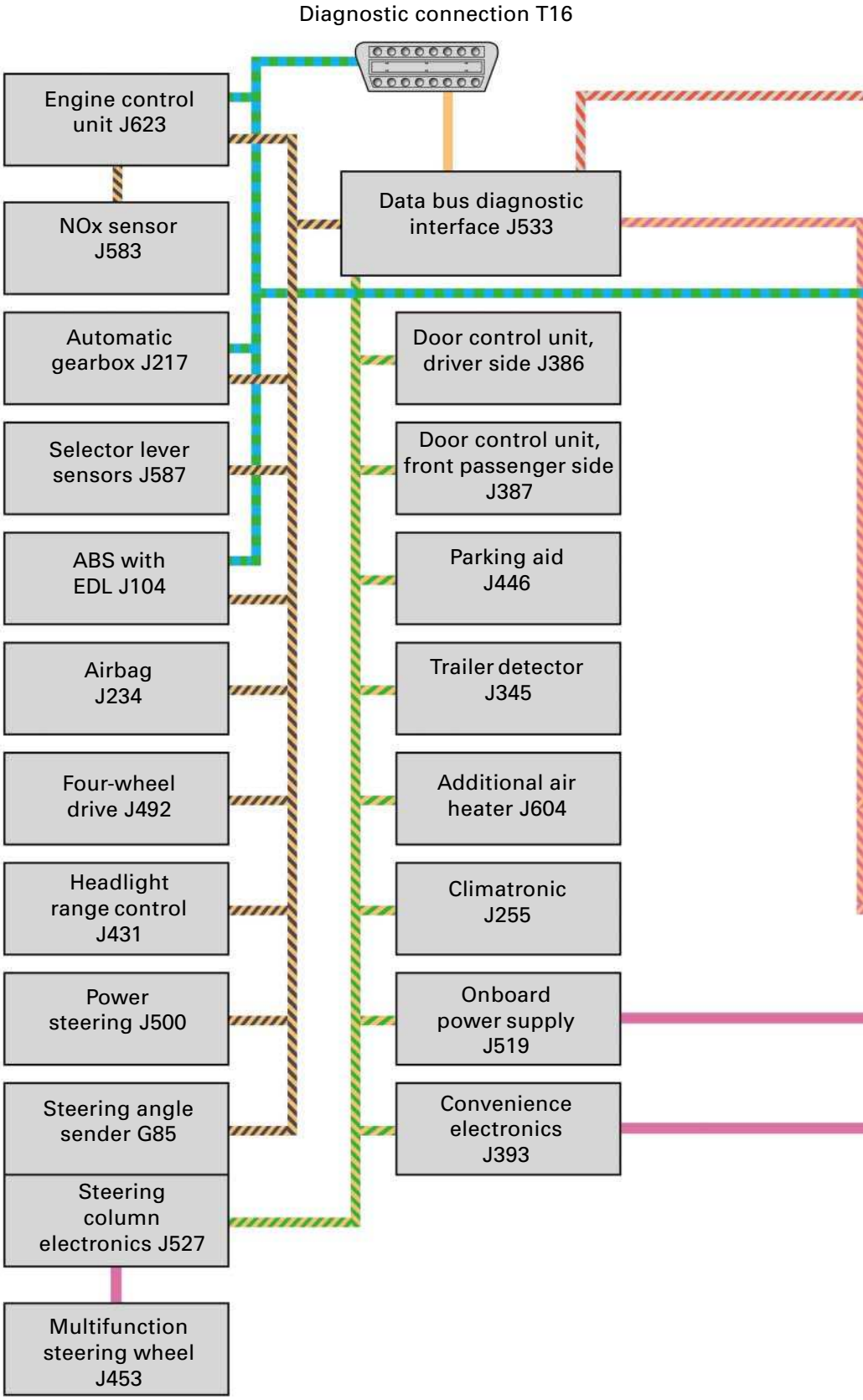

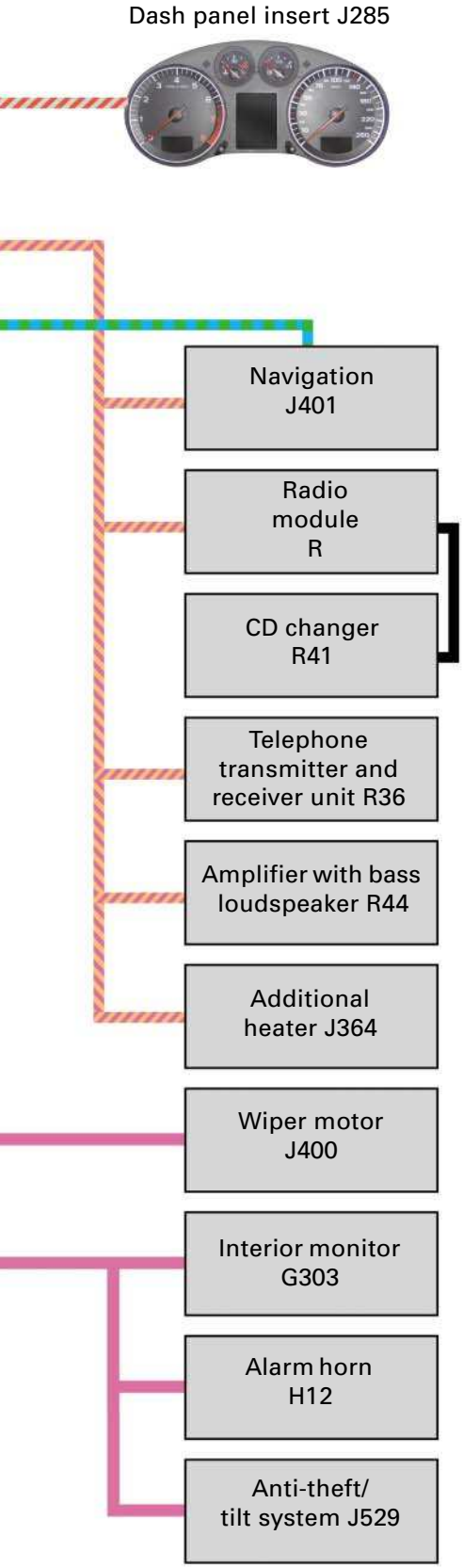

Drive system CAN:	500 kbaud
Dash panel insert CAN:	500 kbaud
Diagnosis CAN:	500 kbaud
Convenience CAN:	100 kbaud
Infotainment CAN:	100 kbaud
LIN	
K-wire	
Panasonic bus	

312_012

Data bus diagnostic interface J533 (gateway)

The data bus diagnostic interface (gateway) essentially corresponds to the control unit used in the Audi A8 '03. It represents the central interface for all CAN bus systems fitted in the vehicle. Each vehicle is equipped with drive system CAN, convenience CAN, dash panel insert CAN, diagnosis CAN and infotainment CAN.
As opposed to the Audi A8, however, the gateway has no adaptive cruise control CAN or MOST data bus connections.

312_072

Fitting location

The gateway is installed beneath the dash panel next to the pedal bracket and is accessible from the driver's footwell.

Block diagram

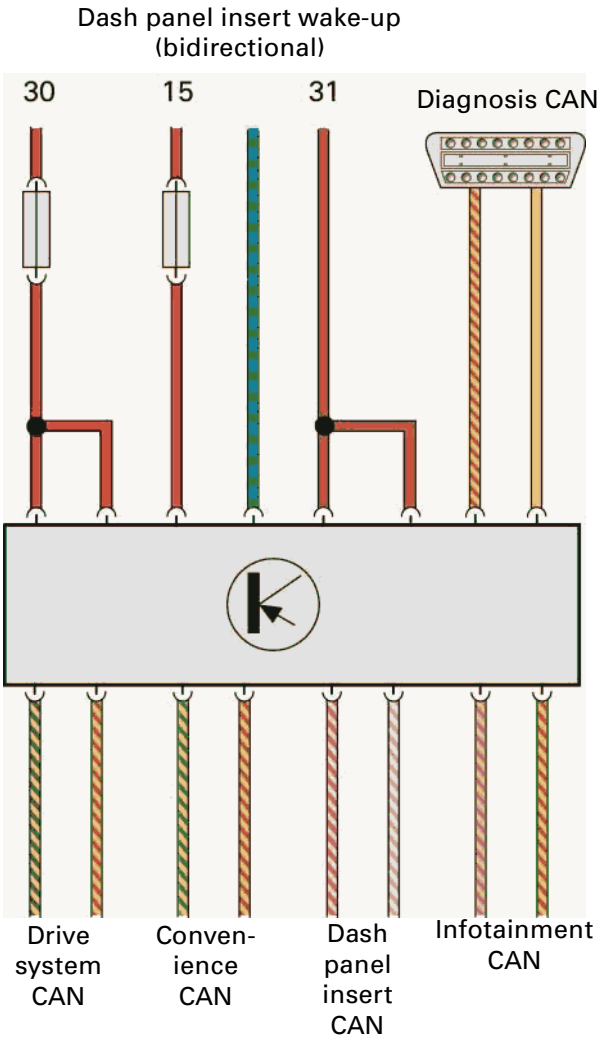

312_013

Transportation mode

In the A3 '04, the transportation mode is implemented in the data bus diagnostic interface J533 and can only be activated/ deactivated using diagnosis testers with software which supports the A3 '04. Activation and deactivation are performed under "Utilities" as part of the vehicle self-diagnosis routine.

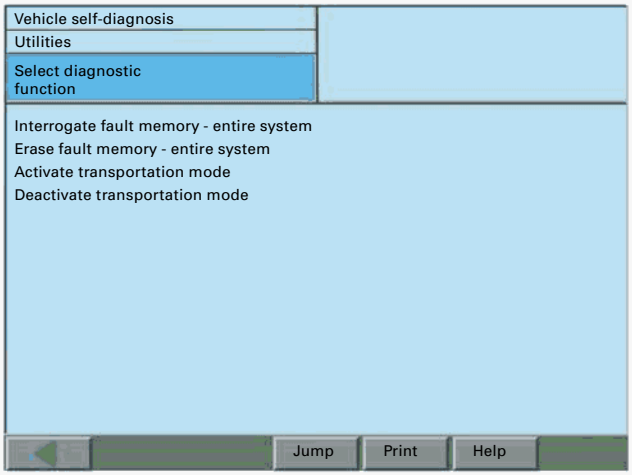

312_027

It is only possible to activate and deactivate transportation mode during the first 150 km. The data bus diagnostic interface J533 then deactivates this mode automatically. Re-activation is no longer possible. Activation of transportation mode is indicated by "TrA" in the trip recorder of the dash panel insert.

To minimise vehicle power consumption during transportation to the dealer, the following systems are deactivated when transportation mode is active:

- Radio
- Remote control
- Interior monitor
- Receiver for auxiliary heater telestart
- Tilt sensor
- Safe LED on dash panel
- Radio controlled clock in dash panel insert J285

312_014

In addition, the interior light is switched off after 30s.

Selective convenience CAN sleep mode

As with the Audi A8 '03, wake-up takes place simultaneously for convenience CAN, dash panel insert CAN and infotainment CAN. On the Audi A3 '04, the convenience CAN can be switched to sleep mode independently of the other two CAN buses to save energy.

As a result, the dash panel insert J285 and the components linked to the infotainment CAN may continue to transmit data (e.g. brightness value, readings on centre display, navigation data) with the convenience CAN in sleep mode.

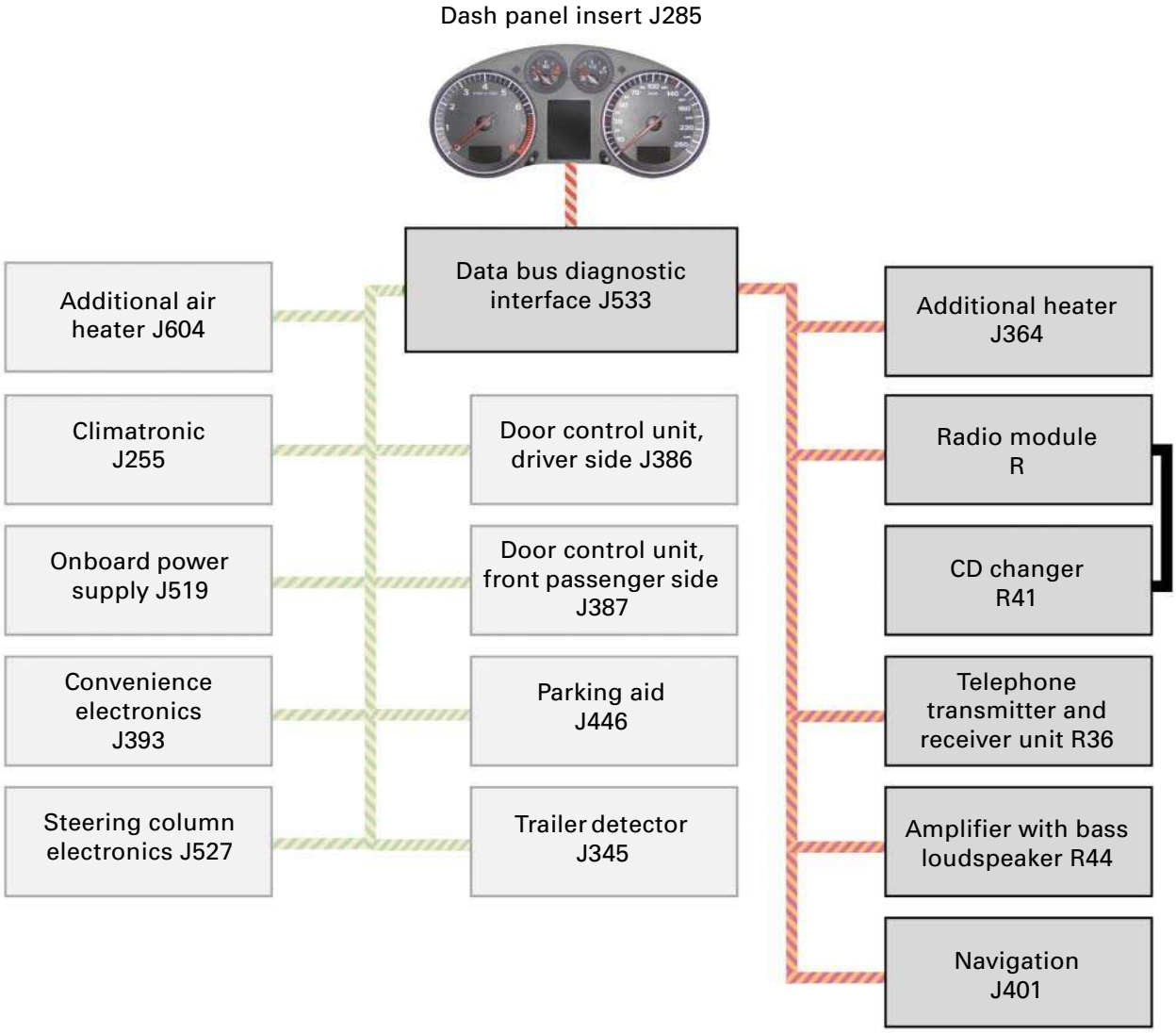

312_028

Master function for terminal 15 continued operation on drive system CAN

As with the Audi A8 '03, the information transmitted on the drive system CAN contains a continued operation function to ensure that various control units can transmit data of relevance to safety even with the ignition switched off. This is necessary, for example, if a vehicle starts rolling down a hill with the ignition switched off.
As regards terminal 15 continued operation, drive system CAN control units form three different groups of CAN users:

Control units which are able to keep the drive system CAN awake:

- ABS with EDL control unit J104
- Automatic gearbox control unit J217
- Power steering control unit J500
- Data bus diagnostic interface J533
- Engine control unit J623

Control units which remain awake until the data bus diagnostic interface signals readiness for sleep mode but which are not able to keep the drive system CAN awake themselves:

- Steering angle sender G85
- Selector lever sensor control unit J587

Control units with no continued operation function. These are deactivated as soon as the ignition is switched off:

- Airbag control unit J234
- Headlight range control unit J431
- Four-wheel drive control unit J492

Encoding

For the first time, provision is made for encoding of

- Manufacturer
- Category (body version)
- Left-hand drive/right-hand drive
- Number of doors

in the data bus diagnostic interface.

These codes do not result in any functional modifications in the data bus diagnostic interface. This information is evaluated by the Climatronic control unit J255. For this reason, the data bus diagnostic interface must have been correctly encoded before performing basic setting of the Climatronic control unit.

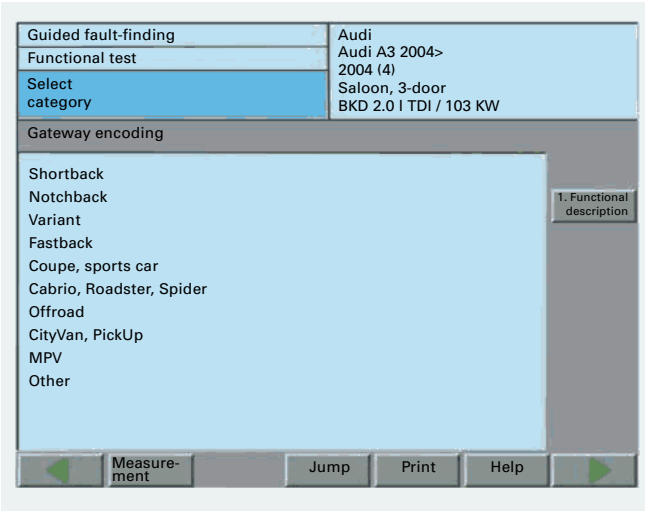

312_029

Onboard power supply control unit J519

Function

The Audi A3 '04 is fitted with a classic onboard power supply control unit similar to that in the Audi A4 '01 which controls the following:

- Exterior lighting
- Charge warning lamp
- Terminal 58s
- Load management
- Terminals 15, 75x, 50 and 30G
- Electric fuel pump relay J17
- Windscreen wipers
- Heated rear window
- Horn
- Interior lighting
- Footwell lights (optional)

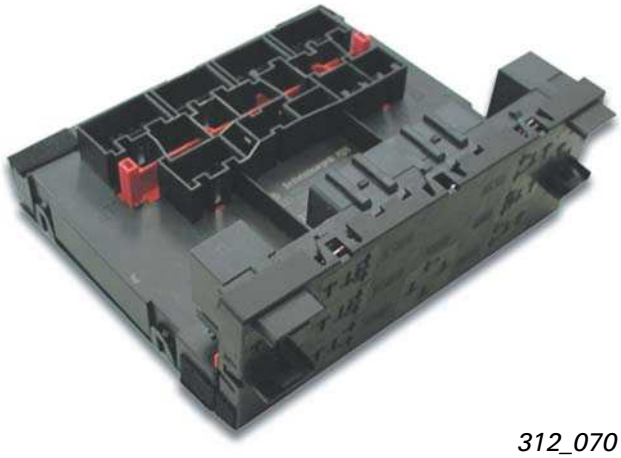

312_070

Exterior lighting control

In addition to full software control, the onboard power supply control unit J519 is responsible for all exterior lights such as headlights, reversing lights, number plate lights and turn signal indicators.
Fuse protection for the exterior lighting is provided by just one fuse each for the bulbs on the left and right sides, with the side light bulbs and the side-mounted turn signal indicators being connected to the fuse on the opposite side. Failure of the "Right side electrical system" fuse thus leads to failure of the left side light and side-mounted turn signal indicator.

In addition, the output voltage to the exterior light bulbs is restricted to 13.2 V to prevent bulb damage in the event of electrical system overvoltage.
The Coming Home/Leaving Home function familiar from the Audi A8 '03 is available as an optional extra for the Audi A3 '04. However, it involves activation of the dipped beam instead of the fog headlight. The Coming Home time can be altered by way of the diagnosis tester.

Actuation of charge warning lamp

Terminal L of the alternator is evaluated by the onboard power supply control unit J519, which transmits this information to the convenience CAN. The data bus diagnostic interface J533 transmits this information to the dash panel insert J285, where the charge warning lamp is actuated.

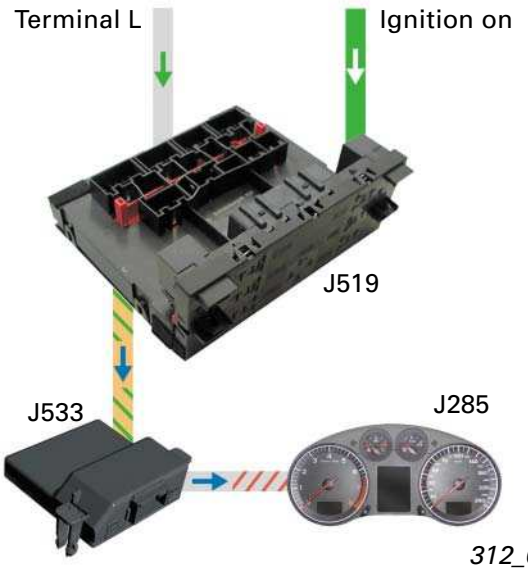

312_071

Brightness control (terminals 58s and 58d)

In conjunction with the dash panel insert J285, the onboard power supply control unit J519 regulates the brightness of the display illumination (terminal 58d) and the switch illumination (terminal 58s).

Terminals 58s and 58d have different brightness values. Whereas values of 6...100 % are possible for the switch illumination, only 80...100 % can be set for the display illumination. The display illumination has a far higher basic signal.

1 The switches and instruments light regulator E20 transmits the potentiometer value via a discrete wire to the onboard power supply control unit.
2 The onboard power supply control unit transmits the information via the convenience CAN, the data bus diagnostic interface J533 and the dash panel insert CAN to the dash panel insert J285.
3 The dash panel insert uses the potentiometer value and the signal of the internal phototransistor to generate the values for terminals 58d and 58s.
4 The dash panel insert transmits the information on terminals 58d and 58s to the dash panel insert CAN. The data bus diagnostic interface passes these values to the convenience CAN.
5 The dash panel insert transmits the terminal 58d brightness value as pulse-width modulated signal to an output pin. Terminal 58d is used for example to actuate the display in the Climatronic control unit J255 or for illuminating the selector lever position indicator with automatic gearboxes.
6 The onboard power supply control unit J519 uses the terminal 58s CAN information to generate a pulse-width modulated signal and thus actuates various switch illumination functions in the passenger compartment but not in the doors.

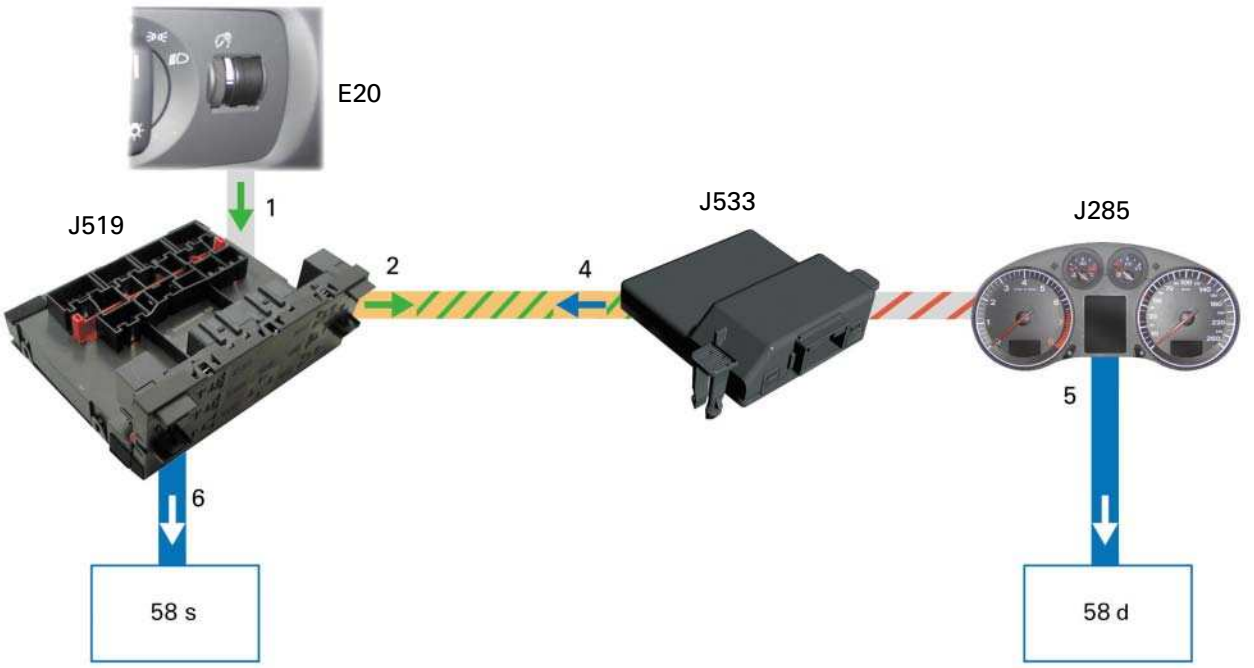

312_018

Control Units

Load management

The wide range of electrical equipment may cause the battery/alternator voltage to drop below a permissible level and thus jeopardise proper functioning of vital systems such as ABS or electromechanical steering.

The onboard power supply control unit J519 is able to boost the electrical system voltage to the necessary extent by increasing idling speed and deactivating heavy-duty loads. The alternator is however designed to restrict load management intervention to exceptional circumstances.

Determination of load status

The electrical system situation is established by comparing the electrical system voltage determined to a permissible lower voltage limit.
The electrical system situation is established from the following quantities: Battery voltage, DF signal (alternator capacity utilisation) and information on activated heavy-duty loads with short cut-in time.

In addition, the loads activated by the driver are determined in the onboard power supply control unit and the load status then calculated from all these quantities.

Load regulation measures

When the engine is running, idling speed increase (2-stage) may be implemented in response to an engine control unit request via the CAN. If this fails to achieve an adequate electrical system status, electrical equipment is then deactivated.

With ignition on and engine off, electrical equipment is deactivated in the same sequence.

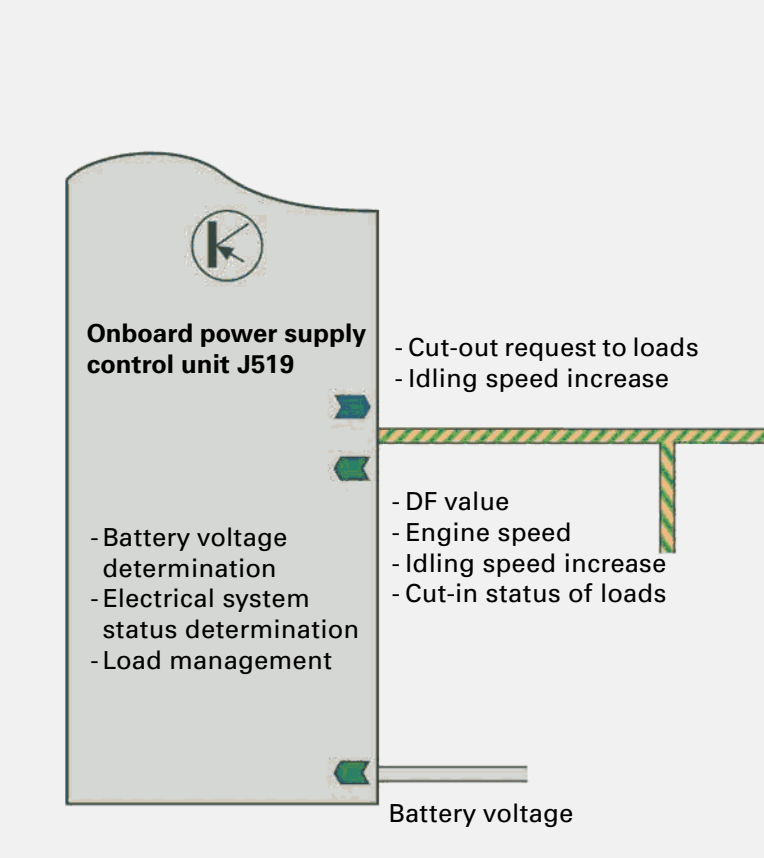

Deactivation of convenience equipment

With ignition on (with and without engine running), loads are deactivated in the given sequence:

1 Additional air heater J604 to 75 %
2 Heated rear window Z1
3 Additional air heater J604 to 50 %
4 Heated seats
5 Additional air heater J604 to 25 %
6 Heated exterior mirrors
7 Additional air heater J604 to 0 %
8 Footwell illumination, interior door release handle illumination, exit lights, ambient lighting
9 Climatronic J255

Deactivation is maintained until an adequate electrical system status has been achieved. If the situation improves, equipment is re-activated in reverse order.

In addition, the following are briefly deactivated

– Heated rear window Z1
– Additional air heater J604
– Heated seats

during ABS braking or in the case of high electromechanical steering current input.

With ignition off, footwell illumination, interior door release handle illumination, exit lights, interior lighting and Leaving Home function are deactivated.

In the event of a crash (signal from airbag control unit J234 via CAN to onboard power supply control unit), the following loads are deactivated by the onboard power supply control unit:

– Heated rear window Z1
– Heated seats
– Heated exterior mirrors
– Additional air heater J604
– Climatronic J255

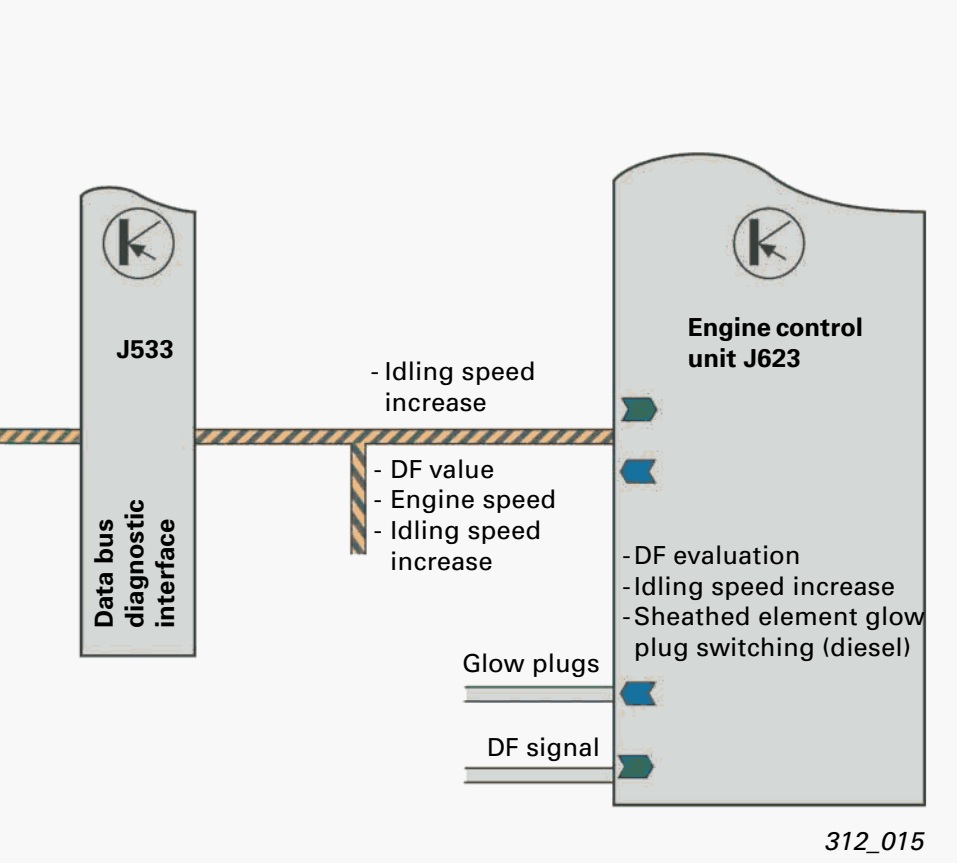

Terminal control

The steering column electronics control unit J527 passes all terminal signals of the ignition/starter switch to the convenience CAN. In addition, the onboard power supply control unit J519 is provided by the steering column electronics control unit J527 with discrete information on terminals 15 and 50.

This information is used to actuate the relays for terminal 15/engine compartment, terminal 15/cockpit (vehicles with battery in luggage compartment only), terminal 75 and terminal 50.

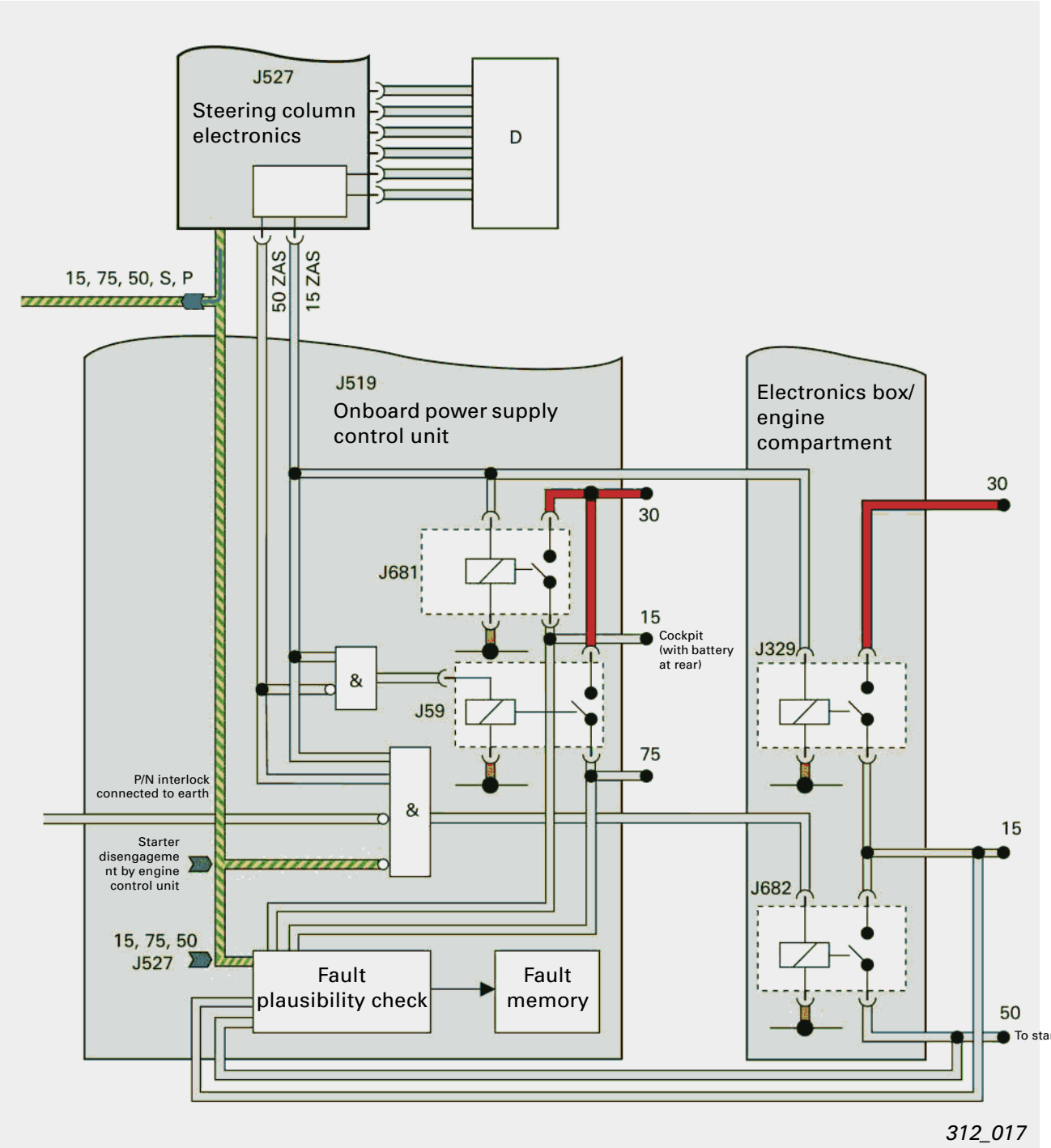

In addition to the ignition/starter switch signals,
- Automatic gearbox P/N signal
- Interlock signal (USA manual gearbox only, otherwise terminal 31)
- and CAN information "Starter disengagement" by engine control unit J623

are required for actuation of terminal 50 voltage supply relay J682 in engine compartment.

This CAN information is also used for implementation of the starting repeat lock and starter disabling with engine running. For terminal monitoring, the relay outputs are compared to the convenience CAN signals.

D	Ignition/starter switch
J59	X-contact relief relay
J329	Terminal 15 voltage supply relay
J519	Onboard power supply control unit
J527	Steering column electronics control unit
J681	Terminal 15 voltage supply relay -2-
J682	Terminal 50 voltage supply relay

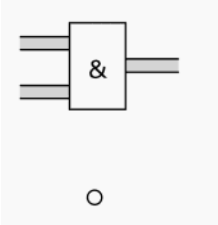

AND gate: Output signal is HIGH (U_{batt}) if all input signals are HIGH. Output becomes LOW as soon as one input signal is LOW (earth).

Negation: HIGH signal becomes LOW and LOW signal becomes HIGH.

Convenience CAN
Terminal 30
Terminal 31
Discrete wire

Terminal 30G (switched)

Terminal 30G supplies the vehicle interior lights with power. To avoid battery discharge caused by permanent activation of interior lights, terminal 30G is deactivated approximately 30 minutes after terminal 15 off if, additionally
- interior light is switched on or
- door is opened or
- tailgate is opened or
- bonnet is opened

Fuel pump actuation

In addition to the electric fuel pump 2 relay J49, actuated by the engine control unit, vehicles with manifold injection engines are fitted with fuel pump relay J17, which is actuated by the onboard power supply control unit J519. J17 is designed to ensure fuel pump supply.

The onboard power supply control unit provides actuation

- If the driver's door is opened (CAN information from door control unit J386)
- For a fixed interval
- For max. 3 intervals if driver's door is left open; if driver's door is closed and re-opened, relay is only actuated after a fixed time delay
- At most until ignition is switched on or crash signal is received via convenience CAN

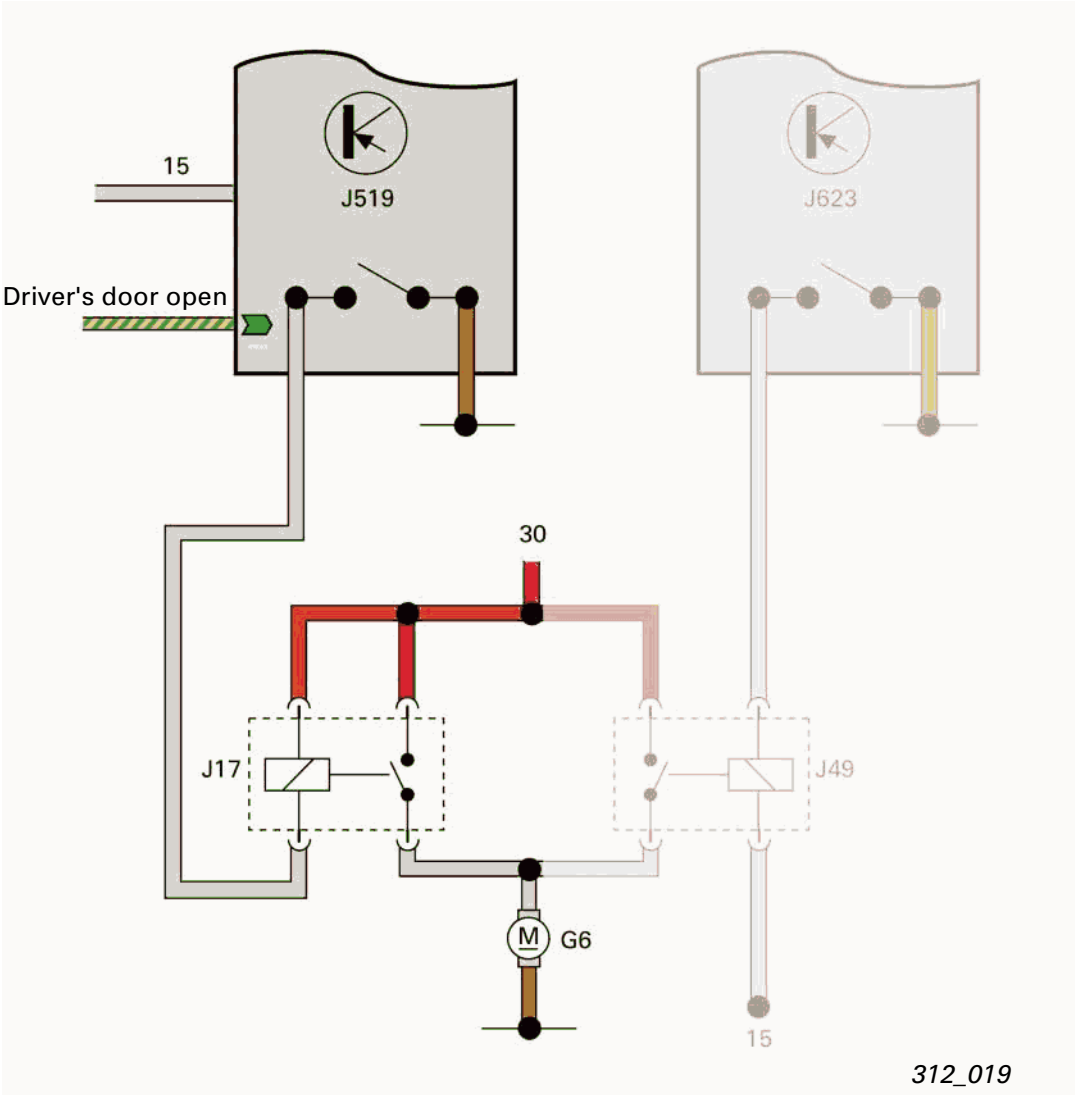

Relay J17 is actuated for 3 intervals with the driver's door open.

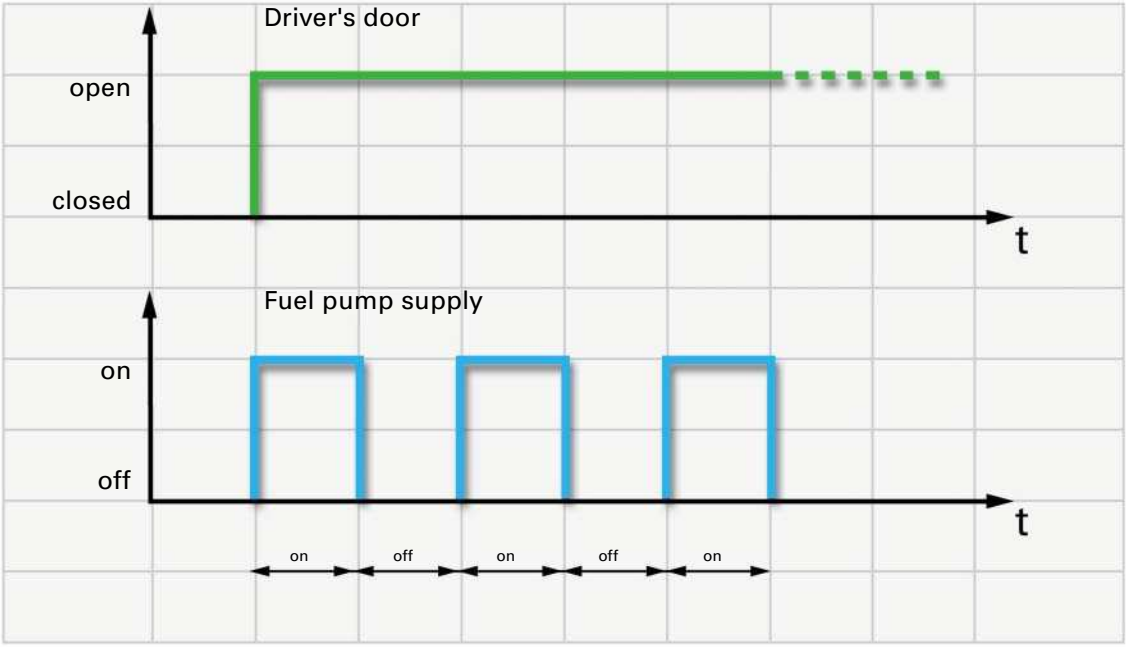

312_020

Relay J17 is only re-actuated following a time delay if the driver's door is opened several times.

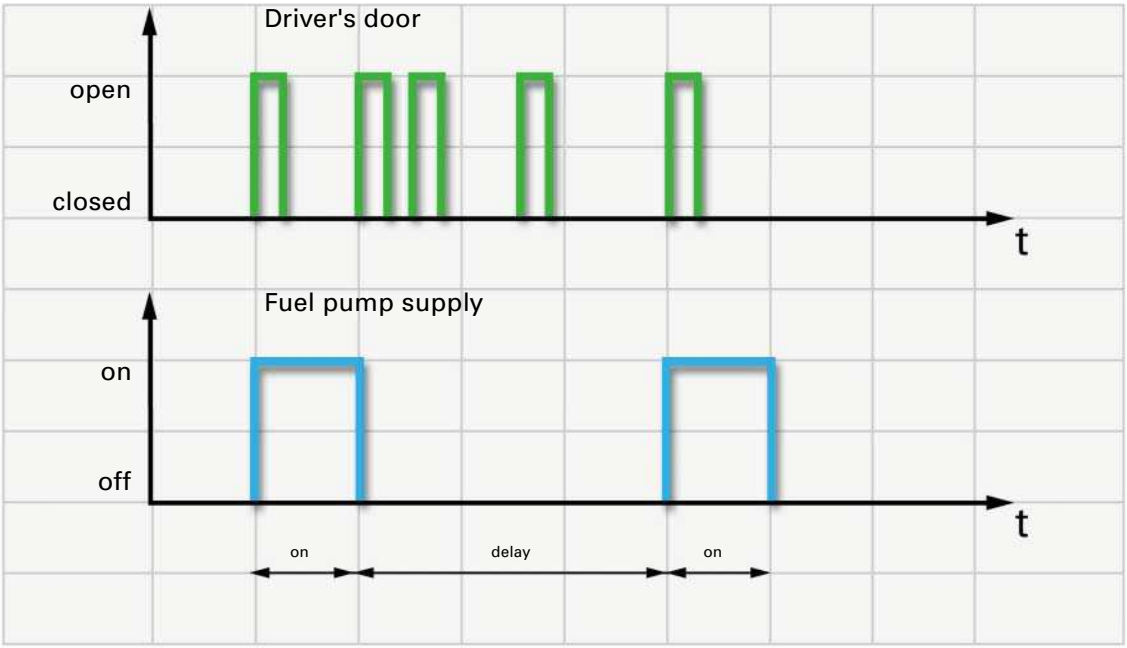

312_021

Convenience system central control unit J393

The convenience system in the Audi A3 '04 is similar to that of the Audi A2 and Audi A4.

It is responsible for the central locking master function and controls the entire anti-theft alarm and interior monitor operating sequence.

This Self Study Programme describes the new features of the convenience system central control unit J393 for the Audi A3 '04. More detailed general information on the convenience system central control unit J393 can be found in Self Study Programme 240 (Audi A2 Technical Features) and Self Study Programme 254 (Audi A4 '01 Technical Features).

New functions

- Diagnosis via CAN bus
- Buttons in doors for deactivating tilt sensor and interior monitor
- Use of LIN bus for communication with
  - Alarm horn H12
  - Anti-theft/tilt system control unit J529 and
  - Interior monitor

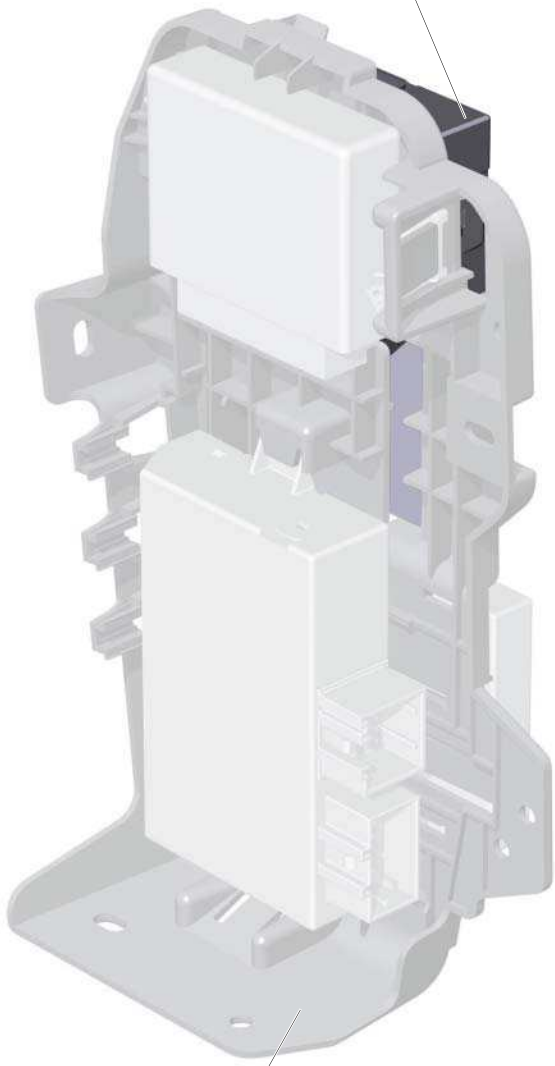

312_051

For further information on LIN bus, refer to Self Study Programme 286: Data bus systems LIN, MOST, BLUETOOTH™

Interior monitor (IM)

The interior monitor is connected to the convenience system central control unit J393 via the LIN bus.

The interior monitor control unit G303 has three sensors, two of which are housed in the control unit.

The third sensor is provided with an extension cable and located such that it can monitor the front area of the passenger compartment.

312_056

The interior monitor can be deactivated before locking the vehicle by way of the following:

- Removing ignition key
- Opening driver's door
- Actuating interior monitoring deactivation switch E267

If the interior monitor is not active, the function LED in switch E267 lights until the anti-theft alarm is activated, however for a maximum of 60 seconds.

The interior monitoring deactivation switch E267 is only active with door open.

The switch commands are read in by the door control unit and transmitted in the form of a CAN message to the convenience system central control unit J393.

Deactivation can be cancelled by actuating the switch E267 again.

312_064

Interior monitoring deactivation switch E267

Automatic re-locking does not alter the deactivation status for this cycle.

Anti-theft alarm (ATA)

Locking the vehicle always primes the anti-theft alarm.

Prerequisites:
- Ignition off
- S-contact off
- No authorised key signalled by immobilizer

The corresponding LED is installed in the centre of the dash panel next to the air conditioner photosensor.

The LED provides information on the status of the anti-theft alarm in the form of a fixed flashing pulse.

312_065

If locking is performed twice in succession with the key by way of the lock cylinder in the driver's door, the convenience system central control unit J393 receives the information:

"Lock but do not isolate"

The anti-theft alarm is however always primed.

By way of the
- Interior monitoring deactivation switch E267 and the
- Deactivation button for vehicle inclination sender E360

it is possible to exclude the corresponding sensor from the next anti-theft alarm priming operation.

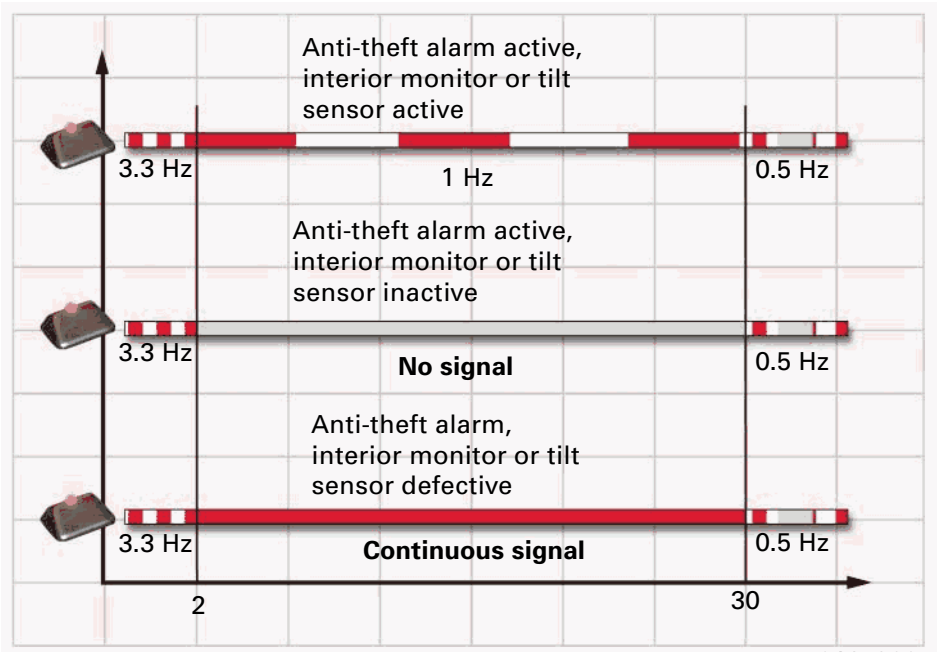

312_066

Alarm horn H12

The alarm horn H12 is actuated and monitored by the convenience system central control unit J393.

It is located in the front right wheel housing and connected by way of the LIN bus to the convenience system central control unit J393.

312_055

Operation

When primed, a wire monitoring telegram is transmitted cyclically every 800 milliseconds and acknowledged by the alarm horn H12.
In the absence of alarm horn acknowledgement or if the alarm horn H12 no longer receives any data, an alarm is triggered in the alarm horn and convenience system central control unit J393.
Alarm horn H12 signalling is governed by a country code, which is set by the "long encoding" in the convenience system central control unit J393.

Design

The alarm horn H12 has a separate battery which is constantly charged by the onboard power supply control unit J519.
Its function is to safeguard output of the specified alarm tone.
An alarm is also triggered in the event of wiring manipulation.

! On account of vehicle registration regulations, the "acknowledgement beep" on locking the vehicle is not permissible on the German market.

! The alarm horn is also available without LIN bus interface. Exact Audi genuine part number is required for ordering replacement parts.

Anti-theft/tilt system control unit J529

On the Audi A3 '04, the anti-theft/tilt system control unit J529 is a self-contained control unit incorporating a semi-conductor sensor for determining vehicle tilt.

Design and operation are described in Self Study Programme 287 (Electrical Components of Audi A8'03).

The internal design of the control unit is identical.

To ensure reliable functioning, modifications had to be made to the housing on account of a different installation position.

The anti-theft/tilt system control unit J529 is actuated by the convenience system central control unit J393 via the LIN bus.

This is located beneath the dash panel on the right.

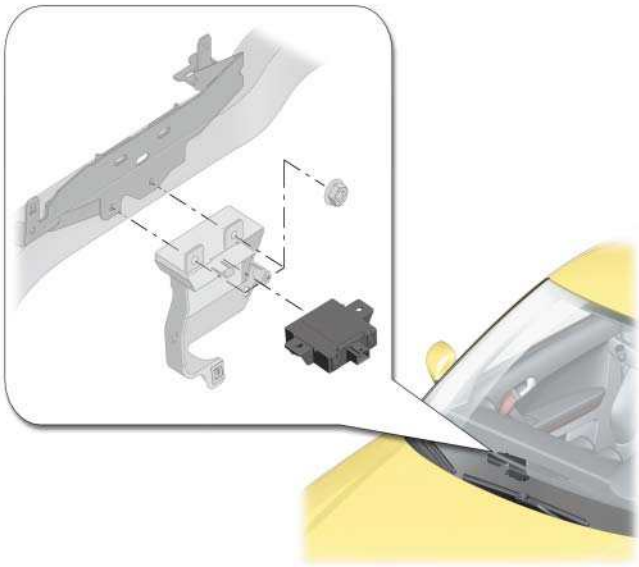

312_054

Deactivation button for vehicle inclination sender E360

The anti-theft/tilt system control unit J529 can, like the interior monitor, be deactivated before locking the vehicle.

312_063

Self-diagnosis

Address word 46 also addresses the LIN users connected to the convenience system central control unit J393. These respond with their control unit identification.

Self-diagnosis is implemented via the diagnosis CAN to the data bus diagnostic interface J533 and via the convenience CAN to the convenience system central control unit J393.

The sensitivity level of the anti-theft/tilt system control unit J529 can be adjusted if required.

The sensor is calibrated at the factory to 1° accuracy = 100 %.

It can be reduced in five stages from 1° to 1.5° = 50 % sensitivity.

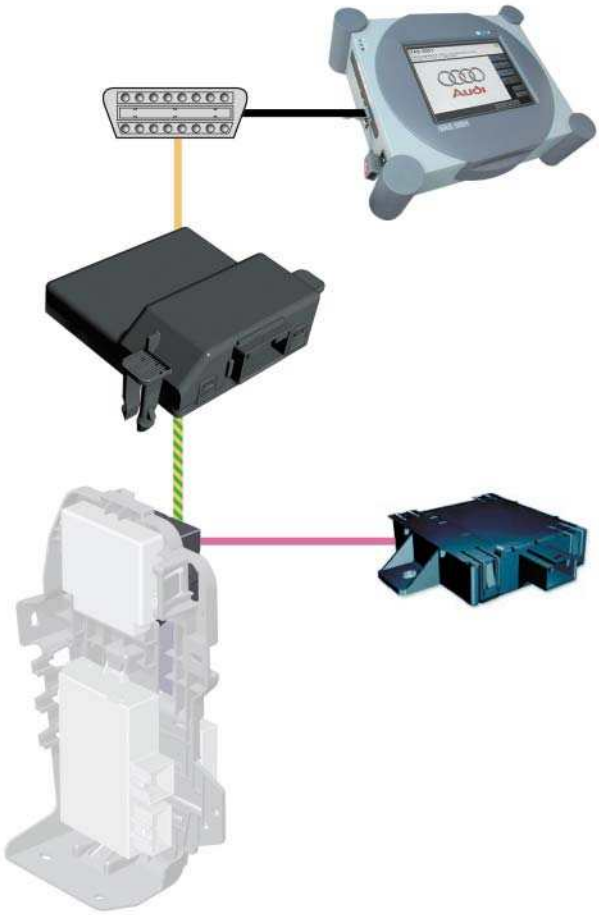

312_067

Reducing sensitivity is only intended to be peformed by service personnel for dealing with any problems reported.

Door control units J386 and J387

The tasks and functions of the door control units J386 and J387 are identical to those in the Audi A2 and A4. Corresponding information has already been published in Self Study Programme 240 (Audi A2 Technical Features) and Self Study Programme 254 (Audi A4 '01 Technical Features).

The door control unit for the front passenger side can however only be used to a restricted extent on the driver's side. For software reasons it cannot evaluate all input signals. This reduces the number of possible versions for service purposes. Interchange is thus also possible for checking operation.

The driver side and front passenger side door control units J386 and J387 are of identical design.
Given appropriate encoding, a driver side door control unit can also be employed on the front passenger's side.

312_057

In the course of service work, the control units are only to be replaced together with the window lifter motors.

If CAN messages are no longer received by the door control units (e.g. fault in convenience system central control unit J393), the following emergency functions are implemented:

Emergency function 1

After five missing messages, all door control units recognise that messages are no longer being transmitted by the convenience system central control unit J393.

- A fault entry is made:
  "No control unit communication"
- The driver side door control unit assumes control of the central locking system.
- All other door control units react to the messages from the driver side door control unit.
- The signals of the lock cylinder at the driver's door and of the lock/unlock button become command signals. Actuation of the lock cylinder takes priority over the button.
- The control points for the other doors are deactivated.

Emergency function 2

If the CAN link with the driver's door is interrupted, the vehicle can only be locked manually by way of the lock cylinder.
The lock/unlock button does not function.

CAN networking

Connection to the vehicle electrical system is by way of the convenience CAN, thus permitting a further reduction in the number of wiring connections between door and vehicle.

New function

The mirror folding function is now also available for the Audi A3 ’04.

Self-diagnosis

Self-diagnosis for the door control units J386 and J387 is performed by way of the following address words:

- 42 for driver's door electronics
- 52 for front passenger's door electronics

Self-diagnosis is implemented via the diagnosis CAN to the data bus diagnostic interface J533.

From there it is relayed via the convenience CAN to the appropriate door control unit.

312_069

Parking aid control unit J446

The function of the acoustic parking aid "APS" is identical to that of the predecessor model. The Audi A3 '04 is also fitted with a four-channel system, which means that the parking aid is again only available at the rear bumper for the Audi A3 '04.

312_068

Use is made of 4th generation sensors which have been optically modified and are identical in terms of design to those in the Audi A8 '03.
On account of the installation position, the sensors have different plug connections and Audi genuine part numbers.
The internal design of the connectors is identical to offer a greater range of adaption options.

Input and output signals

The following CAN information is required by the parking aid control unit J446:

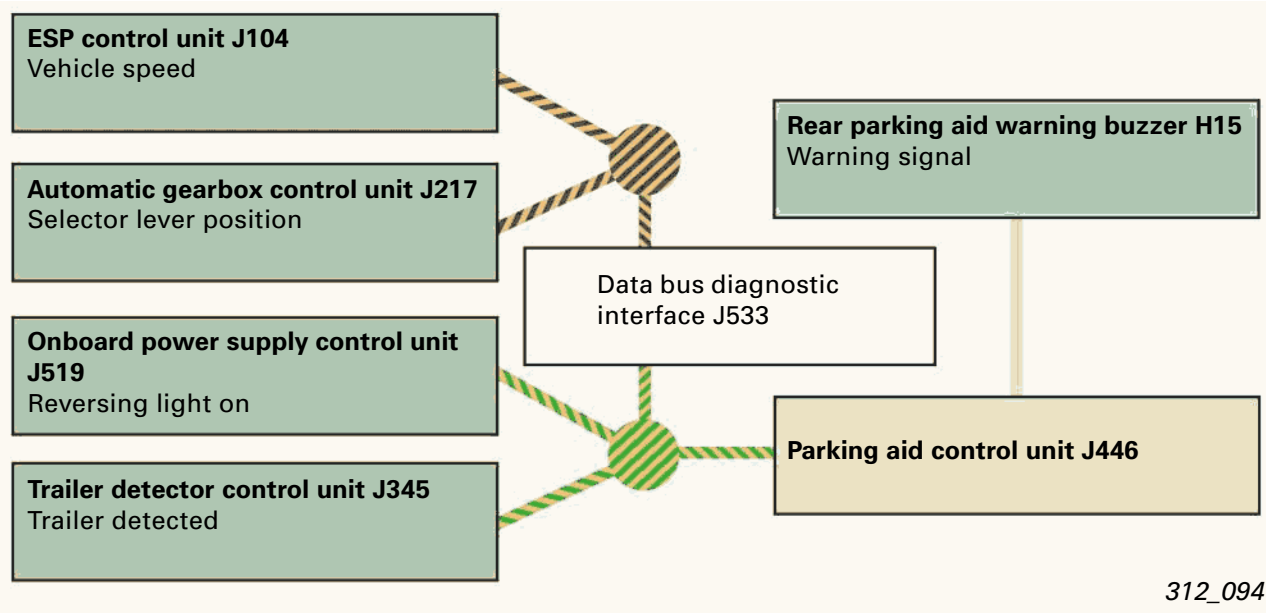

312_094

Basic information can be found in Self Study Programme 194 (Audi A6) and Self Study Programme 213 (New Technologies '99).

Advantages of the new sensors

- Less sensitive to dirt and water
- Larger horizontal sensing angle
- Mechanically encoded installation position

New function

The warning tone is output as of 160 cm.
A continuous tone starts to sound at 30 cm.
On vehicles with trailer coupling this range is 35 cm to allow for the ball attachment.
The side warning range starts at 60 cm.

The volume of the acoustic alarm is reduced if the distance from an obstacle does not change within four seconds.
In this situation, the distance warning given by the two outer sensors is already deactivated after three seconds to indicate that the vehicle is reversing alongside a wall and not approaching an obstacle.

The warning tone is muted if trailer connection is signalled by the trailer detector control unit J345.

The tone generator is located at the rear right of the vehicle above the wheel housing.

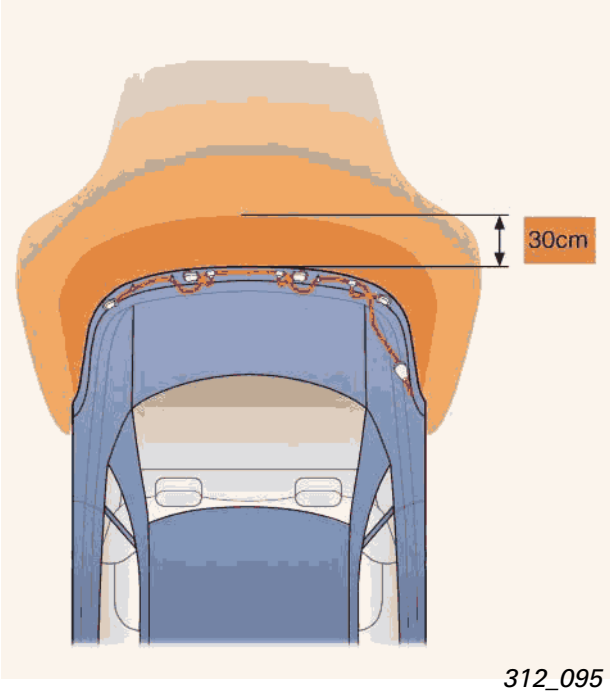

312_095

Self-diagnosis

Parking aid control unit J446 self-diagnosis can be selected by way of address word 76.

Parking aid control unit J446 diagnosis is implemented via the CAN and the data bus diagnostic interface J533. A K-wire is no longer provided.

Adaption

Adaption permits alteration of
- Volume
- Frequency or
- Acknowledgement tone

It is also possible to reset the factory setting.

Volume and frequency can now be adapted in nine stages instead of five.

Control unit encoding

Long 20-bit encoding must be performed using the diagnosis tester.
Changes to the code are adopted immediately without the need for an ignition off/on cycle.

Ambient conditions

Fault entries in the parking aid control unit J446 are now also accompanied by an indication of the ambient conditions.

This is designed to assist fault-finding.

The standard ambient conditions are stored with mileage, date and time.

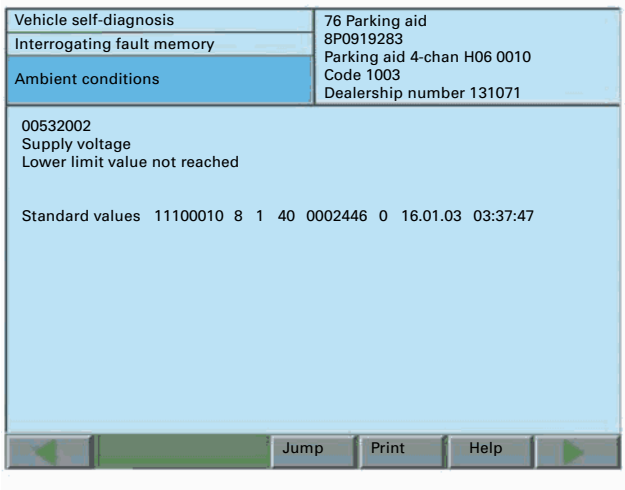

312_093

The ambient conditions are accessed by pressing the bottom right arrow key on the diagnosis tester display when viewing the fault memory content.

Steering column electronics control unit J527

The design of the steering column electronics control unit J527 has been modified for use in the Audi A3 ’04.

It includes the following components:

- Mechanical ignition lock with immobilizer reading coil D2
- Steering column electronics J527 for signal conversion and processing of signals from drive system CAN and convenience CAN
- Equipment-specific control elements
- Coil connector with steering angle sender G85
- Electric ignition key removal lock (for vehicles with automatic gearbox)
- LIN function for connection to steering wheel electronics module J453 and operating unit E221 in multifunction steering wheel

All modules of the steering column electronics control unit J527 are arranged one above the other.
Replacement of individual modules demands extremely careful dismantling of the steering column electronics control unit J527.

On vehicles with automatic gearbox, the electric ignition key removal lock N376 is also incorporated.

312_092

Function

The task of the steering column electronics is to transmit information from operating elements such as turn signal indicators or wipers to the bus in the form of a CAN message and to read any incoming information.

Self-diagnosis

Communication with the steering column electronics is effected by way of the data bus diagnostic interface J533 and the convenience CAN. The diagnostic functions for the steering column electronics control unit J527 can be found using address word 16 under "Steering wheel electronics".

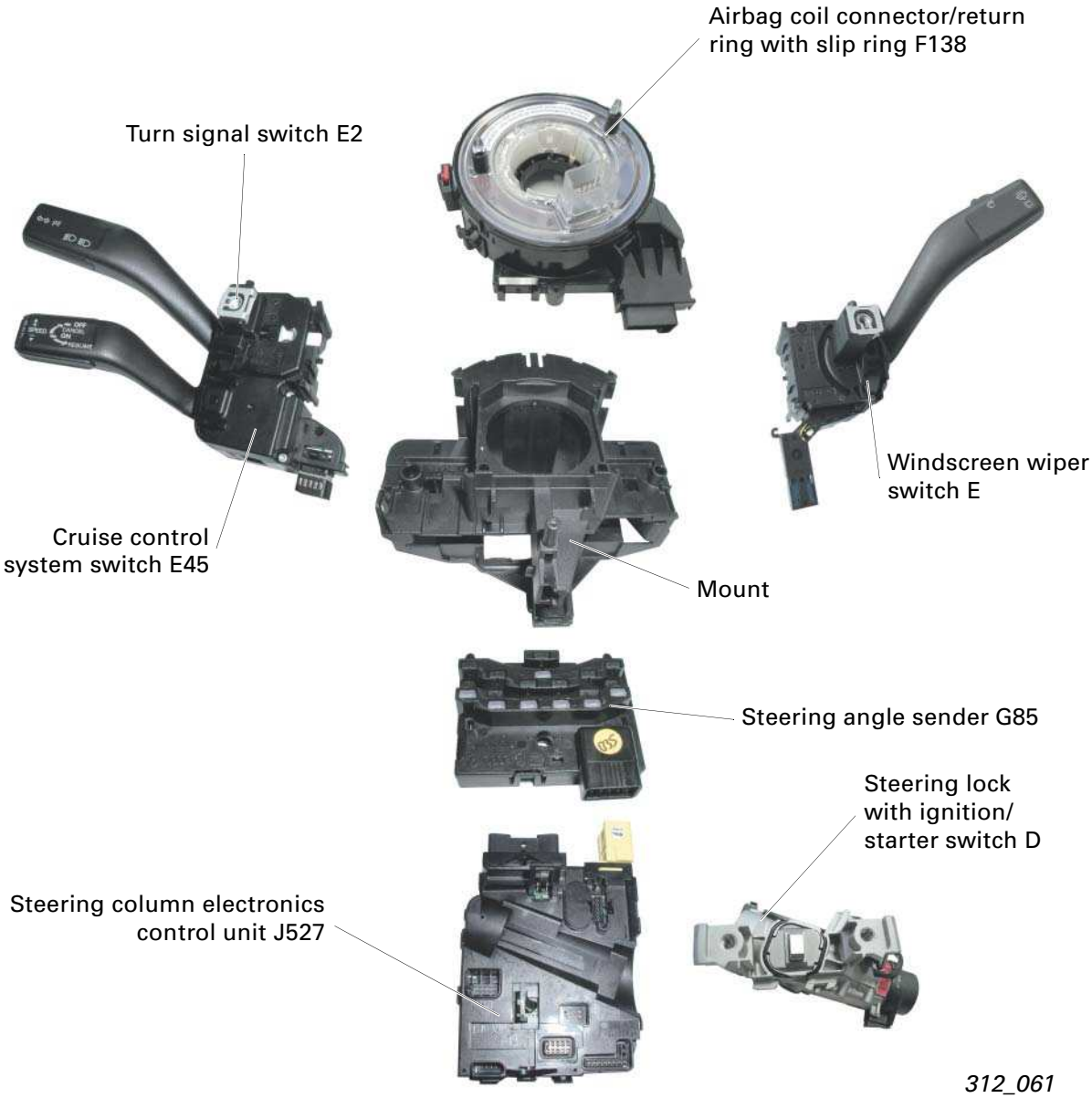

312_061

Trailer detector control unit J345

In terms of design and functions, the trailer detector control unit J345 is identical to that of the Audi A8 '03. Its task is to switch and monitor the trailer lights.

Operating principle

The trailer detector control unit J345 decodes the CAN information (e.g. right turn signal...) transmitted on the convenience CAN.
As the trailer does not have a separate CAN bus interface, the trailer detector control unit J345 incorporates the electronics required to convert the trailer signals into CAN bus messages. The trailer detector control unit is also provided with output stages for amplifying the electrical signals for the trailer taillights.
In addition, it is designed to suppress certain functions when using a trailer.

Plugging in the trailer connector deactivates the rear parking aid as well as the fog taillight on the vehicle.

Trailer detection

When the ignition is switched off, the trailer detector control unit J345 recognises trailer connection by way of a resistance measurement at the turn signal indicator filaments.

This permits actuation of the hazard warning system on the trailer without having to switch on the ignition.

When the ignition is switched on, the taillight bulbs are interrogated by way of a further resistance measurement.
This ensures trailer detection even if the trailer turn signal indicators are defective.

The trailer detector control unit J345 transmits the information "Trailer detected" to the convenience CAN.

! These functions can only be implemented if the parking aid is also encoded for trailer operation.

Fitting location

The trailer detector control unit J345 is located at the rear right of the luggage compartment at the control unit mount.

Emergency function

In the event of failure of the processor in the control unit

– The brake light is re-routed to bypass the processor and thus remains operative.

In the event of a fault in the trailer circuit caused by electrical overloading of the connection to the trailer detector control unit or a short circuit

– The drivers in the control unit switch the output stages off and on and the trailer lights thus flash independently.

The emergency lighting function is activated if the signal "ignition on" is applied to the control unit with no CAN link.

When the emergency lighting function is active, switching on the ignition activates the taillight.

Self-diagnosis

Trailer detector control unit J345 diagnosis is implemented by way of address word 69.

A new feature is the selective control element test, which permits specific actuation of individual control elements.

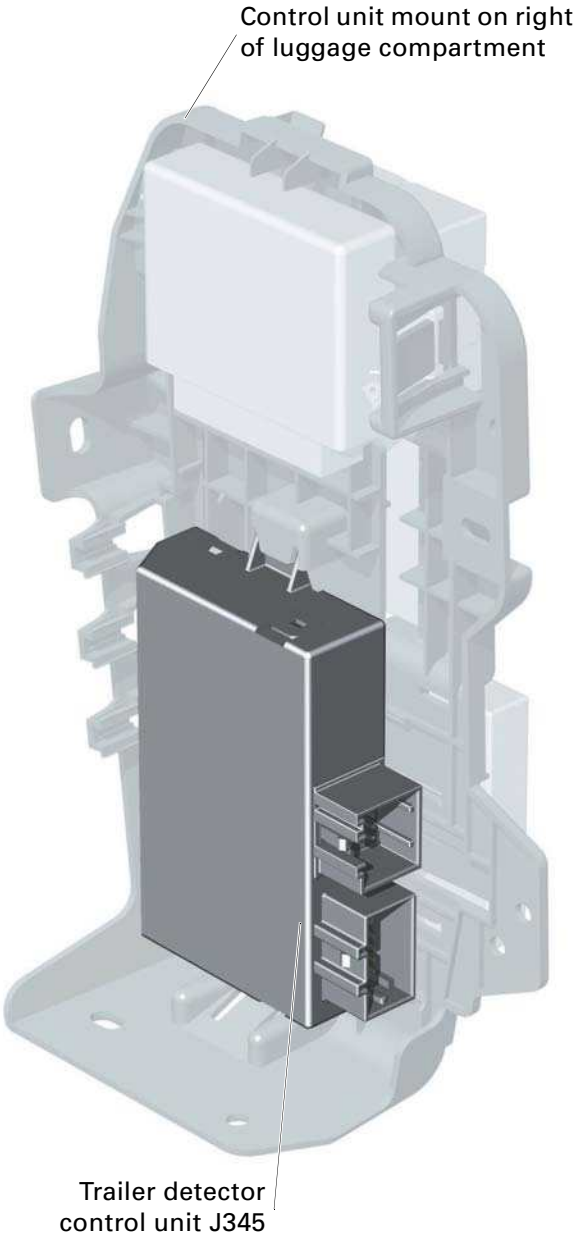

312_050

Control unit with display in dash panel insert J285

A new J285 generation is being introduced with the Audi A3 ’04.

This is the first time that this control unit has been designed as two different printed circuit boards.

The function PCB is attached with the connector to the rear section and accommodates all the function-specific components.

The display PCB contains all illumination LEDs, the stepper motors and the displays together with their output stages.

The link with the vehicle is established by the dash panel insert CAN between the control unit with display in dash panel insert J285 and the separate data bus diagnostic interface J533.

The number of J285 wiring connections has been reduced.

A lot of input information is transmitted in the form of CAN information and thus there is only one connector on the back.

The following input signals from external sensors are relayed by means of separate wires to the control unit with display in dash panel insert J285:

- Ambient temperature sensor in bumper
- Oil pressure switch
- Washer fluid reservoir (equipment-specific)
- Coolant
- Brake pad
- Brake fluid reservoir
- Tank system
- Multifunction switch for navigation and menu control (equipment-specific)

312_058

Possible versions:

Lowline version

This is the basic version with no centre display.
A group of warning lamps is provided in place of the centre display.
The functions presented on the centre display with the highline dash panel insert are represented by way of these lamps on the lowline version.

The left side display is used for the

- Time (no radio controlled clock) and
- Ambient temperature (equipment-specific)

functions.

312_091

The right display is used for trip recorder and mileage readings.

Service information can also be presented.

312_083

Midline version

This version is designed specially for vehicles with automatic gearbox and no driver information system.
In this case, the centre display is encoded such that only the selector lever position is indicated.

The ambient temperature display is equipment-specific and only appears on the centre display if appropriately encoded.

312_059

Highline version

This dash panel insert version of the control unit J285 features a 64x88 pixel central centre display (as in the Audi A3 '97).

The following functions are integrated in addition to those offered by the midline version:

- On-board computer functions
- Radio and telephone display
- Navigation display
- Battery warning
- Vehicle speed warning 1+2
- Washer fluid warning
- Bulb failure monitoring (front, rear and trailer)
- Menu control for auxiliary heater
- Radio controlled clock with test mode
- Gear indicator

312_084

Immobilizer IV

Function

The immobilizer function is integrated into the dash panel insert J285.
The available data are stored in the FAZIT data base of Audi AG.
Re-usable data can only be called up by way of this data base.

Immobilizer IV adaption is to be performed using the "Guided fault-finding" function with the diagnosis tester in online mode.

The immobilizer warning lamp has been discontinued.

The immobilizer fault display is integrated into the speedometer display.

312_086

When matching keys, the number of keys appears on the display.

312_087

Connection to the other CAN users can only be established by way of the data bus diagnostic interface J533.

The immobilizer has a separate diagnosis address word.

The dash panel insert J285 is addressed via address word 17 and the immobilizer via address word 25. Measured value blocks, adaption channels and fault memories are thus handled separately.

On vehicles with driver information system, the terminal 30 electrical system voltage in the dash panel insert J285 is evaluated.
If the electrical system voltage drops below 10.5 V, the warning "low battery charge" appears after twenty seconds. This message is cancelled again once the dash panel insert J285 has measured an electrical system voltage in excess of 10.8 V for more than eight seconds.

312_089

Communication between dash panel insert J285 and data bus diagnostic interface J533

A wake-up wire permits reciprocal waking of the dash panel insert J285 and the data bus diagnostic interface J533.
In contrast to the low-speed convenience CAN, the high-speed dash panel insert CAN cannot be wakened by way of the CAN wire and a separate wake-up wire is thus necessary.
Electrical system voltage is applied to this wire with ignition on.

This wake-up function is required if, for example, the driver wishes to store a "Vehicle speed warning 2" with the ignition switched off and the dash panel insert CAN in sleep mode. The warning threshold is permanently stored in the dash panel insert J285.
To enable the setting to be made, electrical system voltage is applied to the wake-up wire by the dash panel insert J285.

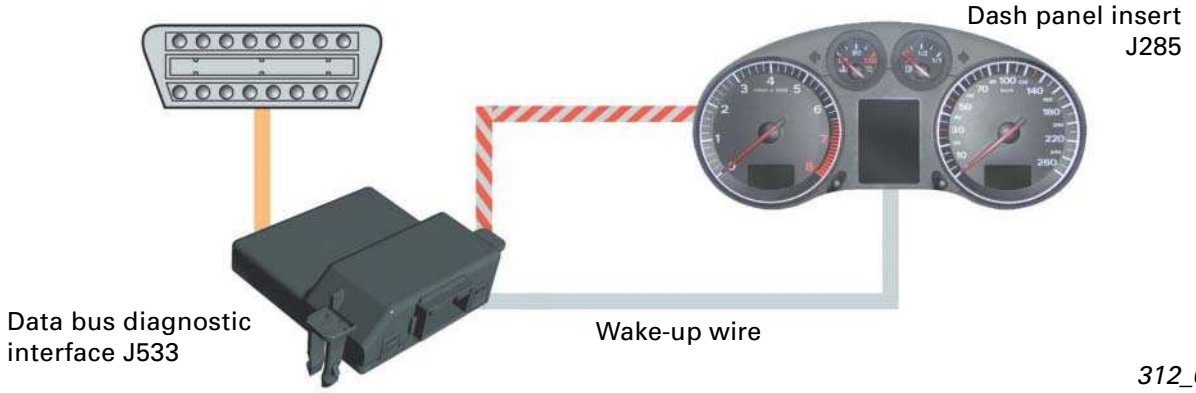

312_085

Pressing the setting button in the dash panel insert J285 causes the data bus diagnostic interface J533 to activate the convenience CAN.
The steering column electronics control unit J527 evaluates the signals from the switch in the wiper stalk.

The signals from the switch are transmitted from the steering column electronics control unit J527 on the convenience CAN to the data bus diagnostic interface J533 and from there via the dash panel CAN to the dash panel insert J285.

Self-diagnosis

Diagnosis is performed via the CAN bus using the diagnosis tester. The K-wire is now only used for diagnosis of emission-specific control units.

On service installation of a new dash panel insert J285, the total mileage is adopted from the old dash panel insert.

This involves writing the value for the vehicle mileage to date into the new dash panel insert J285.

The mileage resolution is entered in 10-kilometre steps.
Following an incorrect entry, further attempts are possible until the first time five kilometres have been covered after the first change has been made.
After an incorrect mileage entry it only becomes impossible to change the mileage on completion of a 5 kilometre test drive.

The code can no longer be altered after entering a mileage of more than 150 km. The entry has to be made in miles if the dash panel insert J285 is encoded for miles (GB and USA).

Transportation mode

Activation of transportation mode in the data bus diagnostic interface J533 is indicated by the dash panel insert J285 in the right display after switching on the ignition.
Transportation mode is implemented in the data bus diagnostic interface J533. A description is given in the first part of this Self Study Programme.

312_014

If "def" appears on display and the warning lamps for
- ABS
- Brakes
- Airbag and
- Power steering

light simultaneously, there is a fault in the dash panel insert J285 and it must be replaced.

Lighting of the display without the warning lamps coming on indicates an error during key matching. With ignition on a waiting time has to elapse before a new entry can be made.

Radio controlled clock

Vehicles with driver information system are also fitted with a radio controlled clock.
DCF 77 or an equivalent signal for GB, USA or Japan is evaluated for clock synchronisation.

To improve reception, the receiver module is fitted in the rear bumper.

A transmitter symbol in the clock display indicates whether radio controlled clock mode is active.

312_088

The radio controlled clock function can be activated by way of the adaption routine in channel 19.
The duration of attempted synchronisation is also governed by the adaption value in channel 19, which can be varied between 0 and 50 minutes. The factory setting for this value is 10 minutes.

1st, 2nd digit	Function
00	No radio controlled clock fitted
01..50	Synchronisation time [min]

312_090

The radio controlled clock function is deactivated
- If the synchronisation time in channel 19 is set to 0
- After the third attempt at synchronising the radio controlled clock (closed-circuit current reduction) or
- If the radio controlled clock is deactivated in the dash panel insert J285 by the user

The radio controlled clock symbol is then no longer displayed.

If the radio controlled clock is not activated in the adaption function, selection of "Radio controlled clock active" is suppressed in the dash panel insert J285. The time function runs in normal clock mode.

Dash panel insert J285 reaction

Information from radio controlled clock, date and time, are transmitted to the dash panel insert CAN.

This information is thus available to all CAN users, e.g. for ambient conditions relating to fault memory entries.

Synchronisation process

A synchronisation attempt is started following connection to the power supply. This involves energisation of the receiver by way of the internal power supply and evaluation of the signal wire.

The aim is to implement synchronisation successfully once daily.

The first synchronisation attempt starts at 3:00 o'clock, followed by a second at 4:00 o'clock and a last attempt at 5:00 o'clock.

If synchronisation proves unsuccessful even after the third attempt, a further attempt is started after every journey (recognised distance).

As soon as the time has been successfully synchronised, the radio controlled clock receiver is deenergised and no further attempts at synchronisation are made until 3:00 o'clock on the following day.

Diagnosis, test mode

A new feature is a test mode for checking the link between the radio controlled clock and the receiver module.

Sequence of test mode

The normal radio controlled clock logic is not influenced by the limited test mode period.
The test mode is started if the value in adaption channel 19 is set once to 0 and then to 10 minutes again.
The edges of the time signal received (step changes in carrier amplitude) are then counted.

Following detection of four edges, a corresponding entry is made to indicate successful reception.
The test lasts 10 seconds and can then be read out in the measured value block.
This shows
- Test OK
- Test not OK or
- Test off

display.

Neither this test mode nor convenience radio encoding were available at the start of series production.

Time zone setting

The time zone setting is made in the same way as normal time settings (clock button or menu), with the difference between the hour set and the DCF hour information being interpreted as a change in time zone.

If the time zone has been changed, allowance is always made for this setting on re-synchronisation even if radio controlled clock mode is then no longer being used.
The time zone information is retained until terminal 30 is reset.

Distributed Functions

Key

This section on the distributed functions in the Audi A3 '04 is designed to give an insight into the data network in the vehicle and to facilitate understanding of the topology.

A detailed description of the distributed functions can be found in Self Study Programme 288 (Audi A8 '03 Distributed Functions).

For the Audi A3 '04 slight changes have been made to the method of representation of the information paths (wires).

Wiring

- Drive system CAN
- Dash panel insert CAN
- Diagnosis CAN
- Convenience CAN
- Infotainment CAN
- LIN bus
- Bidirectional wire
- Discrete wire
- Follow-up function
- Prerequisite

Components and symbols

A number is used to designate the information sequence described in the corresponding text.
The green circle symbolises the start of an information sequence.

The green arrow indicates input information.

The blue arrow indicates output information.

The layout of the individual components such as control units, switches or control elements as illustrated corresponds to the actual arrangement in the vehicle. Component designations are explained on the basis of their identifiers in the corresponding text.

Components marked in red indicate the function master within a sequence of operations.

Hazard warning

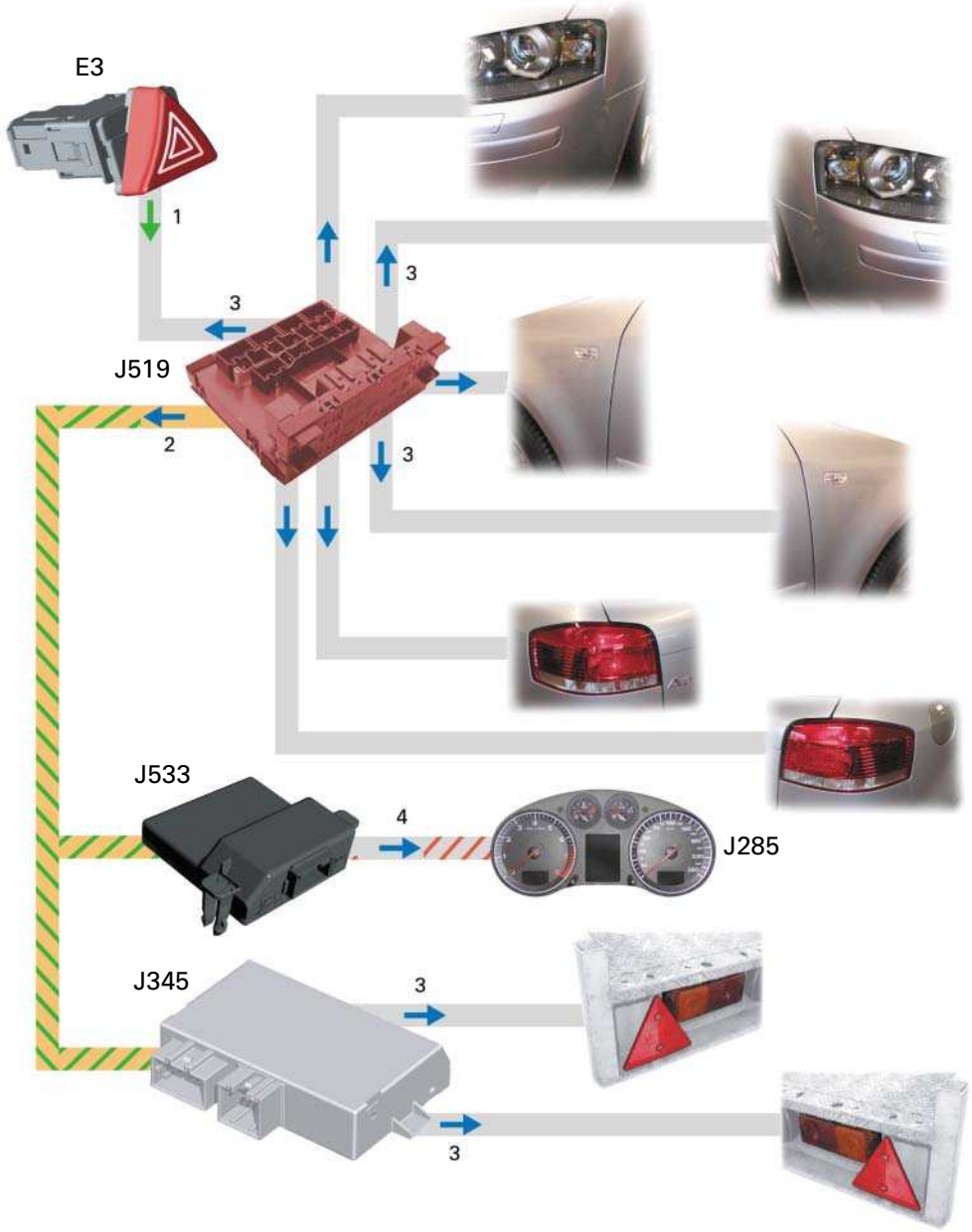

312_023

1 The driver actuates the hazard warning light switch E3. The switch transmits the discrete information "Hazard warning" to the onboard power supply control unit J519.
2 The onboard power supply control unit stipulates the type of indication and transmits the information "Hazard warning flashing mode" to the convenience CAN.
3 The onboard power supply control unit J519 actuates the front M5 and M7, side M18 and M19 and rear M6 and M8 turn signal bulbs as well as the warning lamp in the hazard warning light switch E3.
4 The data bus diagnostic interface J533 transmits the information via the dash panel insert CAN to the dash panel insert J285, which actuates the turn signal indicator lamps.
5 The trailer detector control unit J345 actuates the trailer lights.

Left turn signal

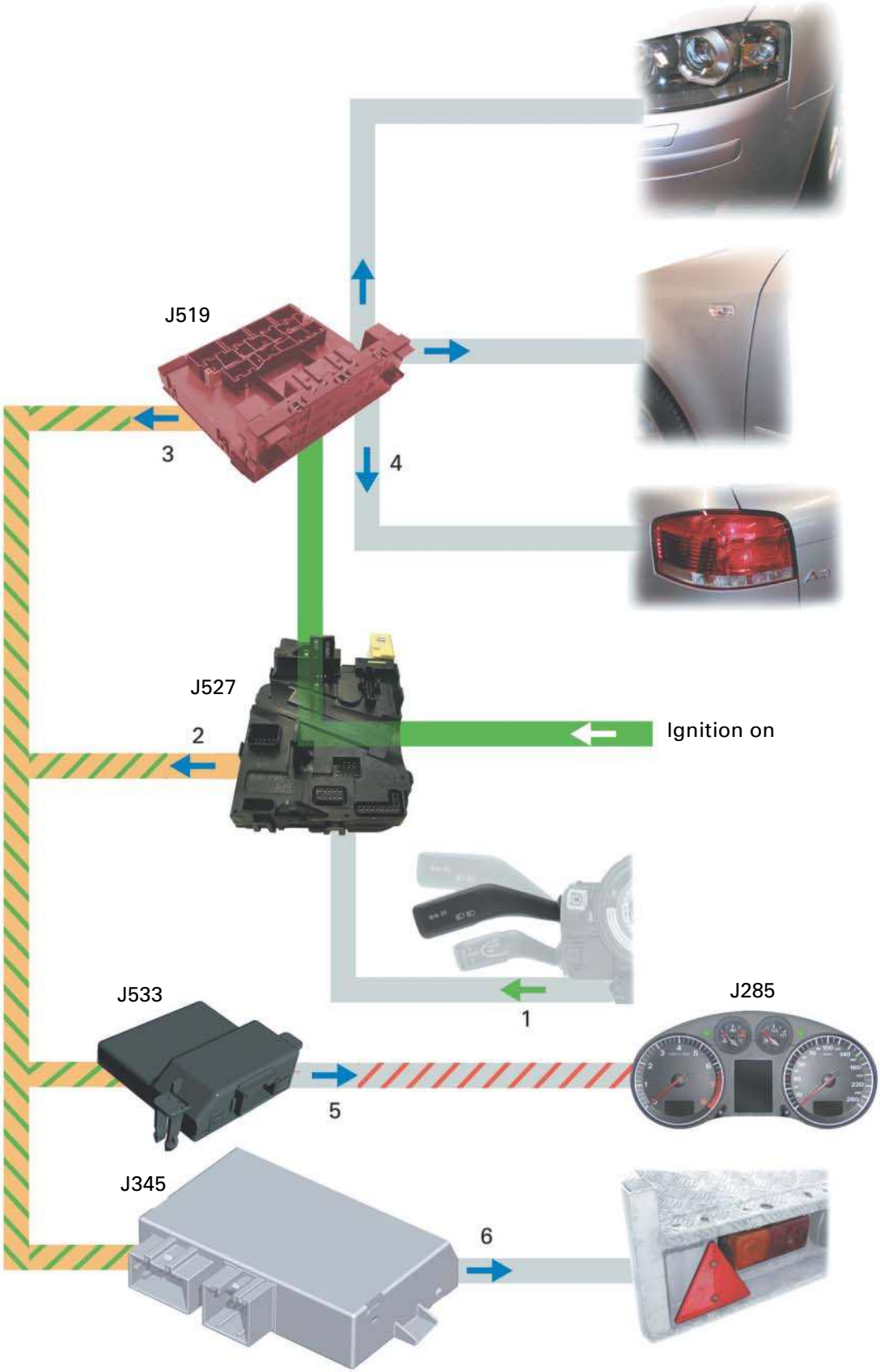

312_024

Prerequisite

Actuation of electric ignition/starter switch, causing onboard power supply control unit J519 to switch on ignition.

Function

1 The driver sets the turn signal switch E2 to the left. This transmits a resistance-encoded signal to the steering column electronics control unit J527.

2 The steering column electronics control unit relays the information "Left turn signal" via the convenience CAN to the onboard power supply control unit J519.

3 The onboard power supply control unit establishes the priorities and type of indication on the basis of the information received and then transmits the information "Left turn signal" to the convenience CAN.

4 The onboard power supply control unit actuates the front left turn signal bulb M5, the left side turn signal bulb M18 and the rear left turn signal bulb M6.

5 The data bus diagnostic interface J533 passes the CAN information "Left turn signal" to the dash panel insert CAN and the warning lamp in the dash panel insert then flashes.

6 The trailer turn signal indicator is actuated by the trailer detector control unit J345 which has received the information "Left turn signal".

Triggering of anti-theft alarm

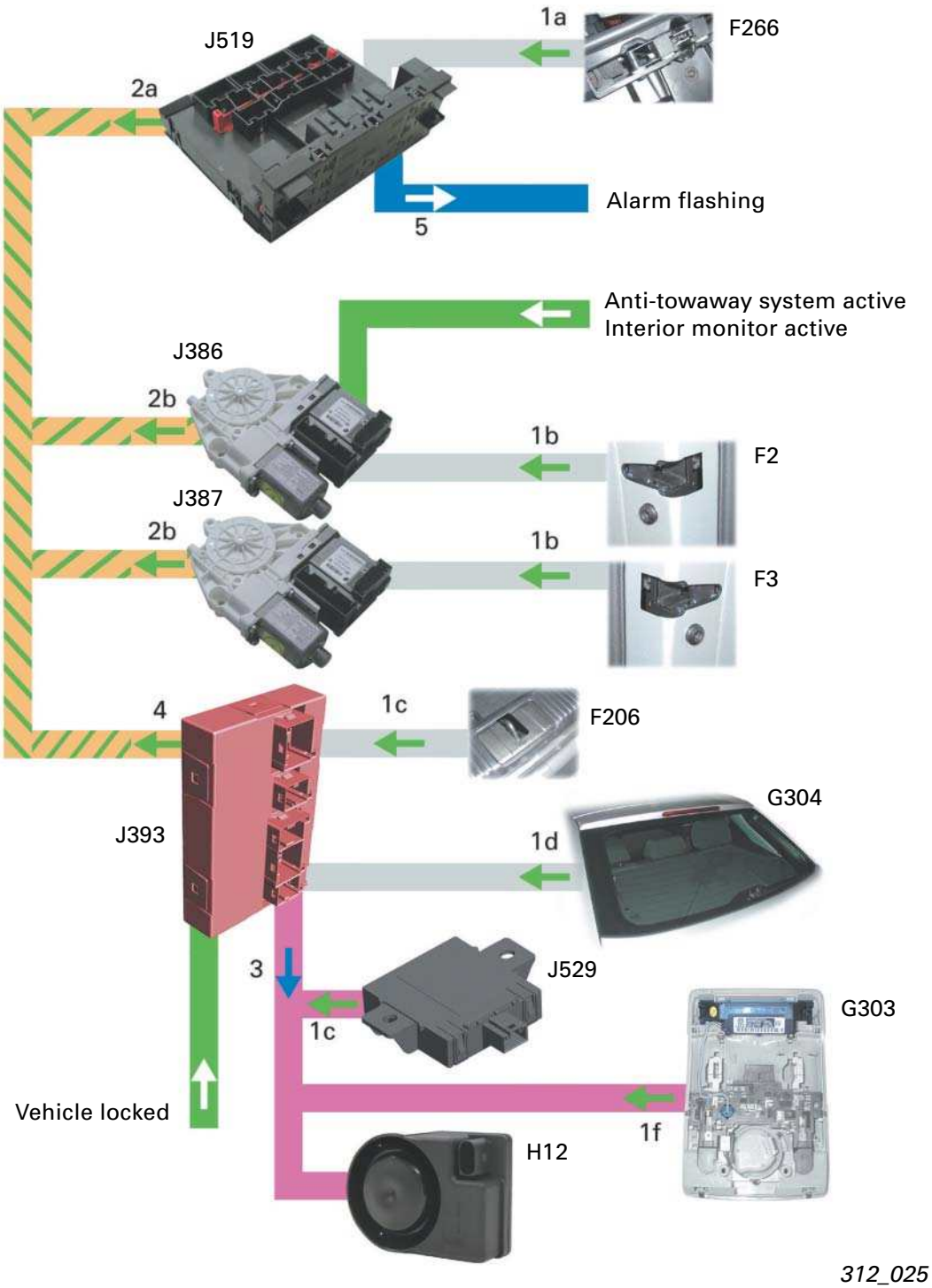

312_025

Prerequisite

Vehicle locked from outside. Anti-towaway system and interior monitor active, i.e. warning LEDs in buttons not lit.

Function

1a The bonnet contact switch F266 detects opening of the bonnet and transmits the information via a discrete wire to the onboard power supply control unit J519.

2a The onboard power supply control unit transmits the information "Bonnet open" via the convenience CAN to the convenience system central control unit J393.

1b Door contact switch F2 or F3 detects an open door and transmits the information via a discrete wire to the appropriate door control unit.

2b The door control unit transmits the information "Door open" via the convenience CAN to the convenience system central control unit.

1c The tailgate/boot lid closed switch F206 detects an open tailgate and transmits the information via a discrete wire to the convenience system central control unit.

1d The rear window glass breakage sensor G304 detects a broken rear window and transmits the information via a discrete wire to the convenience system central control unit.

1e The anti-theft/tilt system control unit J529 detects tilting of the vehicle and transmits the information via the LIN bus to the convenience system central control unit J393.

1f The interior monitor sender/receiver module 1 G303 detects moving objects in the passenger compartment and transmits the information via the LIN bus to the convenience system central control unit.

3 The convenience system central control unit evaluates the alarm triggering and actuates the anti-theft alarm system horn H8 by way of the LIN bus.

4 The convenience system central control unit transmits the information "Alarm flashing" to the convenience CAN.

5 The onboard power supply control unit J519 evaluates the information "Alarm flashing" and implements the "Alarm flashing" function.

General outline of infotainment system

The Audi A3 '04 has a separate infotainment CAN data bus, which is connected to the data bus diagnostic interface J533.

Diagnosis can be performed by way of this CAN bus for all infotainment components with the exception of the navigation system with CD drive control unit J401 (diagnosis still via K-wire) and the BOSE amplifier R12.

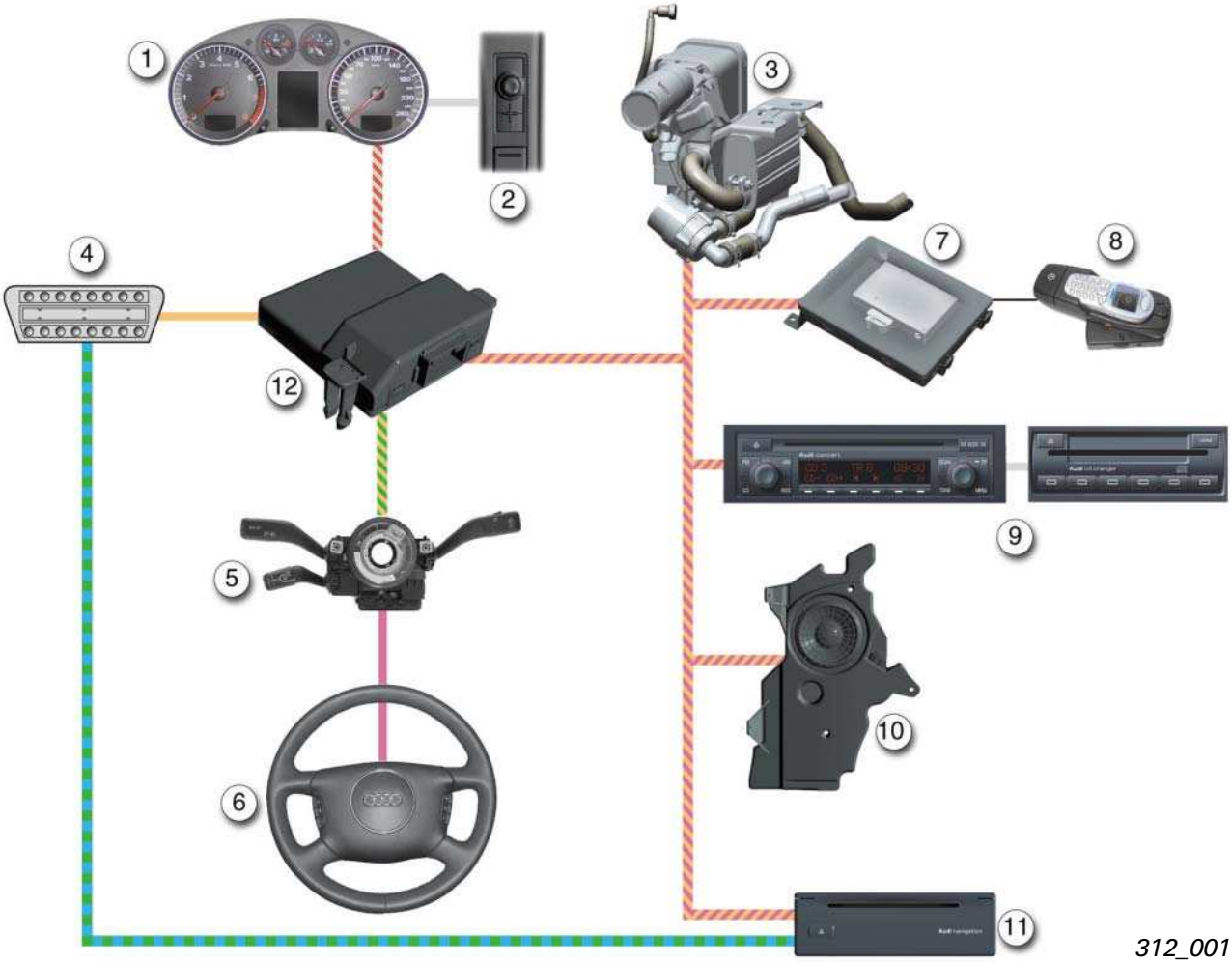

312_001

1 Dash panel insert J285
2 Function selection switch II E272
3 Additional heater J364
4 Diagnostic connection T16
5 Steering column electronics J527
6 Multifunction steering wheel E221 (optional)
7 Telephone transmitter and receiver unit R36
8 Telephone bracket R126
9 Radio R and CD changer R41, connected via separate data bus
10 Amplifier with bass loudspeaker R44
11 Navigation system with CD drive control unit J401
12 Data bus diagnostic interface J533

Data are exchanged with the multifunction steering wheel E221 via the central data bus diagnostic interface J533 and the convenience CAN. For this purpose, the steering column electronics J527 convert the LIN signals of the multifunction steering wheel into CAN messages.
The messages are relayed to the appropriate control units in the infotainment CAN and dash panel insert CAN by way of the convenience CAN and the data bus diagnostic interface J533.

Radio/telephone data and navigation information are presented on the centre display of the dash panel insert J285. This involves the data records being passed from the control units via the infotainment CAN to the data bus diagnostic interface J533 and relayed from there by way of the dash panel insert CAN.

The speed-dependent volume control GALA makes use of the network.

The corresponding signal is passed by the data bus diagnostic interface J533 from the drive system CAN to the infotainment CAN, thus making it available to the control units which use the GALA signal.

The navigation system is operated by means of function selection switch II E272 in the centre console as in the Audi A4 '01. This switch is connected directly to the dash panel insert J285. Signals from the function selection switch are converted by the dash panel insert into CAN messages, which are relayed via the dash panel insert CAN, data bus diagnostic interface J533 and infotainment CAN to the navigation control unit J401.

The additional heater J364 is also integrated into the infotainment CAN.

Information on the additional heater J364 can be found in Self Study Programme 290 (Audi A3 ´04 Technical Features).

Sound systems

Two different sound systems are available for the Audi A3 '04. With both systems, the front mid-range loudspeakers are fitted in the trim of the two doors and the front treble loudspeakers in the A-pillars. The rear loudspeakers in the side trim on either side are of coaxial design and cover both the treble and mid-range spectrum. An additional mid-range/treble loudspeaker is installed in the centre of the dash panel to provide well-balanced acoustics.

One bass loudspeaker is always installed behind the rear left wheel housing.

With the BOSE sound system, a separate amplifier for all channels is additionally fitted on the control unit mount behind the rear right wheel housing.

312_002

1 Front left treble loudspeaker R20
2 Front right treble loudspeaker R22
3 Front left mid-range loudspeaker R103
4 Front right mid-range loudspeaker R104
5 Centre mid-range/treble loudspeaker R158
6 Rear left loudspeaker R4
7 Rear right loudspeaker R5
8 Amplifier with bass loudspeaker R44
BOSE: Bass loudspeaker R100
9 Amplifier R12

Basic sound system

The basic sound system uses analog technology to provide natural and balanced sound quality for all occupants.
The front channels are amplified directly by the radio. These channels are connected via a diplexer to the centre mid-range/treble loudspeaker R158 in the top of the dash panel.

The rear channels are amplified separately. For this purpose two radio pre-amplifier outputs are connected to the amplifier with bass loudspeaker R44, which incorporates the amplifier output stages for the two rear-channel coaxial loudspeakers as well as for the subwoofer. Basic sound system diagnosis can be performed by way of the CAN bus.

BOSE sound system

With the BOSE sound system, all loudspeaker channels are optimally adapted to the passenger compartment and amplified by the additional BOSE amplifier R12. The radio only provides the pre-amplifier outputs and the control wire. There is no provision for BOSE sound system diagnosis.

The analog radio signals are initially digitised using six A/D converters and then acoustically conditioned by the special BOSE digital signal processor. Once the digital signals have been re-converted to analog form, six output stages are responsible for amplification.

Channels five and six are connected to the subwoofer R148. The seventh loudspeaker output for the centre mid-range/treble loudspeaker R158 branches off from the sixth channel via a high-pass filter.

Radios and CD changer

For users, there are no differences in terms of function as compared to units already fitted in other model series. An outline of the main characteristics of these units can also be found in Self Study Programme 254 (Audi A4 '01 Technical Features).

Changes have, however, been made to the radio diagnosis function. All three radios have a direct CAN bus interface for diagnosis purposes. A selective control element test is now available in the diagnosis tester for radio diagnosis. This permits either consecutive implementation of all control element tests or the selection of specific tests.

Radio convenience encoding with which the four-position radio code is read out of the dash panel insert is not functional in the Audi A3 '04.

The CD changer R41 in the glove box and the corresponding radio are connected directly via the Panasonic bus. This bus transmits the radio commands to the CD changer control unit. This bus is also used to transmit data between changer and radio in addition to synchronisation data between the two units.

PIN assignment of radio/CD changer interface, Panasonic bus

PIN	Function	Description
1	CD Data	Data link between CD changer and radio
2	CLK (Clock)	Synchronisation signal from CD changer to radio
3	Data Ground	
4	R-Data	Data link between radio and CD changer
6	12V Back-up	
7	Right channel +	
8	ACC 12V	Switching voltage:12V -> CD changer in operation 0V -> CD changer off
9	Signal Ground	
10	Left channel +	

312_008

Further details on radio diagnosis can be found in diagnosis tester guided fault-finding routine.

Aerial system

Modifications have been made to the aerial system in the heated rear window of the Audi A3 '04. A distinction is made between three versions:

1. With no radio, only the central locking and anti-theft alarm system aerial R47 is fitted at the top of the tailgate.

2. As of Chorus II radio equipment, the left aerial module R108 is fitted in the tailgate. Central locking remote control is integrated into this.

3. As of Concert / Symphony II radio equipment, the aerial amplifier R24 is integrated into the circuit as aerial diversity switching module in addition to the left aerial module R108.

Aerial diversity permits a total of four aerial tuning settings. The left aerial module R108 optimises the aerial tuning by analysing the IF signal from the radio R. If the aerial module detects a radio signal of insufficient strength, it selects the next aerial setting in each case using the aerial amplifier R24.
Attention is to be paid to correct polarity on replacing aerial module or aerial amplifier R24. Incorrect component connection can considerably restrict the range of the remote central locking function or seriously impair aerial diversity.

A good earth connection at the aerial module must also be ensured, as otherwise overvoltage may result in damage to the radio system.

The aerial module has no self-diagnosis capability. In the event of an open circuit in the wiring to the aerial amplifier R24, it manipulates the HF link to the radio R, thus causing the radio R to generate the fault memory entry. This means that the message "Control output aerial HF open circuit" may also relate to a fault in the aerial amplifier R24.

There are three different types of telephone/ navigation/auxiliary heater aerial R66 at the rear of the roof.

1. Telephone reception only

2. Telephone and GPS signal reception for navigation

3. Telephone, GPS and remote signal reception for additional heater J364

312_009

Pre-fitted components for mobile phone installation

The Audi A3 '04 features new pre-fitted components for mobile phone installation with an extended range of functions. This can be attributed to direct incorporation into the infotainment CAN.
Volume can be controlled either by way of the radio R or the optional multifunction steering wheel E221. Telephone book entries are displayed in the dash panel insert J285. Two lines with 8 characters each can be presented on the centre display. The first alphabetical entry is shown when the telephone book is called up for the first time after switching on the ignition. Each time the function is reactivated, the last entry displayed is shown again.

A voice dialog system for telephone operation is an integral feature. The corresponding push-to-talk button is located on the adapter for the mobile phone, thus permitting voice control even without a multifunction steering wheel.

The language versions are encoded in the telephone transmitter and receiver unit R36 - one language for the telephone data appearing on the centre display and possibly a different language for the voice control system.

The pre-fitted components for mobile phone installation form part of the energy management system. They remain in operation until there is no further bus activity. The continued operation time with mobile phone in position can be adapted using the diagnosis tester to values between 30 seconds and 20 hours after switching off the ignition. If a call is received during the continued operation time, this wakes the entire infotainment CAN. Wake-up can lead to the first ring signal not being output via the radio loudspeaker.

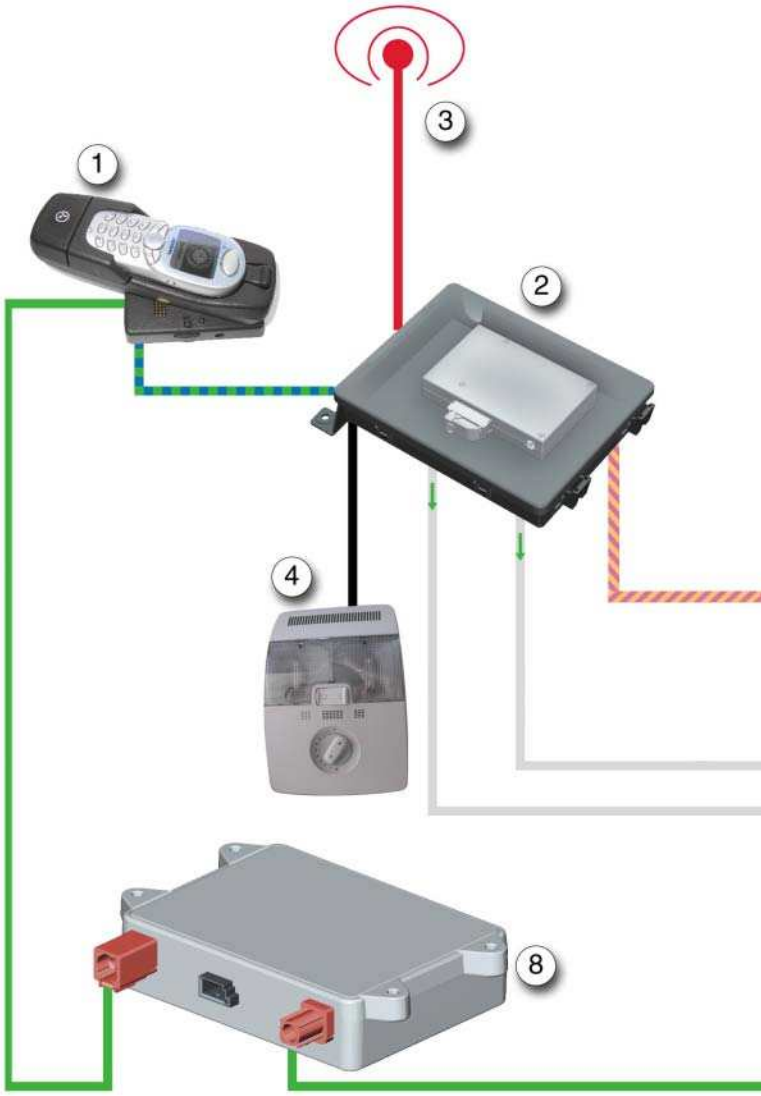

1 Telephone bracket R126
2 Telephone transmitter and receiver unit R36
3 Aerial for Bluetooth R152
4 Microphone R140
5 Dash panel insert J285
6 Data bus diagnostic interface J533
7 Radio R
8 Mobile telephone aerial amplifier (Compensor) R86
9 Telephone aerial R65
10 Steering column electronics J527
11 Multifunction steering wheel E221

The new pre-fitted components for mobile phone installation regulate volume as a function of vehicle speed by means of the GALA signal provided on the infotainment CAN. The digital signal processing (DSP) technology permits enhanced hands-free operation with echo compensation.

The hands-free microphone is located beneath the cover panel of the interior light operating element at the front of the headliner. It is connected directly to the telephone transmitter and receiver unit R36.

With the Bluetooth aerial, appropriately equipped mobile phones can operate by means of a remote link to the pre-fitted components for mobile phone installation in the vehicle. Special adapters designed solely for battery charging and aerial signal pick-off at the mobile phone are available as accessories for these mobile phones. If, for example, a Nokia 6210 not featuring Bluetooth technology is inserted in the adapter of a Nokia 6310 with Bluetooth, the hands-free function is not available on account of the non-assignment of pins at the adapter.

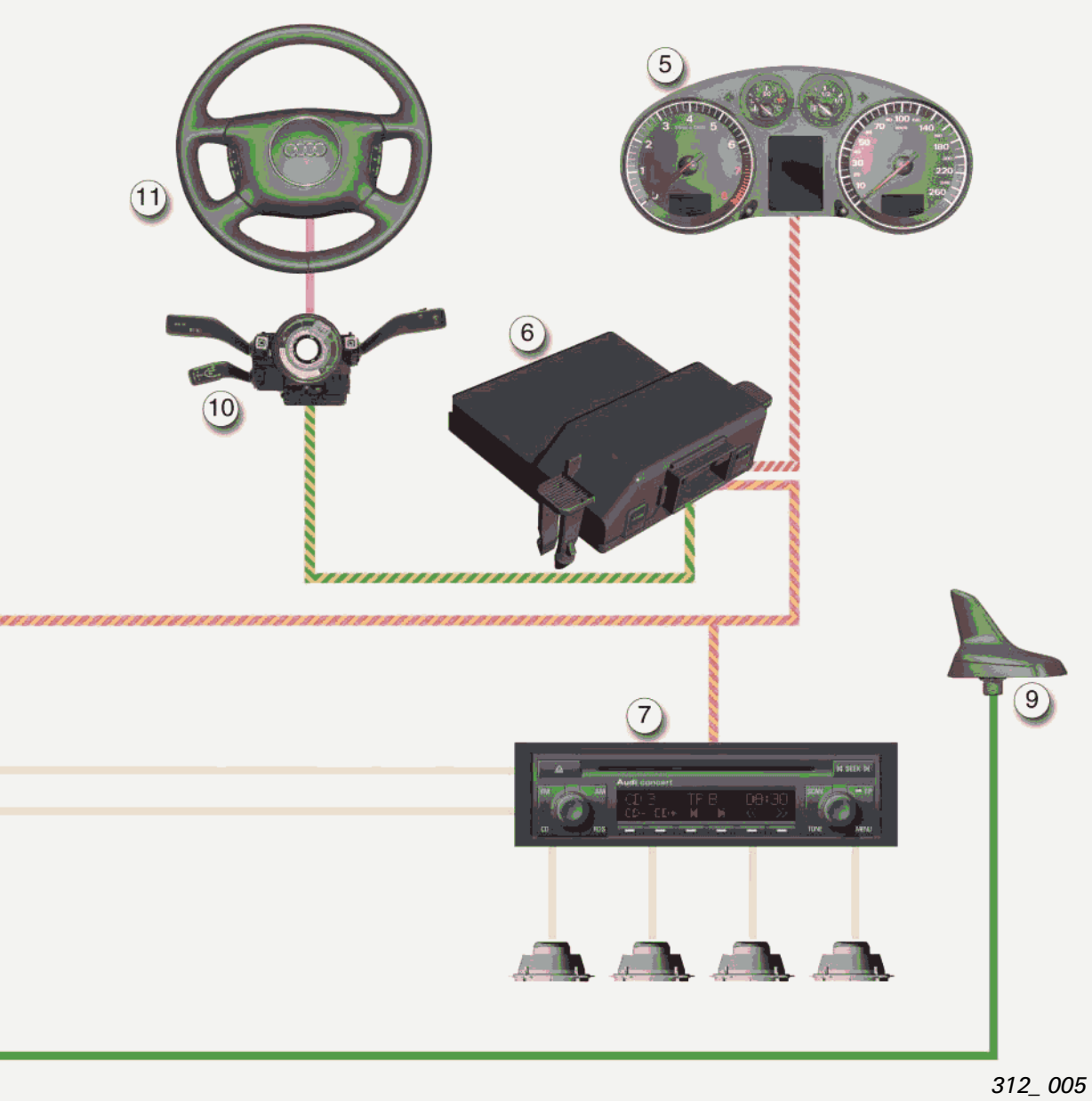

312_ 005

Navigation system 4

At present, the Audi A3 '04 is fitted with the navigation system IV familiar from previous vehicles with modified software.
The navigation system with CD drive control unit J401 is located at the rear left wheel housing, whereas the function selection switch II E272 is in the centre console.

The "menu" button on the function selection switch is not used by the navigation system. If navigation is not active, it is also possible to exit from the navigation basic menu in the dash panel insert J285 by pressing the RETURN button.

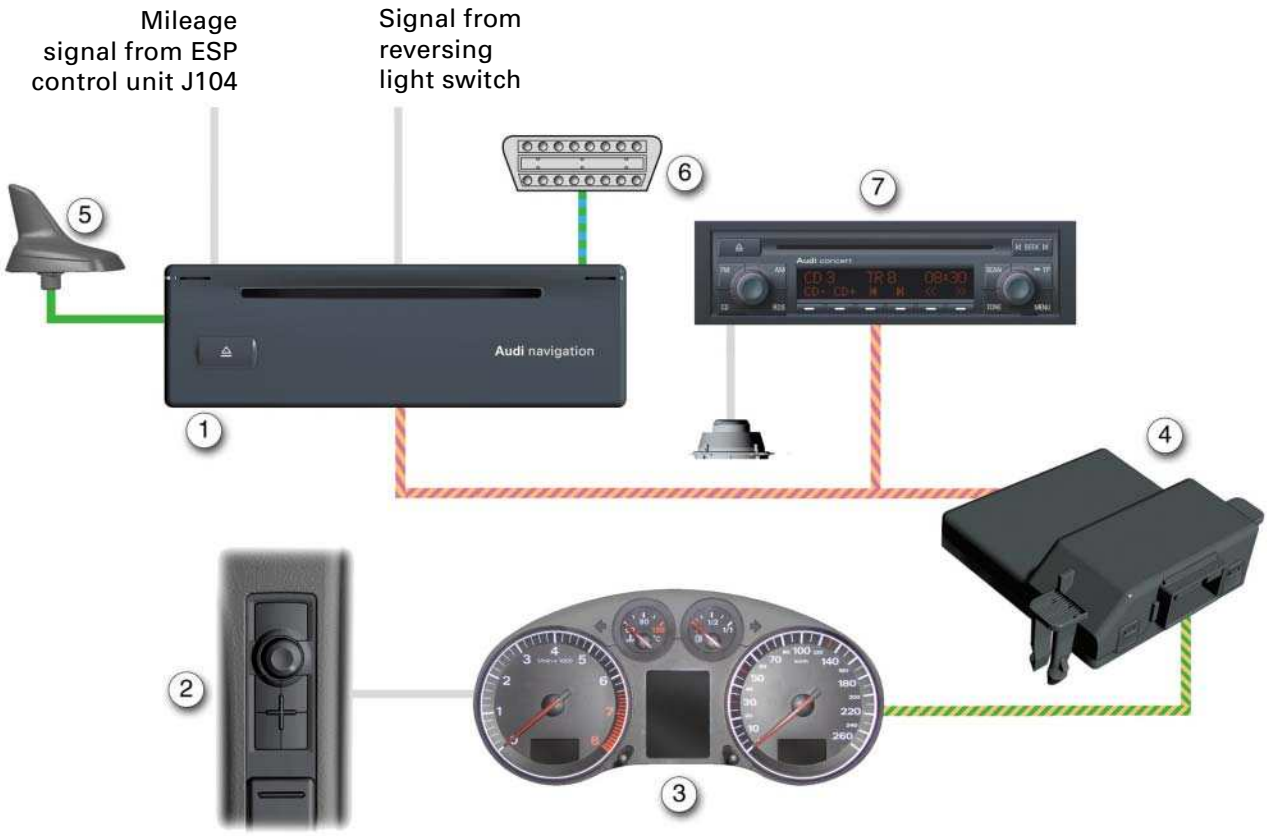

312_006

1 Navigation system with CD drive control unit J401
2 Function selection switch II E272
3 Dash panel insert J285
4 Data bus diagnostic interface J533
5 Navigation aerial R50
6 Diagnostic connector (K-wire)
7 Radio R

Use is made of separate wires for the signals from the reversing light switch and the mileage signal from the ESP control unit. The navigation system cannot process these signals via the CAN. The vehicle speed value is determined as an arithmetic value with allowance for the programmed tyre circumference. No distinction is made between the left/right wheel and only one value is thus obtained.

Navigation system diagnosis is still implemented via the K-wire. Final control diagnosis permits checking of the loudspeaker used for the navigation system as well as the functions in the dash panel insert J285.

The value range for wheel pulses has now been extended to 0-49 in channel 2 of the adaption function.
The adaption value in channel 10 for the dash panel insert in the Audi A3 '04 is 1. The value in this channel for navigation units from other models is 0.
If the channel 10 encoding is not set to 1, there is no navigation system display on the dash panel insert J285 centre display.

Information on the functions of navigation system IV can be found in Self Study Programme 254 (Audi A4'01, Technical Features) or the relevant operating instructions.

Passenger Protection

Safety systems

The safety system in the Audi A3 ’04 has been revised and adapted accordingly to meet with current and future demands in terms of occupant safety.

The system essentially consists of the familar components: Airbag control unit, driver's and front passenger's airbag, front side airbags, front belt tensioners, sideguards (head airbags) and side impact recognition sensors.

New features are the external front airbag crash sensors (so-called upfront sensors for detection of head-on collisions) and battery deactivation in the event of a crash on vehicle models with the battery fitted in the luggage compartment.

Vehicles can optionally be equipped with a key switch for front passenger's airbag deactivation and the corresponding warning lamp.

The Audi A3 ’04 safety system is rounded off by the active head restraints in the front seats.

For the first time use is made in the Audi A3 `04 of airbag modules which are not subject to any replacement intervals.

Always heed the corresponding safety regulations outlined in the Workshop Manuals before working on the airbag system.

E224	Airbag disabling key switch, front passenger side
G179	Side airbag crash sensor, driver side (B-pillar)
G180	Side airbag crash sensor, front passenger side (B-pillar)
G256	Rear side airbag crash sensor, driver side
G257	Rear side airbag crash sensor, front passenger side
G283	Front airbag crash sensor, driver side
G284	Front airbag crash sensor, front passenger side
J234	Airbag control unit
J285	Dash panel insert
J393	Convenience system central control unit
J533	Data bus diagnostic interface (gateway)
J623	Engine control unit
J655	Battery cut-off relay
K75	Airbag warning lamp
K145	Airbag disabled warning lamp, front passenger side
N95	Driver side airbag igniter
N131	Airbag igniter 1, front passenger side
N153	Belt tensioner igniter 1, driver side
N154	Belt tensioner igniter 2, front passenger side
N199	Side airbag igniter, driver side
N200	Side airbag igniter, front passenger side
N251	Curtain airbag igniter, driver side
N252	Curtain airbag igniter, front passenger side
T16	Connector, 16-pin diagnostic connection

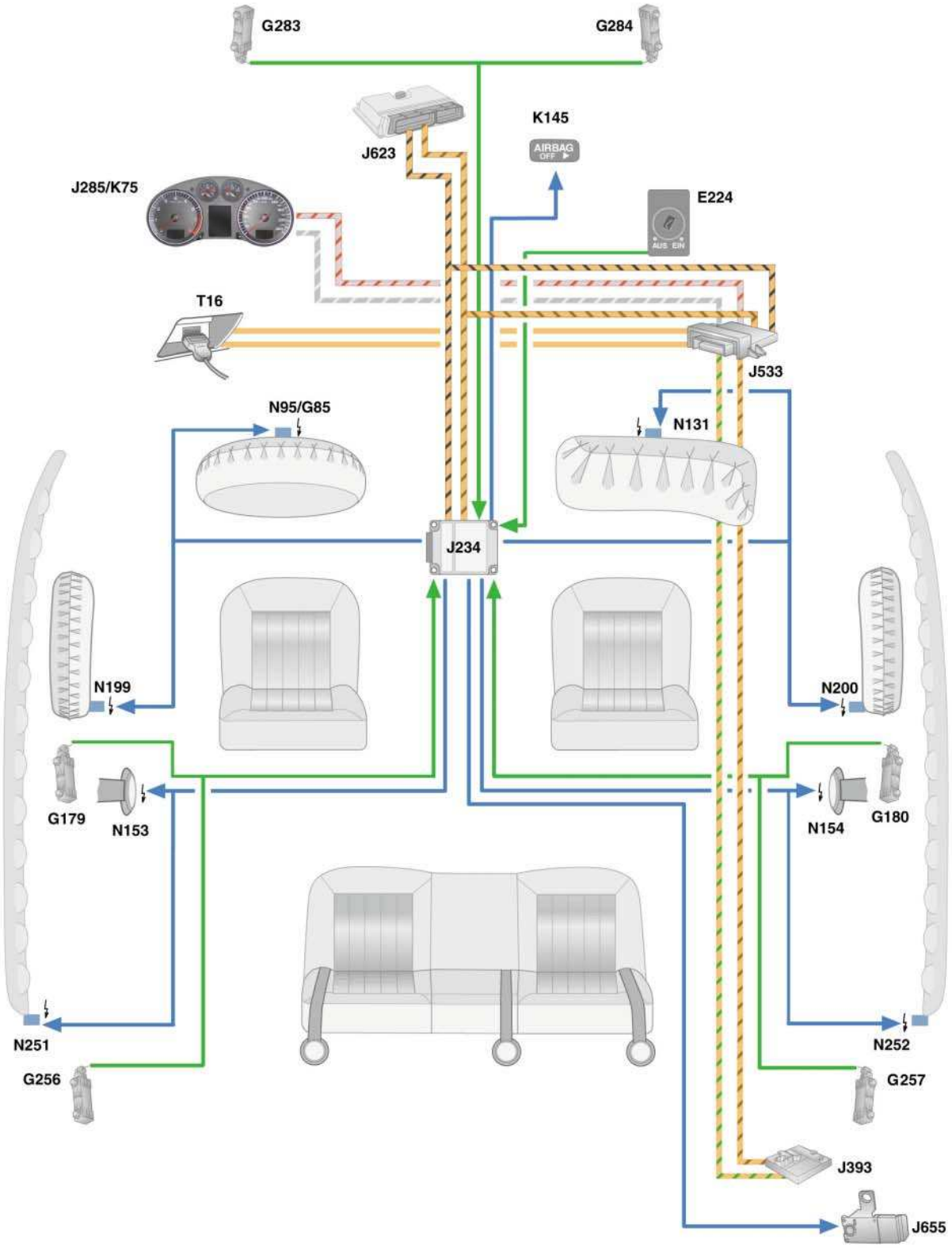
G283
G284
J623
K145
AIRBAG OFF
J285/K75
E224
AUS EIN
T16
J533
N95/G85
N131
J234
N199
N200
G179
N153
N154
G180
N251
N252
G256
G257
J393
J655

312_031

Airbag control unit J234

The function of the airbag electronics is to sense vehicle deceleration and to evaluate it such that vehicle impact is reliably detected. Depending on impact severity, the appropriate restraint systems (airbag/belt tensioner) and the crash output are activated on the basis of various general conditions in the vehicle.

312_033

Main functions of airbag electronics:

- Crash detection
- Correctly timed triggering of airbags and belt tensioners
- Correctly timed recognition of input information
- Permanent monitoring of entire airbag system
- Independent power supply via capacitor for a defined period (approx. 150 ms)
- Fault indication by way of failure warning lamp
- Storage of fault and crash information
- Signalling of crash to other system components via drive system CAN or discrete (conventional wiring) crash output

In addition to the internal sensors in the control unit, use is made of external crash sensors for detecting vehicle impact deceleration.

Front airbag crash sensors G283, G284 (upfront sensors)

The triggering time is advanced by the airbag control unit on exceeding a signal threshold in the front airbag crash sensor.
Even better occupant safety can be achieved by triggering the airbags at an earlier point.

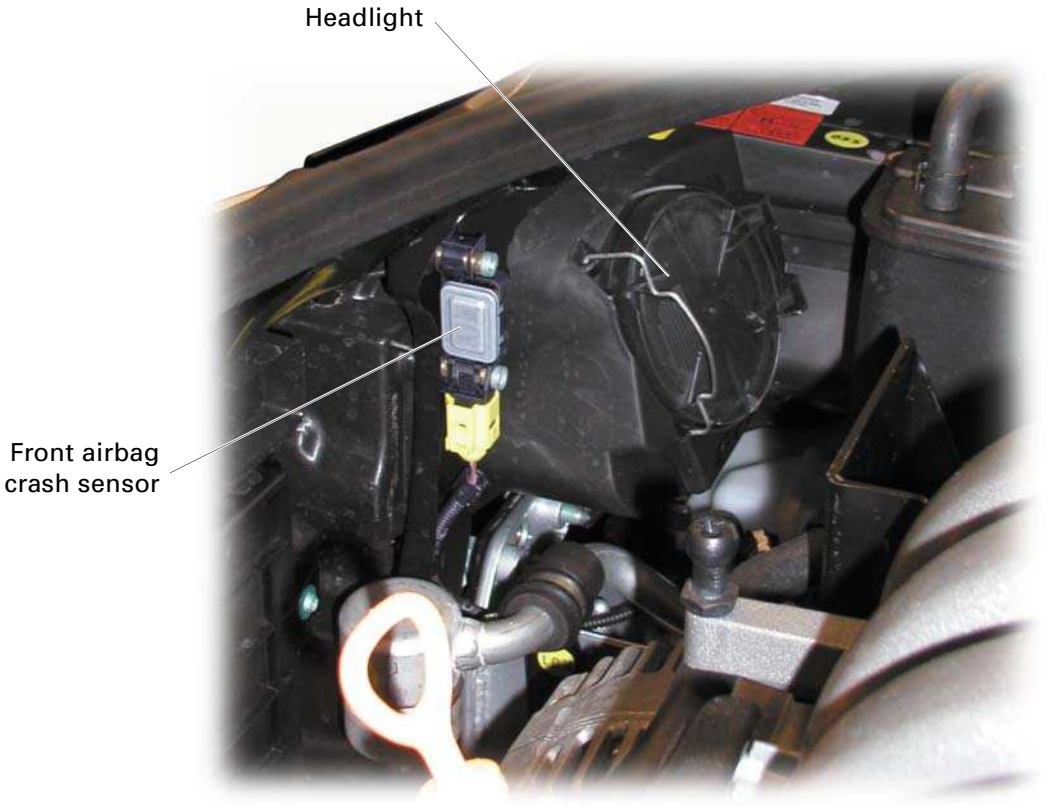

312_035

The two crash sensors are fitted on the left and right next to the headlight.

Airbag warning lamp K75

The airbag warning lamp in the dash panel insert is actuated by way of the CAN data bus.

Seat belts

Use is made of the familiar inertia reels with belt tensioners.
The electrically triggered tensioner units operate on the "ball – gear" principle.
The belt tensioner units are triggered before the front airbags. Side impact involving side airbag triggering also activates the corresponding belt tensioner.

All inertia reels are fitted with belt force limiters to prevent the seat belts exerting unnecessary strain on the occupants.

312_032

Active head restraints

The front seats of the Audi A3 ´04 are provided with active head restraints.
With this system, the head restraints move forwards in the event of a tail-end collision to reduce the distance between head and restraint.

The danger of cervical vertebrae injury is greatly diminished by reducing the relative acceleration between shoulder and head.

312_038

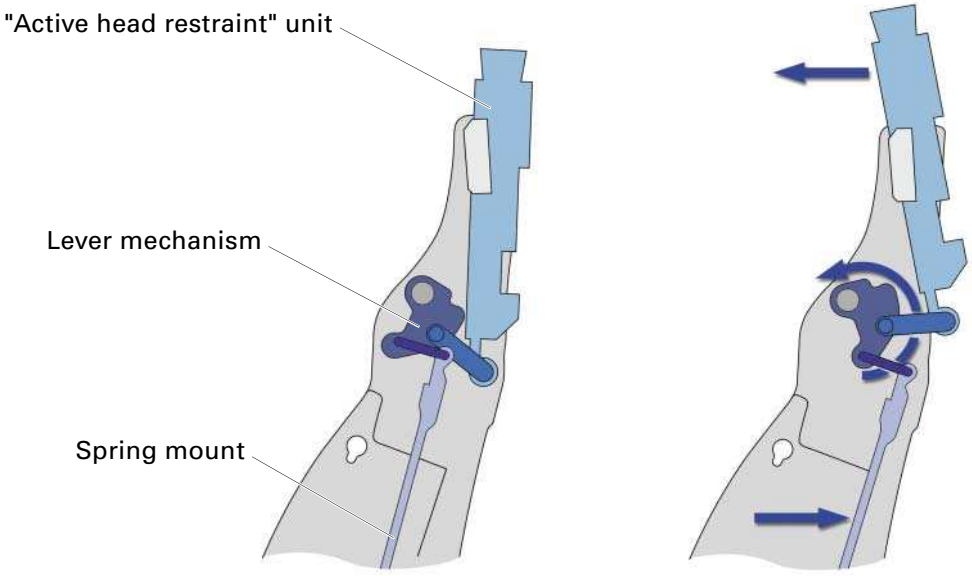

Rest position 312_039

Activated 312_041

Battery cut-off relay J655

The function of the battery cut-off relay is to disconnect the starter and alternator wire from the vehicle battery in the event of a crash and thus avoid the danger of fire in the vehicle due to short circuits.
After being tripped by the airbag control unit, a white panel appears in the element window instead of a copper coil.

The airbag control unit is responsible for actuation and diagnosis monitoring and stores any faults occurring.

The battery cut-off relay is only fitted on vehicles in which the battery is in the luggage compartment.

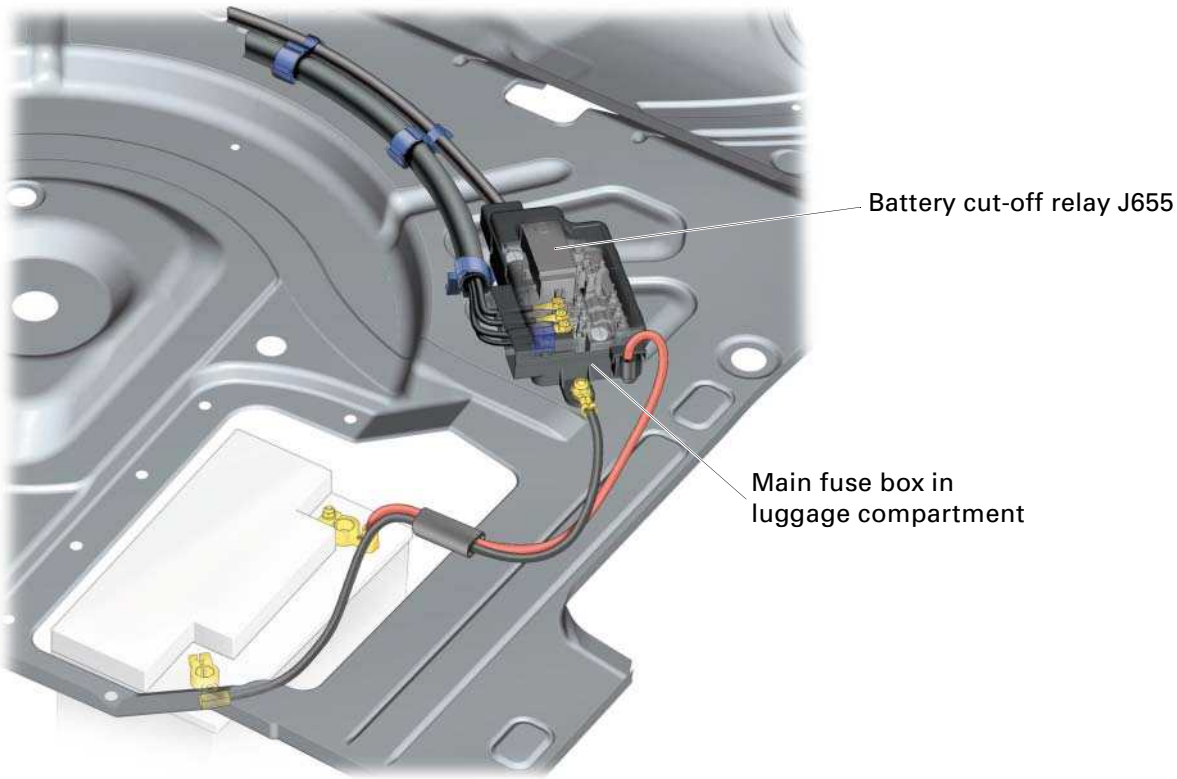

312_034

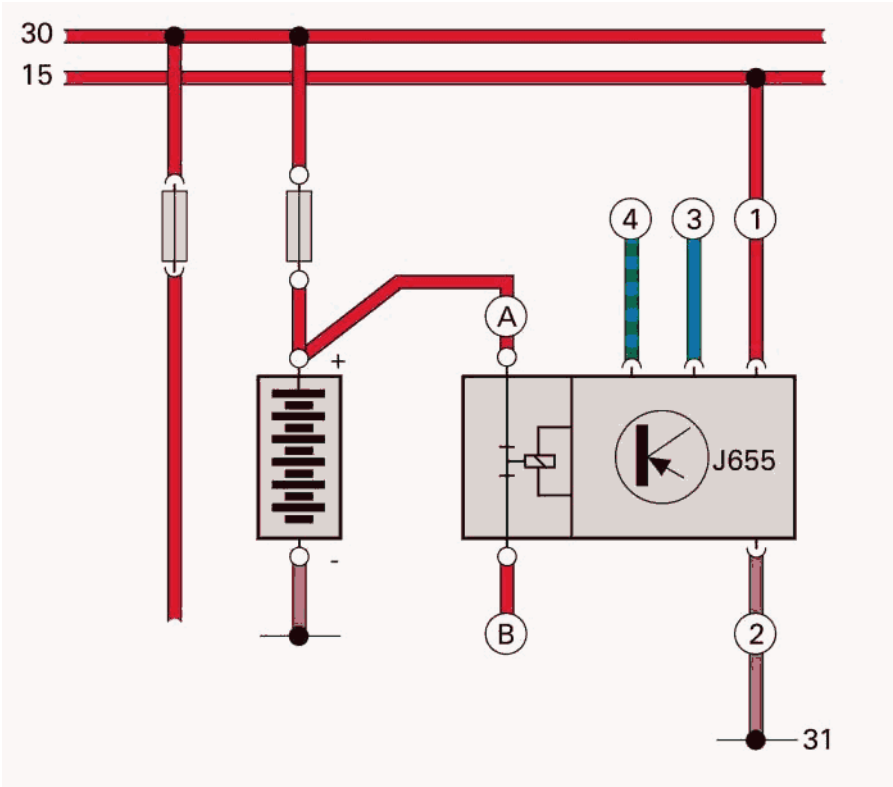

312_036

Pin	Terminal	Input/output	Description
A	30	Input (screw connection)	Battery +
B	87	Output (screw connection)	Output to starter
1	15	Input (plug connection)	Switched +
2	31	Input (plug connection)	Vehicle earth
3	Crash signal	Input (plug connection)	Actuation by airbag control unit J234
4	Diagnosis	Input and output (plug connection)	Diagnostic wire from airbag control unit J234

312_042

Vorsprung durch Technik **www.audi.de**

312

All rights reserved.
Subject to technical modification.

© AUDI AG
I/VK-35
D-85045 Ingolstadt
Fax 0841/89-36367

A03.5S00.03.20
Technical status
02/03
Printed in Germany