Workshop Manual

Audi 100 1991 ➤ , Audi 80 1992 ➤ ,
Audi A1 2011 ➤ ,
Audi A1 Sportback 2018 ➤ ,
Audi A2 2001 ➤ , Audi A3 1997 ➤ ,
Audi A3 2004 ➤ , Audi A3 2013 ➤ ,
Audi A4 1995 ➤ , Audi A4 2001 ➤ ,
Audi A4 2008 ➤ , Audi A4 2015 ➤ ,
Audi A4 Cabriolet 2003 ➤ ,
Audi A5 Cabriolet 2009 ➤ ,
Audi A5 Coupé 2008 ➤ , Audi A6 1995 ➤ ,
Audi A6 1998 ➤ , Audi A6 2005 ➤ ,
Audi A6 2011 ➤ , Audi A6 2019 ➤ ,
Audi A6 China 2012 ➤ ,
Audi A7 Sportback 2011 ➤ ,
Audi A7 Sportback 2018 ➤ ,
Audi A8 1994 ➤ , Audi A8 2003 ➤ ,
Audi A8 2010 ➤ , Audi A8 2018 ➤ ,
Audi Cabriolet 1991 ➤ , Audi Q2 2016 ➤ ,
Audi Q3 2012 ➤ , Audi Q3 2019 ➤ ,
Audi Q3 China 2019 ➤ ,
Audi Q3 Sportback 2020 ➤ ,
Audi Q5 2008 ➤ , Audi Q5 2017 ➤ ,
Audi Q5 China 2010 ➤ , Audi Q7 2007 ➤ ,
Audi Q7 2016 ➤ , Audi R8 2007 ➤ ,
Audi R8 2015 ➤ , Audi TT 1999 ➤ ,
Audi TT 2007 ➤ , Audi TT 2015 ➤ ,
Audi e-tron 2019 ➤

Wheels and tyres

Edition 11.2019

Protected by copyright. Copying for private or commercial purposes, in part or in whole, is not permitted unless authorised by AUDI AG. AUDI AG does not guarantee or assume any liability with respect to the correctness of information in this document. Copyright by AUDI AG.

List of Workshop Manual Repair Groups

Repair Group

44 - Wheels, tyres, vehicle geometry

Protected by copyright. Copying for private or commercial purposes, in part or in whole, is not permitted unless authorised by AUDI AG. AUDI AG does not guarantee or accept any liability with respect to the correctness of information in this document. Copyright by AUDI AG.

Technical information should always be available to the foremen and mechanics, because their careful and constant adherence to the instructions is essential to ensure vehicle road-worthiness and safety. In addition, the normal basic safety precautions for working on motor vehicles must, as a matter of course, be observed.

All rights reserved.
No reproduction without prior agreement from publisher.

Copyright © 2019 Audi AG, Ingolstadt

A00ARRA0020

Contents

44 - Wheels, tyres, vehicle geometry 1
1 Requirements for retrofitting different wheel/tyre combinations (documents) 1
1.1 Legal requirements 1
1.2 Technical requirements 2
1.3 Registration documents since 1 October 2005 2
1.4 COC document (EC certificate of conformity) 3
2 General information 5
3 Tightening torques for wheel bolts 6
3.1 Tightening torques for wheel bolts 6
4 Tightening wheel bolts correctly 8
5 Additional wheel housing extensions (flaps) 10
6 Rims with bonded wheel trim 11
7 Rims with exchangeable trim elements (bonded) 12
7.1 Removing trim element 12
7.2 Installing trim element 14
8 Rims with exchangeable trim elements (bolted) 17
9 Split-rim composite wheels 18
10 Wheel bolts 19
10.1 Anti-theft wheel bolts 20
10.2 Adapter sets for anti-theft wheel bolts 20
11 Fitting wheels / tyres / Tyre Pressure Monitoring System / Tyre Pressure Loss Indicator 22
11.1 General information on wheels and tyres 22
11.2 Exploded view of components for light alloy wheels 22
11.3 Exploded view of components for PAX run-flat tyres 24
11.4 Instructions for changing/fitting wheels 27
11.5 Removing and fitting run-flat tyres 34
11.6 Safety notes for run-flat tyres 34
11.7 Conditions for fitting run-flat tyres 35
11.8 Unseating run-flat tyres 37
11.9 Removing run-flat tyres 38
11.10 Fitting run-flat tyres 40
11.11 Removing standard tyres without run-flat capability 43
11.12 Fitting standard tyres without run-flat capability 45
12 Tyre Pressure Monitoring Systems/Tyre Pressure Loss Indicator 49
12.1 Exploded view - tyre pressure sensor 49
12.2 Removing and installing metal valve body 51
12.3 Tightening torque of union nut 52
12.4 Wheel electronics (TPMS) - Beru system 54
12.5 Wheel electronics (TPMS) - Siemens system 55
12.6 Wheel electronics - new design 55
12.7 Direct measurement system 56
12.8 Tyre Pressure Loss Indicator (TPLI) - indirect measurement system 56
12.9 Tyre Pressure Loss Indicator (TPLI+) - indirect measurement system 57
12.10 Tyre Pressure Loss Indicator (TPLI) with wheel speed sensor 57
13 Repairing slight damage on rims 58
14 Identification markings on the tyre sidewall 59
14.1 Designations on sidewall of tyres with run-flat system (PAX) 61
14.2 EU tyre label 62
15 Tyre requirements and tyre maintenance 67
15.1 Introduction 67

Protected by copyright. Copying for private or commercial purposes, in part or in whole, is not permitted unless authorised by AUDI AG. AUDI AG does not guarantee or accept any liability with respect to the correctness of information in this document. Copyright by AUDI AG.

15.2 Requirements to be met by tyres . . . 68
15.3 Factors influencing the service life of a tyre . . . 68
15.4 Tyre pressure (maintenance) . . . 69
15.5 Driving style . . . 70
15.6 Measuring tread depth . . . 71
15.7 Speed rating / maximum speed . . . 72
15.8 Speed symbols for tyres . . . 72
15.9 Winter tyres with speed symbol “H” . . . 73
15.10 Winter tyres with speed symbol “V” . . . 73
15.11 Load rating code/load index (LI) . . . 74
15.12 Reinforced/Extra Load (XL) tyres . . . 75
15.13 Extra Load (XL) V winter tyres . . . 75
15.14 Snow chains . . . 76
15.15 The valve . . . 77
15.16 Tyre storage . . . 77
15.17 Storing the tyres . . . 78
15.18 Tyre ageing . . . 78
15.19 Renewing tyres . . . 79
15.20 Care and maintenance of alloy wheel rims . . . 79
15.21 Tyres with rim protectors . . . 80
16 Tyre wear / mileage . . . 81
16.1 General notes . . . 81
16.2 Wear of high-speed tyres . . . 81
16.3 Evenly worn tyres . . . 81
16.4 One-sided wear . . . 81
16.5 Permissible differences in tread depth . . . 82
16.6 One-sided wear - adjustment error . . . 82
16.7 Wear in middle of tyre . . . 83
16.8 Diagonal erosion . . . 83
16.9 Wear - adjustment error . . . 84
17 Permissible differences in tread depth . . . 85
17.1 Models with longitudinally installed engine . . . 85
17.2 Models with transversely installed engine . . . 85
17.3 Audi e-tron . . . 85
18 Tyre noise . . . 86
18.1 General notes on tyre noise . . . 86
18.2 Saw-tooth wear . . . 86
18.3 Flat spots (brake-flatting) . . . 87
19 Rough running caused by wheels/tyres . . . 89
19.1 Causes of rough running . . . 89
19.2 Flat spots caused by storage or handling . . . 89
20 Wheel balancing . . . 91
20.1 General notes . . . 91
20.2 Conducting a road test before balancing wheels . . . 91
20.3 Balancing wheels on stationary wheel balancer . . . 92
20.4 Wheels with sensitive surfaces and bonded wheel trims . . . 93
20.5 Work sequence when balancing wheels and tyres . . . 93
20.6 Finish balancer . . . 95
20.7 Vibration control system VAS 6230 A . . . 97
20.8 Radial and lateral run-out on wheel/tyre . . . 97
20.9 Checking radial and lateral run-out of wheels and tyres on V.A.G 1435 . . . 97
20.10 Checking radial and lateral run-out of wheels and tyres with wheel balancing machine centring system VAS 5271 . . . 98
20.11 Checking radial and lateral run-out on rim . . . 99
20.12 Match mounting . . . 100

Protected by copyright. Copying for private or commercial purposes, in part or in whole, is not permitted unless authorised by AUDI AG. AUDI AG does not guarantee or accept any liability with respect to the correctness of information in this document. Copyright by AUDI AG.

21 Vehicle pulls to one side . . . 102
21.1 General notes . . . 102
21.2 Remedies when vehicle pulls to one side . . . 103
21.3 Strategic rotation of wheels for non-directional tyres . . . 104
21.4 Strategic rotation of wheels for unidirectional tyres . . . 105
22 Tyre damage . . . 107
22.1 General notes . . . 107
22.2 Checking tyres . . . 107
22.3 Construction of belted radial tyres . . . 108
22.4 Torn tread . . . 109
22.5 Undulations . . . 109
22.6 Impact damage . . . 110
22.7 Cuts . . . 111
22.8 Damage caused by foreign objects . . . 111
22.9 Loss of air from tyre . . . 111
22.10 Damage occurring when fitting tyres . . . 112
22.11 Bead damage caused by fitting machine . . . 112
22.12 Tyre pressure . . . 113
22.13 Tyre damage due to insufficient inflation pressure . . . 113
22.14 Slow loss of tyre pressure . . . 114
22.15 Temperature increase caused by insufficient inflation pressure . . . 114
22.16 Tears in tyre . . . 114
23 Vehicles with breakdown set . . . 116
23.1 Tyre sealant . . . 116
23.2 Removing a tyre from the rim . . . 116
23.3 Disposal of sealant . . . 117
23.4 Fitting a new tyre . . . 117
24 Temporary spare wheels . . . 118
24.1 Notes on the use of temporary spare wheels . . . 118
25 Run-flat tyres . . . 119
25.1 Renewing tyres/conditions for use of run-flat tyres . . . 119
25.2 Tyres with run-flat capability (PAX) . . . 120
25.3 Self supporting tyres (SST) with run-flat capability . . . 127
25.4 Tyres with run-flat capability (Seal Inside technology) . . . 129
25.5 Servicing tyres with run-flat capability . . . 131

Protected by copyright. Copying for private or commercial purposes, in part or in whole, is not permitted unless authorised by AUDI AG. AUDI AG does not guarantee or accept any liability with respect to the correctness of information in this document. Copyright by AUDI AG.

Protected by copyright. Copying for private or commercial purposes, in part or in whole, is not permitted unless authorised by AUDI AG. AUDI AG does not guarantee or accept any liability with respect to the correctness of information in this document. Copyright by AUDI AG.

44 – Wheels, tyres, vehicle geometry

1 Requirements for retrofitting different wheel/tyre combinations (documents)

(ARL006771; Edition 11.2019)

⇒ “1.1 Legal requirements”, page 1

⇒ “1.2 Technical requirements”, page 2

⇒ “1.3 Registration documents since 1 October 2005”, page 2

⇒ “1.4 COC document (EC certificate of conformity)”, page 3

⇒ “14.2 EU tyre label”, page 62

⇒ “17 Permissible differences in tread depth”, page 85

1.1 Legal requirements

The manufacturer is granted a general operating permit for the entire vehicle including all parts and for specific conversions (general certification according to § 20 StVZO in Germany and/or EC type approval).

Different wheels and tyres may only be fitted under certain conditions. The following points must be observed:

- The wheel/tyre combination can be fitted on the vehicle without restrictions if the wheel and tyre sizes, including the load index and speed symbol, are specified in the general operating permit and/or EC type approval.

The wheel/tyre combination indicated on the registration document (part 1) does not have to be fitted on the vehicle. All combinations approved according the vehicle's general operating permit and/or the EC type approval may be fitted on the vehicle.

- There is no general type approval according to § 22 of the German Road Traffic Permit Act (StVZO) for the recommended conversions (refer to the annex to the approval certificate).
- If the wheels and/or tyres are not specified in the general operating permit and/or the EC type approval, the vehicle no longer complies with the regulations according to the German Vehicle Registration Law (FZV) following the conversion.

The information given here refers to legal requirements in the European Union and does not claim to be exhaustive. The legal requirements in non-EU countries may differ.

The tables contained in the annex to the approval certificate show the recommended wheel/tyre combinations approved by a technical inspection authority which may be fitted on the vehicles and the conditions which must be taken into account. The use of Genuine wheels on a vehicle to which they have not been assigned is not permitted.

The possible conversions listed below are combinations that meet the requirements for handling and road safety. They are the result of practical tests and are recommended for this reason.

Protected by copyright. Copying for private or commercial purposes, in part or in whole, is not permitted unless authorised by AUDI AG. AUDI AG does not guarantee or accept any liability with respect to the correctness of information in this document. Copyright by AUDI AG.

Please also observe the notes on the new vehicle registration documents since 01.10.2005.

1.2 Technical requirements

- The wheel/tyre combinations and conversions listed in the tables for the individual models refer exclusively to Genuine wheels.
- It is not possible to approve wheel/tyre combinations or conversions for wheels/rims from accessories dealers with the tyre approval certificate.
- Tubeless radial tyres may only be fitted to rims with a safety hump feature on the shoulder (e.g. round hump).
- Run-flat tyres (with reinforced side wall) must only be fitted on wheels with extended hump and vehicles with Tyre Pressure Monitoring System/Tyre Pressure Loss Indicator.
- Run-flat tyres must only be fitted on vehicles with Tyre Pressure Monitoring System/Tyre Pressure Loss Indicator.
- The correct tyre pressures must be observed when the specified wheel/tyre combinations are used. Tyre pressures are listed on a tyre pressure sticker on the inside of the fuel tank flap or on the B-pillar on the driver's side.
- Sufficient clearance between the wheels/tyres and the wheel housings, suspension and brake system components is ensured under all operating conditions if the instructions and conditions specified in the approval certificate are observed.
- Unless specified otherwise, snow chains may only be fitted on the driven wheels. On vehicles with four-wheel drive, snow chains may only be fitted on the front wheels.

Protected by copyright. Copying for private or commercial purposes, in part or in whole, is not permitted unless authorised by AUDI AG. AUDI AG does not guarantee or accept any liability with respect to the correctness of information in this document. Copyright by AUDI AG.

Additional wheel housing extensions (flaps)

For reasons of approval, some vehicles with certain wheel/tyre combinations must be fitted with wheel housing extensions (flaps) on the wing panels/bumper -arrows-.

Please check whether wheel housing extensions must be fitted on the vehicle.

Please refer to the overview table for the vehicle for the necessary information on wheel/tyre combinations.

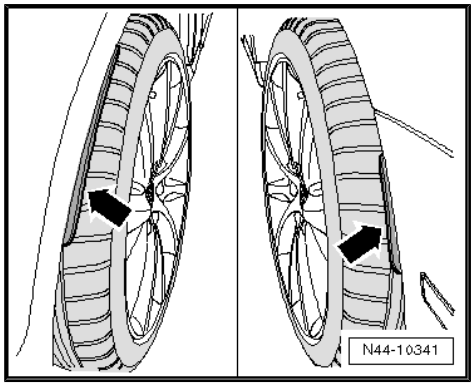

1.3 Registration documents since 1 October 2005

The implementation of the EU guideline 1999/37/EC "Registration documents for vehicles" into German law and data-protection requirements have made it necessary to introduce new forgery-proof registration documents.

Since 1 October 2005 registration authorities only issue the new documentation for the registration of new vehicles, for the registration of new owners, for entering technical modifications and all other submissions.

The new registration documents consist of the following:

- ♦ Registration document (part I) and
- ♦ Registration document (part II).

The registration document (part 1)

- contains all technical vehicle data required for vehicle registration in Europe; however only one approved standard wheel/tyre combination is indicated.
- contains the alphanumerical codes standardised within the EU and assigned to the technical data so that the German registration document can be used to register the vehicle in another EU country without any problems.
- contains an entry field for documenting the temporary or final decommissioning of the vehicle and is therefore no longer withdrawn in these cases.

The registration document (part 2)

- contains the information that the bearer of the registration document is not identified as the owner of the vehicle.
- contains only the current and, if applicable, the last owner of the vehicle; the number of previous owners is indicated.
- contains only a small part of the technical vehicle data.
- is no longer used to document a temporary decommissioning of the vehicle. The vehicle and body type indicated under item 1 of the old vehicle documentation is no longer given. In the new documentation it is replaced by vehicle classes with body types standardised within the EU.

There are hardly any changes for the driver of the vehicle resulting from the introduction of the new registration documents.

Like the old registration document, the new registration document (part 1) must be kept in the vehicle and presented for inspection to authorised persons when requested.

The wheel/tyre combination indicated on the registration document (part 1) does not have to be fitted on the vehicle. All combinations approved according the vehicle's general operating permit and/or the EC type approval may be fitted.

The permissibility of a wheel/tyre combination that is not in line with the vehicle's general operating permit and/or the EC type approval must still be verified with an entry in the registration document (part 1), an installation certificate (based on a parts certificate) or an operating permit for the wheel/tyre combination.

1.4 COC document (EC certificate of conformity)

An automobile manufacturer must apply for an EC operating permit for all passenger cars (vehicle class M1).

A certificate - the so-called COC (Certificate of Conformity) - is issued on the basis of this operating permit.

Protected by copyright. Copying for private or commercial purposes, in part or in whole, is not permitted unless authorised by AUDI AG. AUDI AG does not guarantee or accept any liability with respect to the correctness of information in this document. Copyright by AUDI AG.

This document certifies that the vehicle conforms with the EC operating permit (EC type approval) and can be registered in every EU country without the need for individual approval.

The document is issued for all vehicles produced in accordance with the EC operating permit.

These vehicles are marked with an EC type approval (black sticker) on the driver's door; or in the engine compartment on older vehicles.

The COC document has the same significance as the registration documents; the original certificate should therefore not be kept in the vehicle.

The COC document contains comprehensive technical vehicle data and all permissible wheel/tyre combinations.

Protected by copyright. Copying for private or commercial purposes, in part or in whole, is not permitted unless authorised by AUDI AG. AUDI AG does not guarantee or accept any liability with respect to the correctness of information in this document. Copyright by AUDI AG.

2 General information

⇒ “3 Tightening torques for wheel bolts”, page 6

⇒ “4 Tightening wheel bolts correctly”, page 8

⇒ “12 Tyre Pressure Monitoring Systems/Tyre Pressure Loss Indicator”, page 49

⇒ “17 Permissible differences in tread depth”, page 85

Note

- *The specified tyre pressures are listed on the sticker in the vehicle; these figures can be taken as correct.*
- *If there is no tyre pressure sticker in the vehicle, it must be ordered ⇒ Electronic parts catalogue .*
- *Proper wheel alignment is very important for ensuring the maximum service life of the tyre. The wheel alignment must always be within the specified tolerance range.*
- *Information on wheel alignment ⇒ Running gear, front-wheel drive and four-wheel drive; Rep. gr. 44 .*
- *The tyre properties change as a result of normal tyre wear. Rolling noises or rough running can be the result of such wear. These are simply the symptoms of normal wear and tear and do not constitute damage in the sense of the tyre being defective. You can take measures to eliminate the symptoms at least to some degree. However, in some cases it may not be possible to eliminate tyre noise completely.*

Protected by copyright. Copying for private or commercial purposes, in part or in whole, is not permitted unless authorised by AUDI AG. AUDI AG does not guarantee or accept any liability with respect to the correctness of information in this document. Copyright by AUDI AG.

3 Tightening torques for wheel bolts

⇒ “4 Tightening wheel bolts correctly”, page 8

⇒ “3.1 Tightening torques for wheel bolts”, page 6

3.1 Tightening torques for wheel bolts

Caution

Depending on the model, the wheel bolts have different lengths and contact surfaces.

It is important to use the correct type of wheel bolts to ensure that the wheel bolts and the wheels are properly secured.

Make sure that the correct type of wheel bolts are fitted; refer to ⇒ Electronic parts catalogue .

The contact surfaces of the wheel bolts must be clean and free of grease.

The contact surfaces of the wheel bolts must not be greased or oiled.

Protected by copyright. Copying for private or commercial purposes, in part or in whole, is not permitted unless authorised by AUDI AG. AUDI AG does not guarantee or accept any liability with respect to the correctness and completeness of this document. Copyright by AUDI AG.

Audi A1

Model	Tightening torque
A1/S1/A1 quattro, all types	120 Nm

Audi A2

Model	Tightening torque
A2, type 8Z	120 Nm

Audi A3

Model	Tightening torque
A3, type 8L only	120 Nm
A3, all types except 8L	140 Nm

Audi A4

Model	Tightening torque
RS 4, type 8D only	140 Nm
A4, all types (except RS 4, type 8D)	120 Nm

Audi A5

Model	Tightening torque
A5, all types	120 Nm

Audi A6/Audi A7

Model	Tightening torque
A6, all types	120 Nm
A7, all types	120 Nm

Audi A8

Model	Tightening torque
A8, all types	120 Nm

Audi TT

Model	Tightening torque
TT, all types	120 Nm

Audi R8

Model	Tightening torque
R8, all types	120 Nm

Audi Q2

Model	Tightening torque
Q2, all types	140 Nm

Audi Q3

Model	Tightening torque
Q3, all types	140 Nm

Audi Q5

Model	Tightening torque
Q5, all types	140 Nm

Audi Q7/Audi Q8

Model	Tightening torque
Q7, all types	160 Nm
Q8, all types	160 Nm

Audi e-tron

Model	Tightening torque
Audi e-tron, type GE	160 Nm

Protected by copyright. Copying for private or commercial purposes, in part or in whole, is not permitted unless authorised by AUDI AG. AUDI AG does not guarantee or accept any liability with respect to the correctness of information in this document. Copyright by AUDI AG.

PAX wheels

Model	Tightening torque
PAX wheels, A6	140 Nm
PAX wheels, A8	140 Nm

Security

Model	Tightening torque
A6 Security	140 Nm
A8 Security	140 Nm

4 Tightening wheel bolts correctly

Caution

To make sure the wheel bolts are properly secured:

The contact surfaces of the wheel bolts must be clean and free of grease.

The contact surfaces of the wheel bolts must not be greased or oiled.

The correct wheel bolts must be used.

The wheel bolts have different lengths and contact surfaces depending on the model ⇒ Electronic parts catalogue .

Tighten all wheel bolts to the specified torque ⇒ "3.1 Tightening torques for wheel bolts", page 6 .

Also note the following:

Protected by copyright. Copying for private or commercial purposes, in part or in whole, is not permitted unless authorised by AUDI AG. AUDI AG does not guarantee or accept any liability with respect to the correctness of information in this document. Copyright by AUDI AG.

Observe the following sequence and notes to ensure the wheel bolts are fitted correctly.

Note

Do NOT use an impact wrench to screw in the wheel bolts.

- Before fitting a wheel, thoroughly clean the wheel hub, all contact surfaces between the rim and the wheel hub, and the surfaces for the wheel bolts on the rim.
- Before fitting wheel bolts, thoroughly clean their threads and the contact surfaces of the shoulders on the wheel bolts.
- Apply a thin coat of Optimol paste (⇒ Electronic parts catalogue) to the threads of the wheel bolts.
- The contact surfaces of the wheel bolts must be clean and free of grease.
- Do NOT use an impact wrench to screw in the wheel bolts.
- Screw in all the wheel bolts in diagonal sequence until the wheel is seated securely on the hub; only then should the vehicle be lowered to the ground.
- Lower the vehicle to the ground.
- Make sure to use the correct tool width across flats for tightening the wheel bolts to the correct torque.
- Set torque wrench to the correct torque ⇒ "3 Tightening torques for wheel bolts", page 6 .
- Tighten all the wheel bolts in diagonal sequence to the specified torque with the vehicle on the ground. ⇒ "3 Tightening torques for wheel bolts", page 6
- Re-check each wheel bolt at least once using the correctly set torque wrench; observe the specified tightening torques ⇒ "3 Tightening torques for wheel bolts", page 6 .
- By re-checking the tightening torque, make sure that ALL wheel bolts on ALL wheels have been tightened to the specified torque.

If all the work steps listed above have been completed properly, the wheel bolts do not have to be re-tightened after a certain mileage.

Note

- *After checking that ALL wheel bolts have been tightened to the correct torque, fit caps completely and firmly onto wheel bolts.*
- *To do so, use the back end of a screwdriver or a suitable tool. Take care not to damage the caps.*

Protected by copyright. Copying for private or commercial purposes, in part or in whole, is not permitted unless authorised by AUDI AG. AUDI AG does not guarantee or accept any liability with respect to the correctness of information in this document. Copyright by AUDI AG.

5 Additional wheel housing extensions (flaps)

For technical reasons, some vehicles with certain wheel/tyre combinations must be fitted with wheel housing extensions (flaps) on the wing panels/bumper -arrows-.

Please check whether wheel housing extensions must be fitted on the vehicle.

Please refer to the overview table for the vehicle for the necessary information on wheel/tyre combinations.

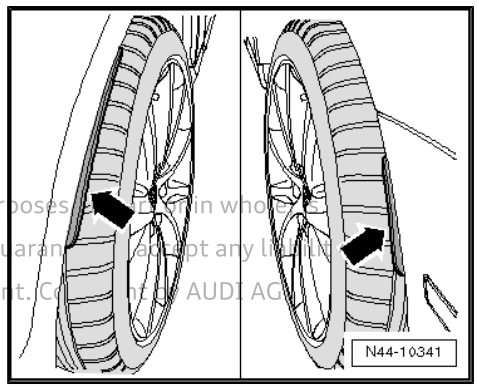

Protected by copyright. Copying for private or commercial purposes, in part or in whole, is not permitted unless authorised by AUDI AG. AUDI AG does not guarantee or accept any liability with respect to the correctness of information in this document. Copyright by AUDI AG.

6 Rims with bonded wheel trim

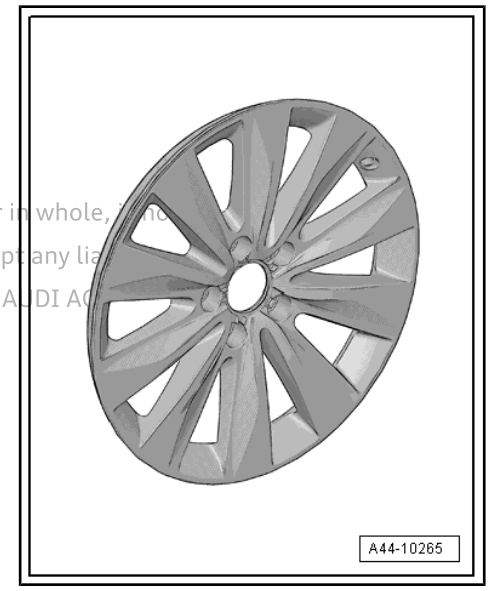

Note

- *On rims with bonded wheel trims, take care not to scratch the wheel trims.*
- *Wheel trims have a very sensitive surface.*
- *If a wheel trim is damaged, the rim must be renewed.*
- *The wheel trim cannot be renewed.*

Protected by copyright. Copying for private or commercial purposes, in part or in whole, is not
permitted unless authorised by AUDI AG. AUDI AG does not guarantee or accept any liability
with respect to the correctness of information in this document. Copyright by AUDI AG.

Protected by copyright. Copying for private or commercial purposes, in part or in whole, is not permitted unless authorised by AUDI AG. AUDI AG does not guarantee or accept any liability with respect to the correctness of information in this document. Copyright by AUDI AG.

7 Rims with exchangeable trim elements (bonded)

⇒ “7.1 Removing trim element”, page 12

7.1 Removing trim element

Special tools and workshop equipment required

- Removal wedge - 3409-

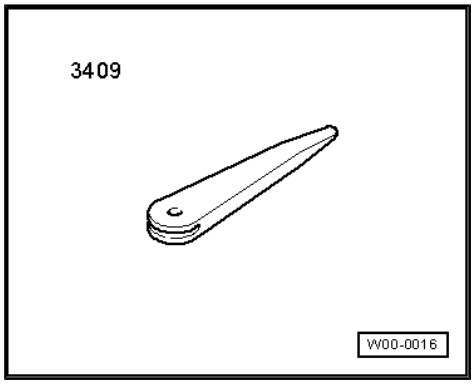

- Hot air blower - V.A.G 1416-

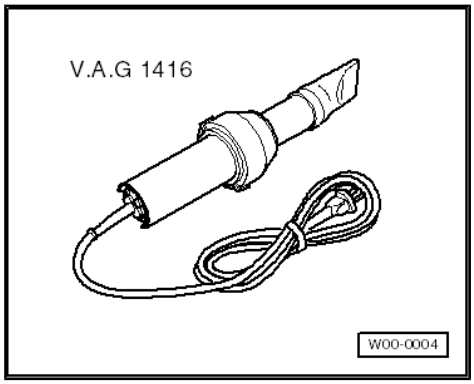

Note

The trim element cannot be removed without being damaged irreparably.

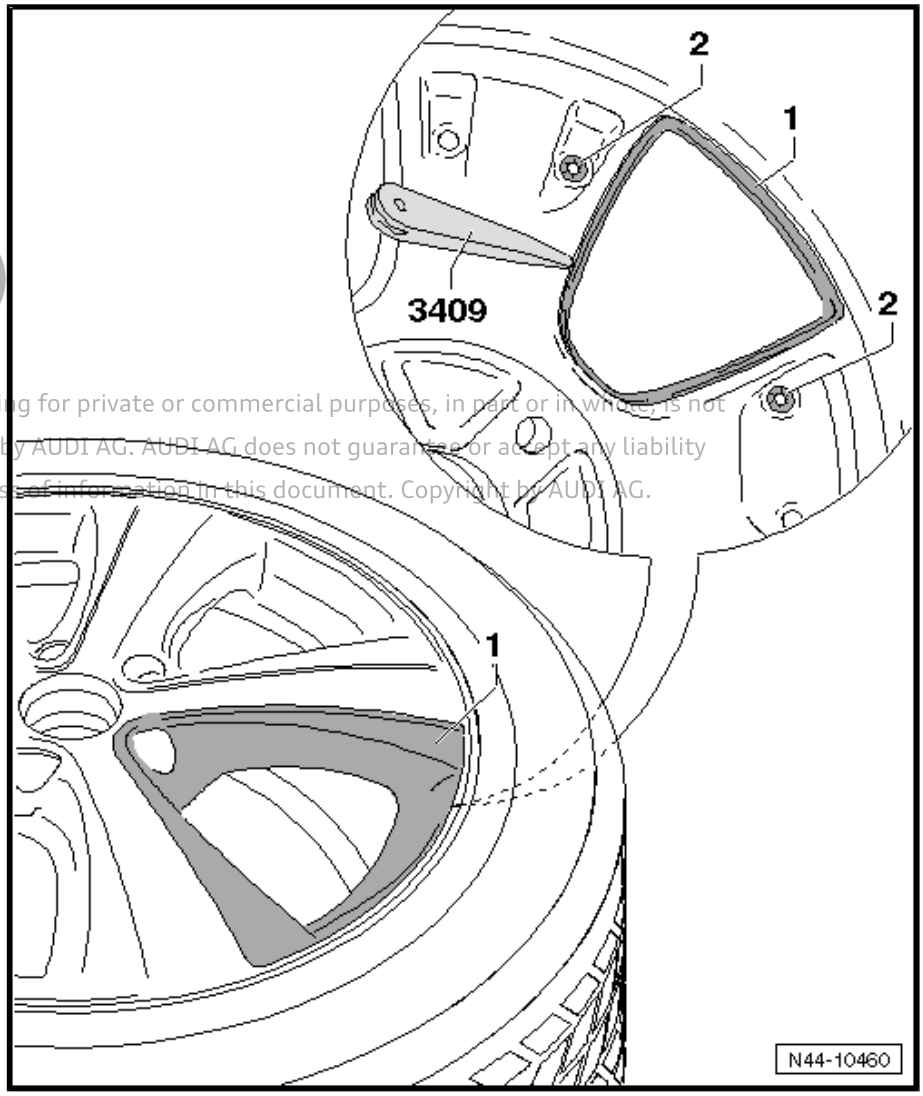

Protected by copyright. Copying for private or commercial purposes, in part or in whole, is not permitted unless authorised by AUDI AG. AUDI AG does not guarantee or accept any liability with respect to the correctness of information in this document. Copyright by AUDI AG.

– Release lock washers -2- on inside of light alloy wheel.
– Heat trim element -1- from outside with hot air blower - V.A.G 1416- .

Caution

Take care not to overheat tyres and light allow wheels.

– Release trim element -1- from inside of light alloy wheel using removal wedge - 3409- .
– Reach under one of the corners from outside and pull trim element -1- firmly off light alloy wheel.

Note

- *Remove the spots of PUR adhesive from the light alloy wheel by cutting them off.*
- *Remaining material can be used as an adhesive base for the new trim element.*
- *The new trim element can be fitted immediately* *⇒ page 14* .

7.2 Installing trim element

Special tools and workshop equipment required

- Hand-cartridge gun - V.A.G 1628-

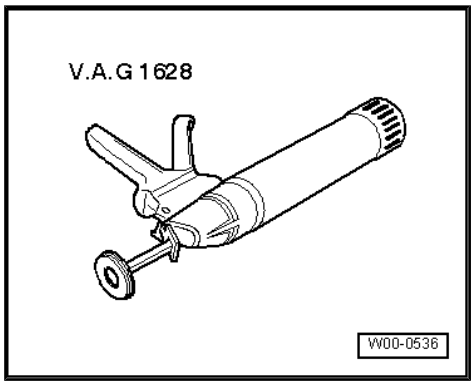

- 1-component window adhesive -DH 009 100 A2-
- Silicone remover -LSE 020 100 A3-

These light alloy wheels are fitted with exchangeable trim elements. Please observe the following instructions during installation.

- Make sure that the bonding surfaces in the light allow wheel and on the trim element are free from dust and grease.
- Clean bonding surfaces with silicone remover - LSE 020 100 A3- .

Protected by copyright. Copying for private or commercial purposes, in part or in whole, is not permitted unless authorised by AUDI AG. AUDI AG does not guarantee or accept any liability with respect to the correctness of information in this document. Copyright by AUDI AG.

Protected by copyright. Copying for private or commercial purposes, in part or in whole, is not permitted unless authorised by AUDI AG. AUDI AG does not guarantee or accept any liability with respect to the correctness of information in this document. Copyright by AUDI AG.

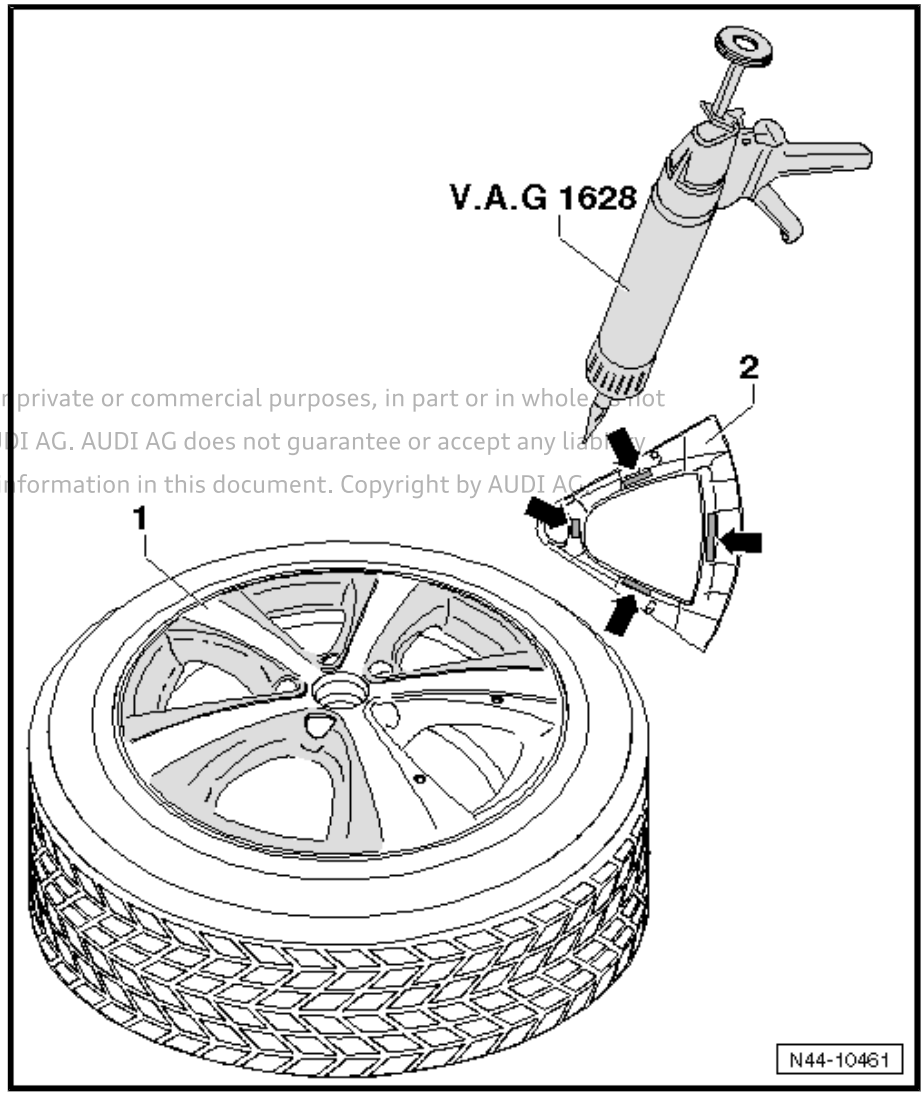

– Apply 1-component window adhesive - DH 009 100 A2- to bonding surface -arrows- using hand-cartridge gun - V.A.G 1628- .

• Spot of adhesive: length = approx. 25 mm and width = approx. 10 mm

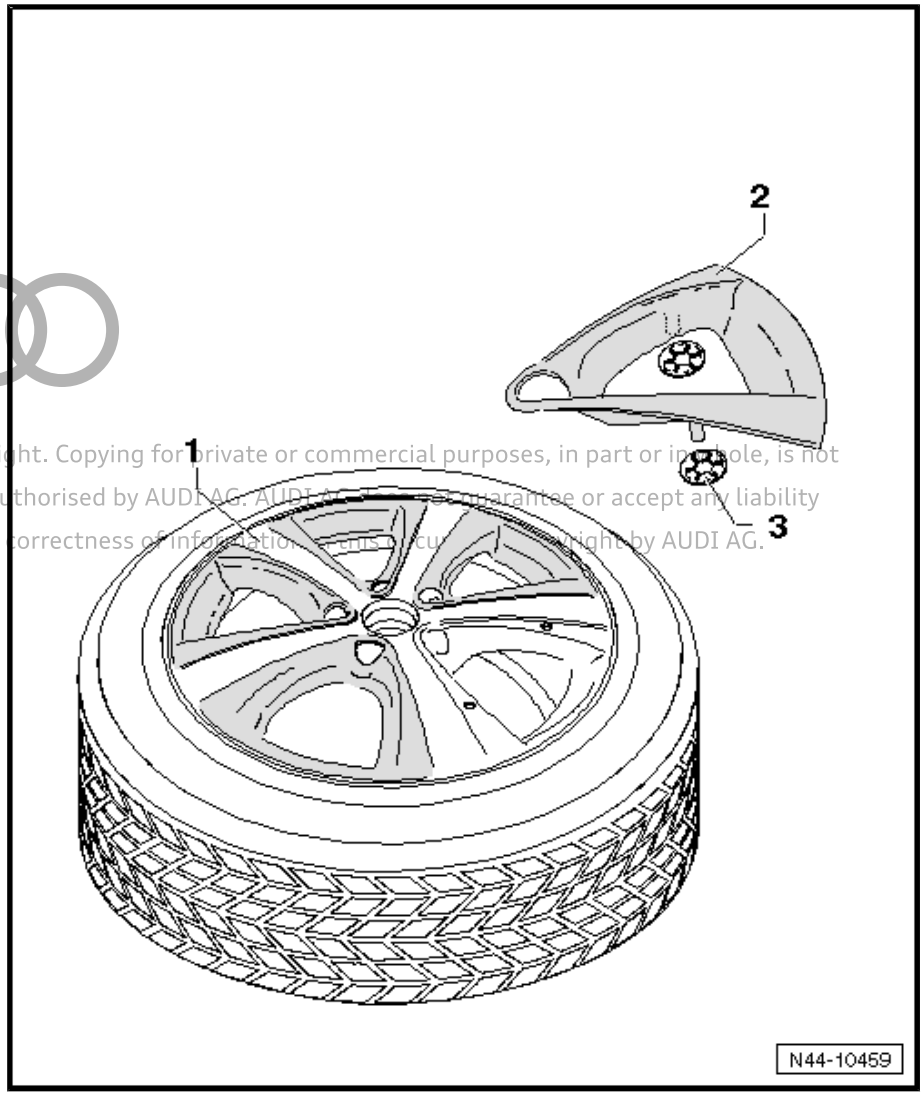

Protected by copyright. Copying for private or commercial purposes, in part or in whole, is not permitted unless authorised by AUDI AG. AUDI AG does not guarantee or accept any liability with respect to the correctness of information in this document. Copyright by AUDI AG.

– Press trim element -2- firmly onto light alloy wheel -1-.
– Secure trim element -2- on inside of light alloy wheel with lock washers -3-.

Minimum drying time: 3 hours (ambient temperature at least 15 ° C)

> ⚠ **WARNING**
>
> ***The light alloy wheel must be re-balanced.***

8 Rims with exchangeable trim elements (bolted)

These rims are fitted with exchangeable trim elements. Please observe the following instructions during installation.

– Clean thread in rim before screwing in the new bolts.

– Always use new bolts.

1 - Trim element

2 - Hexagon socket head bolts

Tightening torque for self-locking hexagon socket head bolts: 5 Nm

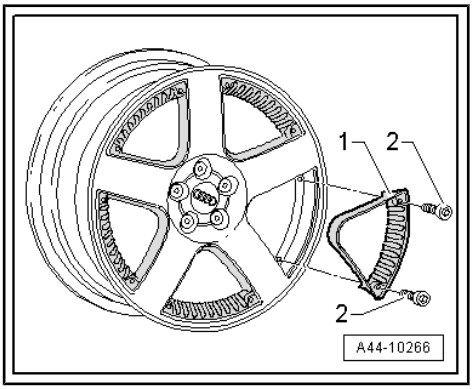

Protected by copyright. Copying for private or commercial purposes, in part or in whole, is not permitted unless authorised by AUDI AG. AUDI AG does not guarantee or accept any liability with respect to the correctness of information in this document. Copyright by AUDI AG.

9 Split-rim composite wheels

Composite wheels consist of several components.

The essential components are the rim and the wheel disc. These components are bolted together with special bolts with a special method. This ensures that the wheel functions properly, that it is sealed and safe and that it runs true. These requirements cannot be met with workshop equipment and under workshop conditions.

WARNING

Composite wheels must not be dismantled or repaired.

Protected by copyright. Copying for private or commercial purposes, in part or in whole, is not permitted unless authorised by AUDI AG. AUDI AG does not guarantee or accept any liability with respect to the correctness of information in this document. Copyright by AUDI AG.

10 Wheel bolts

Caution

Depending on the model, the wheel bolts have different lengths and contact surfaces.

Make sure that the correct type of wheel bolts are fitted; refer to ⇒ Electronic parts catalogue .

It is important to use the correct type of wheel bolts to ensure that the wheel bolts and the wheels are properly secured.

The contact surfaces of the wheel bolts must be clean and free of grease.

The contact surfaces of the wheel bolts must not be greased or oiled.

One-piece wheel bolt (standard)

Protected by copyright. Copying for private or commercial purposes, in part or in whole, is not permitted unless authorised by AUDI AG. AUDI AG does not guarantee or accept any liability with respect to the correctness of information in this document. Copyright by AUDI AG.

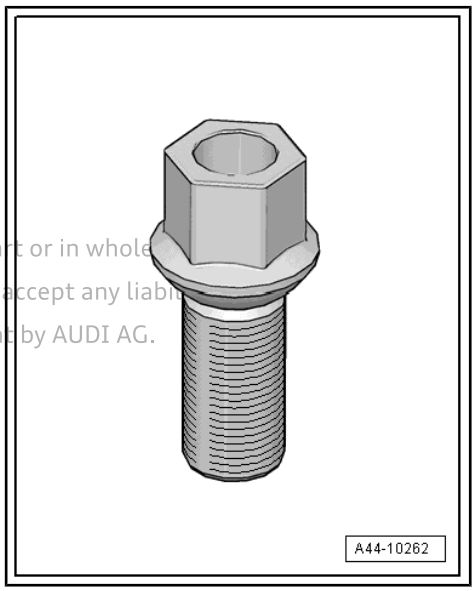

Two-piece wheel bolt (short, rotating shoulder) - mainly for S models

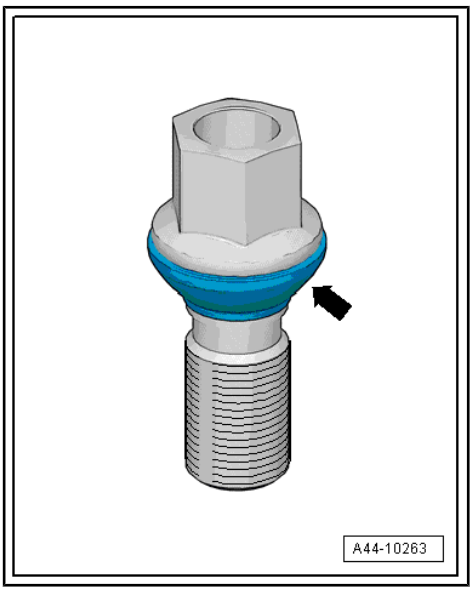

Two-piece wheel bolt (long, rotating shoulder) - mainly for Q models

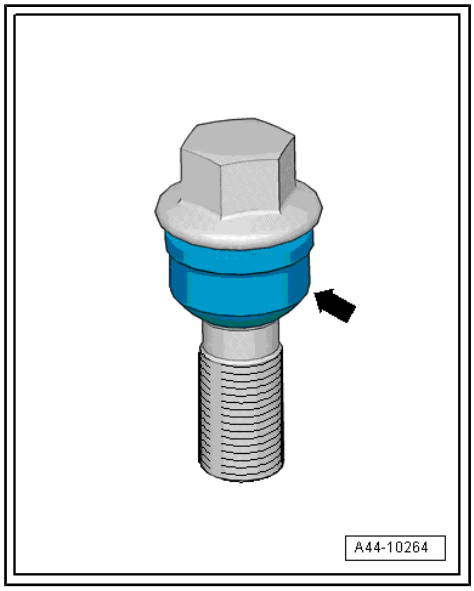

10.1 Anti-theft wheel bolts

Caution

Depending on the model, the wheel bolts have different lengths and contact surfaces.

Make sure that the correct type of wheel bolts are fitted; refer to ⇒ Electronic parts catalogue .

It is important to use the correct type of wheel bolts to ensure that the wheel bolts and the wheels are properly secured.

The contact surfaces of the wheel bolts must be clean and free of grease.

The contact surfaces of the wheel bolts must not be greased or oiled.

Anti-theft wheel bolt

1 - Anti-theft wheel bolt

2 - Trim cap

3 - Adapter for wheel bolt

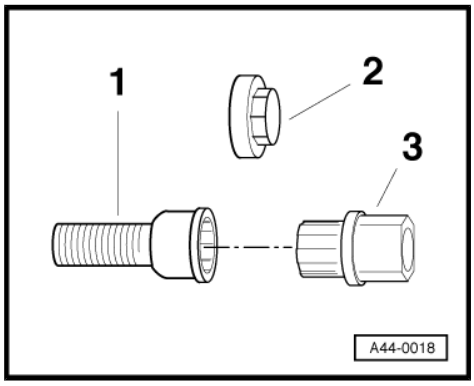

Note

- *After checking that ALL wheel bolts have been tightened to the correct torque* *⇒ "3.1 Tightening torques for wheel bolts", page 6* *, fit caps -2- completely and firmly onto wheel bolts.*
- *To do so, use the back end of a screwdriver or a suitable tool. Take care not to damage the caps.*

10.2 Adapter sets for anti-theft wheel bolts

Special tools and workshop equipment required

Protected by copyright. Copying for private or commercial purposes, in part or in whole, is not permitted unless authorised by AUDI AG. AUDI AG does not guarantee or accept any liability with respect to the correctness of information in this document. Copyright by AUDI AG.

- Torque wrench - V.A.G 1332-

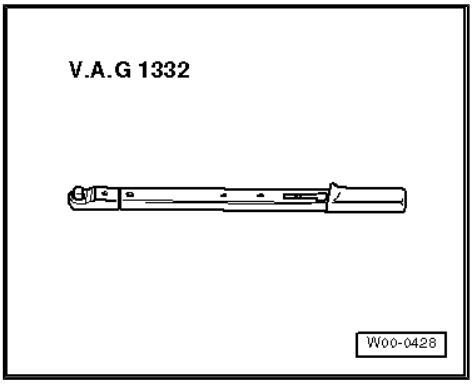

- Adapter set for wheel bolts - T10101-
- Adapter set for wheel bolts - T10101 A-

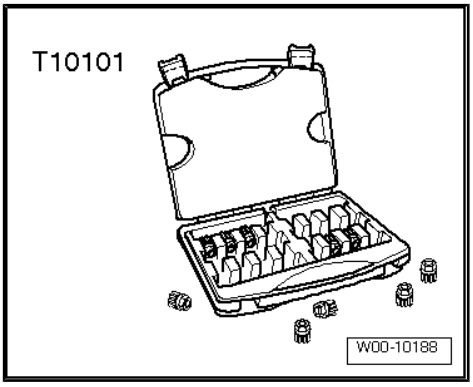

- Adapter set for wheel bolts - T10190-
- Adapter set for wheel bolts - T10313-
- Adapter set for wheel bolts - T40004-

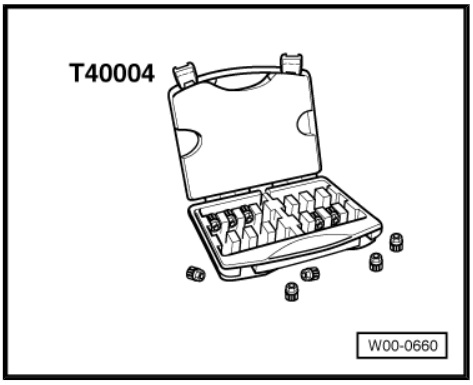

- Adapter set for wheel bolts - T40073-

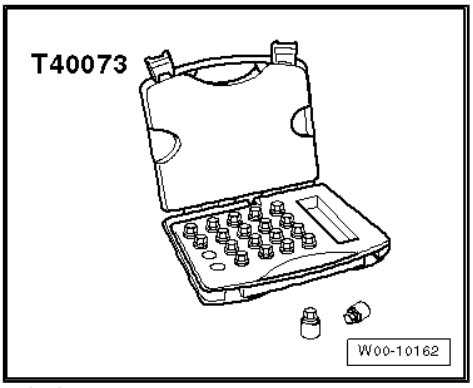

Protected by copyright. Copying for private or commercial purposes, in part or in whole, is not permitted unless authorised by AUDI AG. AUDI AG does not guarantee or accept any liability with respect to the correctness of information in this document. Copyright by AUDI AG.

11 Fitting wheels / tyres / Tyre Pressure Monitoring System / Tyre Pressure Loss Indicator

⇒ “11.1 General information on wheels and tyres”, page 22

⇒ “11.2 Exploded view of components for light alloy wheels”, page 22

⇒ “11.3 Exploded view of components for PAX run-flat tyres”, page 24

⇒ “11.4 Instructions for changing/fitting wheels”, page 27

⇒ “12 Tyre Pressure Monitoring Systems/Tyre Pressure Loss Indicator”, page 49

Protected by copyright. Copying for private or commercial purposes, in part or in whole, is not permitted unless authorised by AUDI AG. AUDI AG does not guarantee or accept any liability with respect to the correctness of information in this document. Copyright by AUDI AG.

11.1 General information on wheels and tyres

The factory recommends using tyres of the same make, construction and tread pattern on all four wheels.

Always renew the rubber valve when fitting a new wheel rim or tyre.

Tyres are to be fitted with DOT mark facing outer side of wheel. For tyres with directional tread pattern, this only applies to left side of vehicle.

If the vehicle is fitted with tyres with a directional tread pattern, the spare wheel should have a wheel/tyre combination for the right-hand side of the vehicle.

11.2 Exploded view of components for light alloy wheels

Note

- *On rims with bonded wheel trims, take care not to scratch the wheel trims.*
- *Wheel trims have a very sensitive surface.*
- *If a wheel trim is damaged, the rim must be renewed.*
- *The wheel trim cannot be renewed.*

Overview of light alloy wheel

Wheel change/wheel fitting instructions ⇒ page 27

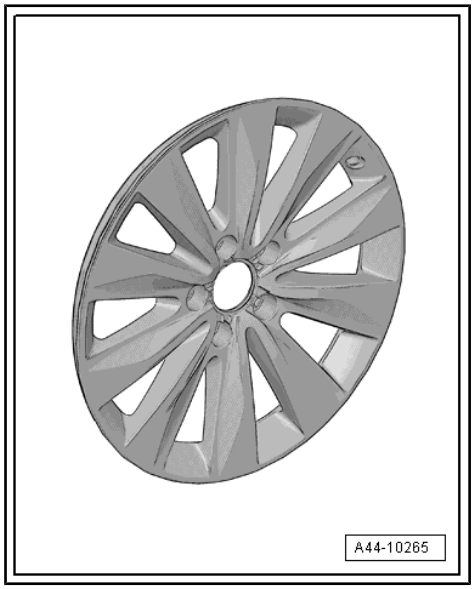

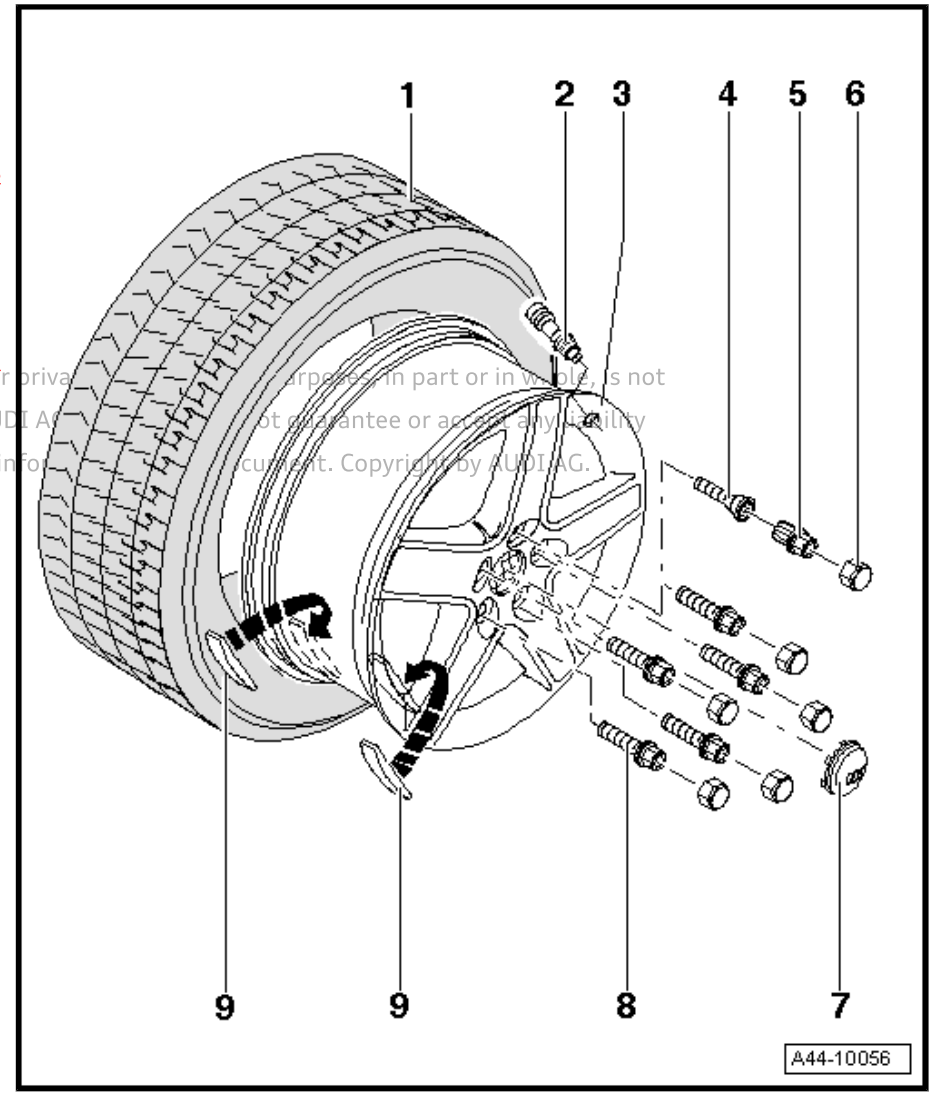

1 - Tyre

⇒ “11.11 Removing standard tyres without run-flat capability”, page 43

⇒ “11.12 Fitting standard tyres without run-flat capability”, page 45

⇒ “11.9 Removing run-flat tyres”, page 38

⇒ “11.10 Fitting run-flat tyres ”, page 40

Protected by copyright. Copying for private or commercial purposes, in part or in whole, is not permitted unless authorised by AUDI AG. AUDI AG does not guarantee or accept any liability with respect to the correctness of information in this document. Copyright by AUDI AG.

WARNING

The fitting temperature of a tyre must not be less than 21 °C and should not exceed 30 °C.

2 - Valve

- ❑ Always renew
- ❑ Use only correct valves as specified in ⇒ Electronic parts catalogue

Caution

Do not screw aluminium valve caps onto steel valve bodies.

3 - Wheel

- ❑ Observe the fitting instructions ⇒ page 27

4 - Wheel bolt

- ❑ Observe the fitting instructions ⇒ page 27
- ❑ Anti-theft wheel bolt ⇒ page 20
- ❑ ⇒ “3 Tightening torques for wheel bolts”, page 6

5 - Adapter for wheel bolt

- ❑ Attach to corresponding wheel bolt ⇒ page 20

6 - Cap for wheel bolts

Note

- *After checking that ALL wheel bolts have been tightened to the correct torque ⇒ “3.1 Tightening torques for wheel bolts”, page 6 , fit caps completely and firmly onto wheel bolts.*
- *To do so, use the back end of a screwdriver or a suitable tool. Take care not to damage the caps.*

7 - Trim cap

8 - Wheel bolt

Note

Make sure that the correct type of wheel bolts are fitted; refer to ⇒ Electronic parts catalogue .

- Observe the fitting instructions ⇒ page 27
- ⇒ “3 Tightening torques for wheel bolts”, page 6

9 - Adhesive balancing weights

- Not more than 60 g permitted per rim flange
- Remove dirt and grease from wheel rim at bonding point
- Pull off backing foil
- Bond on balancing weights at surfaces provided for this purpose

11.3 Exploded view of components for PAX run-flat tyres

Note

After checking that all wheel bolts have been tightened to the correct torque ⇒ “3.1 Tightening torques for wheel bolts”, page 6 , fit caps -2- completely and firmly onto wheel bolts.

WARNING

The fitting temperature of a tyre must not be less than 21 °C and should not exceed 30 °C.

Protected by copyright. Copying for private or commercial purposes, in part or in whole, is not permitted unless authorised by AUDI AG. AUDI AG does not guarantee or accept any liability with respect to the correctness of information in this document. Copyright by AUDI AG.

Caution

Run-flat tyres must only be fitted on vehicles with Tyre Pressure Monitoring System/Tyre Pressure Loss Indicator.

Note

- *On rims with bonded wheel trims, take care not to scratch the wheel trims.*
- *Wheel trims have a very sensitive surface.*
- *If a wheel trim is damaged, the rim must be renewed.*
- *The wheel trim cannot be renewed.*

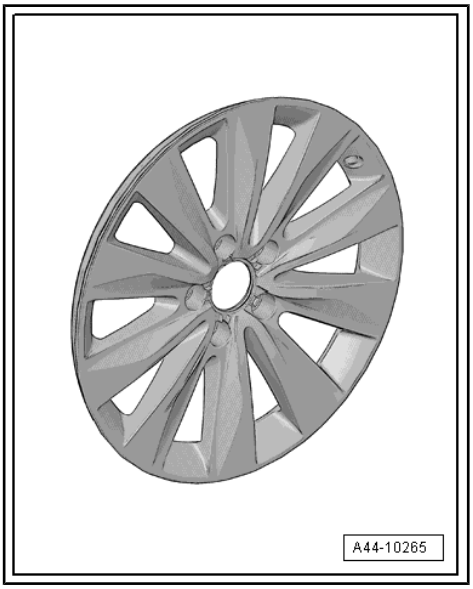

1 - PAX tyre

WARNING

The fitting temperature of a tyre must not be less than 21 °C and should not exceed 30 °C.

Protected by copyright. Copying for private and commercial purposes, in part or in whole, is not permitted unless authorised by AUDI AG. AUDI AG does not guarantee or accept any liability with respect to the correctness of information in this document. Copyright by AUDI AG.

2 - Support ring

3 - Wheel for PAX tyre

- ❑ Observe the fitting instructions ⇒ page 27

4 - Wheel electronics

- ❑ All batteries must be renewed together
- ❑ Remaining service life, temperature and inflation pressure can be read out via diagnosis function with vehicle diagnostic, testing and information system - VAS 5051-

⇒ "12 Tyre Pressure Monitoring Systems/Tyre Pressure Loss Indicator", page 49

⇒ "12.4 Wheel electronics (TPMS) - Beru system", page 54

⇒ "12.5 Wheel electronics (TPMS) - Siemens system", page 55

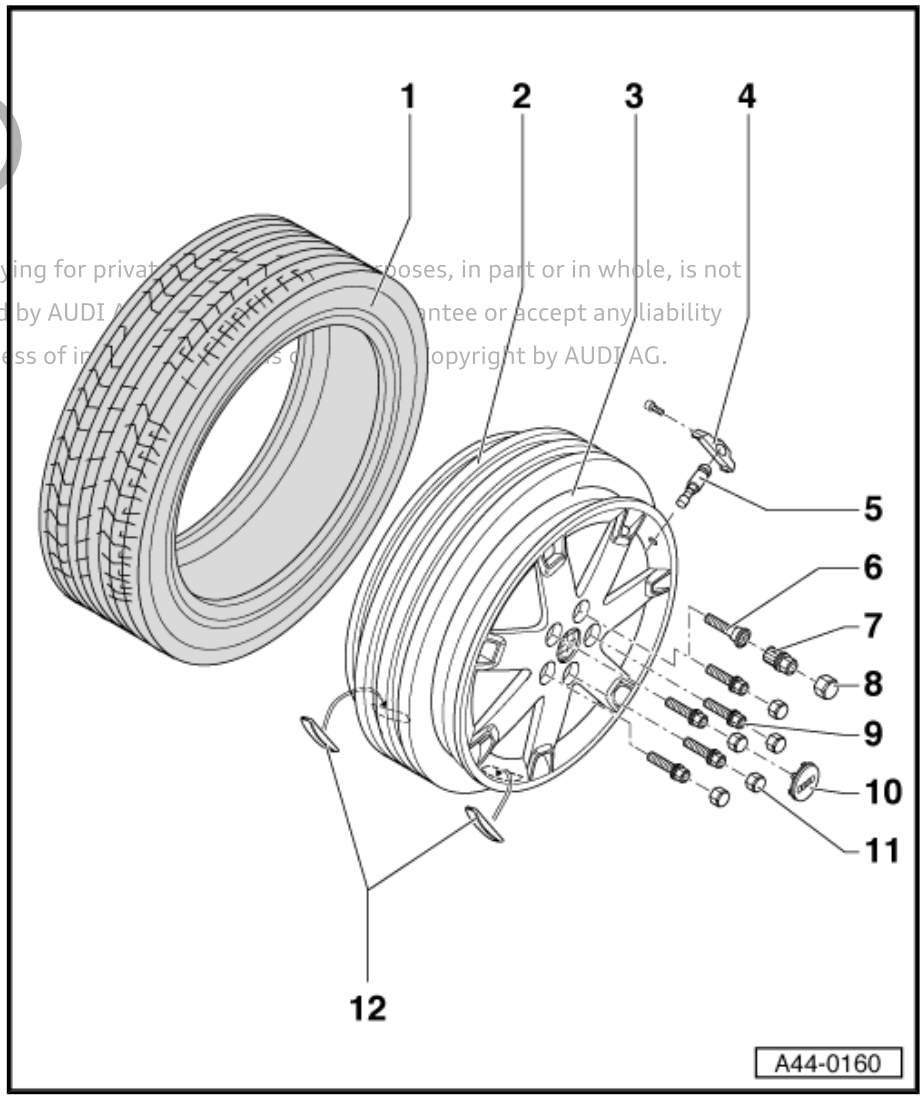

5 - Metal valve body

- ❑ Use only correct valves as specified in ⇒ Electronic parts catalogue
- ❑ Supplied as complete unit

> **Caution**
>
> *Do not screw aluminium valve caps onto steel valve bodies.*

6 - Wheel bolt

> **Caution**
>
> *Depending on the model, the wheel bolts have different lengths and contact surfaces.*
>
> *Make sure that the correct type of wheel bolts are fitted; refer to ⇒ Electronic parts catalogue .*
>
> *It is important to use the correct type of wheel bolts to ensure that the wheel bolts and the wheels are properly secured.*

Protected by copyright. Copying for private or commercial purposes, in part or in whole, is not permitted unless authorised by AUDI AG. AUDI AG does not guarantee or accept any liability with respect to the correctness of information in this document. Copyright by AUDI AG.

- ❑ Observe the fitting instructions ⇒ page 27
- ❑ Anti-theft wheel bolt ⇒ page 20
- ❑ ⇒ “3 Tightening torques for wheel bolts”, page 6

7 - Adapter for wheel bolt

- ❑ Attach to corresponding wheel bolt ⇒ page 20

8 - Trim cap

- ❑ Attach to wheel bolt

> **Note**
>
> - *After checking that ALL wheel bolts have been tightened to the correct torque ⇒ “3.1 Tightening torques for wheel bolts”, page 6 , fit caps completely and firmly onto wheel bolts.*
> - *To do so, use the back end of a screwdriver or a suitable tool. Take care not to damage the caps.*

9 - Two-piece wheel bolt

- ❑ Observe the fitting instructions ⇒ page 27
- ❑ ⇒ “3 Tightening torques for wheel bolts”, page 6

10 - Trim cap

11 - Cap for wheel bolts

Note

- *After checking that ALL wheel bolts have been tightened to the correct torque* *⇒ "3.1 Tightening torques for wheel bolts", page 6* *, fit caps completely and firmly onto wheel bolts.*
- *To do so, use the back end of a screwdriver or a suitable tool. Take care not to damage the caps.*

12 - Adhesive balancing weights

- ❑ Not more than 60 g permitted per rim
- ❑ Remove dirt and grease from wheel rim at bonding point
- ❑ Pull off backing foil
- ❑ Bond on balancing weights at surfaces provided for this purpose

Reproduction of this document or parts thereof for private or commercial purposes, in part or in whole, is not permitted unless authorised by AUDI AG. AUDI AG does not guarantee or accept any liability with respect to the correctness of information in this document. Copyright by AUDI AG.

11.4 Instructions for changing/fitting wheels

Note

The width across flats of the wheel bolt adapter supplied with the vehicle can differ from that of the adapter in the workshop adapter set.

Special tools and workshop equipment required

- Torque wrench - V.A.G 1332-

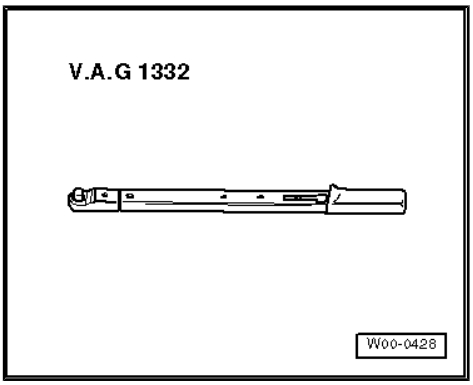

- Adapter set for wheel bolts - T10101-

- Adapter set for wheel bolts - T10101 A-

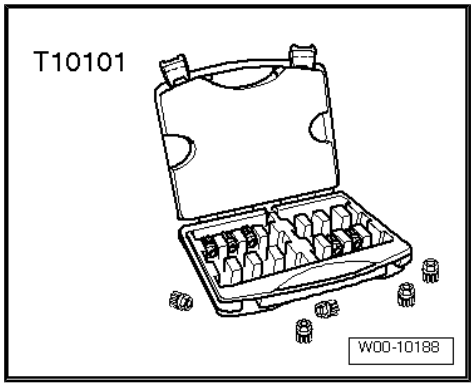

- Adapter set for wheel bolts - T10190-
- Adapter set for wheel bolts - T10313-
- Adapter set for wheel bolts - T40004-

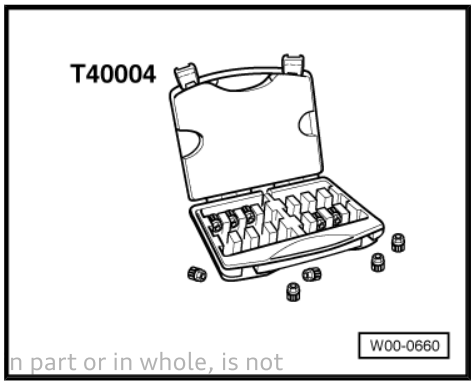

Protected by copyright. Copying for private or commercial purposes, in part or in whole, is not permitted unless authorised by AUDI AG. AUDI AG does not guarantee or accept any liability with respect to the correctness of information in this document. Copyright by AUDI AG.

- Adapter set for wheel bolts - T40073-

- Wax spray - D 322 000 A2-
- Optimol TA paste - G 052 109 A2-
- Wheel hub cleaner - VAS 294 009-

Wheel change

Caution

On vehicles with ceramic brakes the wheel must not be allowed to drop onto the brake disc. This would cause irreparable damage to the disc. When removing or fitting a wheel, screw the long assembly pin into the top wheel bolt hole (12 o'clock position) in place of the wheel bolt, and screw the short pin into one of the other holes to support the wheel. The wheel can then slide along the assembly pins when being fitted or removed.

Note

- *Raise vehicle only at jacking points provided.*
- *Do not use screwdriver to pry off trim caps on vehicles with light-alloy wheels; always use special tool provided (puller from vehicle tool kit).*
- *To slacken off wheel bolts, always use socket attachments of the correct size. Worn socket attachments must not be re-used.*
- *Do not use impact wrenches for slackening off anti-theft wheel bolts (lockable wheel bolts).*
- *Take care to keep wheel bolts clean.*

DANGER!

Perform the checks and follow the instructions listed below. This is important to ensure that the wheel bolts and the wheels are properly secured.

Protected by copyright. Copying for private or commercial purposes, in part or in whole, is not permitted unless authorised by AUDI AG. AUDI AG does not guarantee or accept any liability with respect to the correctness of information in this document. Copyright by AUDI AG.

Perform the following steps with the wheel rim removed.

Caution

Depending on the model, the wheel bolts have different lengths and contact surfaces.

Make sure that the correct type of wheel bolts are fitted; refer to ⇒ Electronic parts catalogue .

It is important to use the correct type of wheel bolts to ensure that the wheel bolts and the wheels are properly secured.

– Remove corrosion and dirt from contact surfaces -arrows- on brake disc/wheel hub or brake disc/brake drum and wheel (rim).

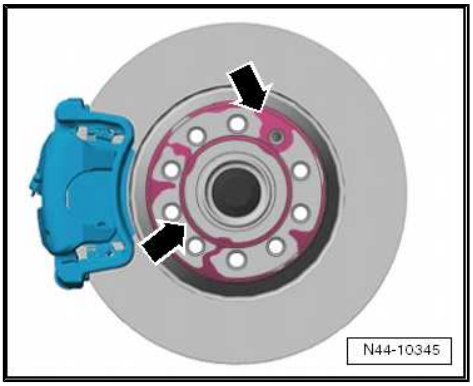

– Use wheel hub cleaner - VAS 294 009- to remove corrosion and dirt.

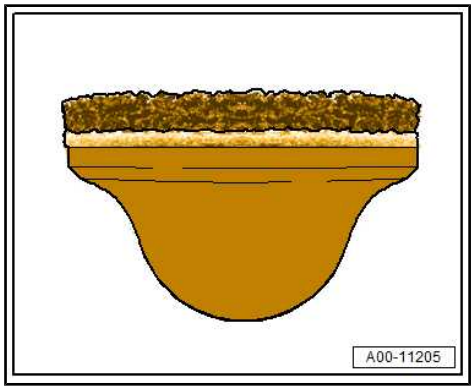

WARNING

Wear protective goggles when cleaning with wheel hub cleaner - VAS 294 009- .

– It is very important to wear protective goggles when cleaning with wheel hub cleaner - VAS 294 009- .

– Remove corrosion and dirt from all contact surfaces of wheel hub and rim using wheel hub cleaner - VAS 294 009-

– Remove any oil, grease and corrosion.

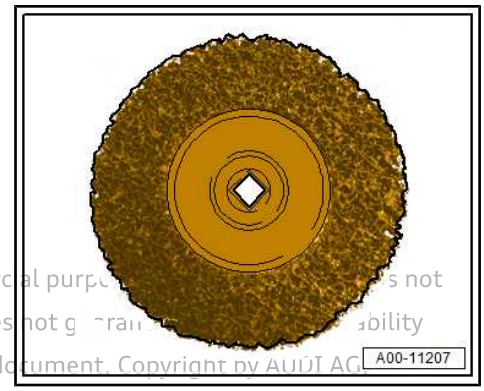

Protected by copyright. Copying for private or commercial purp[illegible]s not permitted unless authorised by AUDI AG. AUDI AG does not g[illegible]ability with respect to the correctness of information in this do[illegible]ument. Copyright by AUDI AG

– Check that centring flange on wheel hub -arrow- is free of corrosion and dirt.

– Check that contact surfaces -arrow- on inside of wheel rim and centring seat in rim are free of corrosion and dirt.

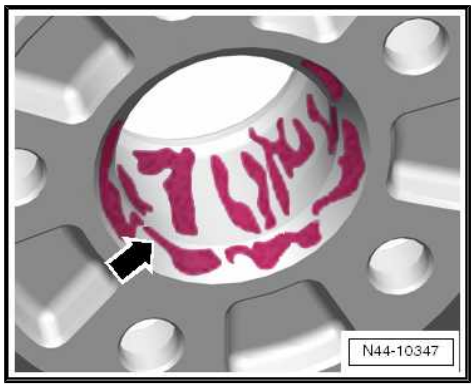

– The convex seats in the holes for the wheel bolts on the rim must be free of corrosion, dirt, oil and grease.

– Remove any oil, grease, dirt and corrosion and apply wax spray - D 322 000 A2- around centring hole/flange to ensure corrosion protection.

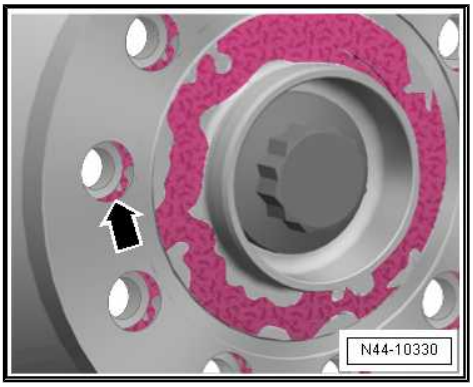

Note

- *The wax spray must not come into contact with brake system components.*
- *Any rust or dirt which drops between brake disc and wheel hub on removal should be blown out with compressed air.*

DANGER!

Wear safety goggles when working with compressed air.

The convex seats for the wheel bolts in the wheel rim and the shoulders on the wheel bolts must be free from dirt and corrosion.

– If necessary, clean the seats for the wheel bolts in the rim using a clean, lint-free cloth.

– Check that the wheel bolts and the threads in the wheel hub are clean.

– Use a brass wire brush or similar to remove any dirt from the shoulder and threads of the wheel bolts.

WARNING

Damaged and/or badly corroded wheel bolts must be renewed.

Protected by copyright. Copying for private or commercial purposes, in part or in whole, is not permitted unless authorised by AUDI AG. AUDI AG does not guarantee or accept any liability with respect to the correctness of information in this document. Copyright by AUDI AG.

If lightly corroded wheel bolts are re-installed on the vehicle, clean the threads and the shoulders on the bolt heads and grease the surfaces in sliding contact using Optimol TA paste - G 052 109 A2- as follows (all vehicles except RS 2 and RS 4, Type 8D):

A - One-piece wheel bolt. Lightly grease thread -2- and shoulder -1-.

B - Two-piece wheel bolt. Lightly grease thread -3-, and area between bolt head contact surface -6- and back of convex washer -5-. Do not apply grease to the convex surface -4- that bears against the wheel rim.

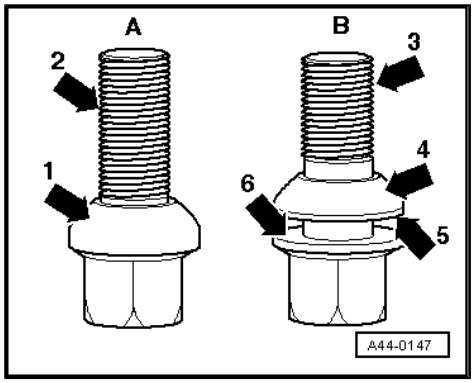

Note

Use only Optimol TA paste - G 052 109 A2- . The paste must not come into contact with parts of the brake system.

Only for RS 2 and RS 4 (Type 8D):

- Slightly corroded wheel bolts are not to be cleaned and greased. They must always be renewed.
- Wheel bolts are always to be screwed in without grease.

All vehicles (continued):

– Check that wheel bolts can be screwed in easily by hand without using tools. When fitting the wheel, the bolts should screw in easily over the full length of the threads.

– Make sure the holes in the hub align. The thread of the wheel bolts must not contact the bore in the brake disc.

– If the thread of the wheel bolt touches the hole, turn the brake disc relative to the wheel hub accordingly.

Fitting wheels:

Caution

Depending on the model, the wheel bolts have different lengths and contact surfaces.

Make sure that the correct type of wheel bolts are fitted; refer to ⇒ Electronic parts catalogue .

It is important to use the correct type of wheel bolts to ensure that the wheel bolts and the wheels are properly secured.

Protected by copyright. Copying for private or commercial purposes, in part or in whole, is not permitted unless authorised by AUDI AG. AUDI AG does not guarantee or accept any liability with respect to the correctness of information in this document. Copyright by AUDI AG.

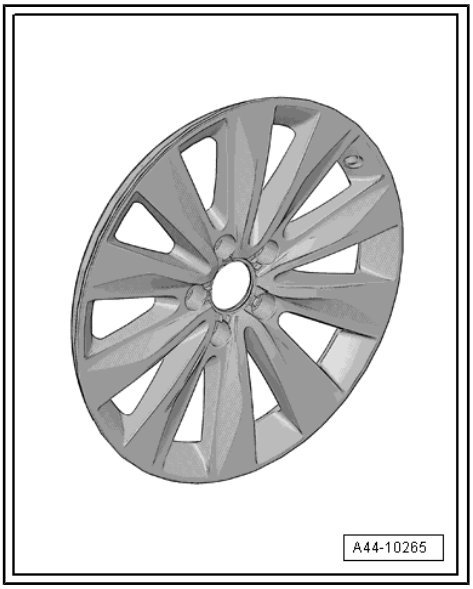

Note

- *On rims with bonded wheel trims, take care not to scratch the wheel trims.*
- *Wheel trims have a very sensitive surface.*
- *If a wheel trim is damaged, the rim must be renewed.*
- *The wheel trim cannot be renewed.*

Caution

Depending on the model, the wheel bolts have different lengths and contact surfaces.

Make sure that the correct type of wheel bolts are fitted; refer to ⇒ Electronic parts catalogue .

It is important to use the correct type of wheel bolts to ensure that the wheel bolts and the wheels are properly secured.

Note

- Position wheel on wheel hub and secure by hand with two opposing wheel bolts.
- Screw in remaining wheel bolts by hand. They should screw in easily. Make sure the bores are exactly centralised.
- If necessary lift the wheel slightly and tighten two wheel bolts lightly by hand.
- When fitting the wheel, screw in all wheel bolts uniformly by hand.
- Tighten the wheel bolts diagonally using, for example, a four-arm wheel nut wrench, to about 30 Nm.

Note

- *After checking that ALL wheel bolts have been tightened to the correct torque ⇒ "3.1 Tightening torques for wheel bolts", page 6 , fit caps completely and firmly onto wheel bolts.*
- *To do so, use the back end of a screwdriver or a suitable tool. Take care not to damage the caps.*

WARNING

Do not use an impact wrench to screw in the wheel bolts.

Protected by copyright. Copying for private or commercial purposes, in part or in whole, is not permitted unless authorised by AUDI AG. AUDI AG does not guarantee or accept any liability with respect to the correctness of information in this document. Copyright by AUDI AG.

Protected by copyright. Copying for private or commercial purposes, in part or in whole, is not permitted unless authorised by AUDI AG. AUDI AG does not assume liability with respect to the correctness of information.

– If necessary, take the weight off the wheel by lifting it slightly.

– Lower vehicle to floor and tighten all wheel bolts in diagonal sequence to final specified torque.

⇒ “3 Tightening torques for wheel bolts”, page 6

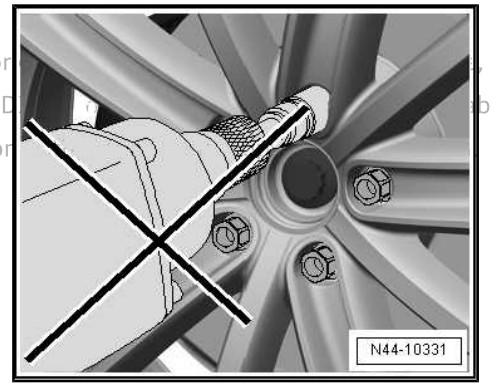

Note

- *After checking that ALL wheel bolts have been tightened to the correct torque ⇒ “3.1 Tightening torques for wheel bolts”, page 6 , fit caps completely and firmly onto wheel bolts.*
- *To do so, use the back end of a screwdriver or a suitable tool. Take care not to damage the caps.*

11.5 Removing and fitting run-flat tyres

⇒ “11.11 Removing standard tyres without run-flat capability”, page 43

WARNING

The fitting temperature of a tyre must not be less than 21 °C and should not exceed 30 °C.

Caution

Run-flat tyres must only be fitted on vehicles with Tyre Pressure Monitoring System/Tyre Pressure Loss Indicator.

⇒ “3 Tightening torques for wheel bolts”, page 6

⇒ “11.6 Safety notes for run-flat tyres”, page 34

⇒ “11.7 Conditions for fitting run-flat tyres”, page 35

⇒ “11.8 Unseating run-flat tyres”, page 37

⇒ “11.9 Removing run-flat tyres”, page 38

⇒ “11.10 Fitting run-flat tyres ”, page 40

11.6 Safety notes for run-flat tyres

Caution

Run-flat tyres must only be fitted on vehicles with Tyre Pressure Monitoring System/Tyre Pressure Loss Indicator.

The temperature must be at least 21°C, but not above 30°C, when fitting run-flat tyres.

- Run-flat tyres must be installed and/or removed by specially trained mechanics.
- The required special tools must be undamaged and in perfect working order. For information on suitable additional tools and materials, please contact the manufacturer of your tyre fitting unit directly. For listed tyre fitting units with VAS numbers, the additional tools and materials are available as recommended accessories.

- Where applicable, use the assembly paste recommended by the tyre manufacturer.
- The description of the procedures for removing and fitting tyres may vary depending on the equipment manufacturer and type of unit.
- The basic procedures for removing and fitting run-flat tyres are described below. Before starting work on a tyre, it is important to establish whether it is likely to be a run-flat tyre, and to follow the correct procedures when removing or fitting it.
- You can identify run-flat tyres from any of the following abbreviations: DSST, Euforia, RFT, ROF, RSC, SSR or ZP. These abbreviations are located on the sidewall after the tyre designation.
- Please always observe the instructions and warnings in the following description.
- Check whether the tyre pressure sensor has to be renewed (if fitted) ⇒ Vehicle diagnostic tester.

Note

- *Ensure that the tyre does not come into contact with the tyre pressure sensor during removal and fitting work.*
- *When cleaning the wheel rim, the tyre pressure sensor must not be allowed to come into contact with water and must not be blown out with compressed air.*

11.7 Conditions for fitting run-flat tyres

Protected by copyright. Copying for private or commercial purposes, in part or in whole, is not permitted unless authorised by AUDI AG. AUDI AG does not guarantee or accept any liability with respect to the correctness of information in this document. Copyright by AUDI AG.

Caution

The temperature must be at least 21°C, but not above 30°C, when fitting run-flat tyres.

Warming up cold tyres to minimum fitting temperature of 21°C

If necessary, warm up tyres in heating cabinet - VAS 6851- .

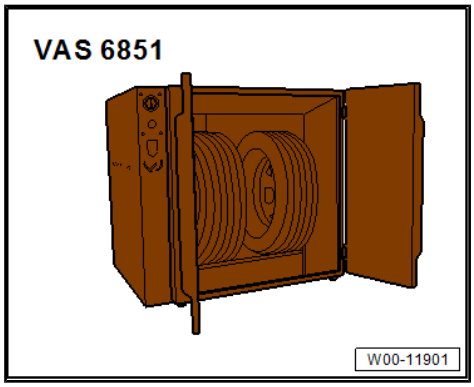

Note

This procedure also applies to ultra high performance tyres (height/width ratio 45 % or less and speed symbol V or higher).

Note

- *After checking that ALL wheel bolts have been tightened to the correct torque* *⇒ "3.1 Tightening torques for wheel bolts", page 6* *, fit caps completely and firmly onto wheel bolts.*
- *To do so, use the back end of a screwdriver or a suitable tool. Take care not to damage the caps.*

WARNING

The fitting temperature of a tyre must not be less than 21 °C and should not exceed 30 °C.

- To prevent injury when fitting the tyre, the temperature of the tyre (in particular the temperature of the upper sidewall and upper bead inside the tyre) must be at least 21°C.
- This internal temperature is referred to as the core temperature.
- Since rubber is a poor heat conductor, a cold tyre must be stored in a temperate environment until the internal rubber layers have warmed up to at least 21 °C.
- The surface temperature of the tyre during the warm-up phase is not indicative of the internal temperature.
- The quickest way for the tyres to absorb heat from the ambient air is to allow the warm air to circulate around them freely. For this purpose, they should be stored separately and NOT stacked.
- Never use a heater or hot air blower to warm up the tyres, as critical surface temperatures can build up extremely quickly.
- There is no way to heat the tyres without damaging them other than using warm water or warm ambient air (max. 50 °C).
- If cold tyres (below 0 °C) are brought into a warm environment (above 0 °C), a layer of frost will immediately form on the surface of the tyre. This layer of frost, which forms from the condensation of moisture in the air, is a sign that the tyre is rapidly absorbing heat from the ambient surroundings.
- When the layer of frost has thawed completely leaving a film of condensate, you should wipe the tyre dry with a cloth to prevent the evaporative cooling effect from slowing down the warm-up process.

Warm-up times:

Protected by copyright. Copying for private or commercial purposes, in part or in whole, is not permitted unless authorised by AUDI AG. AUDI AG does not guarantee or accept any liability with respect to the correctness of information in this document. Copyright by AUDI AG.

If necessary allow tyres to warm up to at least 21°C in heating cabinet - VAS 6851- .

- Assuming a minimum room temperature of 19 °C and a tyre temperature of 0 °C or higher, the tyre should be stored for at least 2 hours.
- Assuming a minimum room temperature of 19 °C and a tyre temperature of below 0 °C, the tyre should be stored for at least 2.5 hours.

Recommendations for warm-up:

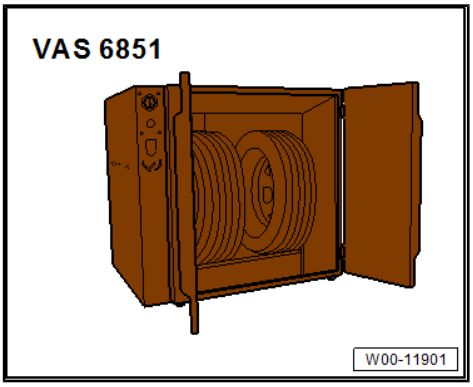

If necessary allow tyres to warm up to at least 21°C in heating cabinet - VAS 6851- .

- Make it part of your routine job preparation to store the tyres in the workshop 1 day before fitting them (if possible).
- Store the tyres as high up as possible on an insulated surface, such as a wood pallet or similar.
- Keep the tyres separate so that the warm air can circulate around them freely.
- Wipe off condensate.
- Never use a heater or hot air blower to warm up the tyres.

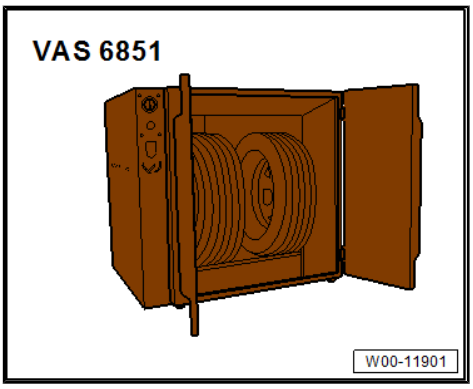

WARNING

The fitting temperature of a tyre must not be less than 21 °C and should not exceed 30 °C.

11.8 Unseating run-flat tyres

Note

If you intend to fit the tyre back onto the rim, allow the tyre to warm up to at least 21°C before unseating it.

Protected by copyright. Copying for private or commercial purposes, in part or in whole, is not permitted unless authorised by AUDI AG. AUDI AG does not guarantee or accept any liability with respect to the correctness of information in this document. Copyright by AUDI AG.

Caution

The temperature must be at least 21°C, but not above 30°C, when fitting run-flat tyres.

Caution

- *⇒ "11.6 Safety notes for run-flat tyres", page 34*

– Release air from tyre by unscrewing valve core.

Note

- *On rims with bonded wheel trims, take care not to scratch the wheel trims.*
- *Wheel trims have a very sensitive surface.*
- *If a wheel trim is damaged, the rim must be renewed.*
- *The wheel trim cannot be renewed.*

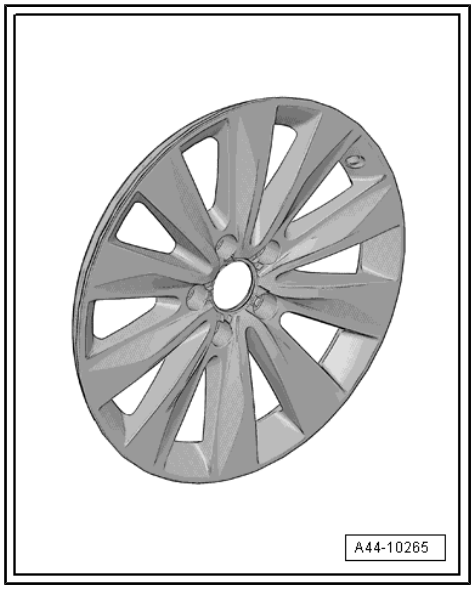

Note

If you intend to fit the tyre back onto the rim, allow the tyre to warm up to at least 21°C before unseating it.

– When using a tyre fitting machine with bead breaker to unseat the tyre, always make sure that the tyre valve/ tyre pressure sensor -arrow- is on the opposite side to the bead breaker -1-.

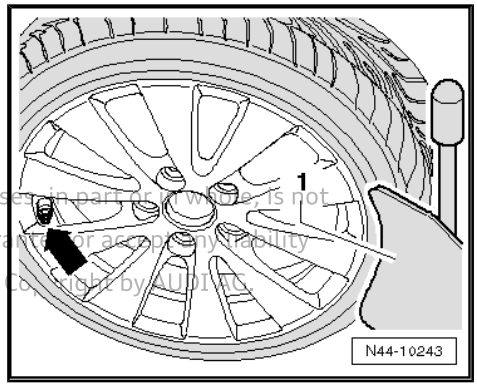

Apply the bead breaker not more than 2 cm away from the wheel flange.

Protected by copyright. Copying for private or commercial purposes, in part or in whole, is not permitted unless authorised by AUDI AG. AUDI AG does not guarantee or accept any liability with respect to the correctness of information in this document. Copyright by AUDI AG.

– Remove balancing weights and coarse dirt from wheel.

– Unseat both tyre beads all round and apply a generous amount of tyre fitting lubricant between tyre and wheel flange -arrow-.

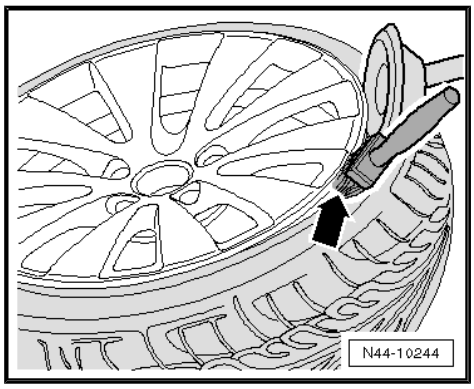

11.9 Removing run-flat tyres

⇒ “11.10 Fitting run-flat tyres ”, page 40

⇒ “11.11 Removing standard tyres without run-flat capability”, page 43

Note

If you intend to fit the tyre back onto the rim, allow the tyre to warm up to at least 21°C before removing and fitting it.

Protected by copyright. Copying for private or commercial purposes, in part or in whole, is not permitted unless authorised by AUDI AG. AUDI AG does not guarantee or accept any liability with respect to the correctness of information in this document. Copyright by AUDI AG.

Caution

The temperature must be at least 21°C, but not above 30°C, when fitting run-flat tyres.

Caution

- *⇒ "11.6 Safety notes for run-flat tyres", page 34*

Note

- *On rims with bonded wheel trims, take care not to scratch the wheel trims.*
- *Wheel trims have a very sensitive surface.*
- *If a wheel trim is damaged, the rim must be renewed.*
- *The wheel trim cannot be renewed.*

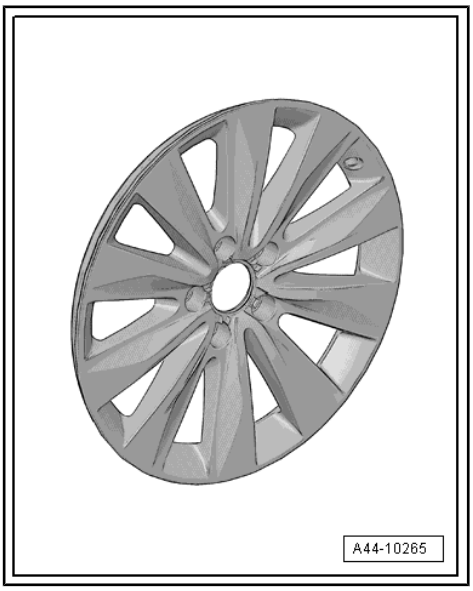

– Turn wheel on tyre fitting unit so that tyre valve/ tyre pressure sensor -2- is in front of head of fitting unit -1-.

Caution

Maintain clearance -a- between head of fitting unit -1- and tyre valve/tyre pressure sensor; otherwise the head will damage the tyre pressure sensor .

– Position head of fitting unit -1- close to tyre valve/ tyre pressure sensor so that tyre iron can be applied approx. 30° away from tyre valve/ tyre pressure sensor -2-.

– Attach retainers -3- to wheel on opposite side to head of fitting unit -1-.

– Now use tyre iron to lever bead over finger on head of fitting unit. Remove tyre iron after doing so.

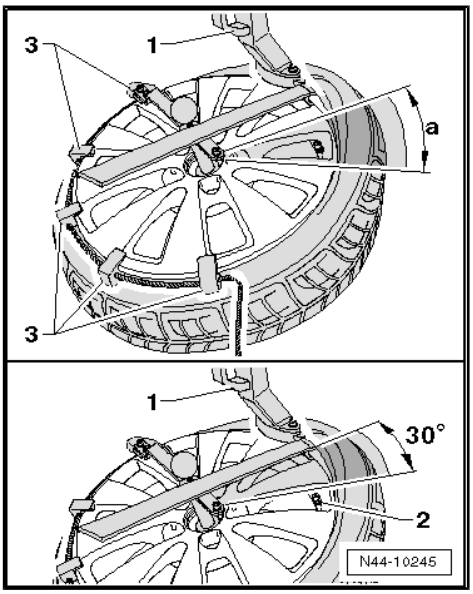

– Run tyre fitting unit in clockwise direction until upper bead is completely over wheel flange.

Retainers -1- will be pushed against head of fitting unit. They can then be easily removed.

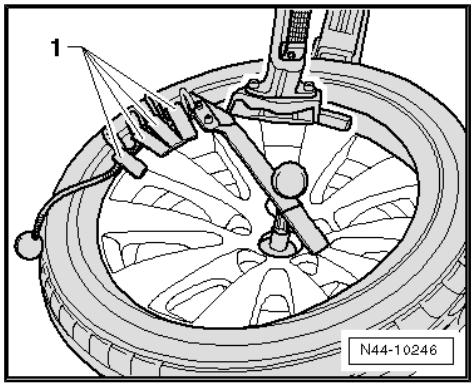

– Turn wheel on tyre fitting unit so that tyre valve/ tyre pressure sensor -2- is in front of head of fitting unit -1-.

> **Caution**
>
> *Maintain clearance -a- between head of fitting unit -1- and tyre valve/tyre pressure sensor; otherwise the head will damage the tyre pressure sensor .*

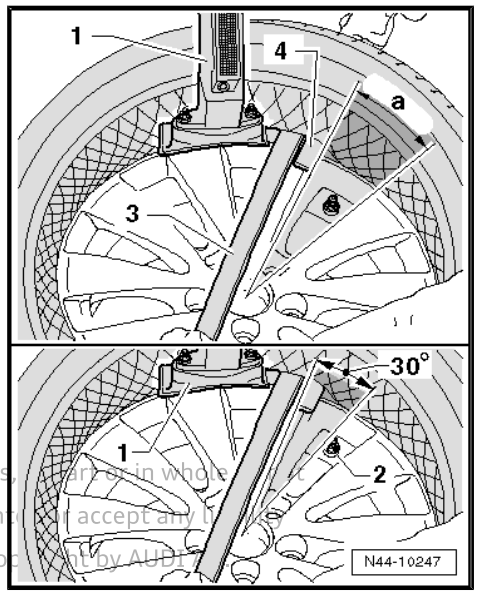

– Position head of fitting unit -1- close to tyre valve/ tyre pressure sensor so that tyre iron can be applied approx. 30° away from tyre valve/ tyre pressure sensor -2-.

– Now use tyre iron -3- to lever bead over finger on head of fitting unit.

Protected by copyright. Copying for private or commercial purposes, in part or in whole, is not permitted unless authorised by AUDI AG. AUDI AG does not guarantee or accept any liability with respect to the correctness of information in this document. Copyright by AUDI AG.

– Apply an additional plastic lever -4-.

– Remove tyre iron -3- again.

– Use plastic lever -1- to hold bead over wheel flange from outside and run tyre fitting unit in clockwise direction until tyre has been pulled completely off wheel flange.

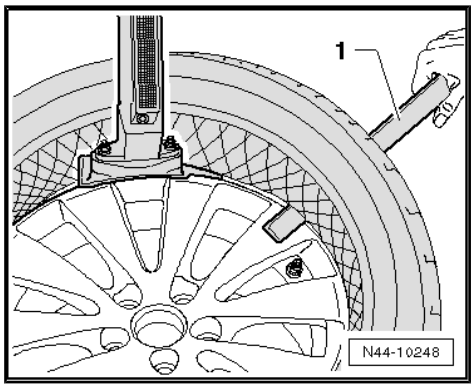

> **Note**
>
> ♦ *Check tyre pressure sensor for loose or damaged parts. If screw-on connections are loose, replace union nut, valve core, seal, sealing washer and valve cap with new parts from repair kit ⇒ Electronic parts catalogue "ETKA" .*
>
> ♦ *If tyre pressure sensor is damaged, renew it completely.*

11.10 Fitting run-flat tyres

> **Caution**
>
> *The temperature must be at least 21°C, but not above 30°C, when fitting run-flat tyres.*
>
> *Run-flat tyres must only be fitted on vehicles with Tyre Pressure Monitoring System/Tyre Pressure Loss Indicator.*

Caution

- ⇒ *"11.7 Conditions for fitting run-flat tyres", page 35*
- ⇒ *"11.6 Safety notes for run-flat tyres", page 34*

Protected by copyright. Copying for private or commercial purposes, in part or in whole, is not permitted unless authorised by AUDI AG. AUDI AG does not guarantee or accept any liability with respect to the correctness of information in this document. Copyright by AUDI AG.

WARNING

The fitting temperature of a tyre must not be less than 21 °C and should not exceed 30 °C.

Warm up tyres in heating cabinet - VAS 6851- .

Heating cabinet - VAS 6851-

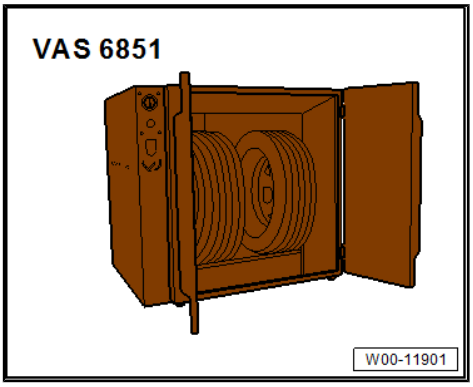

Note

- *On rims with bonded wheel trims, take care not to scratch the wheel trims.*
- *Wheel trims have a very sensitive surface.*
- *If a wheel trim is damaged, the rim must be renewed.*
- *The wheel trim cannot be renewed.*

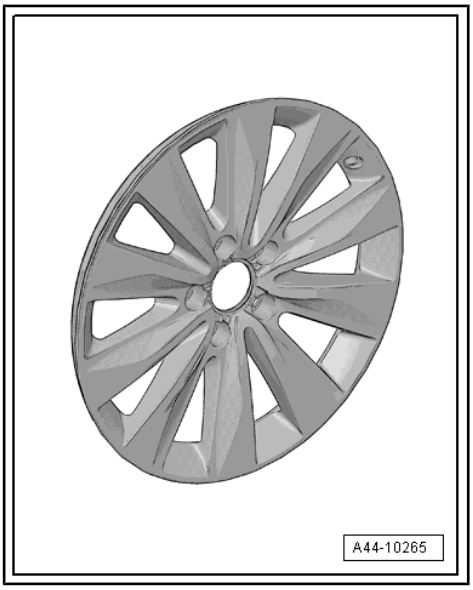

– Install new tyre valve.

• Tyres warmed up to correct temperature

• ⇒ "11.7 Conditions for fitting run-flat tyres", page 35

• ⇒ "11.6 Safety notes for run-flat tyres", page 34

– Apply a generous amount of tyre fitting lubricant to wheel flanges, tyre beads and area inside upper tyre beads.

– Turn wheel on tyre fitting unit so that tyre valve/ tyre pressure sensor -1- is on opposite side to head of fitting unit -2-.

– Run tyre fitting unit in clockwise direction.

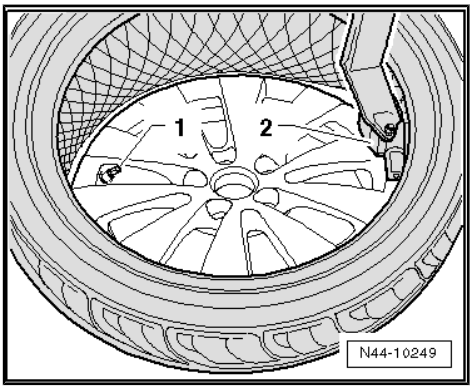

WARNING

The fitting temperature of a tyre must not be less than 21 °C and should not exceed 30 °C.

Note

- *On rims with bonded wheel trims, take care not to scratch the wheel trims.*
- *Wheel trims have a very sensitive surface.*
- *If a wheel trim is damaged, the rim must be renewed.*
- *The wheel trim cannot be renewed.*

Protected by copyright. Copying for private or commerc[illegible] or [illegible] hole, is not permitted unless authorised by AUDI AG. AUDI AG does [illegible] any liability with respect to the correctness of information in this docu[illegible] AUDI AG.

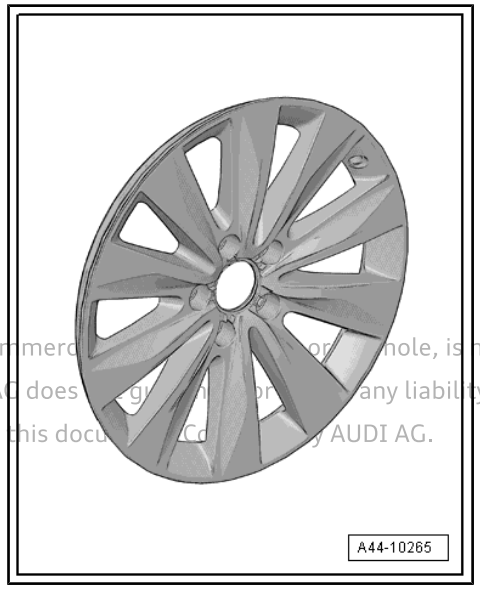

– Stop fitting lower bead before tyre valve/ tyre pressure sensor -arrow- reaches tool; otherwise tyre pressure sensor will be damaged.

Tyre bead will now slip over wheel flange. Make sure that tyre fitting unit stops turning wheel before tyre valve/ tyre pressure sensor -arrow- reaches head of fitting unit.

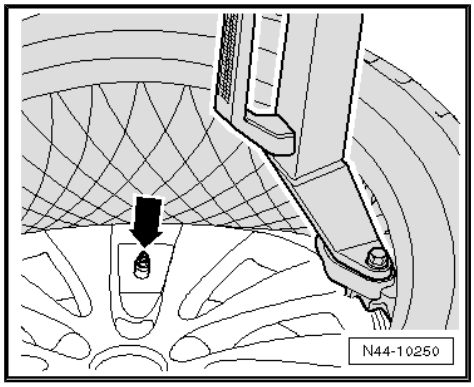

– Turn wheel on tyre fitting unit so that tyre valve/ tyre pressure sensor -1- is on opposite side to head of fitting unit -2-.
– Attach retainers -3- to wheel.
– Ensure that tyre bead is seated correctly on head of fitting unit and run tyre fitting unit in clockwise direction.

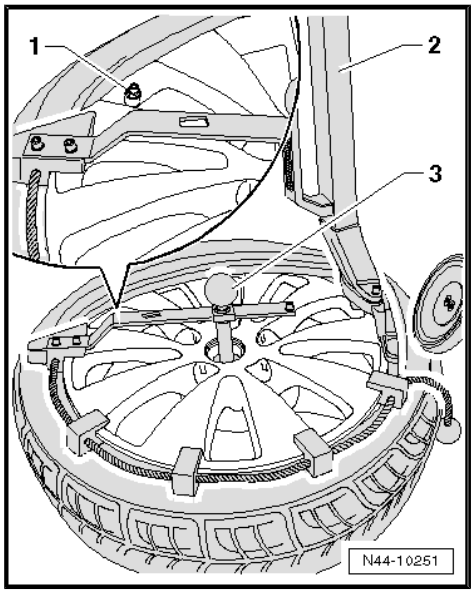

– Stop fitting upper bead before tyre valve/ tyre pressure sensor -arrow- reaches tool; otherwise tyre pressure sensor will be damaged.

Tyre bead will now slip over wheel flange. Make sure that tyre fitting unit stops turning wheel before tyre valve/ tyre pressure sensor -arrow- reaches head of fitting unit.

– Remove retainers from wheel flange.

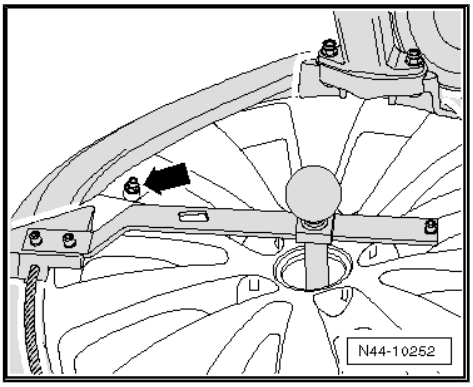

> ⚠ **Caution**
>
> *Do not continue inflating the tyre if the beads do not make full contact at the edge of the wheel.*
>
> *The tyre or wheel will otherwise be damaged.*

– Remove valve core -1-.
– Pump up tyre to max. 3.3 bar (bead seating pressure).
– If tyre beads do not make full contact at edge of wheel, release air from tyre, press off tyre bead again and apply another generous coating of tyre fitting lubricant to wheel flange.
– Inflate tyre to max. 3.3 bar (bead seating pressure).
– Once tyre beads have made proper contact with bead seats, increase inflation pressure to 4 bar to seat the tyre.
– Let air out of the tyre.

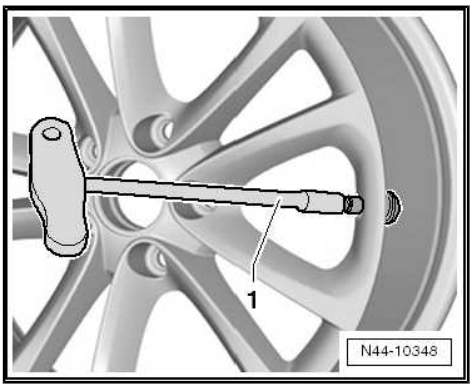

– Screw in new valve core -1-.
– Inflate tyre to specified pressure.
– Then balance the wheel.
– Fit wheel to vehicle and tighten to specified torque ⇒ “3.1 Tightening torques for wheel bolts”, page 6 .

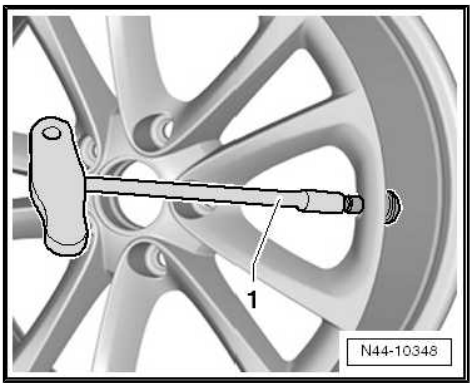

11.11 Removing standard tyres without run-flat capability

⇒ “11.12 Fitting standard tyres without run-flat capability”, page 45

⇒ “11.9 Removing run-flat tyres”, page 38

⇒ “11.10 Fitting run-flat tyres ”, page 40

Protected by copyright. Copying for private or commercial purposes, in part or in whole, is not permitted unless authorised by AUDI AG. AUDI AG does not guarantee or accept any liability with respect to the accuracy of information in this document. Copyright by AUDI AG.

> ⚠ **WARNING**
>
> *The fitting temperature of a tyre must not be less than 21 °C and should not exceed 30 °C.*

Note

- *On rims with bonded wheel trims, take care not to scratch the wheel trims.*
- *Wheel trims have a very sensitive surface.*
- *If a wheel trim is damaged, the rim must be renewed.*
- *The wheel trim cannot be renewed.*

Protected by copyright. Copying for private or commercial purposes, in part or in whole, is not permitted unless authorised by AUDI AG. AUDI AG does not guarantee or assume any liability with respect to the correctness of information in this document. Copyright by AUDI AG

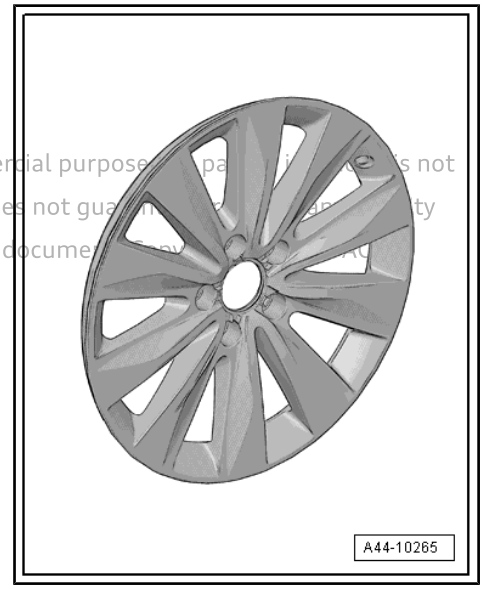

– Turn wheel on tyre fitting unit so that tyre valve/ tyre pressure sensor -2- is in front of head of fitting unit -1-.

Caution

Maintain clearance -a- between head of fitting unit -1- and tyre valve/tyre pressure sensor; otherwise the head will damage the tyre pressure sensor .

– Position head of fitting unit -1- close to tyre valve/ tyre pressure sensor so that tyre iron can be applied approx. 30° away from tyre valve/ tyre pressure sensor -2-.

– Attach retainers -3- to wheel on opposite side to head of fitting unit -1-.

– Now use tyre iron to lever bead over finger on head of fitting unit. Remove tyre iron after doing so.

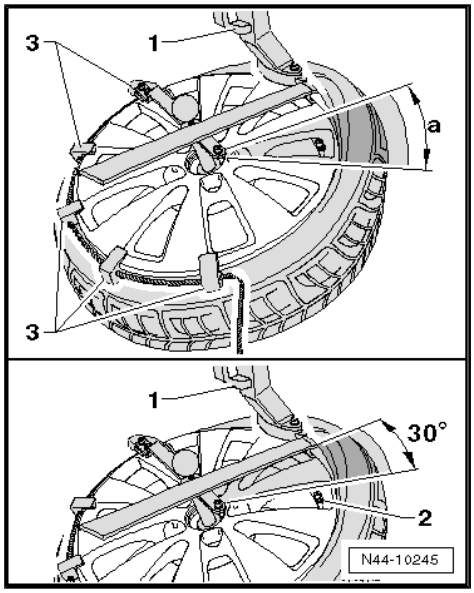

– Run tyre fitting unit in clockwise direction until upper bead is completely over wheel flange.

Retainers -1- will be pushed against head of fitting unit. They can then be easily removed.

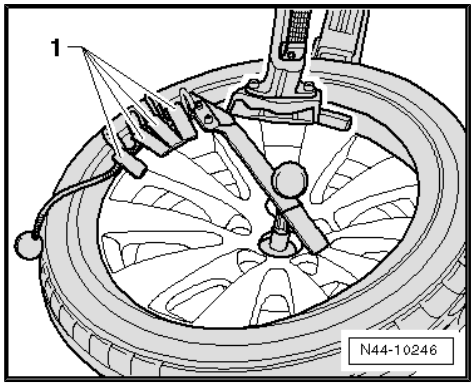

– Turn wheel on tyre fitting unit so that tyre valve/ tyre pressure sensor -2- is in front of head of fitting unit -1-.

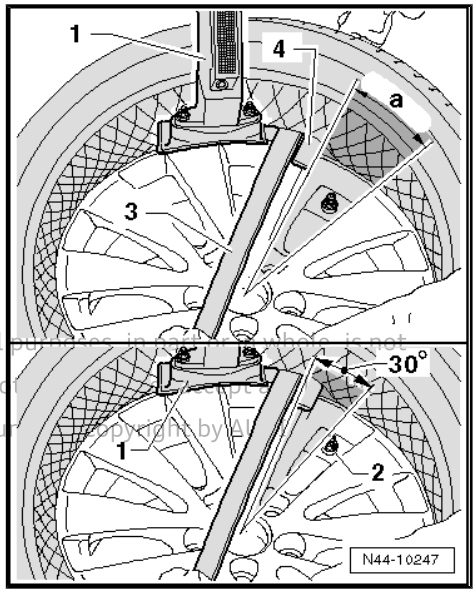

> **Caution**
>
> ***Maintain clearance -a- between head of fitting unit -1- and tyre valve/tyre pressure sensor; otherwise the head will damage the tyre pressure sensor .***

– Position head of fitting unit -1- close to tyre valve/ tyre pressure sensor so that tyre iron can be applied approx. 30° away from tyre valve/ tyre pressure sensor -2-.

– Now use tyre iron -3- to lever bead over finger on head of fitting unit.

– Apply an additional plastic lever -4-.

– Remove tyre iron -3- again.

Protected by copyright. Copying for private or commercial purposes, in part or in whole, is not permitted unless authorised by AUDI AG. AUDI AG does not guarantee or accept any liability with respect to the correctness of information in this document. Copyright by AUDI AG.

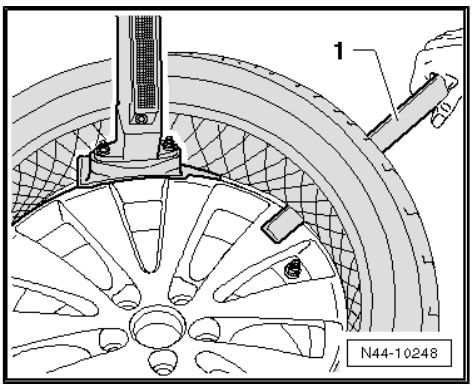

– Use plastic lever -1- to hold bead over wheel flange from outside and run tyre fitting unit in clockwise direction until tyre has been pulled completely off wheel flange.

> **Note**
>
> ♦ *Check tyre pressure sensor for loose or damaged parts. If screw-on connections are loose, replace union nut, valve core, seal, sealing washer and valve cap with new parts from repair kit ⇒ Electronic parts catalogue "ETKA" .*
>
> ♦ *If tyre pressure sensor is damaged, renew it completely.*

11.12 Fitting standard tyres without run-flat capability

> **Caution**
>
> ***Do not screw aluminium valve caps onto steel valve bodies.***

> **WARNING**
>
> ***The fitting temperature of a tyre must not be less than 21 °C and should not exceed 30 °C.***
>
> ***Warm up tyres in heating cabinet - VAS 6851- .***

Heating cabinet - VAS 6851-

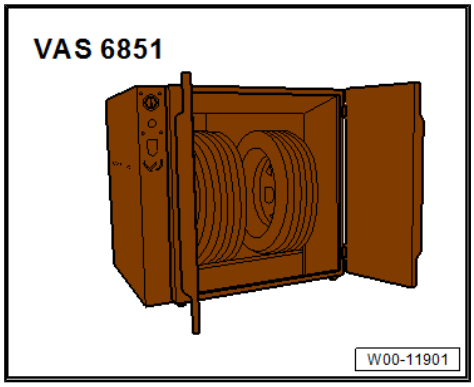

Note

- *On rims with bonded wheel trims, take care not to scratch the wheel trims.*
- *Wheel trims have a very sensitive surface.*
- *If a wheel trim is damaged, the rim must be renewed.*
- *The wheel trim cannot be renewed.*

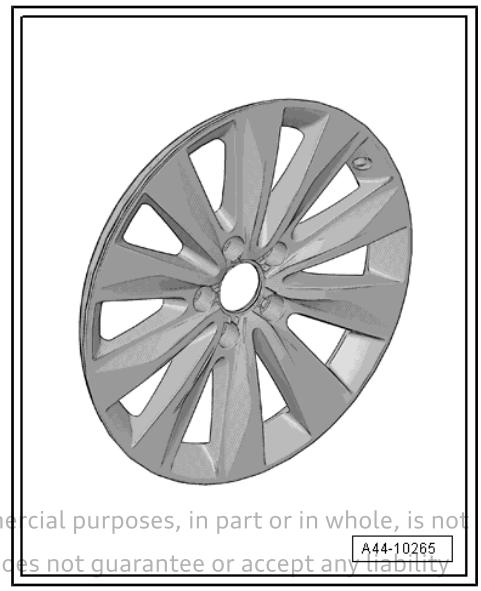

– Install new tyre valve.

• Tyres warmed up to correct temperature

– Apply a generous amount of tyre fitting lubricant to wheel flanges, tyre beads and area inside upper tyre beads.

Protected by copyright. Copying for private or commercial purposes, in part or in whole, is not permitted unless authorised by AUDI AG. AUDI AG does not guarantee or accept any liability with respect to the correctness of information in this document. Copyright by AUDI AG.

– Turn wheel on tyre fitting unit so that tyre valve/ tyre pressure sensor -1- is on opposite side to head of fitting unit -2-.

– Run tyre fitting unit in clockwise direction.

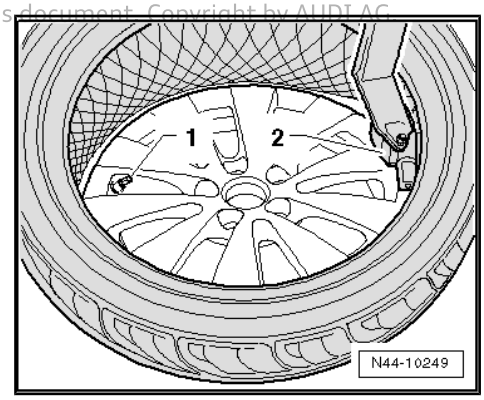

WARNING

The fitting temperature of a tyre must not be less than 21 °C and should not exceed 30 °C.

Note

- *On rims with bonded wheel trims, take care not to scratch the wheel trims.*
- *Wheel trims have a very sensitive surface.*
- *If a wheel trim is damaged, the rim must be renewed.*
- *The wheel trim cannot be renewed.*

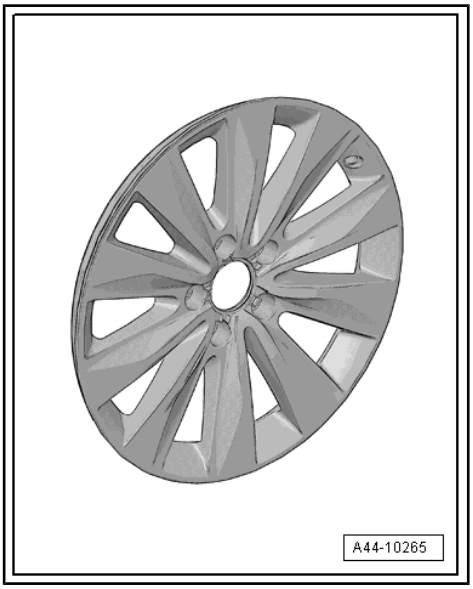

– Stop fitting lower bead before tyre valve/ tyre pressure sensor -arrow- reaches tool; otherwise tyre pressure sensor will be damaged.

Tyre bead will now slip over wheel flange. Make sure that tyre fitting unit stops turning wheel before tyre valve/ tyre pressure sensor -arrow- reaches head of fitting unit.

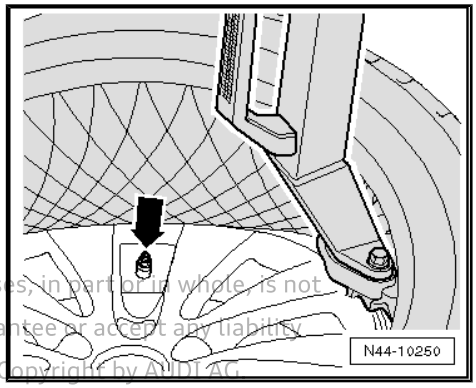

Protected by copyright. Copying for private or commercial purposes, in part or in whole, is not permitted unless authorised by AUDI AG. AUDI AG does not guarantee or accept any liability with respect to the correctness of information in this document. Copyright by AUDI AG.

– Turn wheel on tyre fitting unit so that tyre valve/ tyre pressure sensor -1- is on opposite side to head of fitting unit -2-.
– Attach retainers -3- to wheel.
– Ensure that tyre bead is seated correctly on head of fitting unit and run tyre fitting unit in clockwise direction.

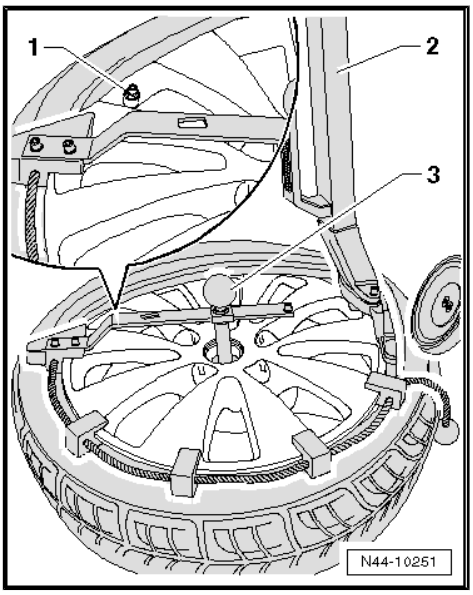

– Stop fitting upper bead before tyre valve/ tyre pressure sensor -arrow- reaches tool; otherwise tyre pressure sensor will be damaged.

Tyre bead will now slip over wheel flange. Make sure that tyre fitting unit stops turning wheel before tyre valve/ tyre pressure sensor -arrow- reaches head of fitting unit.

– Remove retainers from wheel flange.

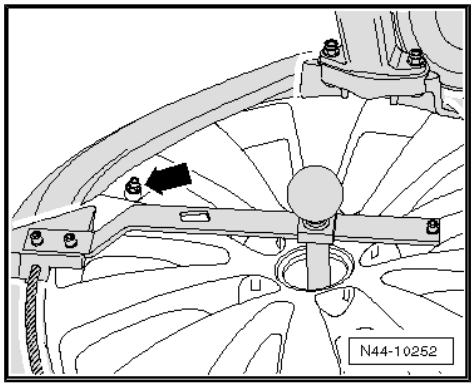

Caution

Do not continue inflating the tyre if the beads do not make full contact at the edge of the wheel.

The tyre or wheel will otherwise be damaged.

– Remove valve core -1-.
– Pump up tyre to max. 3.3 bar (bead seating pressure).
– If tyre beads do not make full contact at edge of wheel, release air from tyre, press off tyre bead again and apply another generous coating of tyre fitting lubricant to wheel flange.
– Inflate tyre to max. 3.3 bar (bead seating pressure).
– Once tyre beads have made proper contact with bead seats, increase inflation pressure to 4 bar to seat the tyre.
– Let air out of the tyre.

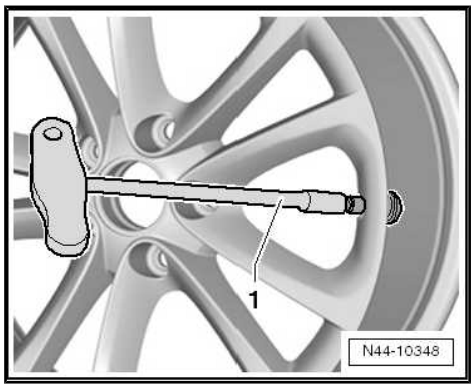

– Screw in new valve core -1-.
– Inflate tyre to specified pressure.
– Then balance the wheel.
– Fit wheel to vehicle and tighten to specified torque ⇒ “3.1 Tightening torques for wheel bolts”, page 6 .

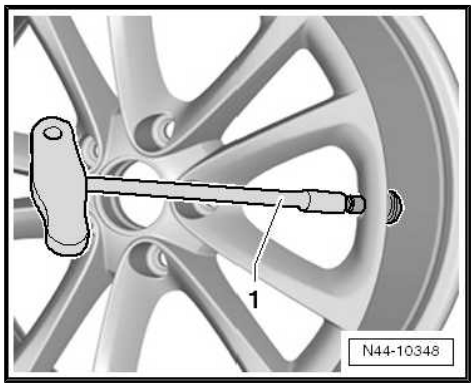

Caution

Do not screw aluminium valve caps onto steel valve bodies.

Protected by copyright. Copying for private or commercial purposes, in part or in whole, is not permitted unless authorised by AUDI AG. AUDI AG does not guarantee or accept any liability with respect to the correctness of information in this document. Copyright by AUDI AG.

12 Tyre Pressure Monitoring Systems/ Tyre Pressure Loss Indicator

⇒ “12.1 Exploded view - tyre pressure sensor”, page 49

⇒ “12.7 Direct measurement system”, page 56

⇒ “12.8 Tyre Pressure Loss Indicator (TPLI) - indirect measurement system”, page 56

⇒ “12.9 Tyre Pressure Loss Indicator (TPLI+) - indirect measurement system”, page 57

⇒ “12.10 Tyre Pressure Loss Indicator (TPLI) with wheel speed sensor”, page 57

WARNING

Run-flat tyres (PAX, SST) are always installed in conjunction with a Tyre Pressure Monitoring System/Tyre Pressure Loss Indicator.

12.1 Exploded view - tyre pressure sensor

Caution

Run-flat tyres must only be fitted on vehicles with Tyre Pressure Monitoring System/Tyre Pressure Loss Indicator.

The wheel electronics consist of a pressure sensor incorporated within the valve.

Protected by copyright. Copying for private or commercial purposes, in part or in whole, is not permitted unless authorised by AUDI AG. AUDI AG does not guarantee or accept any liability with respect to the correctness of information in this document. Copyright by AUDI AG.

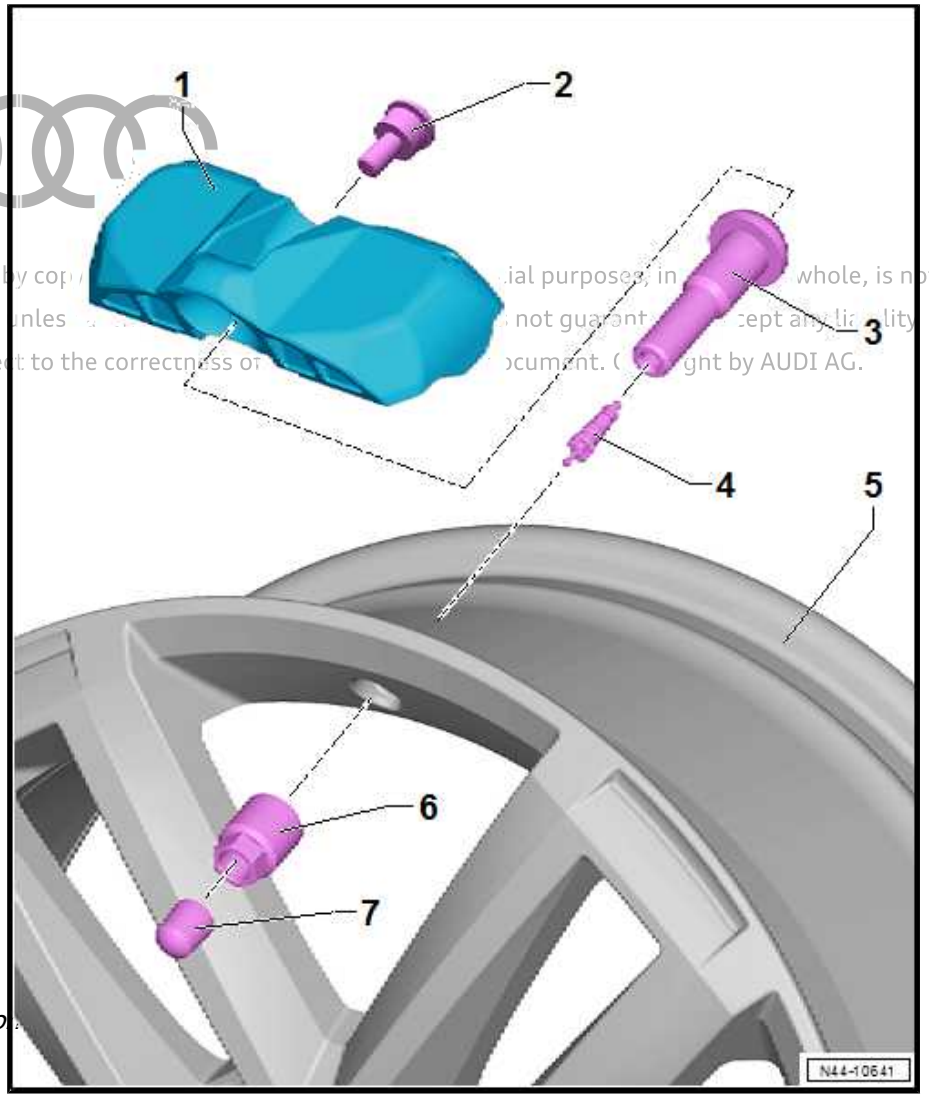

Protected by copyright. Copying for private or commercial purposes, in part or in whole, is not permitted unless authorised by AUDI AG. AUDI AG does not guarantee or accept any liability with respect to the correctness of information in this document. Copyright by AUDI AG.

1 - Tyre pressure sensor

- ❑ Front left tyre pressure sensor - G222-
- ❑ Front right tyre pressure sensor - G223-
- ❑ Rear left tyre pressure sensor - G224-
- ❑ Rear right tyre pressure sensor - G225-
- ❑ All batteries must be renewed together
- ❑ Remaining service life, temperature and inflation pressure can be read out via diagnosis function with vehicle diagnostic, testing and information system - VAS 5051B- or - VAS 5052-

⇒ “12.4 Wheel electronics (TPMS) - Beru system”, page 54

⇒ “12.5 Wheel electronics (TPMS) - Siemens system”, page 55

2 - Bolt

4 Nm

Note

Used only in conjunction with Beru system

- ❑ Micro-encapsulated
- ❑ Supplied with sensor as replacement part

3 - Metal valve

- ❑ Supplied with sensor as replacement part
- ❑ ⇒ “12.2 Removing and installing metal valve body”, page 51

4 - Valve core

5 - Rim

6 - Union nut

- ❑ Always renew if removed

Note

Do not counterhold at metal valve when tightening

- ❑ ⇒ “12.3 Tightening torque of union nut”, page 52

7 - Valve cap

Note

Renew if lost

WARNING

After using tyre sealant, the wheel electronics on the affected wheel must be renewed.

12.2 Removing and installing metal valve body

Special tools and workshop equipment required

- Torque wrench - V.A.G 1410- and tool insert -V.A.G 1331- (11 mm)

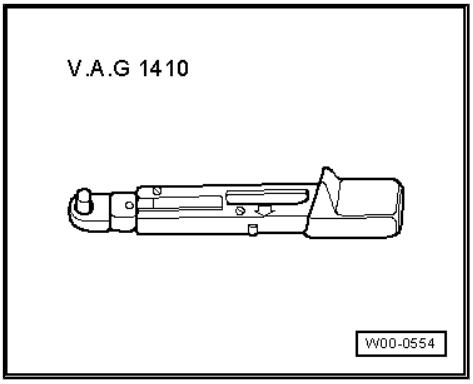

– Push metal valve with rubber seal through the rim from the inside.
– Fit the chamfered washer and union nut from outside and screw in by hand.
– Tighten union nut.

Note

- *On rims with bonded wheel trims, take care not to scratch the wheel trims.*
- *Wheel trims have a very sensitive surface.*
- *If a wheel trim is damaged, the rim must be renewed.*
- *The wheel trim cannot be renewed.*

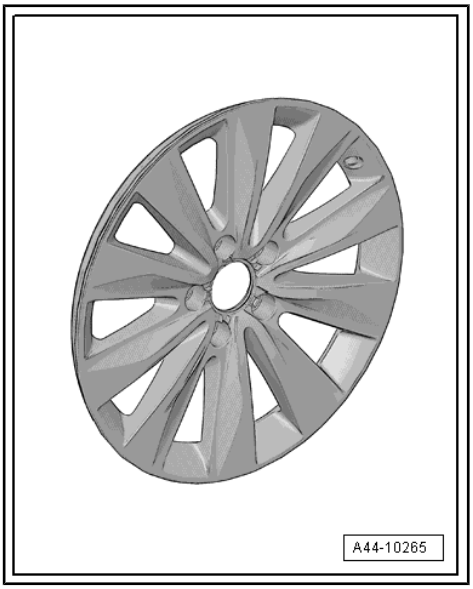

Protected by copyright. Copying for private or commercial purposes, in part or in whole, is not permitted unless authorised by AUDI AG. AUDI AG does not guarantee or accept any liability with respect to the correctness of information in this document. Copyright by AUDI AG.

– Use a suitable tool -1- (e.g. ∅ 2 mm drill bit) to prevent turning.

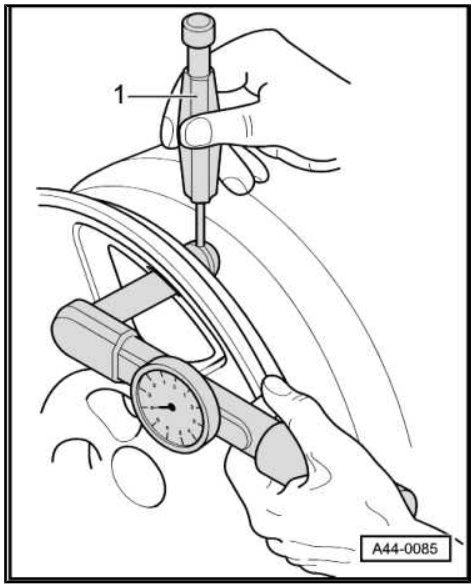

Note

- *On rims with bonded wheel trims, take care not to scratch the wheel trims.*
- *Wheel trims have a very sensitive surface.*
- *If a wheel trim is damaged, the rim must be renewed.*
- *The wheel trim cannot be renewed.*

Protected by copyright. Copying for private or commercial purposes, in part or in whole, is not permitted unless authorised by AUDI AG. AUDI AG does not guarantee or accept any liability with respect to the correctness of information in this document. Copyright by AUDI AG.

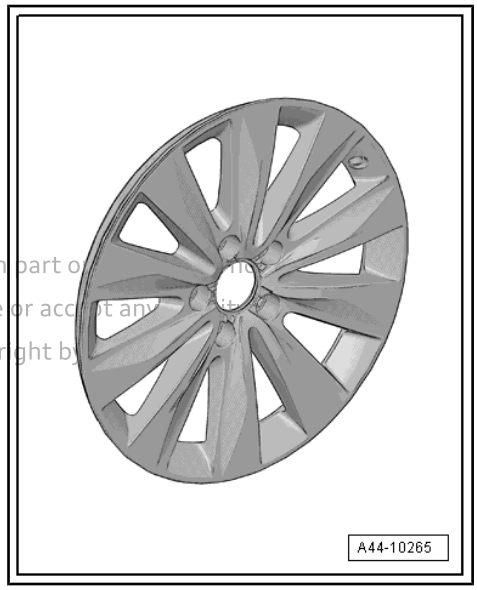

12.3 Tightening torque of union nut

⇒ “12.7 Direct measurement system”, page 56

⇒ “12.8 Tyre Pressure Loss Indicator (TPLI) - indirect measurement system”, page 56

⇒ “12.9 Tyre Pressure Loss Indicator (TPLI+) - indirect measurement system”, page 57

Model, type	System	Country	Nm
A1, S1 (8X)	Tyre Pressure Loss Indicator (TPLI+): indirect measurement	USA and Rest of World	------
A3 (8P, 8V)	Direct measurement, Siemens	USA	6 Nm
A3 (8P, 8V)	Tyre Pressure Loss Indicator (TPLI): indirect measurement	Rest of World	------
A4 (8E)	Direct measurement, Beru	USA and Rest of World	4 Nm

Model, type	System	Country	Nm
A4 (8K, 8W)	Direct measurement, Siemens	USA	6Nm
A4 (8K, 8W)	Tyre Pressure Loss Indicator (TPLI+): indirect measurement	Rest of World	------
A5 (8T)	Direct measurement, Siemens	USA	6 Nm
A5 (8T)	Tyre Pressure Loss Indicator (TPLI+): indirect measurement	Rest of World	------
S5, RS 5 (8T)	Direct measurement, Siemens	USA	6 Nm
S5, RS 5 (8T)	Tyre Pressure Loss Indicator (TPLI+): indirect measurement	Rest of World	------
A5, S5 Cabriolet (8F)	Direct measurement, Siemens	USA	6Nm
A5, S5 Cabriolet (8F)	Tyre Pressure Loss Indicator (TPLI+): indirect measurement	Rest of World	------
A6 (4B)	Direct measurement, Beru	USA and Rest of World	4 Nm
A6 (4F)	Direct measurement, Beru	USA and Rest of World	4 Nm
RS 6 (4F)	Direct measurement, Beru	USA and Rest of World	6 Nm
A6 (4G)	Tyre Pressure Loss Indicator (TPLI+): indirect measurement	USA and Rest of World	------
A7 (4G)	Tyre Pressure Loss Indicator (TPLI+): indirect measurement	USA and Rest of World	------
A8 (4E)	Direct measurement, Beru	USA and Rest of World	4 Nm
A8 (4H)	Tyre Pressure Loss Indicator (TPLI+): indirect measurement	USA and Rest of World	------
Q5 (8R)	Direct measurement, Siemens	USA	6 Nm
Q7 (4L)	Direct measurement, Beru	USA and Rest of World	4 Nm
Q7 (4L) - 12-cylinder	Direct measurement, Beru	USA and Rest of World	4 Nm
Q7 (4M)	Direct measurement, Beru	USA and Rest of World	4 Nm
TT (8J)	Direct measurement, Siemens	USA	6 Nm
TT (8J)	Tyre Pressure Loss Indicator (TPLI+): indirect measurement	Rest of World	------
TT, TT RS (FV)	Direct measurement, Siemens	USA	6 Nm

Protected by copyright. Copying for private or commercial purposes, in part or in whole, is not permitted unless authorised by AUDI AG. AUDI AG does not guarantee or accept any liability with respect to the correctness of information in this document. Copyright by AUDI AG.

Model, type	System	Country	Nm
TT, TT RS (FV)	Tyre Pressure Loss Indicator (TPLI+): indirect measurement	Rest of World	------
R8 (42)	Direct measurement, Beru	USA and Rest of World	6 Nm
R8 (4S)	Direct measurement, Beru	USA and Rest of World	6 Nm
Audi e-tron	Direct measurement, Siemens	USA and Rest of World	6 Nm
Audi e-tron	Tyre Pressure Loss Indicator (TPLI+): indirect measurement	USA and Rest of World	-----

All other models: 4 Nm

⇒ “12.7 Direct measurement system”, page 56

⇒ “12.8 Tyre Pressure Loss Indicator (TPLI) - indirect measurement system”, page 56

⇒ “12.9 Tyre Pressure Loss Indicator (TPLI+) - indirect measurement system”, page 57

12.4 Wheel electronics (TPMS) - Beru system

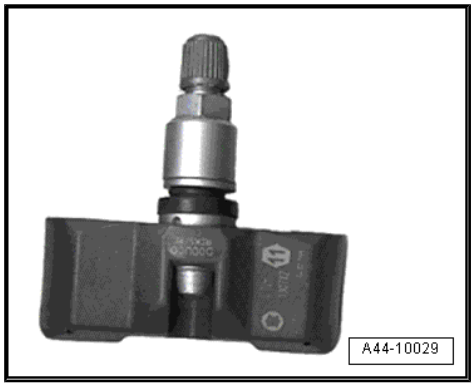

View of Beru system

WARNING

After using tyre sealant, the wheel electronics on the affected wheel must be renewed.

WARNING

The wheel electronics must be renewed if damaged.

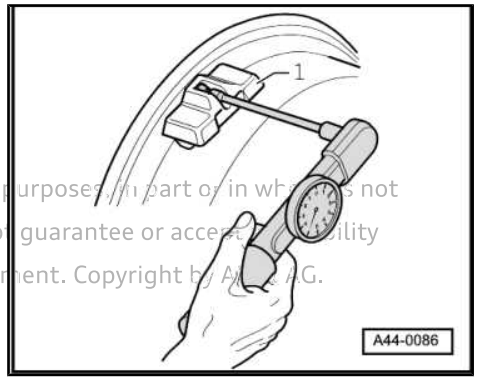

– Press wheel electronics -1- against base of rim.
– Working from behind valve, secure wheel electronics to valve using micro-encapsulated bolt

Note

Protected by copyright. Copying for private or commercial purposes, in part or in whole, is not permitted unless authorised by AUDI AG. AUDI AG does not guarantee or accept any liability with respect to the correctness of information in this document. Copyright by AUDI AG.

- *Renew micro-encapsulated bolt.*
- *Tighten micro-encapsulated bolt to 4 Nm on all models.*

Special tools and workshop equipment required

- Torque wrench - V.A.G 1410- and tool insert -V.A.G 1410/1-

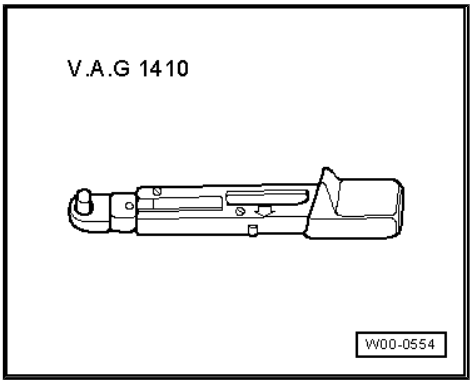

Tightening torque for all models: 4 Nm

12.5 Wheel electronics (TPMS) - Siemens system

> ⚠ WARNING
>
> *After using tyre sealant, the wheel electronics on the affected wheel must be renewed.*

- A micro-encapsulated bolt is not used in conjunction with the Siemens wheel electronics.
- A union nut is used to hold the wheel electronics in position in the rim.
- The metal valve body acts as an antenna.
- Connection between metal valve body and wheel electronics must not be interrupted.

Protected by copyright. Copying for private or commercial purposes, in part or in whole, is not permitted unless authorised by AUDI AG. AUDI AG does not guarantee or accept any liability with respect to the correctness of information in this document. Copyright by AUDI AG.

> ⚠ WARNING
>
> *When pressing wheel electronics against base of rim, counter-hold metal valve by hand from opposite side. Connection between metal valve and wheel electronics must not be interrupted or broken. The wheel electronics must be renewed if damaged.*

– Press wheel electronics against base of rim.

– Fit union nut to metal valve and tighten to secure wheel electronics.

12.6 Wheel electronics - new design

Special tools and workshop equipment required

♦ Torque wrench - V.A.G 1410- and tool insert -V.A.G 1410/1-

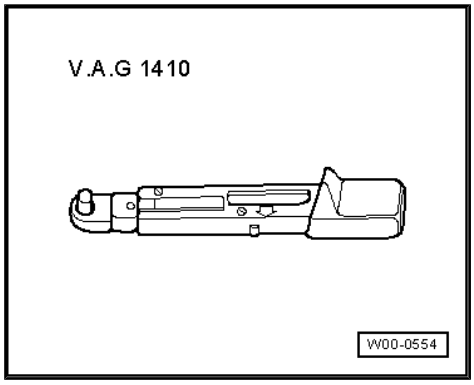

Union nut, 4Nm

– Press valve -1- downwards -arrow A to B-.

– Press valve (with wheel electronics attached) through valve opening on wheel rim.

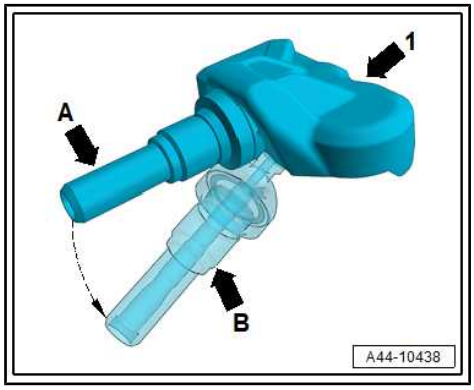

– Screw union nut -2- 3 turns onto valve -1-.

– Tighten union nut -2- until projection on valve breaks with an audible crack.

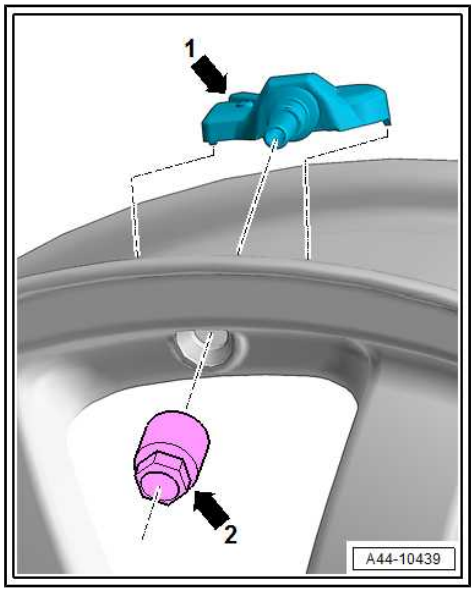

Note

Press wheel electronics -1- firmly onto base of rim so that they make firm contact.

– Tighten union nut to 4 Nm.

12.7 Direct measurement system

Tyre Pressure Monitoring System (TPMS): direct measurement. Wheel electronics fitted at metal valve on wheel; values for pressure and temperature periodically transmitted to vehicle and evaluated.

12.8 Tyre Pressure Loss Indicator (TPLI) - indirect measurement system

Tyre Pressure Loss Indicator (TPLI): indirect measurement. No electronic components installed in wheel. Rolling circumference of the individual wheels is compared by analysing signals from ABS sensors.

Protected by copyright. Copying for private or commercial purposes, in part or in whole, is not permitted unless authorised by AUDI AG. AUDI AG does not guarantee or accept any liability with respect to the correctness of information in this document. Copyright by AUDI AG.

12.9 Tyre Pressure Loss Indicator (TPLI+) - indirect measurement system

Tyre Pressure Loss Indicator (TPLI+): indirect measurement. No electronic components installed in wheel. Rolling circumference and vibration characteristics of the individual wheels are compared by analysing signals from ABS sensors. A loss of tyre pressure is diagnosed indirectly. The speed and vibration characteristics of the wheel change in the event of a drop in the inflation pressure.

12.10 Tyre Pressure Loss Indicator (TPLI) with wheel speed sensor

Note

If a Tyre Pressure Loss Indicator with wheel speed sensor is fitted, wheel electronics are not fitted in the rim.

If the air pressure in a tyre drops, the speed of the wheel changes.

The speed sensor registers the altered wheel speed.

A display in the dash panel insert informs the driver about the tyre pressure change.

Protected by copyright. Copying for private or commercial purposes, in part or in whole, is not permitted unless authorised by AUDI AG. AUDI AG does not guarantee or accept any liability with respect to the correctness of information in this document. Copyright by AUDI AG.

13 Repairing slight damage on rims

WARNING

- *Repairing a damaged wheel rim or disc by heating, welding or adding or removing material is strictly prohibited.*
- *Damaged or deformed rims and rims with cracked or deformed bolt holes must not be repaired.*
- *Rims can only be repaired with approved and specified Genuine Paintwork material.*
- *After rims have been repaired, the manufacturer will no longer accept any warranty claims.*

Rims with cracks at the edges must not be repaired; they must be renewed immediately.

Any form of cutting/machining, heating and welding is not permissible.

Straightening of deformed material is not permissible.

The radial and axial runout must not exceed the production tolerance of 0.8 mm prior to repair.

Only cast light alloy wheels may be repaired using filler compound. These wheels are marked on the inside with the material designation AlSi xx.

Forged wheels may only be painted.

Repairing damage is limited to painted surfaces.

Bright-turned rims with only one coating of clear varnish must not be repaired.

It is only permissible to repair damaged surfaces on the visible side of the wheel (decorative outside surface).

Damage that is deeper than 1 mm must not be repaired.

Do not fill in material closer than 50 mm from outer wheel flange.

Protected by copyright. Copying for private or commercial purposes, in part or in whole, is not permitted unless authorised by AUDI AG. AUDI AG does not guarantee or accept any liability with respect to the correctness of information in this document. Copyright by AUDI AG.

14 Identification markings on the tyre sidewall

⇒ “14.2 EU tyre label”, page 62

Example: Dunlop SP Sport 9000

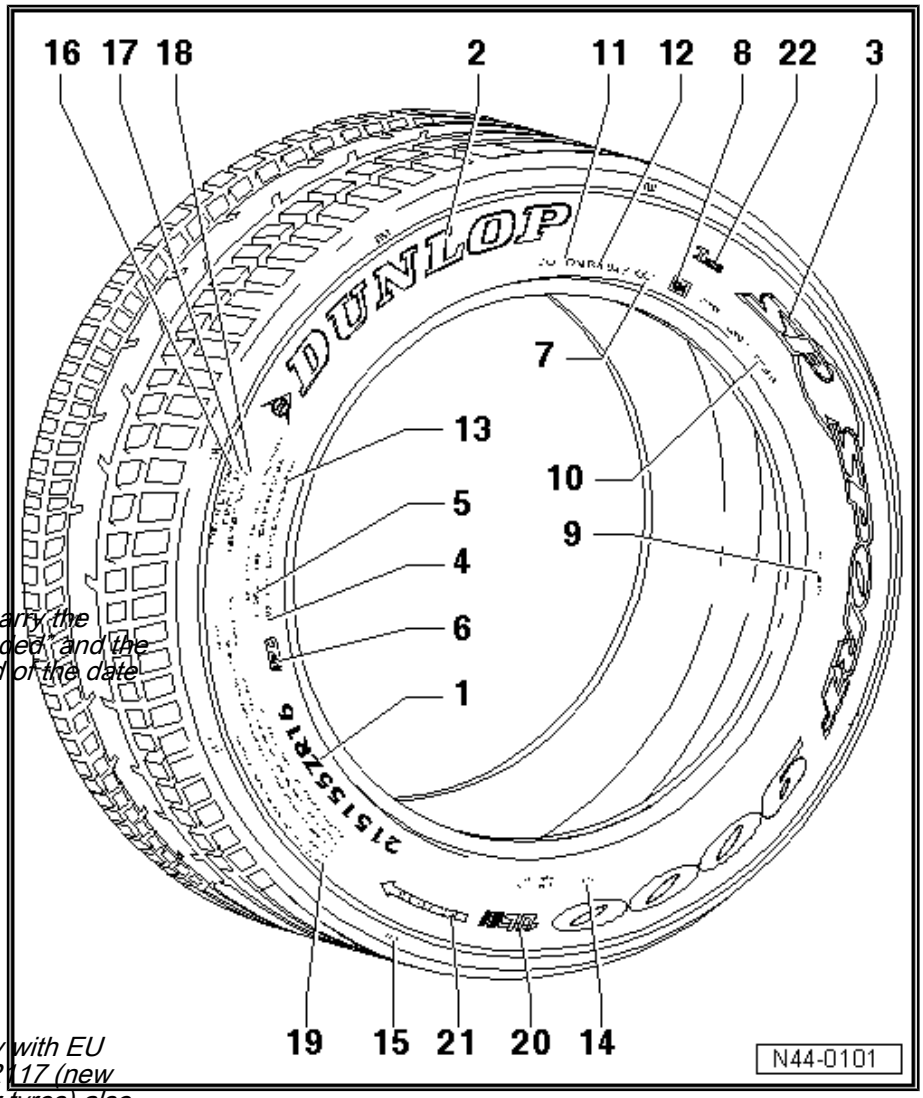

1 - Size: 215/55 ZR16

- ❑ Designations on PAX tyres ⇒ page 61

2 - Manufacturer (trade name)

3 - Tread designation

4 - Code for tubeless tyres

5 - Radial-ply tyre construction (radially oriented fibres in carcass)

6 - Notes for versions with »rim protection«

7 - Date of manufacture - see Tyre ageing

- ❑ ⇒ page 78

Note

Retreaded tyres also carry the marking “R” or “Retreaded” and the retreading date instead of the date of manufacture.

8 - E number = Approval number. Tyre complies with European Directives/Regulations

- ❑ European Directives/ Regulations ECE-R30, EEC92/93 or ECE - R 117

Note

- *Tyres which comply with EU Regulation ECE - R117 (new road noise limits for tyres) also carry the marking “S” (for Sound) on the sidewall.*
- *For passenger car tyres with a cross sectional width of up to 185 mm: from 1 October 2009 onwards*
- *For passenger car tyres with a cross sectional width of between 185 mm and 215 mm: from 1 October 2010 onwards*
- *For passenger car tyres with a cross sectional width of over 215 mm: from 1 October 2011 onwards*

Reproduction, Distribution, Copying for private or commercial purposes, in part or in whole, is not permitted unless authorised by AUDI AG. AUDI AG does not guarantee or accept any liability with respect to the correctness of information in this document. Copyright by AUDI AG.

9 - Country of manufacture - Made in Germany.

10 - Manufacturer's internal tread code

11 - Department of Transportation - the tyre conforms to the U.S. Department of Transportation guidelines

12 - Example: Dunlop SP Sport 9000

DOT- Code ID number for manufacturer's plant, tyre size and tyre model

13 - Maximum permissible load (load index)

- Table ⇒ page 74

Note

Where applicable with an additional marking "Reinforced" or "Extra Load" or "XL" for increased tyre load capacity

- Reinforced, Extra Load tyres ⇒ page 75

14 - Number of plies in the centre of the tread and in the sidewalls and information about the material

15 - Position of TWIs (Tread Wear Indicators)

- ⇒ page 72

16 - Tread wear index - abrasion resistance - based on US standard test

17 - Traction rating - evaluation of wet braking capacity A, B or C according to US test

18 - Temperature rating - evaluation of temperature rating A, B or C according to US test

19 - Safety notes for use or fitting of tyre

20 - Reference to ultra lightweight tyre construction, tyres are up to 30% lighter

21 - Specified direction of rotation for tyre

22 - Inmetro designation, required only for Brazil

Protected by copyright. Copying for private or commercial purposes, in part or in whole, is not permitted unless authorised by AUDI AG. AUDI AG does not guarantee or accept any liability with respect to the correctness of information in this document. Copyright by AUDI AG.

Explanation of tyre size

Tyre	Speed	1	2	3	4	5	6	7
Summer tyres	up to 240 km/h	195	65	R	15	91	V	-
Winter tyres	up to 160 km/h	195	65	R	15	91	Q	M + S
Winter tyres	up to 190 km/h	195	65	R	15	91	T	M + S
High-speed tyres	faster than 240 km/h	225	50	ZR	16	91	-	-

1 - Tyre width

2 - Tyre height to width ratio in %

3 - Code for tyre type "R" (indicates radial)

4 - Rim diameter designation

5 - Load rating code/load index (LI)

6 - Speed rating code

7 - Winter tyre/code for all-season tyre

Caution

Depending on the model, the wheel bolts have different lengths and contact surfaces.

Make sure that the correct type of wheel bolts are fitted; refer to ⇒ Electronic parts catalogue .

It is important to use the correct type of wheel bolts to ensure that the wheel bolts and the wheels are properly secured.

Note

- *Tyres which comply with EU Regulation ECE - R117 (new road noise limits for tyres) also carry the marking "S" (for Sound) on the sidewall.*
- *For passenger car tyres with a cross sectional width of up to 185 mm: from 1 October 2009 onwards*
- *For passenger car tyres with a cross sectional width of between 185 mm and 215 mm: from 1 October 2010 onwards*
- *For passenger car tyres with a cross sectional width of over 215 mm: from 1 October 2011 onwards*

Self supporting tyres (SST) and PAX tyres with run-flat capability have a special marking on the tyre sidewall which differs according to manufacturer.

Caution

Run-flat tyres must only be fitted on vehicles with Tyre Pressure Monitoring System/Tyre Pressure Loss Indicator *⇒ "12 Tyre Pressure Monitoring Systems/Tyre Pressure Loss Indicator", page 49* .

14.1 Designations on sidewall of tyres with run-flat system (PAX)

Protected by copyright. Copying for private or commercial purposes, in part or in whole, is not permitted unless authorised by AUDI AG. AUDI AG does not guarantee or accept any liability with respect to the correctness of information in this document. Copyright by AUDI AG.

Caution

Run-flat tyres must only be fitted on vehicles with Tyre Pressure Monitoring System/Tyre Pressure Loss Indicator *⇒ "12 Tyre Pressure Monitoring Systems/Tyre Pressure Loss Indicator", page 49* .

		1	2	3	4	5	6	7
Summer tyres	up to 240 km/h	195	65	R	15	91	V	
Winter tyres	up to 160 km/h	195	65	R	15	91	Q	M+S
Winter tyres	up to 190 km/h	195	65	R	15	91	T	M+S

		1	2	3	4	5	6	7
High-speed tyres	faster than 240 km/h	225	50	ZR	16	19	Z	

1 - Tyre width

2 - Tyre height to width ratio in %

3 - Code for tyre type “R” indicates radial

4 - Rim diameter designation

5 - Load rating code

6 - Speed rating code

7 - Winter tyre/code for all-season tyre

14.2 EU tyre label

⇒ “14.2.1 EU tyre label - overview”, page 62

⇒ “14.2.2 EU tyre label - objectives”, page 63

⇒ “14.2.3 EU tyre label - categories”, page 64

14.2.1 EU tyre label - overview

Since 1 November 2012, tyre manufacturers have been obliged to label tyres in accordance with the new EU tyre labelling regulation (EC) No. 1222/2009.

The tyre labelling regulation contains the requirements for labelling and displaying information on rolling resistance (fuel efficiency), wet grip and external rolling noise on a standardised EU tyre label. The objective is to increase safety and to enhance the ecological and economical efficiency of road transport by using safe, low-noise tyres which help to reduce fuel consumption.

The new EU tyre label contains specific information on seven classes: A to G.

It is divided into three categories:

Protected by copyright. Copying for private or commercial purposes, in part or in whole, is not permitted unless authorised by AUDI AG. AUDI AG does not guarantee or accept any liability with respect to the correctness of information in this document. Copyright by AUDI AG.

1 - Rolling resistance

- ❑ Explanatory information ⇒ page 64

2 - Wet grip

- ❑ Explanatory information ⇒ page 65

3 - Noise emission

- ❑ Explanatory information ⇒ page 66

Protected by copyright. Copying for private or commercial purposes, in part or in whole, is not permitted unless authorised by AUDI AG. AUDI AG does not guarantee or accept any liability with respect to the correctness of information in this document. Copyright by AUDI AG.

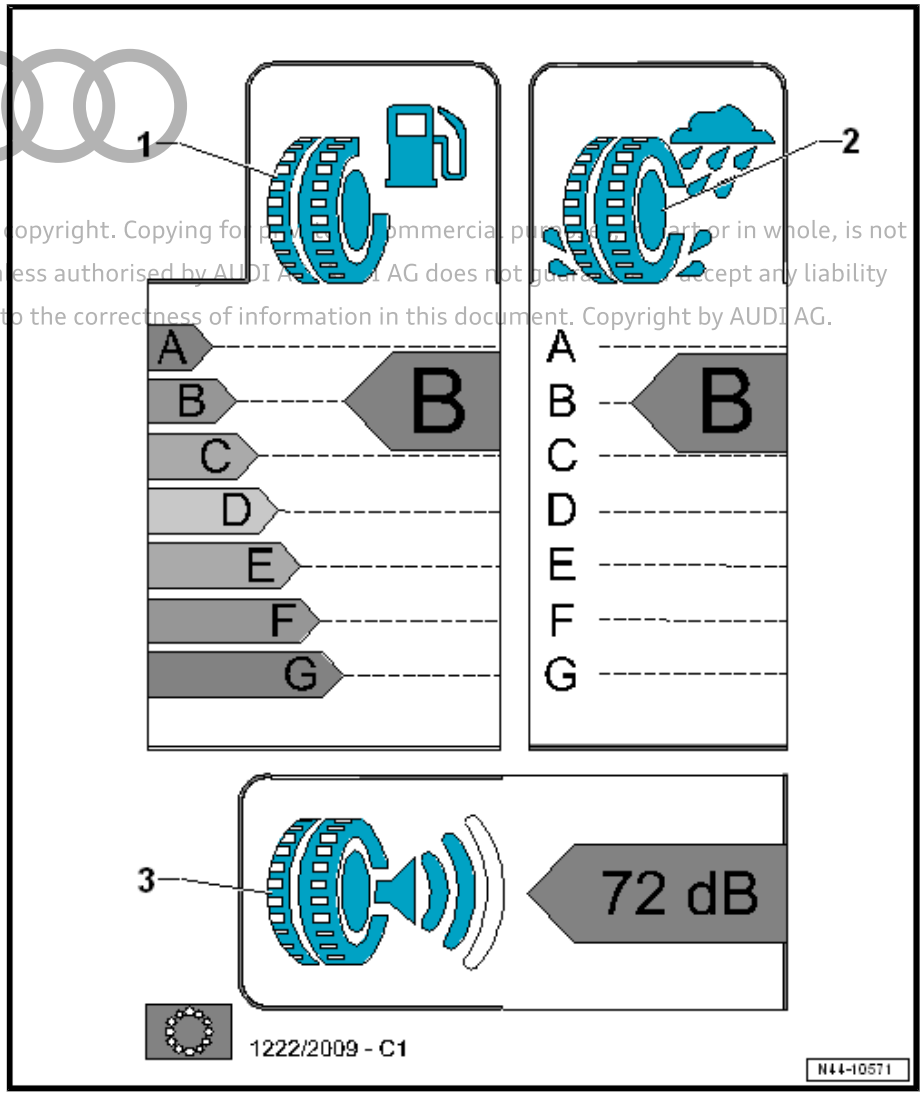

14.2.2 EU tyre label - objectives

- To reduce fuel consumption
- To improve road safety
- To reduce traffic noise

The EU tyre label provides the end user with information about important characteristics of the tyre. However, it does not display all important safety criteria.

- Explaining other characteristics of the tyre can be important in influencing the customer's decision to buy.
- The customer should be informed that the label only provides limited insight into the characteristics of the tyre; on a winter tyre, for instance, it does not state the winter characteristics of the tyre.
- Tyre tests continue to be important sources of information for specialist dealers and end users.

Many other performance-related factors are checked in tyre tests; these should be noted:

- Aquaplaning characteristics
- Driving stability

- Precision of steering
- Service life
- Braking characteristics
- Characteristics in winter conditions

Protected by copyright. Copying for private or commercial purposes, in part or in whole, is not permitted unless authorised by AUDI AG. AUDI AG does not guarantee or accept any liability with respect to the correctness of information in this document. Copyright by AUDI AG.

14.2.3 EU tyre label - categories

Rolling resistance ⇒ page 64

Wet grip ⇒ page 65

Noise emission ⇒ page 66

Rolling resistance

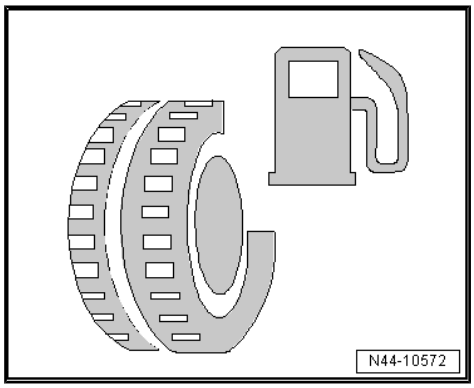

Rolling resistance:

- is defined as the energy consumption of the tyre over a certain distance.
- is equivalent to the energy lost per defined unit of distance covered.
- can be expressed as an energy form in terms of a quotient of newton metres (Nm) and distance in metres (m). This means that rolling resistance is expressed in terms of a force in newtons (N).

A tyre's rolling resistance can be expressed by the rolling resistance coefficient c_R:

$$c_R = F_R Z$$

- c_R = rolling resistance coefficient
- F_R = rolling resistance force
- Z = vehicle weight (sum of all wheel loads)

Objectives

- To reduce rolling resistance
- To reduce fuel consumption and CO_2 emissions

Assessment

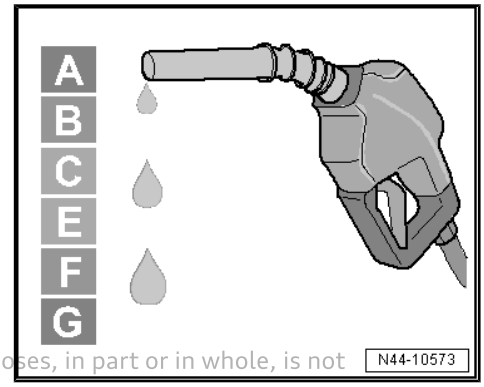

- Divided into fuel efficiency classes from A to G
- Class D is not used

Note

- *The fuel efficiency classes are listed in the EU regulation (EC) No. 1222/2009, according to which the tyres are then assigned to the appropriate category.*
- *The tyre manufacturers carry out the required tests to determine a tyre's rolling resistance.*
- *The lower the rolling resistance, the lower the fuel consumption.*

Protected by copyright. Copying for private or commercial purposes, in part or in whole, is not permitted unless authorised by AUDI AG. AUDI AG does not guarantee or accept any liability with respect to the correctness of information in this document. Copyright by AUDI AG.

A - Lowest rolling resistance coefficient = lowest fuel consumption

B - + 0.10 ltr./100 km

C - + 0.12 ltr./100 km

E - + 0.14 ltr./100 km

F - + 0.15 ltr./100 km

G - + 0.15 ltr./100 km

Wet grip

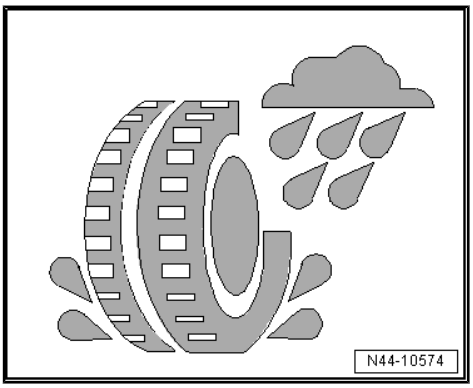

Definition

For wet grip, the wet grip index G must be determined. The wet grip index G is determined by performing a test with a standardised vehicle on a wet, slippery road surface over the required distance where the vehicle must be braked from 80 km/h down to 20 km/h. The basis for the test is provided by a pre-defined standard reference test tyre (SRTT); this is then used to calculate the wet grip index G. A mean fully developed deceleration (MFDD) is taken as the basis for the calculation.

The mean fully developed deceleration (MFDD) is calculated as follows:

MFDD = 231.48 ÷ S

S = measured braking distance (metres) between 80 km/h and 20 km/h

The wet grip index G is determined as follows:

G = MFDD of tyre being testedMFDD of standard reference test tyre

MFDD = mean fully developed deceleration

Objectives

- Tyres should have good wet grip
- Braking distance should be reduced significantly

Assessment

- Divided into wet grip classes from A to G
- Classes D and G are not used

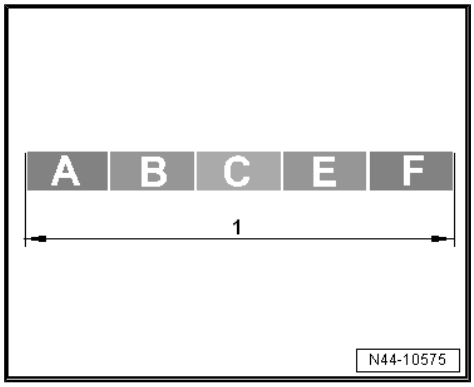

Note

- *The wet grip classes are listed in the EU regulation (EC) No. 1222/2009, according to which the tyres are then assigned to the appropriate category.*
- *The lower the wet grip index, the shorter the braking distance.*

A - Lowest wet grip index = shortest braking distance

B - Braking distance 3 to 6 metres longer than category A

C - Braking distance 3 to 6 metres longer than category B

E - Braking distance 3 to 6 metres longer than category C

F - Braking distance 3 to 6 metres longer than category E

1 - When a full brake application is made at 80 km/h, the difference between categories A and F can be more than 18 metres.

Noise emission

Objectives

- To reduce drive-by noise
- To reduce noise levels

Assessment

- Only measured outside vehicle
- Divided into three categories

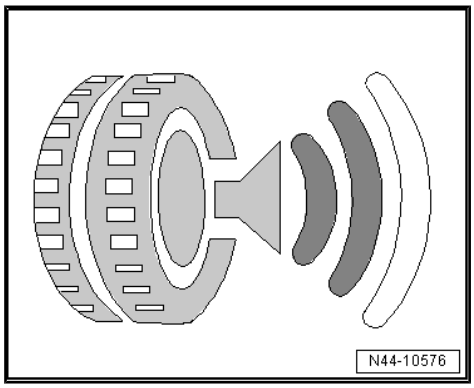

- Three black waves denote the worst rating. The tyre generates rolling noise which is below the current limit according to the EU guideline 2001/43/EC. The tyre's rolling noise exceeds the future limit (which applies from 2016 onwards) according to the regulation (EC) No. 661/2009.
- Two black waves: The tyre's rolling noise is also below the future limit (which applies from 2016 onwards) according to the regulation (EC) No. 661/2009.
- One black wave: The tyre's rolling noise is at least three decibels below the future limit (which applies from 2016 onwards) according to the regulation (EC) No. 661/2009.

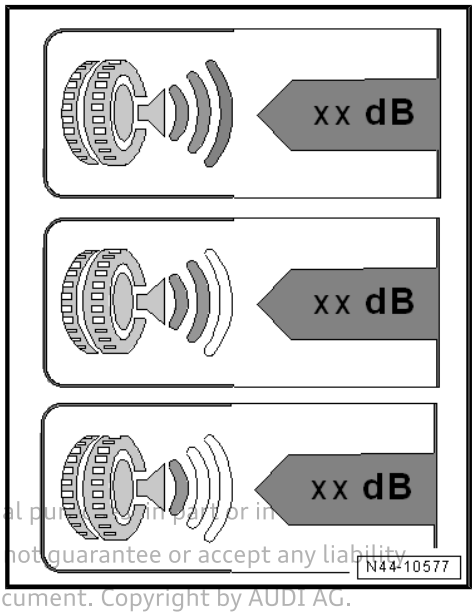

Note

- *If the noise measurement is reduced from two black waves to one black wave, the reduction is equivalent to 3 decibels (i.e. the noise level is halved).*
- *Please note that a tyre's external rolling noise is not always equivalent to the noise heard inside the vehicle.*

Protected by copyright. Copying for private or commercial purposes, in part or in
permitted unless authorized by AUDI AG. AUDI AG does not guarantee or accept any liability
with respect to the correctness of information in this document. Copyright by AUDI AG.

15 Tyre requirements and tyre maintenance

15.1 Introduction

The purpose of this revised information is to supplement your existing knowledge and experience.

By providing this information we want to help you make reliable and safe assessments when dealing with tyre damage and related problems.

In this chapter you will learn more about tyres and wheels/rims.

Tyres are high-tech products that are especially adapted to the requirements of modern vehicles.

Protected by copyright. Copying for private or commercial purposes, in part or in whole, is not permitted unless authorised by AUDI AG. AUDI AG does not guarantee or accept any liability with respect to the correctness of information in this document. Copyright by AUDI AG.

As with all highly developed technical products, tyres require proper care, maintenance and service. This is essential to ensure safety, performance and comfort for the entire service life of the tyre.

Tyres are constantly being further developed. Quality tyres are the result of modern design methods and production processes, as well as continuous quality checks. All tyres that are approved by Audi have been tested by the technical development department and have been designed specifically for each model in collaboration with the tyre manufacturers.

For this reason, we recommend only fitting tyres approved by Audi and made by recommended manufacturers.

Vehicle safety is the top priority. An ideal safety compromise has to be achieved, taking into account the various conditions in which the tyres are used:

- Different speed ranges
- Winter and summer driving conditions
- Wet and dry roads

etc.

Every tyre is subjected to a wide range of different driving conditions over its entire service life. It is therefore important that the basic requirements for ensuring optimum tyre performance are met.

Proper wheel alignment is very important for ensuring the maximum service life of the tyre. The wheel alignment must always be within the specified tolerance range.

Note

Tyre damage and related problems can have various causes. It is therefore very important that you can determine whether the problem has been caused by the tyre or by other components.

The tyre properties change as a result of normal tyre wear. Rolling noises or rough running can be the result of such wear. These are simply the symptoms of normal wear and tear and do not constitute damage in the sense of the tyre being defective. You can take measures to eliminate the symptoms at least to some degree. However, in some cases it may not be possible to eliminate tyre noise completely.

15.2 Requirements to be met by tyres

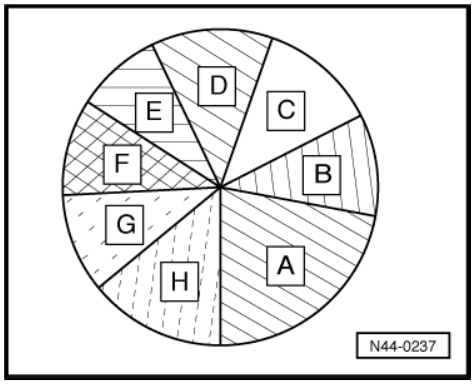

A - Wet braking properties

B - Driving comfort

C - Steering accuracy

D - Driving stability

E - Tyre weight

F - Life expectancy

G - Rolling resistance

H - Aquaplaning

The pie chart illustrates to what extent the tyre meets the various requirements. The tyre in this example (with its specific structure and rubber composition) would meet the requirements listed above (A to H) to the extent indicated by the size of the segments of the pie.

Improving performance in one segment would result in poorer performance in the other segments.

Example:

An improvement in wet braking properties -A- leads to a reduction in driving comfort -B-, rolling resistance -G- and life expectancy -F-.

Protected by copyright. Copying for private or commercial purposes, in part or in whole, is not permitted unless authorised by AUDI AG. AUDI AG does not guarantee or accept any liability with respect to the correctness of information in this document. Copyright by AUDI AG.

The life expectancy of a car tyre depends not only on the rubber composition and design of the tyre. The conditions of operation, the type of vehicle and the style of driving also have a significant influence on its mileage performance.

Modern vehicles enable comfortable and economic driving, but also a more "sporty" driving style. Mileage performance of the tyres can vary from approx. 5,000 to 40,000 kilometres or more.

Note

The driving style is the most important influencing factor as regards the service life of a tyre.

15.3 Factors influencing the service life of a tyre

The following factors influence the service life of a tyre to varying degrees.

- Speed
- Braking
- Acceleration
- Cornering
- Driving style
- Maintenance
- Tyre pressure

Environment:

- Road surface
- Ambient temperature / climate

Vehicle:

- Weight
- Tyre pressure
- Dynamic toe and camber settings

Tyre use:

Speed range, wet or dry

Tyre type:

Winter/summer

Note

The tyre pressure also has an influence on the tyre's service life.

Protected by copyright. Copying for private or commercial purposes, in part or in whole, is not permitted unless authorised by AUDI AG. AUDI AG does not guarantee or accept any liability with respect to the correctness of information in this document. Copyright by AUDI AG.

Note

Always observe the correct tyre pressures.

15.4 Tyre pressure (maintenance)

The weight of the vehicle causes the tyre contact area to flatten. This in turn causes the running surface and the entire ply of the tyre to be continually deformed when a tyre is rolling. If the tyre is underinflated, the amount of flex is higher, resulting in a greater increase in heat and increased rolling resistance. This then leads to increased wear and poses a greater safety risk.

Example: Specified standard tyre pressure with cold tyres, according to vehicle load

Tyre pressure (bar)	Tyre pressure (%)	Tyre life (%)
2.3	100	100
1.9	80	85
1.4	60	60
1.0	40	25

If tyre pressure is too high, this will result in poor rolling comfort and increased wear across the centre of the tread. We recommend to always observe the tyre pressures specified by the manufacturer.

Diagram 1:

Tread depth versus tyre life for vehicles with front-wheel drive and V-rated tyres

P - Tread depth

S - Mileage covered

1 - Front axle

2 - Rear axle

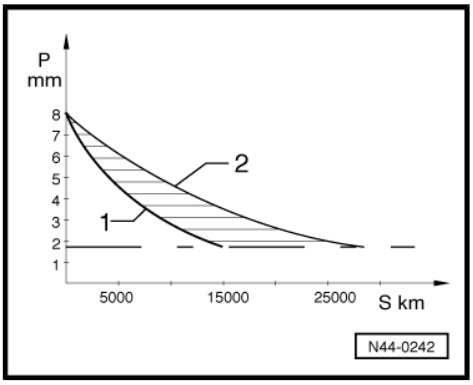

Diagram 2:

Tread depth versus tyre life for vehicles with four-wheel drive and V-rated tyres

P - Tread depth

S - Mileage covered

1 - Front axle

2 - Rear axle

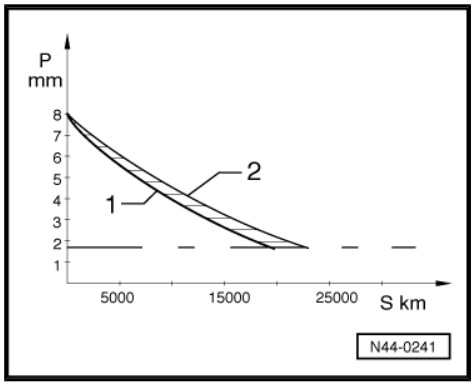

Note

- *The diagrams shown are not applicable in all cases.*
- *They are merely intended to give an idea of the wear rates of tyres on the front and rear axles and with front-wheel drive and four-wheel drive.*
- *The tyre service life may differ significantly, depending on operating conditions and running gear.*

Diagrams -1- and -2- show that the tread on a new tyre wears faster than the tread on a heavily used tyre. As the wear curve is not linear, it is not possible to estimate the tyre service life on the basis of wear after the first 5,000 km.

On front-wheel drive vehicles, the front tyres not only have to transmit the steering and driving forces, but also the greater part of the lateral and braking forces. This causes the front tyres on front-wheel drive vehicles to wear much faster than the rear tyres. Even tyre wear can be achieved by rotating (interchanging) the front and rear tyres on a regular basis. Rotating wheels ⇒ page 80 .

Protected by copyright. Copying for private or commercial purposes, in part or in whole, is not permitted unless authorised by AUDI AG. AUDI AG does not guarantee or accept any liability with respect to the correctness of information in this document. Copyright by AUDI AG.

15.5 Driving style

1. Constant driving speed, no deceleration or acceleration.

Example:

Speed (km/h)	Wheel slip	Abrasion
100	1	1
180	3	9

2. Braking

Most wear is caused during braking.

Example: Braking from a speed of 50 km/h.

Braking distance (m)	Lateral acceleration in g[3)]	Wheel slip	Abrasion
Vehicle allowed to roll to a stop		0	0
100	0.1 g	4	1
50	0.2 g	8	4
12.5	0.4 g[2)]	32	2000-3000

1) g = gravitational acceleration: 9.81 m/s^2

2) A deceleration of 0.4 g corresponds to heavy braking.

3. Acceleration (driving style)

Slip caused when driving off gently is approximately the same as that caused when driving at a constant speed of 100 km/h.

Example:

Protected by copyright. Copying for private or commercial purposes, in part or in whole, is not permitted unless authorised by AUDI AG. AUDI AG does not guarantee or accept any liability with respect to the correctness of information in this document. Copyright by AUDI AG.

	Wheel slip	Abrasion
Driving off gently	1-2	1
Driving off normally	7-8	5
Driving off with wheels spinning	20 or more	100-200

Cornering (driving style)

A »sporty« driving style and driving at higher speeds also cause greater wear when driving through corners.

In practice, this means that wear is increased 16-fold when the cornering speed is doubled. This is the price that has to be paid for going faster.

Example: Driving through a corner with a radius of 150 m.

Speed (km/h)	Lateral acceleration in g[3)]	Abrasion
50	1 = 0.13 g	1
80	2.5 = 0.33 g	6.5
100	4 = 0.53 g	16

3) g = gravitational acceleration: 9.81 m/s^2

15.6 Measuring tread depth

Note

- *The tread depth is measured in the main tread channels.*
- *Do not measure at the TWIs (Tread Wear Indicators).*

Measure the tread depth in the main tread channel, at the points where the tyre is worn most heavily. The main tread channels can be identified by the TWIs (tread wear indicators). The position of the TWI indicators is marked at various points on the sidewall of the tyre. The bars of the TWI have a height of 1.6 mm. This is the minimum tread depth required by German law.

Different values may apply in other countries.

The TWI indicators must not be included in the measurement. Tread depth should always be measured at the deepest point of the tread channel.

A - TWIs (tread wear indicators) in main tread channel. These indicators are marked at 6 points around the sidewall of the tyre.

B - -P- is the depth of the main tread channel

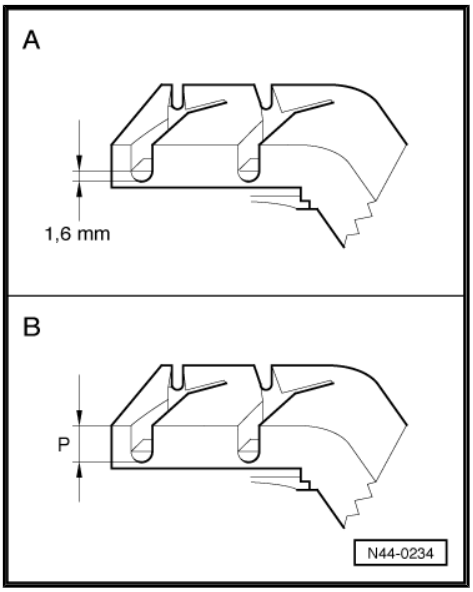

Tread wear indicator - TWI

TWIs[4] are marked at 6 points on the circumference of the side-wall.

4) TWI = tread wear indicator

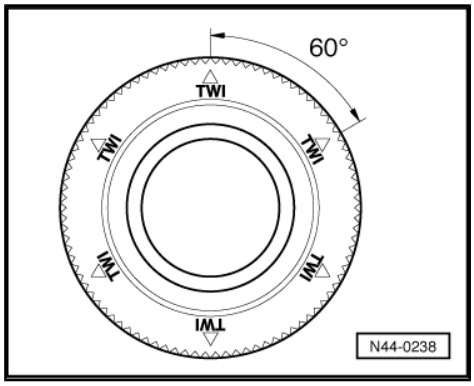

15.7 Speed rating / maximum speed

Code on sidewall	Maximum permissible speed for tyre in km/h
L	120
M	130
N	140
P	150
Q	160
R	170
S	180
T	190
U	200
H	210
V	240
W	270
Y	300
ZR	above 240

⇒ “15.9 Winter tyres with speed symbol H ”, page 73

⇒ “15.10 Winter tyres with speed symbol V ”, page 73

15.8 Speed symbols for tyres

⇒ “15.7 Speed rating / maximum speed”, page 72

The speed symbol (e.g. “T”) indicated after the tyre size (e.g. 185/65 R 14 86T) indicates the maximum permissible speed (v_{max}) for the tyre.

The tyres for the vehicle must be selected so that their maximum permissible speed is above the maximum speed that the vehicle can reach (due to rated speed of vehicle).

Vehicles with national operating permit within Germany

The maximum speed for vehicles with a German operating permit is calculated as follows:

Formula for vehicles with speed “v” up to 150 km/h

$v_{max} = 1.03 \times v + 3.5$ km/h

Example: quoted maximum speed v = 145 km/h

$v_{max} = 1.03 \times 145$ km/h + 3.5 km/h = 152.85 km/h

In this example a tyre marked with the tyre symbol “Q” or a speed symbol from a higher rating must be used.

Protected by copyright. Copying for private or commercial purposes, in part or in whole, is not permitted unless authorised by AUDI AG. AUDI AG does not guarantee or accept any liability with respect to the correctness of information in this document. Copyright by AUDI AG.

Formula for vehicles with speed “v” above 151 km/h

v_{max} = 1.01 x v + 6.5 km/h

Example: quoted maximum speed v = 163 km/h

v_{max} = 1.01 x 163 km/h + 6.5 km/h = 171.13 km/h

In this example a tyre marked with the tyre symbol “S” or a speed symbol from a higher rating must be used.

Vehicles with EC type approval

The required speed rating of tyres for all vehicles with an EC type approval is calculated as follows:

v_{max} = 1.05 x v

Example: quoted maximum speed v = 172 km/h

v_{max} = 1.05 x 172 km/h = 180.60 km/h

In this example a tyre marked with the tyre symbol “T” or a speed symbol from a higher rating must be used.

It is permitted to use tyres with a speed symbol from a higher rating. The same applies to tyres with a higher load index value.

Note

Substitute the maximum speed entered in entry field “T” in the registration document (part 1 or 2)/under item “6” in the German registration document for the letter v in the formula. This calculation is necessary because for technical reasons all vehicles reach different maximum speeds within a legally permissible tolerance range.

15.9 Winter tyres with speed symbol “H”

Vehicles with a permissible speed above 210 km/h:

- Vehicles with a permissible speed above 210 km/h may only be driven with winter tyres with the speed symbol “H” (max 210 km/h).
- A label must be attached in the driver's field of vision.
- The label must indicate the maximum permissible speed of 210km/h (winter tyres or M+S tyres).
- The corresponding load index (LI) of the tyre must be observed.

15.10 Winter tyres with speed symbol “V”

Table ⇒ page 72

Protected by copyright. Copying for private or commercial purposes, in part or in whole, is not permitted unless authorised by AUDI AG. AUDI AG does not guarantee or accept any liability with respect to the correctness of information in this document. Copyright by AUDI AG.

The tyre-manufacturing industry also supplies winter tyres with a V speed rating. However, these tyres may be driven up to the maximum permissible speed v_{max} = 240 km/h only under certain conditions.

Vehicles with V speed rating tyres entered in documents

Vehicles which according to the vehicle documents require V speed rating tyres may be driven without restriction up to a maximum permissible speed “v” $_{max}$ = 240 km/h when winter tyres rated V are fitted.

Vehicles with W, Y or ZR speed rating tyres entered in documents

Vehicles which according to the vehicle documents require W, Y or ZR speed rating tyres may not be driven up to “v” $_{max}$ = 240 km/h under certain conditions when these tyres are fitted.

Reason

V-rated summer tyres and V-rated winter tyres without special markings have 100 % of their maximum load capacity (as specified by load index “LI”) only at speeds of up to 210 km/h.

With V-rated winter tyres, speeds above 210 km/h are only possible if the maximum load capacity of the tyres is not exceeded. The maximum load capacity of the tyres decreases as the speed increases.

The maximum permissible axle load and the maximum speed of some Audi vehicles are so high that the load capacity of the V-rated tyres is not sufficient for speeds of up to 240 km/h.

Example: 205/55 R 16 91V tyres

This work is protected by copyright. Copying for private or commercial purposes, in part or in whole, is not permitted unless authorised by AUDI AG. AUDI AG does not guarantee or accept any liability with respect to the correctness of information in this document. Copyright by AUDI AG.

The load index (LI) 91 certifies that this tyre has a load capacity of 615 kg per tyre at up to 210 km/h.

At 240 km/h this tyre can only carry a load of 560 kg; therefore the maximum axle load is only 1120 kg.

The vehicle has a permissible axle load of 1150 kg and a maximum speed of 232 km/h; this vehicle may be driven at a maximum speed of 230 km/h on V winter tyres.

This applies to all V winter tyres without special markings.

Winter tyres with the designation Extra Load XL ⇒ page 75

Registration regulations in the Federal Republic of Germany

It is only permissible that the top speed that the vehicle can reach is above the maximum speed specified by the speed symbol when winter tyres are fitted.

In this instance, a label indicating the following must be attached in the driver's field of vision:

Caution: winter tyres!
Maximum permissible speed ... km/h

Caution: M+S tyres!
Maximum permissible speed ... km/h

15.11 Load rating code/load index (LI)

The load rating can be found on the sidewall of the tyre. It provides information about the maximum load that the tyre can bear.

The load rating is included in the size designation of the tyre (e.g. 195 R 15 91 H). It is indicated on the tyre as a code according to the ETRTO standard. The following table shows the load rating codes used at Audi together with the corresponding load capacity of the tyres.

Load rating code	Maximum load of tyre in kg
76	400
77	412
78	425
79	437
80	450
81	462

Load rating code	Maximum load of tyre in kg
82	625
83	487
84	500
85	515
86	530
87	545
88	560
89	580
90	600
91	615
92	630
93	650
94	670
95	690
96	710
97	730
98	750
99	775
100	800
101	825
102	850
103	875
104	900
105	925
106	950
107	975
108	1000
109	1030
110	1060
111	1090
112	1120

Protected by copyright. Copying for private or commercial purposes, in part or in whole, is not permitted unless authorised by AUDI AG. AUDI AG does not guarantee or accept any liability with respect to the correctness of information in this document. Copyright by AUDI AG.

15.12 Reinforced/Extra Load (XL) tyres

Tyres marked XL have a higher load capacity than tyres without this marking.

For some time a number of tyre manufacturers have been using the designation “Extra Load” instead of “Reinforced”. This designation has been standard in countries outside of Europe for a while. From a technical point of view there is no difference between them.

Some tyre manufacturers also use the designation “XL” for Extra Load tyres.

Tyres with the designation “Reinforced” or “Extra Load (XL)” are equivalent.

15.13 Extra Load (XL) V winter tyres

V winter tyres marked XL have a higher load capacity than V winter tyres without this marking.

XL V winter tyres allow a higher speed; however, this does not mean that the maximum permissible speed of a V tyre is 240 km/h for every vehicle.

The same conditions as for V winter tyres without special markings apply for these tyres ⇒ page 73 **.**

15.14 Snow chains

Snow chains are permitted on the driven wheels only.

On four-wheel drive vehicles, snow chains may only be fitted on the front wheels (exception: rear wheels also on Audi Q5).

It is not possible to use snow chains with all wheel/tyre combinations.

If no particular type of snow chain is specified, you can use snow chains with fine-pitch links. The links must not protrude more than 15 mm from the tread and inside of the tyres (including tensioner).

On some models only special snow chains with fine-pitch links may be used with certain wheel/tyre combinations.

The maximum speed permitted by law when driving with snow chains is 50 km/h.

Snow chains should be removed when roads are free of snow. Otherwise the vehicle's handling will be more difficult, unnecessary stress is put on the tyres and the chains are worn more than under normal circumstances.

Protected by copyright. Copying for private or commercial purposes, in part or in whole, is not permitted unless authorised by AUDI AG. AUDI AG does not guarantee or accept any liability with respect to the correctness of information in this document. Copyright by AUDI AG.

15.15 The valve

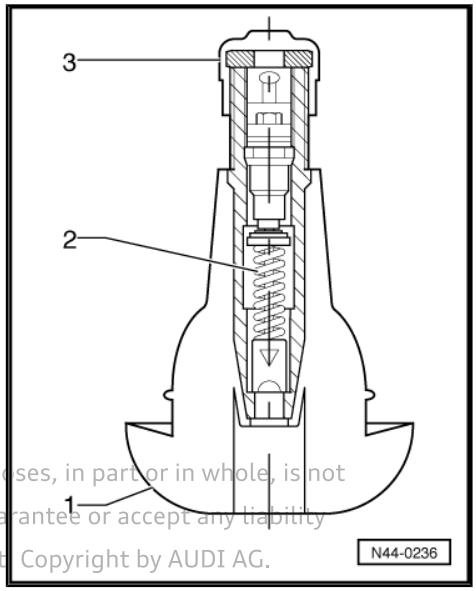

1 - Valve body

2 - Valve core

3 - Valve cap

> **Caution**
>
> ***Do not screw aluminium valve caps onto steel valve bodies.***

Protected by copyright. Copying for private or commercial purposes, in part or in whole, is not permitted unless authorised by AUDI AG. AUDI AG does not guarantee or accept any liability with respect to the correctness of information and/or document. Copyright by AUDI AG.

1. Valve body

The rubber valve for tubeless tyres is designed to be an air-tight seal on the hole in the rim. The elastic material of the rubber valve body presses tightly into the hole in the rim.

In the case of valves with a threaded metal base, a rubber seal is used to seal the rim. The lateral faces of the rim hole are sealing surfaces. They must therefore be free of rust and dirt and must not be damaged.

2. Valve core

The valve core fulfils the most important task in the valve; it acts as a seal and enables you to adjust the inflation pressure. The small flat seal on the valve core can only function correctly if it is free of foreign particles, dirt and moisture.

3. Valve cap

A valve cap must always be screwed onto the valve. It prevents dirt from getting into the valve. Dirt in the valve could reach the seal on the valve plunger when the tyre is inflated and lead to leakage.

The valve must be renewed every time a new tyre is fitted.

If the vehicle is driven without caps on the valves, there is the danger that dirt may get into the valve. This leads to a gradual loss of air, which in turn can lead to irreparable damage to the tyre.

- ♦ Separation of carcass and rubber
- ♦ Wide furrows all around the area of the bead
- ♦ Torn tread

> **Note**
>
> *Please note: The valve cap must be fitted tightly to ensure air-tight sealing.*

> **Caution**
>
> ***Do not screw aluminium valve caps onto steel valve bodies.***

15.16 Tyre storage

Storage area:

Rooms used for storing tyres must be

- dark

- dry,
- cool,
- well ventilated.

Stored tyres must not come in contact with fuel, oil, grease or chemicals under any circumstances. Otherwise, the material in the tyre will be damaged by chemical reactions which are not always visible.

As a result, dangerous situations can occur when the car is driven. Of course, tyre damage occurs only if the tyre is in contact with the chemical for a relatively long time. If a few drops of petrol drip onto the tyre while you are filling the tank, this is of no concern.

15.17 Storing the tyres

Complete wheels

Tyres mounted on wheels can be stored flat, stacked one upon the other. The inflation pressure should be increased to a maximum of 3 bar.

Tyres without rims

Tyres without rims are best stored standing vertically. If tyres are stacked flat for a long period of time, they will be pressed together quite considerably. They will then be more difficult to fit, as the tyres do not sit on the bead seats. If tyres are stored standing vertically, it is recommended to turn them every 14 days to avoid flat spots.

Protected by copyright. Copying for private or commercial purposes, in part or in whole, is not permitted unless authorised by AUDI AG. AUDI AG does not guarantee or accept any liability with respect to the correctness of information in this document. Copyright by AUDI AG.

15.18 Tyre ageing

Tyres age as a result of physical and chemical processes whereby the function can be impaired. Tyres which are stored for long periods of time harden and become brittle faster than tyres which are constantly in use on a vehicle. Older tyres may develop hairline cracks as a result of ageing. When tyres are in regular use, the constant flexing activates softeners in the rubber, preventing hardening and the development of cracks.

It is therefore important to not only take into account the tread depth, but also the age of spare tyres, stored tyres and tyres which are not permanently in use. The tyre age can be seen on the DOT designation, which includes the production date of the tyre.

DOT number (example):

DOT	.....	5	0	0	2	<
						Stands for 2002
				Year of manufacture		
		Calendar week				

In this example, the production date is the 50th week of 2002. The DOT number had 3 digits up to 31 December 1999.

Recommendation:

- ♦ We recommend that you only use tyres which are older than 6 years in emergencies and make sure you then drive with great caution.
- ♦ When new tyres are fitted, the spare tyre may also be used if it is in perfect condition and not more than 6 years old. The age of the tyre has a great influence on the high-speed capability of the tyre. It is possible to combine a spare tyre which is several years old with new tyres, however, this can have an adverse influence on car handling.

- Tyres are constantly being further developed, which can lead, for example, to slight changes in the rubber compound, even if the tyres are of the same make, size and tread pattern.
- For reasons of safety, tyres of the same make and with the same tread pattern should be mounted on one axle.
- Vehicles with four-wheel drive must always be fitted with tyres of the same size, construction, tread pattern and make on all four wheels. This does not apply to Audi vehicles which are factory-fitted with different tyre sizes on the front and rear wheels.

Note

- *Only tyres of the same construction, size and tread pattern should be used on all four wheels.*
- *This does not apply to Audi vehicles which are factory-fitted with different tyre sizes on the front and rear wheels.*

15.19 Renewing tyres

We recommend using only tyres that are additionally marked with "AO". These tyres match the Audi models and their characteristics.

Tyres must always be renewed when:

- the legal minimum tread depth of 1.6 mm is reached,
- there is visible mechanical damage
- the tyres are more than 6 years old.

15.20 Care and maintenance of alloy wheel rims

Regular care is required to maintain the decorative appearance of alloy wheels over a long period of time.

In particular road salt and dust from brake abrasion must be thoroughly washed off every 2 weeks; otherwise the finish of the alloy wheel will suffer.

Suitable cleaning agents:

- Plain water or water with soft soap
- Water and essence of vinegar
- Alloy wheel cleansers without acids or strong solvents

Do not exceed the soaking time of the cleaning agent.

The shorter the recommended soaking time, the stronger and more aggressive the cleaning agent.

If the finish is damaged, for example by stones, the damage must be repaired as quickly as possible.

Protected by copyright. Copying for private or commercial purposes, in part or in whole, is not permitted unless authorised by AUDI AG. AUDI AG does not guarantee or accept any liability with respect to the correctness of information in this document. Copyright by AUDI AG.

Removing adhesive residue from glued balance weights on alloy rims:

- Strong solvents and acids attack the finish on alloy wheels and the surface of the wheel becomes matt and milky. These substances should therefore not be used.
- To remove adhesive residue on alloy wheels, use alloy cleansers or a petrol-based cleanser. Do not exceed the soaking time of the cleaning agent.

- After cleaning or removing adhesive residue from wheels, rinse them with water.

Rotating wheels:

- Vehicles with front-wheel drive exhibit more tread wear on the front wheels due to the greater forces they have to transmit.
- In order for all 4 wheels on the vehicle to have the same service life, we recommend rotating the front and rear wheels/ tyres.
- Ensure that uni-directional tyres are not reversed.
- The longer the tyre runs at one position, the more it wears at certain points. It is therefore advisable to rotate the wheels at short intervals, for example every 5,000 km.
- Diagonal rotation is possible only with non-directional tyres. This wheel rotation method is especially advantageous in the case of saw-tooth wear. For more information on saw-tooth wear, refer to ⇒ page 86 .
- If saw-tooth wear has already progressed and the tread is worn by more than 50%, only slight improvements would be achieved and rotation is not recommended. The elasticity of the tread blocks declines and the saw-tooth wear does not progress.

15.21 Tyres with rim protectors

The tyre industry produces tyres with rim protectors for light alloy wheels. The rim protectors are intended to protect the light alloy wheels against damage due to kerbing.

A combination of a tyre with rim protector, a steel rim and a full-size wheel cover can lead to the loss of the wheel cover while the vehicle is in motion. The wheel cover becomes unseated due to the flexing of the tyre.

Reproduction or copying for commercial purposes, in part or in whole, is not permitted unless authorised by AUDI AG. AUDI AG does not guarantee or accept any liability with respect to the correctness of information in this document. Copyright by AUDI AG.

WARNING

When fitting tyres on steel rims, make sure not to use tyres which have rim protectors.

The illustration shows the inadmissible combination of steel rim, full-size wheel cover and a tyre with rim protector.

A - Rim protector

B - Flange of a steel rim

C - Full-size wheel cover

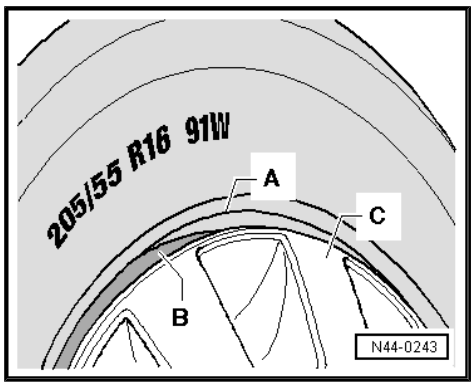

WARNING

This combination must not be fitted!

16 Tyre wear / mileage

Note

- *The tyre pressure also has an influence on the tyre's wear and mileage.*
- *Always observe the correct tyre pressures.*

16.1 General notes

A tyre has to meet numerous requirements.

Depending on the conditions in which the tyres are used and on the type of vehicle, some requirements will be more important than others.

H, V, and Z tyres for »high-performance vehicles« are expected to have good grip on wet and flooded roads. However, mileage performance cannot be as good for tyres of this type as it is, for example, in the case of S or T tyres.

16.2 Wear of high-speed tyres

These tyres are designed for very high speeds. When developing these tyres, good grip in wet conditions is the main objective. The rubber compositions required in order to meet this objective do not have the same wear resistance as T and H tyres for lower speeds.

The life expectancy of high-speed tyres is therefore considerably lower in comparable conditions of use.

16.3 Evenly worn tyres

The requirements to be met by tyres are increasing continuously.

This is caused by the following factors:

- increased vehicle weight
- high speeds
- high level of vehicle safety.

Greater loads on the tyre will, of course, lead to an increase in tyre wear.

Driving style has a critical effect on tyre wear. For this reason, customer claims regarding tyre wear on evenly worn tyres are not covered by the warranty.

The effective service life of a tyre can only be determined when the remaining tread depth has reached 2 mm (see diagrams ⇒ page 69).

16.4 One-sided wear

This is often caused by driving style, but can be the result of incorrect wheel alignment.

Protected by copyright. Copying for private or commercial purposes, in part or in whole, is not permitted without the consent of AUDI AG. AUDI AG does not guarantee or accept any liability with respect to the correctness of information in this document. Copyright by AUDI AG.

One-sided wear, usually in conjunction with signs of scuffing on the ribs of the tread and in the fine grooves, always occurs when the tyres have been allowed to roll with an extreme tyre slip angle, causing them to »rub« on the road surface.

Driving fast on a stretch of road with lots of bends will cause increased wear, in particular on the outer shoulder.

A rounded outer shoulder on the tyre in conjunction with a particularly high degree of wear on the outer tread blocks indicates fast cornering. This wear pattern is influenced by driving style.

To optimise handling, the suspension is set to certain toe-in and camber values. Increased one-sided wear can be expected if tyres are allowed to roll under conditions which differ from those specified.

One-sided wear is especially likely if the toe-in and camber have not been set correctly. Moreover, there is a greater risk of diagonal erosion.

Protected by copyright. Copying for private or commercial purposes, in part or in whole, is not permitted unless authorised by AUDI AG. AUDI AG does not guarantee or accept any liability with respect to the correctness of information in this document. Copyright by AUDI AG.

Toe-out or negative toe-in:

Distance between front of wheels -A- is greater than distance between rear of wheels -B- (-C- = direction of travel).

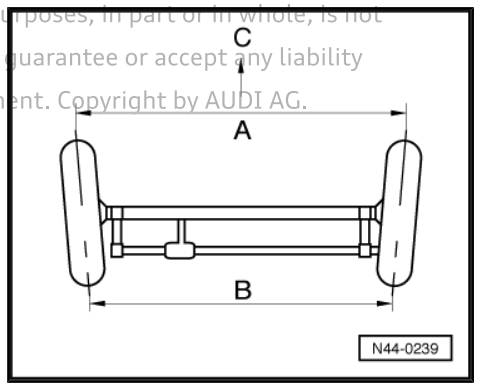

Toe-in or positive toe:

Distance between front of wheels -A- is less than distance between rear of wheels -B- (-C- = direction of travel).

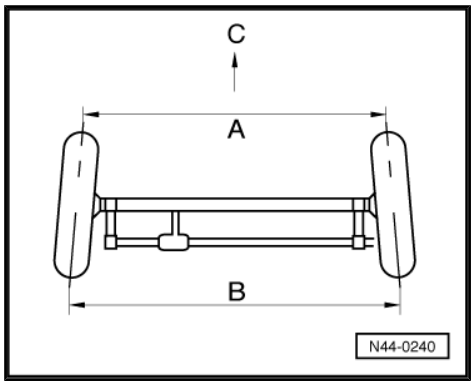

To prevent one-sided wear, care must be taken to ensure that the wheel is set within the tolerance specified by the vehicle manufacturer. The most frequent deviation of the wheel alignment is caused by external influences, for example hard contact with the kerb when parking.

By measuring the axle geometry, you can check whether the wheel alignment is within the specified tolerances or whether it has to be corrected.

16.5 Permissible differences in tread depth

Note

For permissible differences in tread depth please refer to the section

⇒ “17 Permissible differences in tread depth”, page 85

16.6 One-sided wear - adjustment error

If a customer complains about one-sided tyre wear, the axle geometry should be checked. Warranty claims are only permissible if one-sided wear is caused by incorrect axle geometry that is not the result of external influences on the tyre and wheel. The wheel alignment protocol should be submitted together with the complaint report.

Increased, one-sided wear caused by the wheels running »off-track«. This frequently happens in conjunction with a rough tread surface or even the formation of feathering on the edges of the tread.

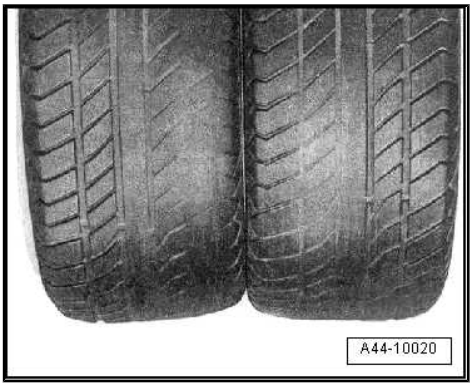

16.7 Wear in middle of tyre

This wear pattern is found on the driven wheels of high-performance vehicles that are frequently driven long distances at high speeds.

Protected by copyright. Copying for private or commercial purposes, in part or in whole, is not permitted without the prior written consent of AUDI AG. We do not guarantee or accept any liability with respect to the correctness of information in this document. Copyright by AUDI AG.

At high speeds, centrifugal forces cause the tyre diameter to increase more in the middle of the running surface than it does at the shoulder. This causes drive forces to be transferred to the road surface from the central area of the running surface. This is reflected in the wear pattern.

Effects of this kind can be especially pronounced on wide tyres.

It is not possible to counter this wear pattern by reducing the tyre pressure.

> ⚠ **DANGER!**
>
> ***For safety reasons, the tyre pressure must not under any circumstances be reduced below the specified tyre pressure.***

A more or less even tread wear pattern can be achieved by interchanging the tyres on the driven wheels and non-driven wheels in good time.

The typical tread wear pattern of tyres run on the driven wheels of a high-performance vehicle. The increased wear in the centre section of the tread results from the extra loading associated with centrifugal forces within the tyre and the transmission of drive forces.

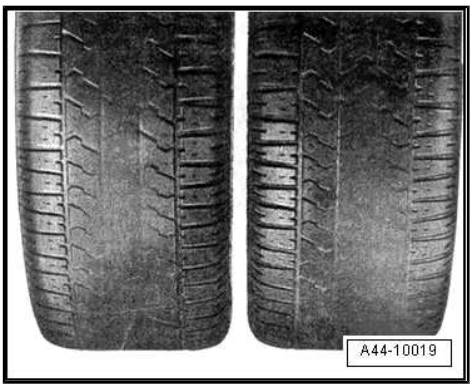

16.8 Diagonal erosion

Diagonal erosion runs at an angle of approx. 45 ° to the direction of rotation. It usually occurs at one point only, but can also occur at several points around the circumference of the tyre.

Such erosion wear occurs almost exclusively on the tyres on the non-driven wheels, in particular at the rear left. Diagonal erosion occurs very often on some models, while it poses no problem at all on other models. The effect is intensified by high toe-in values. Toe-in values in the region of the lower tolerance limits of the specified alignment values improve the wear pattern.

The most pronounced diagonal erosion is often found in the area where the tyre components are joined.

Wheels with toe-in also roll with a tyre slip angle when the vehicle is driven in a straight line. This leads to diagonal strain in the contact area between the tyres and road surface.

This wear pattern is intensified when tyre pressure is too low. To avoid such tread wear patterns, the toe-in values of the two rear wheels should be identical and the specified tyre pressures observed.

If you detect diagonal erosion, you should fit the wheels on the driven axle, assuming the wear is identified at an early stage. Deeper erosion cannot be repaired.

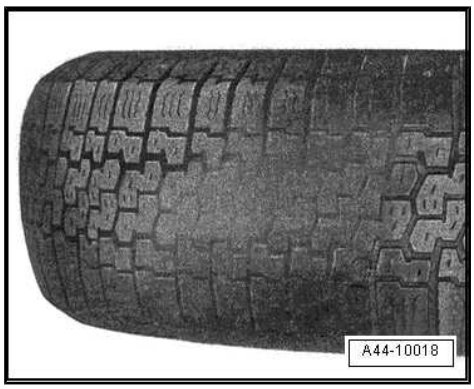

16.9 Wear - adjustment error

In the event of a complaint of diagonal erosion, the toe-in setting should be checked. If toe-in is correct, the cause of the diagonal erosion is very probably the tyre itself. In this case, claims can be made under the warranty.

The wheel alignment protocol should be submitted together with the complaint report.

Tyres with diagonal erosion caused by incorrectly set axle geometry at the wheels are not covered by warranty.

Protected by copyright. Copying for private or commercial purposes, in part or in whole, is not permitted unless authorised by AUDI AG. AUDI AG does not guarantee or accept any liability with respect to the correctness of information in this document. Copyright by AUDI AG.

17 Permissible differences in tread depth

- Tyres of the same construction and tread pattern should always be used on all four wheels.
- It is basically possible to replace tyres individually. However, Audi recommends replacing at least both tyres on an axle at the same time.
- On vehicles with rear sport differential, Audi recommends that you always replace both rear tyres at the same time.

Note

Technical reason for these restrictions: thermal loads on the gear oil due to large differences in the rolling circumference of the tyres.

⇒ "17.1 Models with longitudinally installed engine", page 85

⇒ "17.2 Models with transversely installed engine", page 85

⇒ "17.3 Audi e-tron", page 85

17.1 Models with longitudinally installed engine

Difference in tread depth on models with longitudinally installed engines, e.g. A4, A5, A6, A7, A8, Q5, Q7, etc:

On these models, the average difference between the front and rear axle must not be more than 2 mm.

Protected by copyright. Copying for private or commercial purposes, in part or in whole, is not permitted unless otherwise stated. AUDI AG, AUDI AG does not guarantee or accept any liability with respect to the correctness of information in this document. Copyright by AUDI AG.

Front axle (average): 3.0 mm

Rear axle (average): 4.5 mm

Difference between front and rear axle: 1.5 mm

Within permissible tolerance of 2 mm

17.2 Models with transversely installed engine

Difference in tread depth on models with transversely installed engines, e.g. A3, TT, Q3, A1, etc.:

On these models, the average difference between the front and rear axle must not be more than 3 mm.

Front axle (average): 2.0 mm

Rear axle (average): 4.0 mm

Difference between front and rear axle: 2.0 mm

Within permissible tolerance of 3 mm

17.3 Audi e-tron

On these models, the average difference between the front and rear axle must not be more than 2 mm.

Front axle (average): 3.0 mm

Rear axle (average): 4.5 mm

Difference between front and rear axle: 1.5 mm

Within permissible tolerance of 2 mm

18 Tyre noise

⇒ “18.1 General notes on tyre noise”, page 86

⇒ “18.2 Saw-tooth wear”, page 86

⇒ “18.3 Flat spots (brake-flatting)”, page 87

Protected by copyright. Copying for private or commercial purposes, in part or in whole, is not permitted unless authorised by AUDI AG. AUDI AG does not guarantee or accept any liability with respect to the correctness of information in this document. Copyright by AUDI AG.

18.1 General notes on tyre noise

Tyre noise that can be heard by the human ear is caused by vibrations which are transmitted by the air from the source of the sound to our ears.

Of interest here are the noises caused by certain characteristics and effects while the tyres are rolling (source of the sound).

The cause of the noise is largely dependent on the combination of the road surface and tyres.

The road surface structure and material will greatly affect tyre noise. For example, the noise level on a wet road is much higher than on a dry road.

The tread pattern on the tyre contact surface also has a significant influence on tyre noise. Tyres with transverse grooves at an angle of 90° generate more noise than tyres with grooves running diagonally.

Small tread blocks are unstable. Their highly pronounced deformation agitates the air as the tyres roll. This creates the air vibrations that cause tyre noise.

Wider tyres are louder. They need more tread channels to displace water. When they are rolling, these tread channels displace the air, also creating air vibrations.

Further effects that also influence tyre noise:

- »Tyre vibration« is the principal cause of tyre noise. It is caused by the columns of air in the tread channels being agitated.
- »Air pumping« is the compression and expansion of the air caused by the deformation of the tread blocks as the tyre contact area moves along the road surface.

18.2 Saw-tooth wear

Saw-tooth wear is a stepped wear pattern on the individual tread blocks – see illustration – that can cause increased tyre noise. The saw tooth pattern ("heel-and-toe" wear) is caused by uneven deformation of the tread blocks in the tyre contact area. Saw-tooth wear is more pronounced on non-driven wheels than on driven wheels.

New tyres are more susceptible to saw-tooth wear because of the greater elasticity of the high tread blocks. As the tread depth decreases, the tread blocks become more rigid and the tendency to wear in a saw-tooth pattern decreases.

What does a saw tooth wear pattern look like?

Viewed in the direction of travel, the tread blocks are higher at the front than they are at the rear, see illustration. Pronounced saw-tooth wear can lead to customers complaining about tyre noise.

Pronounced saw-tooth wear occurs:

- when toe-in values are too high
- when tyre pressures are incorrect
- when the tread is coarse, open
- on tyres which are fitted to the non-driven wheels
- when the vehicle is driven very fast around tight corners

1 - More pronounced wear at the front of the tread block

2 - Direction of rotation

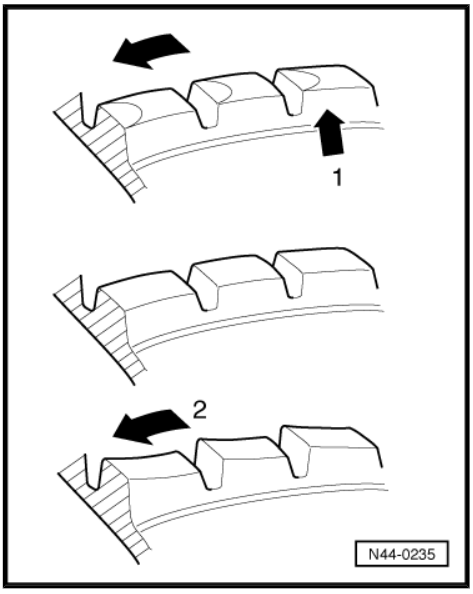

Non-directional tyres:

In the event of saw-tooth wear, the direction of rotation of the tyre must be reversed. If saw-tooth wear is especially pronounced and tyre noise has increased, interchange the tyres diagonally. This will reduce the saw-tooth effect. On front-wheel-drive vehicles, this effect is intensified by the greater wear on the front axle. Tyre noise will be somewhat greater immediately after the tyres have been interchanged, but will return to the normal level after driving about 500 – 1,000 km.

Directional tyres:

Protected by copyright. Copying for private or commercial purposes, in part or in whole, is not permitted unless authorised by AUDI AG. AUDI AG does not guarantee or accept any liability with respect to the correctness of information in this document. Copyright by AUDI AG.

In the event of increased saw-tooth wear on the rear tyres – in particular on front-wheel-drive vehicles – interchange the front and rear tyres. In the event of increased saw-tooth wear on the outer edges of the tyres on one axle, turn both tyres around on their rims. The left-hand wheel must then be fitted on the right side of the vehicle and the right-hand wheel on the left side.

Saw-tooth wear is a normal wear pattern and can be rectified on non-directional tyres by rotating the wheels diagonally. The wear should then be compensated after approx. 500 – 1,000 km.

The complaint report should include information detailing the previous repair work.

Modern tyres are designed for maximum driving safety, even in wet conditions. This demands an open tread pattern at the shoulders of the tyre and a softer rubber composition for the tread itself, both of which accelerate saw-tooth wear.

Saw-tooth wear is a normal wear pattern and does not constitute a fault which is covered by the warranty.

18.3 Flat spots (brake-flatting)

Flat spots can result from an extreme brake application which causes the wheels to lock, so that the rubber is worn off at the contact patch between the tread and the road surface.

As the tyres slide over the road surface, friction generates heat, which also reduces the wear resistance of the tread material.

Not even a highly wear-resistant tread compound can prevent the flat spots caused by violent braking.

Even ABS-controlled brake systems are not always able to stop the wheels locking briefly, causing small patches of wear.

The degree of such wear depends largely on the vehicle speed, the road surface and the load placed on the wheel. The following examples should make this clear.

If a vehicle is braked to a standstill on a dry surface with the wheels locked, the amount of rubber worn from the tyre will cover an area the size of a postcard and will have a thickness of:

- up to 2.0 mm when braking from a speed of 57 km/h (23.8 m braking distance)

- up to 3.3 mm when braking from a speed of 75 km/h (41.8 m braking distance)
- up to 4.8 mm when braking from a speed of 92 km/h (71.6 m braking distance)

Flat spots on running surface

Tyres with such damage must no longer be used and must be renewed.

Tyres with flat spots due to hard braking and those damaged due to other driving errors are not covered by warranty (SA 13 - Out of round or unbalanced; SA 20 Rolling noise).

Protected by copyright. Copying for private or commercial pur
permitted unless authorised by AUDI AG. AUDI AG does not g
with respect to the correctness of information in this docume

19 Rough running caused by wheels/ tyres

19.1 Causes of rough running

Rough running can have a number of different causes. It can also be caused by tyre wear.

Tyre wear caused by driving is not always evenly spread across the entire running surface of the tyre. This causes slight imbalances which affect the smooth running of a wheel which was previously exactly balanced.

Protected by copyright. Copying for private or commercial purposes, in part or in whole, is not permitted unless authorised by AUDI AG. AUDI AG does not guarantee or accept any liability with respect to the correctness of information in this document. Copyright by AUDI AG.

Minor imbalances will not be felt at the steering wheel, but that does not mean that they are not there. They increase wear on the tyre and thus reduce the tyre service life.

Recommendation:

To ensure optimum safety, smooth running and even wear throughout the tyre's service life, we recommend having the wheels and tyres balanced at least twice during the service life of the tyre.

Rough running can also be caused by flat spots resulting from storage or handling. ⇒ page 89

19.2 Flat spots caused by storage or handling

Flat spots caused by storage or handling can also cause rough running.

What is a flat spot?

A flat spot can also be termed flattening or similar.

It is important that flat spots on the tread are identified as such.

A flat spot in the tyre cannot be eliminated by re-balancing.

Flat spots of this kind can re-occur at any time due to particular circumstances. Flat spots caused by storage or handling can be eliminated without complicated special tools. This does not apply to flat spots which have been caused by hard braking, ⇒ page 87 Flat spots (brake-flatting).

Note

Flat spots caused by hard braking cannot be repaired. Such tyres must be renewed.

Other causes of flat spots:

- The vehicle has been left standing in one place without being moved for a long period.
- The tyre inflation pressure is too low.
- The vehicle was placed in a paint shop drying booth after painting.
- The vehicle was parked with warm tyres in a cool garage or similar for a long period of time. In this case, a flat spot may even occur overnight.

Eliminating flat spots caused by storage or handling

- Flat spots caused by storage or handling cannot be eliminated from the tyre using workshop equipment.

- Flat spots caused by storage or handling cannot be eliminated by re-balancing.
- Check and, if necessary, correct inflation pressures.
- The flat spots can only be removed by running the tyres warm.
- We do not recommend running the tyres warm in cold and wintry weather.

DANGER!

Do not endanger yourself or other road users during this road test.

Observe the highway code and speed limitations in force when performing the road test.

Protected by copyright. Copying for private or commercial purposes, in part or in whole, is not permitted unless authorised by AUDI AG. AUDI AG does not guarantee or accept any liability with respect to the correctness of information in this document. Copyright by AUDI AG.

20 Wheel balancing

20.1 General notes

Before you start balancing the wheels, the following requirements must be met.

- The tyre pressure must be OK.
- The tyre tread must not show one-sided wear and should be at least 4 mm deep.
- The tyre must not have a flat spot caused by storage or handling.

A flat spot in the tyre cannot be eliminated by re-balancing.

- The tyre must not show any signs of damage, for example cuts, piercing, foreign bodies, etc.
- The suspension, steering and steering linkage, including the shock absorbers, must be in perfect condition.
- You must have conducted a road test.

20.2 Conducting a road test before balancing wheels

If a customer brings a vehicle to the workshop complaining about »vibration«, a road test is essential prior to balancing the wheels.

♦ This will give you information about the nature of the rough running.

♦ You will be able to determine in which speed range the rough running occurs.

– Raise the vehicle on a lifting platform immediately after the road test.

– Mark the positions of the tyres on the vehicle:

Protected by copyright. Copying for private or commercial purposes, in part or in whole, is not permitted without the consent of AUDI AG. AUDI AG does not guarantee or accept any liability with respect to the correctness of information in this document. Copyright by AUDI AG.

Note

Mark front left tyre »FL«, front right tyre »FR«, rear left tyre »RL« and rear right tyre »RR«.

– Remove the wheels from the vehicle.

Caution

On vehicles with ceramic brakes the wheel must not be allowed to drop onto the brake disc. This would cause irreparable damage to the disc. When removing or fitting a wheel, screw the long assembly pin into the top wheel bolt hole (12 o'clock position) in place of the wheel bolt, and screw the short pin into one of the other holes to support the wheel. The wheel can then slide along the assembly pins when being fitted or removed.

– Balance the wheels.

20.3 Balancing wheels on stationary wheel balancer

Note

When balancing tyres, please remember that cleanliness is absolutely essential, as indeed it is in the case of any other repair work you carry out. Only then can you attain a flawless result!

Caution

Bond on the balancing weights so that they do not touch the brake caliper or parts of the suspension.

– Attach wheel to wheel balancer.

Protected by copyright. Copying for private or commercial purposes, in part or in whole, is not permitted unless authorised by AUDI AG. AUDI AG does not guarantee or accept any liability with respect to the correctness of information in this document. Copyright by AUDI AG.

Wheels with sensitive surfaces and bonded wheel trims
⇒ page 93

Note

- *On rims with bonded wheel trims, take care not to scratch the wheel trims.*
- *Wheel trims have a very sensitive surface.*
- *If a wheel trim is damaged, the rim must be renewed.*
- *The wheel trim cannot be renewed.*

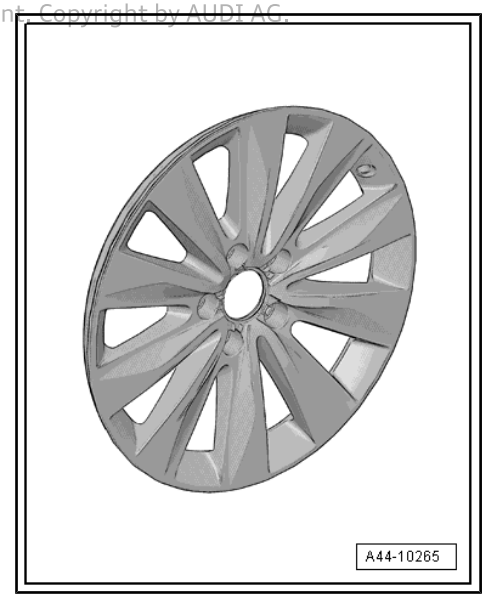

Dirt and rust in the area of the contact surfaces and centre of the wheel distort the result.

– Clean the contact surfaces, the centre of the wheel and the recess on the inside of the wheel before mounting the wheel on the wheel balancer.

– Clamp wheel with tyre on balancer.

Caution

Bond on the balancing weights so that they do not touch the brake caliper or parts of the suspension.

Use a model-specific clamping plate , e.g. -VAS 6243- , to clamp the wheel on the wheel balancer without damage.

This will yield better balancing results and protect the surface of the rim (for instance if it has a chrome design).

20.4 Wheels with sensitive surfaces and bonded wheel trims

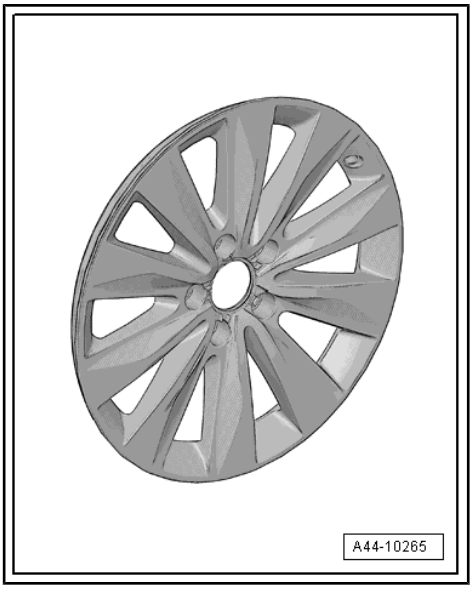

Note

- *On rims with bonded wheel trims, take care not to scratch the wheel trims.*
- *Wheel trims have a very sensitive surface.*
- *If a wheel trim is damaged, the rim must be renewed.*
- *The wheel trim cannot be renewed.*

Use only model-specific clamping plate - VAS 6652- and thrust pin - VAS 6652/1- .

20.5 Work sequence when balancing wheels and tyres

Wheels with sensitive surfaces and bonded wheel trims
⇒ page 93

Caution

Bond on the balancing weights so that they do not touch the brake caliper or parts of the suspension.

Protected by copyright. Copying for private or commercial purposes, in part or in whole, is not permitted unless authorised by AUDI AG. AUDI AG does not guarantee or accept any liability with respect to the correctness of information in this document. Copyright by AUDI AG.

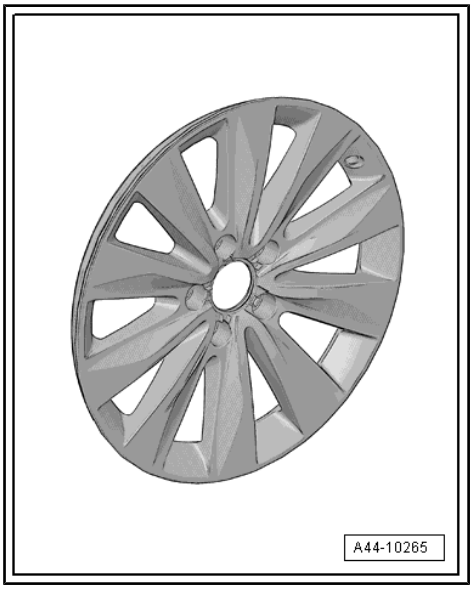

Note

- *On rims with bonded wheel trims, take care not to scratch the wheel trims.*
- *Wheel trims have a very sensitive surface.*
- *If a wheel trim is damaged, the rim must be renewed.*
- *The wheel trim cannot be renewed.*

– Allow the wheel/tyre to turn on the wheel balancer.

– Check that the indicator lines on the sidewall of the tyre near the rim flange run evenly.

– Check that the body of the tyre runs evenly while the wheel and tyre are rotating.

Note

If one-sided wear, flat spots from braking or severe erosion is apparent, balancing will not be able to achieve smooth running. In this case, the tyre must be renewed.

– Check the true running of the wheel and tyre. If the wheel and tyre do not run true although there are no flat spots on the tyre, this may be due to radial or lateral run-out.

– Check the wheel and tyre for radial and lateral run-out.

– If radial and lateral run-out are within the specified tolerance, balance the wheel and tyre.

Note

- *The weight used per wheel should not exceed 60 grams.*
- *If a larger weight is required, you can possibly achieve smoother running by "match mounting" the tyre and rim. "Match mounting" tyres* ⇒ page 100 *.*
- *The wheel balancer display should indicate 0 grams.*

– Bolt the wheel to the vehicle.

Caution

On vehicles with ceramic brakes the wheel must not be allowed to drop onto the brake disc. This would cause irreparable damage to the disc. When removing or fitting a wheel, screw the long assembly pin into the top wheel bolt hole (12 o'clock position) in place of the wheel bolt, and screw the short pin into one of the other holes to support the wheel. The wheel can then slide along the assembly pins when being fitted or removed.

Protected by copyright. Copying for private or commercial purposes, in part or in whole, is not permitted unless authorised by AUDI AG. AUDI AG does not guarantee or accept any liability with respect to the correctness of information in this document. Copyright by AUDI AG.

– First hand-tighten the lowest wheel bolt to about 30 Nm.

– Then tighten the remaining wheel bolts to about 30 Nm (in diagonal sequence). This process centres the wheel on the hub.

– Lower vehicle onto its wheels.

– Now use a torque wrench to tighten the wheel bolts to the specified torque in diagonal sequence.

⇒ “3 Tightening torques for wheel bolts”, page 6

– Perform road test.

Note

- *If you detect vibration during the road test, this may be due to tolerance in the wheel centring.*
- *In unfavourable circumstances, the component tolerances of wheels and hubs could cumulate. This too can lead to vibration. This vibration can be eliminated by using a finish balancer.*

20.6 Finish balancer

Caution

Position vehicle on the sensor platforms (front wheels only on front-wheel drive vehicle, all four wheels on four-wheel drive vehicle) in order to balance the wheels.

Note

Before working with a finish balancer the mechanic needs to have been instructed by the manufacturer of the balancer.

If you determine a residual imbalance greater than 20 grams when balancing the wheels, you should rotate the mounting position of the wheel on the hub.

Protected by copyright. Copying for private or commercial purposes, in part or in whole, is not permitted unless authorised by AUDI AG. AUDI AG does not guarantee or accept any liability with respect to the correctness of information in this document. Copyright by AUDI AG.

Note

- *On rims with bonded wheel trims, take care not to scratch the wheel trims.*
- *Wheel trims have a very sensitive surface.*
- *If a wheel trim is damaged, the rim must be renewed.*
- *The wheel trim cannot be renewed.*

– Mark the point at which the imbalance is indicated.

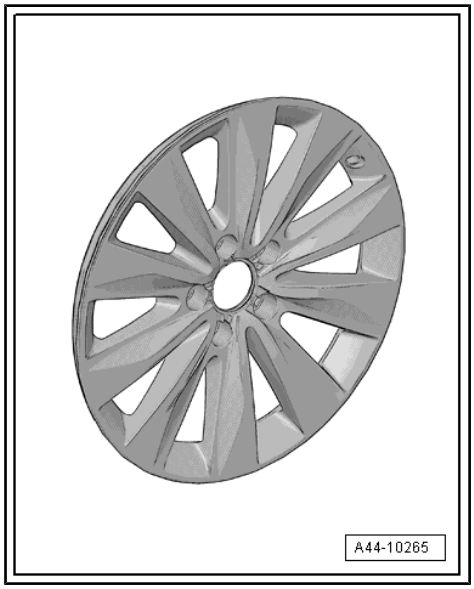

Caution

Bond on the balancing weights so that they do not touch the brake caliper or parts of the suspension.

– Unbolt the wheel and rotate its position on the hub so that the marking points downwards.

Note

Important! The hub must not rotate during this procedure.

– First hand-tighten the lowest wheel bolt to about 30 Nm.
– Then tighten the remaining wheel bolts to about 30 Nm (in diagonal sequence). This process makes sure the wheel is centred properly on the hub.
– Check that the imbalance is less than 20 grams using the finish balancer.

Note

The imbalance should always be less than 20 grams before you change the balance weight.

– If necessary, remove the wheel bolts again.
– Rotate the wheel relative to the hub once more, turning it one or two wheel bolt holes further.
– Tighten the wheel bolts using the method described above.

Protected by copyright. Copying for private or commercial purposes, in part or in whole, is not permitted unless authorised by AUDI AG. AUDI AG does not guarantee or accept any liability with respect to the correctness of information in this document. Copyright by AUDI AG.

Note

Do not try to reduce the imbalance using balance weights until the imbalance is less than 20 grams.

– Balance the wheels until the imbalance is less than 5 grams.
– Tighten wheel bolts to specified torque setting if you have not already done so.

⇒ “3 Tightening torques for wheel bolts”, page 6

– Always tighten wheel bolts to specified torque using a torque wrench!

20.7 Vibration control system - VAS 6230 A-

Wheels with sensitive surfaces and bonded wheel trims
⇒ page 93

Protected by copyright. Copying for private or commercial purposes, in part or in whole, is not permitted unless authorised by AUDI AG. AUDI AG does not guarantee or accept any liability with respect to the correctness of information in this document. Copyright by AUDI AG.

The vibration control system - VAS 6230 A- has a range of additional features over and above regular static wheel balancing.

One of the system's special features is the ability to test the radial force of wheels/tyres while they are rotating.

To do this, a roller is pressed against the wheel with a force of approx. 635 kg. This simulates the force exerted by the tyre's contact patch on the road surface while the vehicle is in motion.

The contact forces on the tyre vary due to variations in the stiffness of the tyre and the degree of radial and lateral run-out on the wheel/tyre.

The -VAS 6230 A- detects and memorises the position of maximum measured radial force in the tyre. It then locates the smallest measurement between the wheel flange and the centre of the rim.

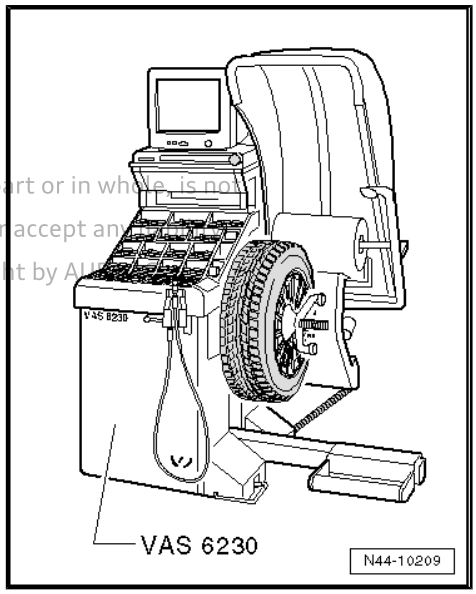

20.8 Radial and lateral run-out on wheel/tyre

Radial and lateral run-out occur when the wheel and tyre do not run absolutely true.

For technical reasons, 100% true running is not possible.

For this reason, the manufacturers of these components allow a precisely determined tolerance.

If the tyre and wheel are mounted in an unfavourable position, this can lead to the maximum permissible tolerance for the wheel with the tyre being exceeded.

The table shows the maximum permissible tolerances for a wheel with mounted tyre.

Tolerances for radial and lateral run-out of disc wheel with tyre:

Disc wheel with tyre	Radial run-out	Lateral run-out
All	0.8 mm	0.9 mm

20.9 Checking radial and lateral run-out of wheels and tyres on V.A.G 1435

Checking lateral run-out:

– Preload dial gauge about 2 mm.
– Apply dial gauge to sidewall of the tyre as shown in illustration.
– Slowly rotate the wheel.

– Note the smallest and the largest dial readings.

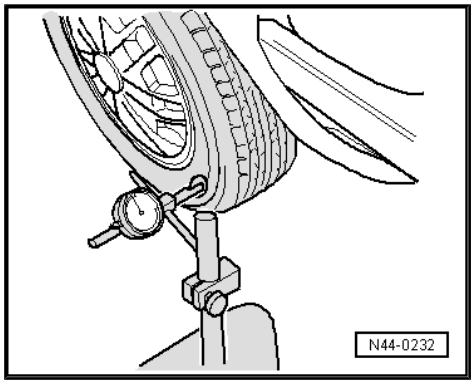

Note

If the difference is greater than 1.3 mm, the lateral run-out is too great.

In this case, you can reduce lateral run-out by match mounting the tyre ⇒ page 100 .

You can disregard extreme readings on the dial gauge which are due to small irregularities in the rubber.

Checking radial run-out:

– Preload dial gauge about 2 mm.

– Apply dial gauge to running surface of the tyre as shown in illustration.

– Slowly rotate the wheel.

– Note the smallest and the largest dial readings.

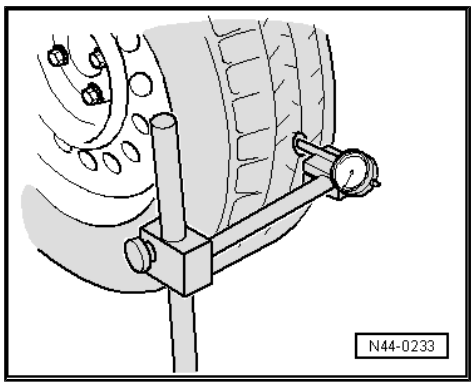

Note

If the difference is greater than 1 mm, the radial run-out is too great.

In this case, you can reduce radial run-out by match mounting the tyre ⇒ page 100 .

20.10 Checking radial and lateral run-out of wheels and tyres with wheel balancing machine centring system - VAS 5271-

Protected by copyright. Copying for private or commercial purposes, in part or in whole, is not permitted unless authorised by AUDI AG. AUDI AG does not guarantee or accept any liability with respect to the correctness of information in this document. Copyright by AUDI AG.

Checking lateral run-out:

– Clamp wheel on wheel balancer.

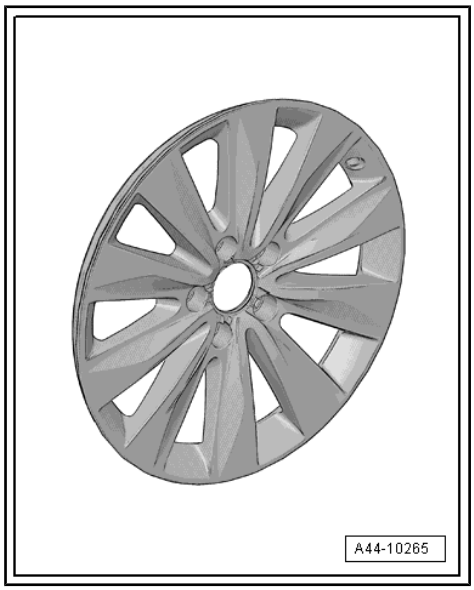

Note

- *On rims with bonded wheel trims, take care not to scratch the wheel trims.*
- *Wheel trims have a very sensitive surface.*
- *If a wheel trim is damaged, the rim must be renewed.*
- *The wheel trim cannot be renewed.*

– Use wheel balancing machine centring system - VAS 5271- .

– Preload dial gauge about 2 mm.

– Apply dial gauge to sidewall of the tyre as shown in illustration.

– Slowly rotate the wheel.

– Note the smallest and the largest dial readings.

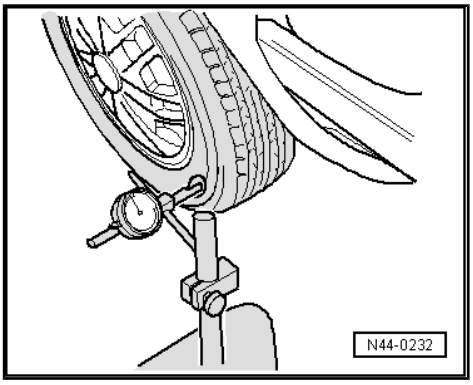

Note

If the difference is greater than 1.3 mm, the lateral run-out is too great.

In this case, you can reduce lateral run-out by match mounting the tyre ⇒ page 100 .

You can disregard extreme readings on the dial gauge which are due to small irregularities in the rubber.

Checking radial run-out:

– Preload dial gauge about 2 mm.

– Apply dial gauge to running surface of the tyre as shown in illustration.

– Slowly rotate the wheel.

Protected by copyright. Copying for private or commercial purposes, in part or in whole, is not permitted unless authorised by AUDI AG. AUDI AG does not guarantee or accept any liability with respect to the correctness of information in this document. Copyright by AUDI AG.

– Note the smallest and the largest dial readings.

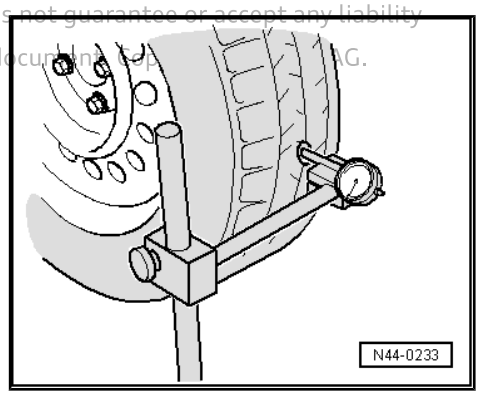

Note

If the difference is greater than 1 mm, the radial run-out is too great.

In this case, you can reduce radial run-out by match mounting the tyre.

Note

If the measured value exceeds the specification, acceptable smoothness cannot be attained.

20.11 Checking radial and lateral run-out on rim

– Clamp rim on balancer.

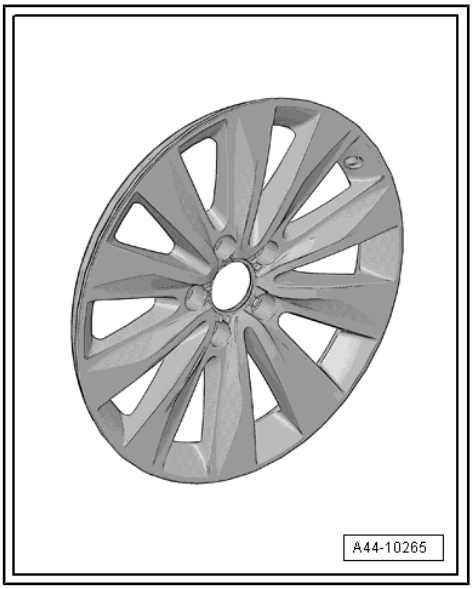

Note

- *On rims with bonded wheel trims, take care not to scratch the wheel trims.*
- *Wheel trims have a very sensitive surface.*
- *If a wheel trim is damaged, the rim must be renewed.*
- *The wheel trim cannot be renewed.*

– Use wheel balancing machine centring system - VAS 5271- .

– Preload dial gauge about 2 mm.

– Slowly rotate rim.

– Note the smallest and the largest dial readings.

S - Lateral run-out

H - Radial run-out

– Compare the measured values with the specifications in the table.

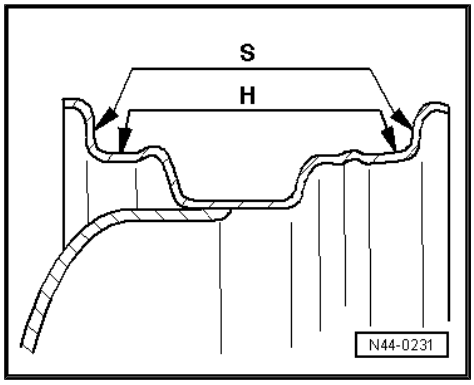

Note

You can disregard extreme readings on the dial gauge which are due to small irregularities.

Specifications for radial and lateral run-out on wheel

Steel disc wheel	Radial run-out	Lateral run-out
Steel disc wheel	0.5 mm	0.5 mm
Aluminium disc wheel	0.3 mm	0.3 mm

Note

If the measured value exceeds the specification, acceptable smoothness cannot be attained.

Protected by copyright. Copying for private or commercial purposes, in part or in whole, is not permitted unless authorised by AUDI AG. AUDI AG does not guarantee or accept any liability with respect to the correctness of information in this document. Copyright by AUDI AG.

20.12 Match mounting

When radial or lateral run-out of the wheel and tyre coincide, the out-of-true running of the wheel is amplified by the tyre.

For technical reasons, 100% true running is not possible when there is radial and lateral run-out on the wheel and tyre.

Under unfavourable circumstances, the radial or lateral run-out of the entire wheel with tyre may be greater than permitted.

The individual values of the wheel and the tyre may nevertheless each be within the permitted tolerances.

Turning the tyre strategically with respect to the wheel can partially compensate for radial or lateral run-out.

This procedure, known as "match mounting", can be used to optimise the true-running properties of the wheel and tyre assembly.

Before match mounting the used wheels which are fitted on the vehicle, the tyres must be run warm. This will eliminate any flat spots caused by storage or handling.

Procedure for match mounting:

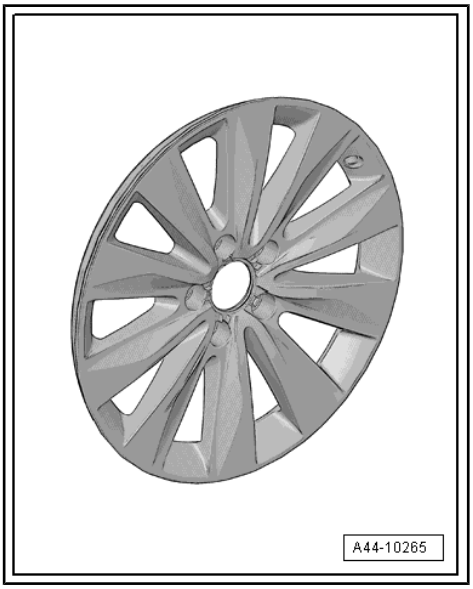

Note

- *On rims with bonded wheel trims, take care not to scratch the wheel trims.*
- *Wheel trims have a very sensitive surface.*
- *If a wheel trim is damaged, the rim must be renewed.*
- *The wheel trim cannot be renewed.*

– Deflate the tyre.
– Press the tyre beads off the rim flanges.
– Coat the tyre bead all round with tyre fitting lubricant.
– Rotate the tyre 180° with respect to the wheel.
– Inflate the tyre to approx. 4 bar.
– Clamp wheel with tyre on balancer.
– Check true running/radial and lateral run-out.

Note

- *If the specified value for radial and lateral run-out is not exceeded, the wheel can be balanced to 0 grams. For specified values, refer to* *⇒ page 100* *.*
- *If the radial and lateral run-out are not within the specified values, the tyre must be rotated again.*

– Deflate the tyre and press off the tyre beads from the rim flanges.
– Rotate the tyre 90° with respect to the wheel (1/4 of a turn).
– Inflate the tyre to 4 bar again and check true running.

Note

- *If the specified value for radial and lateral run-out is not exceeded, the wheel can be balanced to 0 grams.*
- *If the radial and lateral run-out are not within the specified values, the tyre must be rotated again.*

– Press the tyre off the rim flanges again as described above.
– Rotate the tyre 180° with respect to the wheel (1/2 a turn).

If the radial and/or lateral run-out are still not within the specified values, check the rim for radial and/or lateral run-out.

If the measured values for radial and lateral run-out of the wheel are within the specified values, the tyre has an impermissibly high radial or lateral run-out. In this case, the tyre must be renewed.

Protected by copyright. Copying for private or commercial purposes, in part or in whole, is not permitted unless authorised by AUDI AG. AUDI AG does not guarantee or accept any liability with respect to the correctness of information in this document. Copyright by AUDI AG.

21 Vehicle pulls to one side

21.1 General notes

Protected by copyright. Copying for private or commercial purposes, in part or in whole, is not permitted unless authorised by AUDI AG. AUDI AG does not guarantee or accept any liability with respect to the correctness of information in this document. Copyright by AUDI AG.

Perform a test drive to determine whether a vehicle is pulling to one side and if so, which side. If the vehicle pulls to one side, see procedure on ⇒ page 103.

If wheel alignment is checked, include wheel alignment test results in tyre complaint report.

General notes

Manufacturer's tolerances can lead to a slight amount of taper (asymmetry) in the tyre carcass. The rolling tyre then develops a lateral force which acts directly on the suspension, causing a self-steering effect on the vehicle. Strategic rotation of the wheels can balance out this self-steering behaviour.

Taper (asymmetry)

Taper is caused by a slight offset in the tread area and/or the plies (amounting to a few tenths of a millimetre) in relation to the geometric centre of the tyre. Taper is not visible and cannot be measured with equipment available in the workshop.

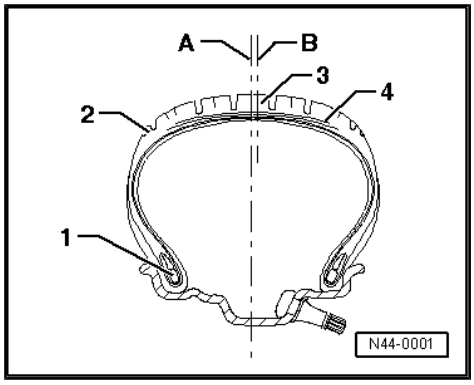

1 - Bead

2 - Shoulder

3 - Tread surface

4 - Steel plies

A - Geometrical centre of tyre

B - Actual centre of plies It can be offset to inside or outside.

Exaggerated for clarity.

1 - Plies and tread surface offset

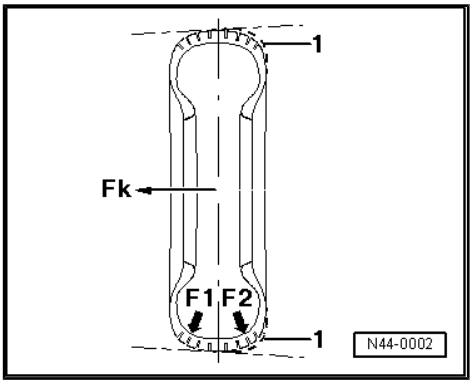

The offset produces differences in stiffness at the inner and outer shoulders of the tyre, resulting in differing forces on the contact patch. Consequently the belt or tread will not be pressed onto the road surface with the same force (F1, F2). A slightly tapered overall shape develops. The resulting force (conicity force Fk) can, depending on the speed, become so great that the vehicle then pulls to one side.

If the force Fk on one wheel of the axle is, for example, 50 Newton, and also 50 Newton on the other wheel, and both forces are exerted in the same direction, the forces are cumulated. Reversing a tyre on the rim can compensate for the lateral pull because the forces then act in opposite directions.

As the direction in which the conicity force acts is not visible, only road tests and strategic rotation of wheels and tyres will establish which tyre is causing the tendency to pull to one side.

The tyre consists of numerous components and materials which are vulcanised to form a single part at the end of a complicated manufacturing process. This results in differing production tolerances which can cause more or less noticeable lateral forces (lateral forces resulting from the tapered shape). These forces can also occur in new tyres.

Protected by copyright. Copying or distribution of this document, or of its contents, in part or in whole, is not permitted unless authorised by AUDI AG. AUDI AG does not guarantee or accept any liability with respect to the correctness of information in this document. Copyright by AUDI AG.

Pulling to one side on front axle:

Pulling to one side can be caused by the running gear. However, experience shows that in 90% of all complaints, the tyres cause pulling to one side.

Pulling to one side during normal driving:

On a straight, level road surface, the vehicle wants to pull to one side at a constant speed or with moderate acceleration. Force can be felt at the steering wheel.

Pulling to one side during fast acceleration:

Pulling to one side during fast acceleration is, in part, due to the basic design of vehicles with front wheel drive. Different friction levels at the left and right wheels or possible irregularities in the road surface (potholes) and consequently varying road adhesion have a substantial influence on the handling characteristics. This does not constitute a complaint which is covered by the warranty.

21.2 Remedies when vehicle pulls to one side

Test conditions before and during the test drive:

- Check all suspension components on the front and rear axles for damage.
- Check tyre pressure and correct if necessary.
- Check the tyres for external damage: Punctures, cuts, blisters on the sidewalls, flat spots from braking and or damage to the tread.
- Ask the customer if the tyre had been damaged by a nail or similar object and was repaired by a tyre dealer. You may have to renew such tyres.
- Check tyres for even wear and tread depth.
- Are all tyres of the same construction, make and tread pattern?
- If the tyres are non-directional, ensure that all DOT classifications on the tyre face outwards. The wheels and/or tyres on

the vehicle have possibly already been changed around at an earlier date.

– Is the make of tyre approved by the factory as original equipment?

– Perform the road test on a road which is level, straight and ungrooved and does not drop off to one side.

– Perform the test drive with the customer under the conditions specified above. Ask the customer to demonstrate the problem.

Note

There must be no cross wind during the road test.

Protected by copyright. Copying for private or commercial purposes, in part or in whole, is not permitted unless authorised by AUDI AG. AUDI AG does not guarantee or accept any liability with respect to the correctness of information in this document. Copyright by AUDI AG.

If the complaint is justified, we recommend rotating the wheels and tyres as described below.

Before you begin, observe the following notes; otherwise your efforts may not have the desired effect.

- Mark the tyres and wheels before rotating them.
- After rotating wheels or reversing the tyre on its rim, you must observe very carefully how the vehicle behaves during the road test. Note exactly what was changed.
- Assess the intensity of or a possible change in the tendency to pull to one side.
- For this purpose it is important that the road tests are always performed by the same person on the same road. It is best to drive the »test course« in both directions.
- Replacing a tyre with a new tyre does not guarantee that pulling to one side will be eliminated. See also ⇒ page 102 “Taper”. Therefore it is recommended to strategically change round the wheels as described below as a first step.
- If there are large differences in the tread depth of the tyres on the front and rear axles, the tyres with the deeper tread should always be mounted on the front axle.

21.3 Strategic rotation of wheels for non-directional tyres

I	
Perform a road test to determine if a vehicle pulls to one side and if so, which side.	
I	
If the vehicle pulls to one side, change around the front wheels.	
I	
Perform road test.	
Vehicle travels in a straight line - END	
Vehicle now pulls to other side	Vehicle still pulls to the same side
I	I
Reverse one front tyre on its rim (direction of travel is reversed).	Change around tyres from front to rear.
I	I
Perform road test.	Perform road test.
Vehicle travels in a straight line - END	Vehicle travels in a straight line - END
Vehicle does not travel in a straight line.	Vehicle does not travel in a straight line.
I	I

<table>
<tr><td colspan="2">Change around the front and rear wheels</td><td>Vehicle now pulls to other side</td><td>No change</td></tr>
<tr><td colspan="2">I</td><td>I</td><td>I</td></tr>
<tr><td colspan="2">Perform road test.</td><td rowspan="4">Reverse one front tyre on its rim (direction of travel is reversed)</td><td rowspan="5">Check front and rear axle geometry and adjust if necessary. If adjustment is OK, consult Product Support department</td></tr>
<tr><td colspan="2">Vehicle travels in a straight line - END</td></tr>
<tr><td colspan="2">Vehicle does not travel in a straight line.</td></tr>
<tr><td colspan="2">I</td></tr>
<tr><td colspan="2">Change around front wheels.</td><td>I</td></tr>
<tr><td colspan="2">I</td><td>I</td></tr>
<tr><td colspan="2">Perform road test.</td><td>Perform road test.</td><td></td></tr>
<tr><td>Vehicle travels in a straight line - END</td><td>Vehicle does not travel in a straight line.</td><td>Vehicle travels in a straight line - END</td><td></td></tr>
<tr><td colspan="2">I</td><td>Vehicle does not travel in a straight line.</td><td></td></tr>
<tr><td></td><td>Mount new tyres on front axle</td><td>Mount new tyres on front axle</td><td></td></tr>
<tr><td colspan="2">I</td><td>I</td><td></td></tr>
<tr><td colspan="2">Perform road test.</td><td>Perform road test.</td><td></td></tr>
<tr><td colspan="2">Vehicle travels in a straight line - END</td><td>Vehicle travels in a straight line - END</td><td></td></tr>
<tr><td colspan="2">I</td><td>I</td><td></td></tr>
<tr><td colspan="4">Vehicle does not travel in a straight line; consult Audi Product Support department.</td></tr>
</table>

Protected by copyright. Copying for private or commercial purposes, in part or in whole, is not permitted unless authorised by AUDI AG. AUDI AG does not guarantee or accept any liability with respect to the correctness of information in this document. Copyright by AUDI AG.

21.4 Strategic rotation of wheels for unidirectional tyres

On rims with bonded wheel trims, take care not to scratch the wheel trims.

Wheel trims have a very sensitive surface.

If a wheel trim is damaged, the rim must be renewed.

The wheel trim cannot be renewed.

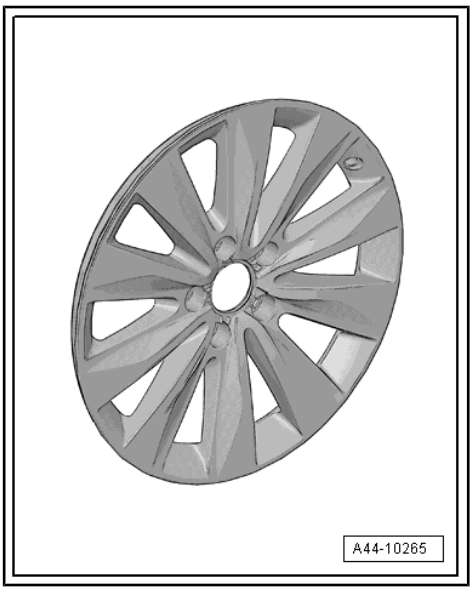

I
Perform a road test to determine if a vehicle pulls to one side and if so, which side.
I

Interchange wheel with tyres from front to back
I
Perform road test.
Vehicle travels in a straight line - END
I
First renew one tyre on the front axle.
I
Perform road test.
Vehicle travels in a straight line - END
Vehicle does not travel in a straight line.
I
Renew other tyre on the front axle.
I
Perform road test.
Vehicle travels in a straight line - END
Vehicle does not travel in a straight line.
I
Check wheel alignment at front and rear.
I
Perform road test.
Vehicle travels in a straight line - END
Vehicle does not travel in a straight line; consult Product Support department.

Protected by copyright. Copying for private or commercial purposes, in part or in whole, is not permitted unless authorised by AUDI AG. AUDI AG does not guarantee or accept any liability with respect to the correctness of information in this document. Copyright by AUDI AG.

22 Tyre damage

22.1 General notes

Note

Protected by copyright. Copying for private or commercial purposes, in part or in whole, is not permitted unless authorised by AUDI AG. AUDI AG does not guarantee or accept any liability with respect to the correctness of information in this document. Copyright by AUDI AG.

- *As tyre damage can have serious consequences, you and the driver should regularly check the tyres to identify any problems at an early stage.*
- *Regular checks of the tyres and tyre pressures is the best way to identify any problems at an early stage.*
- *Pay attention to the display if the vehicle is equipped with a Tyre Pressure Monitoring System.*
- *A display in the dash panel insert informs the driver about the tyre pressure change.*

Caution

Tyre damage with sudden loss of pressure is usually only noticeable at high speeds when the load on the tyre is at its highest.

Damaged tyres cannot withstand driving conditions such as high speed, long distances, dynamic driving, etc.

Damage can have a number of causes:

- Driving with insufficient inflation pressure.
- Assembly error when fitting tyres on rims.
- Damage by embedded objects.
- Ageing.
- Improper storage.

Caution

Whenever a safety risk cannot be ruled out, the tyre must be renewed.

22.2 Checking tyres

When checking a tyre, look out especially for the following criteria:

- Surface erosion or ripples on the inner side (inflation pressure was too low or not sufficient for the load)
- Loose rubber or loose radial threads

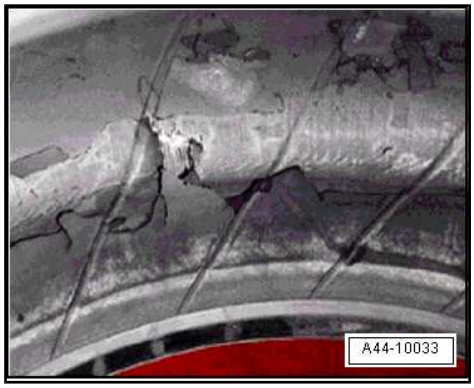

- Separated or deformed bead core

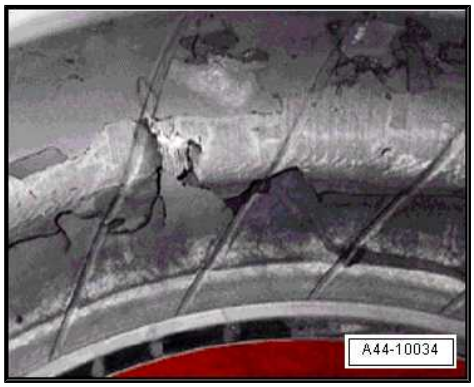

- Damage to tyre bead with cord ply visible

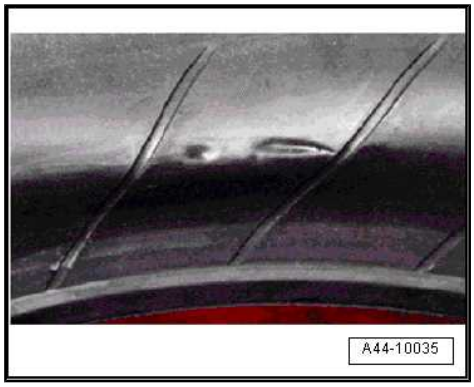

22.3 Construction of belted radial tyres

The illustration shows a cross section of a radial tyre.

Protected by copyright. Copying for private or commercial purposes, in part or in whole, is not permitted unless authorised by AUDI AG. AUDI AG does not guarantee or accept any liability with respect to the correctness of information in this document. Copyright by AUDI AG.

1 - Tread block

2 - Tread groove

3 - Tread surface

4 - Nylon ply

5 - Belt layers, usually made of steel

6 - Bead core, consists of steel wires vulcanised into rubber. They ensure secure seating of the tyre on the rim.

7 - Bead filler

8 - Wheel flange protection protects the rim and tyre from abrasion from, for example, contact with the kerb. Tyres with Maximum Flange Shield (or rim protector bar) are marked with the abbreviation MFS.

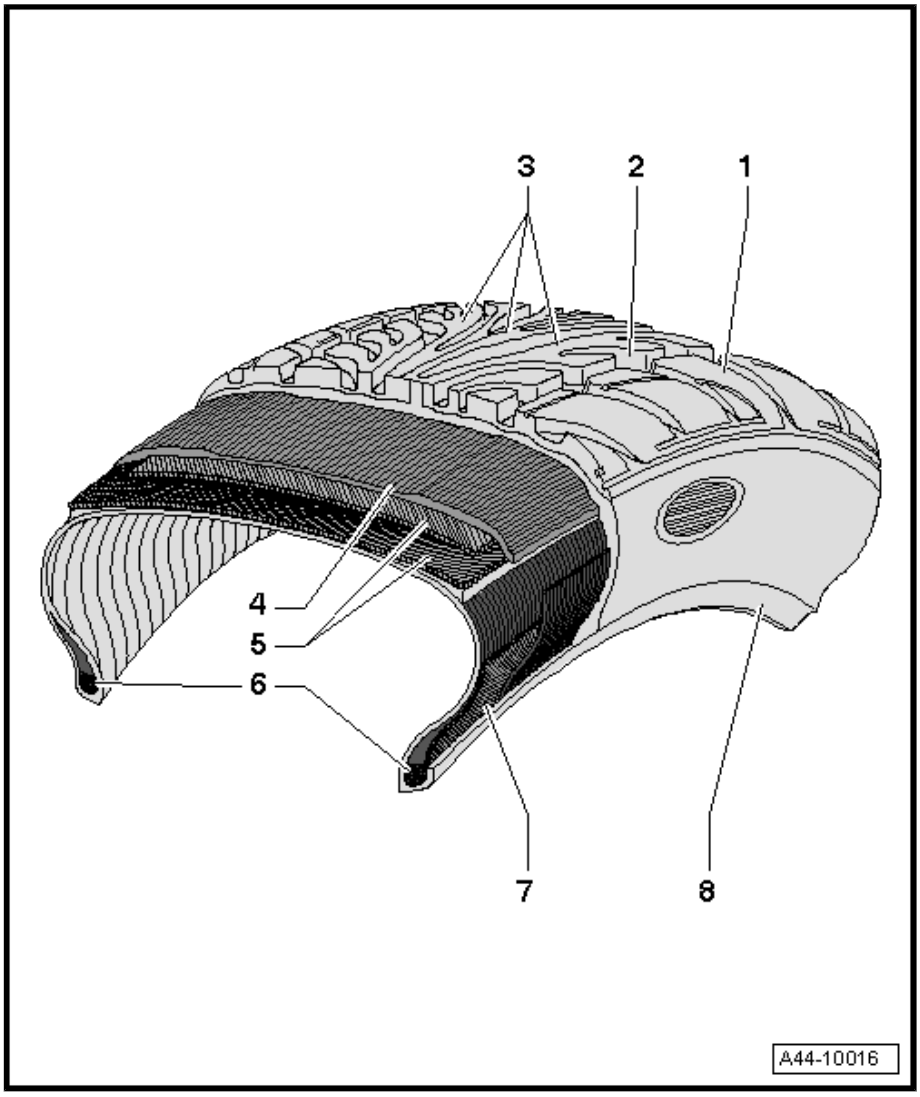

The nylon ply -4-, belt layers -5-, bead cores -6- and bead filler -7- form the carcass. The carcass is the »load-bearing structure« of the tyre.

22.4 Torn tread

Protected by copyright. Copying for private or commercial pur
permitted unless authorised by AUDI AG. AUDI AG does not g
with respect to the correctness of information in this docume

22.5 Undulations

Undulations are slight concavities in the tyre sidewall.

They run from the bead towards the sidewall of the tyre.

Radial depressions are caused by the accumulation of material at the joints of the tyre components.

Undulations do not influence:

- Safety,
- Service life,
- Running characteristics or other properties of the tyre.

Undulations are visible to varying extents. It is not necessary to inspect the tyre or remove it from the rim.

What causes undulations?

Modern steel belted radial tyres are constructed with single-ply sidewalls to save weight.

The sidewall components consist of long strips before they are joined together to form a tyre. They must overlap at the joints. Consequently, slight unevenness or ripples are created in the area of the overlapping parts. The overlaps are easier to see from the outside due to the single-ply construction.

22.6 Impact damage

A swelling in the sidewall of the tyre indicates that the substructure of the carcass has been damaged.

Typical causes for such damage include, for example, driving over kerbs at a sharp angle.

Pinching the tyre in this way can damage the carcass.

The substructure of the tyre is stretched so far that individual fibres in the carcass may be broken.

The extent of the damage depends on the speed of impact, the angle of impact, the inflation pressure, the axle load and the type of obstacle.

Kerb impact damage marks on tyre sidewall.

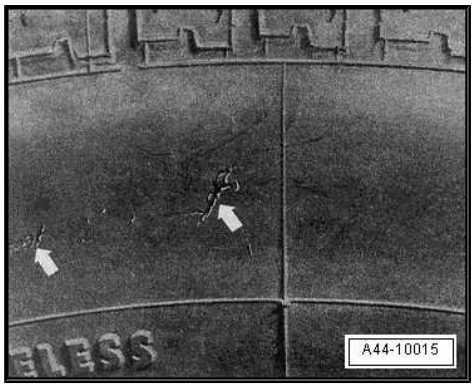

Note

- *Driving over kerbs should be avoided wherever possible.*
- *If you cannot avoid driving over a kerb, you should do so very slowly and as square-on as possible.*

Interior view of a tyre with a ruptured carcass.

Due to a severe impact, the carcass was pinched on the wheel flange and is ruptured in the contact area.

Protected by copyright. Copying for private or c is not permitted unless authorised by AUDI AG. AUDI ility with respect to the correctness of information in this document. Copyright by AUDI AG.

Double rupture caused by pinching when driving over a kerb. Often not detectable from outside.

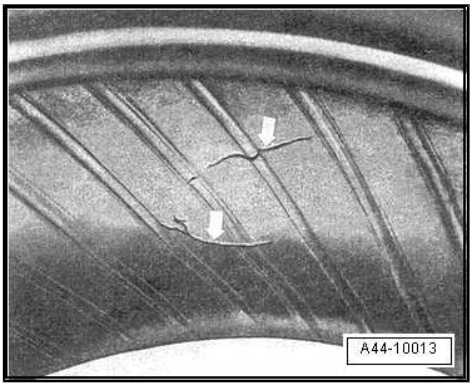

22.7 Cuts

Cut caused by a sharp-edged object.

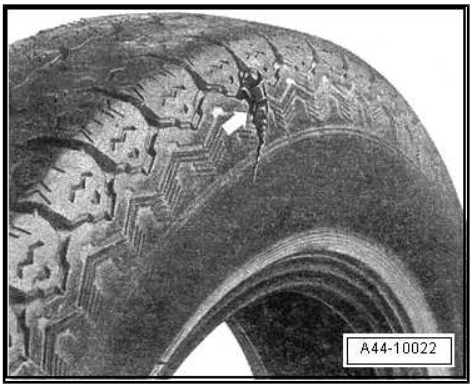

22.8 Damage caused by foreign objects

Driving over hard, pointed objects like nails, screws and the like can pierce the tyre.

This always leads to tyre damage.

Often, the object is so securely embedded in the tyre that it will not free itself even at higher speeds.

It is possible that the foreign object closes off the puncture.

This results in a gradual loss of pressure, which the driver will not notice immediately, but which can lead to sudden and complete tyre failure.

Pay attention to the display if the vehicle is equipped with a Tyre Pressure Monitoring System.

A display in the dash panel insert informs the driver about the tyre pressure change.

Protected by copyright. Copying for private or commercial purposes, in part or in whole, is not permitted unless authorised by AUDI AG. AUDI AG does not guarantee or accept any liability with respect to the correctness of information in this document. Copyright by AUDI AG.

22.9 Loss of air from tyre

If the customer complains of a loss of air from a tyre, it is essential that you check for embedded foreign bodies.

Note

No repair should be attempted on steel-belted tyres if their structure has been punctured by a foreign body.

Corrosion can develop on the steel wires. This will always lead to the separation of the rubber from the steel belt.

Generally, one cannot determine when the foreign body was embedded. The tyre structure may already have been damaged as a result of driving with insufficient tyre pressure.

Damaged belt wires will sooner or later lead to separation of the rubber from the steel belt. As a result, at some point, the tyre can fail completely, long after the tyre was first damaged.

Tyre damage caused by foreign bodies is not covered by the warranty.

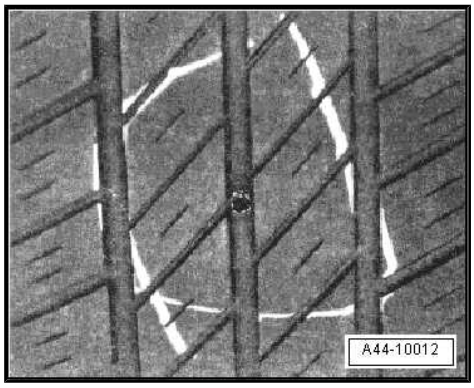

22.10 Damage occurring when fitting tyres

Protected by copyright. Copying or distribution for commercial purposes, in part or in whole, is not permitted unless authorised by AUDI AG. AUDI AG does not guarantee or accept any liability with respect to the correctness of information in this document. Copyright by AUDI AG.

Bead core broken during tyre inflation.

Modern radial ply tyres for passenger cars are mounted only on safety rims. Safety rims have a hump -1- running along the bead seat.

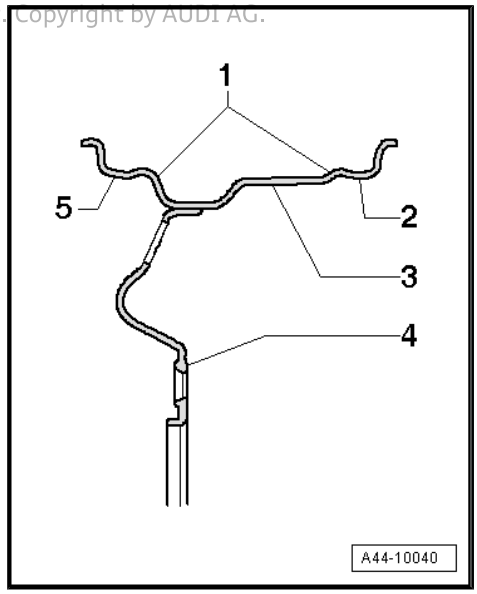

1 - Hump (H2)

2 - Inner bead seat

3 - Rim

4 - Wheel

5 - Outer bead seat

The hump prevents the tyre from being pressed out of the bead seat when travelling with insufficient tyre pressure.

When the tyre is inflated, the bead of the tyre may not slip completely over the outer rim hump.

In this case, there is a danger of the bead core becoming overstretched if the tyre pressure is too high. The steel wires would then rupture partially or completely. A broken bead core cannot be detected from the outside.

> ⚠ DANGER!
>
> - *Tyres with damaged bead cores are not seated safely and securely on the rim. Such tyres are a safety risk!*
> - *In addition, there is a risk of the partly broken bead core breaking apart during continued operation and the tyre could suddenly tear open. If the bead core breaks during inflation, the carcass will also be destroyed.*

22.11 Bead damage caused by fitting machine

The following errors which can be made when fitting tyres can lead to severe tyre damage:

- When rolling the upper bead on the tyre fitting machine, the opposite tyre bead is not seated completely in the rim well.

- The fitting head was not adjusted correctly.
- The edge of the fitting roller rolls onto the bead.
- The guide rollers are worn or have sharp edges.

It is often possible to identify the tracks of the guide roller as it was applied or ran off where the damage occurred.

Note

Both tyre beads as well as the bead seats must always be coated with assembly paste.

If fitting damage remains undetected, there is a danger that the tyre will fail later during operation.

THEREFORE PLEASE NOTE:

- Never fit a tyre without using assembly paste.
- Do not allow the bead seating pressure to exceed 3 bar.
- Do not allow the tyre inflation pressure to exceed 4 bar.
- When the tyre has been fitted, reduce the tyre pressure to the specified value.

22.12 Tyre pressure

The tyre pressure must be checked regularly. We recommend checking the tyre pressure every two weeks. The correct tyre pressure is especially important on long trips or when carrying a heavy load. A dynamic driving style also requires correct or even slightly increased tyre pressure.

Protected by copyright. Copying for private or commercial purposes, in part or in whole, is not permitted unless authorised by AUDI AG. AUDI AG does not guarantee or accept any liability with respect to the correctness of information in this document. Copyright by AUDI AG.

22.13 Tyre damage due to insufficient inflation pressure

The most common causes for tyre failure is minor external damage, a defective valve or a leaking rim due to corrosion or damage.

Excessive heat due to driving with very low tyre pressure led to overheating and subsequent separation of the carcass from the rubber material.

The tyre shown here was sporadically driven with an inflation pressure which was insufficient for the load. A typical indication for this is the scuffing all round the bead caused by the wheel flange and also the discolouration. Small, furrowed creases are visible along the inside of the sidewall.

When the tyre rolls, strong shear forces develop between the steel belt layers, especially at the ends of the belts.

Wide furrows close to the bead all round the tyre indicate that the tyre was driven with insufficient pressure.

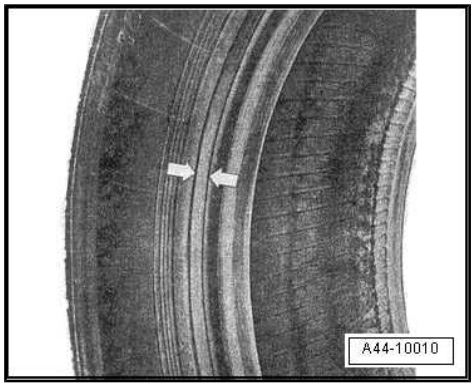

Driving a vehicle with insufficient tyre pressure or ignoring or not recognising tyre damage can have serious consequences.

The tyre can no longer withstand the forces which develop when the vehicle is driven.

The function of the tyre is severely restricted by the defects mentioned above. The rubber compounds separate, which results in the partial separation of tyre components or even its complete destruction.

Such damage usually develops over a long period of time. If an already damaged tyre is exposed to high stress, the centrifugal forces which occur at high speeds can tear components off the tyre.

22.14 Slow loss of tyre pressure

Slow loss of tyre pressure is particularly problematic and is often detected very late.

Insufficient tyre pressure and the subsequently increased amount of flexing (internal friction) causes the tyre material to heat up considerably and may lead to the separation of the various components and rubber compounds.

In the end, the tyre is usually destroyed completely.

The cause for the slow pressure loss cannot always be determined because the tyre is severely damaged and structural components of the tyre are missing.

The following illustrations show tyres which were destroyed by driving with insufficient inflation pressure.

Always pay attention to the display if the vehicle is equipped with a Tyre Pressure Monitoring System.

22.15 Temperature increase caused by insufficient inflation pressure

Protected by copyright. Copying for private or commercial purposes, in part or in whole, is not permitted unless authorised by AUDI AG. AUDI AG does not guarantee or accept any liability with respect to the correctness of information in this document. Copyright by AUDI AG.

The graph shows the temperature changes for a tyre in operation at a speed of 180 km/h.

A - Normal range. When the specified tyre pressure is adhered to, the temperature will remain stable.

B - Danger zone. When tyre pressure is 0.3 bar below specification, the temperature rises to above 120° C at high speeds.

C - Critical temperature threshold. A tyre defect will develop.

T - Temperature

t - Travel time in minutes

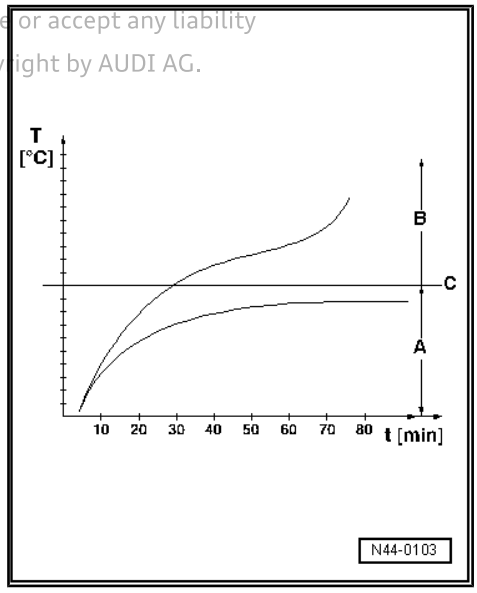

22.16 Tears in tyre

Use for tears in tyre, lost patches of tread or burst tyres.

Damage caused by external forces is not covered by the warranty.

Protected by copyright. Copying for private or commercial purposes, in part or in whole, is not permitted unless authorised by AUDI AG. AUDI AG does not guarantee or accept any liability with respect to the correctness of information in this document. Copyright by AUDI AG.

23 Vehicles with breakdown set

Audi vehicles are equipped with either a spare wheel or a breakdown set, depending on the vehicle specification.

The breakdown set is stowed in the luggage compartment in place of the spare wheel. It consists of a compressor and a bottle of tyre sealant.

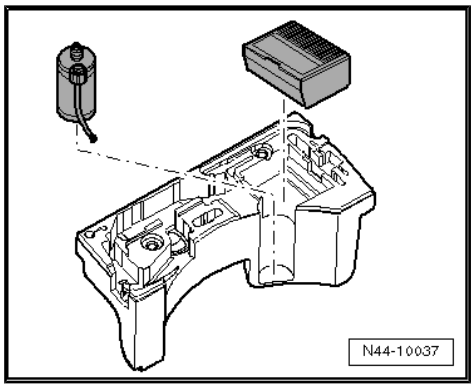

23.1 Tyre sealant

WARNING

After using tyre sealant, the wheel electronics on the affected wheel must be renewed.

The tyre sealant in the bottle can only be kept for a limited period of time.

The expiry date -arrow- is specified on the bottle.

In the example shown, the expiry date on the bottle is 05/2003. The bottle must be renewed by that date.

The bottle must also be renewed any time it is opened, e.g. after a puncture.

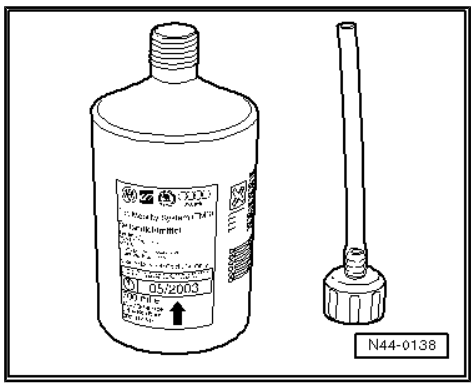

23.2 Removing a tyre from the rim

Before removing a tyre filled or sealed with tyre sealant, you must drain the sealant from the tyre.

Protected by copyright. Copying for private or commercial purposes, in part or in whole, is not permitted unless authorised by AUDI AG. AUDI AG does not guarantee or accept any liability with respect to the correctness of information in this document. Copyright by AUDI AG.

WARNING

- *Avoid eye and skin contact with the tyre sealant.*
- *It can cause injury, irritation to eyes and allergies.*
- *Wear protective gloves and goggles when carrying out installation or repair work.*

– Place the wheel on a flat surface.

– Unscrew the valve core from the tyre valve.

– Carefully make a hole in the shoulder area of the tyre using a suitable drill or cutting tool.
– Hold the wheel over a drip tray and let the sealant drain off.
– Remove the tyre from the wheel rim.
– Clean the wheel, e.g. with a wet cloth.

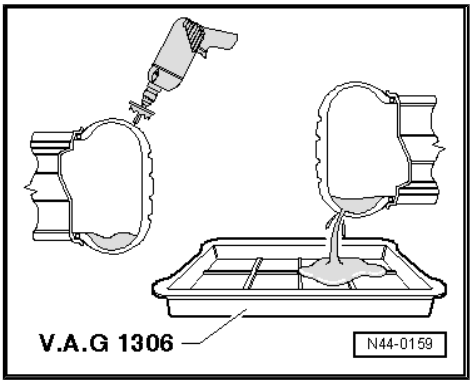

23.3 Disposal of sealant

Any tyre sealant remaining in the bottle and full bottles whose expiry date has lapsed must be discarded.

Old or residual tyre sealant must not be mixed and discarded with other liquids. Adhere to the disposal guidelines in ⇒ Service Organisation Handbook; Environmental protection and Waste disposal .

Protected by copyright. Copying for private or commercial purposes, in part or in whole, is not permitted unless authorised by AUDI AG. AUDI AG does not guarantee or accept any liability with respect to the correctness of information in this document. Copyright by AUDI AG.

23.4 Fitting a new tyre

WARNING

The fitting temperature of a tyre must not be less than 21 °C and should not exceed 30 °C.

WARNING

After using tyre sealant, the wheel electronics on the affected wheel must be renewed.

• Make sure to clean the wheel beforehand.
– The wheel electronics must be renewed if tyre sealant has been applied, as liquid deposits on the pressure sensor could lead to incorrect displays.
– Fit a new tyre valve.
– Unscrew the valve core.
– Inflate the tyre to approx. 3 to 4 bar; you should hear the bead of the tyre slip over the rim hump.
– Screw in the valve core.
– Adjust the tyre pressure in line with the specifications.
– Balance the wheel.

24 Temporary spare wheels

⇒ “24.1 Notes on the use of temporary spare wheels”, page 118

24.1 Notes on the use of temporary spare wheels

Notify your customers of the following information whenever necessary, and refer them to the Owner's Manual.

The information given below also applies to spare wheels which have a yellow sticker specifying “MAX 80 km/h” or “MAX 50 mph”.

Note

- *The spare wheel/temporary spare wheel is designed to be used only for a brief period. It should therefore be replaced with the normal wheel as soon as possible.*
- *The tyre pressure should be checked as soon as possible after fitting the spare wheel/temporary spare wheel. Refer to the tyre pressure specifications on the vehicle or to the Maintenance manual for the correct tyre pressures.*
- *Do not exceed the maximum speed stated on the spare wheel (“MAX 80 km/h” or “MAX 50 mph”).*
- *Avoid full acceleration, heavy braking and fast cornering.*
- *Never drive the vehicle with more than one spare wheel/temporary spare wheel.*
- *It is not permitted to use snow chains on the spare wheel for technical reasons.*
- *If you need to use snow chains, you should therefore fit the spare wheel on the rear axle if the puncture occurred on a front tyre. The good wheel removed from the rear axle should then be fitted in place of the punctured front wheel.*

Protected by copyright. Copying for private or commercial purposes, in part or in whole, is not permitted unless authorised by AUDI AG. AUDI AG does not guarantee or accept any liability with respect to the correctness of information in this document. Copyright by AUDI AG.

25 Run-flat tyres

WARNING

The fitting temperature of a tyre must not be less than 21 °C and should not exceed 30 °C.

Caution

Run-flat tyres must only be fitted on vehicles with Tyre Pressure Monitoring System/Tyre Pressure Loss Indicator *⇒ "12 Tyre Pressure Monitoring Systems/Tyre Pressure Loss Indicator", page 49* *.*

⇒ "25.1 Renewing tyres/conditions for use of run-flat tyres", page 119

⇒ "25.2 Tyres with run-flat capability (PAX)", page 120

⇒ "25.3 Self supporting tyres (SST) with run-flat capability", page 127

⇒ "25.4 Tyres with run-flat capability (Seal Inside technology)", page 129

⇒ "25.5 Servicing tyres with run-flat capability", page 131

Protected by copyright. Copying for private or commercial purposes, in part or in whole, is not permitted unauthorized. AUDI AG does not guarantee or accept any liability with respect to the correctness of information in this document. Copyright by AUDI AG.

25.1 Renewing tyres/conditions for use of run-flat tyres

WARNING

The fitting temperature of a tyre must not be less than 21 °C and should not exceed 30 °C.

Caution

Run-flat tyres must only be fitted on vehicles with Tyre Pressure Monitoring System/Tyre Pressure Loss Indicator *⇒ "12 Tyre Pressure Monitoring Systems/Tyre Pressure Loss Indicator", page 49* *.*

Since a loss of pressure on run-flat tyres cannot always be detected by the naked eye, these tyres must only be used on vehicles with a Tyre Pressure Monitoring System/Tyre Pressure Loss Indicator. The system warns the driver if the tyre pressure drops below a specified level.

Permissible:

- Direct measuring systems
- Indirect measuring systems

Run-flat tyres must only be fitted on wheels with extended hump (EH2).

Note the special installation instructions.

It is not permitted to fit both run-flat tyres and standard tyres on the same vehicle, even on separate axles.

A standard tyre can be fitted only in exceptional circumstances for a brief period and limited distance. The driver must be expressly informed that the run-flat characteristics do not apply in this case.

25.2 Tyres with run-flat capability (PAX)

Protected by copyright. Copying for private or commercial purposes, in part or in whole, is not permitted unless authorised by AUDI AG. AUDI AG does not guarantee or accept any liability with respect to the correctness of information in this document. Copyright by AUDI AG.

WARNING

The fitting temperature of a tyre must not be less than 21 °C and should not exceed 30 °C.

Caution

Run-flat tyres must only be fitted on vehicles with Tyre Pressure Monitoring System/Tyre Pressure Loss Indicator *⇒ "12 Tyre Pressure Monitoring Systems/Tyre Pressure Loss Indicator", page 49* *.*

⇒ "25.2.1 Construction of tyres with run-flat capability (PAX)", page 120

⇒ "25.2.2 Codes and designations on tyres with run-flat capability (PAX)", page 123

⇒ "25.2.3 Support ring on PAX wheels", page 123

⇒ "25.2.4 Dimensions and designations for PAX rims", page 124

⇒ "25.2.5 Inflating tyres on PAX wheels", page 124

⇒ "25.2.6 Wheel alignment", page 124

⇒ "25.2.7 Repairing tyres with run-flat capability (PAX)", page 125

⇒ "25.2.8 PAX tyres - assessing condition", page 125

⇒ "25.2.9 Checking support ring", page 126

Work on PAX wheels must only be performed by trained workshops.

These workshops have suitably trained personnel and the necessary special tools.

25.2.1 Construction of tyres with run-flat capability (PAX)

Caution

Run-flat tyres must only be fitted on vehicles with Tyre Pressure Monitoring System/Tyre Pressure Loss Indicator *⇒ "12 Tyre Pressure Monitoring Systems/Tyre Pressure Loss Indicator", page 49* *.*

Run-flat tyres (PAX) are specially developed tyres that differ from conventional tyres as follows:

PAX tyre with support ring

– -I- PAX tyre with air

– -II- PAX tyre without air

– The tyre is anchored on a special rim which prevents the tyre from sliding off when air is lost. The support ring is made of rubber and maintains stability in the event of a pressure drop.

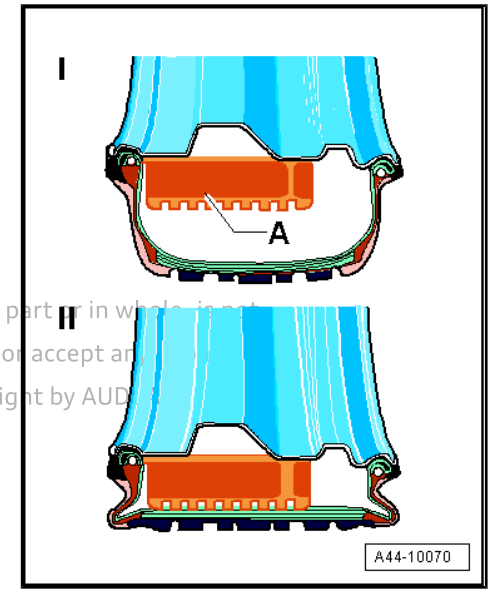

WARNING

The fitting temperature of a tyre must not be less than 21 °C and should not exceed 30 °C.

Protected by copyright. Copying for private or commercial purposes, in part or in whole, is not permitted unless authorised by AUDI AG. AUDI AG does not guarantee or accept any liability with respect to the correctness of information in this document. Copyright by AUDI AG.

Caution

Run-flat tyres must only be fitted on vehicles with Tyre Pressure Monitoring System/Tyre Pressure Loss Indicator ***⇒ "12 Tyre Pressure Monitoring Systems/Tyre Pressure Loss Indicator", page 49*** ***.***

- The inner and outer bead diameters differ in size. This makes it possible to add a support ring inside the tyre.
- The tyre is secured differently to the rim.
- This allows the tyre height to be greatly reduced. This was made possible by the reduced bead area due the special connection between the tyre and rim.
- The tyre beads are formed such that they engage in the rim seat. Therefore, the tyre remains firmly secured to the wheel/rim even when there has been a loss of inflation pressure.

Construction of the bead area for a standard tyre

1 - Wheel flange

2 - Inner plies

3 - Bead core

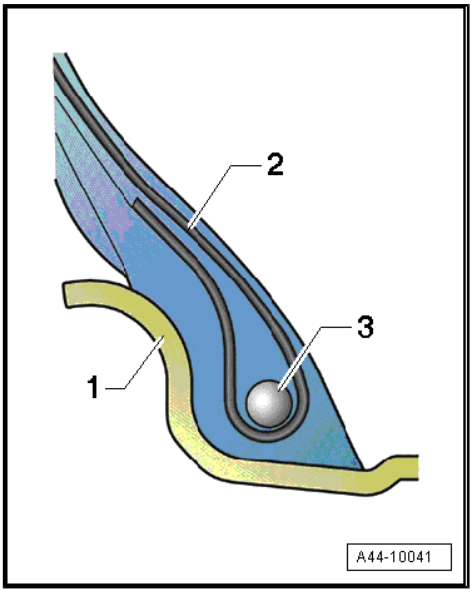

Construction of bead zone on tyres with run-flat capability (PAX)

1 - Loop

2 - Inner plies

3 - Bead core

4 - Wheel flange

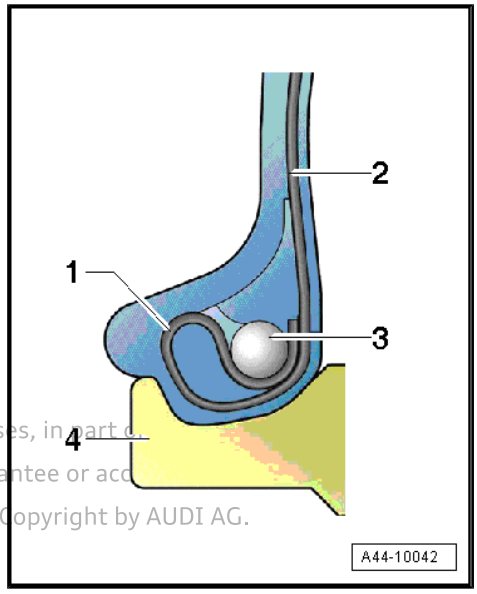

Protected by copyright. Copying for private or commercial purposes, in part or
permitted unless authorised by AUDI AG. AUDI AG does not guarantee or acc
with respect to the correctness of information in this document. Copyright by AUDI AG.

Seating of tyres with run-flat capability (PAX)

Due to the construction of the tyre, it remains firmly attached to the wheel in all driving situations.

A wedge-shaped component of the tyre is thereby pressed between the bead core and rim by the load. This occurs regardless of the tyre pressure.

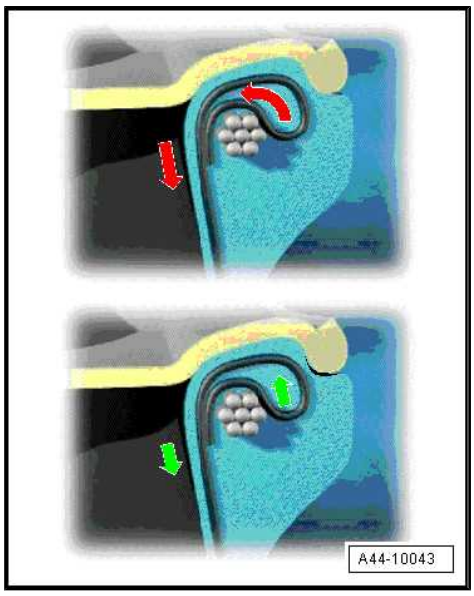

Dimensions of tyres with run-flat capability (PAX)

As compared to standard tyres, run-flat tyres (PAX) have different dimensions and designations.

Run-flat tyres (PAX) can therefore only be fitted to special wheels designed for the PAX system.

1 - Width in millimetres: tyre width from sidewall to sidewall on the standard rim (corresponds to the width dimension on standard tyres)

2 - Outer diameter in millimetres: maximum diameter of the new tyre

3 - Nominal diameter in millimetres on standardised rim seat

4 - Small bead diameter in millimetres: outer rim seat

5 - Larger bead diameter in millimetres: inner rim seat

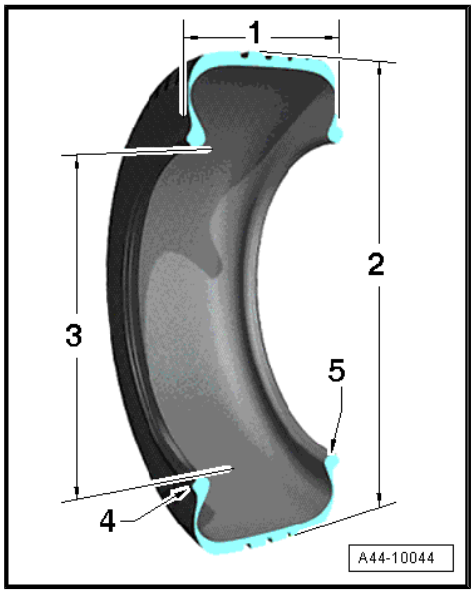

25.2.2 Codes and designations on tyres with run-flat capability (PAX)

Caution

Run-flat tyres must only be fitted on vehicles with Tyre Pressure Monitoring System/Tyre Pressure Loss Indicator *⇒ "12 Tyre Pressure Monitoring Systems/Tyre Pressure Loss Indicator", page 49* .

Protected by copyright. Copying for private or commercial purpo
permitted unless authorised by AUDI AG. AUDI AG does not gua
with respect to the correctness of information in this document.

As compared to standard tyres, run-flat tyres (PAX) have different codes and designations on the sidewall. This makes it easy to identify run-flat tyres.

Codes and designations on tyres with run-flat capability (PAX)

245 - Tyre width in millimetres

690 - Tyre diameter (outer) in millimetres

R - Radial construction

500 - Nominal diameter of standardised rim seat

A - Construction type index for the wheels with run-flat capability (PAX); "A" stands for asymmetric, since the two rim seats have different diameters.

99 - Maximum permissible load of tyre (99 = 1550 kg)

Y - Speed code ("Y" stands for a permissible top speed of 300 km/h).

25.2.3 Support ring on PAX wheels

Dimensions

Overview of important dimensions:

Codes/designations

Example: 90-500(35) CLI A 1 876107

90 - Nominal width in millimetres

500 - Nominal diameter in millimetres

35 - Height in millimetres

CLI - Support ring versions: CLI = clip support ring / FL = standard support ring

A - Construction type index, asymmetrical. Indication of tyre with run-flat capability (PAX)

1 - Support ring version

876107 - CAI, international article code

25.2.4 Dimensions and designations for PAX rims

Example: 235 x 500 A - 5 - 41

235 - Nominal width in millimetres

x - Single-unit

500 - Nominal diameter of standardised rim seat in millimetres

A - Asymmetrical

5 - Number of wheel bolt holes

41 - Rim offset in millimetres

25.2.5 Inflating tyres on PAX wheels

Observe the following important points when inflating the tyre:

– Only inflate after fitting the tyre with valve core installed. Check whether the beads have properly seated at 1 bar.

– If one of the beads is not seated properly, do not let air out of the tyre, but apply the fitting roller to the appropriate bead and press on lightly while turning. The bead will then seat itself properly.

– Then fill up with air until the specified inflation pressure for the vehicle is reached. Tyre gas for standard tyres can also be used.

Protected by copyright. Copying for private or commercial purposes, in part or in whole, is not permitted unless authorised by AUDI AG. AUDI AG does not [illegible] any liability with respect to the correctness of information in this document. [illegible] AUDI AG.

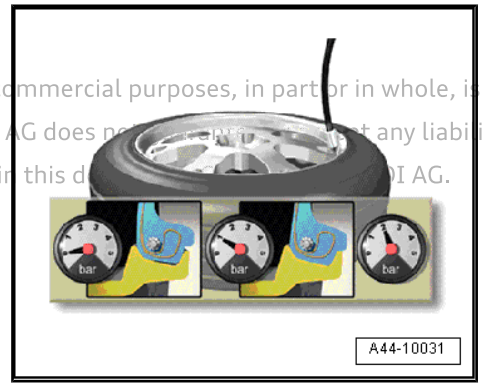

Note

Do NOT overfill tyre (e.g. up to 3.5 bar), even briefly, as is permissible with standard tyres.

25.2.6 Wheel alignment

The procedure for adjusting the wheel alignment on vehicles with run-flat tyres (PAX) is the same as for vehicles with standard tyres.

Generally, the same measuring heads and fasteners for standard tyres with rim protector can be used on PAX wheels. (Fit to the inner side, secure to tyre tread).

25.2.7 Repairing tyres with run-flat capability (PAX)

General notes

Protected by copyright. Copying for private or commercial purposes, in part or in whole, is not permitted unless authorised by AUDI AG. AUDI AG does not guarantee or accept any liability with respect to the correctness of information in this document. Copyright by AUDI AG.

It is not always necessary to renew a tyre after it has lost pressure and then been run in an uninflated condition.

Note

The affected tyre should be removed and checked for damage by qualified personnel. Fitting of tyres and checking tyres for damage must only be carried out by qualified personnel.

After a run-flat tyre (PAX) has lost inflation pressure, check the tyre as follows:

– First remove as much gel residue from the tyre as possible. Use the flat side of the putty knife to do so.

– Then clean away any remaining gel residue from the tyre and support ring using water and a cloth.

– After separating the tyre and support ring, check both components (PAX) according to the following criteria.

Notes:

– When re-installing, make sure the support ring is the correct size for the tyre and wheel dimensions.

– As with standard tyre/wheel systems, the PAX wheel must also be checked before fitting.

– Damaged wheels must be renewed.

25.2.8 PAX tyres - assessing condition

When checking a tyre, look out especially for the following criteria:

♦ Surface erosion or ripples on the inner side (inflation pressure was too low or not sufficient for the load)

♦ Loose rubber or loose radial threads

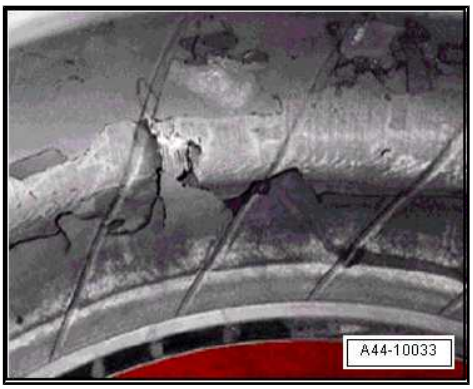

♦ Separated or deformed bead core

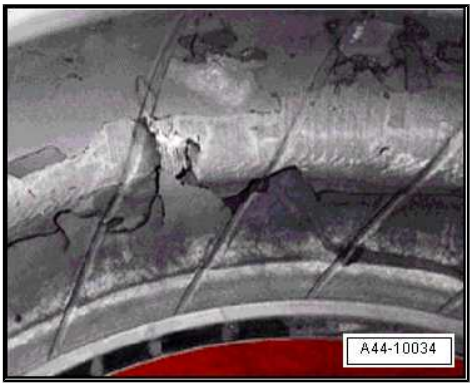

- Damage to tyre bead with cord ply visible

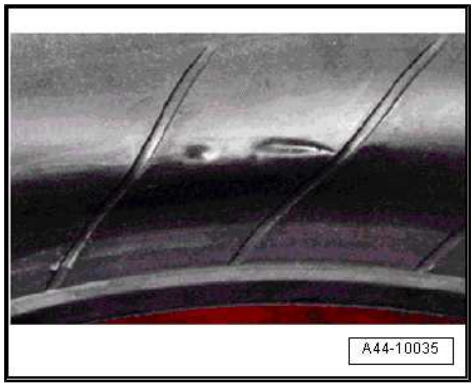

25.2.9 Checking support ring

As with tyres, the support ring does not always need to be renewed after driving with a flat tyre.

The support ring must be renewed if it is damaged as follows:

- Broken parts or missing sections

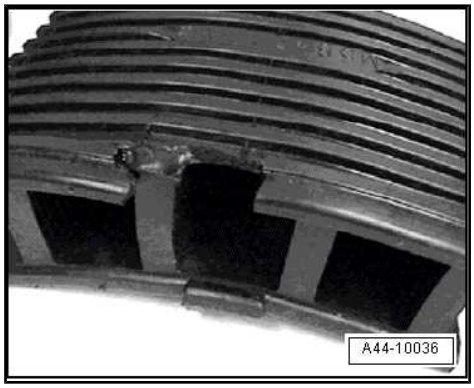

- Tears in the running surface/separating walls

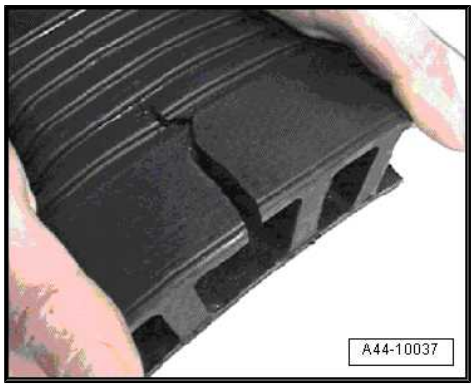

- Punctures and holes

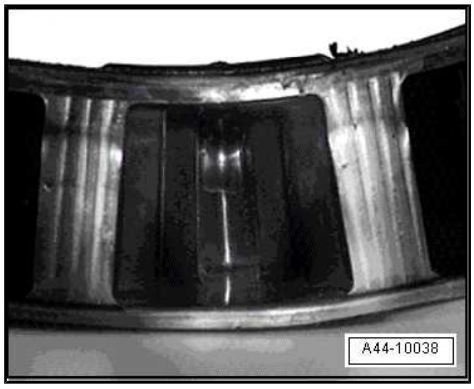

Protected by copyright. Copying for private or commercial purposes, in part or in whole, is not permitted unless authorised by AUDI AG. AUDI AG does not guarantee or accept any liability with respect to the correctness of information in this document. Copyright by AUDI AG.

- Blistering and discolouration due to overheating

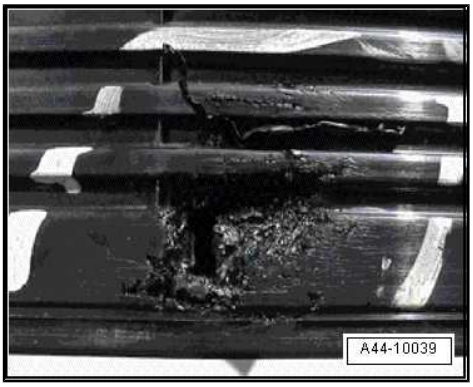

Repairs on tyres

Note

- *Run-flat tyres (PAX) must not be repaired using a tyre patch or similar.*
- *Flat tyre sprays/foams must not be used with PAX tyres, as these products are not compatible with the gel in the tyre.*

25.3 Self supporting tyres (SST) with run-flat capability

WARNING

The fitting temperature of a tyre must not be less than 21 °C and should not exceed 30 °C.

Caution

Run-flat tyres must only be fitted on vehicles with Tyre Pressure Monitoring System/Tyre Pressure Loss Indicator *⇒ "12 Tyre Pressure Monitoring Systems/Tyre Pressure Loss Indicator", page 49* .

⇒ "25.3.1 Design of an SST tyre", page 128

Removing and fitting run-flat tyres ⇒ page 34

Note

- *SST tyres may only be fitted to vehicles which have a Tyre Pressure Monitoring System/Tyre Pressure Loss Indicator. The system warns the driver if the tyre pressure drops below a specified level.*
- *Tyre damage and the resulting loss of pressure are not readily visible.*
- *In the event of a total loss of pressure, it is possible to continue driving for up to 50 km at a maximum of 80 km/h.*

Note the special installation instructions for SST tyres.

It is not permitted to fit both SST tyres and standard tyres on the same vehicle, even on separate axles. A standard tyre can be fitted only in exceptional circumstances for a brief period and limited distance. The driver must be expressly informed that the SST run-flat characteristics do not apply in this case.

Protected by copyright. Copying for private or commercial purposes, in part or in whole, is not permitted unless authorised by AUDI AG. AUDI AG does not guarantee or accept any liability with respect to the correctness of information in this document. Copyright by AUDI AG.

In the event of a puncture, it is the responsibility of the driver to check the affected tyre or tyres and decide whether it is possible to continue driving. See ⇒ Owner's Manual .

Use only the approved type of wheels for retrofitting (EH2 extended hump rim contour).

25.3.1 Design of an SST tyre

WARNING

The fitting temperature of a tyre must not be less than 21 °C and should not exceed 30 °C.

Caution

Run-flat tyres must only be fitted on vehicles with Tyre Pressure Monitoring System/Tyre Pressure Loss Indicator ⇒ *"12 Tyre Pressure Monitoring Systems/Tyre Pressure Loss Indicator", page 49* .

Protected by copyright. Copying for private or commercial purposes, in part or in whole, is not permitted unless authorised by AUDI AG. AUDI AG does not guarantee or accept any liability with respect to the correctness of information in this document. Copyright by AUDI AG.

Removing and fitting run-flat tyres ⇒ page 34

If run-flat tyres are used, a Tyre Pressure Monitoring System/Tyre Pressure Loss Indicator must be fitted.

Tyre damage and the resulting loss of pressure are not readily visible.

SST tyres are labelled on the sidewall with a special RSC symbol (= Runflat System Component).

The markings on the sidewall of a run-flat tyre may differ according to manufacturer.

A self supporting tyre has run-flat properties in the event of a pressure loss. In the event of a puncture, the vehicle can be driven to the nearest workshop subject to certain restrictions (see ⇒ Owner's Manual).

Benefits

SST tyres can be driven for 50 km at up to 80 km/h even after a complete loss of pressure.

Driving style, vehicle speed, road surface, weather conditions, tyre condition and tyre load all affect the distance that can be driven with a puncture.

With an SST tyre, it is not necessary to change the wheel immediately even with the tyre completely deflated (i.e. you don't need to stop the vehicle in a dangerous place or in conditions of poor visibility).

The braking, steering and driving response are virtually unimpaired even with the tyre completely deflated.

You no longer need a spare wheel if SST tyres are fitted. From the customer's point of view, the benefits are savings in space and a lighter vehicle.

Technology in detail

Standard tyres without run-flat properties

– -I- Normal tyre with air
– -II- Normal tyre without air
– If the normal tyre loses air, the rim presses heavily against the sidewall. The rubber becomes very hot and deteriorates quickly when rolling flat.

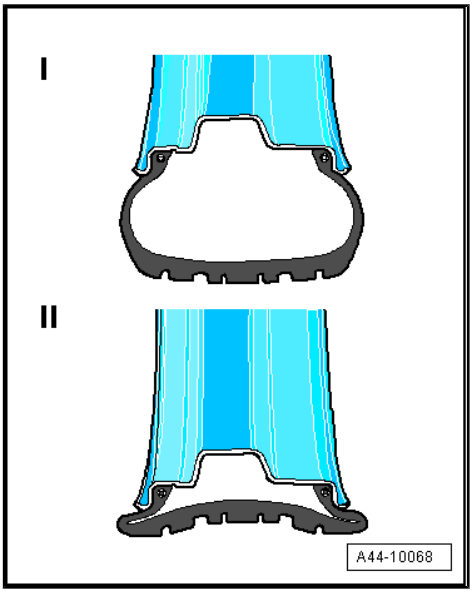

SST tyre with reinforced sidewall

SST technology is based on self-supporting reinforced sidewalls.

– -I- SST tyre with air
– -II- SST tyre without air
– Particularly thick sidewalls -A- support the airless tyre on a standard rim and the vehicle remains manoeuvrable. A special rubber compound strengthens the tyre and bears the weight of the vehicle in the event of a puncture.

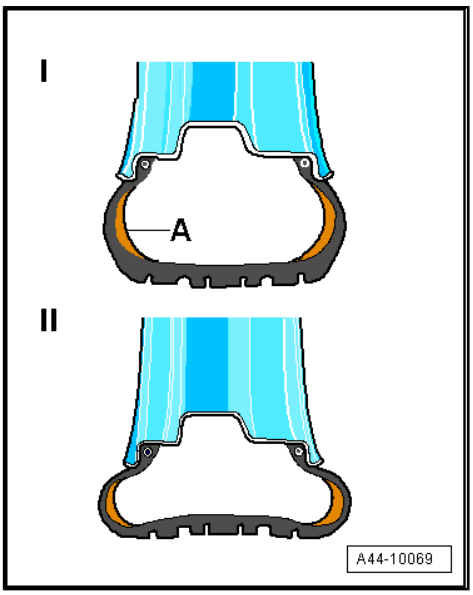

The sidewalls on the SST tyre are reinforced to prevent pinching of the tyre between the road and the wheel rim in the event of a puncture.

Differences between H2 and EH2 extended hump rim designs

- EH2 - the extended hump prevents unseating of the SST tyre after a loss of pressure.
- The hump on an EH2 extended hump rim is steeper and nearer the centre of the wheel.

> ⚠ **WARNING**
>
> *The clearance from the brake is reduced.*

25.4 Tyres with run-flat capability (Seal Inside technology)

> ⚠ **WARNING**
>
> *The fitting temperature of a tyre must not be less than 21 °C and should not exceed 30 °C.*

Protected by copyright. Copying for private or commercial purposes, in part or in whole, is not permitted unless authorised by AUDI AG. AUDI AG does not guarantee or accept any liability with respect to the correctness of information in this document. Copyright by AUDI AG.

> ⚠ **Caution**
>
> *Run-flat tyres must only be fitted on vehicles with Tyre Pressure Monitoring System/Tyre Pressure Loss Indicator* *⇒ "12 Tyre Pressure Monitoring Systems/Tyre Pressure Loss Indicator", page 49* *.*

⇒ “25.4.1 Design of a Seal Inside tyre”, page 130

⇒ “25.4.2 Function of a Seal Inside tyre”, page 131

Caution

A damaged Seal Inside tyre may only be assessed and repaired by qualified personnel.

Note

- *The Seal Inside technology allows the driver to continue driving the vehicle without any loss of tyre pressure even if a tyre has been damaged by an external object.*
- *Seal Inside tyres do not have to be fitted on special rims, but can be fitted on the same rims as standard tyres or other tyres with run-flat capability. However, they cannot be fitted on rims for PAX tyres.*
- *It is not permissible to fit Seal Inside tyres and standard tyres or other tyres with run-flat capability on the same vehicle.*
- *Seal Inside tyres should be stored in the same way as standard tyres or other tyres with run-flat capability.*

25.4.1 Design of a Seal Inside tyre

Caution

Run-flat tyres must only be fitted on vehicles with Tyre Pressure Monitoring System/Tyre Pressure Loss Indicator *⇒ “12 Tyre Pressure Monitoring Systems/Tyre Pressure Loss Indicator”, page 49* *.*

1 - Carcass

2 - Edge strip

3 - Self-sealing layer

Layer of sealant only in tread area

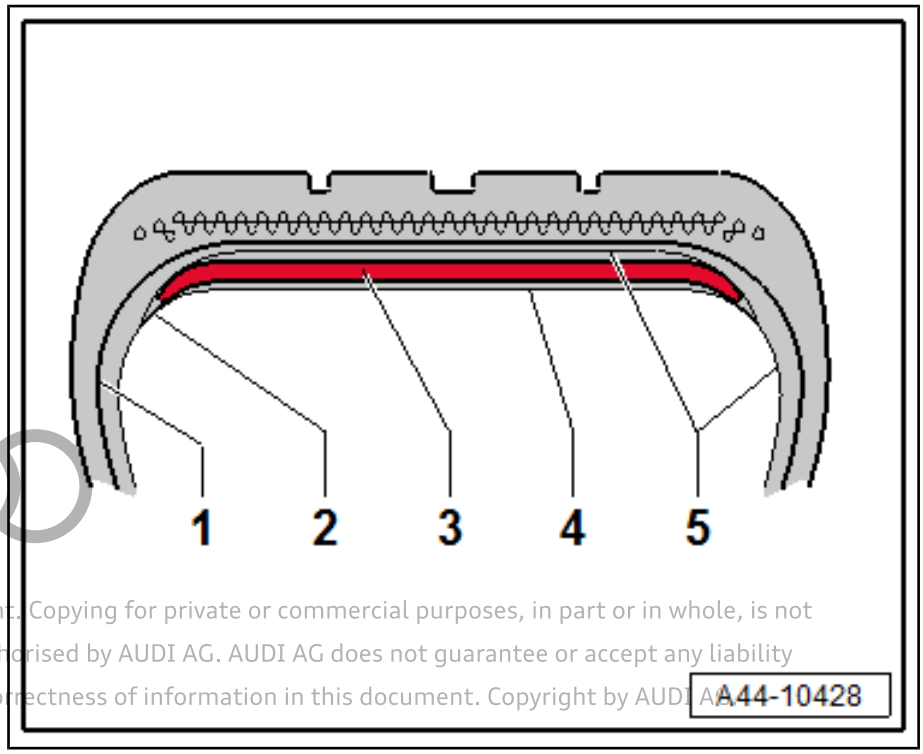

Protected by copyright. Copying for private or commercial purposes, in part or in whole, is not permitted unless authorised by AUDI AG. AUDI AG does not guarantee or accept any liability with respect to the correctness of information in this document. Copyright by AUDI AG.

4 - Nylon layer

5 - Liner

25.4.2 Function of a Seal Inside tyre

Protected by copyright. Copying for private or commercial purposes, in part or in whole, is not permitted unless authorised by AUDI AG. AUDI AG does not guarantee or accept any liability with respect to the correctness of information in this document. Copyright by AUDI AG.

Caution

Run-flat tyres must only be fitted on vehicles with Tyre Pressure Monitoring System/Tyre Pressure Loss Indicator *⇒ "12 Tyre Pressure Monitoring Systems/Tyre Pressure Loss Indicator", page 49* .

There is a layer of sealant inside the tyre within the area corresponding to the tread area which prevents a loss of tyre pressure if the carcass has been damaged, irrespective of whether the object that has damaged the tyre is still stuck in the tyre.

Step 1:

An object punctures the tyre's tread. The sealant clings to the object.

The sealant reacts to the damage immediately and seals the puncture.

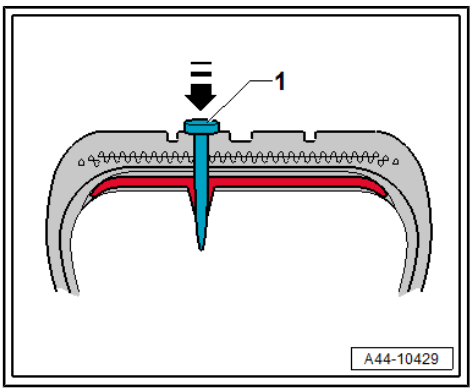

Step 2:

The object is removed from the tread.

The sealant is drawn into the hole by the object when the object is pulled out of the tread.

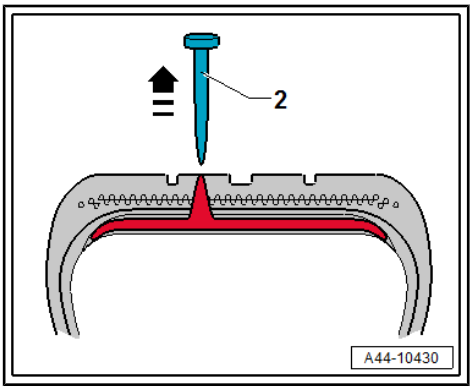

The hole is sealed off by the sealant.

Caution

The Seal Inside technology does not guarantee that the tyre is repaired permanently after a puncture.

Unlike other tyres with run-flat capability, Seal Inside tyres may not be driven when they are underinflated or flat.

Note

Seal Inside technology is not a run-flat technology.

25.5 Servicing tyres with run-flat capability

General notes

Caution

A damaged tyre may only be assessed by qualified personnel.

WARNING

- *Run-flat tyres must be renewed after a puncture.*
- *Note the special installation instructions.*

– As with standard tyre/wheel systems, the wheel must also be checked before fitting.

– After a puncture, the wheel should be checked for damage (excessive lateral and radial run-out or other damage), as the wheel may have been damaged if it hit a pothole while the tyre was flat.

– Damaged wheels must be renewed.

Note

- *Flat tyre sprays/foams can be used with SST tyres.*
- *Tyres must be renewed after a puncture.*
- *Note the manufacturer's instructions.*

Protected by copyright. Copying for private or commercial purposes, in part or in whole, is not permitted unless authorised by AUDI AG. AUDI AG does not guarantee or accept any liability with respect to the correctness of information in this document. Copyright by AUDI AG.