SPECIFICATIONS

FASTENER TIGHTENING SPECIFICATIONS

Fastener Tightening Specifications

Application	Specification	
	Metric	English
Bearing Housing Assembly-to-Coupling Bolts (Automatic Transmission)	70 N.m	52 lb ft
Bearing Housing Assembly-to-Coupling Bolts (Manual Transmission)	90 N.m	66 lb ft
Clutch Actuator Cylinder Mounting Bolts (Manual Transmission)	12 N.m	106 lb in
Coupling-to-Propeller Shaft Bolts (Automatic Transmission)	70 N.m	52 lb ft
Coupling-to-Propeller Shaft Bolts (Manual Transmission)	90 N.m	66 lb ft
Driveline Tunnel Closeout Panel Bolts	10 N.m	89 lb in
EBTCM LH Mounting Bracket Mounting Bolts	50 N.m	37 lb ft
Flexplate Spindle Nut (Automatic Transmission)	90 N.m	66 lb ft
Flexplate-to-Flexplate Spindle Bolts (Automatic Transmission)	50 N.m	37 lb ft
Input Shaft Bearing Positioning Bolts	35 N.m	26 lb ft
Input Shaft-to-Coupling Bolts (Automatic Transmission)	70 N.m	52 lb ft
Input Shaft-to-Coupling Bolts (Manual Transmission)	90 N.m	66 lb ft
Negative Battery Cable Bolt	15 N.m	11 lb ft
Propeller Shaft Hub Clamp Bolt (Automatic Transmission)	125 N.m	93 lb ft
Rear Exhaust Hanger Mounting Bolts	50 N.m	37 lb ft
Rear Shock Absorber Lower Mounting Bolt	220 N.m	162 lb ft
Rear Suspension Crossmember Mounting Nuts	110 N.m	81 lb ft
Shift Control Closeout Boot Retaining Nuts (Manual Transmission)	12 N.m	106 lb in
Shift Control Mounting Bolts	30 N.m	22 lb ft
Transaxle Mount Bracket-to-Differential Bolts	50 N.m	37 lb ft
Transaxle Mount-to-Rear Suspension Crossmember Nuts	50 N.m	37 lb ft
Transmission Oil Cooler Rear Pipe Front Fittings-to-Junction Fittings at Engine Flywheel Housing	27 N.m	20 lb ft
Transmission Oil Cooler Rear Pipe Rear Fittings-to-Transmission Fittings	40 N.m	30 lb ft
Transmission Oil Cooler Rear Pipe Retaining Clamp Bolts	12 N.m	106 lb in

Transmission Shift Control Cable Bracket Retaining Nuts	20 N.m	15 lb ft
Transmission Shift Rod Clamp Bolt	30 N.m	22 lb ft
Transmission-to-Driveline Support Assembly Bolts/Studs	50 N.m	37 lb ft
Transmission Wiring Harness-to-LH Transmission Case Retaining Bolt	2.5 N.m	22 lb in

COMPONENT LOCATOR

DRIVELINE DISASSEMBLED VIEWS

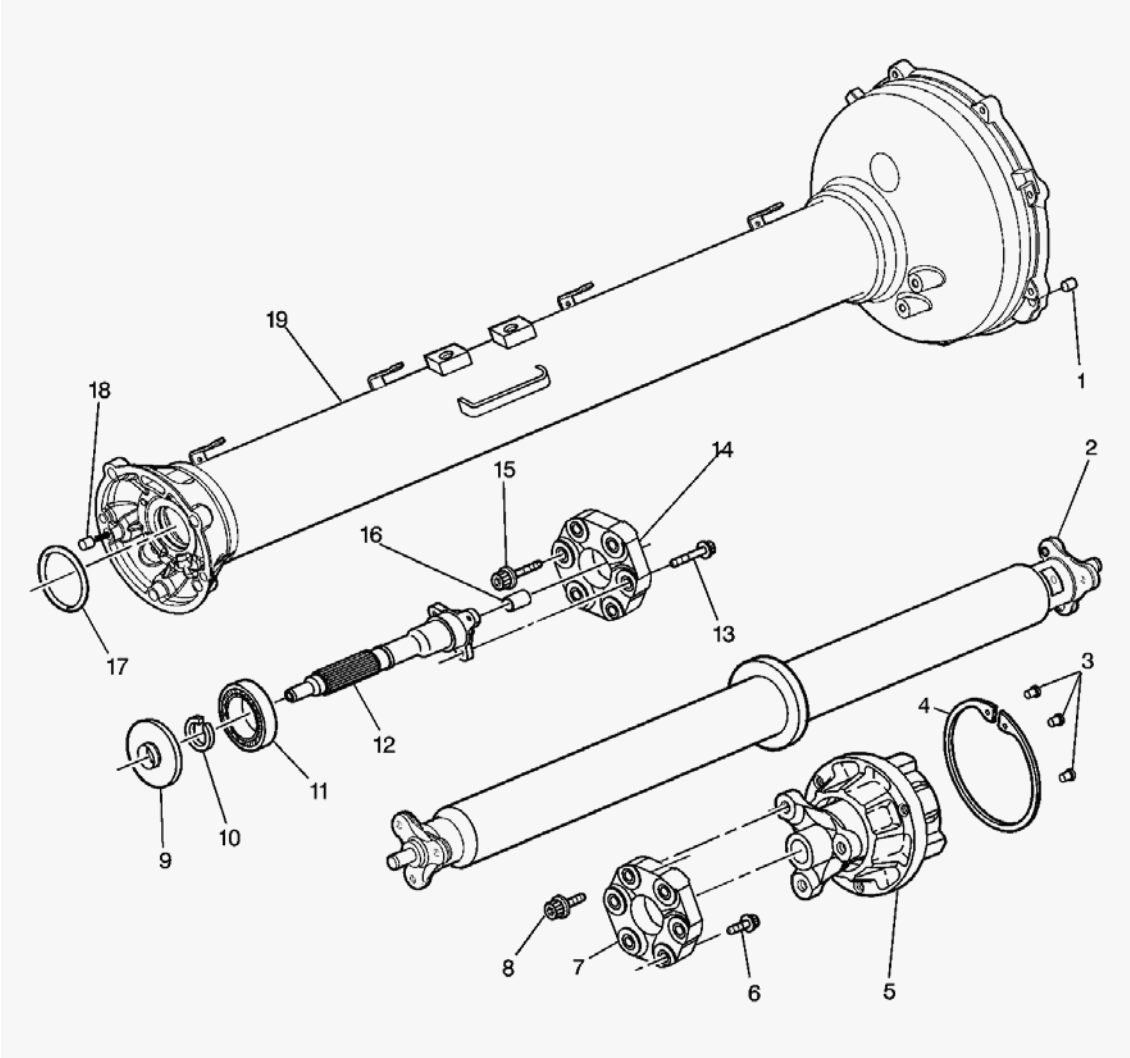

Fig. 1: Driveline Assembly Component View - Manual Transmission
Courtesy of GENERAL MOTORS CORP.

Callouts For Fig. 1

Callout	Component Name
1	Dowel Pin
2	Propeller Shaft

3	Plugs
4	Snap Ring
5	Bearing Housing Assembly
6	Bolt
7	Coupling
8	Bolt
9	Slinger Washer
10	Snap Ring
11	Bearing
12	Input Shaft
13	Bolt
14	Coupling
15	Bolt
16	Bushing
17	O-Ring
18	Dowel Pin
19	Driveline Tube

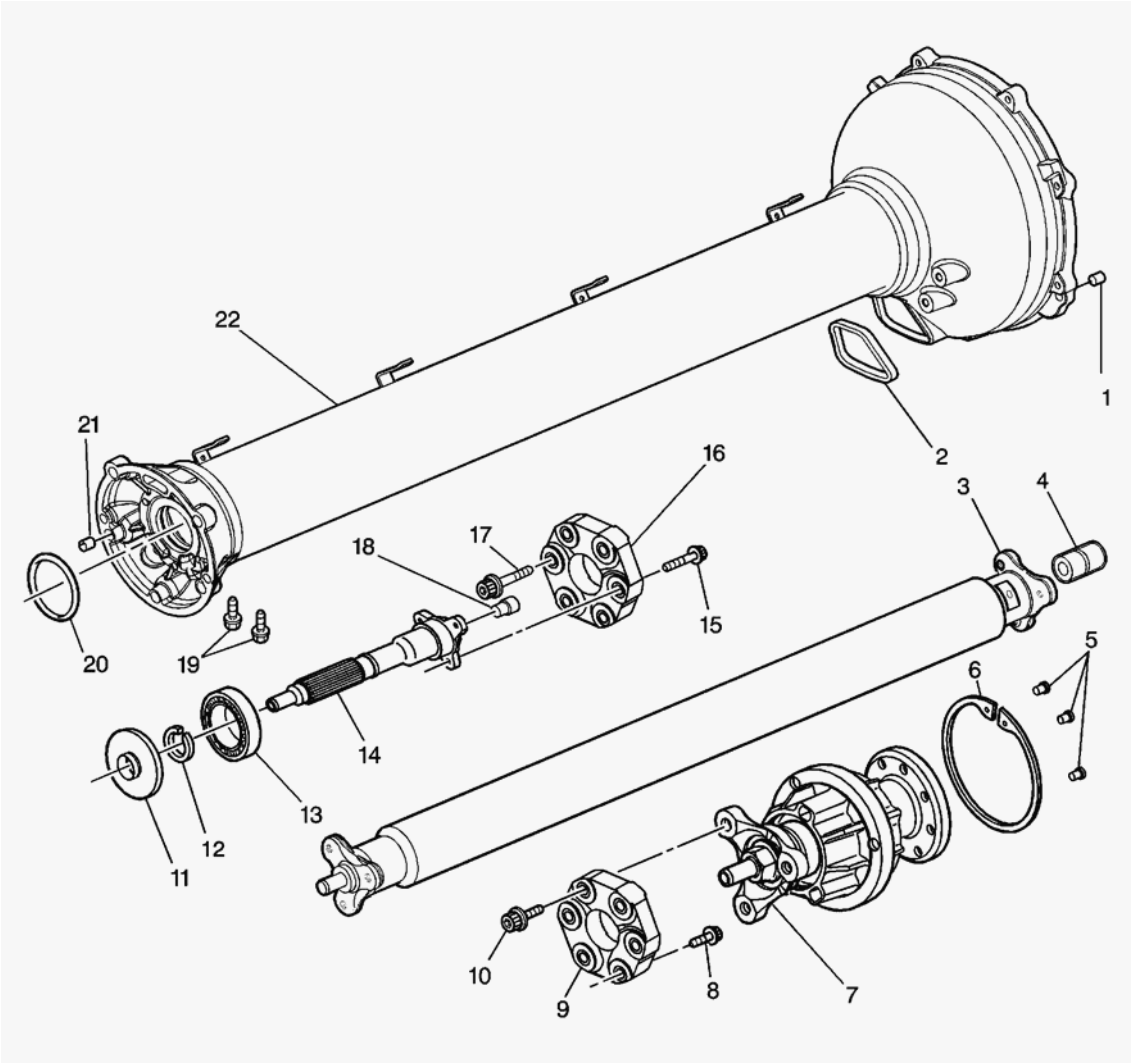

Fig. 2: Driveline Assembly Component View - Automatic Transmission
Courtesy of GENERAL MOTORS CORP.

Callouts For Fig. 2

Callout	Component Name
1	Dowel Pin
2	Access Hole Plug
3	Propeller Shaft
4	Bushing
5	Plugs
6	Snap Ring
7	Bearing Housing Assembly
8	Bolt
9	Coupling
10	Bolt

11	Slinger Washer
12	Snap Ring
13	Bearing
14	Input Shaft
15	Bolt
16	Coupling
17	Bolt
18	Bushing
19	Plug
20	O-Ring
21	Dowel Pin
22	Driveline Tube

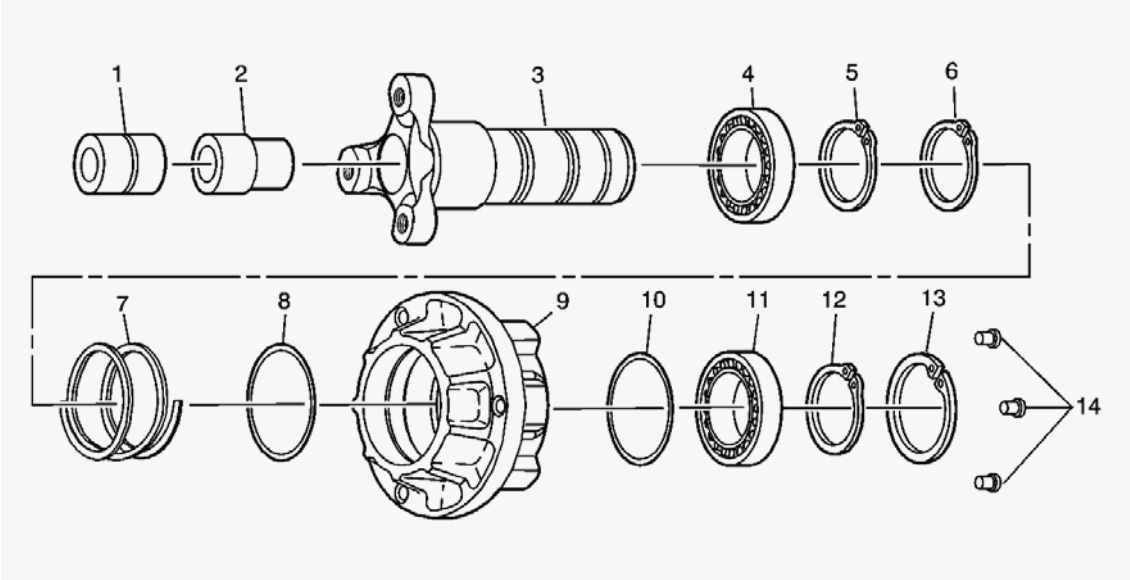

Fig. 3: Rear Bearing Housing Assembly Component View - Manual Transmission
Courtesy of GENERAL MOTORS CORP.

Callouts For Fig. 3

Callout	Component Name
1	Bushing
2	Bushing
3	Hub
4	Bearing
5	Snap Ring
6	Snap Ring
7	Wave Washer
8	O-Ring
9	Bearing Housing

10	O-Ring
11	Bearing
12	Snap Ring
13	Snap Ring
14	Plugs

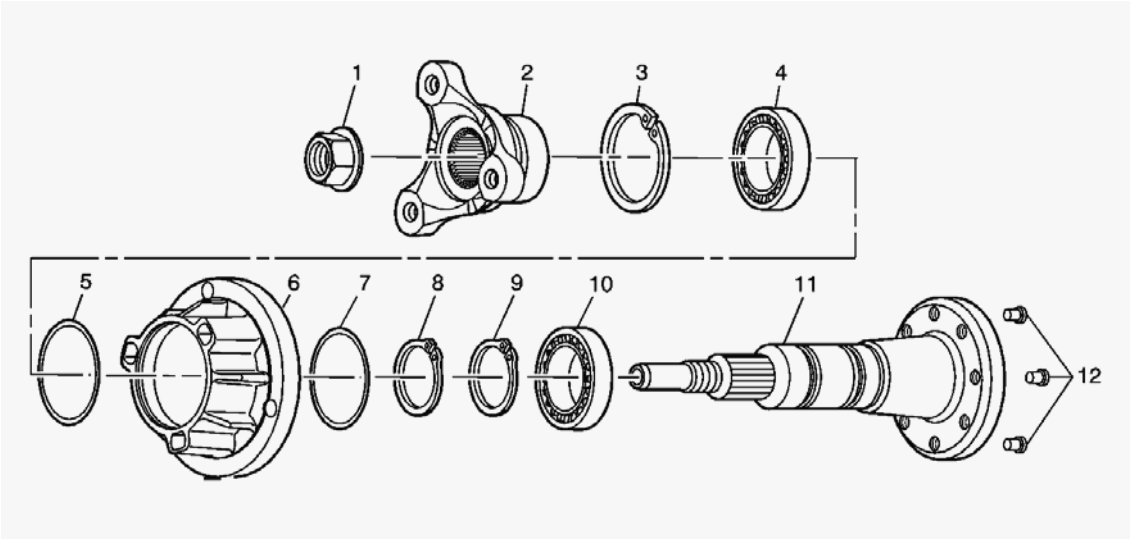

Fig. 4: Rear Bearing Housing Assembly Component View - Automatic Transmission
Courtesy of GENERAL MOTORS CORP.

Callouts For Fig. 4

Callout	Component Name
1	Nut
2	Hub
3	Snap Ring
4	Bearing
5	O-Ring
6	Bearing Housing
7	O-Ring
8	Snap Ring
9	Snap Ring
10	Bearing
11	Flexplate Spindle
12	Plugs

DIAGNOSTIC INFORMATION AND PROCEDURES

DIAGNOSTIC STARTING POINT - PROPELLER SHAFT

Begin the system diagnosis by reviewing the **Driveline Disassembled Views** and **Driveline Support Assembly Description** information. Reviewing the Description and Operation information will help you determine the correct symptom diagnostic procedure when a malfunction exists. Reviewing the Description and Operation information will also help you determine if the condition described by the customer is normal operation. Refer to **Symptoms - Propeller Shaft** in order to identify the correct procedure for diagnosing the system and where the procedure is located.

SYMPTOMS - PROPELLER SHAFT

Strategy Based Diagnostics

Review the system operations in order to familiarize yourself with the system functions. Refer to **Driveline Disassembled Views** and **Driveline Support Assembly Description** information. All diagnosis on a vehicle should follow a logical process. Strategy based diagnostics is a uniform approach for repairing all systems. The diagnostic flow should always be used in order to resolve a system problem. The diagnostic flow is the place to start when repairs are necessary. For a detailed explanation, refer to **Strategy Based Diagnosis** in General Information.

Visual/Physical Inspection

- Inspect for aftermarket devices, which could affect the operation of the vehicle. Refer to **Checking Aftermarket Accessories** in Wiring Systems.
- Inspect the easily accessible or visible system components for obvious damage or conditions, which could cause the symptom.
- Verify the exact operating conditions under which the concern exists. Note factors such as vehicle speed, road conditions, ambient temperature, and other specifics.
- Compare driving characteristics or sounds, if applicable, to a known good vehicle and make sure you are not trying to correct a normal condition.

Intermittent

Text the vehicle under the same conditions that the customer reported in order to verify the system is operating properly.

Symptom List

Refer to a symptom diagnostic procedure from the following list in order to diagnose the symptom:

- **Diagnostic Starting Point - Vibration Diagnosis and Correction** in Vibration Diagnosis and Correction
- **Wheel Drive Shafts Description and Operation** in Wheel Drive Shafts
- **Diagnostic Starting Point - Wheel Drive Shafts** in Wheel Drive Shafts
- **Diagnostic Starting Point - Rear Drive Axle** in Rear Drive Axle
- **Rattle Noise**
- **Scraping Noise**

- **Moaning Noise**
- **Whirring or Squealing Noise**
- **Squeak Noise**
- **Knock or Clunk Noise**
- **Shudder on Acceleration at Low Speed**

KNOCK OR CLUNK NOISE

Knock or Clunk Noise

Cause	Correction
Loose flexplate bolts or a damaged flexplate - automatic transmission applications only	A flexplate that is cracked or that has loose retaining bolts may create a "clicking, clanking, or snapping" type noise in the transmission housing.

RATTLE NOISE

Rattle Noise

Cause	Correction
Loose propeller shaft hub clamp bolt - automatic transmission applications only	A loose propeller shaft hub clamp bolt may create a "rattle" type noise mainly at idle in the flywheel area of the transmission housing.

SCRAPING NOISE

Scraping Noise

Cause	Correction
Balance weight detached from the propeller shaft	A detached balance weight may create a "sliding, scraping, or ticking" type noise during acceleration or deceleration. 1. Inspect the propeller shaft and tube for a detached balance weight. 2. Replace components as required. Do not attempt to reattach the balance weight to the propeller shaft.

MOANING NOISE

Moaning Noise

Cause	Correction
Propeller shaft rev limiter/snubber contacting the driveline tube - manual transmission applications only	A rev limiter/snubber that is contacting the driveline tube may create a "moaning" type noise and/or vibration that is felt through the shift lever. Slight noise and vibration is to be considered normal during an overspeed condition but should not be present when the overspeed condition has ceased. Replace components as required.

WHIRRING OR SQUEALING NOISE

Whirring or Squealing Noise

Cause	Correction
Bearing noise within the driveline assembly	A "whirring or squealing" type noise will increase or decrease relative to the vehicle speed and may be caused by a worn bearing. A MINOR "whirring" type noise should be considered normal. Replace the bearings as required.

SQUEAK NOISE

Squeak Noise

Cause	Correction
A broken or missing snap ring on the rear bearing housing assembly - manual transmission applications only	A broken or missing snap ring on the rear bearing housing may allow the propeller shaft assembly to move forward in the driveline tube. In those situations, the shoulder of the input shaft will contact the outer race of the clutch pilot bearing and create a "squealing or squeaking" type noise with the clutch pedal depressed.

SHUDDER ON ACCELERATION AT LOW SPEED

Shudder on Acceleration at Low Speed

Cause	Correction
Propeller shaft rev limiter/snubber contacting the driveline tube - manual transmission applications only	A rev limiter/snubber that is contacting the driveline tube may create a "moaning" type noise and/or vibration that is felt through the shift lever. Slight noise and vibration is to be considered normal during an overspeed condition but should not be present when the overspeed condition has ceased. Replace components as required.
Propeller shaft "out-of-balance" condition	A propeller shaft "out-of-balance" condition may create a vibration and be caused by: • Worn rev limiter/snubber - manual transmission applications only • Bent propeller shaft • Loose or missing parts

REPAIR INSTRUCTIONS

DRIVELINE TUNNEL CLOSEOUT PANEL REPLACEMENT

Removal Procedure

1. Raise and suitably support the vehicle. Refer to **Lifting and Jacking the Vehicle** in General Information.
2. Remove the catalytic converters. Refer to **Catalytic Converter Replacement** in Engine Exhaust.

3. Remove the driveline tunnel closeout panel bolts.

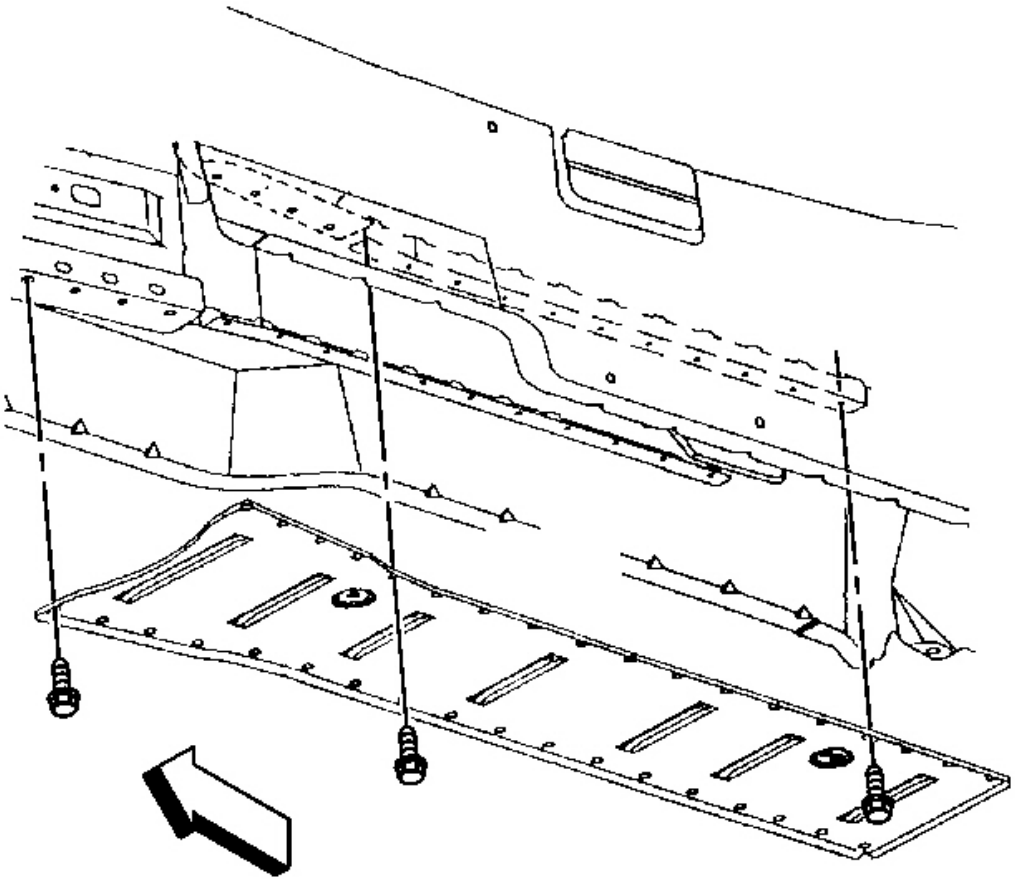

Fig. 5: Driveline Tunnel Closeout Panel Bolts
Courtesy of GENERAL MOTORS CORP.

4. Remove the closeout panel.

Installation Procedure

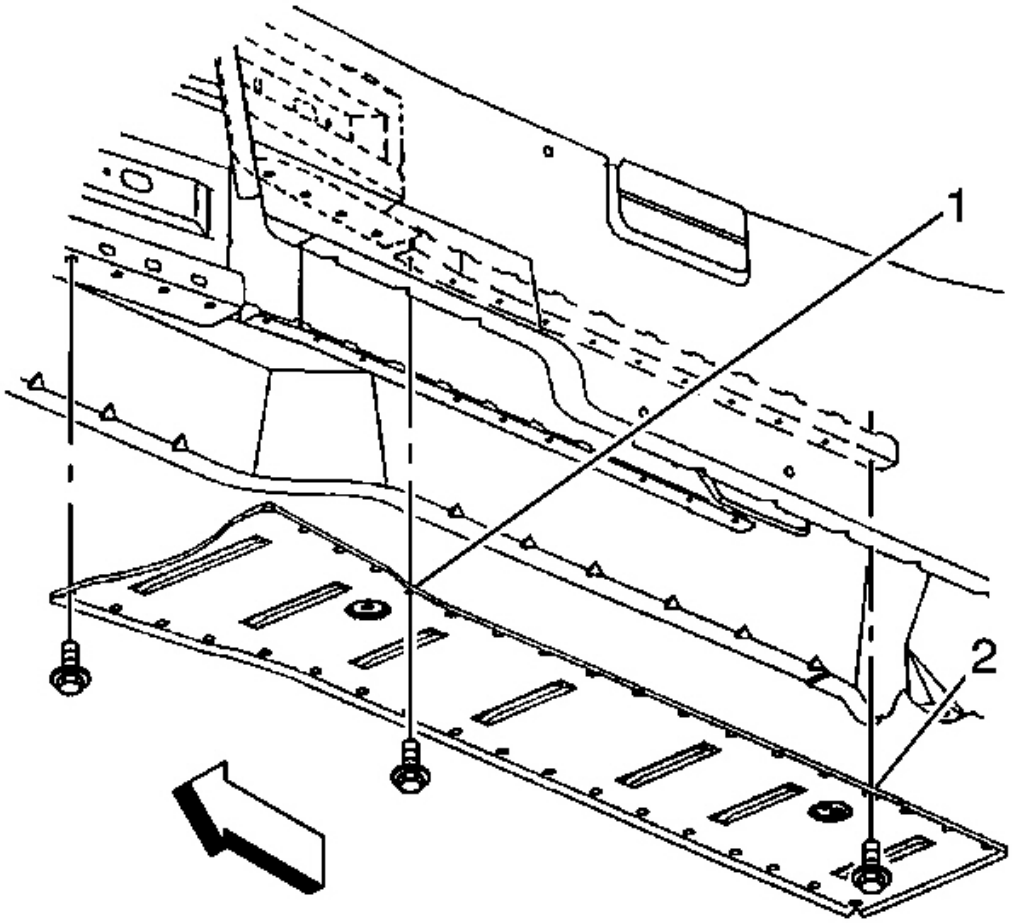

Fig. 6: Bolt To Closeout Panel Slotted Hole
Courtesy of GENERAL MOTORS CORP.

1. Install the driveline tunnel closeout panel into position.
2. Install the bolt into the closeout panel locating hole (1).
3. Install the bolt into the closeout panel slotted hole (2)

NOTE: **Refer to Fastener Notice in Cautions and Notices.**

IMPORTANT: ALL of the driveline tunnel closeout panel bolts must be installed and torqued to specifications, the closeout panel functions as a part of the vehicle body structure.

4. Install the remaining bolts.

   Tighten: Tighten the driveline tunnel closeout panel bolts to 10 N.m (89 lb in).

5. Install the catalytic converters. Refer to **Catalytic Converter Replacement** in Engine Exhaust.
6. Lower the vehicle.

DRIVELINE SUPPORT ASSEMBLY REPLACEMENT (AUTOMATIC TRANSMISSION)

Tools Required

J 42055 Drivetrain Support Fixture. See **Special Tools and Equipment** .

Removal Procedure

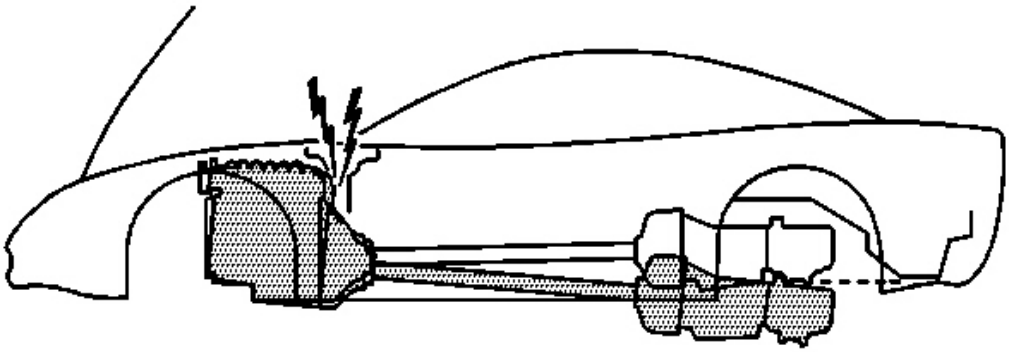

Fig. 7: Rear Of Engine & Composite Dash Panel
Courtesy of GENERAL MOTORS CORP.

NOTE: **Failure to follow the proper removal and installation procedures may result in damage to the engine crankshaft thrust bearing.**

NOTE: **When lowering and removing the rear of the driveline, observe the clearance between the rear of the transaxle assembly and the underbody to prevent damage.**

NOTE: **When tilting down the rear of the driveline, observe the clearance between the rear of the engine and the composite dash panel. Do not allow the engine to rest unsupported against the composite dash panel, or vehicle damage may result.**

CAUTION: Refer to Battery Disconnect Caution in Cautions and Notices.

1. Disconnect the negative battery cable.
2. Raise and support the vehicle. Refer to **Lifting and Jacking the Vehicle** in General Information.
3. Remove the rear tire and wheel assemblies. Refer to **Tire and Wheel Removal and Installation** in Tires and Wheels.
4. Remove the catalytic converters. Refer to **Catalytic Converter Replacement** in Engine Exhaust.
5. Tie off the LH muffler assembly to the underbody to support the muffler out of the way.

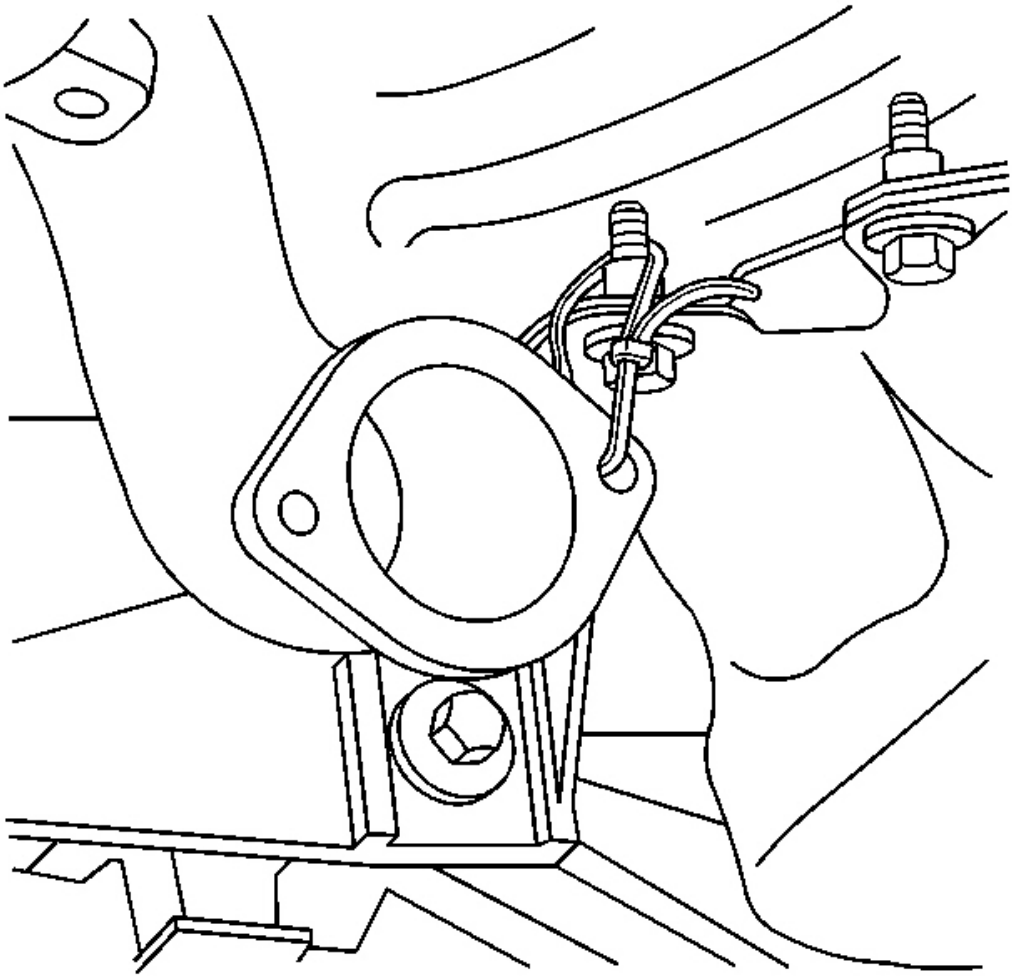

Fig. 8: Supporting LH Muffler Assembly On The Underbody

Courtesy of GENERAL MOTORS CORP.

6. Remove the RH muffler assembly. Refer to **Muffler Replacement - Right** in Engine Exhaust.
7. Remove the driveline tunnel closeout panel. Refer to **Driveline Tunnel Closeout Panel Replacement** .

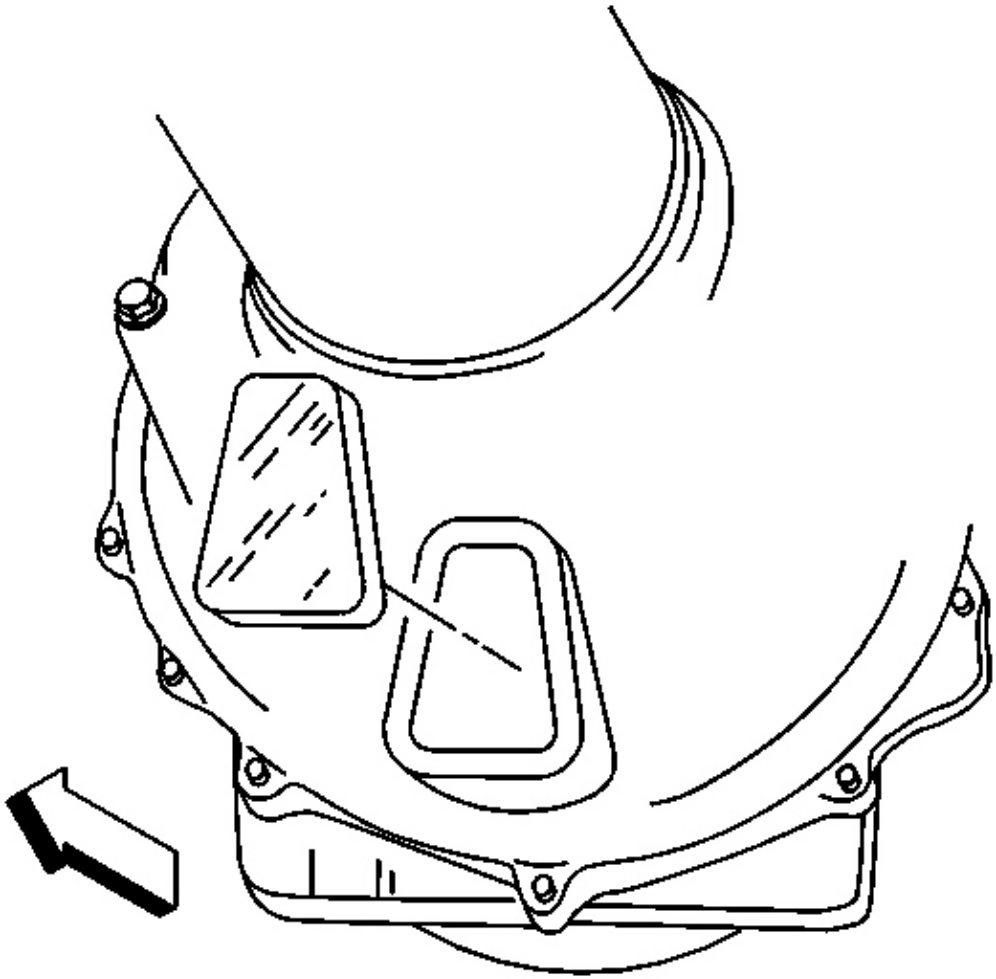

Fig. 9: Rear Bellhousing Access Plug
Courtesy of GENERAL MOTORS CORP.

8. Using a flat bladed screwdriver, remove the rear bellhousing access plug.

IMPORTANT: The following step must be performed to assure proper torque converter

balance during installation.

9. Matchmark the transmission flexplate to the transmission torque converter through the access hole in the rear bellhousing.
10. Remove the transmission flexplate to transmission torque converter bolts. Refer to **Flexplate to Torque Converter Bolts** in Automatic Transmission - 4L60-E.

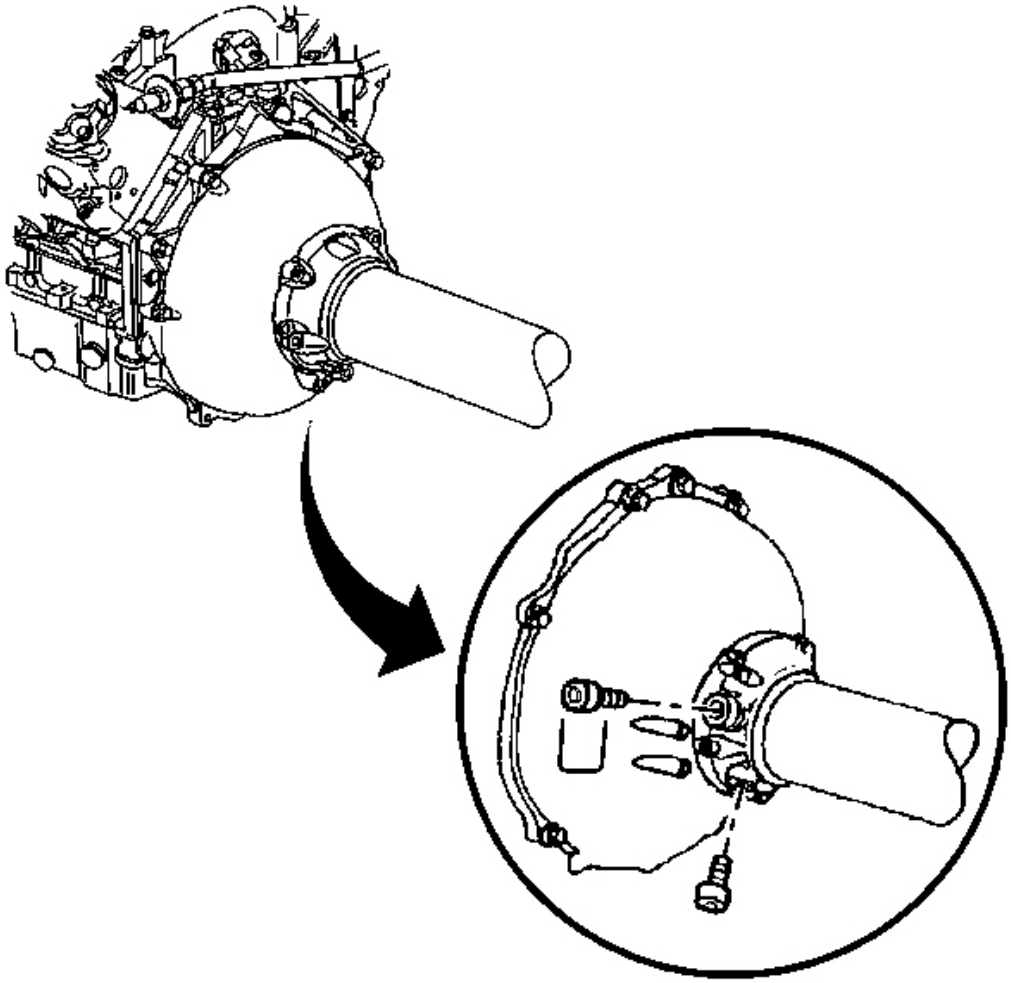

Fig. 10: Plastic Plugs To Front Of Driveline Support Assembly
Courtesy of GENERAL MOTORS CORP.

11. Remove the 2 plastic plugs from the front of driveline support assembly.

NOTE: **Refer to Fastener Notice in Cautions and Notices.**

IMPORTANT:

- **The propeller input shaft front bearing positioning bolts are intended to remain torqued to specification and in place UNTIL INSTRUCTED in the installation procedure.**
- **The bolts are to be removed, and the plastic plugs reinstalled after the installation is complete.**
- **Failure to use the minimum length fastener specified will prevent proper retention of the propeller input shaft front bearing during disassembly or installation.**

12. Install 2 bolts, M10 - 1.5 X 55 mm, or longer, in place of the plastic plugs.

    (The long bolts are used to maintain the propeller input shaft front bearing in original position during removal and installation.)

    Tighten: Tighten the propeller input shaft front bearing positioning bolts to 35 N.m (26 lb ft).

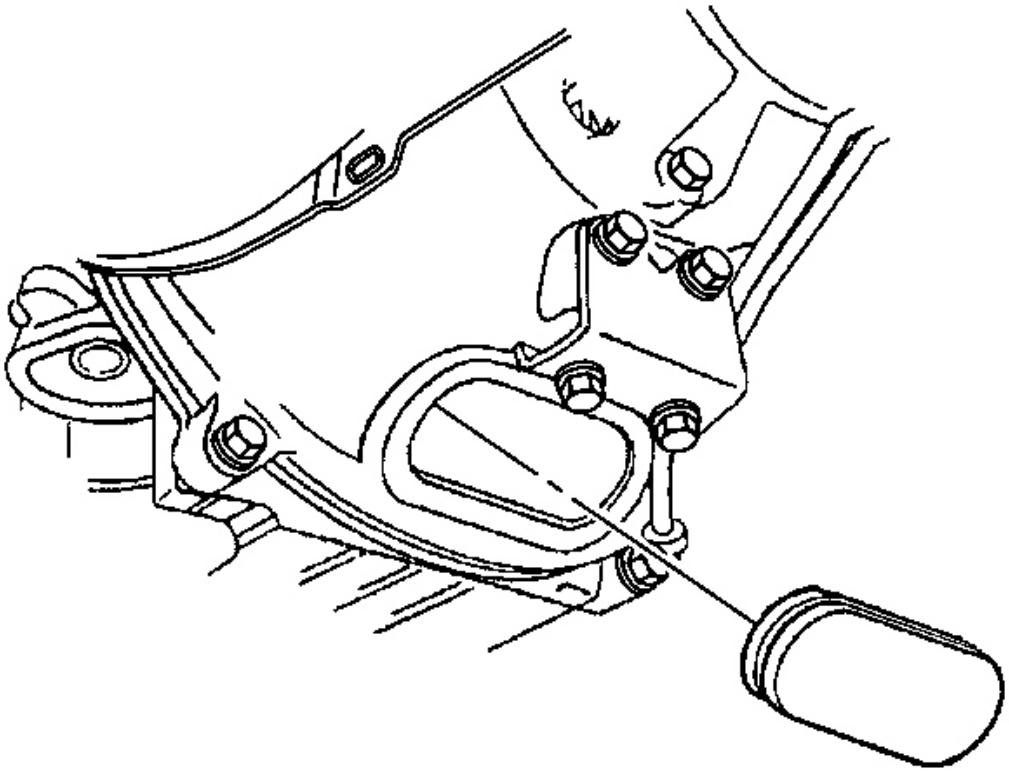

Fig. 11: Engine Flywheel Housing Access Plug
Courtesy of GENERAL MOTORS CORP.

13. Using a flat bladed screwdriver, remove the engine flywheel housing access plug.

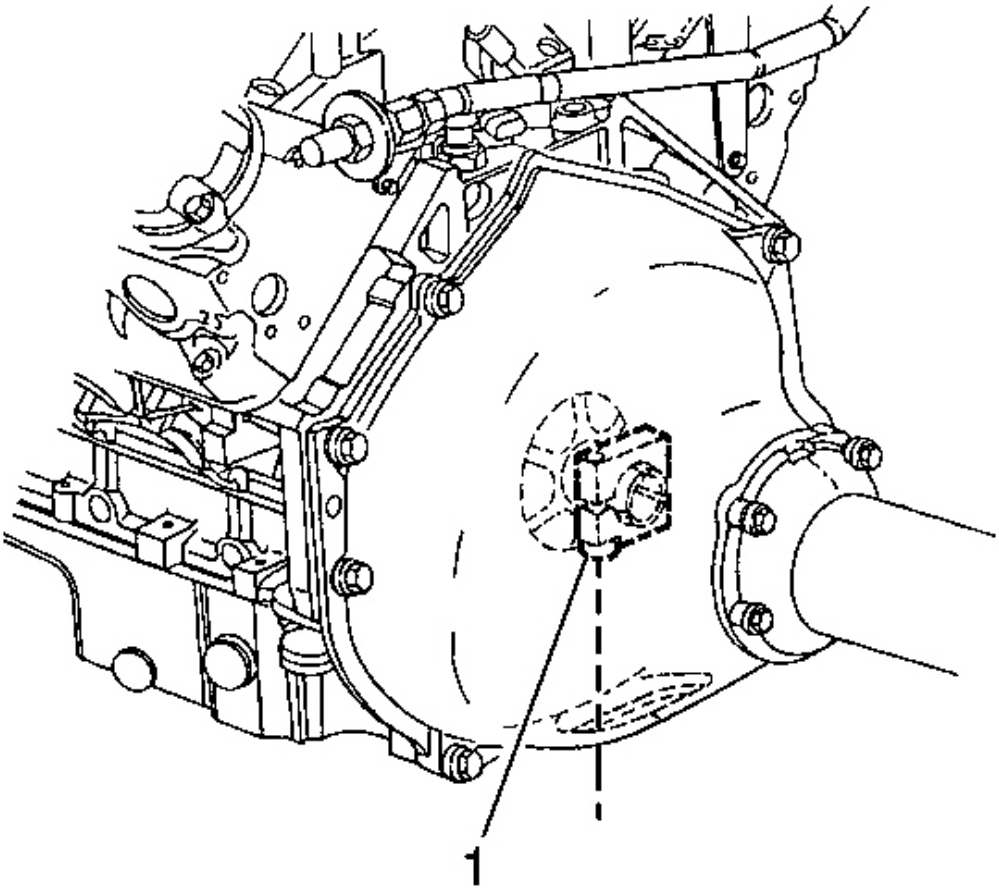

Fig. 12: Propeller Shaft Hub Clamp Bolt
Courtesy of GENERAL MOTORS CORP.

14. Loosen the propeller shaft hub clamp bolt (1).

    Rotate the engine at the flywheel, if necessary for alignment.

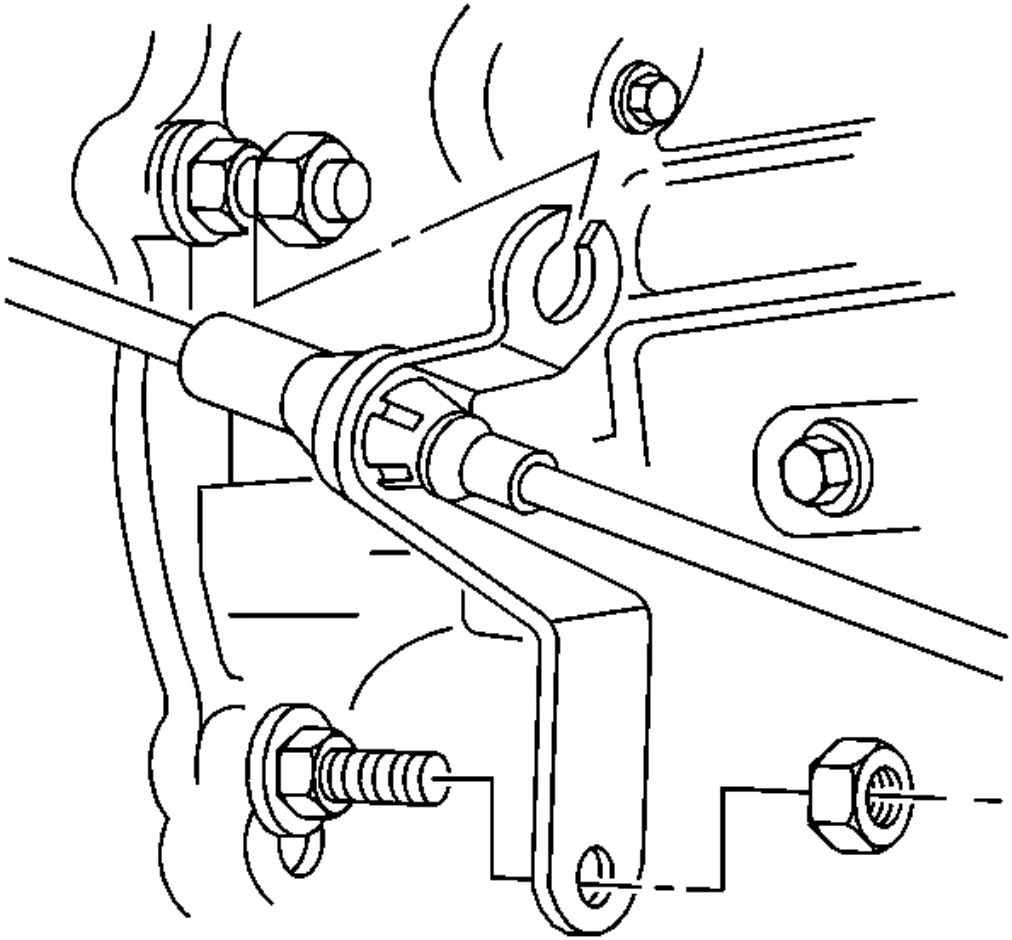

Fig. 13: Transmission Shift Cable Bracket To Transmission
Courtesy of GENERAL MOTORS CORP.

15. Remove the nuts retaining the transmission shift cable bracket to the transmission.

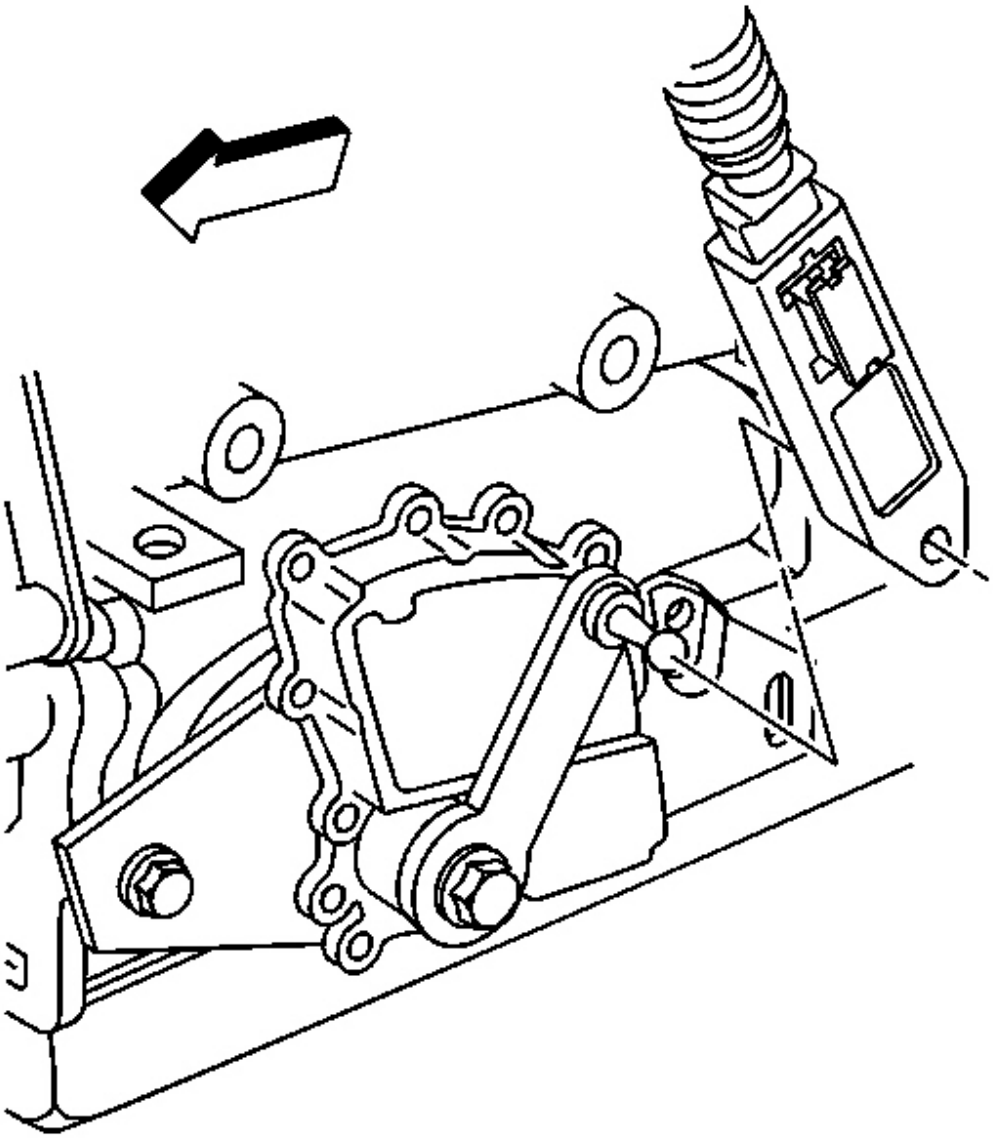

Fig. 14: Transmission Shift Control Cable To Transmission Shift Lever
Courtesy of GENERAL MOTORS CORP.

16. Disconnect the transmission shift control cable from the transmission shift lever.

    Unsnap to release the cable.

17. Reposition the transmission shift cable and bracket.

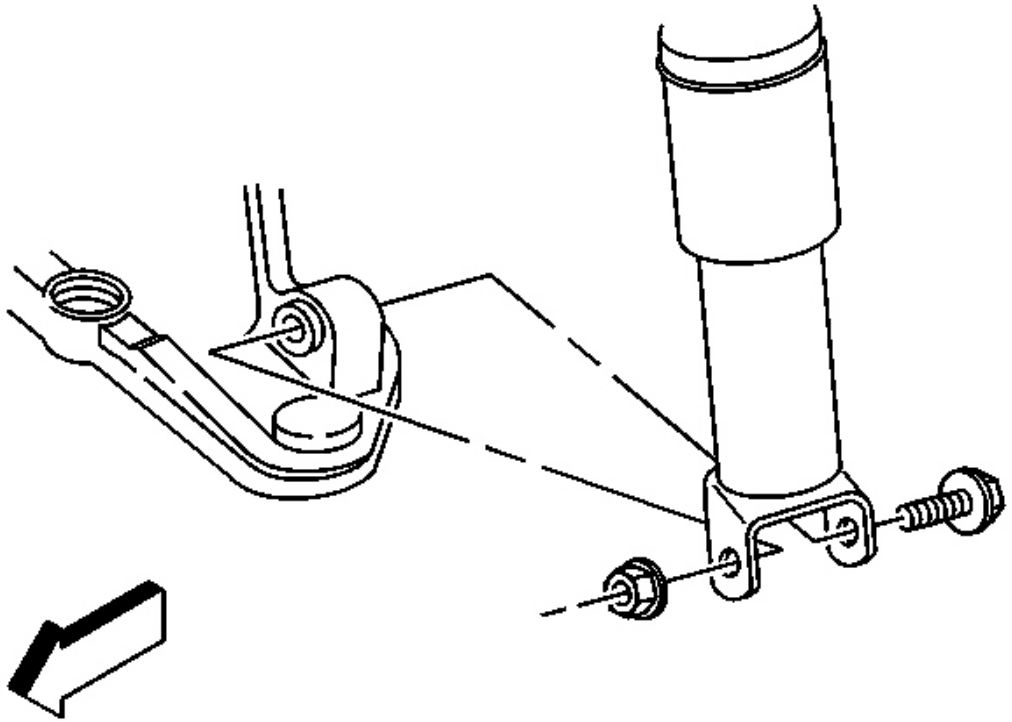

Fig. 15: Mounting Shock Absorber To Control Arm
Courtesy of GENERAL MOTORS CORP.

18. Remove the rear transverse spring. Refer to **Rear Transverse Spring Replacement** in Rear Suspension.
19. Support the lower control arm with a straight jack.
20. Disconnect the outer tie rod end from the suspension knuckle. Refer to **Tie Rod Replacement (Outer End)** or **Tie Rod Replacement (Suspension Link)** in Rear Suspension.
21. Remove the shock absorber lower mounting bolt.
22. Disconnect the lower ball joint from the suspension knuckle. Refer to **Knuckle Replacement** in Rear Suspension.
23. Remove the straight jack from the control arm.
24. Repeat steps 19 through 23 for the other side of the vehicle.

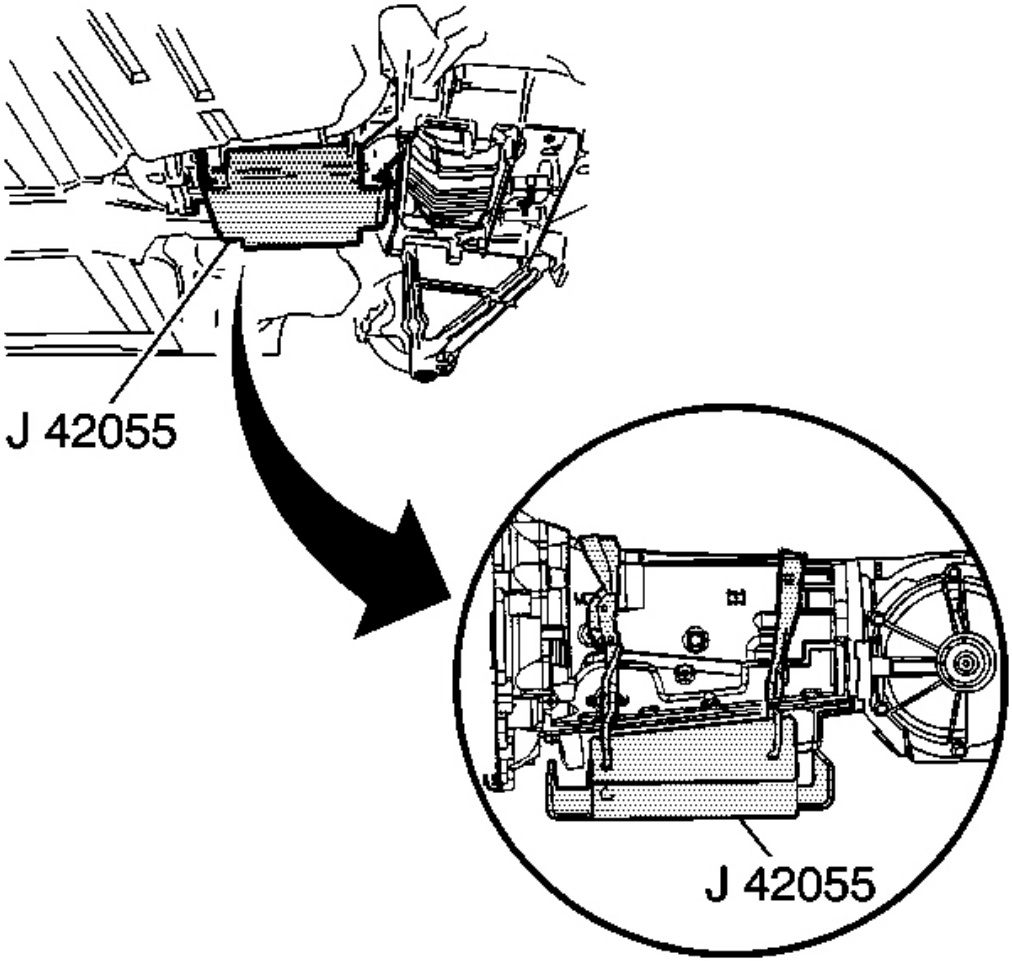

Fig. 16: Transmission Jack To Transmission
Courtesy of GENERAL MOTORS CORP.

25. Assemble the **J 42055** . See **Special Tools and Equipment** .
26. Install the **J 42055** to a transmission jack. See **Special Tools and Equipment** .
27. Position and firmly secure the **J 42055** with the transmission jack to the transmission.

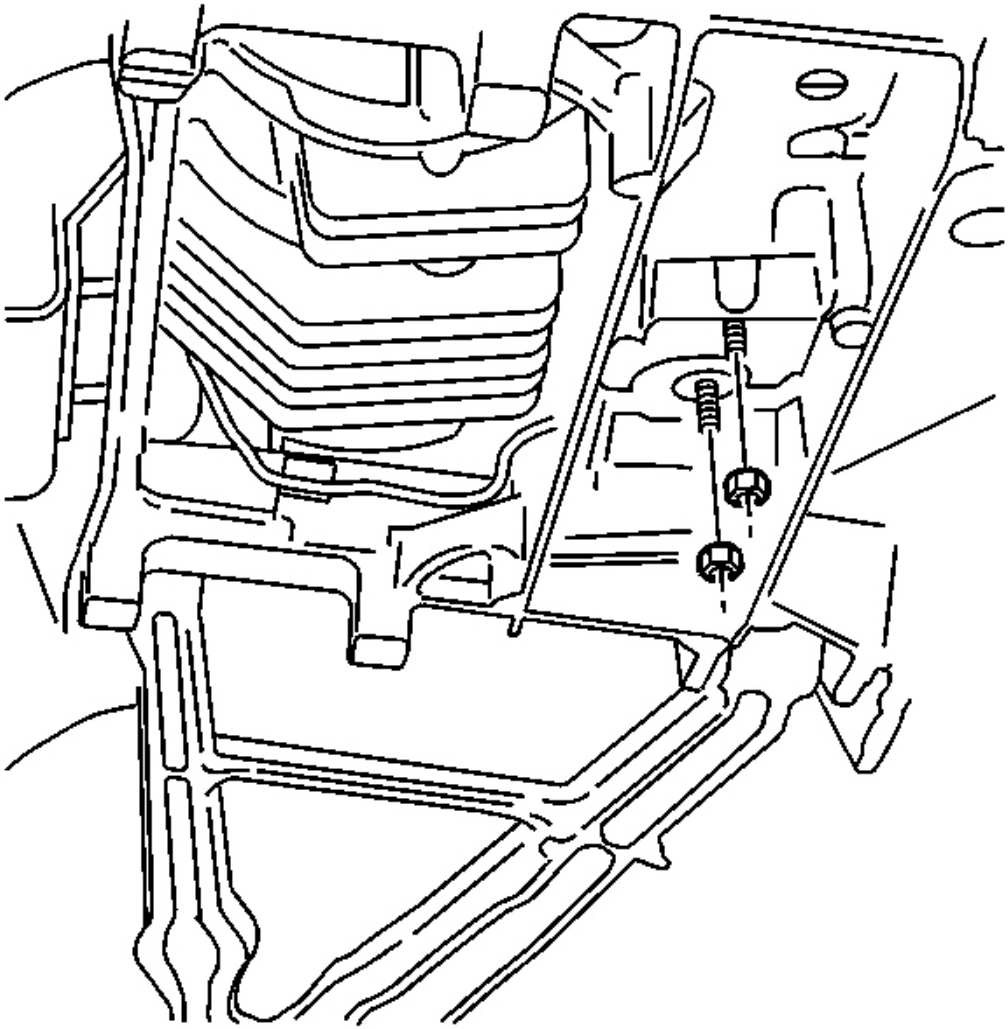

Fig. 17: Transaxle Mount To Rear Crossmember Nuts
Courtesy of GENERAL MOTORS CORP.

28. Disconnect the wiring harness and brake pipe clip retainers from the rear suspension crossmember.
29. Remove the rear crossmember nuts.

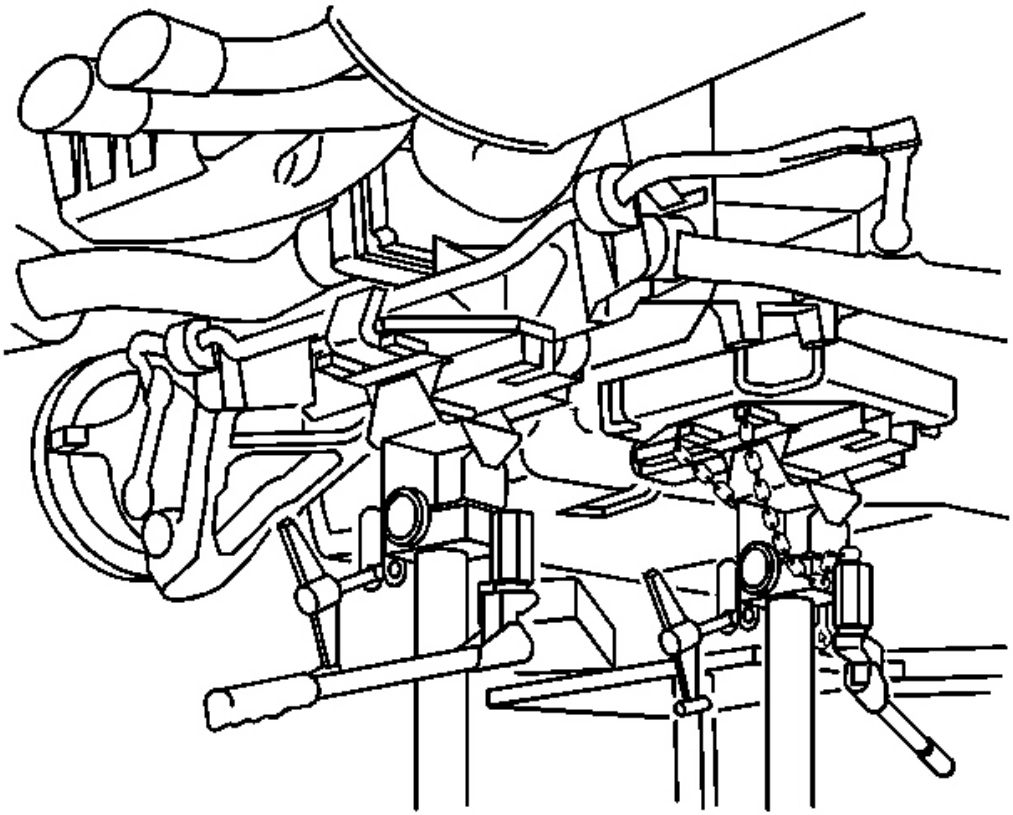

Fig. 18: View Of Jack Under Front End
Courtesy of GENERAL MOTORS CORP.

30. Position a transmission jack under the rear suspension crossmember and firmly secure the crossmember to the jack.
31. Using ONLY HAND TOOLS, remove the rear suspension crossmember retaining nuts.

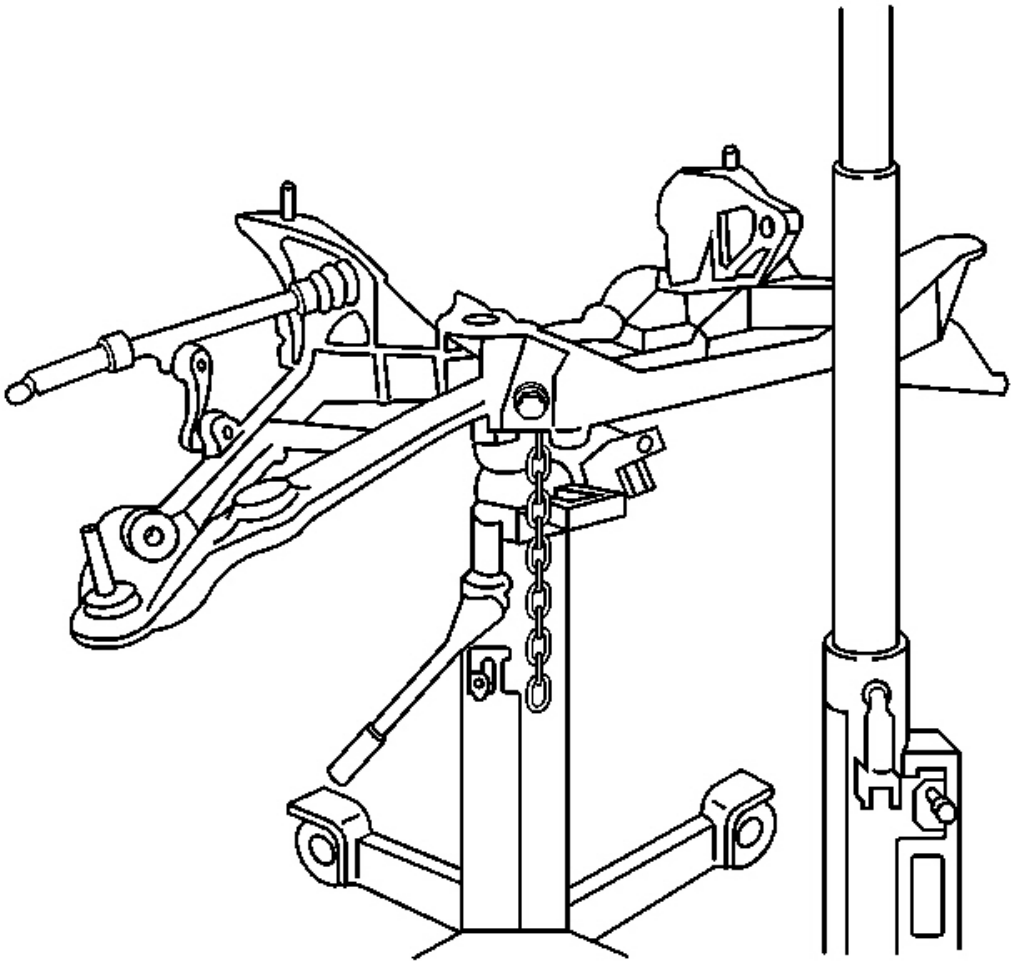

Fig. 19: Supporting Crossmember On Jack
Courtesy of GENERAL MOTORS CORP.

32. With the aid of an assistant, slowly lower the rear suspension crossmember away from the vehicle frame rails and remove the crossmember.

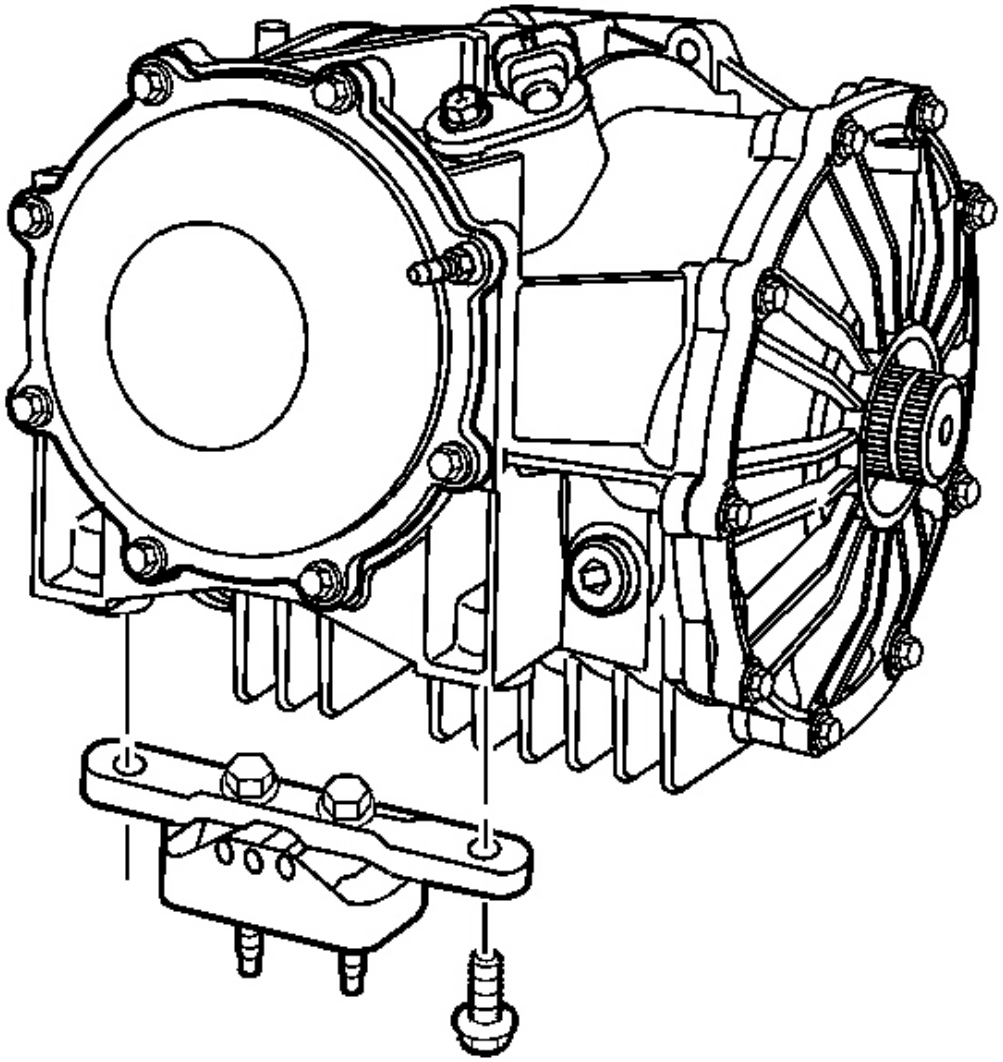

Fig. 20: Mount Location
Courtesy of GENERAL MOTORS CORP.

33. Remove the transaxle mount bracket to differential bolts.
34. Remove the transaxle mount with bracket.

    Removing the transaxle mount will allow for greater stability on a workbench after the driveline is removed.

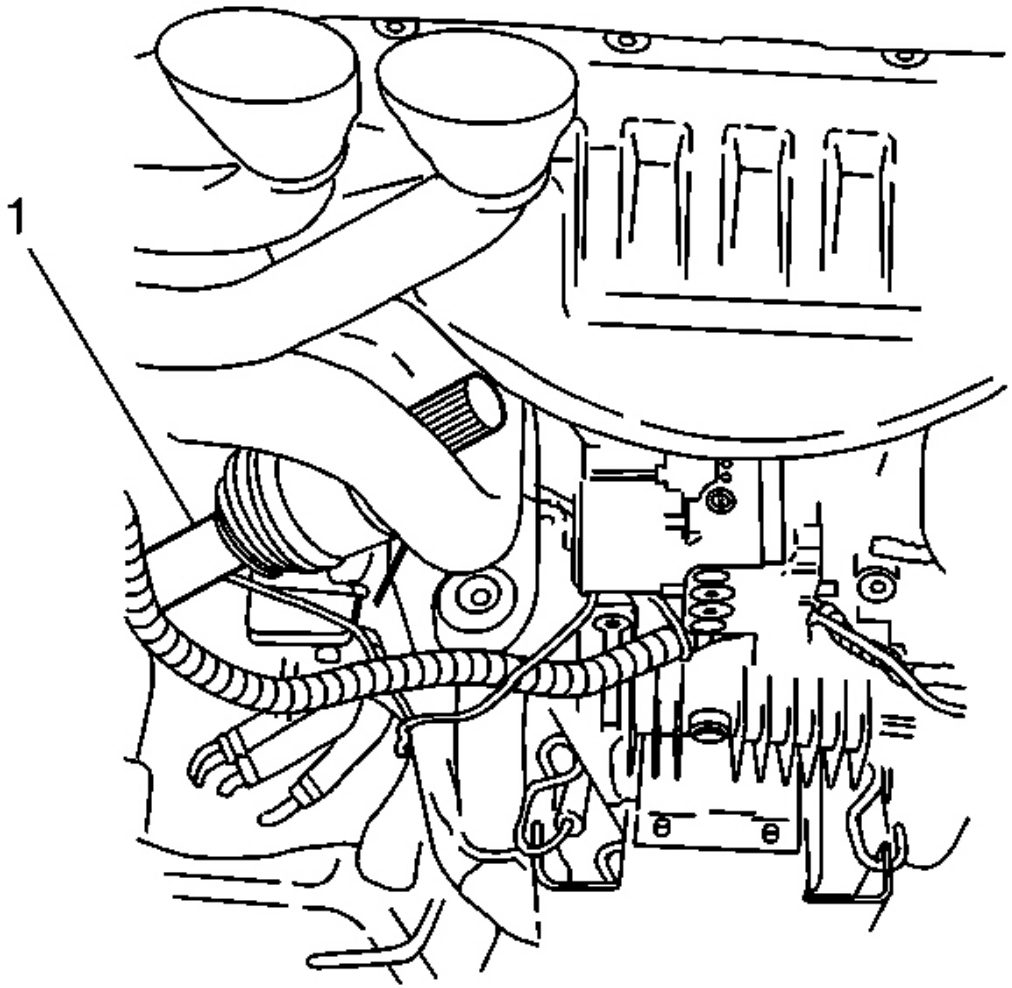

Fig. 21: LH Muffler Assembly Pipe To LH Wheel Drive Shaft
Courtesy of GENERAL MOTORS CORP.

35. Using a pry bar, CAREFULLY release the wheel drive shafts from the differential.
36. Tie off the wheel drive shafts to the underbody to support the shafts out of the way.

The LH muffler assembly pipe toward the rear offers a good location to help support the LH wheel drive shaft (1).

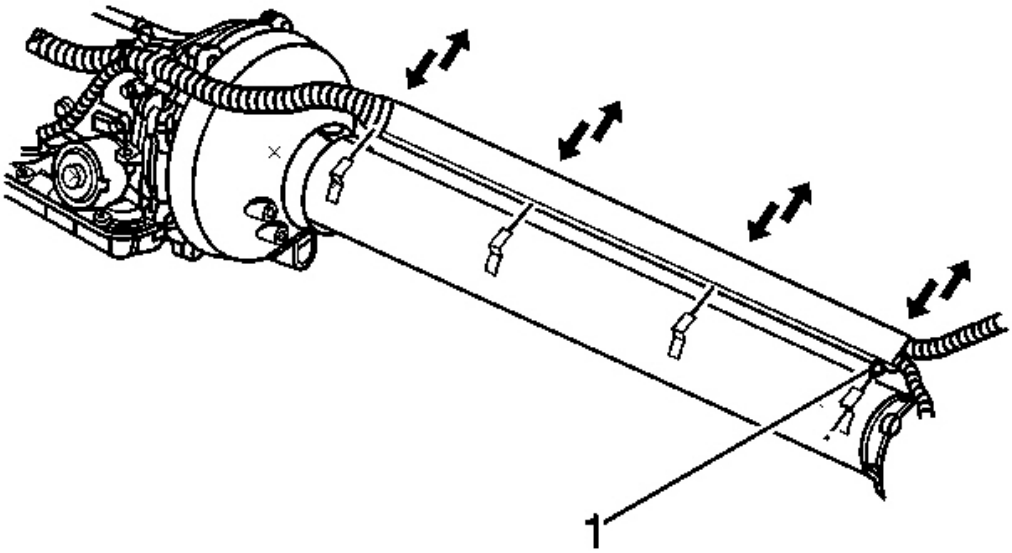

Fig. 22: Wiring Harness To L-Shaped Brackets At Driveline Support Assembly
Courtesy of GENERAL MOTORS CORP.

37. Release the retainer (1) securing (and positioning) the wiring harness to the L-shaped brackets along the driveline support assembly, then slide the harness up out of the brackets and position out of the way.

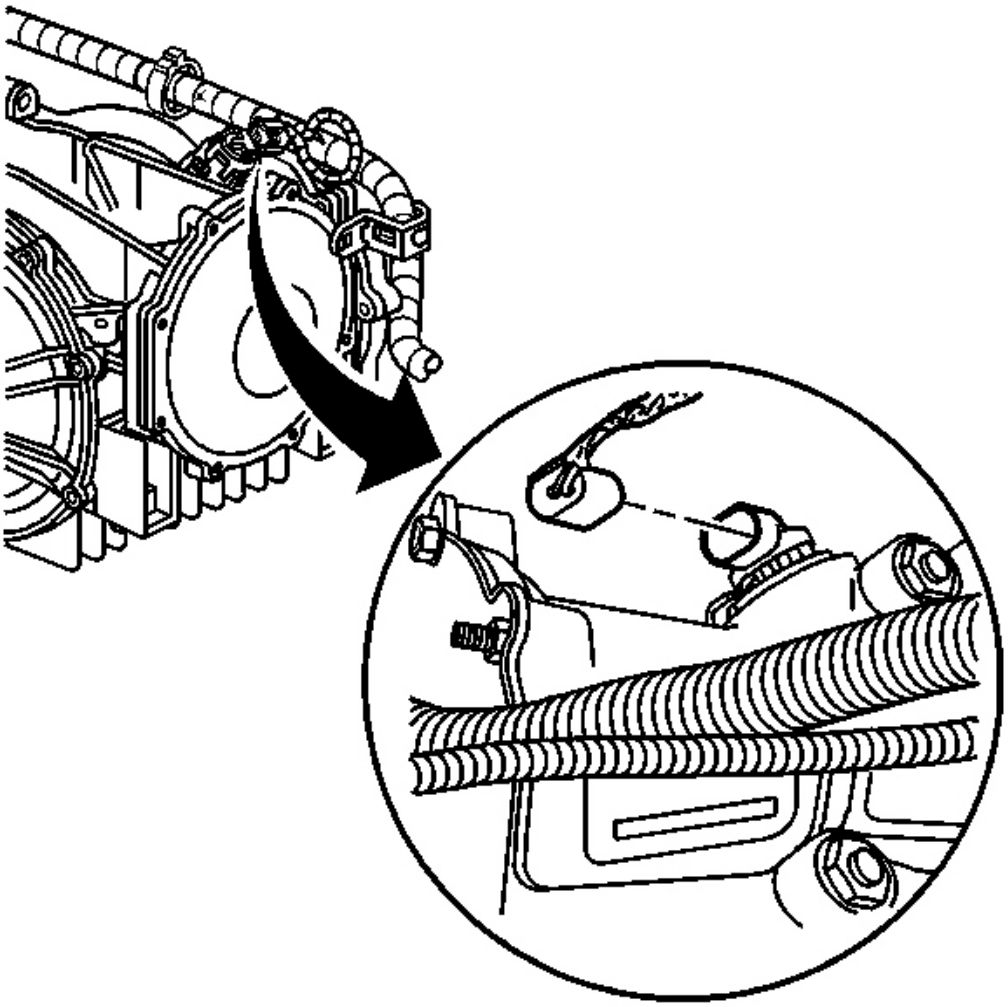

Fig. 23: Vehicle Speed Sensor (VSS) Electrical Connector
Courtesy of GENERAL MOTORS CORP.

38. SLOWLY lower the driveline approximately 51 mm (2.0 in), while simultaneously adjusting the angle of tilt, in order to access the electrical connectors.
39. Disconnect the vehicle speed sensor (VSS) electrical connector.

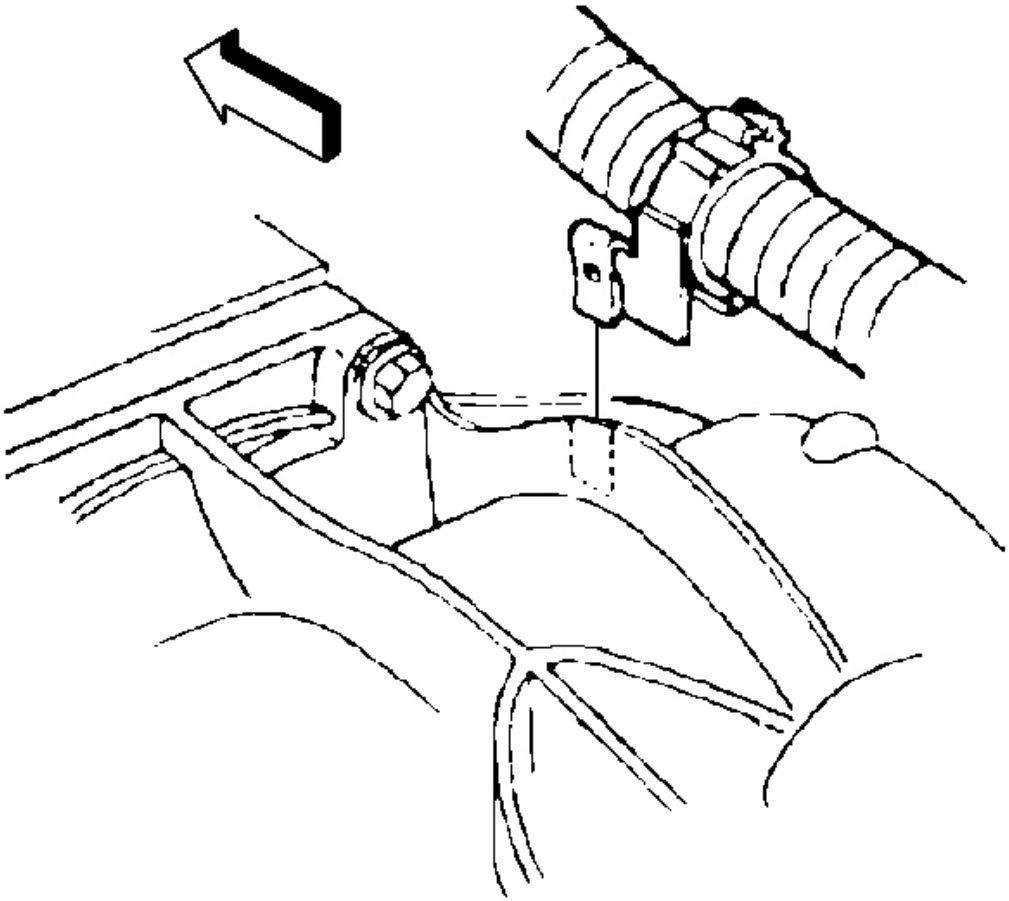

Fig. 24: Wiring Harness Retainer To Stud At Differential Rear Cover
Courtesy of GENERAL MOTORS CORP.

40. Disconnect the wiring harness retainer from the stud at the differential rear cover.
41. Disconnect the wiring harness retainer clip from the top of the differential.

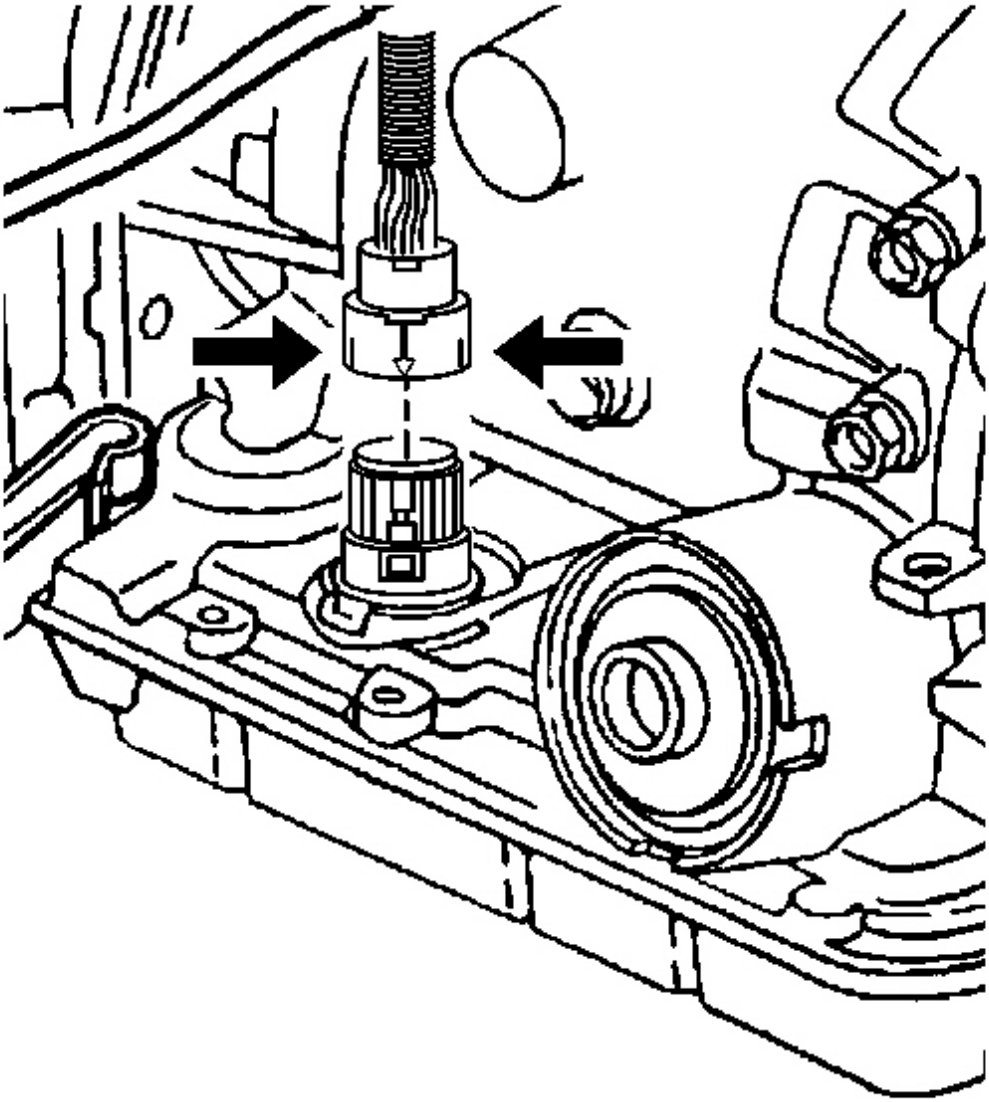

Fig. 25: Transmission Harness 20-Way Connector
Courtesy of GENERAL MOTORS CORP.

42. Disconnect the transmission harness 20-way connector.

    Depress both tabs on the connector and pull straight up; do not pry the connector.

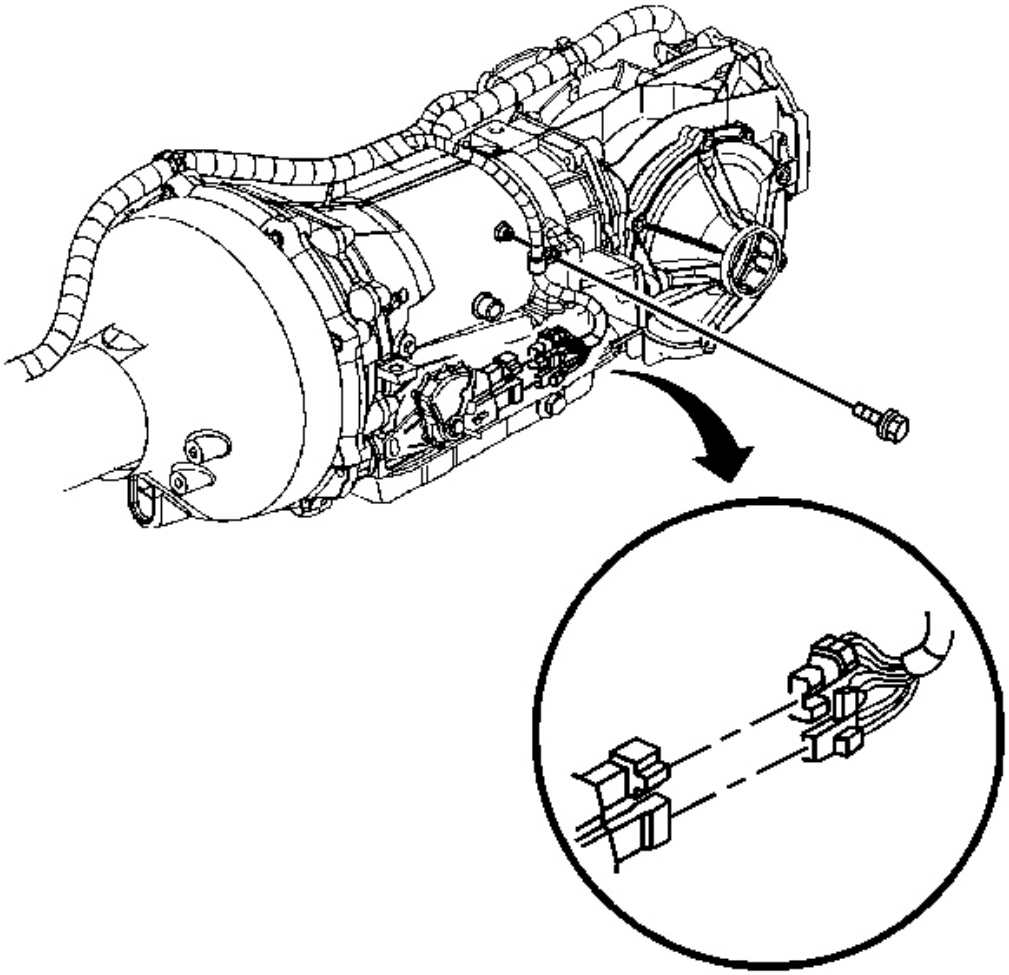

Fig. 26: Park/Neutral Position Switch Electrical Connectors
Courtesy of GENERAL MOTORS CORP.

43. Disconnect the park/neutral position switch electrical connectors.
44. Remove the bolt retaining the transmission wiring harness to the LH side of the transmission case.

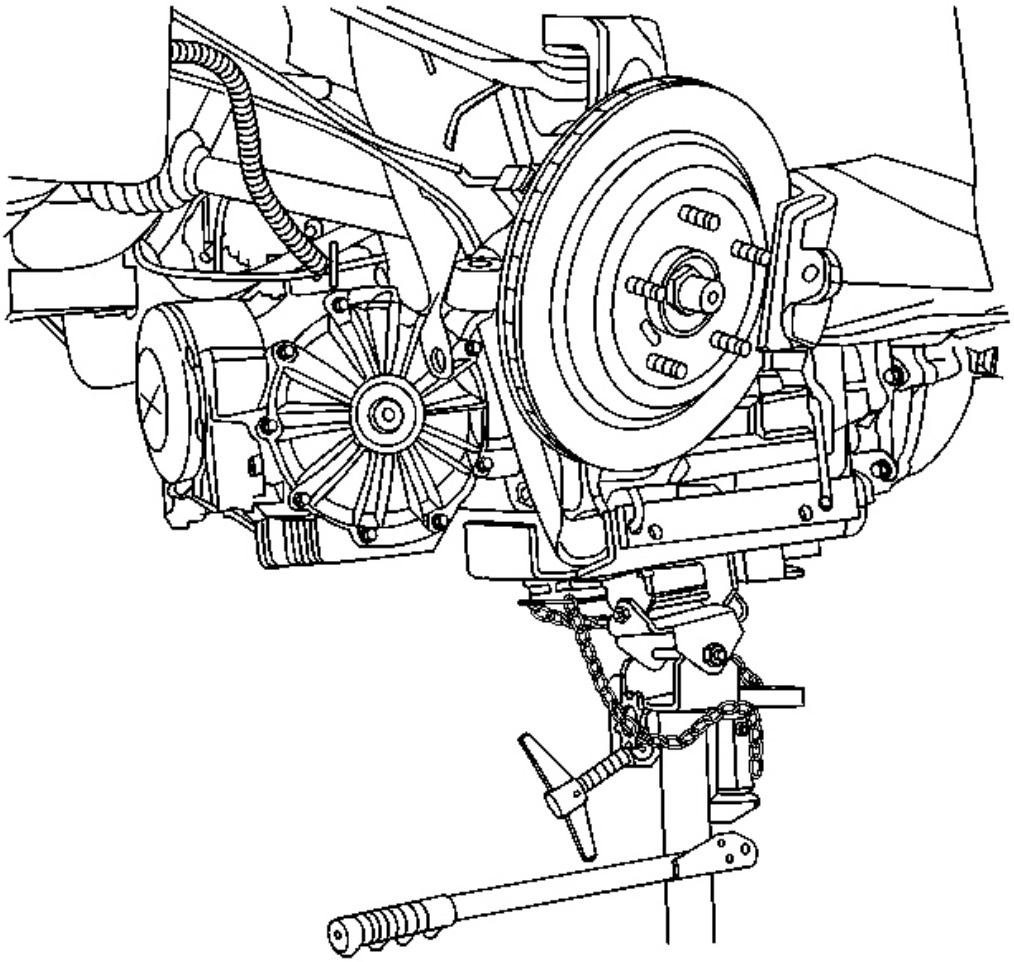

Fig. 27: Wiring Harness To Harness Retainer At Transmission
Courtesy of GENERAL MOTORS CORP.

45. SLOWLY lower the driveline, while simultaneously adjusting the angle of tilt, and observe the relationship between the top rear of the differential and the lowest part of the rear compartment panel floor (the center storage compartment between the frame rails); the differential should not be lowered more than approximately EVEN with the specified body point of reference.

    (The engine positive crankcase ventilation (PCV) pipes which route along the rear of the engine intake manifold [LS1 only] will likely contact the dash panel.)

46. Release the wiring harness from the harness retainer along the top of the transmission.
47. Check to be sure that the wiring harness is free from the driveline being removed.

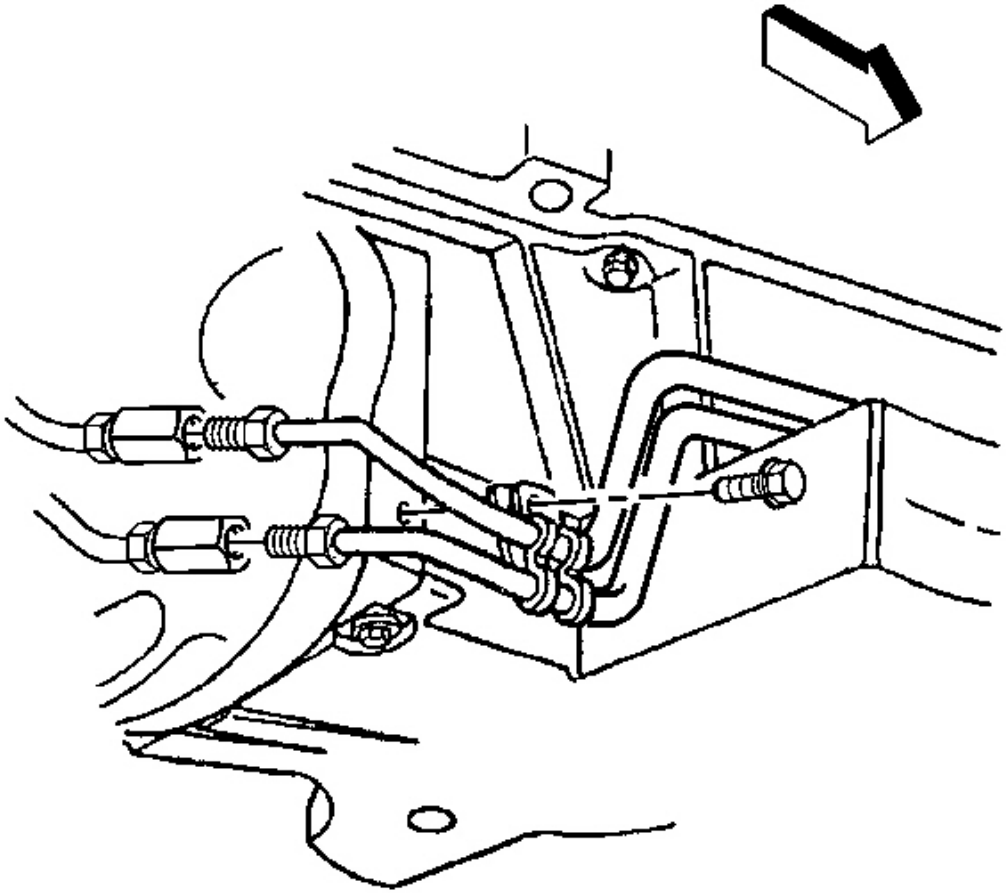

Fig. 28: Locating Cooler Fittings
Courtesy of GENERAL MOTORS CORP.

48. Disconnect the transmission oil cooler rear pipes from the junction fittings at the engine flywheel housing, then cap the pipes and plug the junction fittings to prevent contamination.

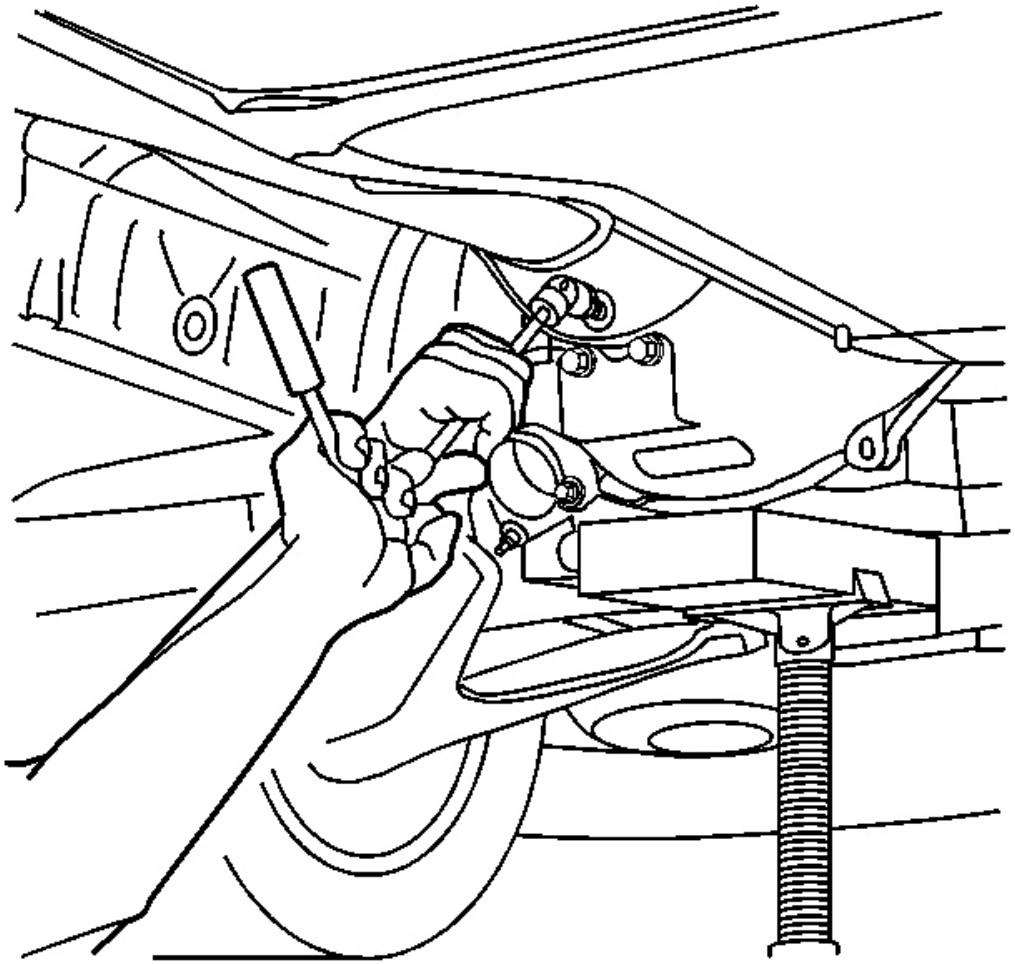

Fig. 29: Driveline Support Assembly To Engine Flywheel Housing Bolts
Courtesy of GENERAL MOTORS CORP.

49. Using a block of wood to protect the engine oil pan, place a jack under the rear of the engine oil pan to support the engine, and prevent contact with the composite dash panel.
50. Remove the five driveline support assembly to engine flywheel housing bolts.

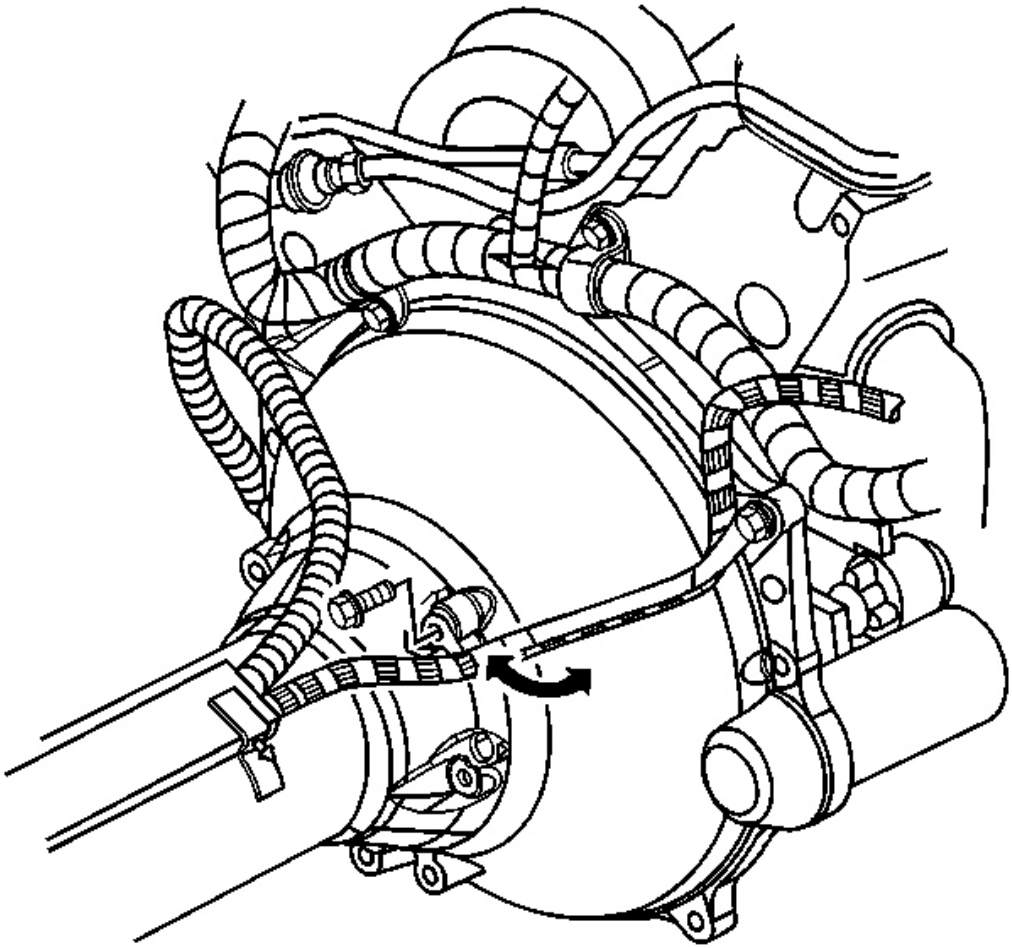

Fig. 30: Wiring Harness Bracket To Driveline Tunnel Wall
Courtesy of GENERAL MOTORS CORP.

51. Carefully bend the wiring harness bracket away from the driveline and toward the driveline tunnel wall in order to make a clear removal path for the driveline.

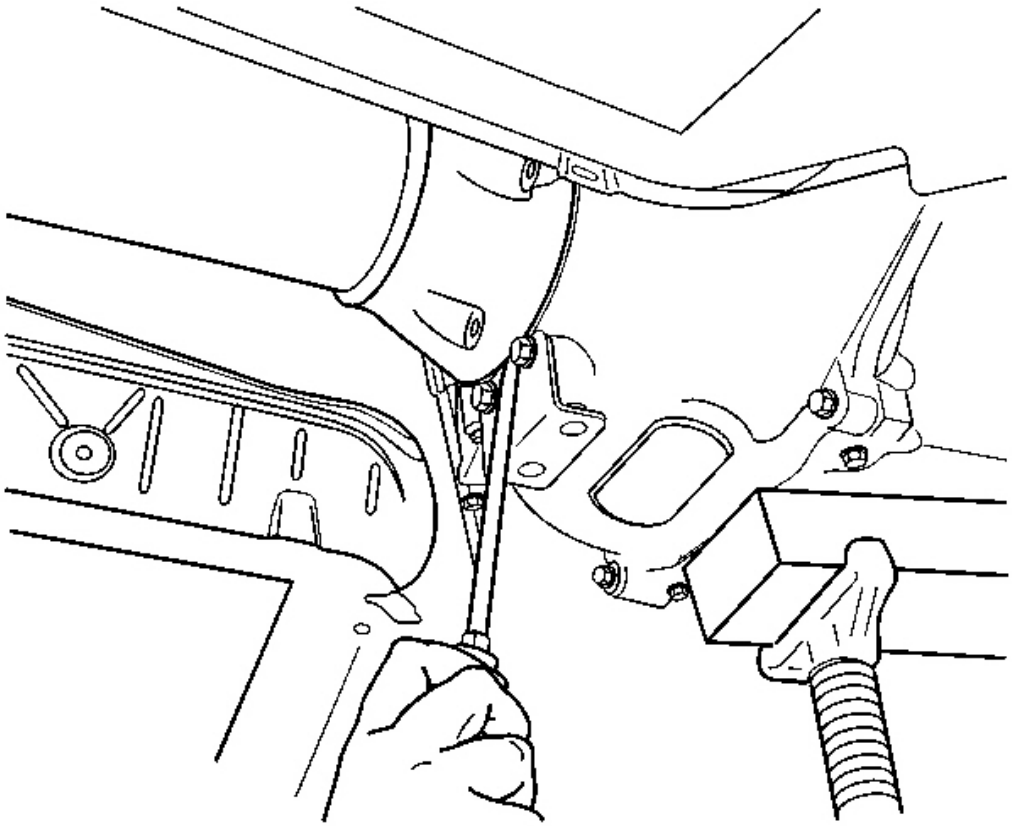

Fig. 31: Edge Of Driveline Support Assembly & Engine Flywheel Housing
Courtesy of GENERAL MOTORS CORP.

IMPORTANT: The aid of an assistant will be necessary for the remaining steps.

52. Have an assistant insert a flat bladed screwdriver, or similar tool, between the edge of the driveline support assembly and the engine flywheel housing, then begin to pry the driveline loose from the engine.

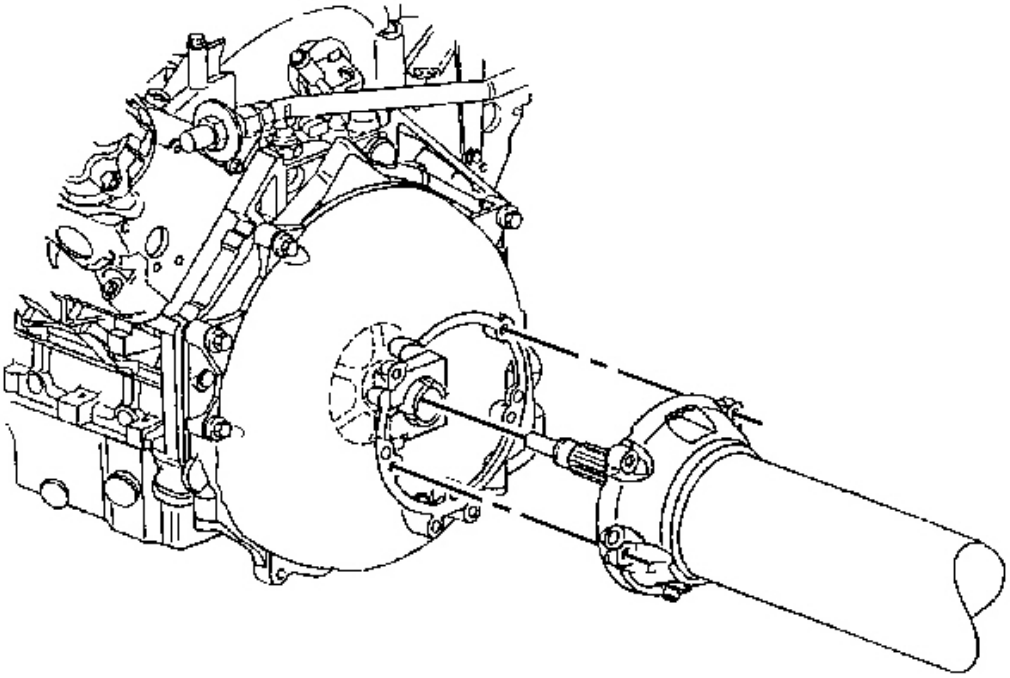

Fig. 32: Input Shaft At Front Of Driveline Support Assembly To Engine Flywheel Housing
Courtesy of GENERAL MOTORS CORP.

53. Have an assistant guide the front of the driveline during the removal of the driveline from the vehicle.
54. SLOWLY lower the driveline, while simultaneously adjusting the angle of tilt and pulling the driveline away from the engine UNTIL the propeller input shaft at the front of the driveline support assembly just clears the engine flywheel housing.
55. SLOWLY lower the driveline completely out of the vehicle.

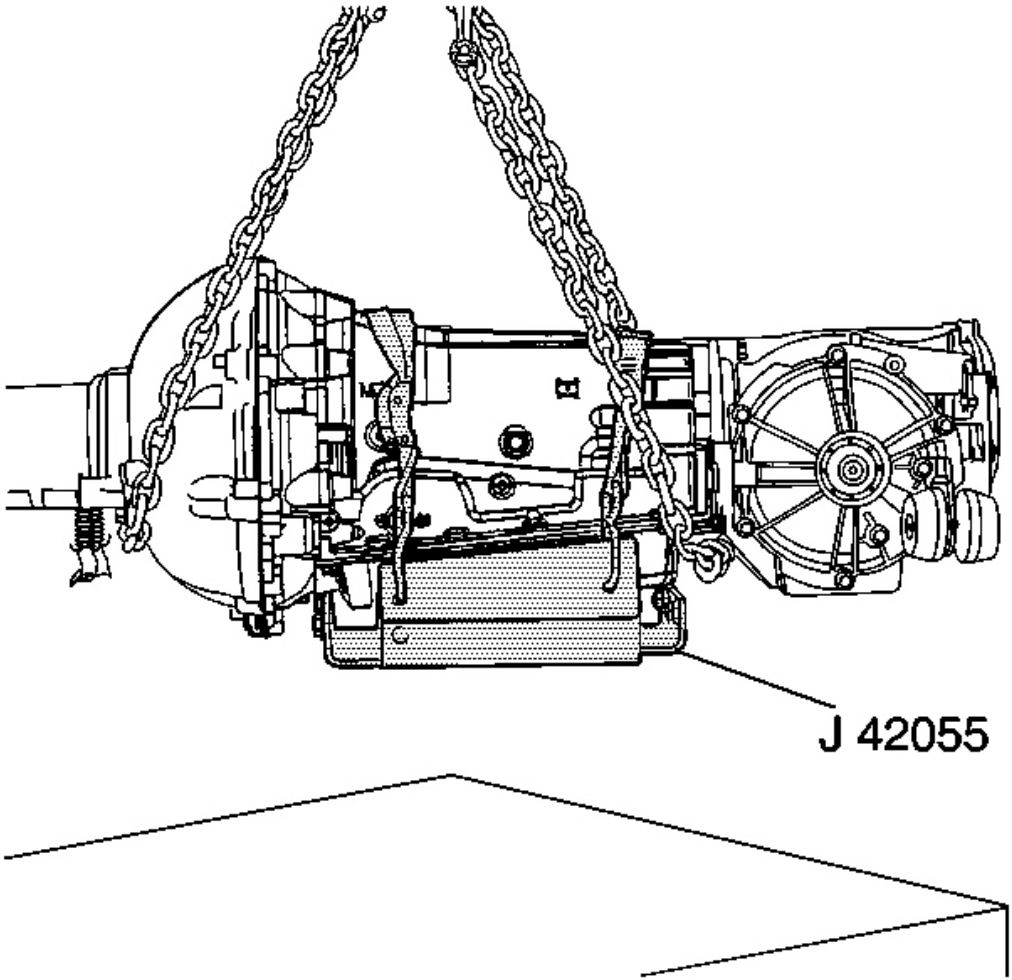

Fig. 33: Transmission Jack To Driveline Components
Courtesy of GENERAL MOTORS CORP.

56. Position the chainfall, or equivalent, of a lift device in a way which will protect the transmission oil cooler rear pipes and the rear exhaust hangers located on the driveline support assembly.
57. Using the lift device, raise the driveline to relieve the weight from the transmission jack.
58. Disconnect the **J 42055** from the transmission jack ONLY, the **J 42055** will provide stability to the driveline components while working on a bench.
59. Position the driveline on a work bench with the lift device still attached.
60. Support the driveline support assembly and the differential for additional balance.
61. Remove the lift device from the driveline.

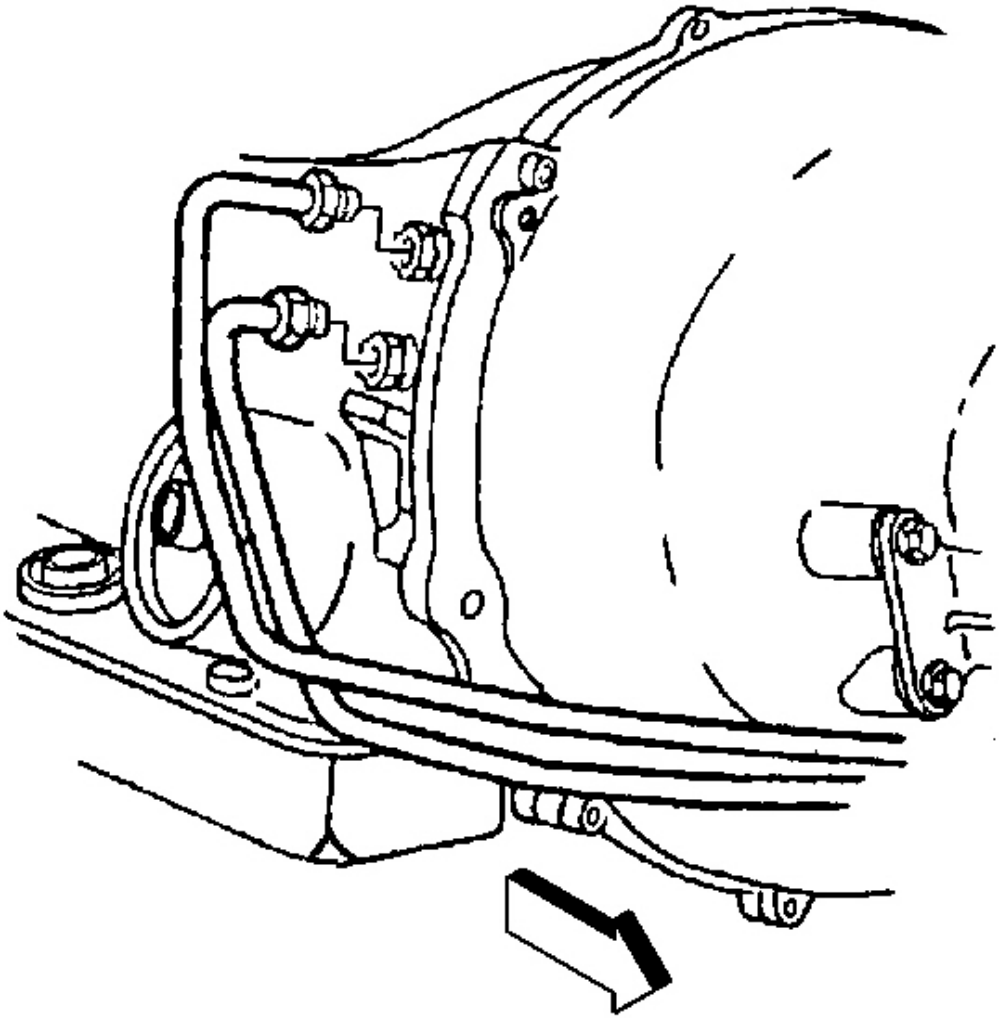

Fig. 34: Transmission Oil Cooler Upper & Lower Pipe Fittings To Transmission
Courtesy of GENERAL MOTORS CORP.

62. Disconnect the transmission oil cooler upper and lower pipe fittings from the transmission, then cap the pipes and plug the fittings to prevent contamination.

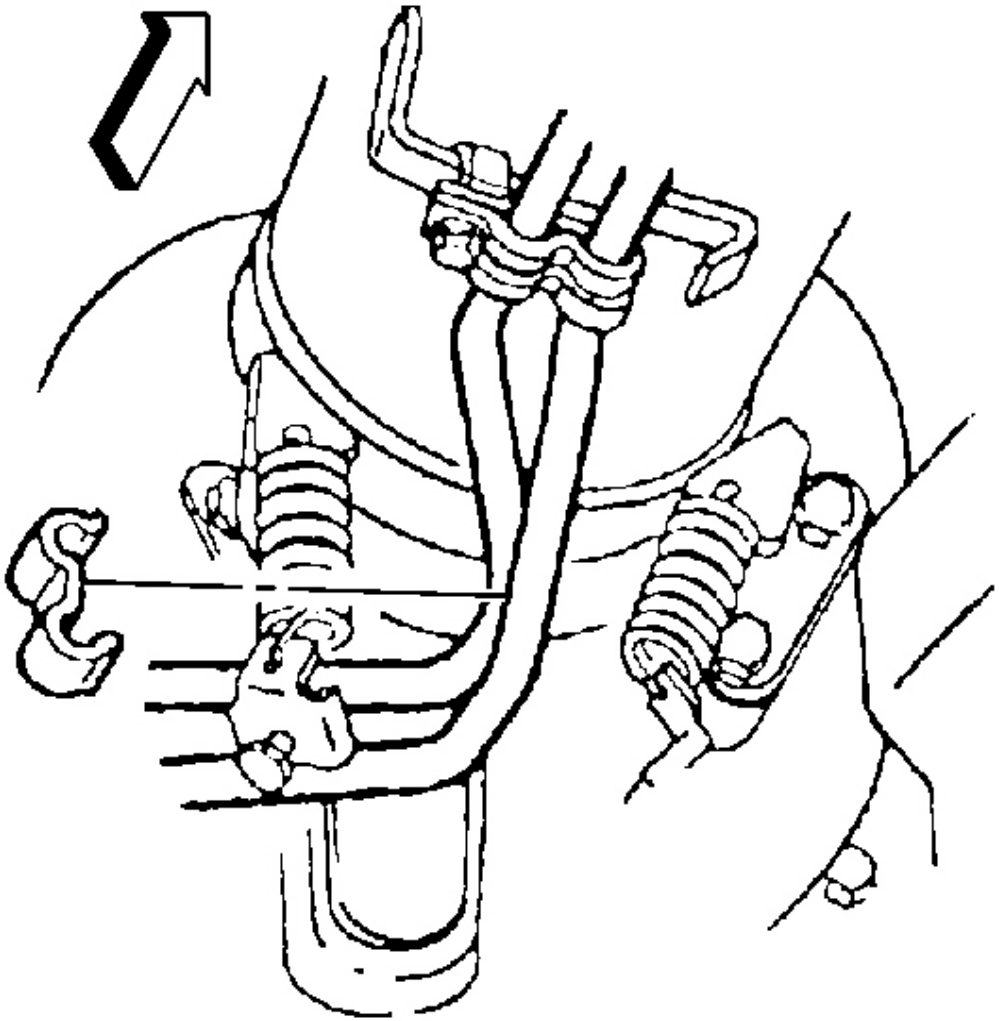

Fig. 35: Transmission Oil Cooler Pipe Rear Clip
Courtesy of GENERAL MOTORS CORP.

63. Remove the transmission oil cooler pipe rear clip.

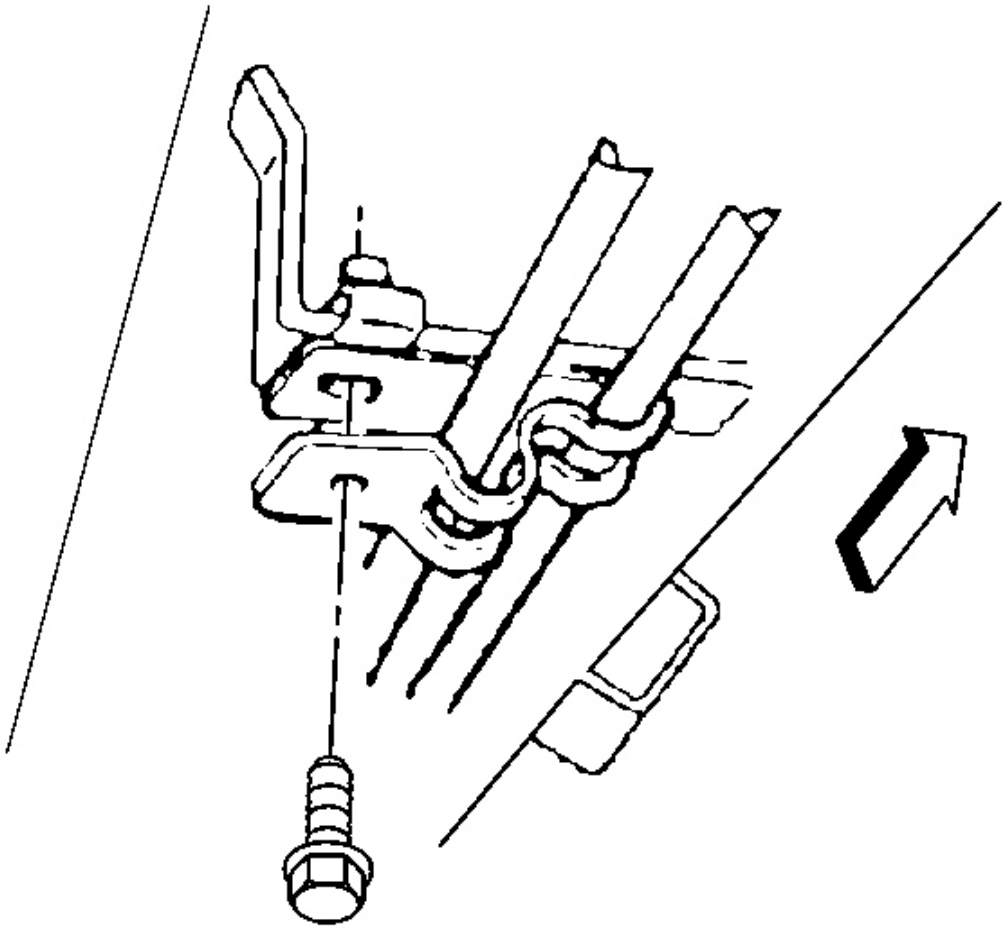

Fig. 36: Transmission Oil Cooler Pipe Middle Clip
Courtesy of GENERAL MOTORS CORP.

64. Remove the transmission oil cooler pipe middle clip.
65. Remove the transmission oil cooler pipe front and rear clamp bolts and clamps.
66. Remove the transmission oil cooler pipes.

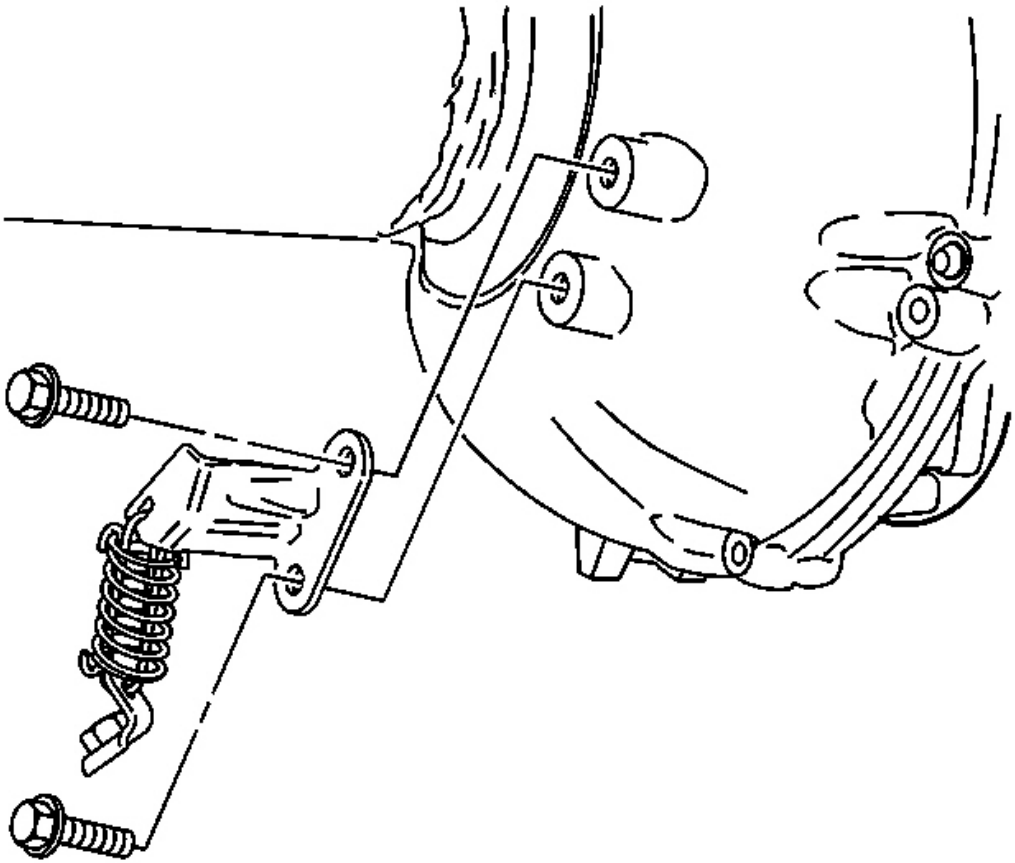

Fig. 37: Rear Exhaust Hanger Mounting Bolts
Courtesy of GENERAL MOTORS CORP.

67. Remove the rear exhaust hanger mounting bolts.
68. Remove the rear exhaust hangers from the driveline support assembly.

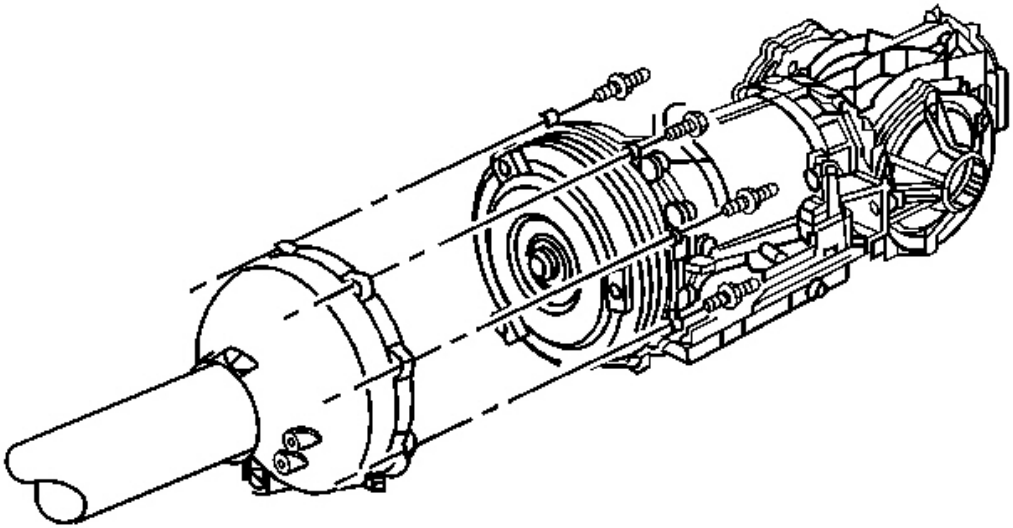

Fig. 38: Transmission To Driveline Support Assembly Bolts/Studs
Courtesy of GENERAL MOTORS CORP.

69. Remove the transmission to driveline support assembly bolts/studs.
70. Insert a flat bladed screwdriver, or similar tool, between the edge of the driveline support assembly and the transmission, then begin to pry the driveline support assembly loose from the transmission.
71. Slowly slide the driveline support assembly away from the transmission while supporting the transmission torque converter.
72. Using a strap positioned from side to side, secure the transmission torque converter to the transmission.

Installation Procedure

NOTE: Failure to follow the proper removal and installation procedures may result in damage to the engine crankshaft thrust bearing.

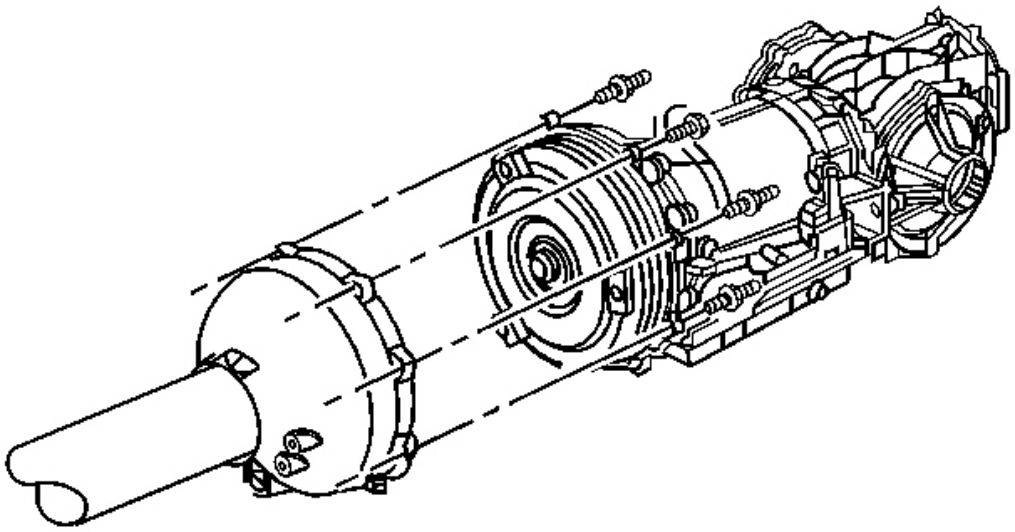

Fig. 39: Transmission To Driveline Support Assembly Bolts/Studs
Courtesy of GENERAL MOTORS CORP.

1. Remove the strap retaining the transmission torque converter.
2. Slowly slide the driveline support assembly to the transmission, while supporting the transmission torque converter.

NOTE: Refer to Fastener Notice in Cautions and Notices.

3. Install the transmission to driveline support assembly bolts/studs.

   Tighten: Tighten the transmission to driveline support assembly bolts/studs to 50 N.m (37 lb ft).

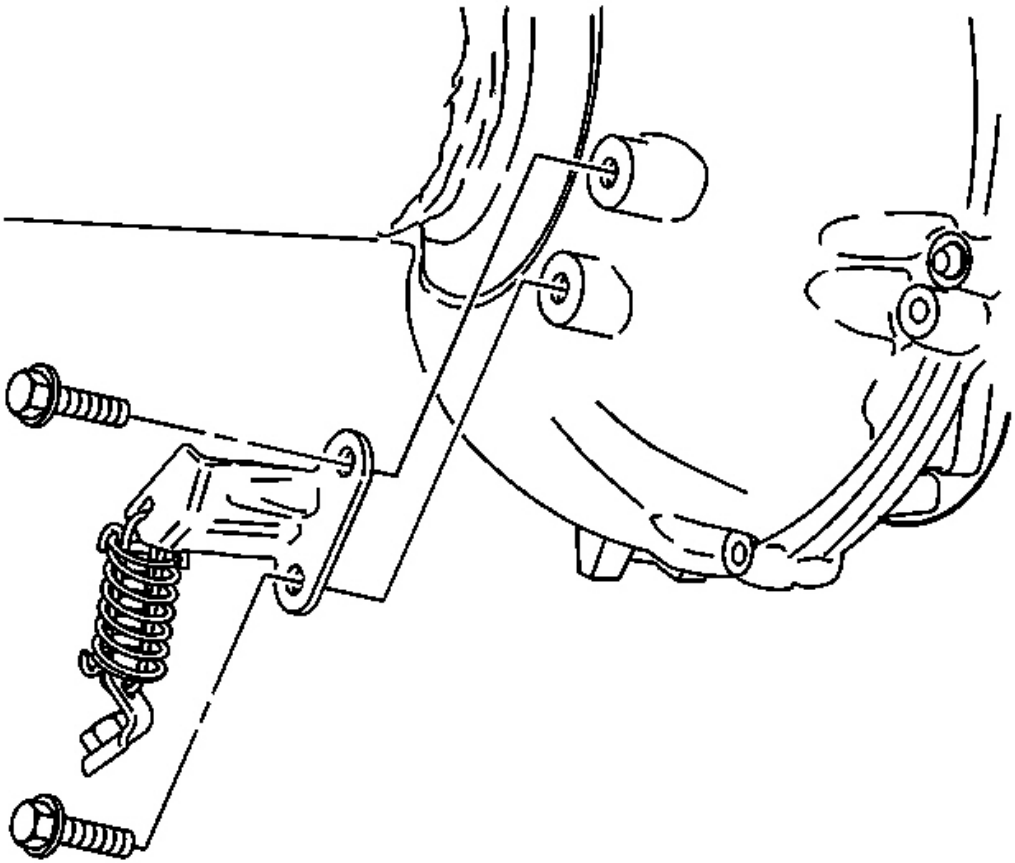

Fig. 40: Rear Exhaust Hanger Mounting Bolts
Courtesy of GENERAL MOTORS CORP.

4. Install the rear exhaust hangers to the driveline support assembly.
5. Install the rear exhaust hanger mounting bolts.

Tighten: Tighten the rear exhaust hanger mounting bolts to 50 N.m (37 lb ft).

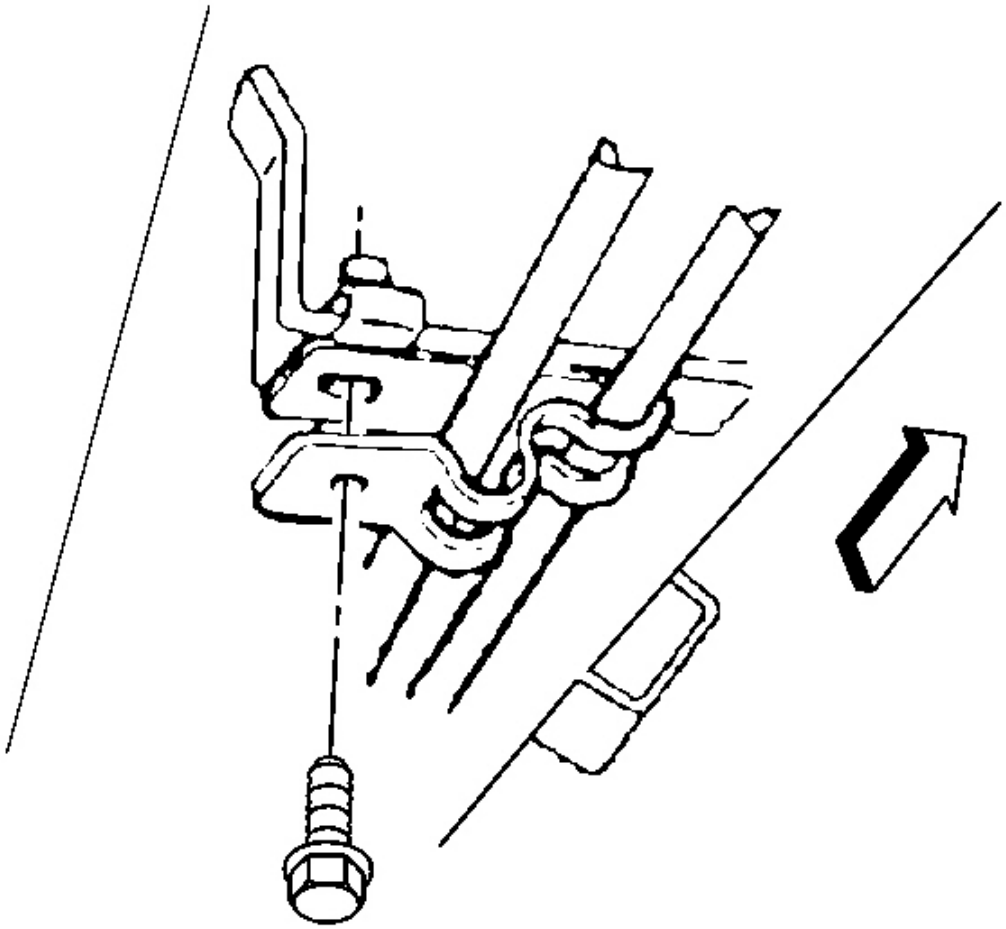

Fig. 41: Transmission Oil Cooler Pipe Middle Clip
Courtesy of GENERAL MOTORS CORP.

6. Install the transmission oil cooler pipes into position.
7. Install the transmission oil cooler pipe front and rear retaining clamps and bolts.

   Tighten: Tighten the transmission oil cooler pipe front and rear retaining clamp bolts 12 N.m (106 lb in).

8. Install the transmission oil cooler pipe middle clip.

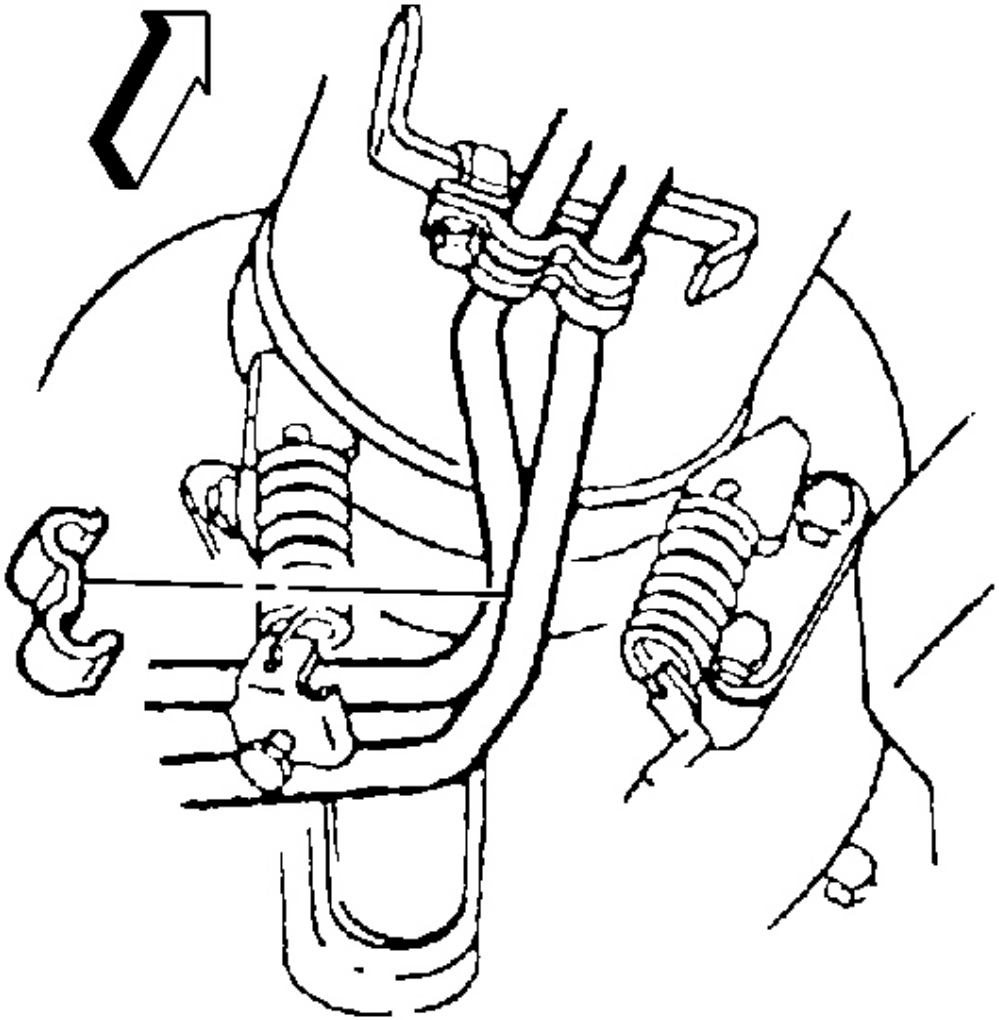

Fig. 42: Transmission Oil Cooler Pipe Rear Clip
Courtesy of GENERAL MOTORS CORP.

9. Install the transmission oil cooler pipe rear clip.

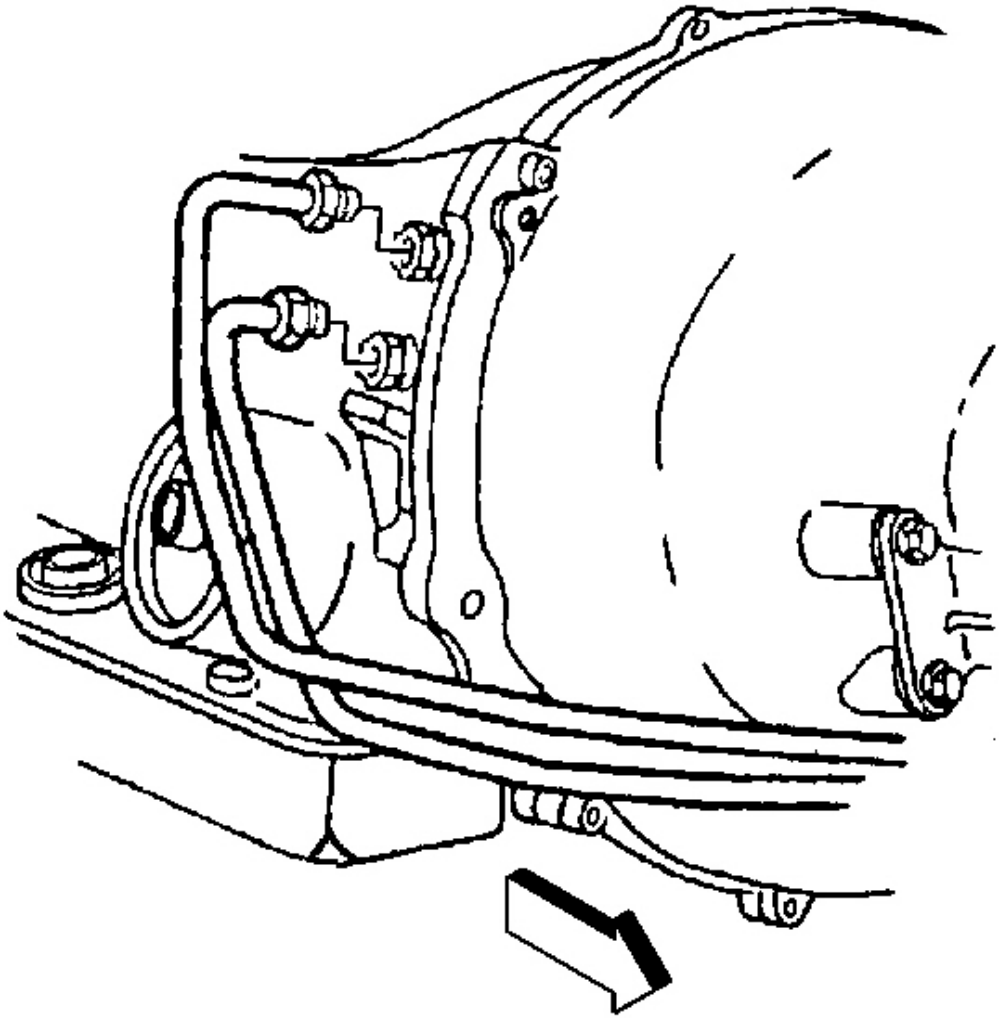

Fig. 43: Transmission Oil Cooler Upper & Lower Pipe Fittings To Transmission
Courtesy of GENERAL MOTORS CORP.

10. Remove the caps from the transmission oil cooler pipes and remove the plugs from the fittings on the transmission.
11. ALIGN and HAND-START, then tighten ONLY by hand to seat the transmission oil cooler pipe fittings to the transmission fittings.

    Tighten: Tighten the transmission oil cooler fittings to 40 N.m (30 lb ft).

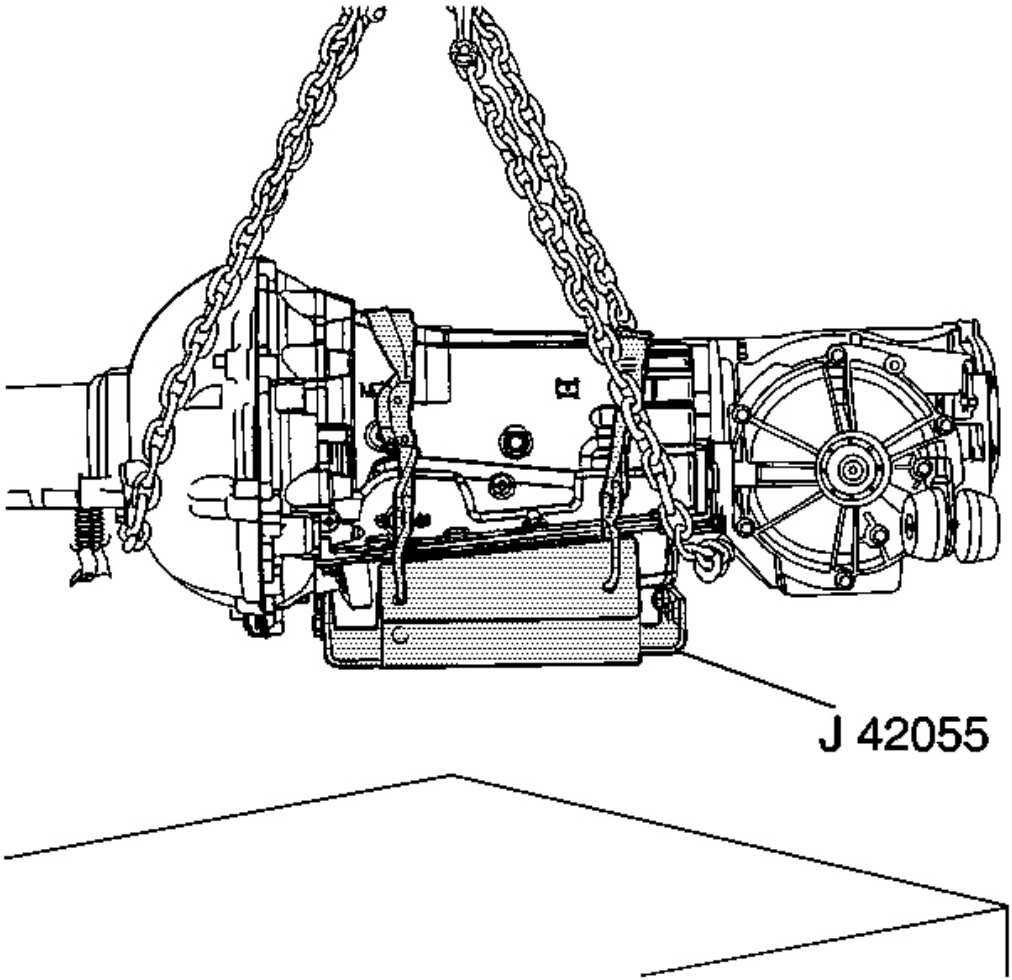

Fig. 44: Transmission Jack To Driveline Components
Courtesy of GENERAL MOTORS CORP.

12. Position the chainfall, or equivalent lifting device, in a way which will protect the transmission oil cooler rear pipes and the rear exhaust hangers located on the driveline support assembly.

IMPORTANT: The aid of an assistant will be necessary for the following steps until the driveline is installed into the vehicle.

13. Using the lifting device, raise the driveline off the workbench and position the driveline with the **J 42055** onto a transmission jack. See **Special Tools and Equipment** .
14. Connect the **J 42055** to the transmission jack. See **Special Tools and Equipment** .

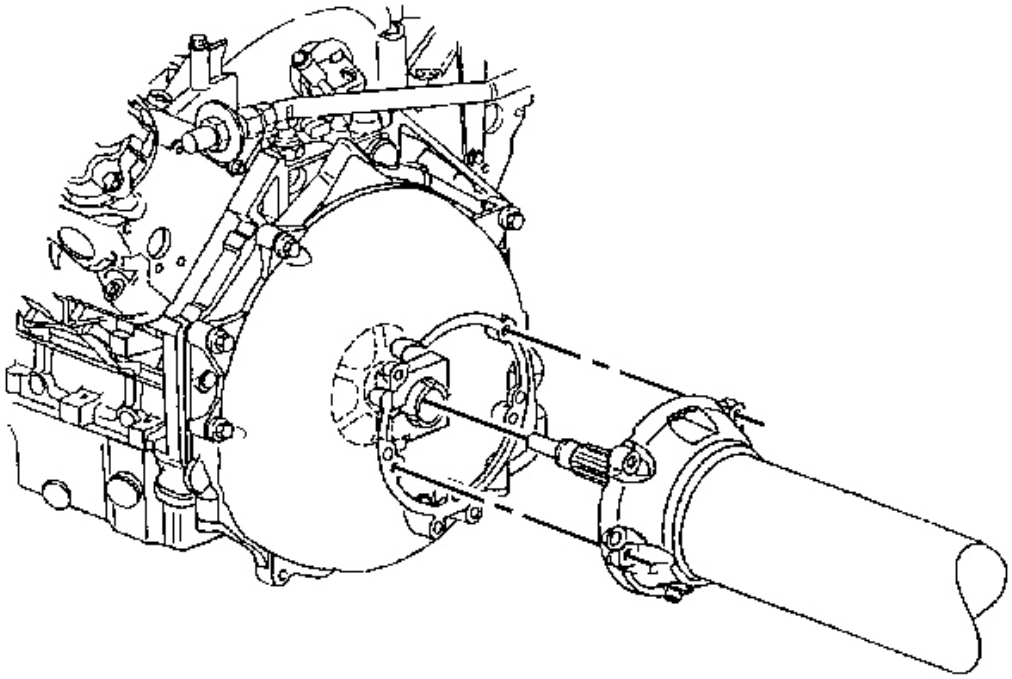

Fig. 45: Input Shaft At Front Of Driveline Support Assembly To Engine Flywheel Housing
Courtesy of GENERAL MOTORS CORP.

15. Remove the lifting device from the driveline.
16. Position the driveline under the vehicle.
17. Begin to raise the driveline at the approximate angle used during removal.
18. Position the wiring harness along the driveline support assembly and LOOSELY install the harness into the harness retaining slots.
19. Have an assistant guide the front of the driveline so the propeller input shaft is just to the rear of the engine flywheel housing, then raise the driveline to the PROPER HEIGHT and the PROPER ANGLE to install to the engine.

IMPORTANT: Use care not to use too much force to install the propeller input shaft into the propeller shaft hub. The propeller input shaft front bearing positioning system is designed to withstand an insertion force not greater than 582 N (130 lb).

20. Have an assistant begin to insert the propeller input shaft into the propeller shaft hub while maintaining the proper angle of the driveline, if necessary use a screwdriver to rotate the shaft slightly to position and align the splines.

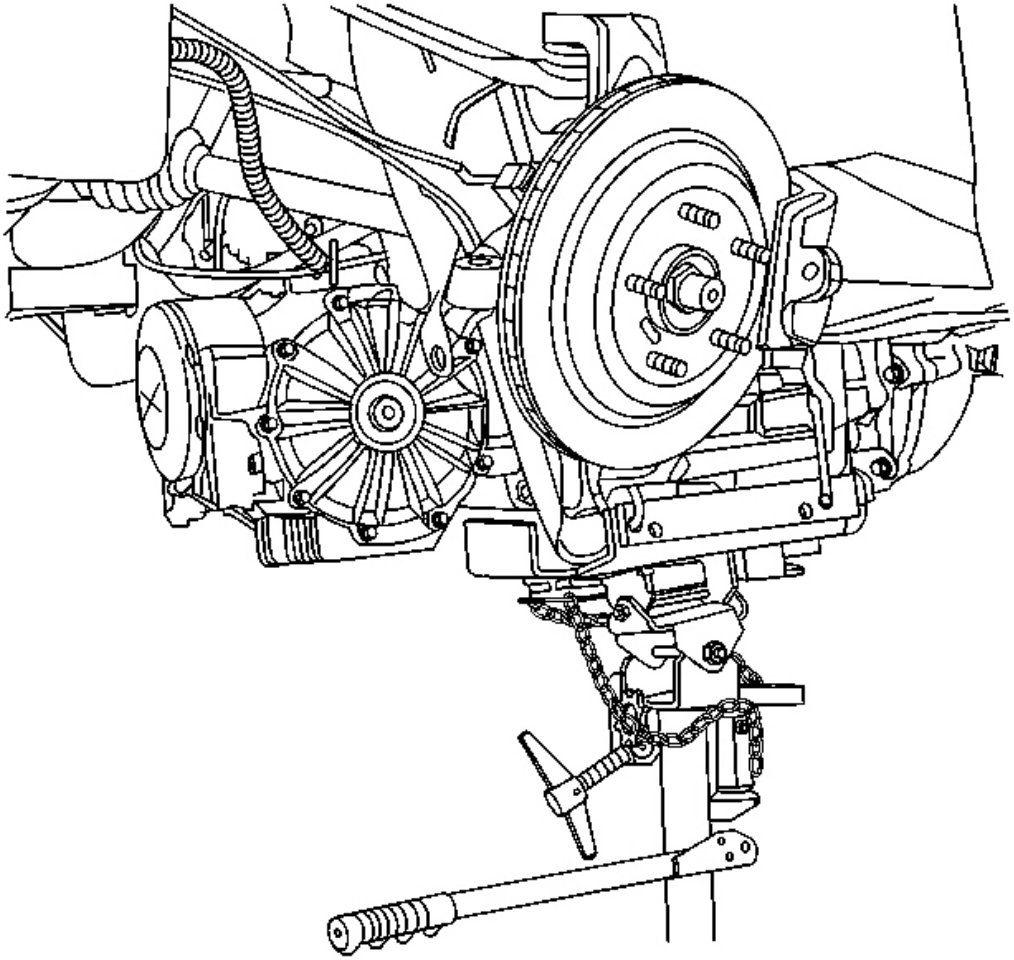

Fig. 46: Wiring Harness To Harness Retainer At Transmission
Courtesy of GENERAL MOTORS CORP.

21. SLOWLY seat the driveline to the engine flywheel housing while maintaining the proper angle of the driveline.

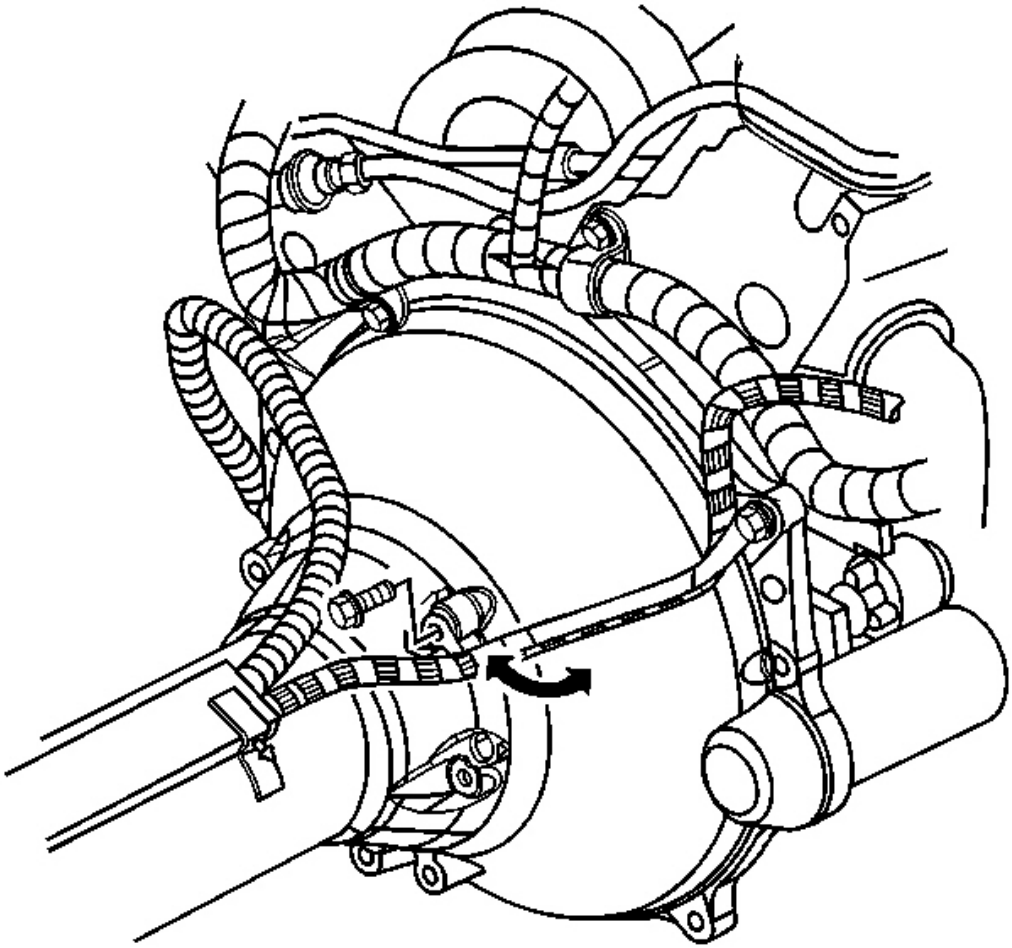

Fig. 47: Wiring Harness Bracket To Driveline Tunnel Wall
Courtesy of GENERAL MOTORS CORP.

22. Reposition the wiring harness bracket to the driveline support assembly bolt hole.

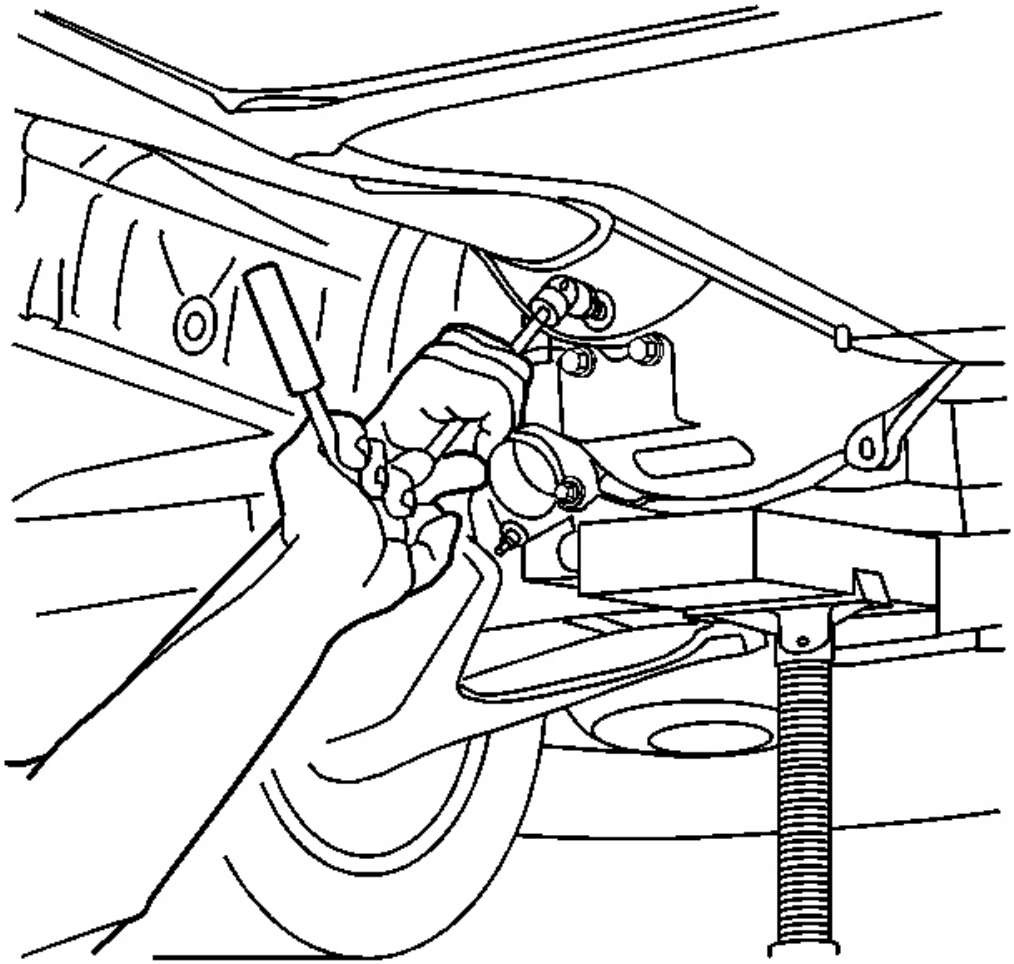

Fig. 48: Driveline Support Assembly To Engine Flywheel Housing Bolts
Courtesy of GENERAL MOTORS CORP.

23. Install the driveline support assembly to engine flywheel housing bolts.

    Tighten: Tighten the driveline support assembly to engine flywheel housing bolts to 50 N.m (37 lb ft).

24. Install the wiring harness to the wiring harness retainer along the top of the transmission.
25. SLOWLY raise the driveline to approximately 51 mm (2 in) BELOW the final installed height.

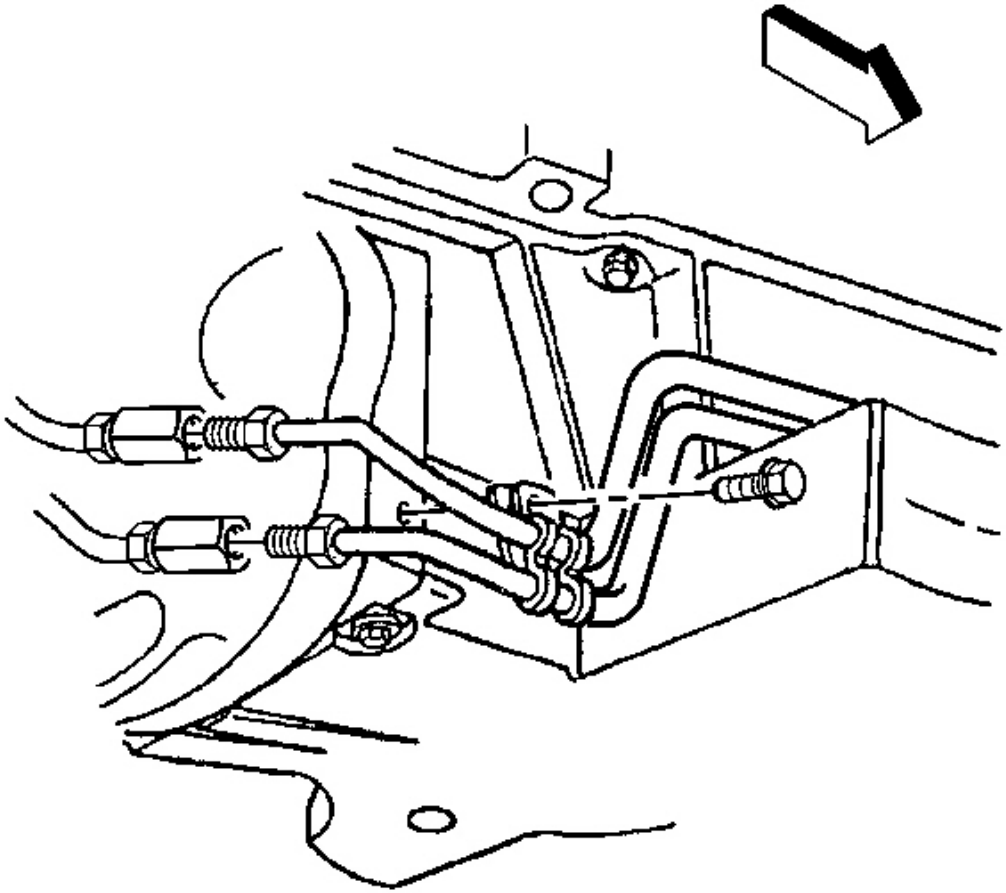

Fig. 49: Locating Cooler Fittings
Courtesy of GENERAL MOTORS CORP.

26. Remove the caps from the front of the transmission oil cooler pipes and remove the plugs from the junction fittings at the engine flywheel housing.
27. ALIGN and HAND-START, then tighten ONLY by hand to seat the transmission oil cooler pipes to the junction fittings at the engine flywheel housing.

    Tighten: Tighten the transmission oil cooler pipes to junction fittings at engine flywheel housing to 27 N.m (20 lb ft).

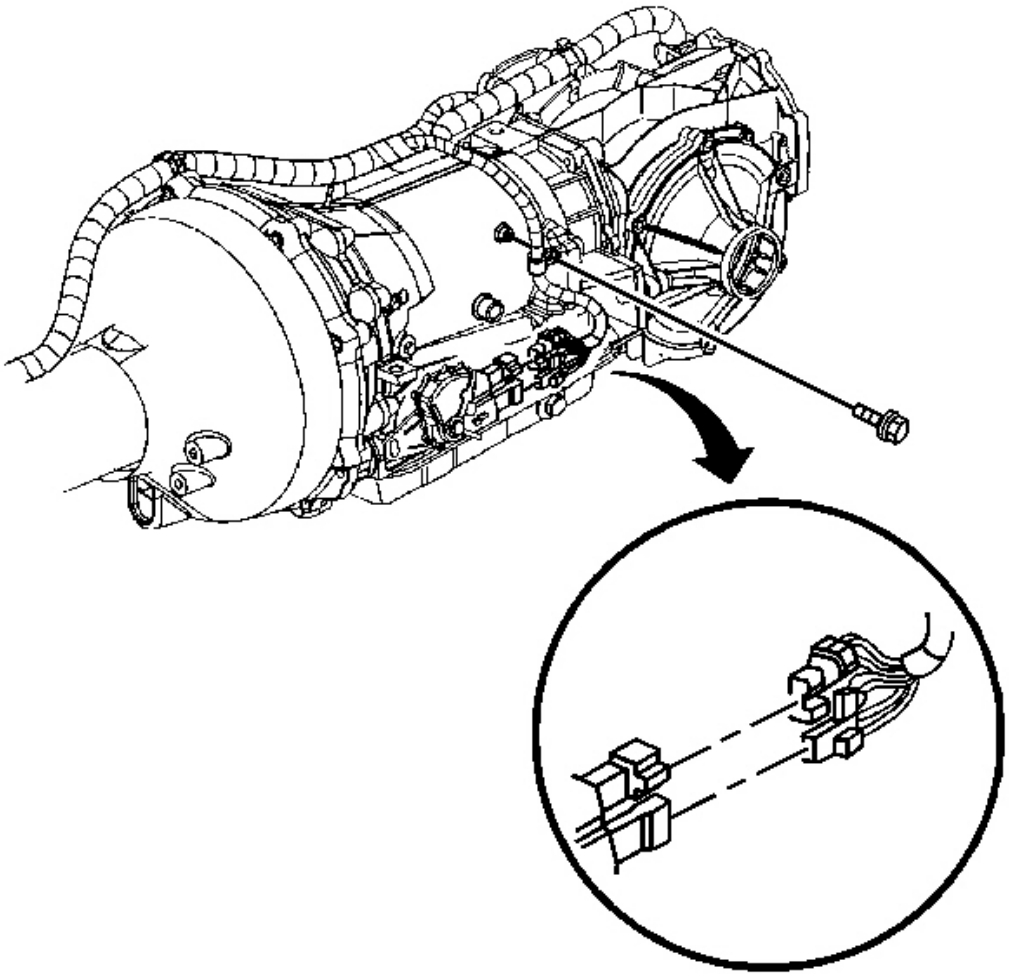

Fig. 50: Park/Neutral Position Switch Electrical Connectors
Courtesy of GENERAL MOTORS CORP.

28. Install the transmission wiring harness to LH side of transmission case retaining bolt.

    Tighten: Tighten the transmission wiring harness to LH side of transmission case retaining bolt to 2.5 N.m (22 lb in).

29. Connect the park/neutral position switch electrical connectors.

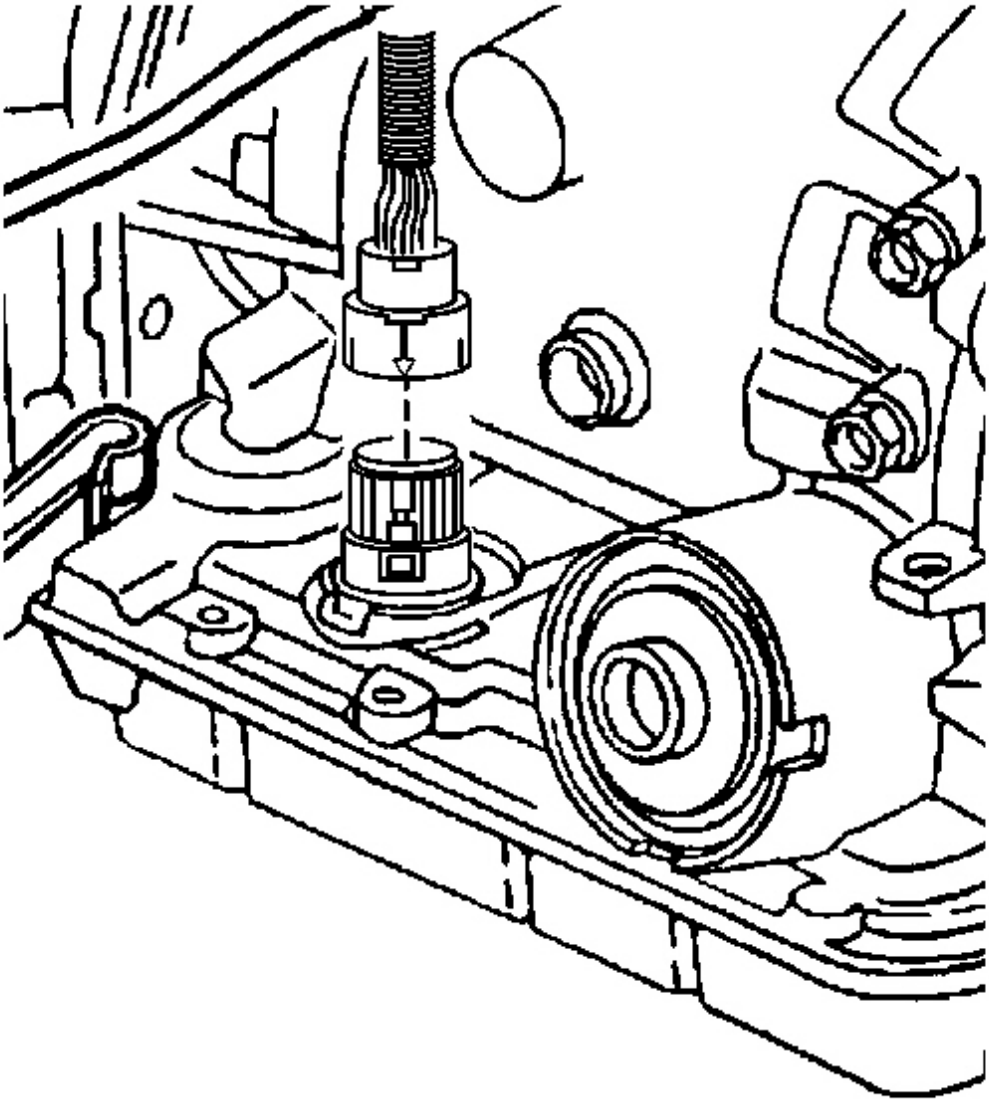

Fig. 51: Align Transmission Wiring Harness 20-Way Connector
Courtesy of GENERAL MOTORS CORP.

30. Connect the transmission wiring harness 20-way connector.

    Align the arrows on each half of the connector.

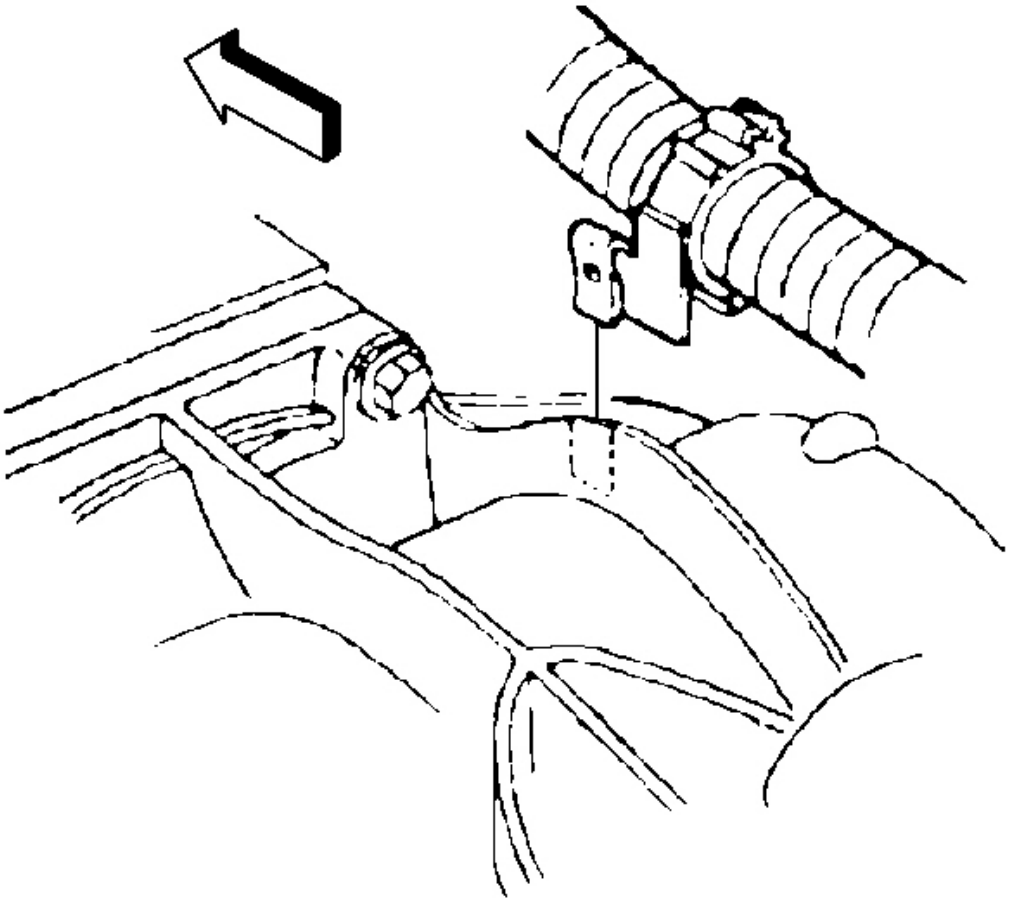

Fig. 52: Wiring Harness Retainer To Stud At Differential Rear Cover
Courtesy of GENERAL MOTORS CORP.

31. Connect the wiring harness clip to the top of the differential.
32. Connect the wiring harness retainer to the stud at the differential rear cover.

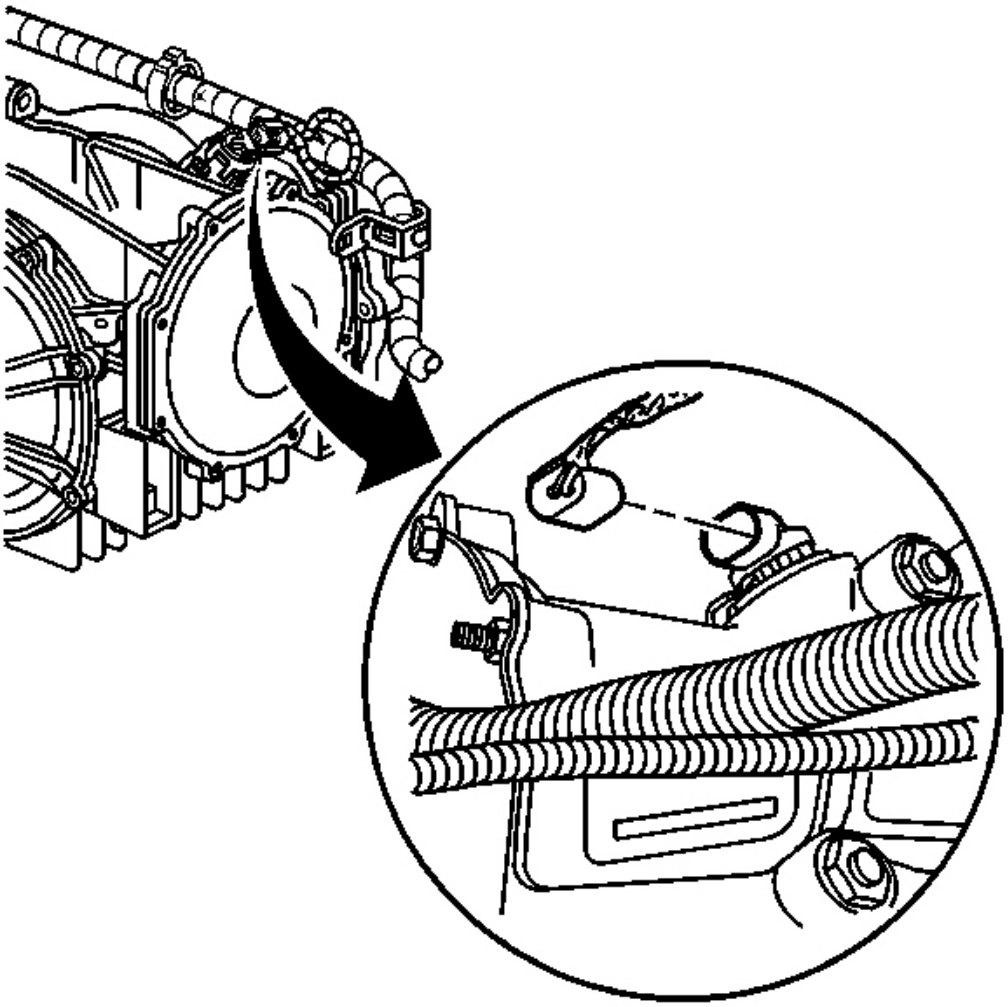

Fig. 53: Vehicle Speed Sensor (VSS) Electrical Connector
Courtesy of GENERAL MOTORS CORP.

33. Connect the vehicle speed sensor (VSS) electrical connector.

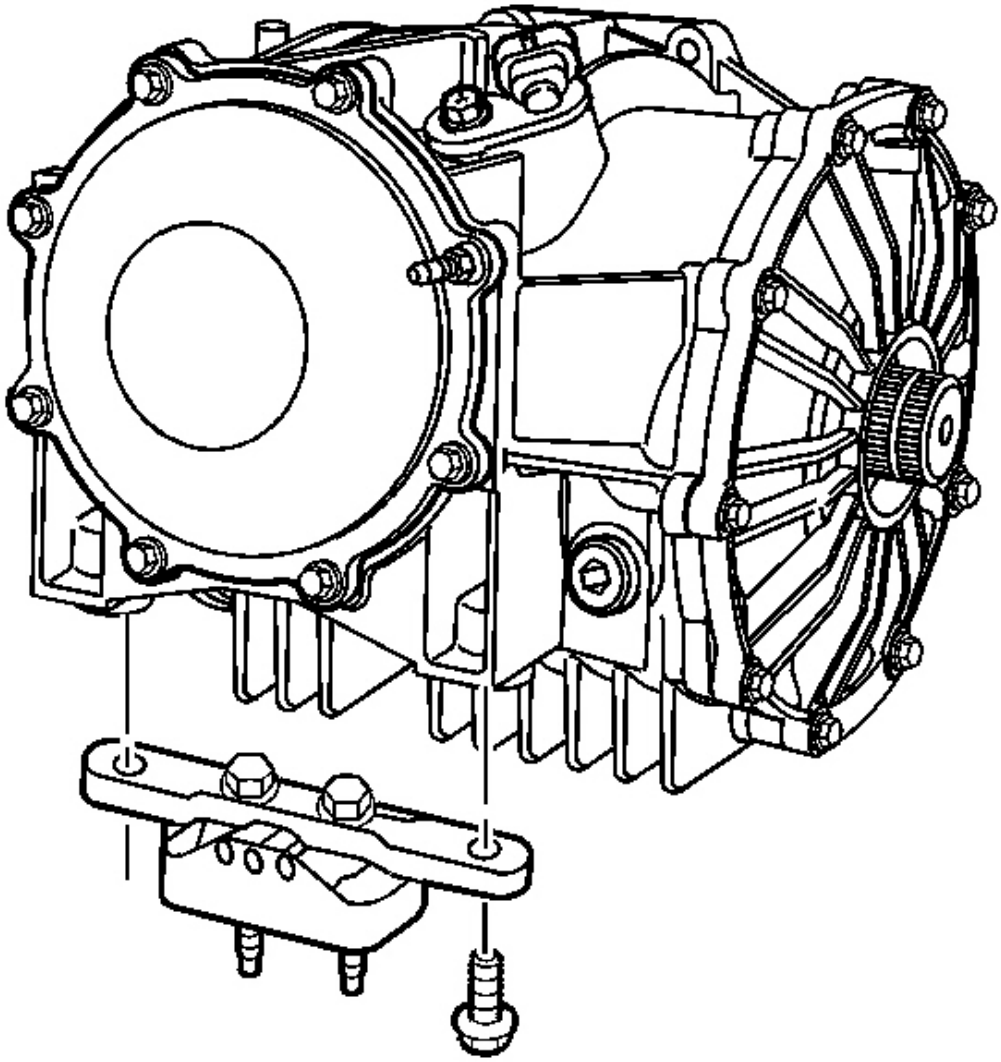

Fig. 54: Mount Location
Courtesy of GENERAL MOTORS CORP.

34. Slowly raise the driveline to final installation height.
35. Remove the jack which supported the engine.
36. Remove the tie-off retainers from the axle shafts.
37. CAREFULLY align and seat the wheel drive shafts to the differential.
38. Install the transaxle mount and bracket to the differential.

39. Install the transaxle mount bracket to differential bolts.

Tighten: Tighten the transaxle mount bracket to differential bolts to 50 N.m (37 lb ft).

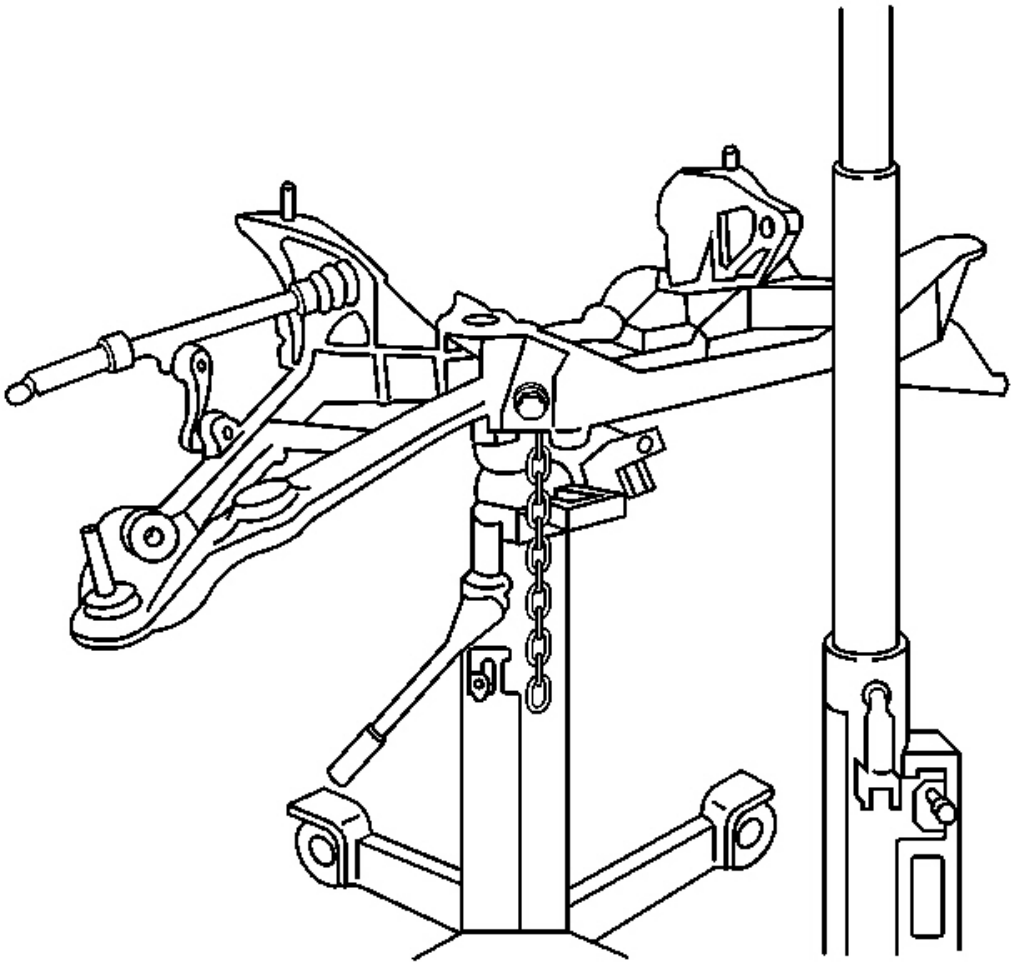

Fig. 55: Supporting Crossmember On Jack
Courtesy of GENERAL MOTORS CORP.

40. With the aid of an assistant, begin to raise the rear suspension crossmember (still firmly attached to a transmission jack), to the vehicle frame rails.
41. Guide the rear suspension crossmember alignment pins into the alignment holes in the vehicle frame rails, and guide the transaxle mount studs into the mounting holes in the crossmember, then raise the crossmember until it contacts the frame rails.

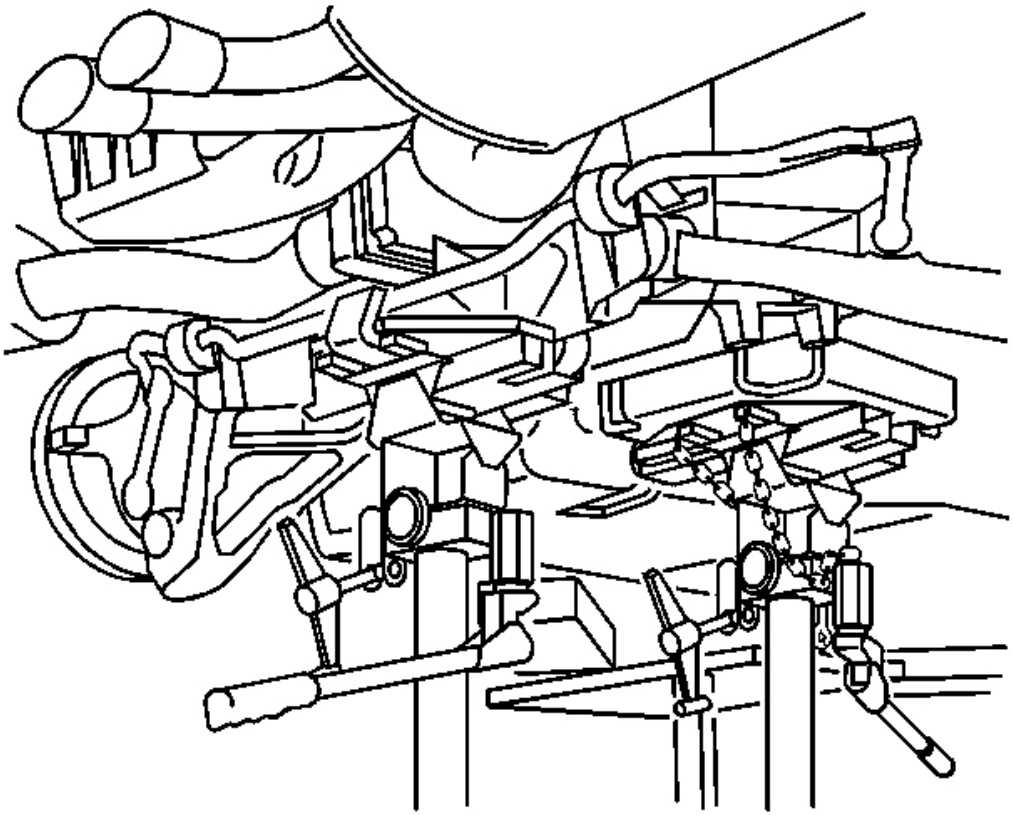

Fig. 56: View Of Jack Under Front End
Courtesy of GENERAL MOTORS CORP.

42. Using ONLY HAND TOOLS, install NEW rear suspension crossmember mounting nuts.

    Tighten: Tighten the rear suspension crossmember mounting nuts to 110 N.m (81 lb ft).

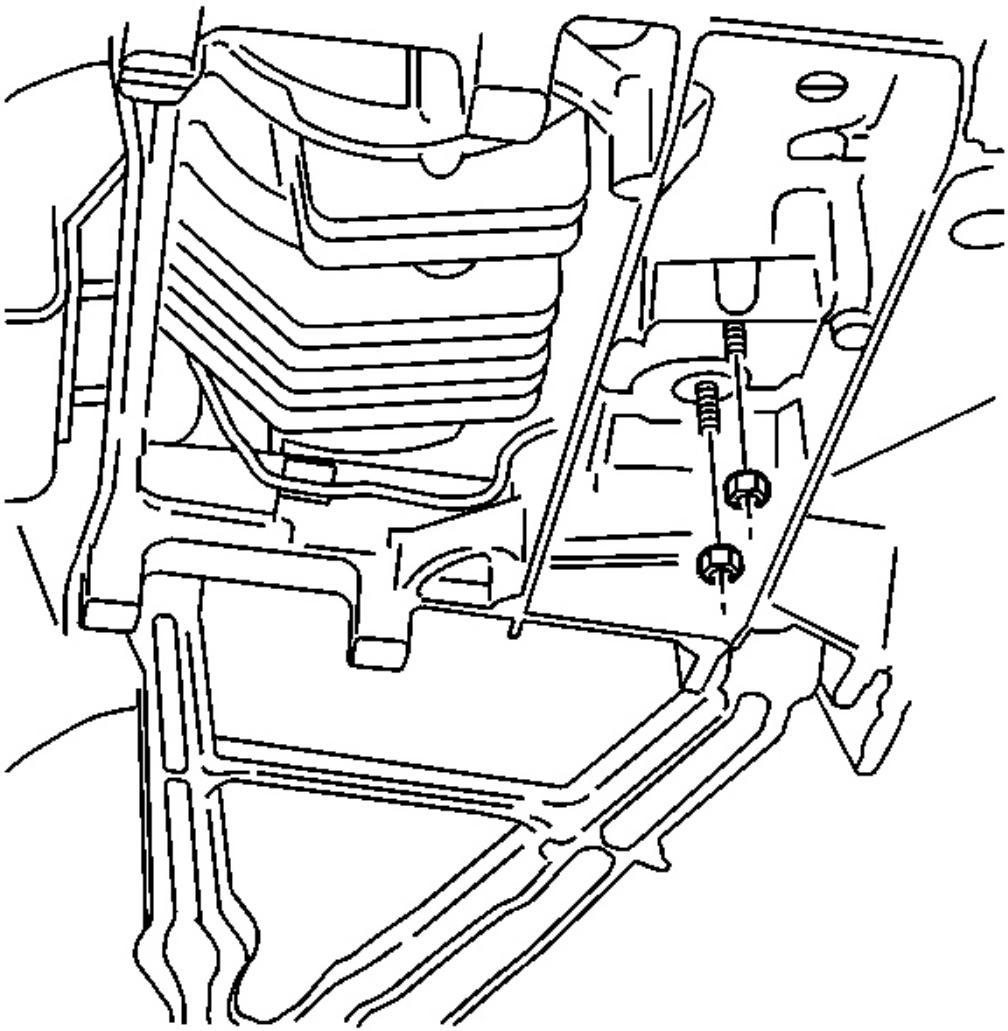

Fig. 57: Transaxle Mount To Rear Crossmember Nuts
Courtesy of GENERAL MOTORS CORP.

43. Remove the transmission jack from the rear suspension crossmember.
44. Release the **J 42055** from the transmission, then remove the **J 42055** and transmission jack. See **Special Tools and Equipment** .
45. Install the transaxle mount to rear suspension crossmember nuts.

    Tighten: Tighten the transaxle mount to rear suspension crossmember nuts to 50 N.m (37 lb ft).

46. Connect the wiring harness and brake pipe clip retainers to the rear suspension crossmember.

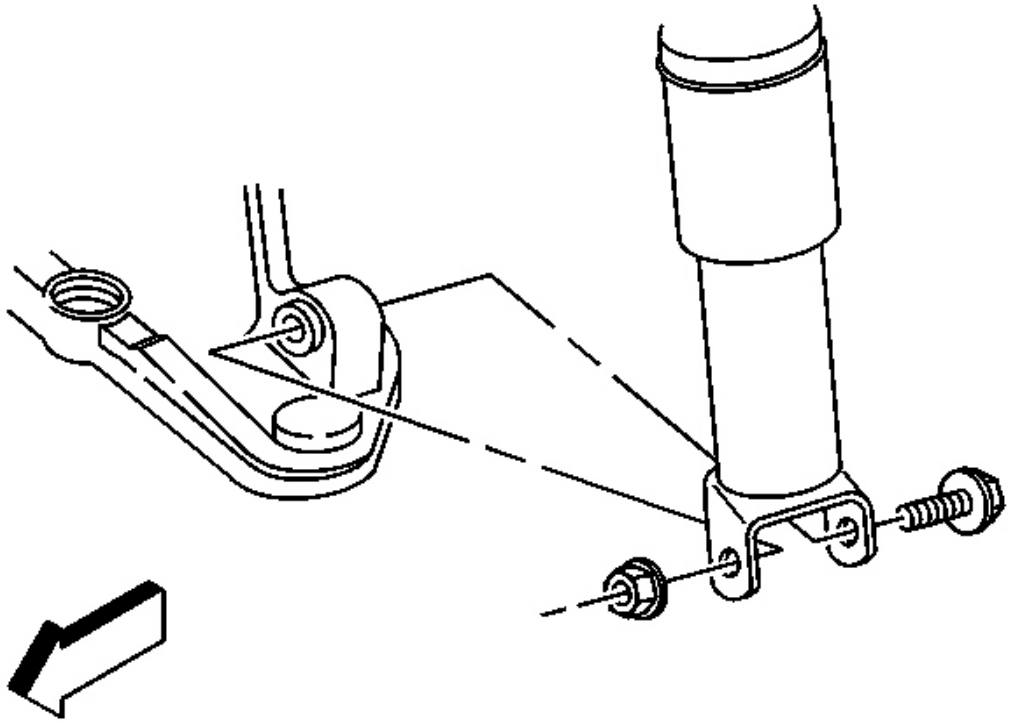

Fig. 58: Mounting Shock Absorber To Control Arm
Courtesy of GENERAL MOTORS CORP.

47. Support the lower control arm with a straight jack.
48. Connect the lower ball joint to the suspension knuckle. Refer to **Knuckle Replacement**

    in Rear Suspension.

49. Install the shock absorber lower mounting bolt.

    Tighten: Tighten the rear shock absorber lower mounting bolt to 220 N.m (162 lb ft).

50. Connect the outer tie rod end to the suspension knuckle. Refer to **Tie Rod Replacement (Outer End)** or **Tie Rod Replacement (Suspension Link)** in Rear Suspension.
51. Remove the straight jack from the suspension control arm.
52. Repeat steps 47 through 51 for the other side of the vehicle.

53. Install the rear transverse spring. Refer to **Rear Transverse Spring Replacement** in Rear Suspension.

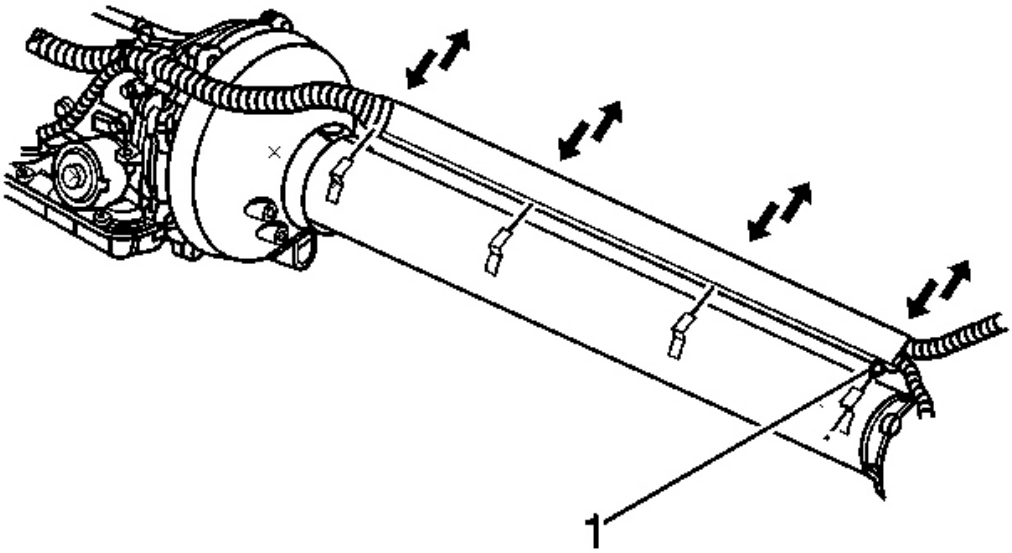

Fig. 59: Wiring Harness To L-Shaped Brackets At Driveline Support Assembly
Courtesy of GENERAL MOTORS CORP.

54. Carefully position the wiring harness into the L-shaped brackets along the driveline support assembly. Align the harness retainer (locator) (1) to the hole in the forward bracket, and secure in place.

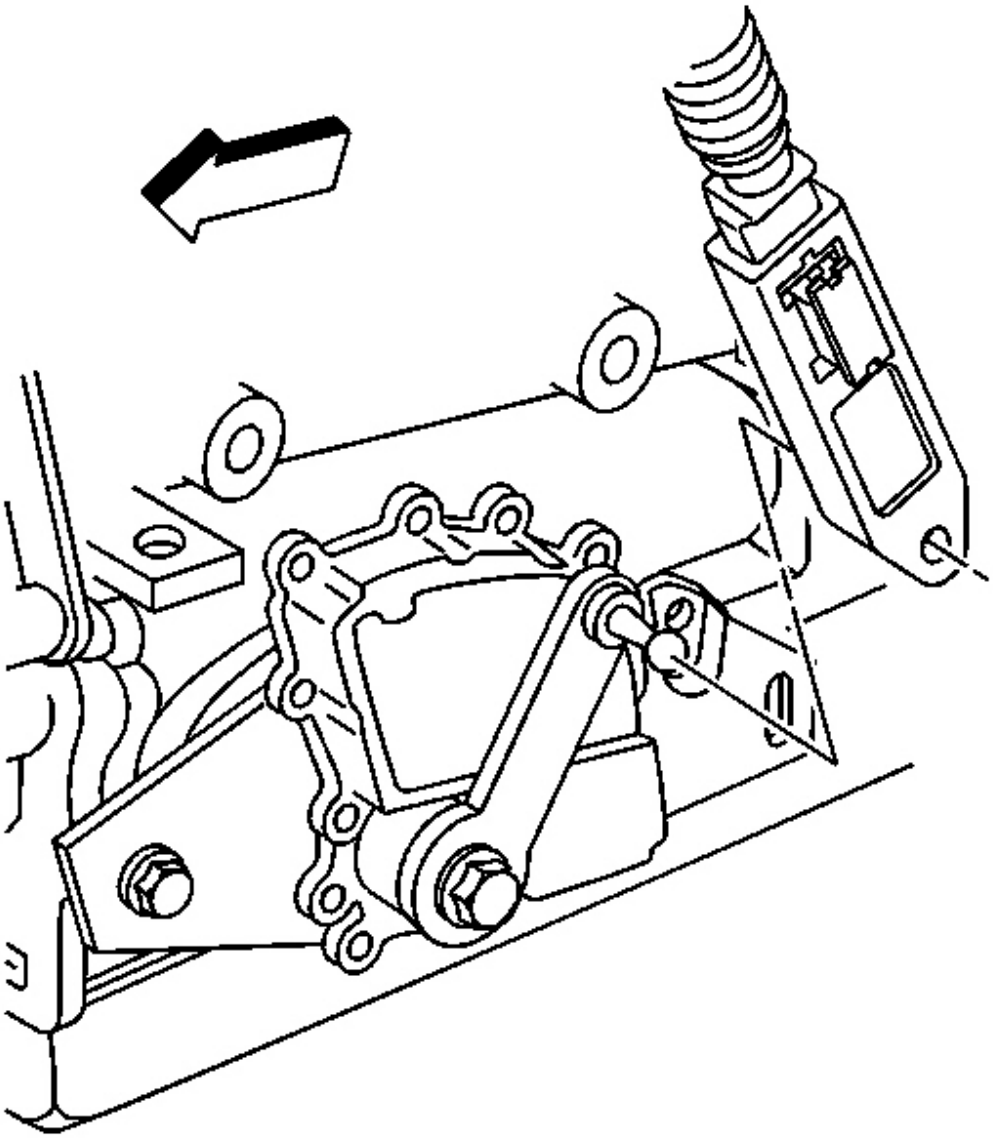

Fig. 60: Transmission Shift Control Cable To Transmission Shift Lever
Courtesy of GENERAL MOTORS CORP.

55. Install the transmission shift cable and bracket into position.
56. Connect the transmission shift cable to the transmission shift lever.

    Press to secure the cable.

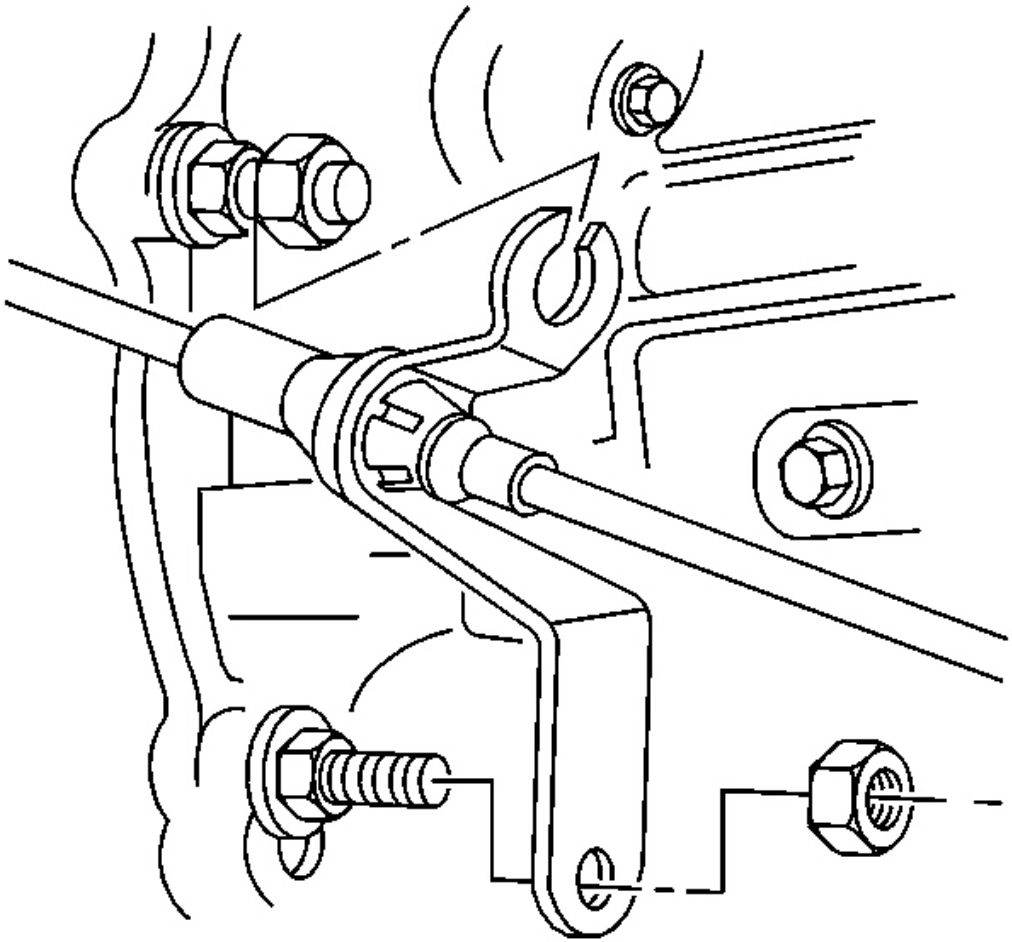

Fig. 61: Transmission Shift Cable Bracket To Transmission
Courtesy of GENERAL MOTORS CORP.

57. Install the transmission shift cable bracket nuts to the transmission.

    Tighten: Tighten the transmission shift cable bracket nuts to 20 N.m (15 lb ft).

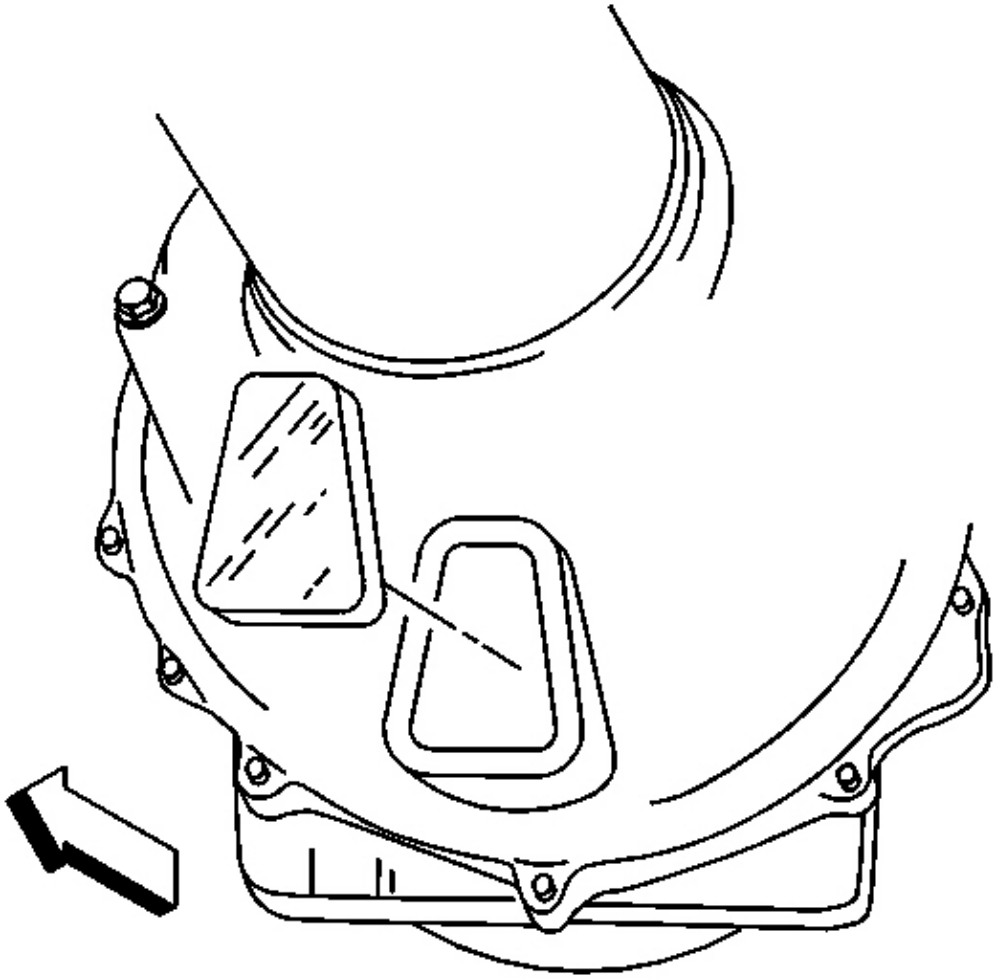

Fig. 62: Rear Bellhousing Access Plug
Courtesy of GENERAL MOTORS CORP.

IMPORTANT: The following step must be performed to assure proper torque converter balance during installation.

58. Align the transmission flexplate to the transmission torque converter using the matchmark made prior to removal.
59. Install the transmission flexplate to transmission torque converter bolts. Refer to **Flexplate to Torque Converter Bolts** in Automatic Transmission - 4L60-E.
60. Install the rear bellhousing access plug.

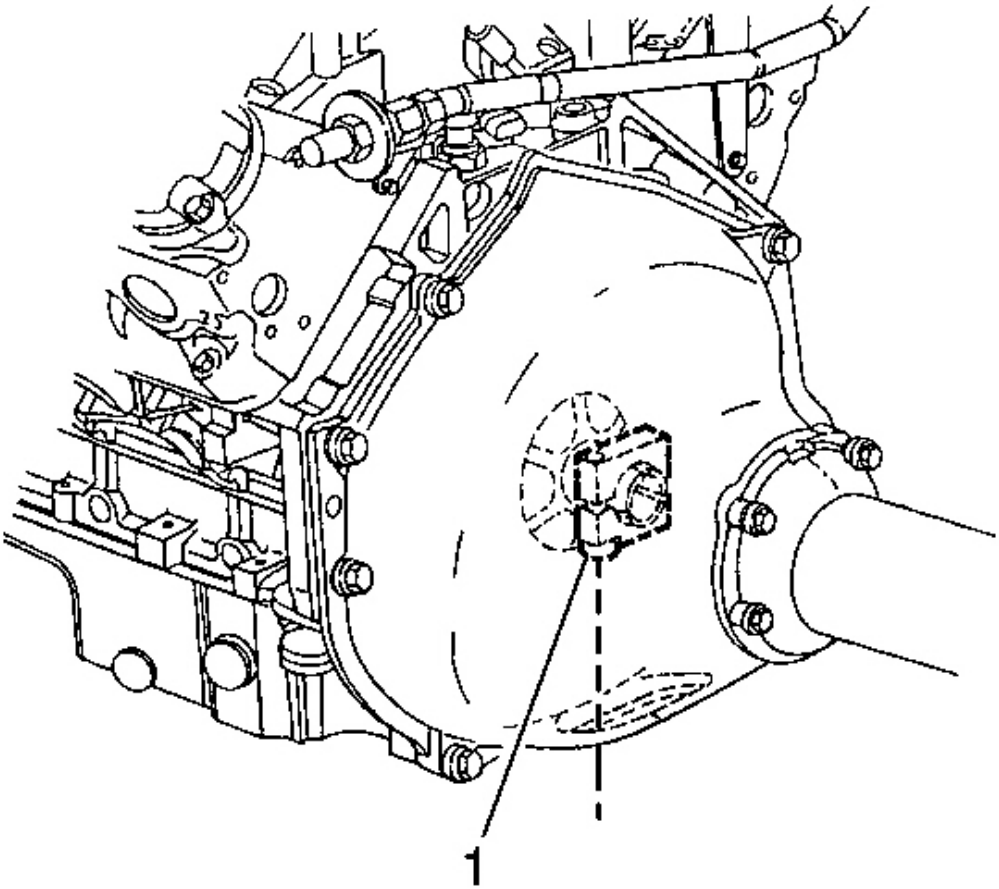

Fig. 63: Propeller Shaft Hub Clamp Bolt
Courtesy of GENERAL MOTORS CORP.

61. HAND-TIGHTEN the propeller shaft hub clamp bolt (1) until FINGER-TIGHT.

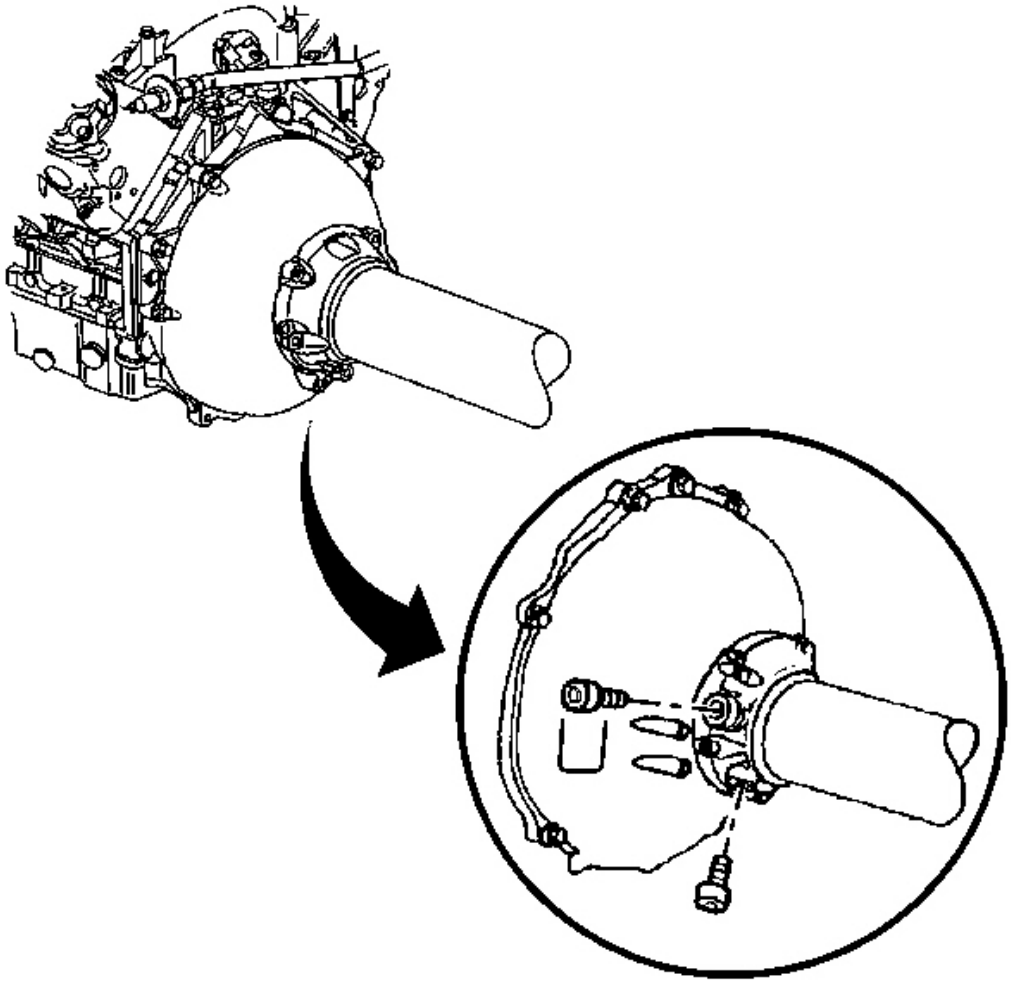

Fig. 64: Plastic Plugs To Front Of Driveline Support Assembly
Courtesy of GENERAL MOTORS CORP.

62. Remove and discard the propeller input shaft front bearing positioning bolts (M10 - 1.5 X 55 mm) from the driveline support assembly.
63. Install the two plastic plugs to the front of the driveline support assembly in place of the positioning bolts.

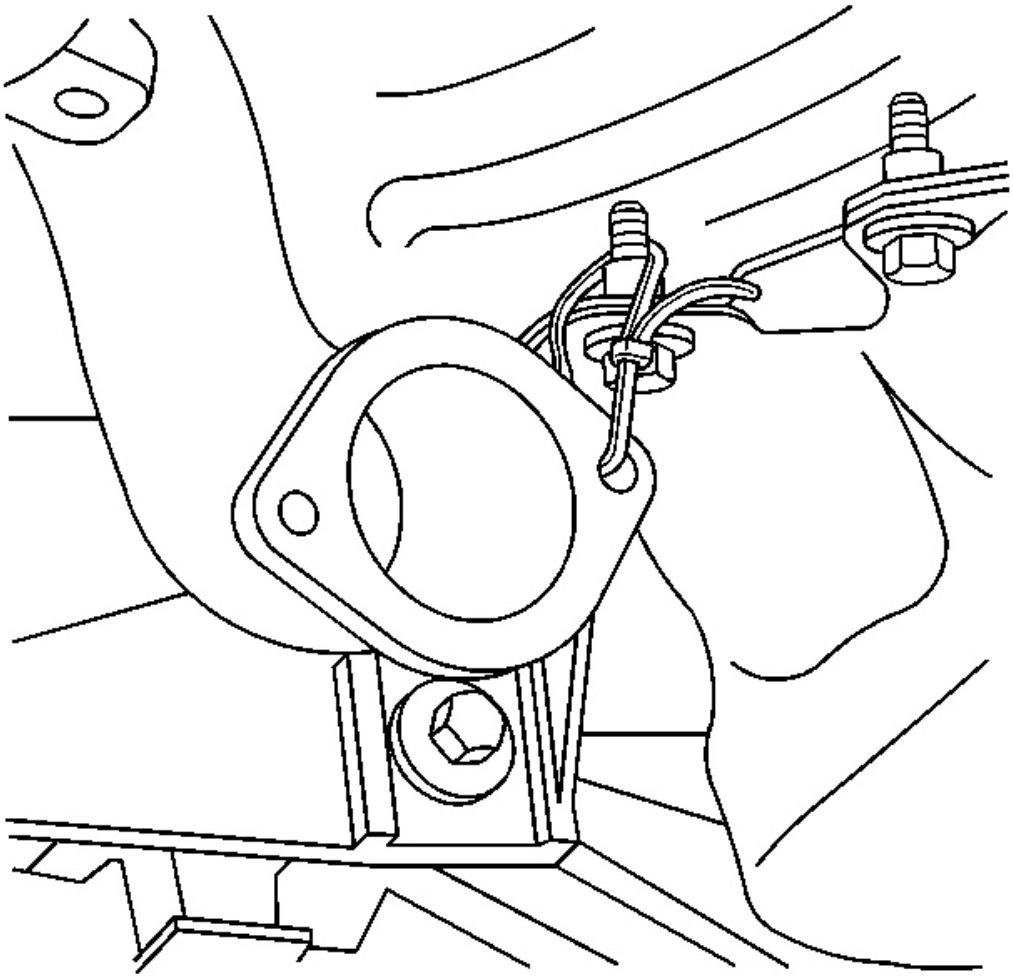

Fig. 65: Driveline Tunnel Closeout Panel
Courtesy of GENERAL MOTORS CORP.

64. Install the driveline tunnel closeout panel. Refer to **Driveline Tunnel Closeout Panel Replacement** .
65. Remove the tie-off retainer from the LH muffler assembly.
66. Install the RH muffler assembly. Refer to **Muffler Replacement - Right** in Engine Exhaust.
67. Install the catalytic converters. Refer to **Catalytic Converter Replacement** in Engine Exhaust.
68. Install the rear tire and wheel assemblies. Refer to **Tire and Wheel Removal and Installation** in Tires and Wheels.
69. Lower the vehicle.
70. Connect the negative battery cable.

Tighten: Tighten the negative battery cable bolt to 15 N.m (11 lb ft).

71. Program the transmitters. Refer to **Transmitter Programming** in Keyless Entry.

IMPORTANT: The following steps MUST be performed in order to provide proper alignment of the propeller shaft hub, the propeller input shaft and the propeller input shaft front bearing.

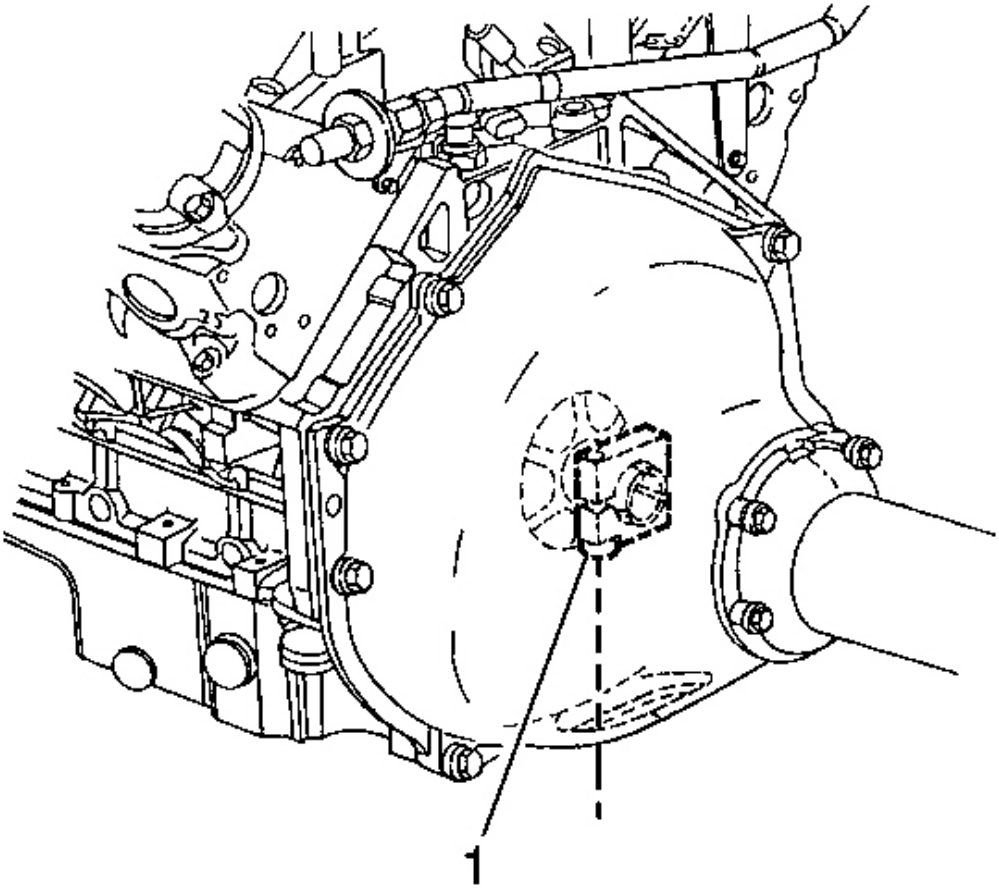

Fig. 66: Propeller Shaft Hub Clamp Bolt
Courtesy of GENERAL MOTORS CORP.

72. Start and run the engine at idle until normal operating temperatures are reached.

Idle or drive for at least 10 minutes.

73. Turn off the engine and allow the powertrain to cool to ROOM temperature.
74. Raise the vehicle.
75. Tighten the propeller shaft hub clamp bolt (1).

    Tighten: Tighten the propeller shaft hub clamp bolt to 125 N.m (93 lb ft).

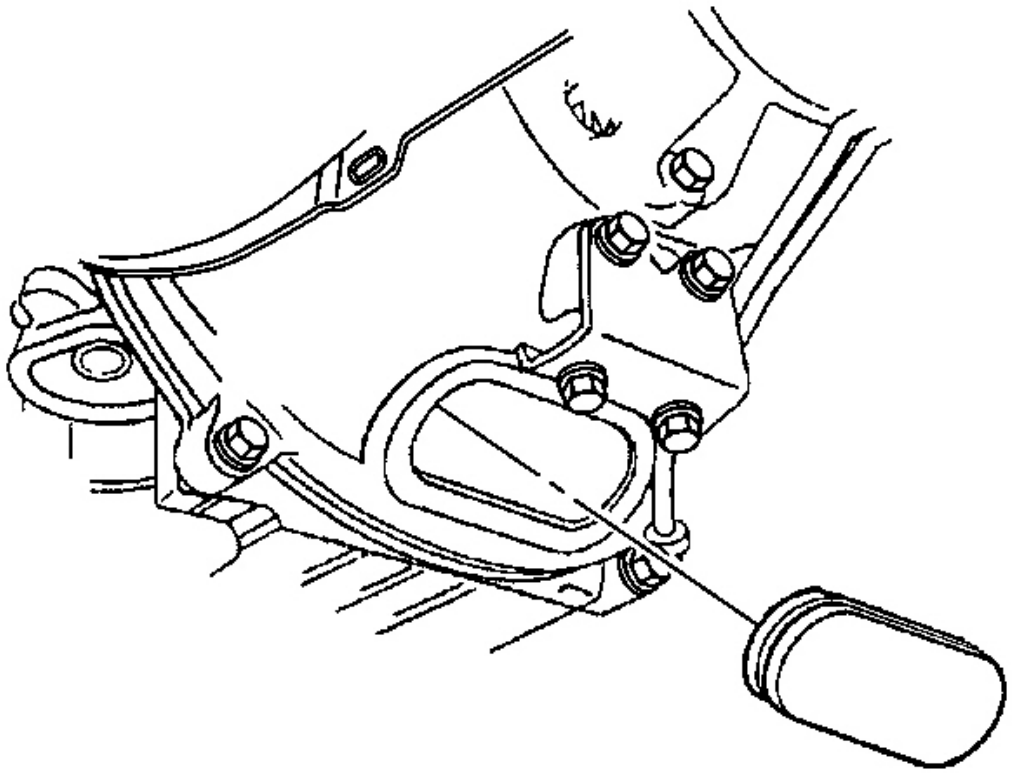

Fig. 67: Engine Flywheel Housing Access Plug
Courtesy of GENERAL MOTORS CORP.

76. Install the engine flywheel housing access plug.
77. Flush the transmission oil cooler. Refer to **Automatic Transmission Oil Cooler Flushing and Flow Test (J 45096)** or **Automatic Transmission Oil Cooler Flushing and Flow Test (J 35944-A)** in Automatic Transmission - 4L60-E.
78. Lower the vehicle.

DRIVELINE SUPPORT ASSEMBLY REPLACEMENT (MANUAL TRANSMISSION)

Tools Required

- **J 36221** Hydraulic Clutch Separator. See **Special Tools and Equipment** .
- **J 42055** Transmission Support Fixture. See **Special Tools and Equipment** .

Removal Procedure

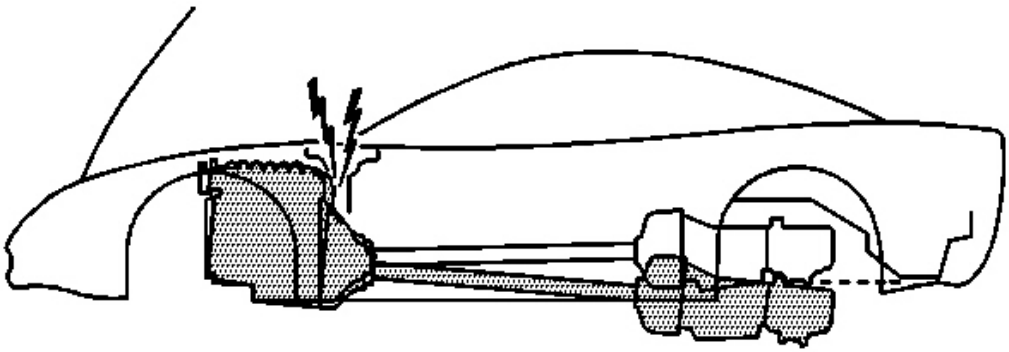

Fig. 68: Rear Of Engine & Composite Dash Panel
Courtesy of GENERAL MOTORS CORP.

CAUTION: Refer to Battery Disconnect Caution in Cautions and Notices.

NOTE: **When tilting down the rear of the driveline, observe the clearance between the rear of the engine and the composite dash panel. Do not allow the engine to rest unsupported against the composite dash panel, or vehicle damage may result.**

NOTE: **When lowering and removing the rear of the driveline, observe the clearance between the rear of the transaxle assembly and the underbody to prevent damage.**

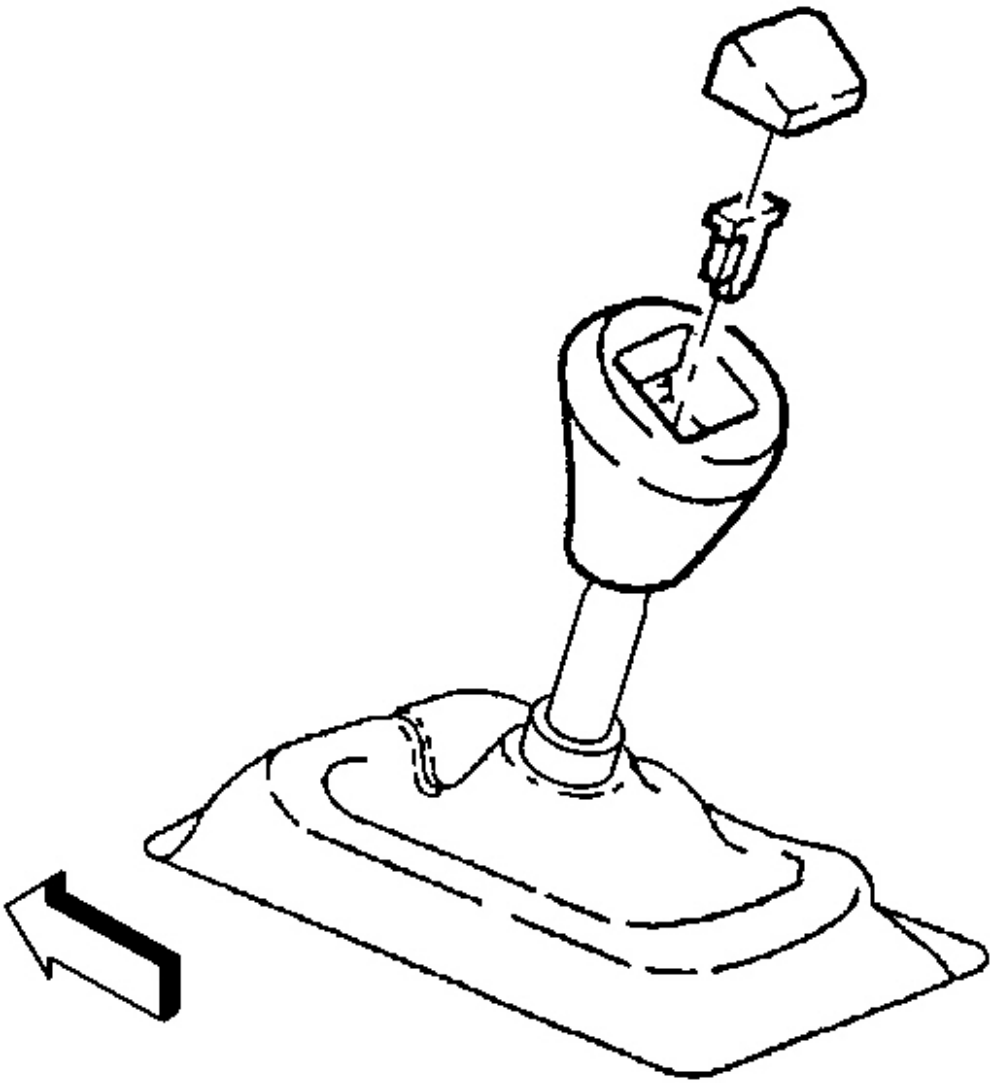

Fig. 69: Shift Control Knob Retainer To Slots & Retainer
Courtesy of GENERAL MOTORS CORP.

1. Disconnect the negative battery cable.
2. Remove the console. Refer to **Console Replacement** in Instrument Panel, Gauges and Console.
3. Carefully pry off the shift control knob button.
4. Pry the shift control knob retainer out of the slots and remove the retainer.

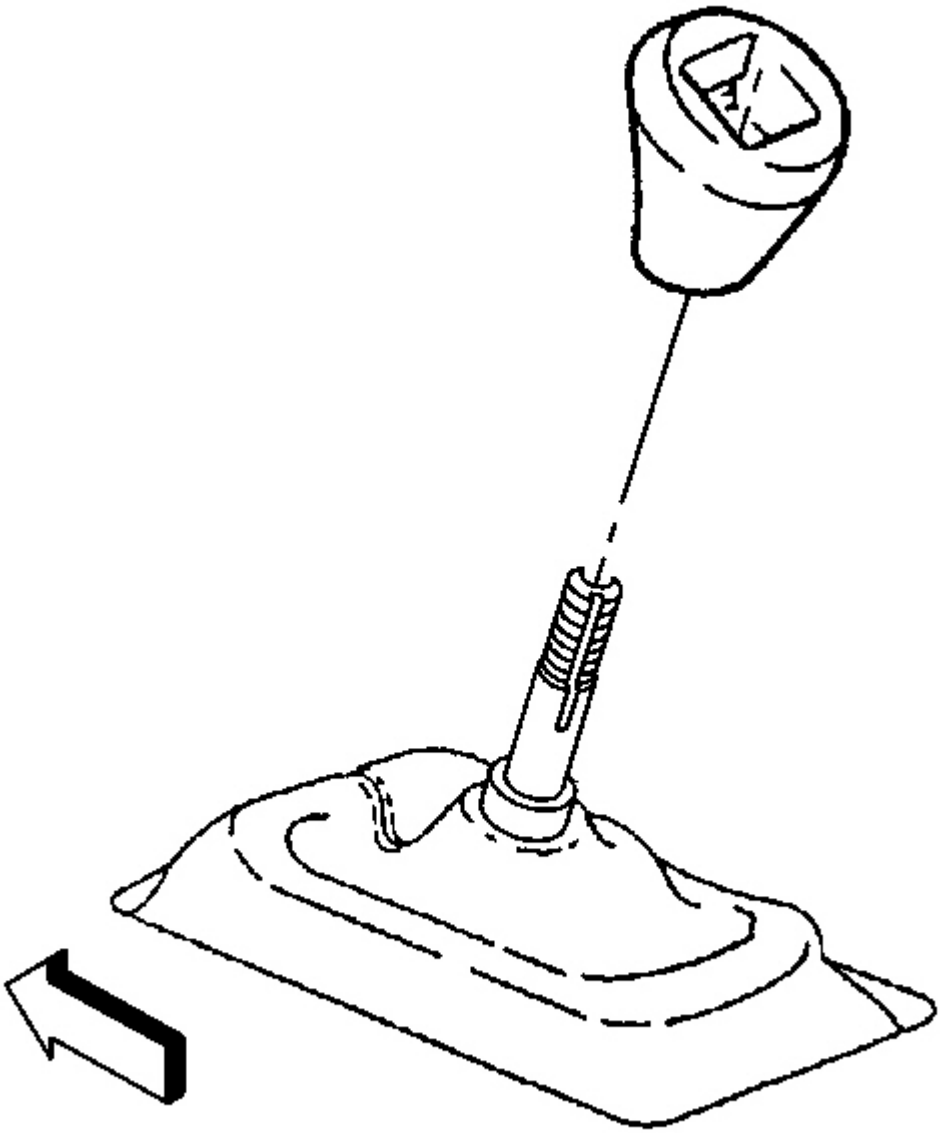

Fig. 70: Removing Gear Shift Knob
Courtesy of GENERAL MOTORS CORP.

5. Unscrew the shift control knob.

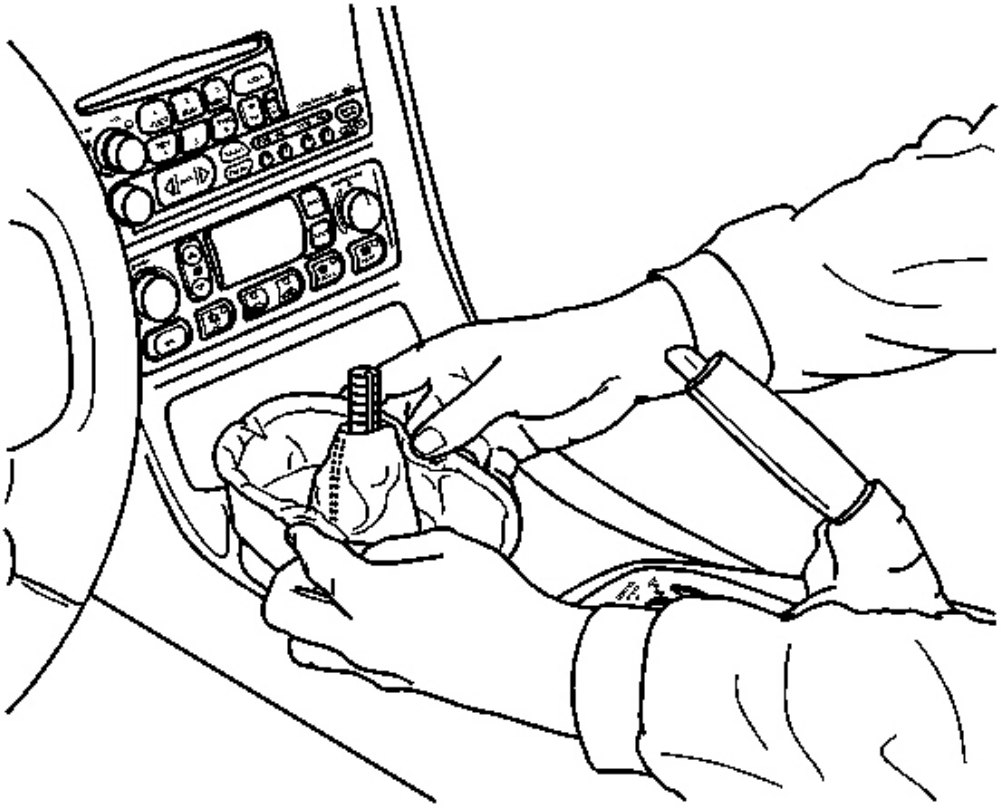

Fig. 71: Sides Of Shift Control Boot To I/P Accessory Trim Plate
Courtesy of GENERAL MOTORS CORP.

6. Grasp the sides of the shift control boot and apply light pressure in toward the shift control lever to begin to release the shift boot retaining tabs from the I/P accessory trim plate.
7. Using light pressure, continue to release the remaining boot retaining tabs.

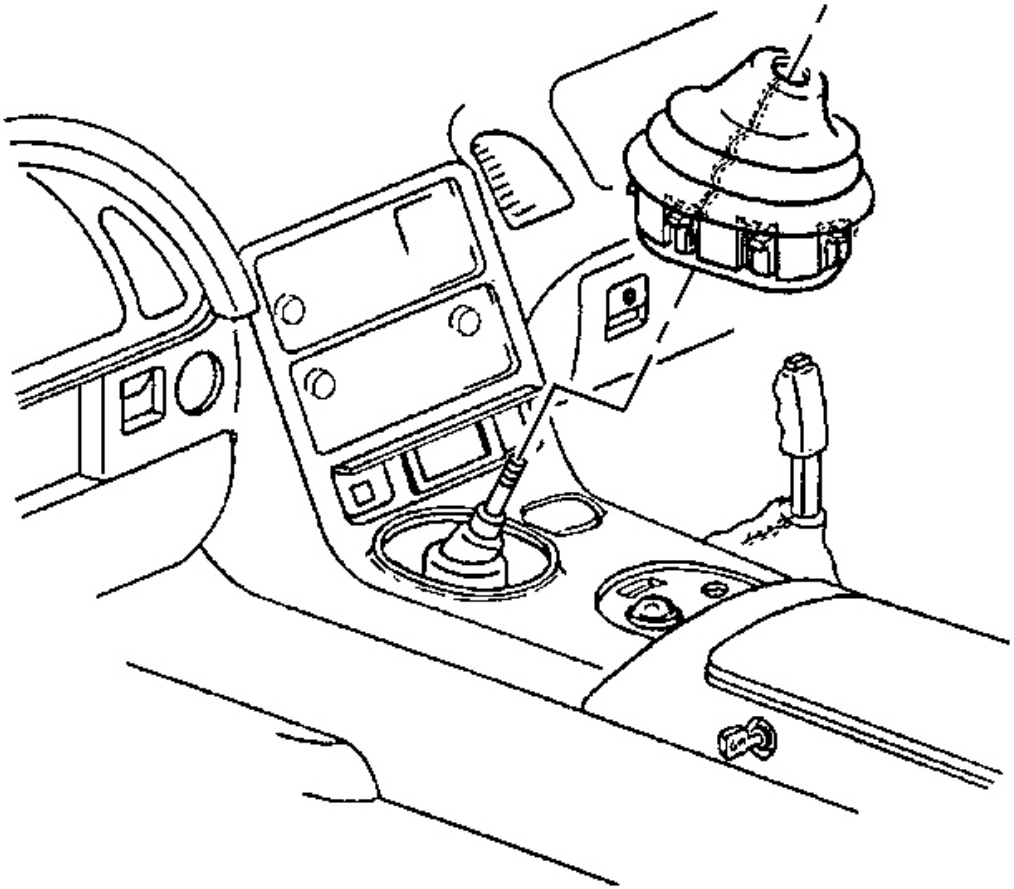

Fig. 72: Shift Control Boot To Shift Control Lever
Courtesy of GENERAL MOTORS CORP.

8. Lift the boot away from the trim plate and remove the boot.
9. Remove the I/P accessory trim plate. Refer to **Trim Plate Replacement - Instrument Panel (I/P) Accessory** in Instrument Panel, Gauges and Console.

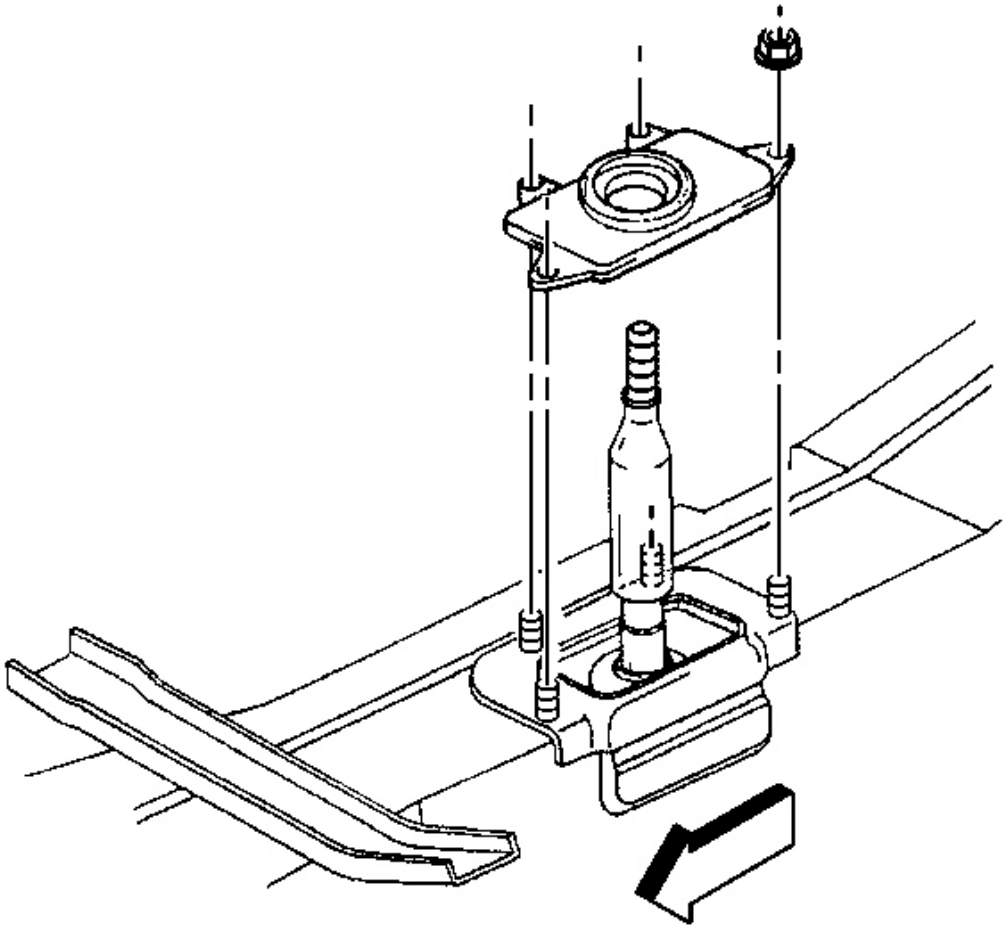

Fig. 73: Left I/P Lower Insulator Panel
Courtesy of GENERAL MOTORS CORP.

10. Remove the shift control closeout boot retaining nuts.
11. Remove the shift control closeout boot.
12. Remove the shift control assembly. Refer to **Shift Control Assembly Replacement** in Manual Transmission - MM6.
13. Remove the left I/P lower insulator panel. Refer to **Closeout/Insulator Panel Replacement - Left** in Instrument Panel, Gauges and Console.

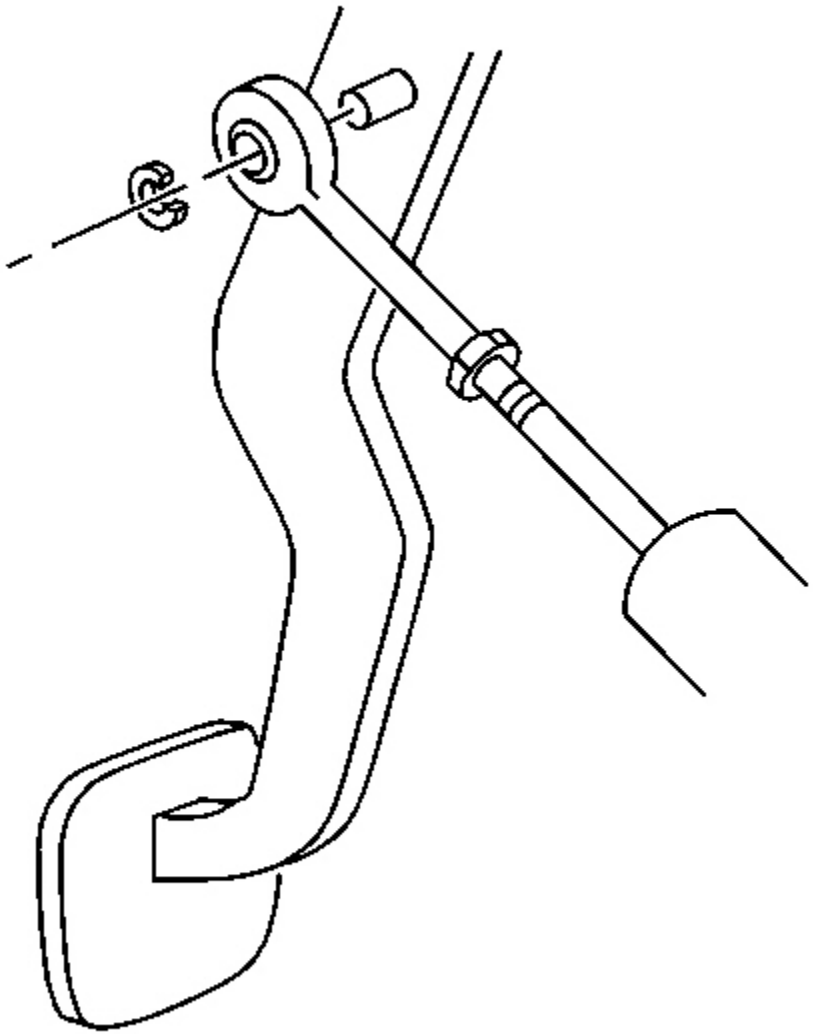

Fig. 74: Master Cylinder Push Rod From The Clutch Pedal
Courtesy of GENERAL MOTORS CORP.

14. Remove the clutch master cylinder pushrod retainer.
15. Disconnect the clutch master cylinder pushrod from the clutch pedal.

Fig. 75: Clutch Actuator Cylinder Hose To Hose Retaining Clip At Rear Of Engine
Courtesy of GENERAL MOTORS CORP.

16. Raise and support the vehicle. Refer to **Lifting and Jacking the Vehicle** in General Information.
17. Remove the clutch actuator cylinder hose from the hose retaining clip, at the rear of the engine.

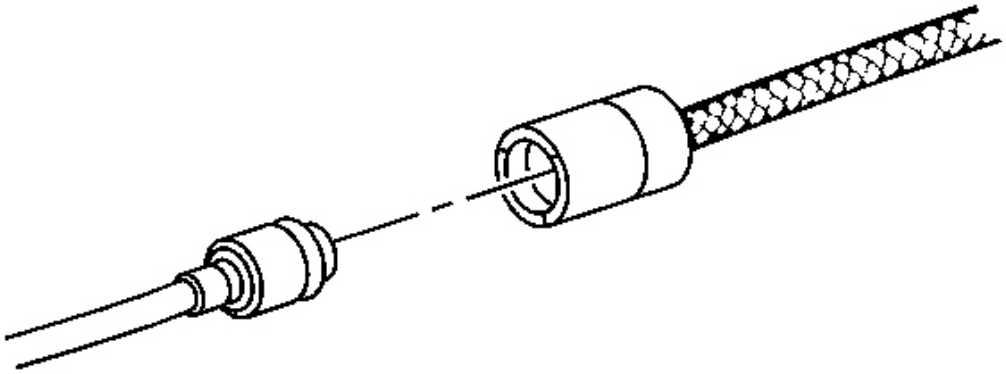

Fig. 76: Identifying White Circular Release Ring On The Actuator Hose
Courtesy of GENERAL MOTORS CORP.

18. Using the **J 36221** , depress the white circular release ring on the actuator cylinder hose and simultaneously pull lightly on the master cylinder hose to disconnect. See **Special Tools and Equipment** .
19. Protect both hose coupling ends from dirt and damage.

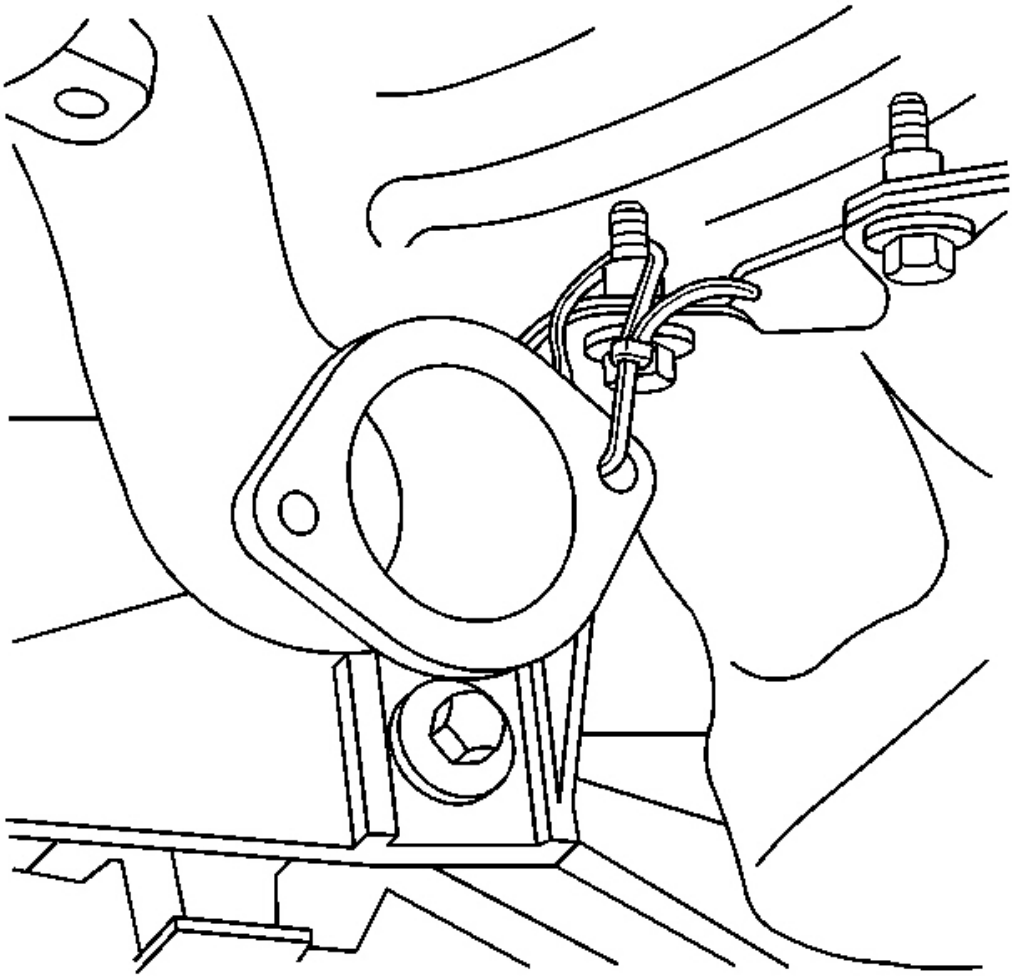

Fig. 77: Driveline Tunnel Closeout Panel
Courtesy of GENERAL MOTORS CORP.

20. Remove the rear tire and wheel assemblies. Refer to **Tire and Wheel Removal and Installation** in Tires and Wheels.
21. Remove the catalytic converters. Refer to **Catalytic Converter Replacement** in Engine Exhaust.
22. Tie off the muffler assemblies to the underbody to support out of the way.
23. Remove the driveline tunnel closeout panel. Refer to **Driveline Tunnel Closeout Panel Replacement** .

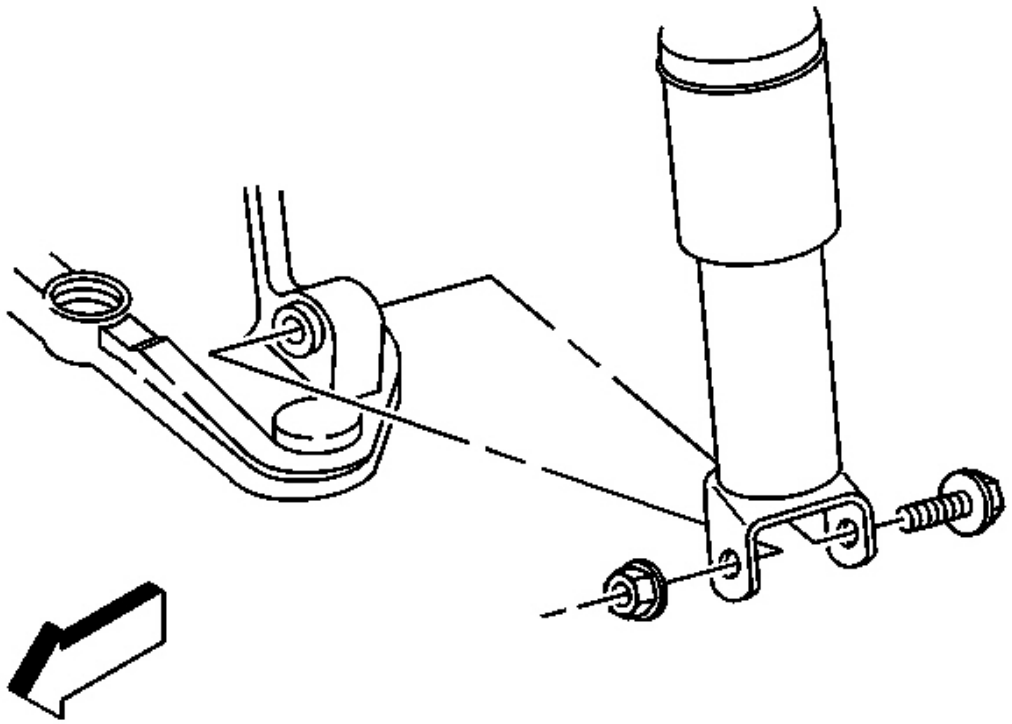

Fig. 78: Mounting Shock Absorber To Control Arm
Courtesy of GENERAL MOTORS CORP.

24. Remove the rear transverse spring. Refer to **Rear Transverse Spring Replacement** in Rear Suspension.
25. Support the lower control arm with a straight jack.
26. Disconnect the outer tie rod end from the suspension knuckle. Refer to **Tie Rod Replacement (Outer End)** or **Tie Rod Replacement (Suspension Link)** in Rear Suspension.
27. Remove the shock absorber lower mounting bolt.
28. Disconnect the lower ball joint from the suspension knuckle. Refer to **Knuckle Replacement** in Rear Suspension.
29. Remove the straight jack from the control arm.
30. Repeat steps 25 through 29 for the other side of the vehicle.

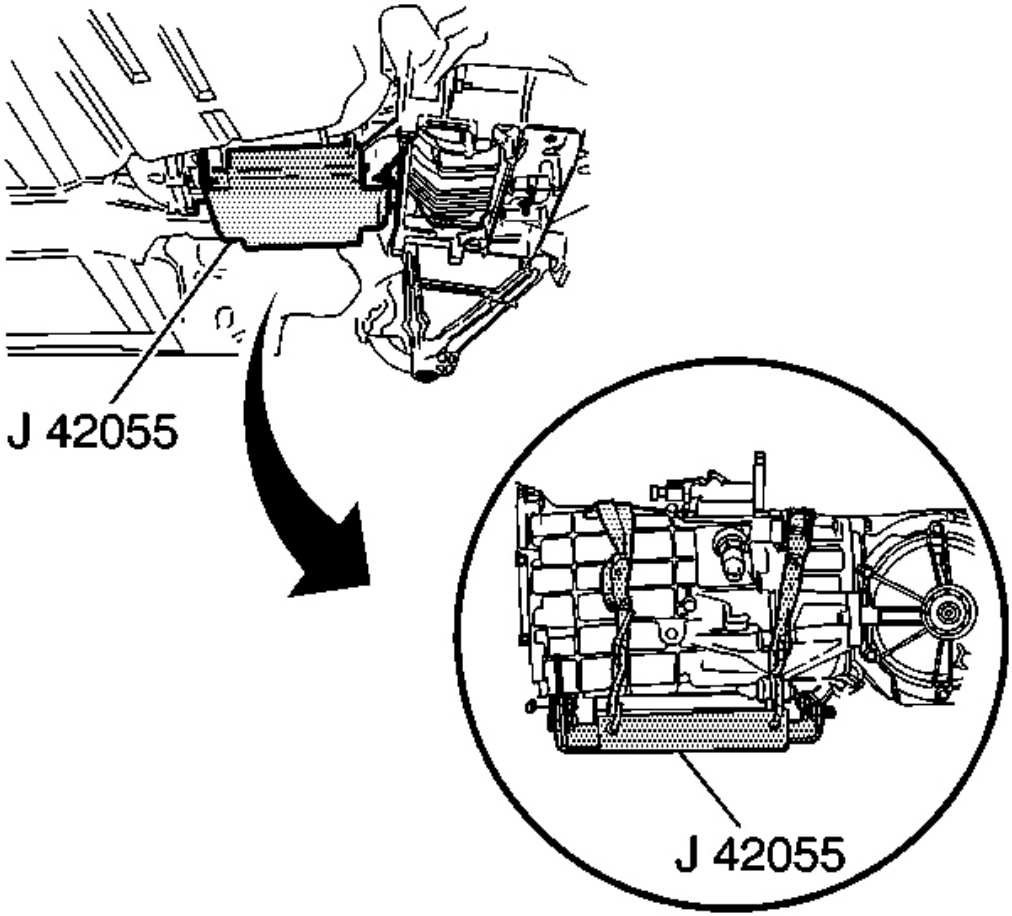

Fig. 79: Transmission Jack To Transmission
Courtesy of GENERAL MOTORS CORP.

31. Assemble the **J 42055** . See **Special Tools and Equipment** .
32. Install the **J 42055** to a transmission jack. See **Special Tools and Equipment** .
33. Position and firmly secure the **J 42055** with the transmission jack to the transmission. See **Special Tools and Equipment** .

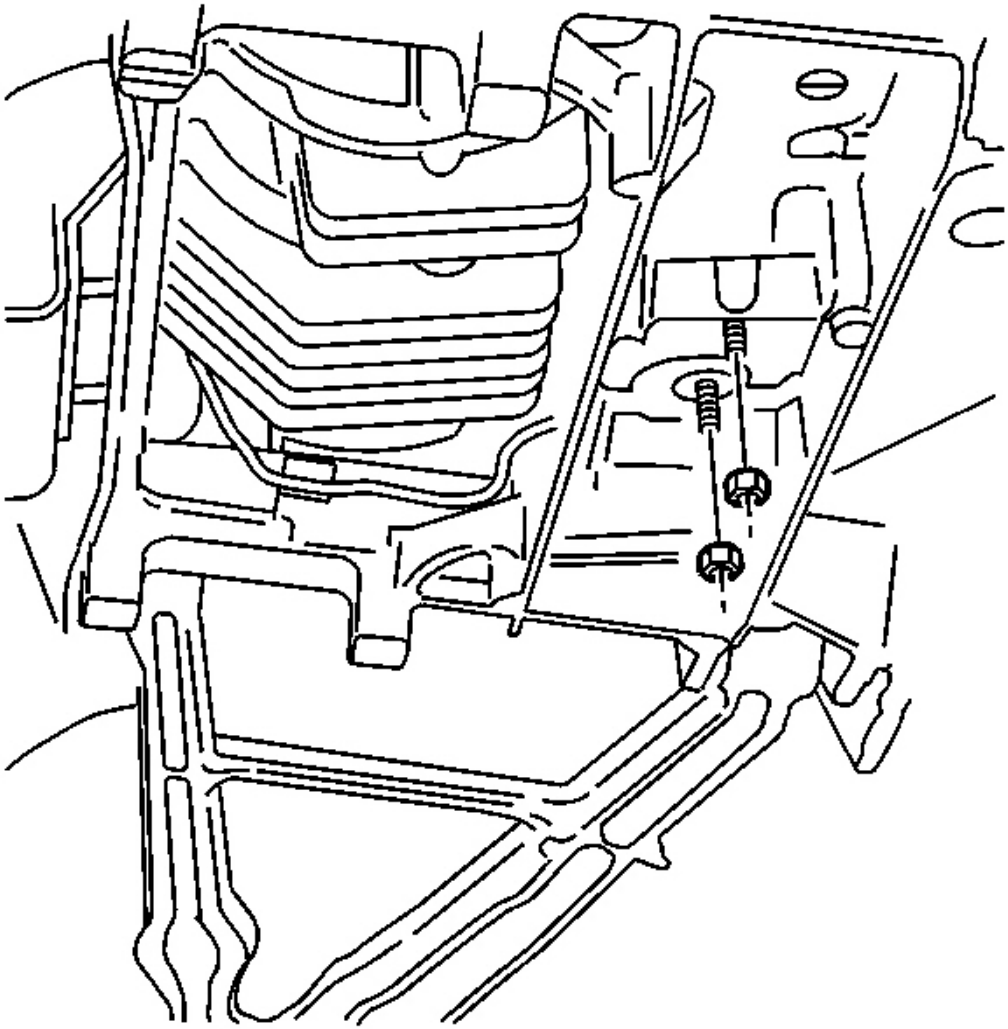

Fig. 80: Transaxle Mount To Rear Crossmember Nuts
Courtesy of GENERAL MOTORS CORP.

34. Disconnect the wiring harness and brake pipe clip retainers from the rear suspension crossmember.
35. Remove the transaxle mount to rear crossmember nuts.

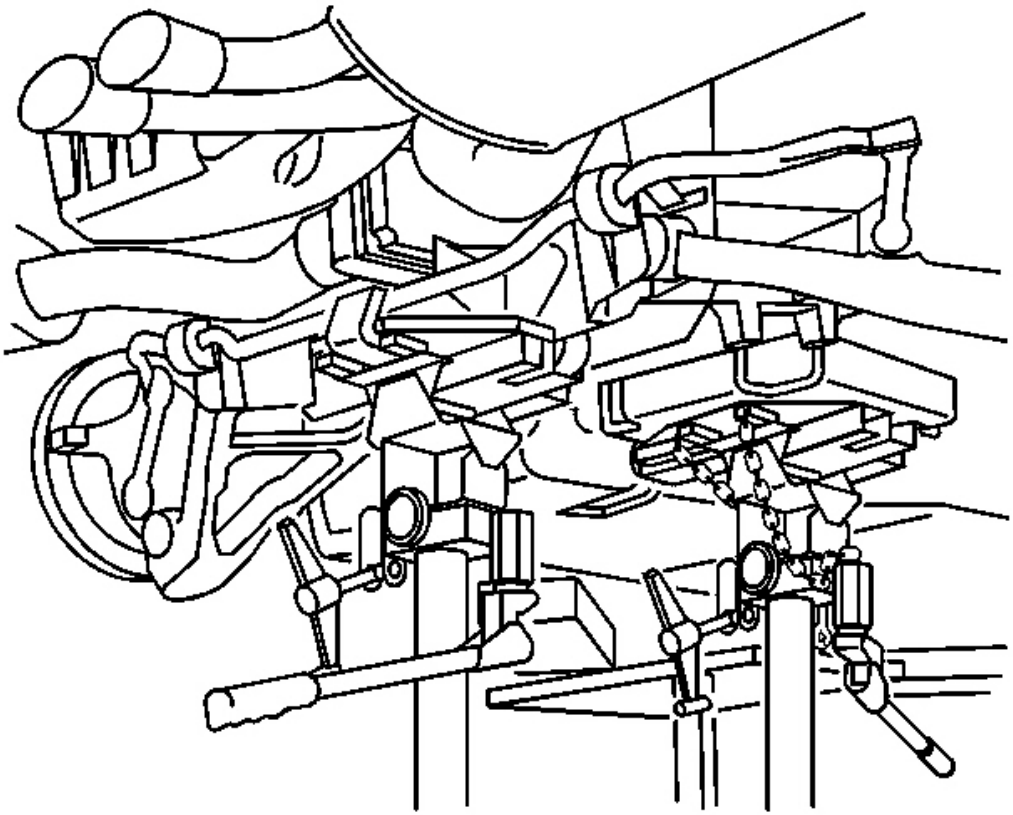

Fig. 81: View Of Jack Under Front End
Courtesy of GENERAL MOTORS CORP.

36. Position a transmission jack under the rear suspension crossmember and firmly secure the crossmember to the jack.
37. Using ONLY HAND TOOLS, remove the rear suspension crossmember retaining nuts.

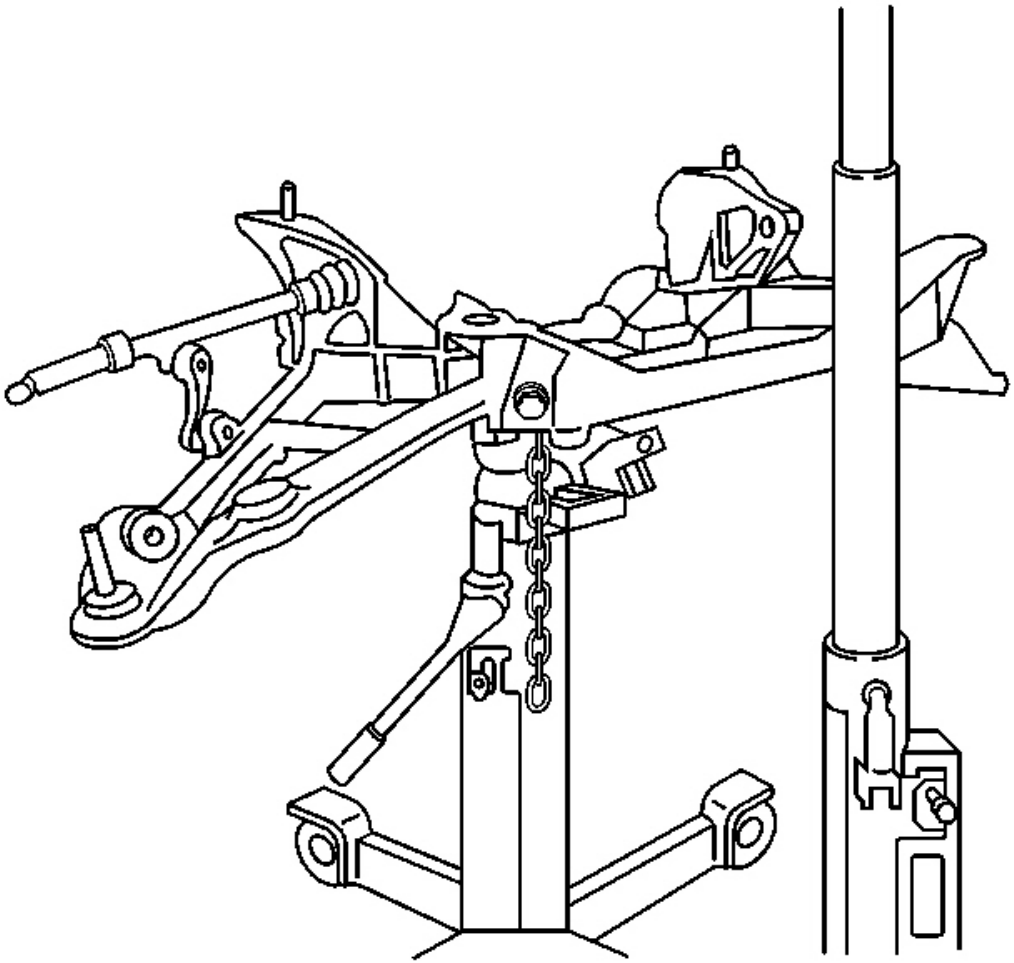

Fig. 82: Supporting Crossmember On Jack
Courtesy of GENERAL MOTORS CORP.

38. With the aid of an assistant, slowly lower the rear suspension crossmember away from the vehicle frame rails and remove the crossmember.

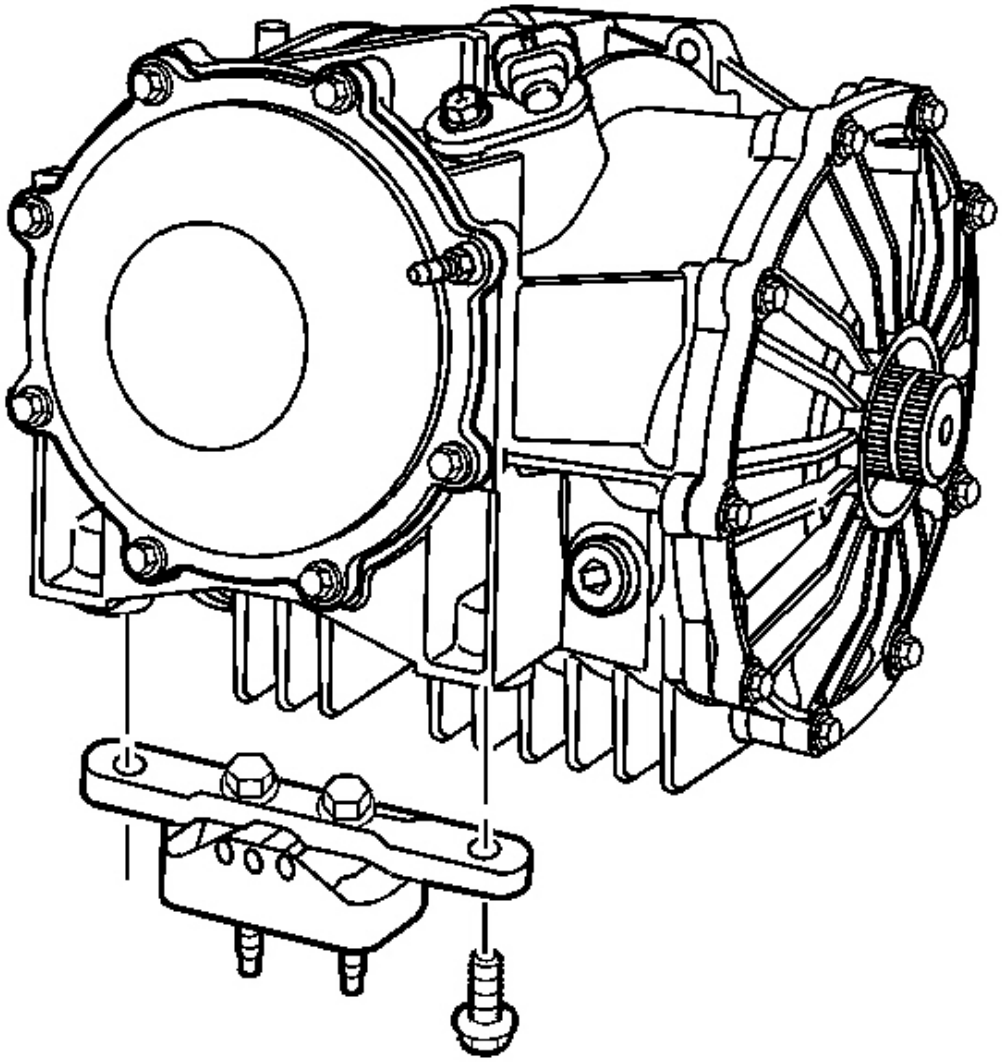

Fig. 83: Mount Location
Courtesy of GENERAL MOTORS CORP.

39. Remove the transaxle mount bracket to differential bolts.
40. Remove the transaxle mount with bracket.

    Removing the transaxle mount will allow for greater stability on a workbench after the driveline is removed.

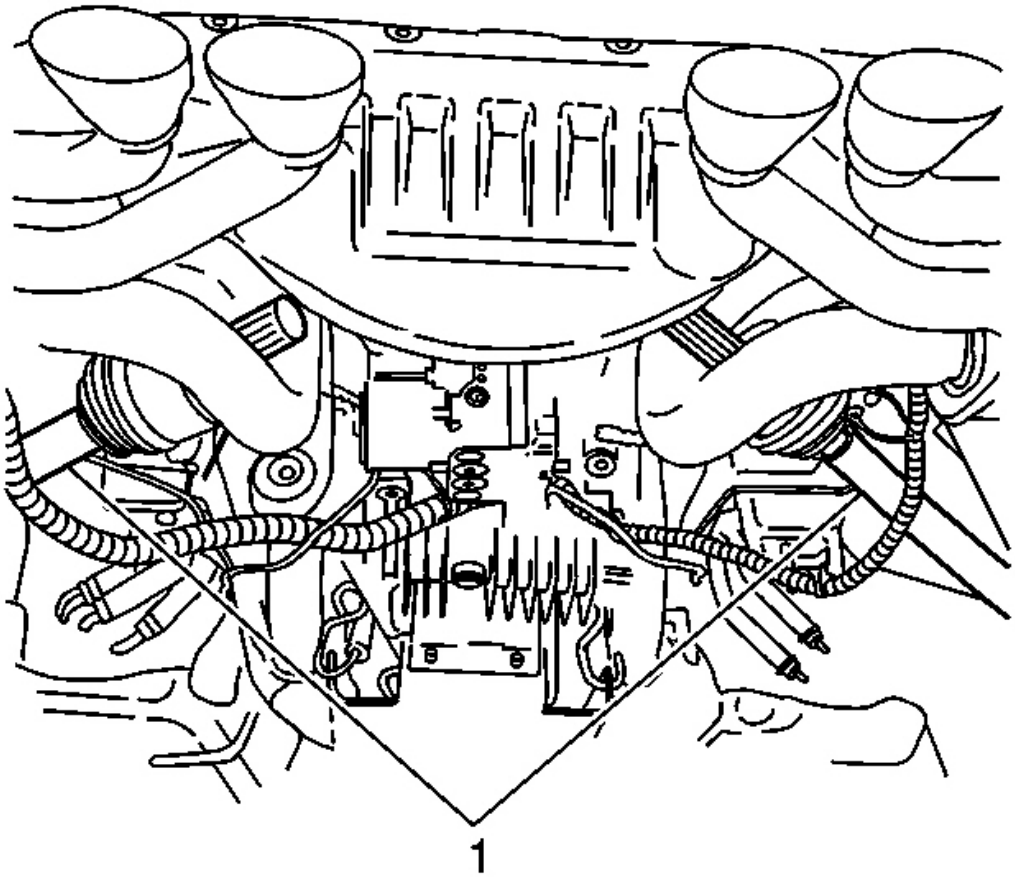

Fig. 84: Wheel Drive Shafts To Differential
Courtesy of GENERAL MOTORS CORP.

41. Using a pry bar, CAREFULLY release the wheel drive shafts from the differential.
42. Tie off the wheel drive shafts (1) to the underbody to support out of the way.

    The muffler assembly pipes toward the rear offer a good location to help support the wheel drive shafts (1).

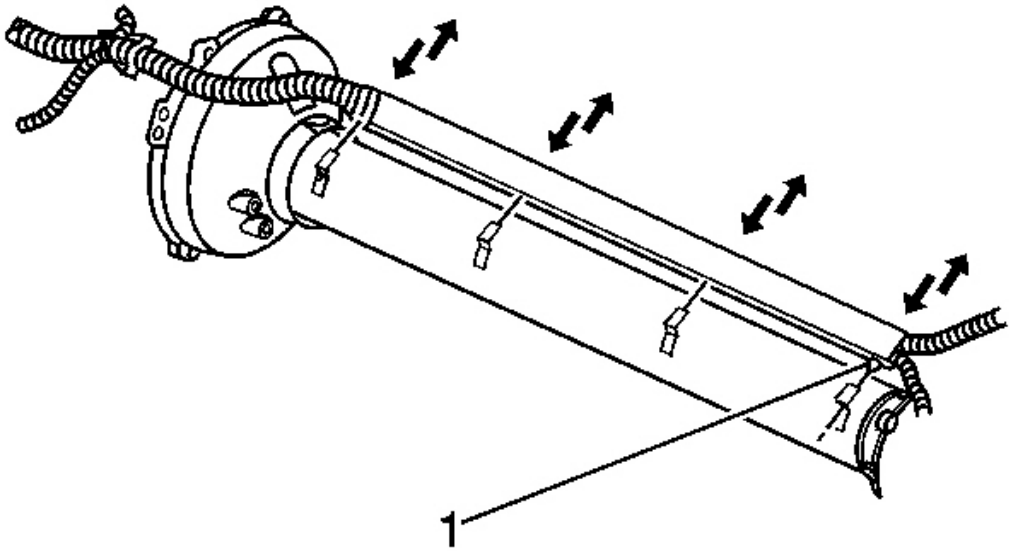

Fig. 85: Wiring Harness To L-Shaped Brackets At Driveline Support Assembly
Courtesy of GENERAL MOTORS CORP.

43. Release the retainer (1) securing (and positioning) the wiring harness to the L-shaped brackets along the driveline support assembly, then slide the harness up out of the brackets and position out of the way.

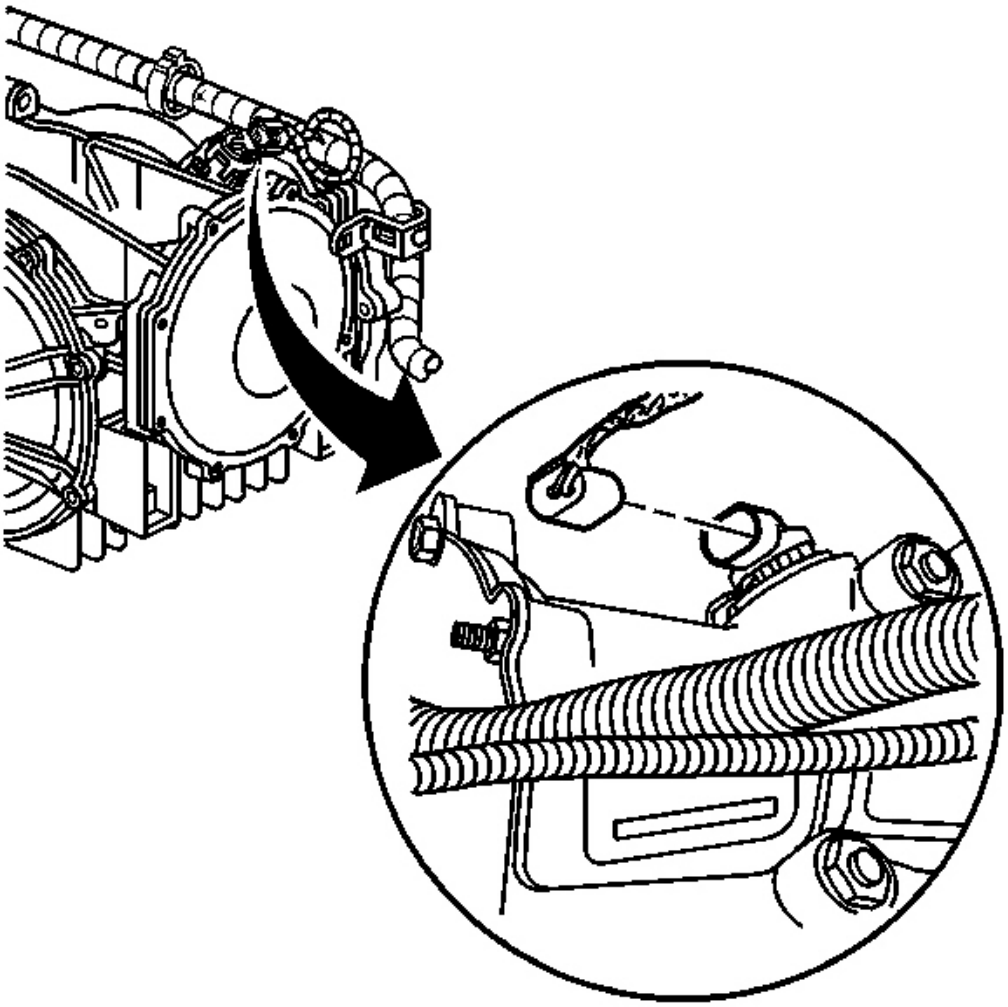

Fig. 86: Vehicle Speed Sensor (VSS) Electrical Connector
Courtesy of GENERAL MOTORS CORP.

44. SLOWLY lower the driveline approximately 51 mm (2 in), while simultaneously adjusting the angle of tilt, in order to access the electrical connectors.
45. Disconnect the vehicle speed sensor (VSS) electrical connector.

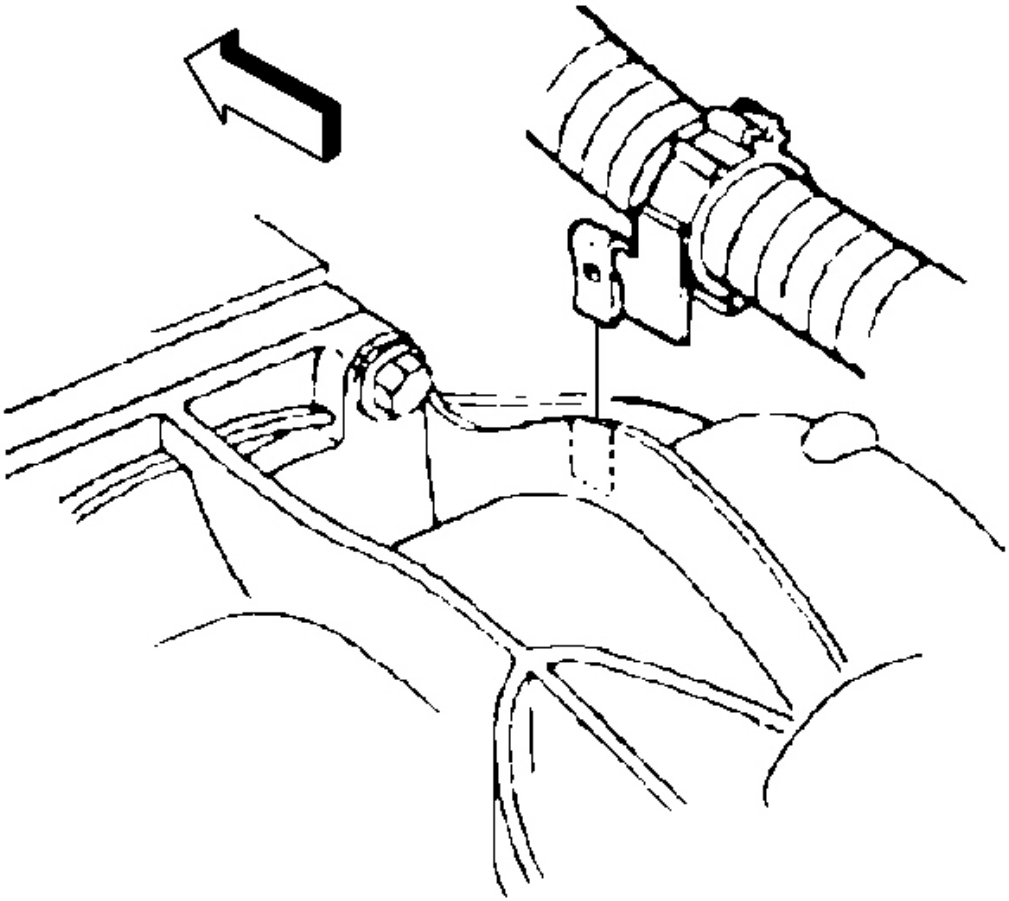

Fig. 87: Wiring Harness Retainer To Stud At Differential Rear Cover
Courtesy of GENERAL MOTORS CORP.

46. Disconnect the wiring harness retainer from the stud at the differential rear cover.
47. Disconnect the wiring harness retainer clip from the top of the differential.

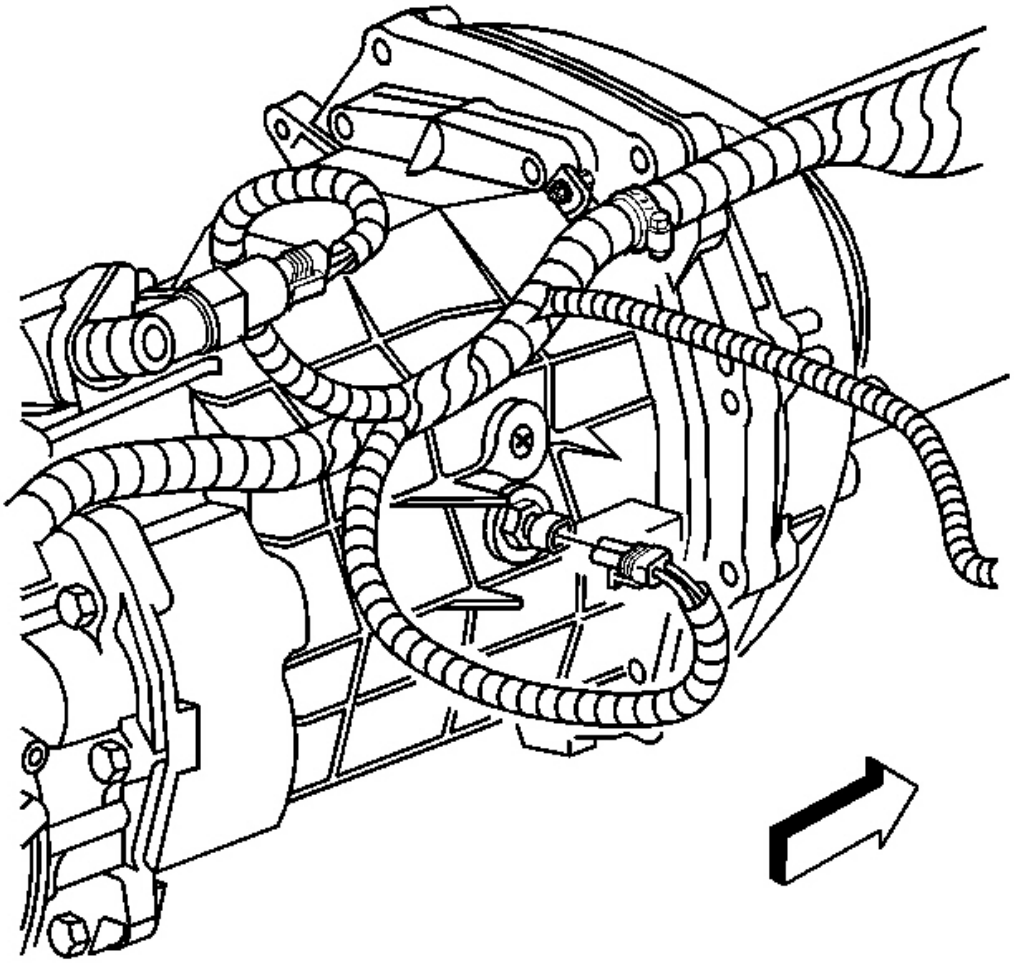

Fig. 88: Backup Lamp Switch Electrical Connector
Courtesy of GENERAL MOTORS CORP.

48. Disconnect the backup lamp switch electrical connector.

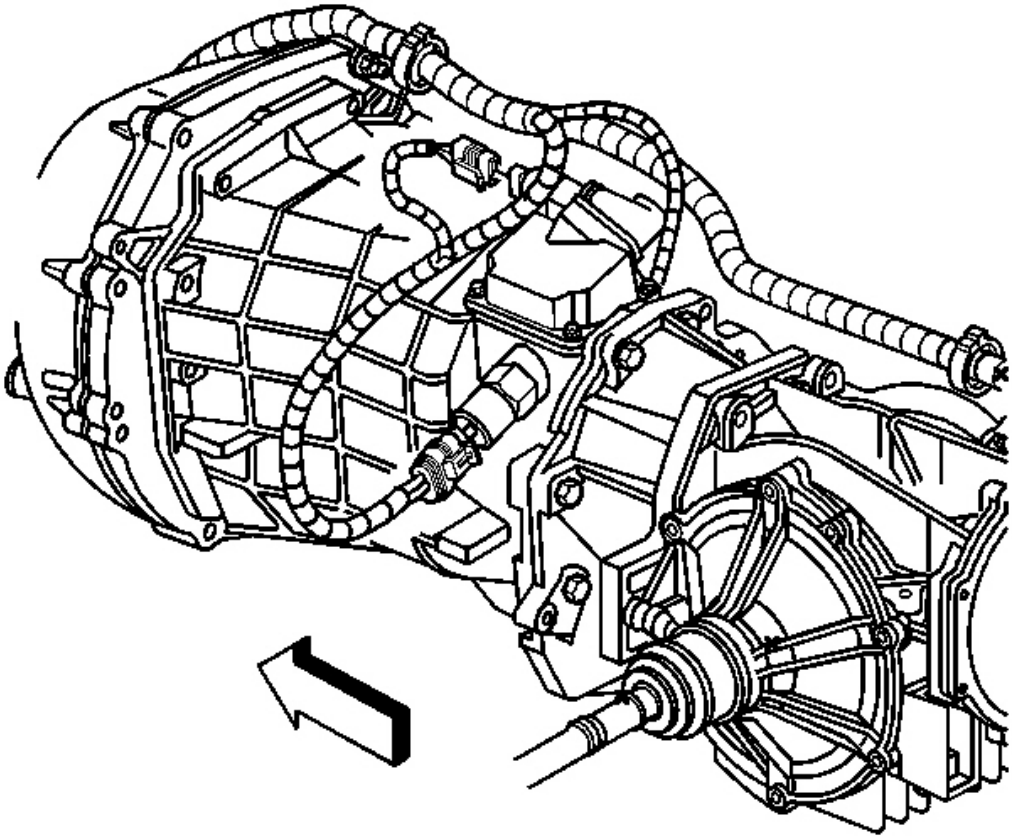

Fig. 89: Reverse Lockout Solenoid Electrical Connector
Courtesy of GENERAL MOTORS CORP.

49. Disconnect the reverse lockout solenoid electrical connector.

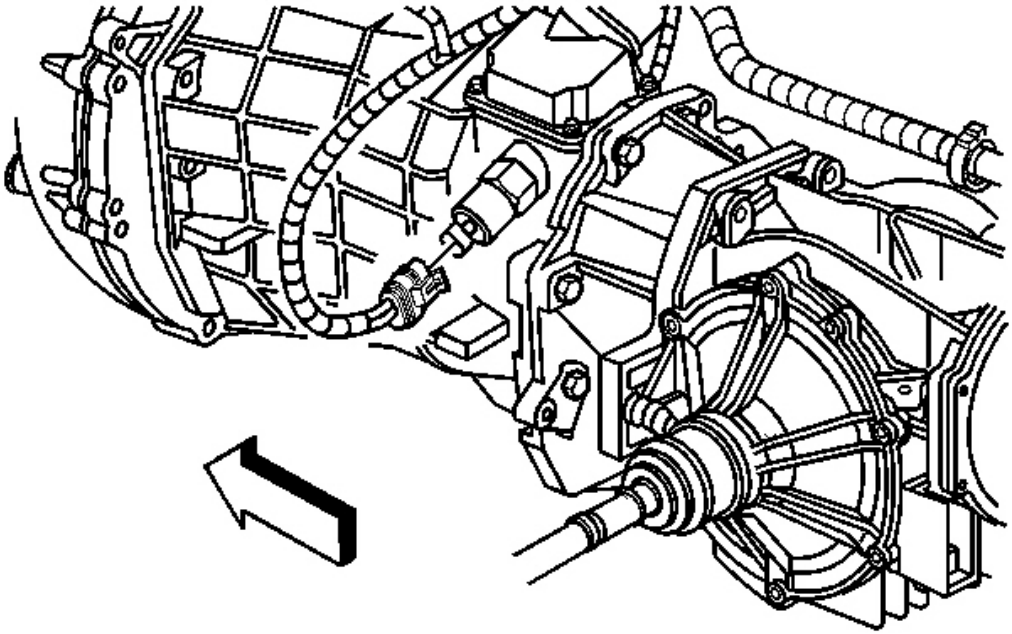

Fig. 90: Gear Select (Skip Shift) Solenoid Electrical Connector
Courtesy of GENERAL MOTORS CORP.

50. Disconnect the gear select (skip shift) solenoid electrical connector.

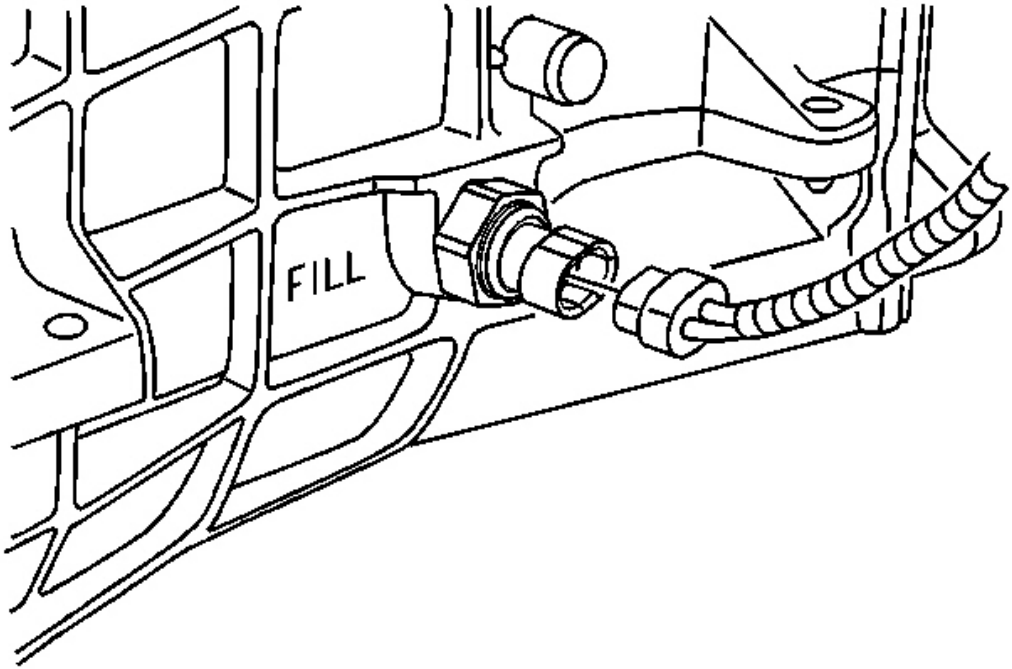

Fig. 91: Transmission Fluid Temperature Sensor Electrical Connector
Courtesy of GENERAL MOTORS CORP.

51. Disconnect the transmission fluid temperature sensor electrical connector, if equipped.

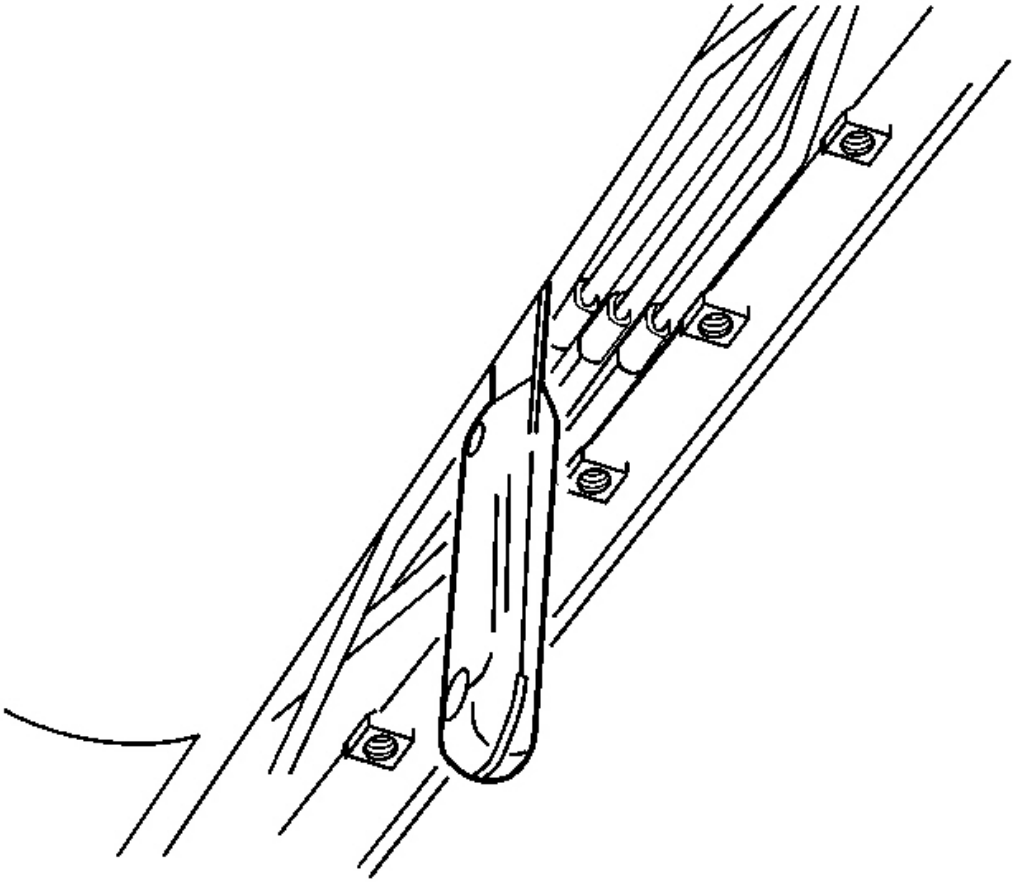

Fig. 92: Edge Of Shifter Bracket On Side Of Driveline Support Assembly & Brake Pipe Retainer
Courtesy of GENERAL MOTORS CORP.

52. Insert a putty knife, or similar tool, between the edge of the shifter bracket on the side of the driveline support assembly and the brake pipe retainer on the wall of the driveline tunnel.

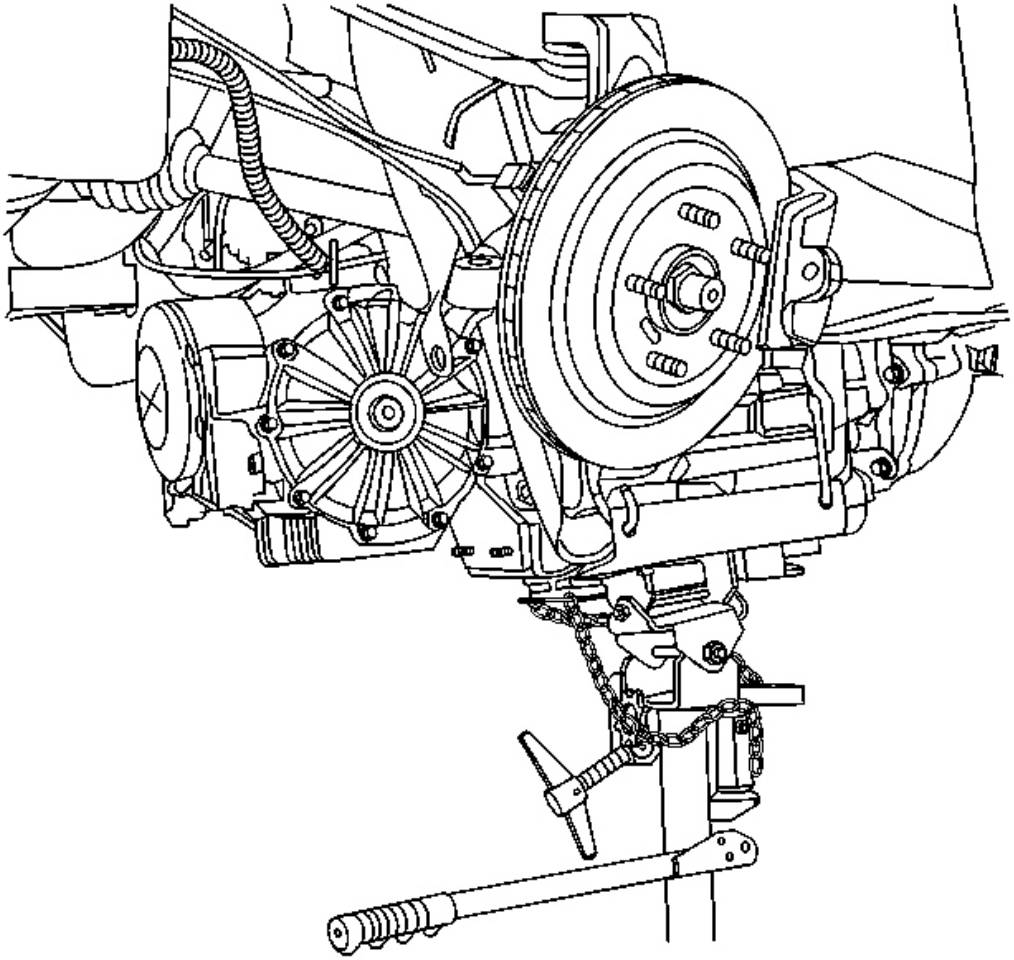

Fig. 93: Wiring Harness To Harness Retainer At Top Of Transmission
Courtesy of GENERAL MOTORS CORP.

53. SLOWLY lower the driveline, while simultaneously adjusting the angle of tilt, and observe the relationship between the top rear of the differential and the lowest part of the rear compartment panel floor (the center storage compartment between the frame rails); the differential should not be lowered more than approximately EVEN with the specified body point of reference.

    The engine positive crankcase ventilation (PCV) pipes which route along the rear of the engine intake manifold [LS1 only] will likely contact the dash panel.

54. Release the wiring harness from the harness retainer along the top of the transmission.
55. Check to be sure that the wiring harness is free from the driveline being removed.

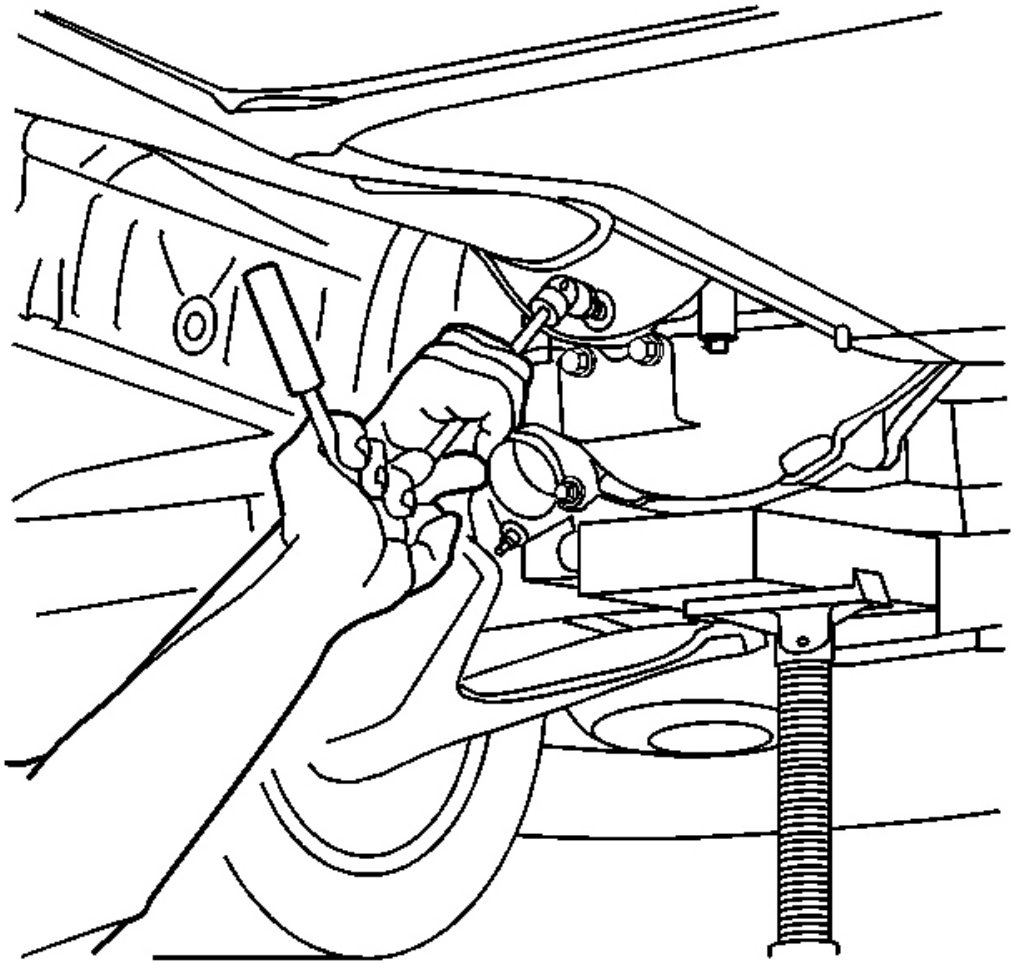

Fig. 94: Driveline Support Assembly To Engine Flywheel Housing Bolts
Courtesy of GENERAL MOTORS CORP.

56. Using a block of wood to protect the engine oil pan, place a straight jack under the rear of the engine oil pan to support the engine from stressing the composite dash panel.
57. Remove the five driveline support assembly to engine flywheel housing bolts.
58. Carefully bend the wiring harness bracket away from the driveline toward the driveline tunnel wall in order to make a clear removal path for the driveline.

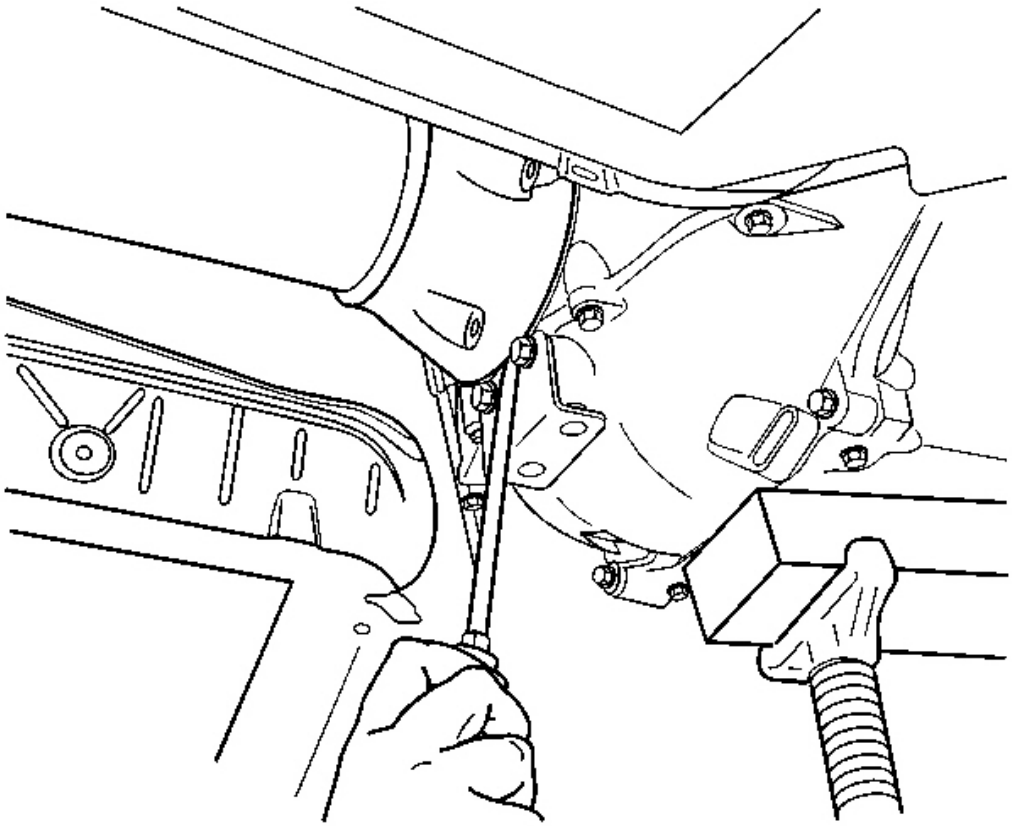

Fig. 95: Edge Of Driveline Support Assembly & Engine Flywheel Housing
Courtesy of GENERAL MOTORS CORP.

IMPORTANT: The aid of an assistant will be necessary for the remaining steps.

59. Have an assistant insert a flat bladed screwdriver, or similar tool, between the edge of the driveline support assembly and the engine flywheel housing, then begin to pry the driveline loose from the engine.

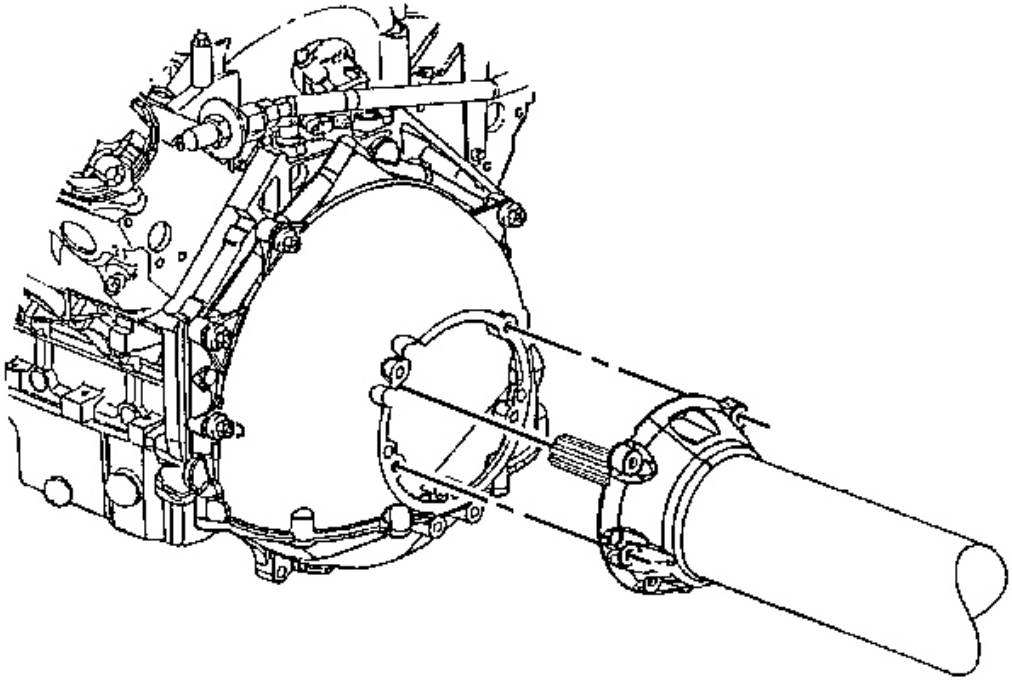

Fig. 96: Propeller Input Shaft At Rear Of Engine Flywheel Housing
Courtesy of GENERAL MOTORS CORP.

60. Have an assistant guide the front of the driveline during the removal of the driveline from the vehicle.
61. SLOWLY lower the driveline, while simultaneously adjusting the angle of tilt and pulling the driveline away from the engine UNTIL the propeller input shaft at the front of the driveline support assembly just clears the engine flywheel housing.
62. SLOWLY lower the driveline completely out of the vehicle.

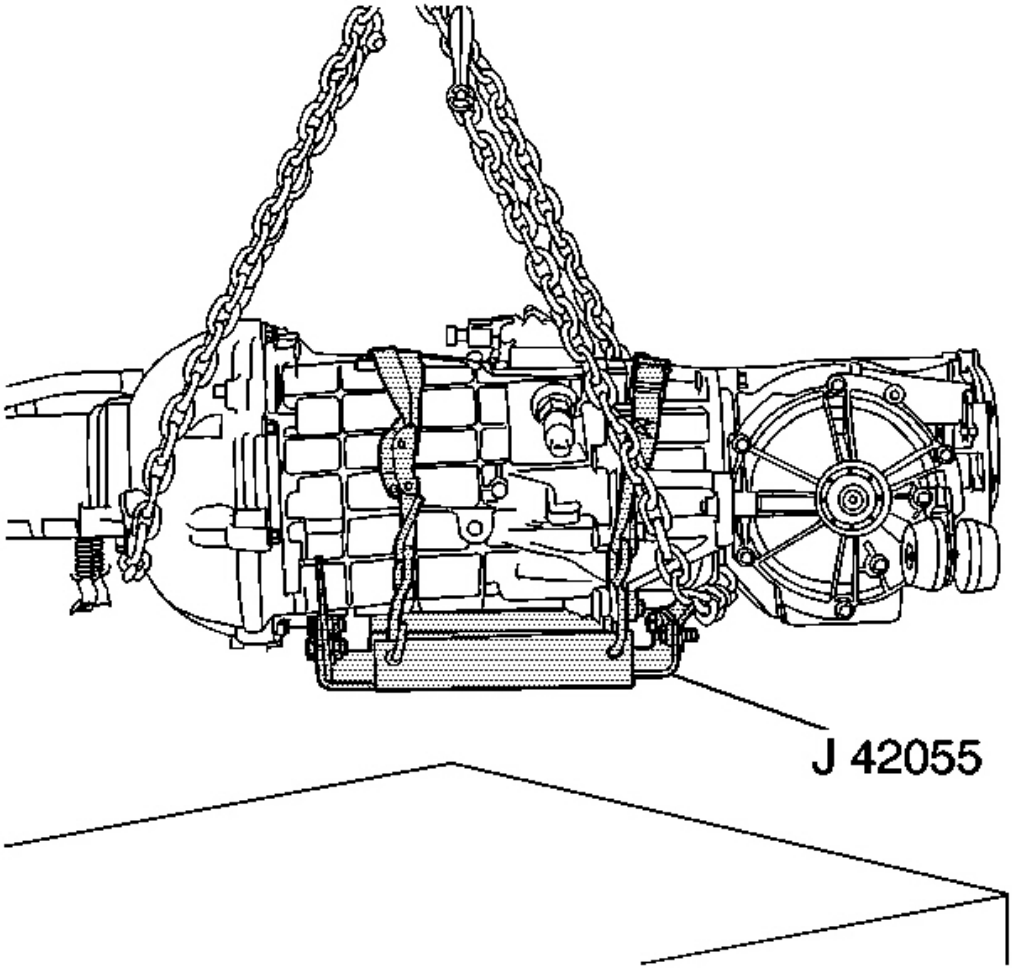

Fig. 97: Rear Exhaust Hangers At Driveline Support Assembly
Courtesy of GENERAL MOTORS CORP.

63. Position the chainfall, or equivalent lifting device, in a way which will protect the rear exhaust hangers located on the driveline support assembly.
64. Using the lifting device, raise the driveline to relieve the weight from the transmission jack.
65. Disconnect the **J 42055** from the transmission jack ONLY; the **J 42055** will provide stability to the driveline components while working on a bench. See **Special Tools and Equipment** .
66. Position the driveline on a workbench with the lifting device still attached.
67. Support the driveline support assembly and the differential for additional balance.
68. Remove the lifting device from the driveline.

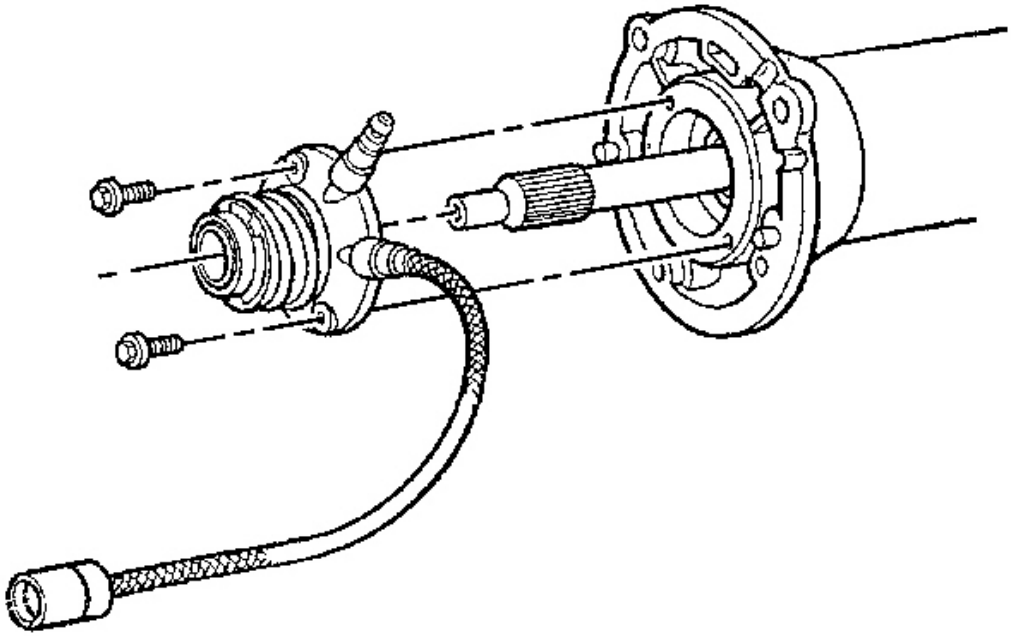

Fig. 98: Clutch Actuator Cylinder Mounting Bolts
Courtesy of GENERAL MOTORS CORP.

69. Remove the clutch actuator cylinder mounting bolts.
70. Remove the clutch actuator cylinder from the driveline support assembly.

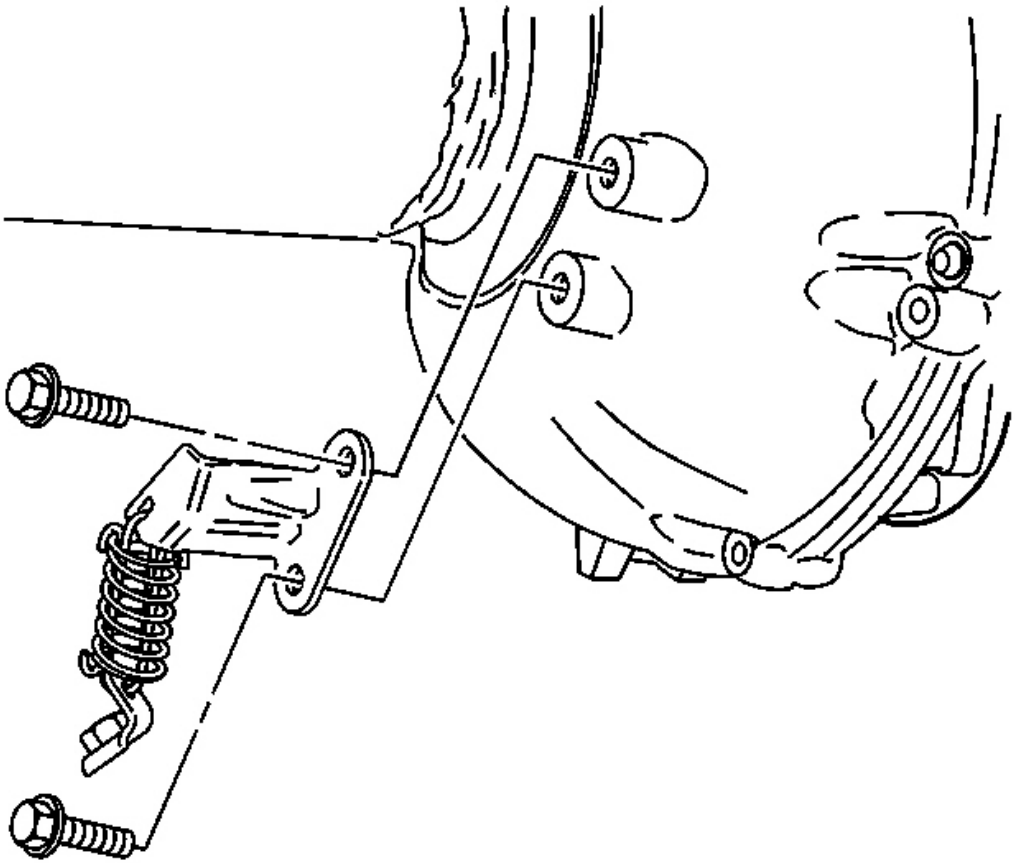

Fig. 99: Rear Exhaust Hanger Mounting Bolts
Courtesy of GENERAL MOTORS CORP.

71. Remove the rear exhaust hanger mounting bolts.
72. Remove the rear exhaust hangers from the driveline support assembly.

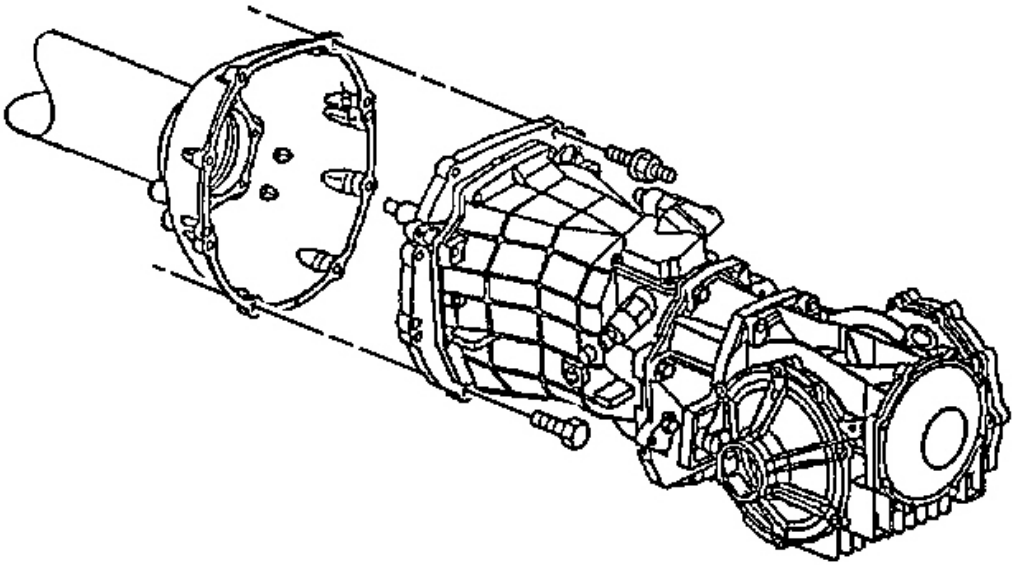

Fig. 100: Transmission To Driveline Support Assembly Bolts/Studs
Courtesy of GENERAL MOTORS CORP.

73. Remove the transmission to driveline support assembly bolts/studs.
74. Insert a flat bladed screwdriver, or similar tool, between the edge of the driveline support assembly and the transmission, then begin to pry the driveline support assembly loose from the transmission.

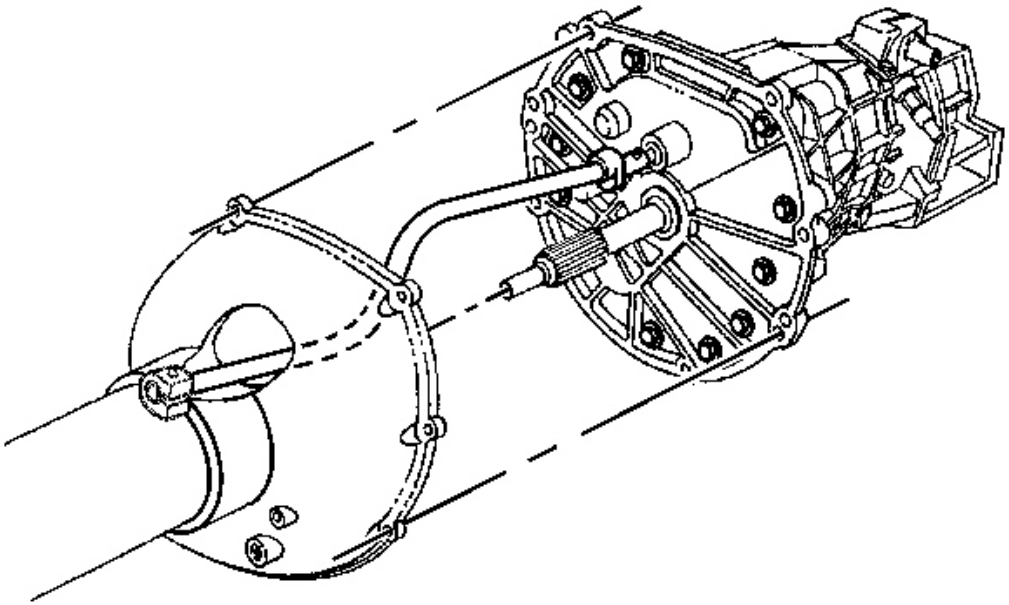

Fig. 101: Driveline Support Assembly To Transmission Shift Rod
Courtesy of GENERAL MOTORS CORP.

75. Slowly slide the driveline support assembly away from the transmission while guiding the transmission shift rod through the opening in the driveline support assembly.

Installation Procedure

NOTE: **When tilting down the rear of the driveline, insert a putty knife or similar tool between the shift control bracket on the driveline support assembly and the brake pipe retainer on the driveline tunnel wall to prevent damage.**

NOTE: **Ensure that the clutch hydraulic hoses are positioned away from nearby vehicle components or vehicle damage may result.**

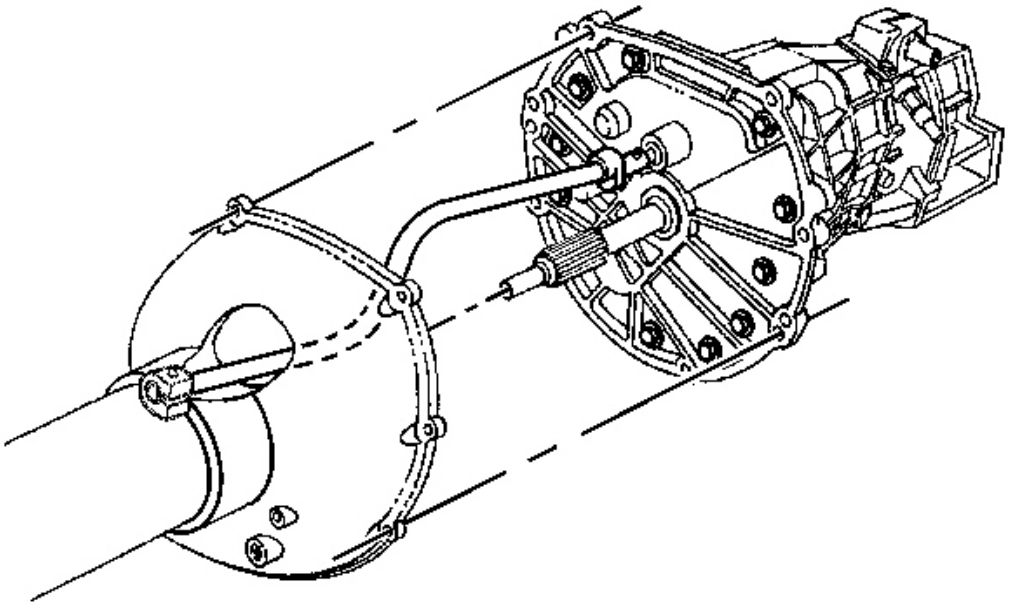

Fig. 102: Driveline Support Assembly To Transmission Shift Rod
Courtesy of GENERAL MOTORS CORP.

1. Slowly slide the driveline support assembly to the transmission, while guiding the shift rod through the opening in the driveline support assembly.

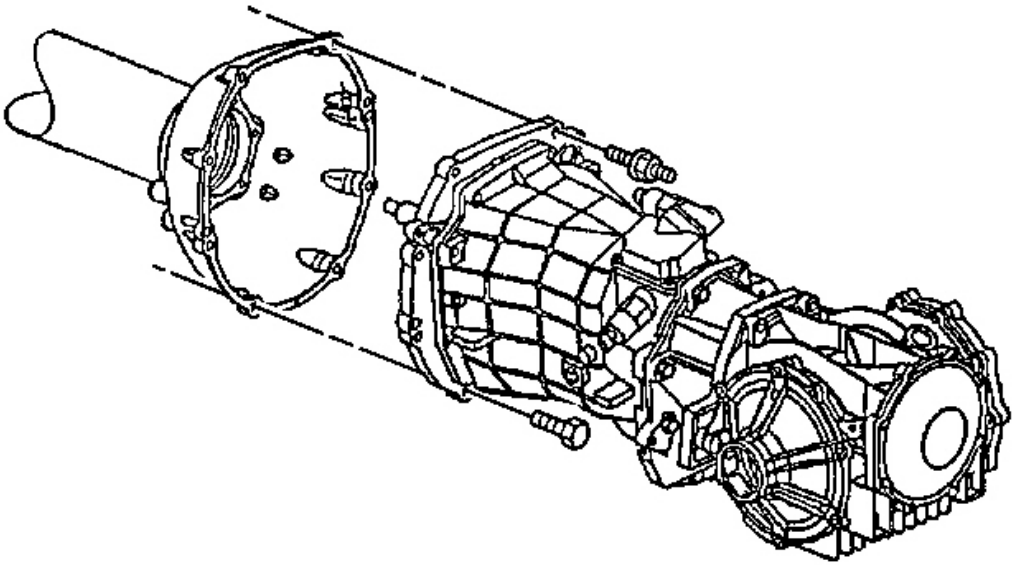

Fig. 103: Transmission To Driveline Support Assembly Bolts/Studs
Courtesy of GENERAL MOTORS CORP.

NOTE: Refer to Fastener Notice in Cautions and Notices.

2. Install the transmission to driveline support assembly bolts/studs.

   Tighten: Tighten the transmission to driveline support assembly bolts/studs to 50 N.m (37 lb ft).

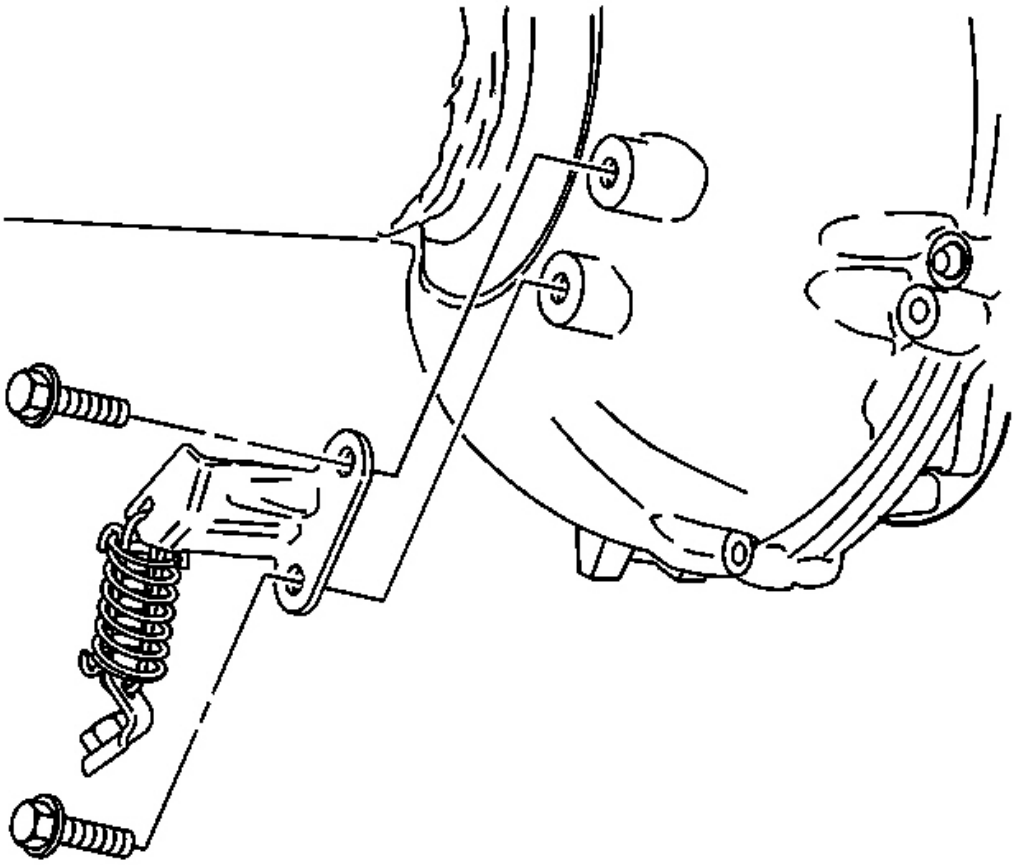

Fig. 104: Rear Exhaust Hanger Mounting Bolts
Courtesy of GENERAL MOTORS CORP.

3. Install the rear exhaust hangers to the driveline support assembly.
4. Install the rear exhaust hanger mounting bolts.

Tighten: Tighten the rear exhaust hanger mounting bolts to 50 N.m (37 lb ft).

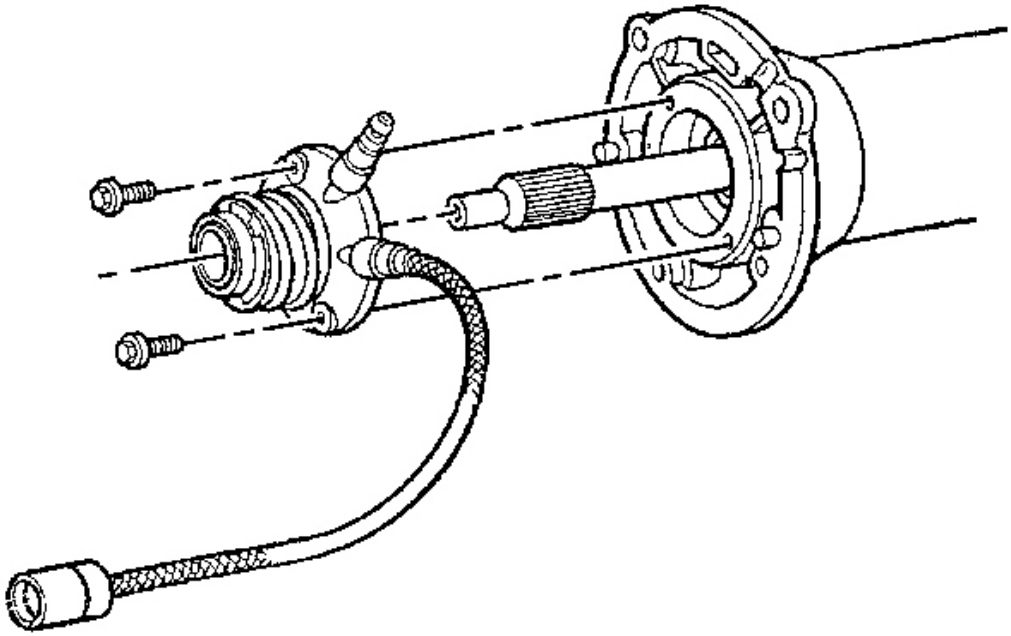

Fig. 105: Clutch Actuator Cylinder Mounting Bolts
Courtesy of GENERAL MOTORS CORP.

5. Install the clutch actuator cylinder to the driveline support assembly.
6. Install the clutch actuator cylinder mounting bolts.

Tighten: Tighten the clutch actuator cylinder mounting bolts to 12 N.m (106 lb in).

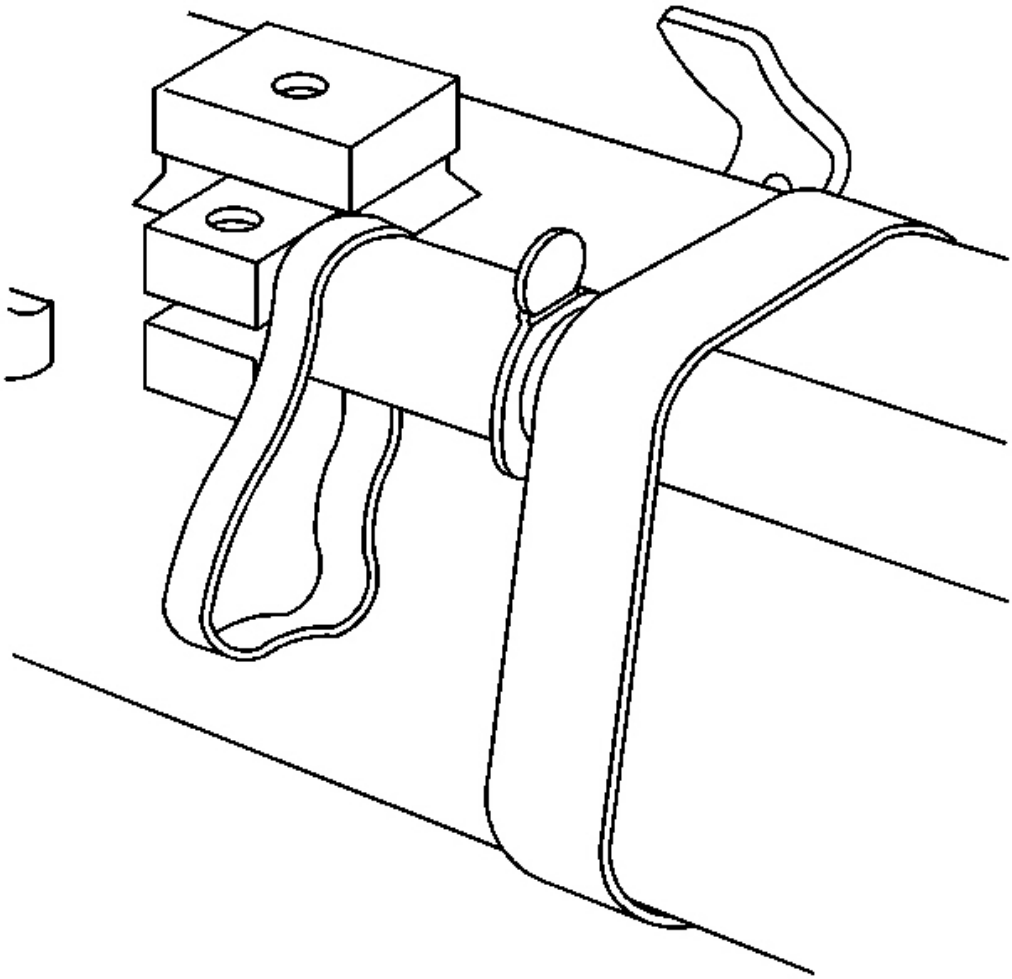

Fig. 106: Rubber Band To Transmission Shift Rod
Courtesy of GENERAL MOTORS CORP.

7. Loosely install a rubber band onto the transmission shift rod and position just behind the shift rod clamp.

   The rubber band will be used to aid in installing the shift control rod after the driveline has been installed.

8. Using a piece of masking tape, or similar tape which can be easily broken, affix the transmission shift rod to the driveline support assembly and position the rod just to the outside of the mounting boss used for the shift control.

   The tape is intended to keep the shift control rod in position, and to aid in shift control rod installation.

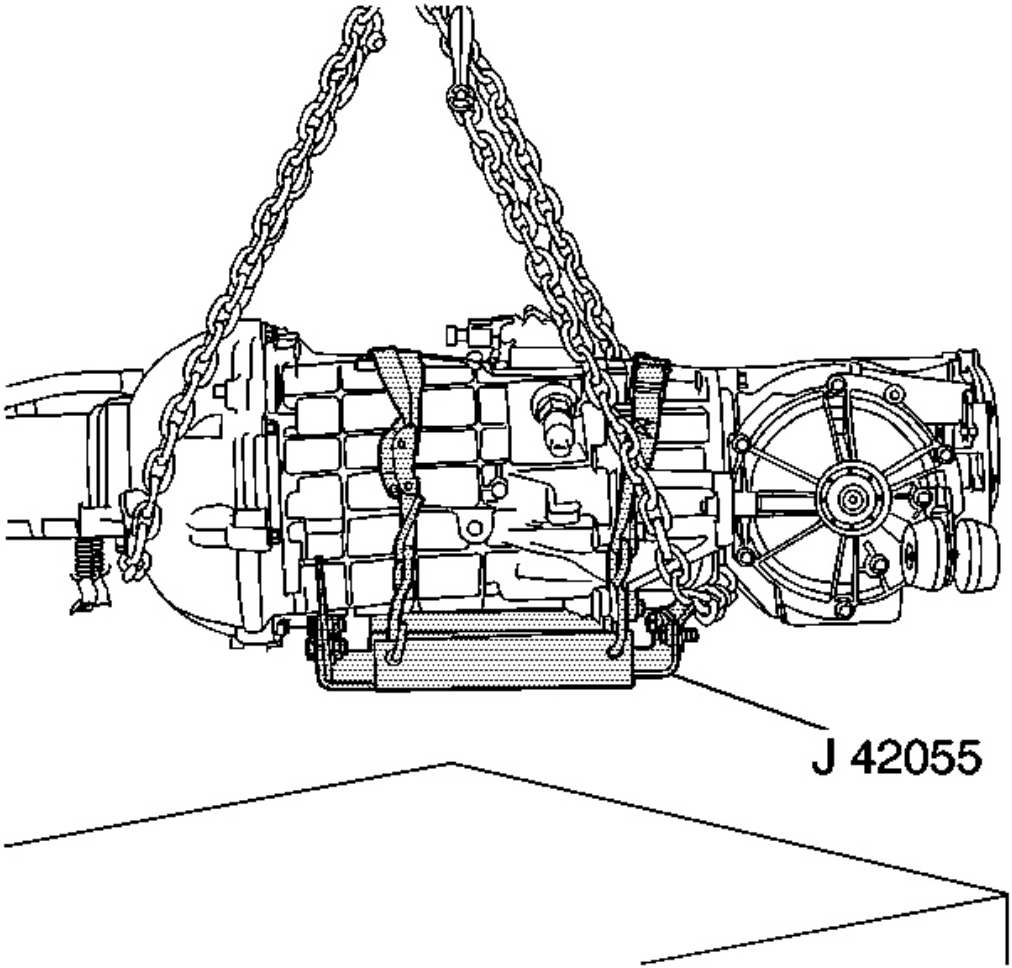

Fig. 107: Rear Exhaust Hangers At Driveline Support Assembly
Courtesy of GENERAL MOTORS CORP.

9. Position the chainfall, or equivalent lifting device, in a way which will protect the rear exhaust hangers located on the driveline support assembly.

IMPORTANT: The aid of an assistant will be necessary for the following steps until the driveline is installed into the vehicle.

10. Using the lifting device, raise the driveline off the workbench and position the driveline with the **J 42055** onto a transmission jack.
11. Connect the **J 42055** to the transmission jack. See **Special Tools and Equipment** .

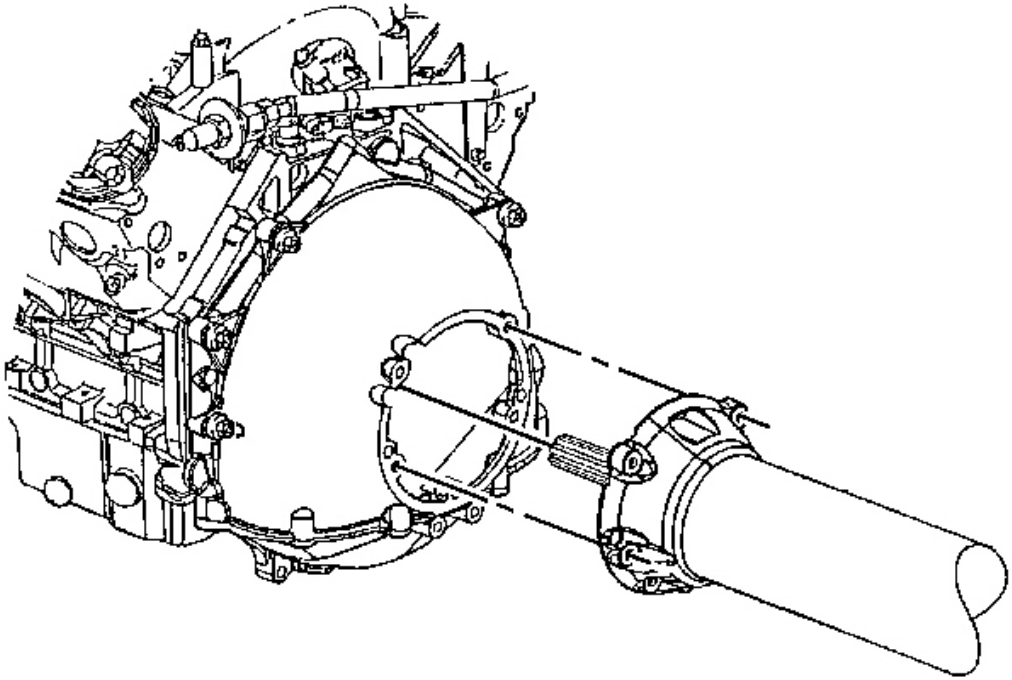

Fig. 108: Propeller Input Shaft At Rear Of Engine Flywheel Housing
Courtesy of GENERAL MOTORS CORP.

12. Remove the lifting device from the driveline.
13. Position the driveline under the vehicle.
14. Begin to raise the driveline at the approximate angle used during removal.
15. Position the wiring harness along the driveline support assembly and LOOSELY install the harness into the harness retaining slots.
16. Have an assistant guide the front of the driveline so the propeller input shaft is just to the rear of the engine flywheel housing, then raise the driveline to the PROPER HEIGHT and the PROPER ANGLE to install to the engine.
17. Have an assistant begin to insert the propeller input shaft into the clutch driven plate hub while maintaining the proper angle of the driveline; if necessary, use a screwdriver to rotate the shaft slightly to bring the splines into alignment.

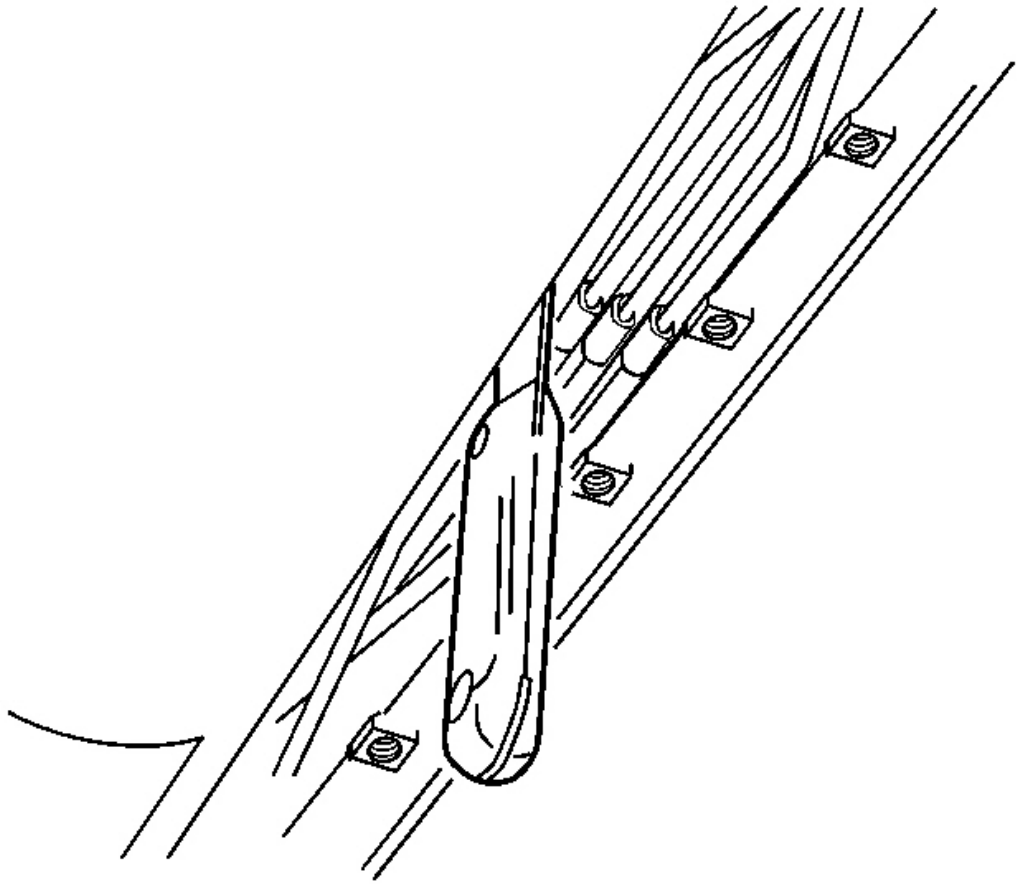

Fig. 109: Edge Of Shifter Bracket On Side Of Driveline Support Assembly & Brake Pipe Retainer
Courtesy of GENERAL MOTORS CORP.

18. Insert a putty knife, or similar tool, between the edge of the shifter bracket on the side of the driveline support assembly and the brake pipe retainer on the wall of the driveline tunnel.

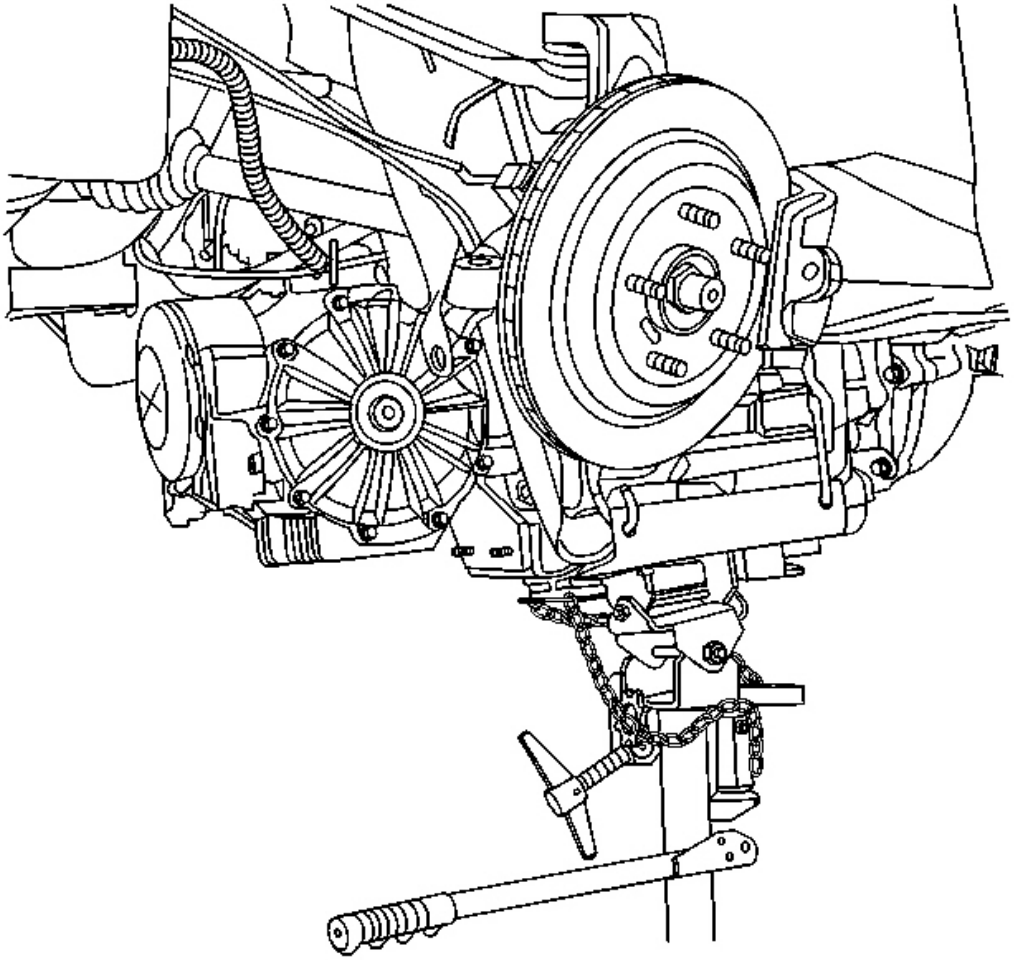

Fig. 110: Wiring Harness To Harness Retainer At Top Of Transmission
Courtesy of GENERAL MOTORS CORP.

19. SLOWLY seat the driveline to the engine flywheel housing while maintaining the proper angle of the driveline.
20. Reposition the wiring harness bracket from near the driveline tunnel wall to align with the appropriate driveline support assembly bolt hole.

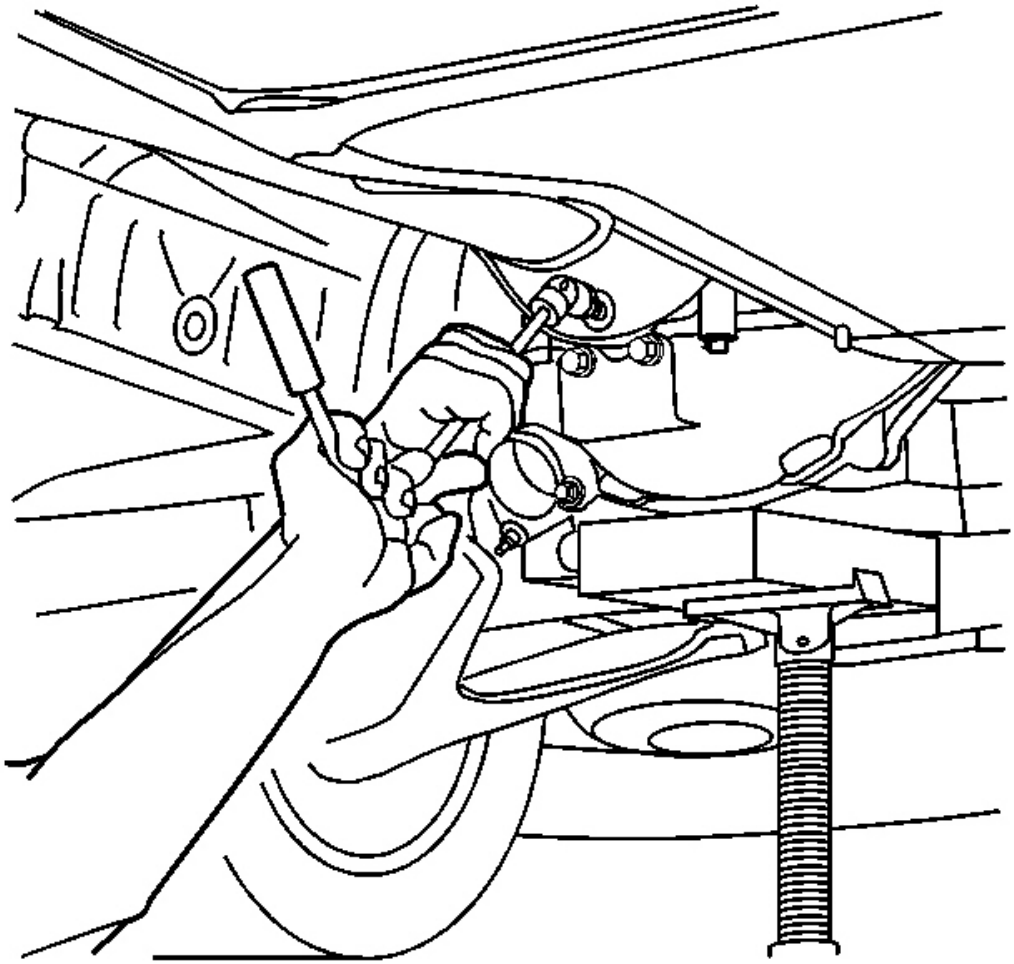

Fig. 111: Driveline Support Assembly To Engine Flywheel Housing Bolts
Courtesy of GENERAL MOTORS CORP.

21. Install the five driveline support assembly to engine flywheel housing bolts.

    Tighten: Tighten the driveline support assembly to engine flywheel housing bolts to 50 N.m (37 lb ft).

22. Install the wiring harness to the wiring harness retainer along the top of the transmission.
23. SLOWLY raise the driveline to approximately 51 mm (2.0 in) BELOW the final installed height.

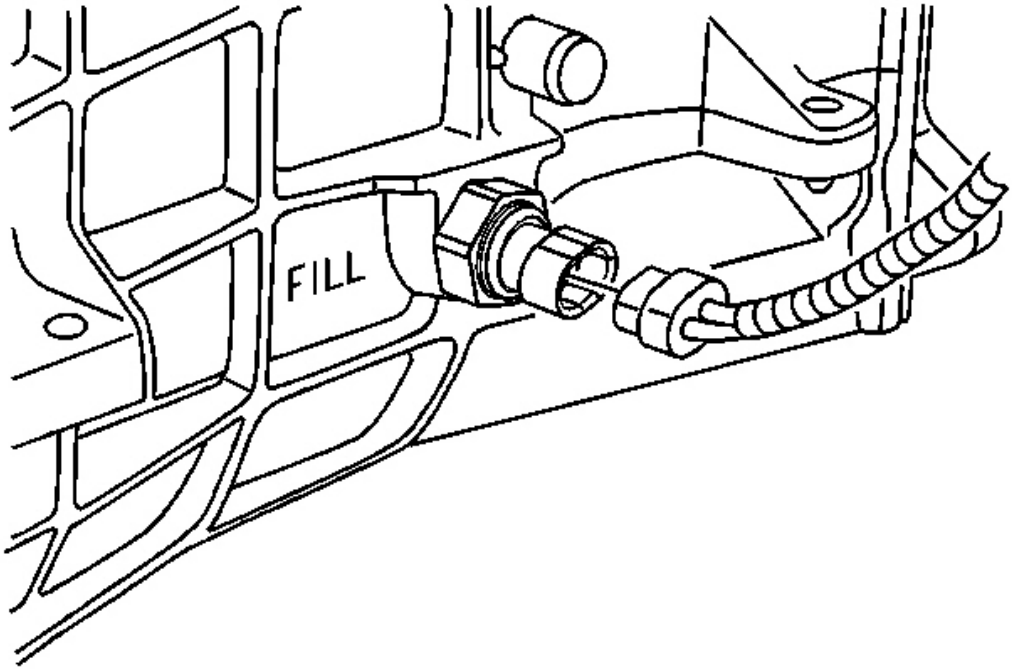

Fig. 112: Transmission Fluid Temperature Sensor Electrical Connector
Courtesy of GENERAL MOTORS CORP.

24. Connect the transmission fluid temperature sensor electrical connector, if equipped.

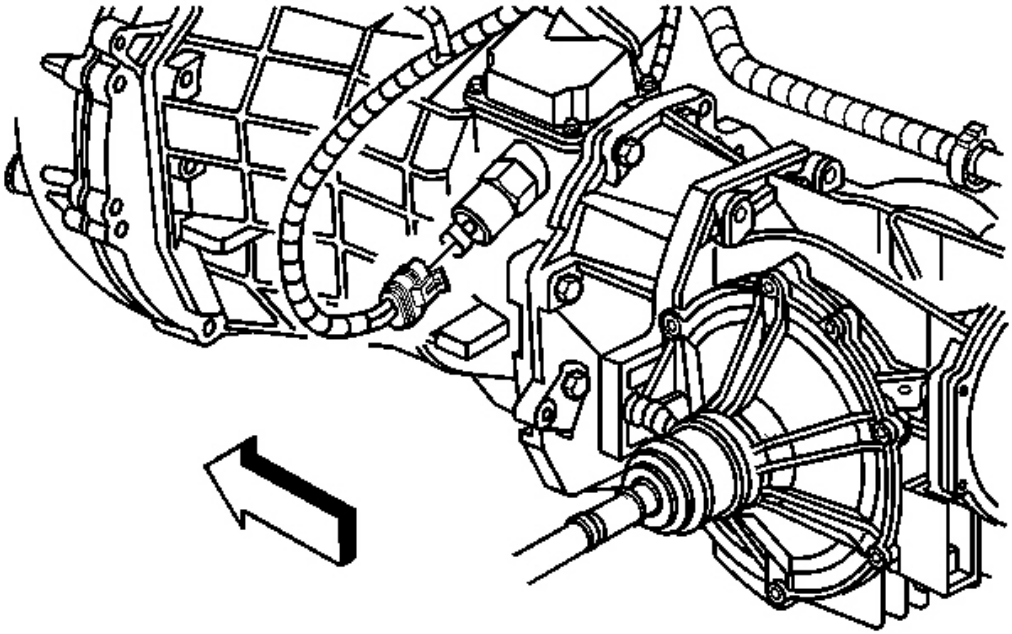

Fig. 113: Gear Select (Skip Shift) Solenoid Electrical Connector
Courtesy of GENERAL MOTORS CORP.

25. Connect the gear select (skip shift) solenoid electrical connector.

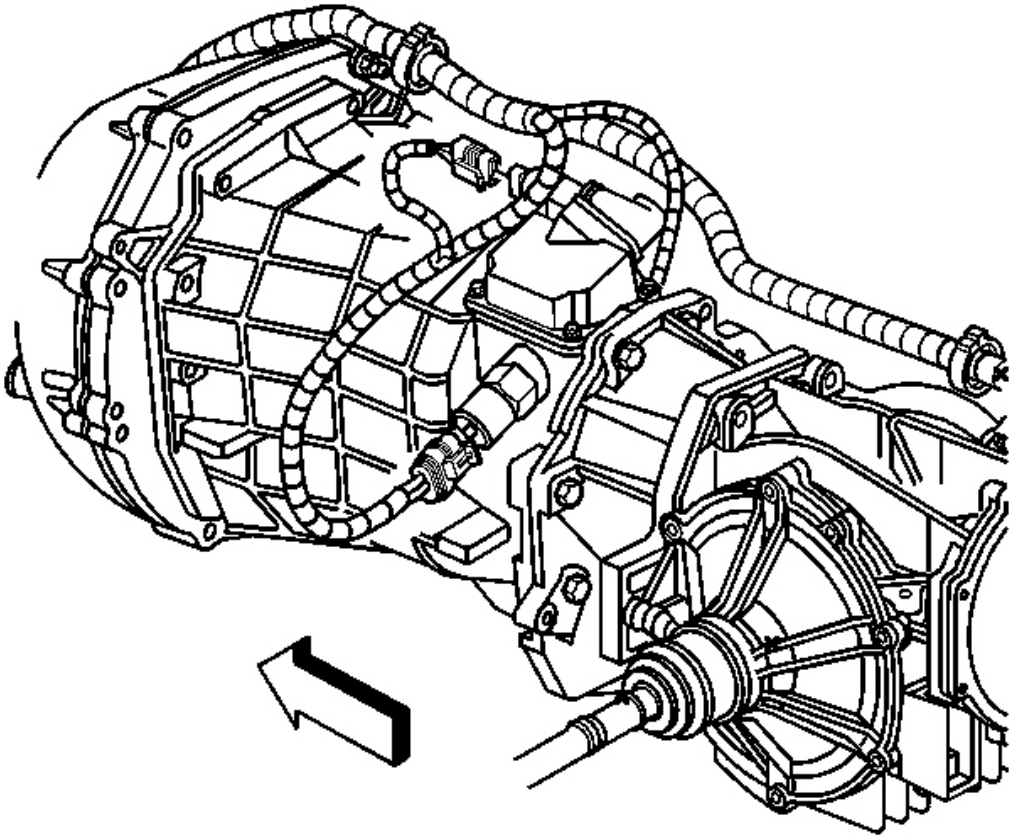

Fig. 114: Reverse Lockout Solenoid Electrical Connector
Courtesy of GENERAL MOTORS CORP.

26. Connect the reverse lockout solenoid electrical connector.

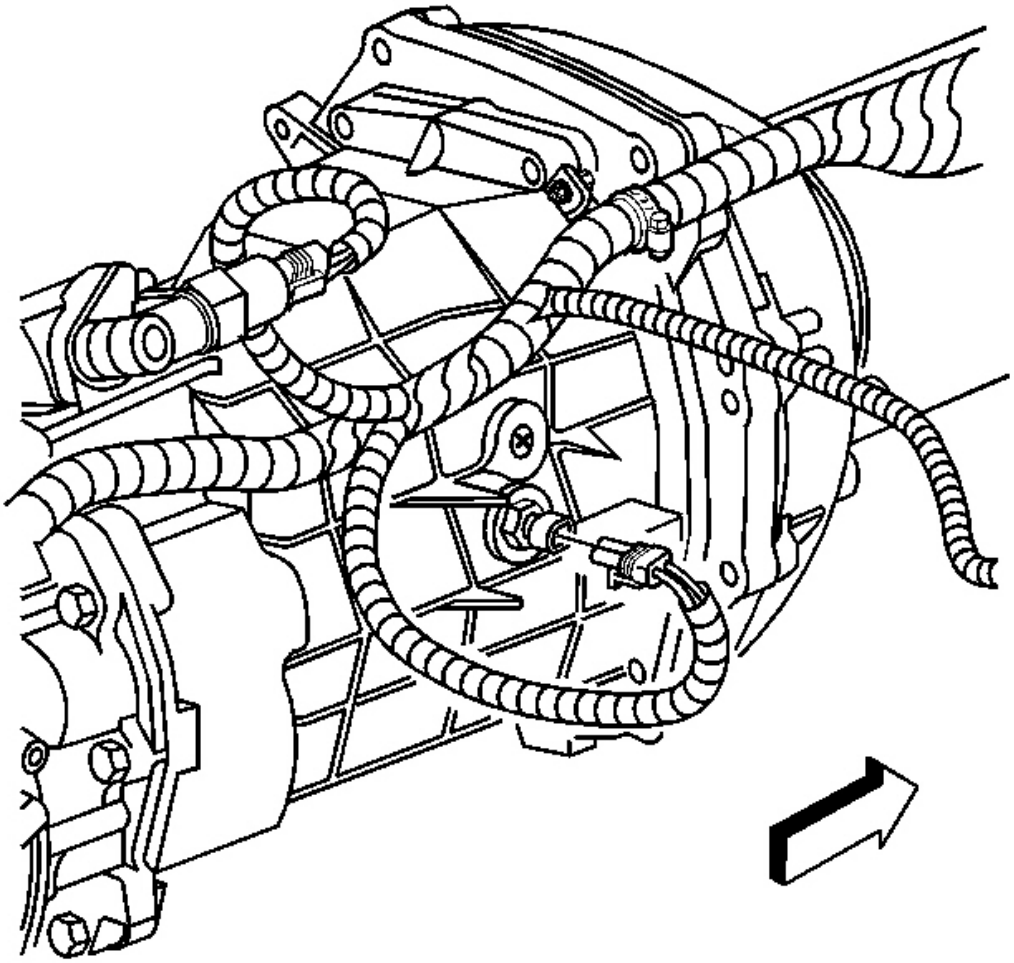

Fig. 115: Backup Lamp Switch Electrical Connector
Courtesy of GENERAL MOTORS CORP.

27. Connect the backup lamp switch electrical connector.

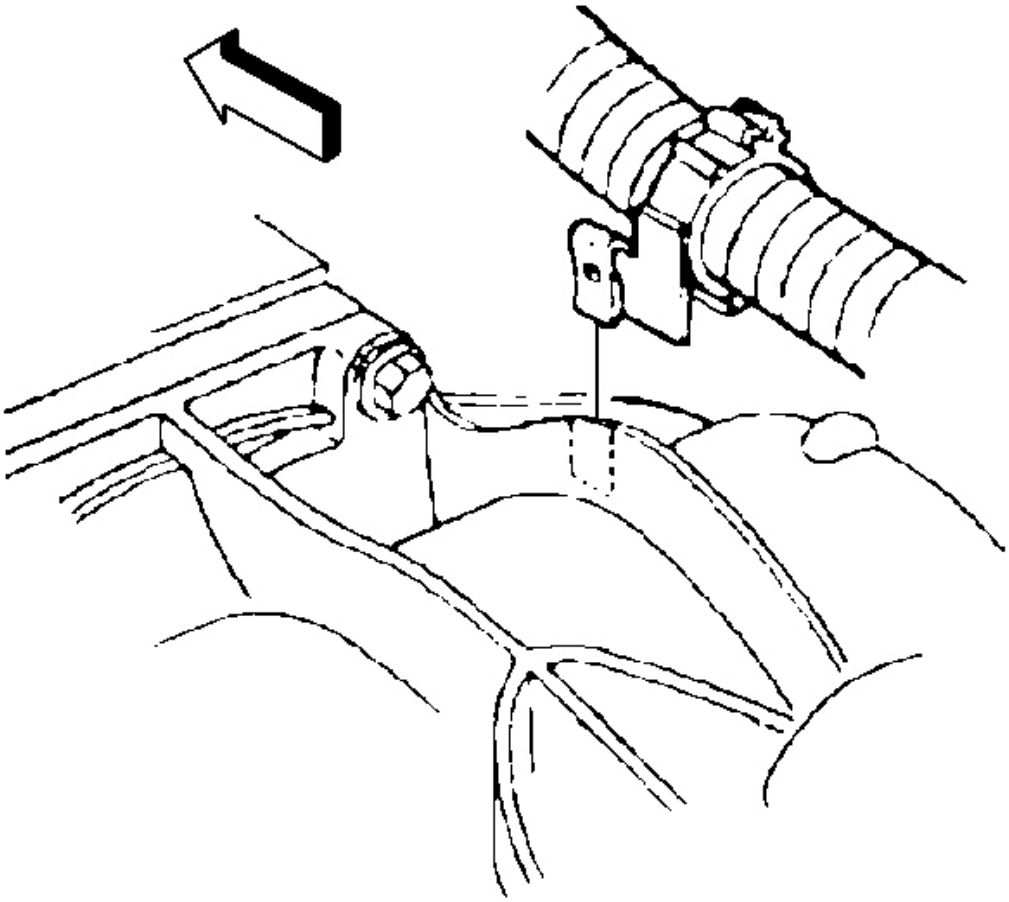

Fig. 116: Wiring Harness Retainer To Stud At Differential Rear Cover
Courtesy of GENERAL MOTORS CORP.

28. Connect the wiring harness clip to the top of the differential.
29. Connect the wiring harness retainer to the stud at the differential rear cover.

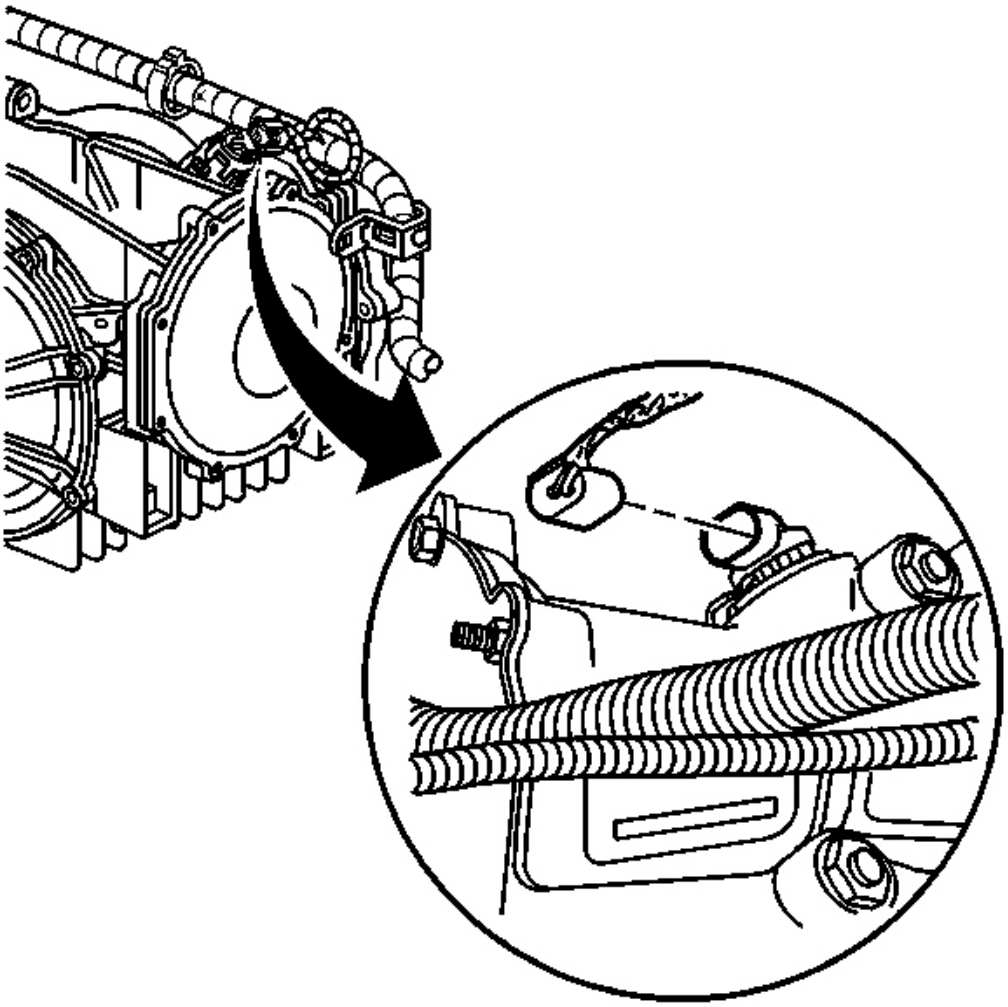

Fig. 117: Vehicle Speed Sensor (VSS) Electrical Connector
Courtesy of GENERAL MOTORS CORP.

30. Connect the vehicle speed sensor (VSS) electrical connector.

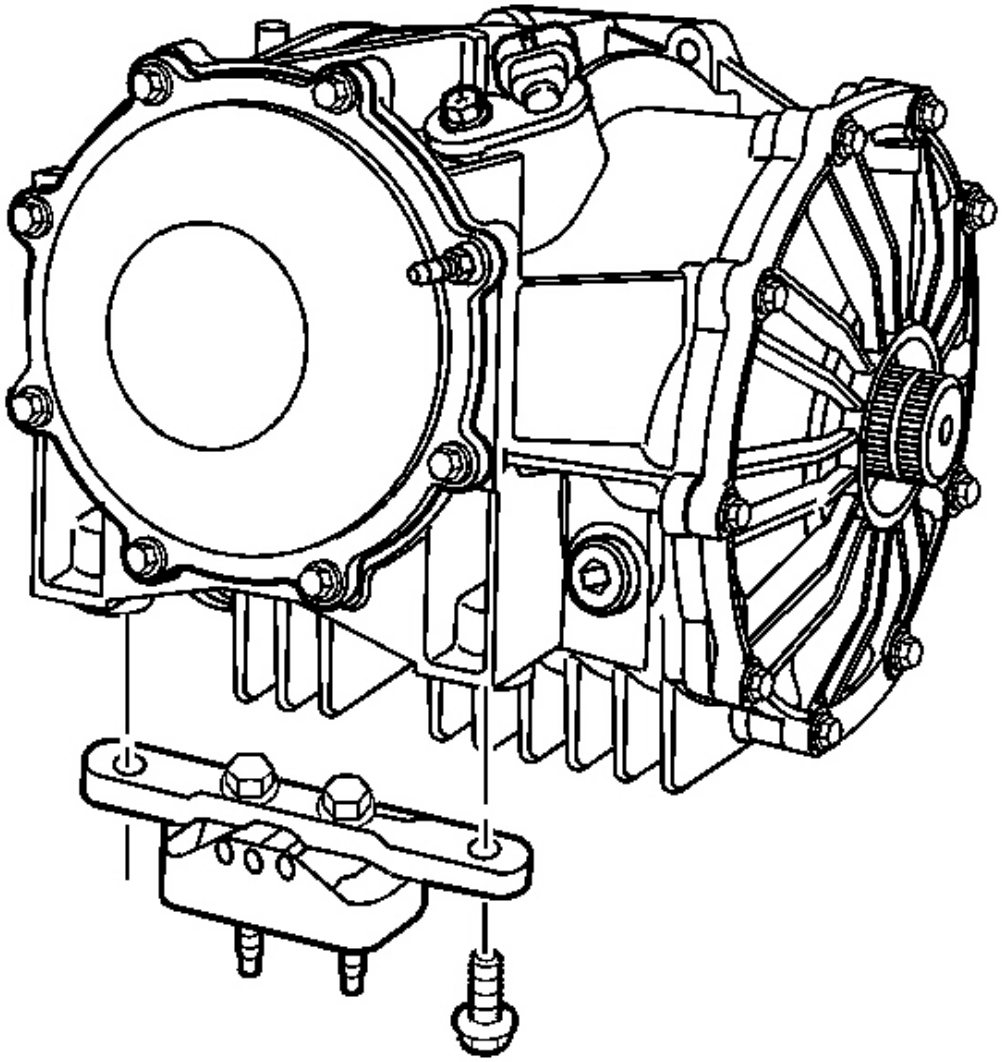

Fig. 118: Mount Location
Courtesy of GENERAL MOTORS CORP.

31. Slowly raise the driveline to final installation height.
32. Remove the putty knife, if still in position.
33. Remove the jack which supported the rear of the engine.
34. Remove the tie-off retainers from the axle shafts.
35. CAREFULLY align and seat the wheel drive shafts to the differential.

36. Install the transaxle mount with bracket to the differential.
37. Install the transaxle mount bracket to differential bolts.

    Tighten: Tighten the transaxle mount bracket to differential bolts to 50 N.m (37 lb ft).

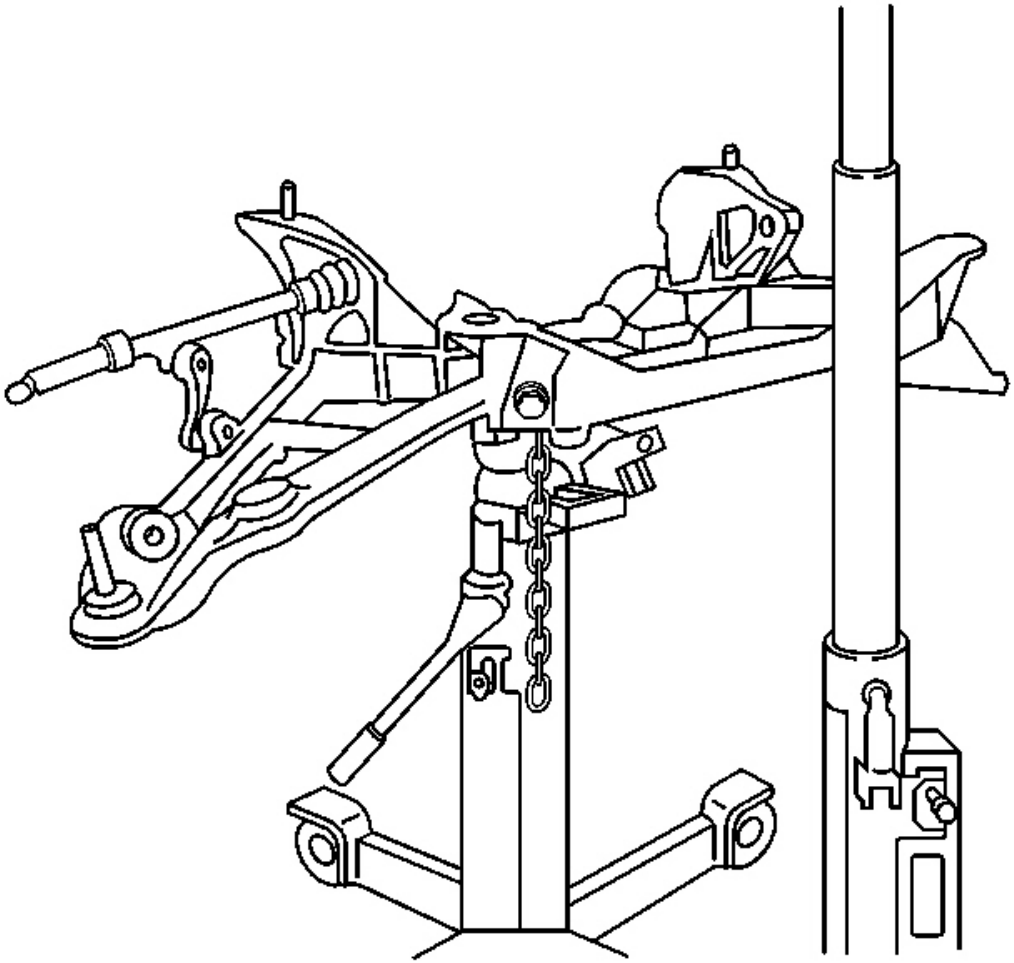

Fig. 119: Supporting Crossmember On Jack
Courtesy of GENERAL MOTORS CORP.

38. With the aid of an assistant, begin to raise the rear suspension crossmember (still firmly attached to a transmission jack), until it contacts the vehicle frame rails.
39. Guide the rear suspension crossmember alignment pins into the alignment holes in the vehicle frame rails, and guide the transaxle mount studs into the mounting holes in the crossmember, then raise the

crossmember until it contacts the vehicle frame rails.

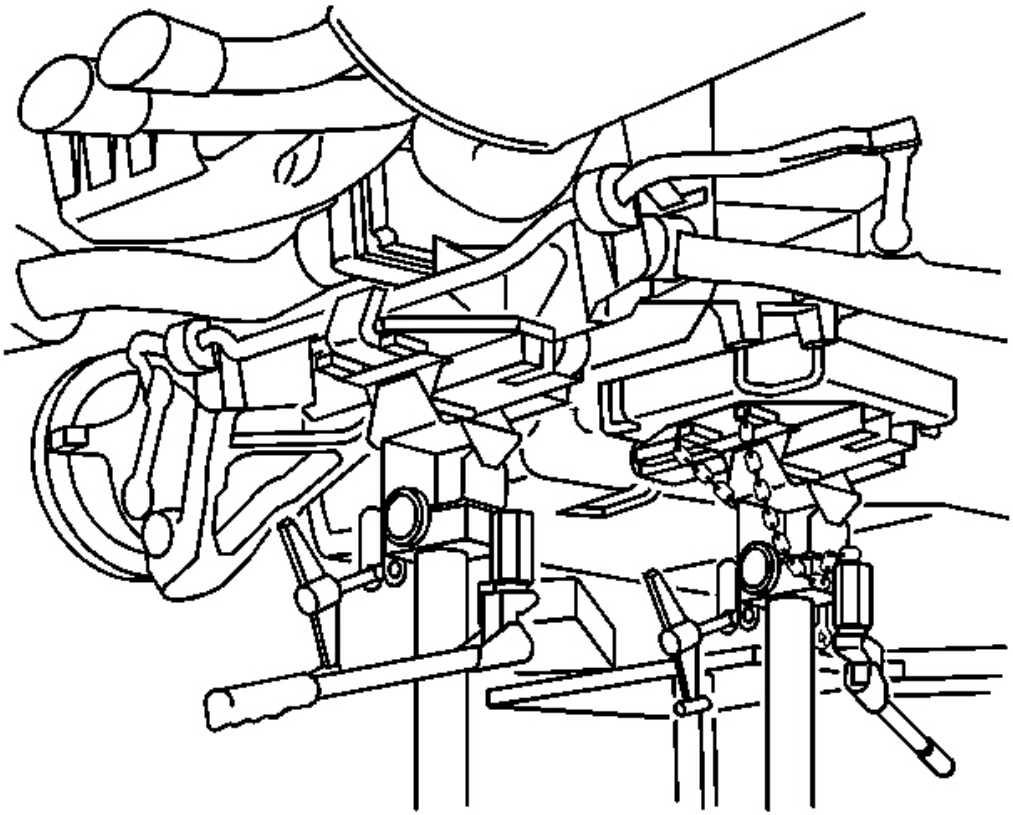

Fig. 120: View Of Jack Under Front End
Courtesy of GENERAL MOTORS CORP.

40. Using ONLY HAND TOOLS, install NEW rear suspension crossmember mounting nuts.

    Tighten: Tighten the rear suspension crossmember mounting nuts to 110 N.m (81 lb ft).

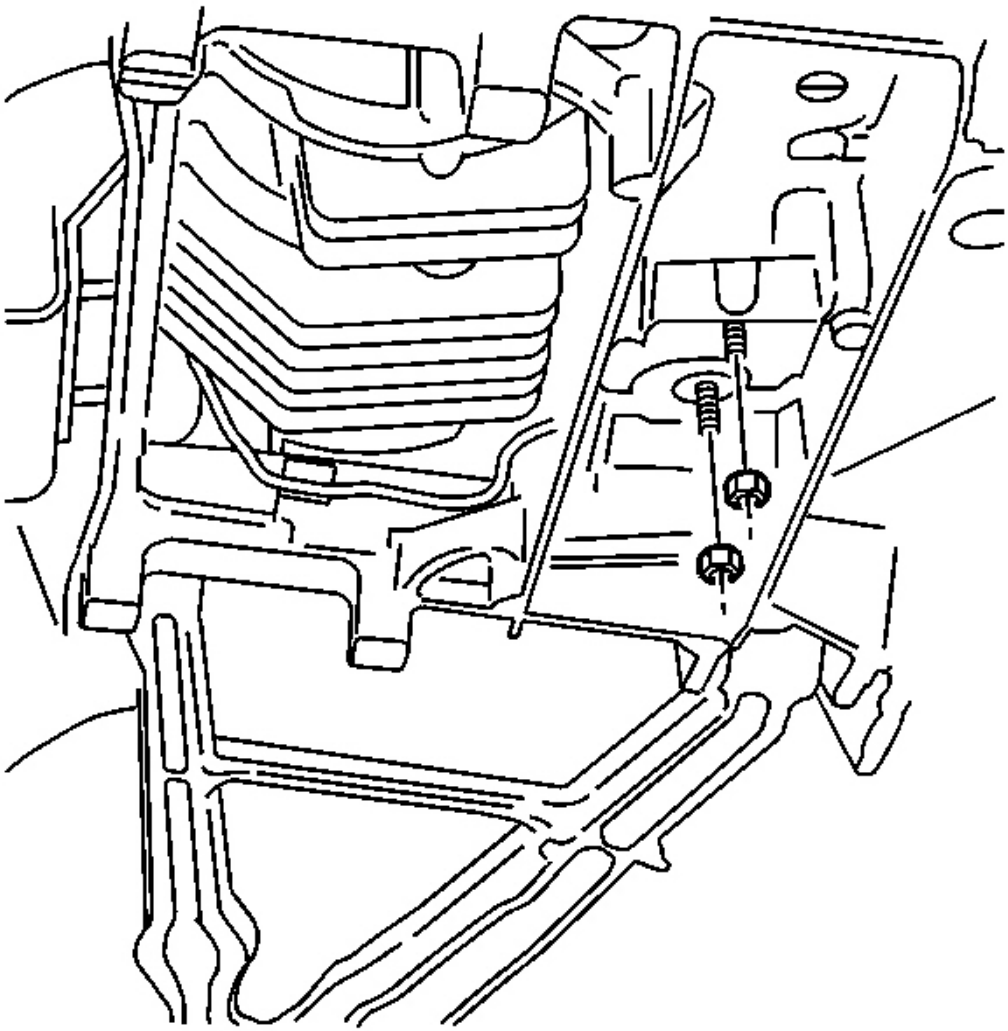

Fig. 121: Transaxle Mount To Rear Crossmember Nuts
Courtesy of GENERAL MOTORS CORP.

41. Remove the transmission jack from the rear suspension crossmember.
42. Release the **J 42055** from the transmission, then remove the **J 42055** and transmission jack. See **Special Tools and Equipment** .
43. Install the transaxle mount to rear suspension crossmember nuts.

    Tighten: Tighten the transaxle mount to rear suspension crossmember nuts to 50 N.m (37 lb ft).

44. Connect the wiring harness and brake pipe clip retainers to the rear suspension crossmember.

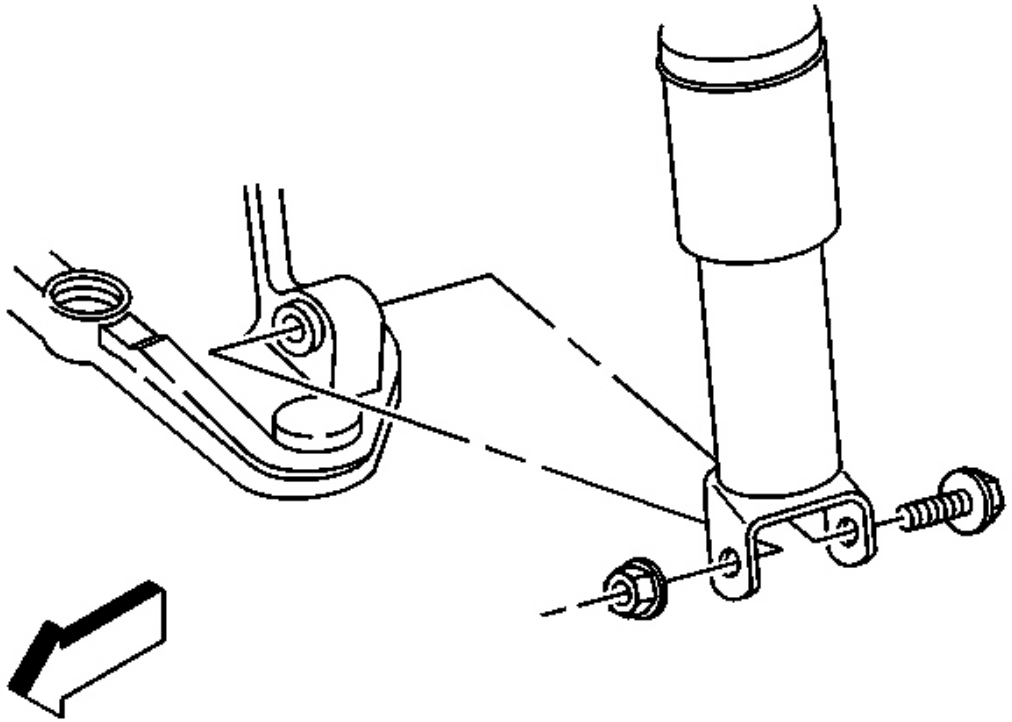

Fig. 122: Mounting Shock Absorber To Control Arm
Courtesy of GENERAL MOTORS CORP.

45. Support the lower control arm with a straight jack.
46. Connect the lower ball joint to the suspension knuckle. Refer to **Knuckle Replacement** in Rear Suspension.
47. Install the shock absorber lower mounting bolt.

    Tighten: Tighten the rear shock absorber lower mounting bolt to 220 N.m (162 lb ft).

48. Connect the outer tie rod end to the suspension knuckle. Refer to **Tie Rod Replacement (Outer End)** or **Tie Rod Replacement (Suspension Link)** in Rear Suspension.
49. Remove the straight jack from the suspension control arm.
50. Repeat steps 45 through 49 for the other side of the vehicle.
51. Install the rear transverse spring. Refer to **Rear Transverse Spring Replacement** in Rear Suspension.

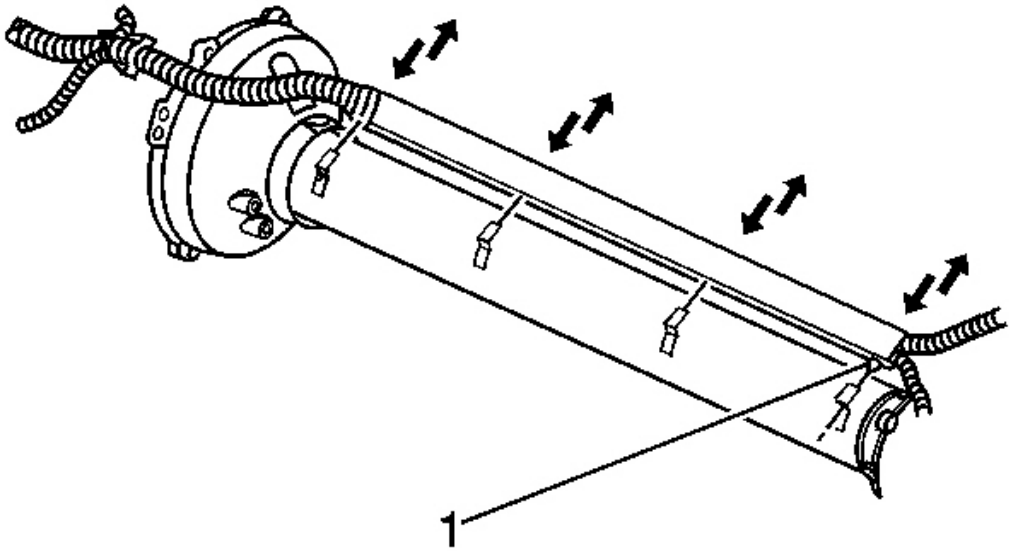

Fig. 123: Wiring Harness To L-Shaped Brackets At Driveline Support Assembly
Courtesy of GENERAL MOTORS CORP.

52. Carefully pull the wiring harness down into the L-shaped brackets along the driveline support assembly, align the harness retainer (locator) (1) to the hole in the forward bracket, then secure in place.

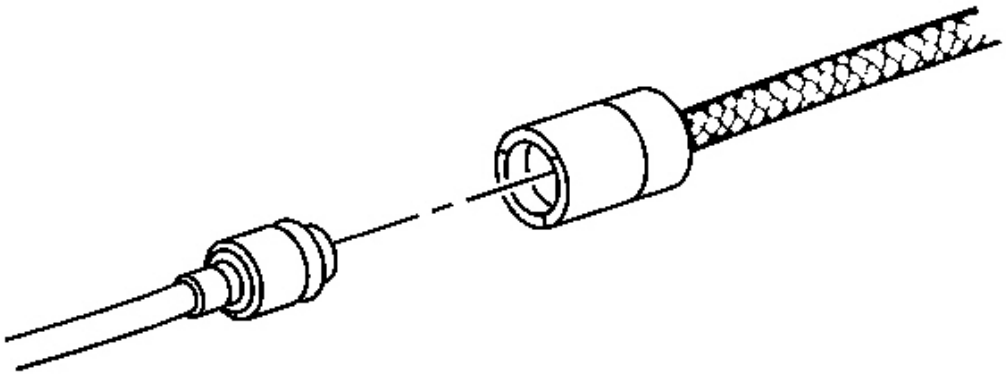

Fig. 124: Identifying White Circular Release Ring On The Actuator Hose

Courtesy of GENERAL MOTORS CORP.

IMPORTANT: DO NOT rely on an audible click or a visual verification of the clutch hydraulic hose quick connect fitting connection.

53. Connect the clutch actuator cylinder hose to the clutch master cylinder hose.

    Push together the clutch hydraulic hose quick connect fittings, then pull back on the fittings to verify engagement.

54. Check the clutch hydraulic hoses for twists or kinks.

Fig. 125: Clutch Actuator Cylinder Hose To Hose Retaining Clip At Rear Of Engine
Courtesy of GENERAL MOTORS CORP.

55. Install the clutch actuator cylinder hose to the hose retaining clip, at the rear of the engine.
56. Install the driveline tunnel closeout panel. Refer to **Driveline Tunnel Closeout Panel Replacement** .
57. Remove the tie-off retainers from the muffler assemblies.
58. Install the catalytic converters. Refer to **Catalytic Converter Replacement** in Engine Exhaust.

59. Install the rear tire and wheel assemblies. Refer to **Tire and Wheel Removal and Installation** in Tires and Wheels.

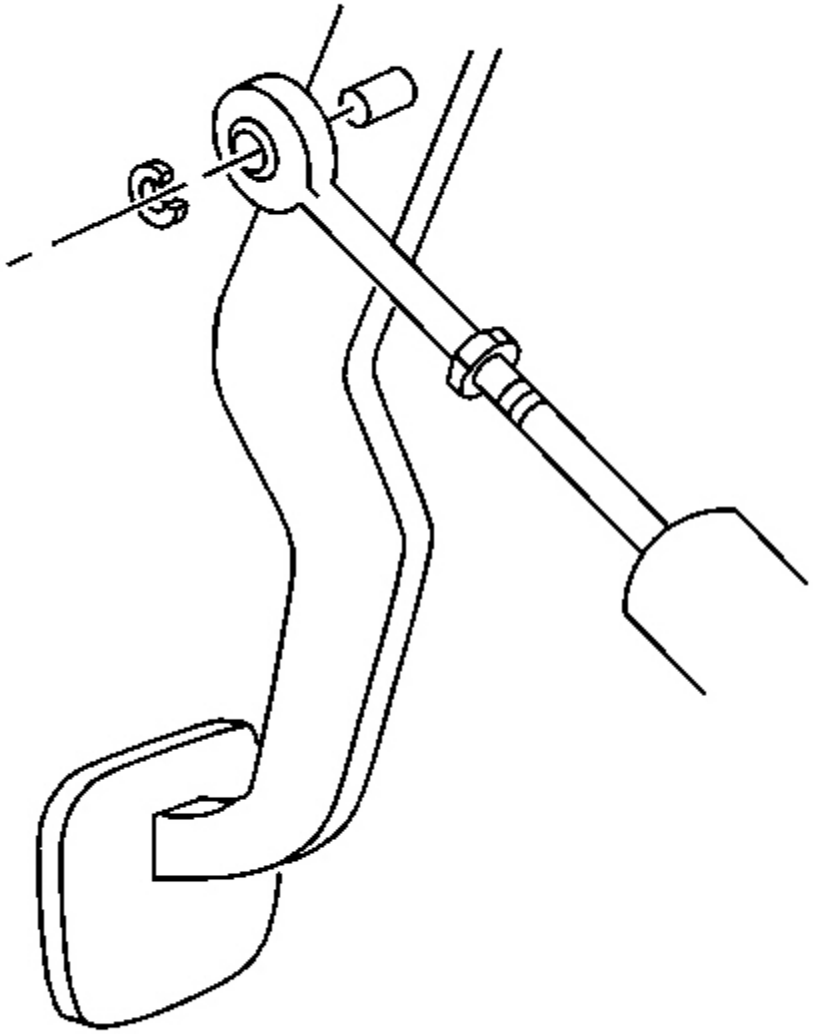

Fig. 126: Master Cylinder Push Rod From The Clutch Pedal
Courtesy of GENERAL MOTORS CORP.

60. Lower the vehicle.
61. Connect the clutch master cylinder pushrod to the clutch pedal.
62. Install the clutch master cylinder pushrod retainer.

63. Install the left I/P lower insulator panel. Refer to **Closeout/Insulator Panel Replacement - Left** in Instrument Panel, Gauges and Console.

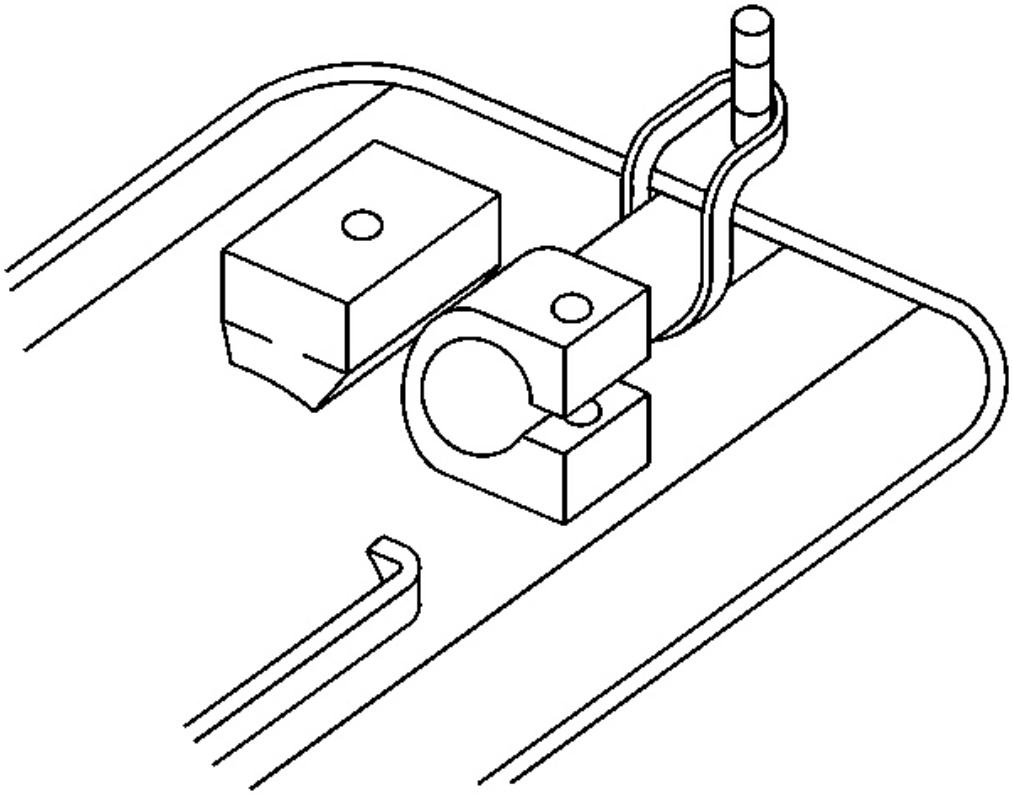

Fig. 127: Transmission Shift Rod At Rear Stud On Top Of Driveline Tunnel To Shift Control
Courtesy of GENERAL MOTORS CORP.

64. Grasp the transmission shift rod and pull up to break the masking tape installed earlier to maintain position during installation.
65. Stretch the rubber band, while still installed onto the transmission shift rod, over the rear stud on top of the driveline tunnel to aid in shift control installation.
66. Install the shift control assembly. Refer to **Shift Control Assembly Replacement** in Manual Transmission.
67. Break and remove the rubber band.

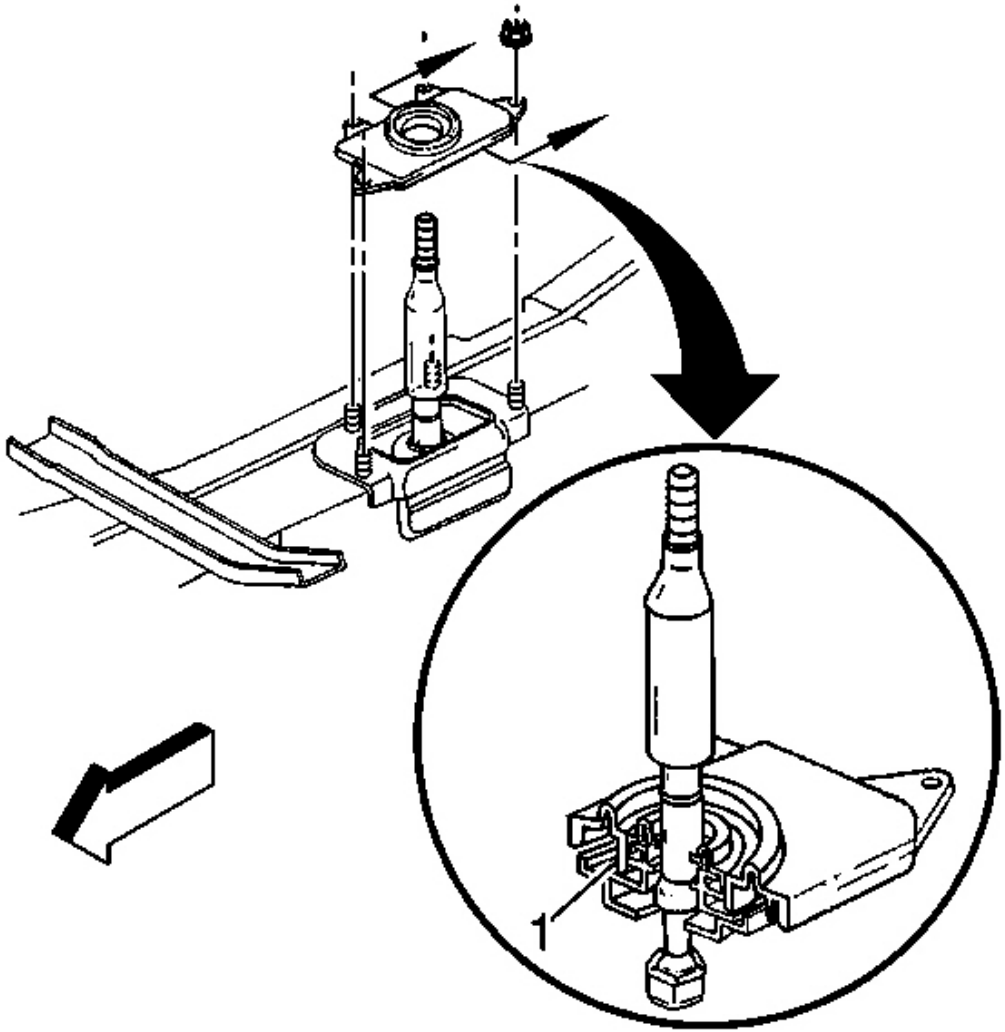

Fig. 128: Shift Control Closeout Boot & Nuts
Courtesy of GENERAL MOTORS CORP.

68. Install the shift control closeout boot.

    Check that the closeout boot fully seats to the shift control lever seal and the base of the shift control assembly (1).

69. Install the shift control closeout boot retaining nuts.

    Tighten: Tighten the shift control closeout boot retaining nuts to 12 N.m (106 lb in).

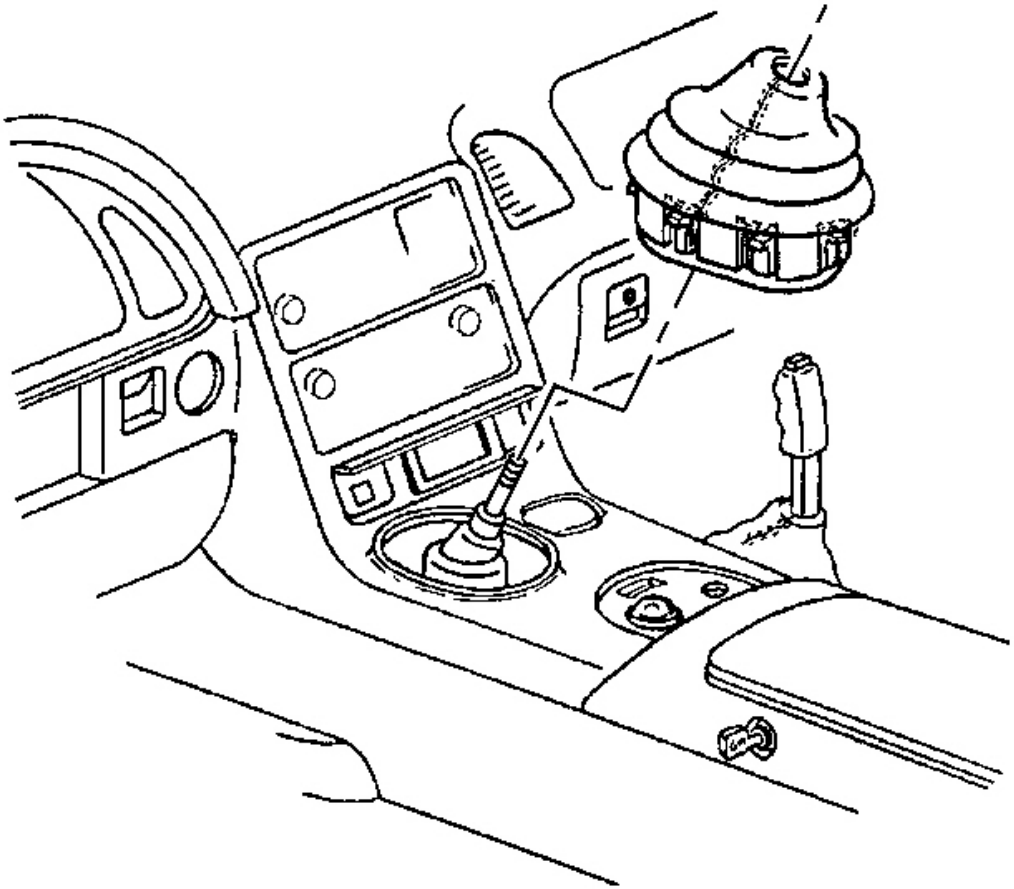

Fig. 129: Shift Control Boot To Shift Control Lever
Courtesy of GENERAL MOTORS CORP.

70. Install the I/P accessory trim plate. Refer to **Trim Plate Replacement - Instrument Panel (I/P) Accessory** in Instrument Panel, Gauges and Console.
71. Install the shift control boot over the shift control lever.

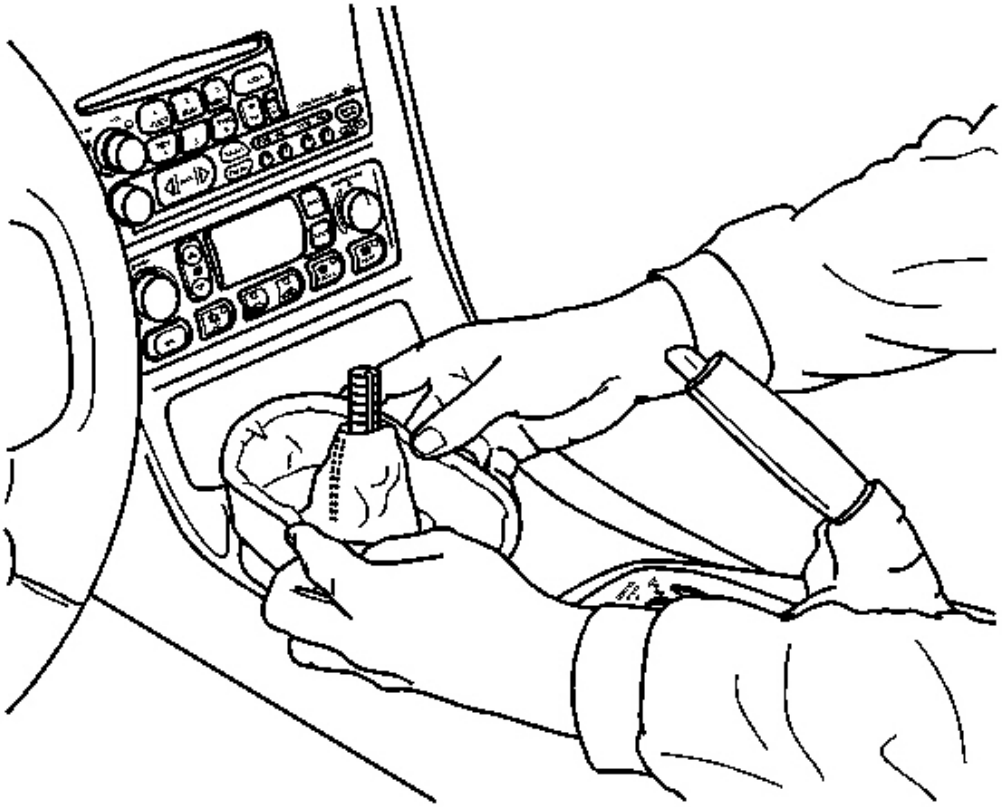

Fig. 130: Shift Control Boot To I/P Accessory Trim Plate
Courtesy of GENERAL MOTORS CORP.

72. Align the shift control boot to the I/P accessory trim plate opening, then press to lock the boot retaining tabs.
73. Adjust the shape of the boot for appearance, if necessary.

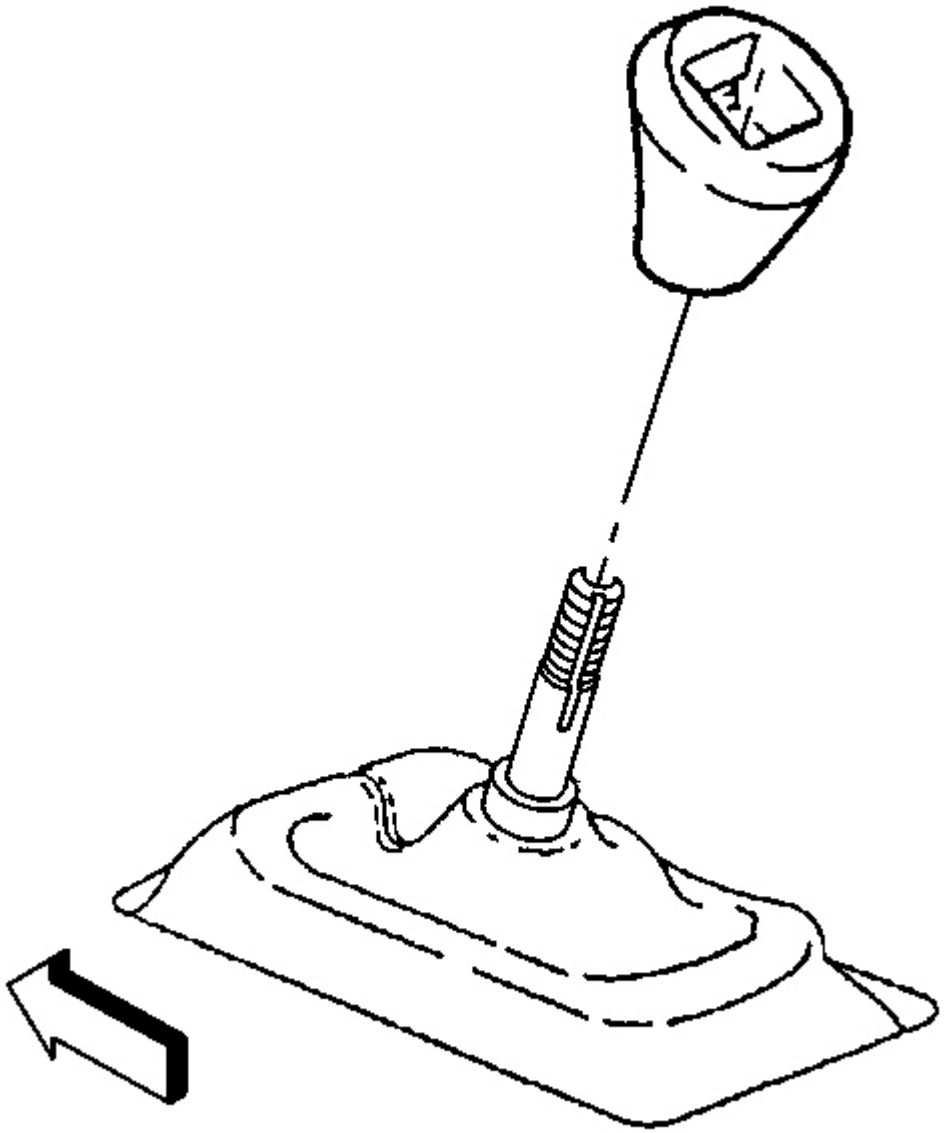

Fig. 131: Removing Gear Shift Knob
Courtesy of GENERAL MOTORS CORP.

74. Screw the shift control knob onto the shift control lever until the knob bottoms out.

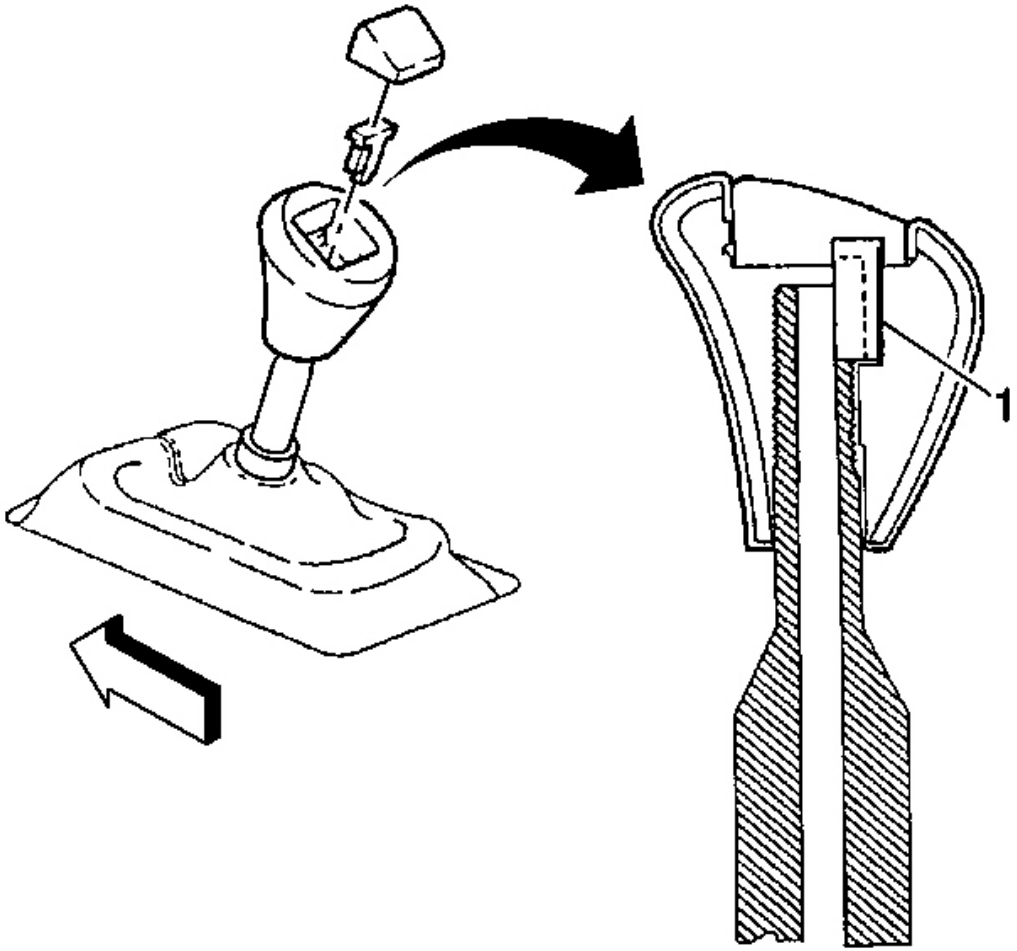

Fig. 132: Shift Control Knob At Shift Control Lever
Courtesy of GENERAL MOTORS CORP.

75. Unscrew the shift control knob just enough to align the retainer slot with the slot on the shift control lever.
76. Install the shift control knob retainer (1) into the slots and seat fully.
77. Install the shift control knob button.
78. Install the console. Refer to **Console Replacement** in Instrument Panel, Gauges and Console.
79. Connect the negative battery cable.

Tighten: Tighten the negative battery cable bolt to 15 N.m (11 lb ft).

80. Program the transmitters. Refer to **Transmitter Programming** in Keyless Entry.
81. Bleed the clutch hydraulic system. Refer to **Hydraulic Clutch Bleeding** in Clutch.

FLEXPLATE REPLACEMENT

Removal Procedure

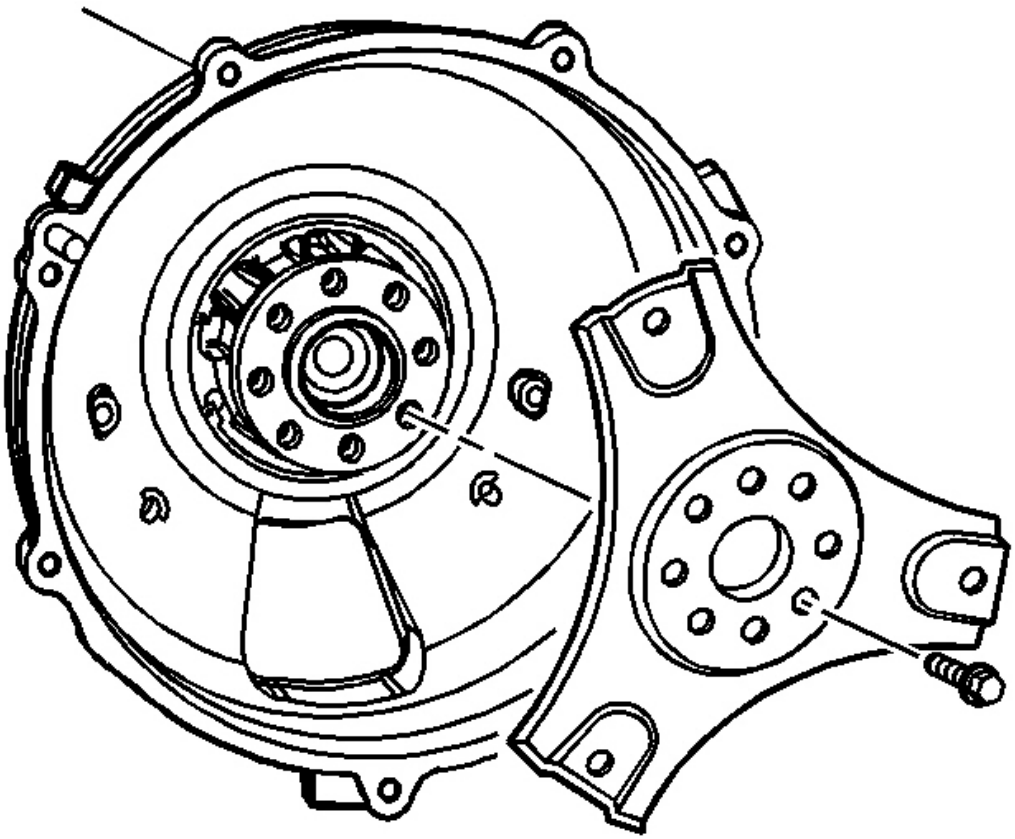

Fig. 133: Bolts & Flexplate To Flexplate Spindle
Courtesy of GENERAL MOTORS CORP.

1. Remove the driveline support assembly and separate it from the transmission. Refer to **Driveline Support Assembly Replacement (Automatic Transmission)** or **Driveline Support Assembly Replacement (Manual Transmission)**
2. Remove the bolts mounting the flexplate to the flexplate spindle.
3. Remove the flexplate.

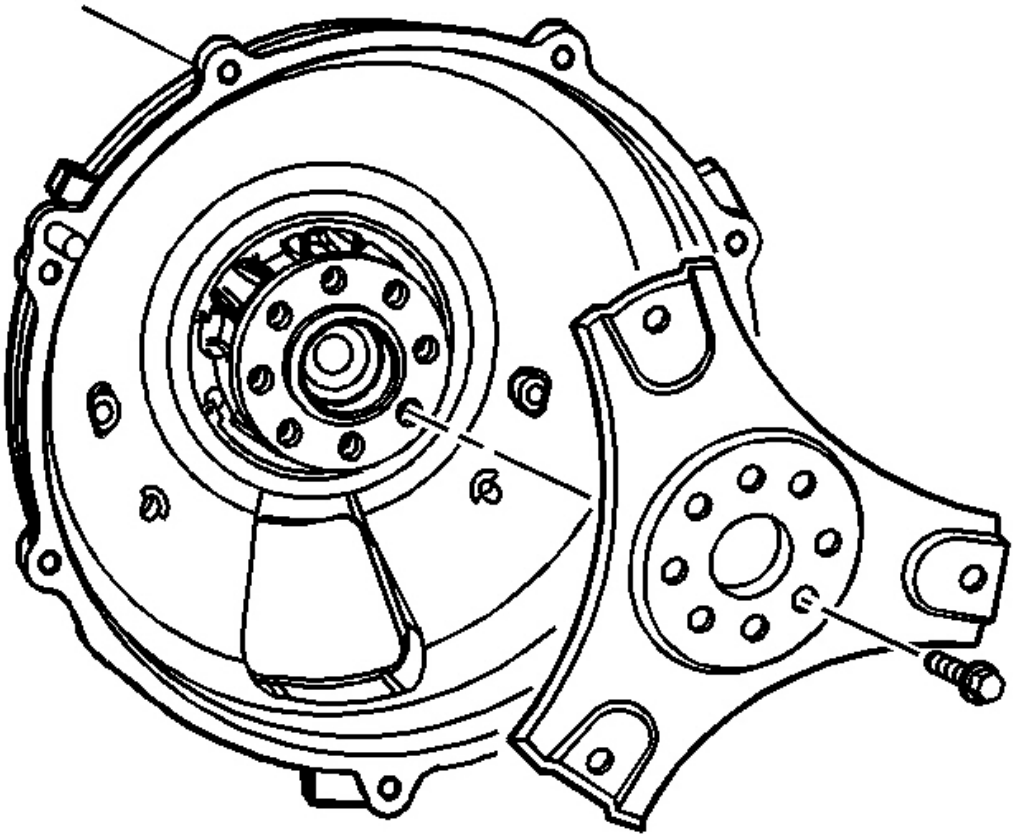

Fig. 134: Bolts & Flexplate To Flexplate Spindle
Courtesy of GENERAL MOTORS CORP.

1. Position the flexplate to the flexplate spindle so that the side of the flexplate marked CONVERTER SIDE will face the transmission torque converter.

   NOTE: Refer to Fastener Notice in Cautions and Notices.

2. Install the flexplate to flexplate spindle bolts.

   Tighten: Tighten the flexplate to flexplate spindle bolts to 50 N.m (37 lb ft).

3. Install the driveline support assembly to the transmission and the vehicle. Refer to **Driveline Support Assembly Replacement (Automatic Transmission)** or **Driveline Support Assembly Replacement**

(Manual Transmission) .

DRIVELINE SUPPORT OVERHAUL

Tools Required

- **J 2619-01** Slide Hammer
- J 24420-C Harmonic Balancer Puller

Propeller Shaft Removal

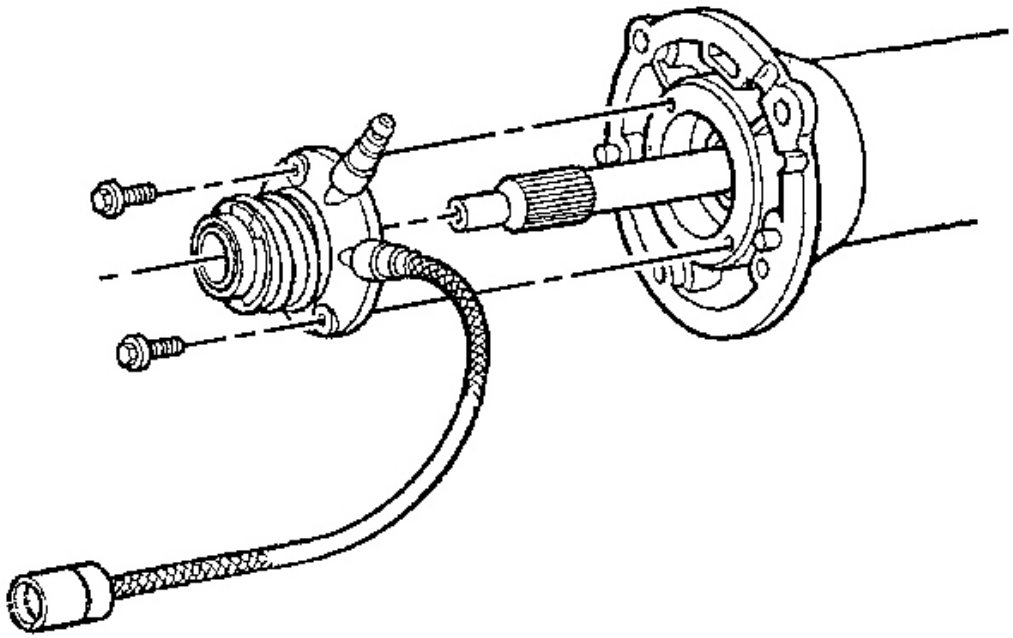

Fig. 135: Clutch Actuator Cylinder Mounting Bolts
Courtesy of GENERAL MOTORS CORP.

IMPORTANT: Do not separate the input shaft, propeller shaft, couplings, or bearing housing assembly, unless required. These components are balanced as an assembly. Disassembly and improper assembly of the components may cause vehicle driveline vibration.
If the input shaft, couplings, propeller shaft, or bearing housing assembly must be separated, the components must be marked prior to disassembly. During assembly, the components must be returned to their original position and location.

1. Remove the clutch actuator and bolts - manual transmission.

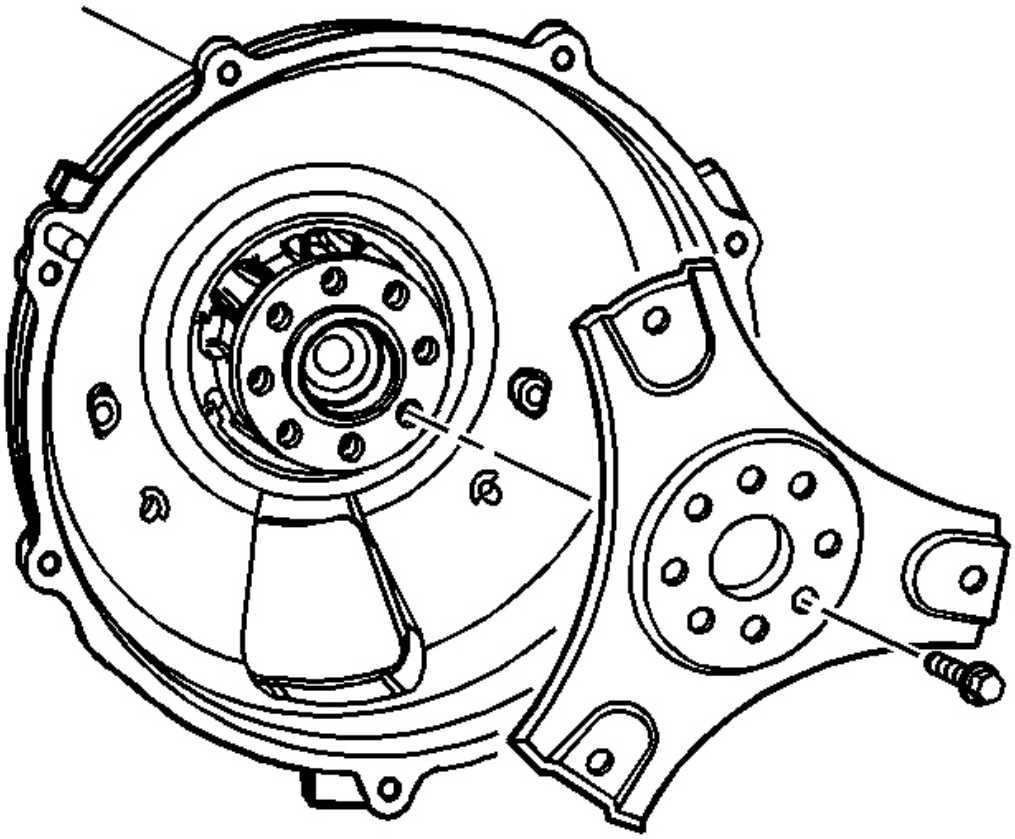

Fig. 136: Bolts & Flexplate To Flexplate Spindle
Courtesy of GENERAL MOTORS CORP.

2. Remove the flex plate and bolts - automatic transmission.

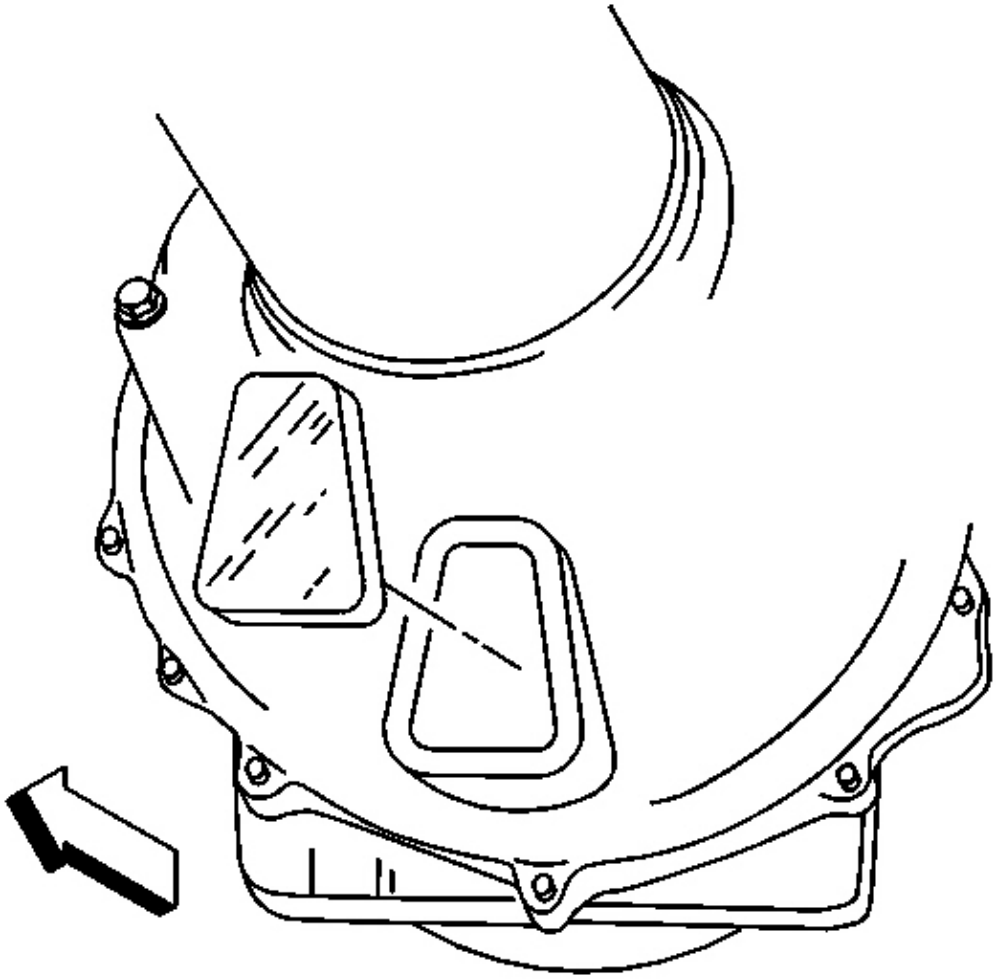

Fig. 137: Rear Bellhousing Access Plug
Courtesy of GENERAL MOTORS CORP.

3. Remove the access hole plug, if required - automatic transmission.

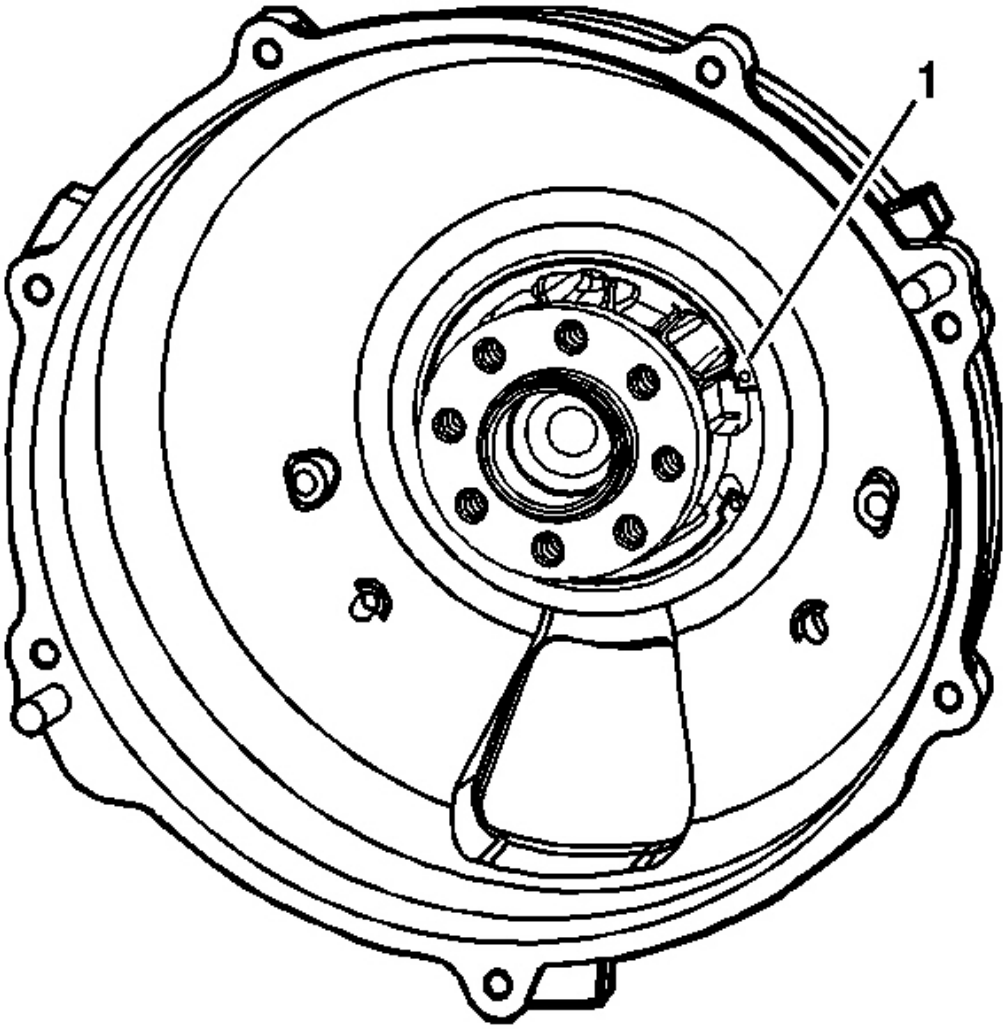

Fig. 138: Snap Ring To Driveline Tube
Courtesy of GENERAL MOTORS CORP.

4. Remove the snap ring (1) from the driveline tube.

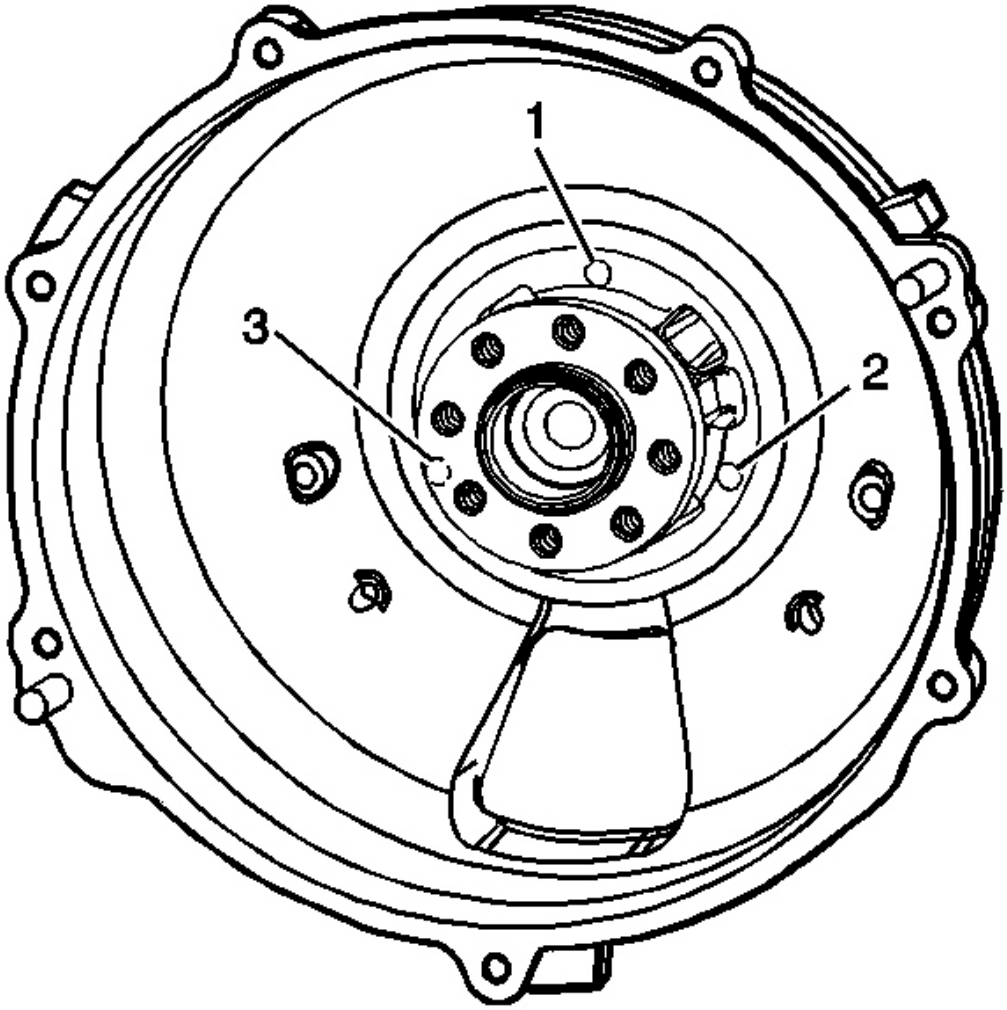

Fig. 139: Rear Bearing Housing Bolt Hole Plugs
Courtesy of GENERAL MOTORS CORP.

5. Remove the rear bearing housing bolt hole plugs (1-3).

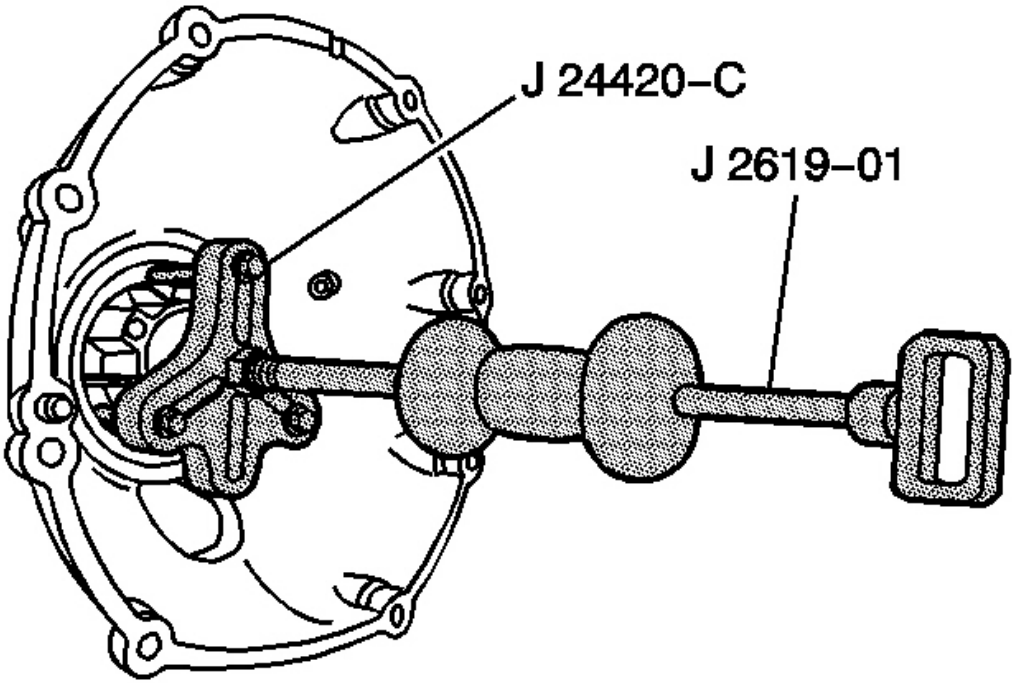

Fig. 140: Bolts To Rear Bearing Housing
Courtesy of GENERAL MOTORS CORP.

6. Install the J 24420-C and three M10-1.5 x 120 mm bolts to the rear bearing housing.
7. Install the **J 2619-01** to the J 24420-C and separate the propeller shaft assembly from the driveline tube.

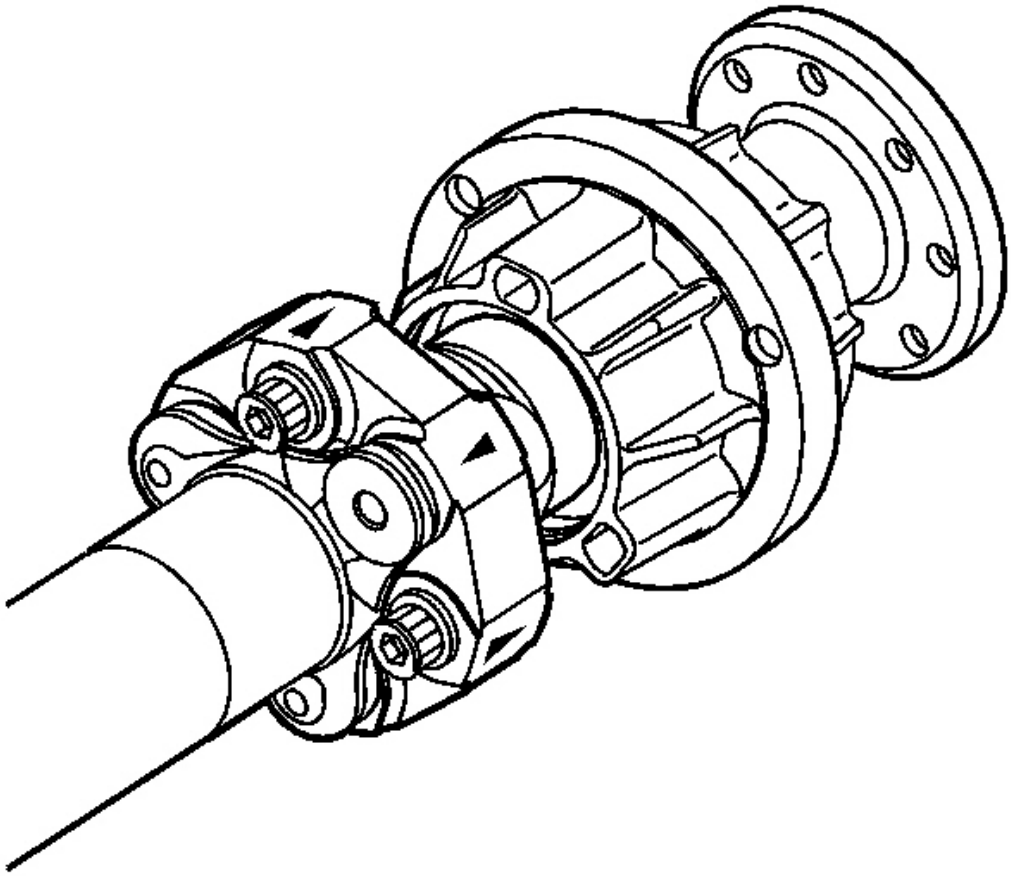

Fig. 141: Propeller Shaft Assembly To Driveline Tube
Courtesy of GENERAL MOTORS CORP.

IMPORTANT: In order to prevent binding, the propeller shaft assembly must be withdrawn straight and evenly from the driveline tube.

8. Remove the propeller shaft assembly from the driveline tube.

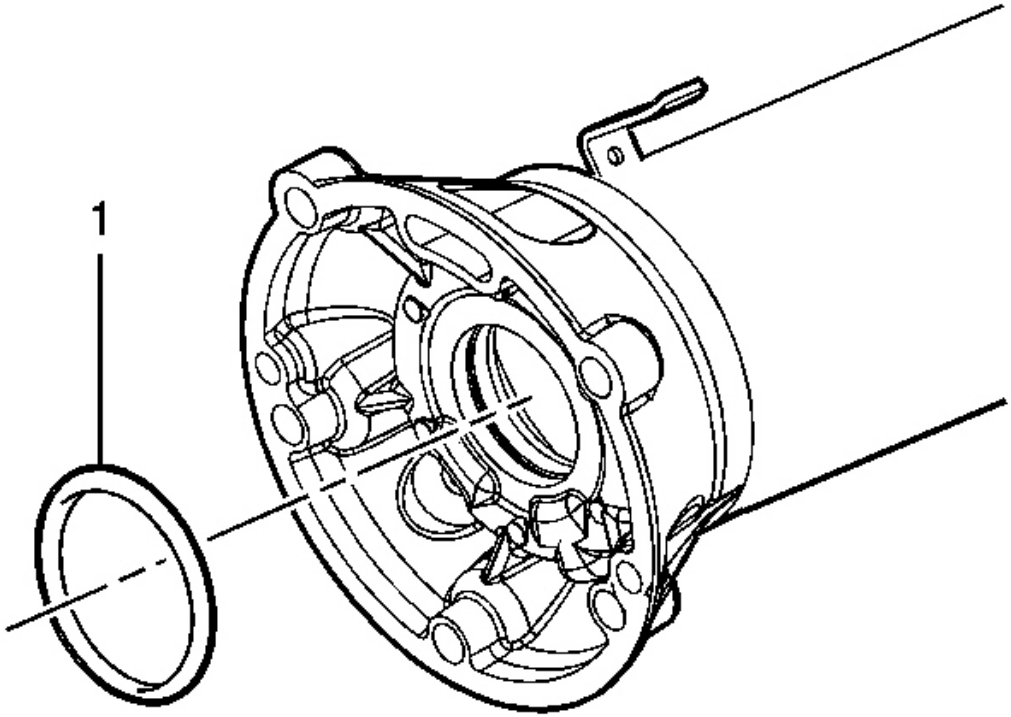

Fig. 142: O-Ring To Front Of Driveline Tube
Courtesy of GENERAL MOTORS CORP.

9. Remove the O-ring (1) from the front of the driveline tube.
10. Discard the O-ring.

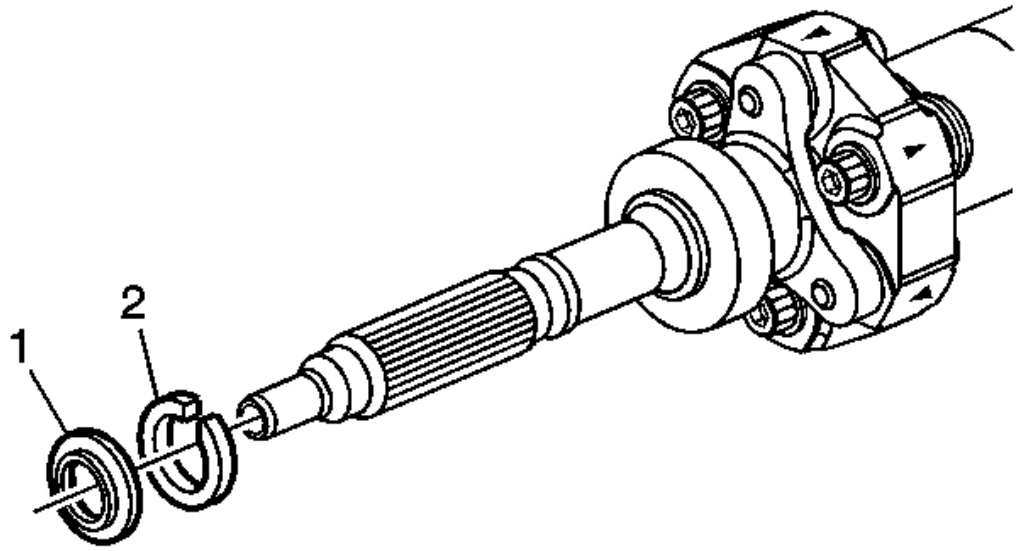

Fig. 143: Slinger Washer To Input Shaft
Courtesy of GENERAL MOTORS CORP.

11. Remove the slinger washer (1) from the input shaft.
12. Discard the slinger washer.
13. Remove the snap ring (2) from the input shaft.

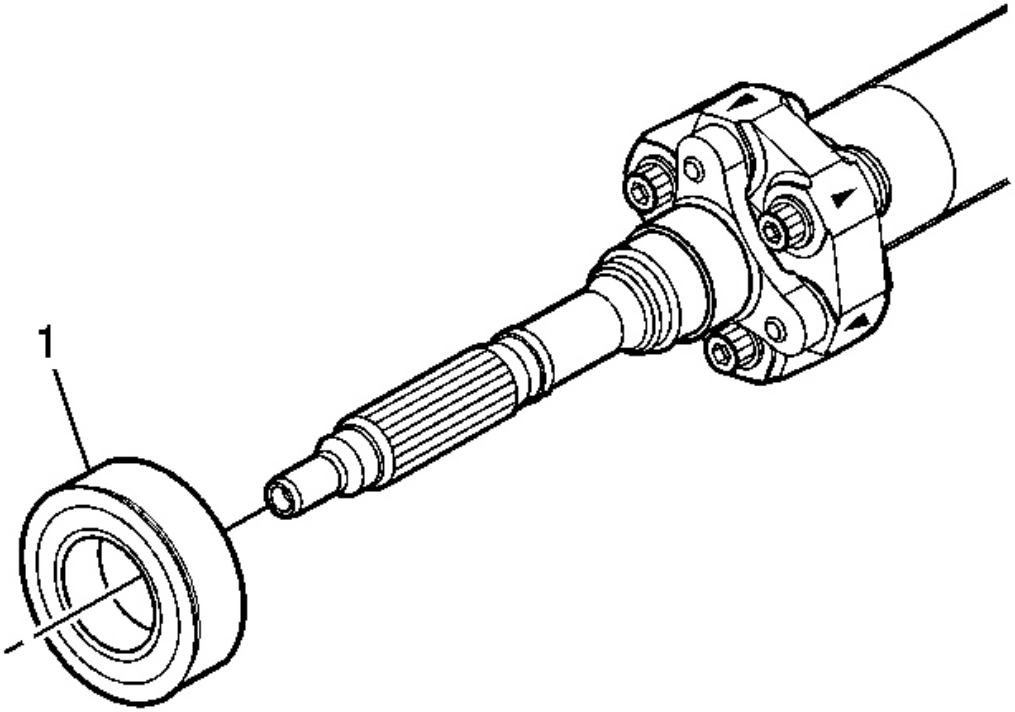

Fig. 144: Bearing To Input Shaft
Courtesy of GENERAL MOTORS CORP.

14. Remove the bearing (1) from the input shaft.

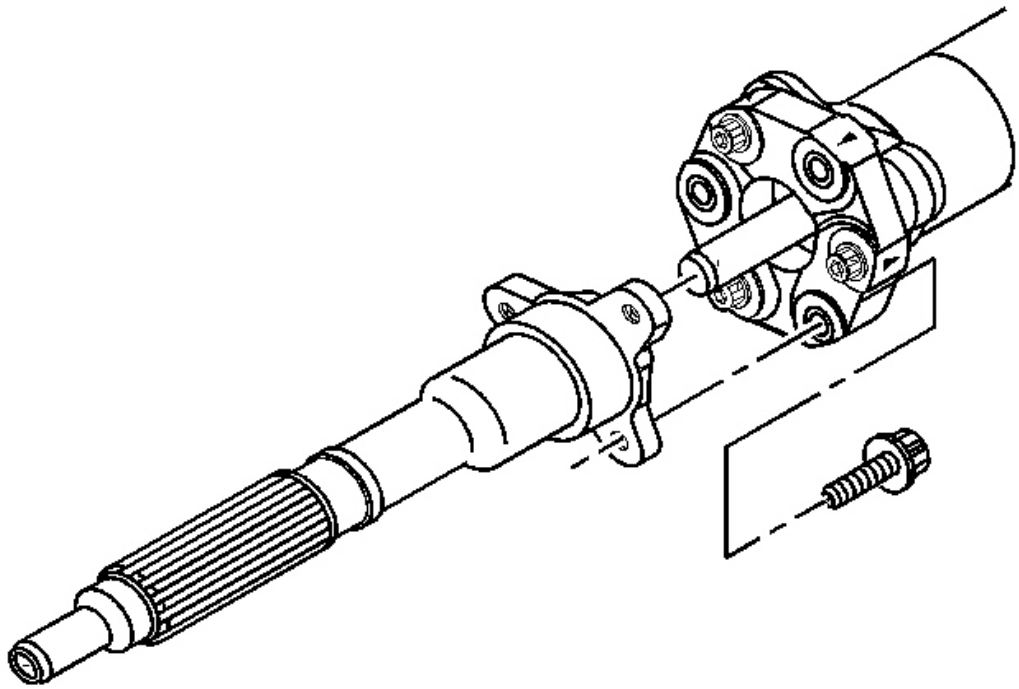

Fig. 145: Input Shaft, Bolts & Washers To Front Coupling
Courtesy of GENERAL MOTORS CORP.

15. Remove the input shaft, bolts, and washers from the front coupling.

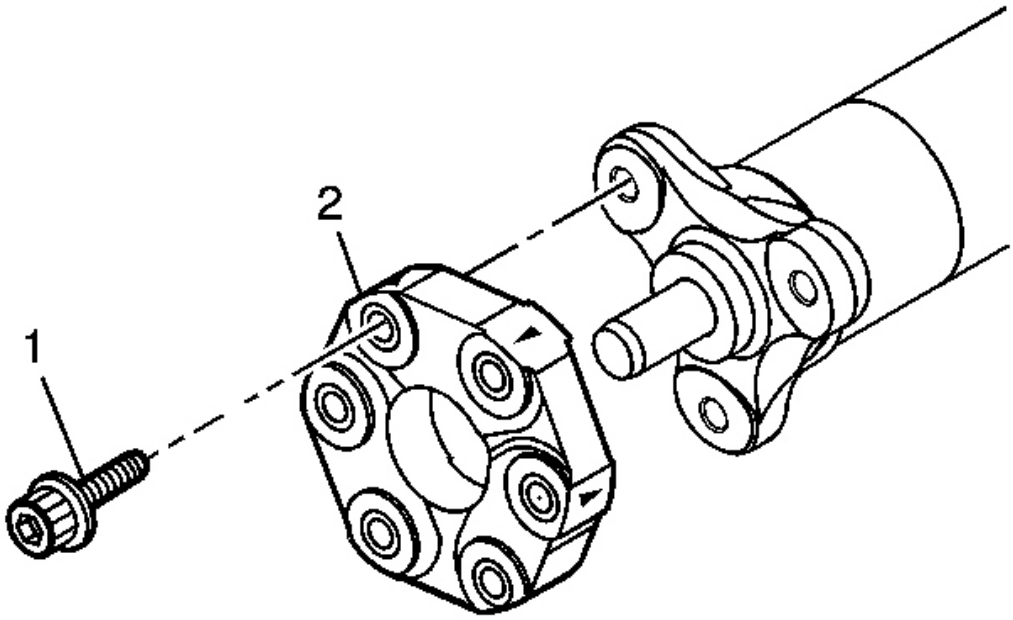

Fig. 146: Front Coupling, Bolts & Washers To Propeller Shaft
Courtesy of GENERAL MOTORS CORP.

16. Remove the front coupling (2), bolts (1), and washers from the propeller shaft.

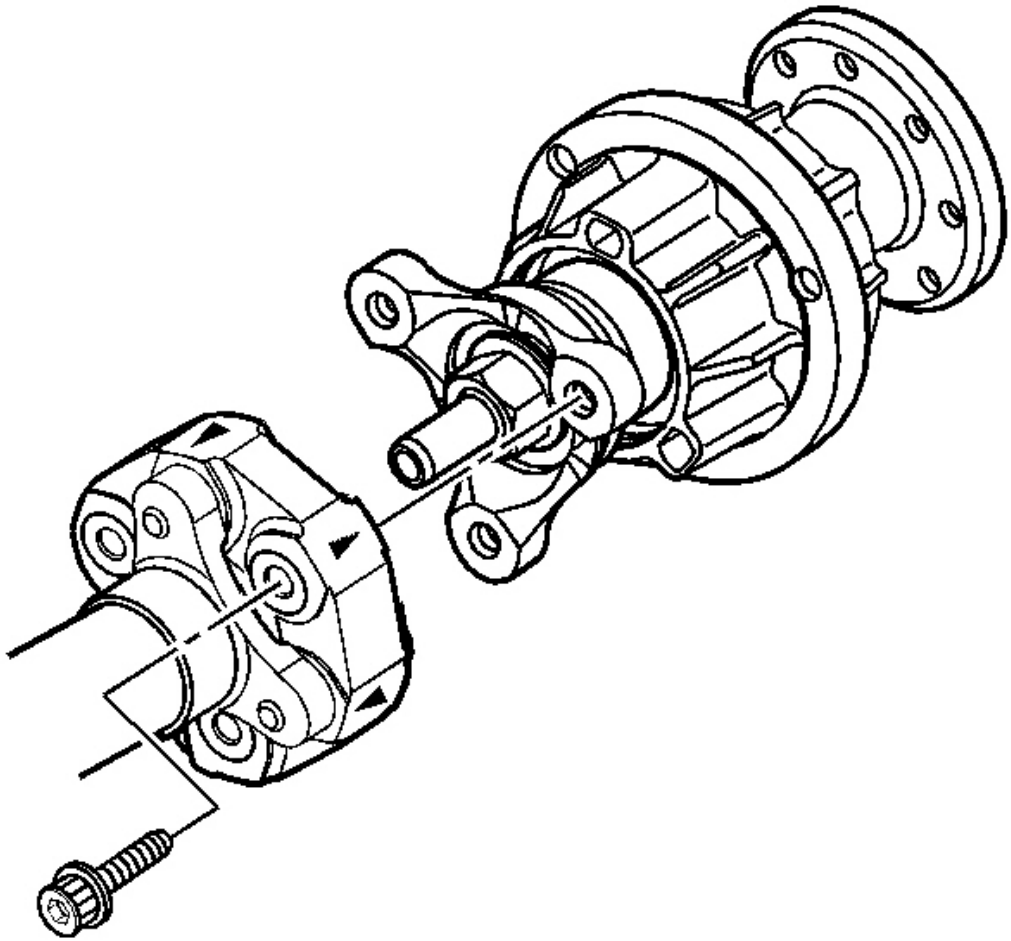

Fig. 147: Bearing Housing Assembly, Bolts & Washers To Rear Coupling
Courtesy of GENERAL MOTORS CORP.

17. Remove the bearing housing assembly, bolts, and washers from the rear coupling.

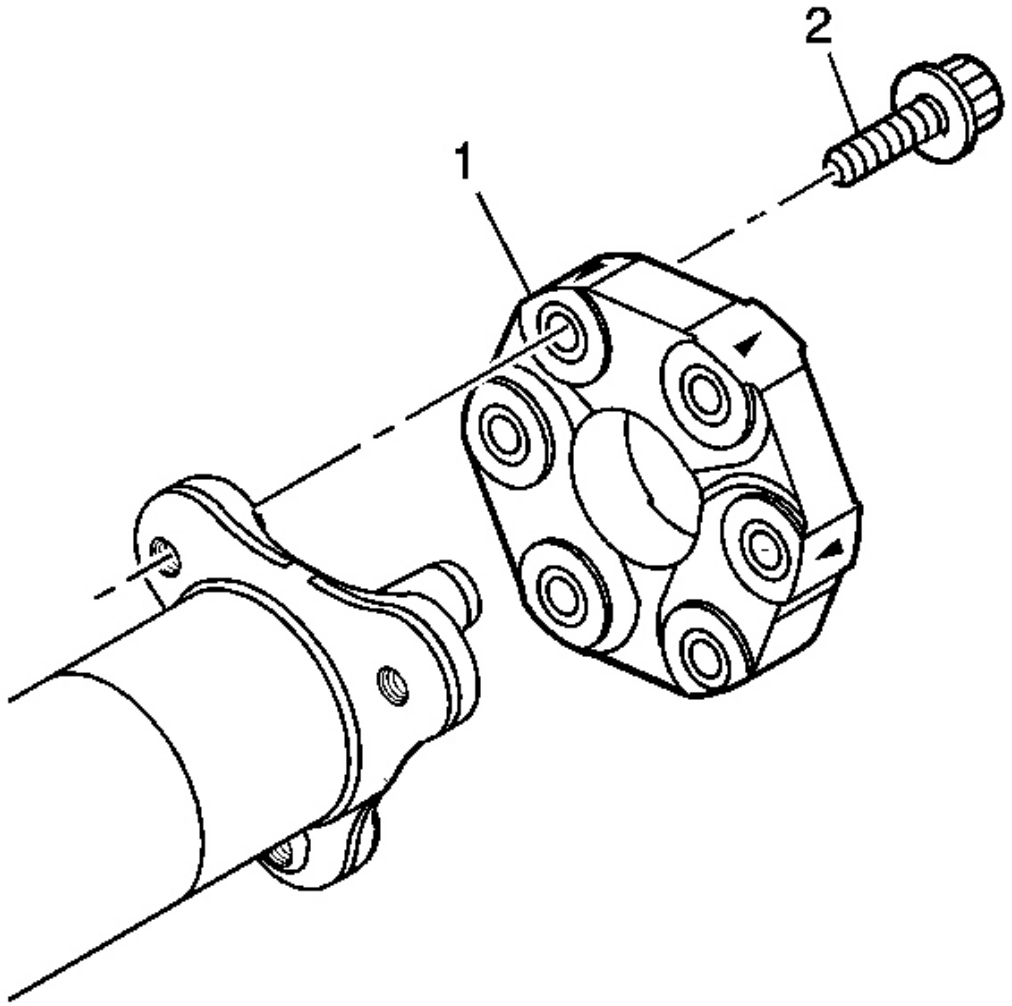

Fig. 148: Rear Coupling, Bolts & Washers To Propeller Shaft
Courtesy of GENERAL MOTORS CORP.

18. Remove the rear coupling (1), bolts (2), and washers from the propeller shaft.

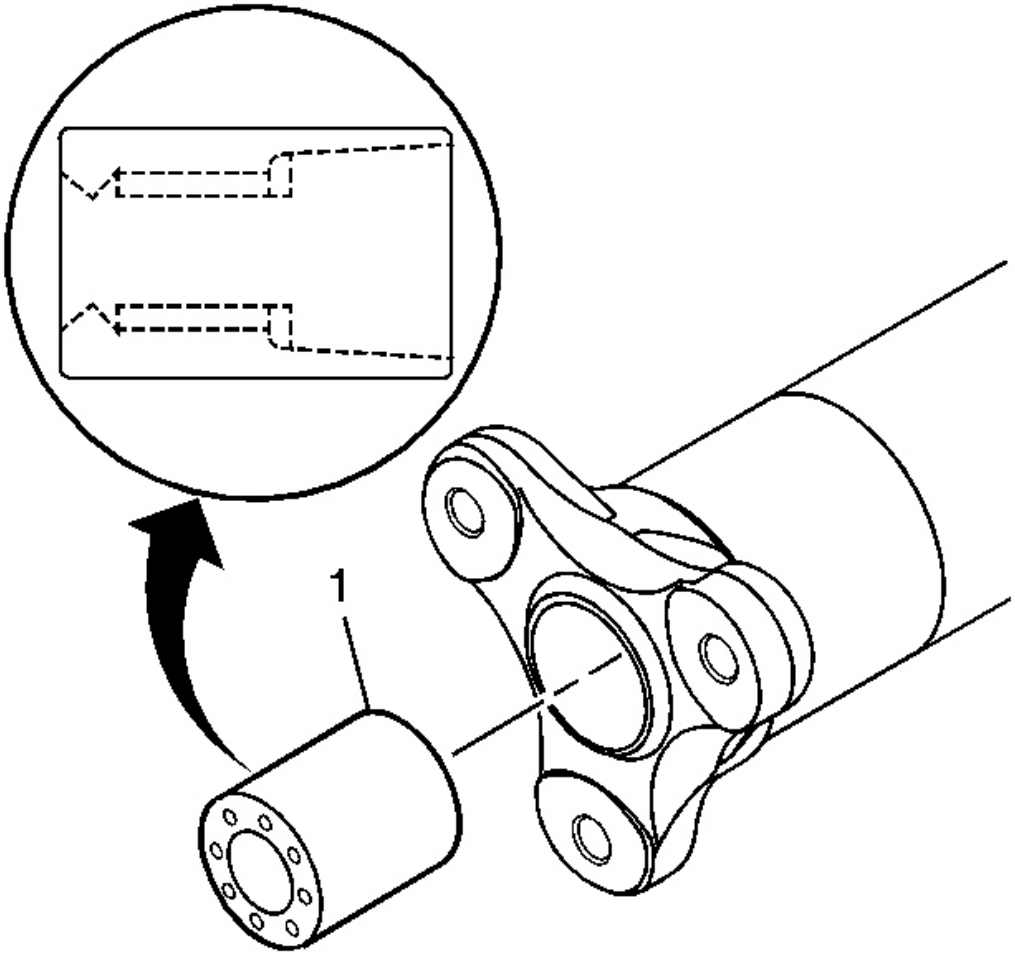

Fig. 149: Bushing To Propeller Shaft
Courtesy of GENERAL MOTORS CORP.

19. Remove the bushing (1) from the propeller shaft, if required - automatic transmission.

Rear Bearing Housing Disassembly - Manual Transmission

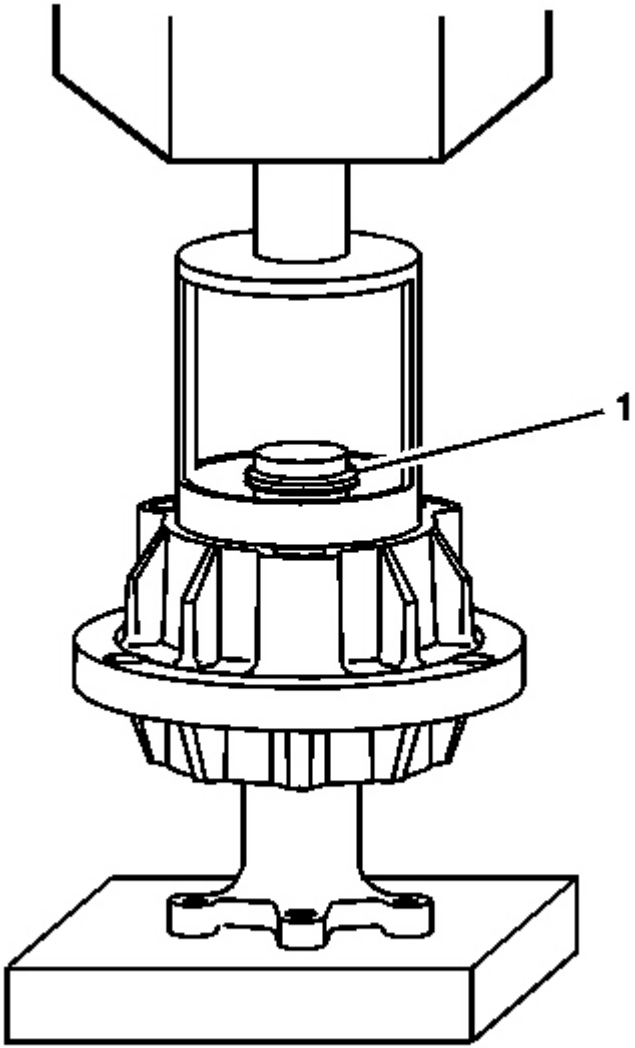

Fig. 150: Rear Bearing Housing Assembly & Snap Ring To Hub
Courtesy of GENERAL MOTORS CORP.

1. Position the rear bearing housing assembly into a press. Apply pressure to the housing and compress the wave washer in order to remove the snap ring (1) from the hub.

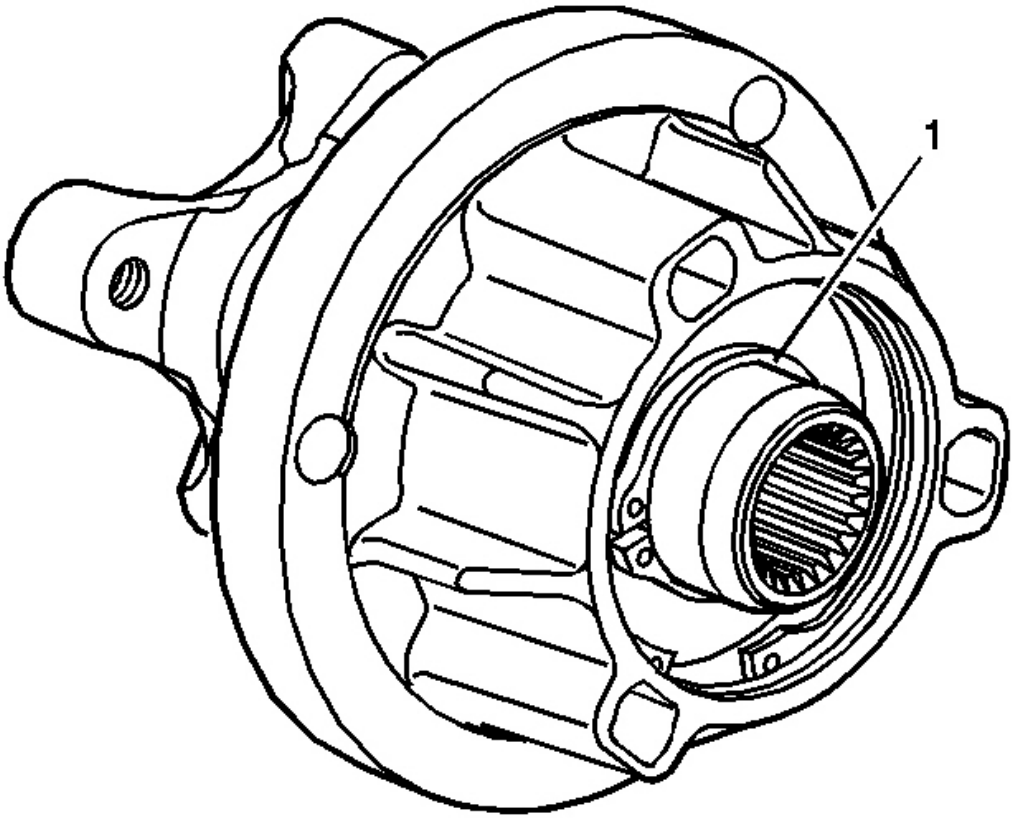

Fig. 151: Snap Ring To Hub
Courtesy of GENERAL MOTORS CORP.

2. Remove the snap ring (1) from the hub.

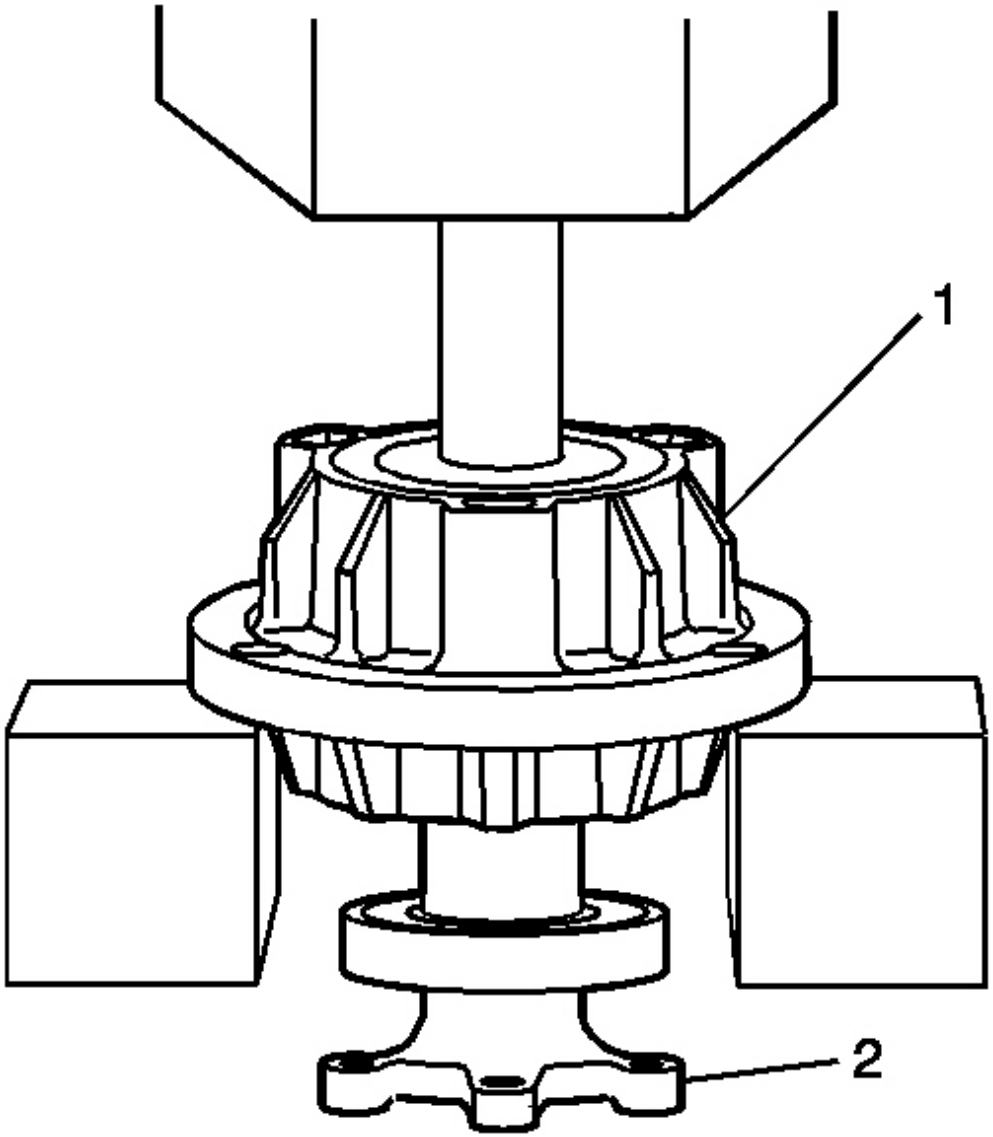

Fig. 152: Bearing Housing Assembly At Hub With Bearing To Housing
Courtesy of GENERAL MOTORS CORP.

3. Position the bearing housing assembly (1) into a press in order to remove the hub and bearing assembly (2).
4. Remove the hub, with bearing (1) from the housing. The wave washer will remain in the housing.

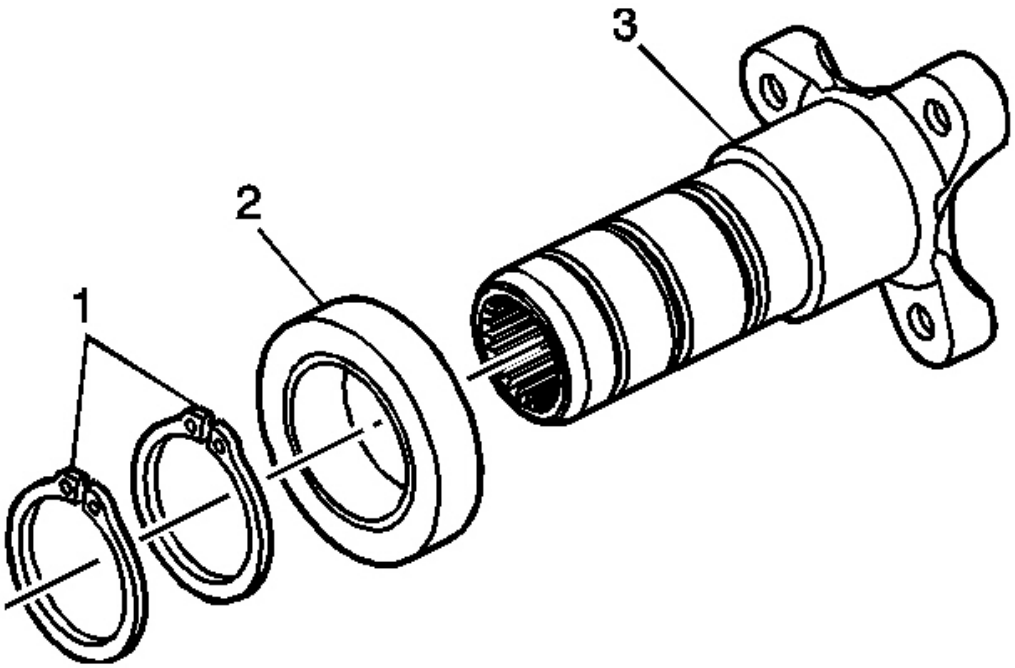

Fig. 153: Snap Rings & Bearing To Hub
Courtesy of GENERAL MOTORS CORP.

5. Remove the snap rings (1) and bearing (2) from the hub (3).

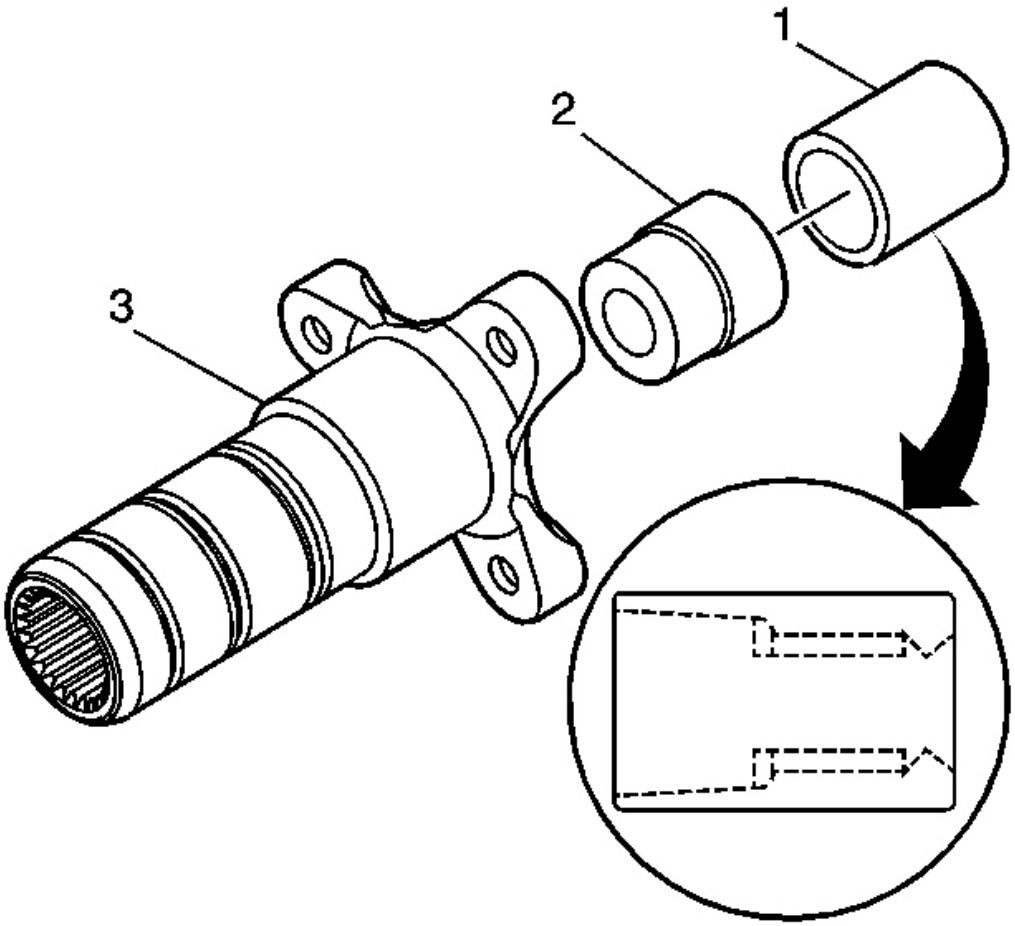

Fig. 154: Propeller Shaft Bushing & Transmission Input Shaft Bushing To Hub
Courtesy of GENERAL MOTORS CORP.

6. Remove the propeller shaft bushing (1) and transmission input shaft bushing (2) from the hub (3) - manual transmission.

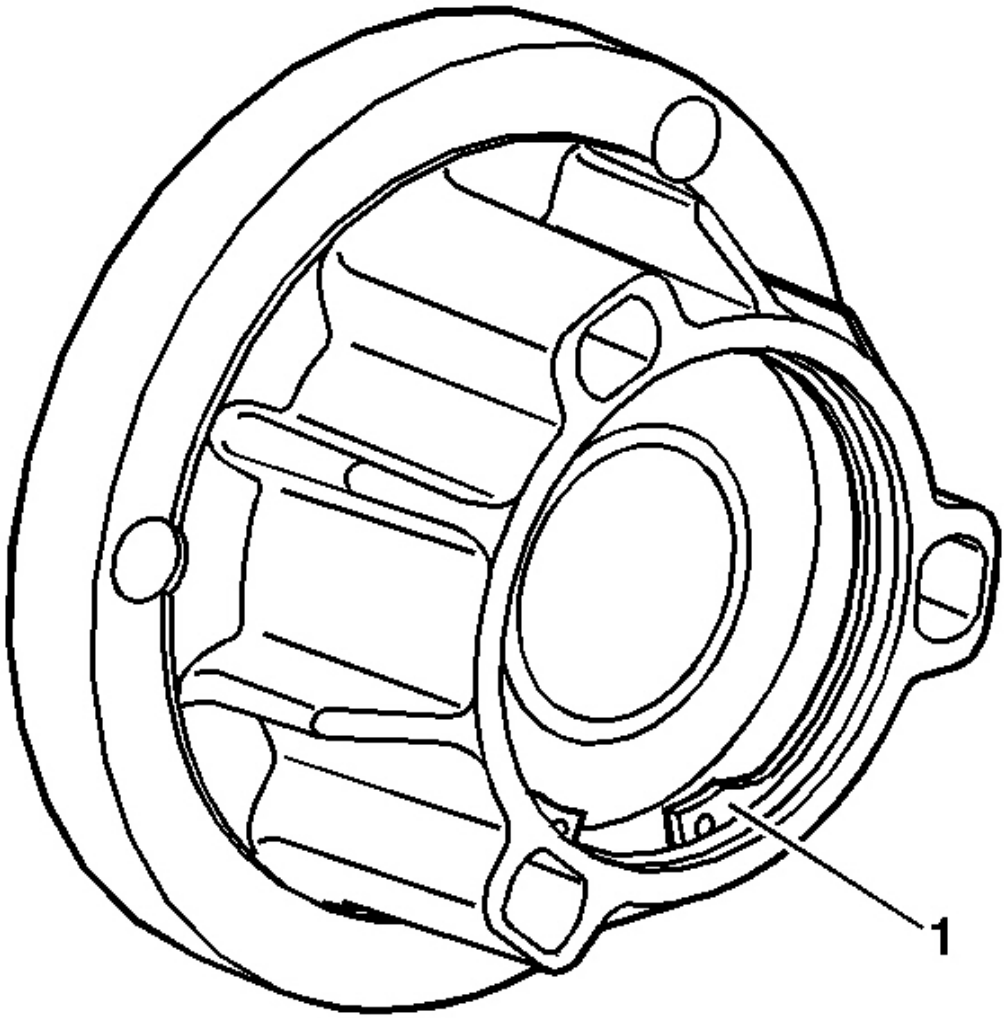

Fig. 155: Snap Ring To Rear Bearing Housing
Courtesy of GENERAL MOTORS CORP.

7. Remove the snap ring (1) from the rear bearing housing.

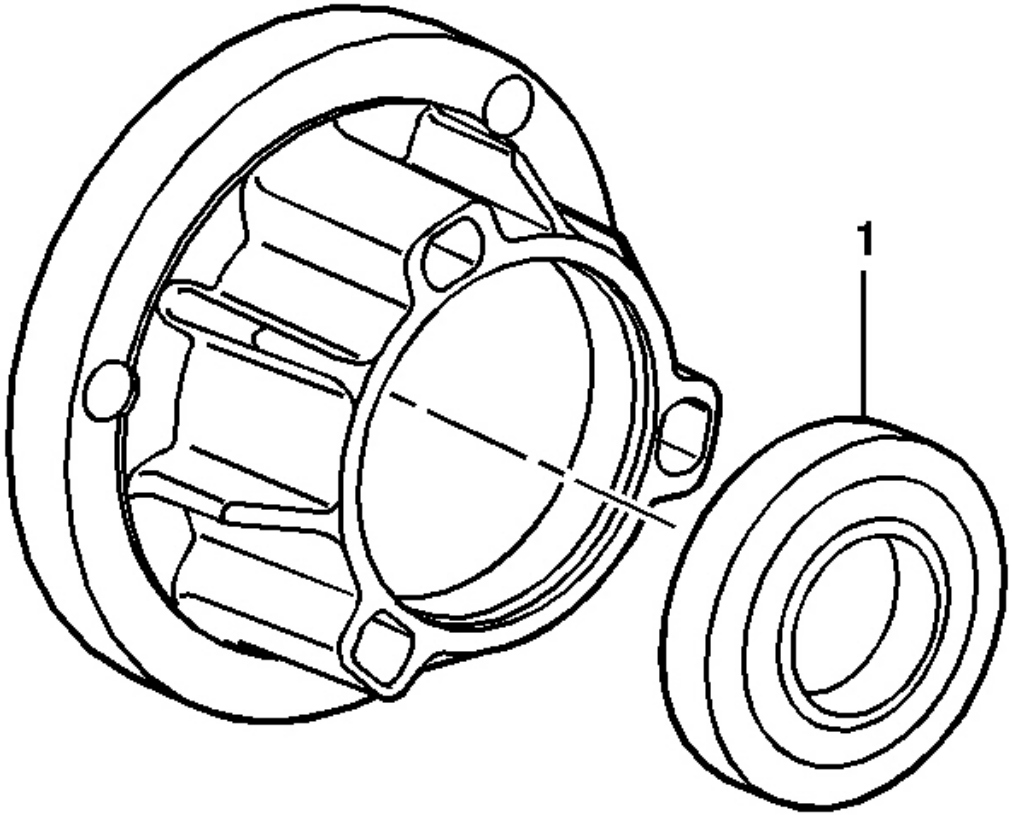

Fig. 156: Rear Bearing Housing To Press & Remove Bearing
Courtesy of GENERAL MOTORS CORP.

8. Position the rear bearing housing into a press and remove the bearing (1).

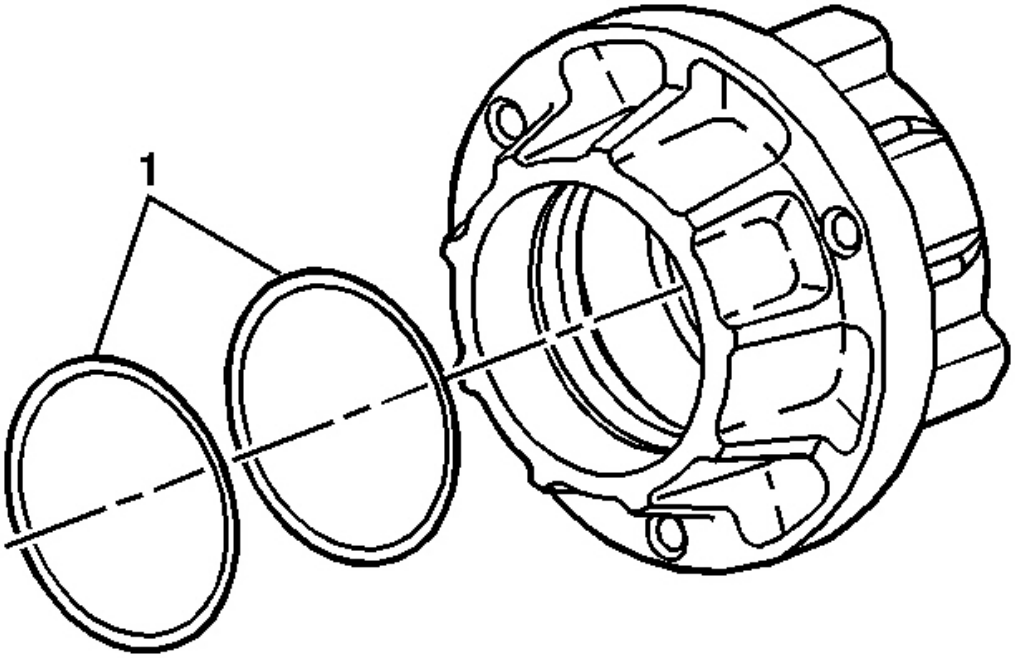

Fig. 157: O-Rings To Rear Bearing Housing
Courtesy of GENERAL MOTORS CORP.

9. Remove the O-rings (1) from the rear bearing housing.
10. Discard the O-rings.

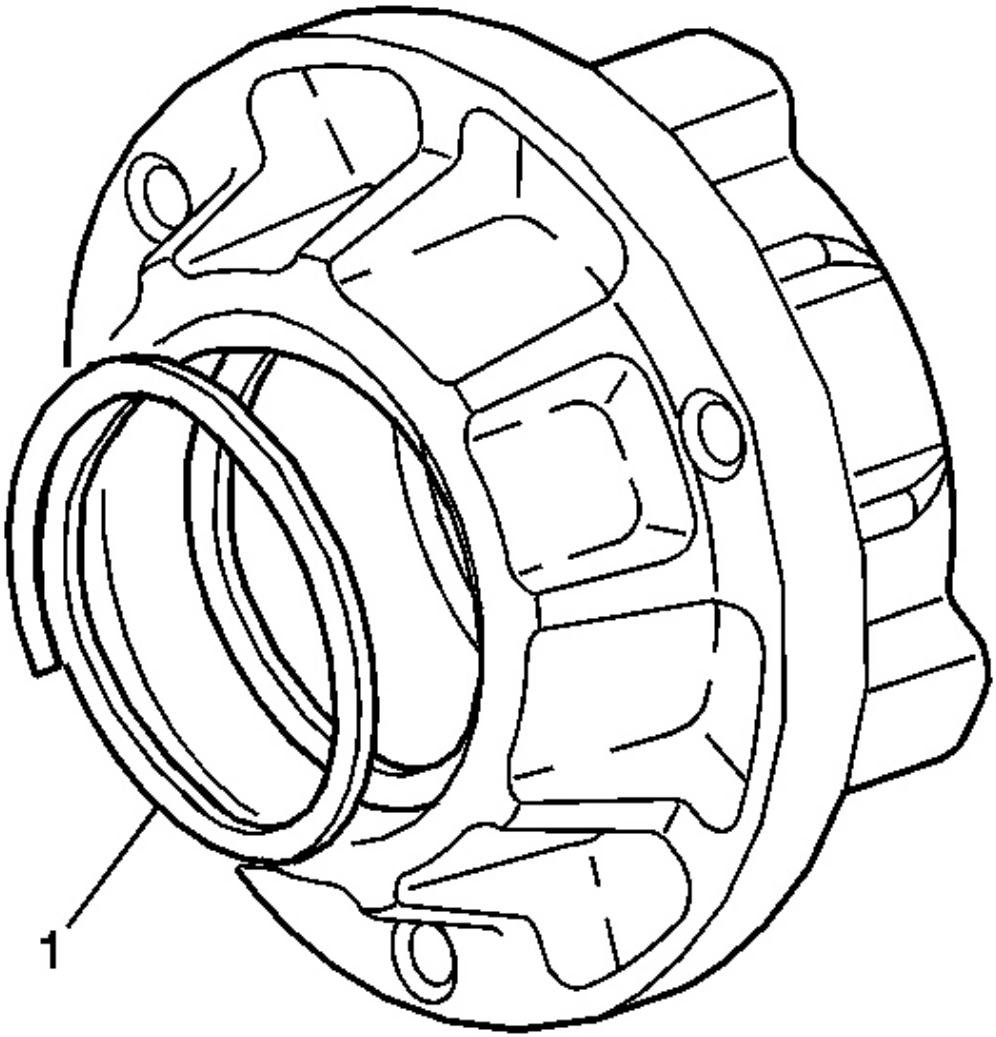

Fig. 158: Wave Washer To Rear Bearing Housing
Courtesy of GENERAL MOTORS CORP.

11. Remove the wave washer (1) from the rear bearing housing.

Rear Bearing Housing Disassembly - Automatic Transmission

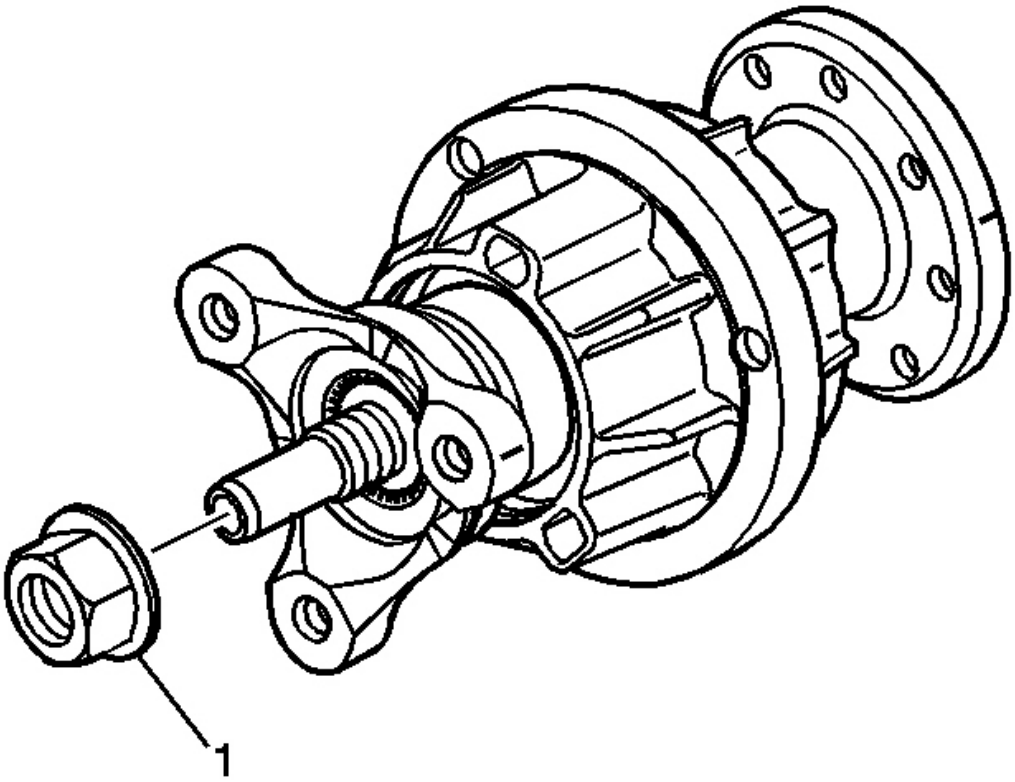

Fig. 159: Nut To Flexplate Spindle
Courtesy of GENERAL MOTORS CORP.

1. Mark the assembled positions of the flange and spindle.
2. Remove the nut (1) from the flexplate spindle.

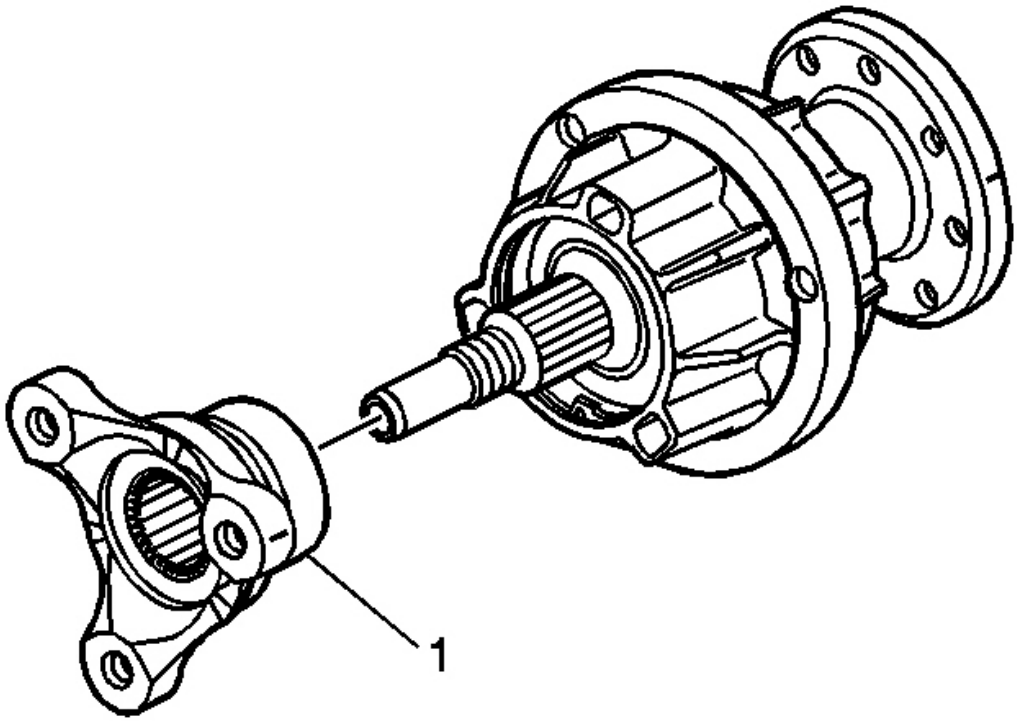

Fig. 160: Hub To Flexplate Spindle
Courtesy of GENERAL MOTORS CORP.

3. Remove the hub (1) from the flexplate spindle.

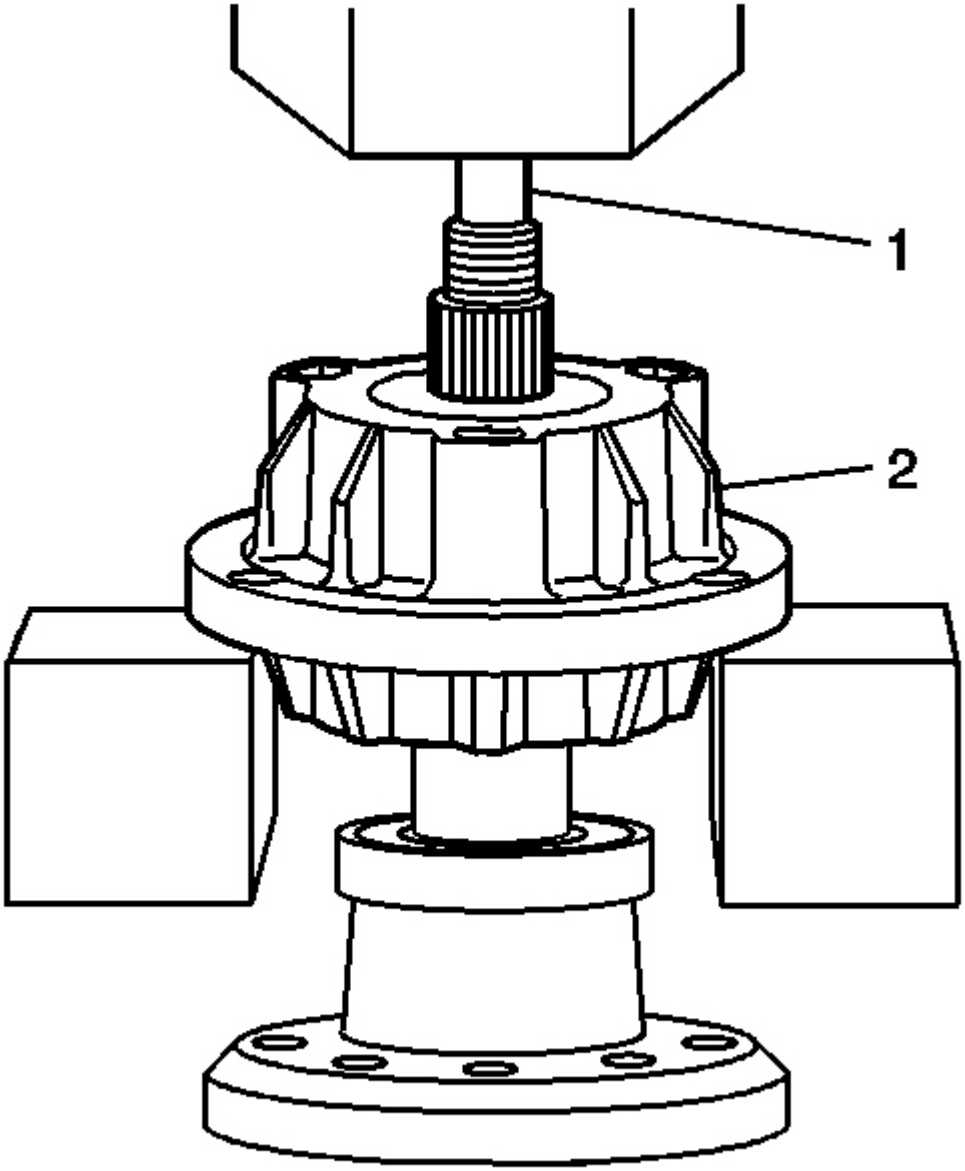

Fig. 161: Bearing Housing Assembly To Flexplate Spindle
Courtesy of GENERAL MOTORS CORP.

4. Position the bearing housing assembly (2) into a press in order to remove the flexplate spindle (1).

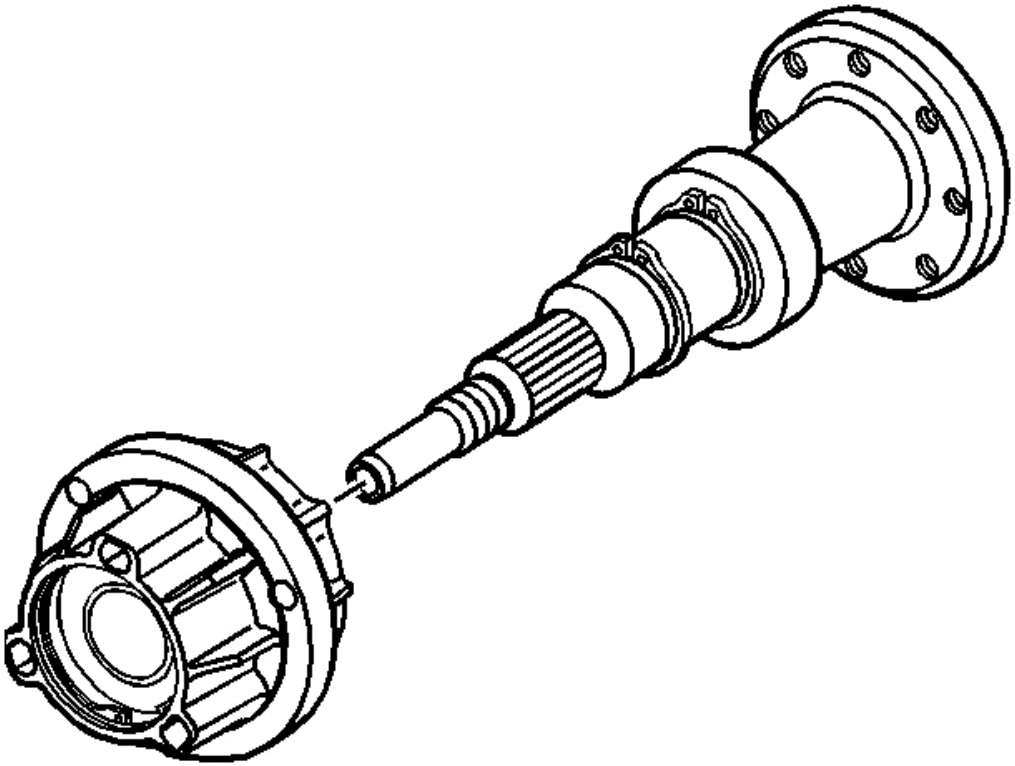

Fig. 162: Flexplate Spindle With Bearing To Bearing Housing
Courtesy of GENERAL MOTORS CORP.

5. Remove the flexplate spindle, with bearing, from the bearing housing.

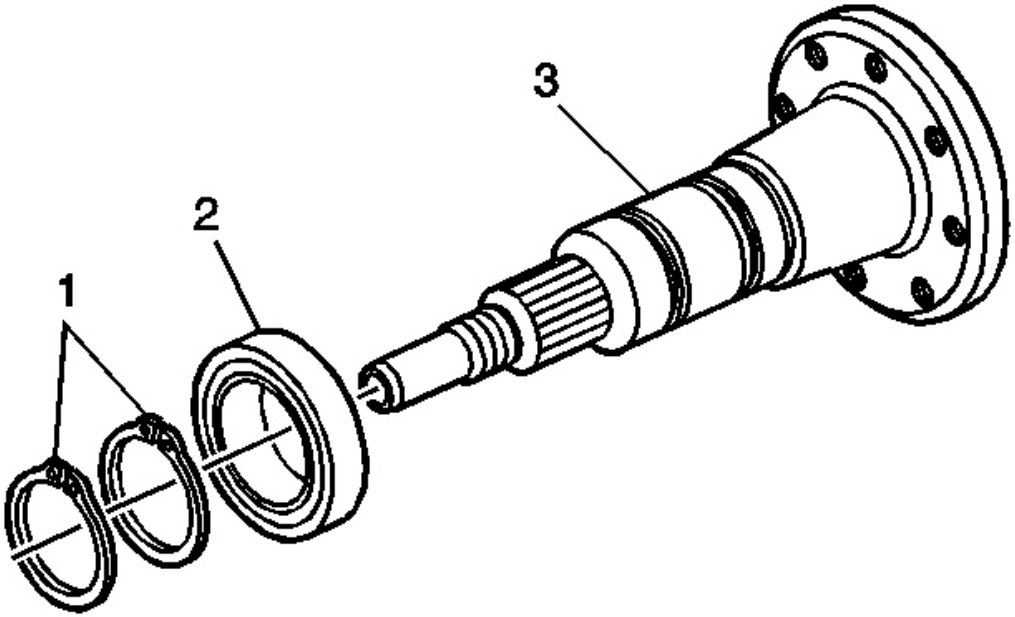

Fig. 163: Snap Rings & Bearing To Flexplate Spindle
Courtesy of GENERAL MOTORS CORP.

6. Remove the snap rings (1) and bearing (2) from the flexplate spindle (3).

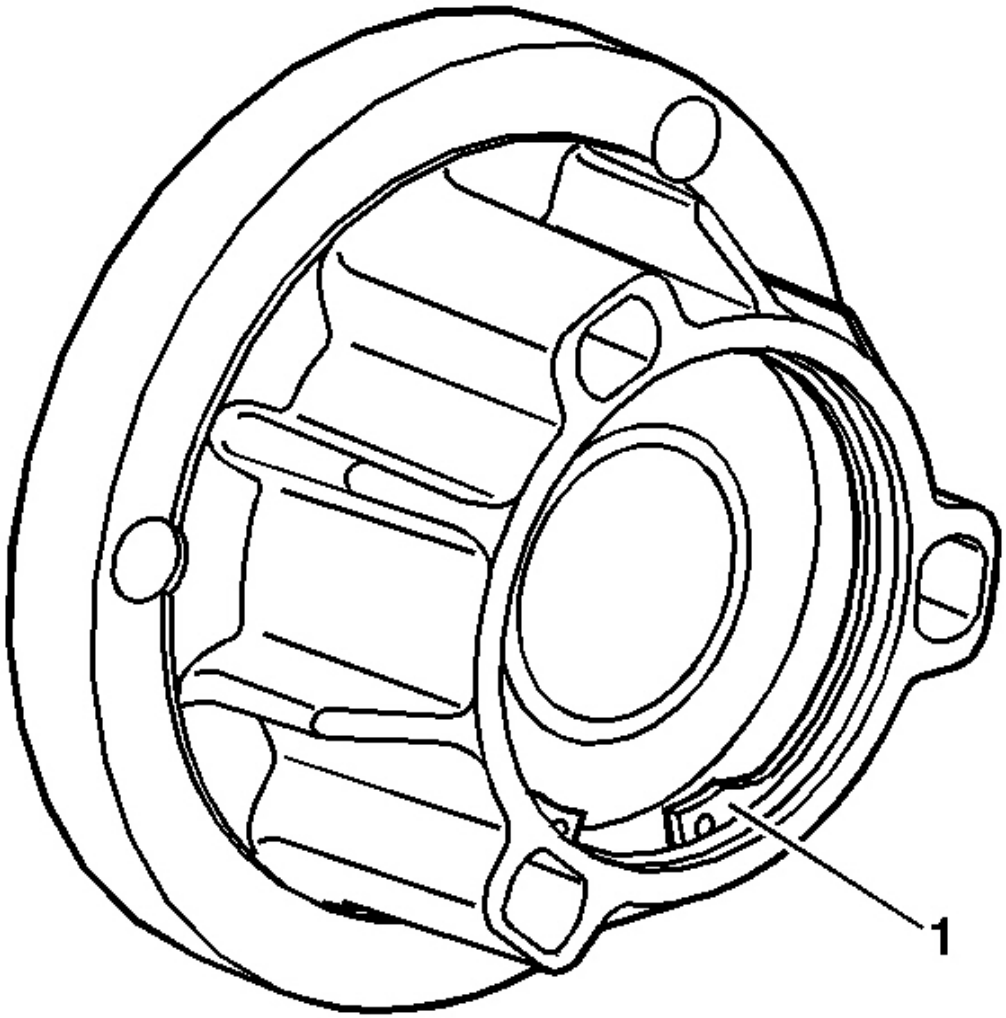

Fig. 164: Snap Ring To Rear Bearing Housing
Courtesy of GENERAL MOTORS CORP.

7. Remove the snap ring (1) from the rear bearing housing.

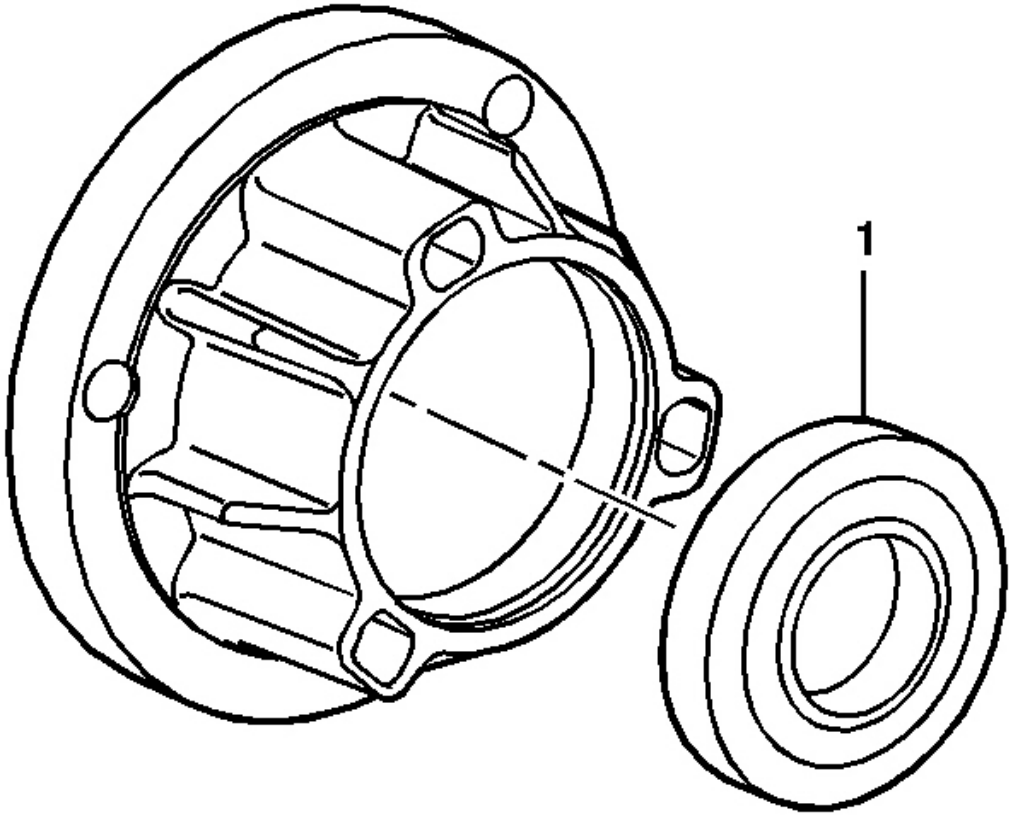

Fig. 165: Rear Bearing Housing To Press & Remove Bearing
Courtesy of GENERAL MOTORS CORP.

8. Position the rear bearing housing into a press and remove the bearing (1).

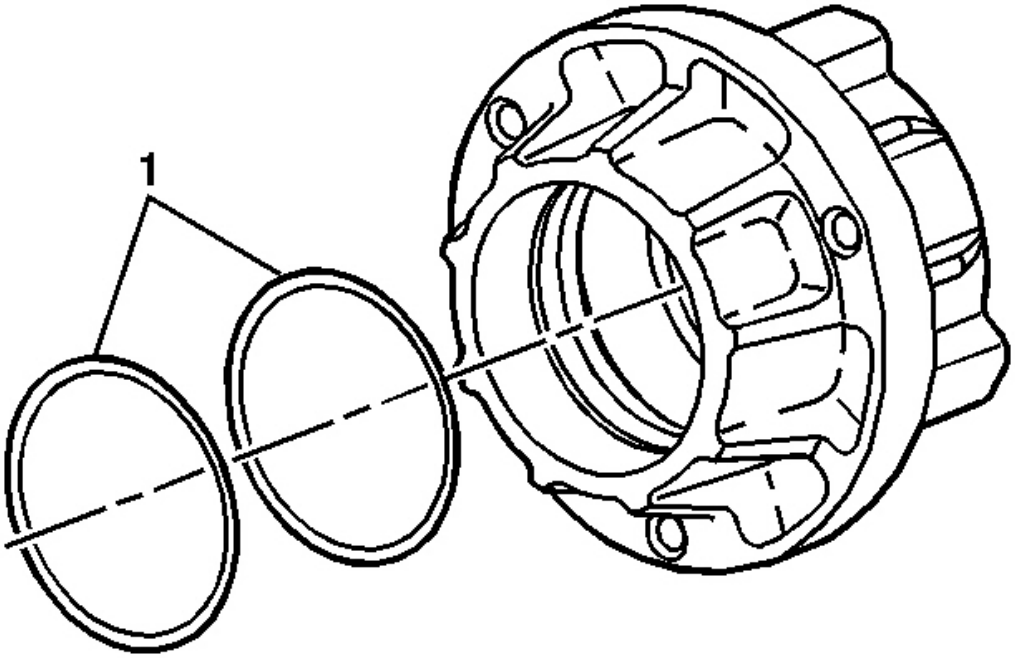

Fig. 166: O-Rings To Rear Bearing Housing
Courtesy of GENERAL MOTORS CORP.

9. Remove the O-rings (1) from the rear bearing housing.
10. Discard the O-rings.

DRIVELINE SUPPORT ASSEMBLY CLEANING AND INSPECTION

Tools Required

J 7872 Magnetic Base Dial Indicator Set. See **Special Tools and Equipment** .

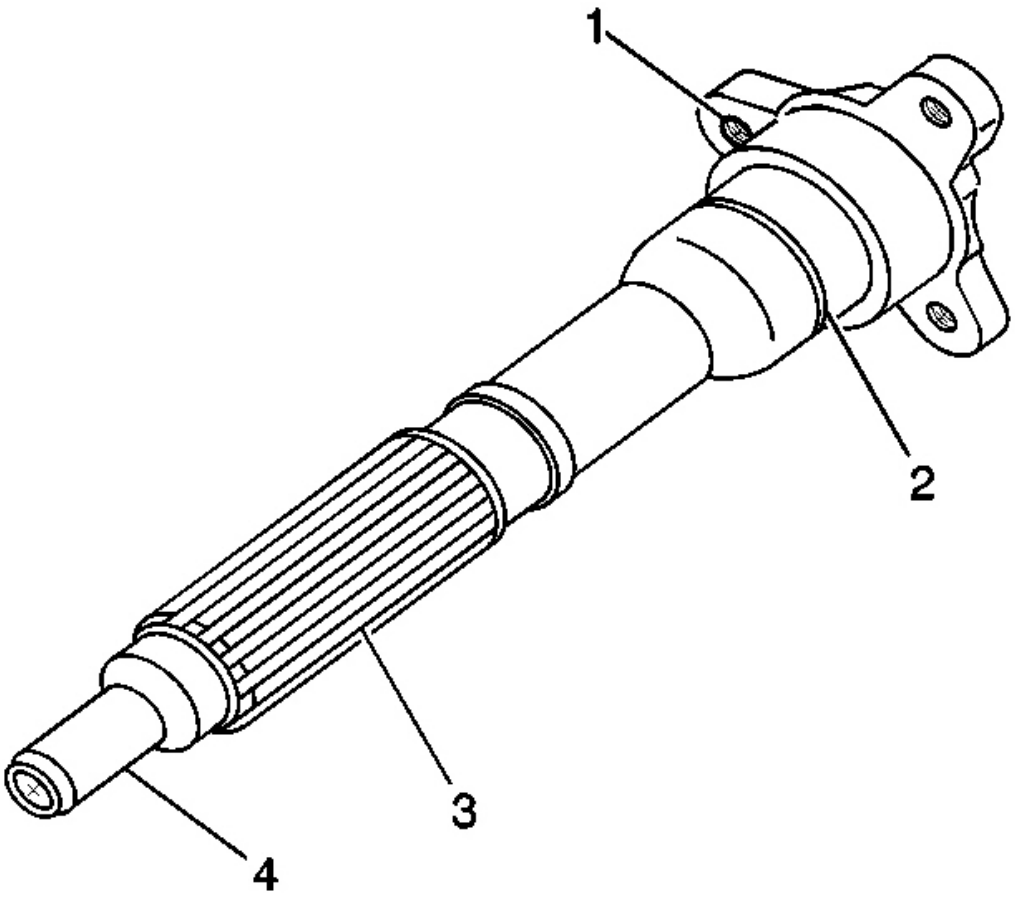

Fig. 167: Bolts & Bolt Holes Of Threadlocking Material
Courtesy of GENERAL MOTORS CORP.

1. Clean all bolts and bolt holes of threadlocking material.
2. Clean the components in solvent.

CAUTION: Wear safety glasses in order to avoid eye damage.

3. Dry the components with compressed air.
4. Inspect the hub for the following:
   - Damaged bolt hole threads (1)
   - Damaged snap ring grooves (2)

- Worn splines (3)
- Worn or scored surface (4)
- Worn or damaged bushing

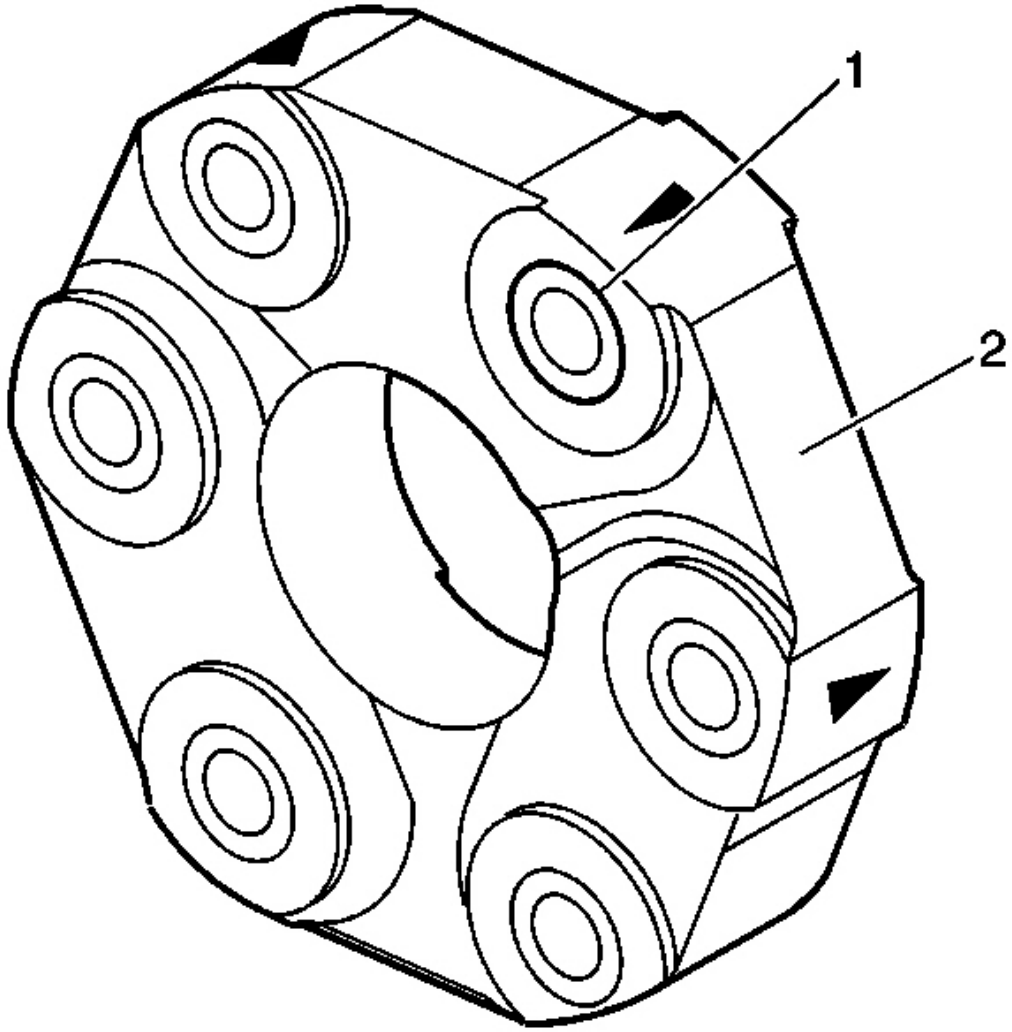

Fig. 168: Couplings
Courtesy of GENERAL MOTORS CORP.

5. Inspect the couplings for the following:
    - Loose or damaged inserts (1)
    - Worn, cracking, or deteriorated rubber (2)

MINOR cracking of the rubber is normal and acceptable. If the cracks expose any frayed fabric or internal windings, replace the coupling.

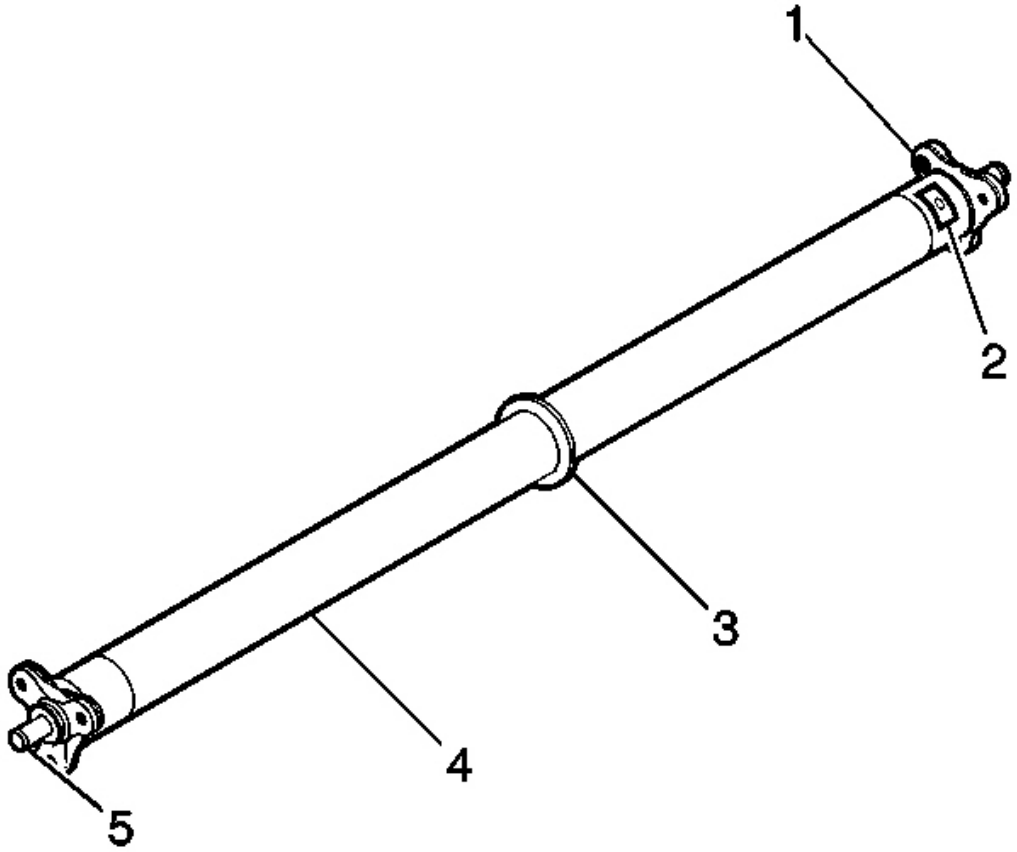

Fig. 169: Propeller Shaft To Driveline Support Tube
Courtesy of GENERAL MOTORS CORP.

6. Inspect the propeller shaft for the following:
   - Damaged bolt hole threads (1)
   - Loose or missing balance weights (2)

     Balance weights may have been installed and removed during the balancing process. In those cases, a weld mark will remain on the propeller tube.

     Inspect the inside of the driveline support tube for a missing balance weight.

   - Loose or damaged snubber (3) - manual transmission

- Dented or damaged propeller shaft tube (4)
- Worn, bent, loose, or damaged pins (5)

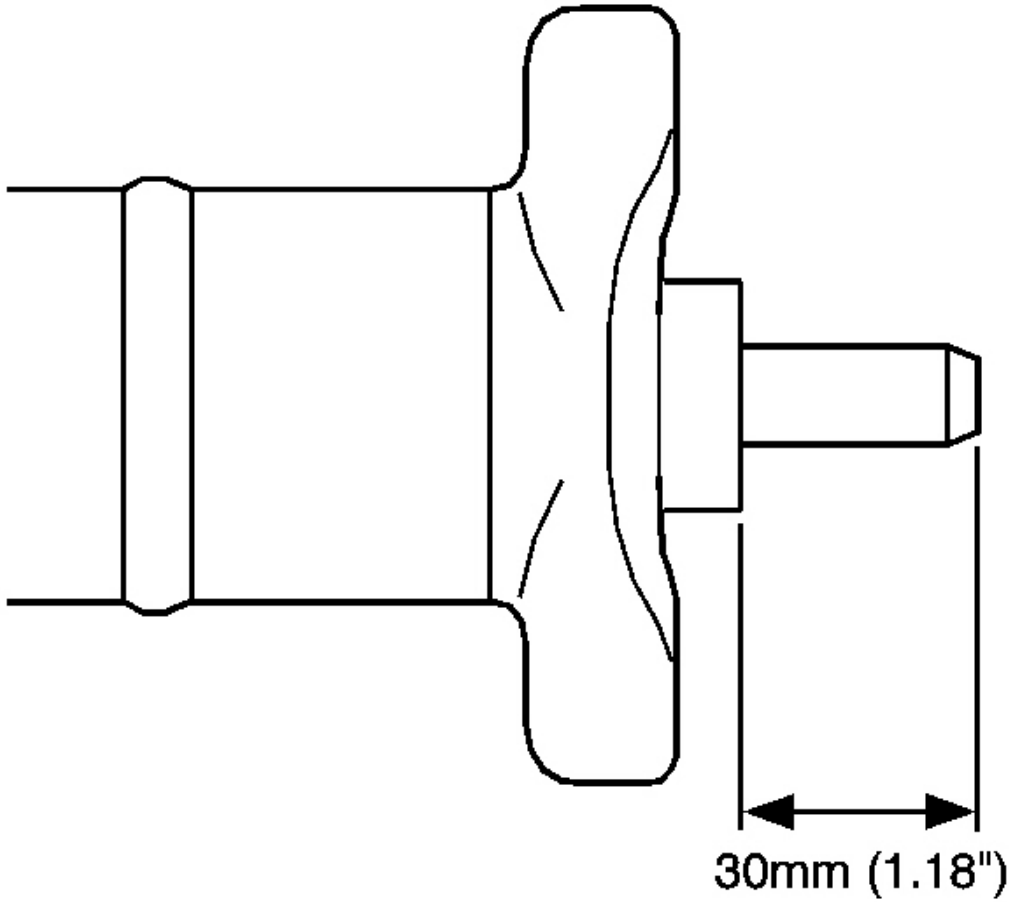

Fig. 170: Propeller Shaft Pins To Flange
Courtesy of GENERAL MOTORS CORP.

7. Inspect the propeller shaft pins for proper installation. The pin should extend beyond the flange 30 mm (1.18 in).

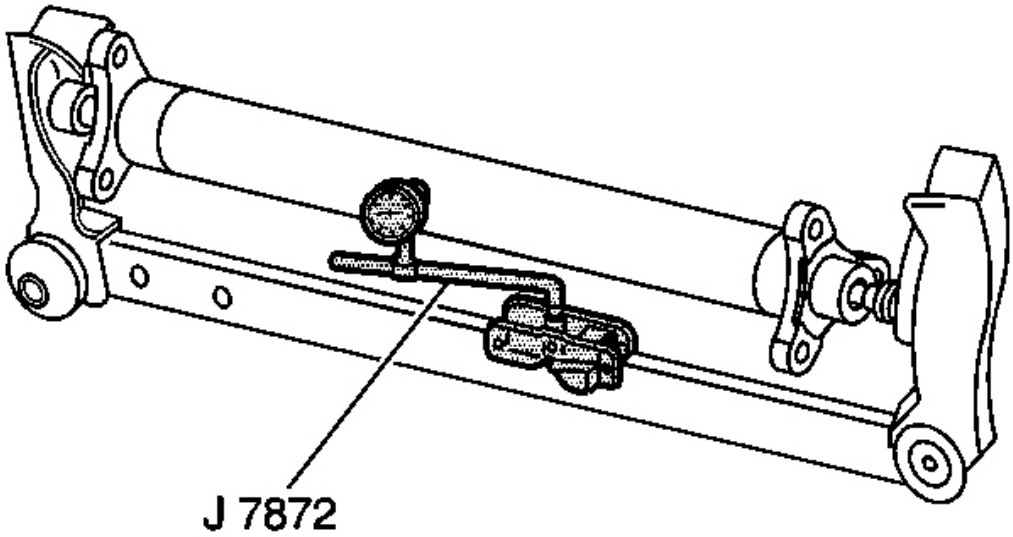

Fig. 171: Propeller Shaft Runout At Wooden V-Blocks
Courtesy of GENERAL MOTORS CORP.

8. Measure the propeller shaft runout.
    1. Mount the propeller shaft in wooden V-blocks or between centers on a fixture.
    2. Check the runout of the propeller shaft in multiple locations, including the barrel ends, using the **J 7872** . See **Special Tools and Equipment** .
    3. If propeller shaft runout exceeds 0.3 mm (0.118 in), the propeller shaft is bent and should be replaced.
9. Inspect the snubber - manual transmission - for wear or a flat spot on the outer edge.
10. Check the runout of the snubber.

    If the runout of the outer edge of the snubber exceeds 2 mm (0.79 in), replace the propeller shaft.

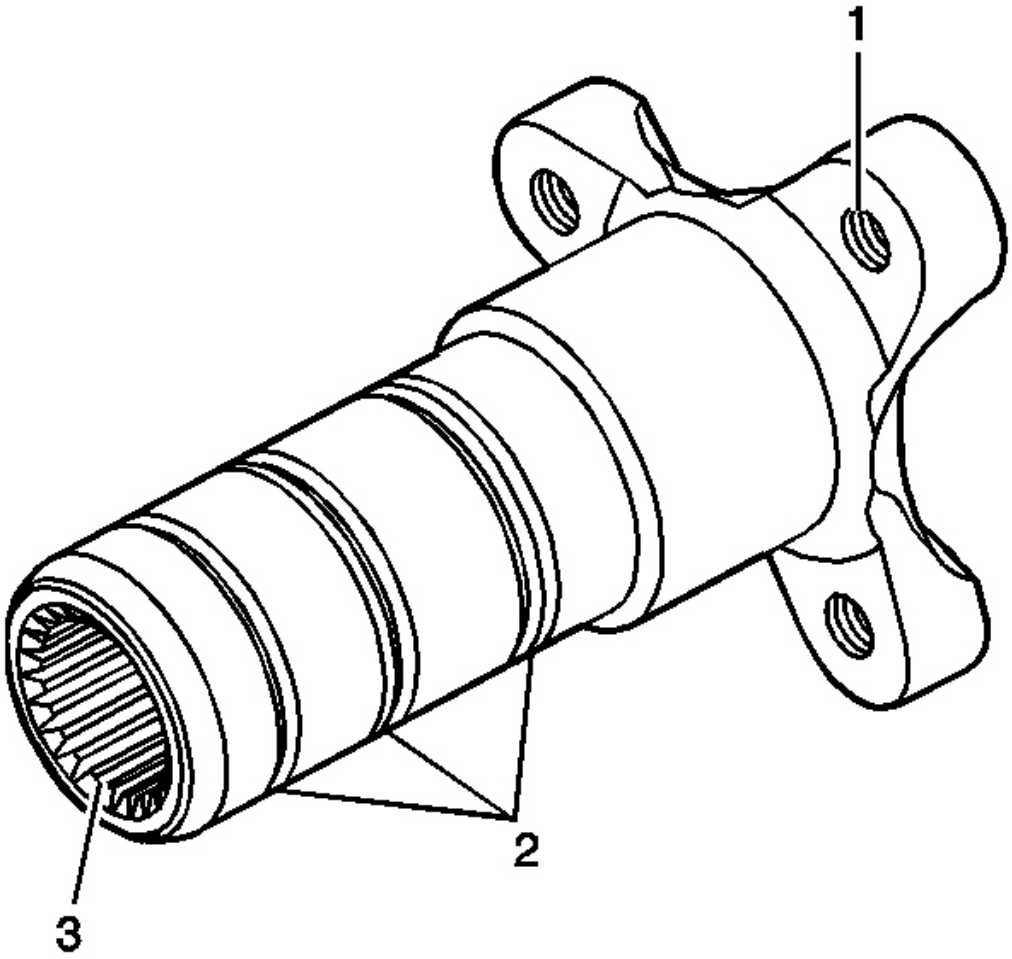

Fig. 172: Bearing Housing Hub At Bolt Hole Threads & Snap Ring Grooves
Courtesy of GENERAL MOTORS CORP.

11. Inspect the bearing housing hub for the following:
    - Damaged bolt hole threads (1)
    - Damaged snap ring grooves (2)
    - Worn or damaged splines (3)
    - Worn or damaged bushings

    Bushings that have been removed from the hub will be damaged and should not be reused. Install NEW bushings during assembly.

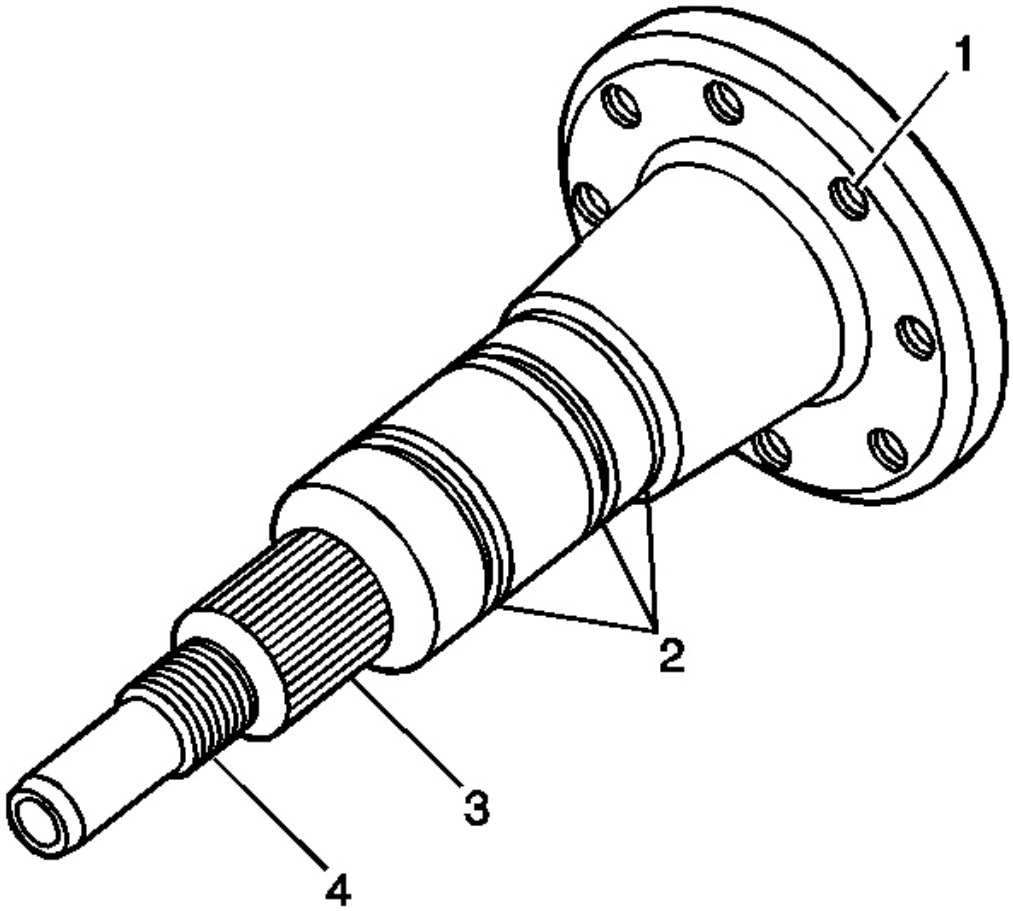

Fig. 173: Flexplate Spindle - Automatic Transmission
Courtesy of GENERAL MOTORS CORP.

12. Inspect the flexplate spindle - automatic transmission - for the following:
    - Damaged bolt hole threads (1)
    - Damaged snap ring grooves (2)
    - Worn or damaged splines (3)
    - Damaged threads (4)

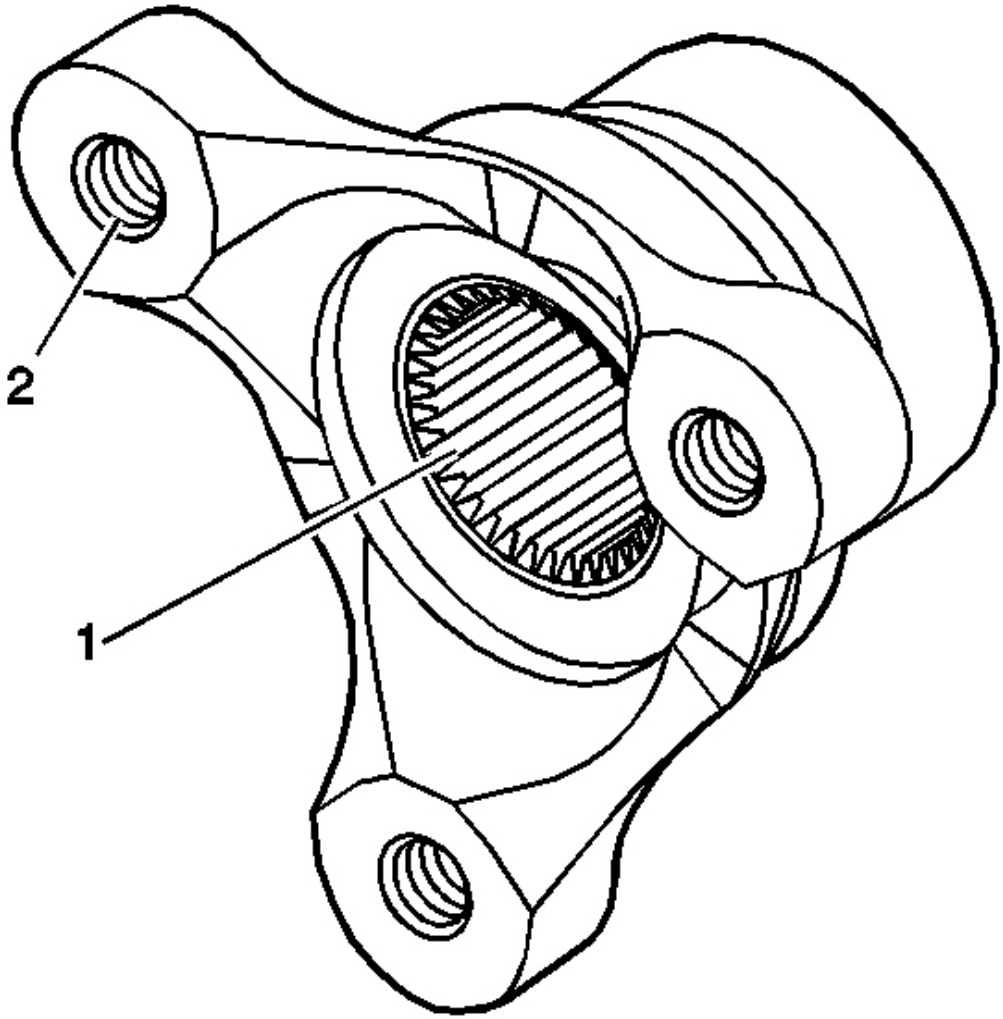

Fig. 174: Input Hub - Automatic Transmission
Courtesy of GENERAL MOTORS CORP.

13. Inspect the input hub - automatic transmission - for the following:
    - Worn or damaged splines (1)
    - Damaged bolt hole threads (2)

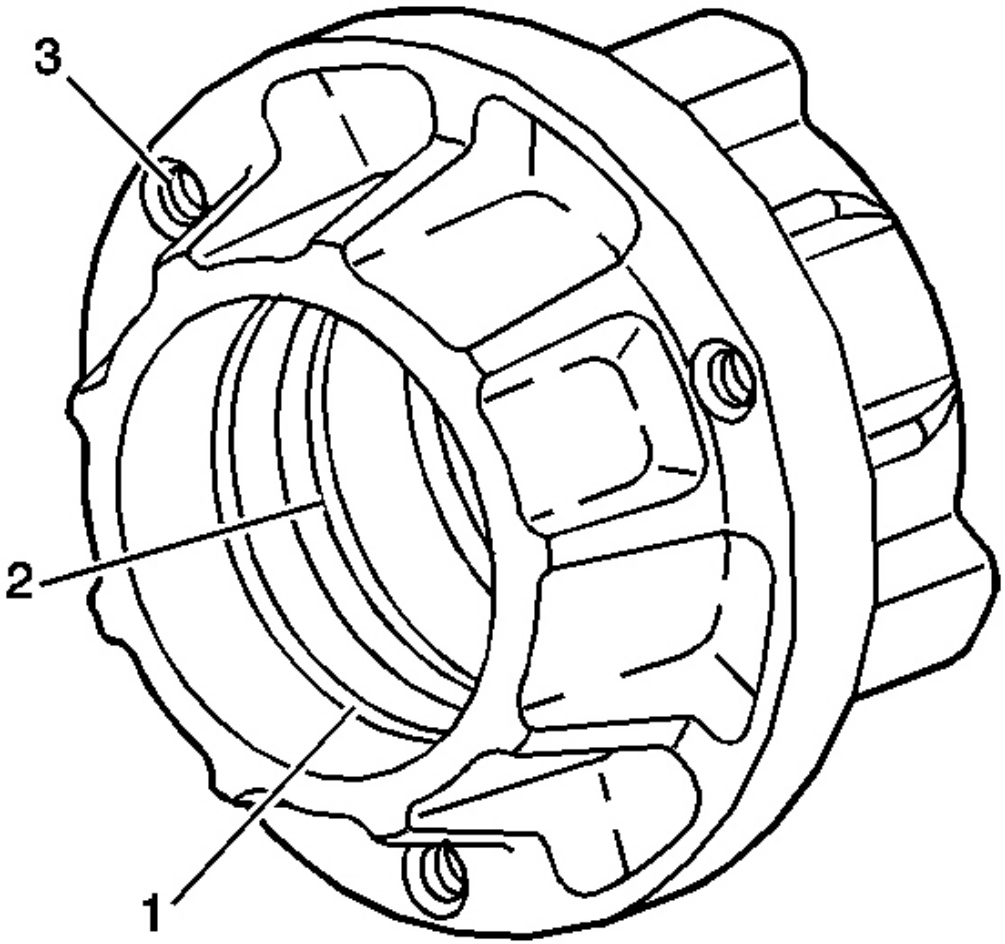

Fig. 175: Bearing Housing At O-Ring Or Snap Ring Grooves & Threads
Courtesy of GENERAL MOTORS CORP.

14. Inspect the bearing housing for the following:
    - Damaged O-ring or snap ring grooves (1-2)
    - Damaged threads (3)
    - Worn or scored bearing bores

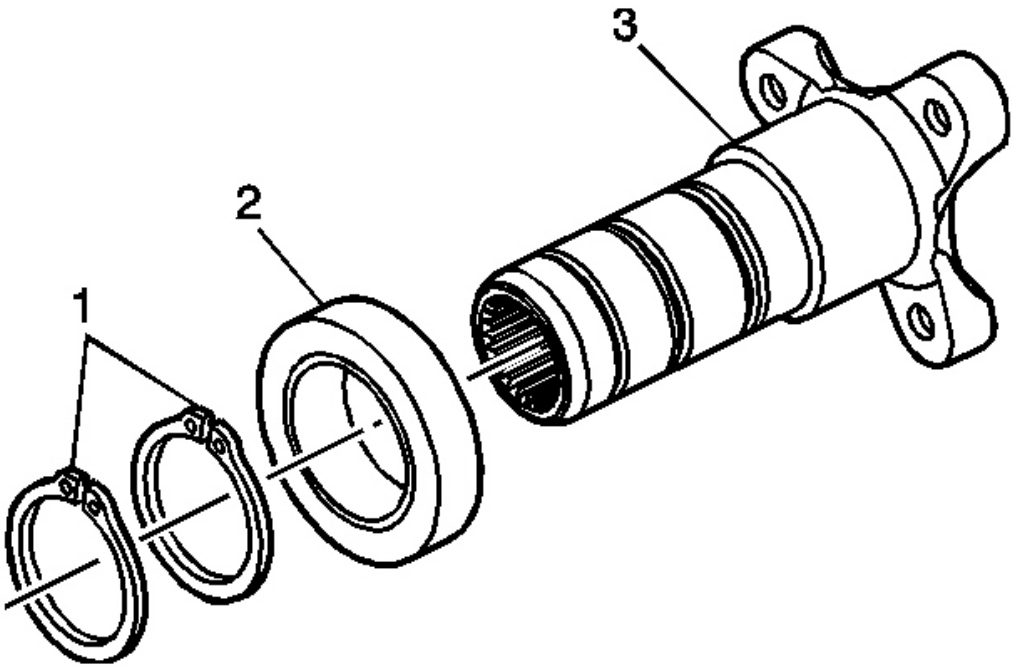

Fig. 176: Snap Rings & Bearing To Hub
Courtesy of GENERAL MOTORS CORP.

15. Inspect the bearings for the following:
    - Damaged grease seals
    - Excessive wear or roughness of operation

    Bearings should rotate freely with no coarseness or rough feel

16. Inspect for bent or broken snap rings (1), replace as required.
17. Inspect the driveline tube for the following:
    - Damaged bolt hole threads
    - Damaged front O-ring groove
    - Worn or scored front bearing bore
    - Missing or damaged bellhousing dowel pins
    - Damage to the exterior of the tube
    - Cracked welds

DRIVELINE SUPPORT ASSEMBLY ASSEMBLE

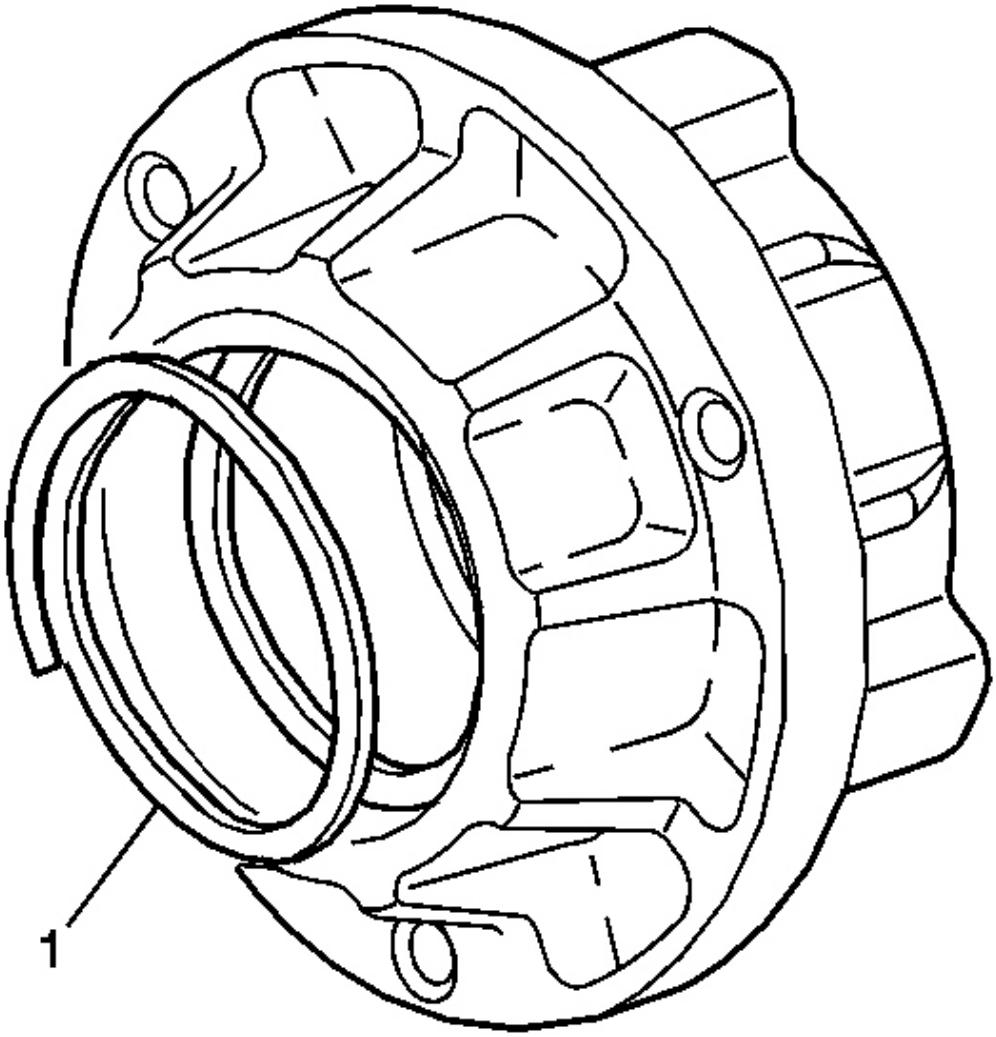

Fig. 177: Wave Washer To Rear Bearing Housing
Courtesy of GENERAL MOTORS CORP.

IMPORTANT: Do not separate the input shaft, propeller shaft, couplings, or bearing housing assembly, unless required. These components are balanced as an assembly. Disassembly and improper reassembly of the components may cause vehicle driveline vibration.
If the input shaft, couplings, propeller shaft, or bearing housing assembly

must be separated, the components must be marked prior to disassembly. During assembly, the components must be returned to their original position and location.

1. Install the wave washer (1) into the rear bearing housing.

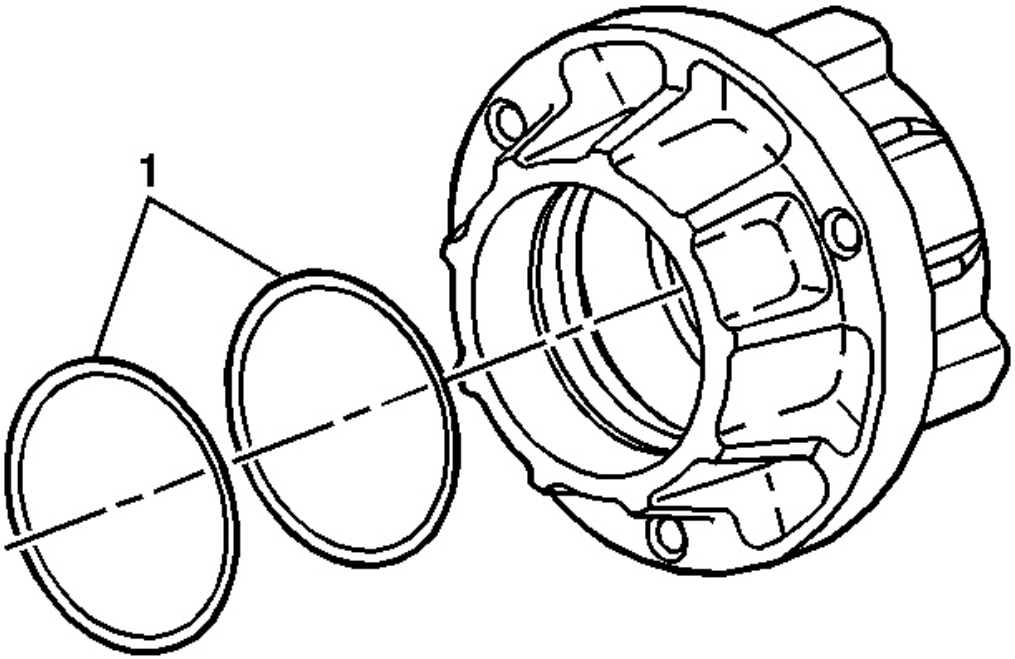

Fig. 178: O-Rings To Rear Bearing Housing
Courtesy of GENERAL MOTORS CORP.

2. Lubricate the NEW rear bearing housing O-rings (1) with clean engine oil.
3. Install the O-rings into the rear bearing housing.

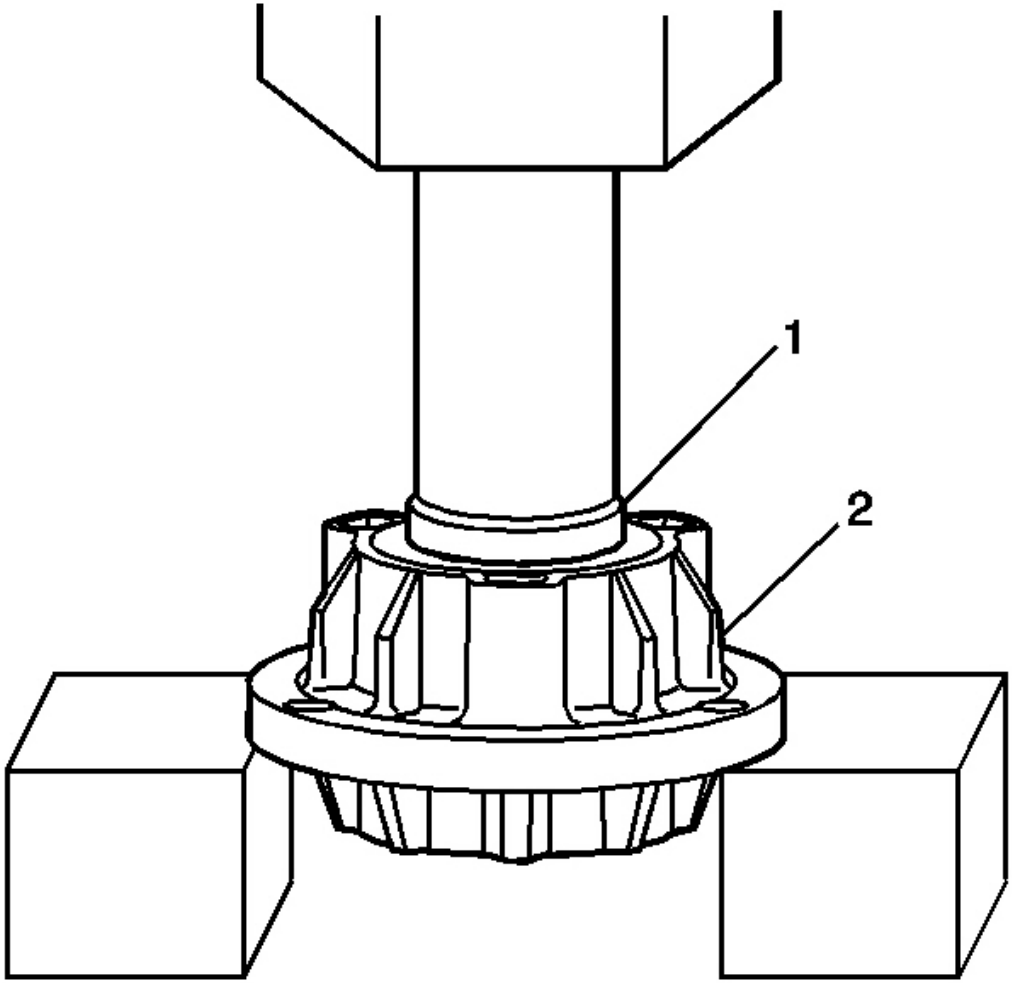

Fig. 179: Rear Bearing Housing To Bearing
Courtesy of GENERAL MOTORS CORP.

IMPORTANT: Press only on the outer race of the bearing.

4. Position the rear bearing housing (2) into a press in order to install the bearing (1).

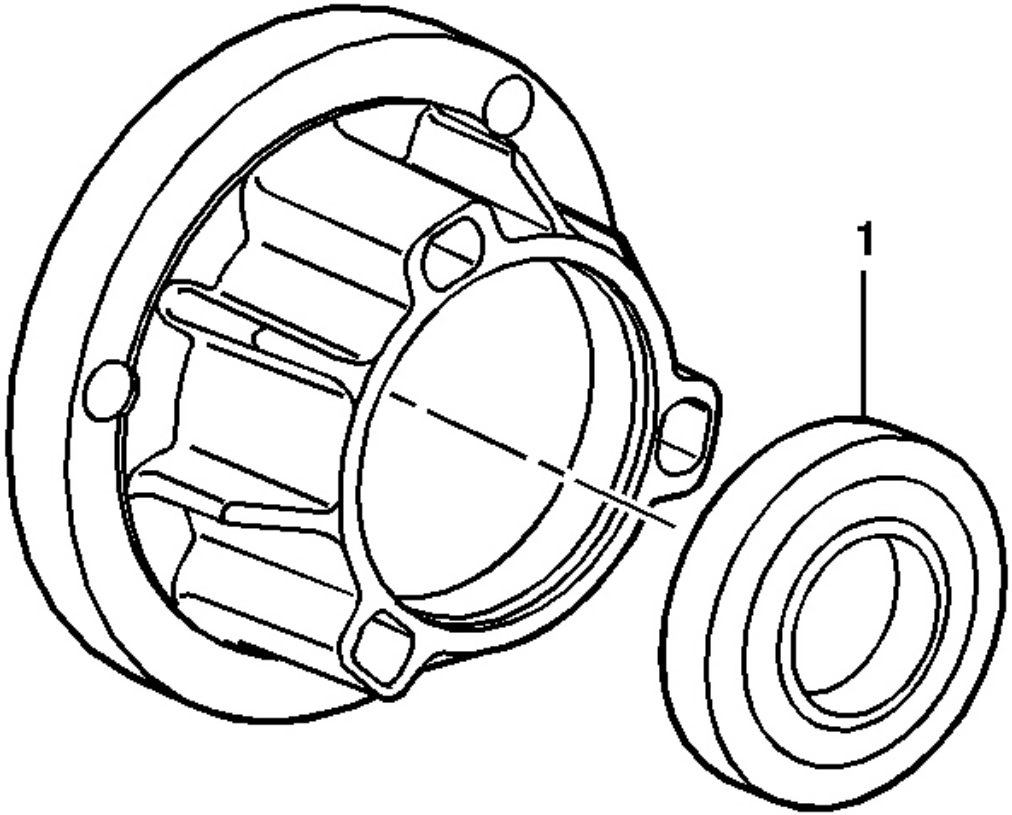

Fig. 180: Rear Bearing Housing To Press & Remove Bearing
Courtesy of GENERAL MOTORS CORP.

5. Install the bearing (1) into the housing.

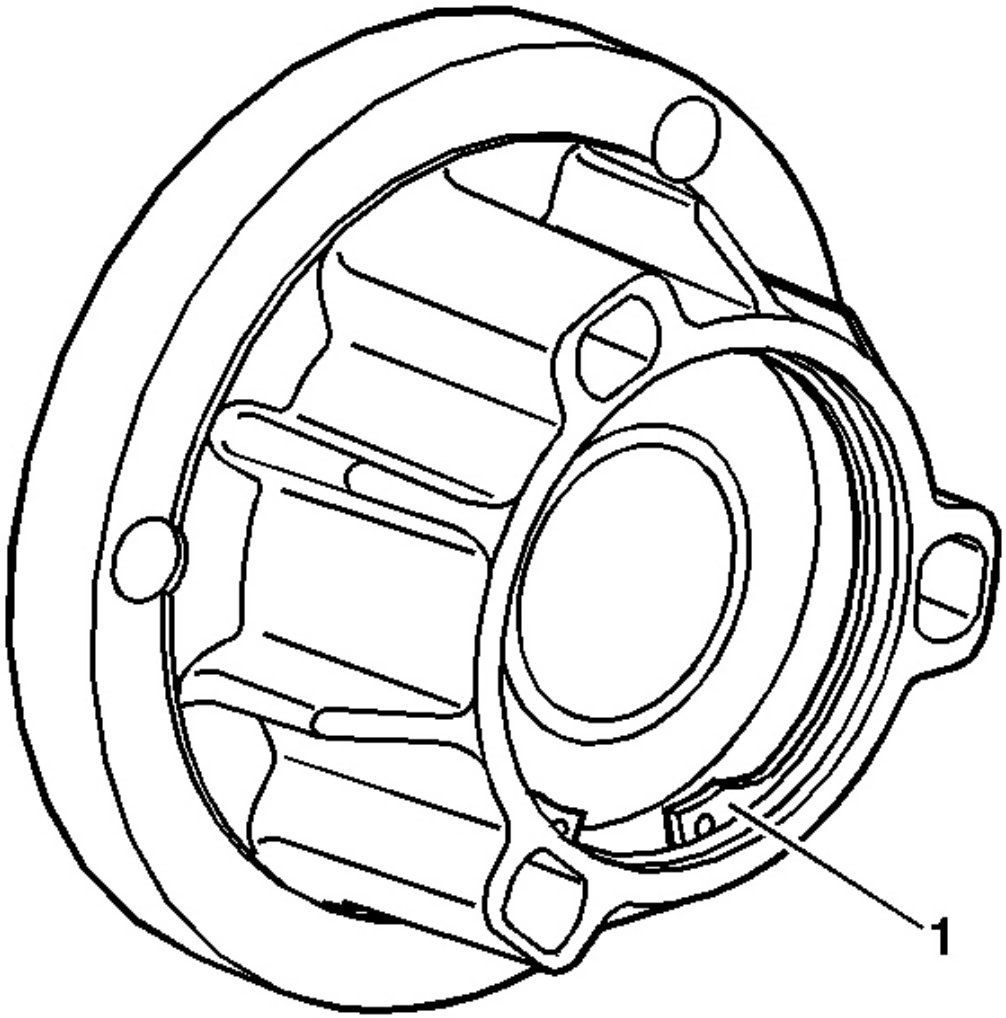

Fig. 181: Snap Ring To Rear Bearing Housing
Courtesy of GENERAL MOTORS CORP.

6. Install the snap ring (1) into the rear bearing housing.

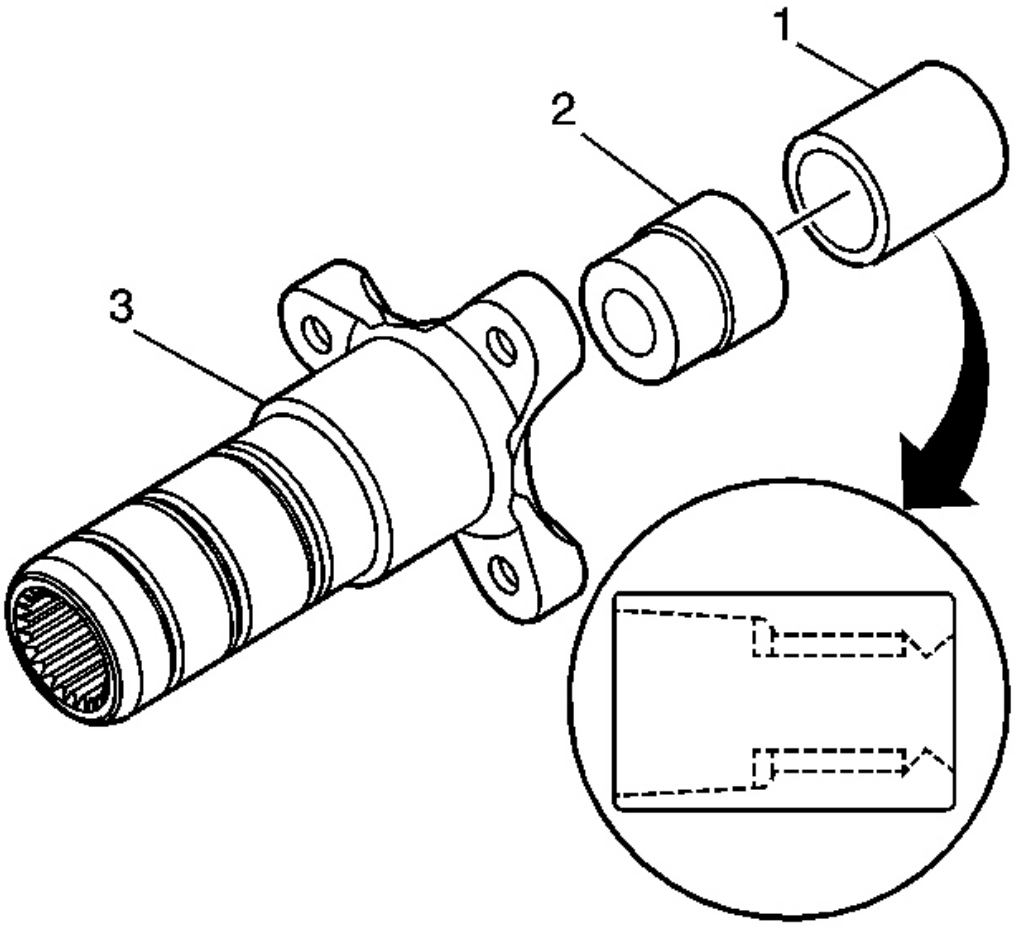

Fig. 182: Propeller Shaft Bushing & Transmission Input Shaft Bushing To Hub
Courtesy of GENERAL MOTORS CORP.

IMPORTANT: Install the propeller shaft bushing into hub with the smaller opening of the bushing positioned away from the hub.

7. Install the transmission input shaft bushing (2) and propeller shaft bushing (1) into the hub, if required.

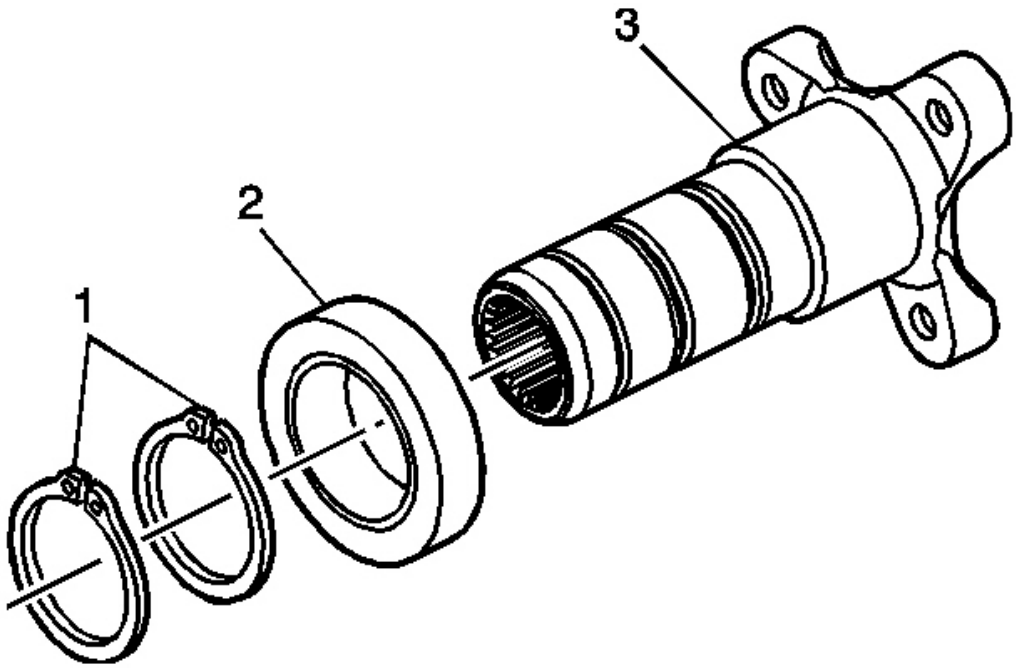

Fig. 183: Snap Rings & Bearing To Hub
Courtesy of GENERAL MOTORS CORP.

8. Install the bearing (2) and snap rings (1) onto the hub (3).

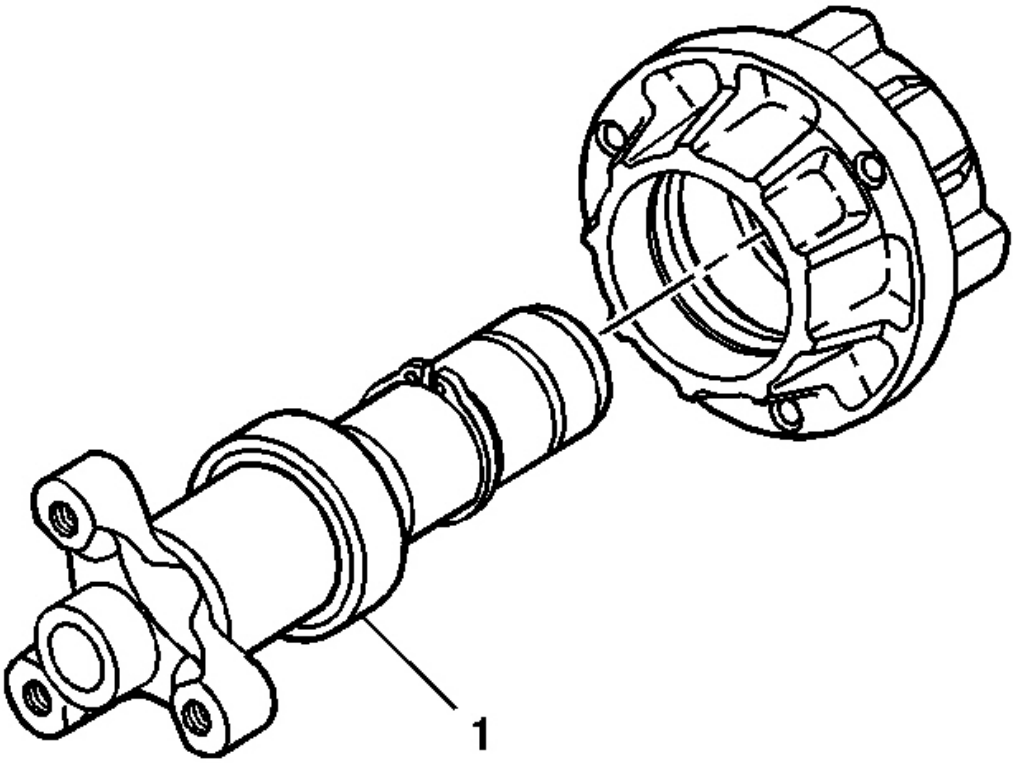

Fig. 184: Hub To Rear Bearing Housing
Courtesy of GENERAL MOTORS CORP.

9. Install the hub (1) into the rear bearing housing.

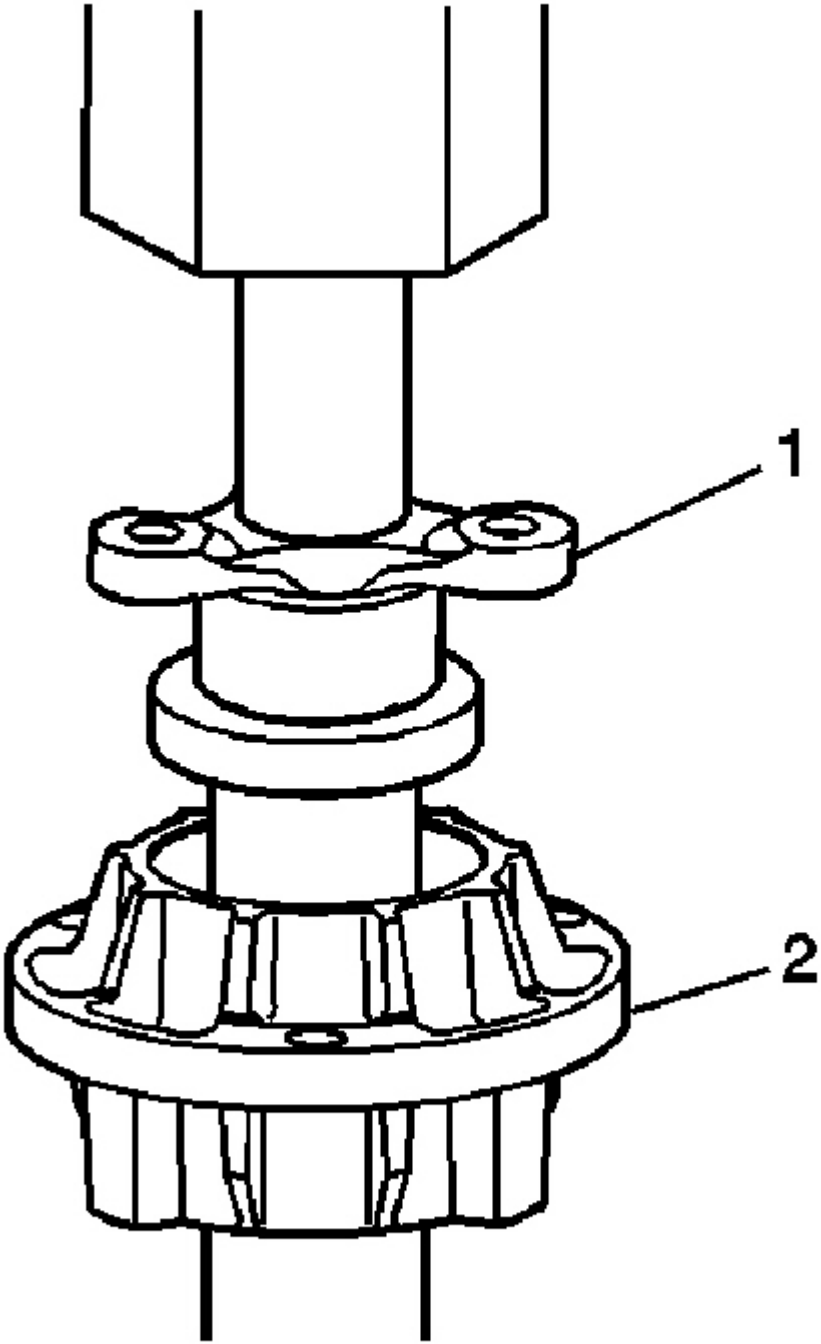

Fig. 185: Hub With Bearing To Housing

Courtesy of GENERAL MOTORS CORP.

10. Press the hub - with bearing (1) into the housing (2). Support the inner race of the housing bearing when assembling the components.

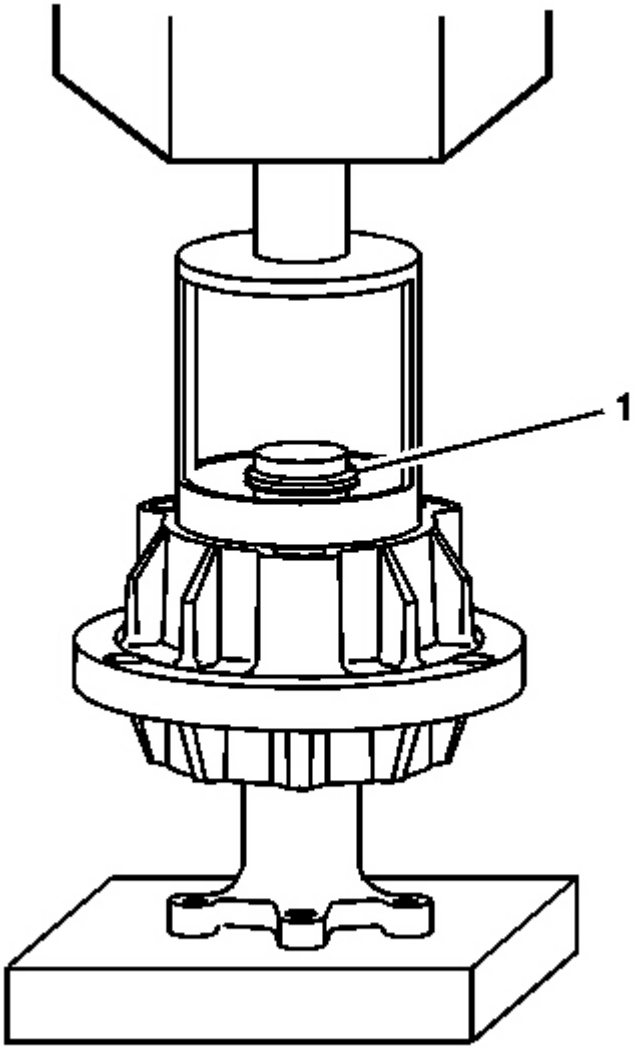

Fig. 186: Rear Bearing Housing Assembly & Snap Ring To Hub
Courtesy of GENERAL MOTORS CORP.

11. Position the bearing housing into a press. Apply pressure to the housing and compress the wave washer in

order to install the snap ring (1).

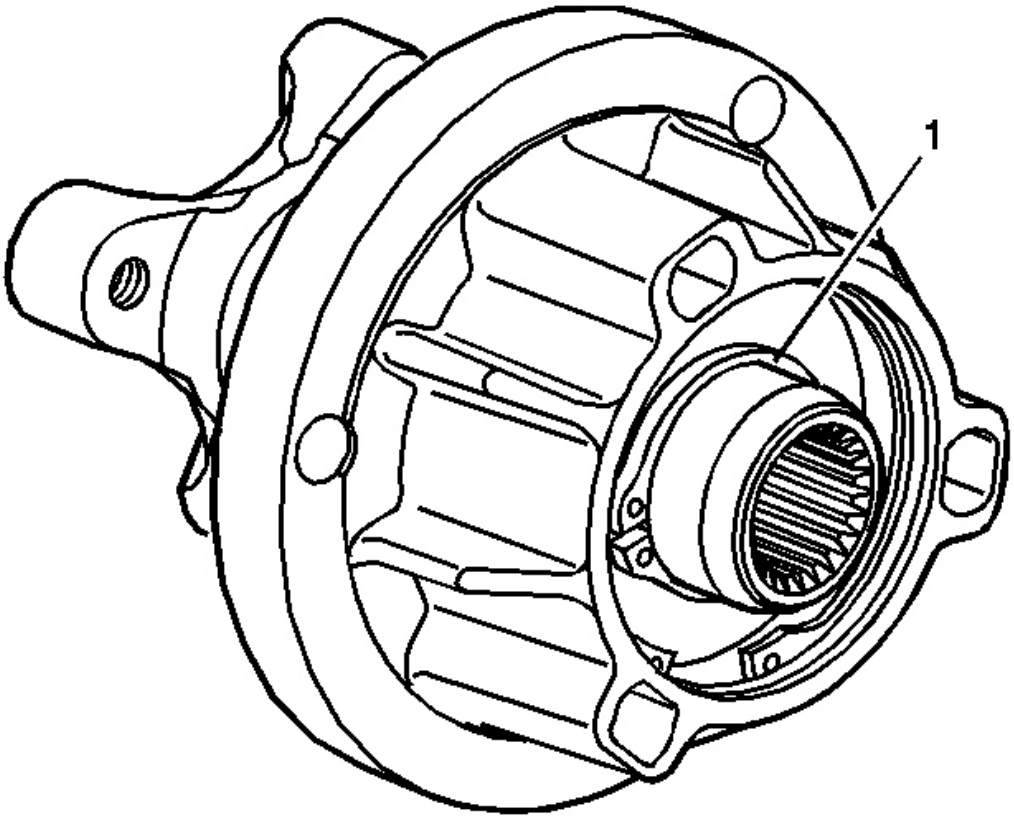

Fig. 187: Snap Ring To Hub
Courtesy of GENERAL MOTORS CORP.

12. Install the snap ring (1) onto the hub.

Rear Bearing Housing Assembly - Automatic Transmission

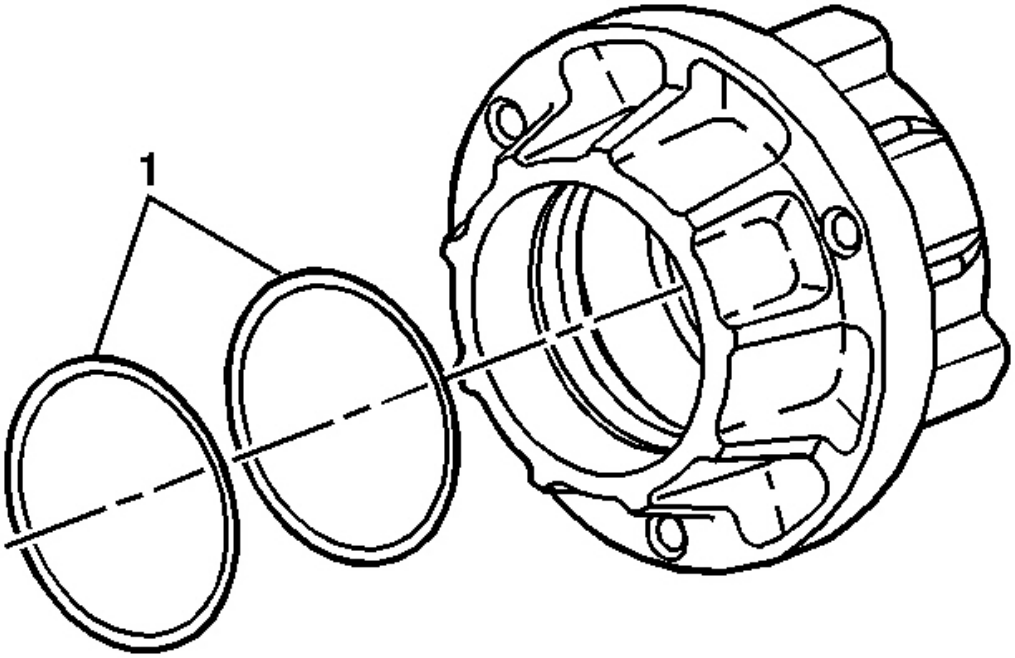

Fig. 188: O-Rings To Rear Bearing Housing
Courtesy of GENERAL MOTORS CORP.

1. Lubricate the NEW rear bearing housing O-rings (1) with clean engine oil.
2. Install the O-rings into the rear bearing housing.

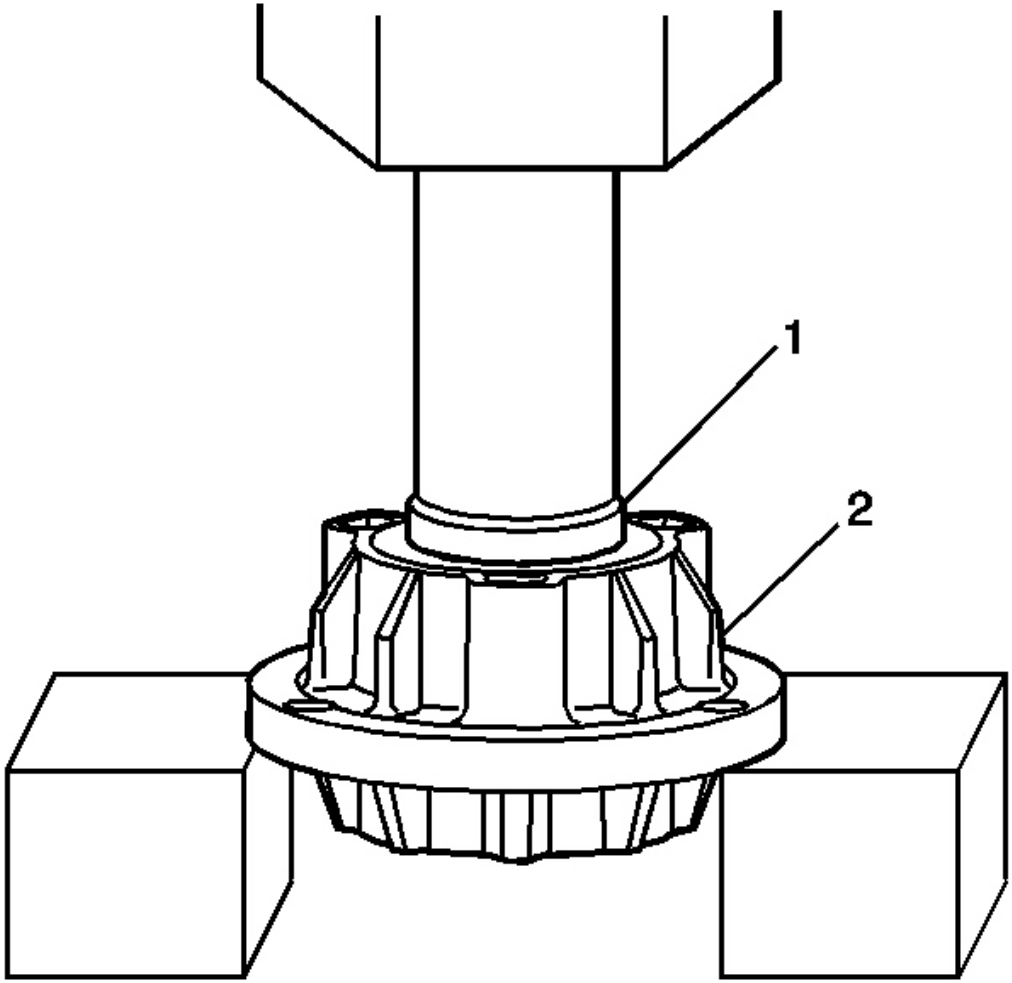

Fig. 189: Rear Bearing Housing To Bearing
Courtesy of GENERAL MOTORS CORP.

IMPORTANT: Press only on the outer race of the bearing.

3. Position the rear bearing housing (2) into a press in order to install the bearing (1).

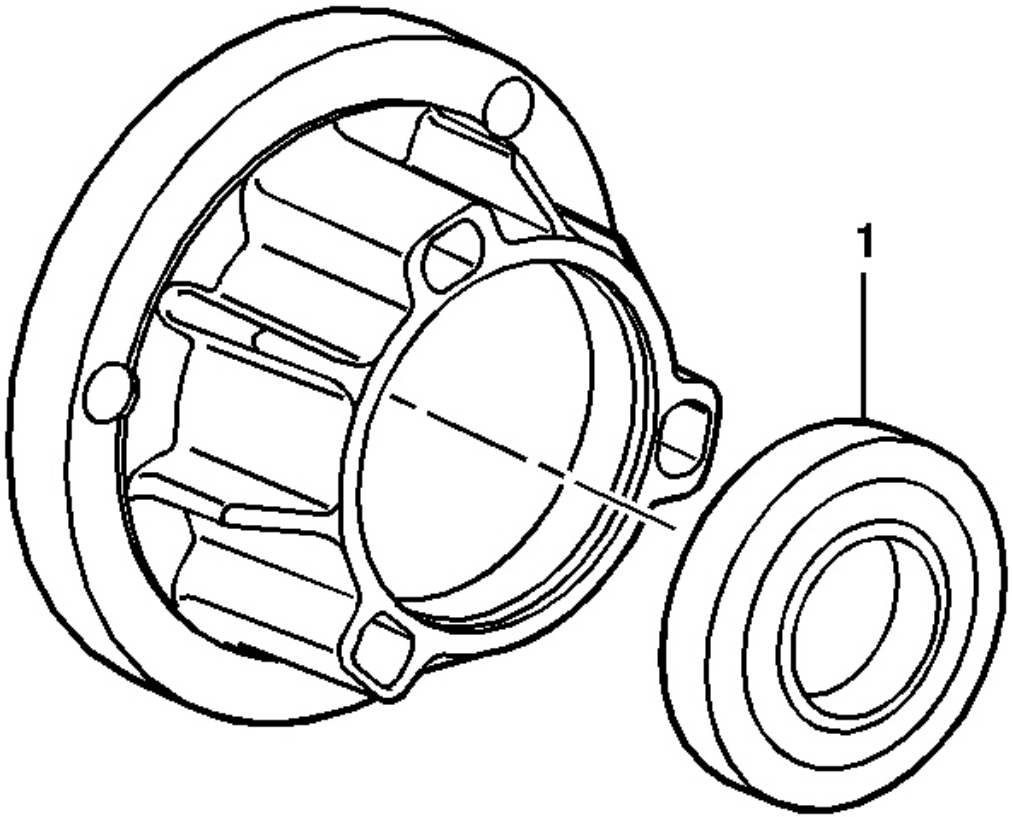

Fig. 190: Rear Bearing Housing To Press & Remove Bearing
Courtesy of GENERAL MOTORS CORP.

4. Install the bearing (1) into the housing.

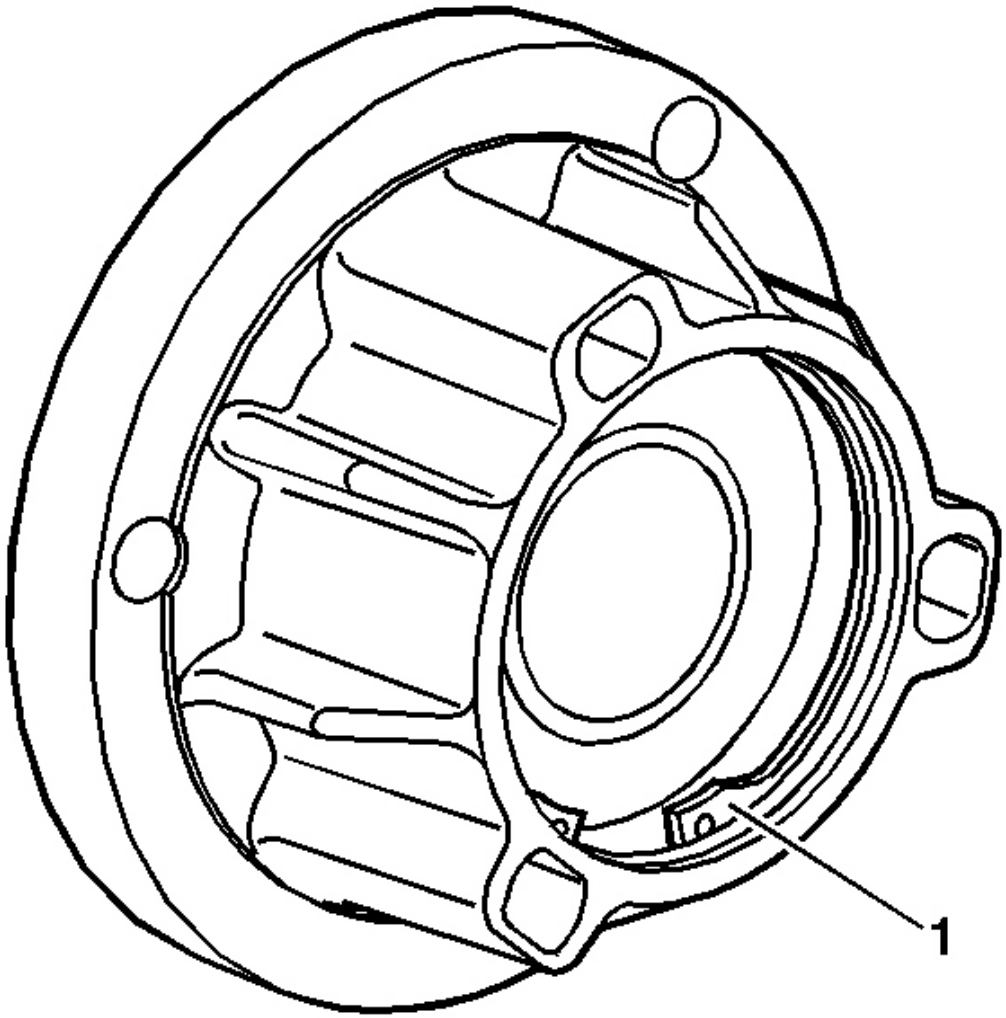

Fig. 191: Snap Ring To Rear Bearing Housing
Courtesy of GENERAL MOTORS CORP.

5. Install the snap ring (1) into the rear bearing housing.

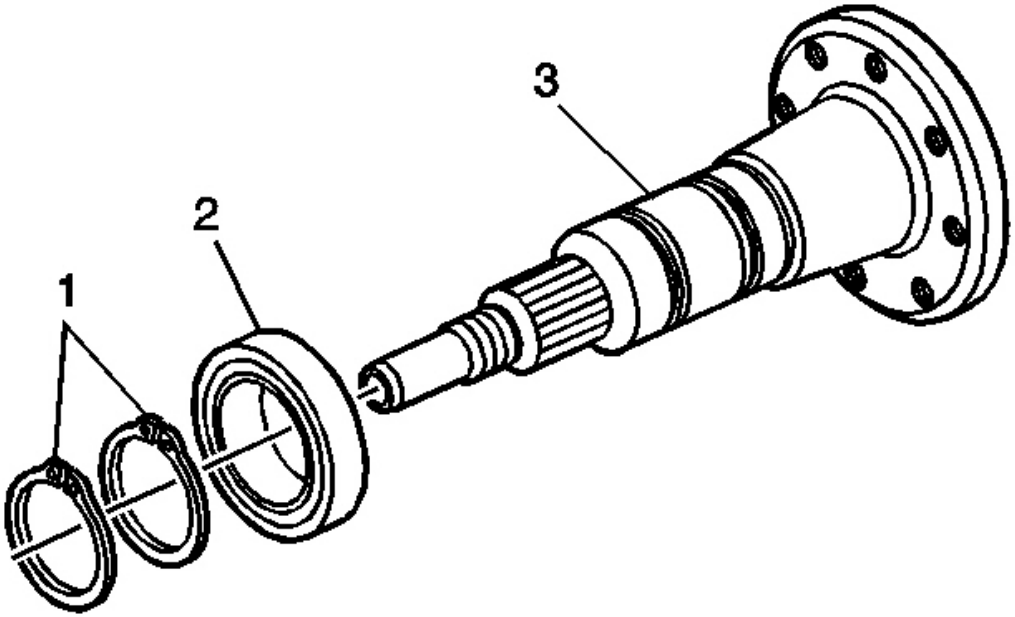

Fig. 192: Snap Rings & Bearing To Flexplate Spindle
Courtesy of GENERAL MOTORS CORP.

6. Install the bearing (2) and snap rings (1) onto the flexplate spindle (3).

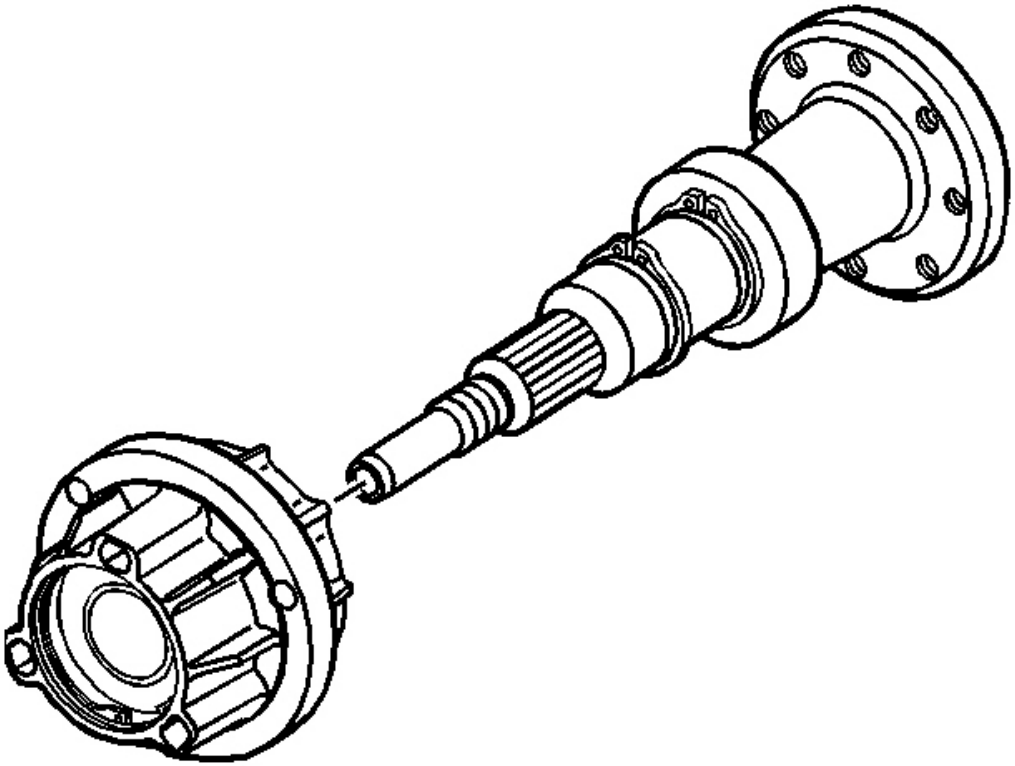

Fig. 193: Flexplate Spindle With Bearing To Bearing Housing
Courtesy of GENERAL MOTORS CORP.

7. Install the flexplate spindle - with bearing into the rear bearing housing.

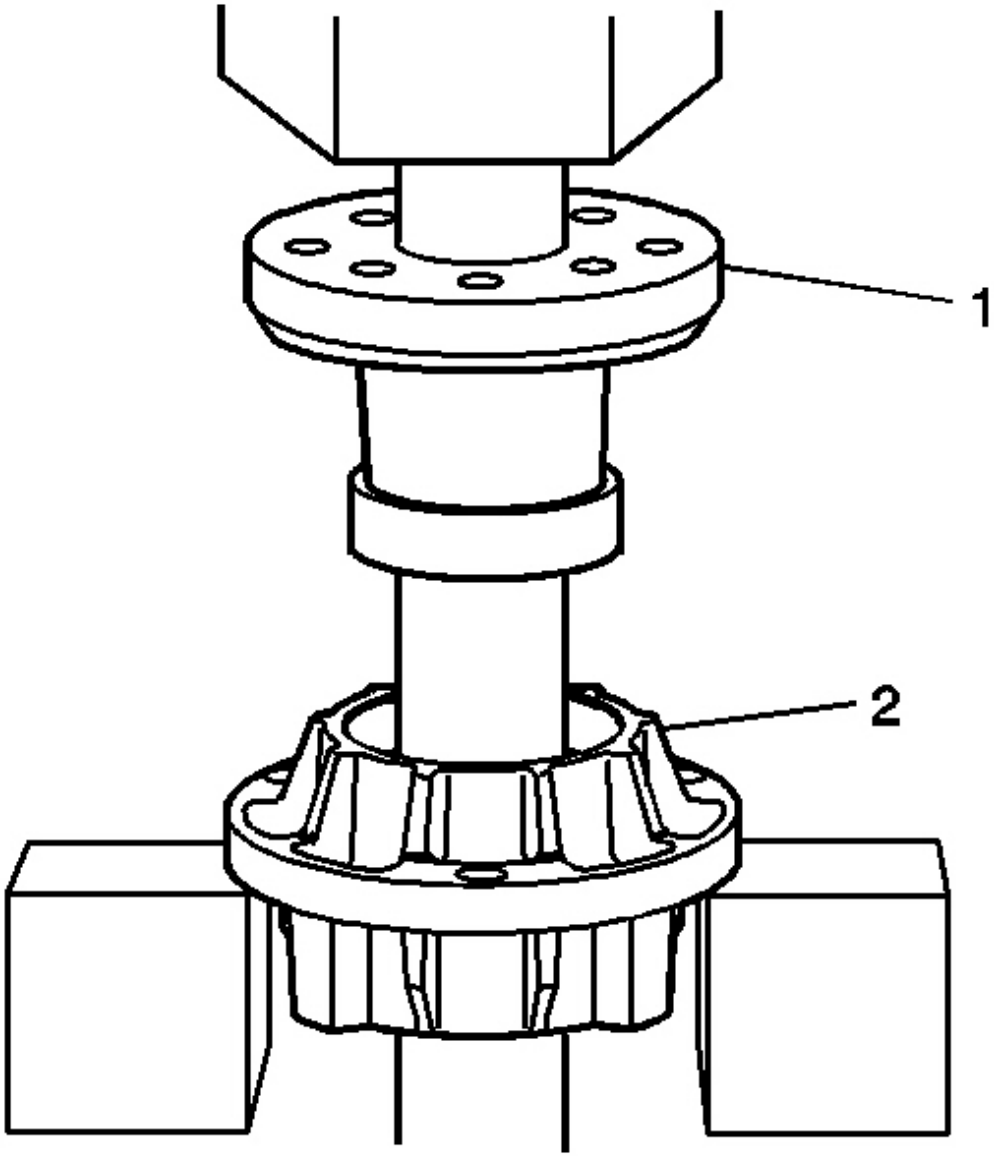

Fig. 194: Flexplate Spindle With Bearing To Housing
Courtesy of GENERAL MOTORS CORP.

8. Press the flexplate spindle - with bearing (1) into the housing (2). Support the inner race of the housing bearing when assembling the components.

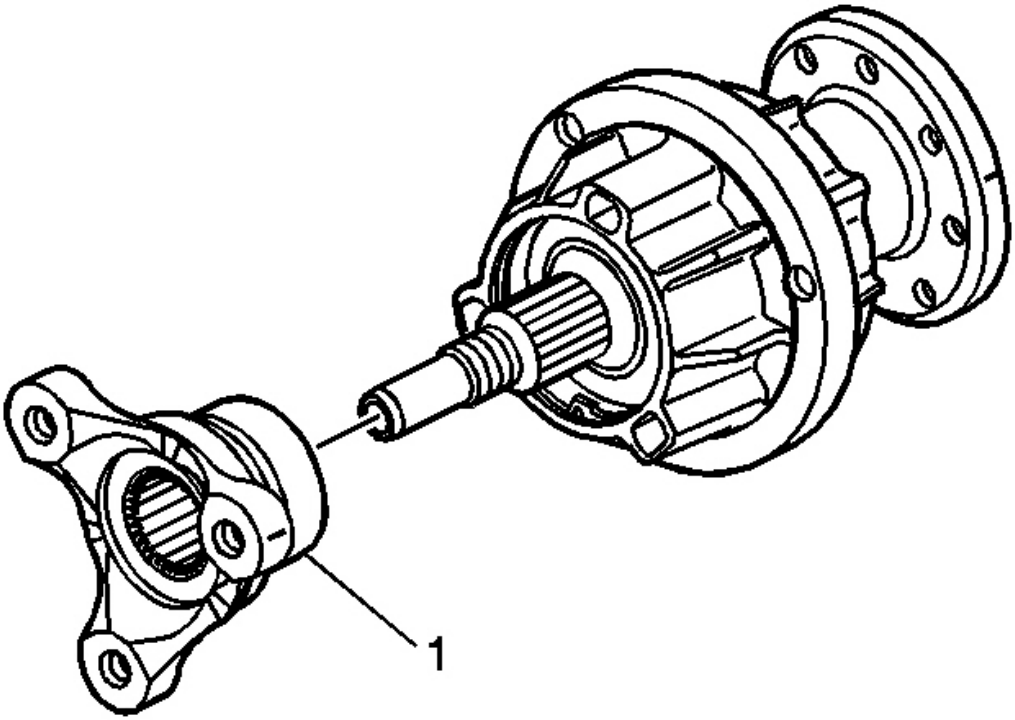

Fig. 195: Hub To Flexplate Spindle
Courtesy of GENERAL MOTORS CORP.

9. Install the hub (1) onto the flexplate spindle. Align the marks on the flexplate spindle and hub for proper assembly.
10. Apply threadlock GM P/N 12345382 (Canadian P/N 10953489) or equivalent to the threads of the spindle.

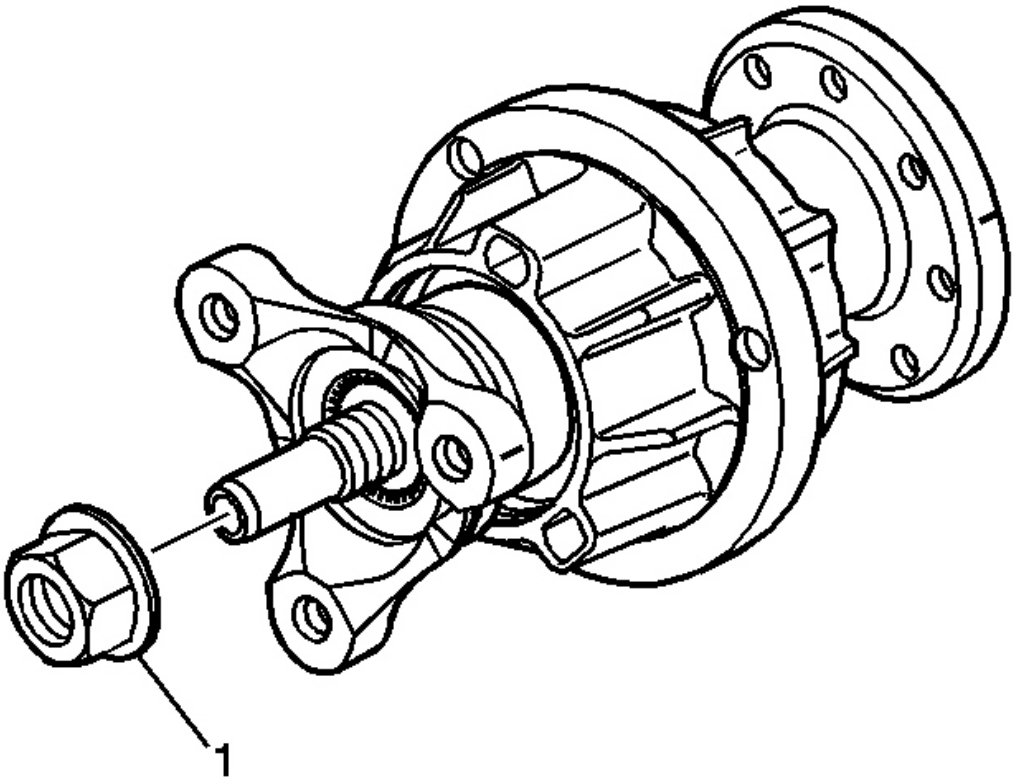

Fig. 196: Nut To Flexplate Spindle
Courtesy of GENERAL MOTORS CORP.

NOTE: Refer to Fastener Notice in Cautions and Notices.

11. Install the nut (1) to the flexplate spindle.

    Tighten: Tighten the spindle nut to 90 N.m (66 lb ft).

Propeller Shaft Installation

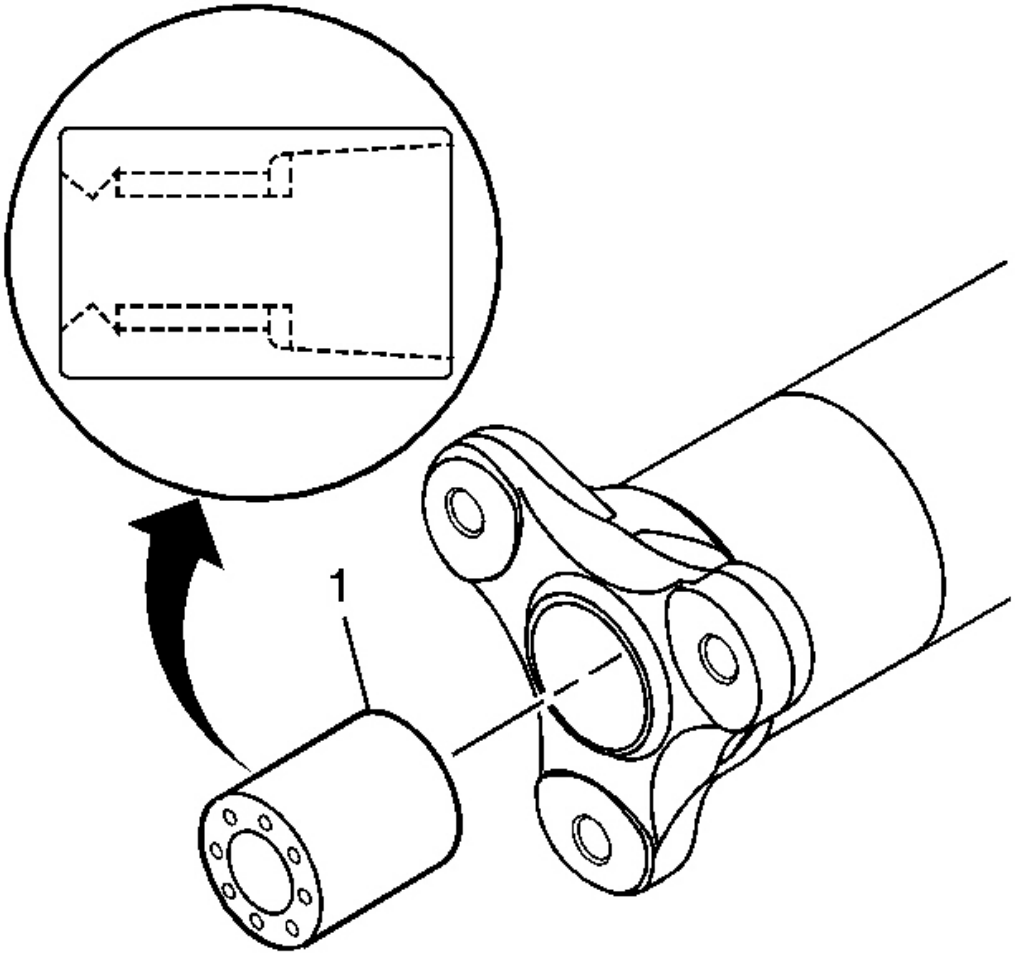

Fig. 197: Bushing To Propeller Shaft
Courtesy of GENERAL MOTORS CORP.

IMPORTANT: Install the propeller shaft bushing into hub with the smaller opening of the bushing positioned away from the flange.

1. Install a NEW bushing (1) into the automatic transmission propeller shaft, if required.

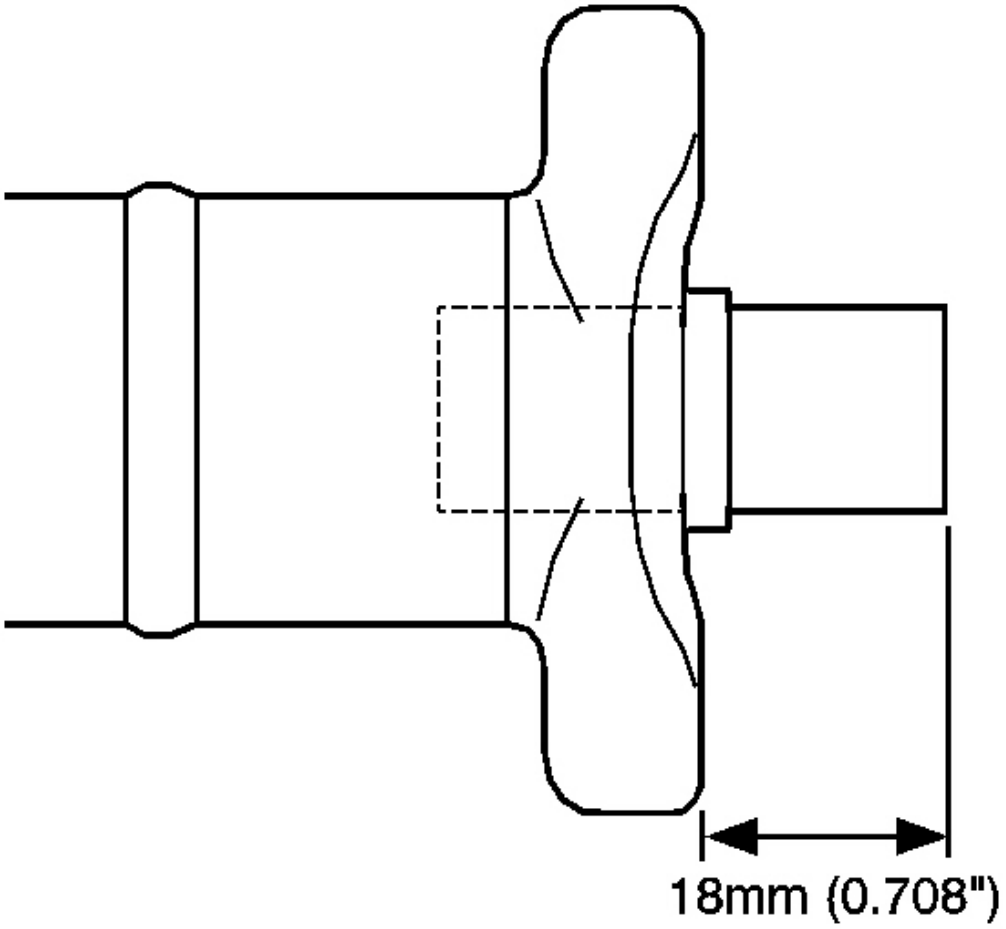

Fig. 198: Bushing To Face Of Hub
Courtesy of GENERAL MOTORS CORP.

2. Inspect the bushing for proper installation. A properly installed bushing will protrude 18 mm (0.708 in) from the face of the hub.

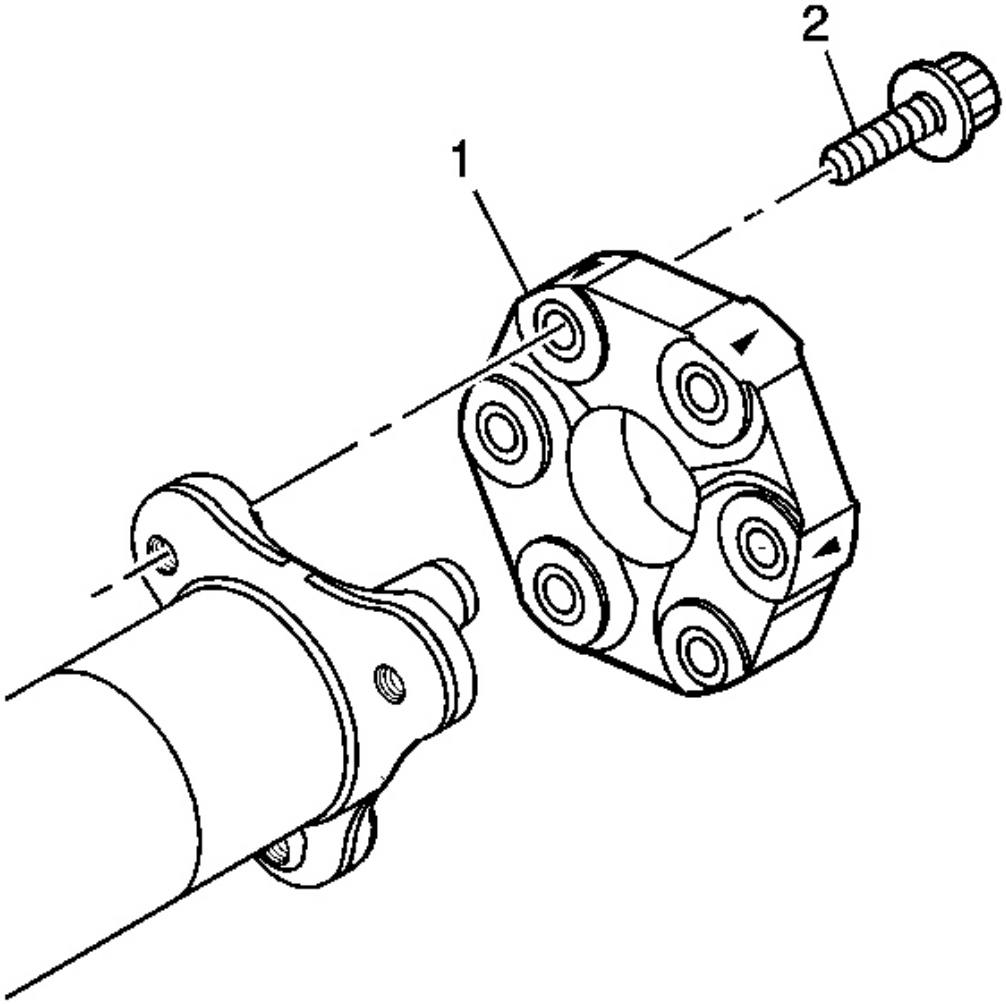

Fig. 199: Rear Coupling, Bolts & Washers To Propeller Shaft
Courtesy of GENERAL MOTORS CORP.

3. Apply threadlock GM P/N 12345382 (Canadian P/N 10953489) or equivalent to the threads of the coupling bolts.

NOTE: **Refer to Fastener Notice in Cautions and Notices.**

IMPORTANT: **If the coupling orientation mark has been lost during the cleaning or disassembly process, the coupling MUST be installed with the directional arrow pointed toward the flange to which it mounts.**

4. Install the rear coupling (1), bolts (2), and washers to the propeller shaft.

Tighten:

- Tighten the coupling bolts - Automatic Transmission to 70 N.m (52 lb ft).
- Tighten the coupling bolts - Manual Transmission to 90 N.m (66 lb ft).

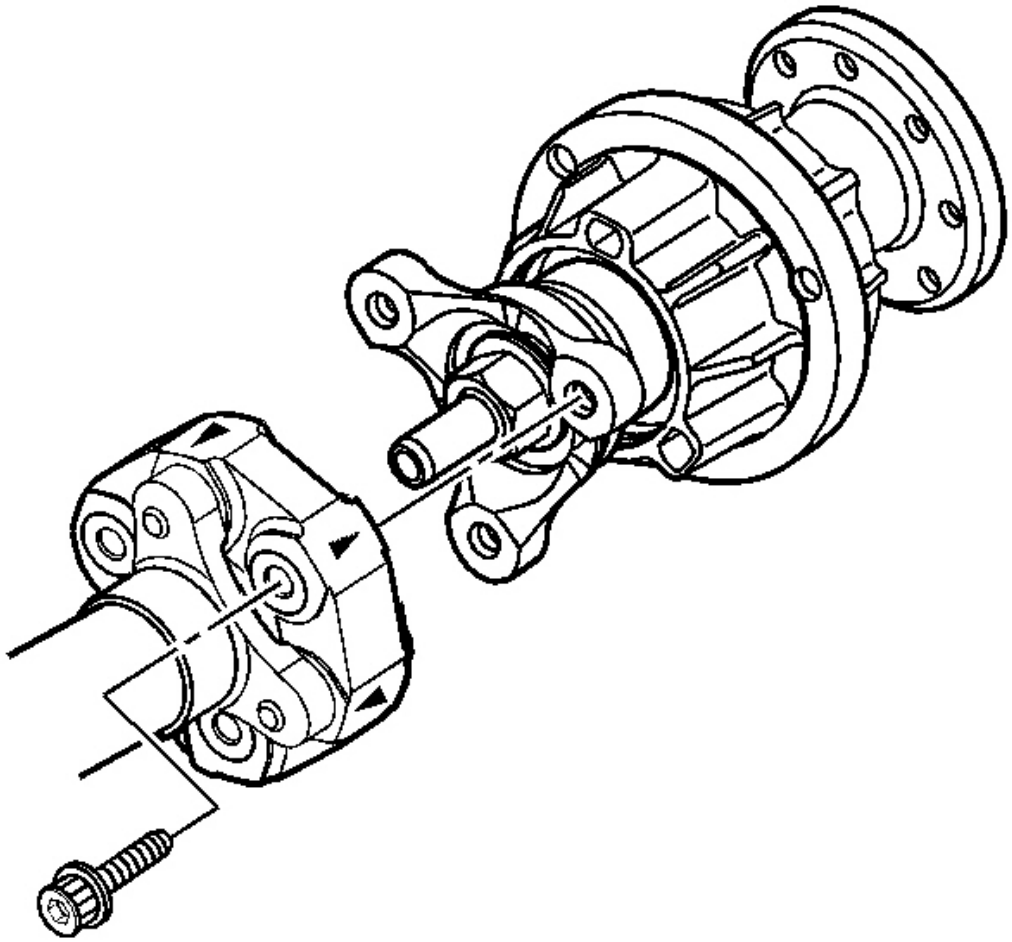

Fig. 200: Bearing Housing Assembly, Bolts & Washers To Rear Coupling
Courtesy of GENERAL MOTORS CORP.

IMPORTANT: If the coupling orientation mark has been lost during the cleaning or disassembly process, the coupling MUST be installed with the directional arrow pointed toward the flange to which it mounts.

5. Install the rear bearing housing assembly, bolts, and washers to the rear coupling.

Tighten:

- Tighten the coupling bolts - Automatic Transmission to 70 N.m (52 lb ft).
- Tighten the coupling bolts - Manual Transmission to 90 N.m (66 lb ft).

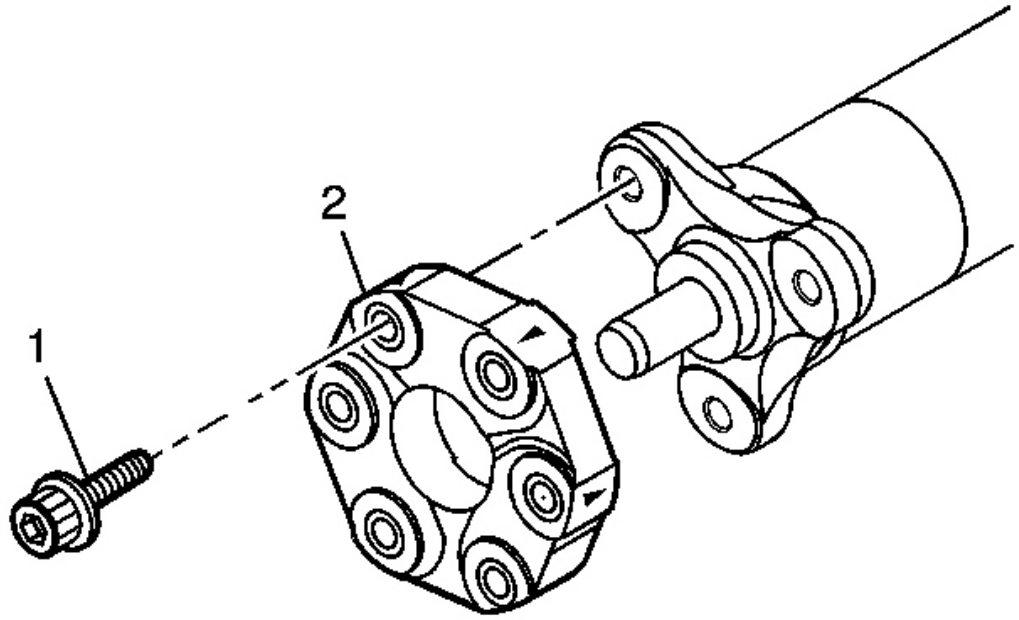

Fig. 201: Front Coupling, Bolts & Washers To Propeller Shaft
Courtesy of GENERAL MOTORS CORP.

6. Install the front coupling (2), bolts (1), and washers to the propeller shaft.

Tighten:

- Tighten the coupling bolts - Automatic Transmission to 70 N.m (52 lb ft).
- Tighten the coupling bolts - Manual Transmission to 90 N.m (66 lb ft).

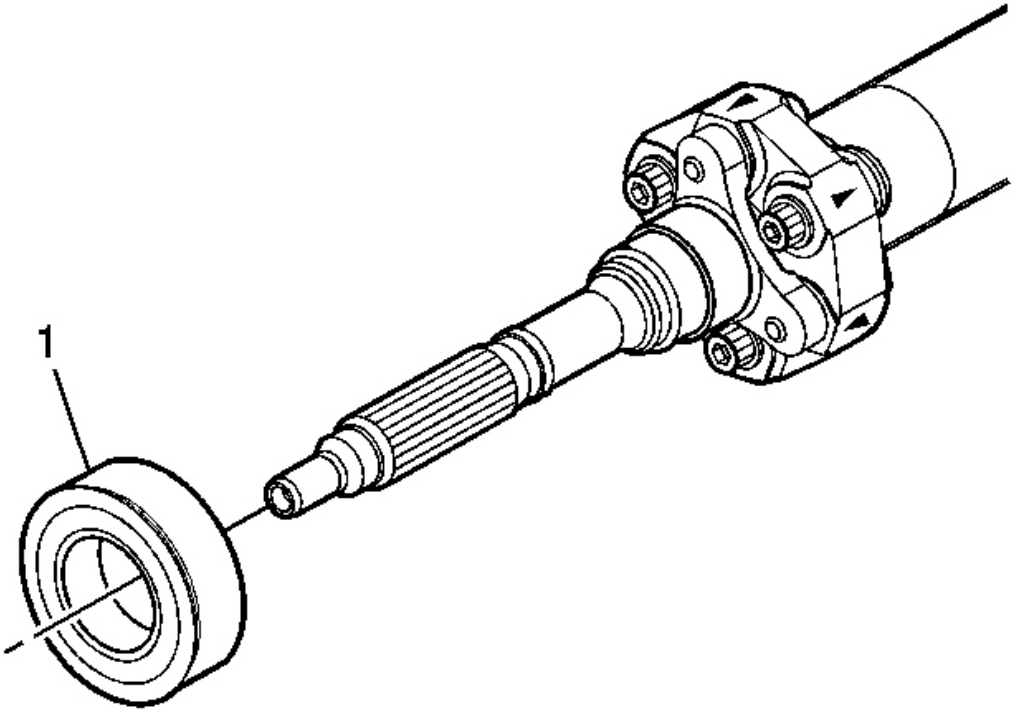

Fig. 202: Bearing To Input Shaft
Courtesy of GENERAL MOTORS CORP.

7. Install the bearing (1) onto the input shaft.

   Install the bearing until completely seated against the flange of the input shaft.

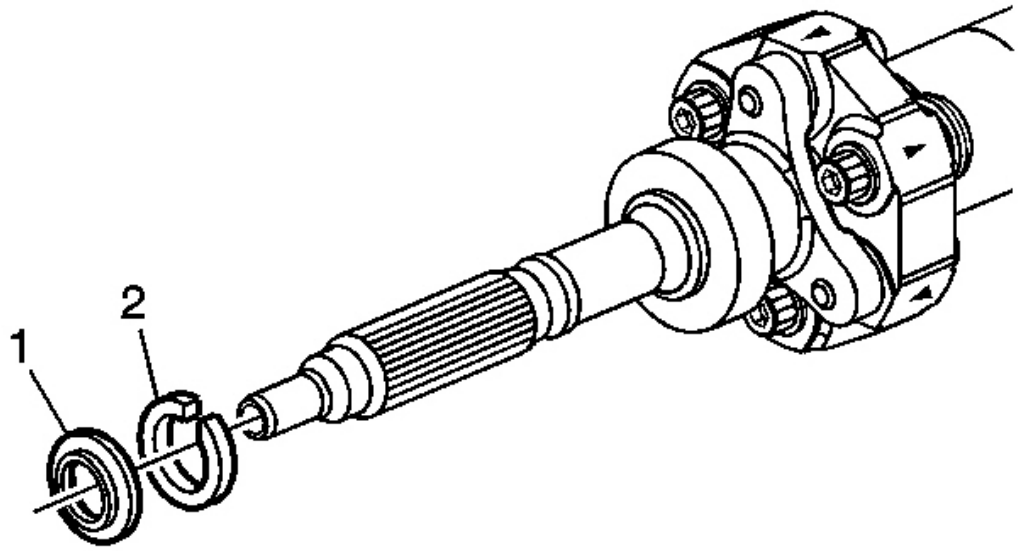

Fig. 203: Slinger Washer To Input Shaft
Courtesy of GENERAL MOTORS CORP.

8. Install the snap ring (2) into the groove of the input shaft.
9. Install a NEW slinger washer (1) onto the input shaft.

   A properly installed slinger washer will have a gap of 1.5-2.5 mm (0.050-0.098 in) between the washer and the bearing face.

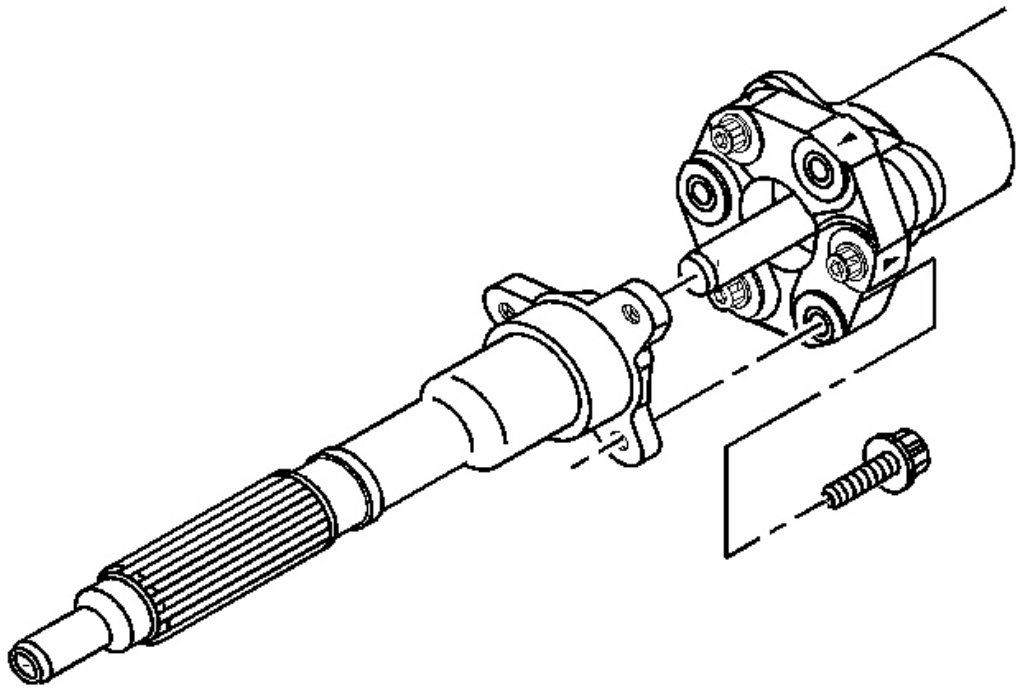

Fig. 204: Input Shaft, Bolts & Washers To Front Coupling
Courtesy of GENERAL MOTORS CORP.

10. Install the input shaft, bolts, and washers to the coupling.

Tighten:

- Tighten the coupling bolts - Automatic Transmission to 70 N.m (52 lb ft).
- Tighten the coupling bolts - Manual Transmission to 90 N.m (66 lb ft).

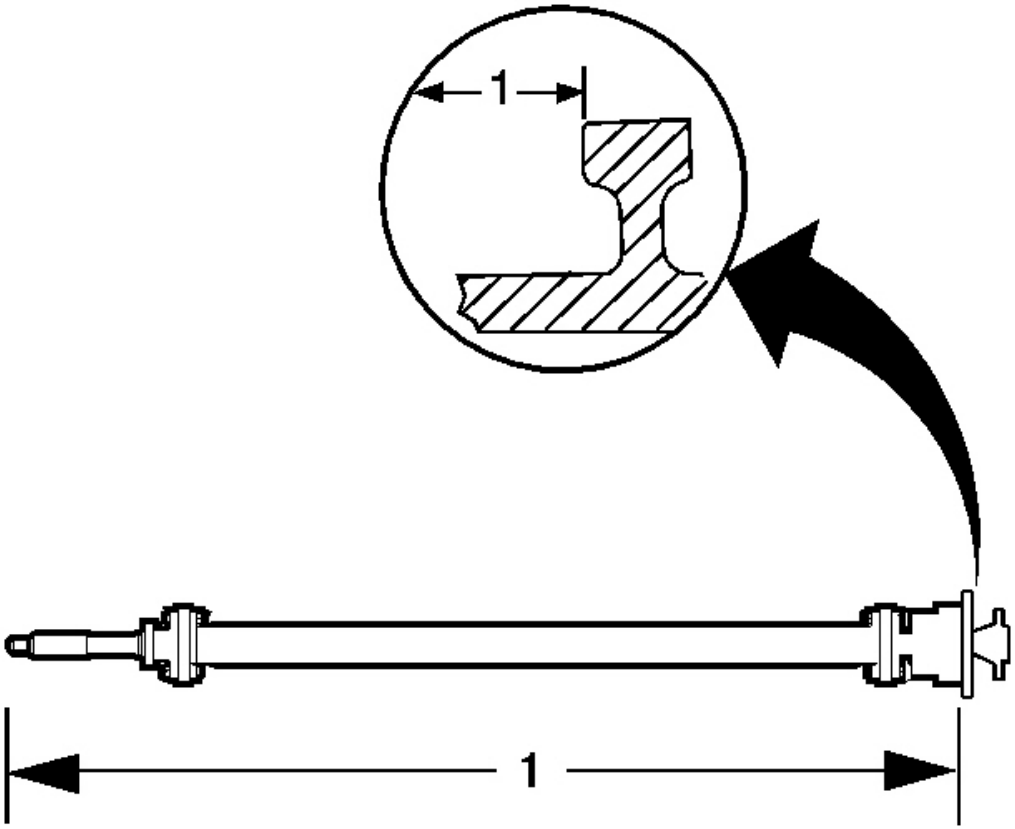

Fig. 205: End Of Input Shaft To Flange On Bearing Housing
Courtesy of GENERAL MOTORS CORP.

11. Measure the distance (1) from the end of the input shaft to the flange on the bearing housing - automatic transmission. Record the amount as distance 1.

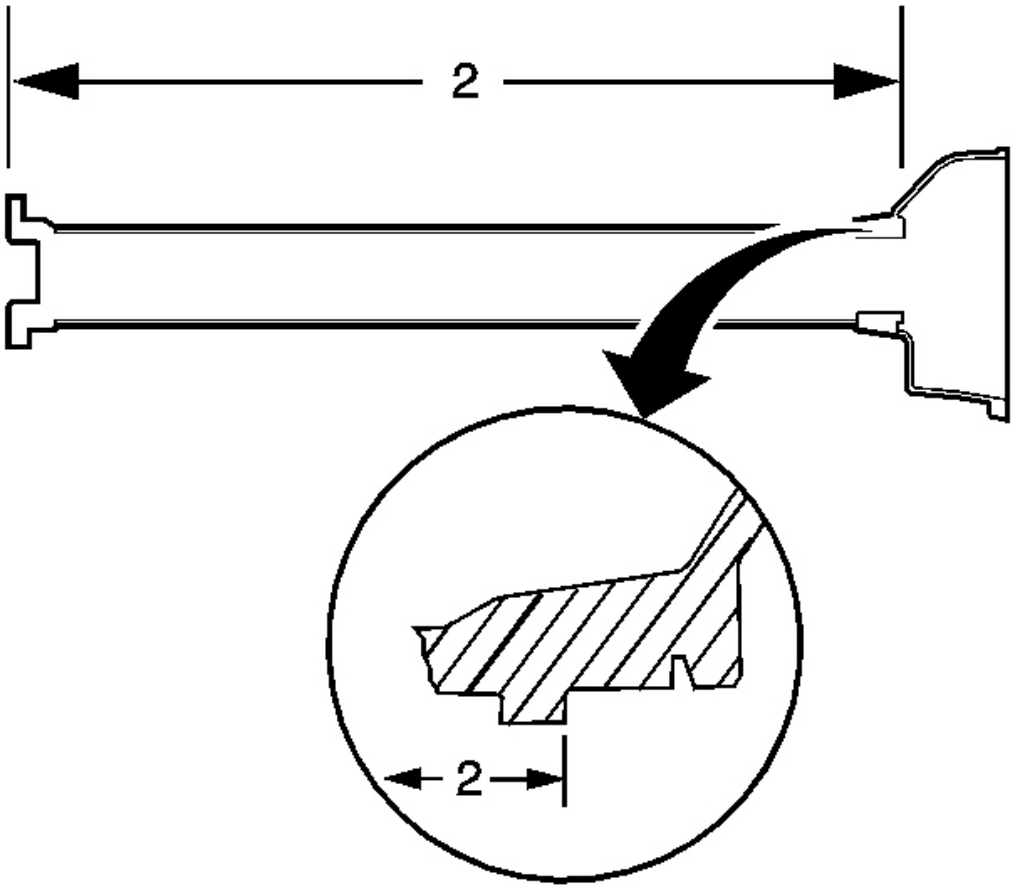

Fig. 206: Driveline Tube Front Bellhousing Flange To Bearing Housing Flange
Courtesy of GENERAL MOTORS CORP.

12. Measure the distance (2) from the driveline tube front bellhousing flange to the bearing housing flange - automatic transmission. Record this as distance 2.
13. Subtract the distance 2 from distance 1.
14. Record the computation as distance 3.

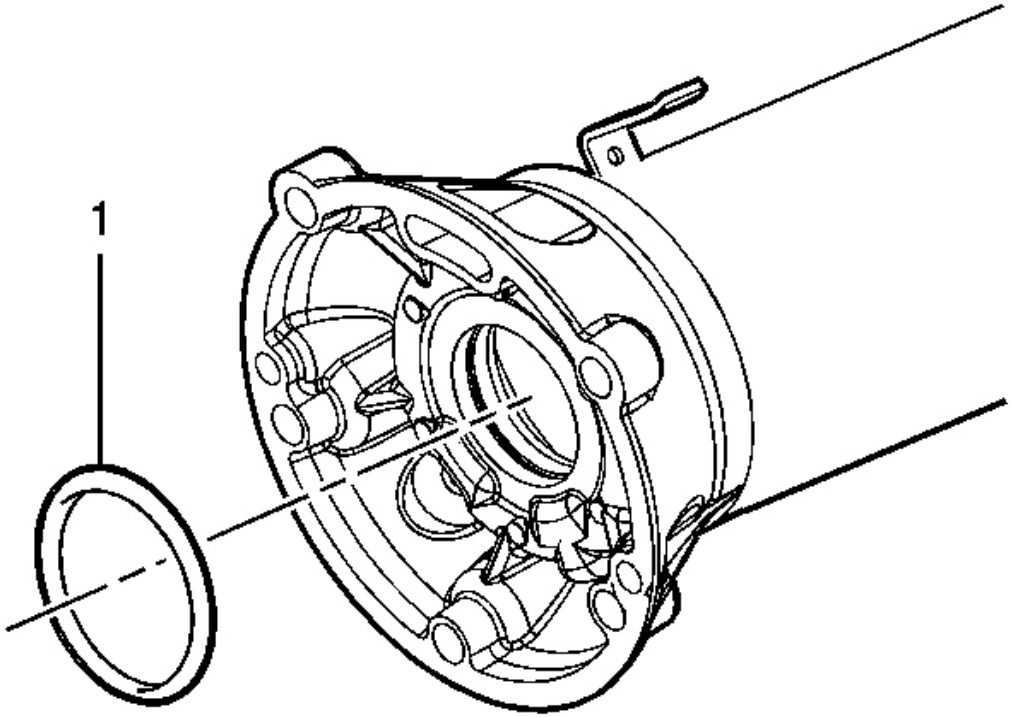

Fig. 207: O-Ring To Front Of Driveline Tube
Courtesy of GENERAL MOTORS CORP.

15. Lubricate the NEW driveline tube O-ring (1) with clean engine oil.
16. Install the O-ring into the front of the driveline tube.

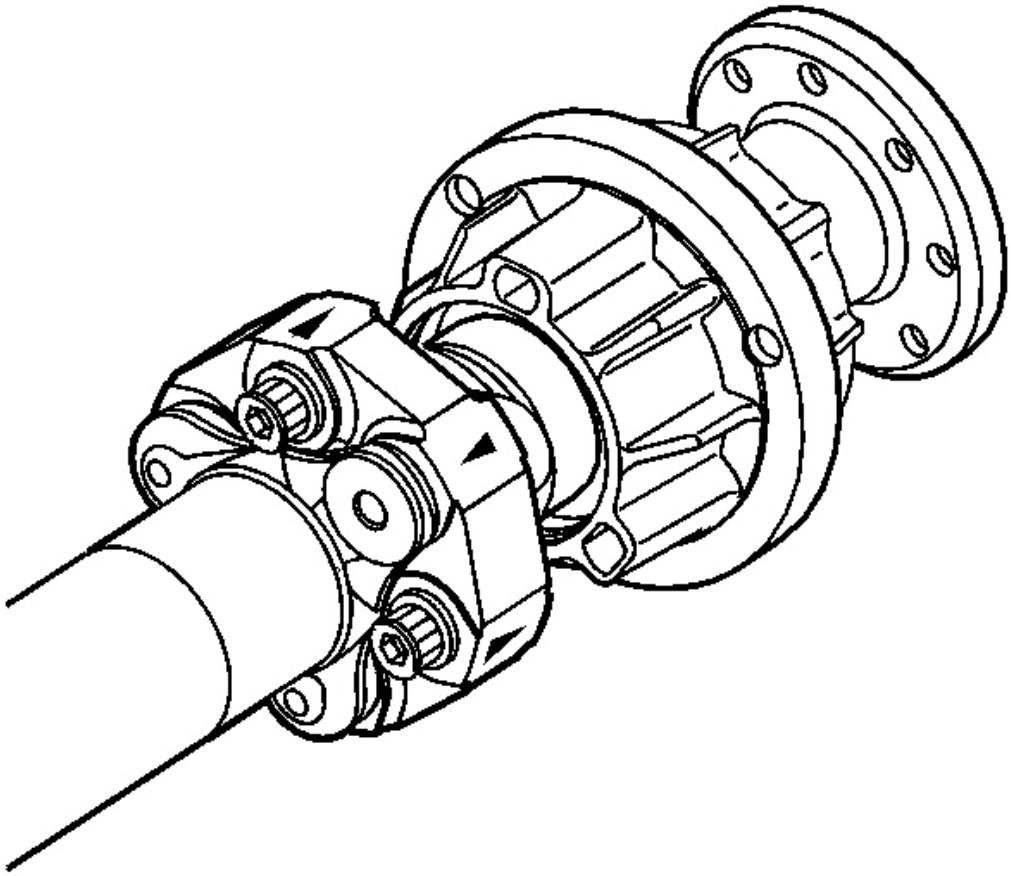

Fig. 208: Propeller Shaft Assembly To Driveline Tube
Courtesy of GENERAL MOTORS CORP.

17. Install the propeller shaft assembly into the driveline tube.

    During installation, lift the front of the input shaft to avoid damage to the slinger washer. Using a punch, tap evenly on the flat flange area of the rear bearing housing and install the assembly completely into the tube.

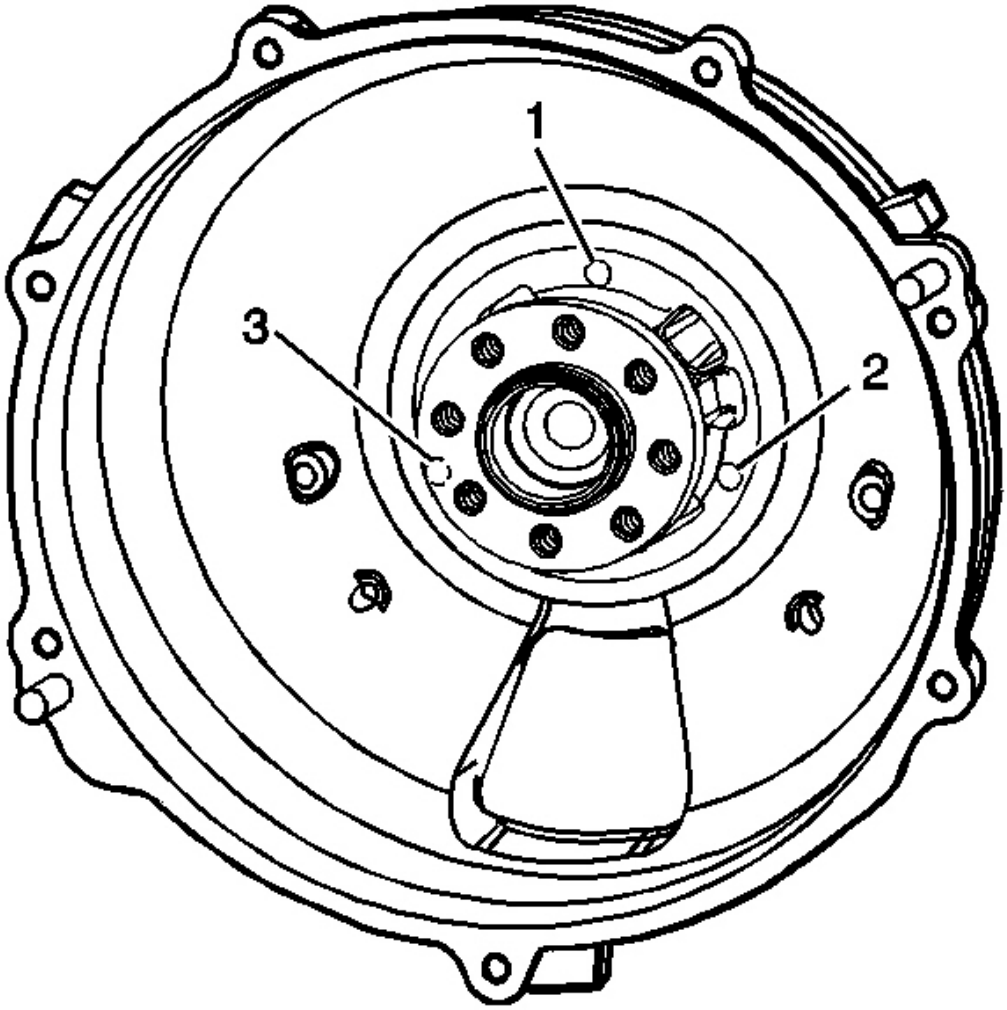

Fig. 209: Rear Bearing Housing Bolt Hole Plugs
Courtesy of GENERAL MOTORS CORP.

18. Install the rear bearing housing bolt hole plugs (1-3).

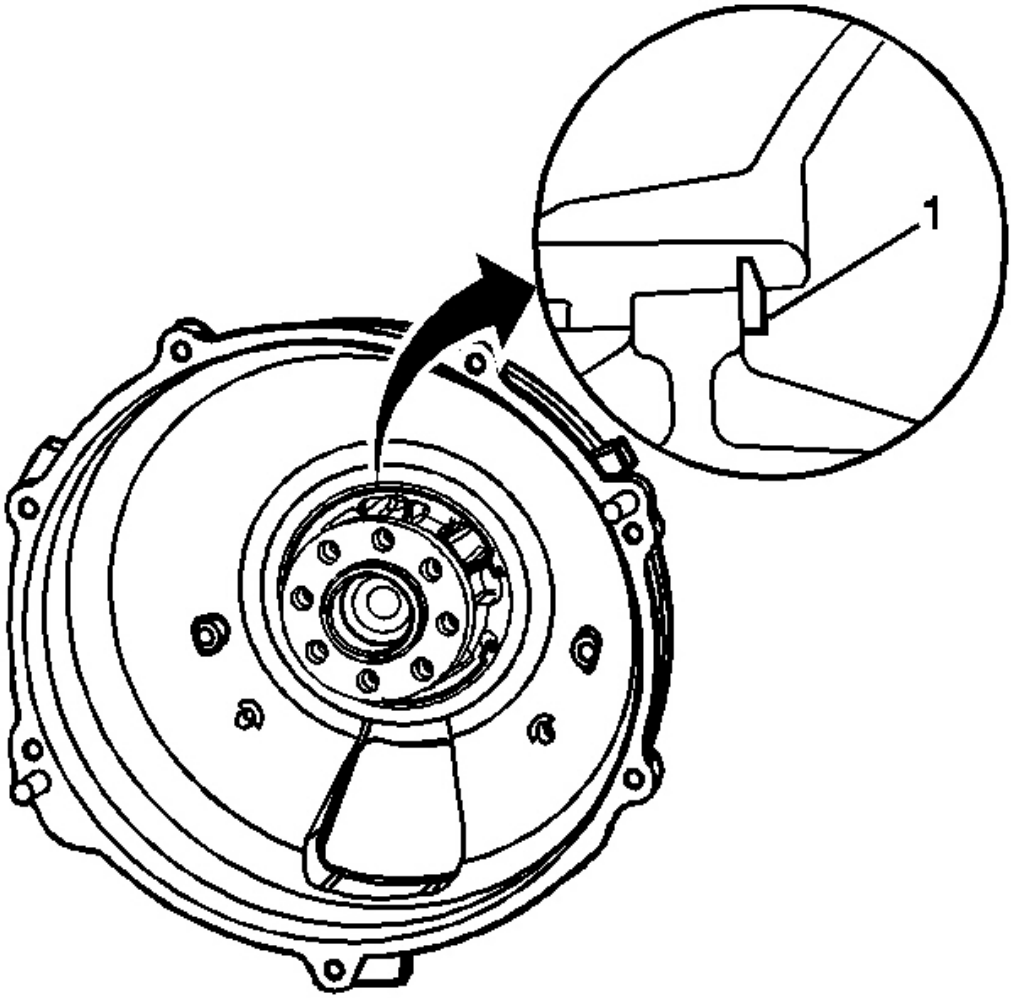

Fig. 210: Snap Ring Faces To Rear Of Driveline Tube Assembly
Courtesy of GENERAL MOTORS CORP.

19. Install the snap ring (1) into the driveline tube. The beveled edge of the snap ring faces the rear of the driveline tube assembly and will seat completely into the groove of the housing.

IMPORTANT: The propeller shaft assembly must be checked for proper installation into the driveline tube - automatic transmission. When the propeller shaft assembly is installed into the driveline tube, the couplings may compress and not properly position the input shaft.

20. Measure the distance from the end of the input shaft to the driveline tube front bell housing flange -

automatic transmission.

The actual distance must be equal to or within 2 mm (0.079 in) of the recorded dimension 3.

1. If the actual distance is not within specifications, use a heat gun and heat the outside of the driveline support tube at the front bearing location.
2. Tap on the rear of the propeller shaft assembly or pull on the input shaft until the shaft has reached the proper position.

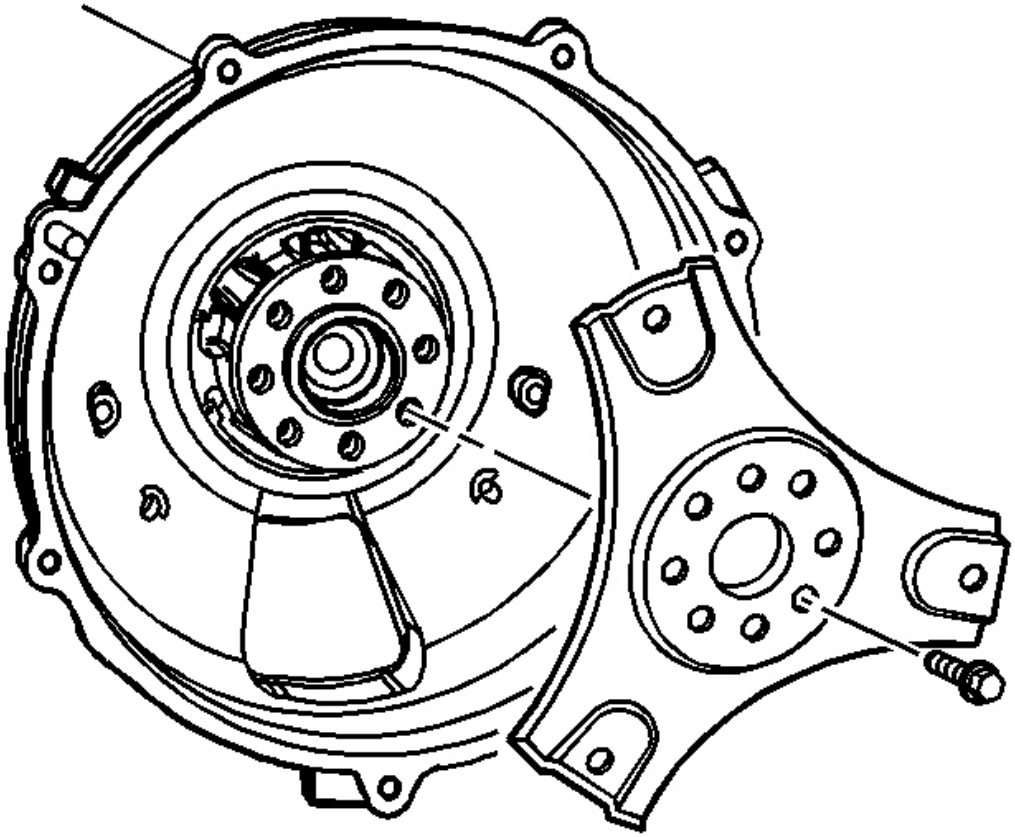

Fig. 211: Bolts & Flexplate To Flexplate Spindle
Courtesy of GENERAL MOTORS CORP.

21. Install the flex plate and bolts - automatic transmission.

Tighten: Tighten the flex plate bolts to 50 N.m (37 lb ft).

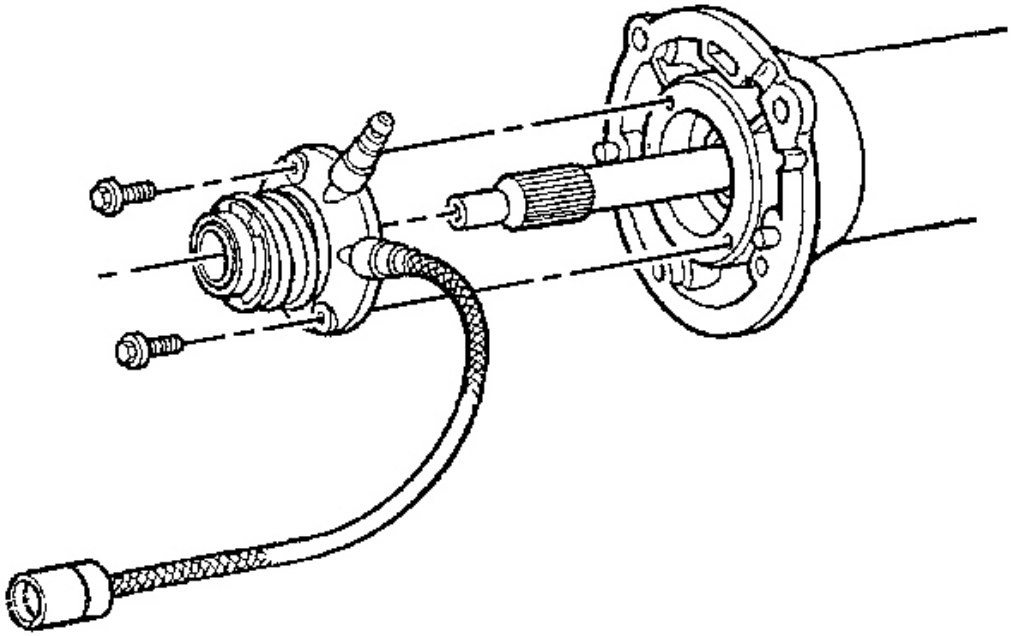

Fig. 212: Clutch Actuator Cylinder Mounting Bolts
Courtesy of GENERAL MOTORS CORP.

22. Install the clutch actuator and bolts - manual transmission.

    Tighten: Tighten the clutch actuator bolts to 12 N.m (106 lb in).

DESCRIPTION AND OPERATION

DRIVELINE SUPPORT ASSEMBLY DESCRIPTION

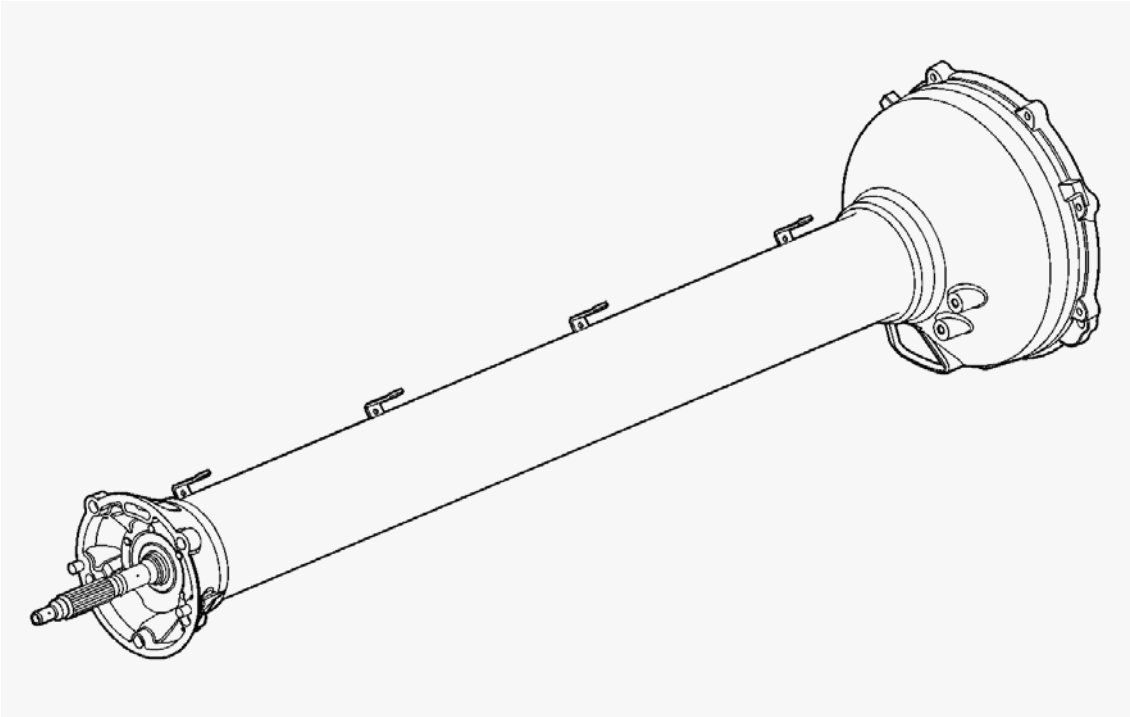

Fig. 213: Driveline Assembly
Courtesy of GENERAL MOTORS CORP.

Automatic Transmission application shown.

The driveline support assembly consists of a driveline support tube, with rear bell housing, and an internal propeller shaft assembly. The front of the driveline assembly mounts to the engine bellhousing. In manual transmission applications, the clutch actuator is retained to the front of the tube and the shifter linkage is mounted to brackets at the top center area. The driveline support assembly is specific for each vehicle as equipped, either automatic or manual transmission applications.

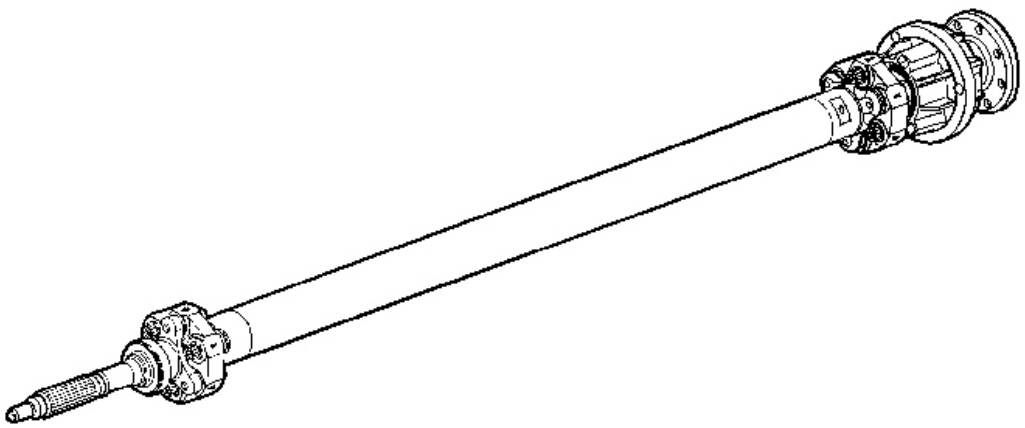

Fig. 214: Propeller Shaft Assembly (Automatic Transmission)
Courtesy of GENERAL MOTORS CORP.

The automatic transmission propeller shaft assembly consists of a splined front input shaft, front coupling, propeller shaft, rear coupling, M10 bolts, and a bearing and housing assembly. The input shaft, propeller shaft, couplings and bearing and housing assembly are balanced as an assembly. The front of the propeller shaft assembly is supported, at the input shaft, by a ball type bearing. An O-ring, located in the front of the driveline support tube, prevents the front bearing outer race from spinning. The rear of the propeller shaft assembly is supported by a bearing and housing assembly. The bearing and housing assembly consists of a housing, internally splined input hub, externally splined flexplate spindle, O-rings, snap rings, and two ball type bearings. The propeller shaft assembly is retained in the driveline tube by an internal snap ring. The torque converter flex plate is retained to the flexplate spindle by bolts and is mated to the torque converter.

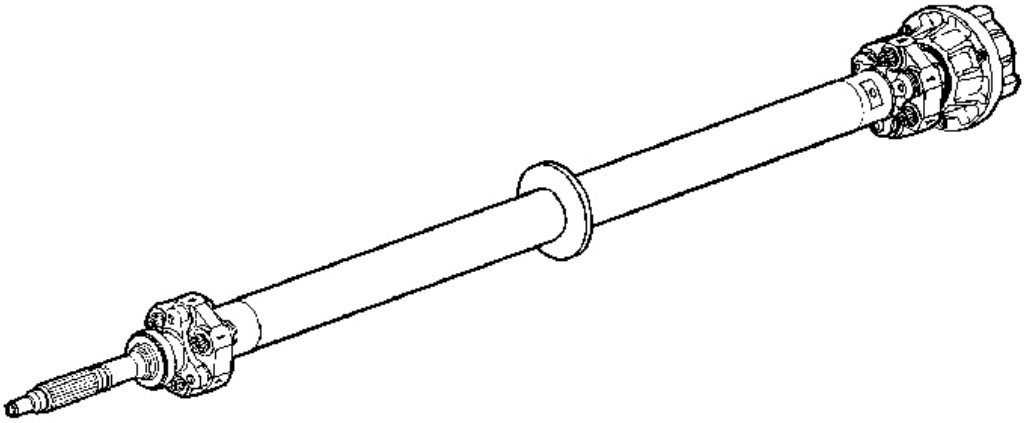

Fig. 215: Propeller Shaft Assembly (Manual Transmission)
Courtesy of GENERAL MOTORS CORP.

The manual transmission propeller shaft assembly consists of a splined front input shaft, front coupling, propeller shaft, rear coupling, M12 bolts, and a bearing and housing assembly. The input shaft, propeller shaft, couplings and bearing and housing assembly are balanced as an assembly. The front of the propeller shaft assembly is supported, at the input shaft, by a ball type bearing. An O-ring, located in the front of the driveline support tube, prevents the front bearing outer race from spinning. The rear bearing of the propeller shaft assembly is supported by a bearing and housing assembly. The bearing and housing assembly consists of a housing, internally splined hub, pilot bushings, O-rings, snap rings, a wave washer, and two ball type bearings. The bearing housing hub internal splines couple to the manual transmission splined input shaft. The propeller shaft assembly is retained in the driveline tube by an internal snap ring. The propeller shaft tube has an overspeed limiter, snubber, that prevents permanent propeller shaft damage as a result of a downshift above recommended speeds.

IMPORTANT: Disassembly and improper reassembly of the propeller shaft components may result in driveline vibration. The propeller shaft and components should be kept free of any foreign material which could upset balance and also produce driveline vibration.
When servicing the engine, transaxle, or driveline support assembly, the proper installation procedure must be followed. Automatic transmission applications have a specific installation procedure and sequence of installation steps. Failure to follow proper procedures may cause damage to other vehicle driveline components.

SPECIAL TOOLS AND EQUIPMENT

SPECIAL TOOLS

Special Tools

Illustration	Tool Number/ Description
	J 2619-01 Slide Hammer
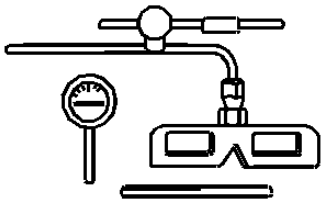	J 7872 Magnetic Base Dial Indicator Set
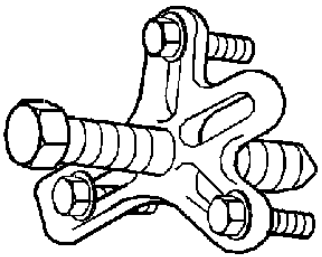	J 24420-C Harmonic Balancer Puller
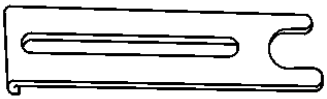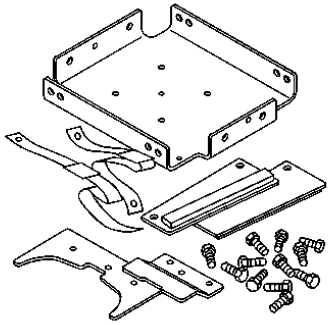	J 36221 Hydraulic Clutch Separator
	J 42055 Transmission Support Fixture