SPECIFICATIONS

FASTENER TIGHTENING SPECIFICATIONS

Fastener Tightening Specifications

Application	Specification	
	Metric	English
Exhaust Manifold Bolt (First Pass)	15 N.m	11 lb ft
• Final Pass	25 N.m	18 lb ft
Exhaust Manifold Heat Shield Bolt	9 N.m	80 lb in
Exhaust Manifold Nut	20 N.m	15 lb ft
Exhaust Muffler Bolt	50 N.m	37 lb ft
Exhaust Muffler Hanger Nut	16 N.m	12 lb ft
Exhaust Pipe Brace Lower Bolt	50 N.m	37 lb ft
Exhaust Pipe Hanger Bolt	50 N.m	37 lb ft
Ignition Coil Bracket Stud	12 N.m	106 lb in
Oxygen Sensor	42 N.m	30 lb ft
Rear Stabilizer Shaft Bracket Bolt	65 N.m	49 lb ft
Rear Stabilizer Shaft Bracket Nut	95 N.m	70 lb ft
Secondary Air Injection (AIR) Pipe Bolt	20 N.m	15 lb ft

DIAGNOSTIC INFORMATION AND PROCEDURES

DIAGNOSTIC STARTING POINT - ENGINE EXHAUST

Begin the system diagnosis by reviewing the system Description and Operation. Reviewing the information will help you determine the correct symptom diagnostic procedure when a malfunction exists. It will also help you determine if the condition described by the customer is normal operation. Refer to **Symptoms - Engine Exhaust** in order to identify the correct procedure for diagnosing the system.

SYMPTOMS - ENGINE EXHAUST

- Review the Exhaust System Description and Operation in order to familiarize yourself with the system functions. Refer to **Exhaust System Description** .
- All diagnostics on a vehicle should follow a logical process. Strategy Based Diagnostics is a uniform approach for repairing all systems. The diagnostic flow is the place to start when repairs are necessary and may always be used in order to resolve a system problem. For a detailed explanation, refer to **Strategy Based Diagnosis** in General Information.

cardiagn.com

Visual/Physical Inspection

- Inspect for aftermarket or non-OEM devices such as, but not including; tailpipe extensions, headers, and exhaust cutouts. This could affect the operation and proper performance of the exhaust system.
- Verify the exact operating conditions under which the concern exists. Note factors such as engine RPM, engine temperature, engine load, and frequency of concern.
- Inspect the easily accessible or visible system components for obvious damage or conditions which could cause any symptom.

Intermittent

Test the vehicle under the same conditions that the customer reported in order to verify the system is operating as designed.

Symptom List

Refer to a symptom diagnostic procedure from the following list in order to diagnose the symptom:

- Loss of power

  Refer to **Restricted Exhaust** .

- Poor acceleration

  Refer to **Restricted Exhaust** .

- Poor fuel economy

  Refer to **Restricted Exhaust** .

- Excessive smoke (diesel)

  Refer to **Restricted Exhaust** .

- Exhaust hissing noise

  Refer to **Exhaust Leakage** .

- Exhaust popping noise

  Refer to **Exhaust Leakage** .

- Exhaust rattle noise

  Refer to **Exhaust Noise** .

cardiagn.com

- Loud exhaust noise

  Refer to **Exhaust Noise** .

- Exhaust buzz, groan, humm noise

  Refer to **Exhaust Noise** .

RESTRICTED EXHAUST

Diagnostic Aids

CAUTION: Refer to Hot Exhaust System Caution in Cautions and Notices.

For dual exhaust systems a quick check of exhaust flow will help determine which side of the exhaust system is restricted. The side that has less exhaust flow is the side that will be suspect, and diagnosis should begin there.

Test Description

The numbers below refer to the step numbers on the diagnostic table.

4: The exhaust system has very low back pressure under normal conditions. If the exhaust system is restricted, a significant increase in the exhaust pressure is noticed on the **J 35314-A** Exhaust Back Pressure Gage. See **Special Tools and Equipment** .Removing the AIR check valve or HO2S sensor may set a DTC. When finishing this diagnostic table, be sure to clear all codes.

5: This step will isolate the catalytic converter from the remainder of the exhaust system.

8: Confirming that the condition has been fixed is essential. If the symptom still exists and the vehicle has a dual exhaust system, proceed to Step 2 and repeat diagnostic procedure on the opposite exhaust pipe.

Restricted Exhaust

Step	Action	Value (s)	Yes	No
1	Did you verify the customers complaint?	-	Go to **Step 2**	-
2	Did you review the exhaust symptoms diagnostic information and perform the necessary inspections?	-	Go to **Step 3**	Go to **Symptoms - Engine Exhaust**
3	Is the system equipped with dual exhaust?	-	Go to Diagnostic Aids	Go to **Step 4**
	1. Remove the AIR check valve or the HO2S that is in front of and closest to the catalytic converter. Refer to			

cardiagn.com

4	**Heated Oxygen Sensor (HO2S) Replacement Bank 1 Sensor 1** or **Heated Oxygen Sensor (HO2S) Replacement Bank 2 Sensor 1** in Engine Controls - 5.7 L. 2. Install the **J 35314-A** in place of the AIR check valve or HO2S sensor. See **Special Tools and Equipment** . 3. Start the engine. 4. Increase and monitor the engine speed at 2,000 RPM. 5. Observe the exhaust system back pressure reading on the gage. Does the reading exceed the specified value?	14 kPa (2 psi)	Go to **Step 5**	Go to **Step 8**
5	1. Turn the engine off and place the ignition in the lock position. 2. Remove the **J 35314-A** . See **Special Tools and Equipment** . 3. Re-install the AIR check valve/HO2S sensor. Refer to **Heated Oxygen Sensor (HO2S) Replacement Bank 1 Sensor 1** or **Heated Oxygen Sensor (HO2S) Replacement Bank 2 Sensor 1** in Engine Controls - 5.7 L. 4. Remove the post-catalyst HO2S sensor. Refer to **Heated Oxygen Sensor (HO2S) Replacement Bank 1 Sensor 2** or **Heated Oxygen Sensor (HO2S) Replacement Bank 2 Sensor 2** in Engine Controls - 5.7 L. 5. Install the **J 35314-A** in place of the post HO2S sensor. See **Special Tools and Equipment** . 6. Start the engine. 7. Increase and monitor the engine speed at 2000 RPM. 8. Observe the exhaust system back pressure reading on the gage. Does the reading exceed the specified value?	14 kPa (2 psi)	Go to **Step 6**	Go to **Step 7**
6	Inspect the exhaust system for the following conditions: • Damage in the exhaust pipe • Debris in the exhaust pipe • Muffler or resonator internal failure • Two-layer exhaust pipe separation	-	Go to **Step**	-

cardiagn.com

	Did you find and correct the condition?		**8**	
7	Replace the catalytic converter. Refer to **Catalytic Converter Replacement** . Did you find and correct the condition?	-	Go to **Step 8**	-
8	1. Remove the **J 35314-A** . See **Special Tools and Equipment** . 2. Reinstall the AIR check valve or the post-catalyst HO2S sensor. Refer to **Heated Oxygen Sensor (HO2S) Replacement Bank 1 Sensor 2** or **Heated Oxygen Sensor (HO2S) Replacement Bank 2 Sensor 2** in Engine Controls - 5.7 L. 3. Clear any codes. 4. Road test the vehicle in order to verify the repair. Did you correct the condition?	-	System OK	Go to **Step 2**

EXHAUST LEAKAGE

Exhaust Leakage

Problem	Action
CAUTION: **Refer to Hot Exhaust System Caution in Cautions and Notices.** DEFINITION: An exhaust leak may show stains at the area of the leak. The leak may be felt by holding a hand close to the suspected areas or using a smoke pencil. The leak may make a popping or hissing noise.Refer to **Symptoms - Engine Exhaust** prior to beginning this table.	
Misaligned or improperly installed exhaust system components.	1. Align and tighten the components to the specifications. Refer to **Fastener Tightening Specifications** . 2. Ensure the exhaust hangers are in the proper locations and not loose.
Exhaust leaks at the following connections: • Exhaust manifold to pipe • Flanges • Pipe clamps	Tighten the components to the specifications. Refer to **Fastener Tightening Specifications** .
Seals or gaskets leaking. • Exhaust manifold to cylinder head • Exhaust pipes to exhaust manifold • Catalytic converter connection • EGR connections	Replace the leaking seal or gasket. Refer to the affected components procedure for service.

cardiagn.com

• AIR connections to the exhaust manifold or cylinder head	
Irregularities at the mating surfaces on the flange connections.	Repair as required or replace the affected component. Refer to the affected components procedure for service.
Exhaust manifold cracked or broken.	Replace the exhaust manifold. Refer to **Exhaust Manifold Replacement - Left** or **Exhaust Manifold Replacement - Right** .
Exhaust system component connection welds leaking.	Replace the leaking component. Refer to the affected component's procedure for service.
Muffler damaged or leaking at the seams.	Replace the affected muffler. Refer to one of the following procedures: **Muffler Replacement - Left** or **Muffler Replacement - Right** .

EXHAUST NOISE

Exhaust Noise

Condition	Action
CAUTION: **Refer to Hot Exhaust System Caution in Cautions and Notices.** DEFINITION: An audible or physical noise due to a faulty component or damaged components causing a loose or misaligned exhaust system resulting in a rattle or vibration noise (buzz, groan, hum).Refer to **Symptoms - Engine Exhaust** prior to beginning this table.	
Popping or hissing noise.	Exhaust leak. Refer to **Exhaust Leakage** .
Loud exhaust.	1. Compare to a known good vehicle. 2. Inspect for a damaged or failed muffler. 3. Replace the faulty muffler. Refer to one of the following procedures: **Muffler Replacement - Left** or **Muffler Replacement - Right**
External rattle or vibration noise.	1. Inspect for a bent or loose hanger, loose heat shield, or loose clamp. 2. Inspect for a exhaust pipe causing interference. 3. Repair or replace the affected component. Refer to the affected component's service procedure.
Internal rattle.	1. Test the components by tapping with a rubber mallet to confirm a rattle. 2. Replace the faulty catalytic converter, resonator, or muffler. Refer to one of the following procedures: • **Catalytic Converter Replacement** Catalytic Converter Replacement • **Muffler Replacement - Left** or **Muffler Replacement - Right**

cardiagn.com

REPAIR INSTRUCTIONS

EXHAUST MANIFOLD REPLACEMENT - LEFT

Removal Procedure

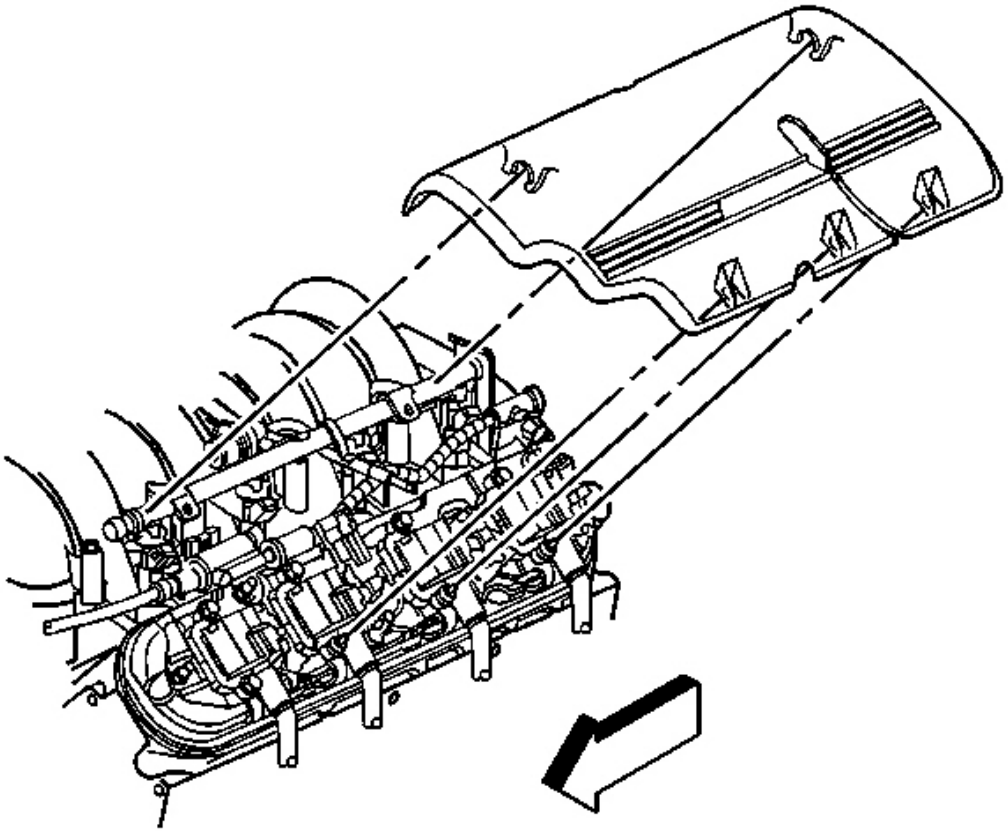

Fig. 1: Generator Fuel Rail Cover
Courtesy of GENERAL MOTORS CORP.

1. Remove the fuel rail cover.
2. Remove the generator. Refer to **Generator Replacement** in Engine Electrical.
3. Raise and suitably support the vehicle. Refer to **Lifting and Jacking the Vehicle** in General Information.

cardiagn.com

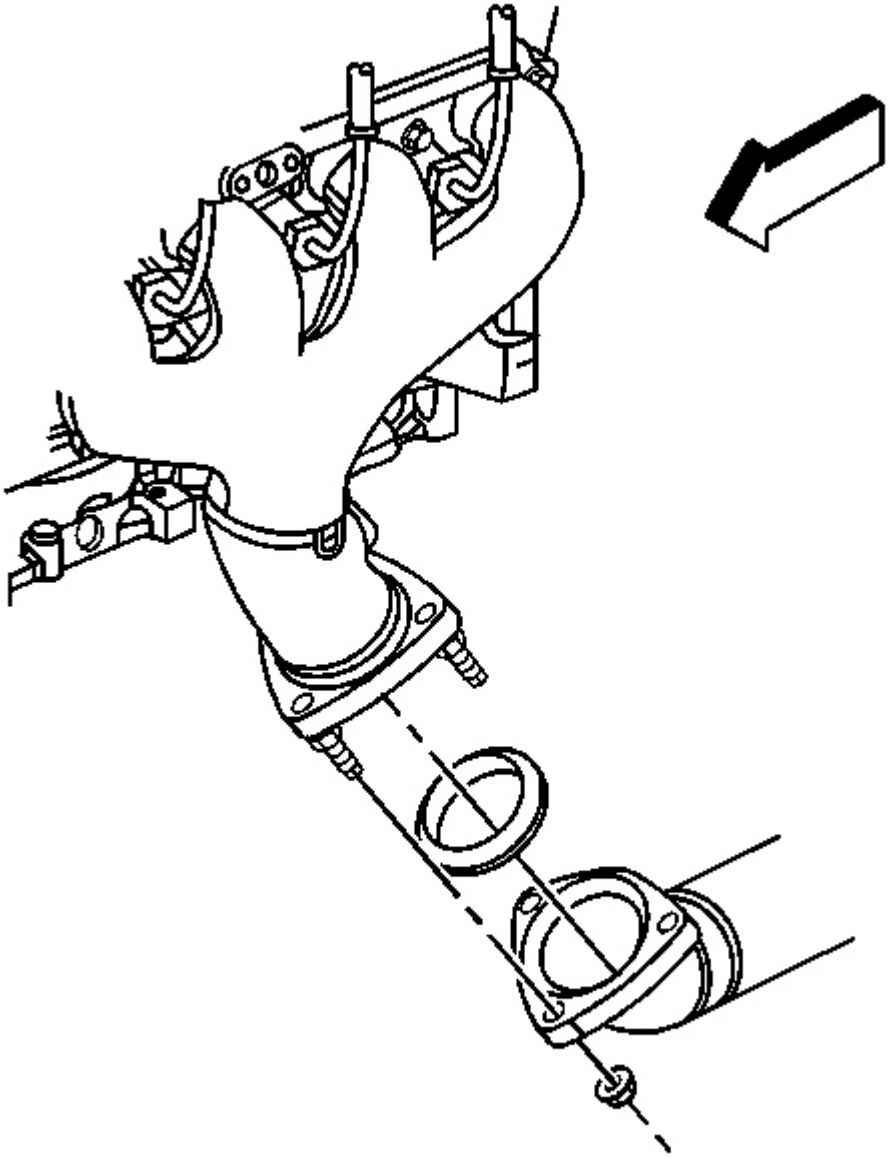

Fig. 2: Exhaust Manifold & Nuts
Courtesy of GENERAL MOTORS CORP.

4. Remove the exhaust manifold nuts.

cardiagn.com

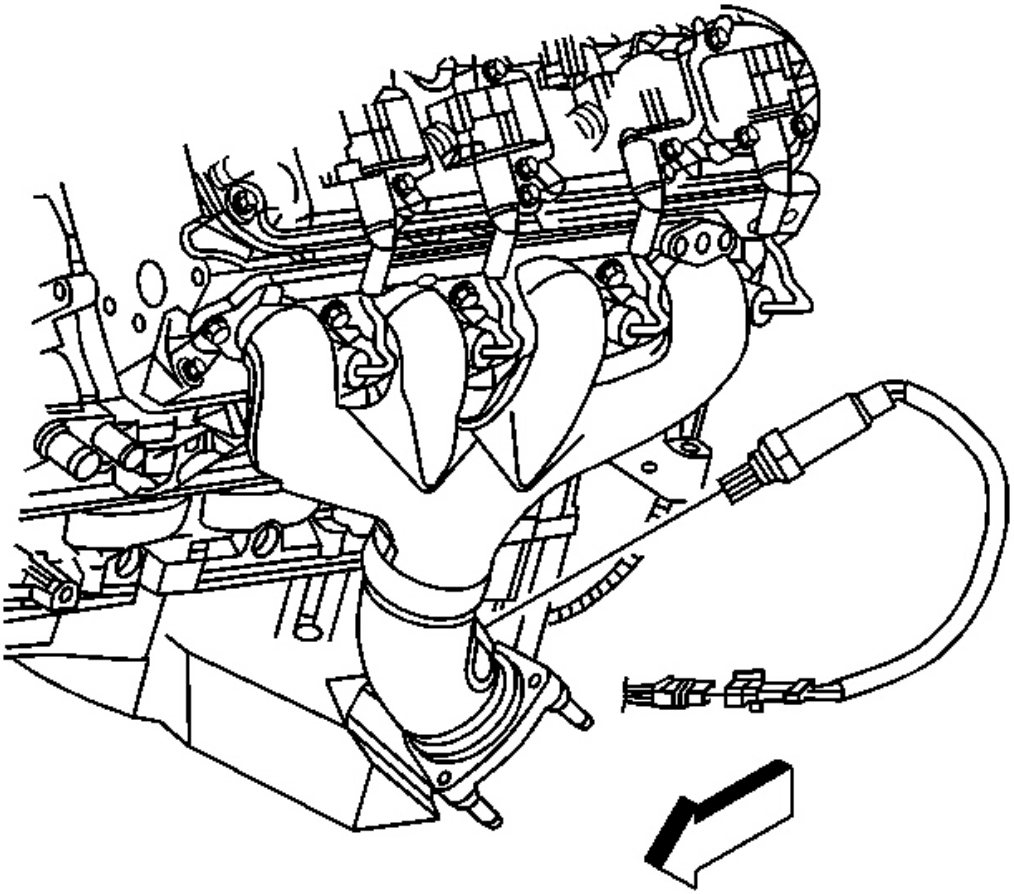

Fig. 3: Oxygen Sensor Electrical Connector
Courtesy of GENERAL MOTORS CORP.

5. Remove the connector position assurance (CPA) lock.
6. Disconnect the oxygen sensor electrical connector.
7. Remove the oxygen sensor connector clip at the body.

NOTE: Refer to Oxygen Sensor Notice in Cautions and Notices.

8. Remove the oxygen sensor.
9. Lower the vehicle.

cardiagn.com

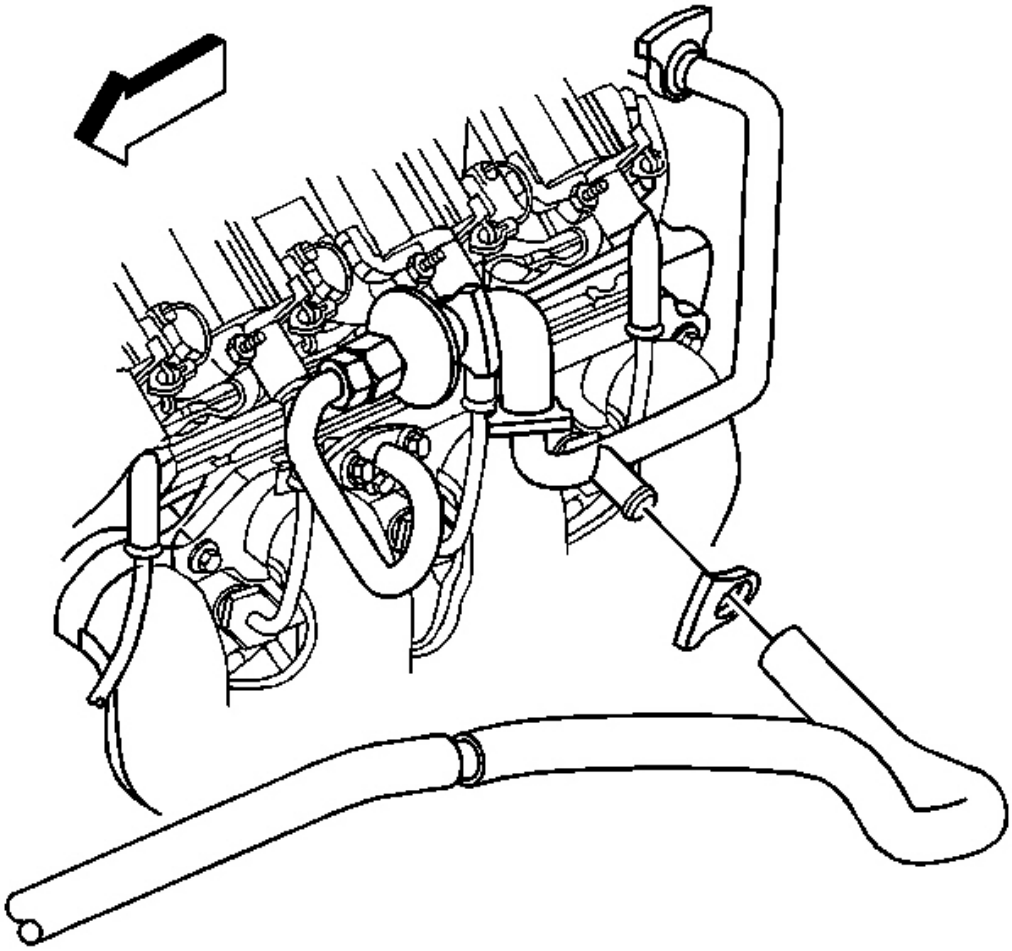

Fig. 4: AIR Pipe Hose & Hose Clamp
Courtesy of GENERAL MOTORS CORP.

10. Remove the hose clamp at the secondary air injection (AIR) pipe.
11. Remove the AIR hose from the AIR pipe.

cardiagn.com

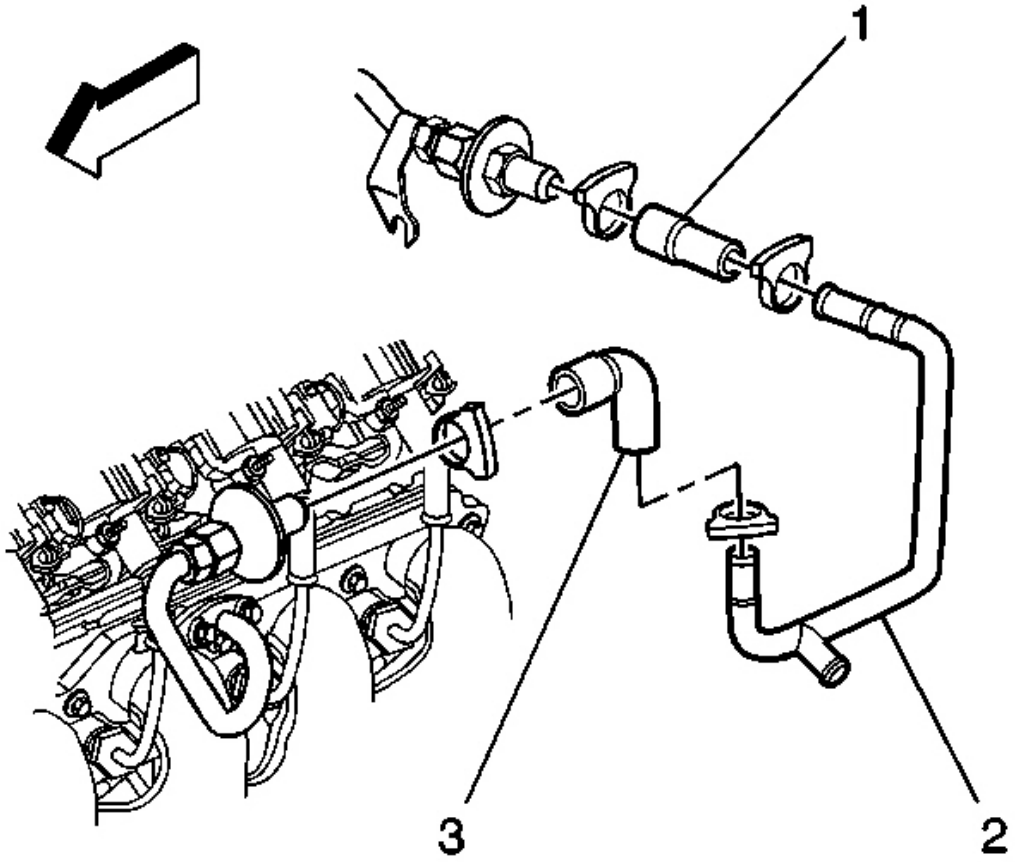

Fig. 5: Right/Left Check Valve, AIR Injection Pipe Hose & AIR Pipe
Courtesy of GENERAL MOTORS CORP.

12. Remove the hose clamps at the right and left check valves.
13. Remove the AIR injection pipe hose (1) from the right check valve.
14. Remove the AIR injection pipe hose (3) from the left check valve.
15. Remove the AIR pipe (2).

cardiagn.com

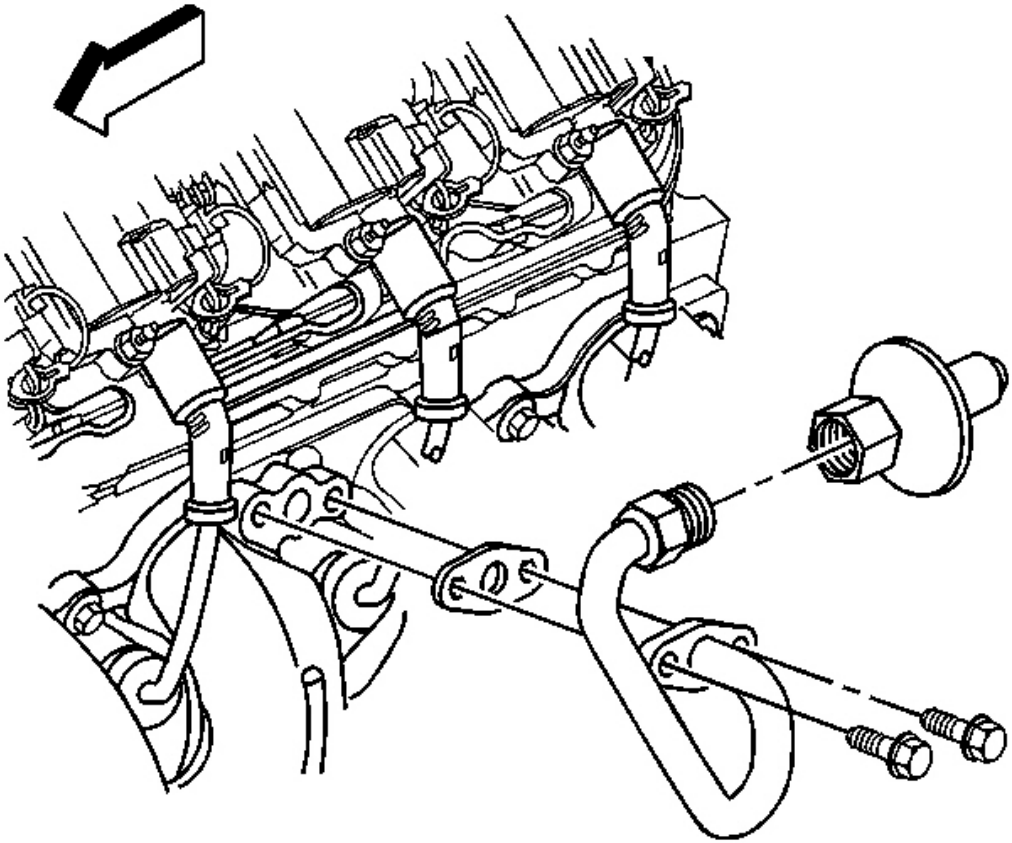

Fig. 6: AIR Pipe, Gasket & Bolts
Courtesy of GENERAL MOTORS CORP.

IMPORTANT: Do not remove the check valve from the AIR pipe unless valve service is required.

16. Remove the AIR pipe bolts.
17. Remove the AIR pipe and gasket. Discard the old gasket

cardiagn.com

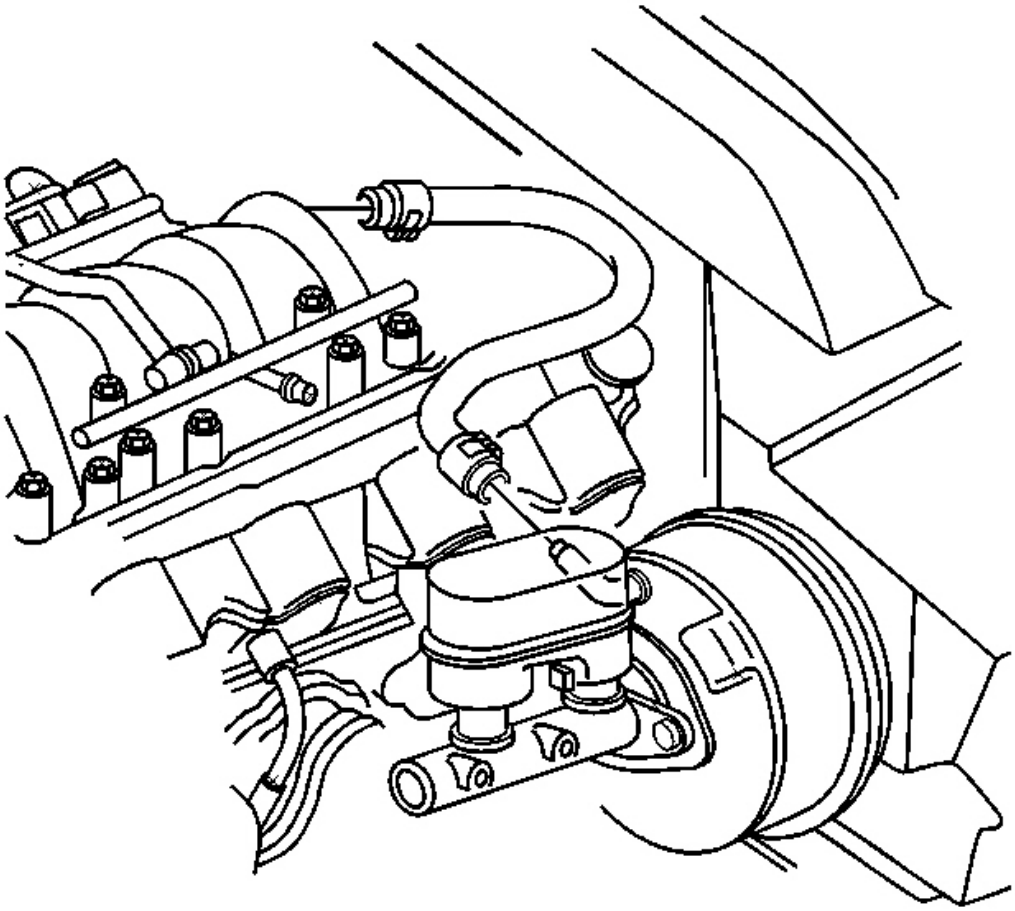

Fig. 7: Vacuum Booster Hose
Courtesy of GENERAL MOTORS CORP.

18. Remove the brake booster vacuum hose from the brake booster.

cardiagn.com

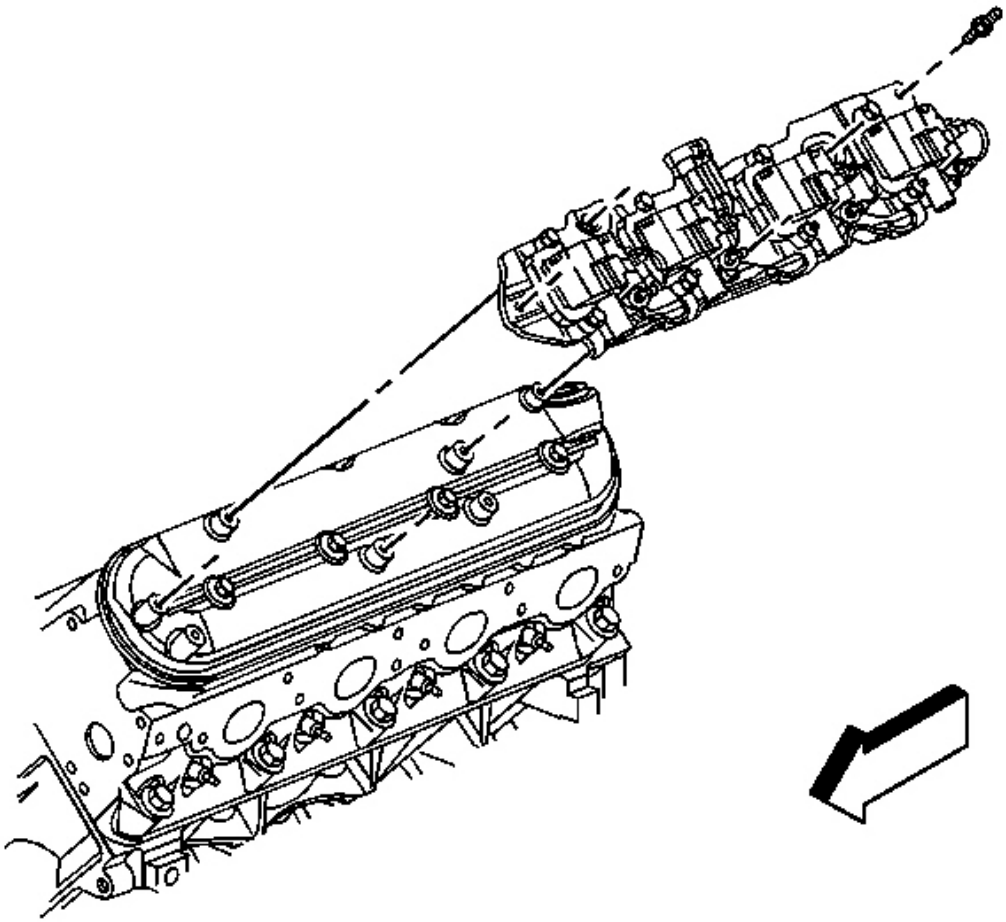

Fig. 8: Left Ignition Coil Bracket & Studs
Courtesy of GENERAL MOTORS CORP.

19. Remove the ignition coil bracket studs.
20. Remove the ignition coil bracket.
21. Remove the spark plugs. Refer to **Spark Plug Replacement** in Engine Controls - 5.7 L.

cardiagn.com

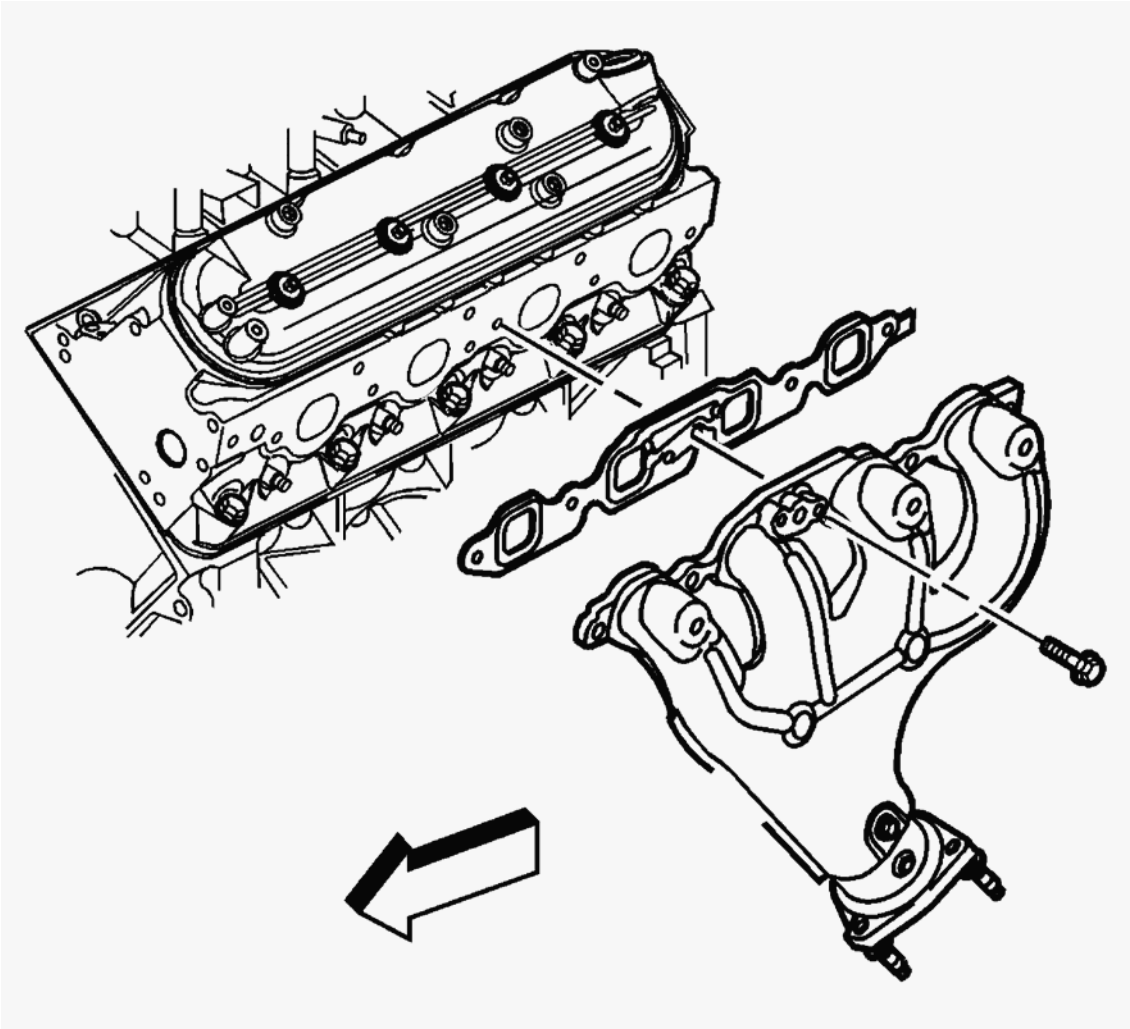

Fig. 9: Left Exhaust Manifold, Bolts & Gasket
Courtesy of GENERAL MOTORS CORP.

22. Remove the exhaust manifold bolts.
23. Remove the exhaust manifold, and old gasket. Discard the gasket.
24. If necessary, remove the exhaust manifold heat shield bolts and shield.

Installation Procedure

IMPORTANT: Tighten the exhaust manifold bolts as specified in the service procedure. Improperly installed and/or leaking exhaust manifold gaskets may effect vehicle emissions and/or On-Board Diagnostics (OBD) II system performance.

The cylinder head exhaust manifold bolt hole threads must be cleaned and free of debris or threadlocking material.

cardiagn.com

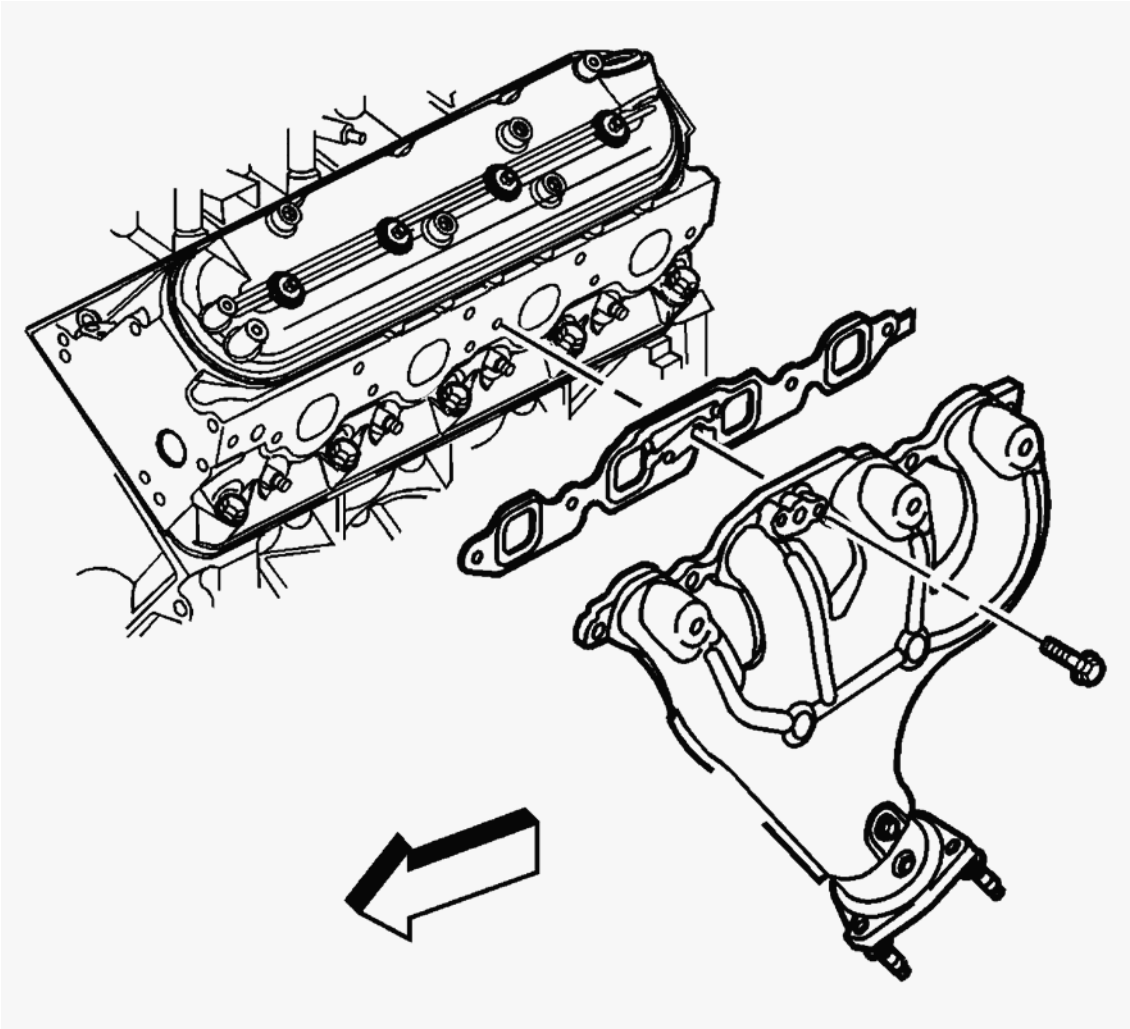

Fig. 10: Left Exhaust Manifold, Bolts & Gasket
Courtesy of GENERAL MOTORS CORP.

NOTE: Refer to Fastener Notice in Cautions and Notices.

1. If necessary, install the exhaust manifold heat shield and bolts.

   Tighten: Tighten the exhaust manifold heat shield bolts to 9 N.m (80 lb in).

2. Apply a 5 mm (0.2 in) wide band of threadlock GM P/N 12345493 (Canadian P/N 10953489), or equivalent to the threads of the exhaust manifold bolts.
3. Position the exhaust manifold and a NEW gasket into place.
4. Install the exhaust manifold bolts.

   Tighten:

   1. Tighten the exhaust manifold bolts a first pass to 15 N.m (11 lb ft). Tighten the exhaust manifold bolts beginning with the center two bolts. Alternate from side-to-side, working toward the outside

cardiagn.com

bolts.

2. Tighten the exhaust manifold bolts a final pass to 25 N.m (18 lb ft). Tighten the exhaust manifold bolts beginning with the center two bolts. Alternate from side-to-side, working toward the outside bolts.

5. Bend over the exposed edge of the exhaust manifold gasket at the rear of the cylinder head.

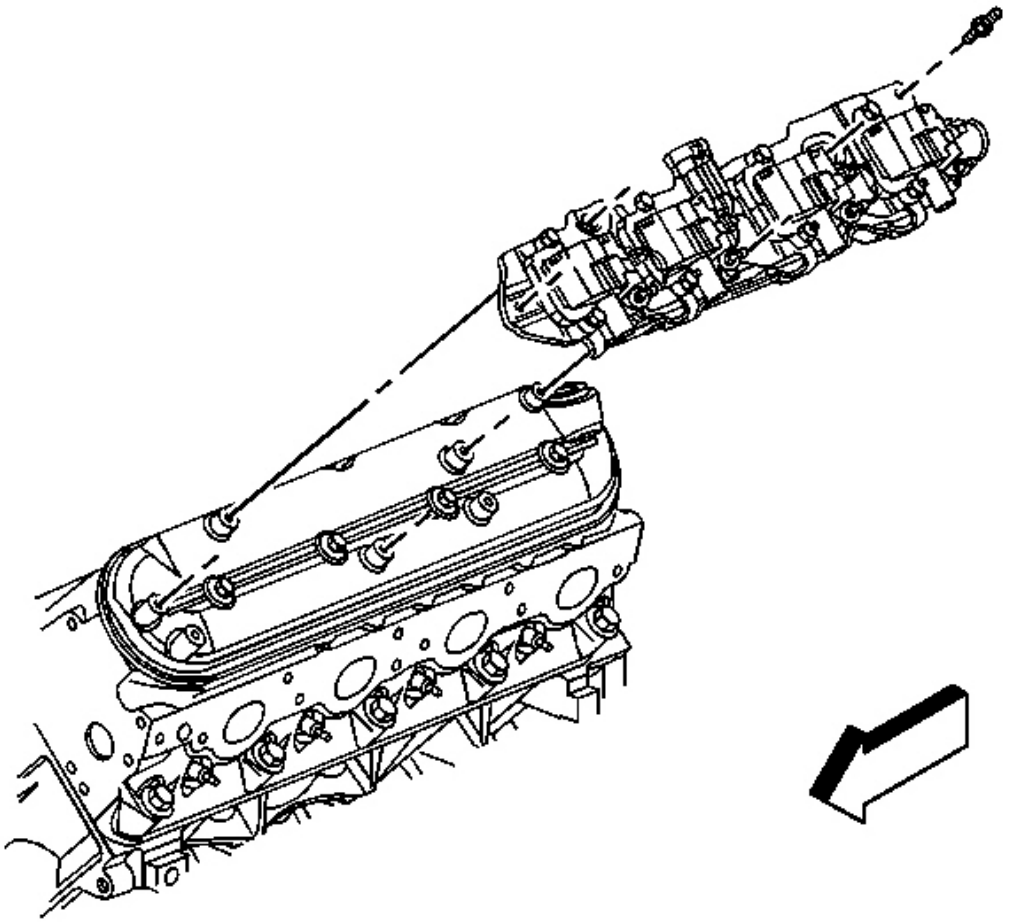

Fig. 11: Left Ignition Coil Bracket & Studs
Courtesy of GENERAL MOTORS CORP.

6. Install the spark plugs. Refer to **Spark Plug Replacement** in Engine Controls - 5.7 L.
7. Place the ignition coil bracket into place.
8. Apply threadlock GM P/N 12345382 (Canadian P/N 10953489), or equivalent to the threads of the coil

cardiagn.com

bracket studs.

9. Install the ignition coil bracket studs.

   Tighten: Tighten the ignition coil bracket studs to 12 N.m (106 lb in).

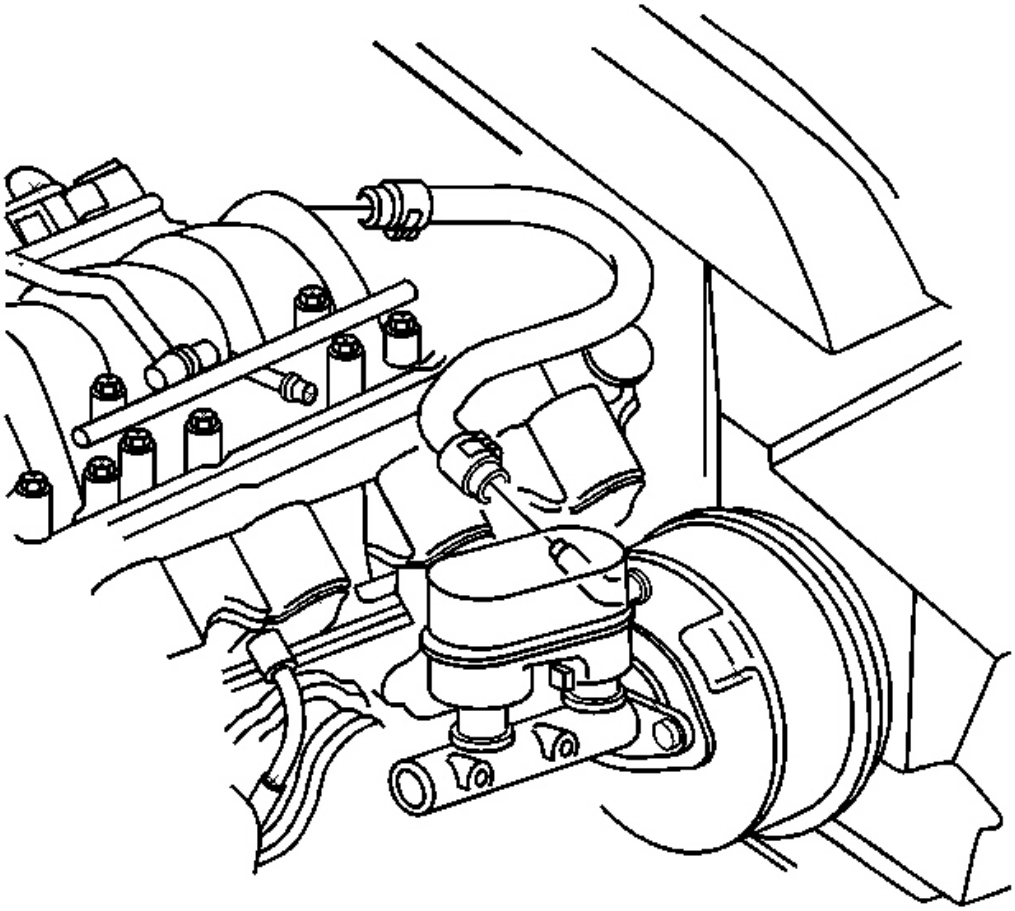

Fig. 12: Vacuum Booster Hose
Courtesy of GENERAL MOTORS CORP.

10. Install the brake booster vacuum hose to the brake booster.

cardiagn.com

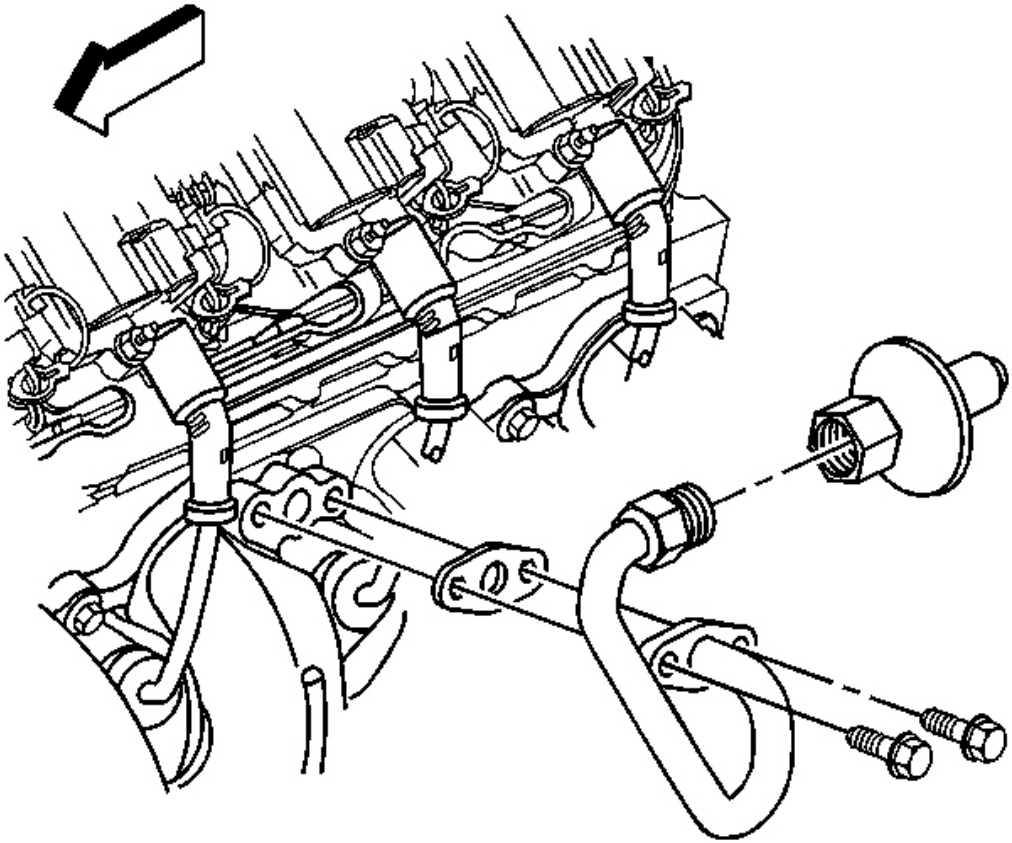

Fig. 13: AIR Pipe, Gasket & Bolts
Courtesy of GENERAL MOTORS CORP.

11. Install the AIR pipe (with check valve) and a NEW gasket.
12. Install the AIR pipe bolts.

Tighten: Tighten the AIR pipe bolts to 20 N.m (15 lb ft).

cardiagn.com

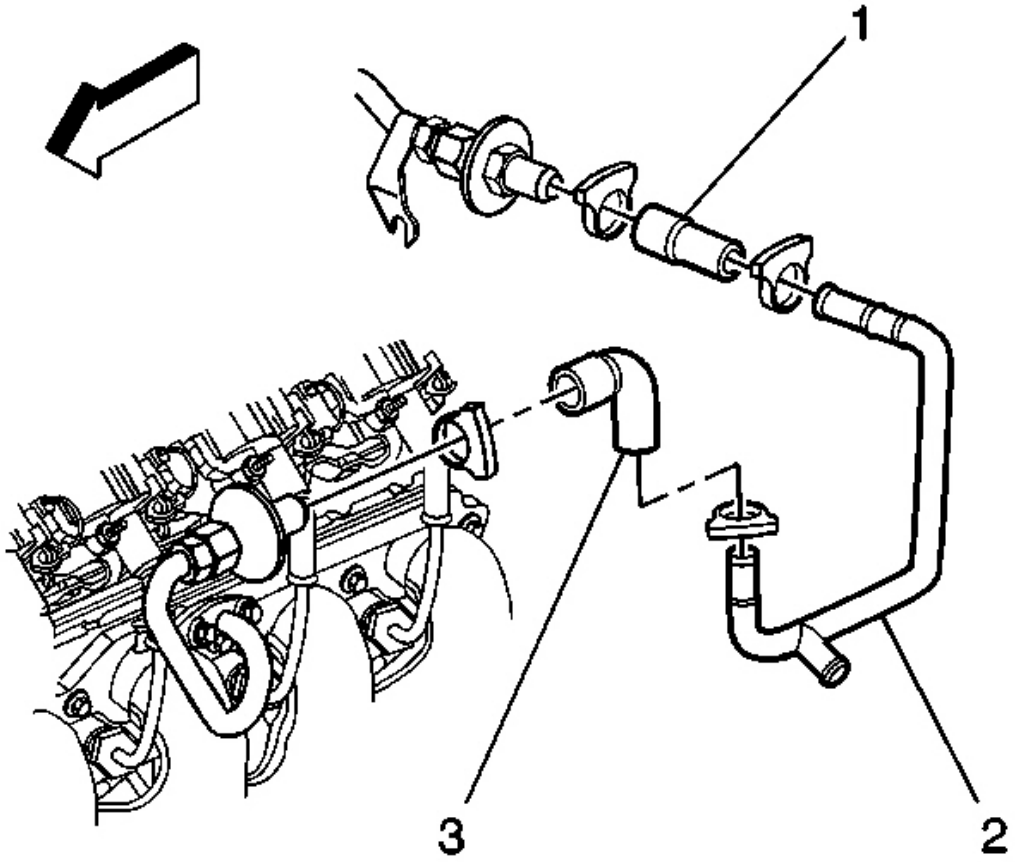

Fig. 14: Right/Left Check Valve, AIR Injection Pipe Hose & AIR Pipe
Courtesy of GENERAL MOTORS CORP.

13. Install the AIR pipe (2).
14. Install the AIR injection pipe hose (3) to the left check valve.
15. Install the AIR injection pipe hose (1) to the right check valve.
16. Install the hose clamps at the right and left check valves.

cardiagn.com

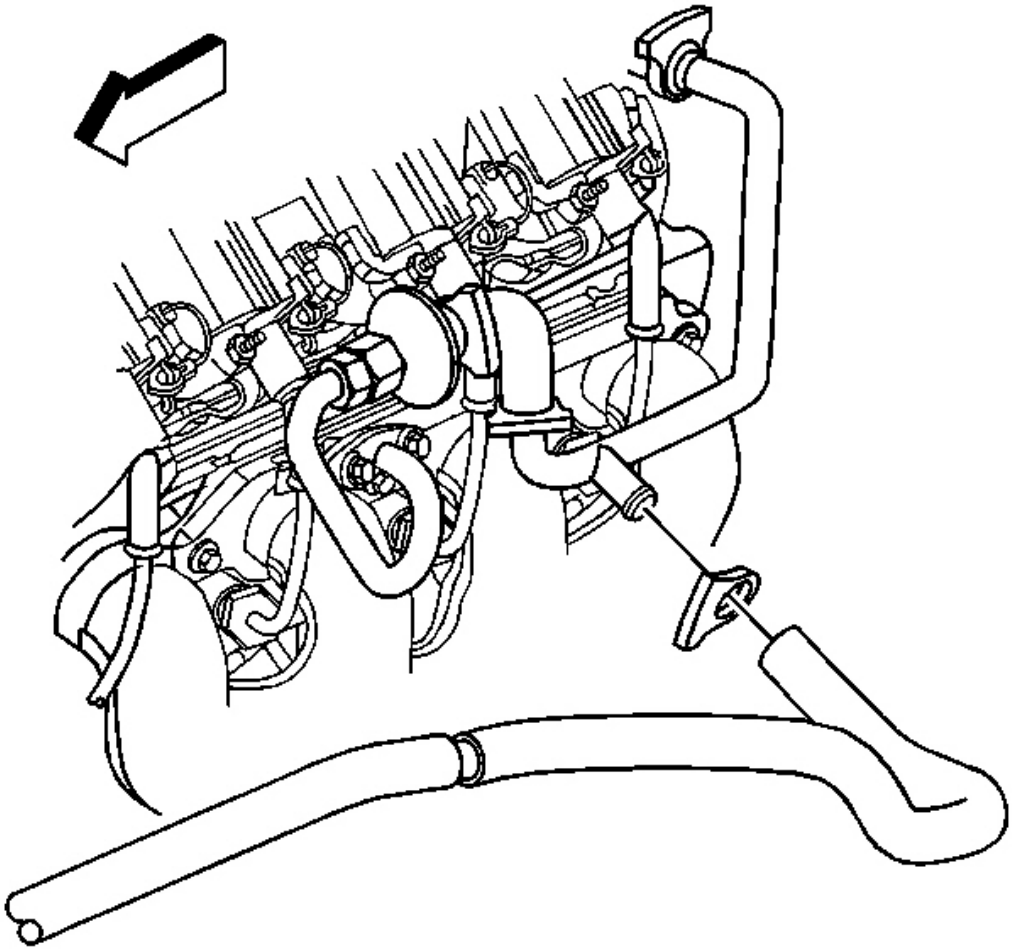

Fig. 15: AIR Pipe Hose & Hose Clamp
Courtesy of GENERAL MOTORS CORP.

17. Install the AIR hose to the AIR pipe.
18. Install the hose clamp at the AIR pipe.
19. Raise the vehicle.

cardiagn.com

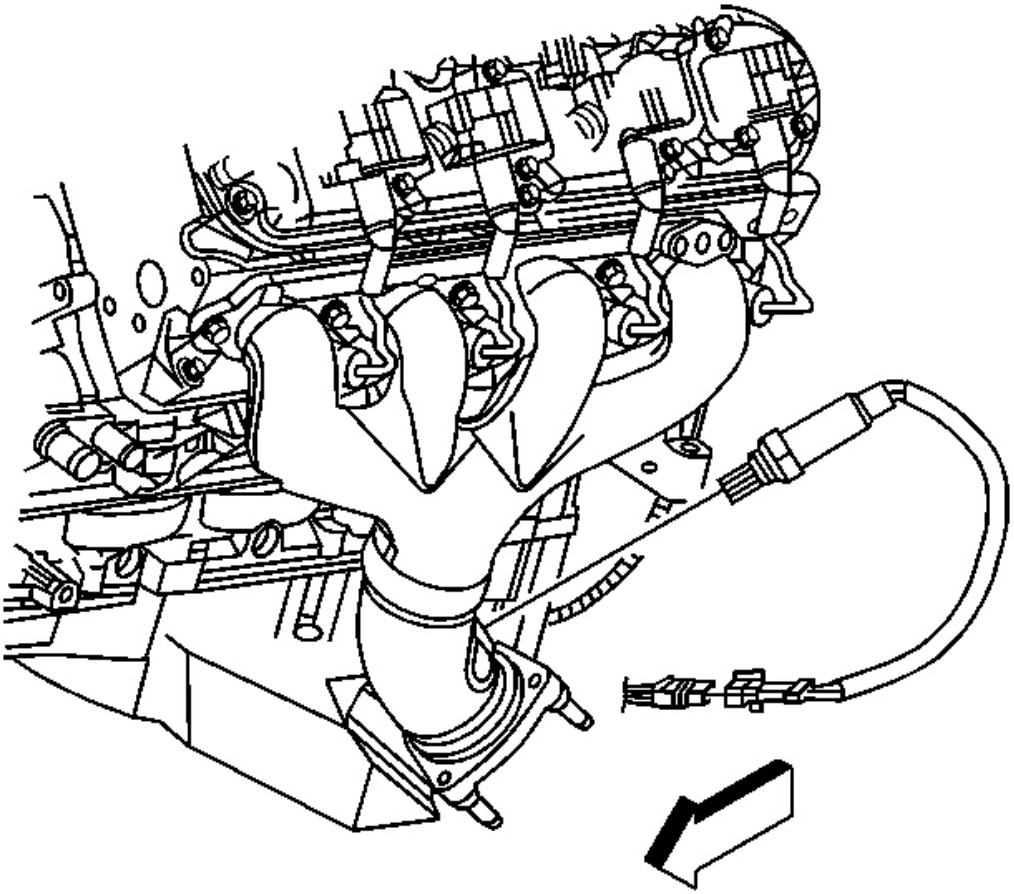

Fig. 16: Oxygen Sensor Electrical Connector
Courtesy of GENERAL MOTORS CORP.

NOTE: Refer to Oxygen Sensor Notice in Cautions and Notices.

20. Apply anti-sieze compound GM P/N 12377953 or equivalent to the threads of the oxygen sensor.
21. Install the oxygen sensor.

    Tighten: Tighten the oxygen sensor to 42 N.m (30 lb ft).

22. Install the oxygen sensor connector clip at the body.
23. Connect the oxygen sensor electrical connector.
24. Install the CPA lock.

cardiagn.com

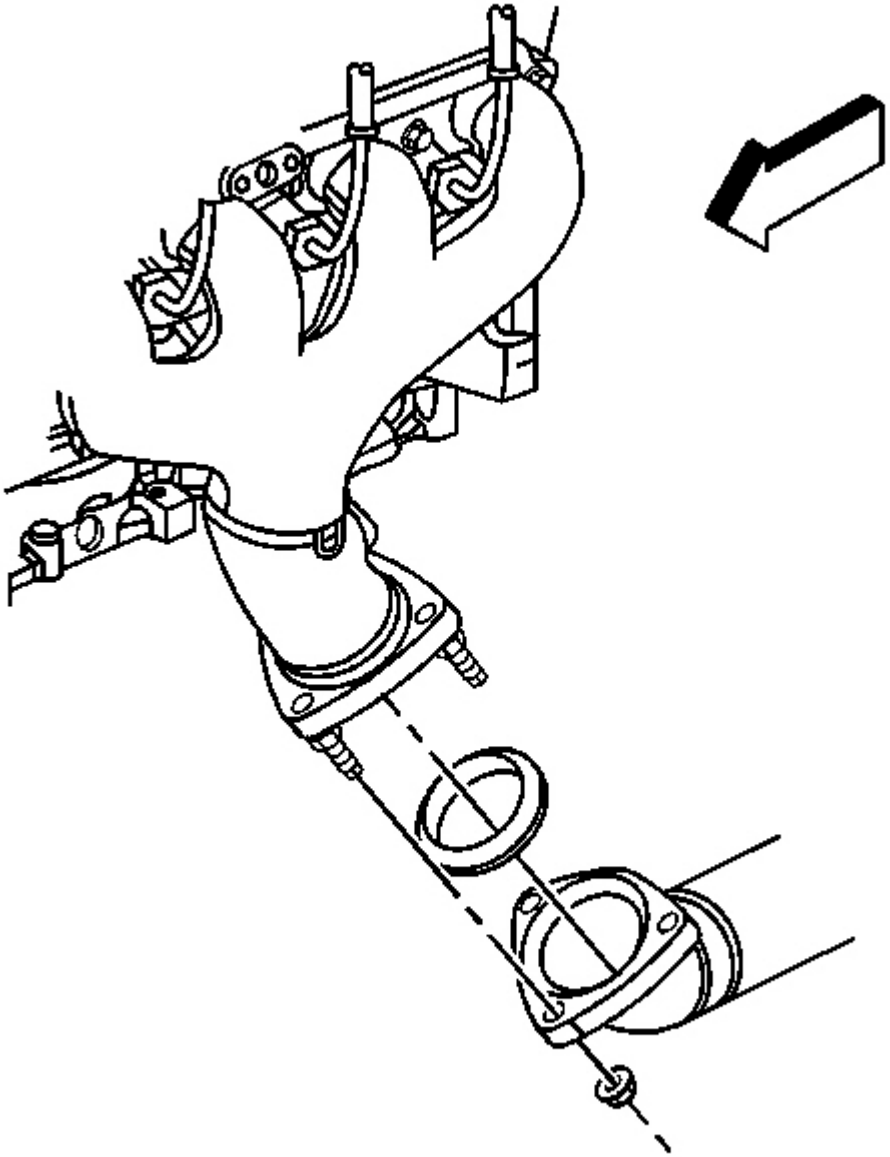

Fig. 17: Exhaust Manifold & Nuts
Courtesy of GENERAL MOTORS CORP.

25. Install the exhaust manifold nuts.

    Tighten: Tighten the exhaust manifold nuts to 20 N.m (15 lb ft).

cardiagn.com

26. Lower the vehicle.
27. Install the generator. Refer to **Generator Replacement** in Engine Electrical.

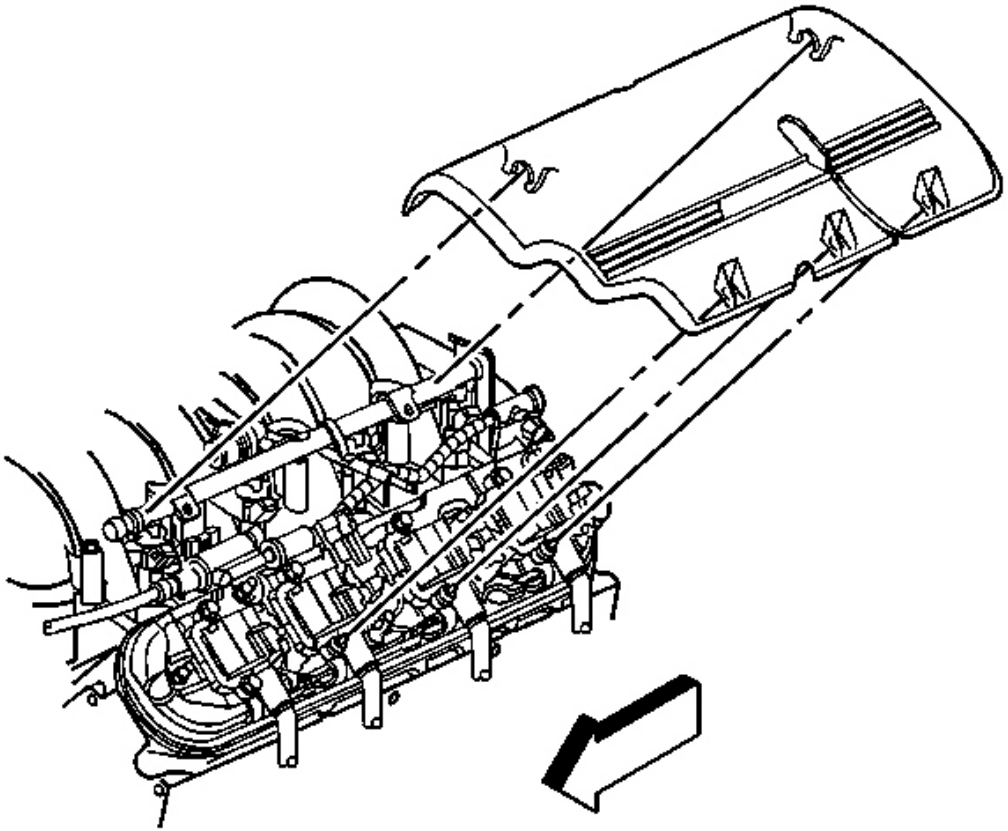

Fig. 18: Generator Fuel Rail Cover
Courtesy of GENERAL MOTORS CORP.

28. Install the fuel rail cover.

EXHAUST MANIFOLD REPLACEMENT - RIGHT

Removal Procedure

cardiagn.com

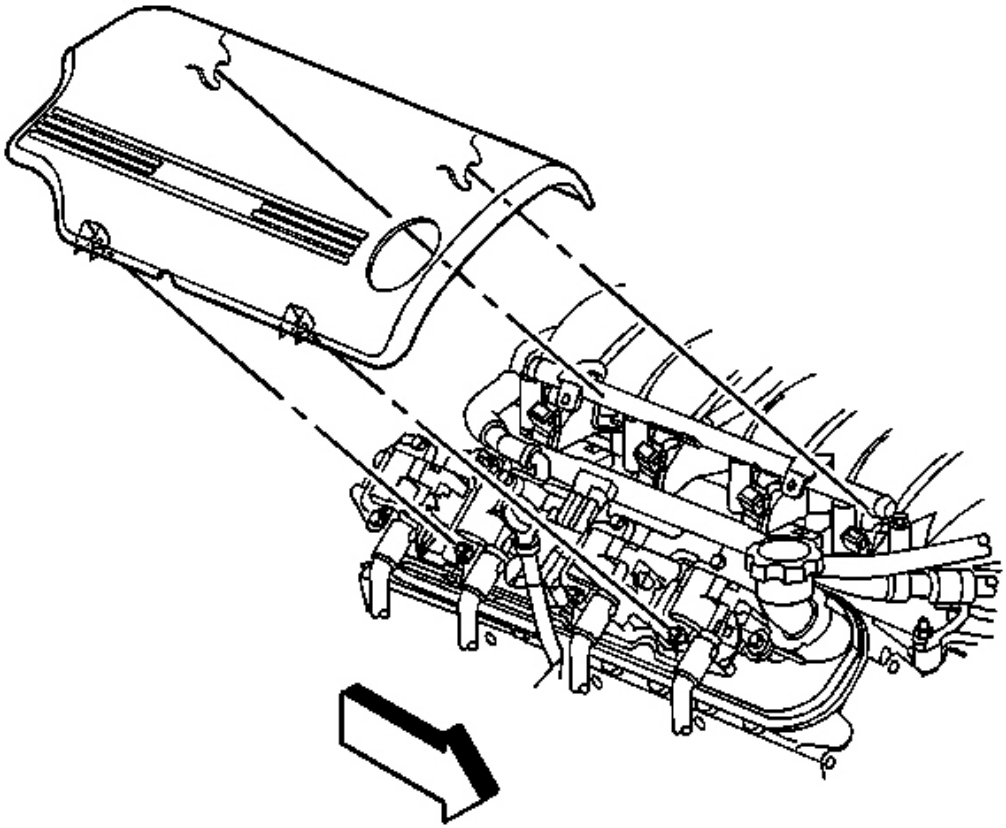

Fig. 19: Fuel Rail Cover
Courtesy of GENERAL MOTORS CORP.

1. Remove the fuel rail cover.
2. Raise and suitably support the vehicle. Refer to **Lifting and Jacking the Vehicle** in General Information.

cardiagn.com

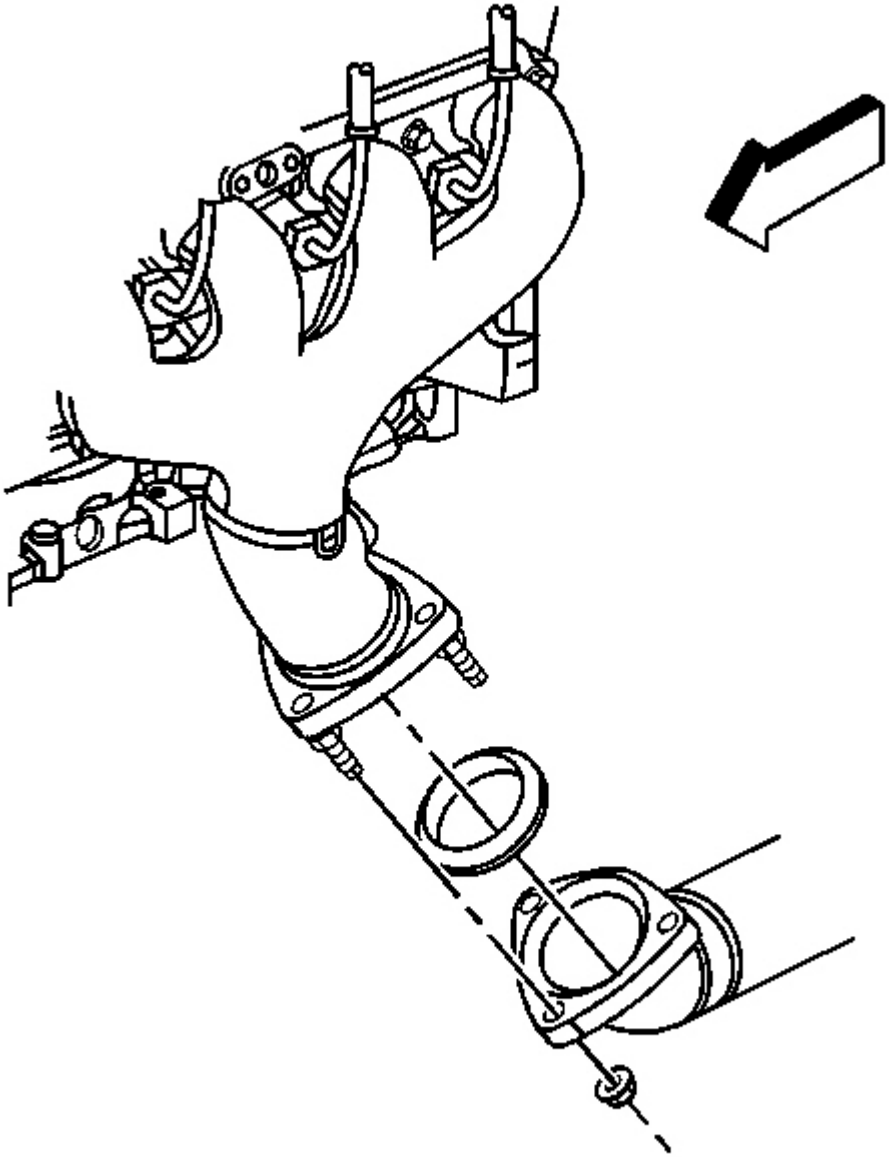

Fig. 20: Exhaust Manifold & Nuts
Courtesy of GENERAL MOTORS CORP.

3. Remove the exhaust manifold nuts. (left side shown, right side similar)

cardiagn.com

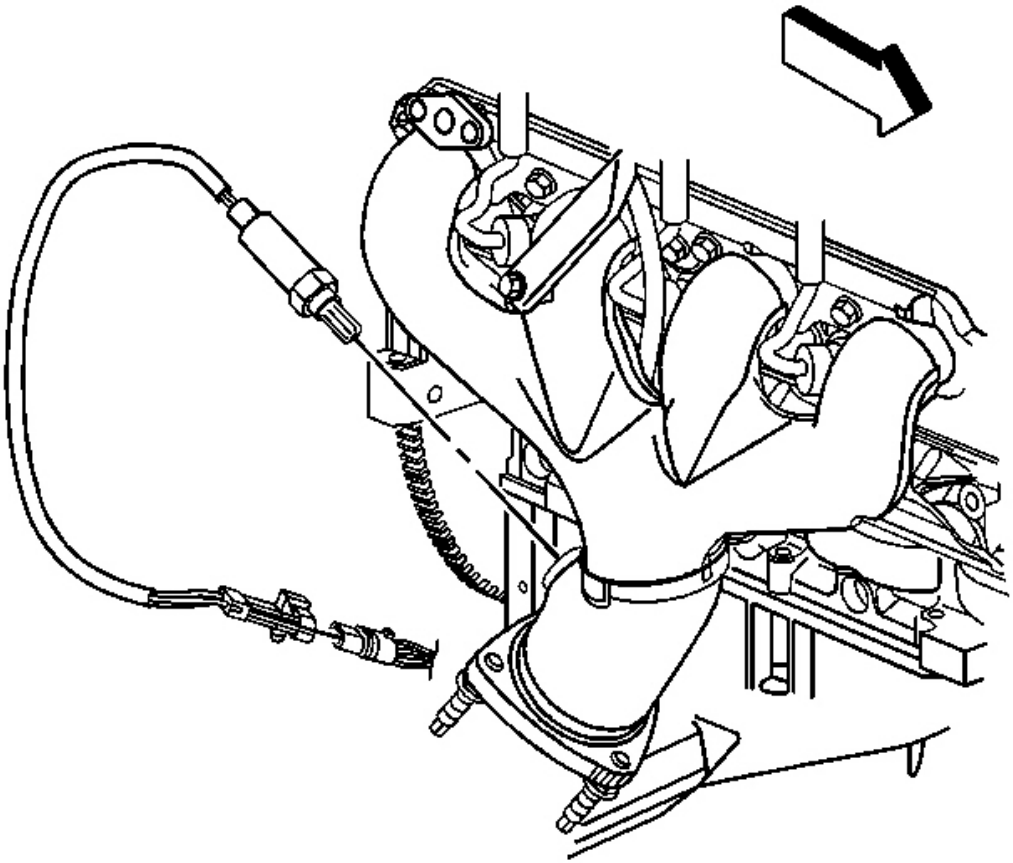

Fig. 21: Oxygen Sensor Electrical Connector & CPA Lock
Courtesy of GENERAL MOTORS CORP.

4. Remove the connector position assurance (CPA) lock.
5. Disconnect the oxygen sensor electrical connector.

NOTE: Refer to Oxygen Sensor Notice in Cautions and Notices.

6. Remove the oxygen sensor.
7. Lower the vehicle.

cardiagn.com

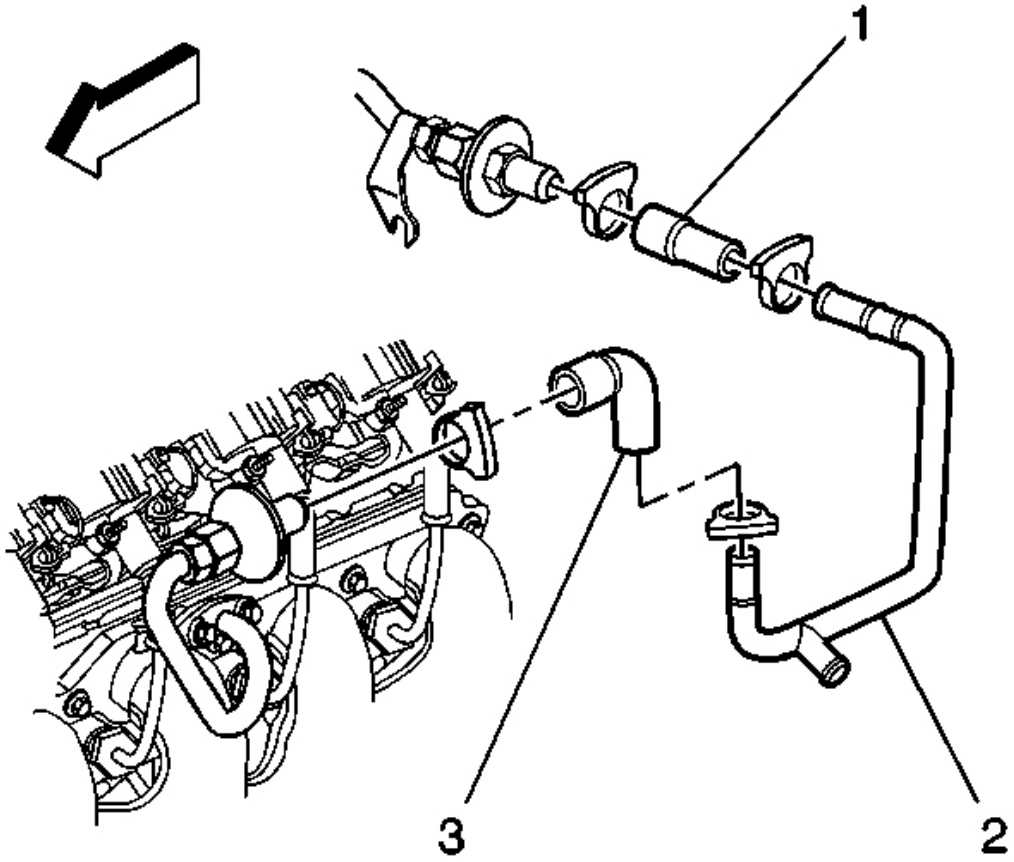

Fig. 22: Right/Left Check Valve, AIR Injection Pipe Hose & AIR Pipe
Courtesy of GENERAL MOTORS CORP.

8. Remove the hose clamp at the right check valve.
9. Remove the secondary air injection (AIR) pipe hose (1) from the right check valve.

cardiagn.com

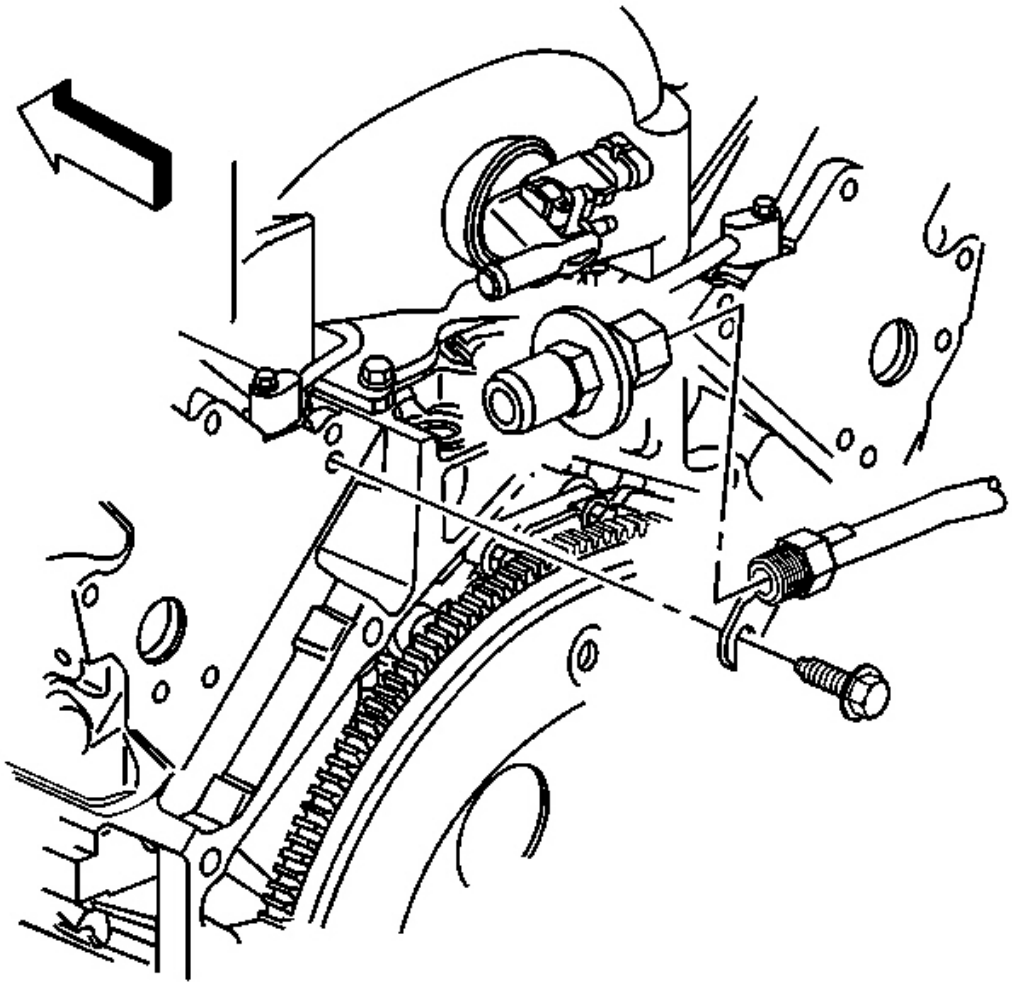

Fig. 23: Rear Left Cylinder Head, AIR Pipe & Bolt
Courtesy of GENERAL MOTORS CORP.

10. Loosen, DO NOT remove the AIR pipe bolt at the rear of the left cylinder head.

cardiagn.com

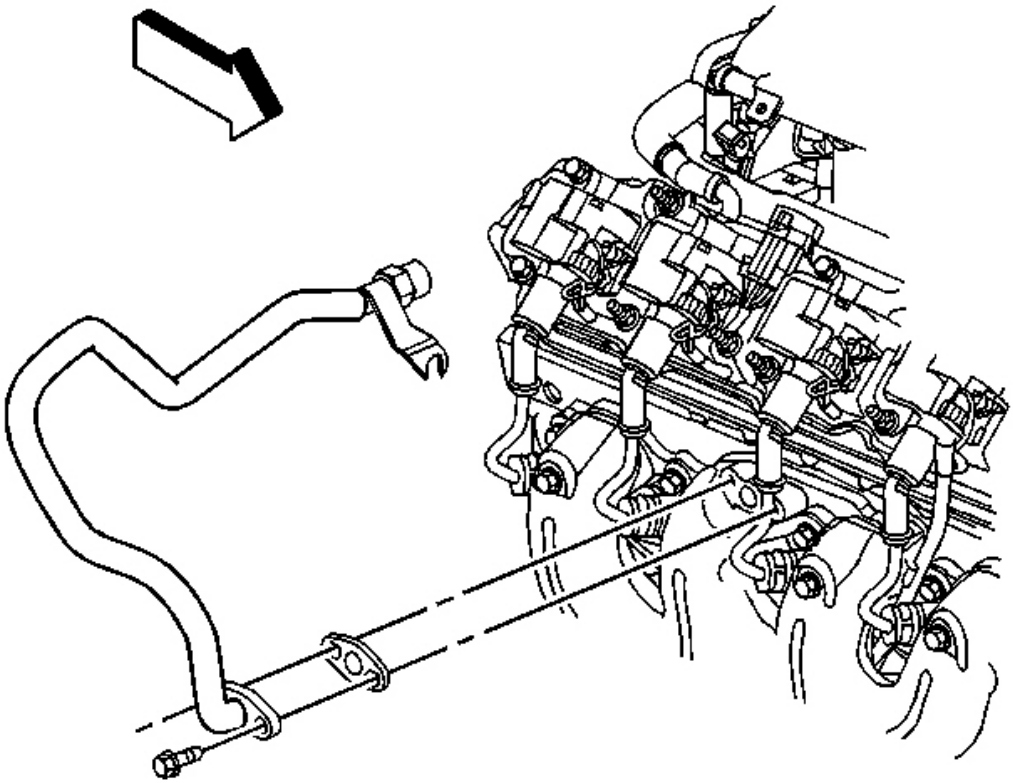

Fig. 24: Right AIR Pipe Gasket, Bolt & Oil Level Indicator Tube
Courtesy of GENERAL MOTORS CORP.

IMPORTANT: Do not remove the check valve from the AIR pipe unless valve service is required.

11. Remove the AIR pipe bolts.
12. Reposition the AIR pipe.
13. Remove the old AIR pipe gasket. Discard the gasket
14. Remove the oil level indicator tube. Refer to **Oil Level Indicator and Tube Replacement** in Engine Mechanical - 5.7 L.

cardiagn.com

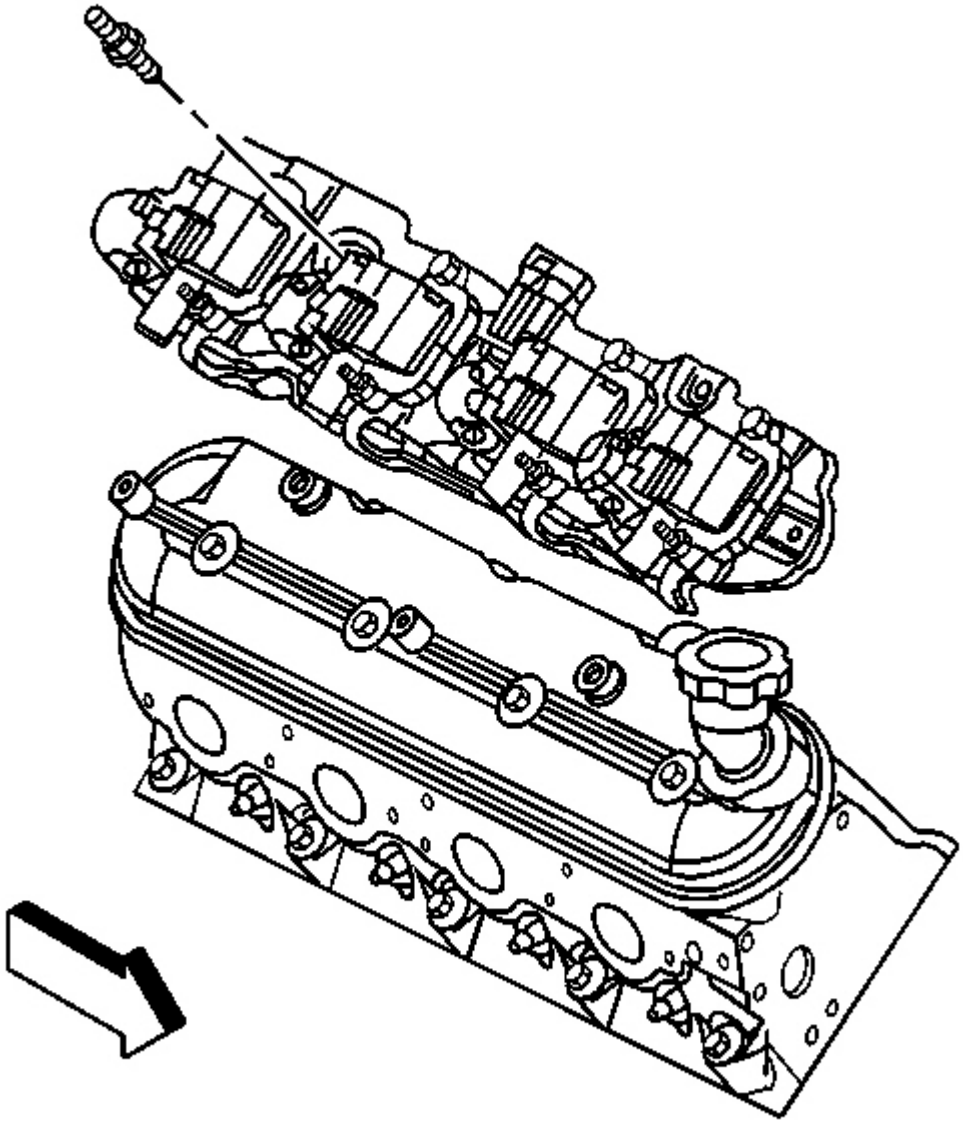

Fig. 25: Right Ignition Coil Bracket & Studs
Courtesy of GENERAL MOTORS CORP.

15. Remove the ignition coil bracket studs.
16. Remove the ignition coil bracket.
17. Remove the spark plugs. Refer to **Spark Plug Replacement** in Engine Controls - 5.7 L.

cardiagn.com

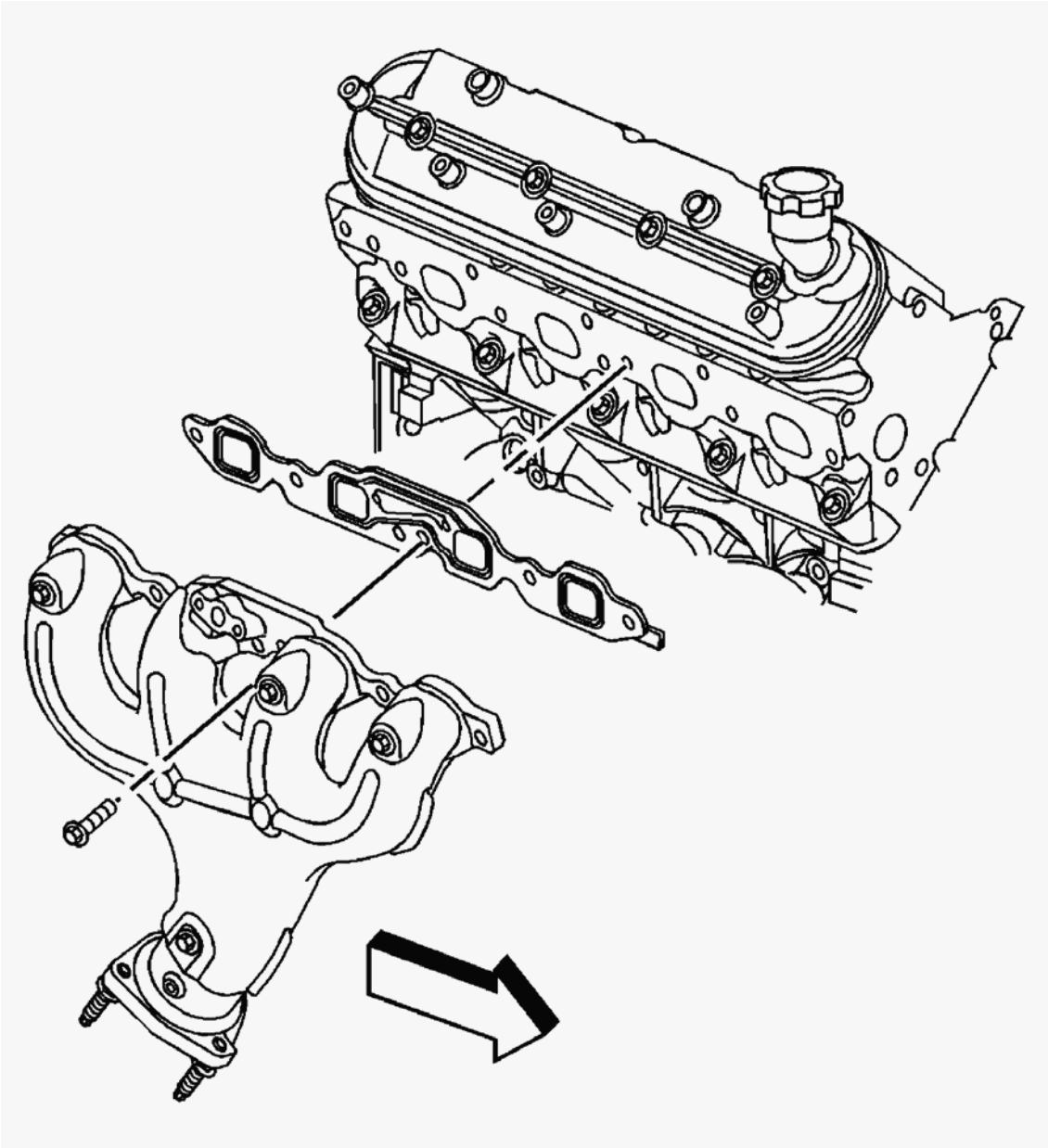

Fig. 26: Right Exhaust Manifold, Bolts & Gasket
Courtesy of GENERAL MOTORS CORP.

18. Remove the exhaust manifold bolts.
19. Remove the exhaust manifold, and old gasket. Discard the gasket.
20. If necessary, remove the exhaust manifold heat shield bolts and shield.

Installation Procedure

IMPORTANT: Tighten the exhaust manifold bolts as specified in the service procedure. Improperly installed and/or leaking exhaust manifold gaskets may effect vehicle emissions and/or On-Board Diagnostics (OBD) II system performance.

cardiagn.com

The cylinder head exhaust manifold bolt hole threads must be clean and free of debris or threadlocking material.

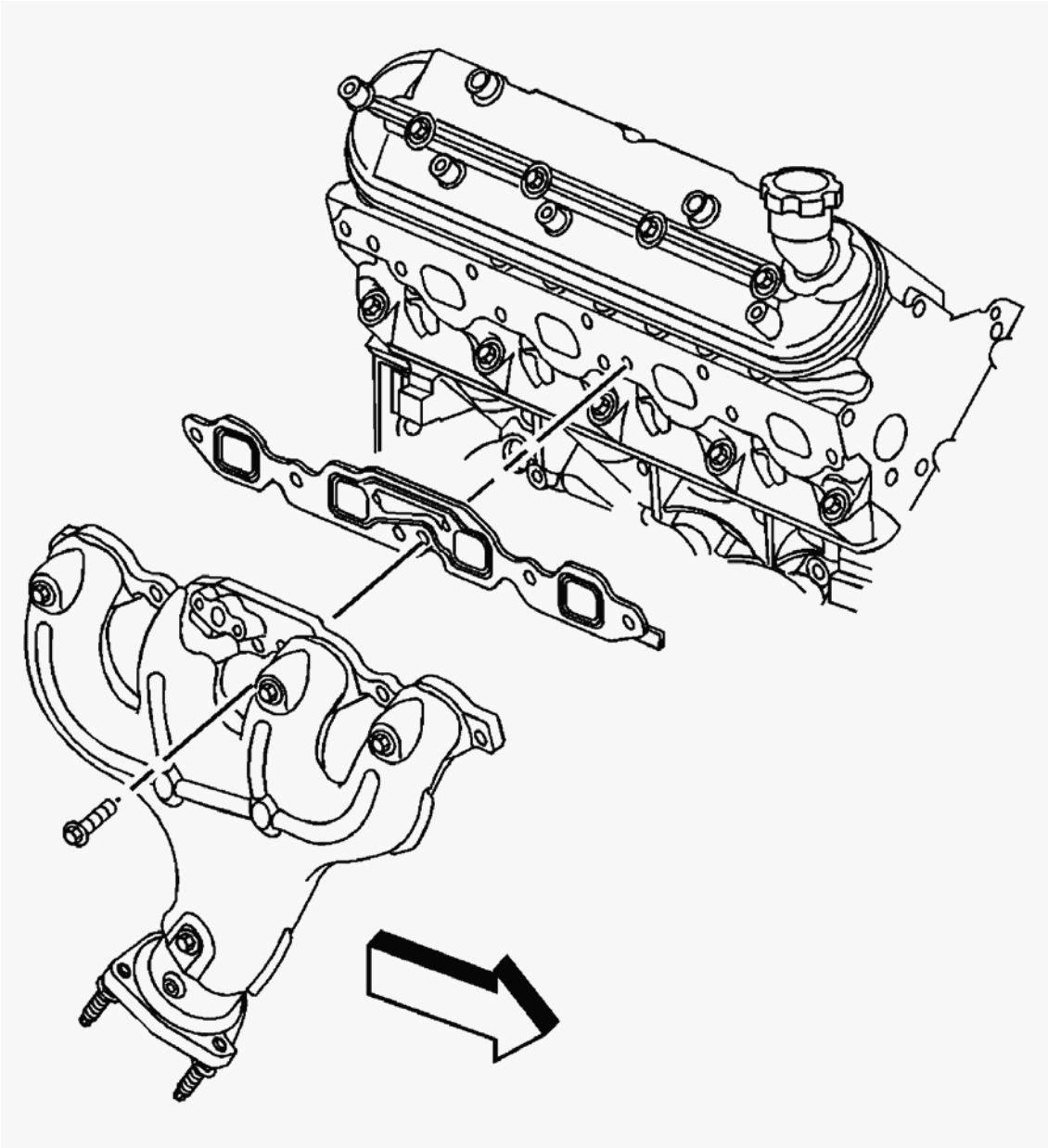

Fig. 27: Right Exhaust Manifold, Bolts & Gasket
Courtesy of GENERAL MOTORS CORP.

NOTE: Refer to Fastener Notice in Cautions and Notices.

1. If necessary, install the exhaust manifold heat shield and bolts.

   Tighten: Tighten the exhaust manifold heat shield bolts to 9 N.m (80 lb in).

cardiagn.com

2. Apply a 5 mm (0.2 in) wide band of threadlock GM P/N 12345493 (Canadian P/N 10953488) or equivalent to the threads of the exhaust manifold bolts.
3. Position the exhaust manifold and a NEW gasket into place.
4. Install the exhaust manifold bolts.

   Tighten:

   1. Tighten the exhaust manifold bolts a first pass to 15 N.m (11 lb ft). Tighten the exhaust manifold bolts beginning with the center two bolts. Alternate from side-to-side, working toward the outside bolts.
   2. Tighten the exhaust manifold bolts a final pass to 25 N.m (18 lb ft). Tighten the exhaust manifold bolts beginning with the center two bolts. Alternate from side-to-side, working toward the outside bolts.

5. Bend over the exposed edge of the exhaust manifold gasket at the front of the right cylinder head.

cardiagn.com

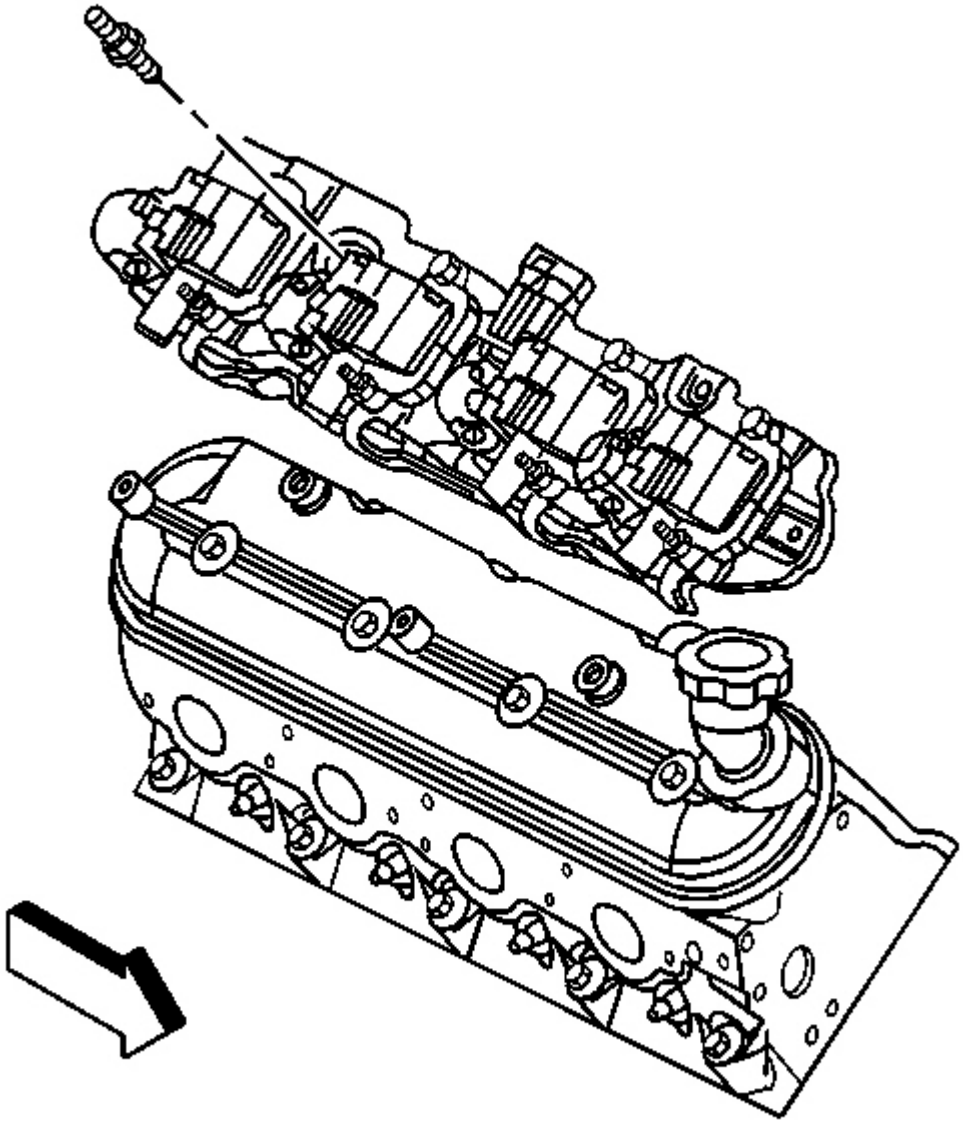

Fig. 28: Right Ignition Coil Bracket & Studs
Courtesy of GENERAL MOTORS CORP.

6. Install the ignition coil bracket.
7. Apply threadlock GM P/N 12345382 (Canadian P/N 10953489), or equivalent to the threads of the bracket studs.
8. Install the ignition coil bracket studs.

cardiagn.com

Tighten: Tighten the ignition coil bracket studs to 12 N.m (106 lb in).

9. Install the spark plugs. Refer to **Spark Plug Replacement** in Engine Controls - 5.7 L.
10. Install the oil level indicator tube. Refer to **Oil Level Indicator and Tube Replacement** in Engine Mechanical - 5.7 L.

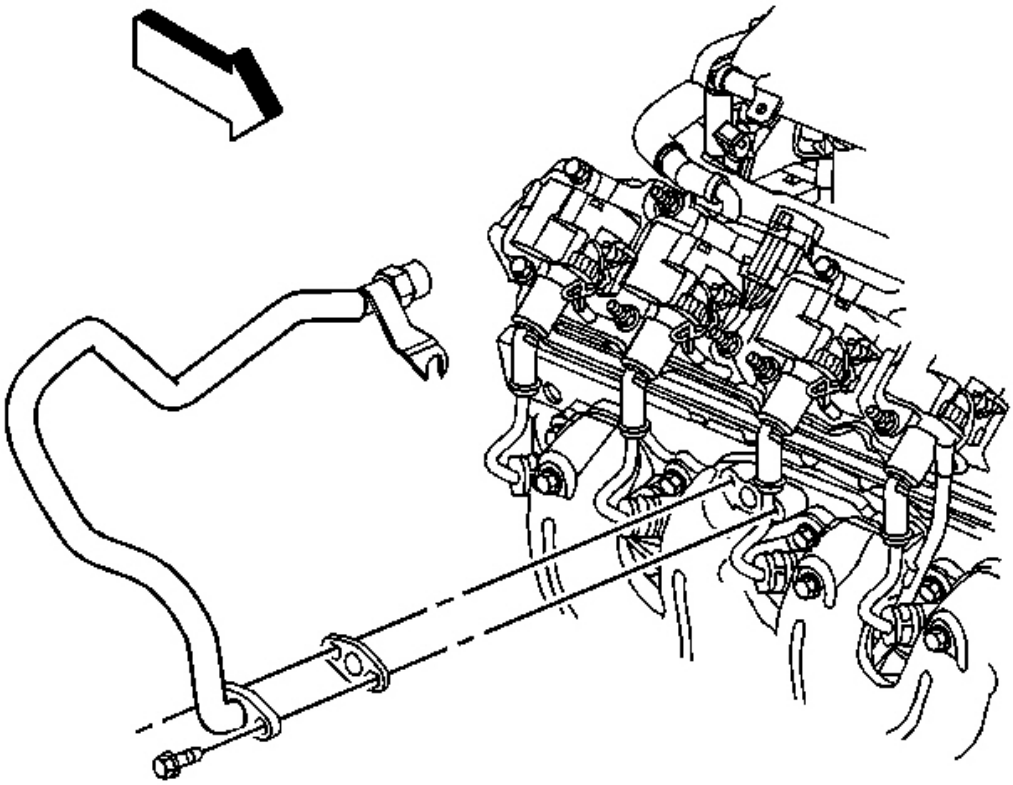

Fig. 29: Right AIR Pipe Gasket, Bolt & Oil Level Indicator Tube
Courtesy of GENERAL MOTORS CORP.

IMPORTANT: Ensure that the AIR pipe bracket slides behind the bolt at the left cylinder head.

11. Position the AIR pipe (with check valve) and NEW gasket into place.
12. Install the AIR pipe bolts.

Tighten: Tighten the AIR pipe bolts to 20 N.m (15 lb ft).

cardiagn.com

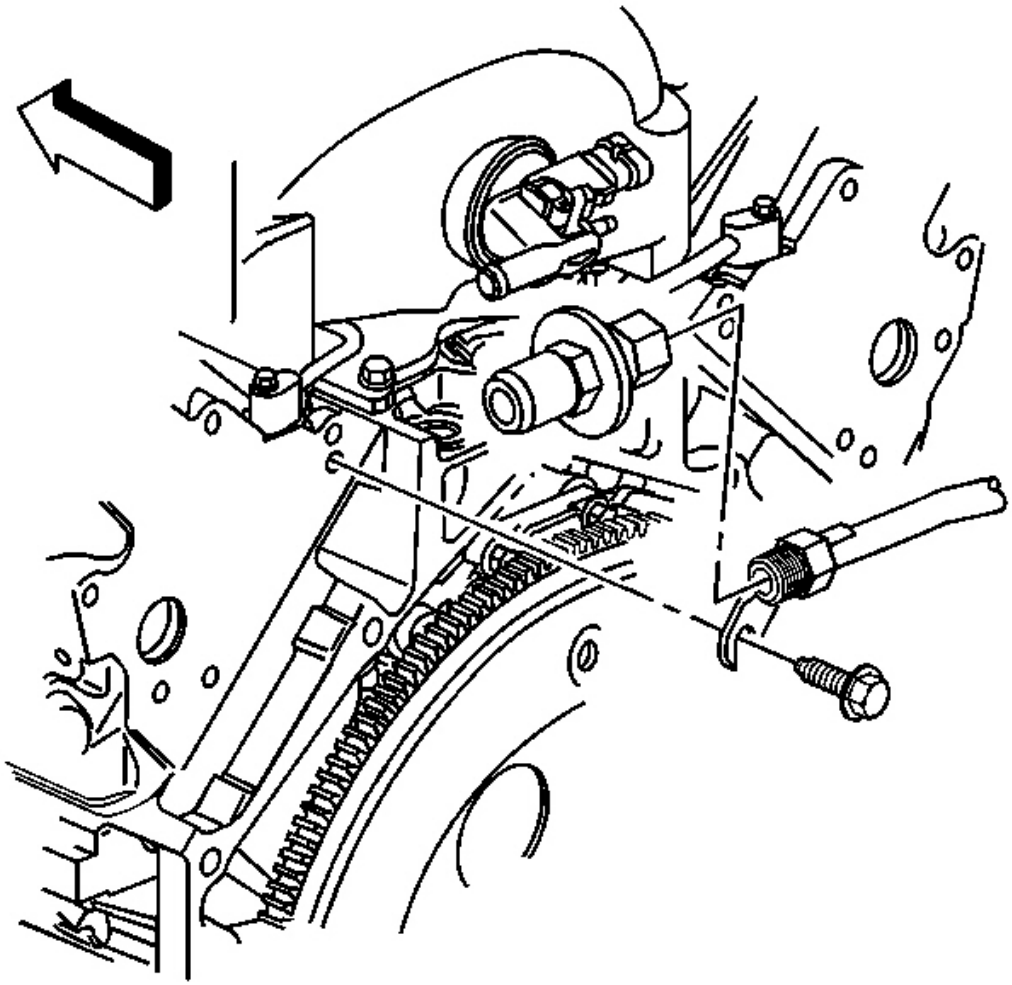

Fig. 30: Rear Left Cylinder Head, AIR Pipe & Bolt
Courtesy of GENERAL MOTORS CORP.

13. Tighten the AIR pipe bolt at the rear of the left cylinder head.

    Tighten: Tighten the AIR pipe bolt to 20 N.m (15 lb ft).

cardiagn.com

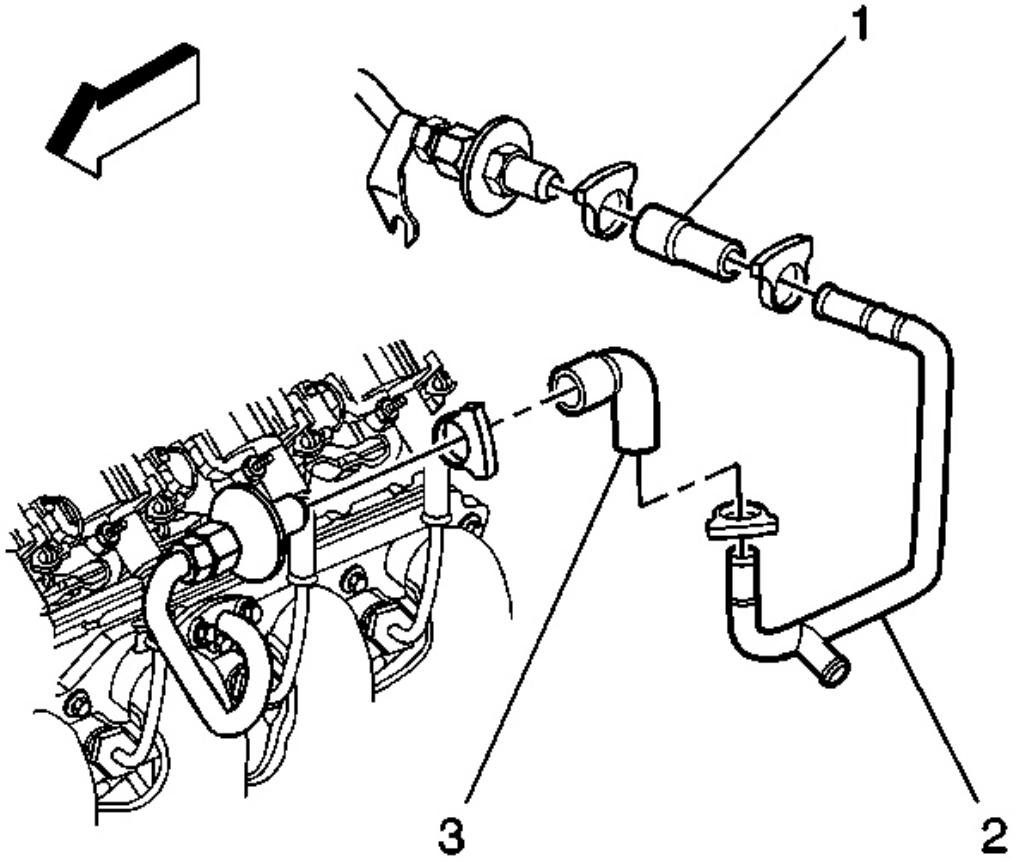

Fig. 31: Right/Left Check Valve, AIR Injection Pipe Hose & AIR Pipe
Courtesy of GENERAL MOTORS CORP.

14. Install the AIR pipe hose (1) to the right check valve.
15. Install the hose clamp at the right check valve.
16. Raise the vehicle.

cardiagn.com

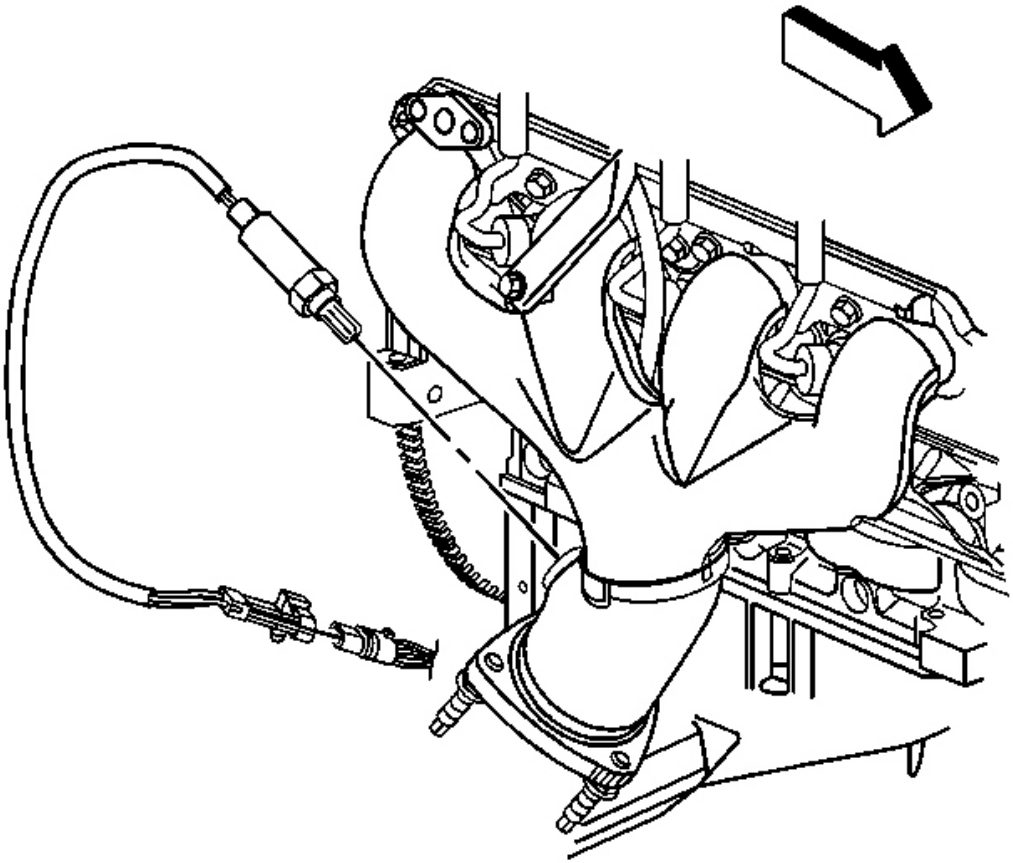

Fig. 32: Oxygen Sensor Electrical Connector & CPA Lock
Courtesy of GENERAL MOTORS CORP.

NOTE: Refer to Oxygen Sensor Notice in Cautions and Notices.

17. Apply anti-sieze compound GM P/N 12377953 or equivalent to the threads of the oxygen sensor.
18. Install the oxygen sensor.

    Tighten: Tighten the oxygen sensor to 42 N.m (30 lb ft).

19. Connect the oxygen sensor electrical connector.
20. Install the CPA lock.

cardiagn.com

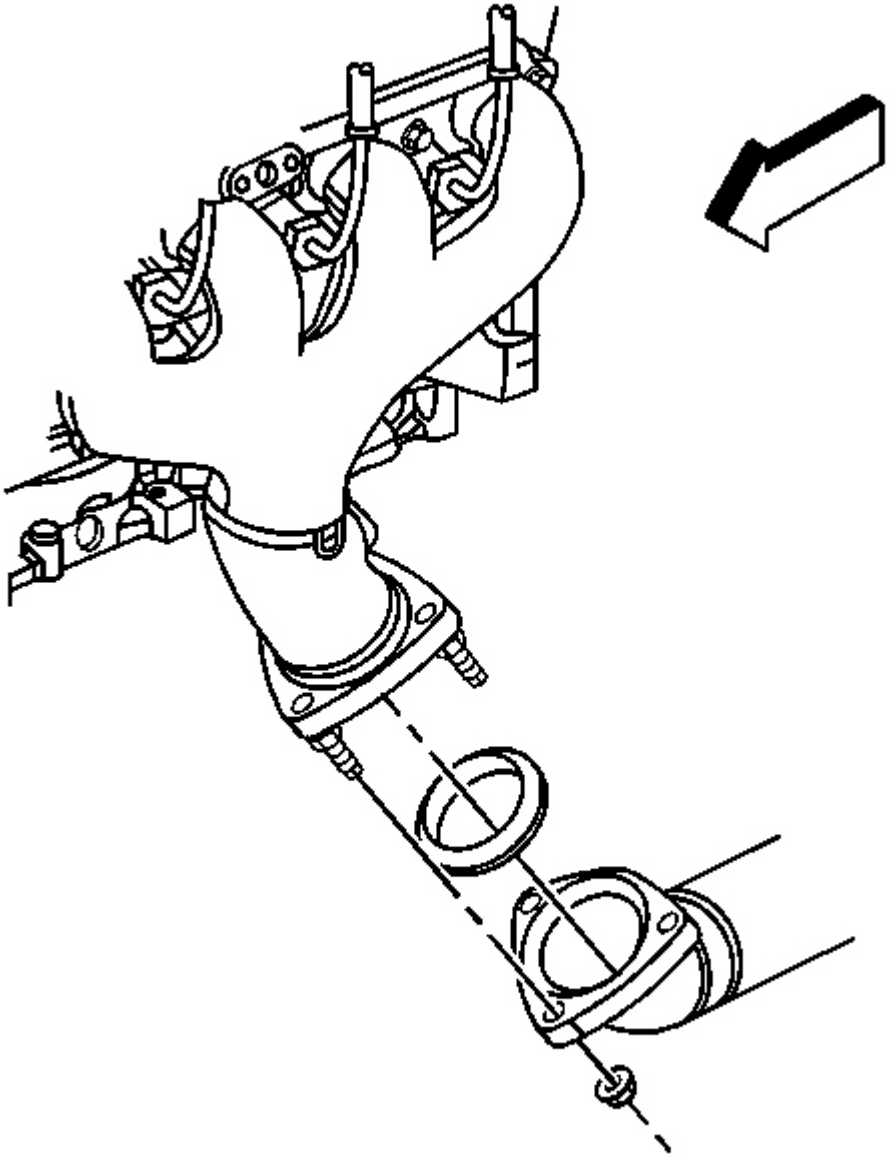

Fig. 33: Exhaust Manifold & Nuts
Courtesy of GENERAL MOTORS CORP.

21. Install the exhaust manifold nuts. (left side shown, right side similar)

    Tighten: Tighten the exhaust manifold nuts to 20 N.m (15 lb ft).

cardiagn.com

22. Lower the vehicle.

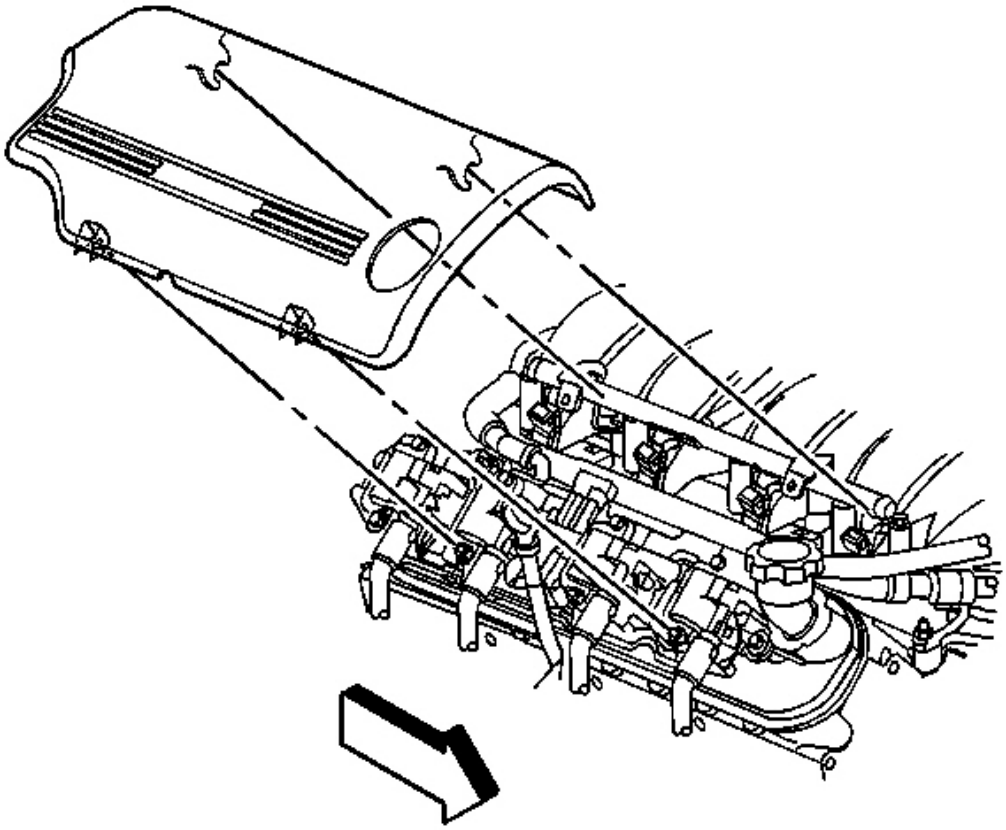

Fig. 34: Fuel Rail Cover
Courtesy of GENERAL MOTORS CORP.

23. Install the fuel rail cover.

EXHAUST SEAL REPLACEMENT

Removal Procedure

cardiagn.com

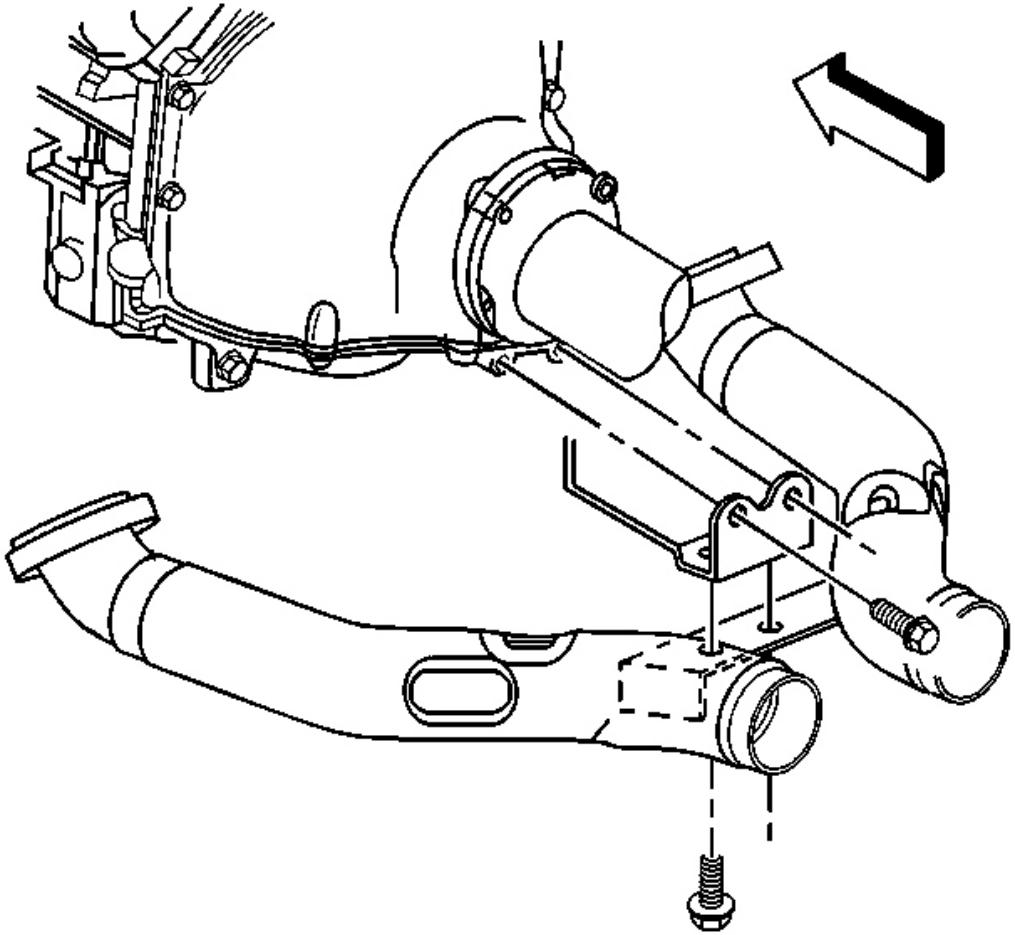

Fig. 35: Exhaust Pipe Brace Lower & Bolts
Courtesy of GENERAL MOTORS CORP.

1. Raise and suitably support the vehicle. Refer to **Lifting and Jacking the Vehicle** in General Information.
2. Support the front of the catalytic converter with an adjustable jack stand.
3. Remove the exhaust pipe brace lower bolts.

cardiagn.com

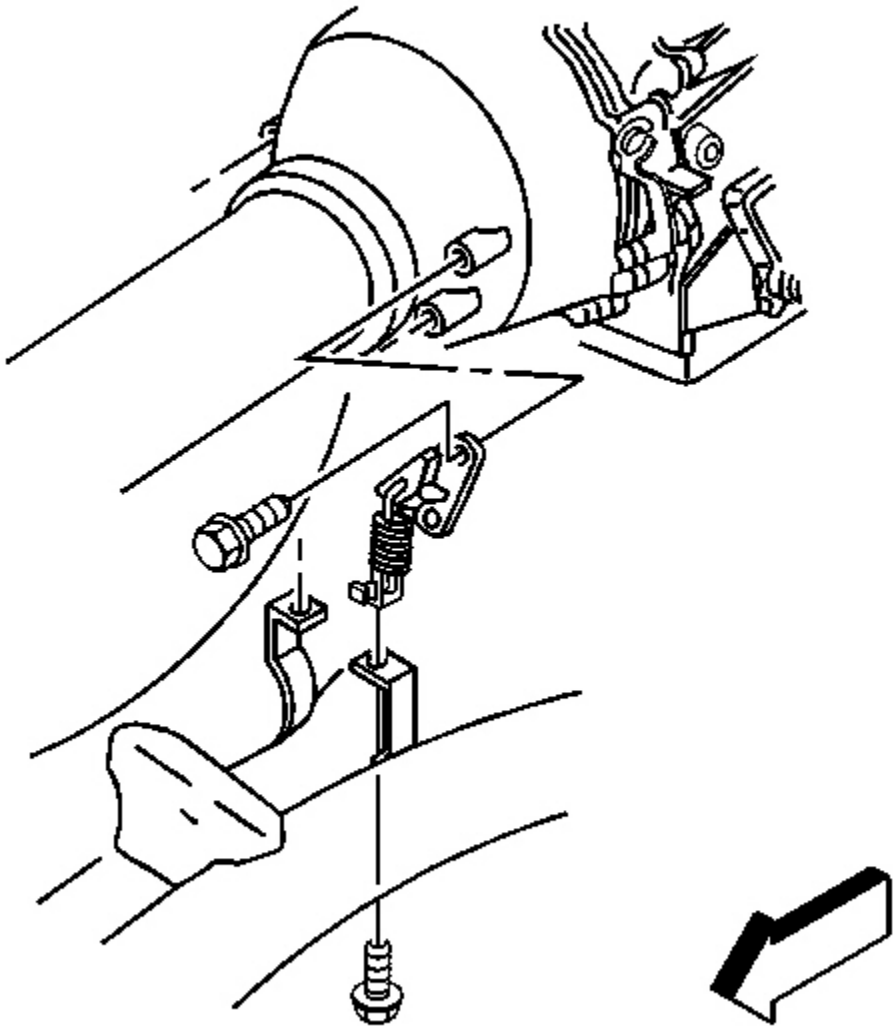

Fig. 36: Exhaust Pipe Hanger Lower & Bolts
Courtesy of GENERAL MOTORS CORP.

4. Remove the exhaust pipe hanger lower bolts.

cardiagn.com

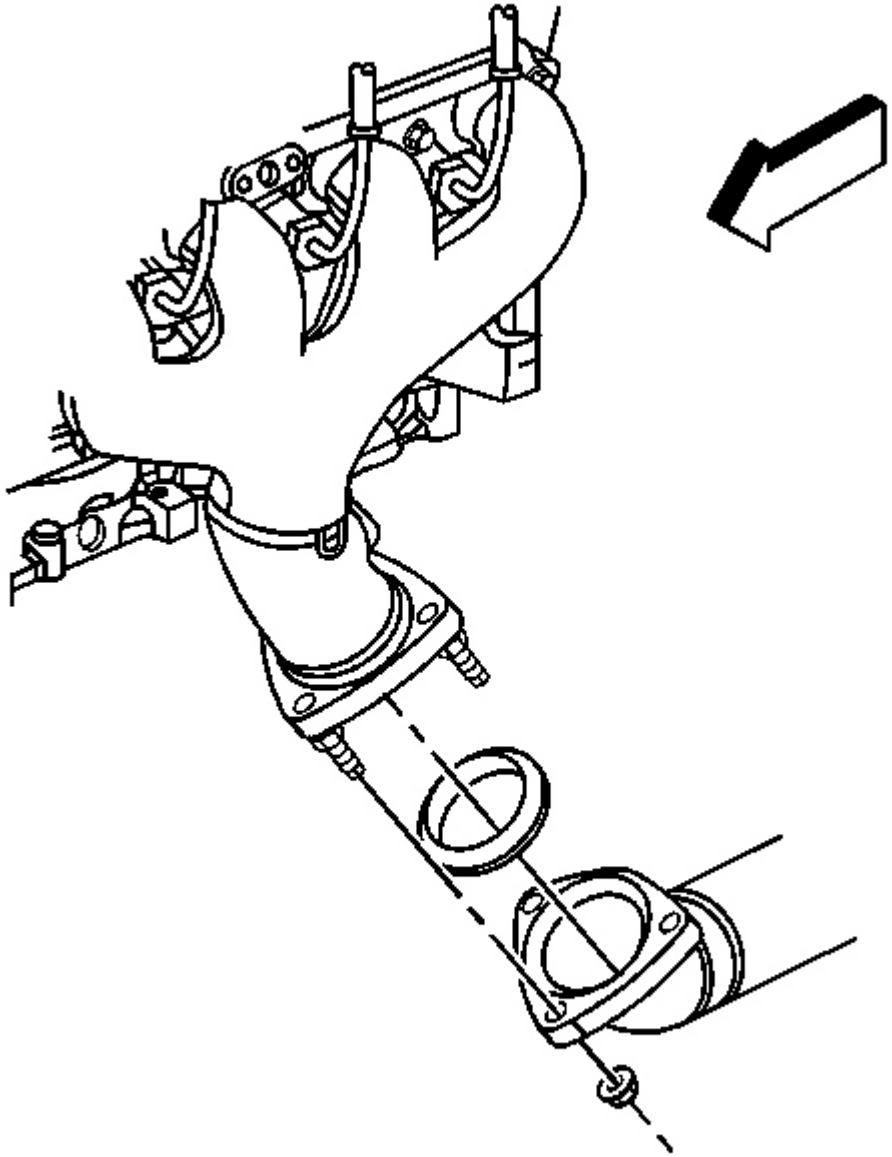

Fig. 37: Exhaust Manifold & Nuts
Courtesy of GENERAL MOTORS CORP.

5. Remove the left and right exhaust manifold nuts.
6. Lower the front of the catalytic converter.
7. Remove the exhaust seal.

cardiagn.com

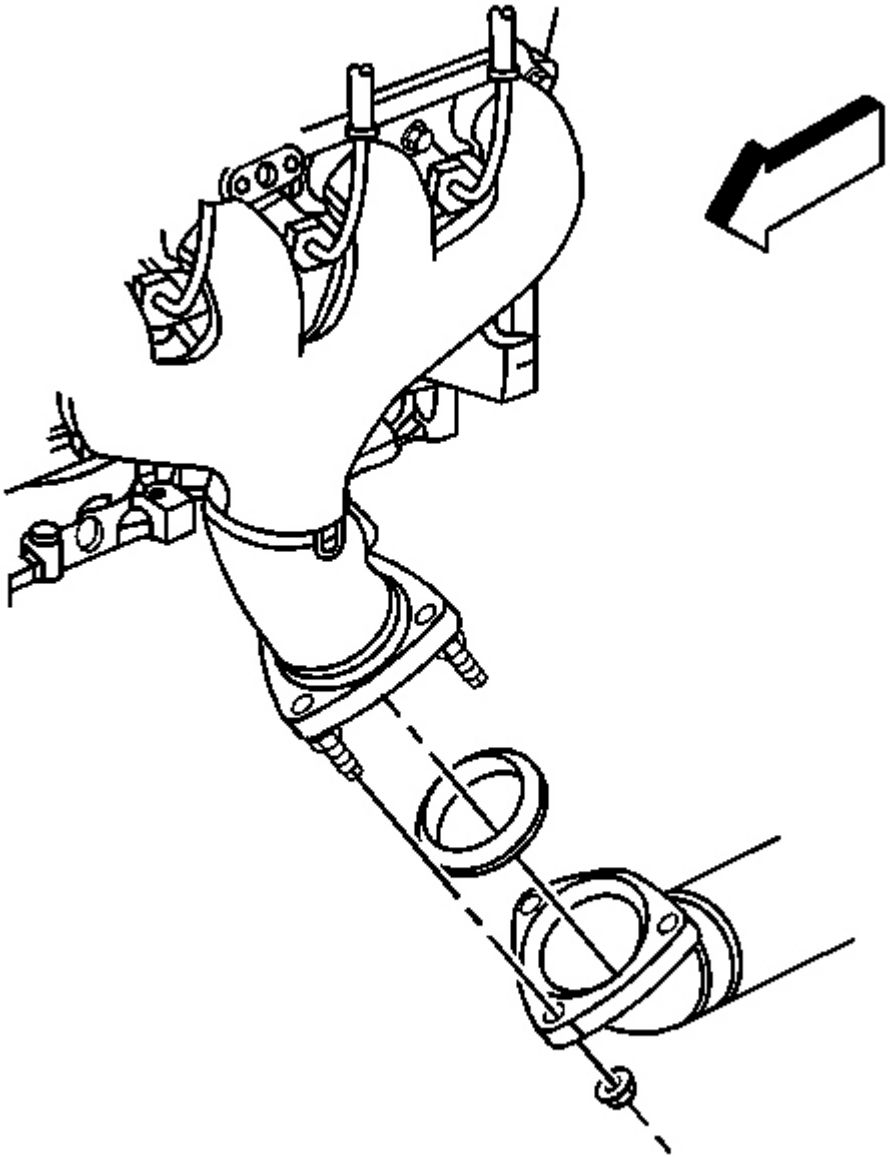

Fig. 38: Exhaust Manifold & Nuts
Courtesy of GENERAL MOTORS CORP.

1. Install a NEW exhaust seal.

cardiagn.com

2. Raise the front of the catalytic converter.

NOTE: **Refer to Fastener Notice in Cautions and Notices.**

3. Install the left and right exhaust manifold nuts.

Tighten: Tighten the exhaust manifold nuts to 20 N.m (15 lb ft).

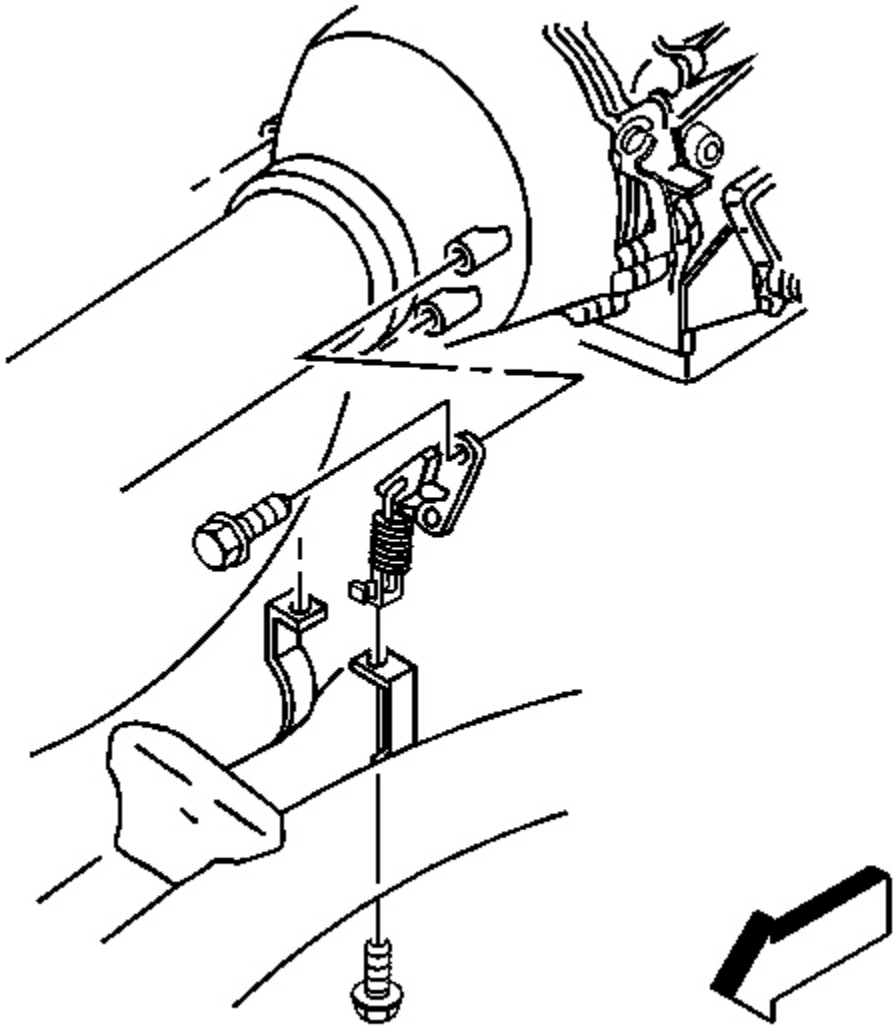

Fig. 39: Exhaust Pipe Hanger Lower & Bolts

cardiagn.com

Courtesy of GENERAL MOTORS CORP.

4. Install the exhaust pipe hanger lower bolts.

   Tighten: Tighten the exhaust pipe hanger bolts to 50 N.m (37 lb ft).

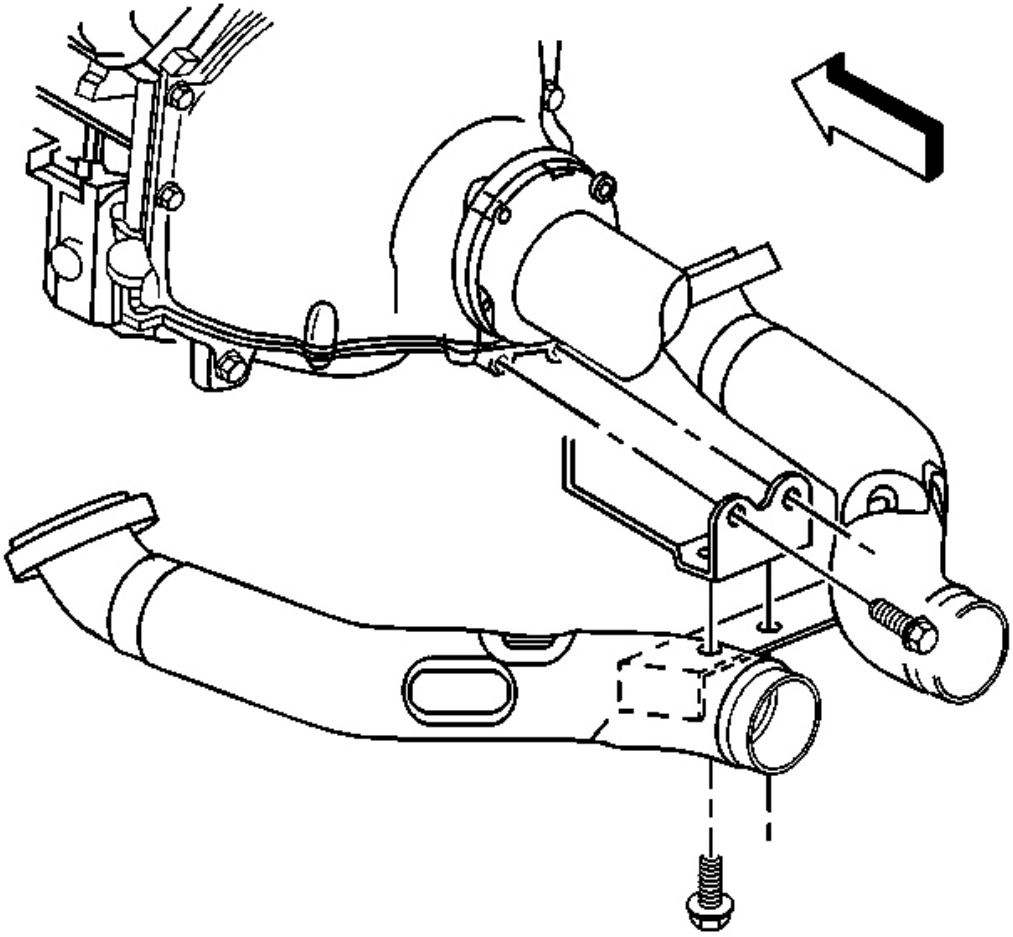

Fig. 40: Exhaust Pipe Brace Lower & Bolts
Courtesy of GENERAL MOTORS CORP.

5. Install the exhaust pipe brace lower bolts.

   Tighten: Tighten the exhaust pipe brace bolts to 50 N.m (37 lb ft).

6. Remove the adjustable jack stand.

cardiagn.com

7. Lower the vehicle.

CATALYTIC CONVERTER REPLACEMENT

Removal Procedure

CAUTION: Refer to Exhaust Service Caution in Cautions and Notices.

CAUTION: Refer to Protective Goggles and Gloves Caution in Cautions and Notices.

cardiagn.com

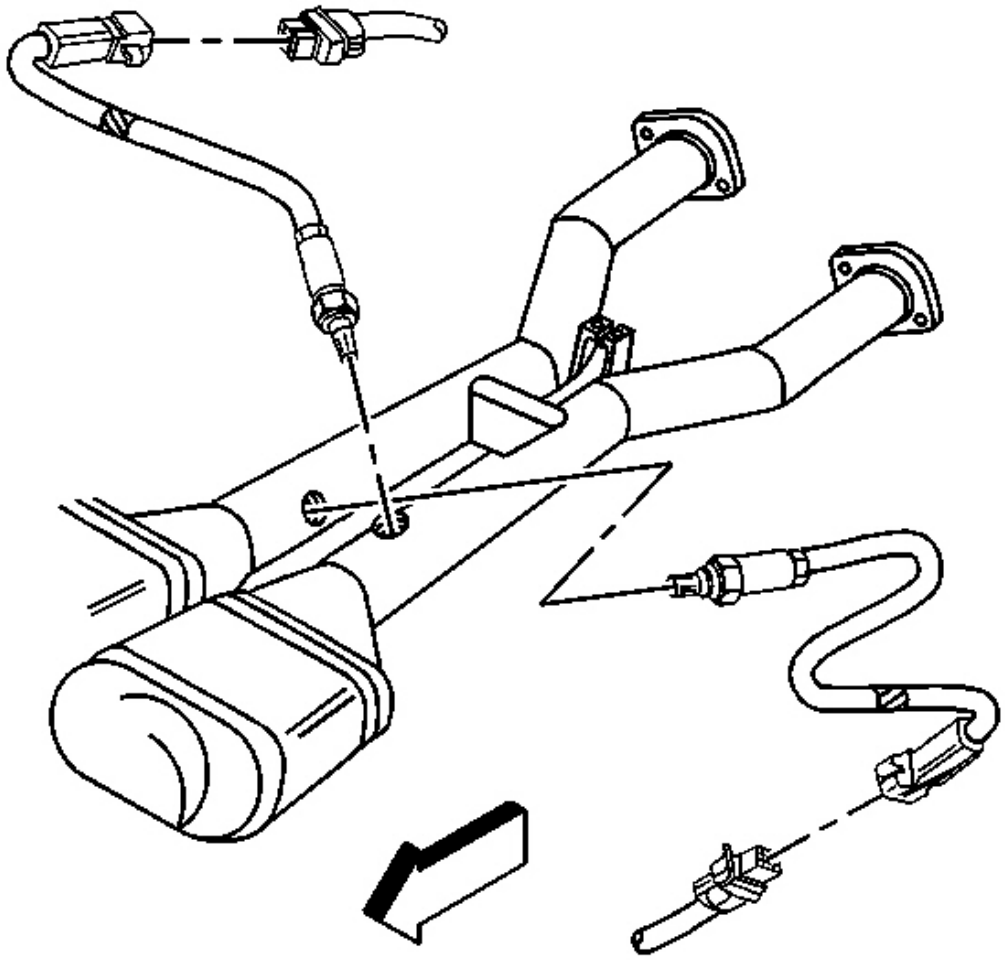

Fig. 41: CPA Locks & Oxygen Sensor Electrical Connectors
Courtesy of GENERAL MOTORS CORP.

1. Raise and suitably support the vehicle. Refer to **Lifting and Jacking the Vehicle** in General Information.
2. Remove the connector position assurance (CPA) locks.
3. Disconnect the oxygen sensor electrical connectors.
4. Remove the oxygen sensor clips to the heat shields.

NOTE: Refer to Oxygen Sensor Notice in Cautions and Notices.

5. Remove the oxygen sensors.

cardiagn.com

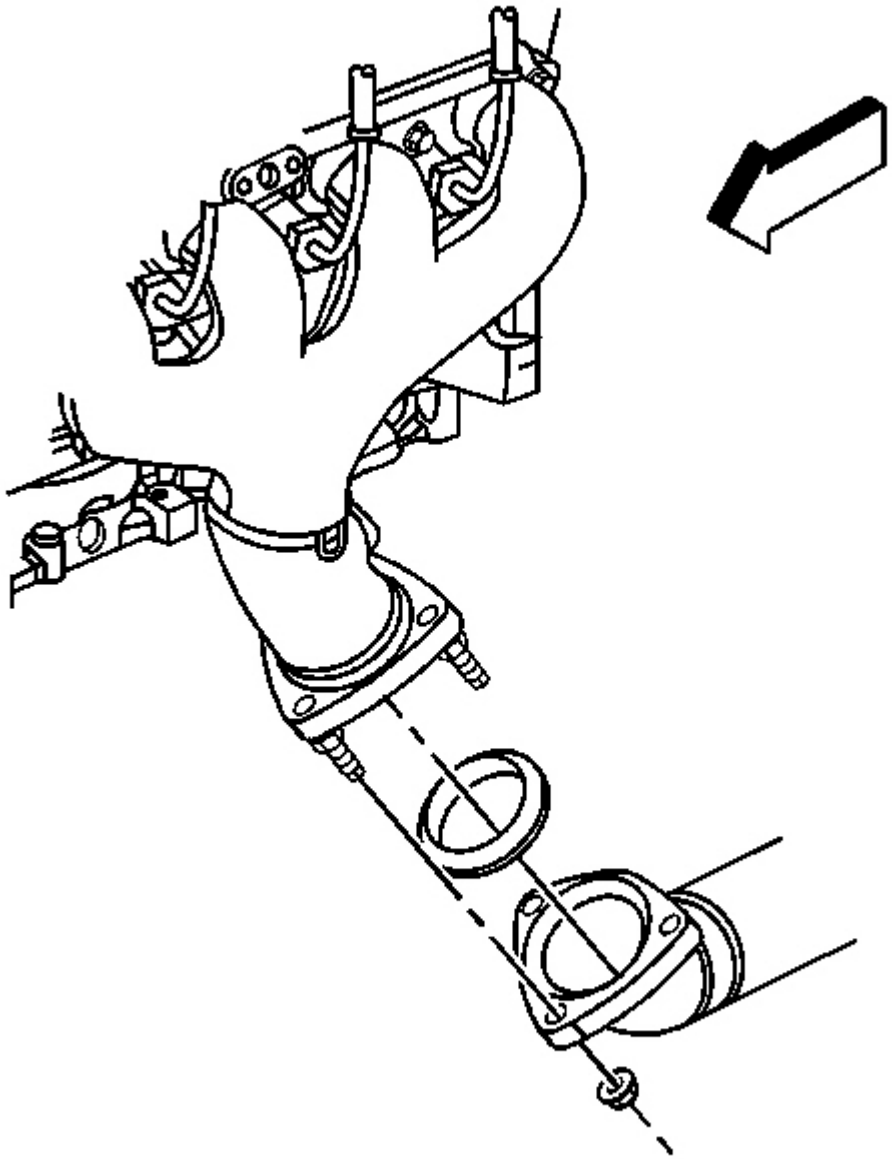

Fig. 42: Exhaust Manifold & Nuts
Courtesy of GENERAL MOTORS CORP.

6. Remove the exhaust manifold nuts.
7. Install adjustable jack stands under the front and rear of the catalytic converter.

cardiagn.com

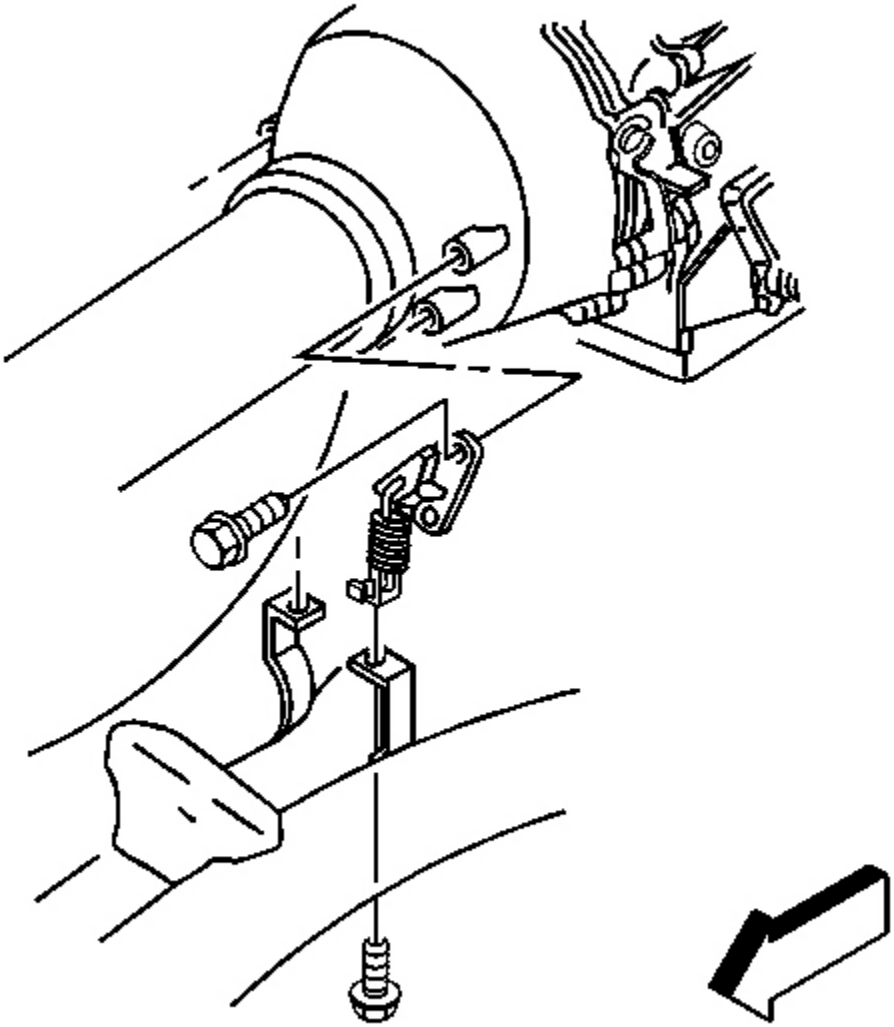

Fig. 43: Exhaust Pipe Hanger Lower & Bolts
Courtesy of GENERAL MOTORS CORP.

8. Remove the exhaust pipe hanger lower bolts.

cardiagn.com

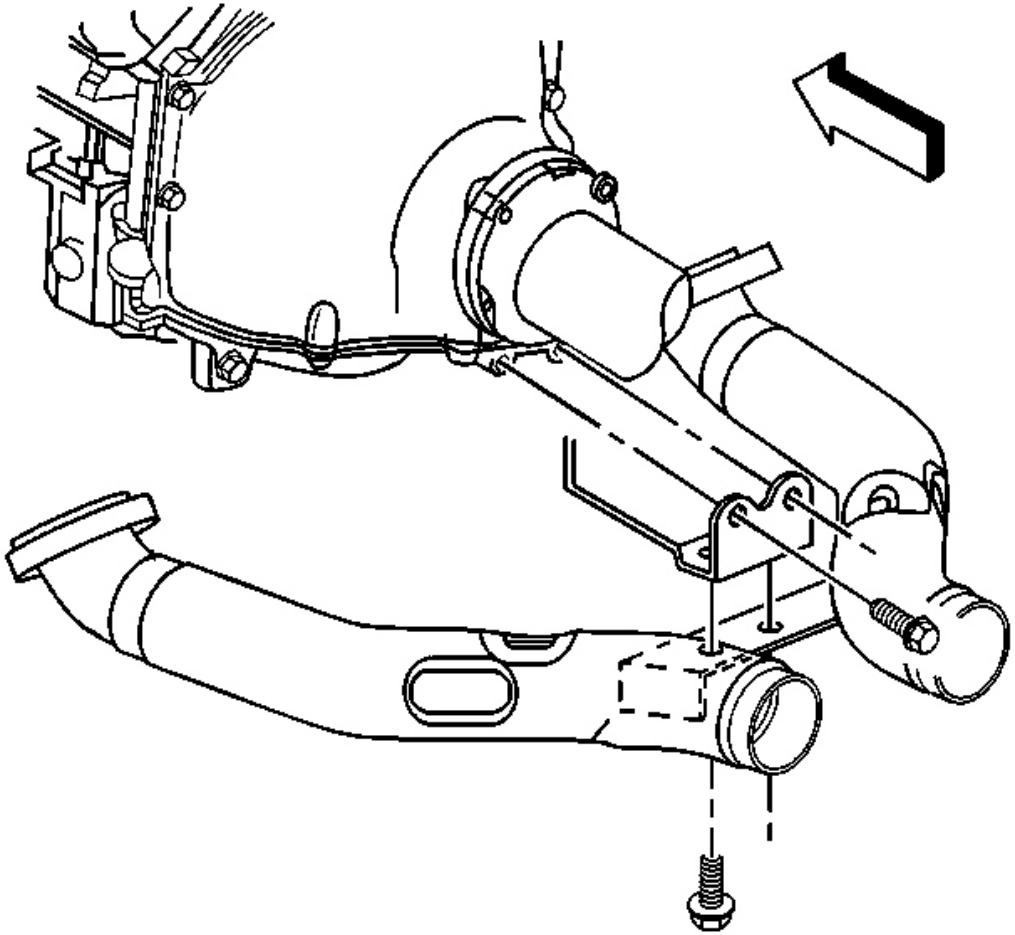

Fig. 44: Exhaust Pipe Brace Lower & Bolts
Courtesy of GENERAL MOTORS CORP.

9. Remove the exhaust pipe brace lower bolts.

cardiagn.com

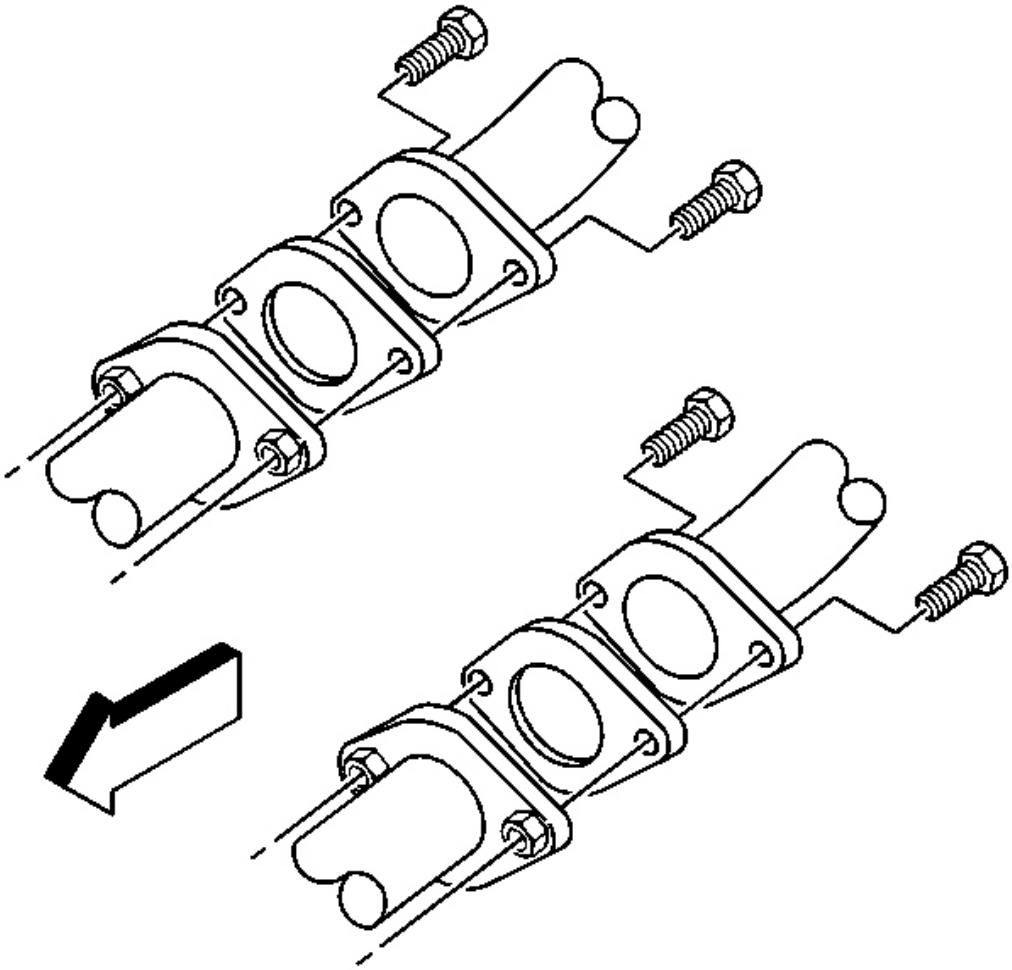

Fig. 45: Exhaust Muffler, Bolts & Gaskets
Courtesy of GENERAL MOTORS CORP.

10. Remove the exhaust muffler bolts.
11. Remove the exhaust muffler gaskets.
12. Lower the jack stands.

cardiagn.com

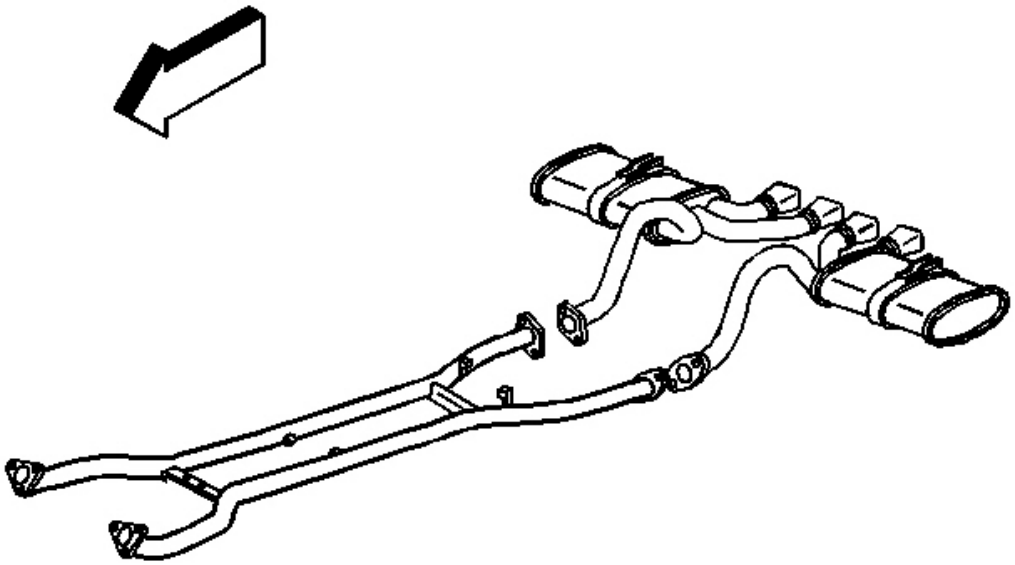

Fig. 46: Jack Stand & Catalytic Converter
Courtesy of GENERAL MOTORS CORP.

13. With the aid of an assistant remove the catalytic converter from the jack stands.

Installation Procedure

NOTE: Refer to Exhaust System Inspection Notice in Cautions and Notices.

cardiagn.com

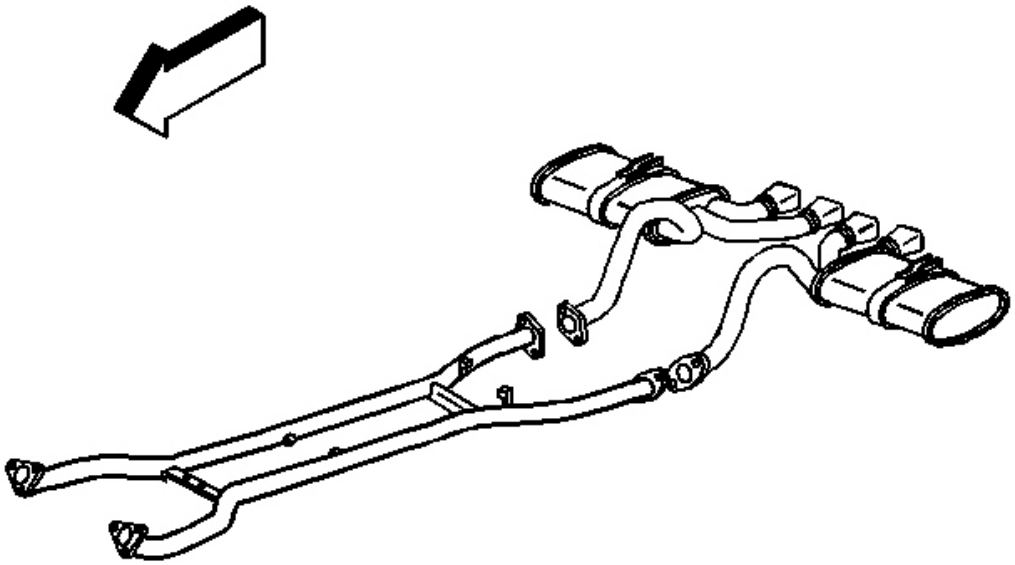

Fig. 47: Jack Stand & Catalytic Converter
Courtesy of GENERAL MOTORS CORP.

1. With the aid of an assistant install the catalytic converter to the jack stands.
2. Raise the jack stands in order to position the catalytic converter.
3. Install NEW exhaust muffler gaskets.
4. Install ALL exhaust bolts until snug to ensure correct alignment of the catalytic converter.
5. Remove the adjustable jack stands.

cardiagn.com

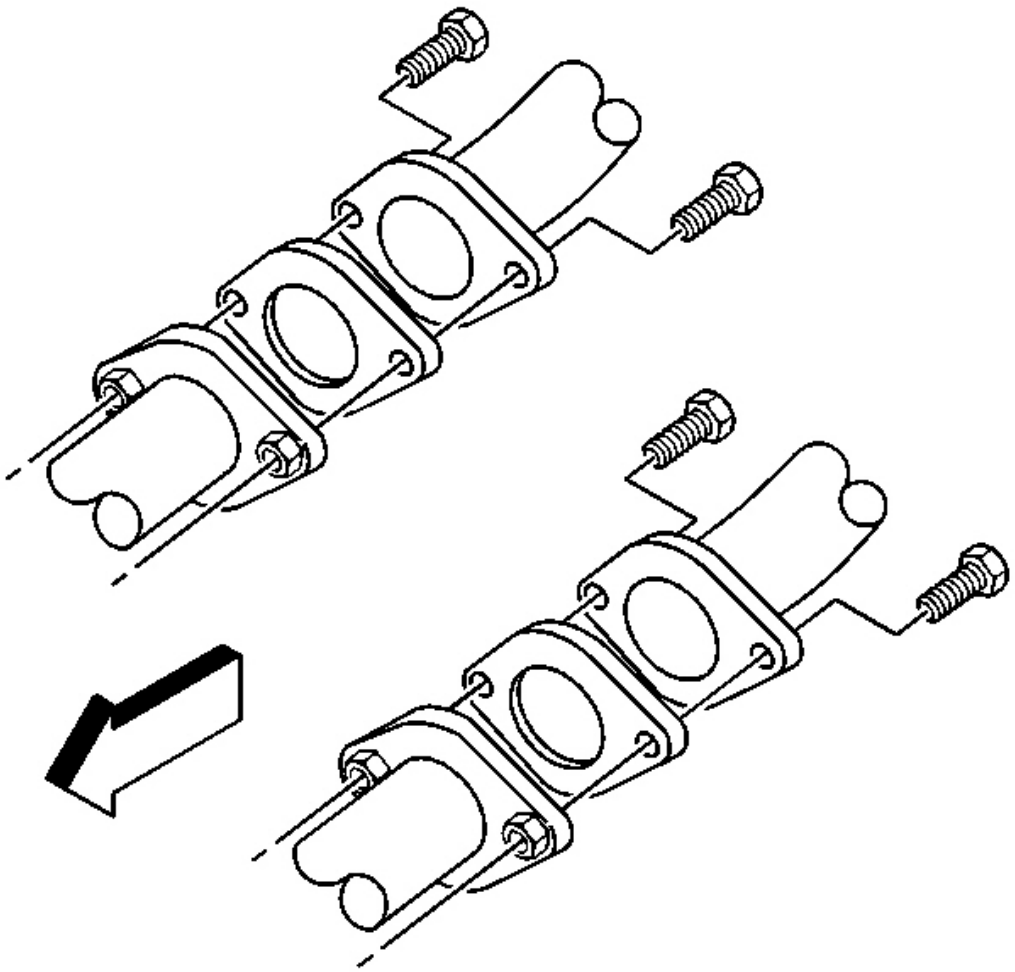

Fig. 48: Exhaust Muffler, Bolts & Gaskets
Courtesy of GENERAL MOTORS CORP.

NOTE: Refer to Fastener Notice in Cautions and Notices.

6. Tighten the exhaust muffler bolts in the following sequence:
    1. Left inboard
    2. Left outboard
    3. Right inboard
    4. Right outboard

    Tighten: Tighten the exhaust muffler bolts to 50 N.m (37 lb ft).

cardiagn.com

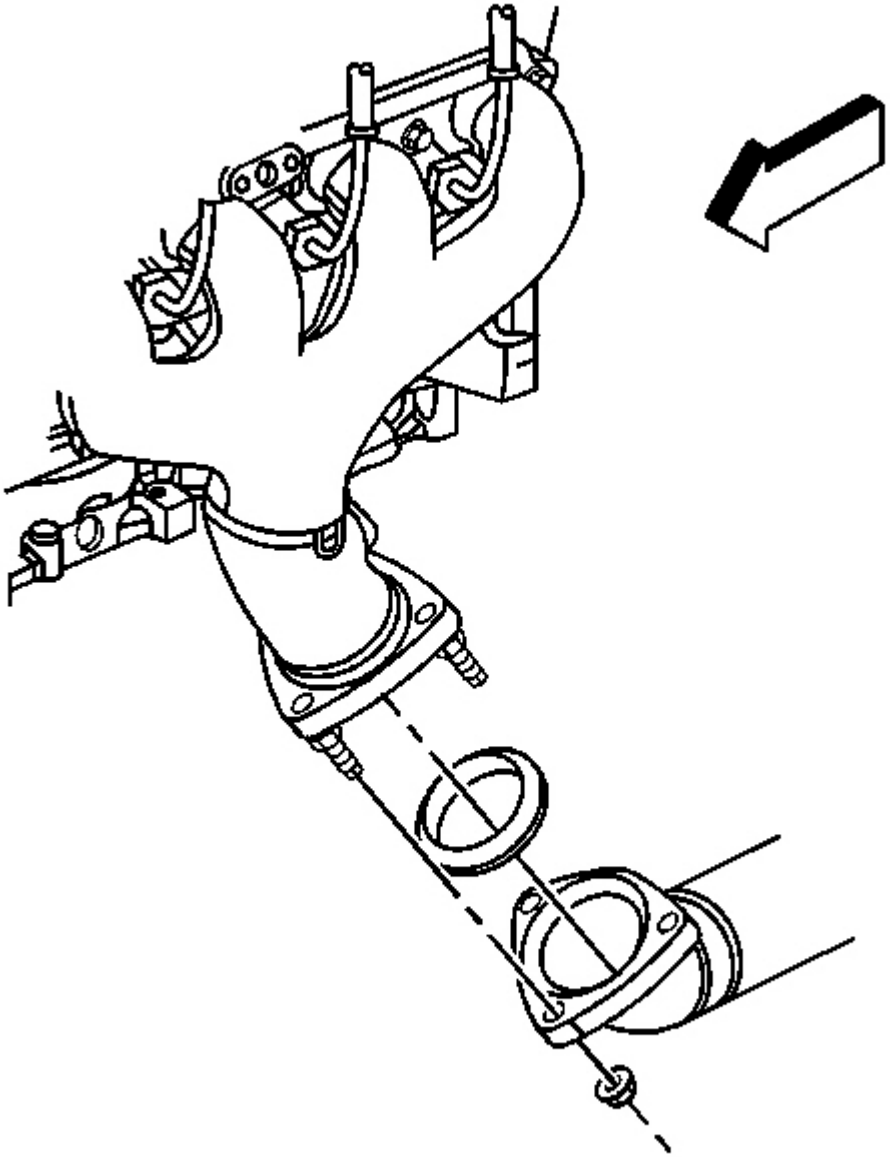

Fig. 49: Exhaust Manifold & Nuts
Courtesy of GENERAL MOTORS CORP.

7. Tighten the exhaust manifold nuts.

   Tighten: Tighten the exhaust manifold nuts to 20 N.m (15 lb ft).

cardiagn.com

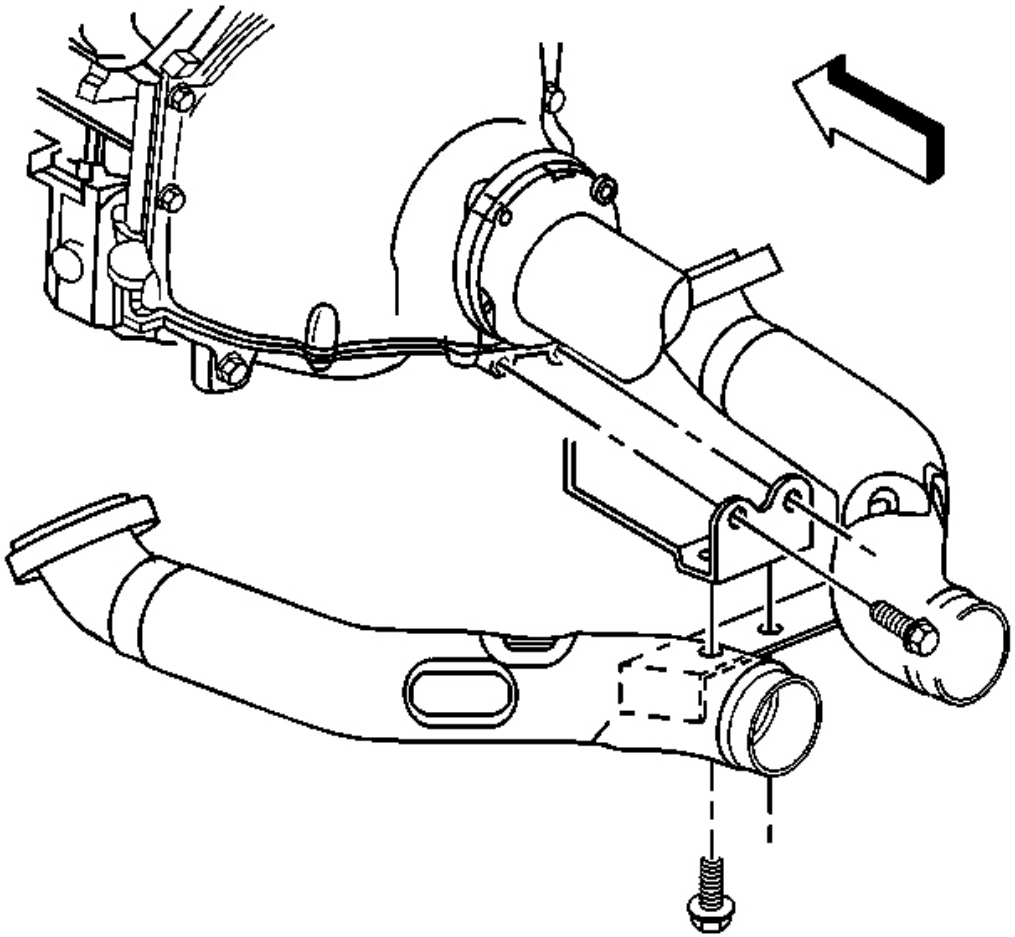

Fig. 50: Exhaust Pipe Brace Lower & Bolts
Courtesy of GENERAL MOTORS CORP.

8. Tighten the exhaust pipe brace lower bolts.

   Tighten: Tighten the exhaust pipe brace bolts to 50 N.m (37 lb ft).

cardiagn.com

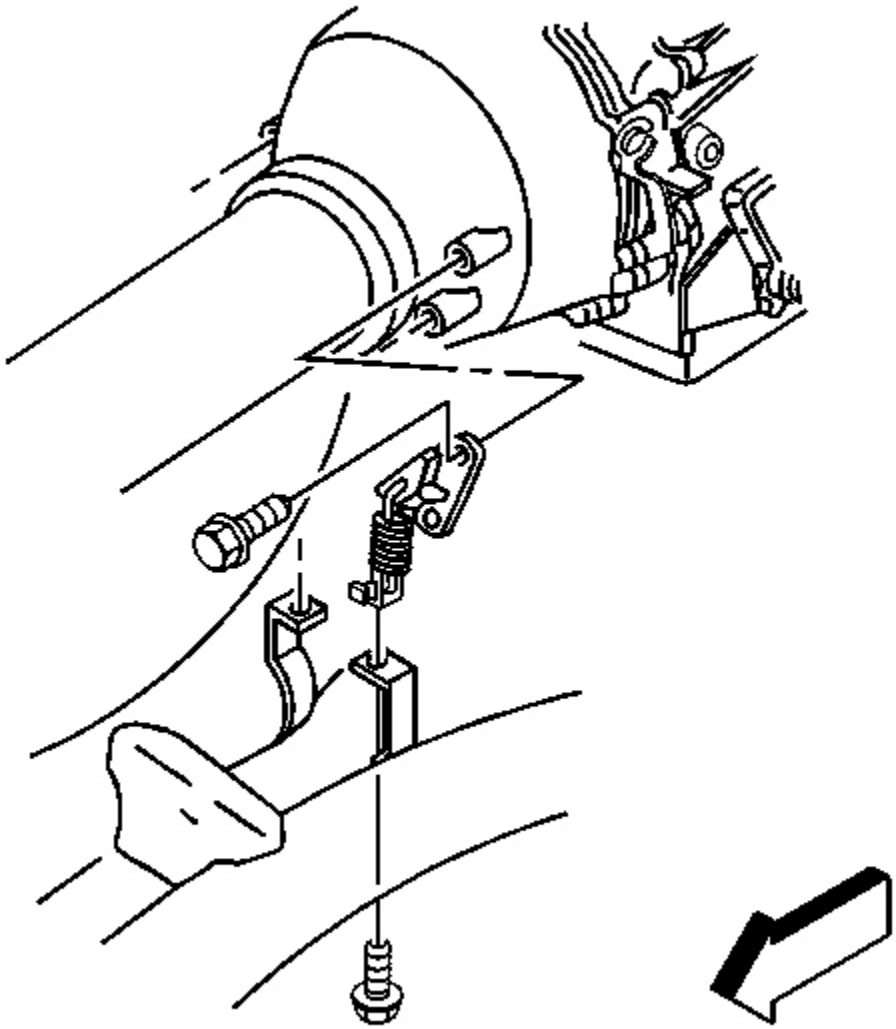

Fig. 51: Exhaust Pipe Hanger Lower & Bolts
Courtesy of GENERAL MOTORS CORP.

9. Tighten the exhaust pipe hanger lower bolts.

   Tighten: Tighten the exhaust pipe hanger bolts to 50 N.m (37 lb ft).

cardiagn.com

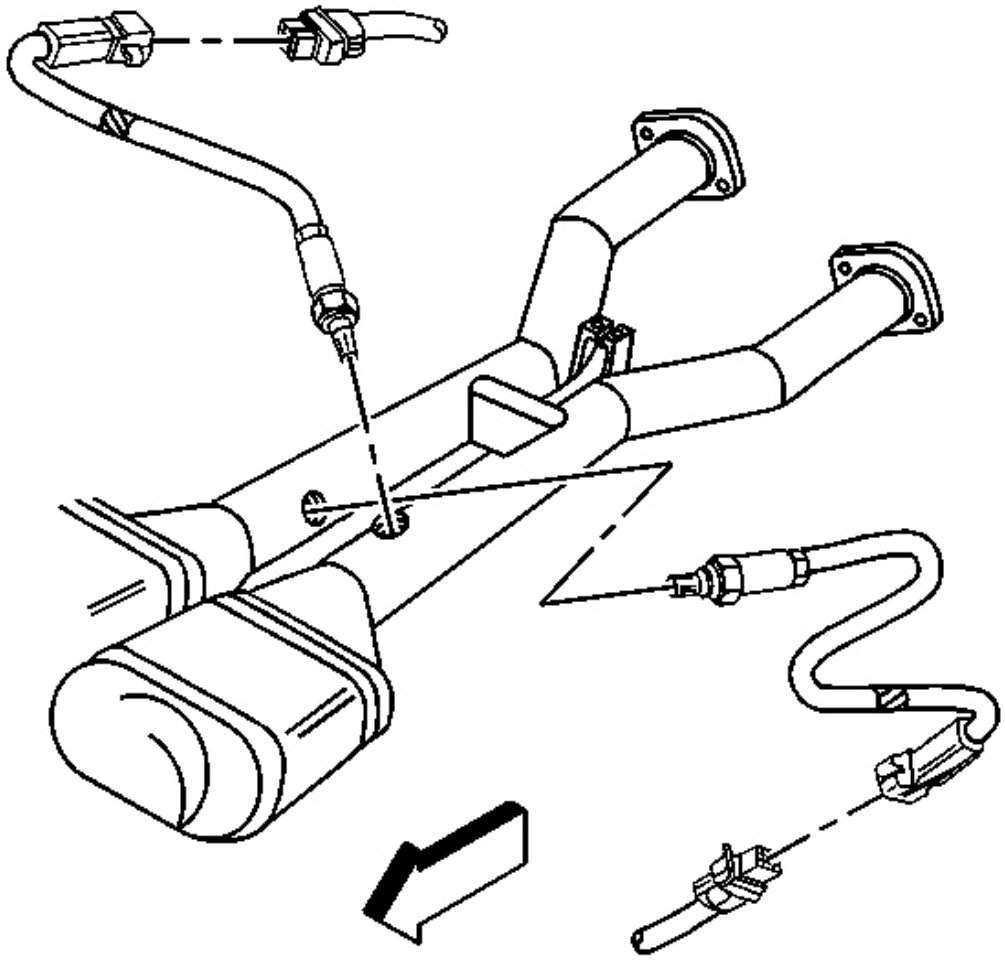

Fig. 52: CPA Locks & Oxygen Sensor Electrical Connectors
Courtesy of GENERAL MOTORS CORP.

NOTE: Refer to Oxygen Sensor Notice in Cautions and Notices.

10. Apply anti-sieze compound GM P/N 12377953 or equivalent to the threads of the oxygen sensor.
11. Install the oxygen sensors.

    Tighten: Tighten the oxygen sensors to 42 N.m (30 lb ft).

12. Install the oxygen sensor clips to the heat shields.
13. Connect the oxygen sensor electrical connectors.

cardiagn.com

14. Install the CPA locks.
15. Lower the vehicle.

EXHAUST HANGER REPLACEMENT (EXHAUST PIPE REAR)

Removal Procedure

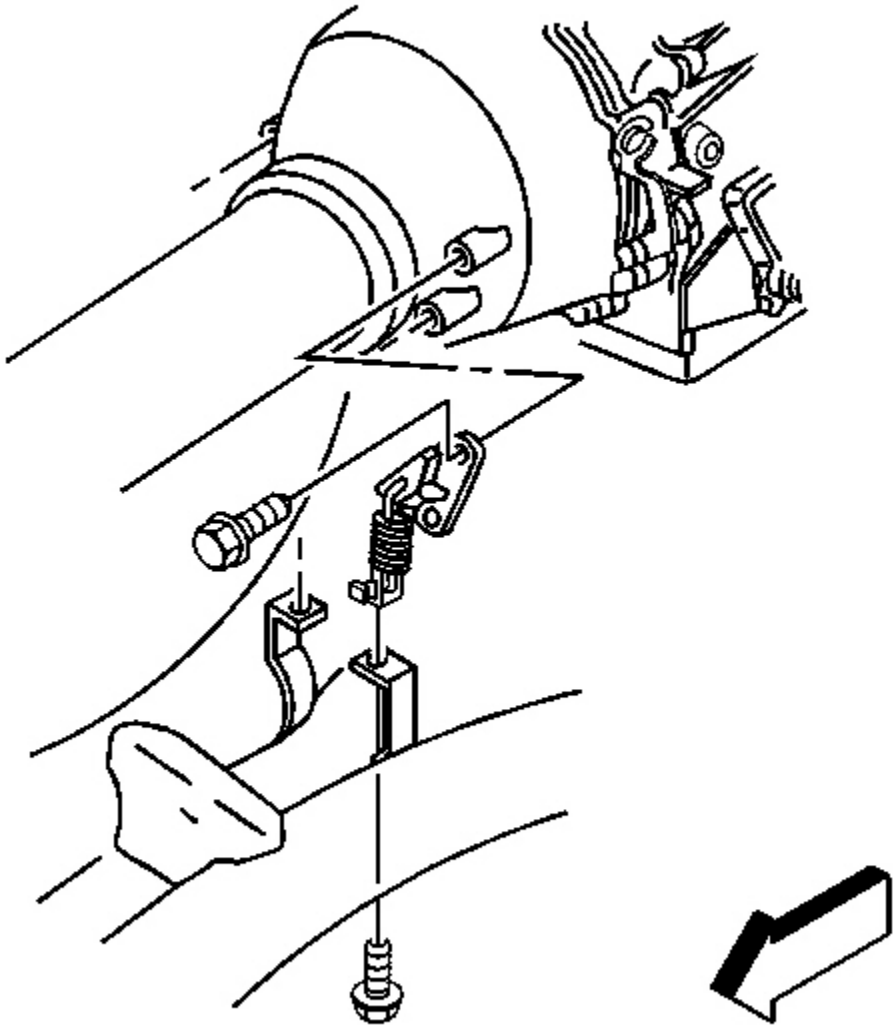

Fig. 53: Exhaust Pipe Hanger Lower & Bolts
Courtesy of GENERAL MOTORS CORP.

cardiagn.com

1. Remove the catalytic converter. Refer to **Catalytic Converter Replacement** .
2. Remove the upper exhaust pipe hanger bolts.
3. Remove the exhaust pipe hanger.

Installation Procedure

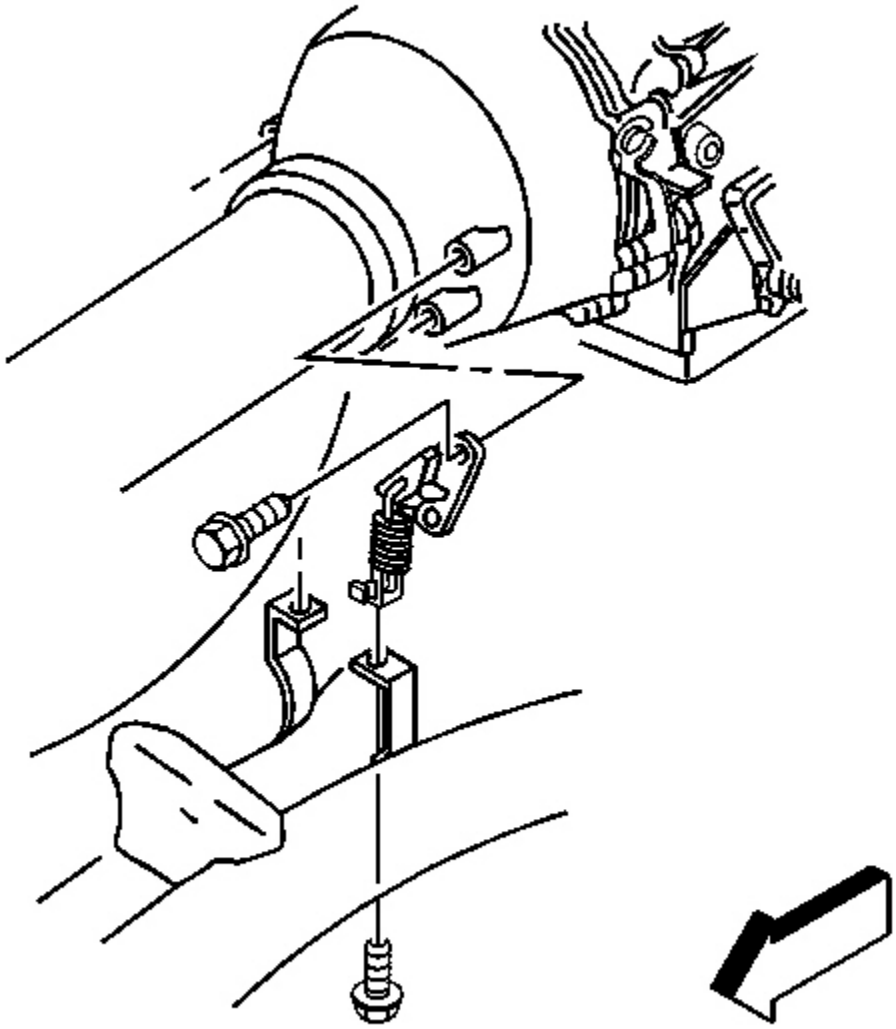

Fig. 54: Exhaust Pipe Hanger Lower & Bolts
Courtesy of GENERAL MOTORS CORP.

cardiagn.com

NOTE: **Refer to Fastener Notice in Cautions and Notices.**

1. Install the exhaust pipe hanger.
2. Install the upper exhaust pipe hanger bolts.

   Tighten: Tighten the exhaust pipe hanger bolts to 50 N.m (37 lb ft).

3. Install the catalytic converter. Refer to **Catalytic Converter Replacement** .

EXHAUST HANGER REPLACEMENT (EXHAUST MUFFLER)

Removal Procedure

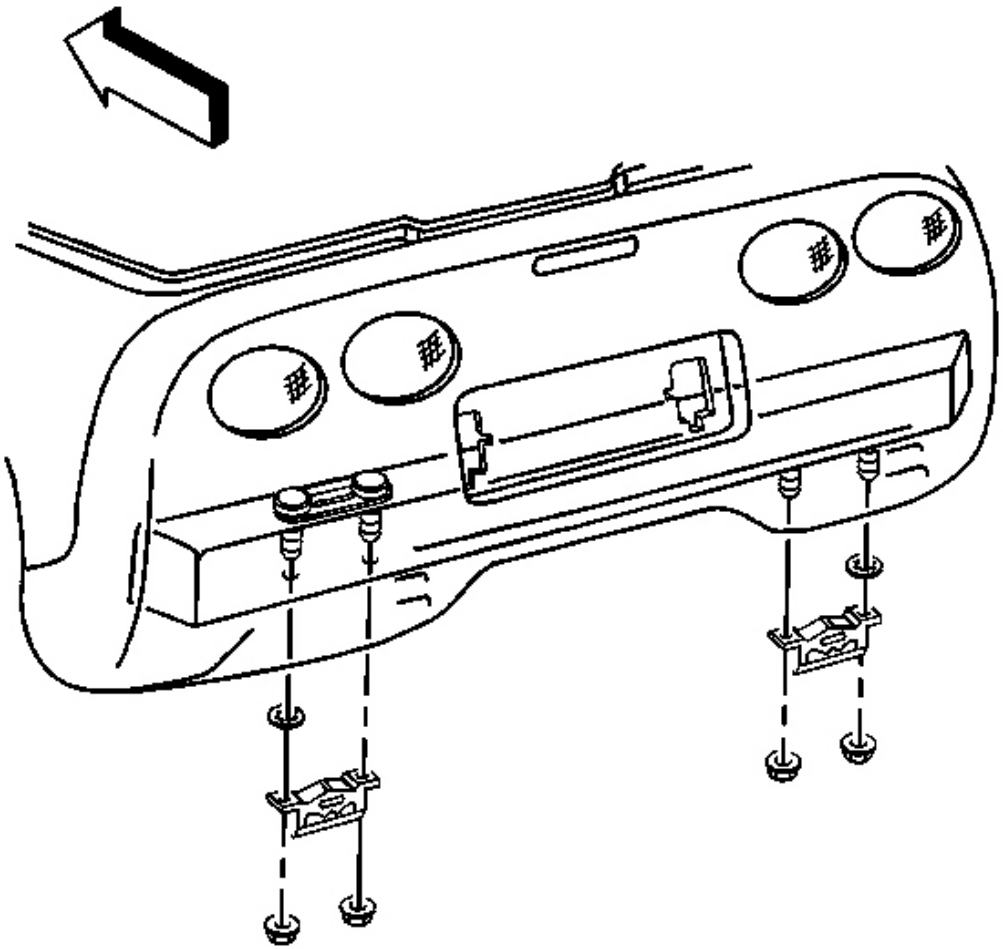

cardiagn.com

Fig. 55: Muffler Hanger Nuts & Hanger
Courtesy of GENERAL MOTORS CORP.

1. Remove the muffler. Refer to **Muffler Replacement - Left** or **Muffler Replacement - Right** .
2. Remove the muffler hanger nuts and hanger.
3. Remove the push-on retainer, if necessary.
4. Remove the hanger reinforcement, if necessary.

Installation Procedure

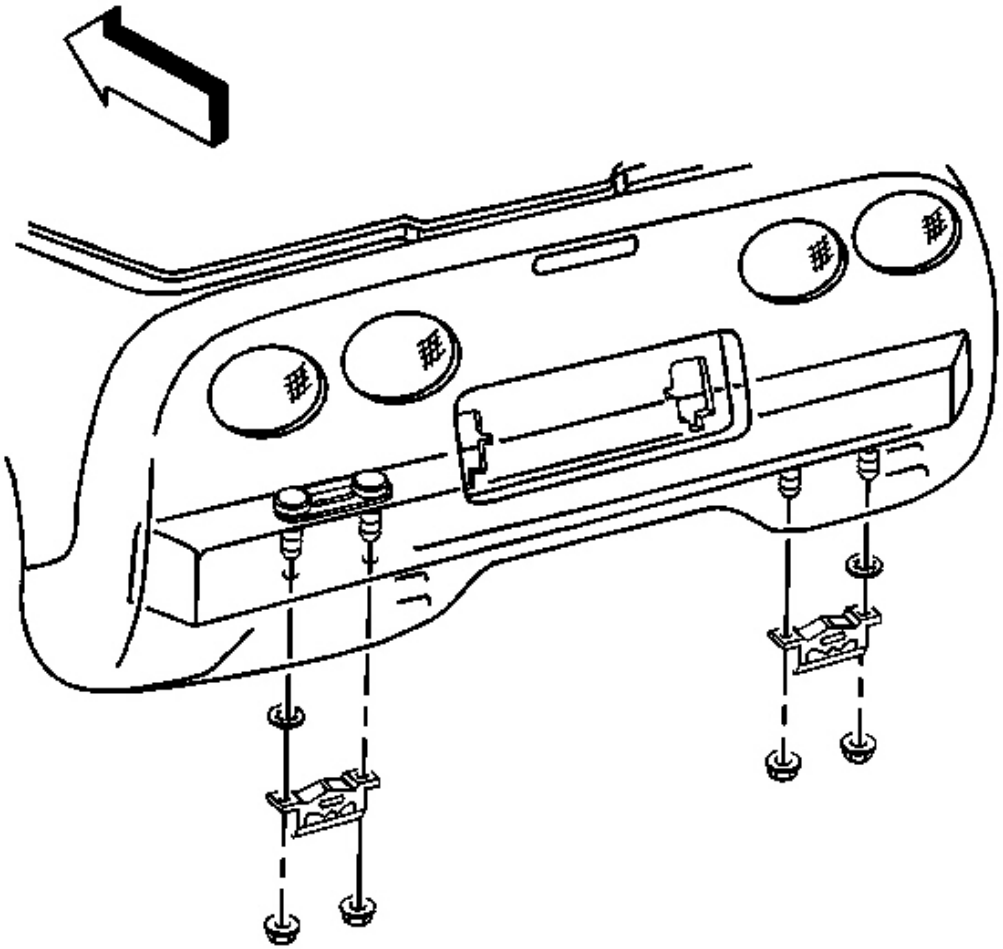

Fig. 56: Muffler Hanger Nuts & Hanger
Courtesy of GENERAL MOTORS CORP.

cardiagn.com

1. Install the hanger reinforcement, if necessary.
2. Install the push-on retainer, if necessary.

NOTE: Refer to Fastener Notice in Cautions and Notices.

3. Install the muffler hanger and nuts.

   Tighten: Tighten the muffler hanger nuts to 16 N.m (12 lb ft).

4. Install the muffler. Refer to **Muffler Replacement - Left** or **Muffler Replacement - Right** .

MUFFLER REPLACEMENT - LEFT

Removal Procedure

CAUTION: Refer to Exhaust Service Caution in Cautions and Notices.

CAUTION: Refer to Protective Goggles and Gloves Caution in Cautions and Notices.

cardiagn.com

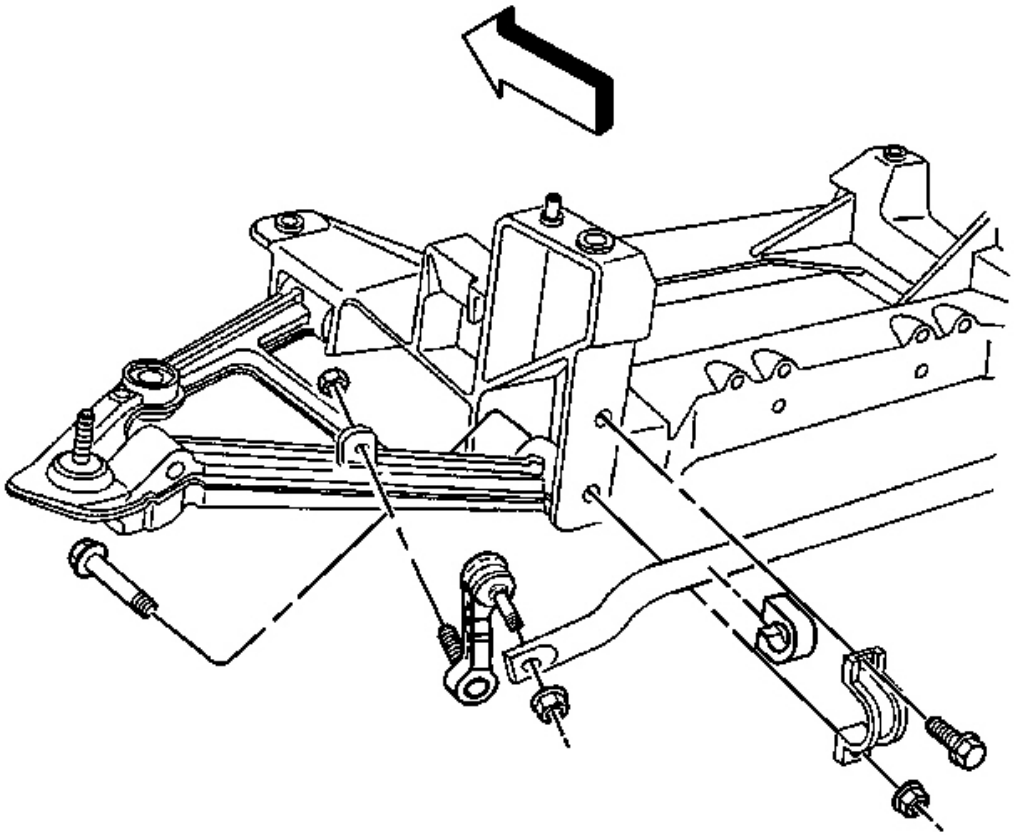

Fig. 57: Rear Stabilizer Shaft Brackets, Bolts & Insulators
Courtesy of GENERAL MOTORS CORP.

1. Remove the rear stabilizer shaft bracket bolts and nuts.
2. Remove the rear stabilizer shaft brackets and insulators.
3. Position the stabilizer shaft downwards.

cardiagn.com

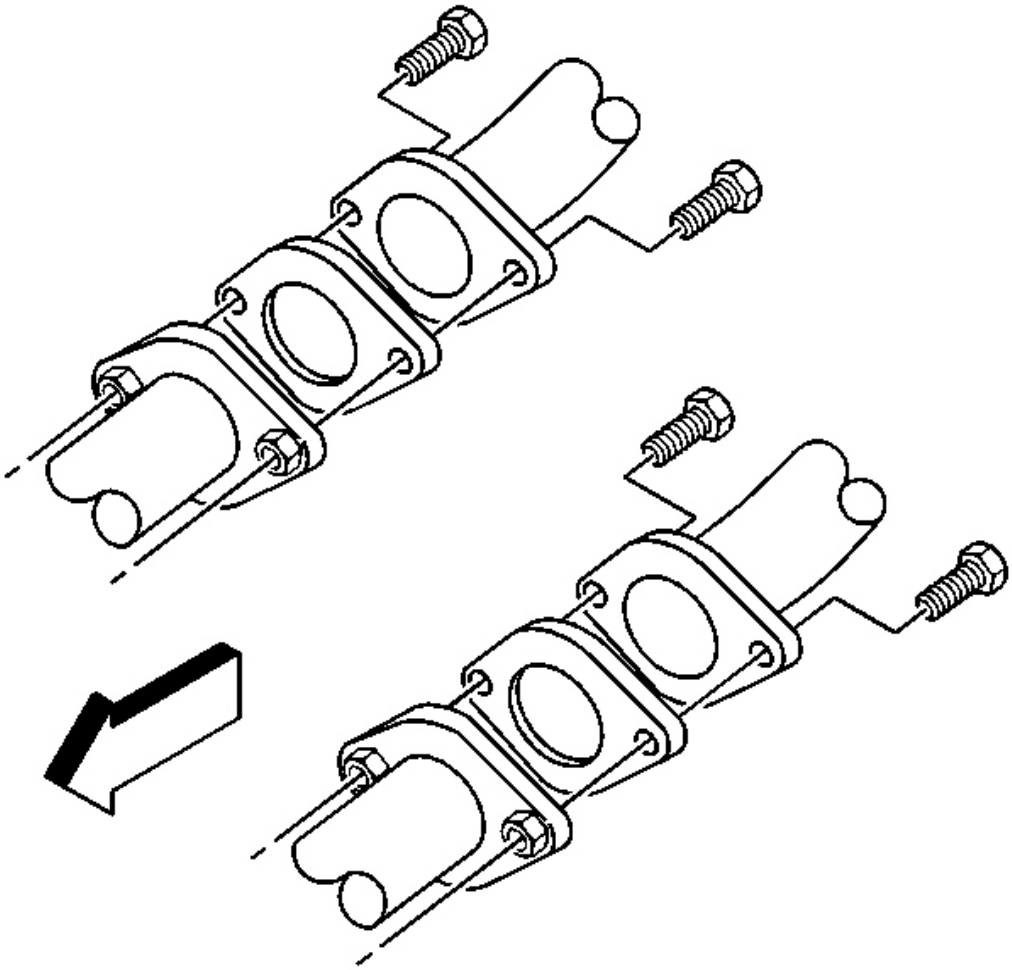

Fig. 58: Exhaust Muffler, Bolts & Gaskets
Courtesy of GENERAL MOTORS CORP.

4. Remove the left exhaust muffler bolts.
5. Remove the exhaust muffler gasket.

cardiagn.com

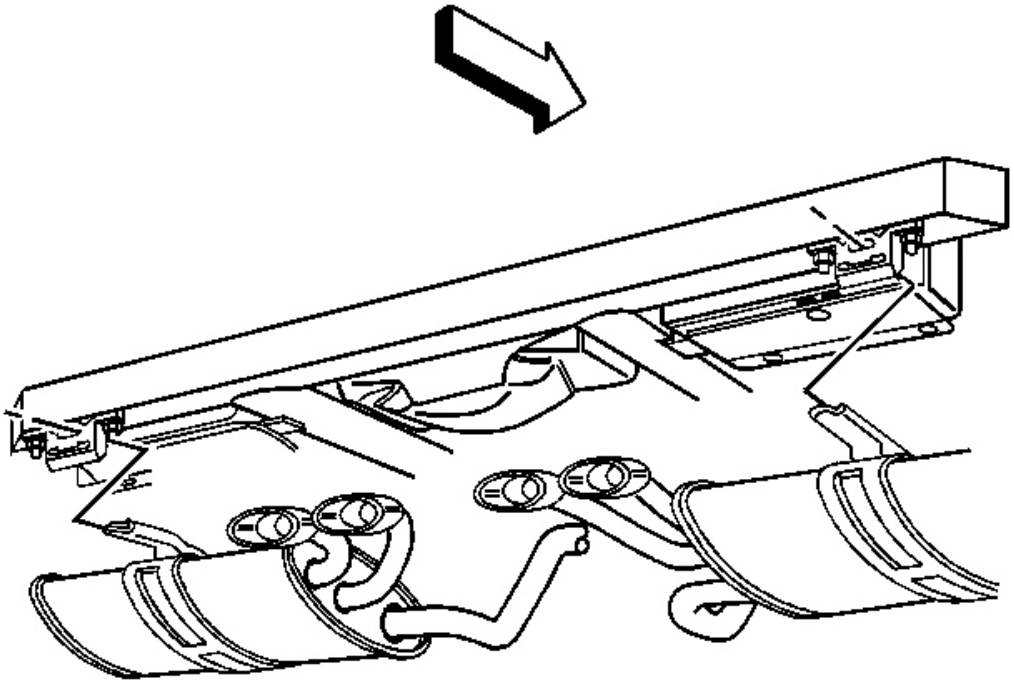

Fig. 59: Hanger Muffler Blade
Courtesy of GENERAL MOTORS CORP.

6. Slide the muffler blade out from the hanger.
7. Remove the left muffler.

Installation Procedure

NOTE: Refer to Exhaust System Inspection Notice in Cautions and Notices.

cardiagn.com

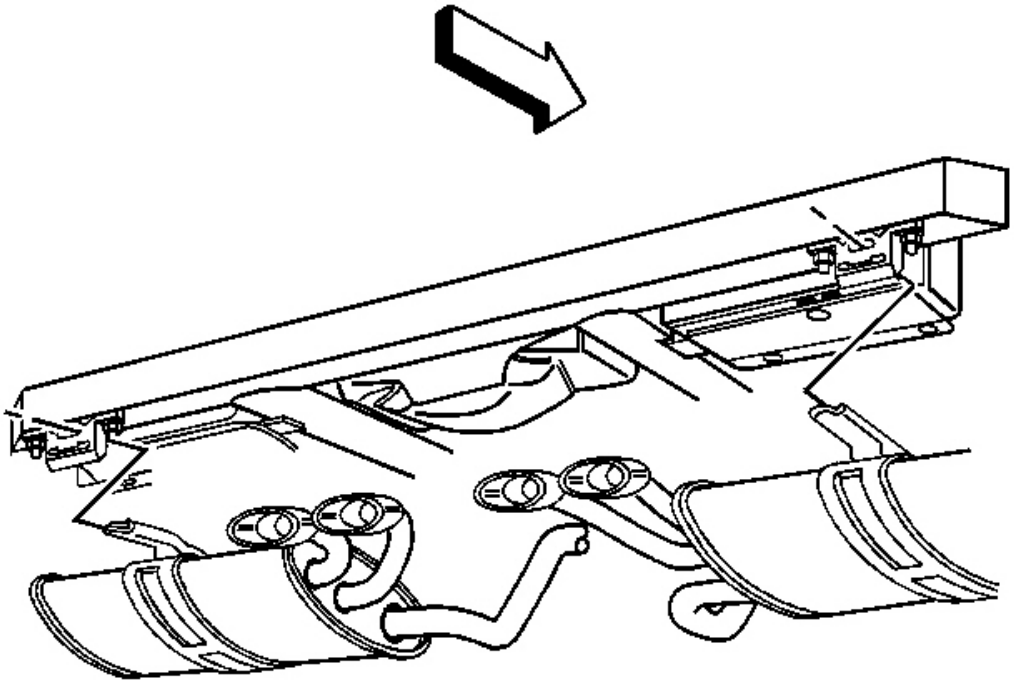

Fig. 60: Hanger Muffler Blade
Courtesy of GENERAL MOTORS CORP.

1. Install the left muffler.
2. Slide the muffler blade into the hanger.

cardiagn.com

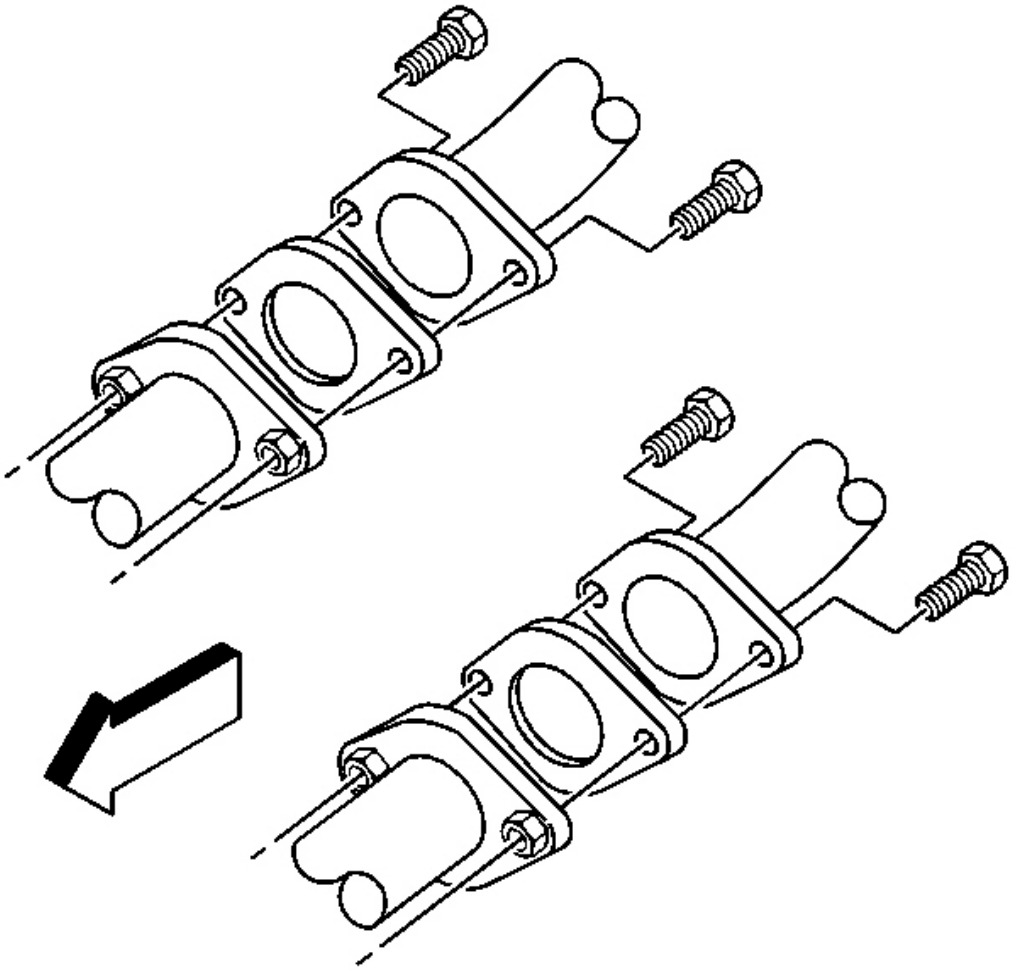

Fig. 61: Exhaust Muffler, Bolts & Gaskets
Courtesy of GENERAL MOTORS CORP.

NOTE: Refer to Fastener Notice in Cautions and Notices.

3. Install a NEW exhaust muffler gasket.
4. Install the left side exhaust muffler bolts.

Tighten: Tighten the exhaust muffler bolts to 50 N.m (37 lb ft).

cardiagn.com

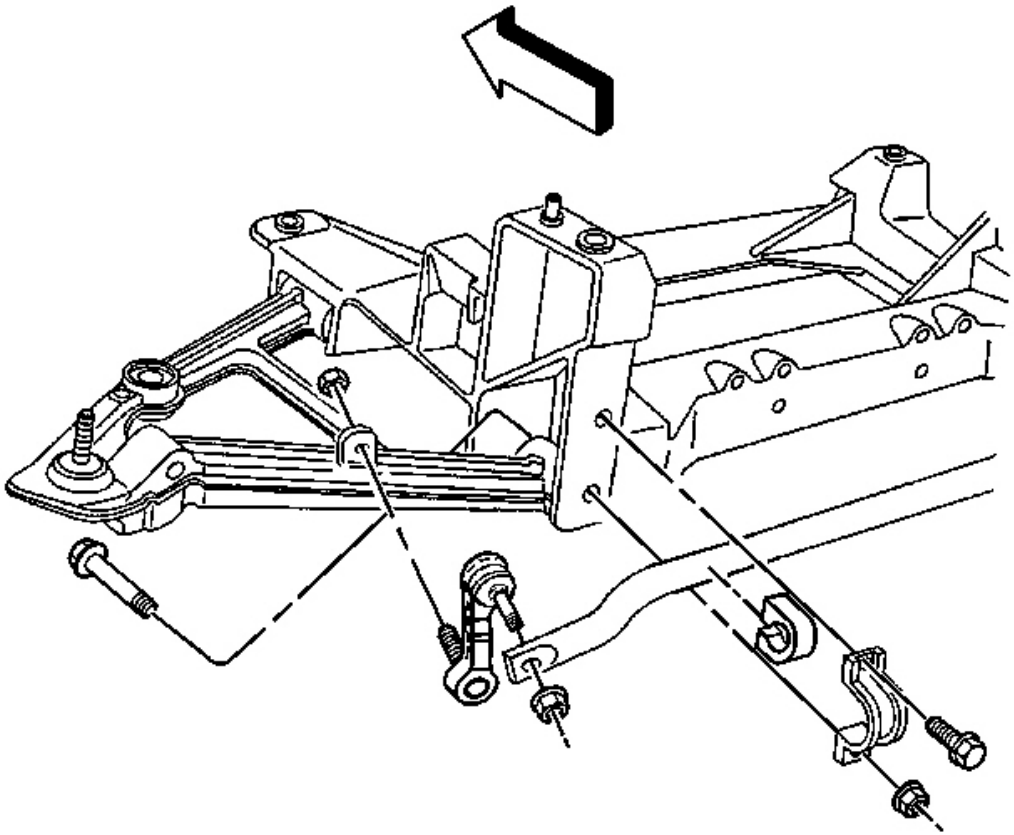

Fig. 62: Rear Stabilizer Shaft Brackets, Bolts & Insulators
Courtesy of GENERAL MOTORS CORP.

5. Position the rear stabilizer shaft upwards.
6. Install the rear stabilizer shaft insulators and brackets.
7. Install the rear stabilizer shaft bracket bolts and nuts.

Tighten:

- Tighten the rear stabilizer shaft bracket bolts to 65 N.m (49 lb ft).
- Tighten the rear stabilizer shaft bracket nuts to 95 N.m (70 lb ft).

MUFFLER REPLACEMENT - RIGHT

Removal Procedure

cardiagn.com

CAUTION: Refer to Exhaust Service Caution in Cautions and Notices.

CAUTION: Refer to Protective Goggles and Gloves Caution in Cautions and Notices.

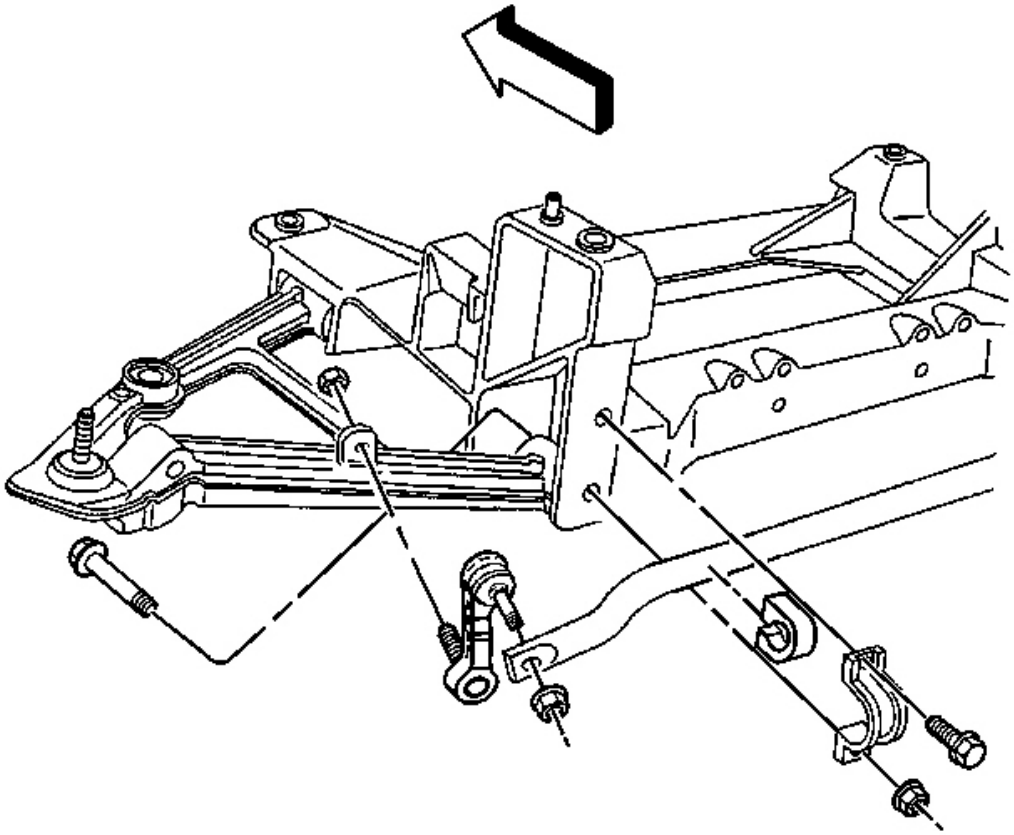

Fig. 63: Rear Stabilizer Shaft Brackets, Bolts & Insulators
Courtesy of GENERAL MOTORS CORP.

1. Remove the rear stabilizer shaft bracket bolts and nuts.
2. Remove the rear stabilizer shaft brackets and insulators.
3. Position the stabilizer shaft downwards.

cardiagn.com

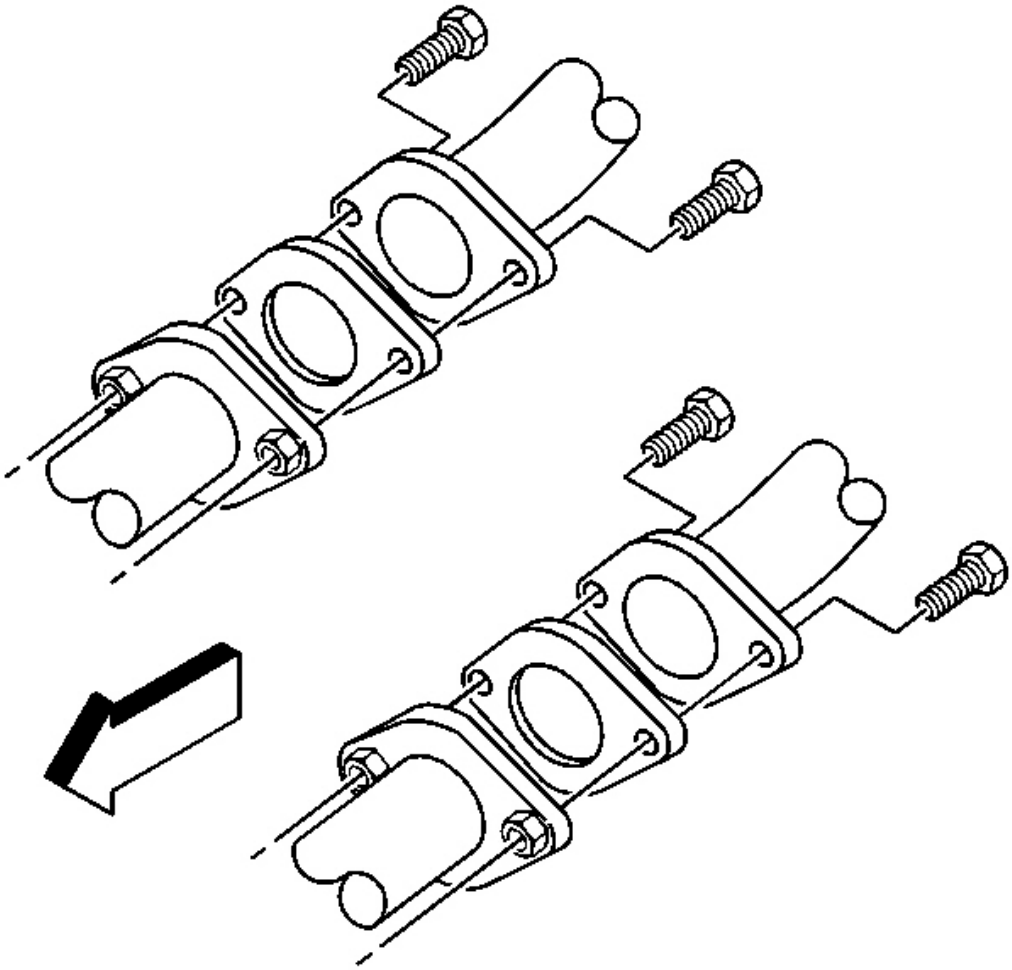

Fig. 64: Exhaust Muffler, Bolts & Gaskets
Courtesy of GENERAL MOTORS CORP.

4. Remove the left side exhaust muffler bolts.
5. Remove the exhaust muffler gasket.

cardiagn.com

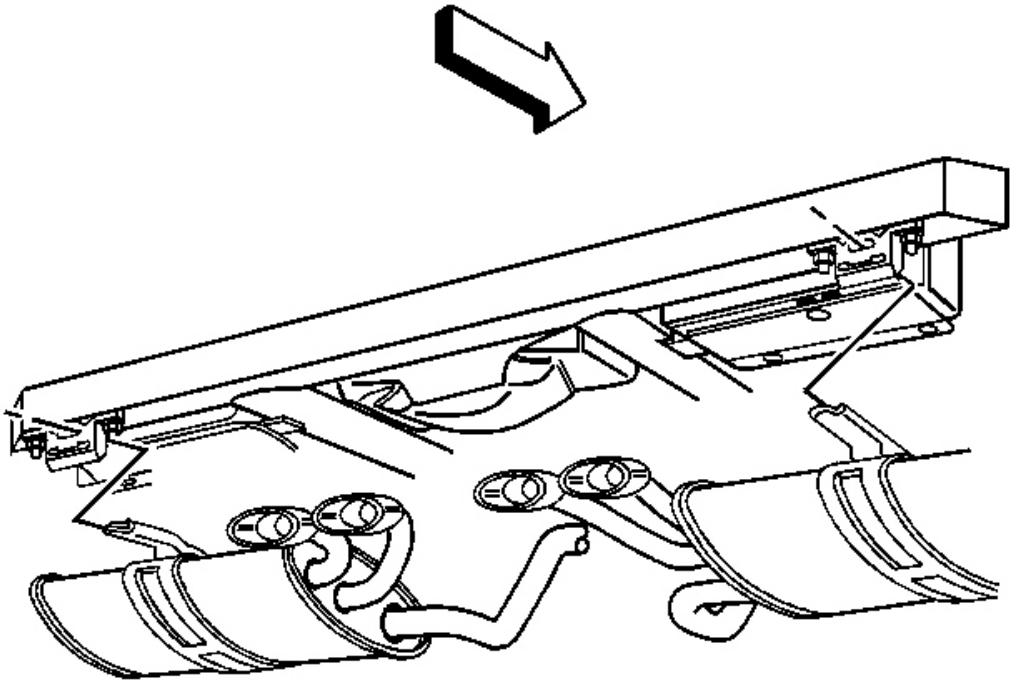

Fig. 65: Hanger Muffler Blade
Courtesy of GENERAL MOTORS CORP.

6. Slide the muffler blade out from the hanger.
7. Remove the right muffler.

Installation Procedure

NOTE: Refer to Exhaust System Inspection Notice in Cautions and Notices.

cardiagn.com

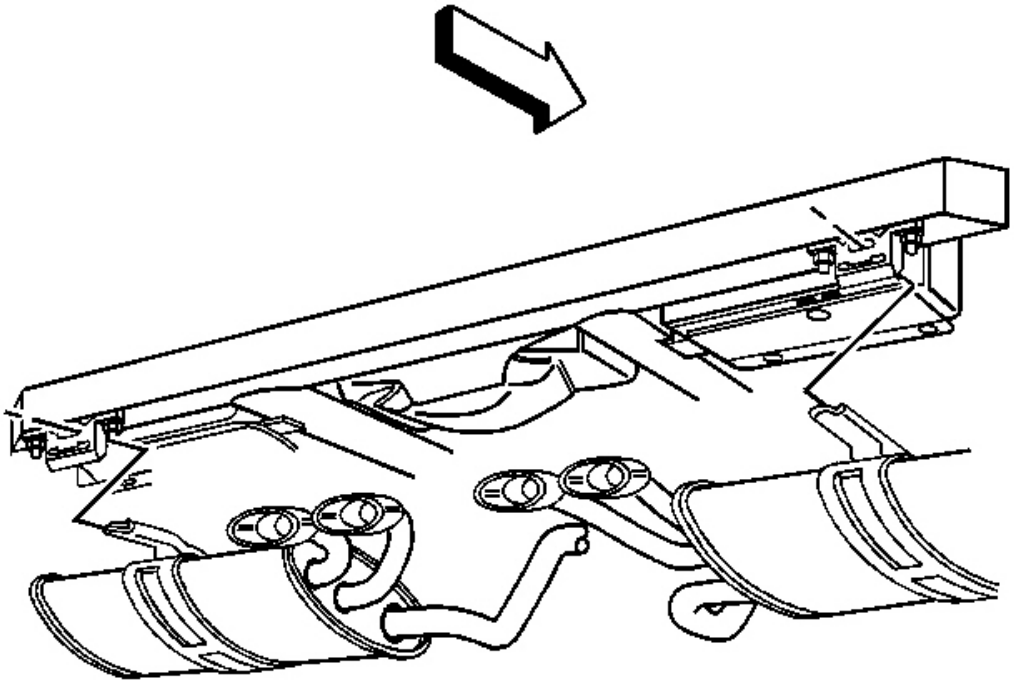

Fig. 66: Hanger Muffler Blade
Courtesy of GENERAL MOTORS CORP.

1. Install the left muffler.
2. Slide the muffler blade into the hanger.

cardiagn.com

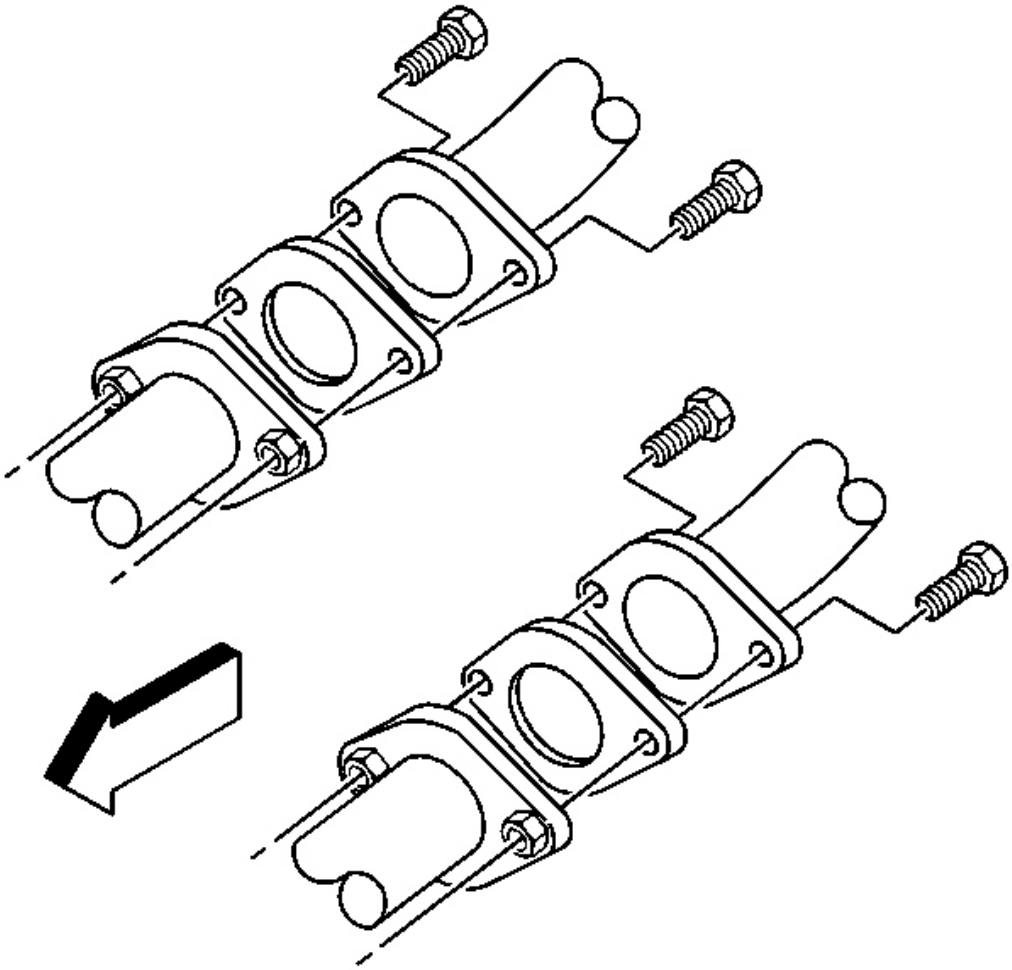

Fig. 67: Exhaust Muffler, Bolts & Gaskets
Courtesy of GENERAL MOTORS CORP.

NOTE: Refer to Fastener Notice in Cautions and Notices.

3. Install a NEW exhaust muffler gasket.
4. Install the left side exhaust muffler bolts.

Tighten: Tighten the exhaust muffler bolts to 50 N.m (37 lb ft).

cardiagn.com

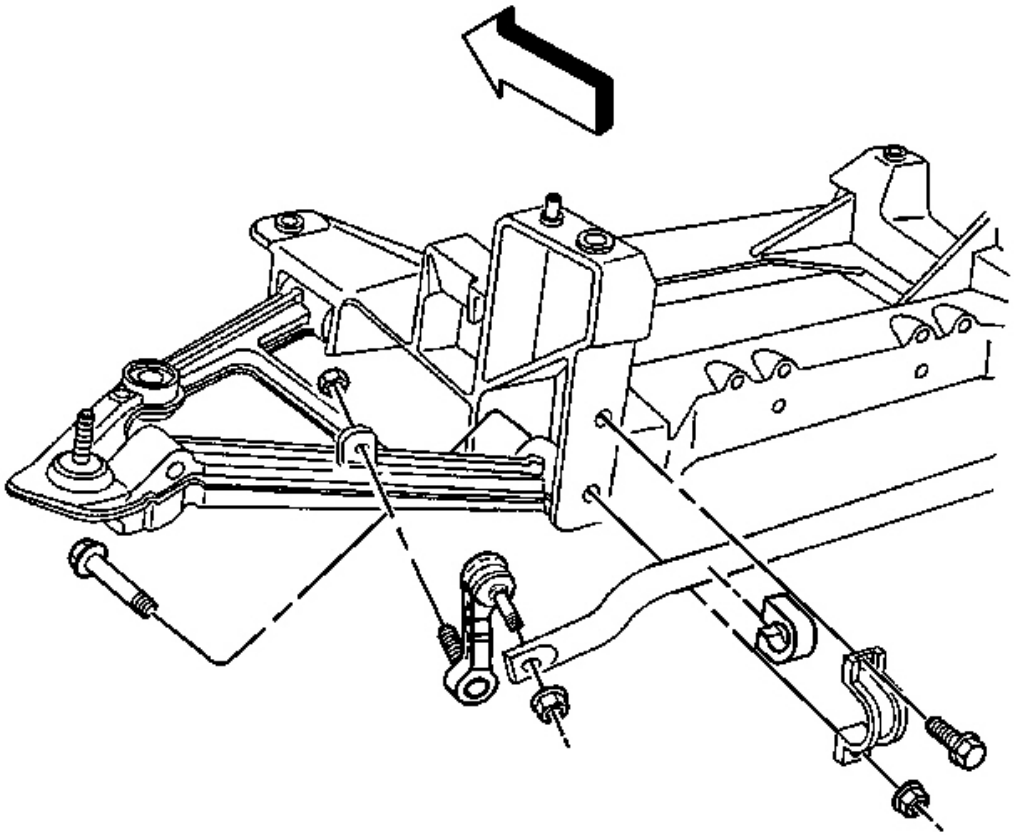

Fig. 68: Rear Stabilizer Shaft Brackets, Bolts & Insulators
Courtesy of GENERAL MOTORS CORP.

5. Position the rear stabilizer shaft upwards.
6. Install the rear stabilizer shaft insulators and brackets.
7. Install the rear stabilizer shaft bracket bolts and nuts.

Tighten:

- Tighten the rear stabilizer shaft bracket bolts to 65 N.m (49 lb ft).
- Tighten the rear stabilizer shaft bracket nuts to 95 N.m (70 lb ft).

CATALYTIC CONVERTER HEAT SHIELD REPLACEMENT

Removal Procedure

cardiagn.com

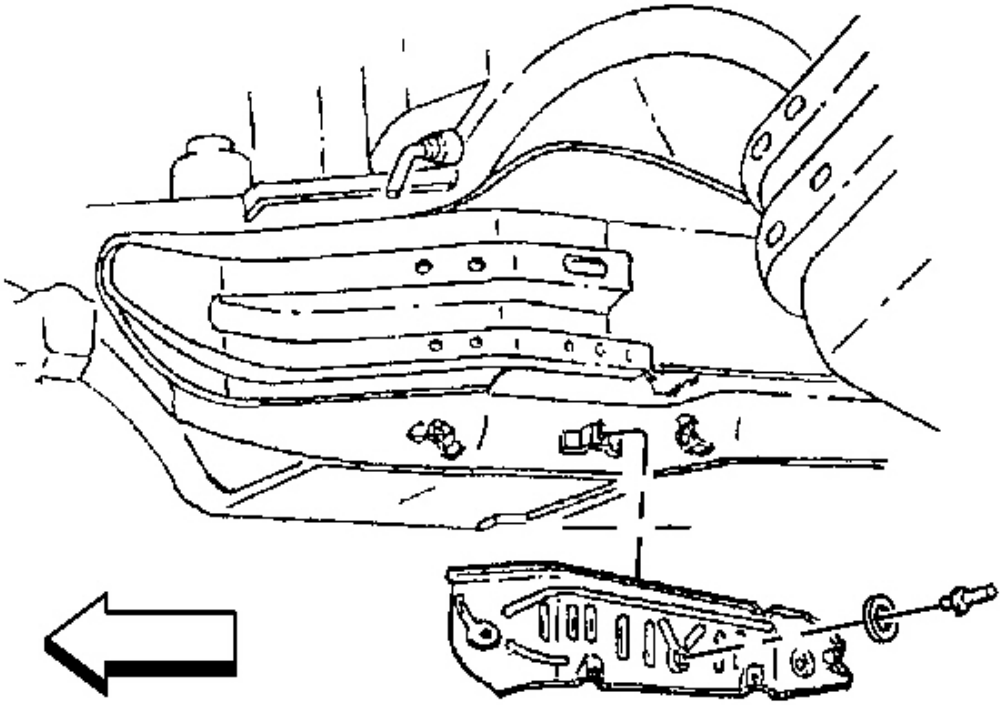

Fig. 69: Catalytic Converter Heat Shield Rivets
Courtesy of GENERAL MOTORS CORP.

1. Remove the catalytic converter. Refer to **Catalytic Converter Replacement** .
2. Drill out the catalytic converter heat shield rivets.
3. Remove the catalytic converter heat shield.

Installation Procedure

cardiagn.com

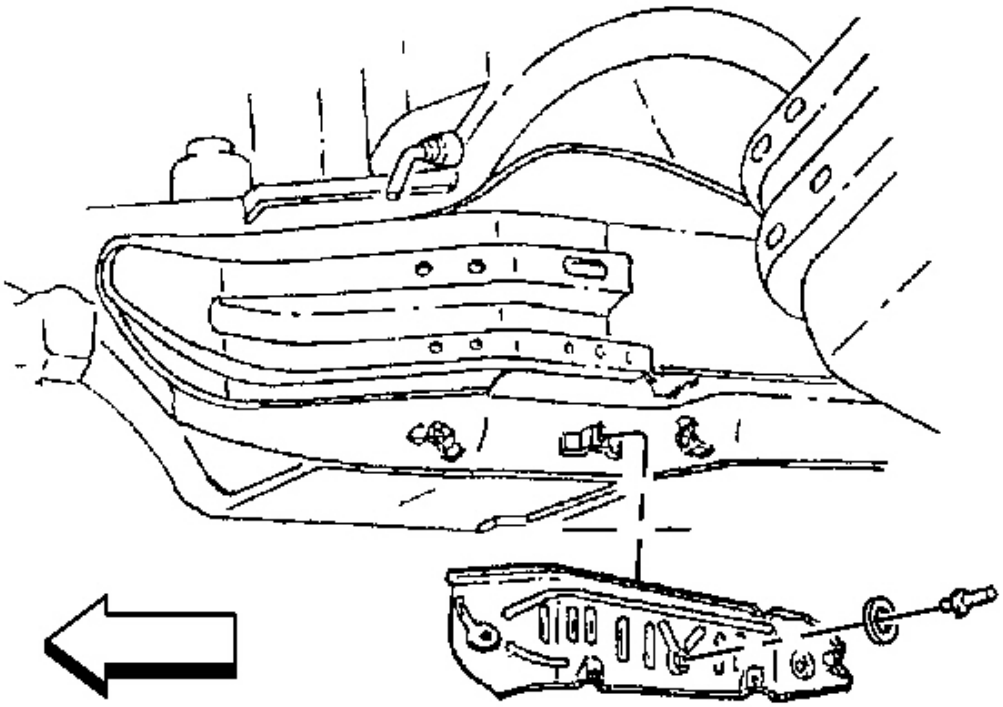

Fig. 70: Catalytic Converter Heat Shield Rivets
Courtesy of GENERAL MOTORS CORP.

1. Install the catalytic converter heat shield.
2. Install new catalytic converter heat shield rivets.
3. Install the catalytic converter. Refer to **Catalytic Converter Replacement** .

EXHAUST MUFFLER HEAT SHIELD REPLACEMENT

Removal Procedure

cardiagn.com

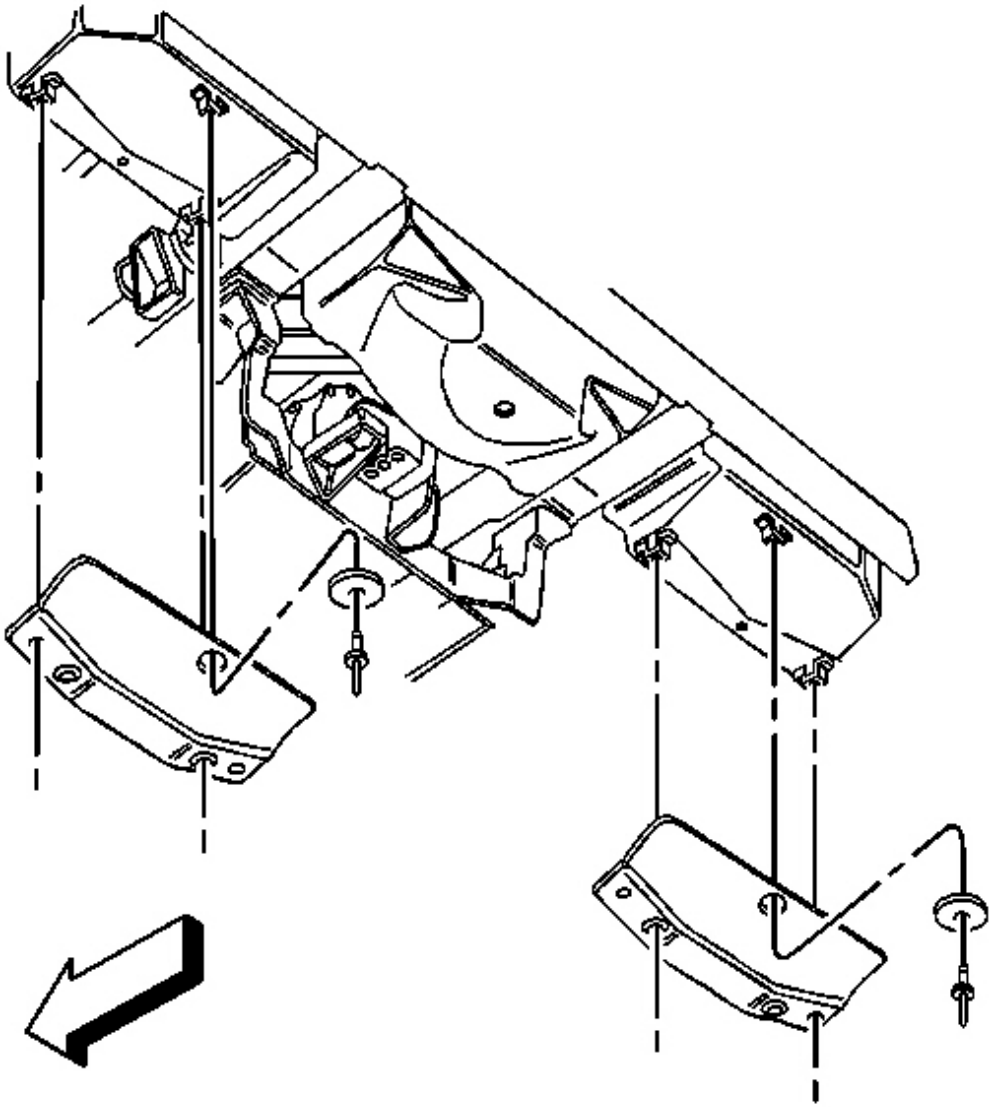

Fig. 71: Left/Right Heat Shield Washers & Shield
Courtesy of GENERAL MOTORS CORP.

1. Remove the left or right muffler. Refer to **Muffler Replacement - Left** or **Muffler Replacement - Right** .
2. Drill out the left or right muffler heat shield rivets.
3. Remove the left or right heat shield washers and shield.

cardiagn.com

Installation Procedure

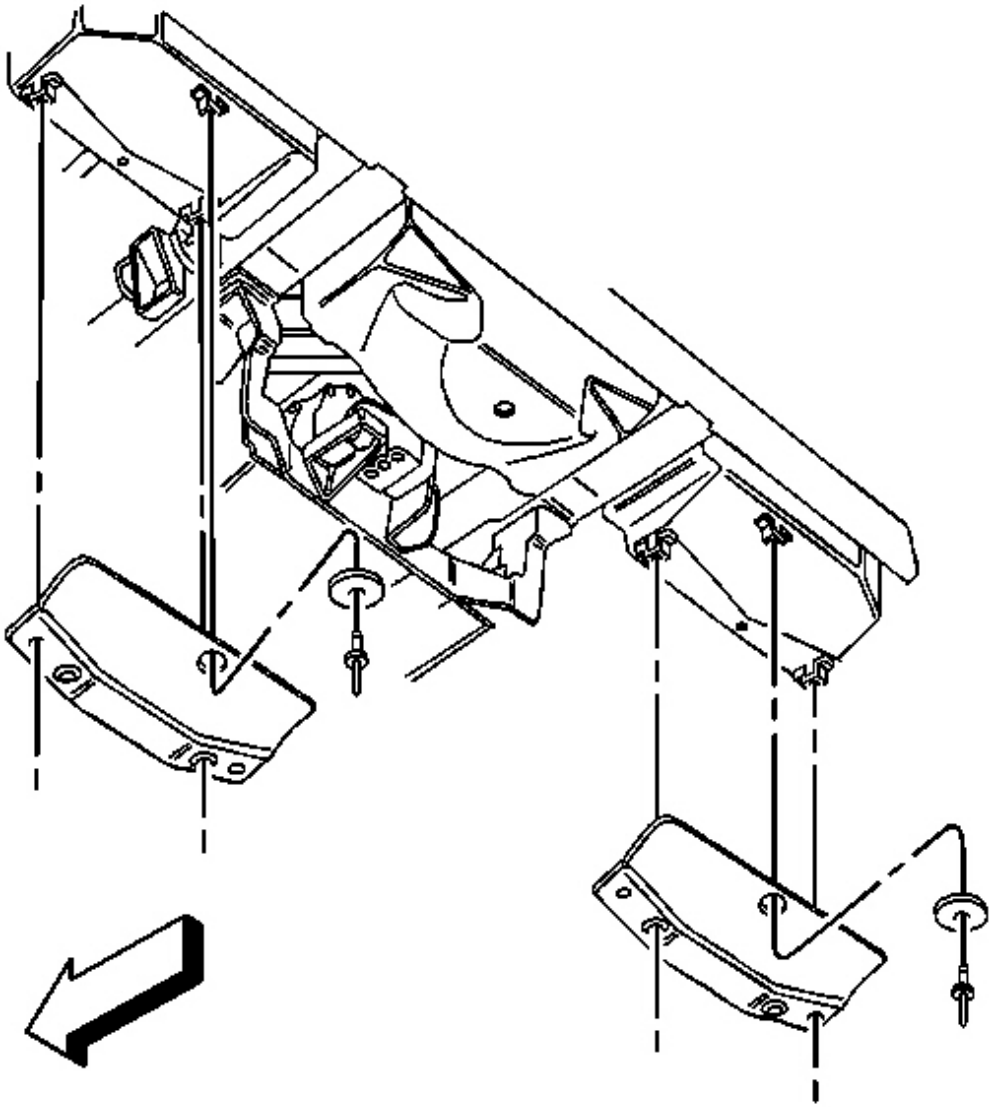

Fig. 72: Left/Right Heat Shield Washers & Shield
Courtesy of GENERAL MOTORS CORP.

1. Install the left or right heat shield and washers.
2. Install new left or right heat shield rivets.
3. Install the left or right muffler. Refer to **Muffler Replacement - Left** or **Muffler Replacement - Right** .

cardiagn.com

DESCRIPTION AND OPERATION

EXHAUST SYSTEM DESCRIPTION

IMPORTANT: Use of non-OEM parts may cause driveability concerns.

The exhaust system carries exhaust gases, treated by the catalytic converter, through a resonator, if applicable and into the exhaust muffler where exhaust noise is lessened.

In order to secure the exhaust pipe to the exhaust manifold, a flange and seal-joint coupling is utilized. The exhaust system may utilize a slip-joint coupling design with a clamp and a U-bolt or a flange connection with a gasket.

Exhaust hangers and rubber insulators help to support the weight of the exhaust pipe along with insulating any exhaust system vibration, rattle, or noise.

Exhaust hangers also space the exhaust system away from the underbody of the vehicle and allows the exhaust system to expand as the exhaust system warms up.

Exhaust heat shields are used to protect the body and other components from damage due to the heat from the exhaust system.

The exhaust system may be comprised of the following components:

- Exhaust manifold
- Exhaust pipes
- Catalytic converters
- Exhaust muffler
- Exhaust resonator, if equipped
- Exhaust tail pipe, if equipped
- Exhaust hangers
- Exhaust heat shields

Resonator

Some exhaust systems are equipped with a resonator. The resonator, located either before or after the muffler, allows the use of mufflers with less back pressure. Resonators are used when vehicle characteristics require specific exhaust tuning.

Catalytic Converter

The catalytic converter is an emission control device added to the engine exhaust system in order to reduce hydrocarbons (HC), carbon monoxide (CO), and oxides of nitrogen (NOx) pollutants from the exhaust gas.

cardiagn.com

The catalytic converter is comprised of a ceramic monolith substrate, supported in insulation and housed within a sheet metal shell. The substrate may be washcoated with 3 noble metals:

- Platinum (Pt)
- Palladium (Pd)
- Rhodium (Rh)

The catalyst in the converter is not serviceable.

Muffler

The exhaust muffler reduces the noise levels of the engine exhaust by the use of tuning tubes. The tuning tubes create channels inside the exhaust muffler that lower the sound levels created by the combustion of the engine.

SPECIAL TOOLS AND EQUIPMENT

SPECIAL TOOLS

Special Tools

Illustration	Tool Number/ Description
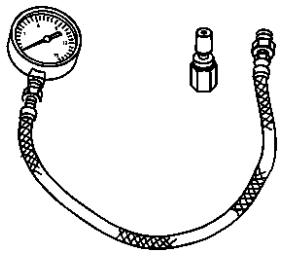	J 35314-A Exhaust Back Pressure Gage

cardiagn.com