SPORTAGE(SL) > 2013 > G 2.4 DOHC > Body Electrical System

Body Electrical System > General Information > General Information

General Troubleshooting Information

Before Troubleshooting

1. Check applicable fuses in the appropriate fuse/relay box.
2. Check the battery for damage, state of charge, and clean and tight connections.
   (Refer to the EE group - "Battery")

NOTE

- Do not quick-charge a battery unless the battery ground cable has been disconnected, otherwise you will damage the alternator diodes.
- Do not attempt to crank the engine with the battery ground cable loosely connected or you will severely damage the wiring.

3. Check the alternator belt tension.

Handling Connectors

1. Make sure the connectors are clean and have no loose wire terminals.
2. Make sure multiple cavity connectors are packed with grease (except watertight connectors).
3. All connectors have push-down release type locks (A).

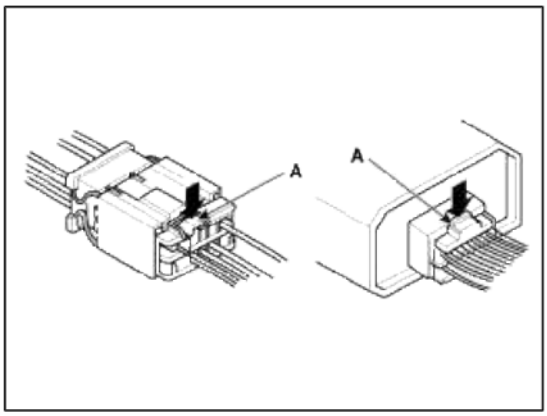

4. Some connectors have a clip on their side used to attach them to a mount bracket on the body or on another component. This clip has a pull type lock.
5. Some mounted connectors cannot be disconnected unless you first release the lock and remove the connector from its mount bracket (A).

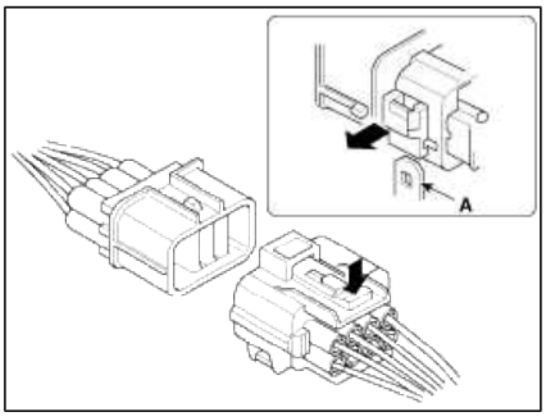

6. Never try to disconnect connectors by pulling on their wires; pull on the connector halves instead.

cardiagn.com

7. Always reinstall plastic covers.

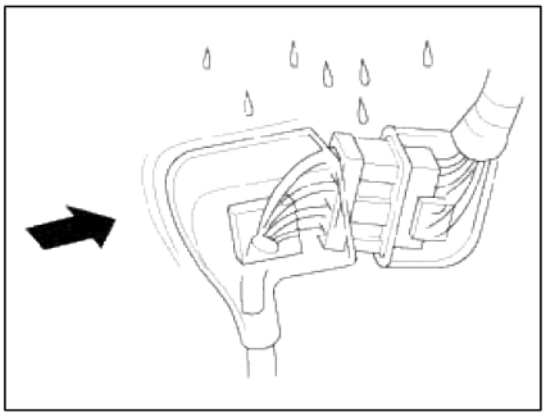

8. Before connecting connectors, make sure the terminals (A) are in place and not bent.

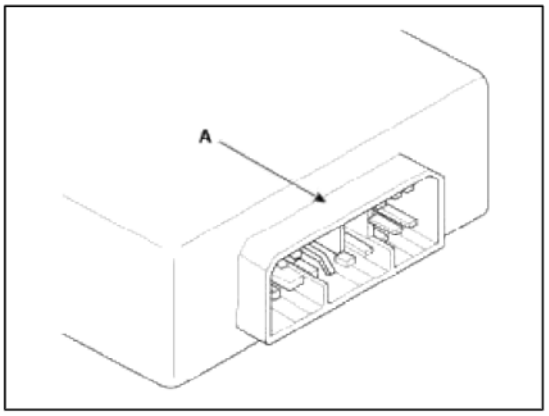

9. Check for loose retainer (A) and rubber seals (B).

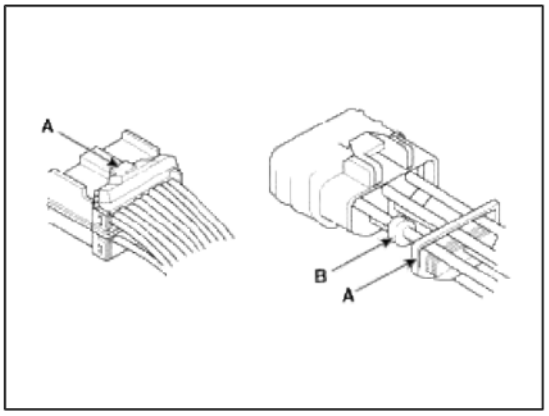

10. The backs of some connectors are packed with grease. Add grease if necessary. If the grease (A) is contaminated, replace it.

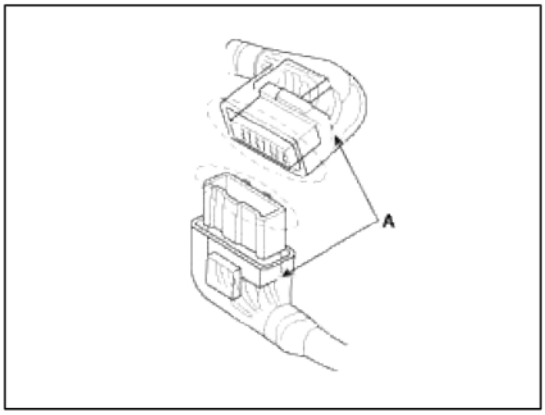

11. Insert the connector all the way and make sure it is securely locked.

cardiagn.com

12. Position wires so that the open end of the cover faces down.

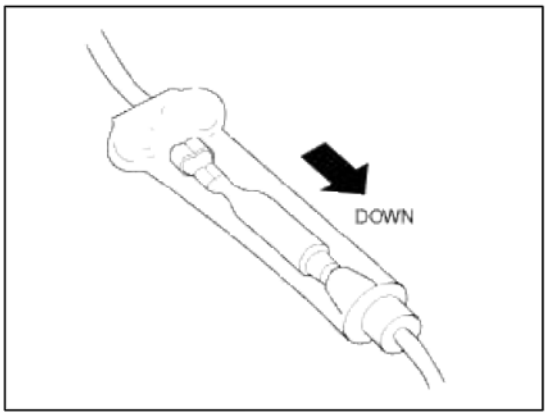

Handling Wires And Harnesses

1. Secure wires and wire harnesses to the frame with their respective wire ties at the designated locations.
2. Remove clips carefully; don't damage their locks (A).

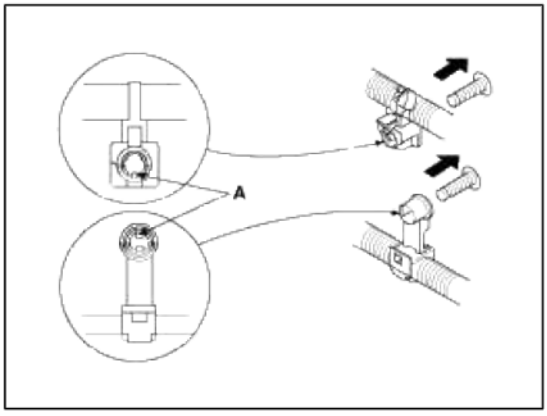

3. Slip pliers (A) under the clip base and through the hole at an angle, and then squeeze the expansion tabs to release the clip.

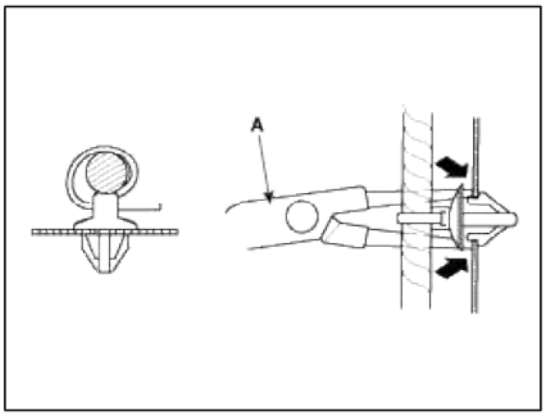

4. After installing harness clips, make sure the harness doesn't interfere with any moving parts.
5. Keep wire harnesses away from exhaust pipes and other hot parts, from sharp edges of brackets and holes, and from exposed screws and bolts.

cardiagn.com

6. Seat grommets in their grooves properly (A). Do not leave grommets distorted (B).

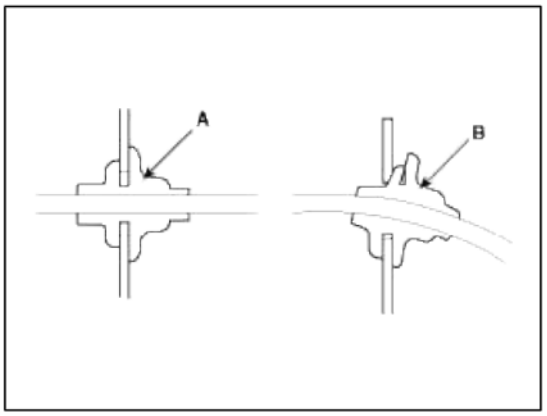

Testing And Repairs

1. Do not use wires or harnesses with broken insulation.
   Replace them or repair them by wrapping the break with electrical tape.
2. After installing parts, make sure that no wires are pinched under them.
3. When using electrical test equipment, follow the manufacturer's instructions and those described in this manual.
4. If possible, insert the remover tool from the wire side (except waterproof connector).

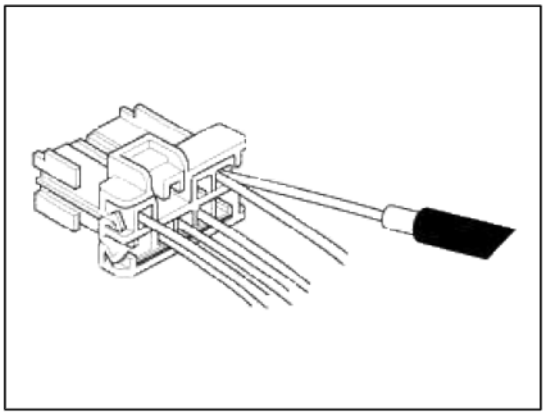

5. Use a probe with a tapered tip.
   Refer to the user's guide in the wiring repair kit (Pub No. : TRK 015.)

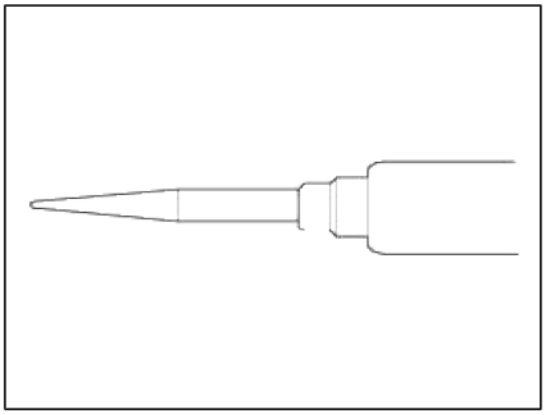

Five-step Troubleshooting

1. Verify the complaint
   Turn on all the components in the problem circuit to verify the customer complaint. Note the symptoms. Do not begin disassembly or testing until you have narrowed down the problem area.
2. Analyze the schematic
   Look up the schematic for the problem circuit.
   Determine how the circuit is supposed to work by tracing the current paths from the power feed through the circuit components to ground. If several circuits fail at the same time, the fuse or ground is a likely cause.
   Based on the symptoms and your understanding of the circuit operation, identify one or more possible causes of the problem.

cardiagn.com

3. Isolate the problem by testing the circuit.
   Make circuit tests to check the diagnosis you made in step 2. Keep in mind that a logical, simple procedure is the key to efficient troubleshooting.
   Test for the most likely cause of failure first. Try to make tests at points that are easily accessible.
4. Fix the problem
   Once the specific problem is identified, make the repair. Be sure to use proper tools and safe procedures.
5. Make sure the circuit works
   Turn on all components in the repaired circuit in all modes to make sure you've fixed the entire problem. If the problem was a blown fuse, be sure to test all of the circuits on the fuse. Make sure no new problems turn up and the original problem does not recur.

Battery Reset

Description

When reconnecting the battery cable after disconnecting, recharging battery after discharged or installing the memory fuse located on the driver's side panel after removing, be sure to reset systems mentioned on the below table.
In addition, when replacing or reinstalling their fuses after removing, they should be reset according to the below table. Please refer to the below table when servicing.

System	Resetting
Auto up/down window	Whenever the window cannot be properly closed or opened. Whenever the battery is discharged or the related fuse is replaced or reinstalled, reset the power window system according to the procedure below. 1. Turn the ignition switch to the ON position. 2. Pull up the power window switch in order that the window can close completely, and then keep pulling up the power switch for about 1 second.
Panoramaroof	Whenever the battery is disconnected, discharged or the related fuse is replaced or reinstalled, the panoramaroof system must be reset according to the procedure below. 1. Turn the ignition key to the ON position and then close the panoramaroof completely. 2. Release the panoramaroof control lever. 3. Press and hold the CLOSE button for more than 10 seconds until the sunroof has moved slightly. 4. Release the panoramaroof control lever. 5. Press and hold the CLOSE button once again until the sunroof do as follows. • Tilt → Slide Open → Slide Close Then, release the lever. 6. Reset procedure of panorama system is finished.
Trip computer	When the battery is disconnected and reconnected, the set functions of the trip computer become initialized. So, you need to explain this information to the customer.
Clock	Whenever the battery terminals or related fuses are disconnected, you must reset the time. When the ignition switch is in the ACC or ON position, the clock buttons operate as follows : Hour : Pressing the H button will advance the time displayed by one hour. Minute : Pressing the M button will advance the time displayed by one minute. To change the 24 hour format to the 12 hours format (if equipped), while pressing the “H” button, press the “M” button for 3 seconds or more. For example, if the “H” and “M” buttons are pressed for more than 3 seconds while the time is 22:15, the display will change to 10:15.

cardiagn.com

Audio	When the battery is disconnected and reconnected, the customer's radio stations become initialized. So, you need to record the customer's radio stations prior to service, and after service, set the customer's radio stations into the audio.

Body Electrical System > General Information > Special Service Tools

Special Service Tools

Tool (Number and Name)	Illustration	Application
RKE Battery Checker (09954-2P100)	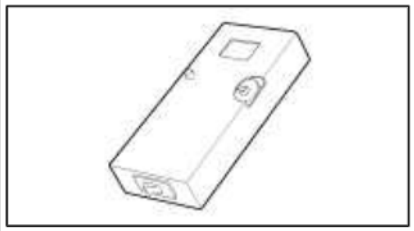	Measuring the RKE battery voltage

Body Electrical System > Audio > Specifications

Specifications

Audio

Item		Specification	
Model		RADIO/CD/MP3 (PA710,PA710S)	RADIO/CD/MP3 (BA900,BA950)
SDARS (Option)		○ (PA710S)	○
HD audio(Option)		X	O(BA950)
Power supply		DC 14.4V	
Antenna		80PF 75Ω	
Tuning type		PLL SYNTHESIZED TUNING	
Frequency range / Channel space	FM	87.5~107.9 MHz / 200KHz	
	AM	530~1710 KHz / 10KHz	

Speaker

cardiagn.com

Item		PA710	BA900,BA950,AVN
Input power (W or V)	Front	Max. 40W	
	Rear	Max. 40W	
	Front tweeter	Max. 40W	
	Sub woofer	-	Max. 40W
Speaker Impedance (Ω)	Front	4 ± 0.6	2 ± 0.3
	Rear	4 ± 0.6	2 ± 0.3
	Front tweeter	3.4 ± 0.5	
	Sub woofer	-	2 ± 0.3
Speaker number		6	7

Body Electrical System > Audio > Components and Components Location

Component Location

cardiagn.com

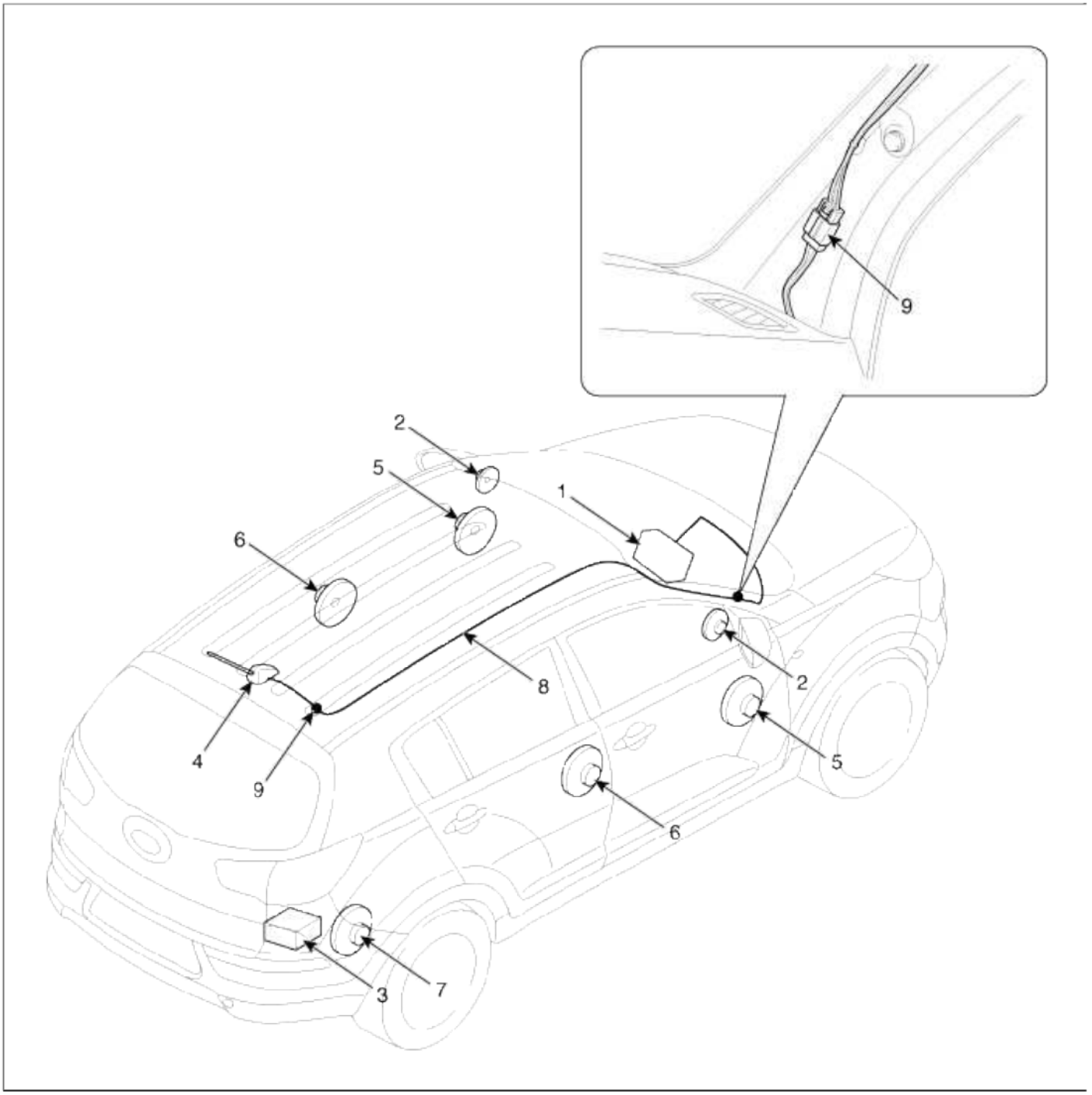

1. Audio unit 2. Tweeter speaker 3. External amplifier 4. Roof antenna (Radio) 5. Front door speaker	6. Rear door speaker 7. Sub woofer speaker 8. Antenna feeder cable 9. Antenna cable connector

Body Electrical System > Audio > Audio Unit > Components and Components Location

Components

cardiagn.com

[RADIO/CD/MP3 (PA710/PA710S)]

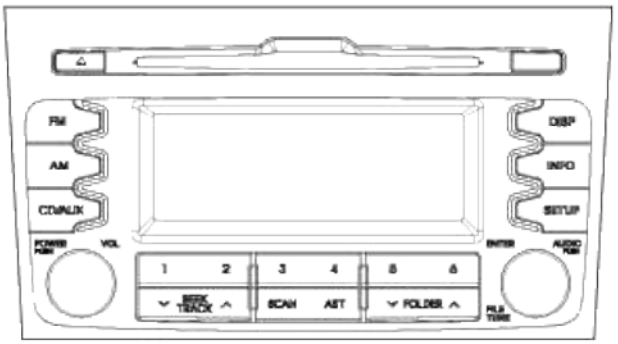

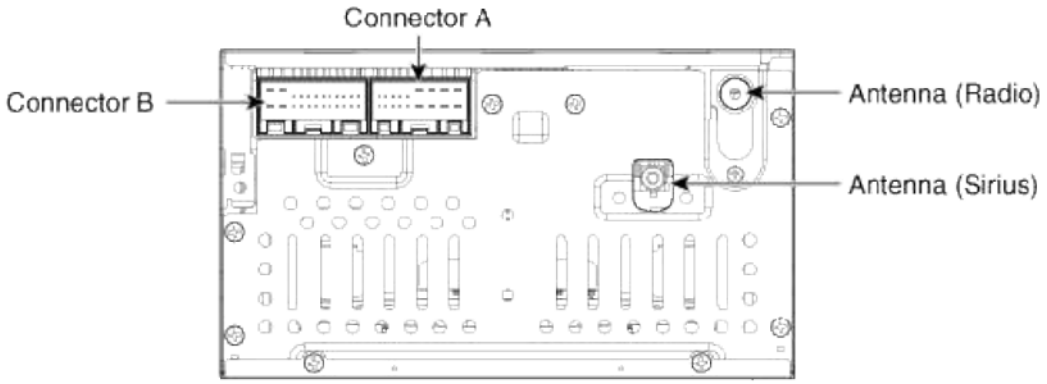

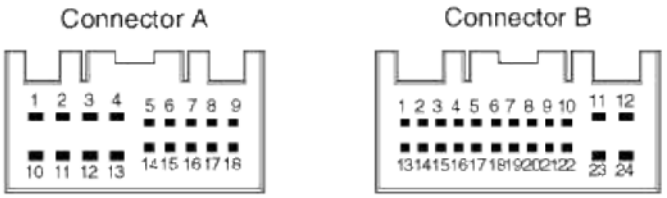

Connector A				Connector B			
No	Description	No	Description	No	Description	No	Description
1	Speaker RL (+)	13	Speaker RR (-)	1	CAN-H	13	CAN-L
2	Speaker FL (+)	14	Remote AMP	2	TEL MUTE	14	-
3	Speaker FR (+)	15	SPDIF DP	3	TEMP	15	-
4	Speaker RR (+)	16	E.AMP MUTE	4	Steering remote	16	Vehicle speed
5	SPDIF GND	17	Illumination (-)	5	-	17	Remote GND
6	SPDIF DN	18	Remote Antenna	6	USB D (+)	18	USB D (-)
7	IGN			7	USB/iPod VDD	19	USB/iPod GND
8	Illumination (+)			8	AUX Input R	20	AUX Detect
9	DETENT			9	AUX GND	21	AUX Input L
10	Speaker RL (-)			10	Mic (+)	22	Mic (-)
11	Speaker FL (-)			11	ACC	23	-
12	Speaker FR (-)			12	Battery (+)	24	Power GND

cardiagn.com

[RADIO/CD/MP3 (BA900/BA950) - External Amplifier]

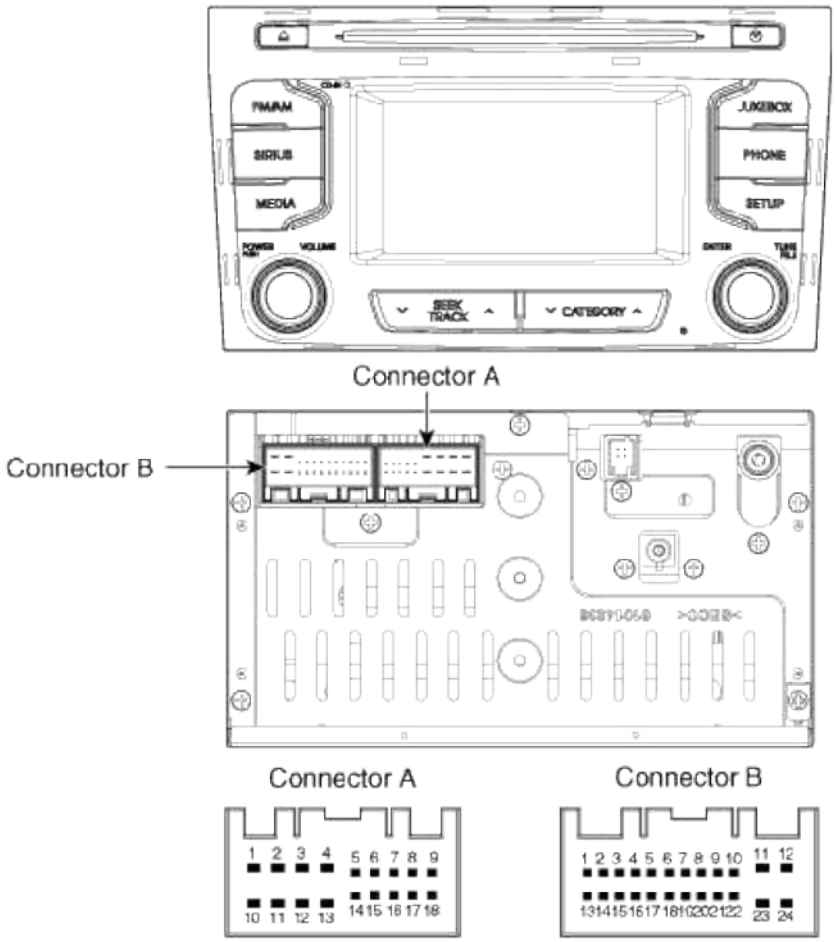

Connector A				Connector B			
No	Description	No	Description	No	Description	No	Description
1	Speaker RL (+)	13	Speaker RR(-)	1	CAN-H	13	CAN-L
2	Speaker FL (+)	14	P position	2	-	14	-
3	Speaker FR (+)	15	-	3	-	15	Auto light
4	Speaker RR (+)	16	-	4	Steering remote	16	Speed IN
5	-	17	Illumination(-)	5	-	17	Remote GND
6	-	18	Remote antenna	6	Camera_V_IN	18	Camera V_GND
7	Ignition			7	Camera B+	19	Camera REQ
8	Illumination (+)			8	AUX_R_IN	20	AUX_Detect
9	-			9	AUX_REF	21	AUX_L_IN
10	Speaker RL (-)			10	MIC+(BT)	22	MIC-(BT)
11	Speaker FL (-)			11	ACC	23	Camera_P_GND
12	Speaker FR (-)			12	B/UP	24	Power GND

cardiagn.com

[RADIO/CD/MP3 (BA900/BA950) - Internal Amplifier]

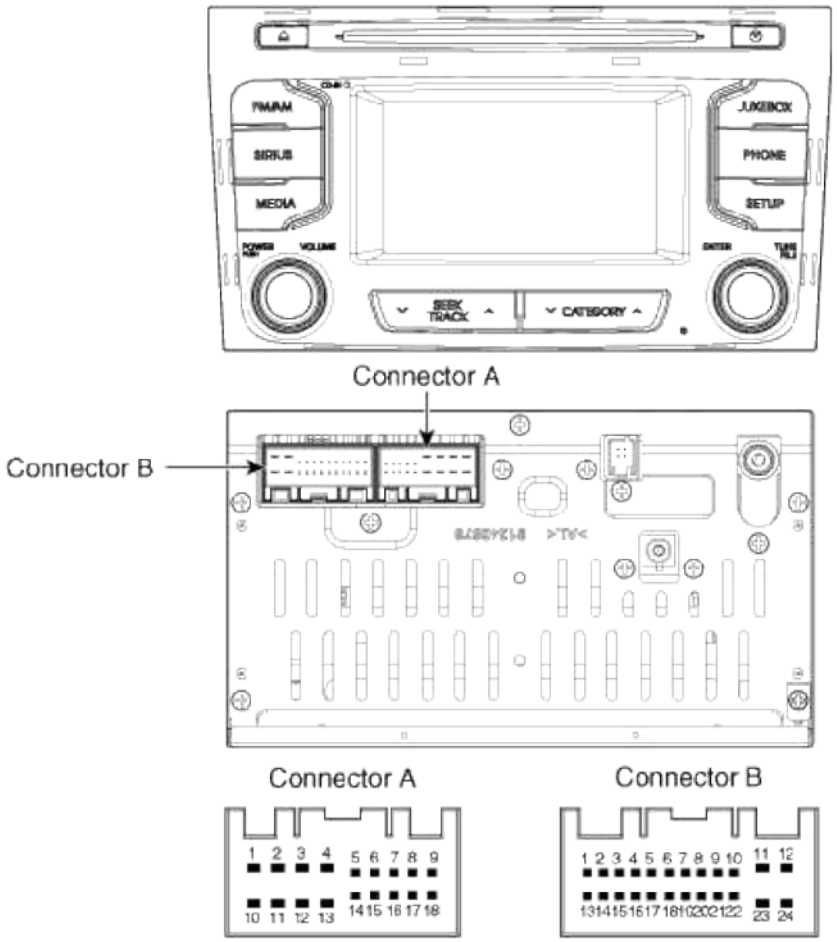

Connector A				Connector B			
No	Description	No	Description	No	Description	No	Description
1	-	13	-	1	CAN-H	13	CAN-L
2	-	14	P position	2	-	14	-
3	-	15	SPDIF DP	3	-	15	Auto light
4	-	16	-	4	Steering remote	16	Speed IN
5	SPDIF GND	17	Illumination(-)	5	-	17	Remote GND
6	SPDIF DN	18	Remote antenna	6	Camera_V_IN	18	Camera V_GND
7	Ignition			7	Camera B+	19	Camera REQ
8	Illumination(+)			8	AUX_R_IN	20	AUX_Detect
9	-			9	AUX_REF	21	AUX_L_IN
10	-			10	MIC+(BT)	22	MIC-(BT)
11	-			11	ACC	23	Camera_P_GND
12	-			12	B/UP	24	Power GND

cardiagn.com

[External Amplifier]

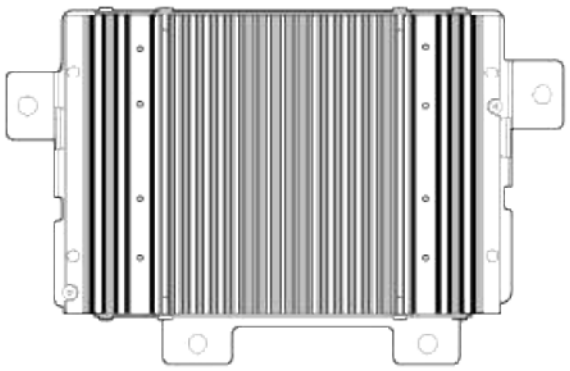

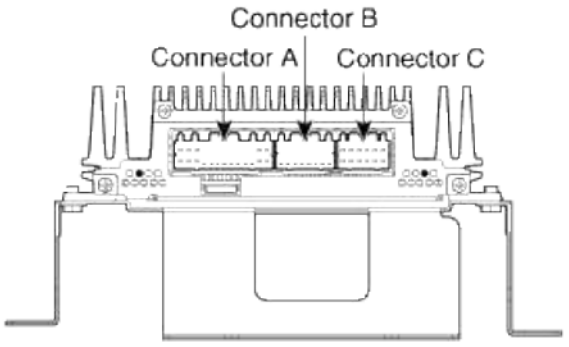

NO	Connector A	Connector B	Connector C
	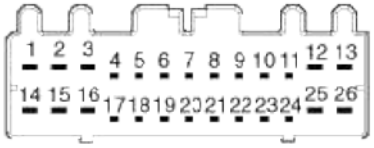	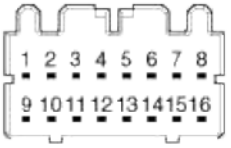	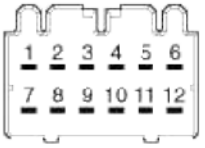
1	B (+)	-	Rear Door Right (+)
2	B (+)	-	Rear Door Left (+)
3	B (+)	-	Front Tweeter Right (+)
4	-	-	Front Tweeter Left (+)
5	CAN (+)	-	Front Door Right (+)
6	CAN (-)	-	Front Door Left (+)
7	ACC	-	Rear Door Right (-)
8	-	-	Rear Door Left (-)
9	-	-	Front Tweeter Right (-)
10	-	-	Front Tweeter Left (-)
11	Navigation (+)	-	Front Door Right (-)
12	Sub woofer 2 (+)	-	Front Door Left (-)
13	Sub woofer 1 (+)	-	
14	GND	-	
15	GND	-	
16	GND	-	
17	-		
18	SPDIF (+)		
19	SPDIF (-)		
20	-		
21	-		
22	-		
23	-		
24	Navigation (-)		
25	Sub woofer 2 (-)		
26	Sub woofer 1 (-)		

cardiagn.com

[Roof Antenna (Radio)]

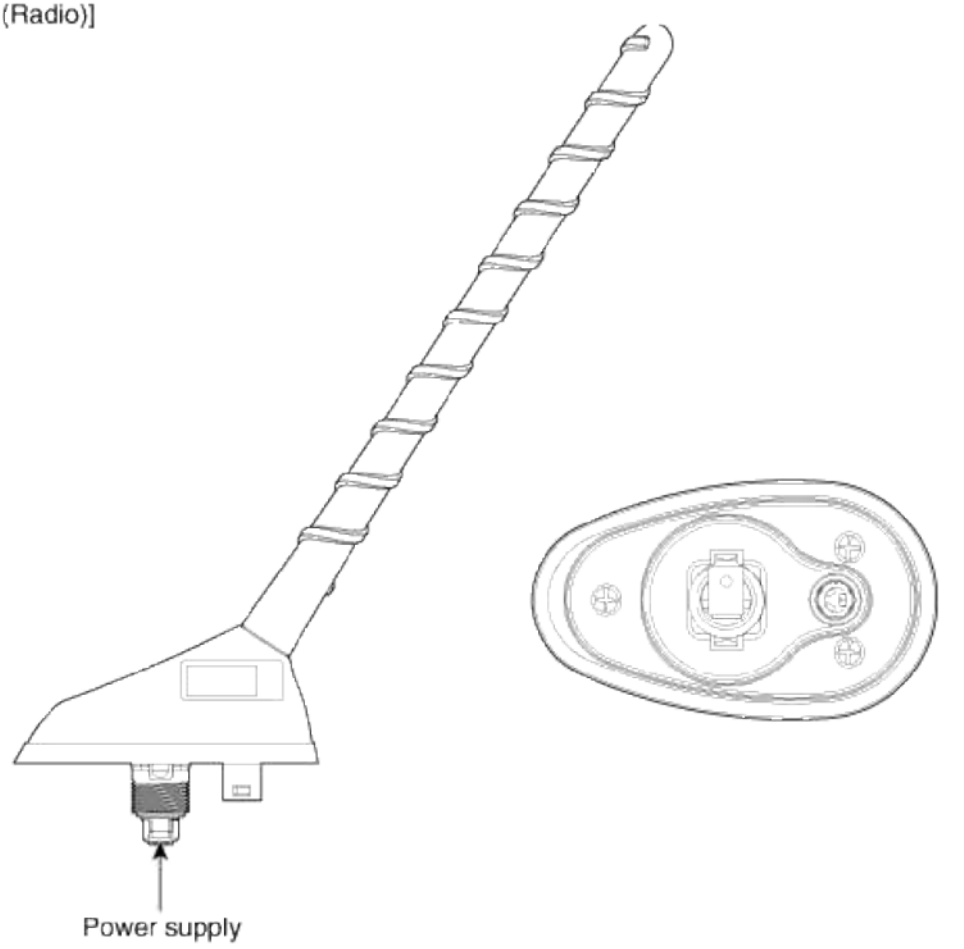

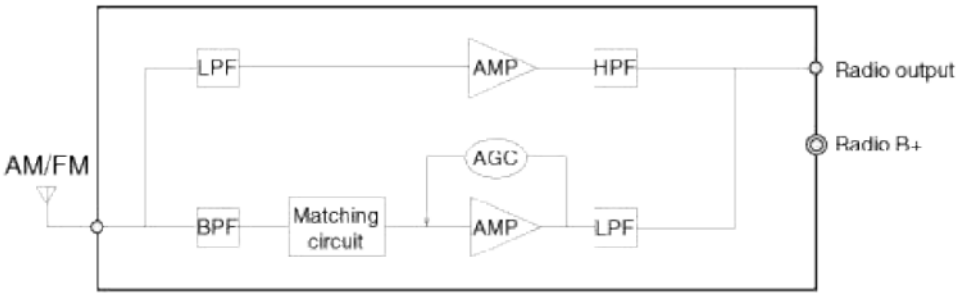

cardiagn.com

[Roof Antenna (Radio+GPS)]

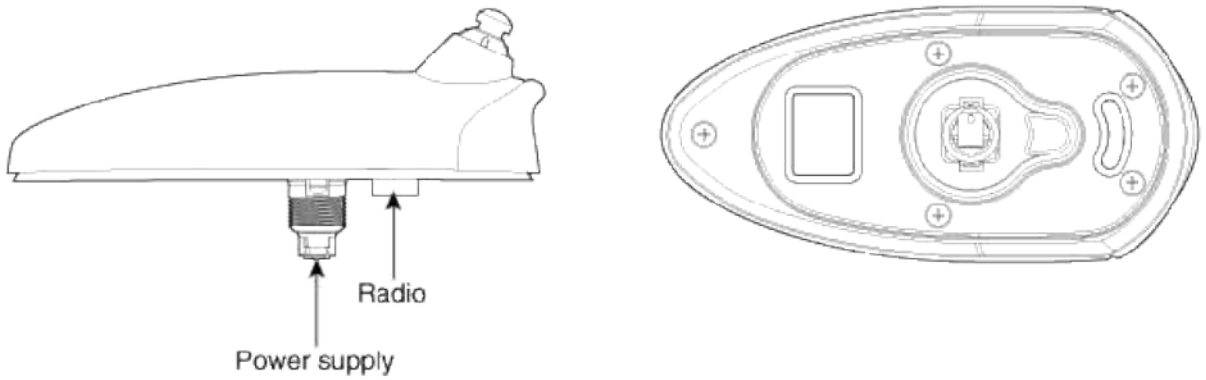

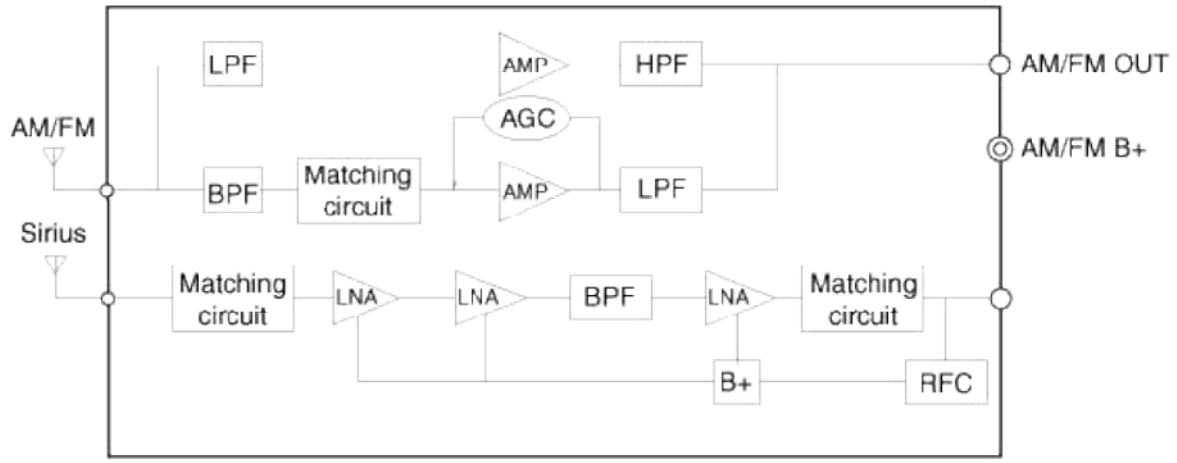

Body Electrical System > Audio > Audio Unit > Repair procedures

Removal

1. Disconnect the negative (-) battery terminal.

cardiagn.com

2. Remove the crash pad passenger's garnish (A).
   (Refer to BD group - "Crash pad")

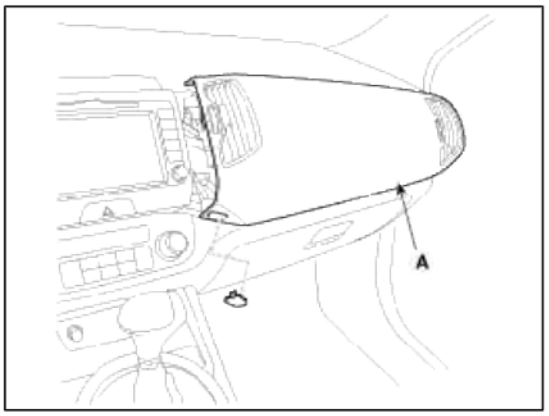

3. Disconnect the connectors and remove the cluster fascia panel (A).
   (Refer to BD group - "Crash pad")

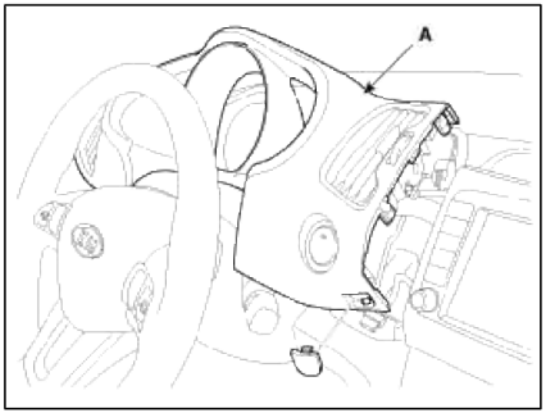

4. Remove the center fascia panel (A) after loosening the mounting screw (2EA).

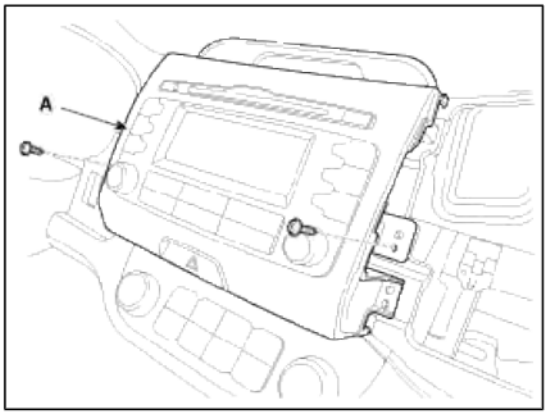

5. Disconnect the connector (A) installed on the center fascia panel.

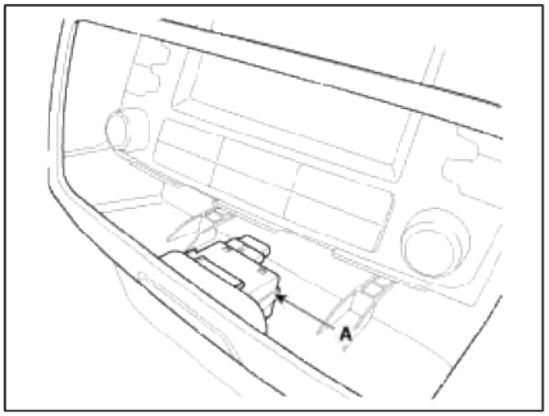

cardiagn.com

6. Remove the audio assembly (A) after loosening the mounting screw (4EA).

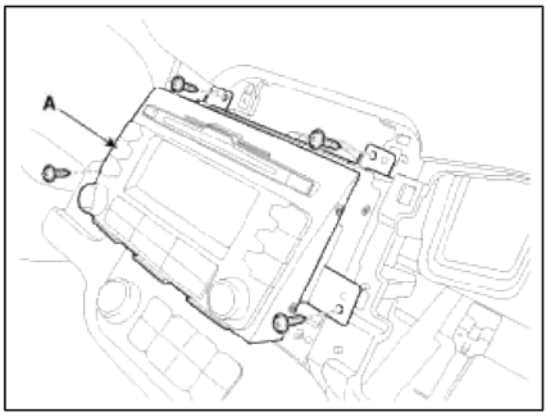

7. Disconnect the audio connectors and cable (A), then remove the audio unit completely.

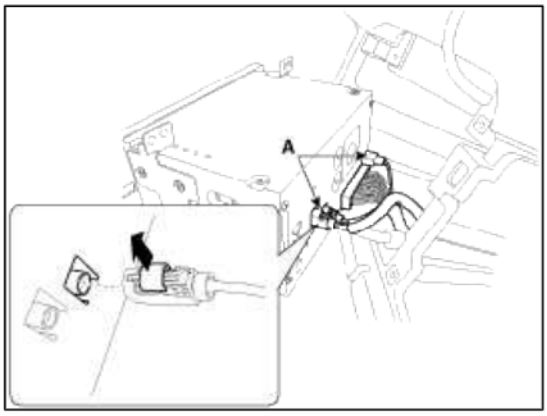

NOTE

Lift the connector locking clip to the arrow direction, disconnect the connector.
When assembling, install the connector and connector locking clip.

CAUTION

- If CD does not eject, don't try to remove it.
- The player may be damaged.
- Therefore, contact a service shop for repairs.

Installation

1. Connect the audio unit connectors and cable.
2. Install the audio unit.
3. Install the center fascia panel.
4. Install the cluster fascia panel.
5. Install the crash pad passenger's garnish.
6. Connect the negative (-) battery terminal.

NOTE

1) Make sure the connector are connected in properly.
2) Check the audio system.

Disassembly

cardiagn.com

1. Loosen the screw (Left 3EA, Right 3EA) and remove the audio head unit mounting bracket (A).

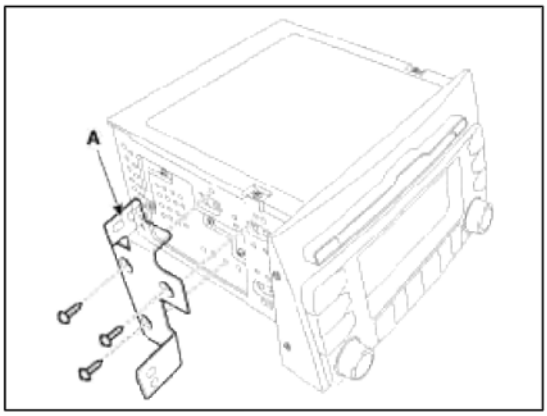

2. When separate the CD rom drive, if necessary, remove the top cover (A) after loosening the screws (4EA).

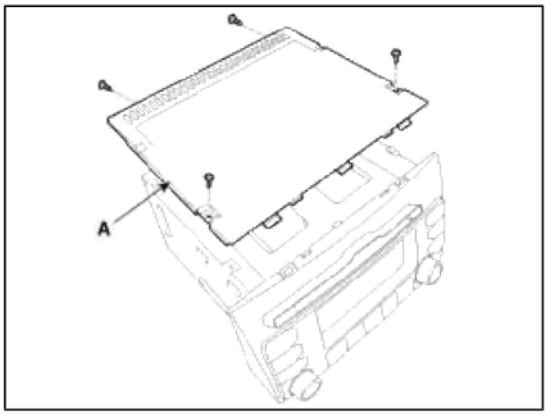

3. After loosening the screws, remove the CD rom drive(B).

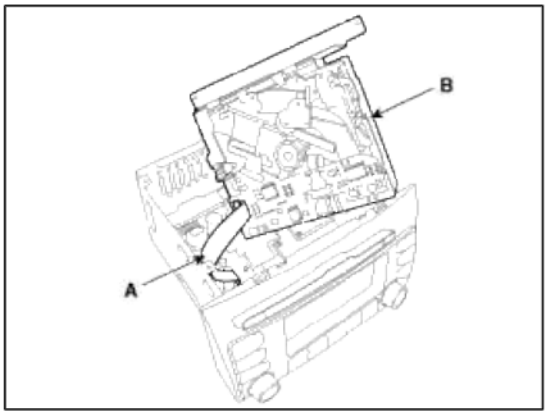

NOTE

Take care not to damage the cable connectors (A) when removing drive.

Body Electrical System > Audio > Speakers > Repair procedures

Inspection

1. Troubleshooting for Speaker

cardiagn.com

(1) Basic inspection of speaker

Inspect the sound from speaker after verifying that the speaker mounting screws are removed and the wiring connector is connected to remove any possible vibration transmitted from body trims and surrounding parts.

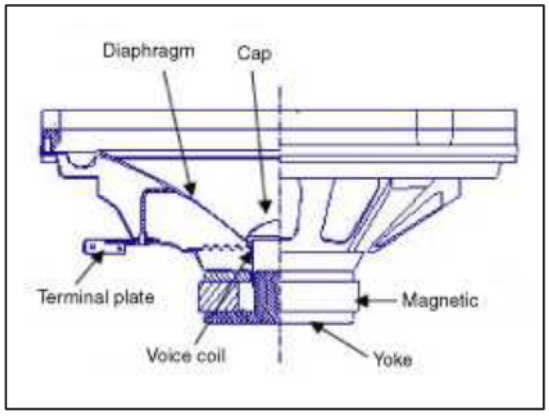

(2) Case Troubleshooting

No.	Case	Inspection/Remedy
1	Trembling sound	1. Before replacing the speaker, inspect that the mounting screw is installed normally. 2. After re-installing the speaker, verify that no trembling sound is heard. 3. When hearing a trembling sound again, replace the speaker with new one.
2	Noise	1. Check if the wiring connector is connected normally. If not, reconnect the wiring connector. 2. In case of radio static, check if there is a noise from CD player. 3. When a noise is heard on turning radio and CD on, replace the speaker with new one. NOTE In case there is only radio static, this causes from poor radio reception. Thus the speaker needs no repair and replacement.
3	Poor working	Inspection of the wiring connection between the battery and the speaker 1. Before replacing the speaker, inspect the wiring connection between the battery and the speaker is normal. 2. Check the supply power to the speaker and the resistance, then inspect the sound quality. 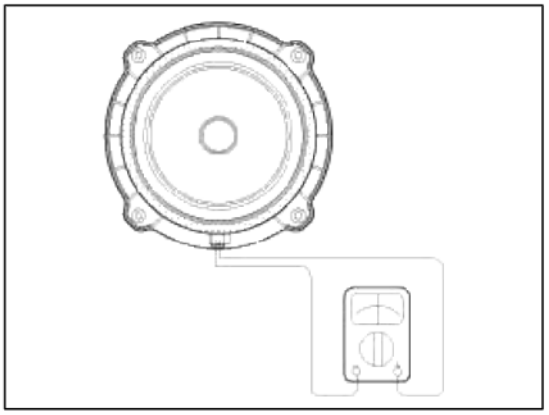 3. If the speaker works poorly, replace it with new one.

cardiagn.com

CAUTION

When handling the speakers:

- Do not damage the speaker with impact, like dropping or throwing it.
- Be careful not to drop water and oil on the speakers.
- Caution during handling of speaker because the material of diaphragm is paper which is easily torn by impact or external force.
- Modifying the audio system may cause damage the speakers. If this is the case, the speakers are not covered by the manufacturer's warranty.

Removal

Front Door Speaker

1. Remove the front door trim.
   (Refer to the BD group - "Front door")
2. Remove the front speaker (A) after removing 4 rivets.

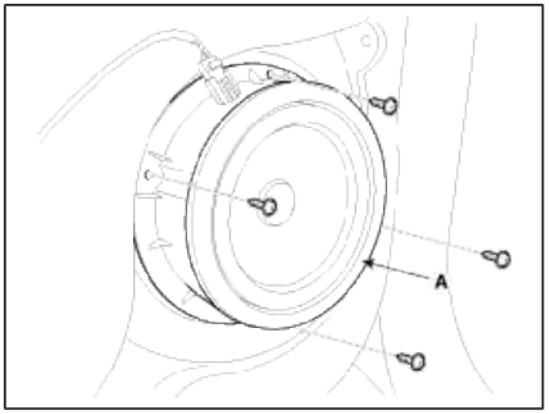

Rear Door Speaker

1. Remove the rear door trim.
   (Refer to the BD group - "Rear door")
2. Remove the rear speaker (A) after removing 4 rivets.

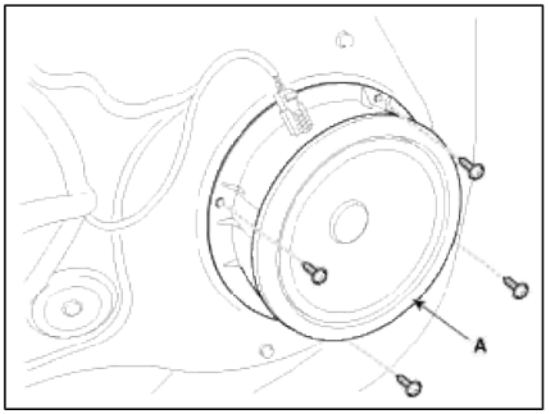

Tweeter Speaker (Front)

cardiagn.com

1. Remove the front door delta cover (A).

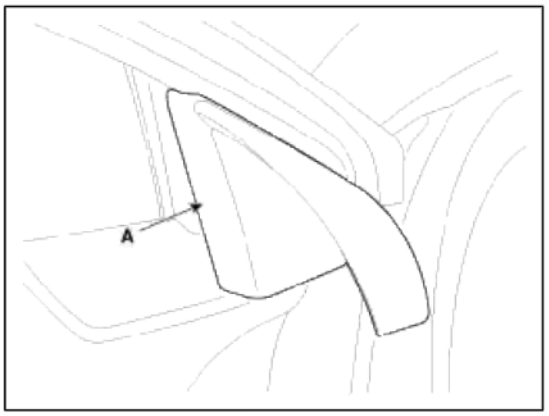

NOTE

Take care not to damage and scratch the delta cover and its related parts.

2. Remove the door trim.
   (Refer to the BD group – "Front door")
3. Remove the tweeter speaker (A) after disconnecting the connector.

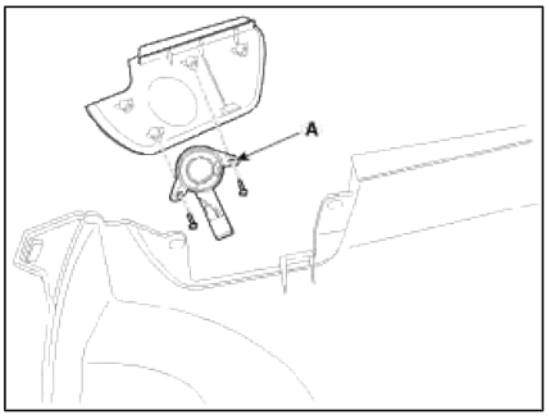

Woofer Speaker

1. Remove the right luggage side trim.
   (Refer to the BD group – "Interior trim")
2. Remove the woofer speaker connector (A).

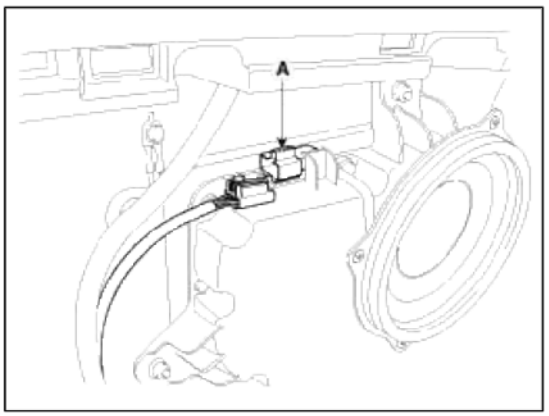

cardiagn.com

3. Remove the woofer speaker (A) after removing nuts (3EA).

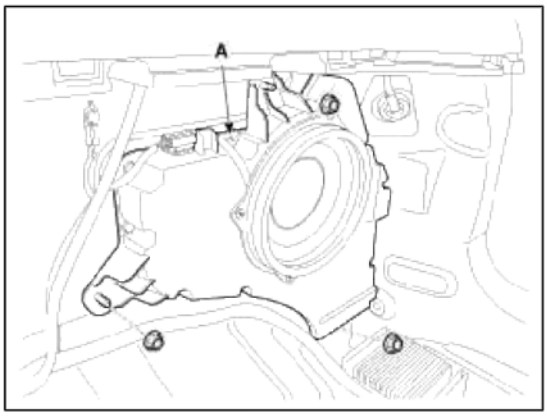

External Amplifier

1. Remove the right luggage side trim.
   (Refer to the BD group – "Interior trim")
2. Disconnect the external amplifier connectors (A).

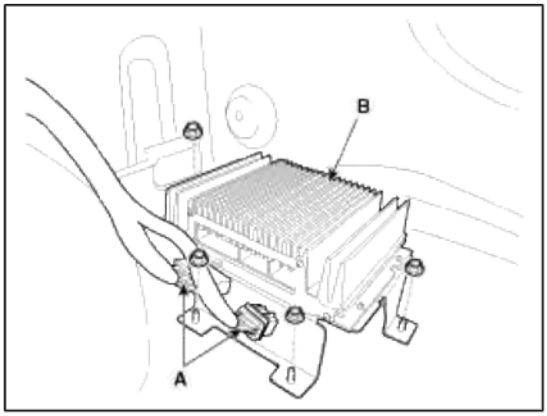

3. Remove the external amplifier (B) after loosening the mounting nuts (4EA).

Installation

Front Door Speaker

1. Install the speaker to the speaker mounting hole in the door in-panel.
2. Reconnect the speaker connector.

Rear Door Speaker

1. Install the speaker to the speaker mounting hole in the door in-panel.
2. Reconnect the speaker connector.

Tweeter Speaker (Front)

1. Install the front tweeter speaker to the front door delta cover.
2. Reconnect the connector and then install the delta cover.

Woofer Speaker

1. Install the woofer speaker to the right quarter inner panel.
2. Reconnect the connector.
3. Install the right luggage side trim.

External Amplifier

1. Reassemble the external amplifier after connecting the connector.
2. Install the right luggage side trim.

NOTE

- Make sure that the amplifier connectors are plugged in properly.
- Check the audio system.

cardiagn.com

Body Electrical System > Audio > Antenna > Repair procedures

Inspection

Antenna Cable

1. Remove the antenna jack from the audio unit and antenna.
2. Check for continuity between the center poles of antenna cable.

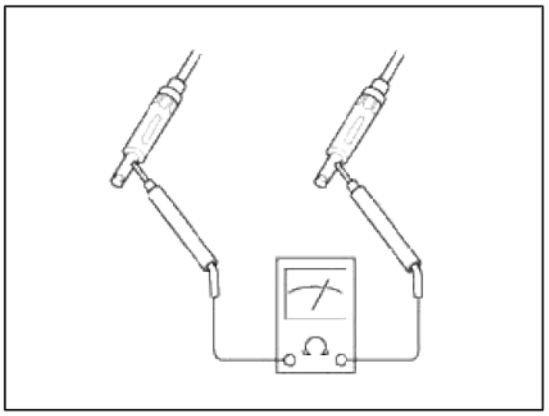

3. Check for continuity between the outer poles of antenna cable. There should be continuity.

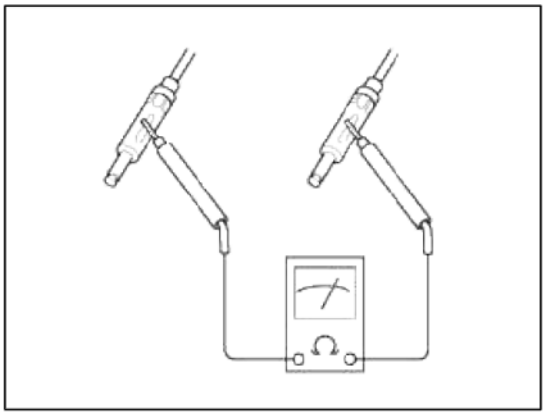

4. If there is no continuity, replace the antenna cable.
5. Check for continuity between the center pole (A) and outer pole (B) of antenna cable. There should be no continuity.

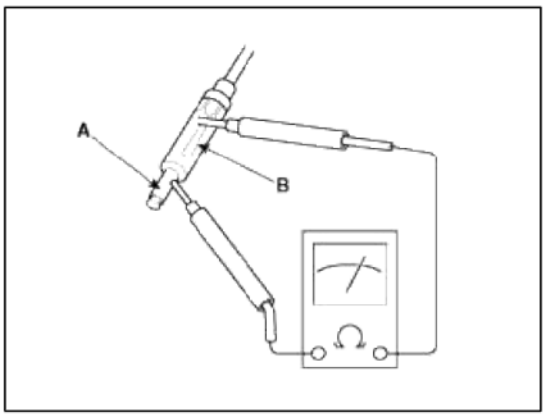

6. If there is continuity, replace the antenna cable.

Removal

Roof Antenna

1. Remove the rear roof trim.
   (Refer to the BD group - "Roof trim")

cardiagn.com

2. Disconnect the roof antenna feeder cable and connector (A) from the roof antenna.

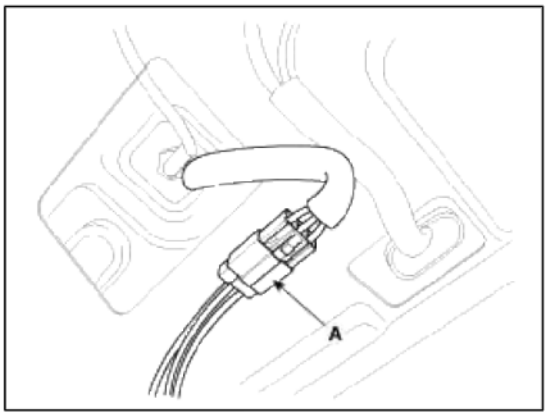

3. Disconnect the antenna power cable (A).

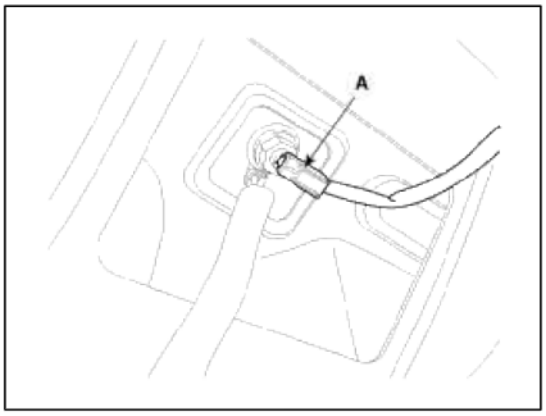

4. Remove the roof antenna (A) after removing a nut.

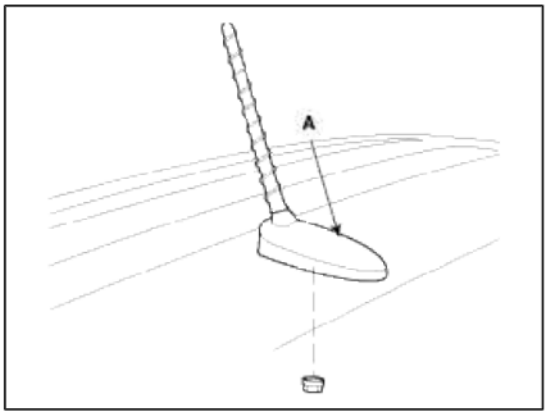

Installation

1. Install the roof antenna to the roof panel.

Tightening torque(nut) :
8 ~ 15 Nm (0.8 ~ 1.5 kgf.m , 5.8 ~ 10.8 lb-ft)

2. Connect the feeder cable to the antenna.
3. Connect the power cable to the antenna.
4. Install the rear roof trim.

NOTE

- Make sure that the cables and connectors are plugged in properly.
- Check the audio system.

cardiagn.com

Body Electrical System > Audio > Audio Remote Control > Components and Components Location

Component Location

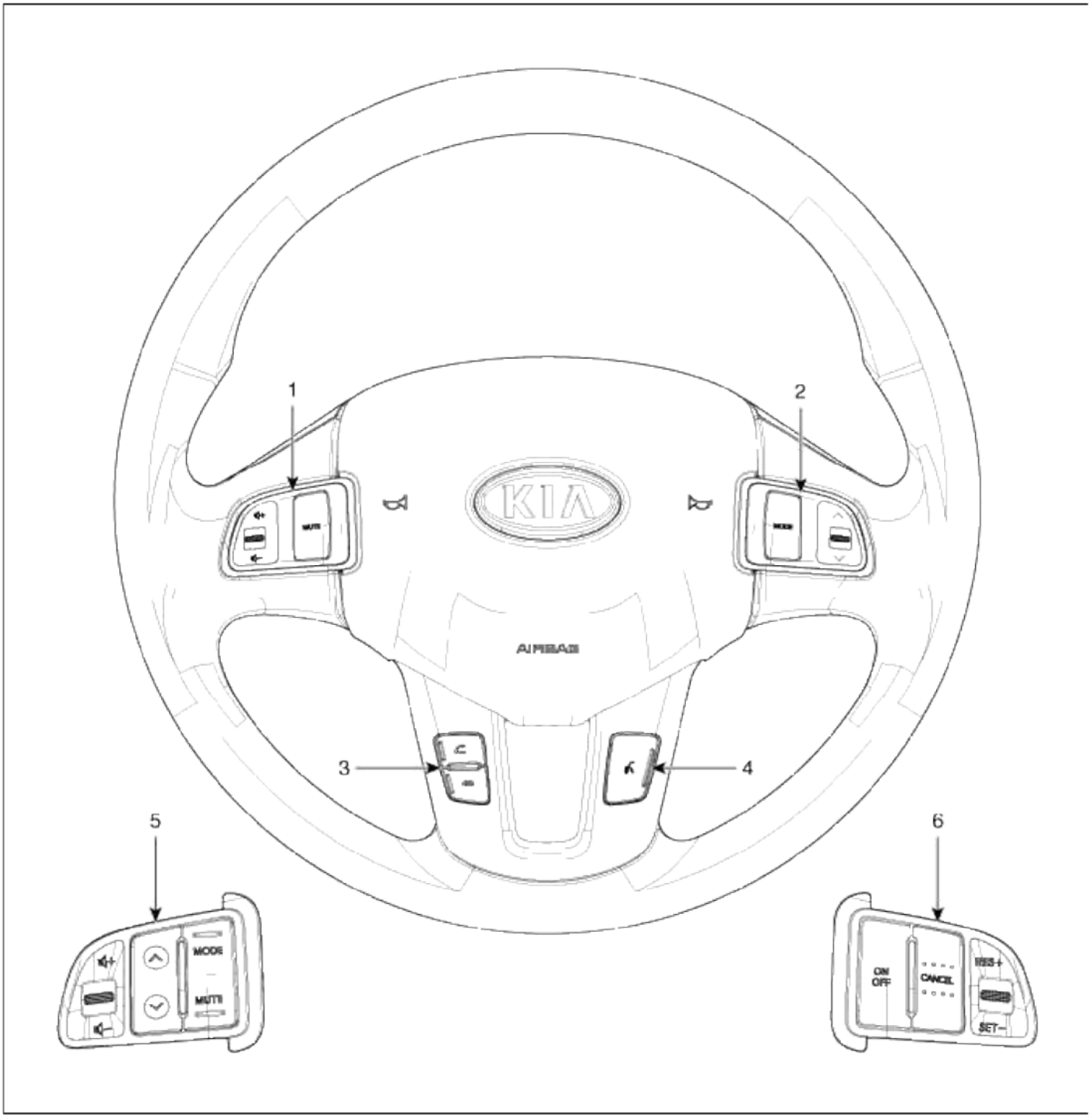

1. Audio remote control switch (Left) 2. Audio remote control switch (Right) 3. Bluetooth switch	4. Voice switch 5. Audio remote control switch 6. Cruise remote control switch

Body Electrical System > Audio > Audio Remote Control > Schematic Diagrams

cardiagn.com

Circuit Diagram

[Audio + Cruise]

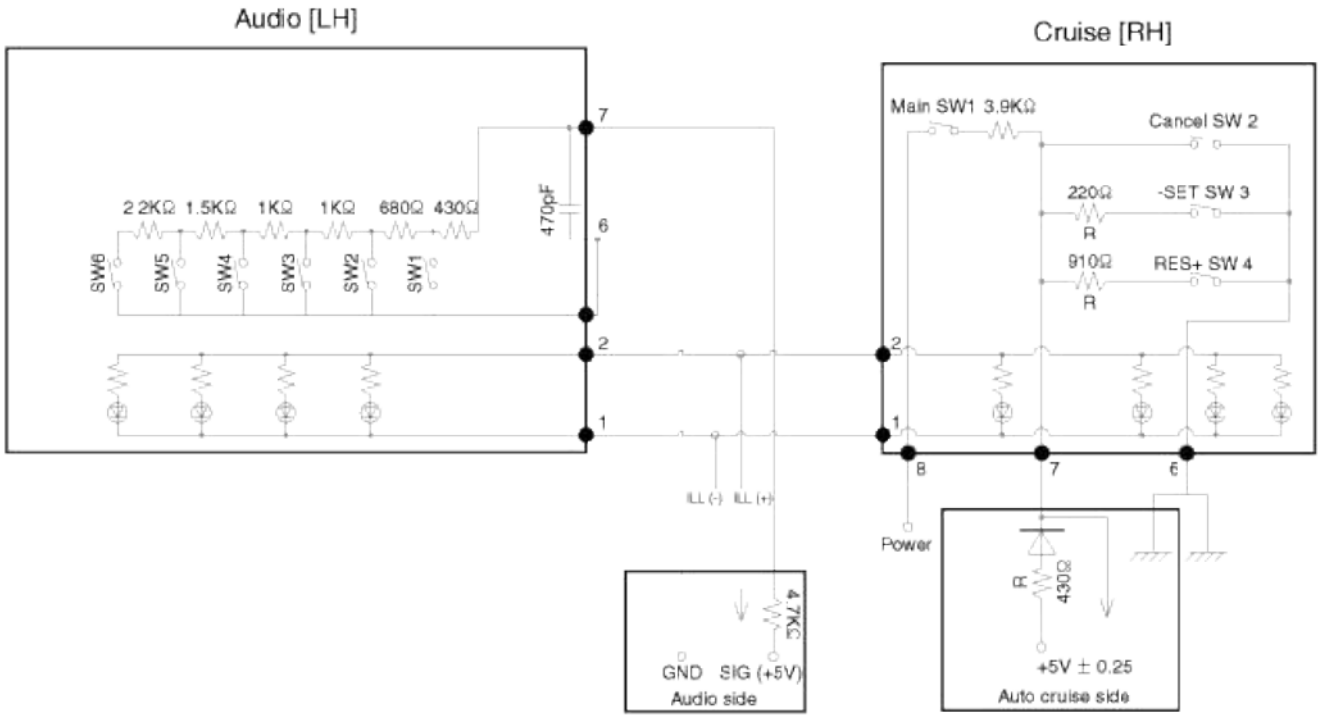

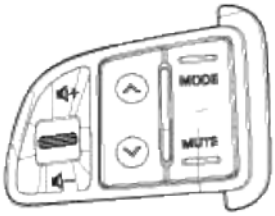

Audio (LH)		Cruise (RH)	
Pin	Description	Pin	Description
1	Illumination (-)	1	Illumination (-)
2	Illumination (+)	2	Illumination (+)
3	-	3	-
4	-	4	-
5	-	5	-
6	Audio (-)	6	ACC GND
7	Audio (+)	7	ACC signal
8	Bluetooth output	8	ACC power

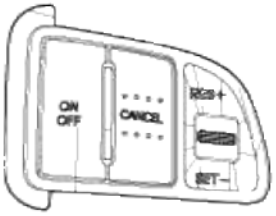

cardiagn.com

[Audio + Cruise + Bluetooth]

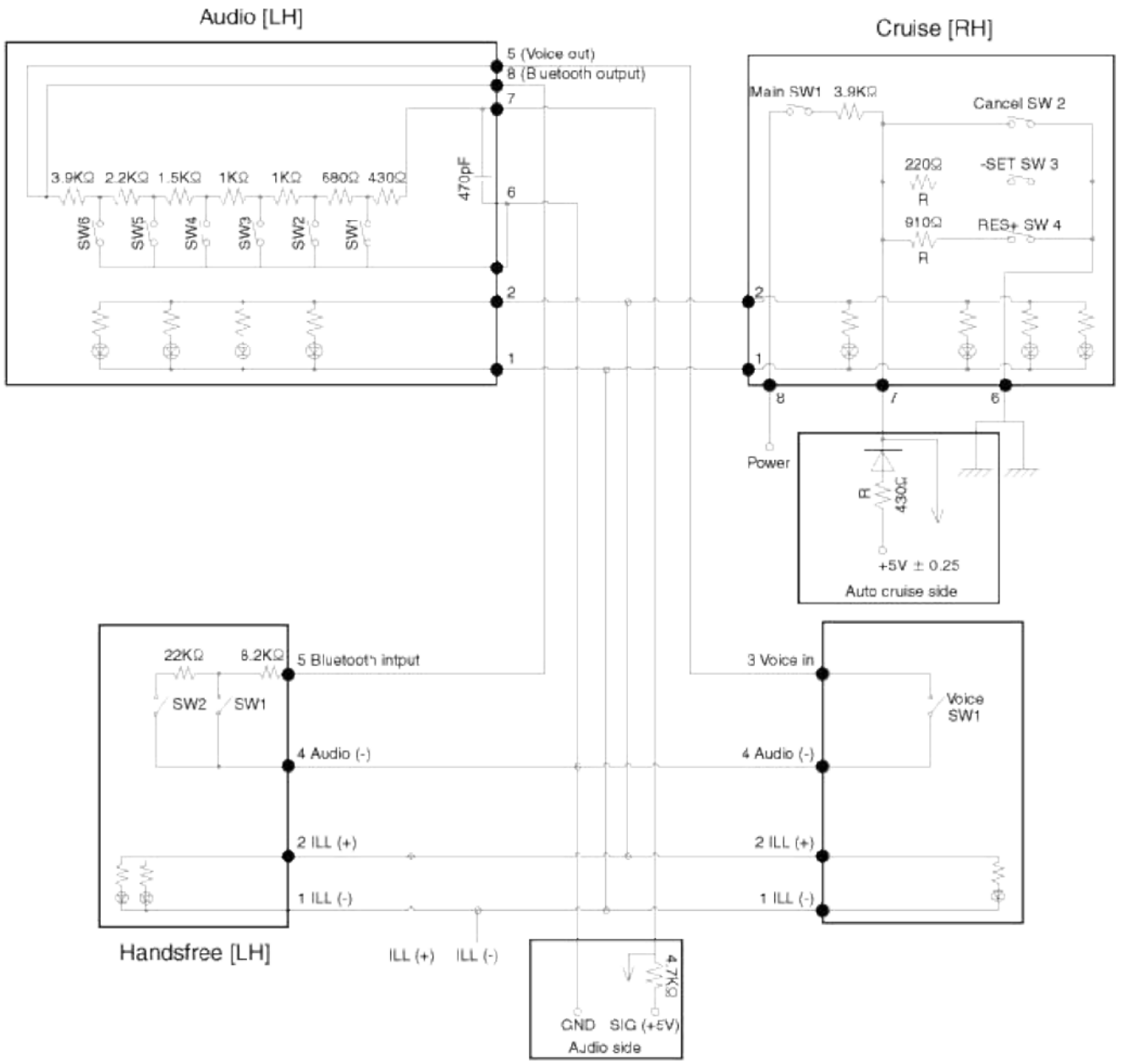

cardiagn.com

[Audio + Cruise + Bluetooth]

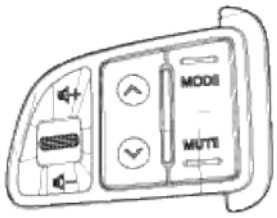

Audio (LH)		Cruise (RH)	
		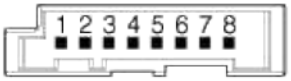	
Pin	Description	Pin	Description
1	Illumination (-)	1	Illumination (-)
2	Illumination (+)	2	Illumination (+)
3	-	3	-
4	-	4	-
5	-	5	-
6	Audio (-)	6	ACC GND
7	Audio (+)	7	ACC signal
8	Bluetooth output	8	ACC power

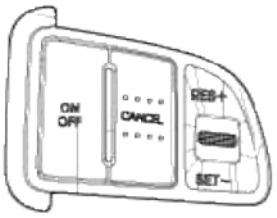

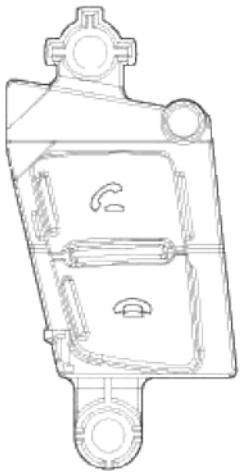

Bluetooth (LH)		Voice (RH)	
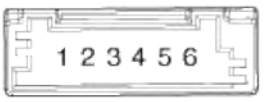		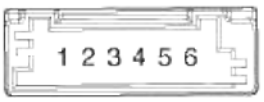	
Pin	Description	Pin	Description
1	Illumination (-)	1	Illumination (-)
2	Illumination (+)	2	Illumination (+)
3	-	3	Voice input
4	Audio (-)	4	Audio (-)
5	Bluetooth input	5	-
6	-	6	-



cardiagn.com

Body Electrical System > Audio > Audio Remote Control > Repair procedures

Inspection

1. Check for resistance between No.6 and No.7 terminals in each switch position.

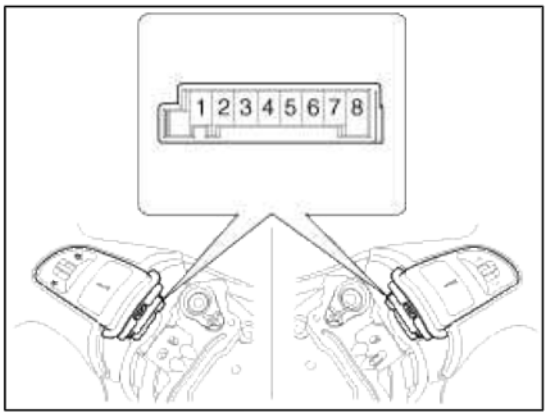

[Audio System]

Switch	Connector terminal	Resistance (±5%)
Volume down	6 - 7	6.81 kΩ
Volume up	6 - 7	4.61 kΩ
Mute	6 - 7	3.11 kΩ
Mode	6 - 7	2.11 kΩ
Seek down	6 - 7	1.1 kΩ
Seek up	6 - 7	430 Ω

2. Check for voltage between No.6 and No.7 terminal in each switch position.

[Audio System]

Switch	Connector terminal	Output voltage (±0.22V)
Volume down	6 - 7	3
Volume up	6 - 7	2.5
Mute	6 - 7	2
Mode	6 - 7	1.5
Seek down	6 - 7	1
Seek up	6 - 7	0.4

Removal

1. Remove the driver airbag module.
   (Refer to the RT group - "Airbag module")

cardiagn.com

2. Remove the steering wheel remote control switch mounting screws (2EA).
   Disconnect the connector and remove the steering wheel remote control switch (A).

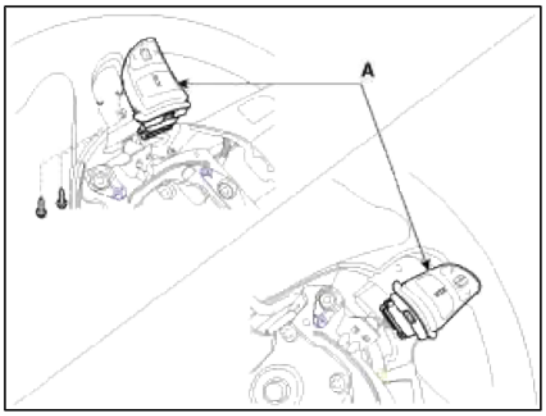

Installation

1. Install the audio remote control switch on the steering wheel.
2. Reconnect the audio remote control switch connector and airbag connectors.

> NOTE
>
> Make sure that the switch connector is plugged in properly.

3. Install the driver airbag module.

> NOTE
>
> Turn the ignition switch ON; the SRS indicator light should be turned on for about six seconds and then go off.
> Make sure horn button works.

Body Electrical System > Audio > AUX(Auxiliary) Jack > Schematic Diagrams

Circuit Diagram

cardiagn.com

[AUX, USB, iPod Jack]

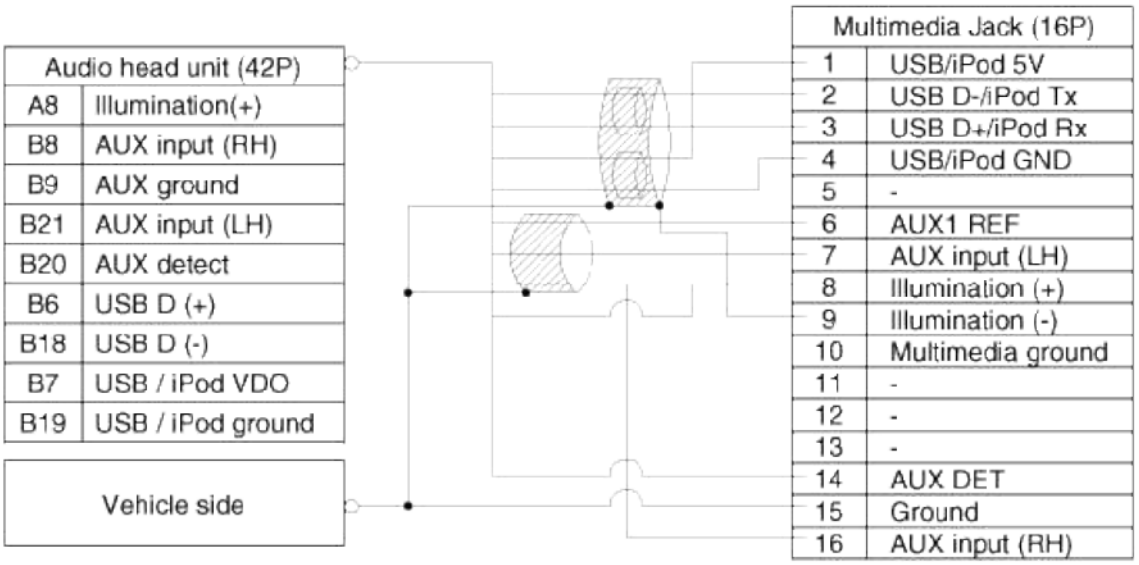

Audio head unit (42P)	
A8	Illumination(+)
B8	AUX input (RH)
B9	AUX ground
B21	AUX input (LH)
B20	AUX detect
B6	USB D (+)
B18	USB D (-)
B7	USB / iPod VDO
B19	USB / iPod ground

Vehicle side

Multimedia Jack (16P)	
1	USB/iPod 5V
2	USB D-/iPod Tx
3	USB D+/iPod Rx
4	USB/iPod GND
5	-
6	AUX1 REF
7	AUX input (LH)
8	Illumination (+)
9	Illumination (-)
10	Multimedia ground
11	-
12	-
13	-
14	AUX DET
15	Ground
16	AUX input (RH)

Output connector	Pin No.	Description
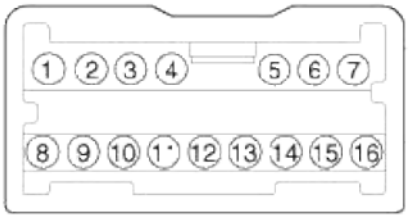	1	USB / iPod 5V
	2	USB D(-) / iPod Tx
	3	USB D(+) / iPod Rx
	4	USB/iPod GND
	5	-
	6	AUX1 REF
	7	AUX input (LH)
	8	Illumination (+)
	9	Illumination (-)
	10	-
	11	Multimedia ground
	12	-
	13	-
	14	AUX DET
	15	Ground
	16	AUX input (RH)

cardiagn.com

Body Electrical System > Audio > AUX(Auxiliary) Jack > Description and Operation

Description

The AUX, iPod and USB JACK on the center console is for customers who like to listen to external portable music players like the MP3, iPod, earphone, USB memory stick, CD player and etc., through the vehicle's sound system when it is linked to this jack. The customer has this added option.

In case of distortions from media connected to the AUX source, the audio unit may not be defective but the output level of the used media does not match the specification of the AUX input.

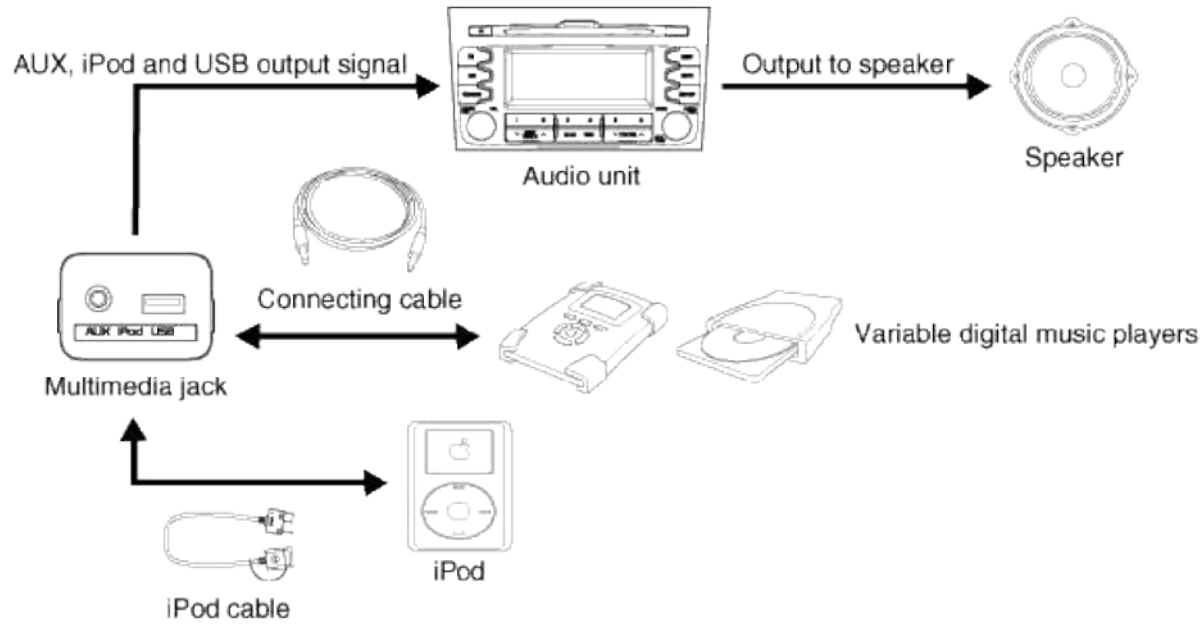

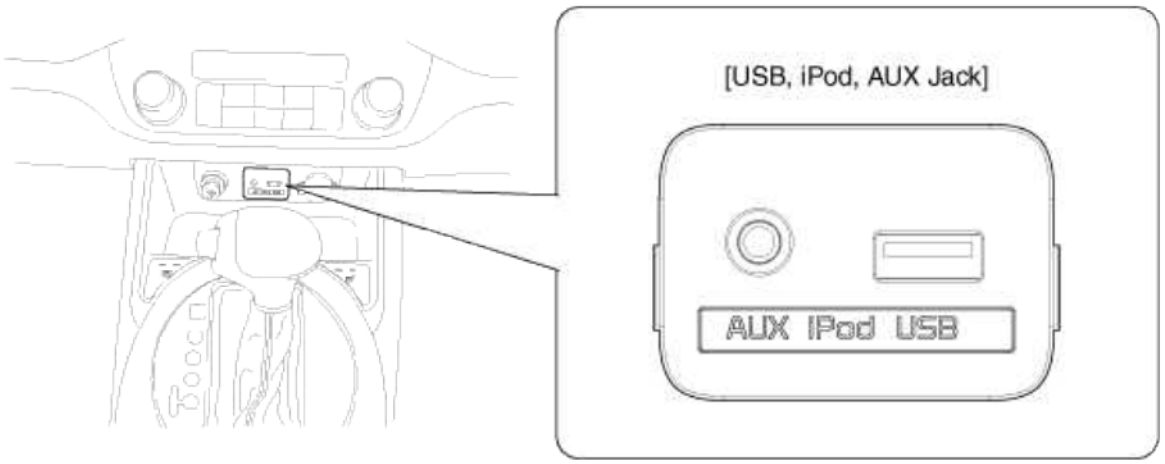

Body Electrical System > Audio > AUX(Auxiliary) Jack > Repair procedures

Removal

1. Remove the knob. Remove the floor console upper cover (A) using the appropriate tool.
   (Refer to the BD group - "Console")

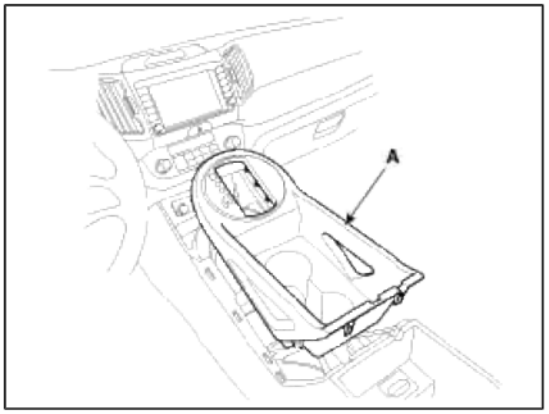

cardiagn.com

2. Loosen screws (2EA) and remove the floor console tray (A).

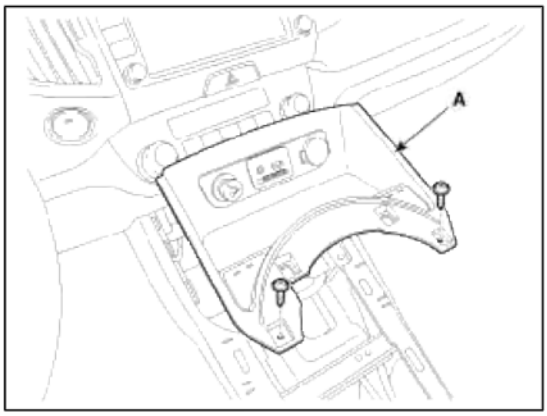

NOTE

Take care not to damage the hook when removing the switch.

3. Disconnect the connectors (A) from the floor console tray.

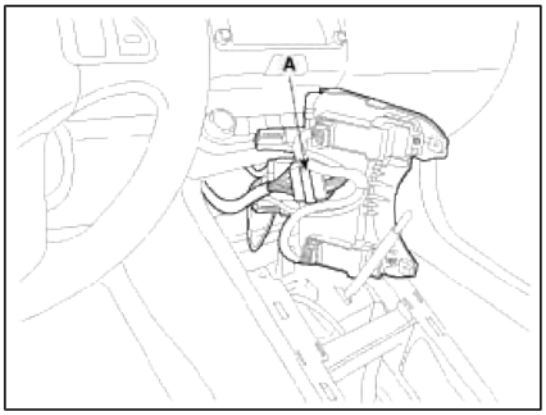

4. Remove the multimedia jack (A) from the floor console tray after pressing the hooks.

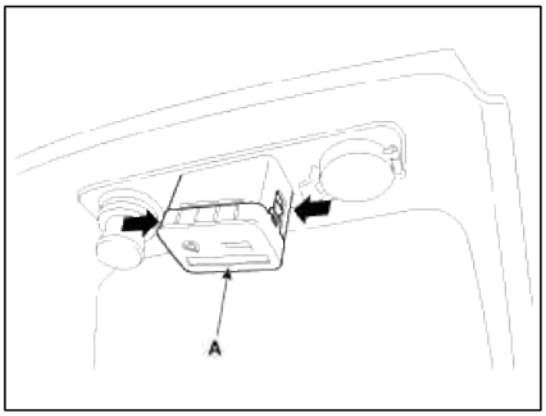

Installation

1. Install the multimedia jack.
2. Install the floor console tray.
3. Install the floor console upper cover.

Body Electrical System > Audio > Troubleshooting

Troubleshooting

Customer Complaint Analysis Check Sheet

cardiagn.com

TROUBLE IN	☐ ALL ☐ AM ☐ FM ☐ CD ☐ MP3 ☐ CD changer ☐ AMP ☐ Others
TROUBLE OCCURS	☐ Always ☐ Engine start ☐ Engine Running ☐ Cold ☐ Warm ☐ Sometimes ☐ Most of the time ☐ Engine off
TYPE OF TROUBLE	☐ Will not play ☐ Weak ☐ Squealing noise ☐ Display/illumination poor ☐ CD skips & jumps ☐ CD will not eject or insert ☐ Others (Describe) :
OTHERS	▶ Customer complaint contents : ▶ Have you checked customer's defects :
* Using the customer complaint analysis check sheet for reference, ask the customer for as much detail as possible about the problem.	

There are six areas where a problem can occur: wiring harness, the radio, the CD player, and speaker. Troubleshooting enables you to confine the problem to a particular area.

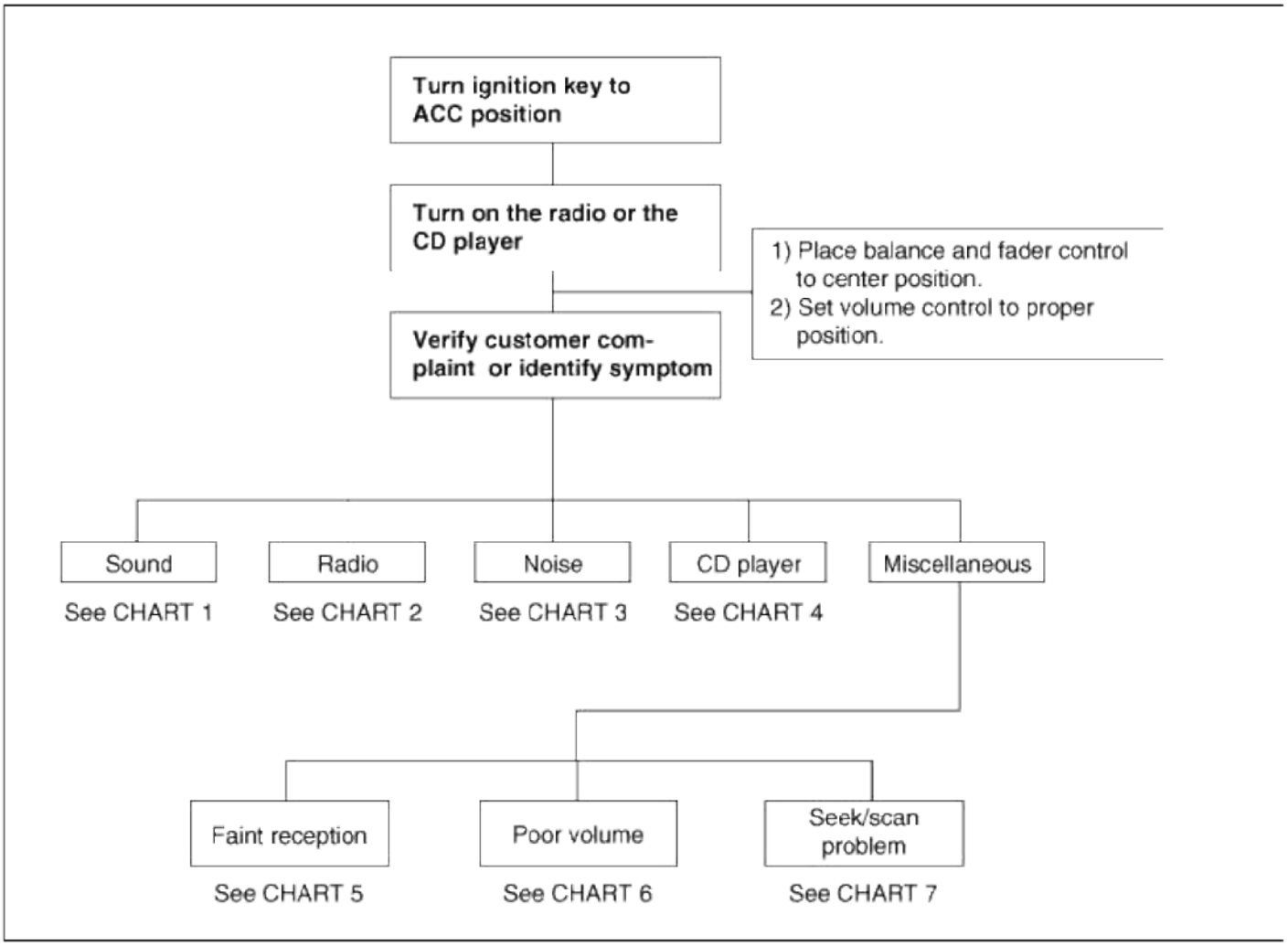

Chart 1

cardiagn.com

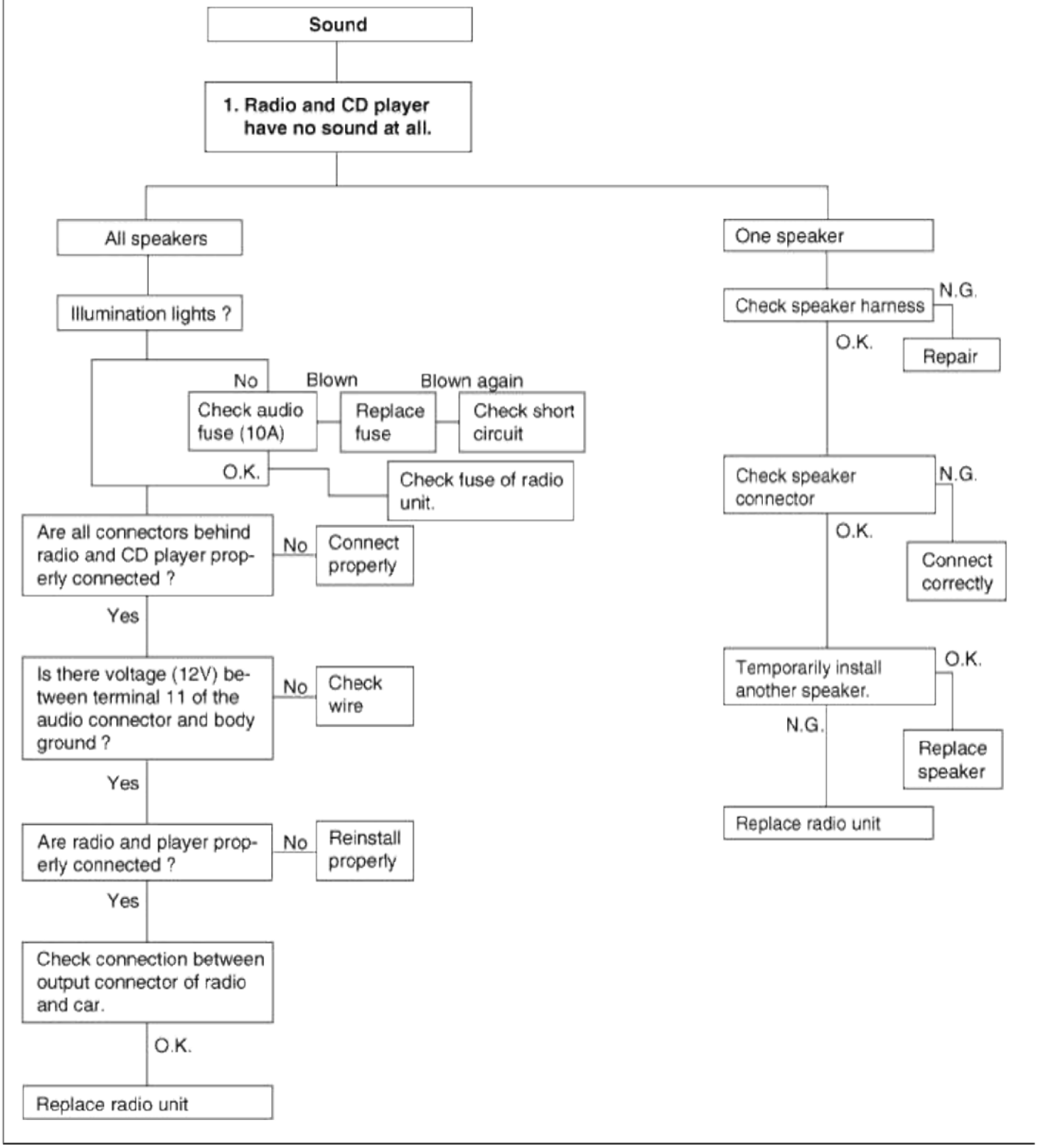

cardiagn.com

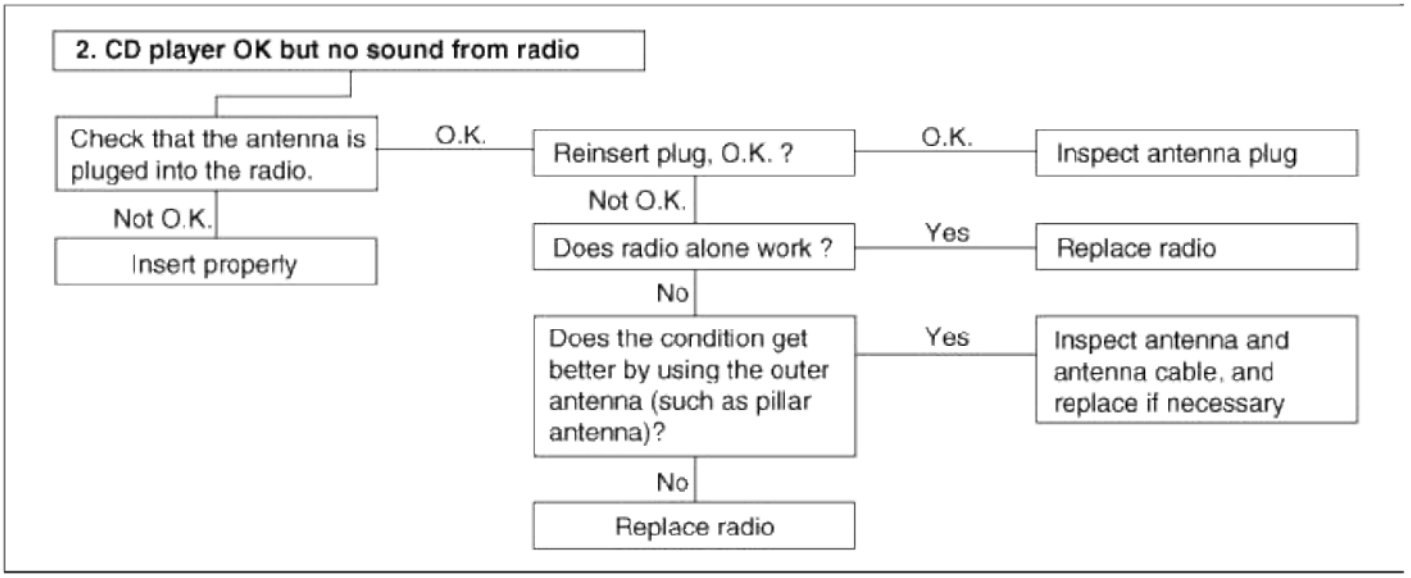

Chart 2

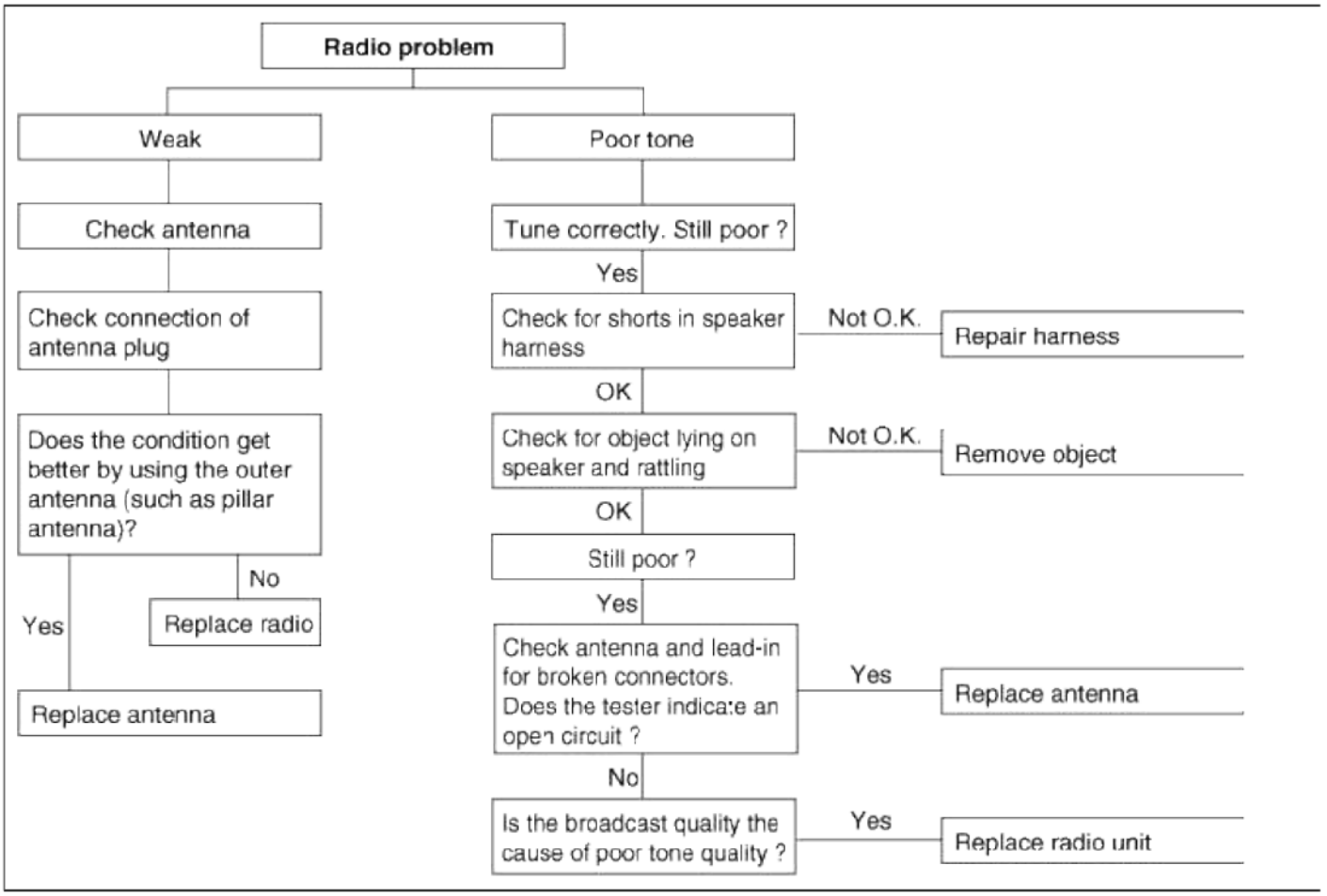

Chart 3

cardiagn.com

1. RADIO

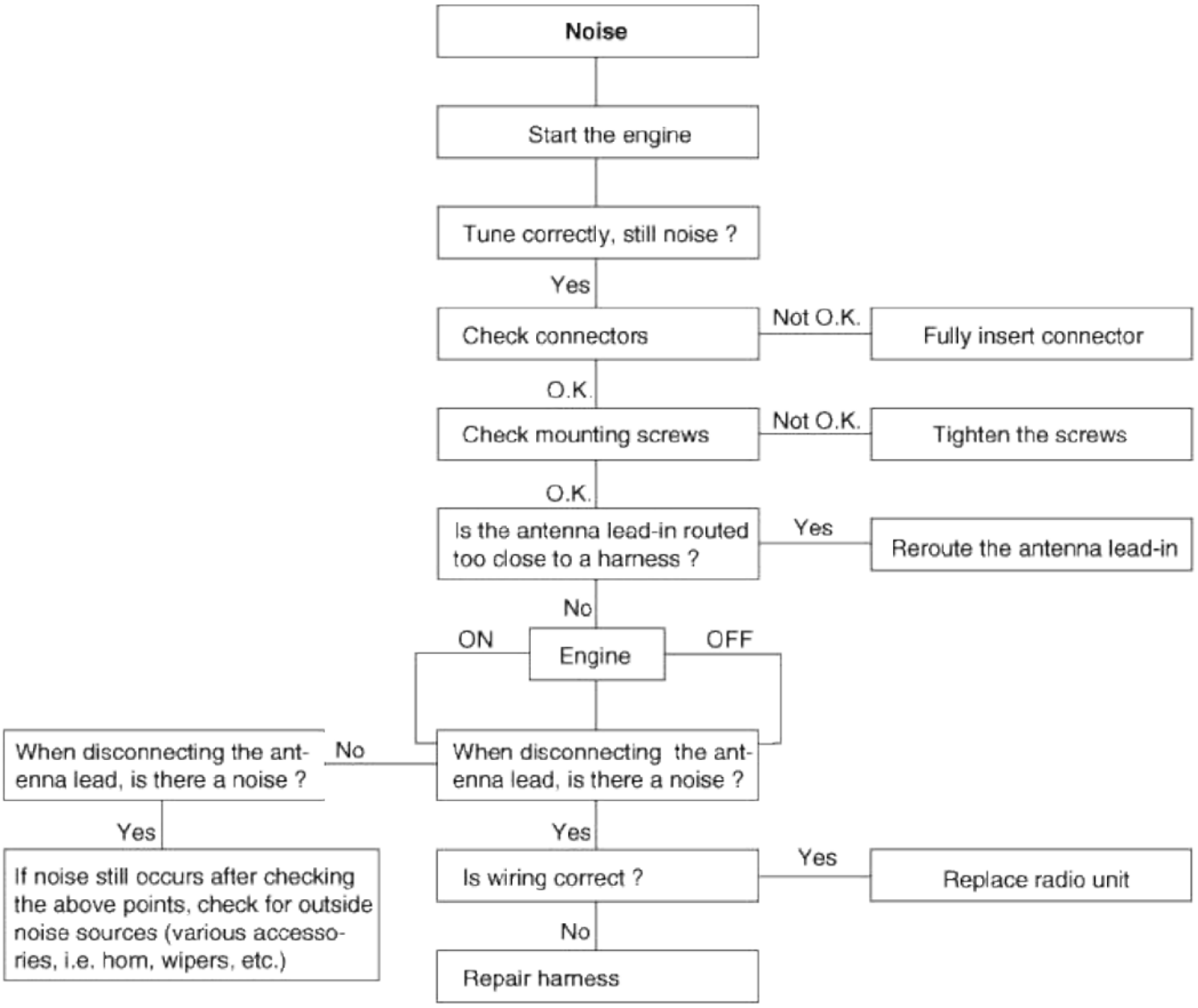

Chart 4

cardiagn.com

1. CD WILL NOT BE ACCEPTED

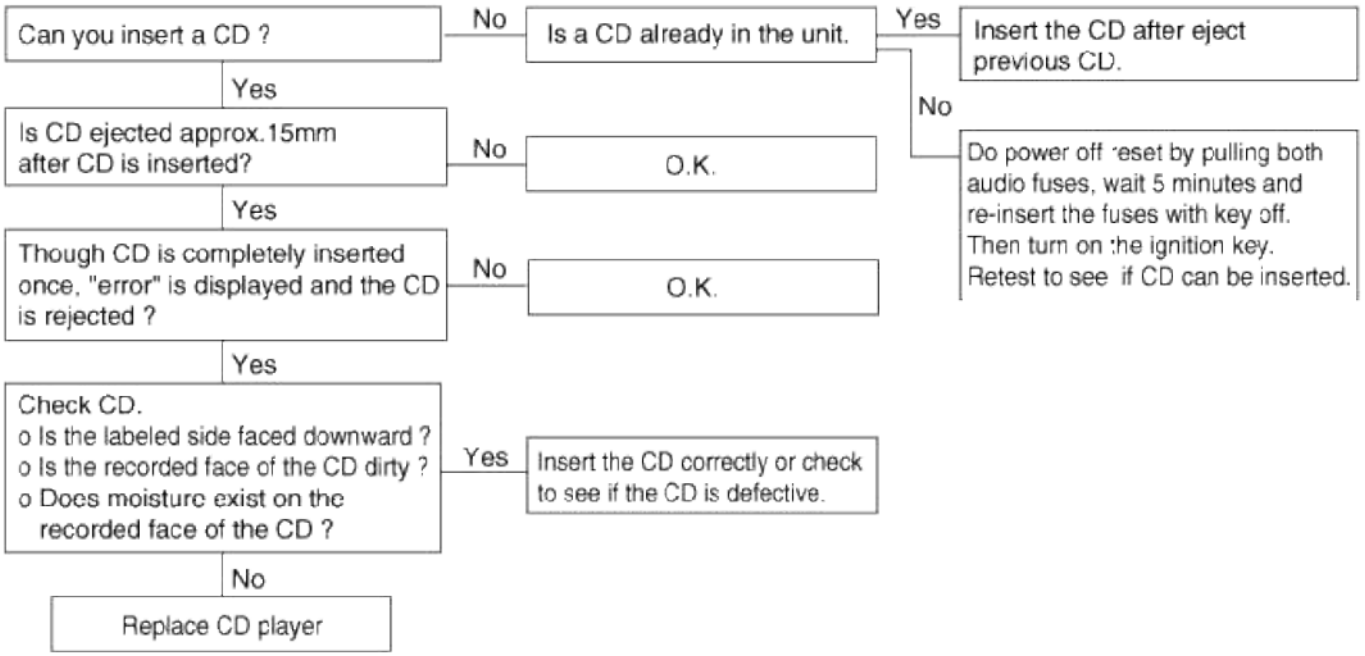

2. NO SOUND

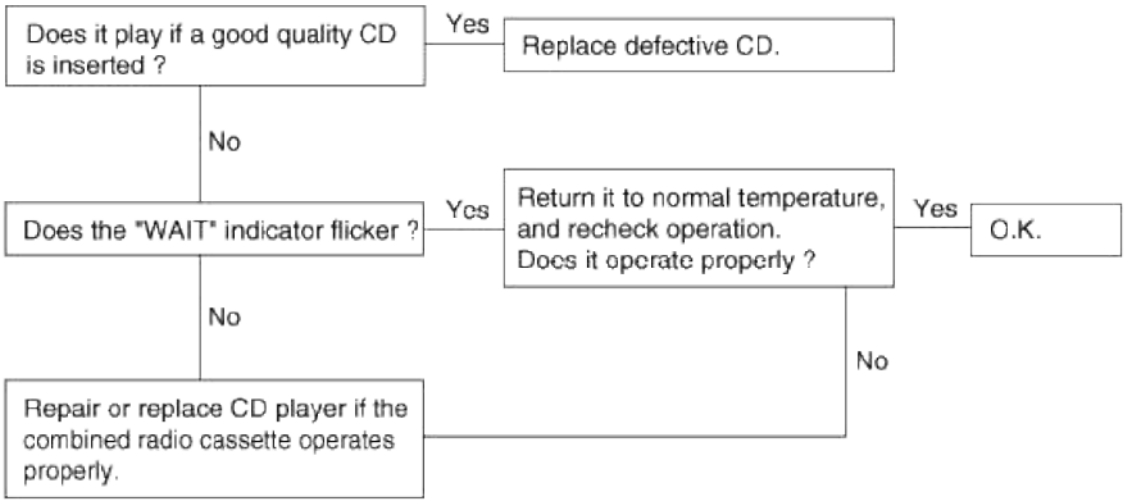

cardiagn.com

3. CD SOUND SKIPS

1) Sound sometimes skips when parking.

Is CD face scratched or dirty ? — Yes → CD is defective, or clean CD.

No

Does it play properly if CD is replaced with an existing proper CD ? — No → Repair or replace CD player.

Yes

Replace CD.

2) Sound sometimes skips when driving.
(Stop vehicle, and check it.)
(Check by using a CD which is free of scratches, dirt or other damage.)

Does sound skip when the side of the CD player is tapped ? — No → Check for skipping while driving and contact a service shop.

Yes

Securely mount the CD player.

cardiagn.com

4. SOUND QUALITY IS POOR

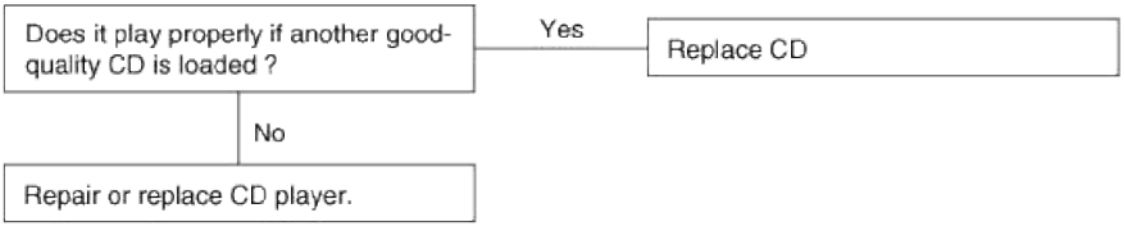

5. CD WILL NOT EJECT

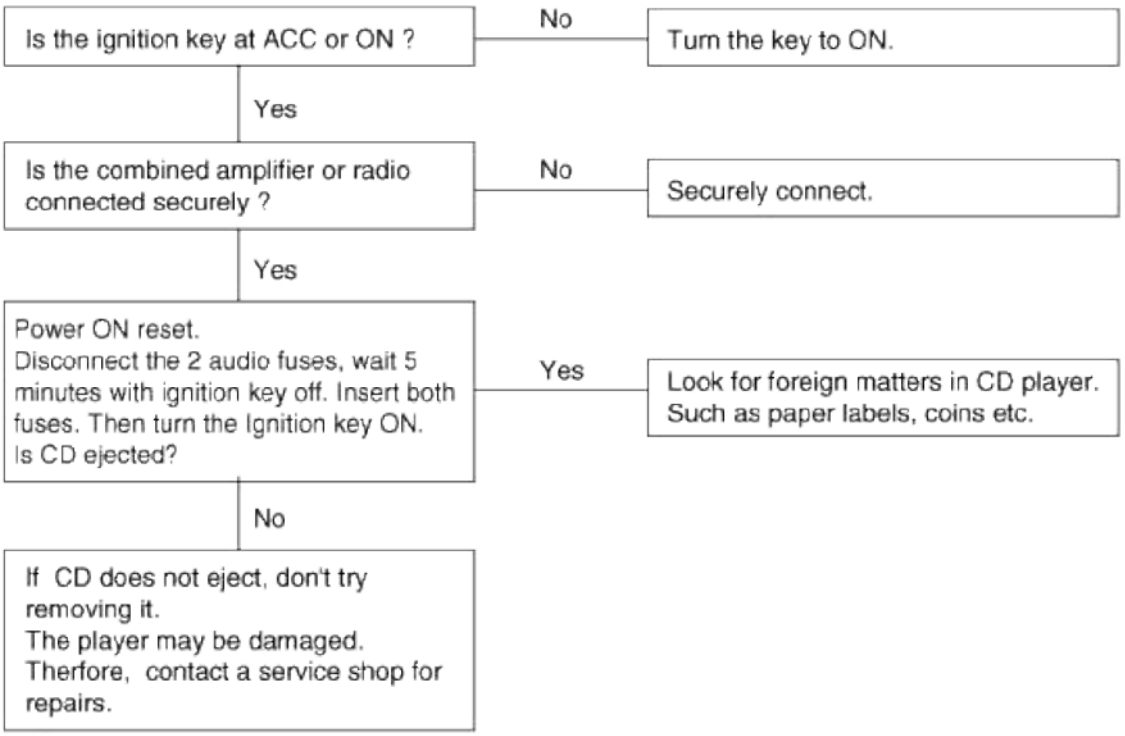

6. NO SOUND FROM ONE SPEAKER

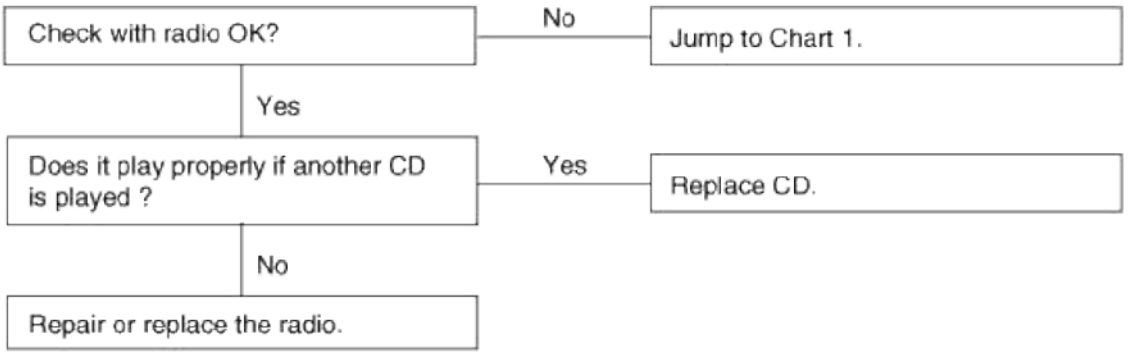

Chart 5

cardiagn.com

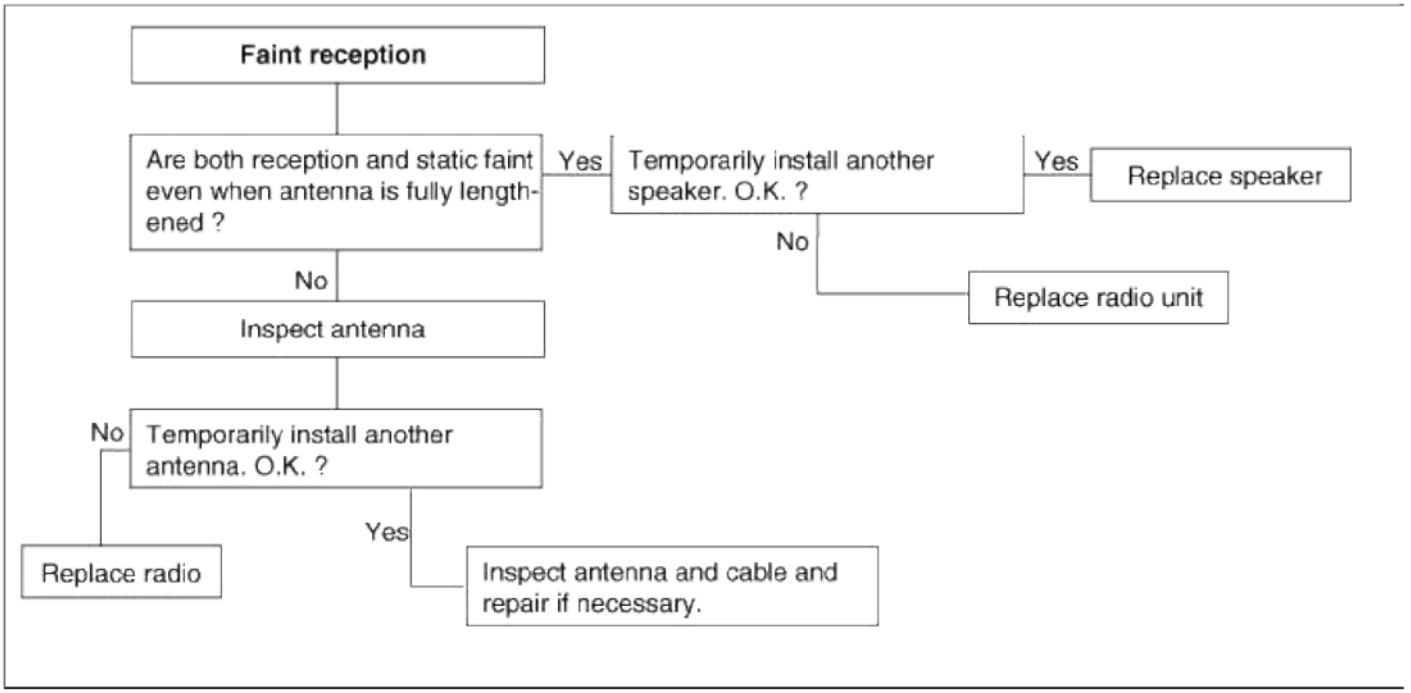

Chart 6

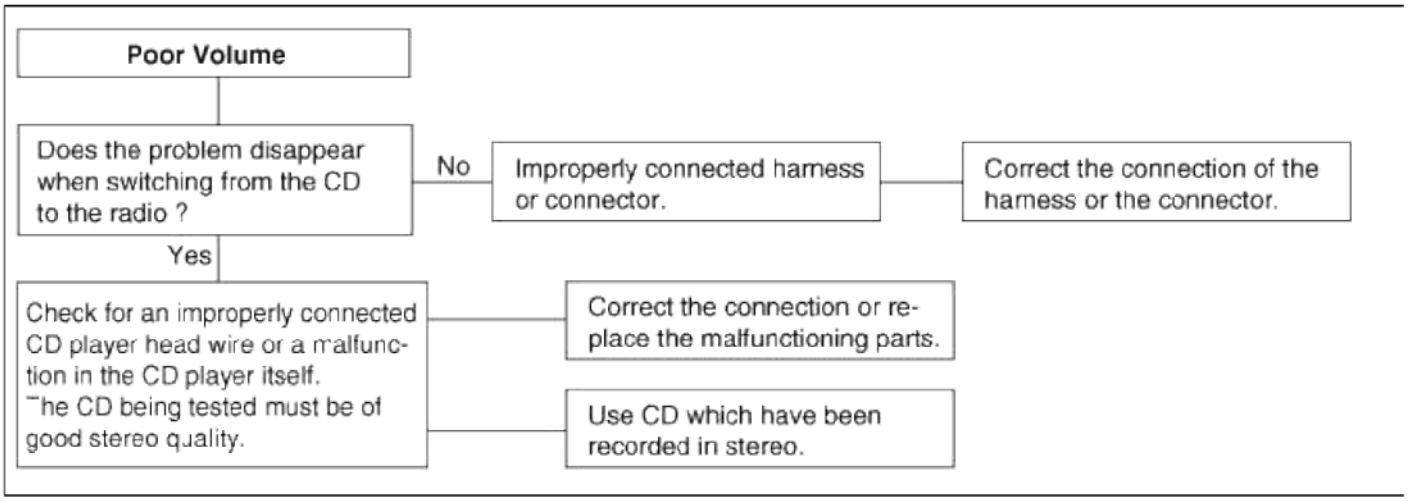

Chart 7

cardiagn.com

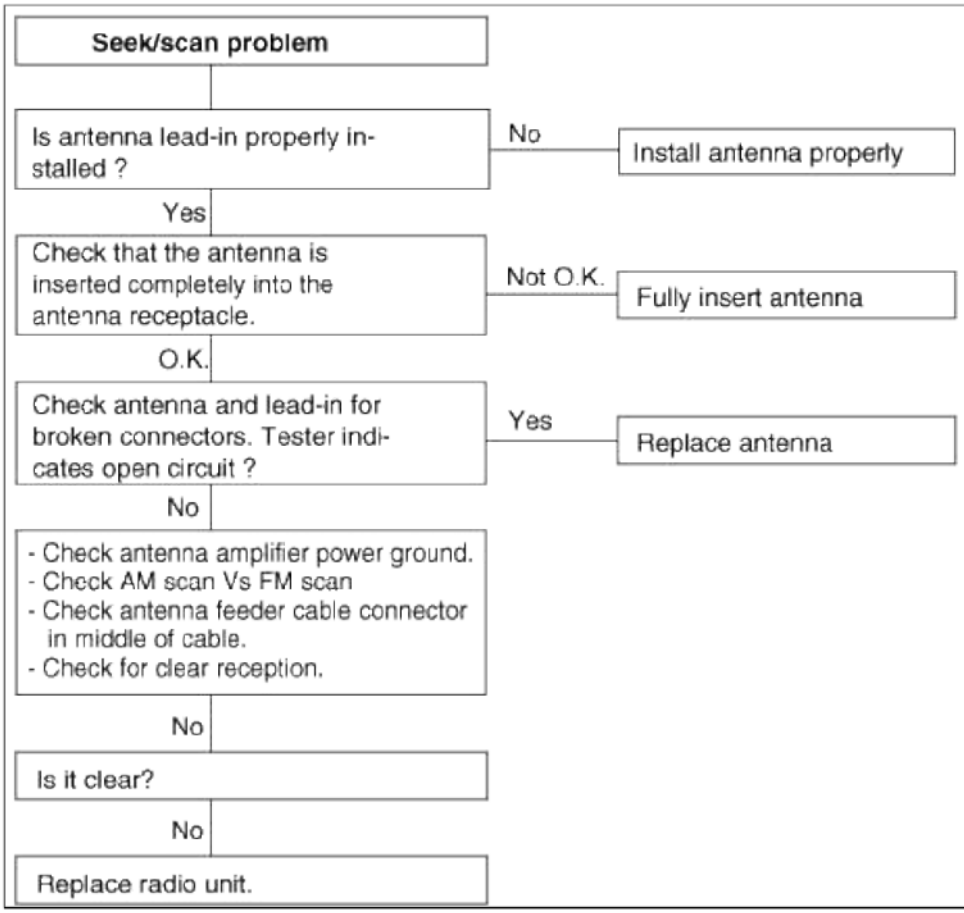

Body Electrical System > Multifunction switch > Specifications

Specifications

Items		Specifications
Rated voltage		DC 12V
Operating temperature range		-22 ~ +176°F (-30°C ~ +80°C)
Rated load	Dimmer & passing switch	High : 0.2A (Relay load) Low : 0.2A (Relay load) Passing : 0.2A (Relay load)
	Lighting switch	Lighting : 0.2A (Relay load)
	Turn signal switch	6.6 ± 0.5A (Lamp load)
	Wiper & mist switch	Low, High : 4.5A (Motor load) Intermittent : 0.22 ± 0.05A (Relay load) Lock : Max. 28A (Motor load) Washer : 4.0A (Motor load)
	Front fog lamp switch	0.2A (Relay load)
	Rear wiper & washer	Wiper : 1.0A (Relay load) Washer : 4.0A (Motor load)

Body Electrical System > Multifunction switch > Components and Components Location

cardiagn.com

Component (1)

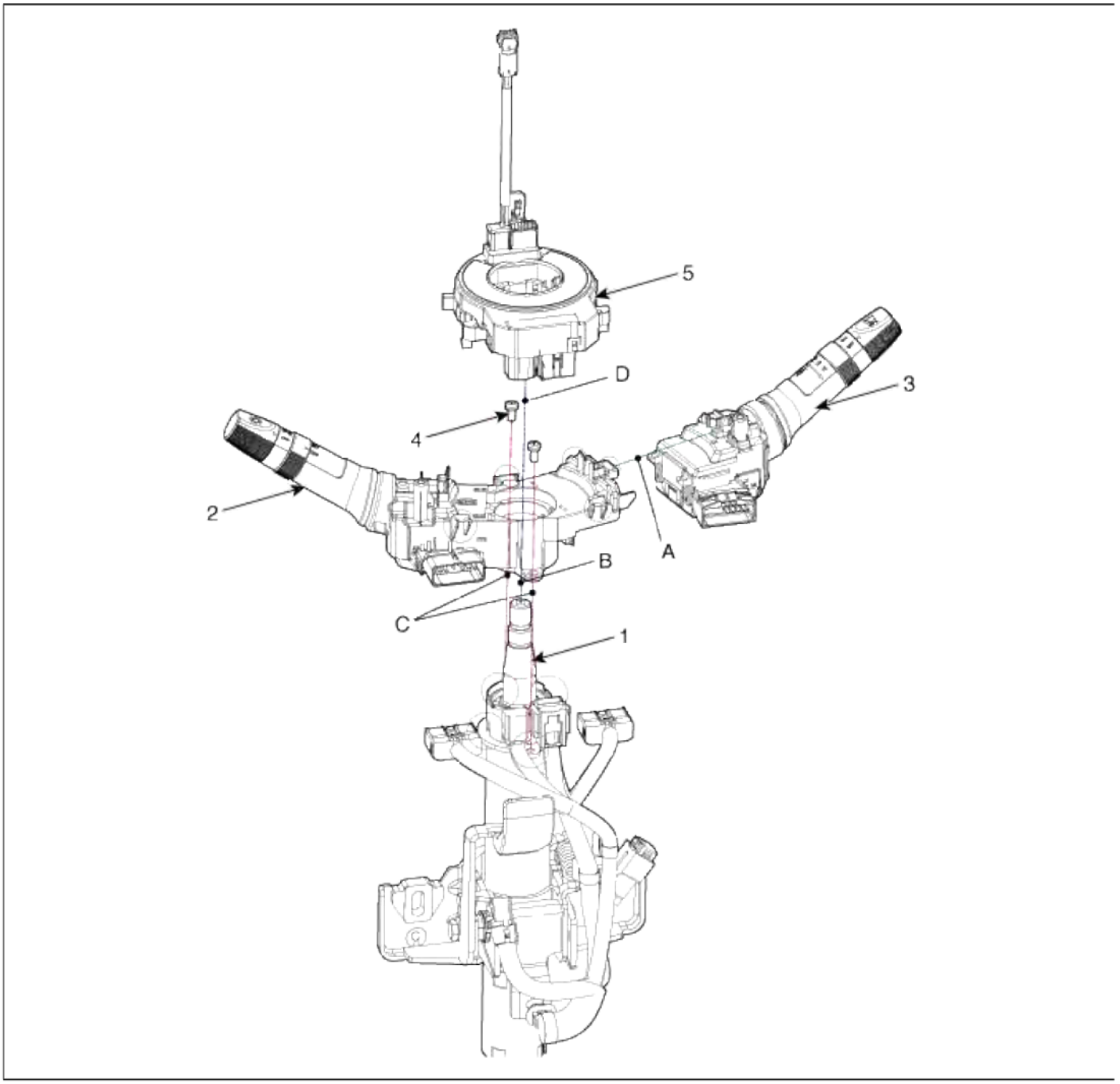

<Installation order : A→B→C→D>

1. Steering column shaft 2. Lighting switch 3. Wiper and washer switch	4. Screw 5. Clock spring

Component (2)

cardiagn.com

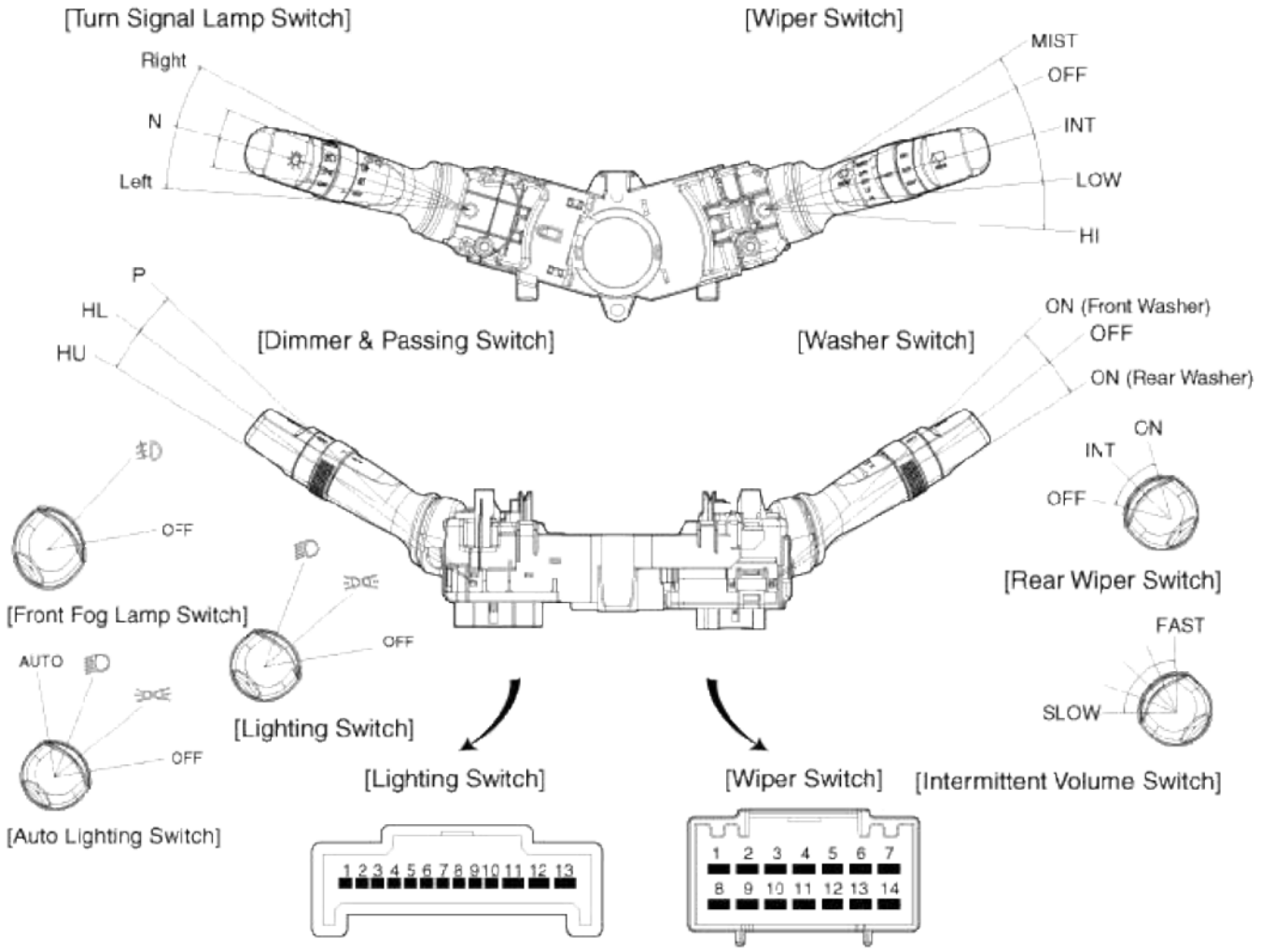

Connector name	No	Description	Connector name	No	Description
Lighting (13 pin)	1	Tail lamp switch	Wiper & Washer (14 pin)	1	Mist switch
	2	Lighting switch GND		2	Wiper parking
	3	Auto light switch		3	Wiper low speed
	4	Head lamp switch		4	Intermittent volume base
	5	Fog lamp switch base		5	Intermittent time base
	6	Front fog lamp switch		6	Rear wiper switch
	7	-		7	Intermittent rear wiper switch
	8	Head lamp low		8	Intermittent wiper switch
	9	Head lamp high		9	Wiper high speed
	10	Dimmer switch base		10	IGN2 (front washer & wiper)
	11	Turn signal left		11	Front washer switch
	12	Turn signal base		12	IGN2 (rear wiper & washer)
	13	Turn signal right		13	Rear washer switch
				14	-

cardiagn.com

Body Electrical System > Multifunction switch > Repair procedures

Removal

1. Disconnect the negative (-) battery terminal.

2. Remove the steering column upper and lower shrouds (A) after removing 3 screws.

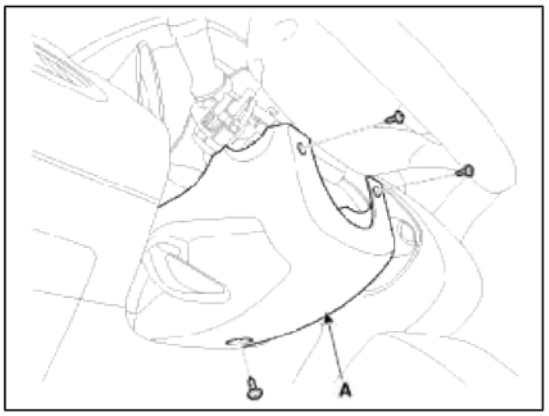

NOTE

Take care not to damage and scratch the shrouds and its related parts.
Take care not to damage the hook when removing the upper and lower shrouds.

3. Disconnect the light switch connector (A) and the wiper switch connector (B).

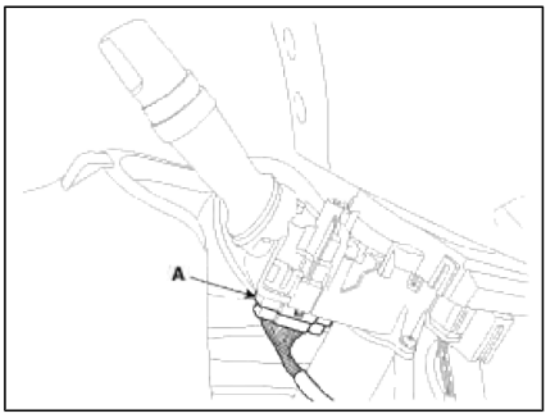

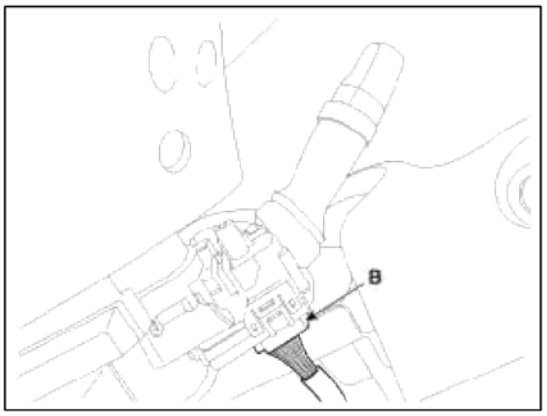

cardiagn.com

4. Remove the wiper switch (A) by pushing the lock pin (B).

> NOTE
>
> When removing the wiper & washer switch only, release the lock of wiper switch without removing the steering wheel.

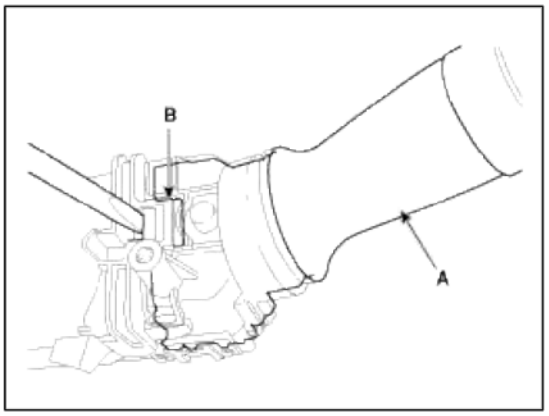

5. Remove the steering wheel.
   (Refer to the ST group - "Steering column and shaft")
6. Remove the clock spring.
   (Refer to the RT group - "Airbag module")
7. Loosen the 2 screws from the multifunction switch assembly (A).

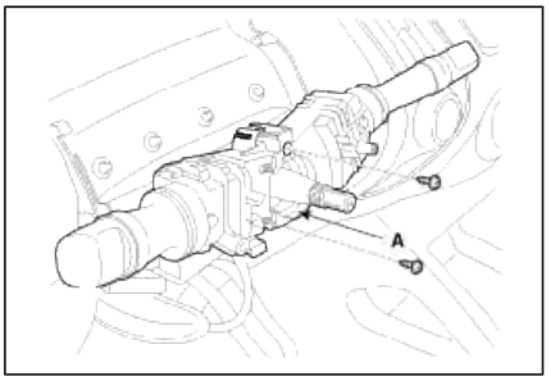

Installation

1. Install the multifunction switch.
2. Install the clock spring and steering wheel.
3. Install the steering column upper and lower shrouds.
4. Install the steering wheel.

Inspection

Lighting Switch Inspection

cardiagn.com

1. With the multi function switch in each position, make sure that continuity exists between the terminals below. If continuity is not as specified, replace the multi-function switch.

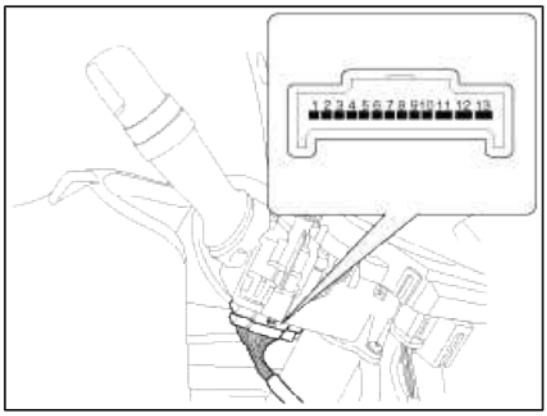

Lighting switch (Auto Light)

Position \ Terminal	2	4	3	1
OFF				
Tail Lamp	○	—	—	○
Head Lamp	○	○	—	○
Auto	○	—	○	

Lighting Switch

Position \ Terminal	1	4	2
OFF			
Tail Lamp	○	—	○
Head Lamp	○	○	○

Dimmer And Passing Switch

Position \ Terminal	2	9	8	10
HU		○	—	○
HL			○	○
P	○	○	—	○

HU : Head lamp high beam
HL : Head lamp low beam
P : Head lamp passing switch

Turn Signal Switch

Hazard Switch \ Turn Signal Switch \ Terminal	13	12	11
OFF	L		○	○
	N			
	R	○	○	

Front Fog Lamp

Position \ Terminal	5	6
OFF		
ON	○	○

cardiagn.com

Wiper And Washer Switch Inspection

1. With the multi function switch in each position, make sure that continuity exists between the terminals below. If continuity is not as specified, replace the multi-function switch.

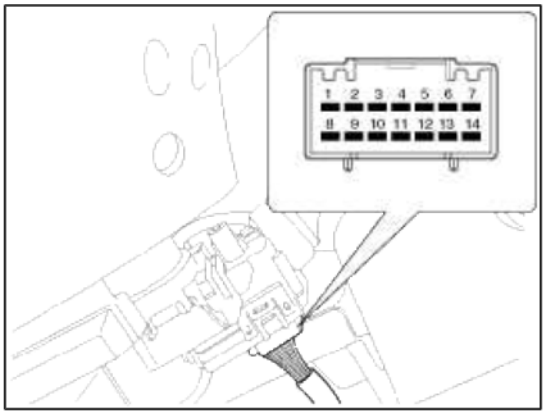

Wiper Switch

Position \ Terminal	3	9	2	8	10	1	4	5
MIST	○		○		○	○		
OFF	○		○					
INT	○		○	○	○		○	○
LOW	○				○			
HI		○			○			

Washer Switch

Position \ Terminal	10	11
OFF		
ON	○	○

Rear Wiper Switch

Position \ Terminal	12	6	7
INT	○		○
OFF			
ON	○	○	

Rear Washer Switch

Position \ Terminal	12	13
OFF		
ON	○	○

Inspection (With GDS)

1. Check BCM input/output specification of multifunction switch using the GDS. If the specification is abnormal, replace the lamp or wiper switch.

cardiagn.com

2. If diagnosis is required on the multifunction switch, select model and "BCM".

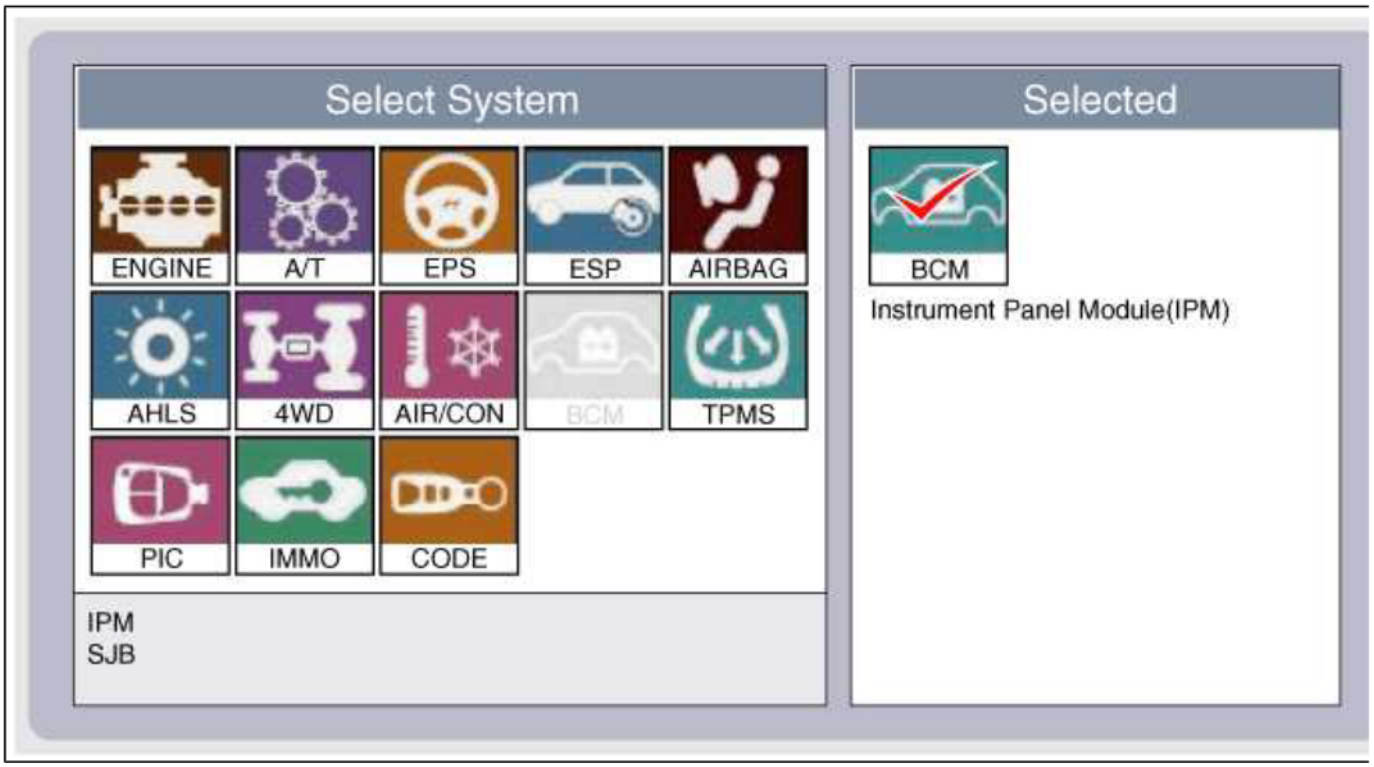

3. Select "Current data" and check the input/output condition of "Multifunction switch".



cardiagn.com

4. To perform test on "Multifunction switch" outputs, select "Actuation test".

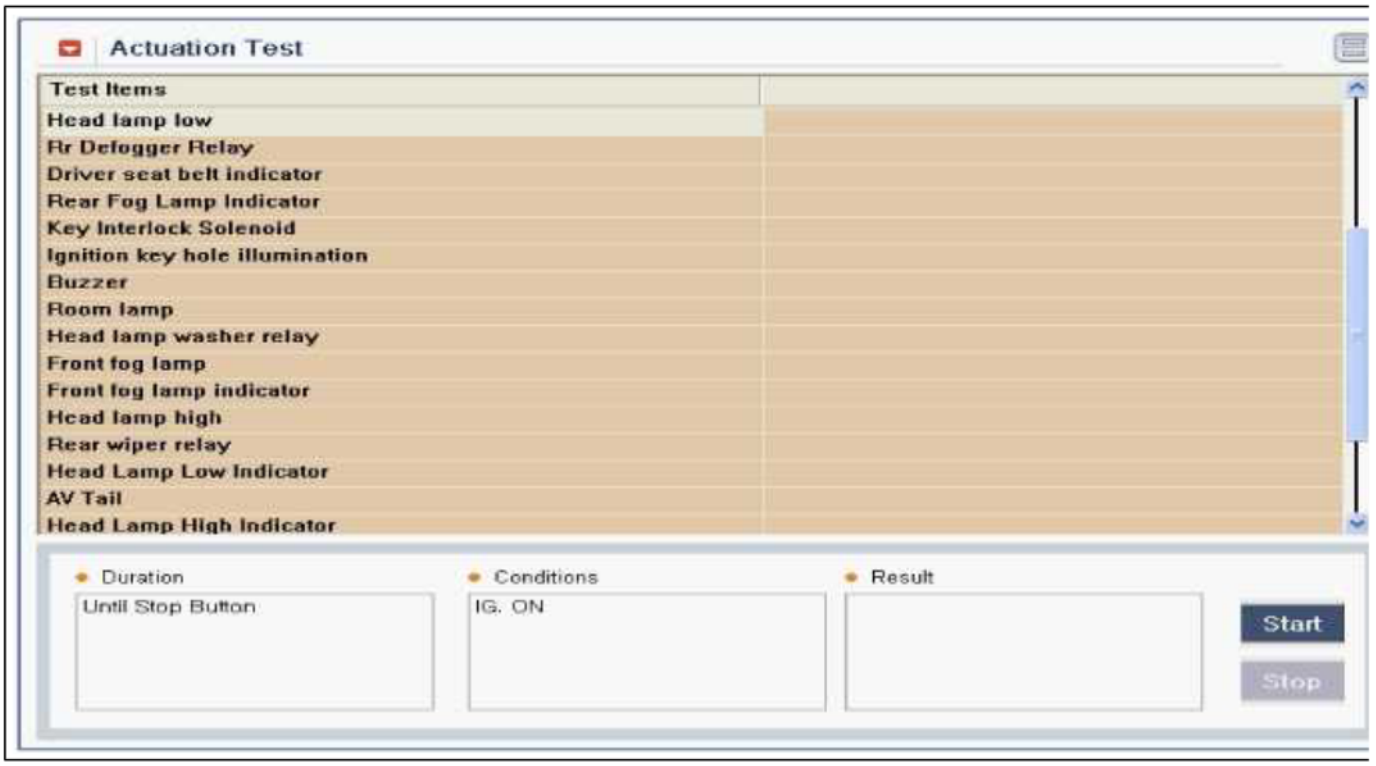

Body Electrical System > Horn > Components and Components Location

Component Location

cardiagn.com

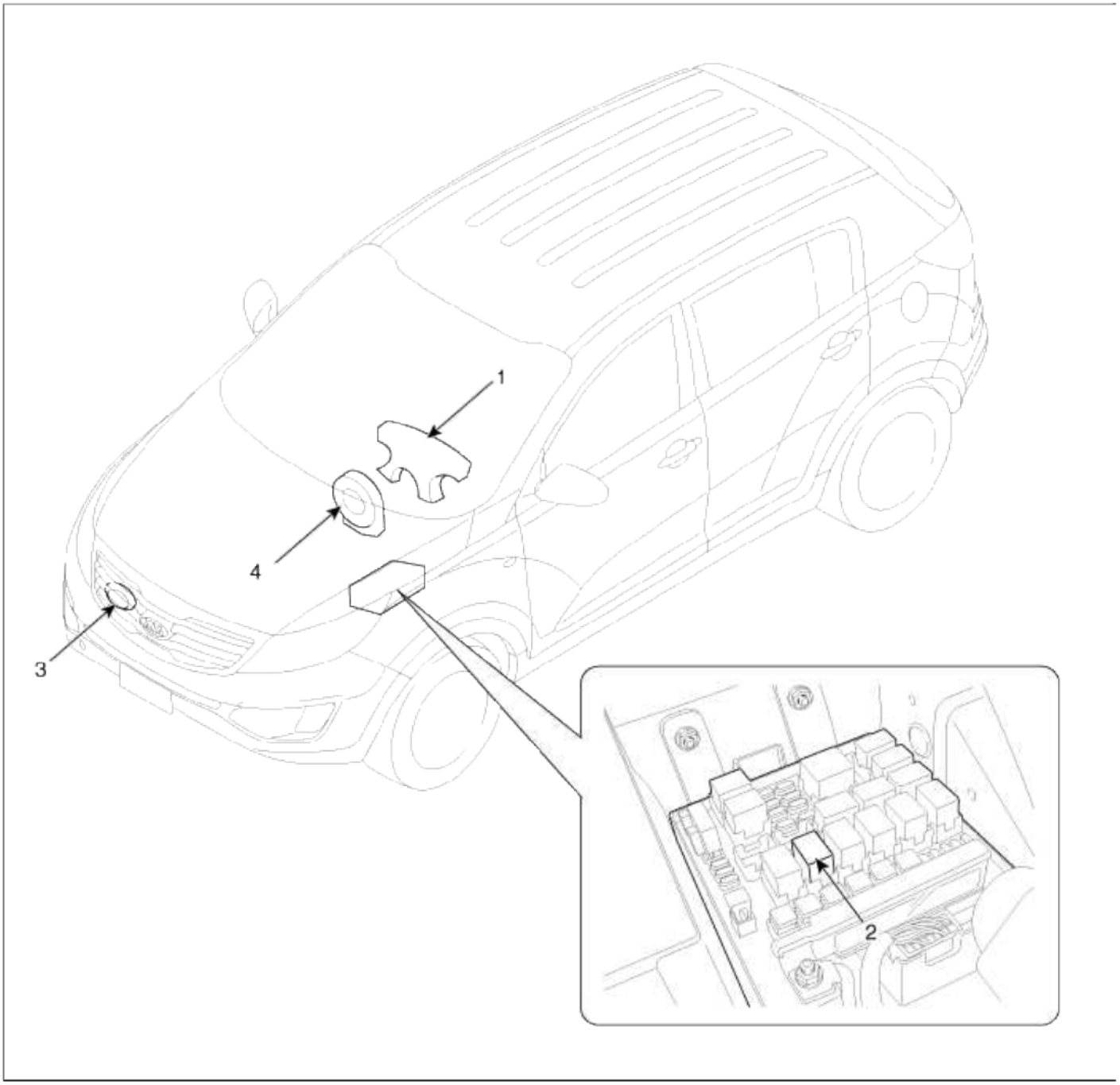

1. Horn switch 2. Horn relay (Engine room compartment)	3. Horn (Low pitch) 4. Clock spring

Body Electrical System > Horn > Repair procedures

Removal

1. Remove the radiator upper cover.
   (Refer to the BD group - "Front bumper")

cardiagn.com

2. Remove the bolt and disconnect the horn connector, then remove the low pitch horn (A).

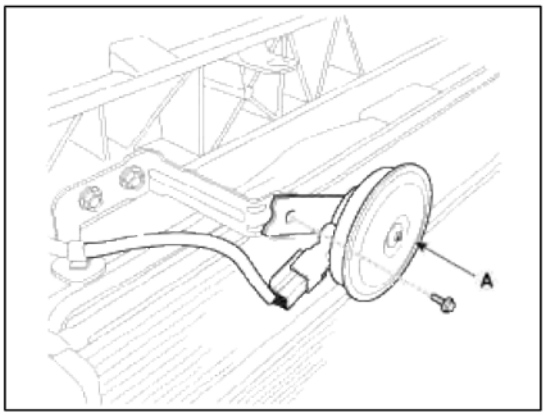

Installation

1. Install the horn after connecting the horn connector.
2. Install the radiator upper cover.

Inspection

Test the horn by connecting battery voltage to the 1 terminal and ground the 2 terminal.
The horn should make a sound. If the horn fails to make a sound, replace it.

Horn Relay Inspection

1. Remove the horn relay (A) from the engine room relay box.
2. There should be continuity between the No.30 and No.87 terminals when power and ground are connected to the No.85 and No.86 terminals.
3. There should be no continuity between the No.30 and No.87 terminals when power is disconnected.

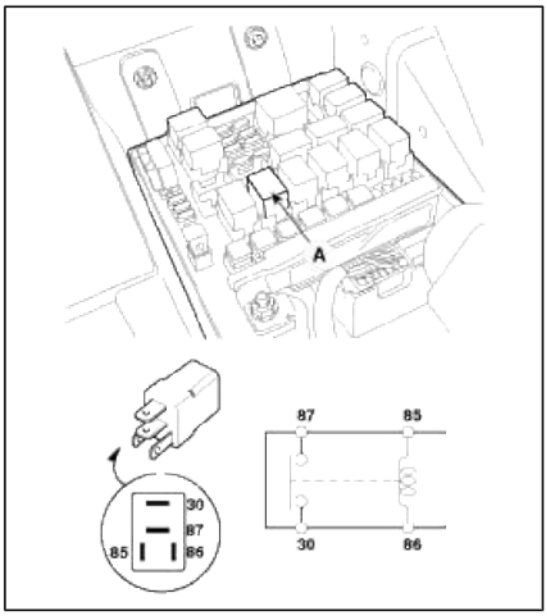

Terminal / Power	30	87	85	86
Disconnected			○	○
Connected	○	○	⊖	⊕

Adjustment

cardiagn.com

1. Operate the horn, and adjust the tone to a suitable level by turning the adjusting screw.

NOTE

Horn adjustment screw is automatically sealed with silicon sealant.
The shape and size of the applied sealant is variable and tails or dribbles are acceptable and not to be tampered with.

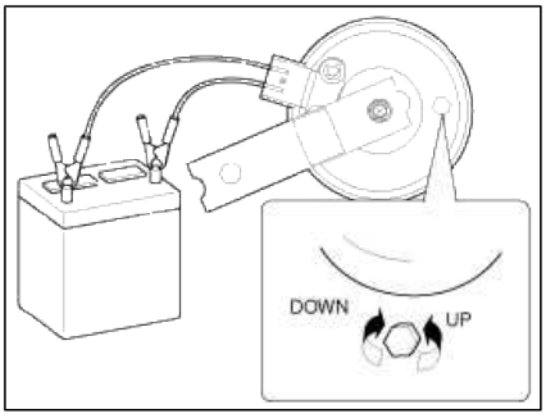

Body Electrical System > AVN System > Specifications

Specifications

Item	Specification
Power supply	DC 14.4V (-) Negative ground
Frequency range / Channel space	FM : 87.5~108.0MHz, AM : 531~1602KHz
Tuning type	PLL SYNTHESIZED TUNING
Antenna	80 pF 75 Ohm
Dark current	Max 4mA (Head unit)
S/N	FM : MIN 50 dB AM : MIN 40 dB
Temperature range	Operating : -4°F~ +158°F (-20°C~ +70°C) Storage : -22°F~ +316.4°F (-30°C~ +80°C)

Display System

Item	Specification
Size	7 inch, WVGA
TFT-LCD Deffect dot	800 X 480

DVD Deck

Item	Specification
Power supply	8V, 5V

cardiagn.com

Bluetooth

Item	Specification
Power supply	+ 3.3V (Max 600mA)
Functions	Hands free, Audio streaming, Phone book

Storage Memory

Item	Specification
Type	USB (Map data)
Capacity	8 GB

Body Electrical System > AVN System > Components and Components Location

Component Location

cardiagn.com

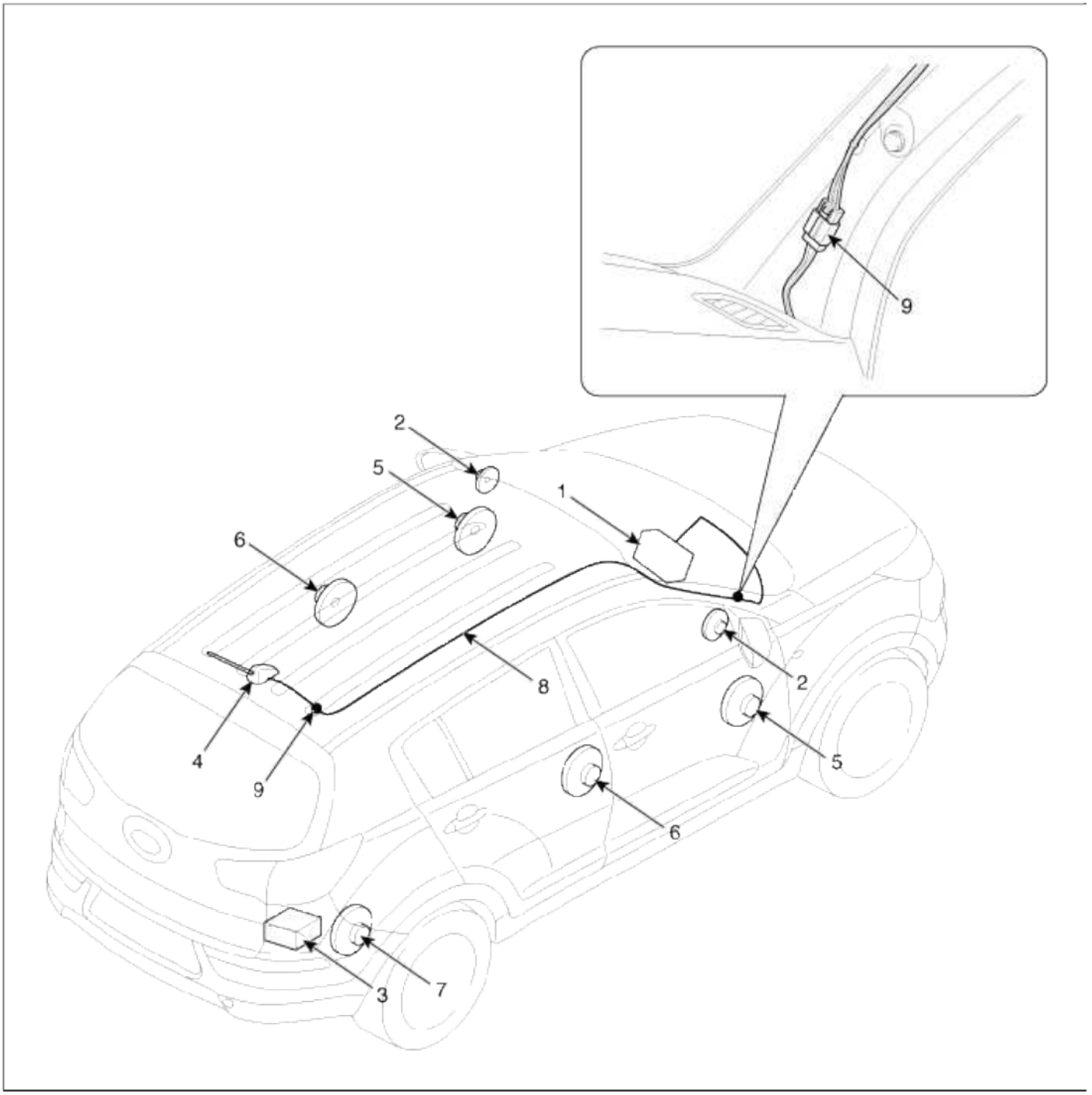

1. AVN (A/V & Navigation) head unit 2. Tweeter speaker 3. External Amplifier 4. Roof antenna (GPS + SDARS + Radio) 5. Front door speaker	6. Rear door speaker 7. Woofer speaker 8. Antenna feeder cable 9. Feeder cable joint connector

SDARS : Satellite Digital Audio Radio Service

Components

AVN (A/V & Navigation) Head Unit

cardiagn.com

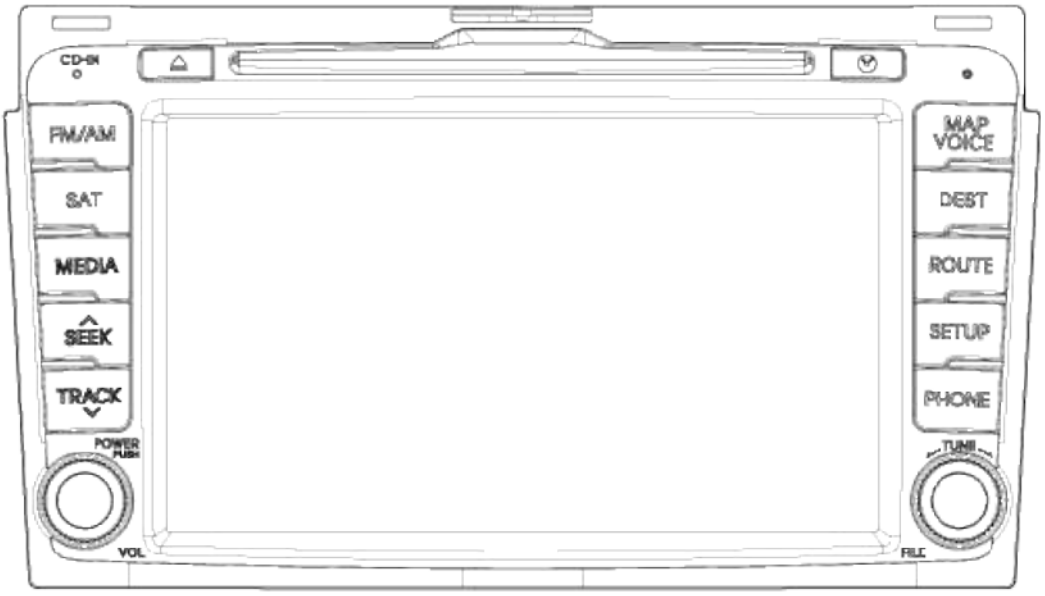

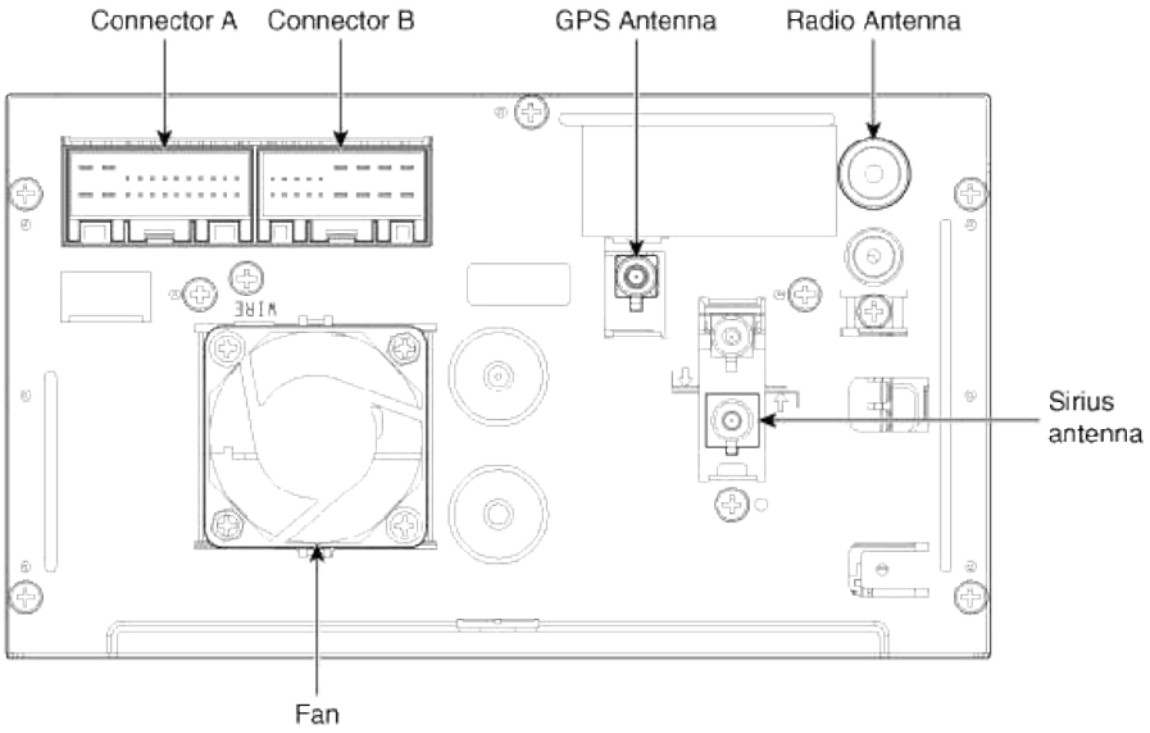

cardiagn.com

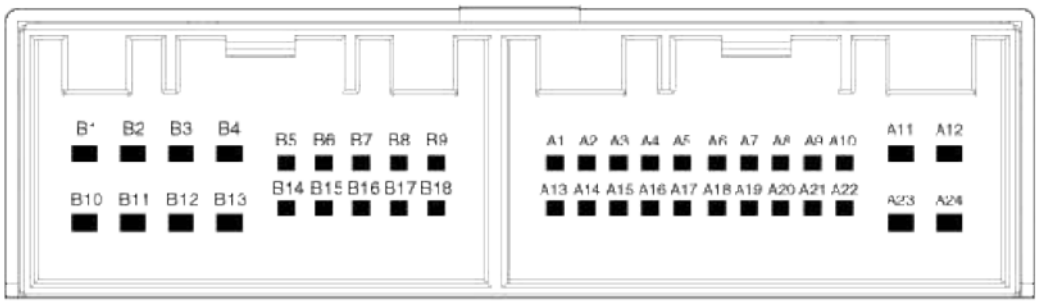

Pin	Description	Pin	Description
B1	-	A1	CAN-H
B2	Camera video	A2	-
B3	Camera GND	A3	-
B4	Camera P GND	A4	Steering remote
B5	SPDIF GND	A5	-
B6	SPDIF +	A6	-
B7	ALT_L	A7	AUX / iPod video
B8	Illumination(+)	A8	AUX audio R
B9	R position	A9	AUX GND
B10	-	A10	MIC +
B11	Camera power	A11	ACC
B12	Navigation voice -	A12	Battery +
B13	Navigation voice +	A13	CAN-L
B14	-	A14	Auto light
B15	SPDIF -	A15	TGS park signal
B16	Door unlock	A16	Speed
B17	Illumination(-)	A17	Steering GND
B18	Antenna power	A18	-
		A19	AUX / iPod V GND
		A20	AUX_Detect
		A21	AUX_ Audio L
		A22	MIC -
		A23	Main GND
		A24	Main GND

cardiagn.com

Radio antenna	Pin	Description	Pin	Description
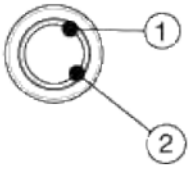	1	Signal	2	Ground

USB Connector	Pin	Description	Pin	Description
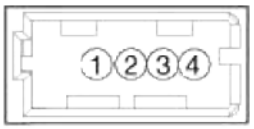	1	USB Ground	3	USB D (-)
	2	USB D (+)	4	USB VCC

GPS Antenna	Pin	Description	Pin	Description
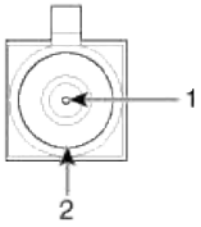	1	GPS Signal	2	Ground

Sirius antenna	Pin	Description	Pin	Description
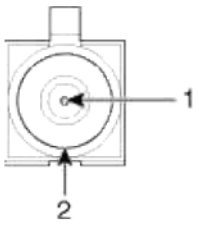	1	Sirius signal	2	Ground

cardiagn.com

[External Amplifier]

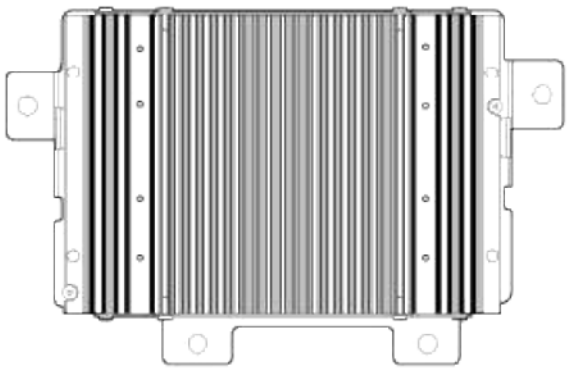

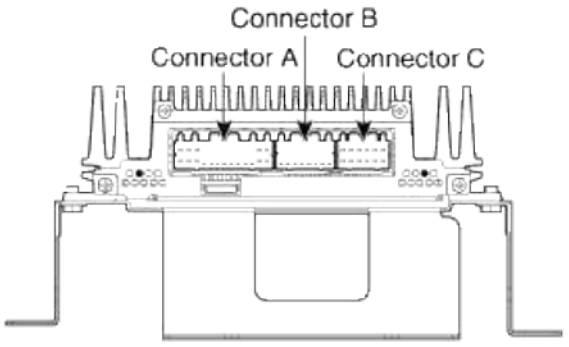

NO	Connector A	Connector B	Connector C
	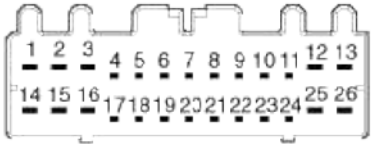	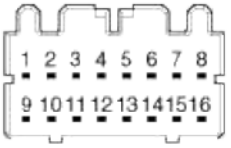	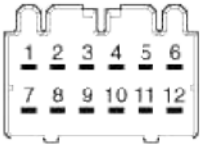
1	B (+)	-	Rear Door Right (+)
2	B (+)	-	Rear Door Left (+)
3	B (+)	-	Front Tweeter Right (+)
4	-	-	Front Tweeter Left (+)
5	CAN (+)	-	Front Door Right (+)
6	CAN (-)	-	Front Door Left (+)
7	ACC	-	Rear Door Right (-)
8	-	-	Rear Door Left (-)
9	-	-	Front Tweeter Right (-)
10	-	-	Front Tweeter Left (-)
11	Navigation (+)	-	Front Door Right (-)
12	Sub woofer 2 (+)	-	Front Door Left (-)
13	Sub woofer 1 (+)	-	
14	GND	-	
15	GND	-	
16	GND	-	
17	-		
18	SPDIF (+)		
19	SPDIF (-)		
20	-		
21	-		
22	-		
23	-		
24	Navigation (-)		
25	Sub woofer 2 (-)		
26	Sub woofer 1 (-)		

cardiagn.com

[Roof antenna (Radio + GPS + Sirius)]

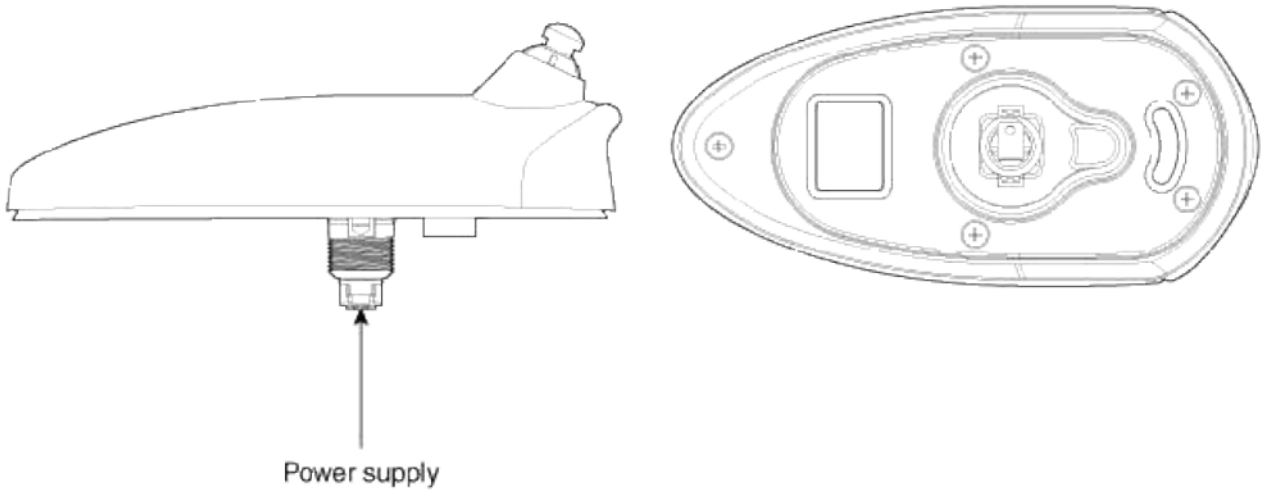

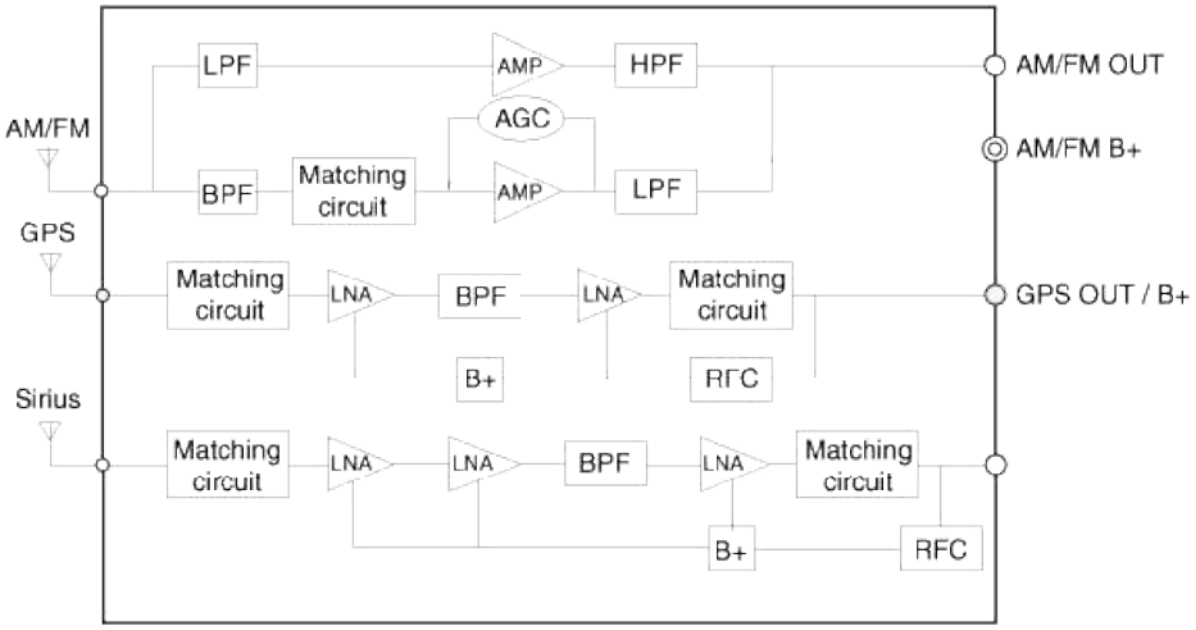

Body Electrical System > AVN System > Schematic Diagrams

System Block Diagram

cardiagn.com

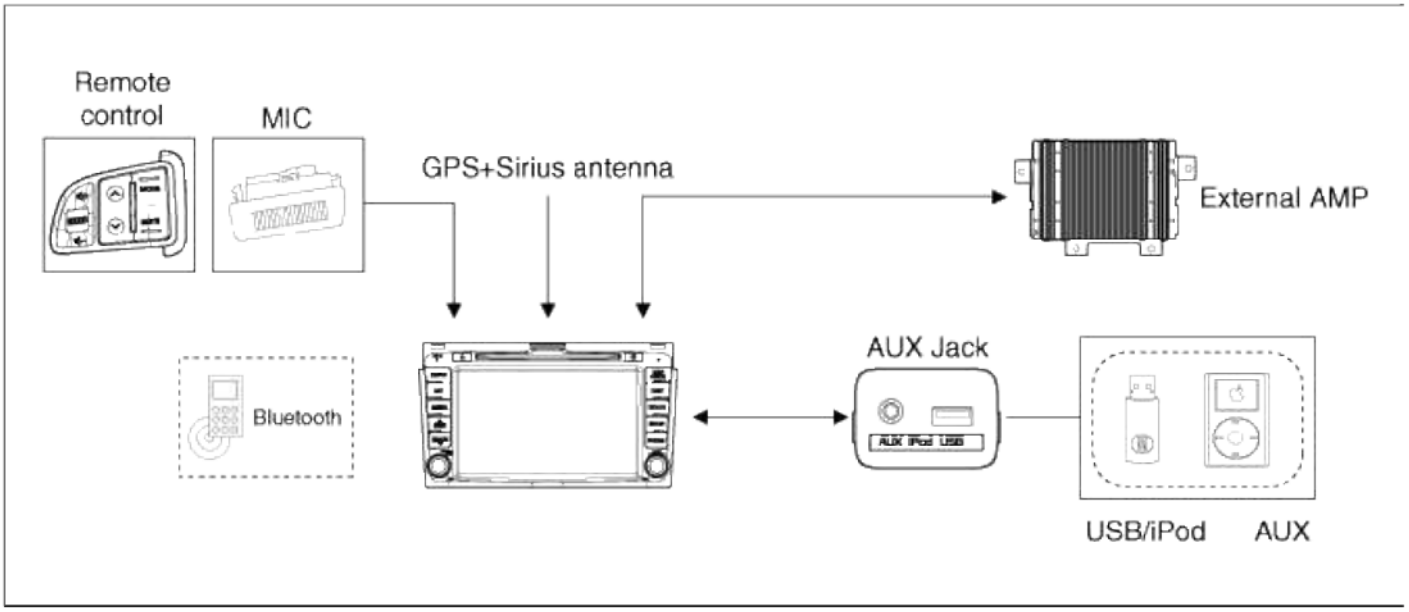

Body Electrical System > AVN System > Description and Operation

Limitations Of The Navigation system

GPS Signal Reception State

As the GPS satellite frequency is received/transmitted in straight lines, reception may not work if hiding devices are placed on or near the GPS antenna or when traveling through the following locations.



- Tunnels



- Basement parking structures



cardiagn.com

• Underneath an overpass



• Roads within forested areas



• Areas near high rise buildings



• Roads within canyons

Vehicle Position Display

1. If multipass errors occur due to reflections from buildings or related causes, the current position mark on the navigation may differ from the actual position of the vehicle.
2. The position of the vehicle on the navigation may be different from the actual position if the vehicle is under the occur, driving for a short period of time will vehicle through map matching or GPS information (several minutes may be necessary in certain cases).
   A. When driving on a Y-shaped road with a narrow angle, the current position may be displayed in the opposite direction.
   B. If the vehicle is loaded onto a car transport vehicle, the current position mark may be stalled on the last position prior to loading.
   C. When driving on a spiral-shaped road.
   D. When driving in mountain regions with sharp turns or sudden brakes.
   E. When entering a road after having been in an underground parking structure, building parking structure, or turnable with many rotations.
   F. When the tires have recently been replaced (Especially upon use of spare or studless tires)
   G. If the battery terminal is removed.
   H. When driving in city streets, the current position may be displayed on the opposite side or on an off-road position.
   I. When changing the zoom level from the maximum zoom in level to a different zoom level, the current position mark may be displayed on a different road.
   J. When driving in heavy traffic with frequent go · stops in traffic or intersections.
   K. When driving under slippery conditions, such as heavy sand, snow, etc.

cardiagn.com

L. When driving with the tire chain in place.
M. When using a tire with an incorrect size specification.
N. When the tire pressure for the 4 tires are different.
O. When the replacement tire is a worn or used tire (Especially studless tires having passed a 2nd seasons, etc.)
P. When driving near high-rise buildings
Q. If a roof carrier has been installed
R. When driving under high speeds or having calculated a long-distance route.

Route Guidance

Suitable route guidance may not occur caused by search conditions or the driving position.

- Guidance to go straight may be given while driving on a straight road.
- Guidance may not be given even when having turned at an intersection.
- There are certain intersections in which guidance may not occur.
- A route guidance signaling entrance into a no enter zone may occur (No enter zone, road under construction, etc.)
- Guidance may be given to a position removed from the actual destination if roads to reach the actual destination do not exist or are too narrow.
- Faulty voice guidance may be given if the vehicle breaks from the designated route (ex : if a turn is made at an intersection while the navigation provided guidance to go straight).
- Map Data may be missing or incorrect causing route guidance to not be given.

Route Re-calculation

The following phenomena may occur after conducting route recalculation.

- Guidance may be given to a position differing from the current position when turning at an intersection.
- Route recalculation may take a longer period of time when driving under high speeds.
- A route guidance signaling for a U-Turn in a No U-Turn location may occur.
- A route guidance signaling entrance into a no enter zone may occur (No enter zone, road under construction, etc).
- Guidance may be given to a position removed from the actual destination do not exist or are too narrow.
- Faulty voice guidance may be given if the vehicle breaks from the designated route (ex : if a turn is made at an intersection while the navigation provided guidance to go straight)

Body Electrical System > AVN System > Repair procedures

Removal

NOTE

Take care not to damage and scratch the hazard lamp switch assembly and its related parts.
Apply the protective tapes to the hazard lamp switch assembly and its related parts.

1. Disconnect the negative (-) battery terminal.

cardiagn.com

2. Remove the crash pad passenger's garnish (A).
   (Refer to BD group - "Crash pad")

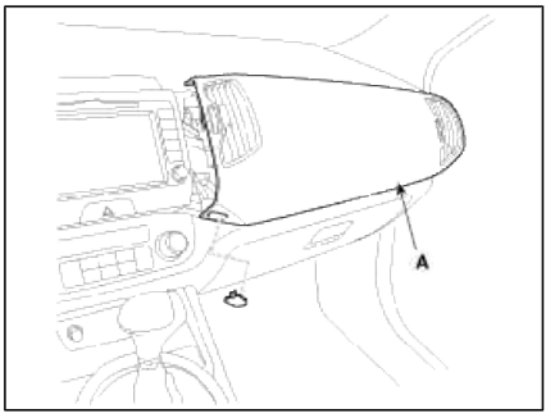

3. Disconnect the connectors and remove the cluster fascia panel (A).
   (Refer to BD group - "Crash pad")

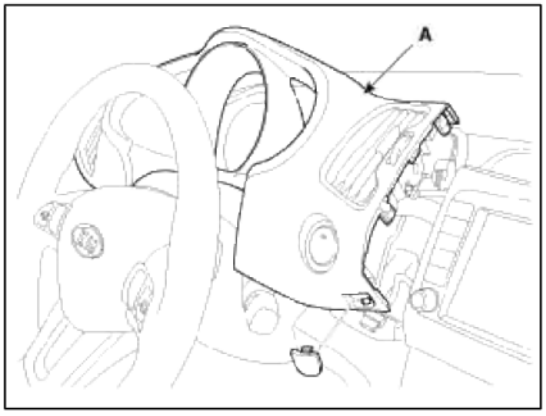

4. Remove the center fascia panel (A) after loosening the mounting screw (2EA).

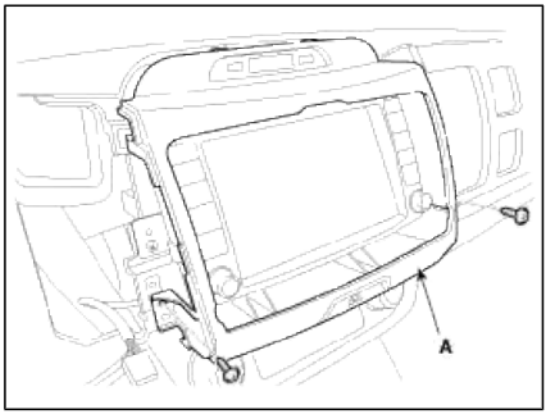

5. Disconnect the connector (A) installed on the center fascia panel.

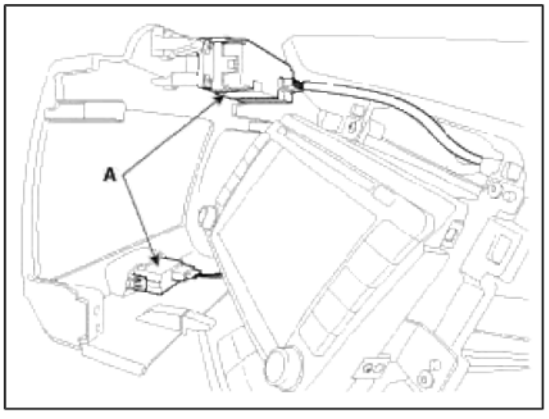

cardiagn.com

6. Remove the AVN assembly (A) after loosening the mounting screw (4EA).

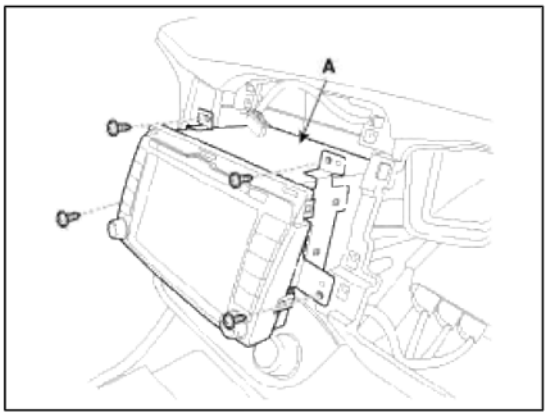

7. Disconnect the AVN connectors (A) and cable, then remove the AVN unit completely.

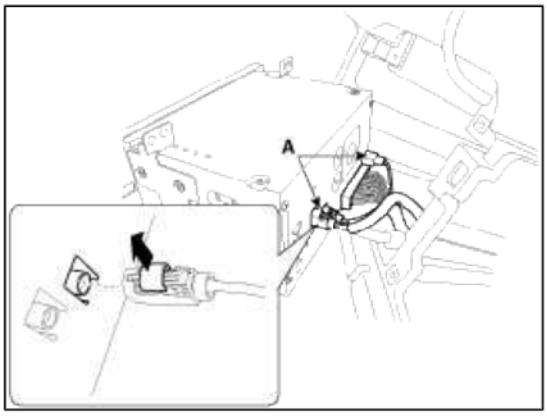

NOTE

Lift the connector locking clip to the arrow direction, disconnect the connector.
When assembling, install the connector and connector locking clip.

CAUTION

- If CD does not eject, don't try to remove it.
- The player may be damaged.
- Therefore, contact a service shop for repairs.

Installation

1. Connect the AVN head unit connectors and cable.
2. Install the AVN head unit.
3. Install the center fascia panel.
4. Install the cluster fascia panel.
5. Install the crash pad passenger's garnish.
6. Connect the negative (-) battery terminal.

NOTE

1) Make sure the connector are connected in properly.
2) Check the AVN system.

Body Electrical System > AVN System > AUX(Auxiliary) Jack > Description and Operation

cardiagn.com

Description

The multimedia jack on the console upper cover is for customers who like to listen to external portable music players like the MP3, iPod and etc., through the vehicle's sound system when it is linked to this jack. The customer has this added option.

In case of distortions from media connected to the AUX source, the audio unit may not be defective but the output level of the used media does not match the specification of the AUX input.

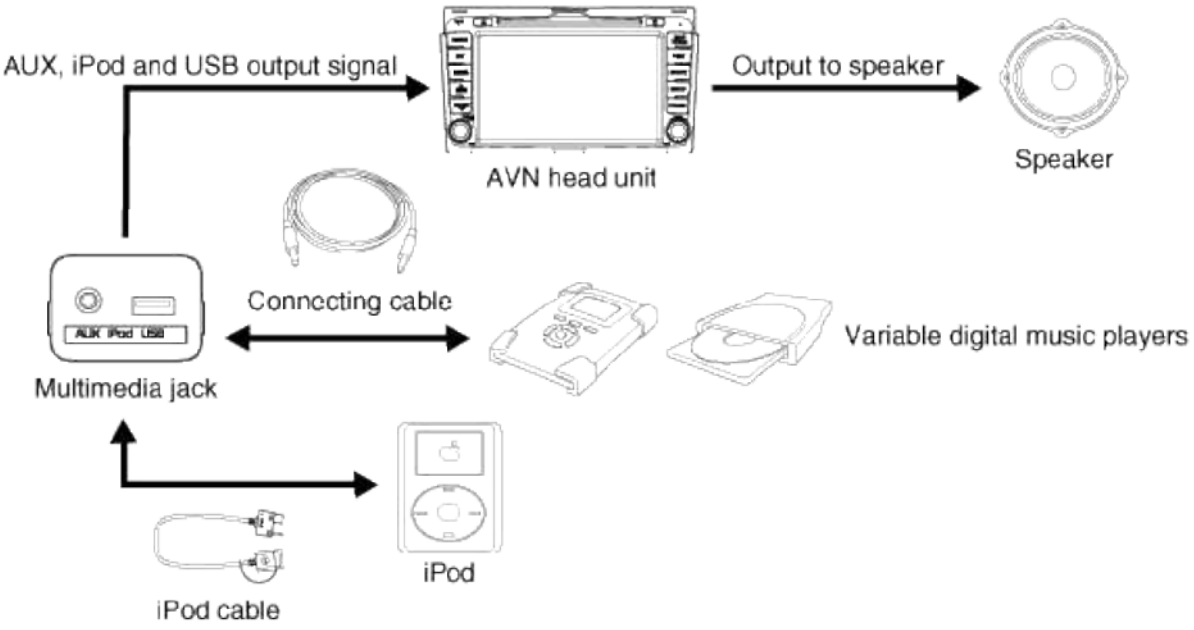

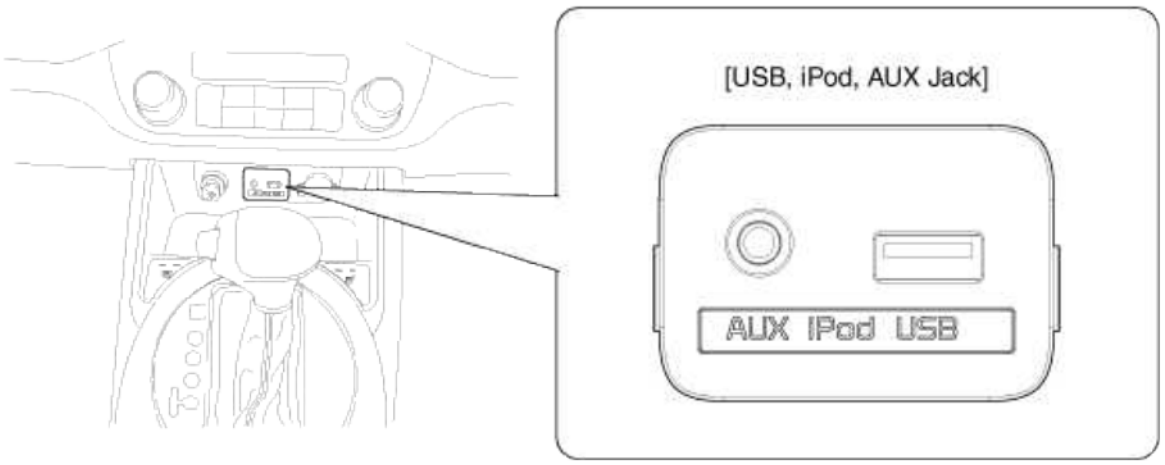

Body Electrical System > AVN System > AUX(Auxiliary) Jack > Schematic Diagrams

Circuit Diagram

cardiagn.com

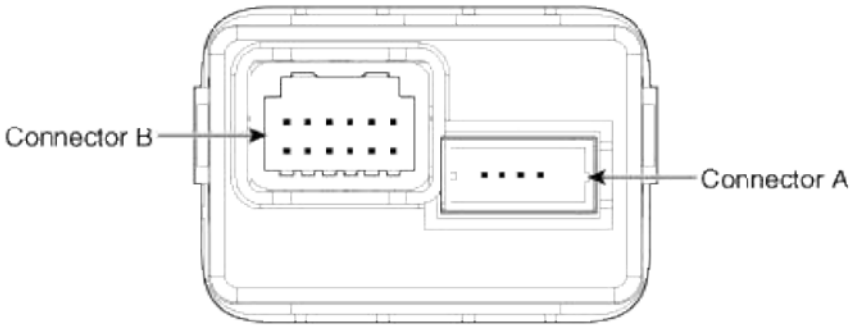

Connector A	Pin No.	USB Connector
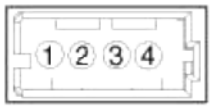	1	USB VOD
	2	USB D (-)
	3	USB D (+)
	4	USB Ground

Connector B	Pin No.	AUX(iPod) Connector
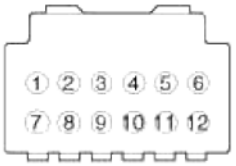	1	AUX Input (LH)
	2	AUX Input (RH)
	3	AUX Detect
	4	AUX Video input
	5	-
	6	Illumination (+)
	7	AUX REF
	8	-
	9	-
	10	AUX V Ground
	11	Illumination (-)
	12	Ground

cardiagn.com

Body Electrical System > AVN System > AUX(Auxiliary) Jack > Repair procedures

Removal

1. Remove the knob. Remove the floor console upper cover (A) using the appropriate tool.
   (Refer to the BD group - "Console")

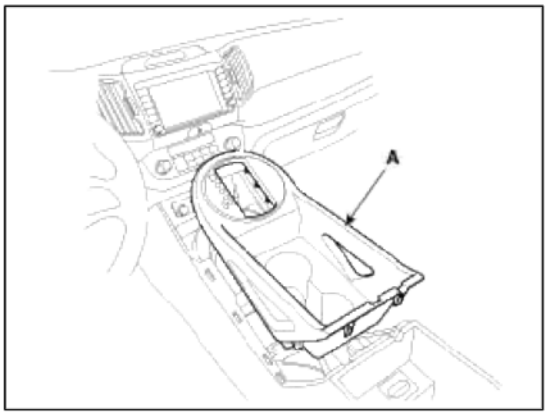

2. Loosen screws (2EA) and remove the floor console tray (A).

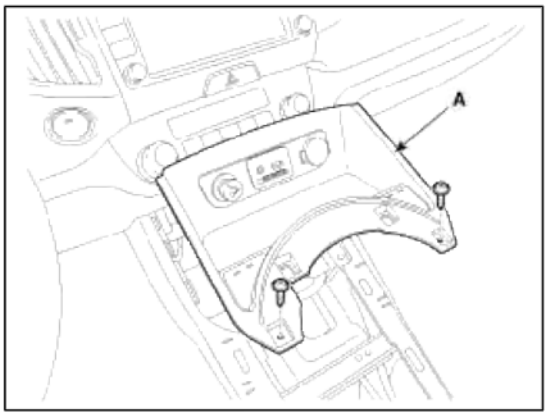

NOTE

Take care not to damage the hook when removing the switch.

3. Disconnect the connectors (A) from the floor console tray.

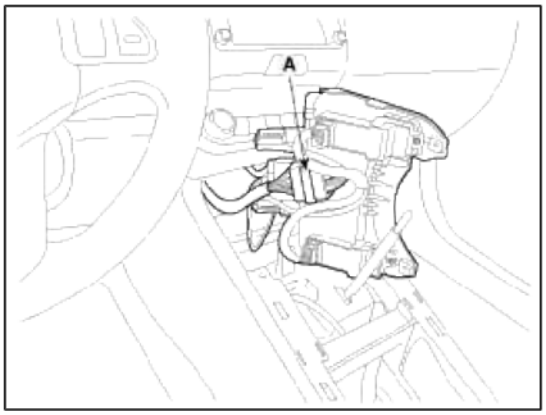

4. Remove the multimedia jack (A) from the floor console tray after pressing the hooks.

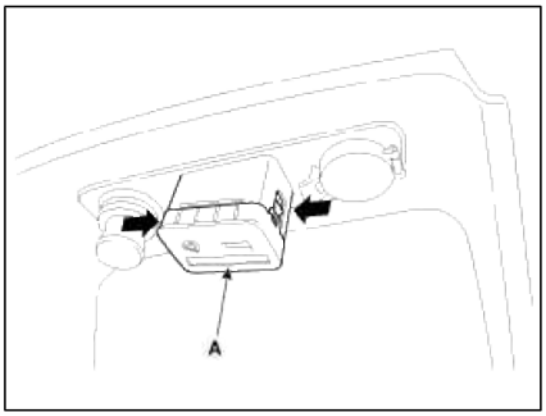

Installation

1. Install the multimedia jack.
2. Install the floor console tray.
3. Install the floor console upper cover.

Body Electrical System > AVN System > Troubleshooting

Troubleshooting Guide

Before Thinking The Product Has Malfunctioned

1. Errors which occur during the operation or installation of the device may be mistaken as a malfunction of the actual device.

cardiagn.com

2. If you are having problems with the divice, try the suggestions listed below.
3. If the problems persist, contact your point of purchase or the nearest service center.

Problem	Function
There are small red, blue, or green dots on the screen	Because the LCD is manufactured with technology requiring high point density, a pixel deficiency or lighting may occur within 0.01% of total pixels.
The sound or image is not working	• Has the switch for the vehicle been turned to [ACC] or [ON]? • Has the SYSTEM been turned OFF?
The video is being displayed but sound is not working	• Has the volume been set to a low level? • Has the volume been set on mute?
When the power is turned on, the corners of the screen are dark	• The display looking somewhat darker after prolonged periods of use is a normal phenomenon with LCD panels. It is not a malfunction. • If the screen is very dark, contact your point of purchase or the nearest service center.
Sound is working from only one speaker	• Is the position of FAL/BAL sound controls or volume adjusted to only one side?
Sound and video does not work in AUX mode	Is the audio and video connector jacks fully inserted into the AUX terminal?
The external device is not working	Is the external device connected with a standard connector cable?
The road is missing	Some map data may be missing or incorrect.
The road name is spoken incorrectly	The TTS(Text To Speech) engine speaks the street name based off of the phonetic spelling. This will continuously be update with the map datebase.

Troubleshooting

Problem	Possible Cause	Solution
The power does not turn on.	The fuse is disconnected.	Replace with a suitable fuse. If the fuse is disconnected again, please contact your point of purchase or service center.
	Device is not properly connected.	Check to see that the device has been properly connected.
XM only goes through one category	The XM mode is in category.	Press the mode button to change to channel mode.
The CD does not play.	The DISC has not been inserted or has been inserted upside down.	Insert the disc properly so that the sides are facing the correct direction.
	The DISC has been contaminated.	Wipe dirt dirt and other foreign substances from the DISC.
	The vehicle battery is low.	Charge the battery. If the problem persists, please contact your point of purchase or service center.
	A disc which is not supported by the device has been inserted.	Insert a disc which is supported for play by the device.

cardiagn.com

The sound does not work.	• The volume level is set the lowest level. • The connector is not properly connected. • The device is currently fast-forwarding, rewinding, scanning, or playing in slow mode.	• Adjust the volume level. • Check the connection state. • The sound will not work when the device is fast-forwarding, rewinding, scanning, or playing in slow mode.
The sound or video quality is low.	• The DISC is dirty or scrached. • Vibration is occuring from the position in which the conversion switch has been installed. • The color and tone quality of the image is low.	• Wipe off water or dirt from the DISC. Do not use a disc which has been scrached. • The sound may be short-circuited and the image distorted if the device begins to vibrate. The device will return to normal operation once the vibration has stopped. • Aging of the video display and deterioration in performance may cause certain quality degradations.
The USB does not work.	• USB memory is damaged. • USB memory has been contaminated. • A separately purchased USB HUB is being used. • A USB extension cable is being used. • A USB which is not a Metal Cover Type USB Memory is being used. • A HDD type, CF, SD Memory is being used. • There are no music files which can be played.	• Please use after formatting the USB into FAT 12/16/32 format. • Remove any foreign substances on the contact surface of the USB memory and multimedia terminal. • Directly connect the USB memory with the multimedia terminal on the vehicle. • Directly connect the USB memory with the multimedia terminal on the vehicle. • Use a standard USB memory. • Use a standard USB memory. • Only MP3, WMA file formats are supported. Please use only the supported music file formats.
The iPod is not recognized even though it has been connected.	• There are no titles which can be played. • The iPod firmware version has not been properly updated. • The iPod device does not recognize downloads.	• Use iTunes to download and save MP3 files into the iPod. • Use iTunes to update the firmware version and reconnect the iPod with the device. • Reset the iPod and reconnect with the device.

Body Electrical System > Smart key System > Specifications

Specifications

Smart Key Unit

cardiagn.com

Items	Specification
Rated voltage	DC 12V
Operating voltage	DC 9 ~ 16V
Operating temperature	-22°F ~ 167°F (-30°C ~ 75°C)
Load	Max. 3mA

RF Receiver

Items	Specification
Frequency	433 MHz
Antenna type	FSK (Frequency Shift Keying)

Smart Key Fob

Items	Specification
Battery	Lithium battery 3V
Distance	30m
Battery life	More than 2 years WARNING An inappropriately disposed battery can be harmful to the environment and human health. Dispose the battery according to your local law(s) or regulation.
Push buttons	4 (Door lock / unlock, Tailgate, Panic)
Frequency(Rx)	125 KHz
Frequency(Tx)	433.92 MHz
Numbers	2EA

Antenna

Items	Specification
Rated voltage	DC 12V
Operating voltage	DC 9 ~ 16V
Operating temperature	-22°F ~ 167°F (-30°C ~ 75°C)
Frequency	125 KHz
Numbers	Interior(3EA), Door(2EA), Bumper(1EA)

Body Electrical System > Smart key System > Components and Components Location

cardiagn.com

Component Location (1)

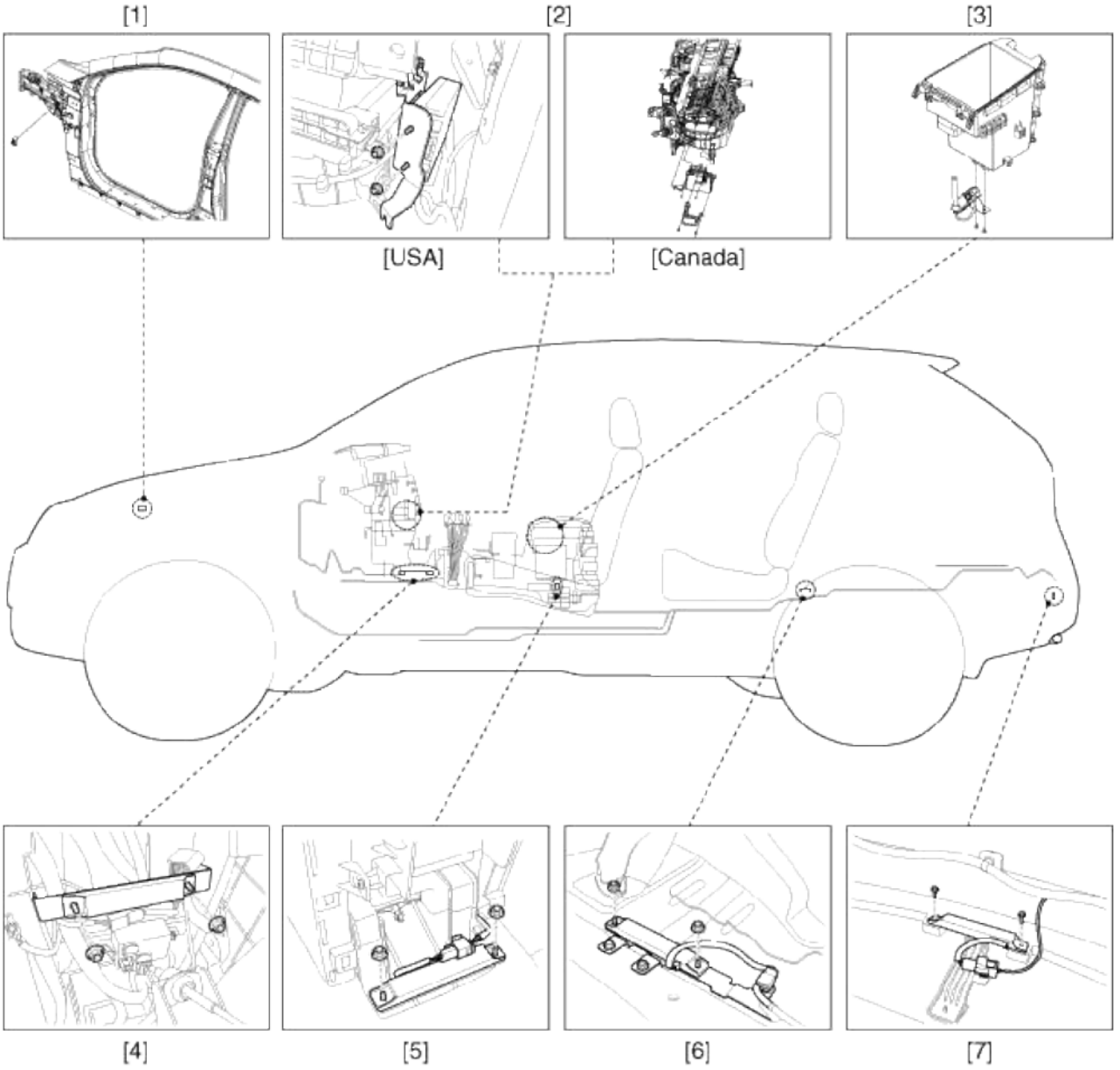

1. Buzzer 2. Smart key unit 3. RF receiver 4. Interior antenna 1	5. Interior antenna 2 6. Interior antenna 3 7. Bumper antenna

Component Location (2)

cardiagn.com

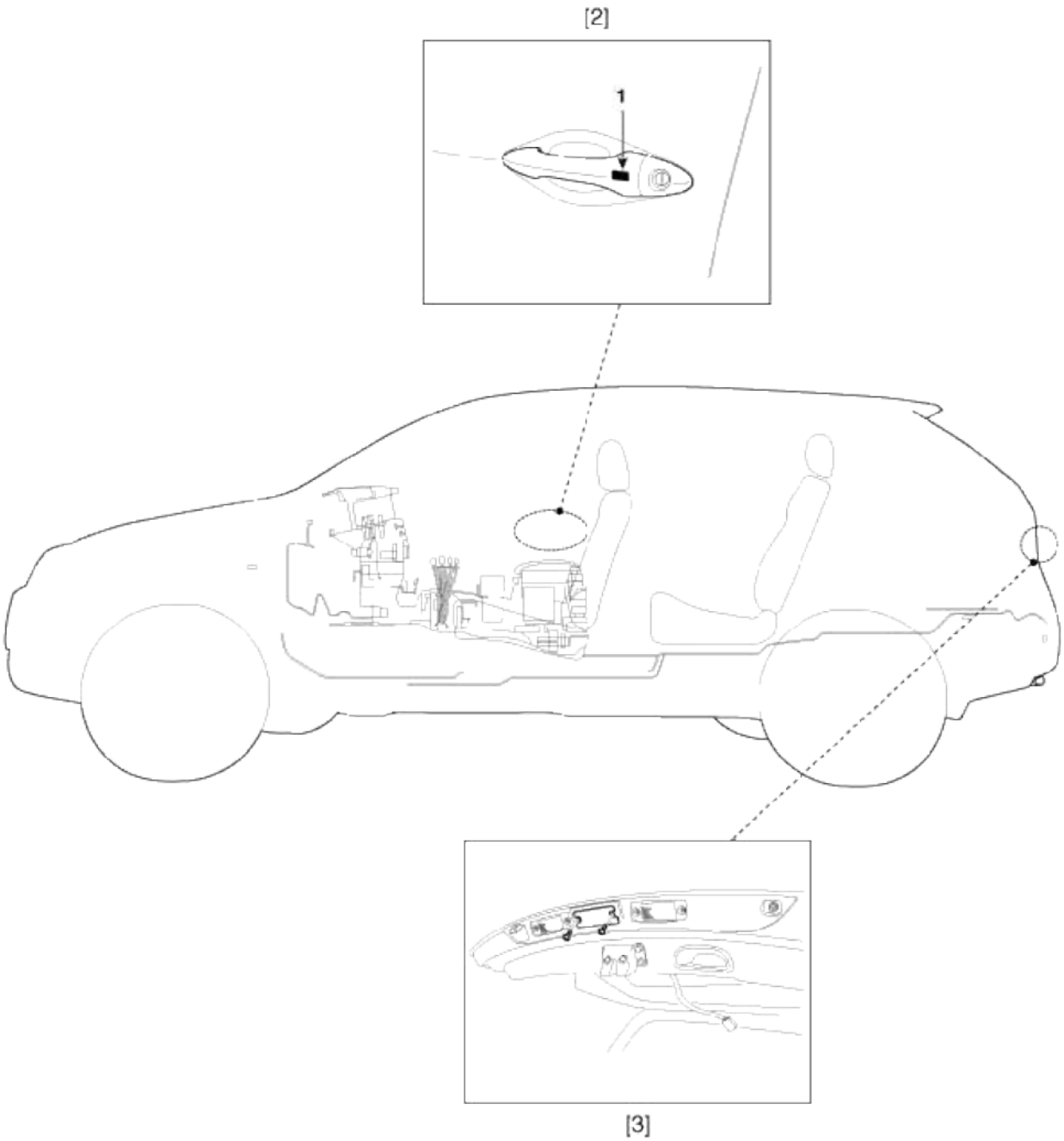

1. Door outside handle button 2. Door outside handle	3. Tailgate switch

Body Electrical System > Smart key System > Description and Operation

Description

The SMART KEY system is a system that allows the user to access and operate a vehicle in a very convenient way. To access the vehicle, no traditional key or remote control unit is needed.

The user carries a SMART KEY FOB which does not require any conscious actions by the user (e.g. operate a RKE button). The SMART KEY system is triggered by pressing a push button in the door handle.

After being triggered the vehicle sends out a request in a limited range. If the SMART KEY FOB receives this request, it automatically sends a response to the vehicle. Then the system decides whether to perform a particular

cardiagn.com

action (unlocking, locking…) or remain inactive.
Again, a communication between the vehicle and the SMART KEY FOB is needed before any actions will be performed.
The System offers the following features :

- Passive unlock via door driver side and passenger side
- Passive locking via door driver side and passenger side
- Passive start
- Max. 2 FOBs can be handled by the system
- Immobilizer backup antenna driver integrated into FOB-HOLDER for TP authentication (i.e. limp home mode)
- Communication with engine management system
- Communication with SRX
- LF-RF communication

1. Passive unlock
   The system allows the user to access (unlock) the vehicle without performing any actions with the SMART KEY FOB. This feature could be different depending on platform as follows:
   A. Pressing Push button in door handle
2. Passive locking
   The system allows the user to lock the vehicle by pushing a button on door handle with the SMART KEY FOB.
3. Button start
   The system allows the user to release ESCL and to switch the power modes (Off, Accessory, Ignition), as well as to start and stop the vehicle's engine without performing any actions with the SMART KEY FOB. See Button Engine Start system specification.
4. LIMP HOME Mode
   Additionally, the system offers so called "limp home mode", which is the user can operate all vehicle functions by inserting the key into the FOB HOLDER.

Smart Key ECU (SMK ECU)
The SMK ECU manages all functions related to "Passive Unlock", "Passive Lock" and "Passive Authorization for Engine Start Operation".
It reads the inputs (Push button in door handle, Start Stop Button (SSB), P(A/T) or N(M/T) position Switch), controls the outputs (e.g. exterior and interior antennas), and communicates via the CAN/LIN (depends on the vehicle) as well as a single line interface to further devices of the car.
It reads the inputs (Push button in door handle, Start Stop Button (SSB), P(A/T) or N(M/T) position Switch), controls the outputs (e.g. exterior and interior antennas), and communicates via the CAN as well as a single line interface to further devices of the car.
For communication with the SMART KEY FOB, SMK ECU generates a request (challenge) as an encoded and modulated 125 kHz signal at the inductive antenna outputs and receives the SMART KEY FOB's response via the external RF receiver.
The main functional blocks of the SMK ECU are:

- Power supply
- Microcontroller with FLASH Memory
- Single Line Interface to SRX
- Single Line Interface to EMS
- Input stage
- LF antenna amplifier/driver
- CAN communication with BCM
- LIN communication with other unit (depending on platform)

The LF antenna amplifier/driver generates a 125 kHz sinusoidal carrier signal which is distributed to the different antennas.
Smart Key FOB

cardiagn.com

The system supports up to 2 SMART KEY FOBs.
The main functions of the SMART KEY FOB are:

- Passive functionality: receives LF-challenge and sends automatically RF response.
- Classic RKE function by action up to 6 push buttons.
- Transponder-functionality in case of a flat battery or a disturbed communication.
- LED for operation feedback and battery monitoring.

NOTE

The FOB's LED indicator may continue to light even with a low transmitter battery.
If the performance or range of the FOB is less than expected, check the transmitter battery.

Antennas

1. Emitting LF Antennas:
   Inductive antennas in and at the vehicle are used to transform the current, driven by the SMK ECU antenna driver, into a 125 kHz magnetic field, which is the carrier for the SMART KEY challenge.
   Three antennas cover the vehicle's exterior: two antennas in the Door Handles (DS and PS) cover the area around the doors; one antenna in the rear bumper covers the area around the trunk.
   Two antennas cover the vehicle's exterior: two antennas in the Door Handles (DS and PS) cover the area around the doors.
   Up to three antennas cover the vehicle's interior and the trunk interior: two in the passenger compartment and one in the trunk.
2. Bidirectional Immobilizer Antenna (for Limp Home):
   The Immobilizer Backup Antenna is used for sending and receiving data: it emits a magnetic field (125 - 135 kHz challenge) and receives changes in the field strength (response of Transponder).
3. External Receiver
   The SMART KEY FOB's response is received via the external RF receiver, which is connected to the SMK ECU via a serial communication Line.
   The SMK ECU provides a connector pin for the serial communication Line.

Door Handle

The front door handles of the two doors (driver door / passenger door) are equipped with emitting LF-antennas to emit the 125 kHz signals. The front door handles are also equipped with a push button.

Push Button

The push button in door handle serves as a trigger to indicate the user's intent to unlock or lock the vehicle.
The push buttons are installed at front doors, integrated into the door handles.

Operation

Passive Functions

The system allows the user to access the vehicle without having to perform any actions (e.g. RKE button pressing) with the SMART KEY FOB. It is sufficient that a valid SMART KEY FOB is located within a defined and limited range with respect to the vehicle. So the system is capable of detecting and authenticating a SMART KEY FOB in the ranges as specified below.

Operating Range

The SMART KEY FOB receives and interprets a challenge sent from the vehicle via the exterior antennas in a free space range of min. 0.7m measured around the exterior antennas which are integrated in the door handles; refer to the below given picture.
The SMART KEY FOB receives and interprets a challenge sent from the vehicle via the exterior antennas in a free space range of min. 0.7m measured around the exterior antennas which are integrated in the door handles; refer to the below given picture

Passive Access (Passive Entry)

Pressing one of the push buttons in the door handles when all doors locked indicates the operator's intent to access the vehicle and thus triggers the system for unlock

cardiagn.com

Passive Locking (Exit)

Pressing one of the push buttons in the door handles when one of the following condition is fulfilled:

- At least one door is unlocked and two_steps timer is not running or
- Two_steps timer is running and one of the push button except Front Left side is triggered

indicates the operator's intent to lock the vehicle and thus triggers the system for a lock.

Passive Open Tailgate

Pressing the Tailgate Lid Switch when tailgate is closed indicates the operator's intent to open the tailgate and thus triggers the system. Subsequently, the SMK ECU sends a LF-challenge to the SMART KEY FOB via the exterior bumper antenna. The SMART KEY FOB answers with a RF-response. If the received response matches the expected answer, SMK ECU sends a "tailgate open" message via the CAN network.

Smart Key Reminder 1

1. Preconditions:
   All terminals OFF & at least one door open & locking status is not locked checked by SMK periodically every 100ms, as long as CAN/LIN active.
2. Event:
   At least 1 door knob status changed from unlock to lock.
3. SMK actions:
   A. IF NO FOB-IN ACTIVE
      SMK performs a search for the FOBs in the interior of the vehicle. The same LF-strategy has to be used as it is defined for the ID out warning (registering only, no authentication)
   B. IF FOB-IN ACTIVE
      SMK searches valid TP
   If no FOB or no TP has been found, no action is required.
   If any valid FOB or valid TP has been found, SMK unlocks the vehicle by sending a CAN Key Reminder unlock message with the FOB number.
   If any valid FOB has been found, SMK unlocks the vehicle by sending a CAN/LIN Key Reminder unlock message with the FOB number.

Smart Key Reminder 2

1. Preconditions:
   All terminals OFF & any door (including tailgate) open & no FOB-IN & no locking status (checked by SMK periodically every 100ms, as long as CAN/LIN active)
2. Vehicle action:
   Closing last door or tailgate with knobs locked state, or with a locking in progress
3. SMK actions:
   Before elapsing 500ms after the closing if all doors are locked then:
   A. IF NO FOB-IN ACTIVE
      SMK performs a search for the FOBs in the interior of the vehicle.
      The same LF-strategy has to be used as it is defined for the ID out warning (registering only, no authentication)
   B. IF FOB-IN ACTIVE
      SMK searches valid TP
   If no FOB has been found, no action is required.
   If any valid FOB or valid TP has been found, SMK sends unlock command via CAN and activates ext. buzzer warning.
   If any valid FOB has been found, SMK sends unlock command via CAN/LIN and activates ext. buzzer warning.

Smart Key Door Lock Warning

Door Lock Warning 1

1. Preconditions:
   While (at least one door knob is unlocked) & (ACC ON or IGN ON) & (No FOB-IN) :
   A. (All doors are closed) & (tailgate closed)

cardiagn.com

2. Event:
   A. User presses the push button in door handle or tailgate
3. SMK actions:
   SMK performs a search for the FOBs outside of the vehicle; the same LF-strategy has to be used as it is defined for "Scenario Access with I/O Distinction".

Door Lock Warning 2

1. Preconditions:
   Same as passive locking precondition but with at least one door open.
2. Event:
   User presses the door handle Push button .
3. SMK actions:
   SMK performs a search for the FOBs outside of the vehicle; the same LF-strategy has to be used as it is defined for "Scenario Access with I/O Distinction".
   If no FOB has been found, no action is required.
   If the preconditions are no longer valid during buzzer active time (3 seconds), the SMK ECU stops the buzzer immediately.

Door Lock Warning 3

1. Preconditions:
   Same as passive locking precondition
2. User action:
   A. User presses the door handle Push button
3. SMK ECU actions:
   A. If ATWS(Anti Theft Warning System) is in DISARM status, SMK ECU performs a search for the FOB inside of the vehicle (use "Door Lock Warning 3" scenario)

If no FOB has been found, the passive locking is performed.
If any valid FOB has been found, SMK ECU activates the external buzzer.
If the activity timer elapsed or ACC ON or IGN1 ON or NOT All door closed or FOB-IN, the SMK ECU stops the buzzer immediately.
After searching of inside FOB, SMK ECU also performs a search for FOBs outside of the vehicle.

Smart Key Lamp Warning

1. SMK actions:
   As long as the preconditions are valid, the SMK ECU performs a periodical search for the FOBs in the interior of the vehicle; the same LF-strategy has to be used as it is defined for the ID out warning (registering only, no authentication); periodical means, the search is done every 3 seconds.
   If no FOB has been found, the SMK ECU starts Key out indicator lamp activation as all preconditions are valid and will perform another search 3 seconds later.

If any valid FOB has been found, the SMK ECU stops the Key out indicator lamp and will (if one door is open) perform another search 3 seconds later; if no door is open then it's only at the next When the preconditions are still valid, the search resumes by opening of one door.

Failsafe Functions (Backup For Limp Home)

In case of a discharged battery of the SMART KEY FOB or disturbed transmission, the following functions are available:

- Unlocking / locking of doors or tailgate (or tailgate depending of the vehicle configuration): use of mechanical key

User Information Functions

ID OUT Warning

1. Preconditions:
   A. (ACC or IGN1) & (any door open or tailgate open)
2. Event:
   The last opened door is closed

cardiagn.com

3. SMK action:
   SMK searches for a SMART KEY FOB in the interior.
   A. If no valid SMART KEY FOB is found, the SMK activates external buzzer and also sends ID OUT WNG via CAN (exterior buzzer warning and internal buzzer warning).
   B. If a door is opened and closed again during terminals on and inside valid FOB, SMK re-enables the authentication and stops the warning. If the terminal is in ACC, SMK shall turn on immobilizer lamp.

NOTE

If there is a LF error (LF overheating or LF antenna failure), the system will have the same behavior as it is with no FOB found.

Immobilizer Lamp

Removing the PIF from the MSL and reinserting the PIF and pushing the MSL Knob will switch the lamp on again.

Fob Battery Low Voltage Detection

To detect FOB low battery condition, certain battery voltage measurement and low voltage detection strategy are implemented into FOB. The measurement of the battery voltage will be done if FOB button is pressed or if a LF measurement command is received.

If the FOB has detected a low battery voltage, the LED will not be switched on at button press.

Learning Description

In this chapter, the learning procedure for SMK and FOBs is described.

For the learning of the SMK and FOBs, it's necessary to have a connection to the diagnostic tool.

Learning MODE

Whatever the mode, the learning procedures are managed by the SMK.

Prior to start learning service, Fob-In signal must be active and the vehicle secret code (called as PIN code) should be known.

Teaching MODE

This mode is used by the dealers in order to replace SMK and/or the set of keys, or to register additional keys for an existing system. That means the system already has been learnt with certain PIN Code. The PIN Code is fixed for the life time of the vehicle, therefore the same PIN Code must be used in this mode. Otherwise learning will be failed

Teaching MODE Procedure Description (Step By Step)

Objective: Key teaching procedure at service station

Initial state:

- SMK replacement: SMK is not learnt, SMART FOB is already learnt with same PIN code
- ESCL replacement: ESCL is not learnt, SMK and SMART FOB are already learnt with same PIN code

cardiagn.com

- Additional or new keys teaching: SMK is already learnt with same PIN code

Smart key teaching

Insert smart key #1 to key holder
↓
SMK start to learn
↓
Input the PIN code
↓
Smart key #1 learnt
↓
SMK learnt
↓
Pull out smart key #1
↓
Insert smart key #2 to holder
↓
Smart key #2 learnt

- Smart key and transponder are programmed simultaneously.

<Smart key neutralization mode>

- Neutralization mode is for replacing Smart key unit, ECM easily.
- It is possible that smart key is learnt again, after neutralizing Smart key system.
- Virgin start (twice ignition) is impossible in neutralized condition

<Lock by timer>

- If PIN code is inputted over 3 times, it is impossible to learnt and neutralization during 1 hour.

Starting After Replacing (Virgin Start)

Starting is possible by following process after replacing new smart key unit and FOB key.

- It is for starting at virgin condition
- All related parts are virgin condition (Smart key, IPM, ECM)
- When virgin smart key is inserted in smart key holder, possible to start, IG ON and ACC position
- Press brake pedal in P or N range
- After inserting virgin smart key to holder, push start button once.

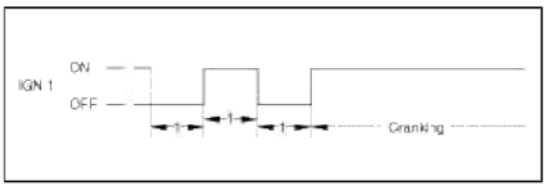

Body Electrical System > Smart key System > Repair procedures

Inspection

Self Diagnosis With Scan Tool

Smart key system defects can be quickly diagnosed with the GDS. GDS operates actuator quickly to monitor, input/output value and self diagnosis.

The following three features will be major problem in SMART KEY system.

1. Problem in SMART KEY unit input.
2. Problem in SMART KEY unit.
3. Problem in SMART KEY unit output.

The following three diagnostic solutions will be the main solution process to a majority of concerns.

1. SMART KEY unit Input problem : switch diagnosis
2. SMART KEY unit problem : communication diagnosis
3. SMART KEY unit Output problem : antenna and switch output diagnosis

Switch Diagnosis

1. Connect the cable of GDS to the data link connector in driver side crash pad lower panel, turn the power on GDS.

cardiagn.com

2. Select the vehicle model and then SMART KEY system.

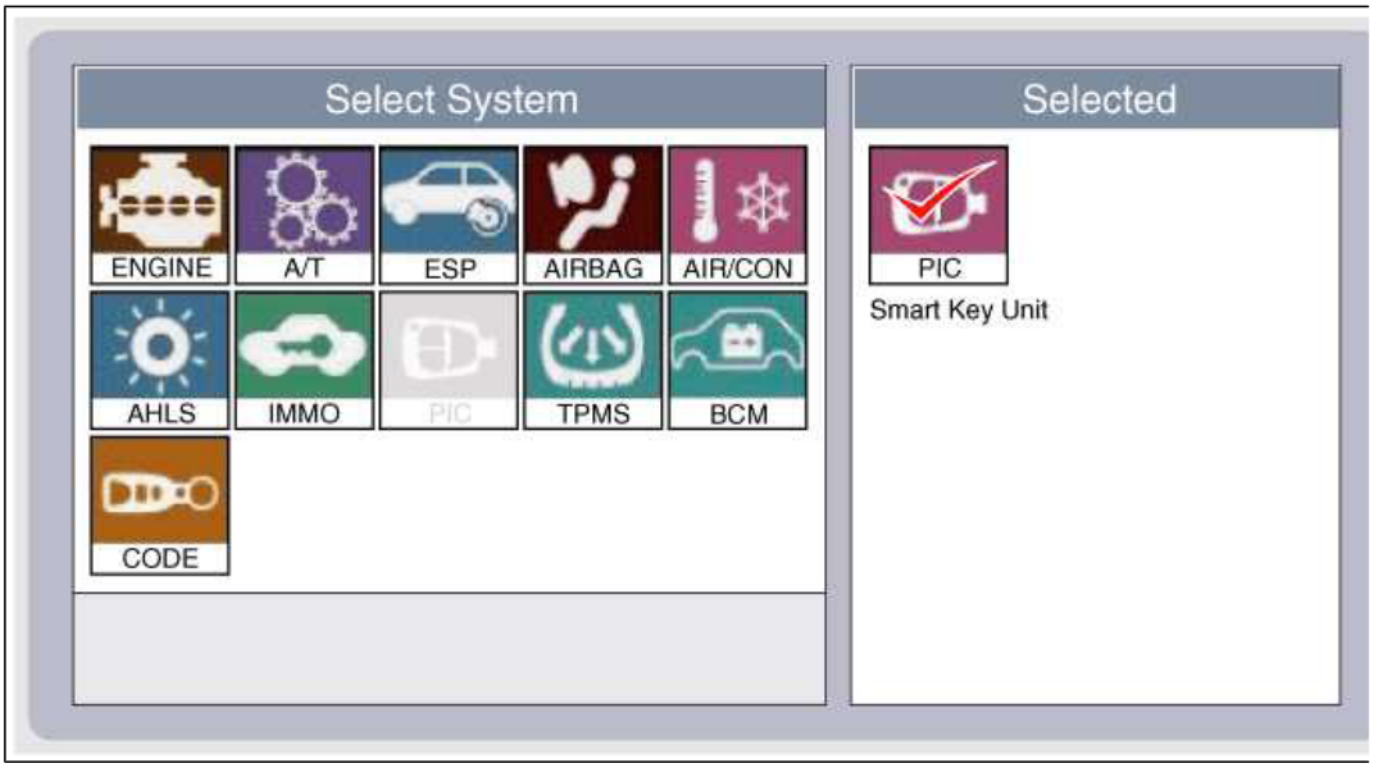

3. Select the "SMART KEY unit".
4. After IG ON, select the "Current data".

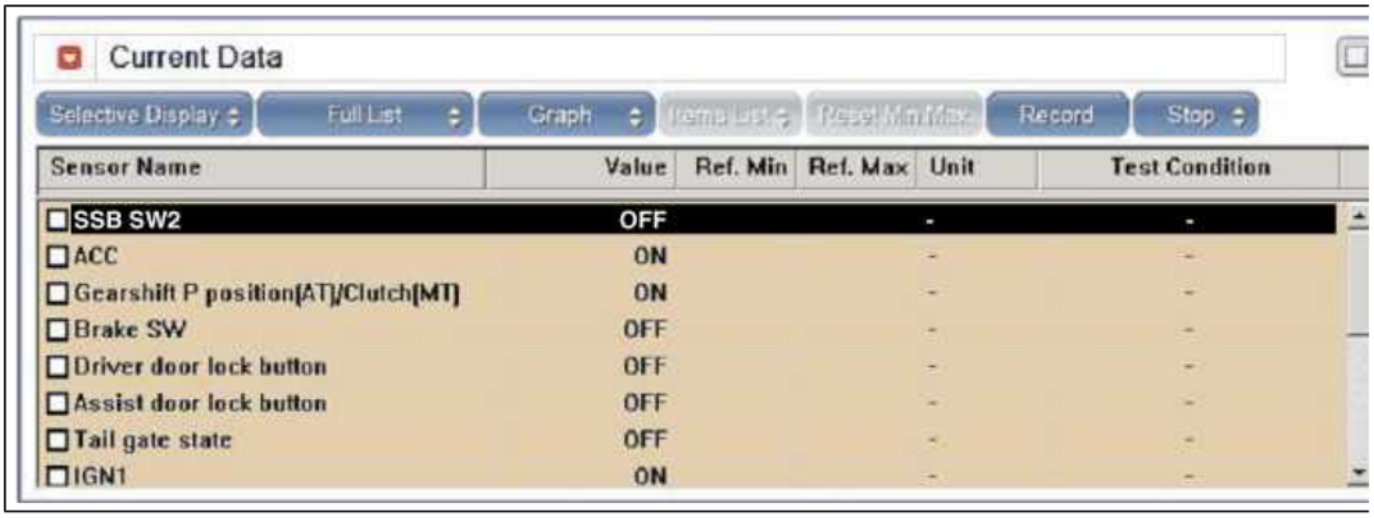

5. You can see the situation of each switch on scanner after connecting the "current data" process.

Display	Description
FL Toggle SW	ON : Push button is ON in the driver door handle.
FR Toggle SW	ON : Push button is ON in the assist door handle.
Trunk SW	ON : Trunk button is ON.
Gear P Position	ON : Shift lever is P position.
IGN 1	ON : IGN switch is IG position.
ACC	ON : IGN switch is ACC position.
Push Knob SW	ON : Push knob switch is ON.
External Buzzer	ON : Buzzer is ON.

Communication Diagnosis With GDS (Self Diagnosis)

cardiagn.com

1. Communication diagnosis checks that the each linked components operates normal.
2. Connect the cable of GDS to the data link connector in driver side crash pad lower panel.
3. After IG ON, select the "DTC".



Antenna Actuation Diagnosis

1. Connect the cable of GDS to the data link connector in driver side crash pad lower panel.
2. After IG ON, select the "ACTUATION TEST".

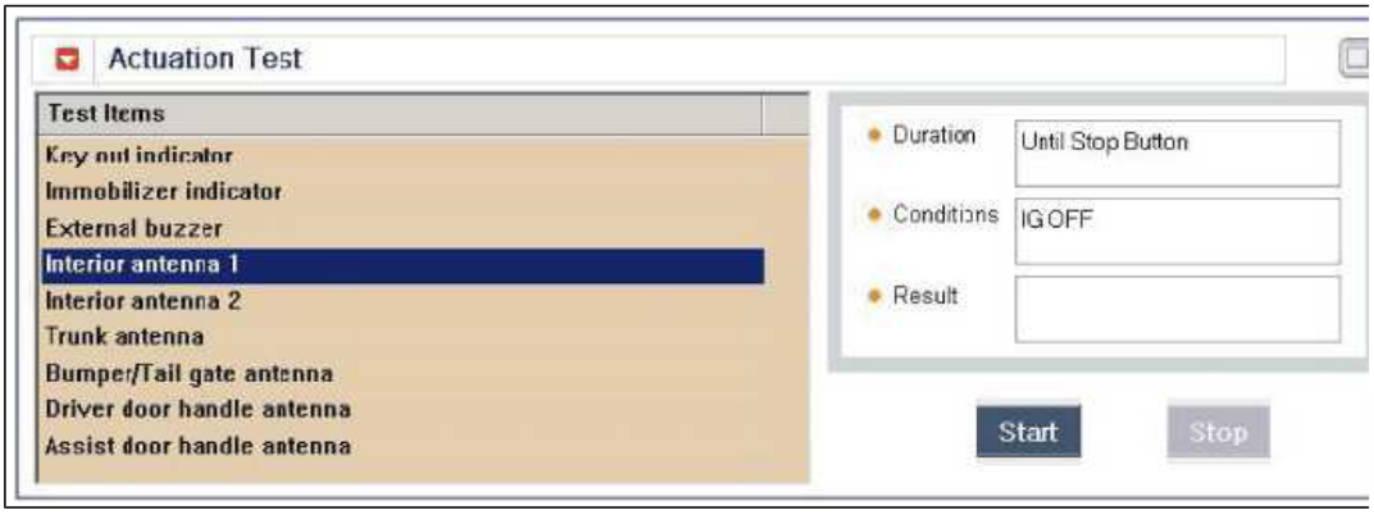

3. Set the smart key near the related antenna and operate it with a GDS.

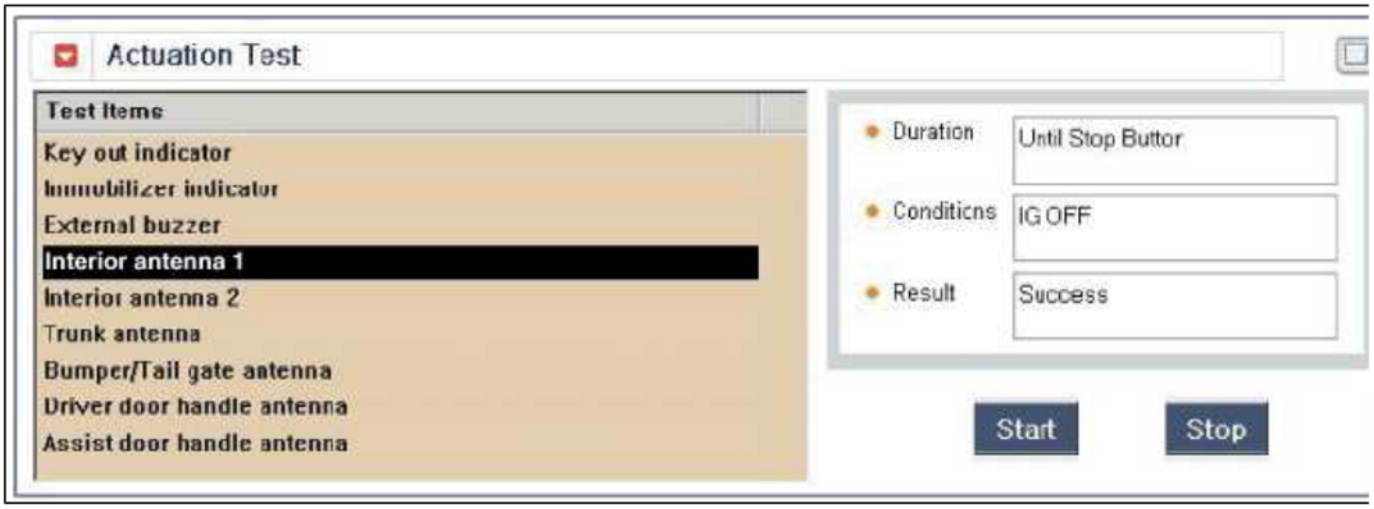

4. If the LED of smart key is blinking, the smart key is normal.
5. If the LED of smart key is not blinking, check the voltage of smart key battery.

cardiagn.com

6. Antenna actuation
   A. INTERIOR Antenna 1
   B. INTERIOR Antenna 2
   C. INTERIOR Antenna 3
   D. BUMPER Antenna
   E. DRV_DR Antenna
   F. AST_DR Antenna

Antenna Status Check

1. Connect the cable of GDS to the data link connector in driver side crash pad lower panel.
2. Select the "Antenna Status Check".

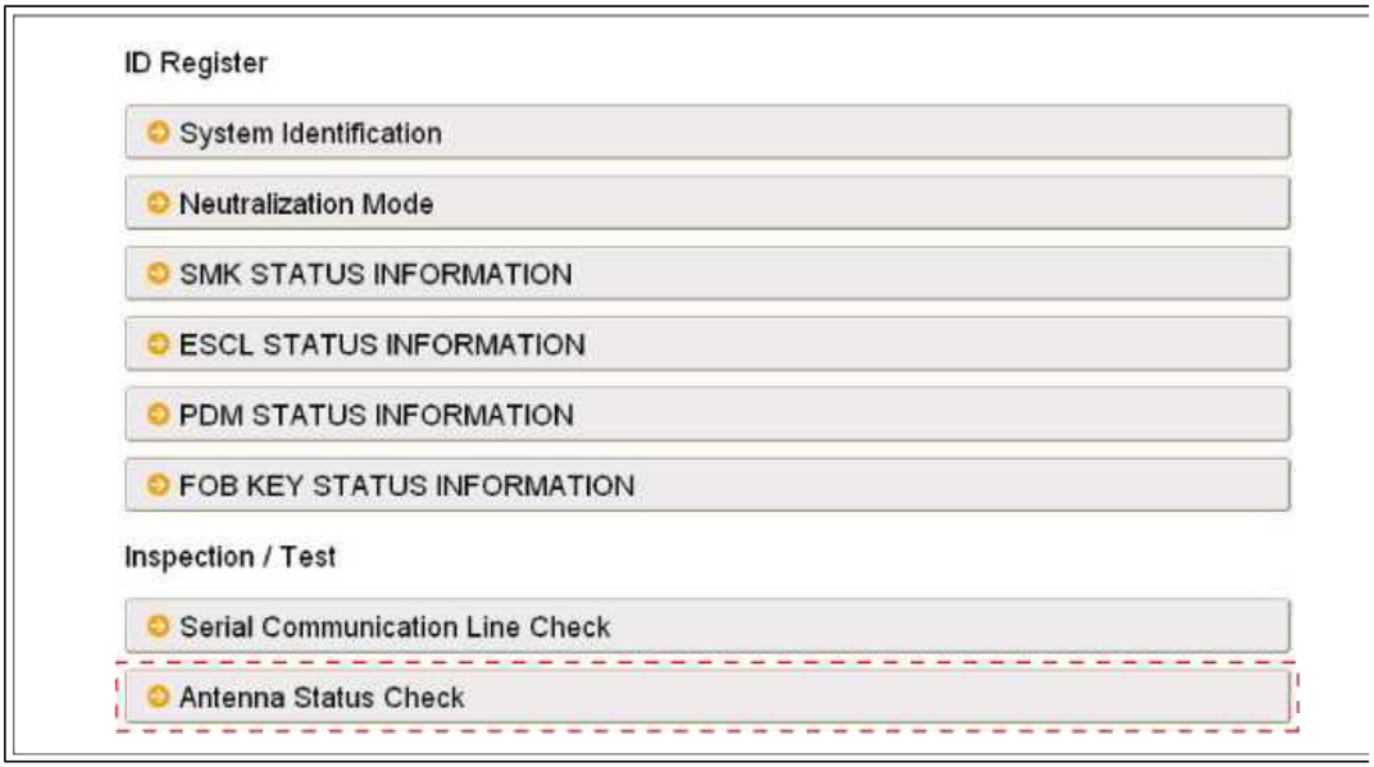

3. After IG ON, select the "Antenna Status Check".

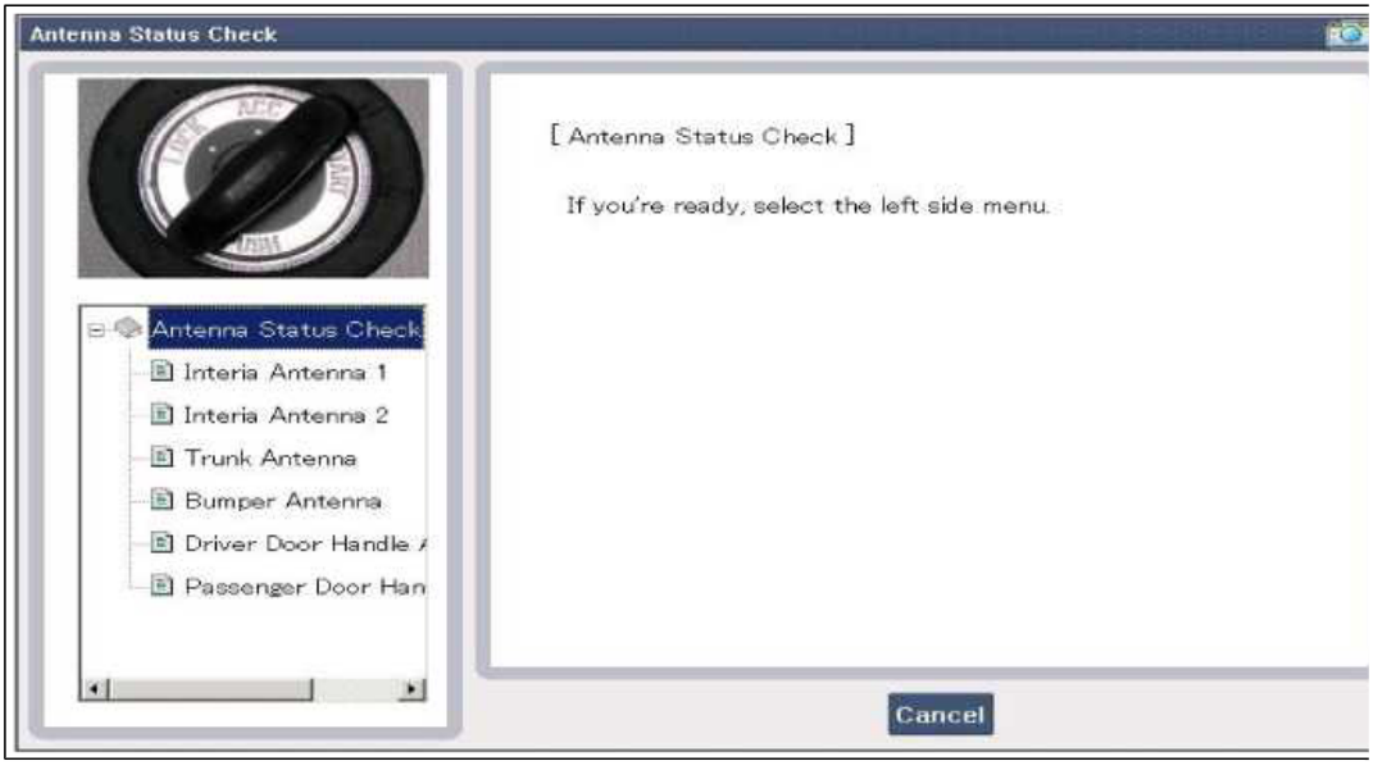

cardiagn.com

4. Set the smart key near the related antenna and operate it with a GDS.

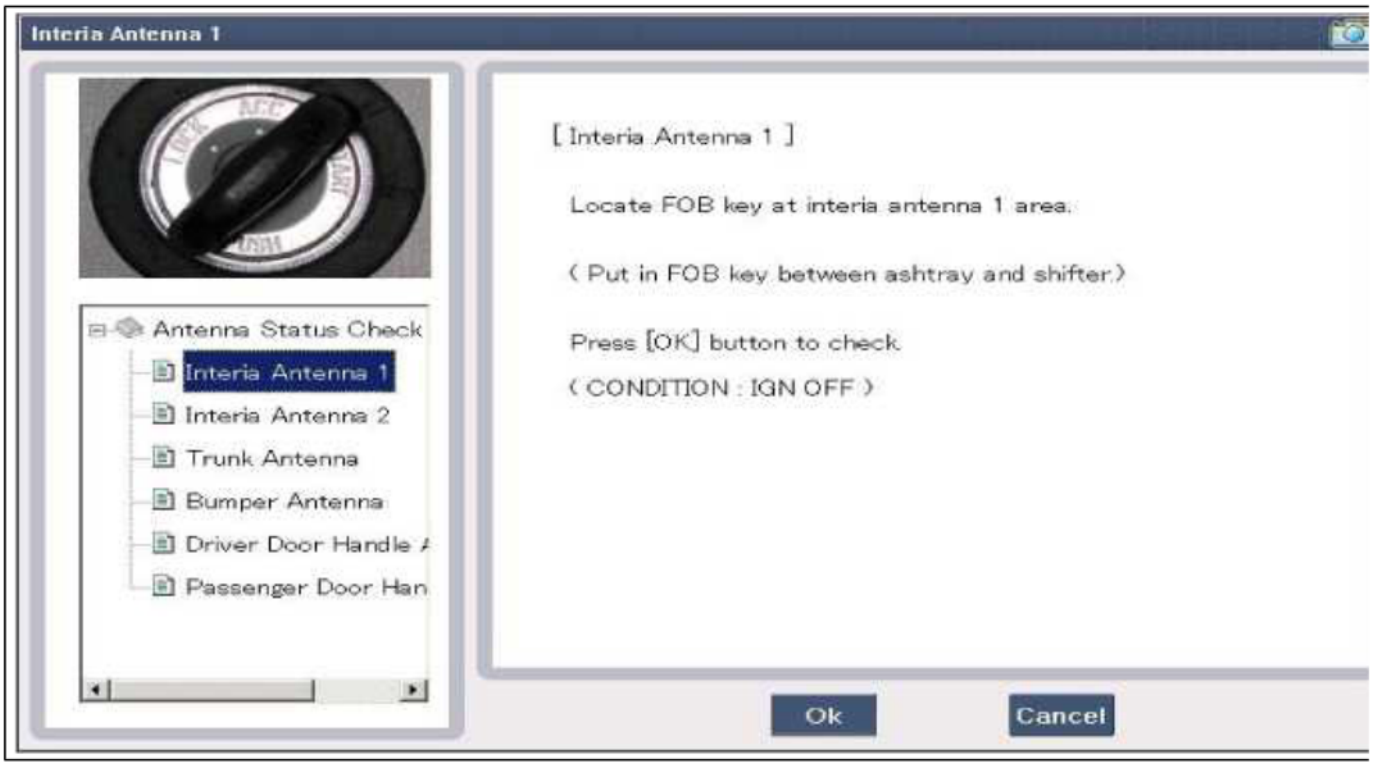

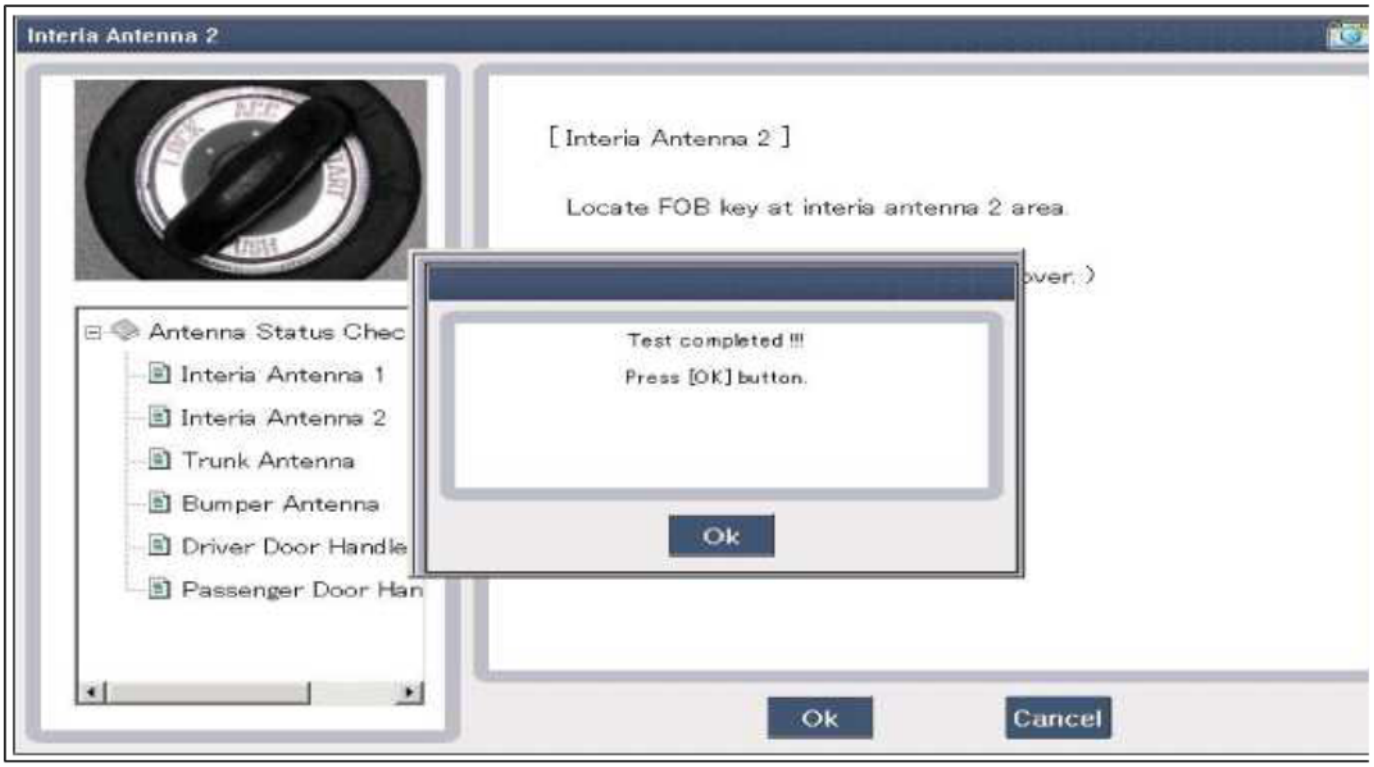

5. If the smart key runs normal , the related antenna, smart key(transmission, reception) and exterior receiver are normal.
6. Antenna status
   A. INTERIOR Antenna 1
   B. INTERIOR Antenna 2
   C. INTERIOR Antenna 3
   D. BUMPER Antenna
   E. DRV_DR Antenna
   F. AST_DR Antenna

Serial Communication Status Check

1. Connect the cable of GDS to the data link connector in driver side crash pad lower panel.

cardiagn.com

2. Select the "Serial Communication Line Check".

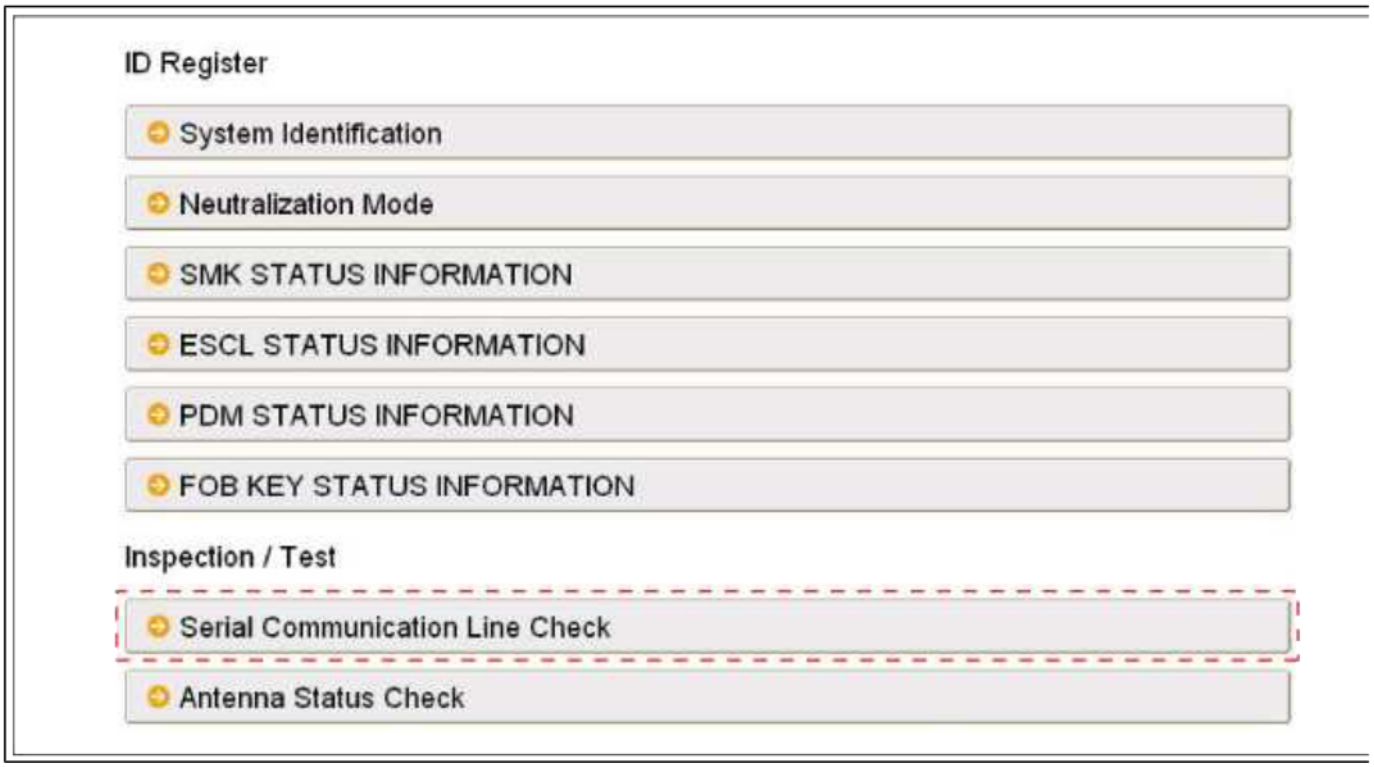

3. After IGN ON, select the "Receiver Communication Line Check".

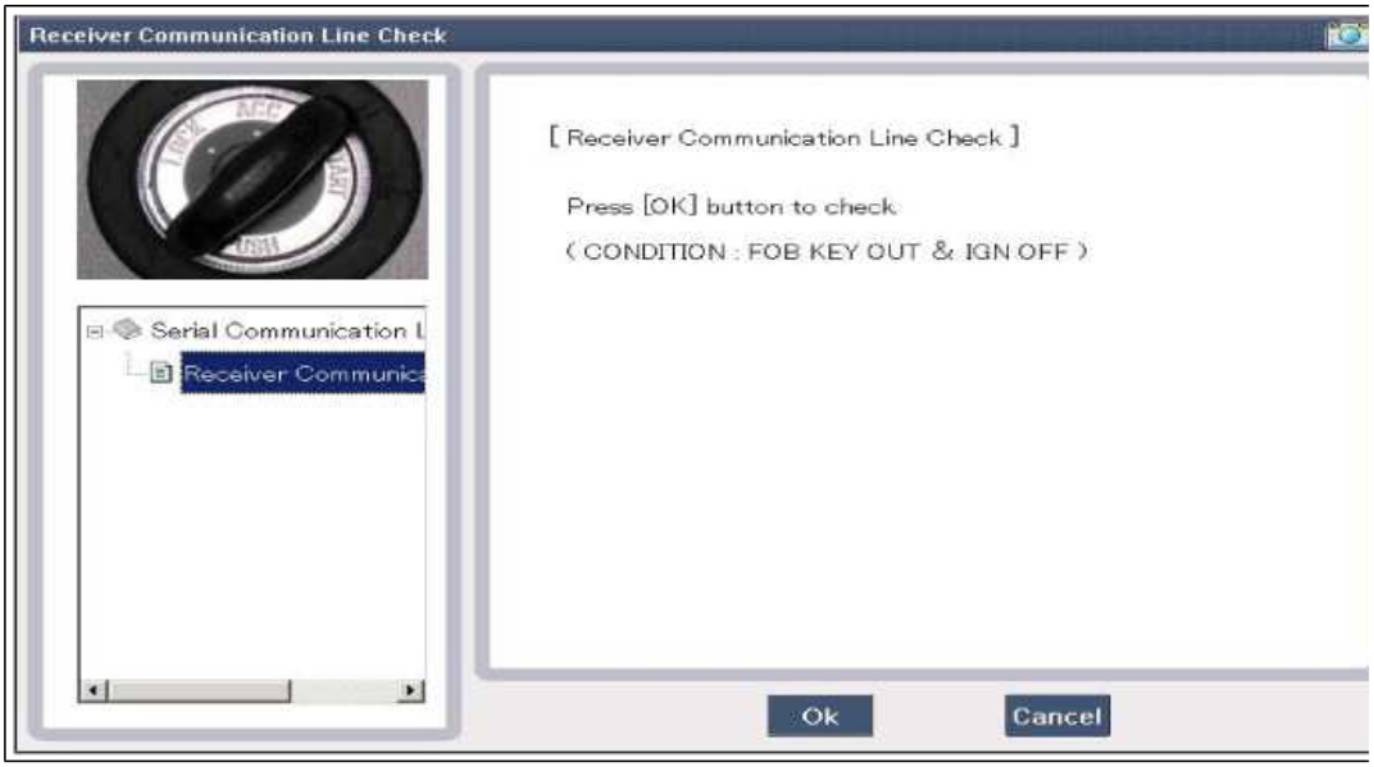

4. Check the serial communication line with a GDS.
5. If the smart key runs normal, the communication of smart key unit and exterior receiver are normal.
6. If the smart key system does not operate properly, check the following items.
   A. Disconnection or no response of the exterior receiver communication line.
   B. The exterior receiver communication line disconnection and ground connection.

Interior Antenna Actuation Check

cardiagn.com

1. Set the smart key in the following shade area and check the IG ON.

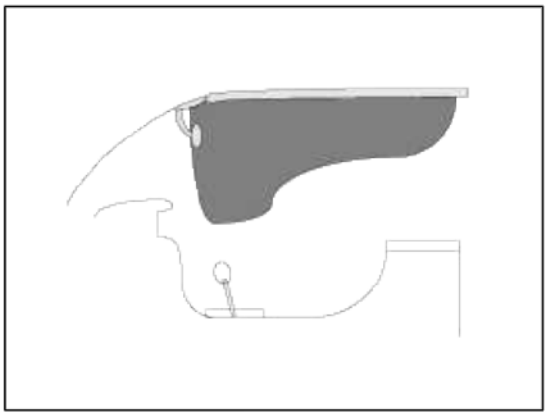

2. If the ignition is ON, the antenna runs normal.
3. Check the interior antenna ignition mode.
4. Set the smart key in the following shade area and actuate the antenna. Check the LED of smart key is blinking.

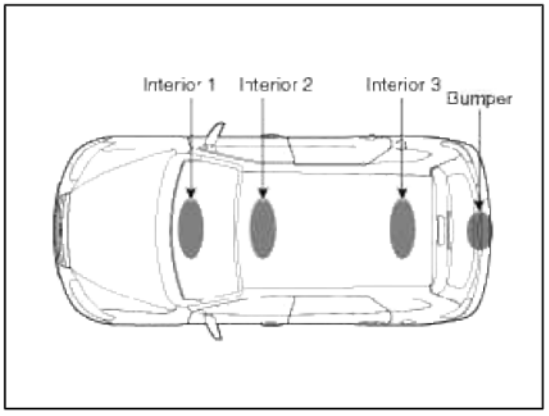

5. If the LED of smart key is not blinking, check the antenna in shade area.

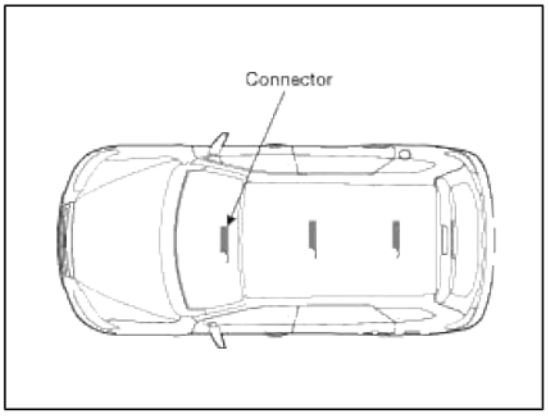

FOB Status Check

1. Connect the cable of GDS to the data link connector in driver side crash pad lower panel.

cardiagn.com

2. After IGN ON, select the "FOB KEY STATUS INFO".

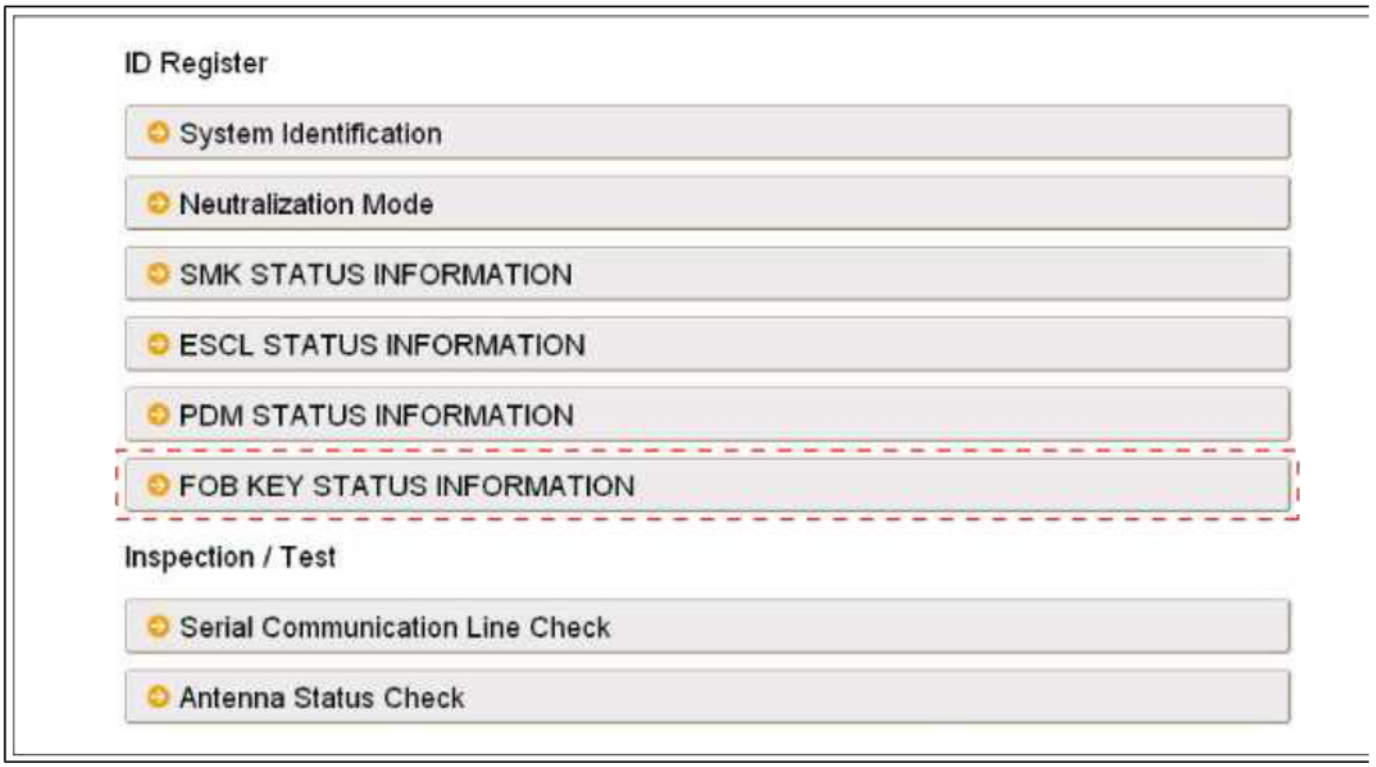

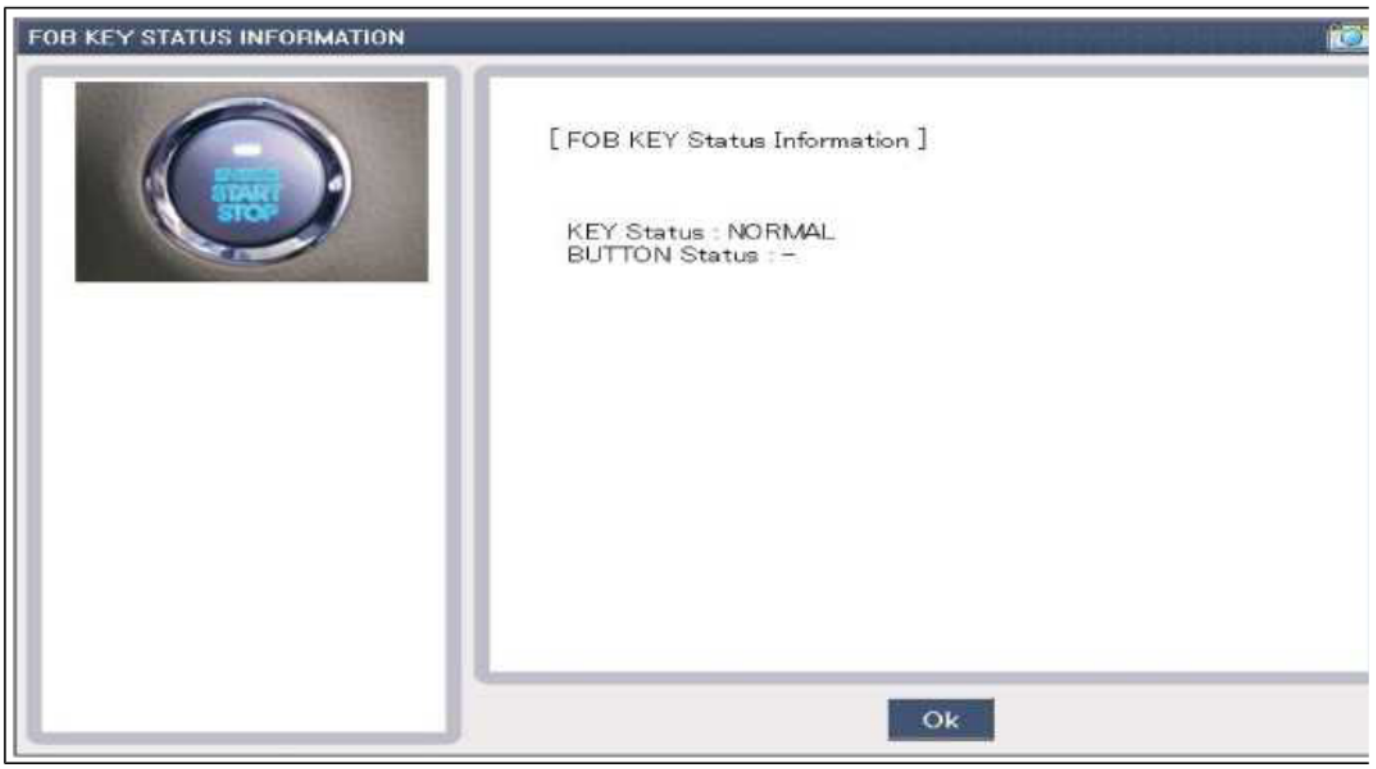

Smart Key Status Check

1. Connect the cable of GDS to the data link connector in driver side crash pad lower panel.

cardiagn.com

2. After IGN ON, select the "SMK STATUS INFO".

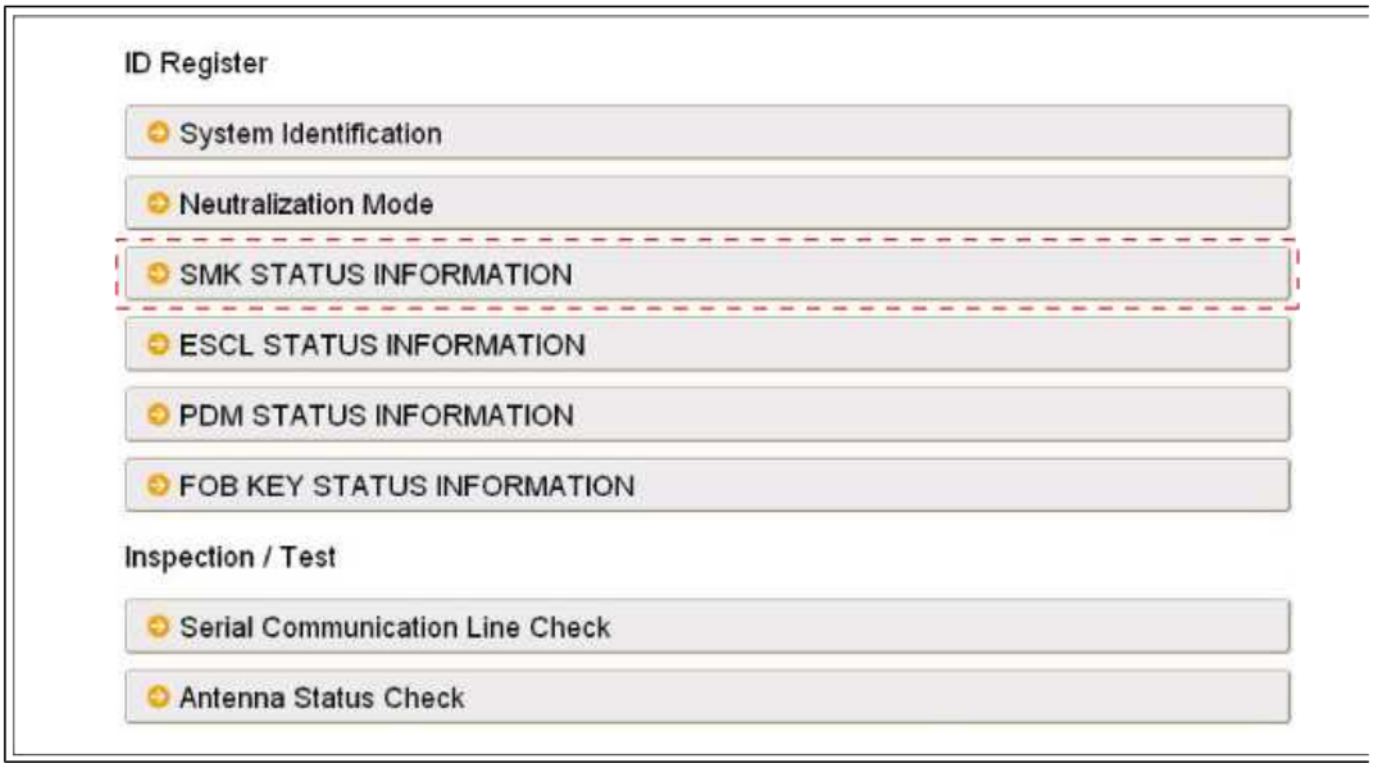

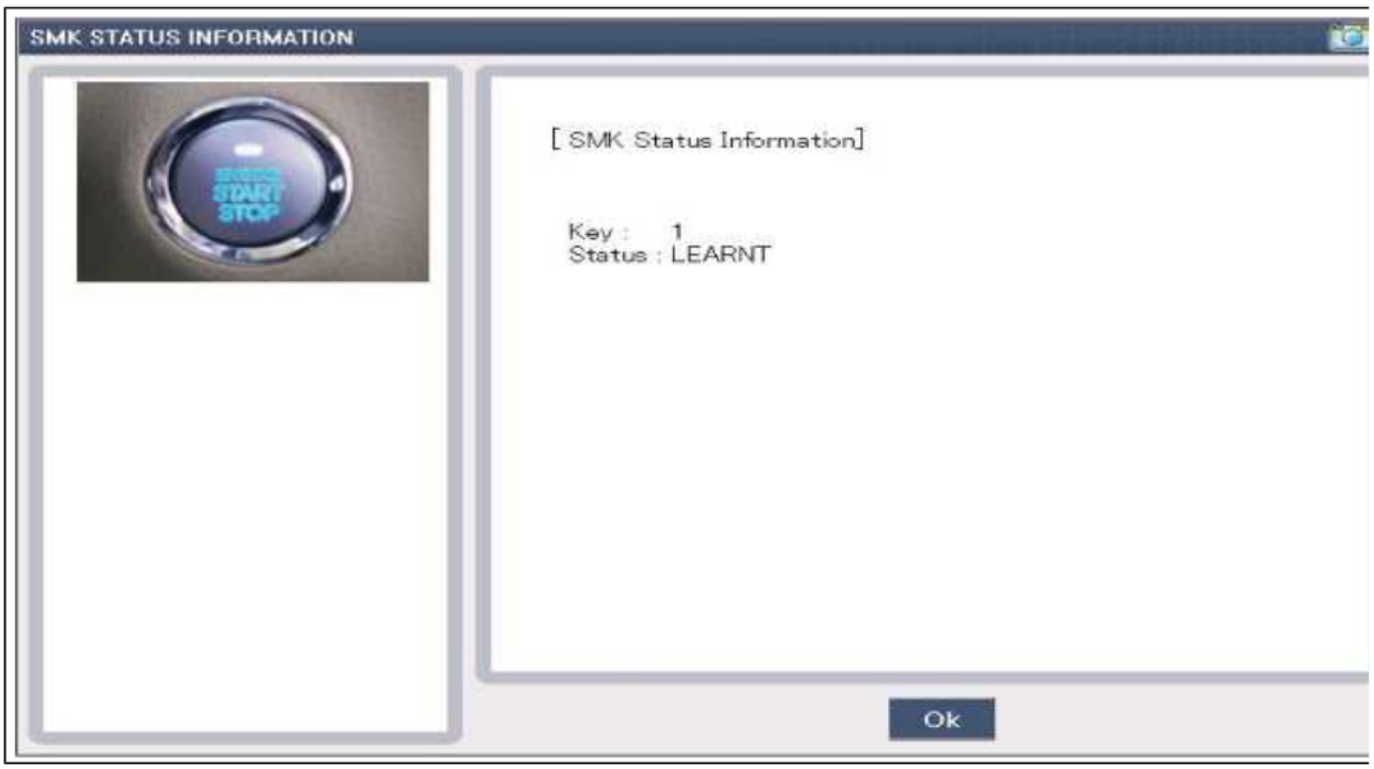

Neutralization Status Check

1. Connect the cable of GDS to the data link connector in driver side crash pad lower panel.
2. After IGN ON, select the "Neutralization mode".

cardiagn.com

ID Register

- System Identification
- Neutralization Mode
- SMK STATUS INFORMATION
- ESCL STATUS INFORMATION
- PDM STATUS INFORMATION
- FOB KEY STATUS INFORMATION

Inspection / Test

- Serial Communication Line Check
- Antenna Status Check

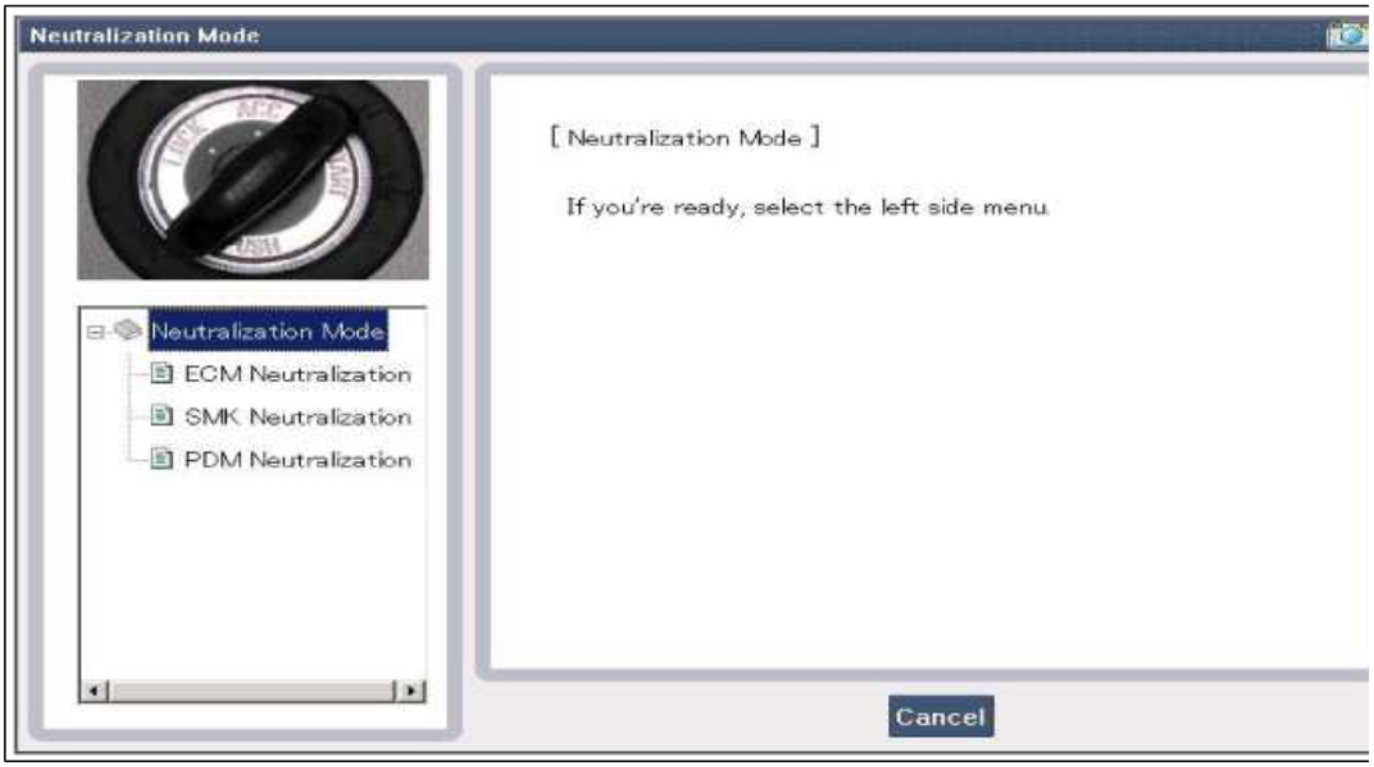

cardiagn.com

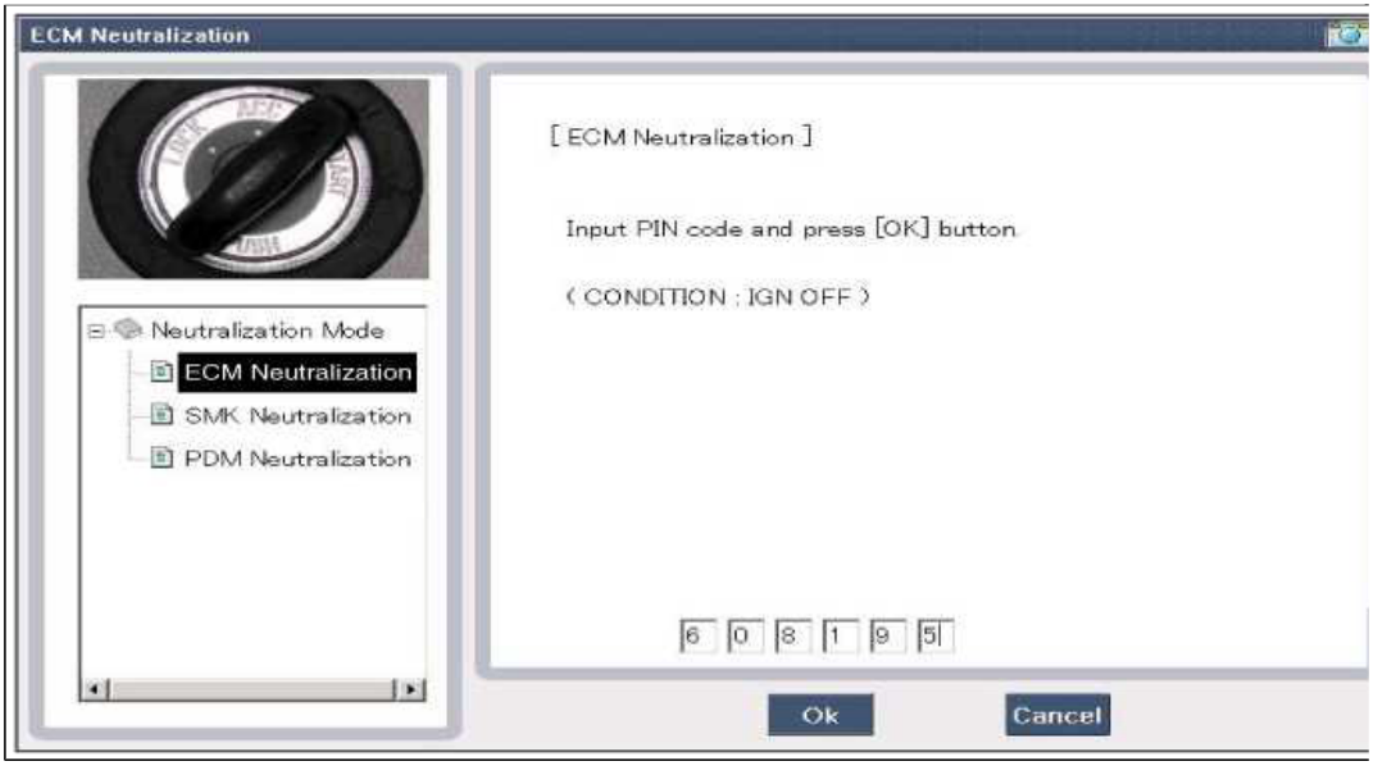

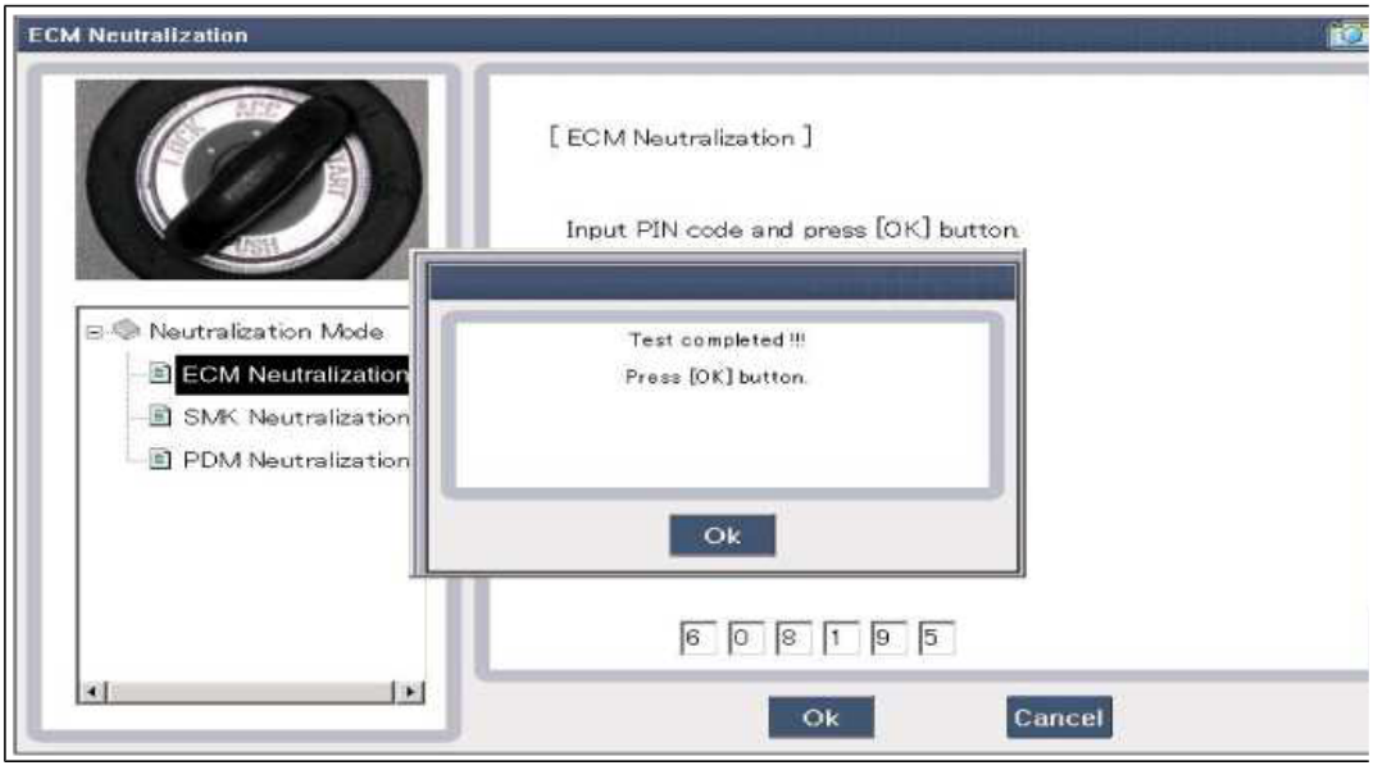

cardiagn.com

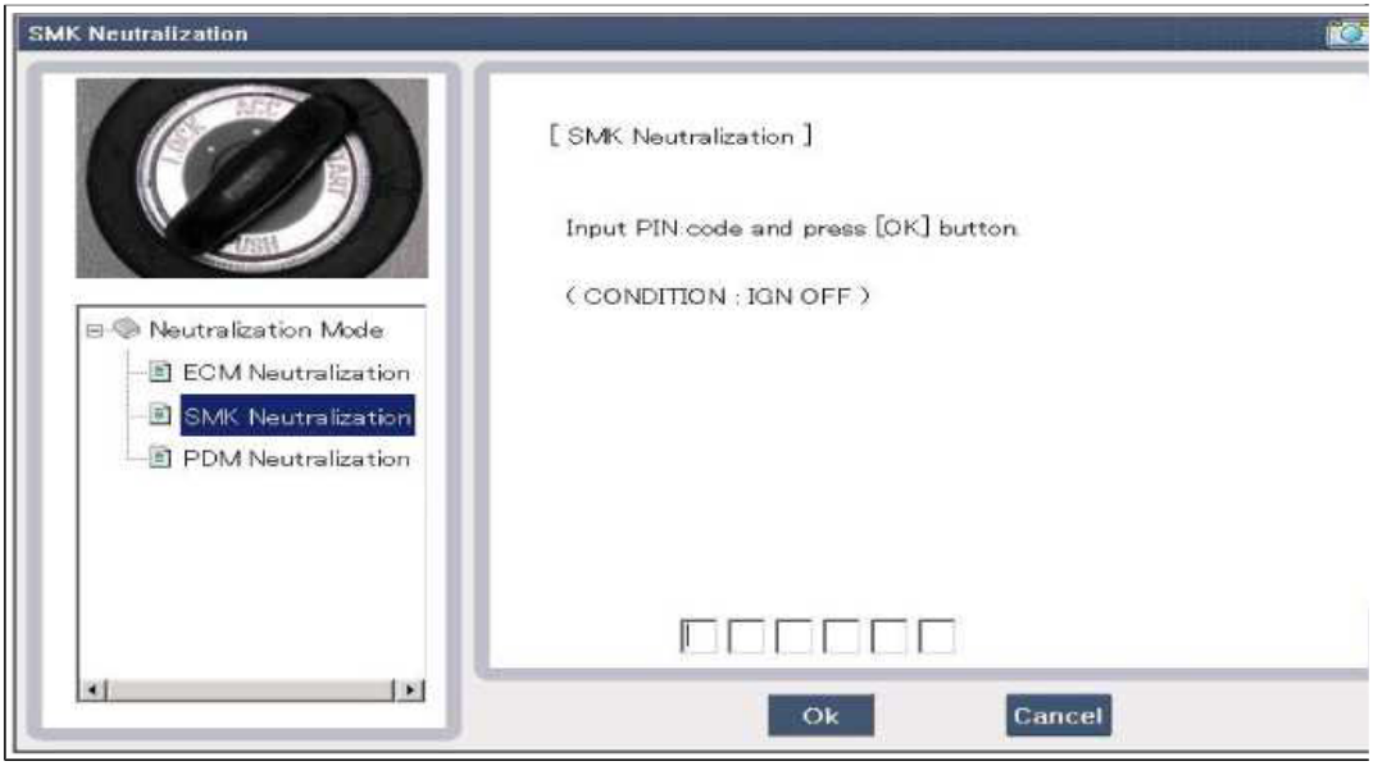

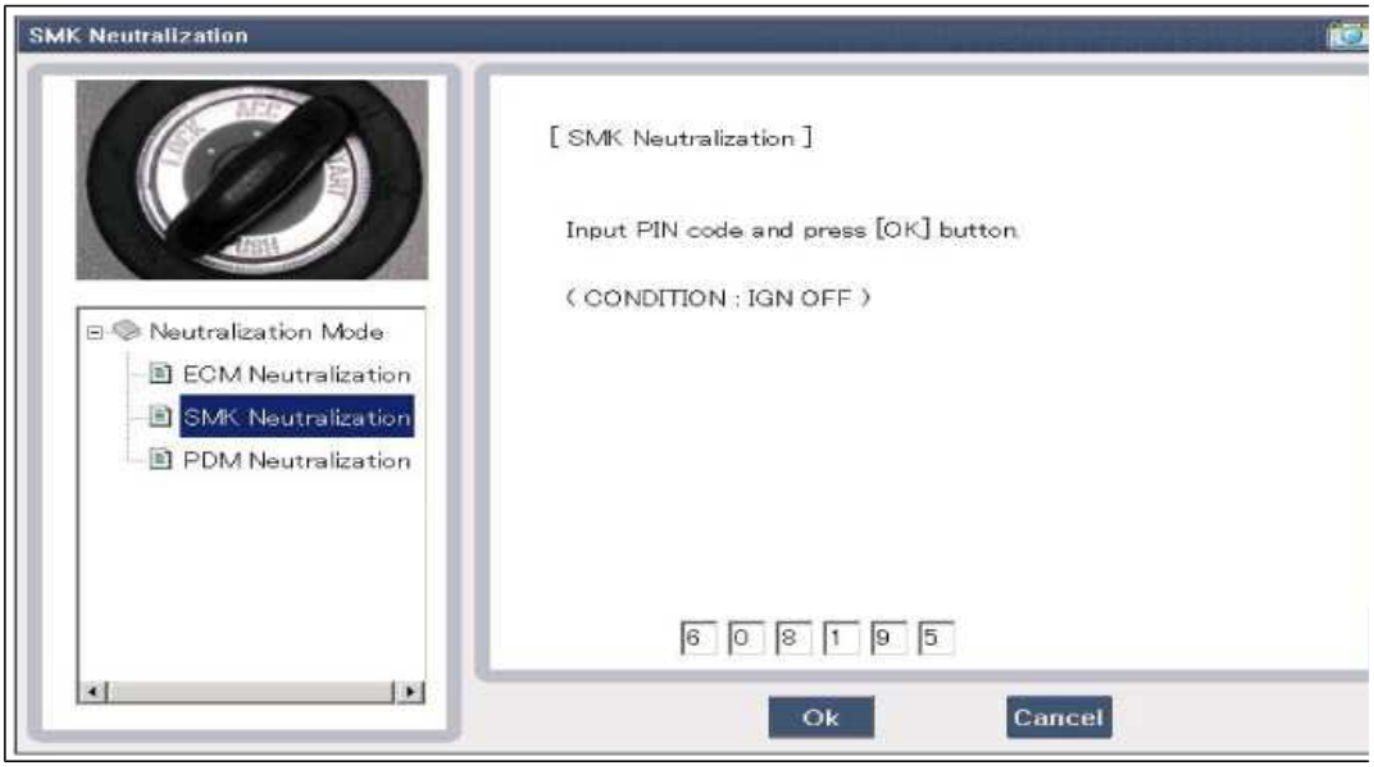

cardiagn.com

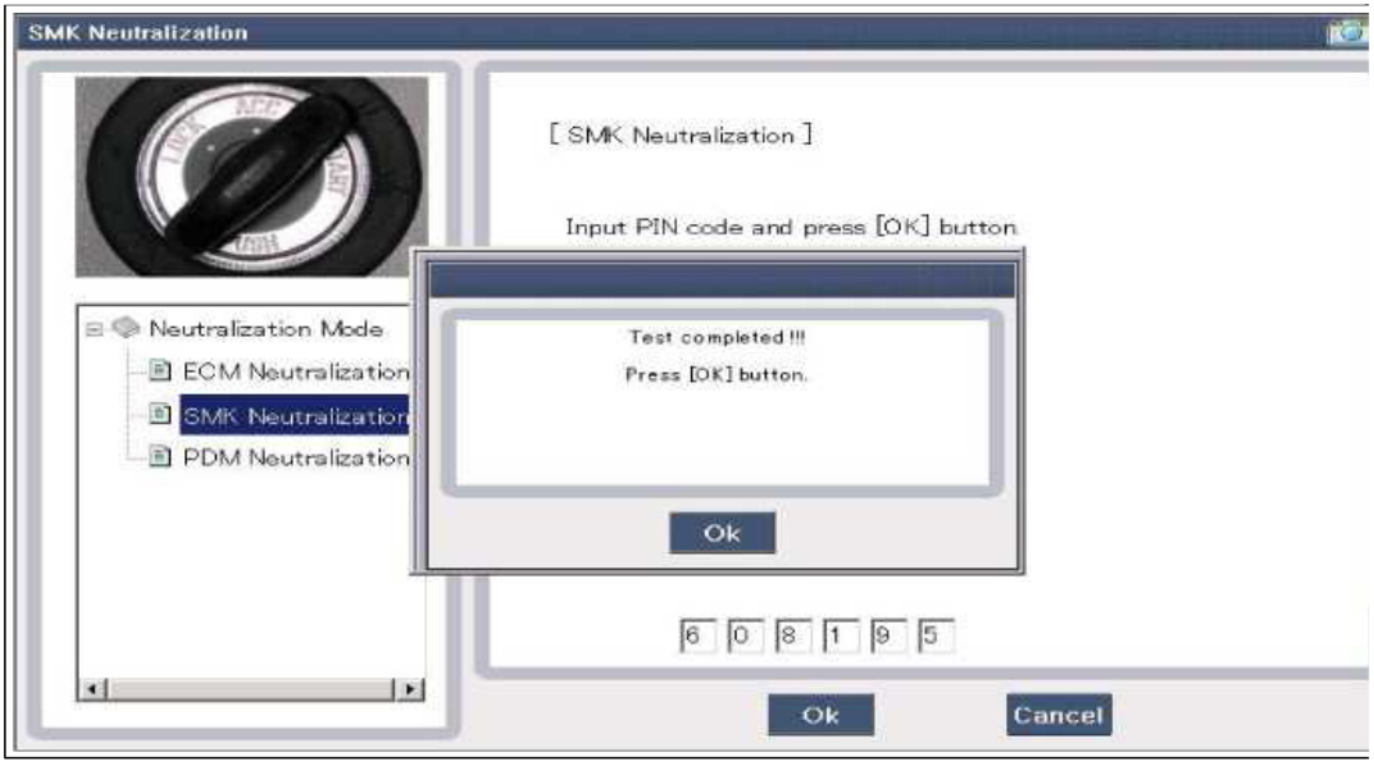

Input Switch List

No	Item name	Unit
1	SSB SW2	-
2	ACC	-
3	IGN1	-
4	Gear 'P' Position	-
5	Brake SW	-
6	FL Door Lock Button	-
7	FR Door Lock Button	-
8	Trunk Lid SW	-
9	Battery Voltage	-
10	Alternator Voltage	-
11	KEY out Indicator Lamp	-
12	Immobilizer Lamp	-
13	External Buzzer	-

Actuator List

cardiagn.com

No.	Item name	Condition
1	**KEY out Indicator Lamp**	**Ignition switch ON Engine off**
2	Immo.indicator Lamp	Ignition switch ON Engine off
3	External Buzzer	Ignition switch ON Engine off
4	Interior Antenna 1 Active	Ignition switch ON Engine off
5	Interior Antenna 2 Active	Ignition switch ON Engine off
6	Interior Antenna 3 Active	Ignition switch ON Engine off
7	Bumper Antenna Active	Ignition switch ON Engine off
8	DRV_DR Antenna Active	Ignition switch ON Engine off
9	AST_DR Antenna Active	Ignition switch ON Engine off

Body Electrical System > Smart key System > Smart key > Repair procedures

Smart Key

Smart Key Code Saving

1. Connect the DLC cable of GDS to the data link connector (16 pins) in driver side crash pad lower panel, turn the power on GDS.

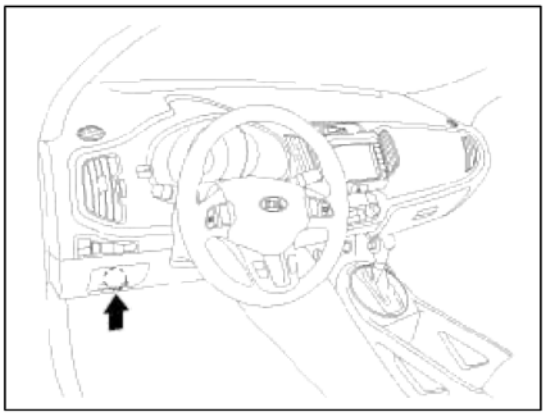

cardiagn.com

2. Select the vehicle model and then do "Smart key code saving".

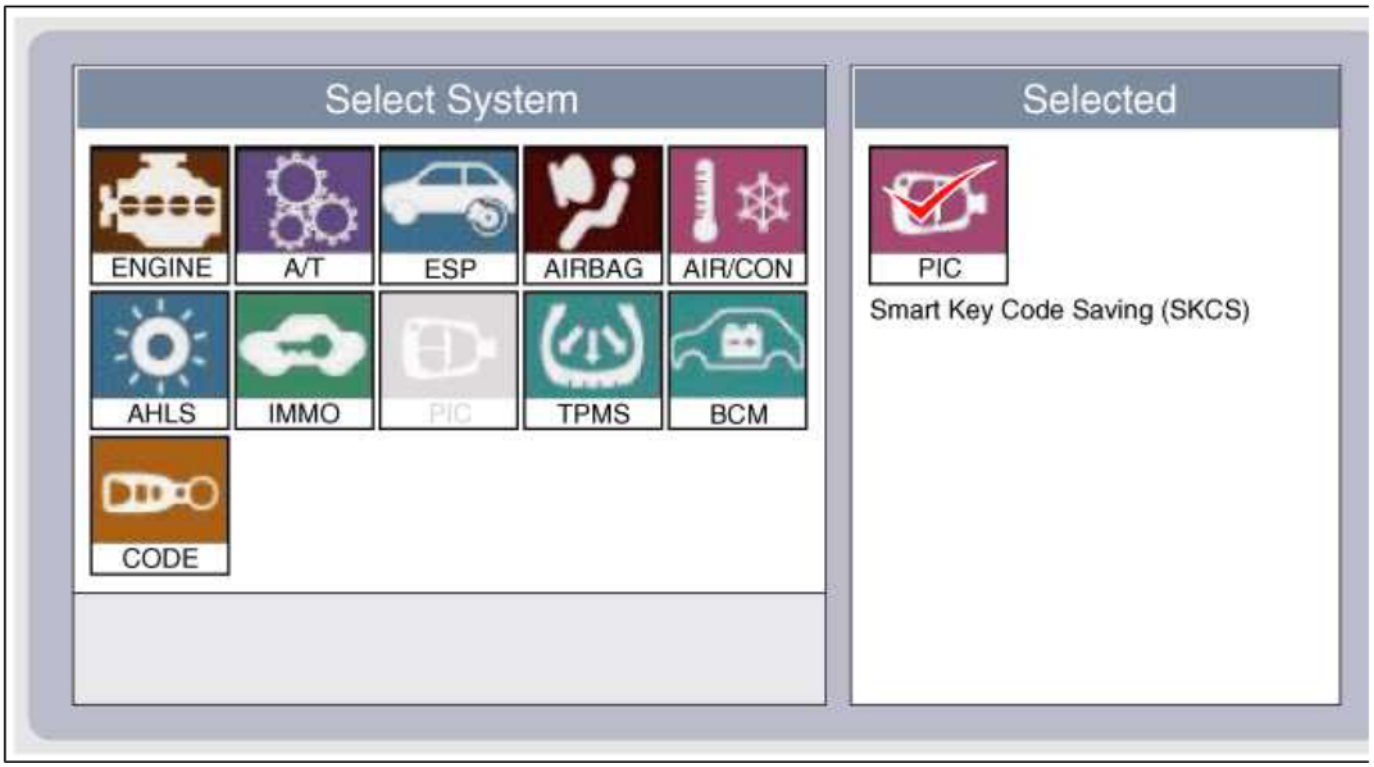

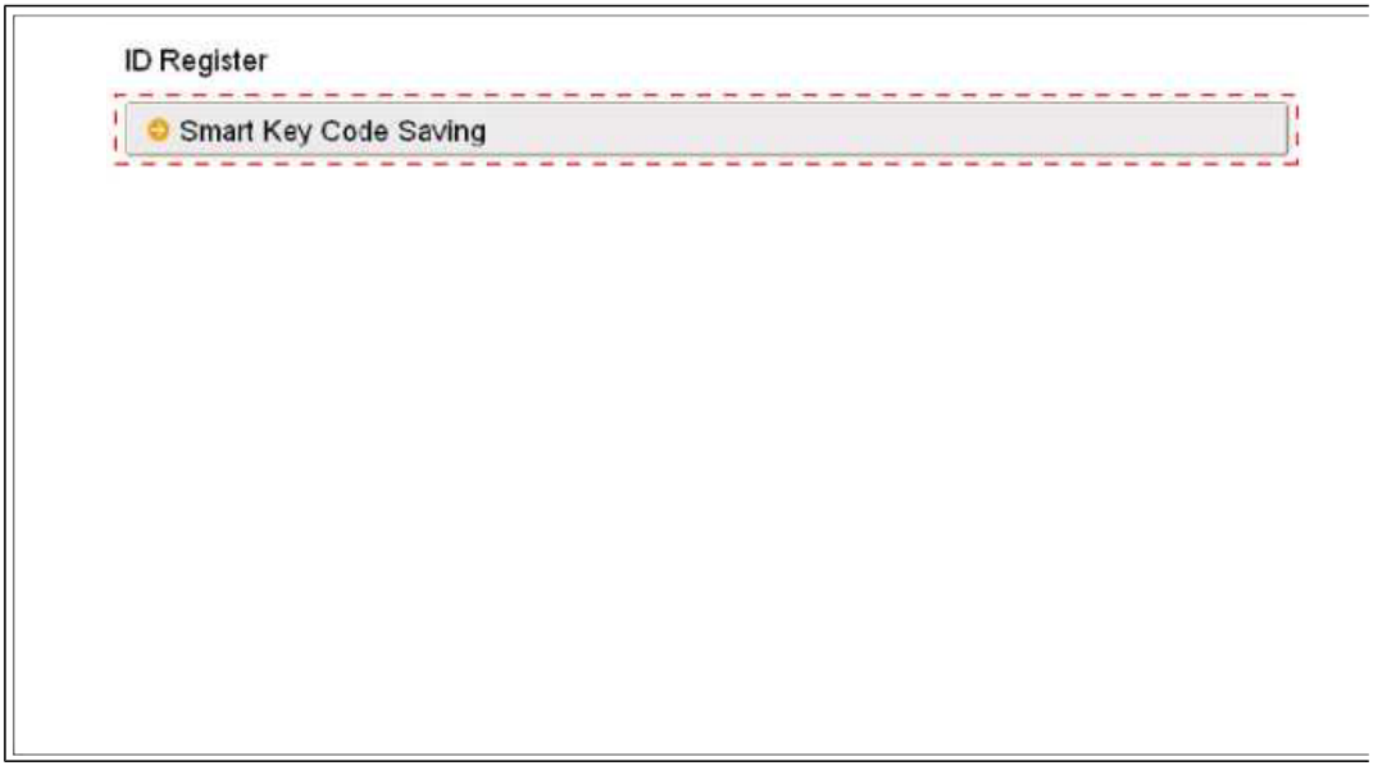

cardiagn.com

3. After selecting "Smart key teaching" menu, push "Enter" key, then the screen will be shown as below.

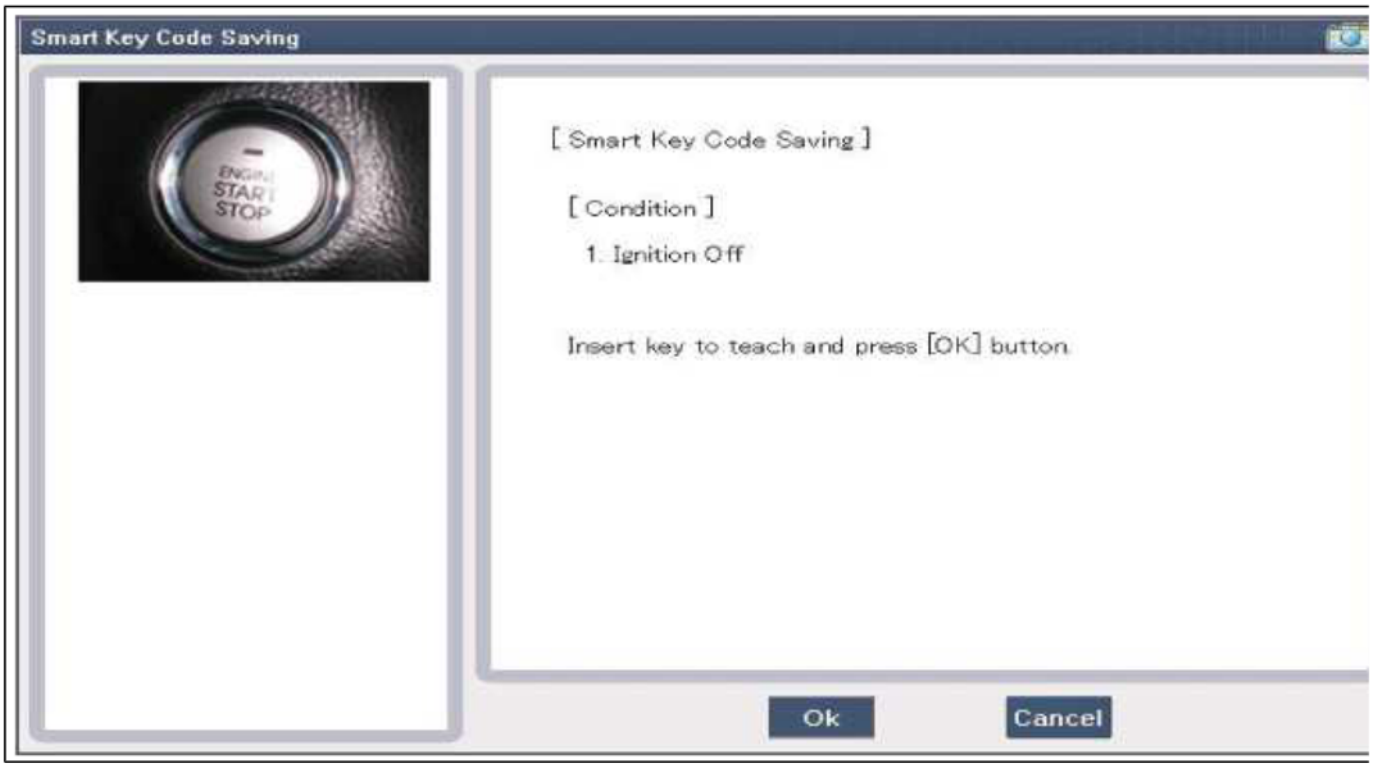

4. After inserting the teaching key, push "ENTER" key.
5. Input the "Pin code" for first key teaching.

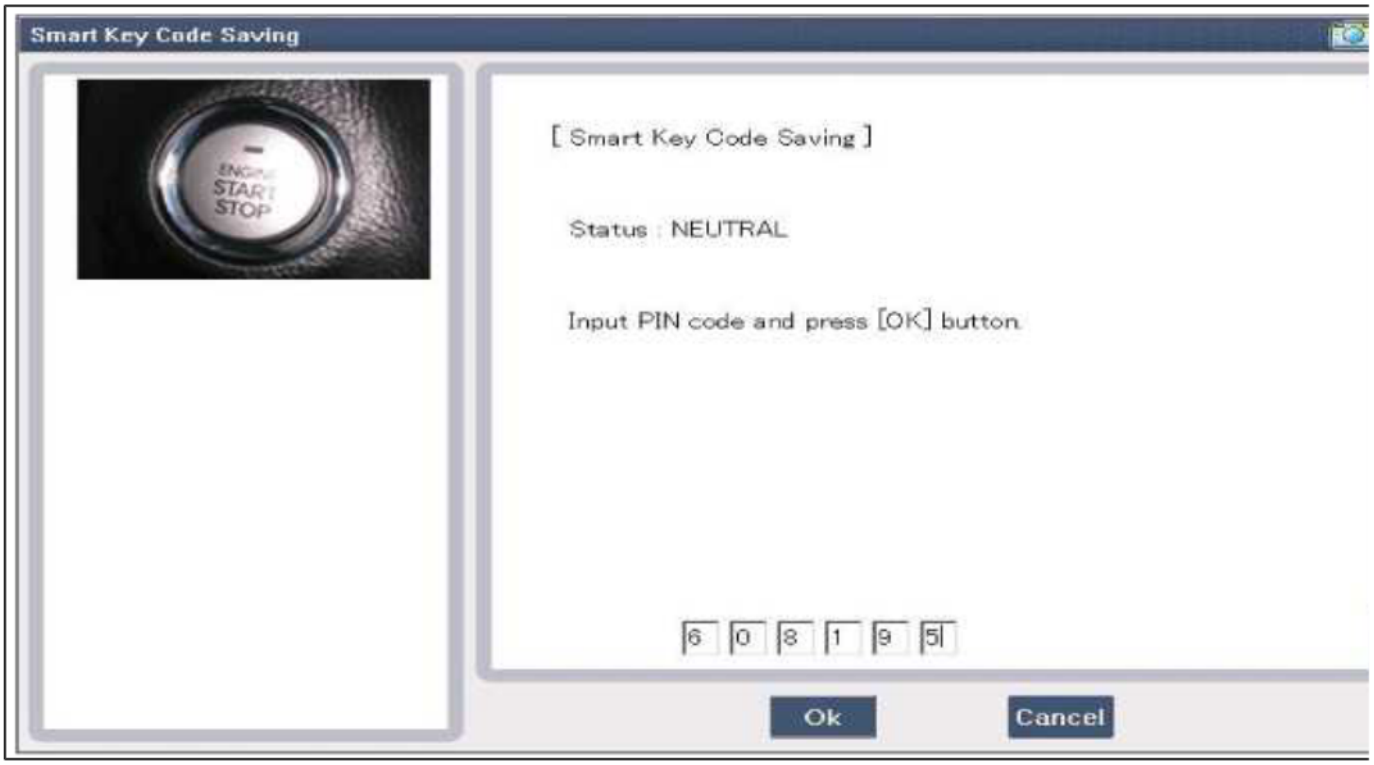

cardiagn.com

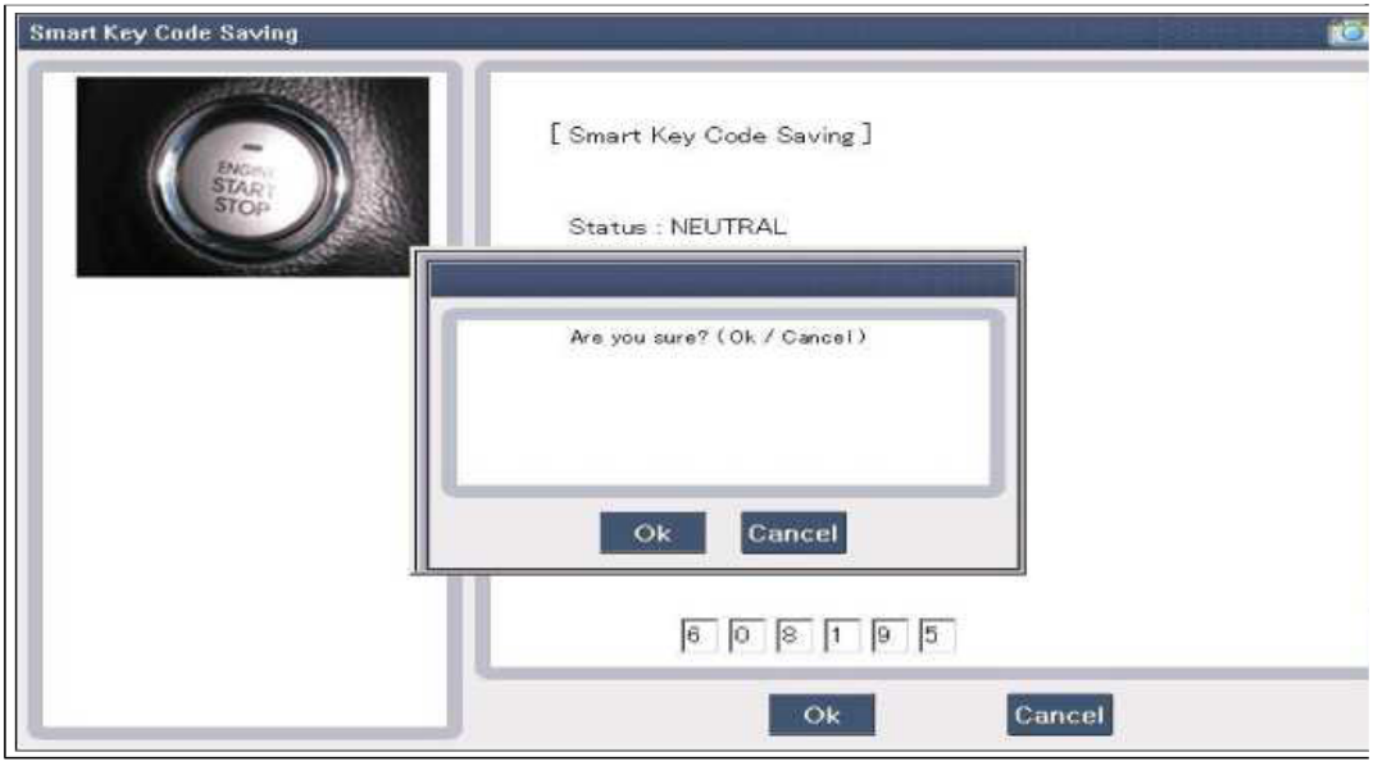

6. Confirm the message "First key teaching completed".

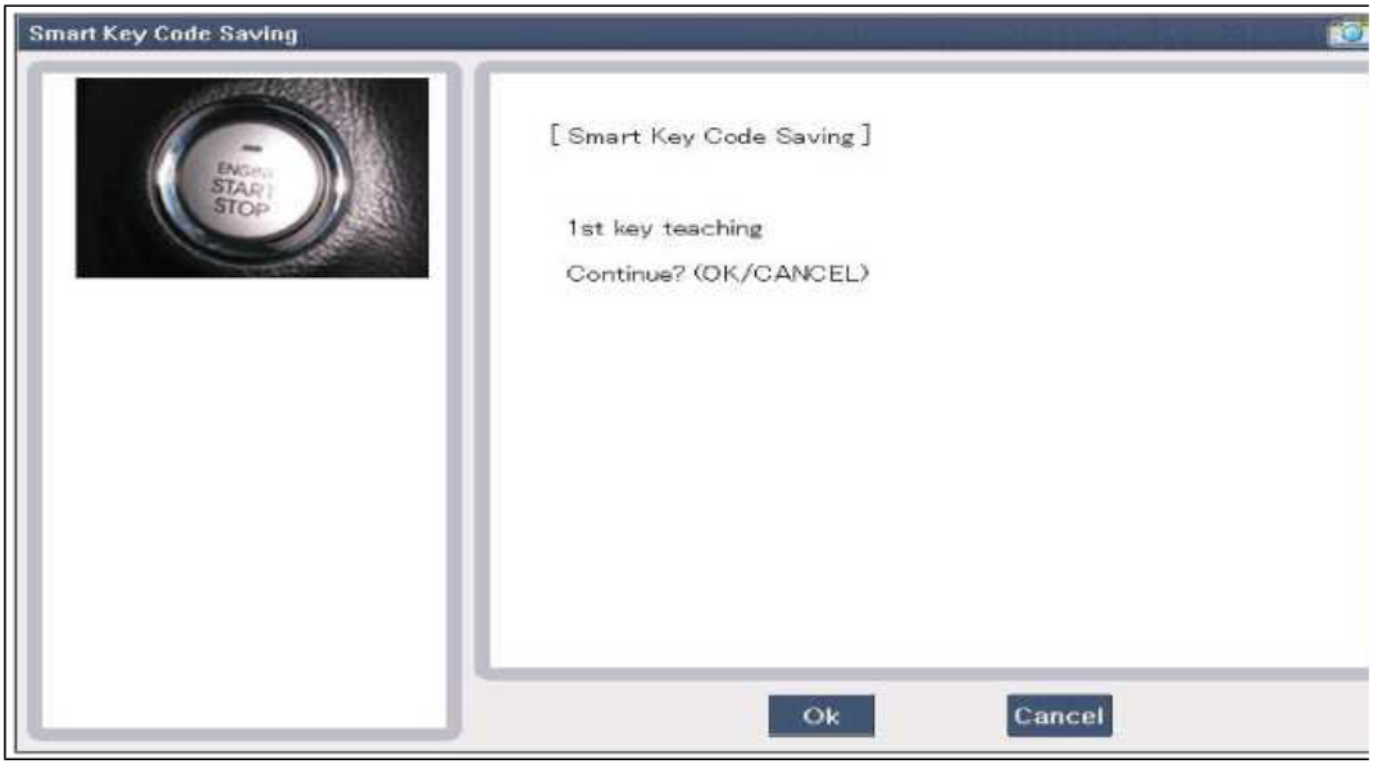

cardiagn.com

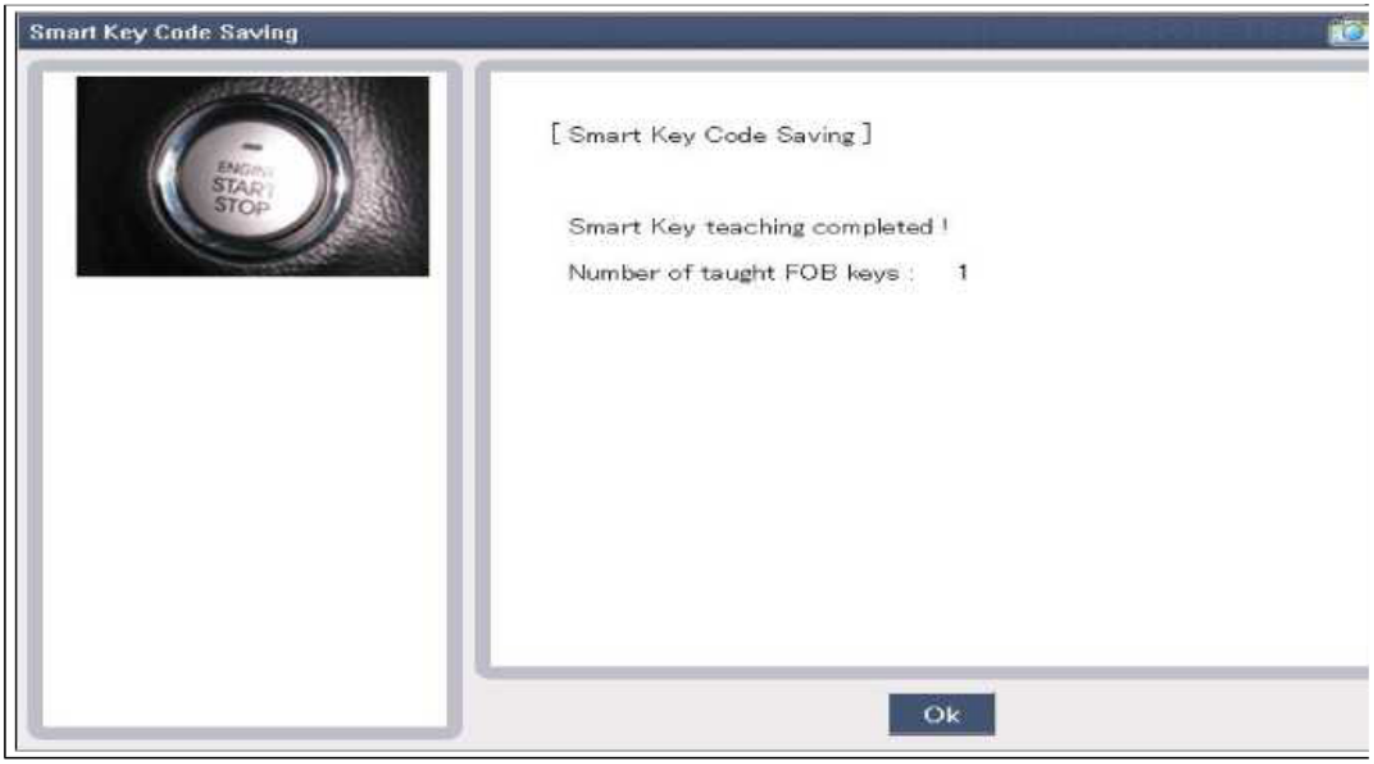

7. Input the "Pin code" for second key teaching.

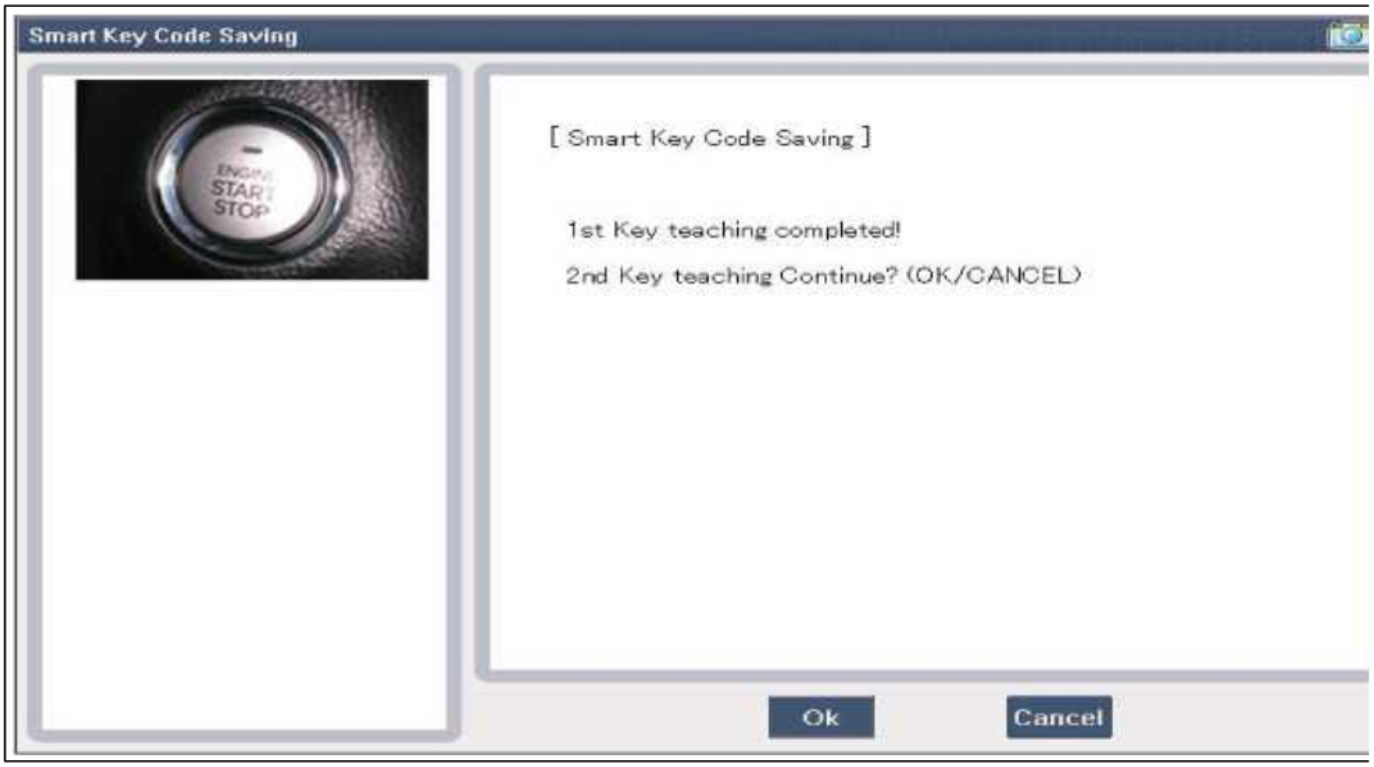

cardiagn.com

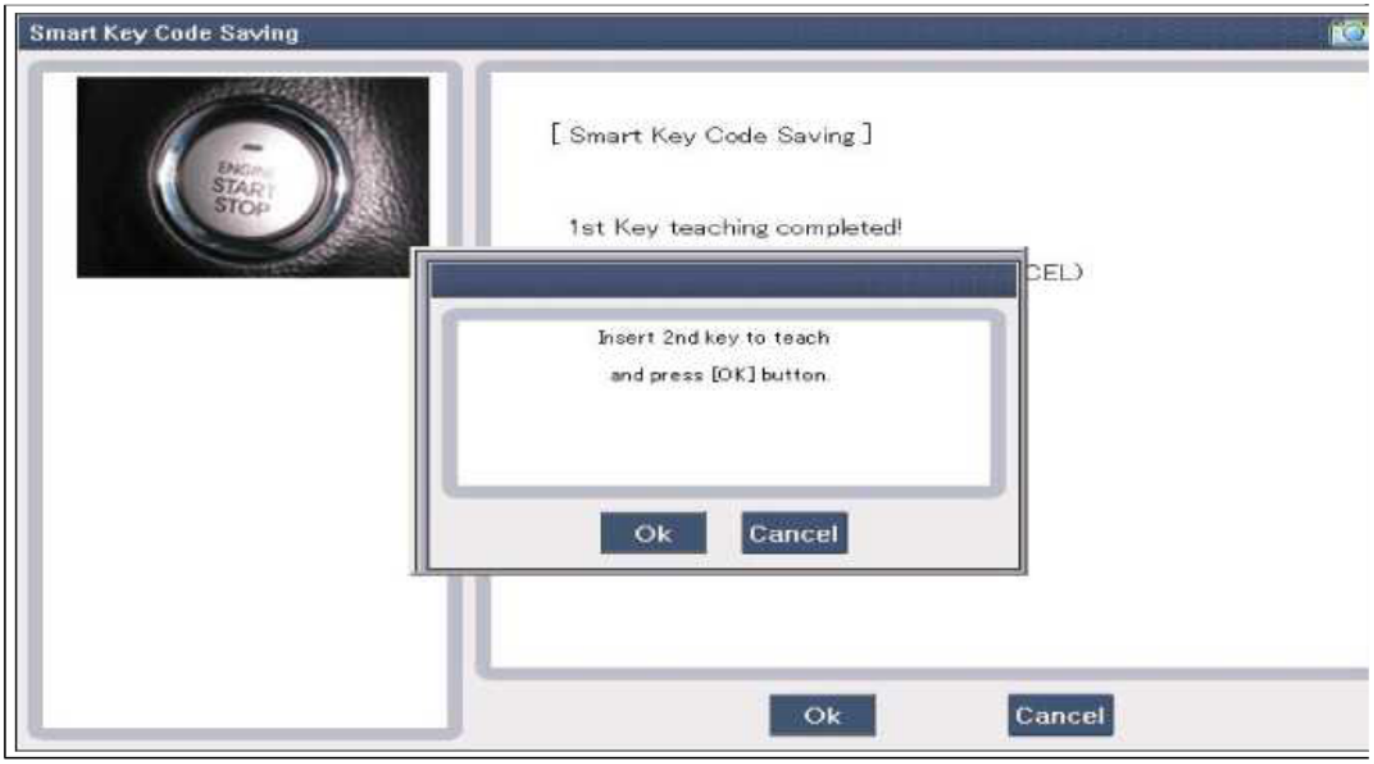

8. Confirm the message "Second key teaching completed".

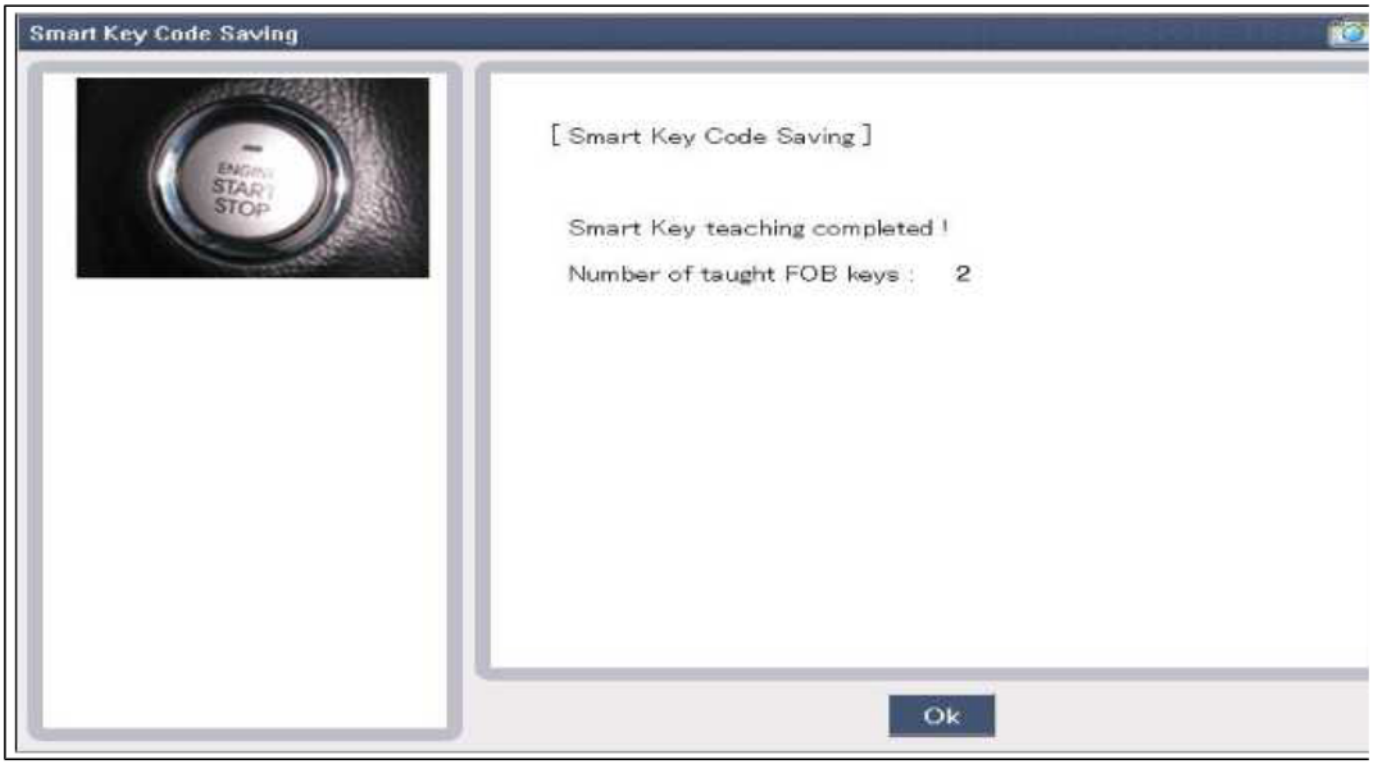

9. Then the screen will be shown as below when key teaching process is completed.

Body Electrical System > Smart key System > Smart key unit > Components and Components Location

Components

cardiagn.com

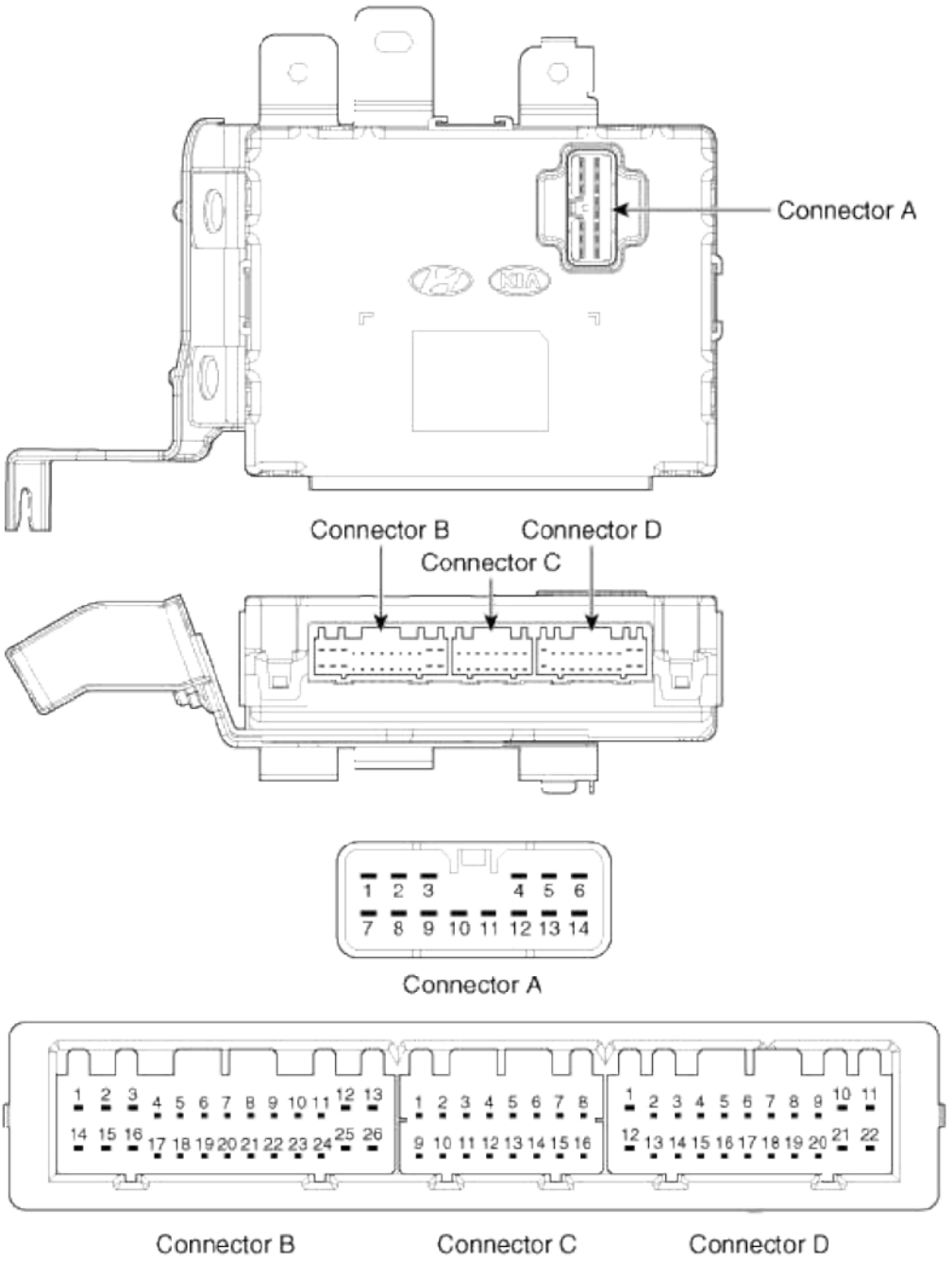

Connector Pin Information

cardiagn.com

No	Connector A (14 Pin)	No	Connector B (26 Pin)		
1	Ground 1	1	-	15	L_Passenger lock button, L_Passenger toggle button
2	A_ACC	2	L_Driver lock button, L_Driver toggle button	16	-
3	A_IGN2	3	-	17	-
4	A_IGN1	4	-	18	-
5	VBAT_CPU	5	-	19	L_Fob input
6	VBAT_LOAD	6	L_SSB_Switch1	20	F_RPM
7	Ground 2	7	F_Wheel vehicle	21	L_Start Feedback
8	-	8	L_SSB_Switch2	22	-
9	O_Exterior buzzer	9	-	23	-
10	O_ACC Relay	10	-	24	-
11	O_IGN1 Relay	11	-	25	-
12	O_IGN2 Relay	12	B_CAN_H	26	L_Tailgate Switch
13	O_Starter Relay	13	B_CAN_L		
14	-	14	-		

Connector Pin Information

No	Connector C (16 Pin)	No	Connector D (22 Pin)
1	C_CAN_L	1	Immobilizer warning lamp
2	C_CAN_H	2	O_SSB_LED_AMBER
3	-	3	O_SSB_illumination power
4	O_Holder illumination	4	O_Interior antenna 2 ground
5	-	5	O_Interior antenna 1 ground
6	Diagnostic K	6	-
7	L_Brake switch	7	-
8	Immobilizer data	8	O_Interior antenna 3 power
9	RF_COM	9	O_Bumper antenna power
10	EMS_COM	10	O_Passenger side antenna power

cardiagn.com

11	-	11	O_Driver side antenna power
12	-	12	-
13	L_Stop lamp fuse	13	O_SSB_LED_Blue
14	-	14	O_SSB_illumination ground
15	L_P shift, L_Clutch switch	15	O_Interior antenna 2 power
16	Immobilizer clock	16	O_Interior antenna 1 power
		17	-
		18	-
		19	O_Interior antenna 3 ground
		20	O_Bumper antenna ground
		21	O_Passenger side antenna ground
		22	O_Driver side antenna ground

Body Electrical System > Smart key System > Smart key unit > Schematic Diagrams

Circuit Diagram

cardiagn.com

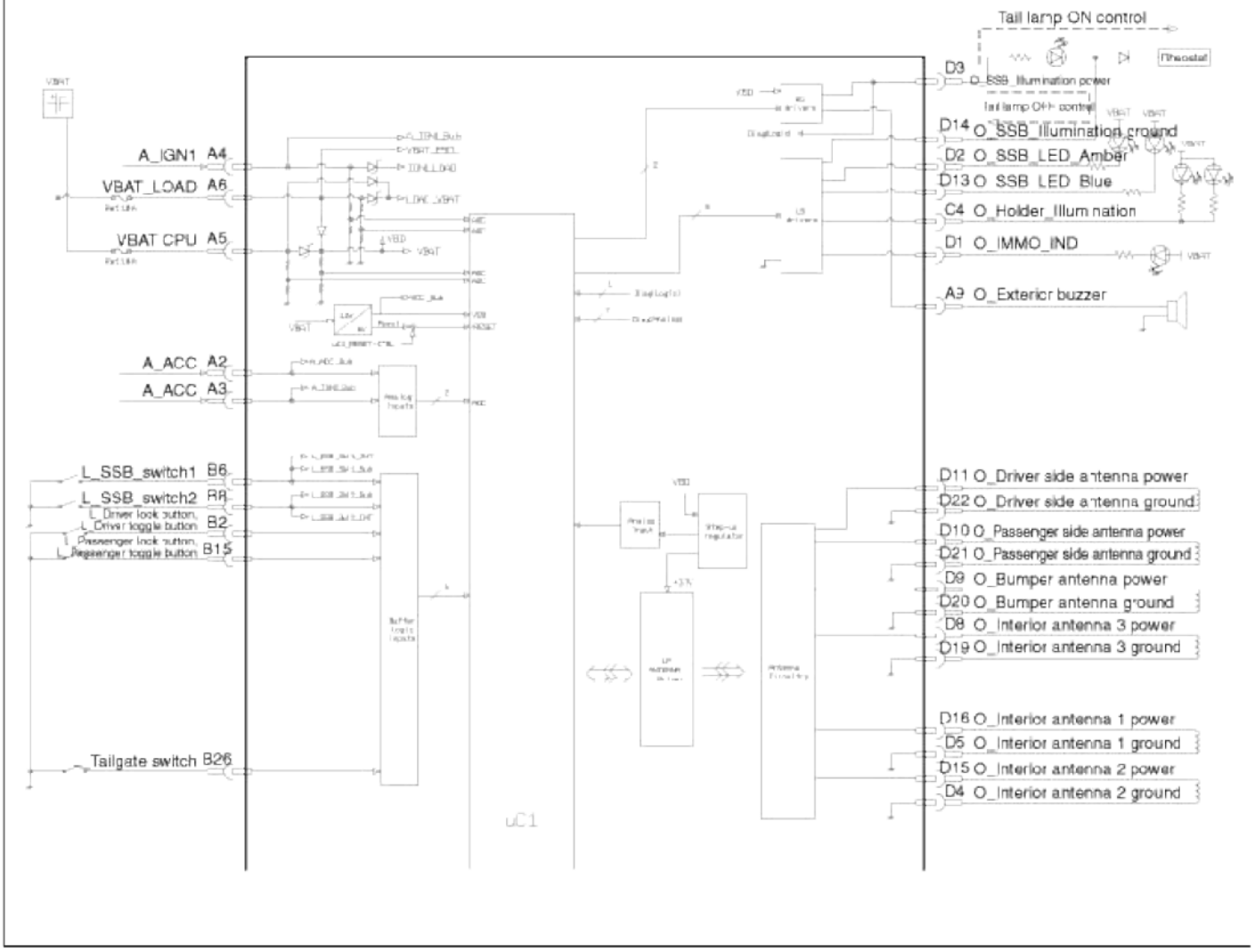

cardiagn.com

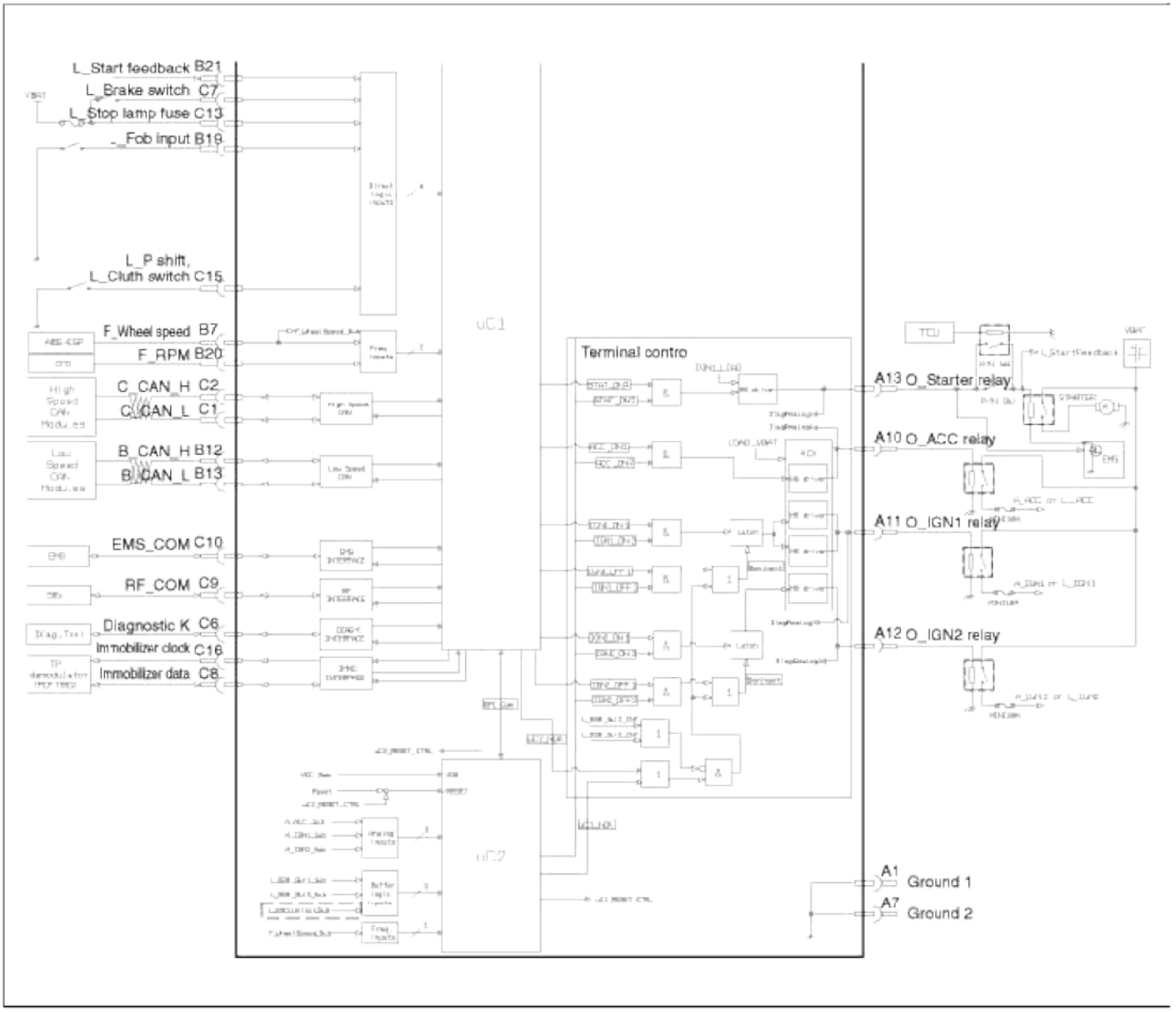

Body Electrical System > Smart key System > Smart key unit > Repair procedures

Removal

Smart Key Unit

1. Disconnect the negative (-) battery terminal.
2. Remove the glove box.
   (Refer to the BD group - "Crash pad")

cardiagn.com

3. After disconnecting the smart key unit connectors (A), loosen the smart key unit mounting nuts (2EA), and remove the smart key unit (B).

[USA]

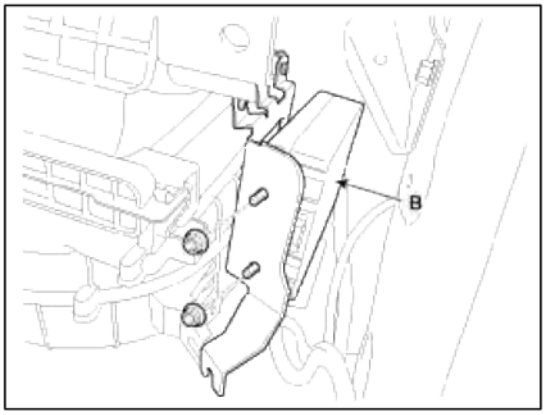

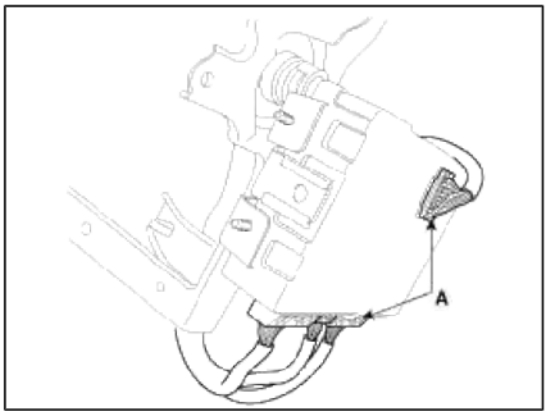

[Canada]

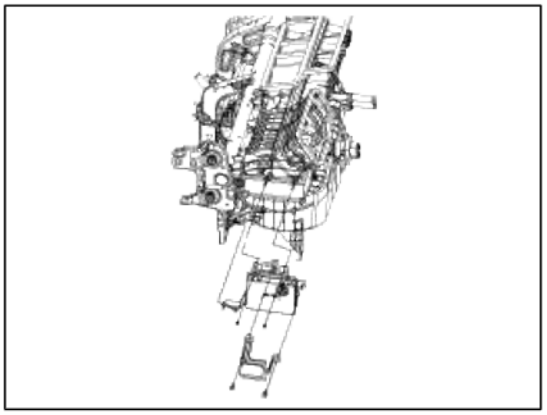

RF Receiver

1. Disconnect the negative (-) battery terminal.
2. Remove the floor console.
   (Refer to the BD group - "Console")

cardiagn.com

3. Disconnect the RF receiver connector and remove the RF receiver mounting screws. Remove the RF receiver.

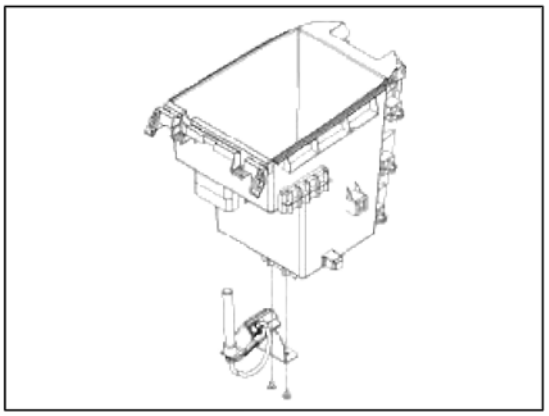

Interior 1 Antenna

1. Disconnect the negative (-) battery terminal.
2. Remove the floor console.
   (Refer to the BD group - "Console")
3. After loosening the antenna nuts (2EA) and connector (B), remove the interior 1 antenna (A).

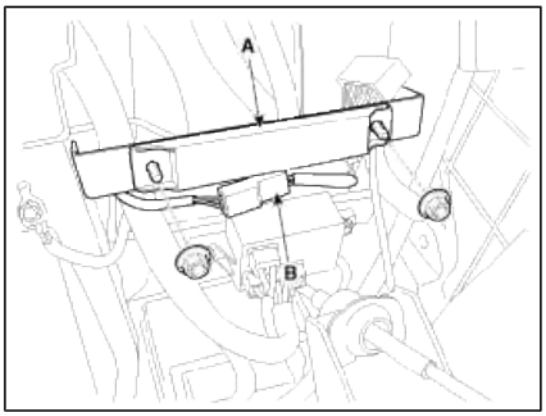

NOTE

Release the connector lock (A) as indicated by the arrow, and then push-down the lock.
Make sure the connector is locked completely when installing.

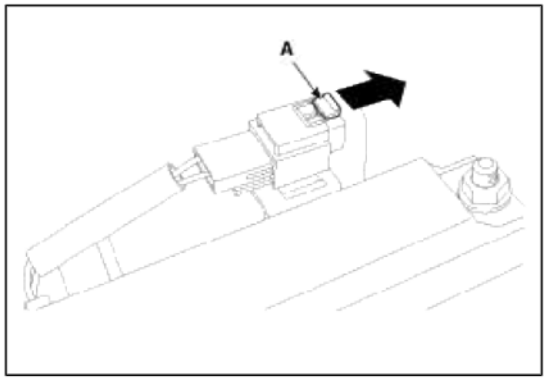

Interior 2 Antenna

1. Disconnect the negative (-) battery terminal.

cardiagn.com

2. Remove the floor console rear panel (A) using the appropriate tool.

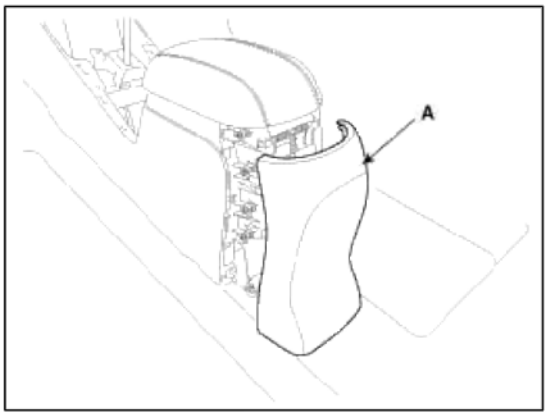

NOTE

Take care not to damage and scratch the floor console rear panel and its related parts.
Take care not to damage the hook when removing the floor console rear panel.

3. After loosening the antenna nuts (2EA) and connector, remove the interior 2 antenna (A).

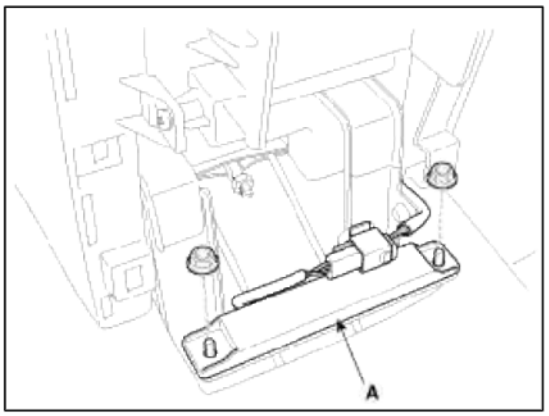

NOTE

Release the connector lock (A) as indicated by the arrow, and then push-down the lock.
Make sure the connector is locked completely when installing.

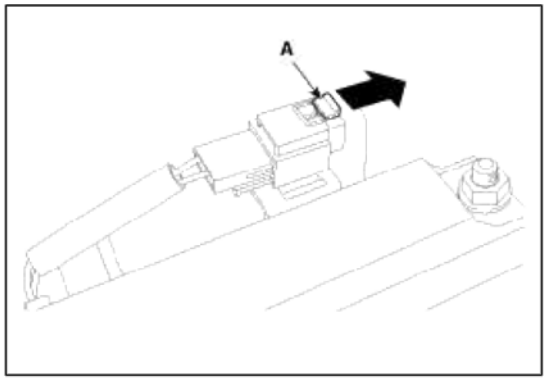

Interior 3 Antenna

1. Disconnect the negative (-) battery terminal.
2. After loosening the mounting bolts, then remove the rear seat assembly.
   (Refer to the BD group - "Rear seat")
3. Remove the luggage side trim (RH, LH), and then remove the rear floor carpet.
   (Refer to the BD group - "Interior trim")

cardiagn.com

4. After loosening the antenna nuts (2EA) and connector (A), remove the interior 3 antenna (B).

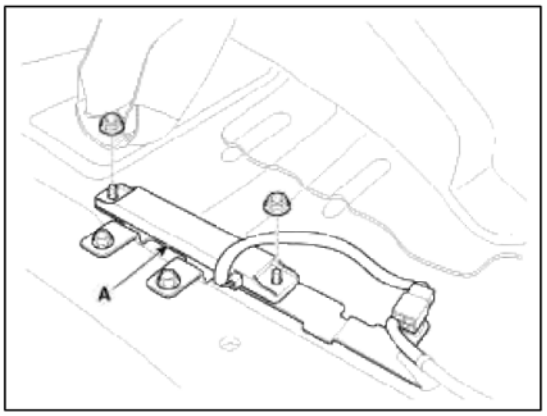

NOTE

Release the connector lock (A) as indicated by the arrow, and then push-down the lock.
Make sure the connector is locked completely when installing.

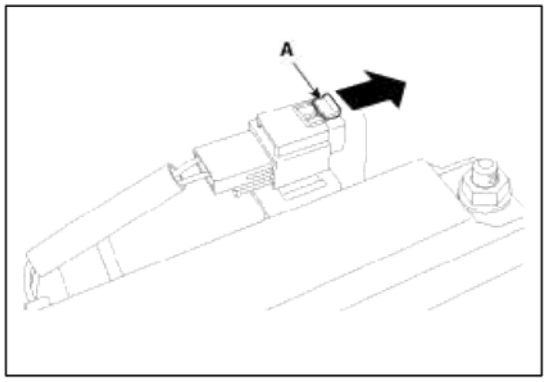

Exterior Bumper Antenna

1. Disconnect the negative (-) battery terminal.
2. Lift the vehicle up using the lift.
   (Refer to the GI group - "Lift And Support Points")
3. Remove the rear bumper.
   (Refer to the BD group - "Rear bumper")
4. Disconnect the antenna connector (A) on the center of rear bumper.

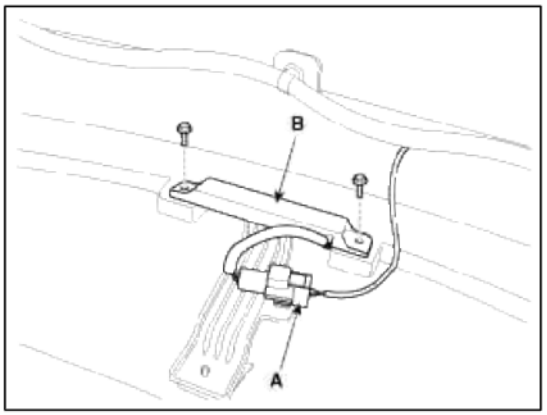

5. After loosening the screws (2EA), remove the exterior bumper antenna (B).

Buzzer

1. Disconnect the negative (-) battery terminal.
2. Remove the front left fender.
   (Refer to the BD group - "Fender")

cardiagn.com

3. Disconnect the connector, then remove the buzzer (A).

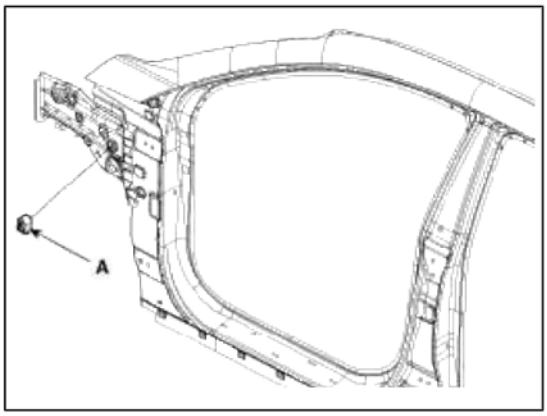

Door Outside Handle

1. Disconnect the negative (-) battery terminal.
2. Disconnect the connector after removing the door trim.
   (Refer to the BD group - "Front door")
3. After loosening the mounting bolt, then remove the key holder (A).

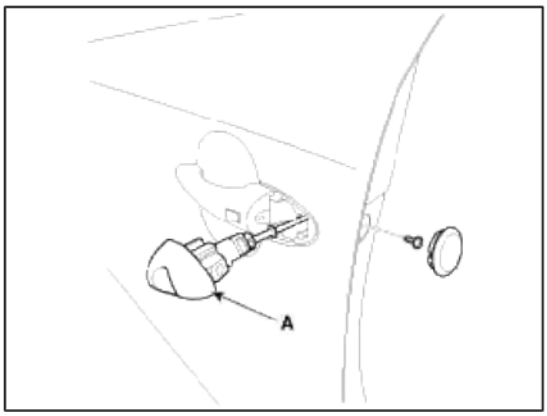

4. Remove the outside handle (A) by sliding it rearward.

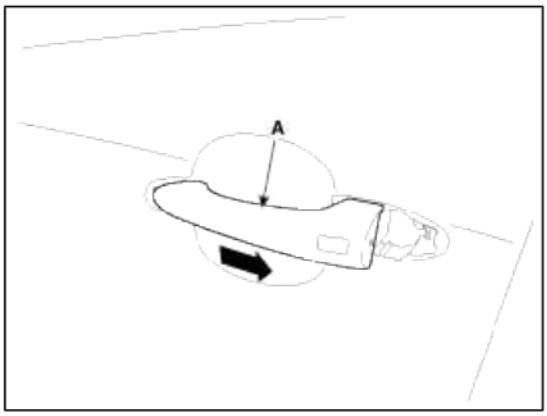

Tailgate Switch

1. Disconnect the negative (-) battery terminal.
2. Remove the tailgate trim.
   (Refer to the BD group - "Tailgate trim")

cardiagn.com

3. Disconnect the license lamp and tailgate switch connector (A). Disconnect the back warning camera connector (B).

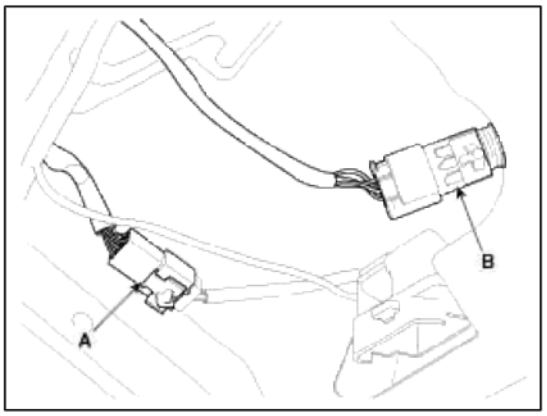

4. Remove the screws (2EA) and clips (4EA). Remove the tailgate garnish (A).

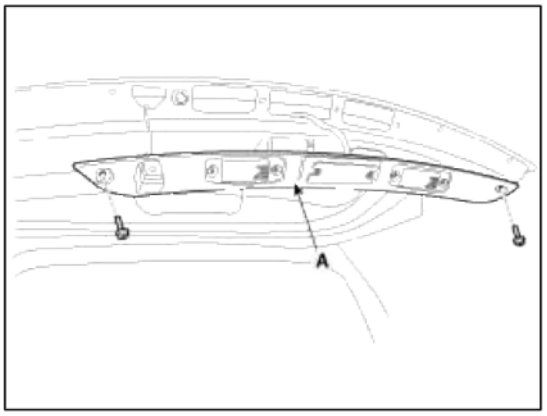

5. Loosen the tailgate outside handle mounting screw. Remove the outside handle and license lamp (A).

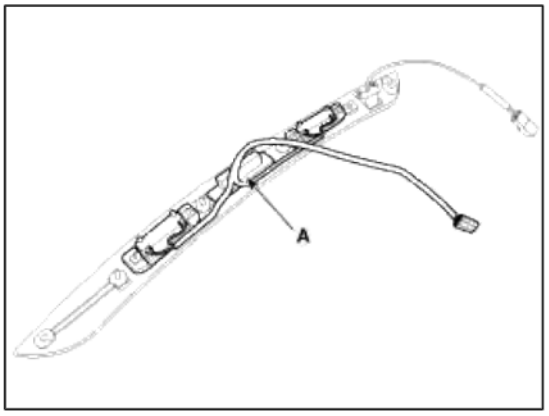

Inspection

Smart Key Unit

- Refer to BE group - Smart key system - inspection / self diagnosis with scan tool.

Smart Key Switch

- Refer to BE group - Smart key system - inspection / self diagnosis with scan tool.

Antenna

- Refer to BE group - Smart key system - inspection / self diagnosis with scan tool.

Tailgate Switch

cardiagn.com

1. Check for continuity between the tailgate switch terminals.

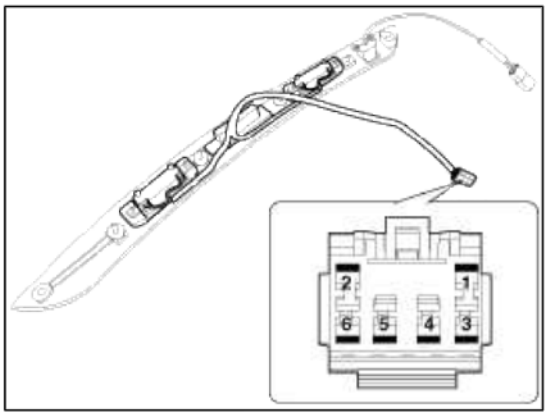

Terminal / Position	1	2
Unlock	○	○
Lock		

2. If needed, replace the switch.

Installation

Smart Key Unit

1. Install the smart key unit.
2. Install the smart key unit mounting nuts, and then connect the connector.
3. Install the glove box.
4. Install the negative (-) battery terminal and check the smart key system.

RF Receiver

1. Install the RF receiver.
2. Install the floor console.
3. Install the negative (-) battery terminal and check the smart key system.

Interior 1 Antenna

1. Install the interior 1 antenna.
2. Install the floor console.
3. Install the negative (-) battery terminal and check the smart key system.

Interior 2 Antenna

1. Install the interior 2 antenna.
2. Install the floor console rear cover after connecting the connector.
3. Install the negative (-) battery terminal and check the smart key system.

Interior 3 Antenna

1. Install the interior 3 antenna.
2. Install the rear seat assembly.
3. Install the negative (-) battery terminal and check the smart key system.

Exterior Bumper Antenna

1. Install the exterior bumper antenna.
2. Install the negative (-) battery terminal and check the smart key system.

Buzzer

1. Install the buzzer.
2. Install the front left fender.
3. Install the negative (-) battery terminal and check the smart key system.

Door Outside Handle

1. Install the outside handle.
2. Install the door trim.
3. Install the negative (-) battery terminal and check the smart key system.

cardiagn.com

Tailgate Switch

1. Install the tailgate switch.
2. Install the tailgate garnish.
3. Install the tailgate trim.
4. Install the negative (-) battery terminal and check the smart key system.

Body Electrical System > Keyless Entry And Burglar Alarm > Specifications

Specification

Item	Description
Power source	3V
Operating temperature	-20°C ~ +60°C
RF Modulation	FSK
RF frequency	433.92MHz
Battery	1EA (CR2032) WARNING An inappropriately disposed battery can be harmful to the environment and human health. Dispose the battery according to your local law(s) or regulation.
Transmissible distance	10m or more
Button number	3
Function	Door lock
	Door unlock
	Panic

Body Electrical System > Keyless Entry And Burglar Alarm > Components and Components Location

Component Location (1)

cardiagn.com

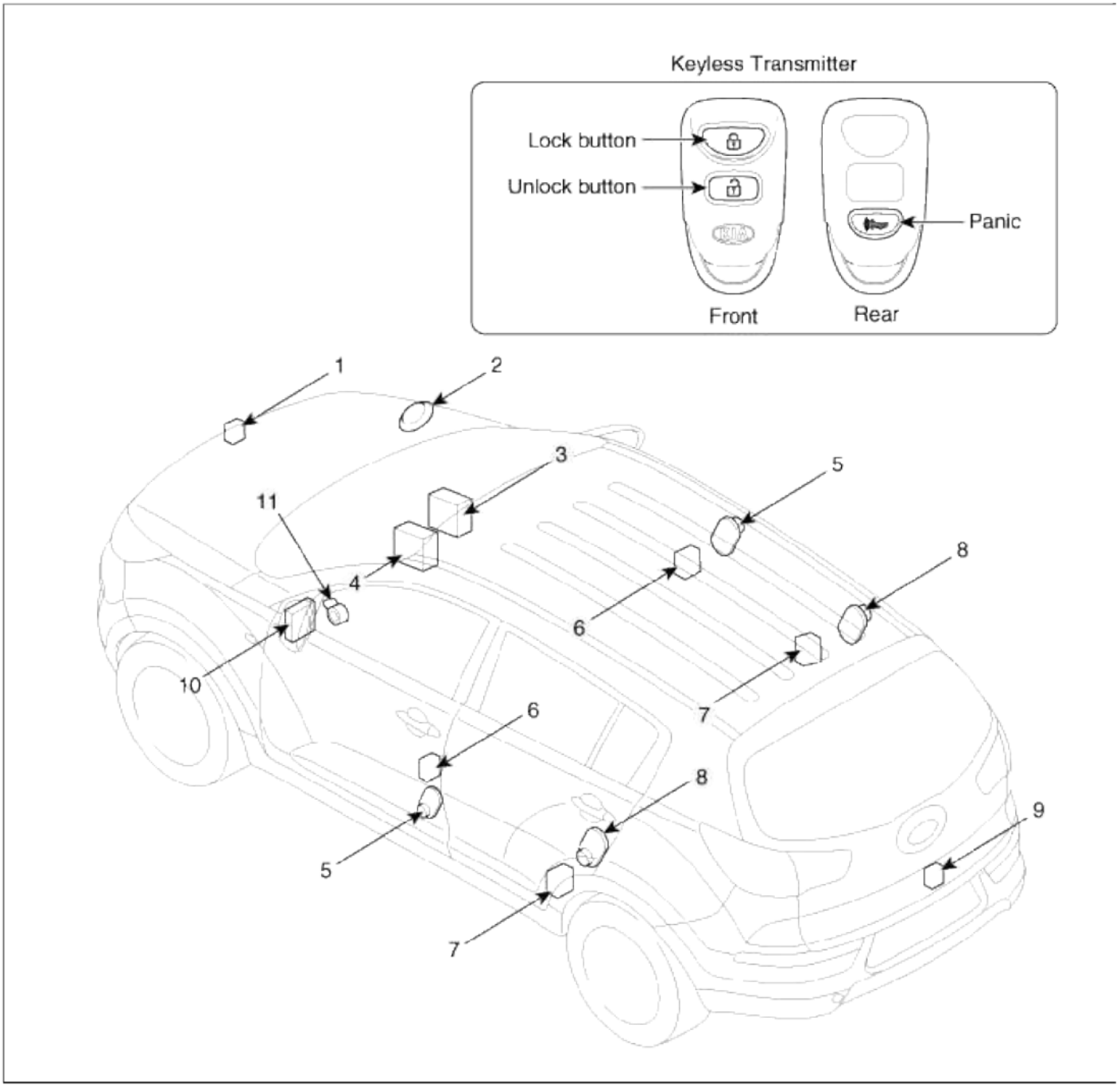

1. Hood switch 2. Burglar horn 3. RKE receiver 4. BCM (Body Control Module) 5. Front door switch 6. Front door lock actuator & switch	7. Rear door lock actuator & switch 8. Rear door switch 9. Tailgate release switch 10. SJB (Smart Junction Box) 11. Key warning switch

Component Location (2)

cardiagn.com

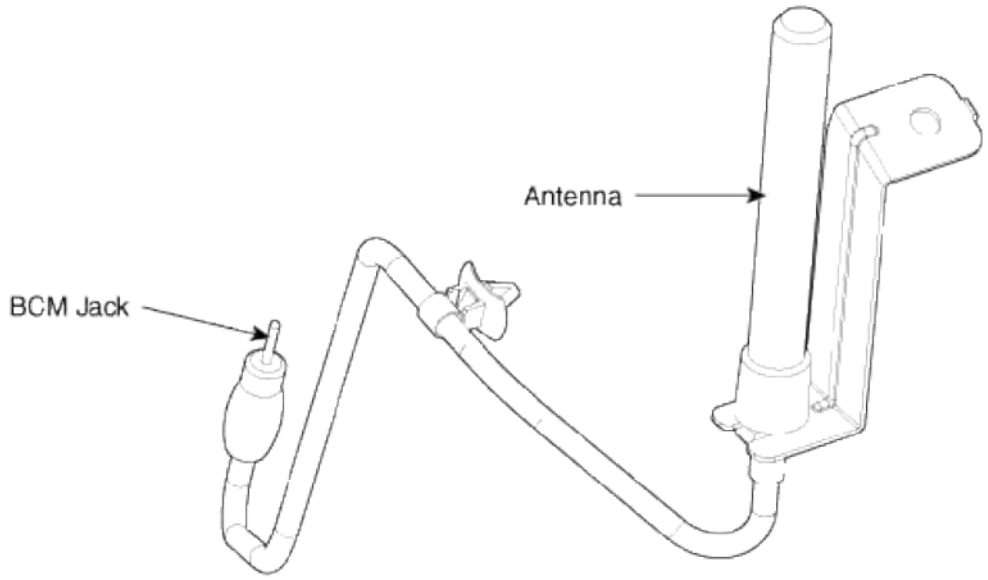

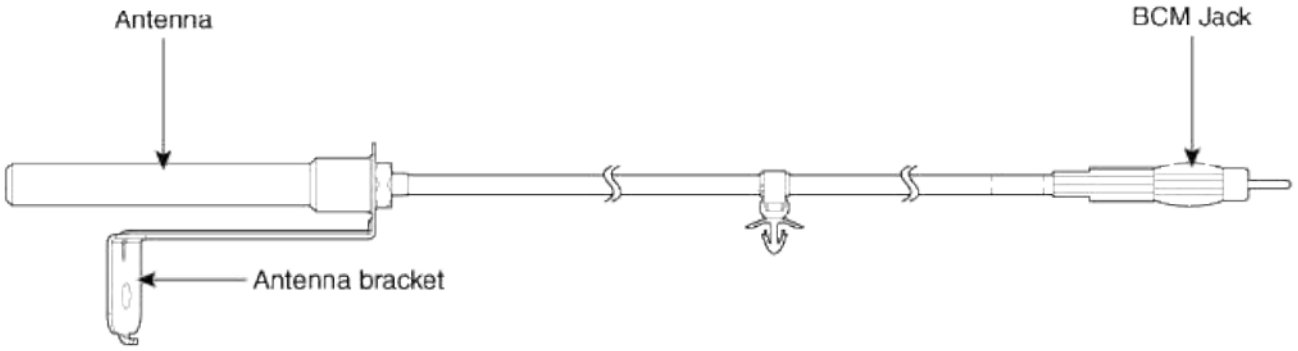

Body Electrical System > Keyless Entry And Burglar Alarm > Schematic Diagrams

Circuit Diagram

cardiagn.com

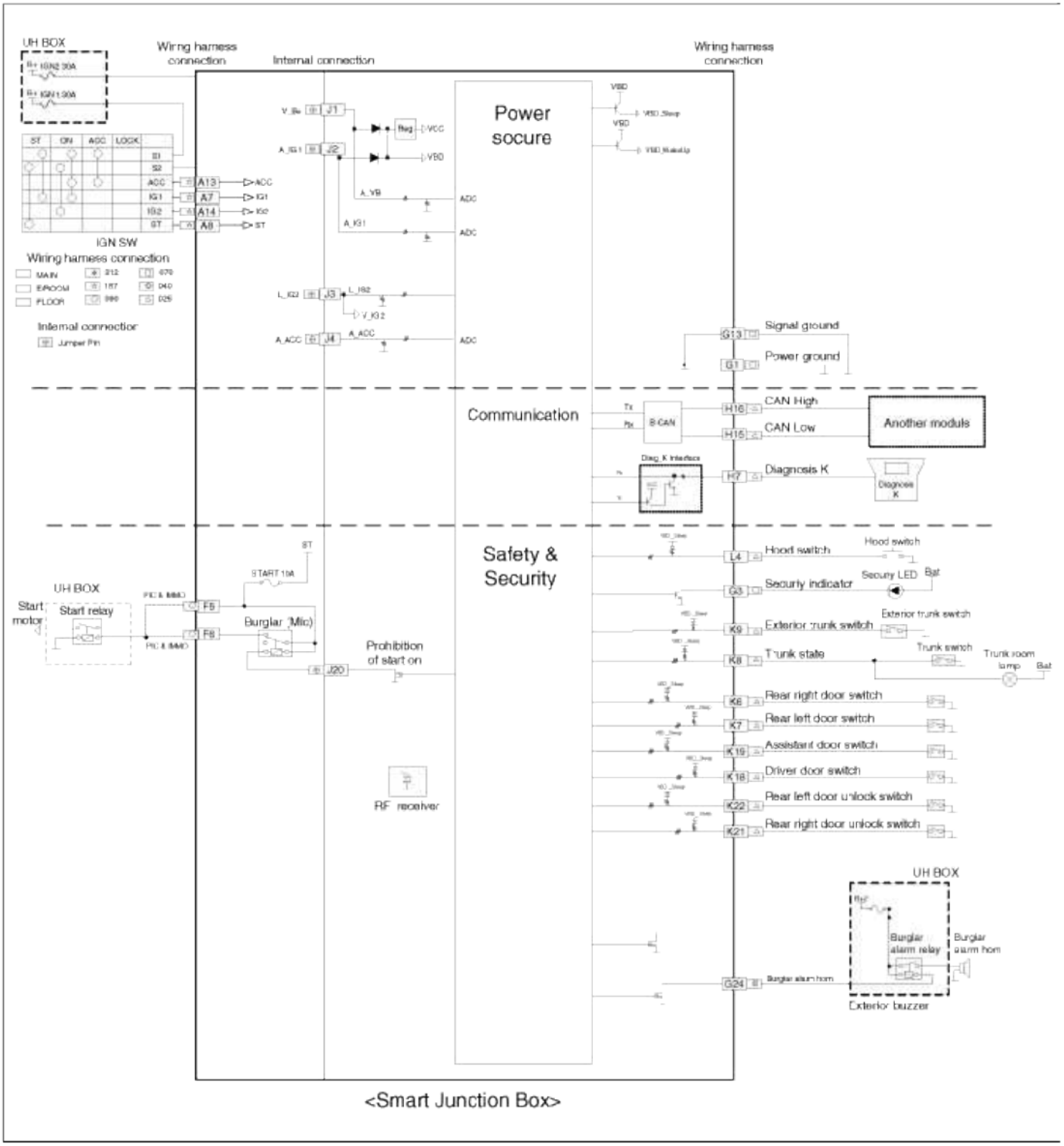

Body Electrical System > Keyless Entry And Burglar Alarm > Description and Operation

Description

Remote Keyless Entry System

The described function is a radio-frequency remote control for central doors locking / unlocking, trunk release and Panic activity of an automotive vehicle without using a mechanical key.

This system confirms successful (un-)locking through flash light or/and a horn signal.

This will be a part of the equipment of vehicles in case of the Non-SMK variant.

- Transmitter with 3 buttons (door locking, door unlocking, and panic)
- Receiver is integrated in the BCM.
- BCM, control unit in which remote control decoding is done

cardiagn.com

RF System Function Data Flow

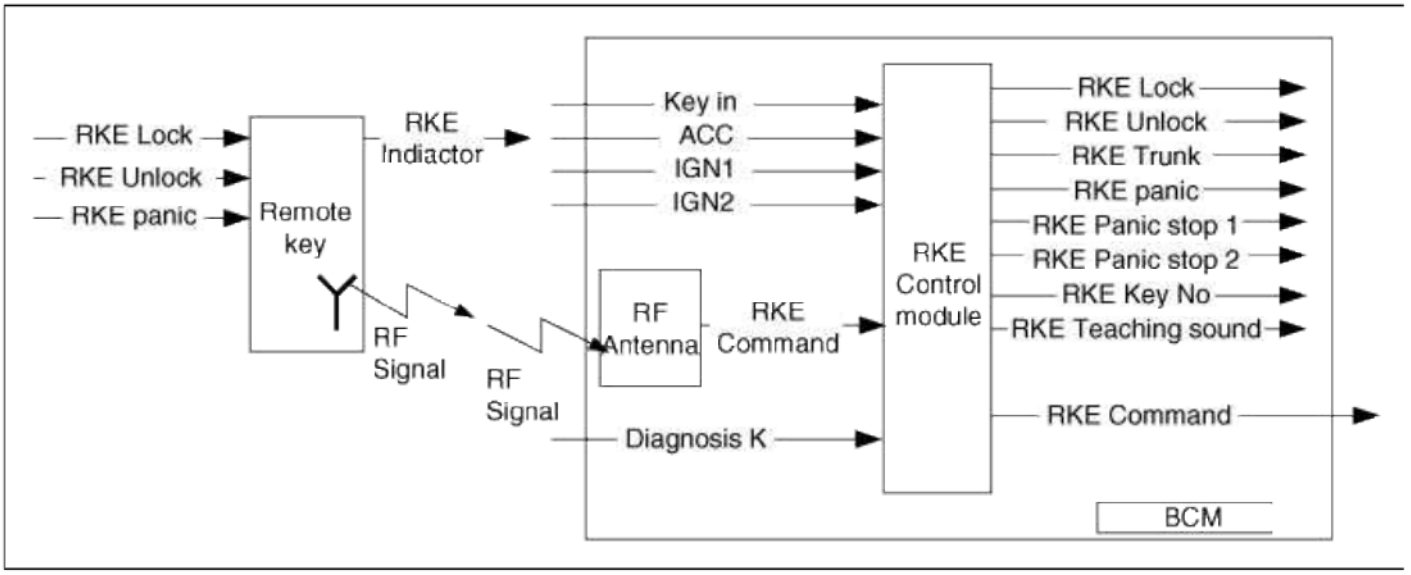

Key (button) Operation

1. New button event is detected in the condition of "button-off".
2. Chattering time of Lock/Unlock buttons is 100 ms and Trunk button have 1s chattering time and Panic button is 500ms.
3. If a button switch is off before determining the button switch value (100ms), RF transmission is stopped.
4. If more two buttons pressed simultaneously, older is rejected.

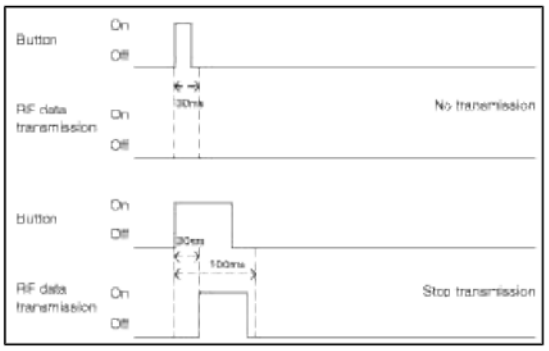

Key(button) Operation Abnormal Transmit Timing Chart

Indicator (LED)

Each transmitter has a red LED on the housing top. It indicates the transmission activity. The LED blinks same times with RF data First valid frame transmission times follow is "normal frame" case.

Normal frame cases are Lock frame, Unlock frame, Panic frame, Trunk frame. it is also valid case and first detection frame.

There is one exception to this rule, Panic Stop frame has to ignore for LED blinking.

If you want to know other cases, refer the figure in chapter for Validated Key (button) Input for Protection of Panic noise.

When RF Data is transmitted, the LED is blinked like below.

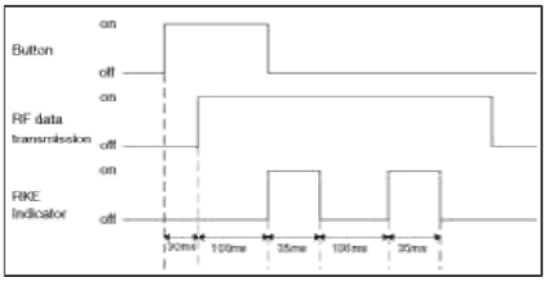

Receiver & BCM Function

cardiagn.com

This function describes the following features

- RKE Lock
- RKE Unlock
- RKE Panic
- RKE PanicStop1/ RKE PanicStop2
- Memory order by RKE Lock
- Key Teaching
- Synchronization / Resynchronization

Key Teaching

Key Teaching is that BCM has the identification of remote key and Synchronization of rolling code between BCM and remote key

1. Key Teaching with GDS Diagnostic Tool

A. Key teaching Step refers to the Diagnostic Specification.

Step	User Action	BCM Action
1	Connect Diag-Tool to BCM	
2	Start Diag-Tool RKE Teaching Mode	BCM ready RKE Teaching
3	Press the RKE's any Button	- BCM Save the issue RKE's ID Code and Rolling Code. - If RKE Teaching succeeds, BCM sounds the internal buzzer one time.
4	If user wants teach additional RKE, enter the Diag-Tool's additional RKE Teaching Mode	BCM ready RKE Teaching
5	Press the RKE's any Button	- BCM Save the issue RKE's ID Code and Rolling Code. - If RKE Teaching succeeds, BCM sounds the internal buzzer one time.
6	If user wants teach additional RKE, repeat step4,5	Maximum 4 RKE's Teaching is Possible.
7	If user doesn't want teach RKE, enter the Diag-Tool's Stop RKE Teaching Mode	BCM terminate RKE Teaching mode.

cardiagn.com

2. Key Teaching Sound

Only for information: (RKE teaching sound is described in Warning function specification)

A. When each Key's teaching is ended, magnetic buzzer is operated, every one time.

B. Key Teaching Buzzer Sound Characteristics

Type	Magnetic Buzzer
Key Teaching Buzzer Sound frequency :	800 Hz
Key Teaching Buzzer Sound Signal Duty Ratio :	50% Duty
Key Teaching Buzzer Sound Period :	0.6 sec
Key Teaching Buzzer Sound duration :	0.6 sec

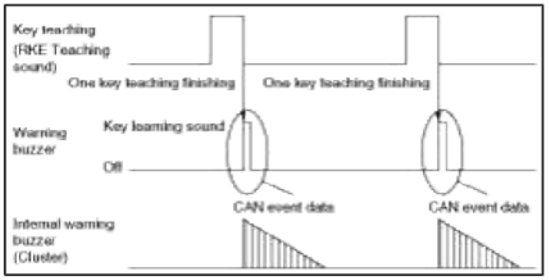

Burglar Alarm System

- The Burglar Alarm System is a function used to prevent or deter the unauthorized appropriation of the vehicle. Theft prevention or Burglar Alarm function has been introduced to assert the ownership whenever the rightful owner is physically present. In an attempt to discourage theft, Burglar Alarm works by emitting high-volume sound (Horn) when triggered by circuit breach. This vehicle alarm is designed to be triggered by opening special switches (e.g. doors, hood, trunk open switch contacts)
- This system also prevents the car from starting by disabling Starter relay if intrusion has been detected.
- To indicate that the vehicle is anti-theft protected a blinking indicator located at a visible area in the vehicle is provided (this is part of a theft preventive action).

The Alarm System function group consists of an Burglar Alarm function.

The Burglar Alarm offers a theft protection functions which

1. Armed by
   A. Mechanical key lock switch in driver side door if Mechanical Option is set
   B. By RKE lock or SMK lock command
   C. All door lock and then all door closed if Mechanical Option is set
2. Triggers an alarm when
   A. Any doors open
   B. Hood open
   C. Trunk open by unknown event
3. Disarmed by
   A. Turning the mechanical key unlock switch in driver side door if Mechanical Option is set
   B. By RKE unlock or SMK unlock command

Burglar Alarm Function Data Flow

cardiagn.com

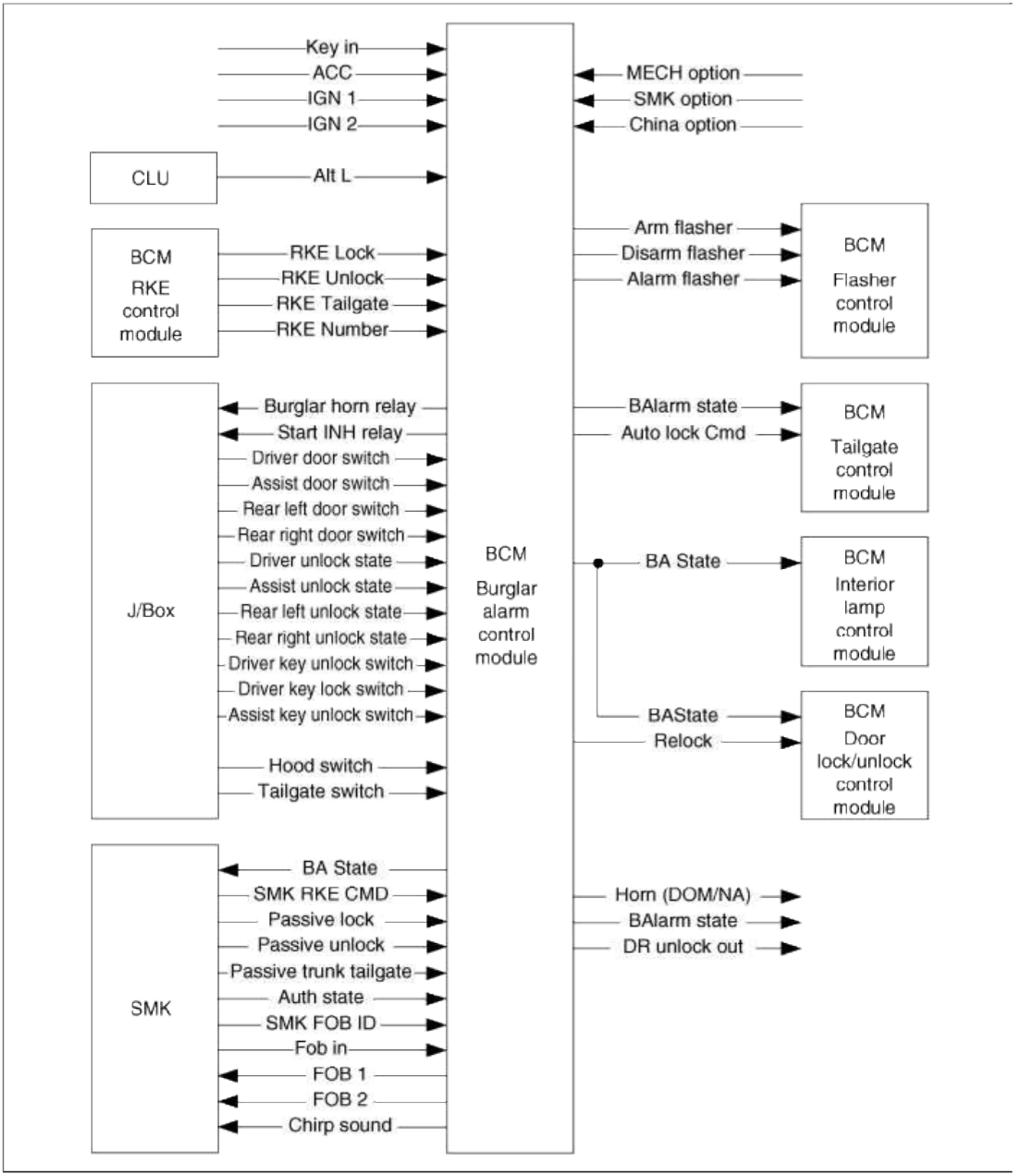

Function	Characteristics	Name	
		Hardware Label	Spec. Designation
	Logic	L_ACC	Accessory Signal
		L_IGN2	Ignition 2 Power
		L_KeyIn	Key In signal
	Analog	A_IGN1	Ignition 1 Power
		C_ASTDRSW	Assistant Door Switch Status

cardiagn.com

Input	Communication	C_AltL	Engine is running
		C_ASTUnlockState	Assistant door unlock state
		C_DRVDRSW	Driver Door Switch status
		C_DRVKeyLockSW	Driver Door Key Lock signal
		C_DRVKeyUnlockSW	Driver Door Key Unlock signal
		C_ASTKeyUnlockSW	Key Cylinder Unlock SW In Assistant Door
		C_DRVUnlockState	Driver door unlock state
		C_FobIn	Fob in SW
		C_HoodSW	Hood Closing Status
		C_PassiveTrunk_TG	PIC Passive access trunk / tailgate
		C_PassiveLock	PIC Passive access lock for door module
		C_PassiveUnlock	PIC Passive access unlock for door module
		C_AuthState	Authentication state
		C_RLDRSW	Rear Left Door Switch Status
		C_RLUnlockState	Rear Left Door Unlock State
		C_RRDRSW	Rear Right Door Switch Status
		C_RRUnlockState	Rear Right Door Unlock State
		C_SMK_FOB_ID	RKE Command ID or Passive Access Command ID
		C_SMKRKECMD	SMK FOB RKE Command
		C_TGSW	Tail gate closing status
	Internal	b_RKELock	RKE Lock command: (Non-SMK Variant)
		b_RKETGate	RKE Tailgate open command: (Non-SMK Variant)
		b_RKEUnlock	RKE Unlock command: (Non-SMK Variant)
		RKENumber	Issued RKE Number
		b_MECHOption	ARM/DISARM by Mechanical Key Option
		b_SMKOption	Smart Key Option
		b_ChinaOption	China Option
Internal		b_HornAnsCmd	Horn Output Command by Horn Answer back function(Event Signal)
			After create On event, automatically turned Off.
		b_RKELockCmd	RKE Lock command(Event Signal)
		b_BAlarmState	Burglar Alarm State Information (all state indicated)
		b_AlarmFlasher	Alarm Flasher Request

cardiagn.com

Output	Internal	b_ArmFlasher	ARM Flasher Request
		b_BAState	Burglar Alarm State Information
		b_AutoLockCmd	Auto Lock Command(Event Signal)
		b_DisarmFlasher	DISARM Flasher Request
		b_Relock	Lock by Autolock
	Communication	C_BAlarmState*	BCM Burglar Alarm State
		C_BAState	Burglar Alarm State (To: SMK)
		C_StartINHRly	Start Inhibit Relay Control (Non-Immobilizer & Non-Smartkey option)
		C_BurglarHornRly	Burglar Alarm Horn Control
		C_ChirpSound	Lock Sound Command to Smart key Unit for Ext Buzzer
		C_FOB1	FOB ID1 at the origin of the change from DISARM to ARM
		C_FOB2	FOB ID2 at the origin of the change from DISARM to ARM
	Logic	O_DRUnlockOUT	Unlock Command to AV Unit
		O_HornRly	Burglar Alarm Horn Output in North America Area Only

Burglar Alarm Control Function

This function specification describes the following states of Burglar Alarm Control

- ARM Mode
- DISARM Mode
- ARMWAIT Mode
- ALARM Mode
- ARMHOLD Mode
- AutoLockTimer1 Mode
- AutoLockTimer2 Mode
- PREARM Mode
- REARM Mode

cardiagn.com

No	Pre-condition	Event	Result	Remark
1	All Entrances Closed	All kind of Lock	ARM Flash ARM Buzzer	Stay ARMWAIT mode during 30 sec and go to ARM mode
2	All Entrances Closed	All kind of Unlock	DISARM Flash DISARM Buzzer	
3	Any Entrance Opened			
4	All Entrances Closed, After Lock Trunk or Hood Open	Trunk or Hood Open → Close	ARM Flash	
5		Any Door Unlock		
6	Any Door Open, Trunk or Hood Open	RKE Unlock	DISARM Flash DISARM Buzzer	
7		MTS, Passive Unlock	DISARM Flash	
8	ARM mode	Any Entrance Opened	ALARM Flash ALARM Buzzer	

Function Description

Signal Activity

The Burglar Alarm System provides the function that shall inhibit the use of the vehicle when intrusion into the vehicle has been detected

1. Burglar Alarm State is managed by the Burglar Alarm Control function for SMK, and is dependant on Burglar Alarm Control state as follows:
   A. Burglar Alarm State = 1: Burglar Alarm Control state is in ARM or ALARM or REARM or ARMWAIT
   B. Burglar Alarm State = 0: Burglar Alarm Control state is in DISARM or AUTOLOCKTIMER1 or AUTOLOCKTIMER2 or ARMHOLD or PREARM
2. At the time of sending on the CAN signal to ARM type state from DISARM type state, the BCM unit shall send the CAN signals FOB1 and FOB2 set versus the memorized Key fob ID number.
   A. If Key Number = 1 is sending, FOB1 = 1 otherwise FOB1 = 0
   B. If Key Number = 2 is sending, FOB2 = 1 otherwise FOB2 = 0
3. To make available to other internal BCM functions the current Burglar Alarm Control state
4. Burglar Alarm State is updated each time the Burglar Alarm Control is changed of state.

Power Condition Activity

State by RESET Condition

cardiagn.com

Present State	After Reset	Action by Reset
DISARM	DISARM	No Action
ARMWAIT	ARMWAIT	No Action
ARM	ARM	No Action
ALARM	ALARM	Alarm Flashing
REARM	ALARM	Alarm Flashing
PREARM	DISARM	No Action
AUTOLOCKTIMER1	DISARM	No Action
AUTOLOCKTIMER2	DISARM	No Action
ARMHOLD	DISARM	No Action

1. Reset means battery input restarted.
2. Only in ALARM State or REARM State, when reset is occurred, it is retried Alarm Flashing.
3. After reset, All timers should be reset.

State Description

Parameter Value

Name	Default Value	Description
Alarm Time	Non NA: 27 sec +0/-2.7sec	Time for Burglar Alarm Flashing
	NA: 101 sec ±1sec	
Alarm Single Time	27 sec ± 2 sec	Burglar Alarm Single activation Time
Alarm Pause Time	10 sec ± 1 sec	Burglar Alarm Single activation Pause Time
On Time	DOM, NA : 0.5 sec ± 0.05 sec	Burglar Alarm Pulse On Time
	Others : 0.45 sec ± 0.045 sec	
Off Time	DOM, NA : 1.0 sec ± 0.1 sec	Burglar Alarm Pulse Off Time
	Others : 0.45 sec ± 0.045 sec	
AutoLock1Time	30 sec ±3sec	Time for AUTOLOCKTIMER1 to ARMWAIT
AutoLock2Time	30 sec ±3sec	Time for AUTOLOCKTIMER2 to PREARM
AutoLock3Time	30 sec ±3sec	Time for ARMHOLD to PREARM
ArmWait Time	Non China: 30 sec ±3sec	Time for ARMWAIT to ARM mode
	China: 8 + 0.1 sec	
Lock Fail Confirm Time	5 sec ± 0.5sec	Maximum time to receive locking status from doors
Key IGN Time	30 sec ±3sec	Minimum time in IGN position prior to leave ALARM state
ALT Alarm Release Time	3 sec ±0.3sec	Minimum time with alternator active prior to leave ALARM state

cardiagn.com

Arm Disarm Buzzer Duration	0.1 sec ±10msec	Chirp sound single pattern duration

DISARM

1. DISARM to DISARM

Condition 1

State	Description
Initial Condition	• DISARM STATE • Key Out state(Key On = Off) • Any Door is Open(All Doors Close = Off) or Tailgate is Open(TG SWITCH = On)
Event	Unlock by RKE(RKE Unlock command = Off → On)
Action	• DISARM Flashing(Disarm Flasher = On) • DISARM Buzzer Activation(Disarm Buzzer = On) • State should not be changed

Condition 2

State	Description
Initial Condition	• Any Door is Open(All Doors Close = Off) or Tailgate is Open(TG SWITCH = On)
Event	Unlock by SMK(Passive Unlock command = Off→ On)
Action	• DISARM Flashing(Disarm Flasher = On) • DISARM Buzzer Activation(Disarm Buzzer = On) • State should not be changed

Condition 3

State	Description
Initial Condition	• DISARM STATE
Event	Key On state (Key On = On)
Action	• Security IND is Off(Security IND = Off) • State should not be changed

Condition 4

State	Description
Initial Condition	• DISARM STATE
Event	Key Off state (Key On = Off)
Action	• Security IND is Blinking (Security IND = Blinking; 0.32sec:On/2sec:Off) • State should not be changed

cardiagn.com

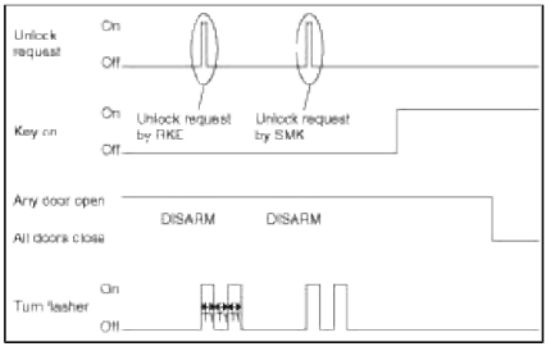

T1 : 0.5 ± 0.05 sec, T2 : Arm Disarm buzzer duration

2. ARMWAIT to DISARM

Condition 1

State	Description
Initial Condition	• ARMWAIT STATE
Event	1. Key In (Key In = On) or 2. Fob In (Fob In = On) or 3. Any Door is Open(All Doors Close = Off) or 4. Hood is Open(Hood switch = On) or 5. Tailgate is Open(TG SWITCH = On) or 6. Any Door is Unlock(All Doors Lock = Off) or 7. Authenticate by SMK(Auth State = Authentication) or 8. Pre-Authenticate by SMK(Auth State = Preauthentication)
Action	• Cancel Arm Wait Timer· State should go to DISARM State

Condition 2

State	Description
Initial Condition	• ARMWAIT STATE • Mechanical key ARM/DISARM Option is enable(MECH Option = On)
Event	Unlock by Mechanical Key (DRV Key Unlock Switch = Off → On or AST Key Unlock Switch = Off → On)
Action	• Cancel Arm Wait Timer • State should go to DISARM State

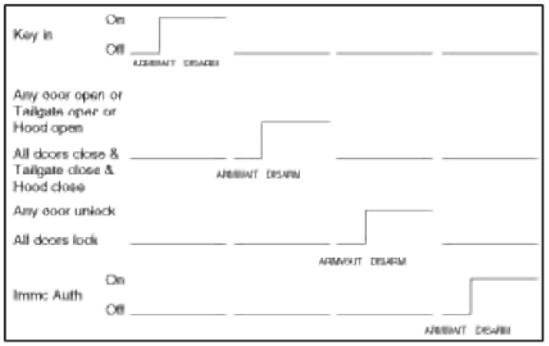

cardiagn.com

3. ARM to DISARM

Condition 1

State	Description
Initial Condition	• ARM STATE
Event	1. Authenticate by SMK(Auth State = Authentication) or 2. Pre-Authenticate by SMK(Auth State = Preauthentication)
Action	• State should go to DISARM State

Condition 2

State	Description
Initial Condition	• ARM STATE • No China Option (China Option = Off)
Event	Key In and IGN1 On and IGN2 On(Key IGN On = On)
Action	• State should go to DISARM State

Condition 3

State	Description
Initial Condition	• ARM STATE • Mechanical key ARM/DISARM Option is enable(MECH Option = On)
Event	Unlock by Mechanical Key (DRV KeyUnlock Switch = Off → On or AST KeyUnlock Switch = Off → On)
Action	• State should go to DISARM State

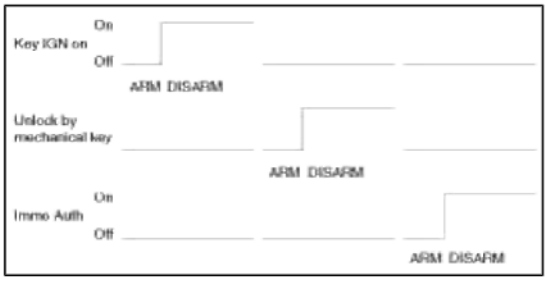

cardiagn.com

4. AUTO LOCK TIMER1 to DISARM

Condition 1

State	Description
Initial Condition	• AUTOLOCKTIMER1 STATE
Event	1. Key In(Key In = On) or 2. Fob In (Fob In = On) or 3. Any Door is Open(All Doors Close = Off) or 4. Hood is Open(Hood switch = On) or 5. Tailgate is Open(TG SWITCH = On) or 6. Authenticate by SMK(Auth State = Authentication) or 7. Pre-Authenticate by SMK(Auth State = Preauthentication) or 8. Lock request by RKE/SMK/Auto Lock but locking is fail (Lock Confirm Fail = Off →On)
Action	• Cancel AutoLock1Timer • State should go to DISARM State

Condition 2

State	Description
Initial Condition	• AUTOLOCKTIMER1 STATE • Mechanical key ARM/DISARM Option is enable(MECH Option = On)
Event	Lock request by mechanical key but locking is fail (Lock Confirm Fail = Off → On)
Action	• Cancel AutoLock1Timer • State should go to DISARM State

5. AUTO LOCK TIMER2 to DISARM

Condition 1

State	Description
Initial Condition	• AUTOLOCKTIMER2 STATE
Event	1. Key In On(Key In = On) or 2. Fob In (Fob In = On) or 3. Any Door is Open(All Doors Close = Off) or 4. Tailgate is Open(TG SWITCH = On) or 5. Authenticate by SMK(Auth State = Authentication) or 6. Pre-Authenticate by SMK(Auth State = Preauthentication) or 7. Lock request by RKE/SMK/Auto Lock but locking is fail (Lock Confirm Fail = Off → On)
Action	• Cancel AutoLock2Timer • State should go to DISARM State

cardiagn.com

Condition 2

State	Description
Initial Condition	• AUTOLOCKTIMER2 STATE • Mechanical key ARM/DISARM Option is enable(MECH Option = On)
Event	Lock request by mechanical key but locking is fail (Lock Confirm Fail = Off → On)
Action	• Cancel AutoLock2Timer • State should go to DISARM State

6. ARMHOLD to DISARM

Condition 1

State	Description
Initial Condition	• ARMHOLD STATE
Event	1. Key In (Key In = On) or 2. Fob In (Fob In = On) or 3. Any Door is Open(All Doors Close = Off) or 4. Hood is Open(Hood switch = On) or 5. Authenticate by SMK(Auth State = Authentication) or 6. Pre-Authenticate by SMK(Auth State = Preauthentication) or 7. Lock request by RKE/SMK/Auto Lock but locking is fail (Lock Confirm Fail = Off → On)
Action	• Cancel ArmHold Timer • State should go to DISARM State

Condition 2

State	Description
Initial Condition	• ARMHOLD STATE • Mechanical key ARM/DISARM Option is enable(MECH Option = On)
Event	1. Unlock by Mechanical Key (DRV Key Unlock Switch = Off → On or AST Key Unlock Switch = Off → On) or 2. Lock request by mechanical key but locking is fail (Lock Confirm Fail = Off → On)
Action	• Cancel ArmHold Timer • State should go to DISARM State

cardiagn.com

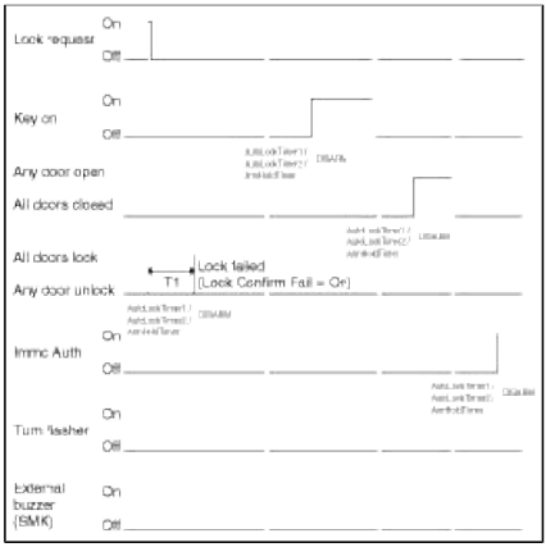

T1 : Lock fail confirm time

7. PREARM to DISARM

Condition 1

State	Description
Initial Condition	• PREARM STATE
Event	1. Key In On (Key In = On) or 2. Fob In (Fob In = On) or 3. Authenticate by SMK (Auth State = Authentication) or 4. Pre-Authenticate by SMK (Auth State = Preauthentication) or 5. All Doors are Close (All Doors Close = On) and Hood is Close (Hood switch = Off) and Tailgate is Close(TG SWITCH = Off) and Any Door is Unlock (All Doors Lock = Off)
Action	• State should go to DISARM State

Condition 2

State	Description
Initial Condition	• PREARM STATE • Mechanical key ARM/DISARM Option is enable(MECH Option = On)
Event	1. Unlock by Mechanical Key (DRV Key Unlock Switch = Off → On or AST Key Unlock Switch = Off → On)
Action	• State should go to DISARM State

Condition 3

cardiagn.com

State	Description
Initial Condition	• PREARM STATE • Any Door is Open(All Doors Close = Off) or Tailgate is Open(TG SWITCH = On)
Event	1. Unlock by RKE(RKE Unlock command = Off → On) or 2. Unlock by SMK(Passive Unlock command = Off → On)
Action	• DISARM Flashing(Disarm Flasher = On) • DISARM Buzzer Activation(Disarm Buzzer = On) • State should go to DISARM State

8. REARM to DISARM

Condition 1

State	Description
Initial Condition	• REARM STATE
Event	1. Tailgate release by RKE(RKE TGate command= Off → On) or 2. Tailgate release by SMK (Passive Trunk_TG = Off → On) or 3. Lock by RKE/SMK but Locking is Failed (Lock Confirm Fail = Off → On) or 4. Alternator active level over 3sec (ALTL Alarm Release Timer ≥ ALTL AlarmReleaseTime) or 5. Authenticate by SMK(Auth State = Authentication) or 6. Pre-Authenticate by SMK(Auth State = Preauthentication)
Action	• Cancel Key IGN Timer· Cancel ALTL Alarm Release Timer • Engine Start Inhibition state is released (Start INH Relay = Off) • State should go to DISARM State

Condition 2

State	Description
Initial Condition	• REARM STATE at Non China Option (China Option = Off)
Event	Key In On and IGN1 On and IGN2 On over 30sec (Key IGN Timer ≥ Key IGN Time)
Action	• Cancel Key IGN Timer • Cancel ALTL Alarm Release Timer • Engine Start Inhibition state is released (Start INH Relay = Off) • State should go to DISARM State

Condition 3

cardiagn.com

State	Description
Initial Condition	• REARM STATE • Mechanical key ARM/DISARM Option is enable(MECH Option = On)
Event	1. Unlock by Mechanical Key (DRV Key Unlock Switch = Off → On or AST Key Unlock Switch = Off → On) or 2. Lock by Mechanical Key but Locking is Failed(Lock Confirm Fail = Off→On)
Action	• Cancel Key IGN Timer • Cancel ALTL Alarm Release Timer • Engine Start Inhibition state is released (Start INH Relay = Off) • State should go to DISARM State

9. ALARM to DISARM

Condition 1

State	Description
Initial Condition	• ALARM STATE
Event	1. Tailgate release by RKE(RKE Tail Gate command= Off → On) or 2. Tailgate release by SMK (Passive Trunk_TG = Off → On) or 3. Lock by RKE/SMK but Locking is Failed (Lock Confirm Fail = Off → On) or 4. Alternator inactive level over 3sec (ALTL Alarm Release Timer ≥ ALTL AlarmReleaseTime) or 5. Authenticate by SMK(Auth State = Authentication) or 6. Pre-Authenticate by SMK(Auth State = Preauthentication)
Action	• Cancel Alarm Timer • Cancel Key IGN Timer • Cancel ALTL Alarm Release Timer • Stop alarm flashing (Alarm Flasher = Off) • Stop Burglar Alarm Horn(Burglar Horn Relay = Off / Horn Relay = OFF) • Engine Start Inhibition state is released (Start INH Relay = Off) • State should go to DISARM State

Condition 2

cardiagn.com

State	Description
Initial Condition	• ALARM STATE at Non China Option(China Option = Off)
Event	Key In On and IGN1 On and IGN2 On over 30sec (Key IGN Timer ≥ Key IGN Time)
Action	• Cancel Alarm Timer • Cancel Key IGN Timer • Cancel ALTL Alarm Release Timer • Stop alarm flashing (Alarm Flasher = Off) • Stop Burglar Alarm Horn(Burglar Horn Relay = Off / Horn Relay = OFF) • Engine Start Inhibition state is released (Start INH Relay = Off) • State should go to DISARM State

Condition 3

State	Description
Initial Condition	• ALARM STATE • Mechanical key ARM/DISARM Option is enable(MECH Option = On)
Event	1. Unlock by Mechanical Key (DRV Key Unlock Switch = Off → On or AST Key Unlock Switch = Off → On) or 2. Lock by Mechanical Key but Locking is Failed(Lock Confirm Fail = Off→On)
Action	• Cancel Alarm Timer • Cancel Key IGN Timer • Cancel ALTL Alarm Release Timer • Stop alarm flashing (Alarm Flasher = Off) • Stop Burglar Alarm Horn(Burglar Horn Relay = Off / Horn Relay = OFF) • Engine Start Inhibition state is released (Start INH Relay = Off) • State should go to DISARM State

Condition 4

State	Description
Initial Condition	• ALARM STATE • Any Door is Open(All Doors Close = Off) or Tailgate Open(TG SWITCH = On)
Event	1. Unlock by RKE (RKE Unlock command = Off → On) or 2. Unlock by SMK(Passive Unlock command = Off → On)
Action	• Cancel Alarm Timer • Cancel Key IGN Timer • Cancel ALTL Alarm Release Timer • Stop alarm flashing (Alarm Flasher = Off) • Stop Burglar Alarm Horn(Burglar Horn Relay = Off / Horn Relay = Off) • DISARM Flashing(Disarm Flasher = On) • DISARM Buzzer Activation(Disarm Buzzer = On) • Engine Start Inhibition state is released (Start INH Relay = Off)

cardiagn.com

	• State should go to DISARM State

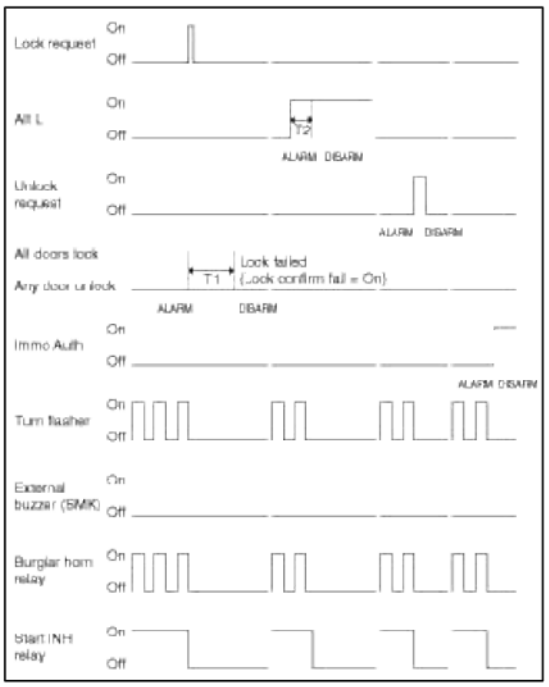

T1 : Lock fail confirm time,

T2 : ALT L alarm release time

ARM WAIT

1. DISARM to ARMWAIT

Condition 1

State	Description
Initial Condition	• DISARM STATE • Key Out state(Key On = Off) • All Doors are Close(All Doors Close = On) • Hood is Close(Hood switch = Off) • Tailgate is Close(TG SWITCH = Off)
Event	1. Lock by RKE and Locking is success (RKE Lock Confirm Success = Off → On) or 2. Lock by SMK and Locking is success (Passive Lock Confirm Success = Off → On)
Action	• ARM Flashing(Arm Flasher = On) • ARM Buzzer Activation(Arm Buzzer = On) • Start Arm Wait Timer • State should go to ARMWAIT State

Condition 2

cardiagn.com

State	Description
Initial Condition	• DISARM STATE • Key Out state(Key On = Off) • All Doors are Close(All Doors Close = On) • Hood is Close(Hood switch = Off) • Tailgate is Close(TG SWITCH = Off) • Mechanical key ARM/DISARM Option is enable(MECH Option = On)
Event	Lock by Mechanical Key and Locking is success (Mechanical Key Lock Confirm Success = Off → On)
Action	• Start Arm Wait Timer • State should go to ARMWAIT State

Condition 3

State	Description
Initial Condition	• DISARM STATE • Key Out state(Key On = Off) • All Doors are Lock(All Doors Lock = On) • Any Door is Open(All Doors Close = Off) • Hood is Close(Hood switch = Off) • Tailgate is Close(TG SWITCH = Off) • Mechanical key ARM/DISARM Option is enable(MECH Option = On)
Event	All Doors are Close(All Doors Close = Off → On)
Action	• Start Arm Wait Timer • State should go to ARMWAIT State

Condition 4

State	Description
Initial Condition	• DISARM STATE • Key Out state(Key On = Off) • All Doors are Lock(All Doors Lock = On) • All Doors are Close(All Doors Close = On) • Hood is Close(Hood switch = Off) • Tailgate is Open(TG SWITCH = On) • Mechanical key ARM/DISARM Option is enable(MECH Option = On)
Event	Tailgate is Close(TG SWITCH = On → Off)
Action	• Start Arm Wait Timer • State should go to ARMWAIT State

cardiagn.com

2. ARMWAIT to ARMWAIT

Condition 1

State	Description
Initial Condition	• any state
Event	enter ARMWAIT STATE
Action	• Security IND is On (Security IND = On) • State should not be changed

Condition 2

State	Description
Initial Condition	• ARMWAIT STATE
Event	1. Lock by RKE and Locking is success (RKE Lock Confirm Success = Off → On) or 2. Lock by SMK and Locking is success (Passive Lock Confirm Success = Off → On)
Action	• ARM Flashing(Arm Flasher = On) • ARM Buzzer Activation(Arm Buzzer = On) • State should not be changed

3. AUTO LOCK TIMER1 to ARMWAIT

Condition 1

State	Description
Initial Condition	• AUTOLOCKTIMER1 STATE • Key Out state(Key On = Off) • All Doors are Close(All Doors Close = On) • Hood is Close(Hood switch = Off) • Tailgate is Close(TG SWITCH = Off)
Event	1. Lock by RKE and Locking is success (RKE Lock Confirm Success = Off → On) or 2. Lock by SMK and Locking is success (Passive Lock Confirm Success = Off → On)
Action	• Cancel AutoLock1Timer • ARM Flashing(Arm Flasher = On) • ARM Buzzer Activation(Arm Buzzer = On) • Start Arm Wait Timer • Security IND is On (Security IND = On) • State should go to ARMWAIT State

Condition 2

cardiagn.com

State	Description
Initial Condition	• AUTOLOCKTIMER1 STATE • Key Out state(Key On = Off) • All Doors are Close(All Doors Close = On) • Hood is Close(Hood switch = Off) • Tailgate is Close(TG SWITCH = Off) • Mechanical key ARM/DISARM Option is enable(MECH Option = On)
Event	Lock by Mechanical Key and Locking is success (Mechanical Key Lock Confirm Success = Off → On)
Action	• Cancel AutoLock1Timer • Start Arm Wait Timer • Security IND is On (Security IND = On) • State should go to ARMWAIT State

Condition 3

State	Description
Initial Condition	• AUTOLOCKTIMER1 STATE • Key Out state(Key On = Off) • All Doors are Close(All Doors Close = On) • Hood is Close(Hood switch = Off) • Tailgate is Close(TG SWITCH = Off)
Event	• Lock by Auto Lock (AutoLock1Timer ≥ AutoLock1Time) and Locking is success (AutoLockConfirmSuccess = Off → On)
Action	• Cancel AutoLock1Timer • ARM Flashing(Arm Flasher = On) • Start Arm Wait Timer • Security IND is On (Security IND = On) • State should go to ARMWAIT State

cardiagn.com

4. ARMHOLD to ARMWAIT

Condition 1

State	Description
Initial Condition	• ARMHOLD STATE • Key Out state(Key On = Off) • All Doors are Close(All Doors Close = On) • Hood is Close(Hood switch = Off) • Tailgate is Close(TG SWITCH = Off)
Event	1. Lock by RKE and Locking is success (RKE Lock Confirm Success = Off → On) or 2. Lock by SMK and Locking is success (Passive Lock Confirm Success = Off → On)
Action	• Cancel ArmHold Timer • ARM Flashing(Arm Flasher = On) • ARM Buzzer Activation(Arm Buzzer = On) • Start Arm Wait Timer • Security IND is On (Security IND = On) • State should go to ARMWAIT State

Condition 2

State	Description
Initial Condition	• ARMHOLD STATE· Key Out state(Key On = Off) • All Doors are Close(All Doors Close = On) • Hood is Close(Hood switch = Off) • Tailgate is Close(TG SWITCH = Off) • Mechanical key ARM/DISARM Option is enable(MECH Option = On)
Event	Lock by Mechanical Key and Locking is success (Mechanical Key Lock Confirm Success = Off → On)
Action	• Cancel ArmHold Timer • Start Arm Wait Timer • Security IND is On (Security IND = On) • State should go to ARMWAIT State

cardiagn.com

5. PREARM to ARMWAIT

Condition 1

State	Description
Initial Condition	• PREARM STATE
Event	All Doors are Close (All Doors Close = On) and Hood is Close(Hood switch = Off) and Tailgate is Close(TG SWITCH = Off) and All Doors are Lock (All Doors Lock = On)
Action	• ARM Flashing(Arm Flasher = On) • Start Arm Wait Timer • Security IND is On (Security IND = On) • State should go to ARMWAIT State

6. REARM to ARMWAIT

Condition 1

State	Description
Initial Condition	• REARM STATE • Key Out state(Key On = Off) • All Doors are Close(All Doors Close = On) • Hood is Close(Hood switch = Off) • Tailgate is Close(TG SWITCH = Off)
Event	1. Lock by RKE and Locking is success (RKE Lock Confirm Success = Off → On) or 2. Lock by SMK and Locking is success (Passive Lock Confirm Success = Off → On)
Action	• Cancel Key IGN Timer • Cancel ALTL Alarm Release Timer • Engine Start Inhibition state is released (Start INH Relay = Off) • ARM Flashing(Arm Flasher = On) • ARM Buzzer Activation(Arm Buzzer = On) • Start Arm Wait Timer • Security IND is On (Security IND = On) • State should go to ARMWAIT State

Condition 2

cardiagn.com

State	Description
Initial Condition	• REARM STATE • Key Out state(Key On = Off) • All Doors are Close(All Doors Close = On) • Hood is Close(Hood switch = Off) • Tailgate is Close(TG SWITCH = Off) • Mechanical key ARM/DISARM Option is enable(MECH Option = On)
Event	Lock by Mechanical Key and Locking is success (Mechanical Key Lock Confirm Success = Off → On)
Action	• Cancel Key IGN Timer • Cancel ALTL Alarm Release Timer • Engine Start Inhibition state is released (Start INH Relay = Off) • Start Arm Wait Timer • Security IND is On (Security IND = On) • State should go to ARMWAIT State

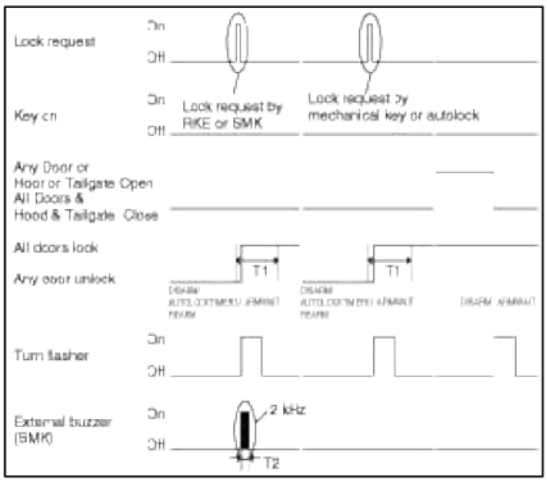

T1 : Lock fail confirm time, T2 : Arm Disarm buzzer duration

7. ALARM to ARMWAIT

Condition 1

State	Description
Initial Condition	• ALARM STATE • Key Out state(Key On = Off) • All Doors are Close(All Doors Close = On) • Hood is Close(Hood switch = Off) • Tailgate is Close(TG SWITCH = Off)
Event	1. Lock by RKE and Locking is success (RKE Lock Confirm Success = Off → On) or 2. Lock by SMK and Locking is success (Passive Lock Confirm Success = Off → On)
	• Cancel Alarm Timer • Cancel Key IGN Timer • Cancel ALTL Alarm Release Timer • Stop alarm flashing. (Alarm Flasher = Off)

cardiagn.com

Action	• Stop Burglar Alarm Horn(Burglar Horn Relay = Off / Horn Relay = Off) • Engine Start Inhibition state is released (Start INH Relay = Off) • ARM Flashing(Arm Flasher = On) • ARM Buzzer Activation(Arm Buzzer = On) • Start Arm Wait Timer • Security IND is On (Security IND = On) • State should go to ARMWAIT State

Condition 2

State	Description
Initial Condition	• ALARM STATE • Key Out state(Key On = Off) • All Doors are Close(All Doors Close = On) • Hood is Close(Hood switch = Off) • Tailgate is Close(TG SWITCH = Off) • Mechanical key ARM/DISARM Option is enable(MECH Option = On)
Event	Lock by Mechanical Key and Locking is success (Mechanical Key Lock Confirm Success = Off → On)
Action	• Cancel Alarm Timer • Cancel Key IGN Timer • Cancel ALTL Alarm Release Timer • Stop alarm flashing. (Alarm Flasher = Off) • Stop Burglar Alarm Horn(Burglar Horn Relay = Off / Horn Relay = Off) • Engine Start Inhibition state is released (Start INH Relay = Off) • Start Arm Wait Timer • Security IND is On (Security IND = On) • State should go to ARMWAIT State

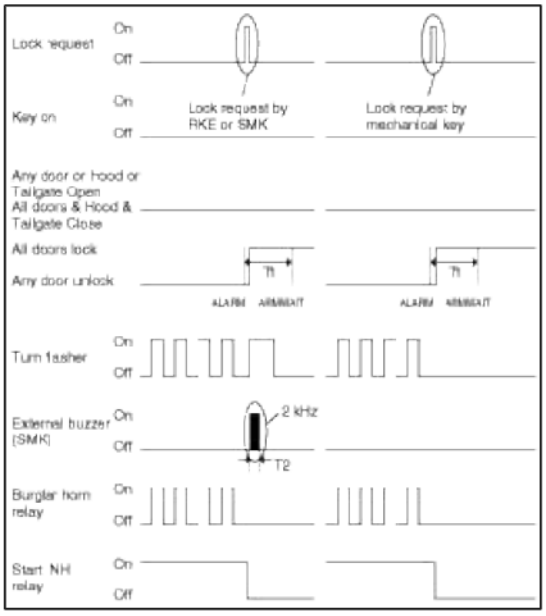

T1 : Lock fail confirm time,

T2 : Arm Disarm buzzer duration

ARM

cardiagn.com

1. ARMWAIT to ARM

Condition 1

State	Description
Initial Condition	• ARMWAIT STATE
Event	Arm Wait Timer ≥ ArmWait Time
Action	• Cancel Arm Wait Timer • State should go to ARM State

2. ARM to ARM

Condition 1

State	Description
Initial Condition	• any state
Event	enter ARM STATE
Action	• Security IND is Blinking (Security IND = Blinking; 0.32sec:On/2sec:Off) • State should not be changed

Condition 2

State	Description
Initial Condition	• ARM STATE
Event	1. Lock by RKE and Locking is success (RKE Lock Confirm Success = Off → On) or 2. Lock by SMK and Locking is success (Passive Lock Confirm Success = Off → On)
Action	• ARM Flashing(Arm Flasher = On) • ARM Buzzer Activation(Arm Buzzer = On) • State should not be changed

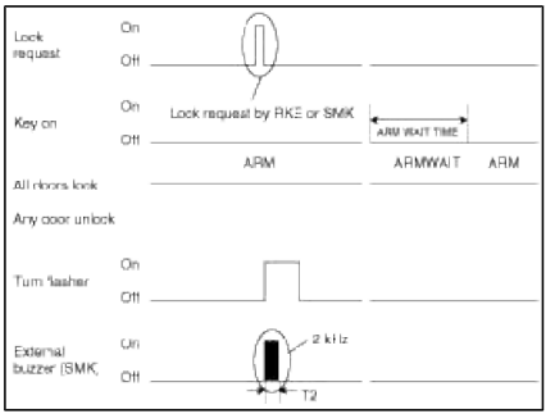

ARMHOLD

cardiagn.com

1. ARMWAIT to ARMHOLD

Condition 1

State	Description
Initial Condition	• ARMWAIT STATE
Event	1. Tailgate release by RKE(RKE Tail Gate command= Off → On) or 2. Tailgate release by SMK (Passive Trunk_TG = Off → On)
Action	• Cancel Arm Wait Timer • DISARM Flashing(Disarm Flasher = On) • Start ArmHold Timer • Security IND is Blinking (Security IND = Blinking; 0.32sec:On/2sec:Off) • State should go to ARMHOLD State

2. ARM to ARMHOLD

Condition 1

State	Description
Initial Condition	• ARM STATE
Event	1. Tailgate release by RKE(RKE Tail Gate command= Off → On) or 2. Tailgate release by SMK (Passive Trunk_TG = Off → On)
Action	• DISARM Flashing(Disarm Flasher = On) • Start ArmHold Timer • State should go to ARMHOLD State

3. ARMHOLD to ARMHOLD

Condition 1

State	Description
Initial Condition	Any State
Event	1. Enter ARMHOLD State
Action	• Security IND is Blinking (Security IND = Blinking; 0.32sec:On/2sec:Off) • State should not be changed

Condition 2

cardiagn.com

State	Description
Initial Condition	• ARMHOLD State
Event	1. Tailgate release by RKE(RKE Tail Gate command= Off → On) or 2. Tailgate release by SMK (Passive Trunk_TG = Off → On)
Action	• DISARM Flashing(Disarm Flasher = On) • Restart ArmHold Timer • State should not be changed

AUTOLOCKTIMER1

1. DISARM to AUTOLOCKTIMER1

Condition 1

State	Description
Initial Condition	• DISARM STATE • Key Out state(Key On = Off) • All Doors are Close(All Doors Close = On) • Hood is Close(Hood switch = Off) • Tailgate is Close(TG SWITCH = Off)
Event	1. Unlock by RKE(RKE Unlock command = Off → On) or 2. Unlock by SMK(Passive Unlock command = Off → On)
Action	• DISARM Flashing(Disarm Flasher = On) • DISARM Buzzer Activation(Disarm Buzzer = On) • Start AutoLock1Timer • State should go to AUTOLOCKTIMER1 State

2. ARMWAIT to AUTOLOCKTIMER1

Condition 1

State	Description
Initial Condition	• ARMWAIT STATE • All Doors are Close(All Doors Close = On) • Hood is Close(Hood switch = Off) • Tailgate is Close(TG SWITCH = Off)
Event	1. Unlock by RKE(RKE Unlock command = Off → On) or 2. Unlock by SMK(Passive Unlock command = Off → On)
Action	• Cancel Arm Wait Timer • DISARM Flashing(Disarm Flasher = On) • DISARM Buzzer Activation(Disarm Buzzer = On) • Start AutoLock1Timer • State should go to AUTOLOCKTIMER1 State

cardiagn.com

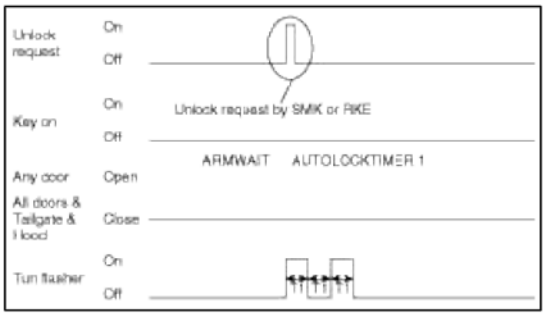

T1 : 0.5 ± 0.05 sec

3. ARM to AUTOLOCKTIMER1

Condition 1

State	Description
Initial Condition	• ARM STATE • All Doors are Close(All Doors Close = On) • Hood is Close(Hood switch = Off) • Tailgate is Close(TG SWITCH = Off)
Event	1. Unlock by RKE(RKE Unlock command = Off → On) or 2. Unlock by SMK(Passive Unlock command = Off → On)
Action	• DISARM Flashing(Disarm Flasher = On) • Start AutoLock1Timer • DISARM Buzzer Activation(Disarm Buzzer = On) • State should go to AUTOLOCKTIMER1 State

4. AUTOLOCKTIMER1 to AUTOLOCKTIMER1

Condition 1

State	Description
Initial Condition	• any state
Event	1. enter AUTOLOCKTIMER1 STATE
Action	• Security IND is Blinking (Security IND = Blinking; 0.32sec:On/2sec:Off) • State should not be changed

Condition 2

cardiagn.com

State	Description
Initial Condition	• AUTOLOCKTIMER1 STATE • All Doors are Close(All Doors Close = On) • Hood is Close(Hood switch = Off) • Tailgate is Close(TG SWITCH = Off)
Event	1. Unlock by RKE(RKE Unlock command = Off → On) or 2. Unlock by SMK(Passive Unlock command = Off → On)
Action	• DISARM Flashing(Disarm Flasher = On) • DISARM Buzzer Activation(Disarm Buzzer = On) • Start AutoLock1Timer • State should not be changed

Condition 3

State	Description
Initial Condition	• AUTOLOCKTIMER1 STATE
Event	AutoLock1Timer timer running and is elapsed (AutoLock1Timer ≥ AutoLock1Time)
Action	• Cancel AutoLock1Timer • Lock by Auto lock (Auto Lock command = On; Relock = On) • State should not be changed

5. ARMHOLD to AUTOLOCKTIMER1

Condition 1

State	Description
Initial Condition	• ARMHOLD STATE • All Doors are Close(All Doors Close = On) • Hood is Close(Hood switch = Off) • Tailgate is Close(TG SWITCH = Off)
Event	1. Unlock by RKE(RKE Unlock command = Off → On) or 2. Unlock by SMK(Passive Unlock command = Off → On)
Action	• Cancel ArmHold Timer • DISARM Flashing(Disarm Flasher = On) • DISARM Buzzer Activation(Disarm Buzzer = On) • Start AutoLock1Timer • State should go to AUTOLOCKTIMER1 State

cardiagn.com

6. REARM to AUTOLOCKTIMER1

Condition 1

State	Description
Initial Condition	• REARM STATE • All Doors are Close(All Doors Close = On) • Hood is Close(Hood switch = Off) • Tailgate is Close(TG SWITCH = Off)
Event	1. Unlock by RKE(RKE Unlock command = Off → On) or 2. Unlock by SMK(Passive Unlock command = Off → On)
Action	• Cancel Key IGN Timer • Cancel ALTL Alarm Release Timer • Engine Start Inhibition state is released (Start INH Relay = Off) • DISARM Flashing(Disarm Flasher = On) • DISARM Buzzer Activation(Disarm Buzzer = On) • Start AutoLock1Timer • State should go to AUTOLOCKTIMER1 State

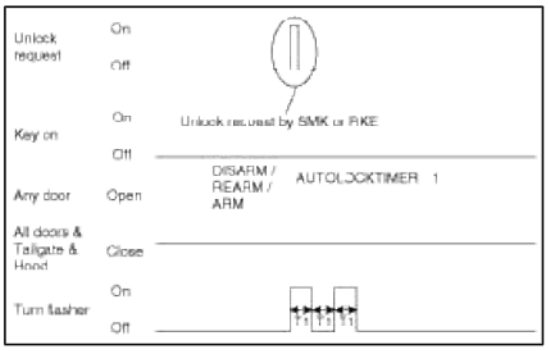

T1 : 0.5 ± 0.05 sec

7. ALARM to AUTOLOCKTIMER1

Condition 1

State	Description
Initial Condition	• ALARM STATE • All Doors are Close(All Doors Close = On) • Hood is Close(Hood switch = Off) • Tailgate is Close(TG SWITCH = Off)
Event	1. Unlock by RKE(RKE Unlock command = Off → On) or 2. Unlock by SMK(Passive Unlock command = Off → On)
Action	• Cancel Key IGN Timer • Cancel Alarm Timer • Cancel ALTL Alarm Release Timer • Stop alarm flashing. (Alarm Flasher = Off) • Stop Burglar Alarm Horn(Burglar Horn Relay = Off / Horn Relay = Off) • Engine Start Inhibition state is released (Start INH Relay = Off) • DISARM Flashing(Disarm Flasher = On)

cardiagn.com

	• DISARM Buzzer Activation(Disarm Buzzer = On) • Start AutoLock1Timer • State should go to AUTOLOCKTIMER1 State

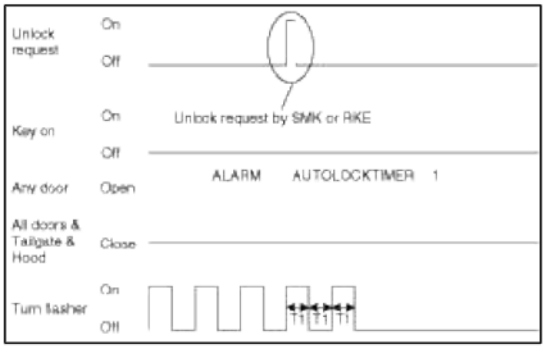

T1 : 0.5 ± 0.05 sec

AUTOLOCKTIMER2

1. DISARM to AUTOLOCKTIMER2

Condition 1

State	Description
Initial Condition	• DISARM STATE • Key Out state(Key On = Off) • All Doors are Close(All Doors Close = On) • Hood is Open(Hood switch = On) • Tailgate is Close(TG SWITCH = Off)
Event	1. Unlock by RKE(RKE Unlock command = Off → On) or 2. Unlock by SMK(Passive Unlock command = Off → On)
Action	• DISARM Flashing(Disarm Flasher = On) • DISARM Buzzer Activation(Disarm Buzzer = On) • Start AutoLock2Timer • State should go to AUTOLOCKTIMER2 State

cardiagn.com

2. AUTOLOCKTIMER2 to AUTOLOCKTIMER2

Condition 1

State	Description
Initial Condition	• Any State
Event	Enter AUTOLOCKTIMER2 STATE
Action	• Security IND is Blinking (Security IND = Blinking; 0.32sec:On/2sec:Off) • State should not be changed

Condition 2

State	Description
Initial Condition	• AUTOLOCKTIMER2 STATE • Key Out state(Key On = Off) • All Doors are Close(All Doors Close = On) • Hood is Open(Hood switch = On) • Tailgate is Close(TG SWITCH = Off)
Event	1. Unlock by RKE(RKE Unlock command = Off → On) or 2. Unlock by SMK(Passive Unlock command = Off → On)
Action	• DISARM Flashing(Disarm Flasher = On) • DISARM Buzzer Activation(Disarm Buzzer = On) • Restart AutoLock2Timer • State should not be changed

Condition 3

State	Description
Initial Condition	• AUTOLOCKTIMER2 STATE
Event	AutoLock2Timer timer running and is elapsed (AutoLock2Timer ≥ AutoLock2Time)
Action	• Cancel AutoLock2Timer • Lock by Auto lock (Auto Lock command = On; Relock = On) • State should not be changed

cardiagn.com

3. PREARM to AUTOLOCKTIMER2

Condition 1

State	Description
Initial Condition	• PREARM STATE • Key Out state(Key On = Off) • All Doors are Close(All Doors Close = On) • Hood is Open(Hood switch = On) • Tailgate is Close(TG SWITCH = Off)
Event	1. Unlock by RKE(RKE Unlock command = Off → On) or 2. Unlock by SMK(Passive Unlock command = Off → On)
Action	• DISARM Flashing(Disarm Flasher = On) • DISARM Buzzer Activation(Disarm Buzzer = On) • Start AutoLock2Timer • State should go to AUTOLOCKTIMER2 State

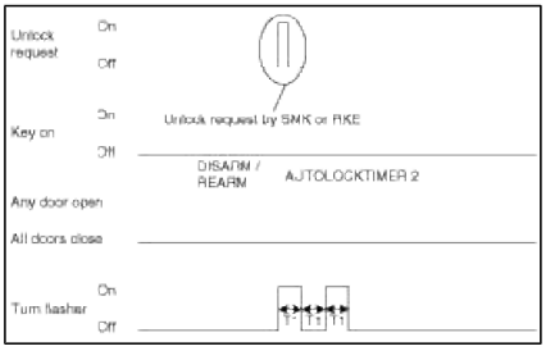

T1 : 0.5 ± 0.05 sec

4. ALARM to AUTOLOCKTIMER2

Condition 1

State	Description
Initial Condition	• ALARM STATE· Key Out state(Key On = Off) • All Doors are Close(All Doors Close = On) • Hood is Open(Hood switch = On) • Tailgate is Close(TG SWITCH = Off)
Event	1. Unlock by RKE(RKE Unlock command = Off → On) or 2. Unlock by SMK(Passive Unlock command = Off → On)
Action	• Cancel Alarm Timer • Cancel Key IGN Timer • Cancel ALTL Alarm Release Timer· Stop alarm flashing. (Alarm Flasher = Off) • Stop Burglar Alarm Horn(Burglar Horn Relay = Off / Horn Relay = Off) • Engine Start Inhibition state is released (Start INH Relay = Off) • DISARM Flashing(Disarm Flasher = On) • DISARM Buzzer Activation(Disarm Buzzer = On)

cardiagn.com

	• Start AutoLock2Timer • State should go to AUTOLOCKTIMER2 State

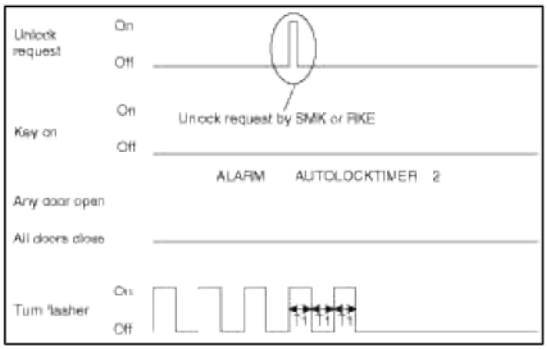

T1 : 0.5 ± 0.05 sec

PREARM

1. DISARM to PREARM

Condition 1

State	Description
Initial Condition	• DISARM STATE • Key Out state(Key On = Off) • Any Door is Open(All Doors Close = Off) or Hood is Open(Hood switch = On) or Tailgate is Open(TG SWITCH = On)
Event	1. Lock by RKE and Locking is success (RKE Lock Confirm Success = Off → On) or 2. Lock by SMK and Locking is success (Passive Lock Confirm Success = Off → On)
Action	• State should go to PREARM State

Condition 2

State	Description
Initial Condition	• DISARM STATE • Key Out state(Key On = Off) • Any Door is Open(All Doors Close = Off) or(Hood is Open(Hood switch = On) or Tailgate is Open(TG SWITCH = On) • Mechanical key ARM/DISARM Option is enable(MECH Option = On)
Event	Lock by Mechanical Key and Locking is success (Mechanical Key Lock Confirm Success = Off → On)
Action	• State should go to PREARM State

Condition 3

cardiagn.com

State	Description
Initial Condition	• DISARM STATE • Key Out state(Key On = Off) • Hood is Open(Hood switch = On) • Any Door is Open(All Doors Close = Off) • Tailgate is Close(TG SWITCH = Off) • All Doors are Lock(All Doors Lock = On) • Mechanical key ARM/DISARM Option is enable(MECH Option = On)
Event	All Doors are Close(All Doors Close = On)
Action	• State should go to PREARM State

Condition 4

State	Description
Initial Condition	• DISARM STATE • Key Out state(Key On = Off) • Hood is Open(Hood switch = On) • All Doors are Close(All Doors Close = On) • Tailgate is Open(TG SWITCH = On) • All Doors are Lock(All Doors Lock = On) • Mechanical key ARM/DISARM Option is enable(MECH Option = On)
Event	Tailgate is Close(TG SWITCH = Off)
Action	• State should go to PREARM State

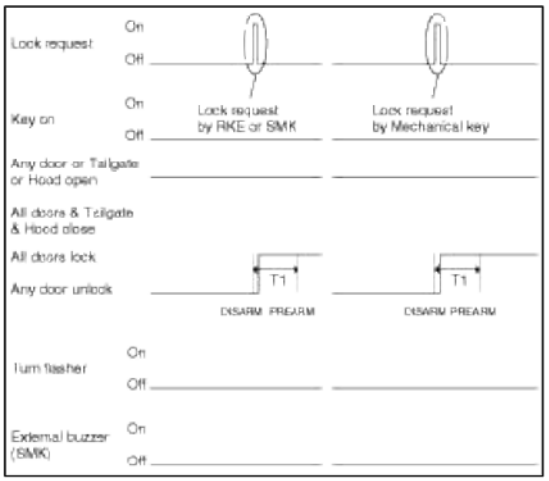

cardiagn.com

2. AUTOLOCKTIMER2 to PREARM

Condition 1

State	Description
Initial Condition	• AUTOLOCKTIMER2 STATE
Event	1. Lock by RKE and Locking is success (RKE Lock Confirm Success = Off → On) or 2. Lock by SMK and Locking is success (Passive Lock Confirm Success = Off → On) or 3. Lock by Auto Lock (AutoLock1Timer ≥ AutoLock1Time) and Locking is success (AutoLockConfirmSuccess = Off → On)
Action	• Cancel AutoLock2Timer • State should go to PREARM State

Condition 2

State	Description
Initial Condition	• AUTOLOCKTIMER2 STATE • Mechanical key ARM/DISARM Option is enable(MECH Option = On)
Event	Lock by Mechanical Key and Locking is success (Mechanical Key Lock Confirm Success = Off → On)
Action	• Cancel AutoLock2Timer • State should go to PREARM State

3. ARMHOLD to PREARM

Condition 1

State	Description
Initial Condition	• ARMHOLD STATE
Event	1. Expired Auto Lock3Timer(ArmHold Timer ≥ AutoLock3Time) or 2. Tailgate is open (TG SWITCH = On
Action	• Cancel ArmHold Timer • State should go to PREARM State

4. ALARM to PREARM

Condition 1

cardiagn.com

State	Description
Initial Condition	• ALARM STATE • Key Out state(Key On = Off) • Any Door is Open(All Doors Close = Off) or Hood is Open(Hood switch = On) or Tailgate is Open(TG SWITCH = On)
Event	1. Lock by RKE and Locking is success (RKE Lock Confirm Success = Off → On) or 2. Lock by SMK and Locking is success (Passive Lock Confirm Success = Off → On)
Action	• Cancel Alarm Timer • Cancel Key IGN Timer • Cancel ALTL Alarm Release Timer • Stop alarm flashing. (Alarm Flasher = Off) • Engine Start Inhibition state is released (Start INH Relay = Off) • Stop Burglar Alarm Horn(Burglar Horn Relay = Off / Horn Relay = Off) • State should go to PREARM State

Condition 2

State	Description
Initial Condition	• ALARM STATE • Key Out state(Key On = Off) • Any Door is Open(All Doors Close = Off) or Hood is Open(Hood switch = On) or Tailgate is Open(TG SWITCH = On) • Mechanical key ARM/DISARM Option is enable(MECH Option = On)
Event	Lock by Mechanical Key and Locking is success (Mechanical Key Lock Confirm Success = Off → On)
Action	• Cancel Alarm Timer • Cancel Key IGN Timer • Cancel ALTL Alarm Release Timer • Stop alarm flashing. (Alarm Flasher = Off) • Engine Start Inhibition state is released (Start INH Relay = Off) • Stop Burglar Alarm Horn(Burglar Horn Relay = Off / Horn Relay = Off) • State should go to PREARM State

cardiagn.com

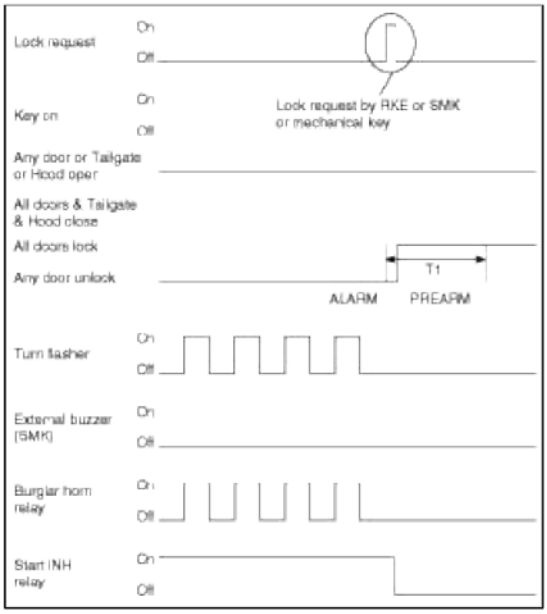

T1 : Lock fail confirm time

5. PREARM to PREARM

Condition 1

State	Description
Initial Condition	Any State
Event	1. Enter PREARM State
Action	• Security IND is Blinking (Security IND = Blinking; 0.32sec:On/2sec:Off) • State should not be changed

REARM

1. ALARM to REARM

Condition 1

State	Description
Initial Condition	• ALARM STATE • Non China Option (China Option = Off)
Event	All Doors are Close(All Doors Close = On) and Hood is Close(Hood switch = Off) and Tailgate is Close(TG SWITCH = Off) and Finish ALARM Flashing (Alarm Flasher = Off)
Action	• State should go to REARM State

Condition 2

State	Description
Initial Condition	• ALARM STATE • China Option (China Option = On)
Event	Key On =Off and All Doors are Close(All Doors Close = On) and Hood is Close(Hood switch = Off) and Tailgate is Close(TG SWITCH = Off) and Finish ALARM Flashing (Alarm Flasher = Off)
Action	• State should go to REARM State

cardiagn.com

2. REARM to REARM

Condition 1

State	Description
Initial Condition	• REARM STATE • Key In = Off || A_IGN1 = Off || IGN2 = Off
Event	Key In = On & A_IGN1 = On & IGN2 = On
Action	• Start Key IGN Timer • State should not be changed

Condition 2

State	Description
Initial Condition	• REARM STATE • Key IGN Timer running and Key IGN Timer < Key IGN Time
Event	Key In = Off || A_IGN1 = Off || IGN2 = Off
Action	• Cancel Key IGN Timer • State should not be changed

Condition 3

State	Description
Initial Condition	• REARM STATE • AltL = Off
Event	AltL = On
Action	• Start ALTL Alarm Release Timer • State should not be changed

Condition 4

State	Description
Initial Condition	• REARM STATE • ALTL Alarm Release Timer running and ALTL Alarm Release Timer < ALTL AlarmReleasTime
Event	AltL = Off
Action	• Cancel ALTL Alarm Release Timer • State should not be changed

Condition 5

State	Description
Initial Condition	• Any State
Event	Enter REARM STATE
Action	• Security IND is Blinking (Security IND = Blinking; 0.32sec:On/2sec:Off) • State should not be changed

cardiagn.com

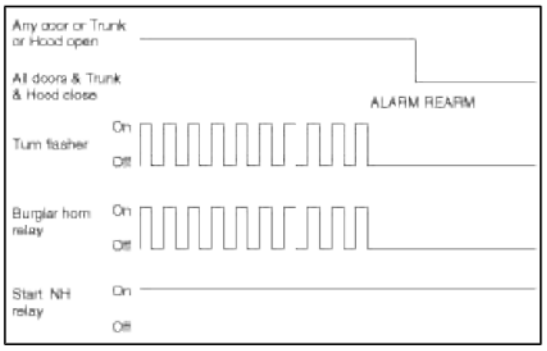

ALARM

- Alarm pattern: MID/China 1 time Alarm flashing and Horn Activation (Alarm On Time 1 time).
- Alarm pattern: GEN 3 times Alarm flashing and Horn Activation (Alarm On Time / Alarm Off Time, 3 time).

1. ARM to ALARM

Condition 1

State	Description
Initial Condition	• ARM STATE
Event	1. Any Door is Open(All Doors Close = Off) or 2. Hood is Open(Hood switch = On) or 3. Tailgate is Open(TG SWITCH = On)
Action	• Start Alarm Flashing (Alarm Flasher = On) • Start Alarm Buzzer (Burglar Horn Relay = On / Horn Relay = On) • Start Alarm Timer • Engine Start Inhibition is On (Start INH Relay = On) • State should go to ALARM State

Condition 2

State	Description
Initial Condition	• ARM STATE at China Option (China Option = On) • Non SMK Variant (SMKOption = Off)
Event	Key On = On
Action	• Start Alarm Flashing (Alarm Flasher = On) • Start Alarm Buzzer (Burglar Horn Relay = On / Horn Relay = On) • Start Alarm Timer • Engine Start Inhibition is On (Start INH Relay = On) • State should go to ALARM State

Condition 3

cardiagn.com

State	Description
Initial Condition	• ARM STATE at China Option (China Option = On) • SMK Variant (SMKOption = On)
Event	Key In = On
Action	• Start Alarm Flashing (Alarm Flasher = On) • Start Alarm Buzzer (Burglar Horn Relay = On / Horn Relay = On) • Start Alarm Timer • Engine Start Inhibition is On (Start INH Relay = On) • State should go to ALARM State

2. REARM to ALARM

Condition 1

State	Description
Initial Condition	• REARM STATE
Event	1. Any Door is Open(All Doors Close = Off) or 2. Hood is Open(Hood switch = On) or 3. Tailgate is Open(TG SWITCH = On)
Action	• Start Alarm Flashing (Alarm Flasher = On) • Start Alarm Buzzer (Burglar Horn Relay = On / Horn Relay = On) • Start Alarm Timer • State should go to ALARM State

Condition 2

State	Description
Initial Condition	• REARM STATE at China Option (China Option = On) • Non SMK Variant (SMKOption = Off)
Event	Key On = On
Action	• Start Alarm Flashing (Alarm Flasher = On) • Start Alarm Buzzer (Burglar Horn Relay = On / Horn Relay = On) • Start Alarm Timer • State should go to ALARM State

Condition 3

cardiagn.com

State	Description
Initial Condition	• REARM STATE at China Option (China Option = On) • SMK Variant (SMKOption = On)
Event	Key In = On
Action	• Start Alarm Flashing (Alarm Flasher = On) • Start Alarm Buzzer (Burglar Horn Relay = On / Horn Relay = On) • Start Alarm Timer • State should go to ALARM State

3. ALARM to ALARM

Condition 1

State	Description
Initial Condition	• ALARM STATE
Event	Alarm Timer is running and Alarm Timer ≥ AlarmTime
Action	• Cancel Alarm Timer • Stop Alarm Flashing(Alarm Flasher = Off) • Stop Alarm Buzzer (Burglar Horn Relay = Off / Horn Relay = Off) • State should not be changed

Condition 2

State	Description
Initial Condition	• ALARM STATE • Key In = Off || A_IGN1 = Off || IGN2 = Off
Event	Key In = On & A_IGN1 = On & IGN2 = On
Action	• Start Key IGN Timer • State should not be changed

Condition 3

State	Description
Initial Condition	• ALARM STATE • Key IGN Timer < Key IGN Time
Event	Key In = Off || A_IGN1 = Off || IGN2 = Off
Action	• Cancel Key IGN Timer • State should not be changed

Condition 4

cardiagn.com

State	Description
Initial Condition	• ALARM STATE • AltL = Off
Event	AltL = On
Action	• Start ALTL Alarm Release Timer • State should not be changed

Condition 5

State	Description
Initial Condition	• ALARM STATE • ALTL Alarm Release Timer < ALTL AlarmReleaseTime
Event	AltL = Off
Action	• Cancel ALTL Alarm Release Timer • State should not be changed

Condition 6

State	Description
Initial Condition	• Any State
Event	Enter ALARM STATE
Action	• Security IND is Blinking (Security IND = Blinking; 0.32sec:On/2sec:Off) • State should not be changed

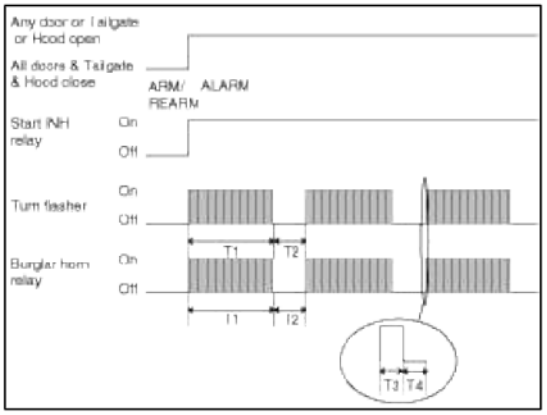

T1 : Alarm single time, T2 : Alarm pause time,
T3 : On time, T4 : Off time

cardiagn.com

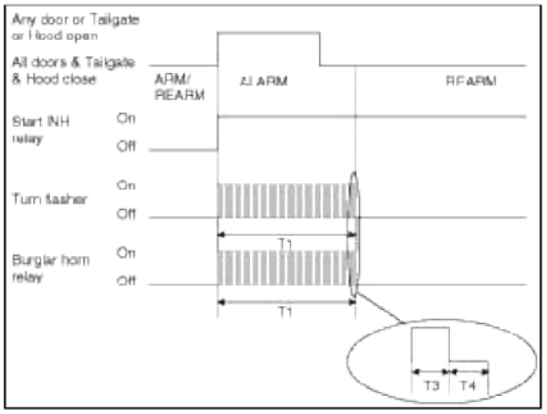

T1 : Alarm single time, T3 : On time, T4 : Off time

Body Electrical System > Keyless Entry And Burglar Alarm > Repair procedures

Inspection

Front Door Lock Actuator Inspection

1. Remove the front door trim.
   (Refer to the BD group - "Front door")
2. Remove the front door module.
3. Disconnect the 7P connector from the actuator.

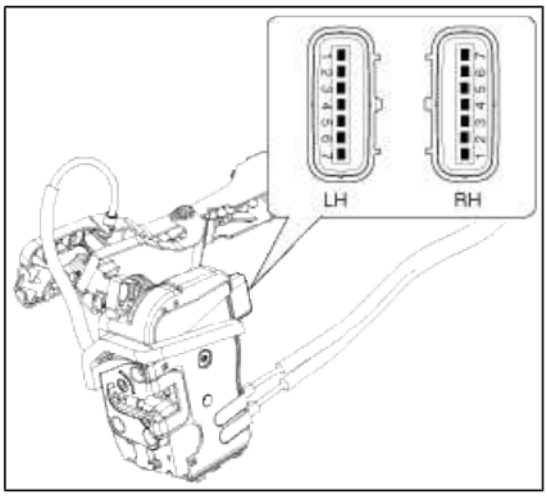

4. Check actuator operation by connecting power and ground according to the table. To prevent damage to the actuator, apply battery voltage only momentarily.

   [Central Lock]

Position \ Terminal		2	1
Front left	Central Lock	⊕	⊖
	Central Unlock	⊖	⊕
Position \ Terminal		**7**	**6**
Front right	Central Lock	⊖	⊕
	Central Unlock	⊕	⊖

Rear Door Lock Actuator Inspection

1. Remove the rear door trim.
   (Refer to the BD group - "Rear door")
2. Remove the rear door module.

cardiagn.com

3. Disconnect the 7P connector from the actuator.

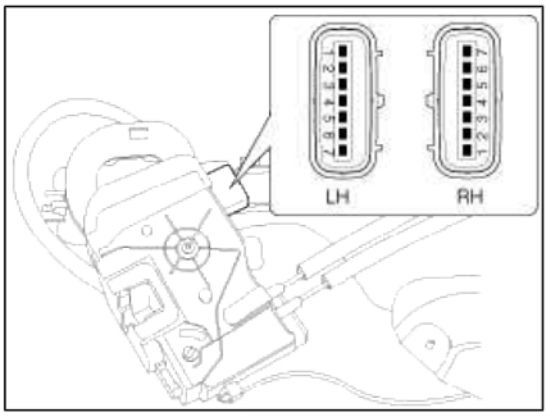

4. Check actuator operation by connecting power and ground according to the table. To prevent damage to the actuator, apply battery voltage only momentarily.

[Central Lock]

Position \ Terminal		2	1
Rear left	Central Lock	⊕	⊖
	Central Unlock	⊖	⊕
Position \ Terminal		7	6
Rear right	Central Lock	⊖	⊕
	Central Unlock	⊕	⊖

Tailgate Release Actuator Inspection

1. Remove the tailgate trim panel.
   (Refer to the BD group - "Trunk lid")
2. Disconnect the 4P connector from the actuator.

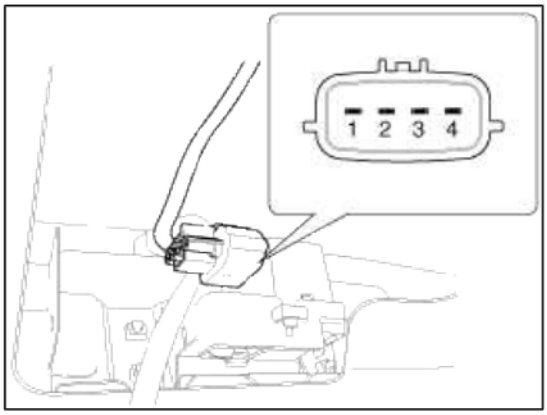

3. Check actuator operation by connecting power and ground according to the table. To prevent damage to the actuator, apply battery voltage only momentarily.

Position \ Terminal	4	3
Open	⊖	⊕
Close	–	–

Front Door Lock Switch Inspection

1. Remove the front door trim panel.
   (Refer to the BD group - "Front door")
2. Remove the front door module.

cardiagn.com

3. Disconnect the 7P connector from the actuator.

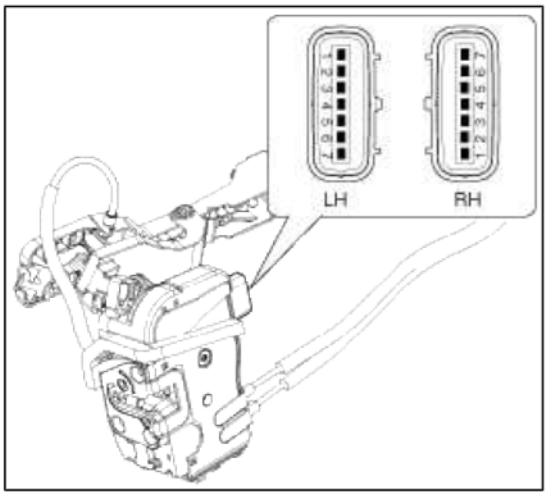

4. Check for continuity between the terminals in each switch position when inserting the key into the door according to the table.

[Central Lock]

Position \ Terminal		5	6	3	4
Front left	C/Unlock	○	○		
	Counter-clock wise	○		○	
	Clock wise	○			○

Position \ Terminal		3	2	5	4
Front right	C/Unlock	○	○		
	Clock wise	○		○	
	Counter-clock wise	○			○

Rear Door Lock Switch Inspection

1. Remove the rear door trim panel.
   (Refer to the BD group - "Rear door")
2. Remove the rear door module.
3. Disconnect the 7P connector from the actuator.

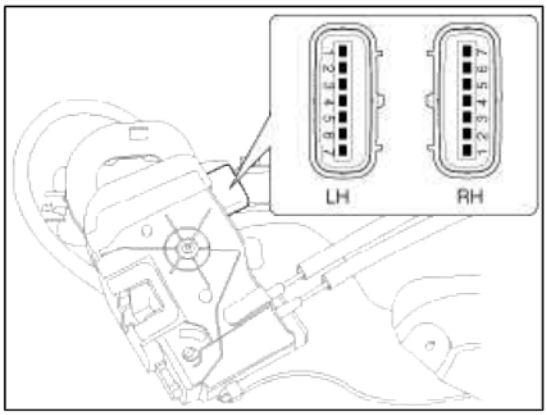

cardiagn.com

4. Check for continuity between the terminals in each switch position according to the table.

[Central Lock]

Position \ Terminal		5	6
Rear Left	C/Lock		
	C/Unlock	○———	———○
Position \ Terminal		2	3
Rear Right	C/Lock		
	C/Unlock	○———	———○

Tailgate Lid Open Switch Inspection

1. Remove the tailgate lid trim.
   (Refer to the BD group - "Tailgate")
2. Disconnect the 4P connector from the actuator.

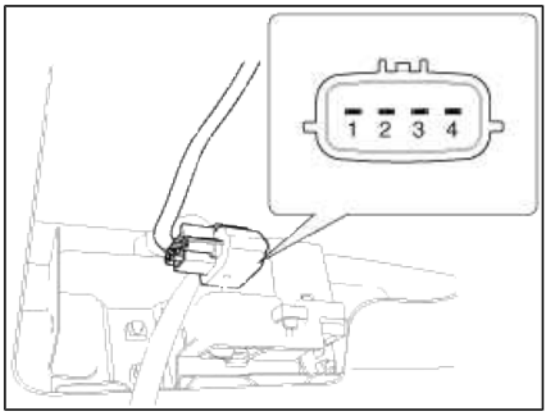

3. Check for continuity between the terminals in each switch position according to the table.

Position \ Terminal	1	2
Lock		
Unlock	○———	———○

Door Switch Inspection

Remove the door switch and check for continuity between the terminals.

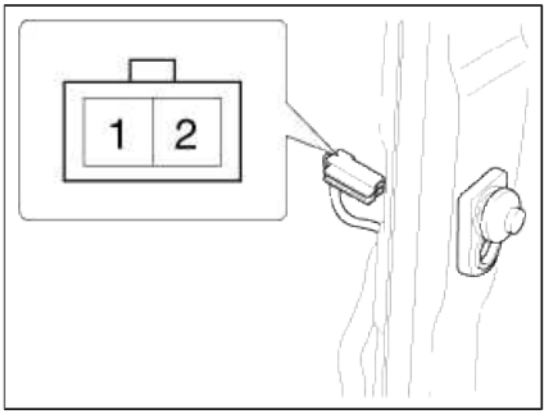

Position \ Terminal	1	2	Body (Ground)
Free(Door open)	○———	———○	———○
Push(Door close)			

Hood Switch Inspection

cardiagn.com

1. Disconnect the connector from the hood switch (A).

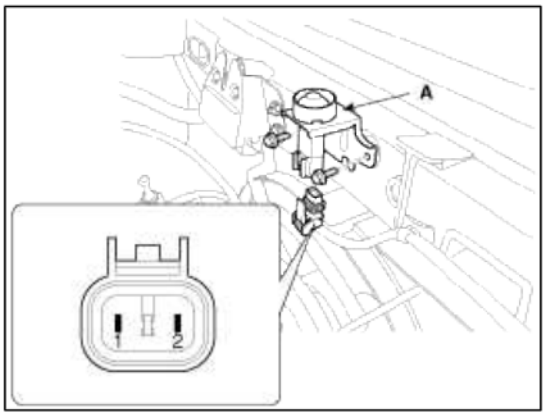

2. Check for continuity between the terminals and ground according to the table.

Terminal / Position	2	1
Hood open (Free)	○	○
Hood close (Push)		

Burglar Horn Inspection

1. Remove the burglar horn (A) after removing 1 bolt and disconnect the 2P connector from the burglar horn.

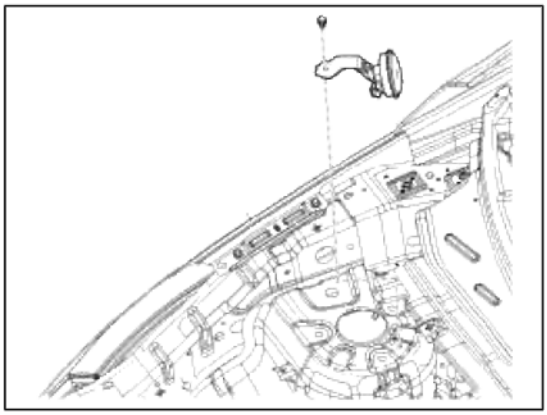

2. Test the burglar horn by connecting battery power to the terminal 1 and ground the terminal 2.
3. The burglar horn should make a sound. If the burglar horn fails to make a sound replace it.

Body Electrical System > Keyless Entry And Burglar Alarm > Transmitter > Repair procedures

Inspection

1. Check that the red light flickers when the door lock or unlock button is pressed on the transmitter.
2. Remove the battery (A) and check voltage if the red light doesn't flicker.

Standard voltage : 3V

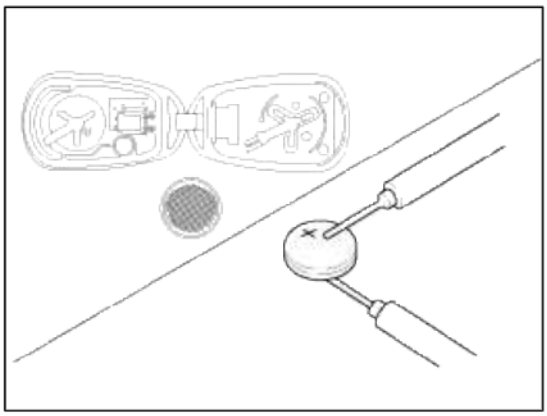

cardiagn.com

3. Insert the battery (A) into the tester (09954-2p100).

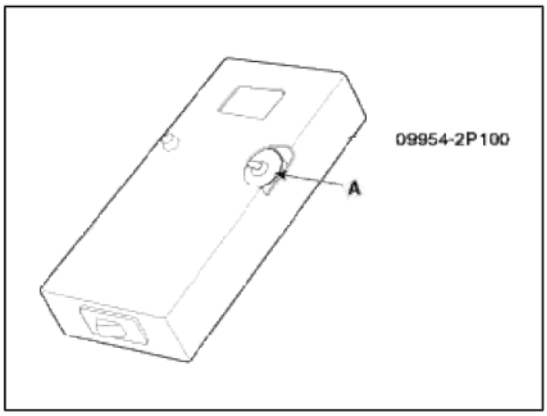

4. Push the test button and If "0.00" is displayed on screen, it means that the battery voltage is 2V or less.
5. If "L" is displayed on screen, it means that the battery is low power and it needs to replace.
6. To prevent the discharge of electricity, turn the tester power off.
7. Replace the transmitter battery with a new one, if voltage is low power then try to lock and unlock the doors with the transmitter by pressing the lock or unlock button five or six times.
8. If the doors lock and unlock, the transmitter is O.K, but if the doors don't lock and unlock, register the transmitter code, then try to lock and unlock the doors.
9. If the doors lock and unlock, the transmitter is O.K, but if the doors don't lock and unlock, replace the transmitter.

> WARNING
>
> An inappropriately disposed battery can be harmful to the environment and human health.
> Dispose the battery according to your local law(s) or regulation.

Transmitter Code Registration (Using Code Saver)

1. Open Door.
2. Connect POWER (B+) and GND, signal line of Code Saver.
3. If connection is normal, signal line is activated and RED LED turns ON.
4. If switch of Code Saver turns ON, data via signal line will be transmitted.
5. BCM enters into Code Save mode when it receives data from Code Saver and send Code Save Start signal via signal line.
6. Code Saver turns Green LED ON when it receives Code Save Start signal.
7. When you press Lock or Unlock button of transmitter, BCM will save Codes.
8. If there are 2 transmitters for Code Saving, register by performing item 7).
9. If switch of Code Saver turns OFF or is disconnected, Code Saving mode will be finished.

Transmitter Code Registration (Using GDS)

1. Connect the DLC cable of GDS to the data link connector (16 pins) in driver side crash pad lower panel, turn the power on GDS.

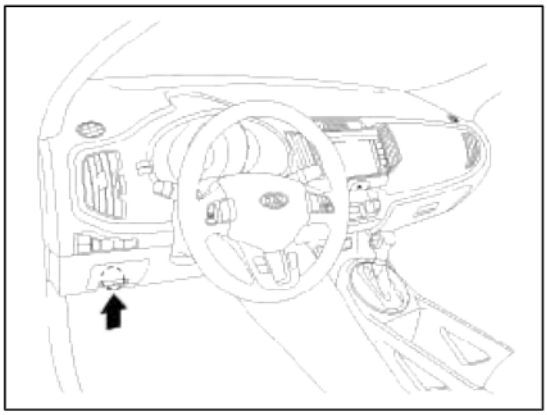

cardiagn.com

2. Select the vehicle model and then do "CODE SAVING"

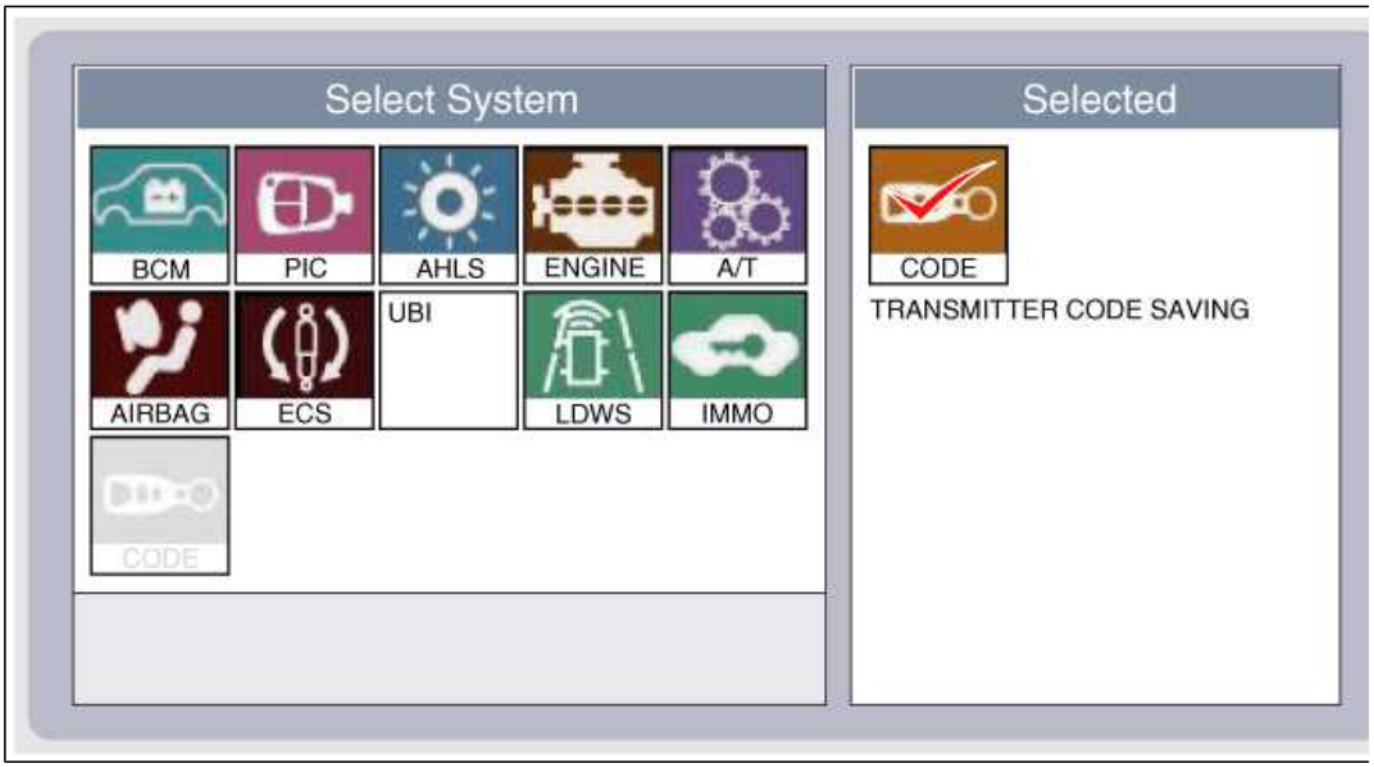

3. After selecting "CODE SAVING" menu, button "ENTER" key, then the screen will be shown as below.

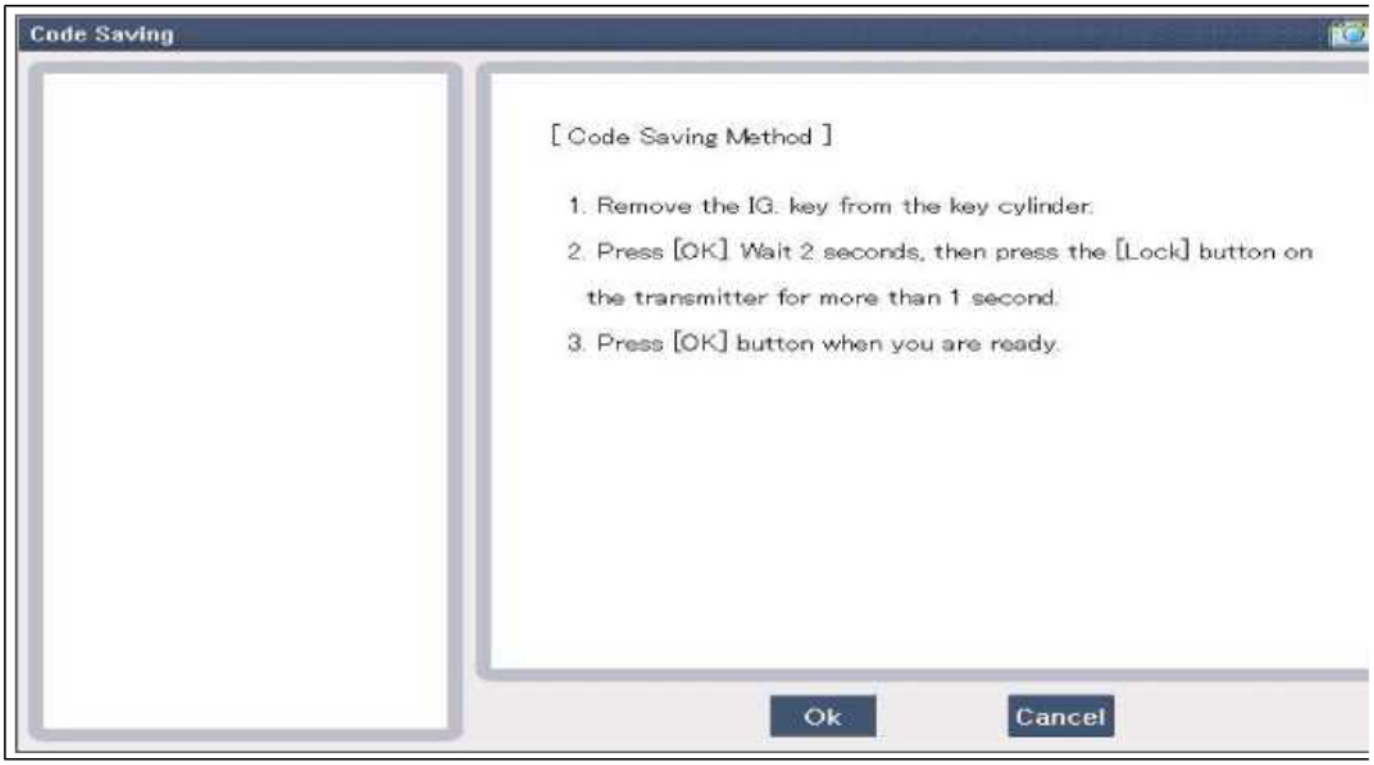

4. After removing the ignition key from key cylinder, push "ENTER" key to proceed to the next mode for code savin Follow steps 1 to 4 and then code saving is completed.

cardiagn.com

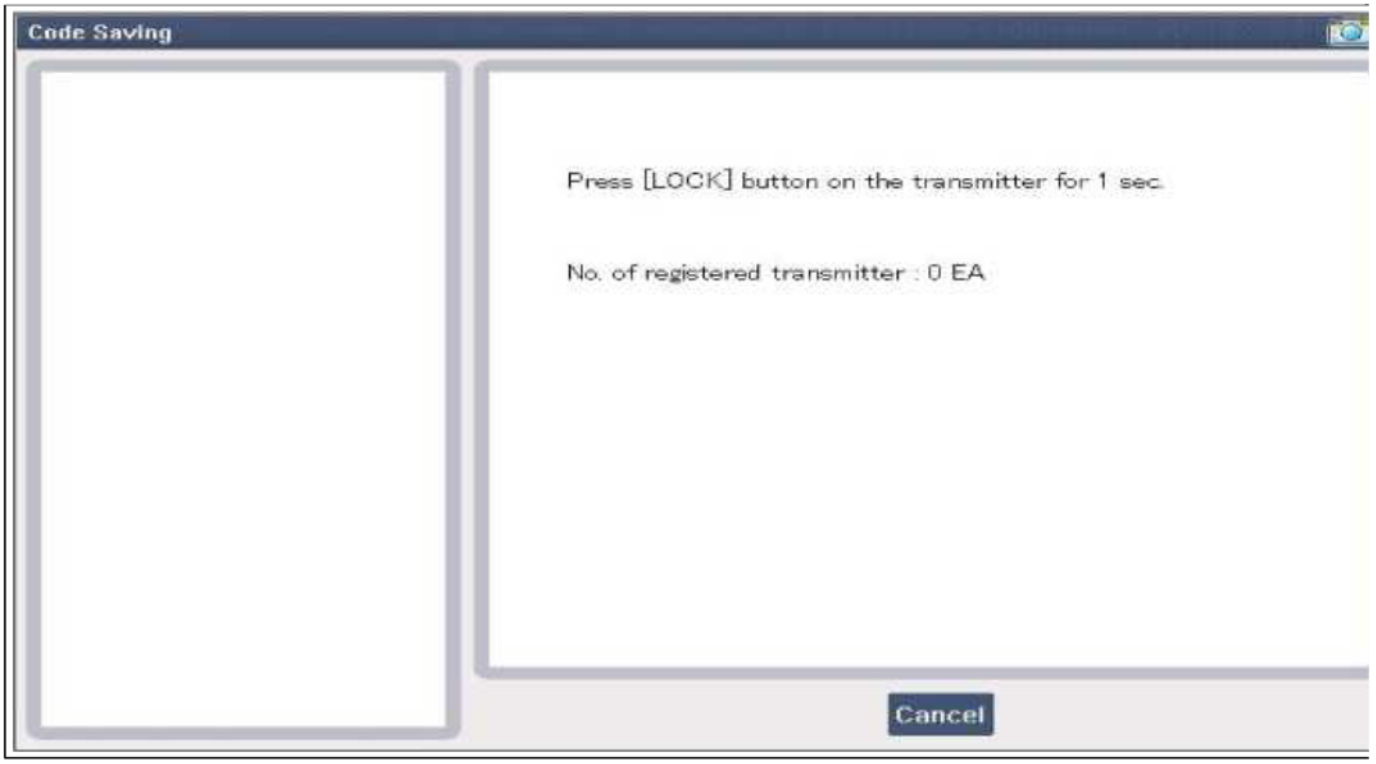

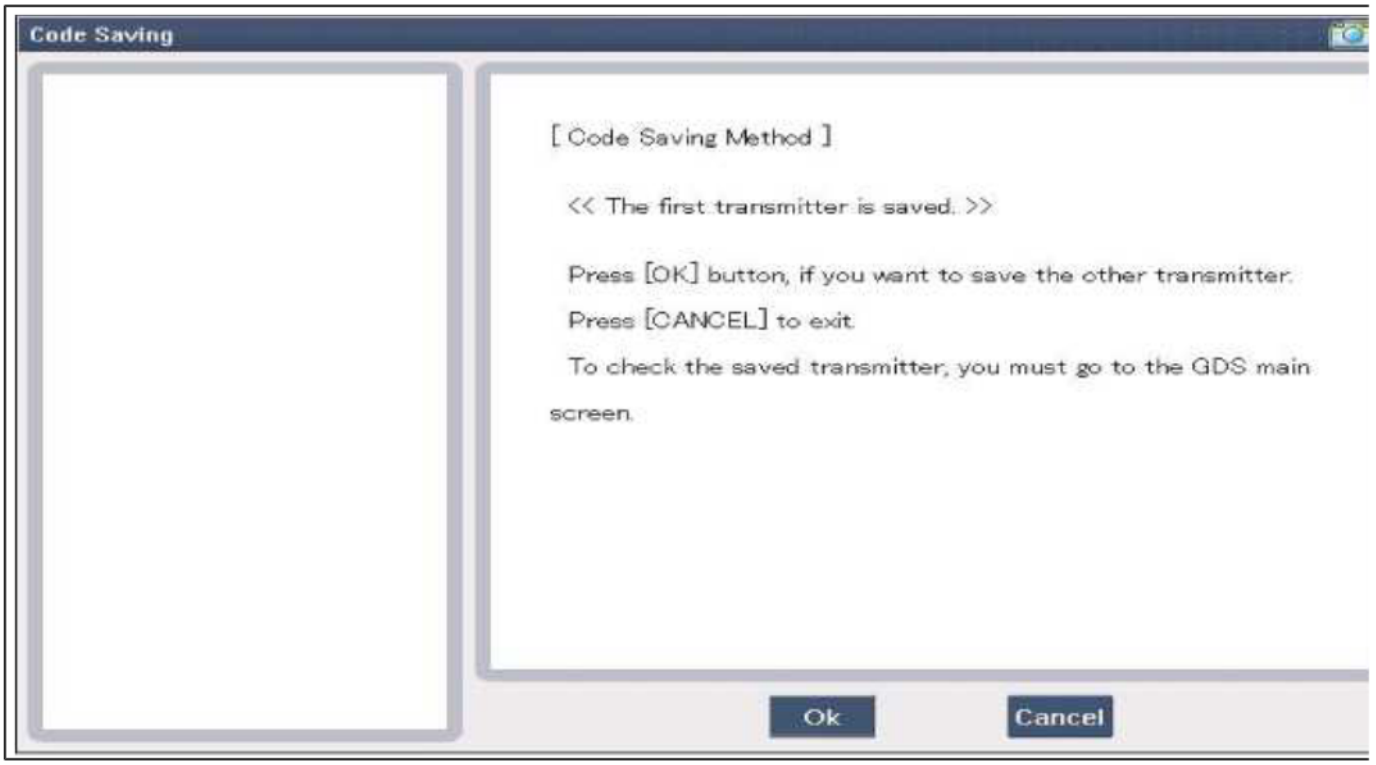

cardiagn.com

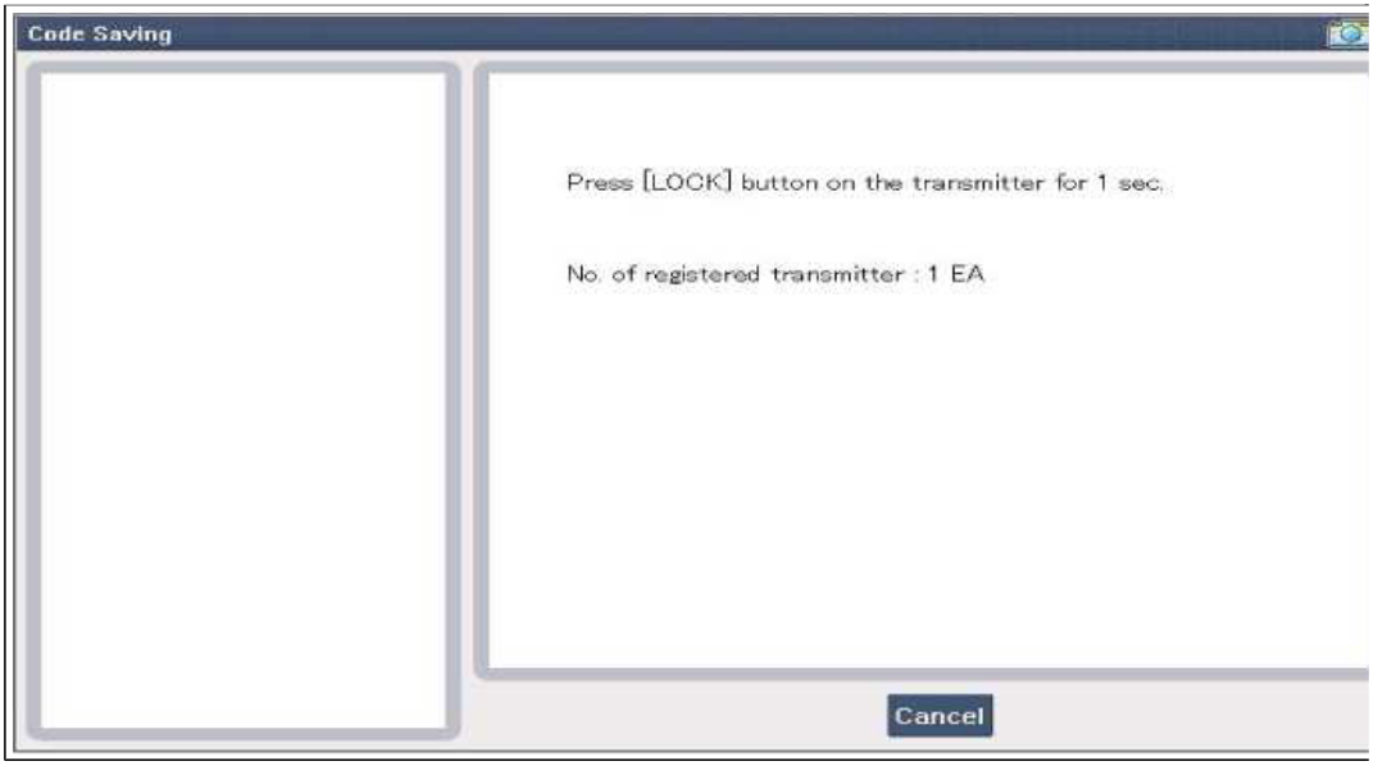

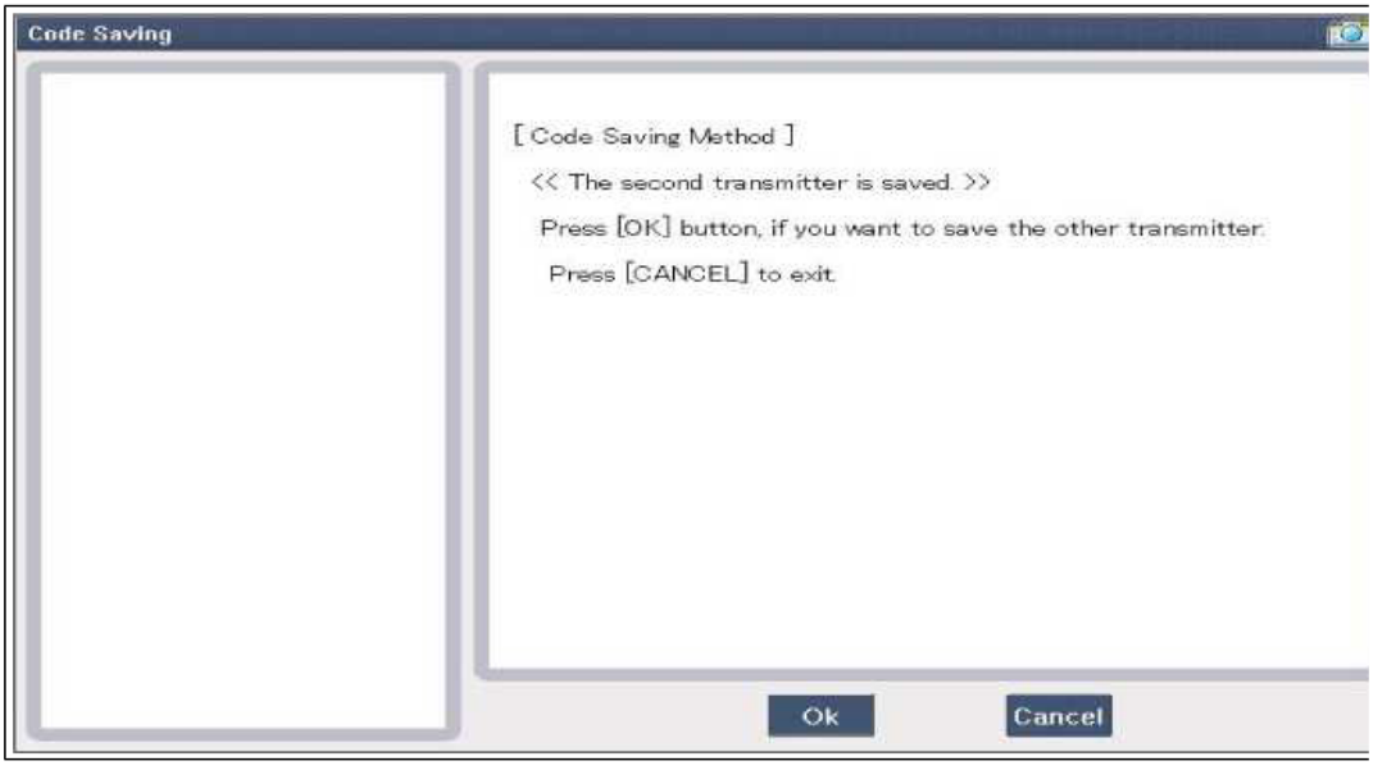

cardiagn.com

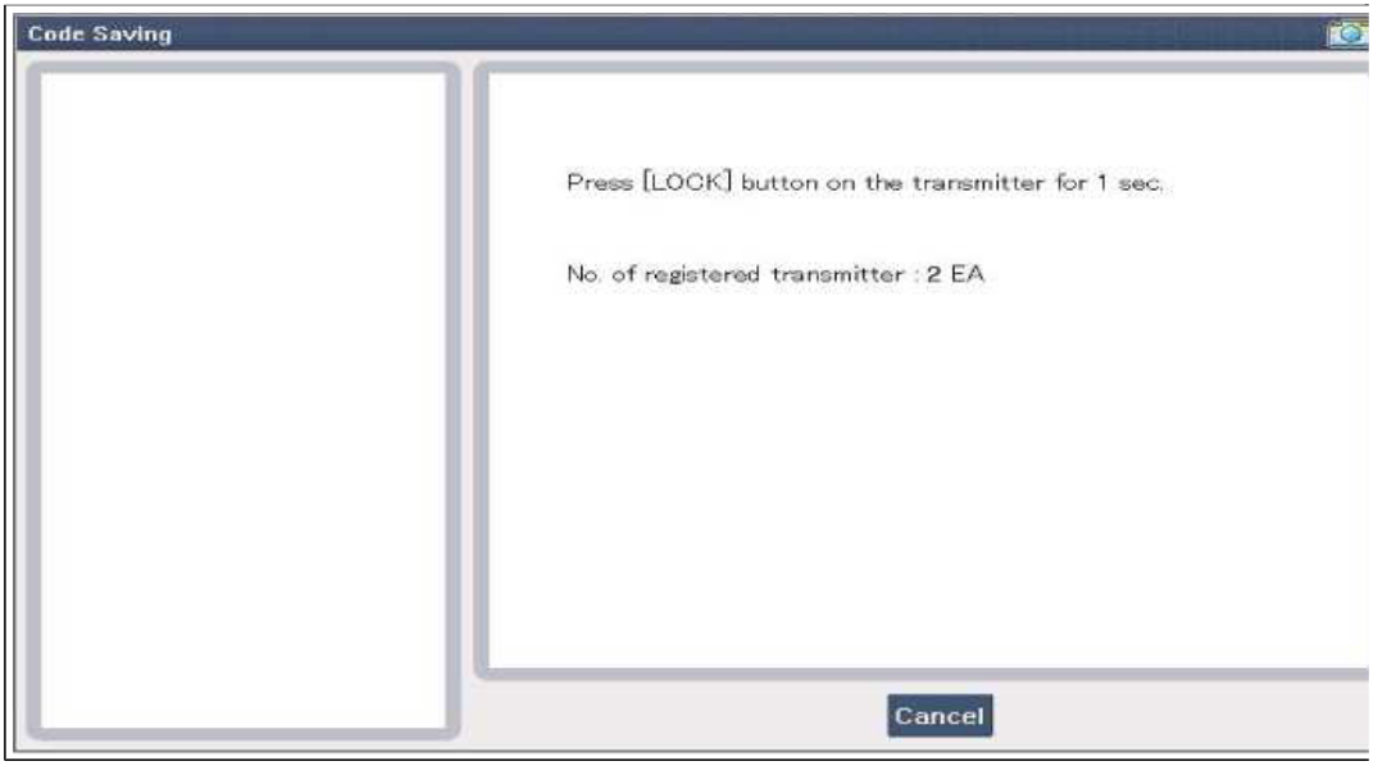

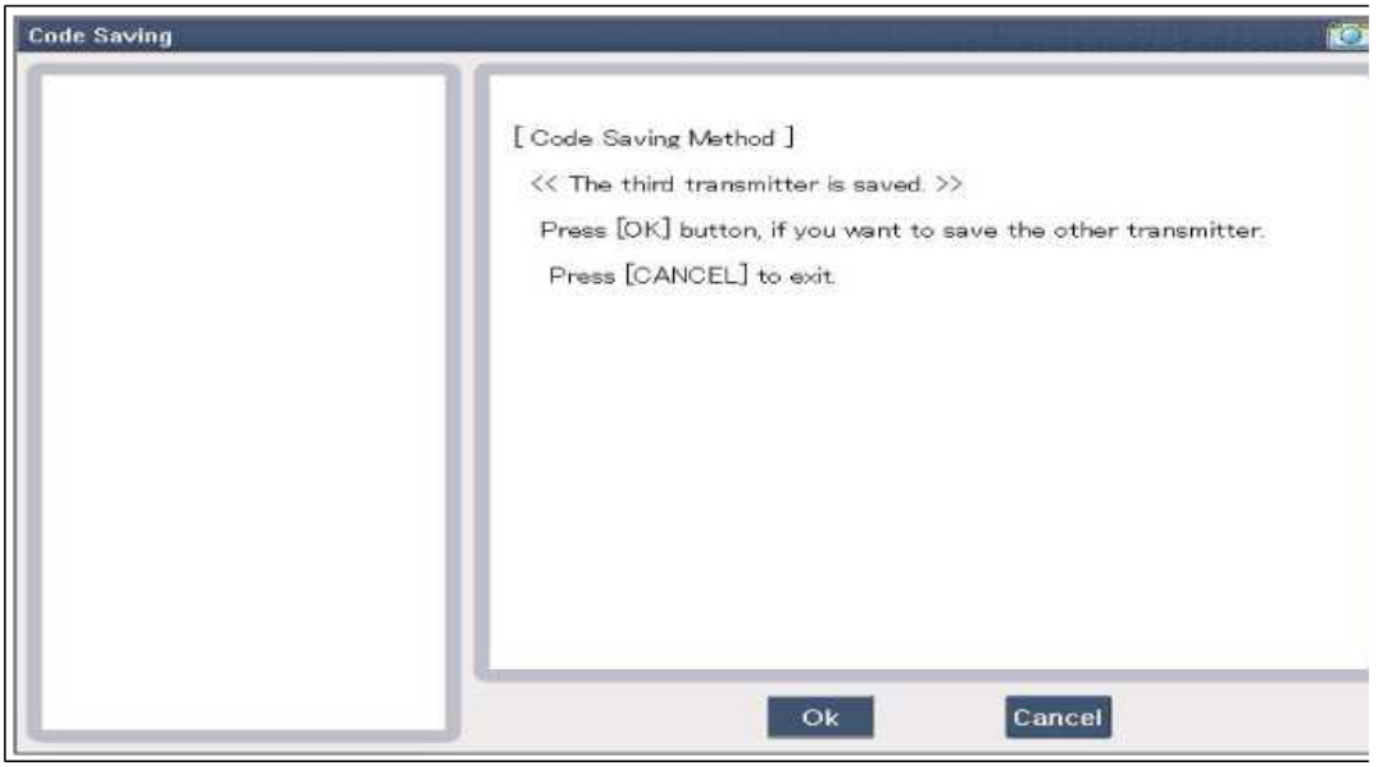

cardiagn.com

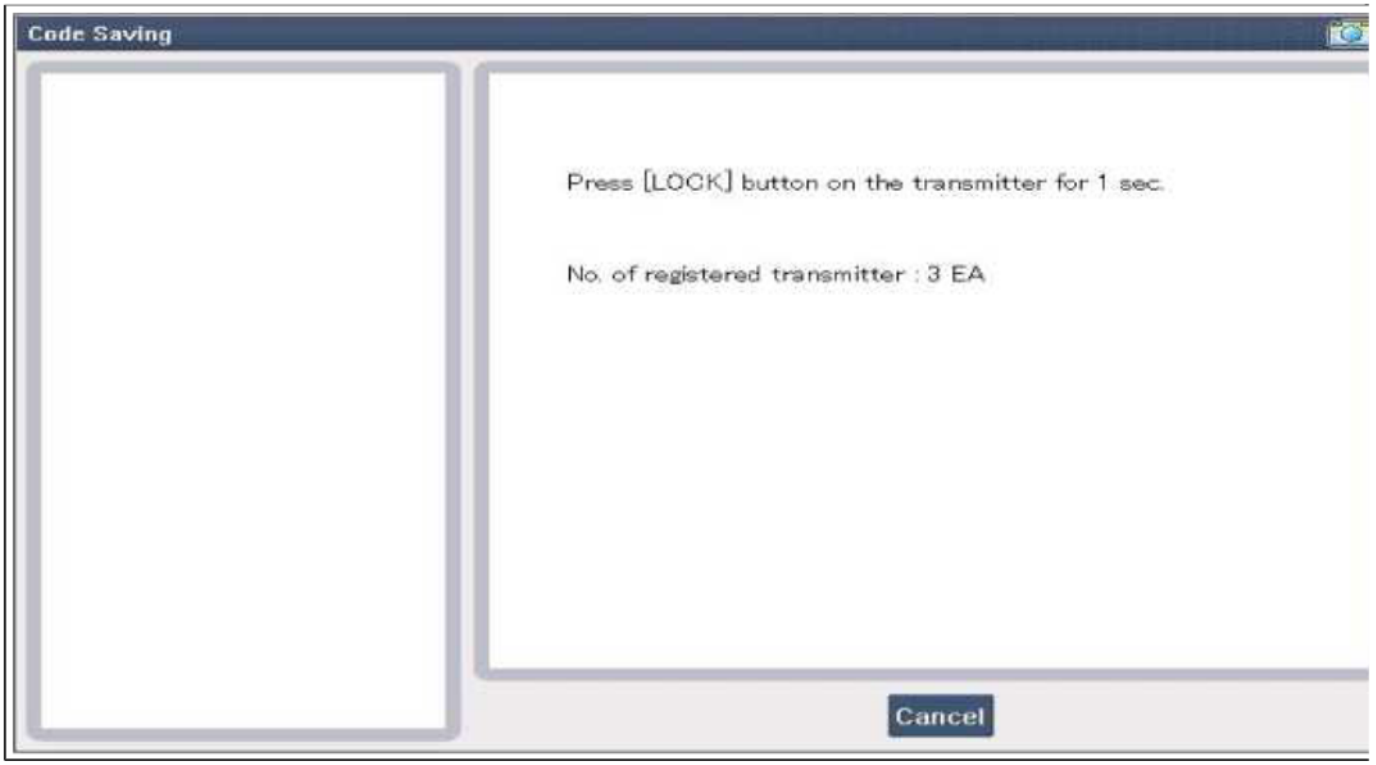

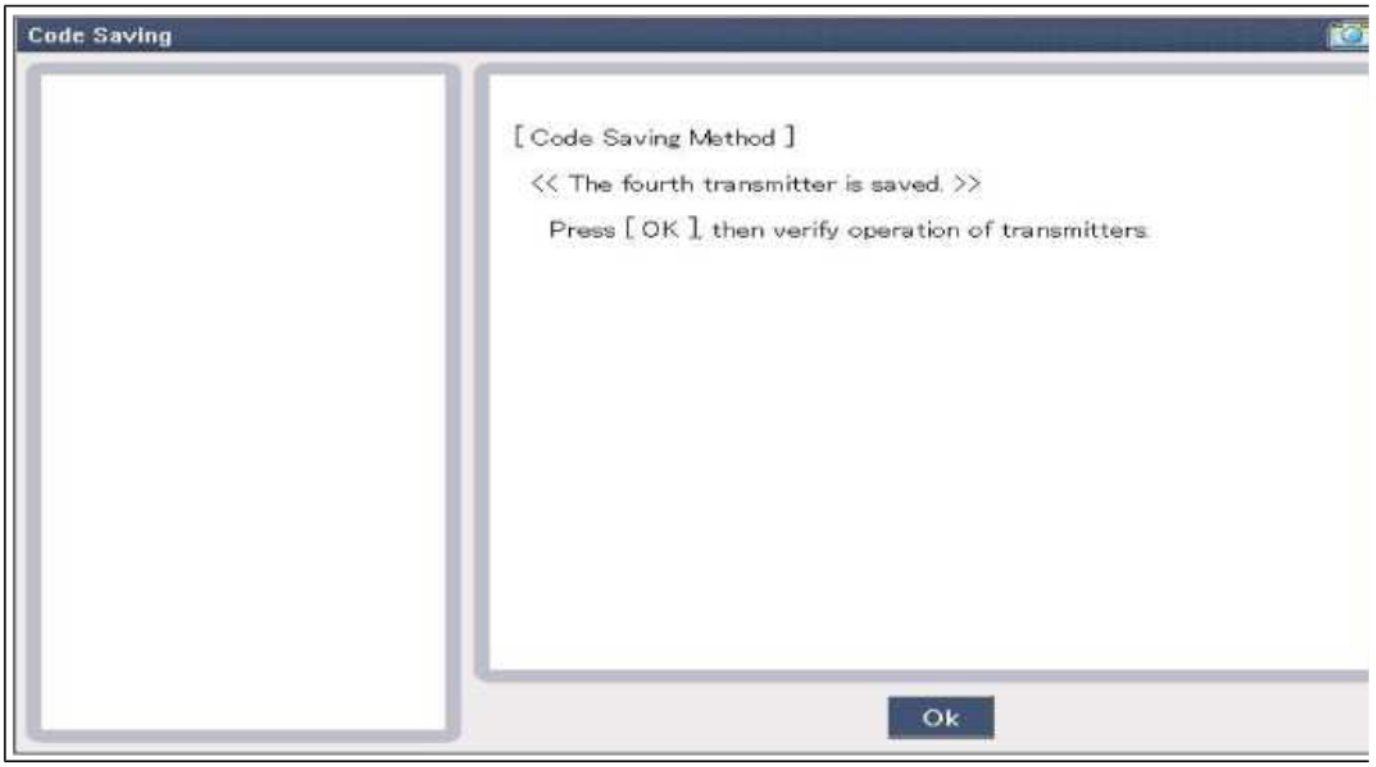

cardiagn.com

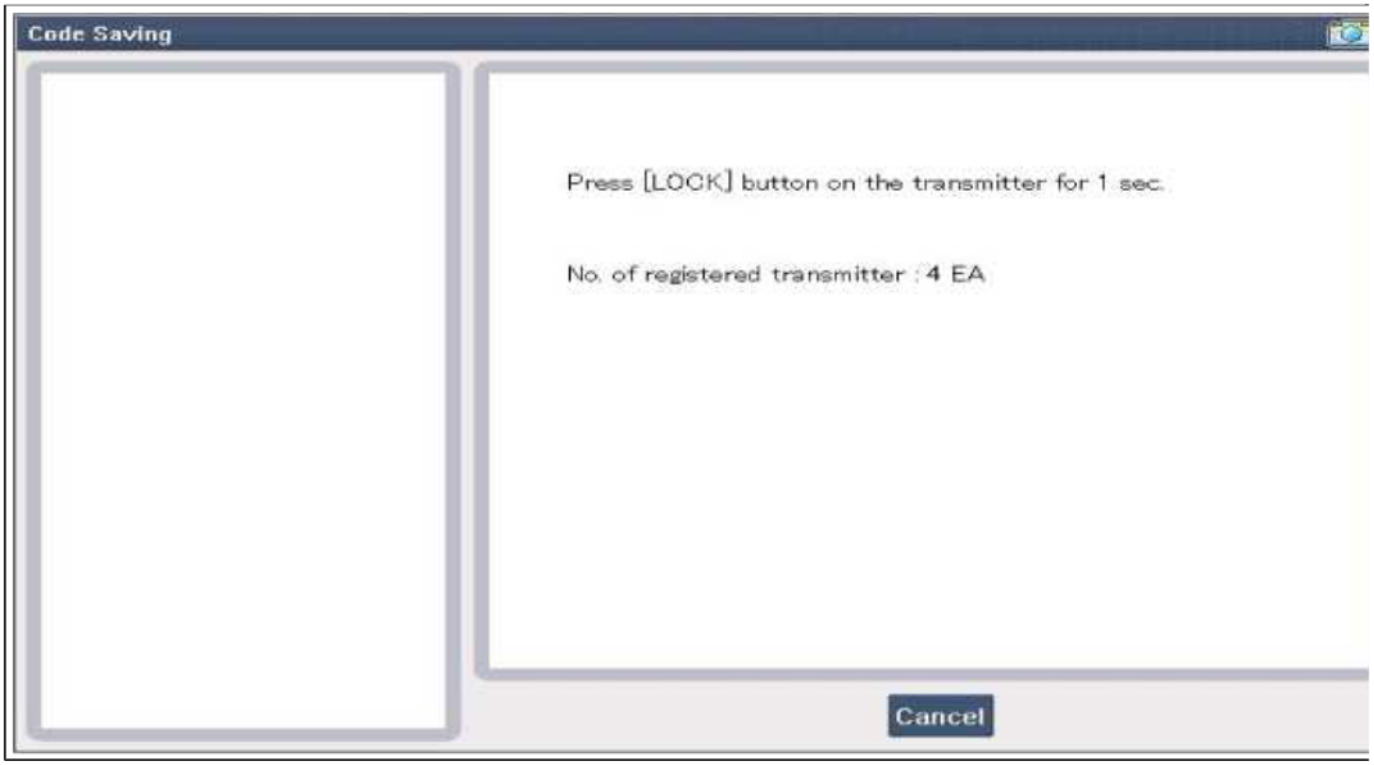

Body Electrical System > BCM (Body Control Module) > Body Control Module (BCM) > Specifications

Specifications

Electrical Performance

Item	Requirement	Remark
Rated voltage	DC 12V	
Operating voltage range	DC 9 ~ 16V	Shall activate normally in these range
Operating temperature range	-30°C ~ +80°C	Shall conserve normally in these range.
Storage temperature range	-40°C ~ +85°C	
Max humidity in use	95%	
High voltage resistance	24V/1min, 18V/1hour	After overvoltage is the Normal behavior
Insulation resistance	100MΩ or more (measured with 500V MEGGER)	Specify as well as parts that insulation like PCB, moisture-proof COATING is required.
Quiescent current	KEYLESS spec : 6mA or less SMK spec : 5.5mA or less NON-KEYLESS : 4mA or less	Measure when the state, all output loads are OFF and there are no Input SW(including TX operation) changes, continues 2sec.
Voltage drop	1.2V or less	but, Terminal B9, B20, C1, C2, C3, C13, C14, C15, C16 is 2.0V or less.

Body Electrical System > BCM (Body Control Module) > Body Control Module (BCM) > Schematic Diagrams

Circuit Diagram

cardiagn.com

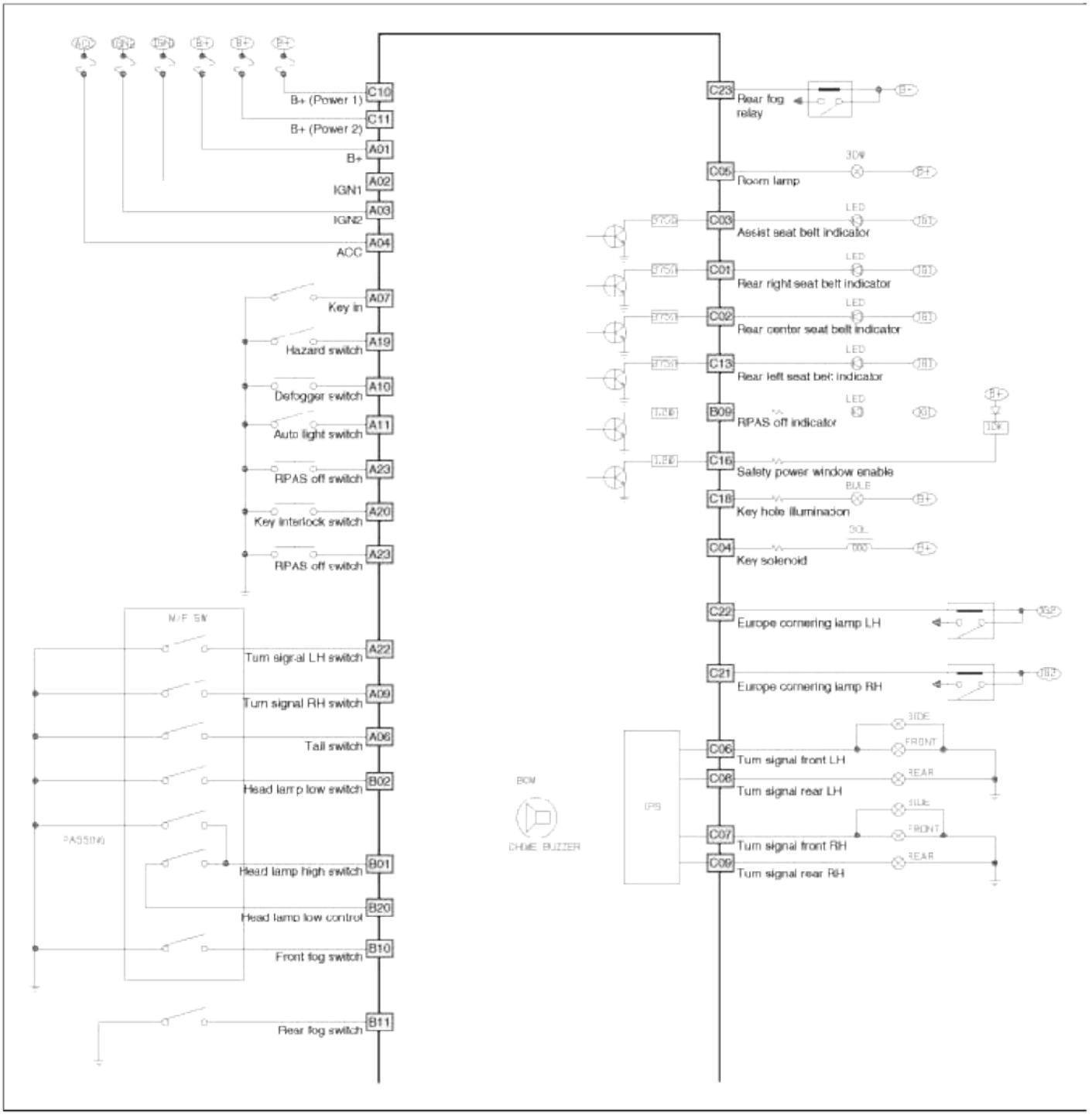

cardiagn.com

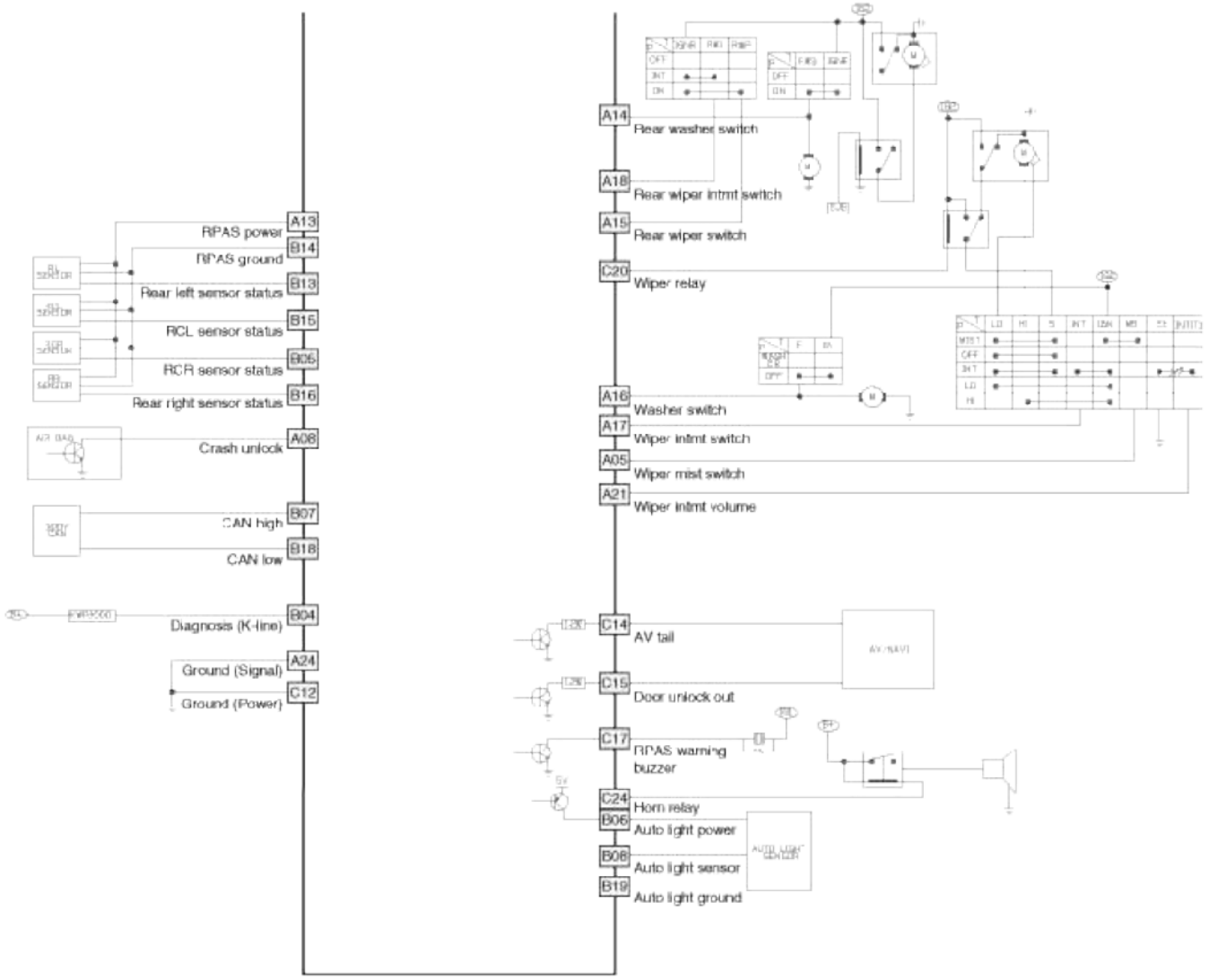

Body Electrical System > BCM (Body Control Module) > Body Control Module (BCM) > Description and Operation

Description

Body control module receives various input switch signals controlling time and alarm functions for front washer interlocking wiper, front intermittent wiper, mist wiper, rear washer interlocking wiper, rear intermittent wiper, seat belt reminder, key operated warning, parking start warning, RKE teaching sound, SMK warning, power window timer, safety power window, rear defogger timer, windshield deicer timer, decayed room(map) lamp, tail lamp autocut, DRL, escort, head lamp low/high, tail lamp, Turn signal lamp, hazard lamp, ESS lamp, lane change, auto light, front fog lamp, AV tail, central door lock/unlock, AV unlock signal, 2 turn unlock, auto door lock/unlock, IGN key reminder, crash door unlock, key inter lock, buglar alarm control.	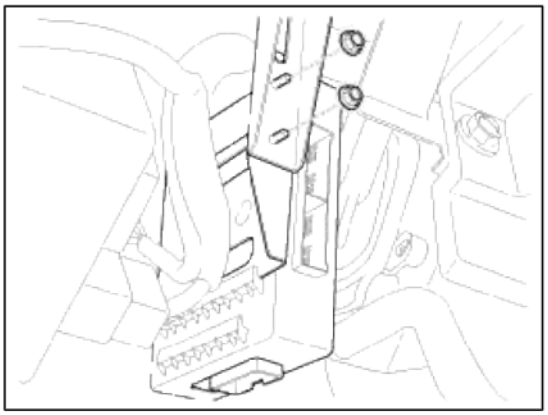

cardiagn.com

Abbreviations And Definitions

Abbreviations	Definitions
IPM	Intelligent integrated Platform Module (= Body Control Module)
DRL	Daytime Running Lights
MFSW	Multi Function SWitches
IPS	Intelligent Power Switch
ALS	Auto Light Sensor
SW	Switch
J/Box	(Smart) Junction Box
BCM	Body Control Module
SMK	Smart Key Unit
CLU	Cluster
SBW	Seat Belt Warning
DRV	Driver side
AST	Assistant side
RPAS	Rear Parking Assist

The classification of signal characteristics

Symbol	Description	Remarks
L_	Logic Input	
A_	Analog Input	
O_	Logic Output	
C_	Can Signal	
S_	Serial Communication	
P_	PWM signal and Frequency Signal	
D_	Data signal	Special Data Format
V_	Power and Ground supplying	
b_	Internal variable	
B_	Body	

Function

Wiper & Washer Control

cardiagn.com

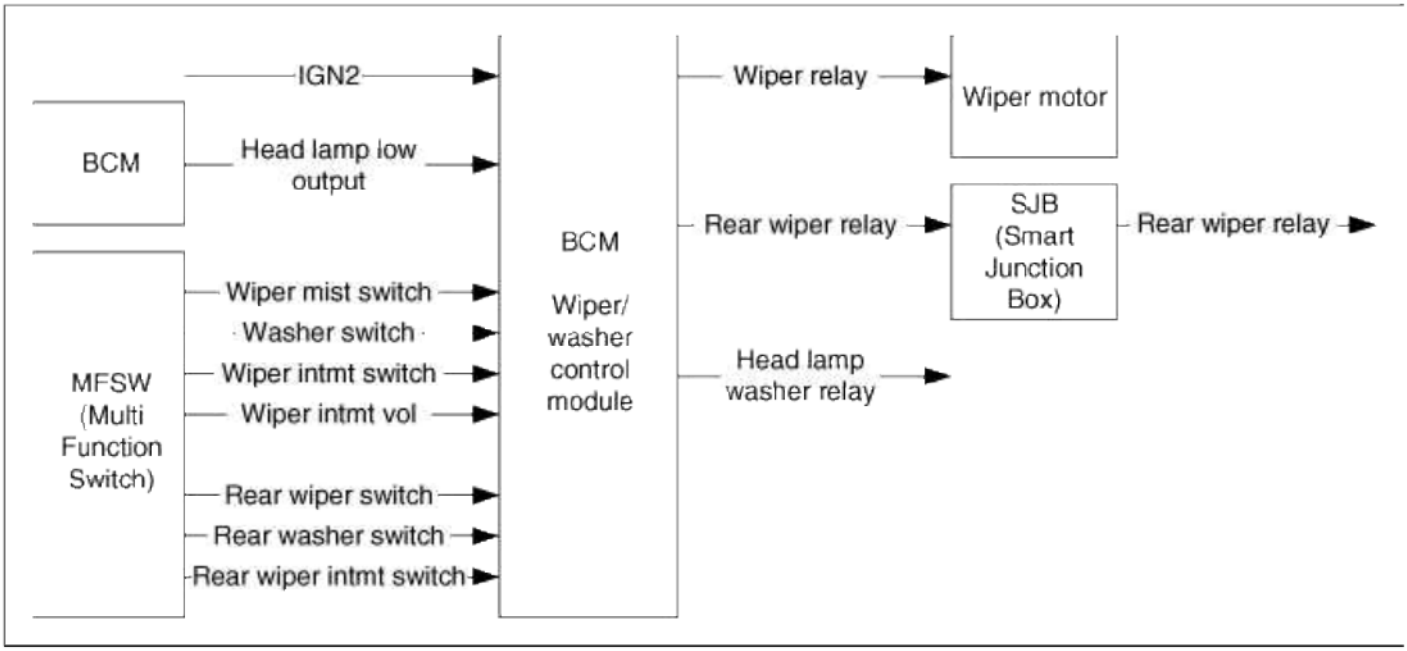

Function	Characteristics	Name	
		Hardware Label	Spec. Designation
Input	Logic	L_IGN2	Ignition 2 Input
		L_WiperMistSW	Front Wiper Mist Switch
		L_WasherSW	Front Washer Switch
		L_WiperIntmtSW	Front Wiper Intermittent Switch
		L_RearWiperSW	Rear Wiper Switch
		L_RearWasherSW	Rear Washer Switch
		L_RearWiperIntmtSW	Rear Wiper Intermittent Switch
	Internal	b_HeadLampLowOutput	Head Lamp Low On/Off State
	Analog	A_WiperIntmtVol	Front Wiper Intermittent Interval Time Value
Output	Logic	O_WiperRly	Front Wiper Output
		O_HeadLampWasherRly	Head Lamp Washer Output
	CAN Communication	C_RearWiperRly	Rear Wiper Output

Front Wiper & Washer General Description

1. Wiper Low Switch Control and Wiper High Switch Control are direct control.
   A. The MFSW's Wiper Low Switch and Wiper High Switch outputs are directly connected with Wiper Motor.
   B. BCM only control Wiper Mist, Wiper Washer and Wiper Intermittent.
   C. Wiper Function Priority : Wiper Washer > Wiper Mist > Wiper Intermittent

Front Wiper Mist Control

- In case of IGN2 On(L_IGN2 = ON), if turn on the Wiper Mist Switch(L_WiperMistswitch= On), then Wiper is controlled, by switch on time.
- Mist operation does not work at Wiper Washer.

cardiagn.com

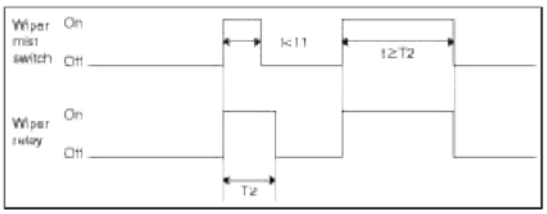

T1 : One wiping, T2 : Mist one time

Front Wiper Intermittent Control

- In case of IGN2 On(L_IGN2 = ON), if turn on the Wiper Intermittent Switch(L_WiperIntmtswitch= On), then Wiper Low output is turned on depending on Wiper Intermittent Time(WiperIntmtTime, this value is defined by A_WiperIntmtVol input value).

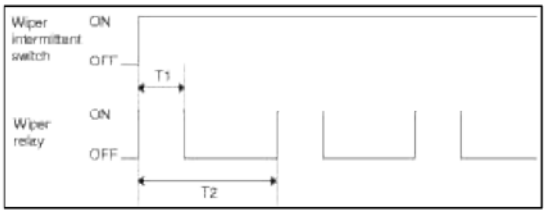

T1 : One wiping, T2 : Wiper intmt time

Value Name	Value
One Wiping	0.7 sec ± 70 msec
Con Wipe Time	2 sec

Front Wiper Washer Control

1. In case of IGN2 On(L_IGN2 = ON), if user turns on the Washer Switch(L_Washerswitch= On) more than a given time, then Wiper output shall be driven depending on Wiper mode.

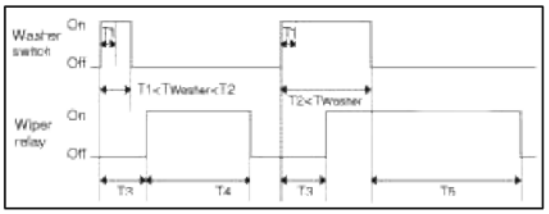

T1 : Washer SW DET time, T2 : Mist mode time,
T3 : Out delay time, T4 : One wiping,
T5 : Washer mode time

Value Name	Values
Washer SW DET Time	0 sec (Input Filtering Time)
Mist Mode Time	0.2 sec ± 20 msec
Out Delay Time	0.3 sec ± 30 msec
One Wiping	0.7 sec ± 70 msec
Washer Mode Time	3 sec ± 0.3 sec

cardiagn.com

2. During wiper intermittent control, If Washer switch is turned on, BCM stops the Intermittent control and enter washer control mode and then after washer control finish, return the wiper intermittent control.

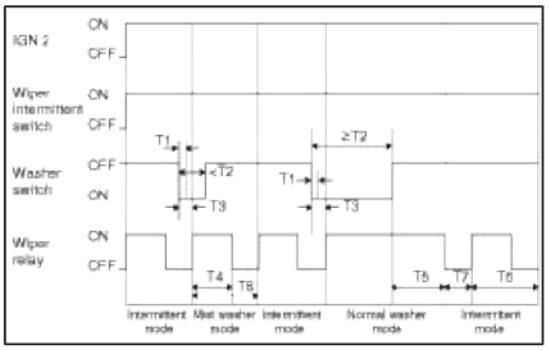

T1 : Washer SW DET time, T2 : Mist mode time,
T3 : Out delay time, T4 : One wiping,
T5 : Washer mode time, T6 : Wiper intmt time,
T7 : (Wiper intmt time - One wiping)

Rear Wiper & Washer General Description

1. BCM has Rear Wiper Control Logic.
   A. BCM sends the rear wiper control signal(C_RearWiperRly) to J/Box via CAN.
   B. J/Box controls the Rear Wiper motor.
   C. Rear Wiper Function Priority : Rear Wiper Switch > Rear Wiper Washer > Rear Wiper Intermittent

Rear Wiper Switch Control Function

- In case of IGN2 ON(L_IGN2 = On), if user turns on the Rear Wiper Switch(L_RearWiperswitch= On), BCM controls the Rear Wiper Output(C_RearWiperRly = On) until Rear Wiper Switch Off (L_RearWiperswitch= Off)or IGN2 Off(L_IGN2 = Off)

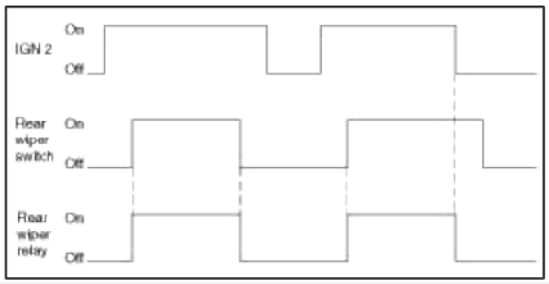

Rear Wiper Intermittent Control

- In case of IGN2 On(L_IGN2 = ON), if user turns on the Rear Wiper Intermittent Switch(L_RearWiperIntmtswitch= On), then Rear Wiper Low output is turned on following as Rear Wiper Intermittent Time(RearWiperIntmtTime).

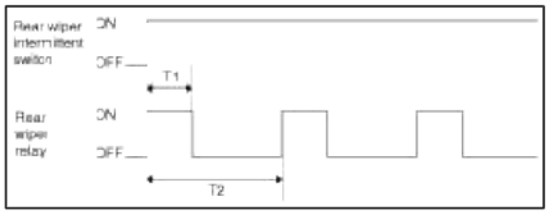

T1 : Rear wiper one time, T2 : Rear wiper intmt time

Value Name	Value
Rear Wiper One Time	0.7 sec ± 70 msec
Rear Wiper Intmt Time	6.7 sec ± 0.67 sec

Rear Wiper Washer Control

cardiagn.com

- In case of IGN2 On(L_IGN2 = ON), if user turns on the Rear Washer Switch(L_RearWasherswitch= On) more than a given time, then Wiper output shall be driven depending on Rear Wiper mode.

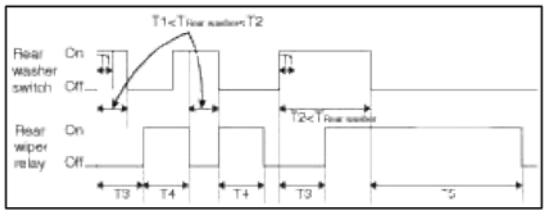

T1 : Rear wiper washer mode on time,
T2 : Rear wiper mist mode time,
T3 : Rear wiper washer out delay time,
T4 : Rear wiper one time,
T5 : Rear wiper washer mode time

Value Name	Values
Rear Wiper Washer Mode On Time	0.2 sec ± 20 msec
Rear Wiper Mist Mode Time	0.6 sec ±100 msec
Rear Wiper Washer Out Delay Time	0.3 sec ± 100 msec
Rear Wiper One Time	0.7 sec ± 70 msec
Rear Wiper Washer Mode Time	3 sec ± 0.3 sec

- Rear Washer Wiping During Rear Wiper Intermittent Control
  During Rear Wiper Intermittent Control, If Rear Washer Switch is turned on, BCM stops the Intermittent Control and enter Rear Wiper Washer Control Mode and then after Rear Wiper Washer Control finish, return the Rear Wiper Intermittent Control.

Head Lamp Washer Function

1. In case of IGN2 ON(L_IGN2 = On) & HEAD LAMP ON(b_HeadLampLowOutput = On) status, if washer switch input(L_Washerswitch= On) is detected and keep on the state longer than “WasherSWTime”, Head Lamp Washer Output is turned On (O_HeadLampWasher = On) during “Head Lamp Washer On Time”. If “HeadLampWasherNumber” is bigger than 1, Head Lamp washer output repeats On and Off for “Head Lamp Washer On Time” and “Head Lamp Washer Off Time” and “HeadLampWasherNumber” times.
2. When another Head Lamp Washer is requested during Head Lamp Washer activation, the second is ignored.
3. After an output activation of the Head Lamp Washer, there is an inhibition time for “HeadLampWasherInhibitTime”. During the inhibition time, Head Lamp washer request is ignored.

cardiagn.com

4. After beginning the output, even though the precondition is not satisfied (Head Lamp Off), output does not stop. But in IGN2 off, output is stop.

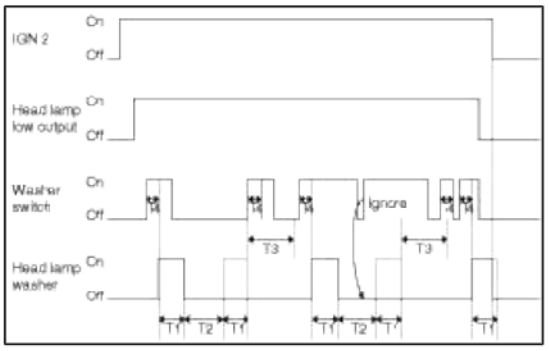

T1 : Head lamp washer on time,
T2 : Head lamp washer off time,
T3 : Head lamp washer inhibit time,
T4 : Washer SW time

Name	Value
Head Lamp Washer Number	1 (TBD)
Head Lamp Washer On Time	1.2 ± 0.1 sec (TBD)
Head Lamp Washer Off Time	1.2 ± 0.1 sec (TBD)
Washer SW Time	0 sec
Head Lamp Washer Inhibit Time	5 sec

Exterior Lighting Control

cardiagn.com

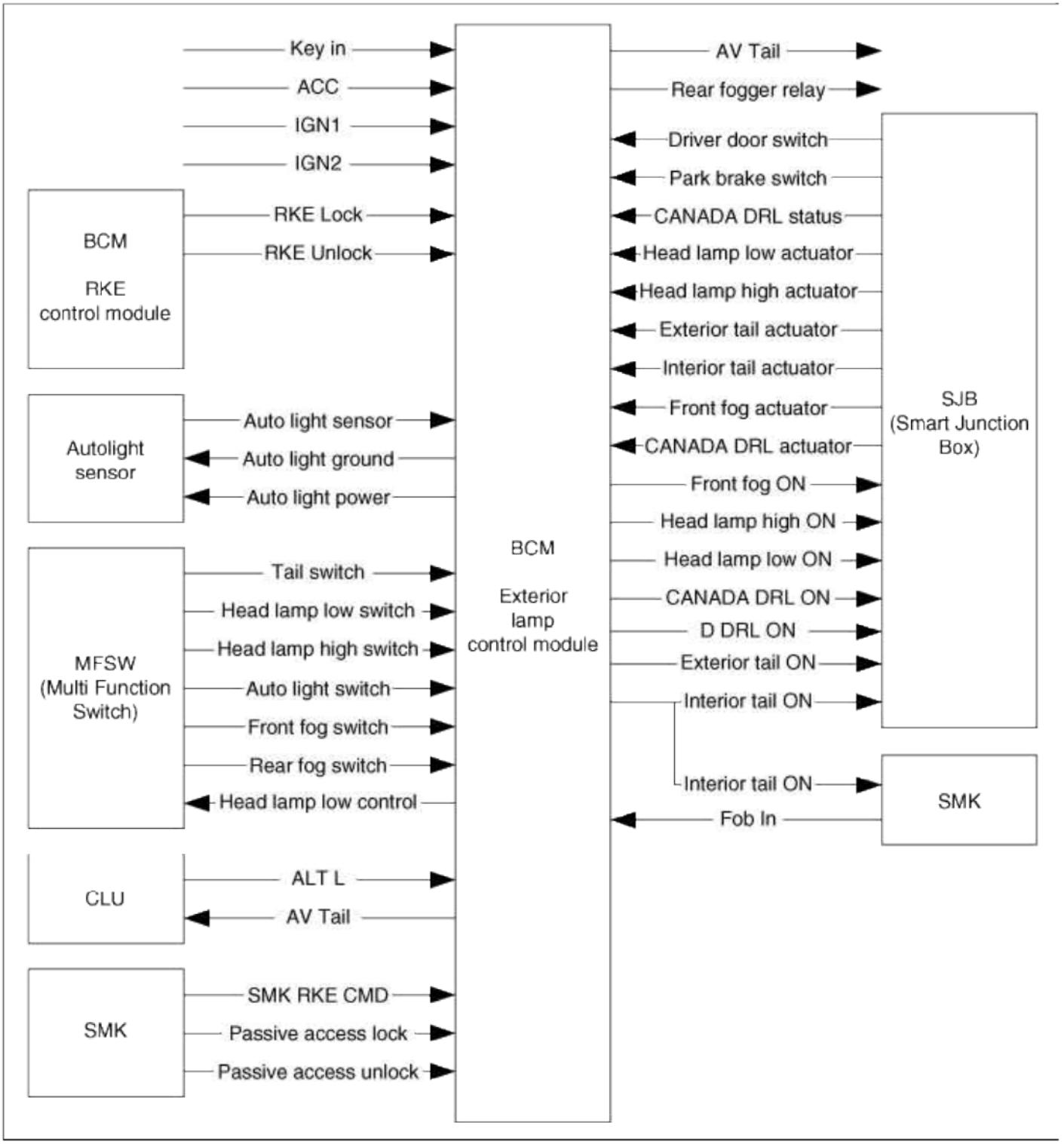

Function	Characteristics	Name	
		Hardware Label	Spec. Designation
	Logic	L_KeyIn	Key In signal
		L_ACC	Accessory Signal
		L_IGN2	Ignition 2 Power
		L_AutoLightSW	Head Lamp Auto Switch
		L_HeadLampLowSW	Head Lamp Low Switch
		L_TailSW	Tail Lamp Switch
		L_FrontFogSW	Front Fog Switch

cardiagn.com

Input		L_HeadLampHighSW	Head Lamp High Switch
		L_RearFogSW	Rear Fog Switch
	Analog	A_AutoLightSnsr	Auto Light Sensor Analog Input
		A_IGN1	Ignition 1 Power
	CAN Communication	C_FobIn	Fob Key Insert State
		C_ALT_L	Engine is running
		C_PassiveAccessLock	SMK Passive access lock for door module
		C_PassiveAccessUnlock	PIC Passive access unlock for door module
		C_SMKRKECMD	SMK FOB Keyless Command
		C_DRVDRSW	Driver Door Switch
		C_ParkBrakeSW	Parking Brake Switch
		C_CANADA_DRLSts	CANADA DRL Option
		C_HLampLOW_Act	Head Lamp Low Beam Activity
		C_HLampHIGH_Act	Head Lamp High Beam Activity
		C_EXTTail_Act	External Tail Lamp Activity
		C_INTTail_Act	Internal Tail Lamp Activity
		C_FrontFog_Act	Front Fog Lamp Activity
		C_CANADA_DRL_Act	CANADA DRL Activity(High beam 50%)
	Internal	b_RKELock	Lock Request by RKE in non-SMK Variant
		b_RKEUnlock	Unlock Request by RKE in non-SMK Variant
Output	Logic	O_HeadLampLowCTRL	Head Lamp Low Output Status (Active Low)
		O_RearFogRLY	Rear Fog Control
		O_AVTail	Auto Light output to AV module
		V_AutoLightPwr	Supplying Power to Auto Light Module
		V_AutoLightGND	Supplying Ground to Auto Light Module
	CAN Communication	C_INTTailON	Internal Tail Lamp ON Command
		C_EXTTailON	External Tail Lamp ON Command
		C_HeadLampLowON	Head Lamp Low Command
		C_HeadLampHighON	Head Lamp High Command
		C_FrontFogON	Front Fog Command
		C_CANADA_DRLON	CANADA DRL ON Command (high beam 50%)
		C_AV_Tail	AV Tail
		C_D_DRL_ON	Dedicated DRL Command

cardiagn.com

Tail Lamp Control

1. This function describes the following features.
   A. Turn on and off Tail Lamp by switch input.
   B. Turn on and off Tail Lamp in Auto Light Control command.
   C. Automatically cut off Tail Lamps if a driver forgets to turn them off.
   D. Output control of Tail Lamp
2. Tail Auto Cut Function Condition
   A. The “Tail Auto Cut” strategy ensures that Tail lamps are turned off even if a driver forgets to turn them off.
   B. When the Tail lamp is turned on by Tail lamp SW, after key insertion, and if a user removes key and opens the driver side door(or vice versa), the Tail lamps are automatically turned off.
   C. While “Tail Auto Cut” function is active, if a user turns off the Tail lamp switch or inserts key, “Tail Auto Cut” function will be deactivated.

> NOTE
>
> During the activation of Escort function, no Tail Auto Cut mode is possible and it is only after escort function deactivation that Tail Auto Cut mode can be applied.

Head Lamp Control

1. This function describes the following features.
   A. Turn on and off Head Lamp Low by Head Lamp Low Switch input.
   B. Turn on and off Head Lamp Low by Escort Function.
   C. Turn on and off Head Lamp Low by Auto Light Control Request.
   D. Turn on and off Head Lamp High by Head Lamp High Switch input.
   E. Turn on and off Head Lamp High and Low by Passing Switch Input.
   F. Output control of Head Lamp Low.
   G. Output control of Head Lamp High.
   H. Output control of Head Lamp High Indicator.
   I. Output control of EC DRL Lamp
2. Head Lamp Low Control
   A. In IGN ter minal State(b_IGN = ON), if turn on the Head Lamp LOW SW(L_HeadLampLowSW = ON) or Auto Light sensor value shows head lamp On, Head Lamp Low outputs are turned on (C_HLampLowON = On).
   B. When Tail lamp Off and headlamp Off conditions are satisfied at the same time, Head Lamp LOW and Tail LAMP turned off simultaneous immediately.
3. Head Lamp High Control
   A. In IGN ter minal State(b_IGN = ON) and Head Lamp Low On(O_HeadLampLowCTRL = ON), if turn on the Head Lamp High SW(L_HeadLampHighSW = ON), Head Lamp High Outputs are turned on (C_HLampHighON = ON).
   B. In Auto light mode , If Head Lamp High switch turn on , when Head lamp Low is 'on' then Head Lamp High activation.
   C. So, in this case used head lamp low output signal. [O_HeadLampLowCTRL]this signal is active low, when HeadLampLow On condition, [O_HeadLampLowCTRL = On], it can get the head lamp high switch state .
   D. when HeadLampLow Off condition [O_HeadLampLowCTRL = Off], head lamp high switch is not activated, even if multifunction Head Lamp High switch is on .
4. Passing Control
   A. In IGN ter minal State(b_IGN = ON), If Head Lamp Passing conditon Input(b_PassingSW = ON) is detected then Head Lamp High Output(C_HLampHighON = ON) is turned on and Head Lamp Low Output(C_HLampLowON= ON) at the same time.

cardiagn.com

5. CANADA DRL (NA DRL)
   A. If alternator is active(C_AltL = On), BCM activates CANADA DRL functionality and turns on the Head Lamp High (C_CANADA_DRLON=On).
   B. Deactivation condition
   1) Head Lamp Low On request by Head Lamp switch or auto Light Head Lamp Low control
   2) Head High On request by Passing switch
   3) Parking Brake switch On

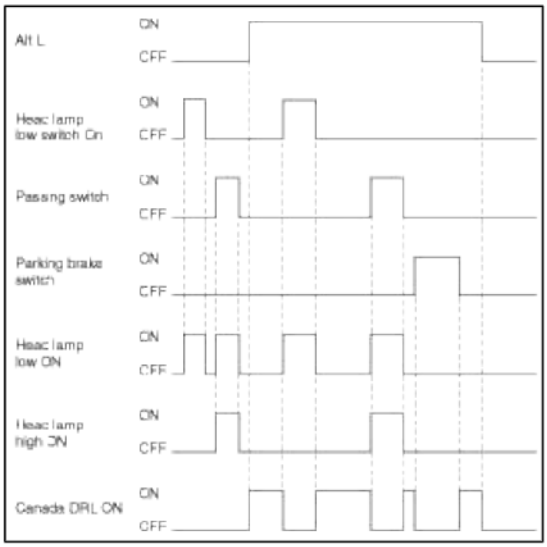

6. Escort Function
   A. After user generates the call of head lamp low light(b_HeadLampLowSWOn = ON), if switch off ignition(b_IGN =Off and b_START=Off), and then keep Head Lamp Low Output On (C_HLampLowON= ON) state during 20 min.
   B. And after open and close driver side door(C_DRVDRSW = ON → C_DRVDRSW = Off), user will have consequently lighting of head lamp low(C_HLampLowON = ON) during only 30 sec.
   C. During active "Escort Function", if receive Lock request 2 times (b_2LOCK =2) or cancel the lighting request of head lamp low (L_HeadLampLowSW = Off & L_AutoLightSW = Off), this function is released.

> NOTE
>
> While escort function is activated, Tail lamp is keeping the turn on state and does not go to Autocut and after finish escort state and user removes key, it can go Autocut mode.
> While the "Escort Function" is activated by 'Head Lamp Low Switch', if change from 'Head Lamp Low Switch' to 'Lamp Auto Switch', "Escort Function" is deactivated, because Lamp Auto mode is 'Lamp Off' condition.
> While the "Escort Function" is activated by 'Lamp Auto Switch', if change from 'Lamp Auto Switch' to 'Head Lamp Low Switch', "Escort Function" is keeping the activation state, because of 'Head Lamp On' condition.
> After IGN ter minal off 20 minute timers is started, but as soon as door is opened and closed then 30 sec timer is engaged.

cardiagn.com

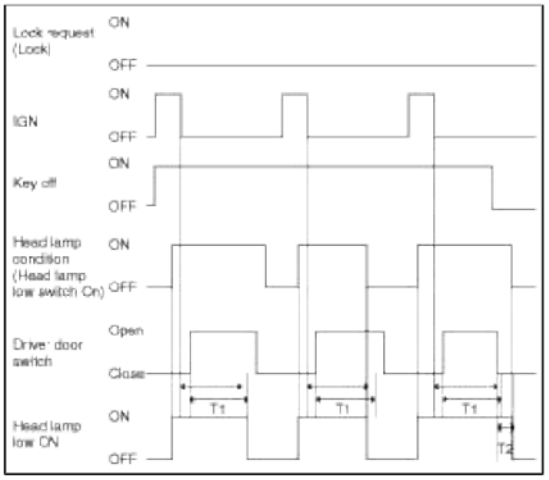

T1 : Ecsort 20m time, T2 : Ecsort 30s time

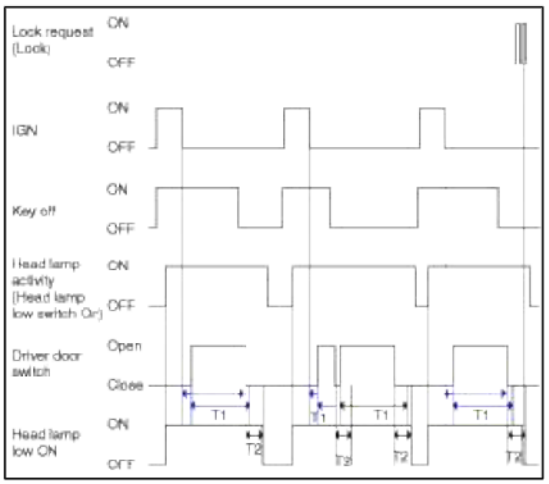

T1 : Ecsort 20m time, T2 : Ecsort 30s time

Auto Light Control

1. This function describes the following features.
   A. Input detection by Auto Light Sensor.
   B. Generate Auto Light Out Status data.
   C. Send Auto Light Out Status.
   D. Tail Lamp Control by Auto light Mode.
   E. Head Lamp Low Control by Auto light Mode.
   F. AV Tail Control by Auto Light sensor level.
2. Variant

Variant		NA
Description	TailON Level	1.57V ± 0.10V
	TailOFF Level	2.56V ± 0.10V
	HeadON Level	1.57V ± 0.10V
	HeadOFF Level	2.56V ± 0.10V
	AVTailON Level	0.41V ± 0.10V
	AVTailOFF Level	0.9V ± 0.10V
	On filtering Time	12 + 0.1 sec
	Off Filtering Time	12 + 0.1 sec

AV Tail Output Control

cardiagn.com

1. In ACC, IGN, START ter minal states, monitoring of the auto light sensor supply's range (AutoLightPwr) is performed and a failure is raises up (Auto Light failure) when the supply's voltage is out of range (outside of range [4V :6V]).
   If Auto Light failure occurs and as long as this error is present, the tail lamp and head lamp low must be turned on regardless of the sunlight level provided by the sensor.
   When physical Auto light sensor failure occurs the Lamps are turned on, because a zero voltage level is provided by the sensor when internal failure is present.
   This is designed to prevent any head lamp cut off when the failure occurs during the night.
   AV Tail Output Control is started In ACC, IGN, START regardless of MFSW Auto Light switch.
   CAN signal AV_Tail is set/reset at the same time as AV Tail.

Front Fog Lamp Control

- In case of Tail Lamp Output On (b_TailLamp = On), if Front Fog Lamp Switch input is detected(L_FrontFogSW = On), Front Fog Lamp outputs (C_FrontFogON = On) is turned ON.

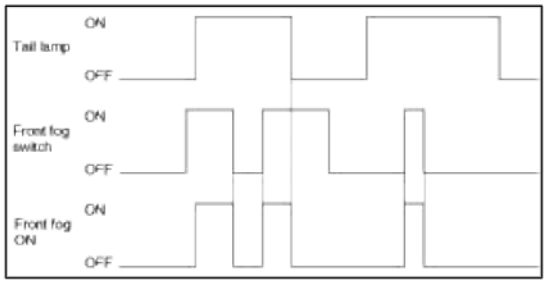

Interior Lamp Control

cardiagn.com

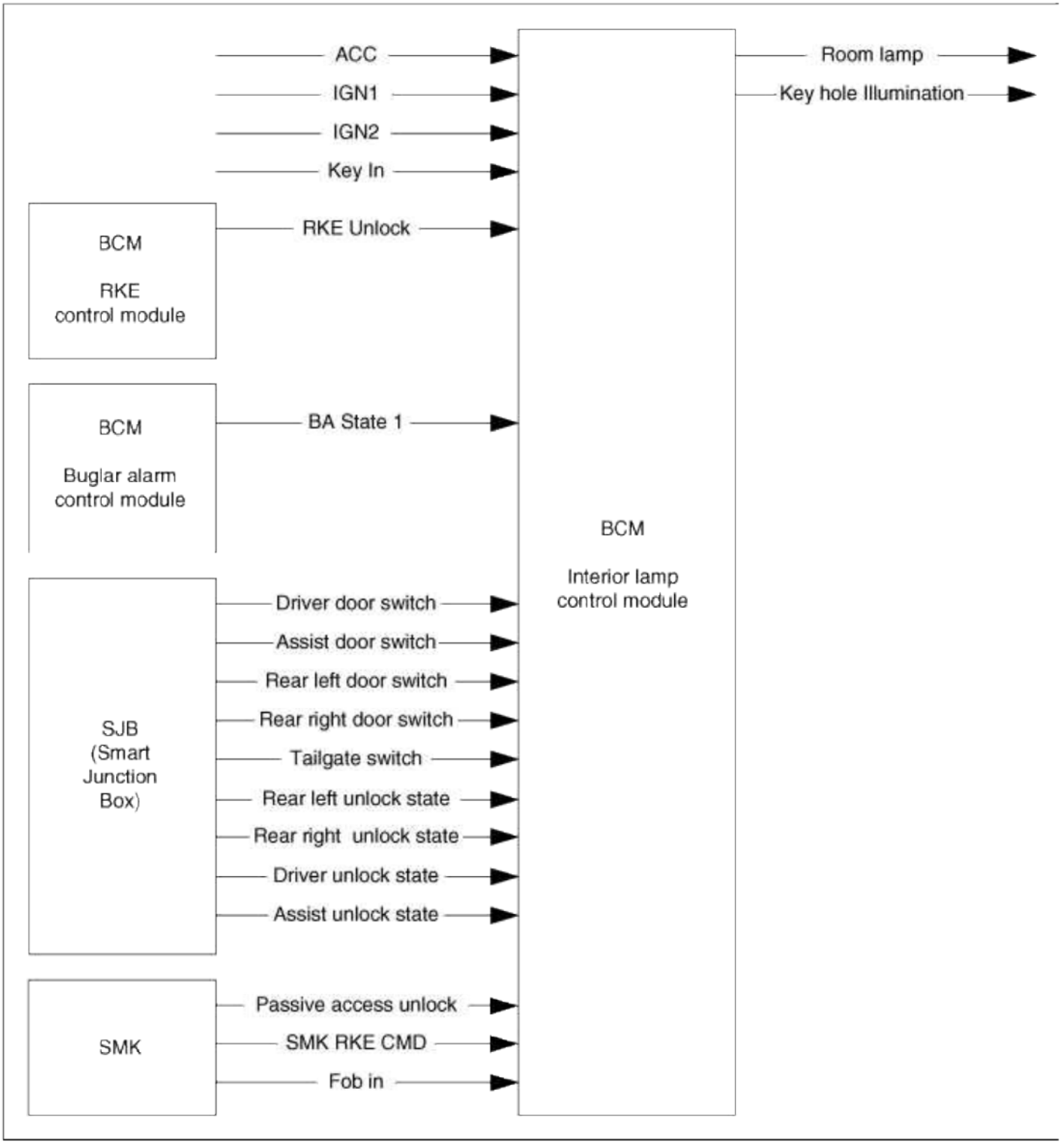

cardiagn.com

Function	Characteristics	Name	
		Hardware Label	Spec. Designation
Input	Logic	L_ACC	ACC input
		L_IGN2	Ignition 2 Input
		L_KeyIn	Key In Signal
	Analog	A_IGN1	Ignition 1 Input
	CAN Communication	C_FobIn	Fob In SW
		C_DRVDRSW	Driver Door Open/Close
		C_ASTDRSW	Assist Door Open/Close
		C_RLDRSW	Rear Left Door Open/Close
		C_RRDRSW	Rear Right Door Open/Close
		C_DRVUnlockState	Driver Door Unlock State
		C_ASTUnlockState	Assistant Door Unlock State
		C_RLUnlockState	Rear Left Door Unlock State
		C_RRUnlockState	Rear Right Door Unlock State
		C_PassiveAccessUnlock	Passive Access Unlock
Output	Logic	O_HeadLampLowCTRL	Head Lamp Low Output Status (Active Low)
		O_RearFogRLY	Rear Fog Control
		O_AVTail	Auto Light output to AV module
		V_AutoLightPwr	Supplying Power to Auto Light Module
		V_AutoLightGND	Supplying Ground to Auto Light Module
	CAN Communication	C_INTTailON	Internal Tail Lamp ON Command
		C_EXTTailON	External Tail Lamp ON Command
		C_HeadLampLowON	Head Lamp Low Command
		C_HeadLampHighON	Head Lamp High Command
		C_FrontFogON	Front Fog Command
		C_CANADA_DRLON	CANADA DRL ON Command (high beam 50%)
		C_AV_Tail	AV Tail
		C_D_DRL_ON	Dedicated DRL Command

Room Lamp Control

cardiagn.com

1. Transitions from “Room Lamp Off” state :

State	Description
Initial Condition	“Room Lamp Off” state : A_IGN1 = Off & b_AllDoorsClose = On & C_TGSW =Off
Event	1. b_KeyOn = Off & b_Unlock = Off →On : (Unlock by RKE or Passive) 2. b_KeyOn = On→Off
Action	• State changed to “Room Lamp 30 sec On” • Start RoomLamp30Timer • O_RoomLamp = On (during RoomLamp30Time)

State	Description
Initial Condition	“Room Lamp Off” state : A_IGN1 = Off
Event	1. b_AnyDoorOpen = Off → On or 2. Reset & b_AnyDoorOpen = On
Action	• State changed to “Room Lamp 20 min On” • Start RoomLamp20Timer • O_RoomLamp = On (during RoomLamp20Time)

State	Description
Initial Condition	“Room Lamp Off” state :
Event	A_IGN1 = On & b_AnyDoorOpen = On
Action	• State changed to “Room Lamp On” • O_RoomLamp = On

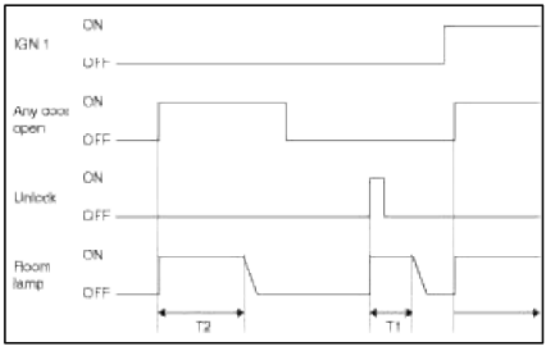

T1 : Room lamp 30 time, T2 : Room lamp 20 time

Value name	Value
Room Lamp 30 Time	30 sec ± 3 sec
Room Lamp 20 Time	20 min ± 1 min

2. Transitions from “Room Lamp 30 sec On” state :

cardiagn.com

State	Description
Initial Condition	"Room Lamp 30 sec On" state :
Event	1. A_IGN1 == On or 2. RoomLamp30Timer ≥ RoomLamp30Time or 3. C_TGSW == Off & b_AllDoorsLock == Off → On or 4. b_ATWSARM == On
Action	• State changed to "Room Lamp Decaying" • Cancel RoomLamp30Timer • Start RoomLampDecayTimer • O_RoomLamp = Decaying (Decaying time : RoomLampDecayTime)

State	Description
Initial Condition	"Room Lamp 30 sec On" state : A_IGN1 == Off & b_AllDoorsClose == On & C_TGSW == Off
Event	1. b_KeyOn == Off & b_Unlock == Off →On : (Unlock by RKE or Passive) 2. b_KeyOn == On→Off
Action	• State remains "Room Lamp 30 sec On" • Re-start RoomLamp30Timer (re-start for additional RoomLamp30Time)

State	Description
Initial Condition	"Room Lamp 30 sec On" state : A_IGN1 == Off
Event	b_AnyDoorOpen == Off→On
Action	• State changed to "Room Lamp 20 min On" • Cancel RoomLamp30Timer • Start RoomLamp20Timer • O_RoomLamp = On (during RoomLamp20Time)

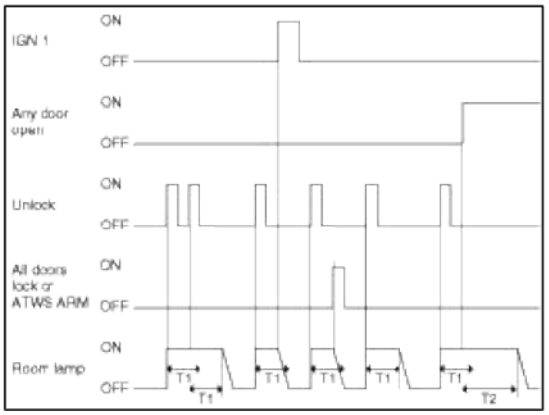

T1 : Room lamp 30 time, T2 : Room lamp 20 time

cardiagn.com

Value name	Value
Room Lamp 30 Time	30 sec ± 3 sec
Room Lamp 20 Time	20 min ± 1 min

3. Transitions from “Room Lamp 20 min On” state :

State	Description
Initial Condition	“Room Lamp 20 min On” state :
Event	• RoomLamp20Timer ≥ 20 min or • A_IGN1 == Off & b_AllDoorsClose == On & C_TGSW == Off & b_AllDoorsLock == On
Action	• State changed to “Room Lamp Decaying” • Cancel RoomLamp20Timer • Start RoomLampDecayTimer • O_RoomLamp = Decaying (Decaying time : RoomLampDecayTime)

State	Description
Initial Condition	“Room Lamp 20 min On” state : A_IGN1 == Off
Event	b_AllDoorsClose == On & C_TGSW == Off & b_AllDoorsLock == Off
Action	• State changed to “Room Lamp 30 sec On” • Cancel RoomLamp20Timer • Start RoomLamp30Timer • O_RoomLamp = On (during RoomLamp30Time)

State	Description
Initial Condition	“Room Lamp 20 min On” state :
Event	A_IGN1 = On
Action	• State changed to “Room Lamp On” • Cancel RoomLamp20Timer • O_RoomLamp = On

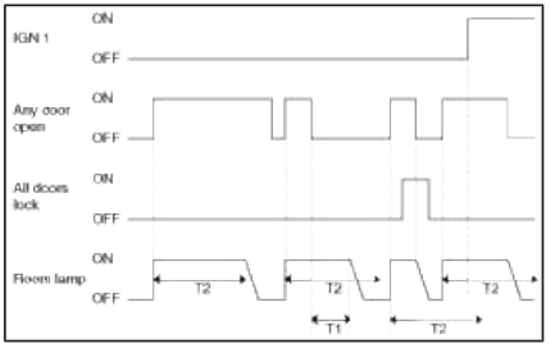

T1 : Room lamp 30 time, T2 : Room lamp 20 time

cardiagn.com

Value name	Value
Room Lamp 30 Time	30 sec ± 3 sec
Room Lamp 20 Time	20 min ± 1 min

4. Transitions from "Room Lamp Decaying" state :

State	Description
Initial Condition	"Room Lamp Decaying" state :
Event	RoomLampDecayTimer ≥ RoomLampDecayTime
Action	• State changed to "Room Lamp Off" • Cancel RoomLampDecayTimer • O_RoomLamp = Off

State	Description
Initial Condition	"Room Lamp Decaying" state : A_IGN1 == Off & b_AllDoorsClose == On & C_TGSW == Off
Event	1. b_KeyOn == Off & b_Unlock == Off →On : (Unlock by RKE or Passive) 2. b_KeyOn == On→Off
Action	• State changed to "Room Lamp 30 sec On" • Cancel RoomLampDecayTimer • Start RoomLamp30Timer • O_RoomLamp = On (during RoomLamp30Time)

State	Description
Initial Condition	"Room Lamp Decaying" state :
Event	A_IGN1 == On & b_AnyDoorOpen == On
Action	• State changed to "Room Lamp On" • Cancel RoomLampDecayTimer • O_RoomLamp = On

State	Description
Initial Condition	"Room Lamp Decaying" state : A_IGN1 == Off
Event	b_AnyDoorOpen == Off → On
Action	• State changed to "Room Lamp 20 min On" • Cancel RoomLampDecayTimer • Start RoomLamp20Timer • O_RoomLamp = On (during RoomLamp20Time)

cardiagn.com

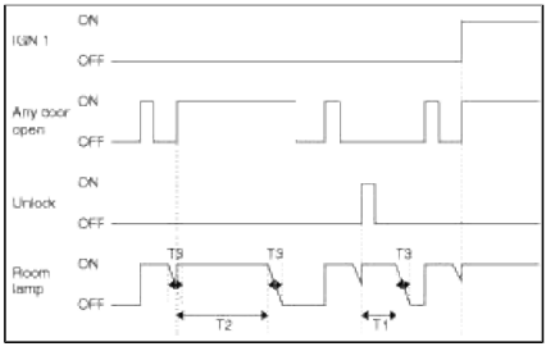

T1 : Room lamp 30 time, T2 : Room lamp 20 time,
T3 : Room lamp decay time

Value name	Value
Room Lamp 30 Time	30 sec ± 3 sec
Room Lamp 20 Time	20 min ± 1 min
Room Lamp Decay Time	2 sec ± 0.2 sec

5. Transitions from "Room Lamp On" state :

State	Description
Initial Condition	"Room Lamp On" state : A_IGN1 == On
Event	b_AllDoorsClose == On & C_TGSW == Off
Action	• State changed to "Room Lamp Decaying" • Start RoomLampDecayTimer • O_RoomLamp = Decaying (Decaying time : RoomLampDecayTime)

State	Description
Initial Condition	"Room Lamp On" state :
Event	A_IGN1 == Off & b_AllDoorsClose == On & C_TGSW == Off
Action	• State changed to "Room Lamp 30 sec On" • Start RoomLamp30Timer • O_RoomLamp = On (during RoomLamp30Time)

State	Description
Initial Condition	"Room Lamp On" state :
Event	A_IGN1 == Off & b_AnyDoorOpen == On
Action	• State changed to "Room Lamp 20 min On" • Start RoomLamp20Timer • O_RoomLamp = On (during RoomLamp20Time)

Key Hole Illumination Lamp Control

cardiagn.com

1. General Description
   A. Key hole illu mination provides a convenient ring illu mination around the area where the driver has to insert his ignition key to switch ter minals.
   B. Key Hole illu mination activated by drive or assistant door open, and after close it maintain illumi on during 30 seconds.
2. Transition from "Key Hole Illu mination Off"

State	Description
Initial Condition	"Key Hole Illu mination Off" state : A_IGN1 == Off
Event	• C_DRVDRSW == On Or • C_ASTDRSW == On
Action	• State changed to “Key Hole Illu mination On” • O_KeyHoleIllum = On

3. Transition from "Key Hole Illu mination On"

State	Description
Initial Condition	"Key Hole Illu mination On" state :
Event	• A_IGN1 == On or • b_BAState1 == On & C_DRVDRSW == Off & C_ASTDRSW == Off
Action	• State changed to “Key Hole Illu mination Off” • O_KeyHoleIllum = Off

State	Description
Initial Condition	"Key Hole Illu mination On" state : • A_IGN1 == Off & b_BAState1 == Off
Event	C_DRVDRSW == Off & C_ASTDRSW == Off
Action	• State changed to “Key Hole Illu mination 30” • Start Illumi30Timer • O_KeyHoleIllum = On (during Illumi30Time)

cardiagn.com

4. Transition from "Key Hole Illu mination 30"

State	Description
Initial Condition	"Key Hole Illu mination 30" state :
Event	• A_IGN1 == On or • Illumi30Timer ≥ Illumi30Time • b_BAState1 == On
Action	• State changed to “Key Hole Illu mination Off” • Cancel Illumi30Timer • O_KeyHoleIllum = Off

State	Description
Initial Condition	"Key Hole Illu mination 30" state : A_IGN1 == Off
Event	• C_DRVDRSW == On Or • C_ASTDRSW == On
Action	• State changed to “Key Hole Illu mination On” • Cancel Illumi30Timer • O_KeyHoleIllum = On

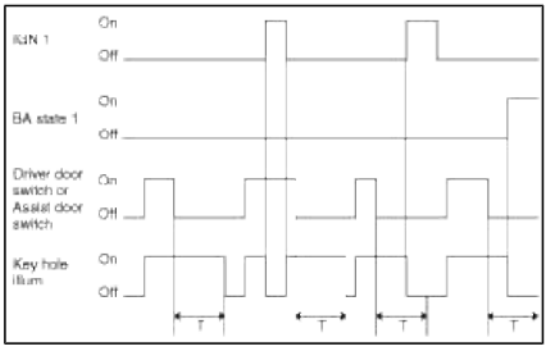

T1 : Illumi 30 time

Value Name	Value
Illumi 30 Time	30 sec ± 3 sec

Warning Control

cardiagn.com

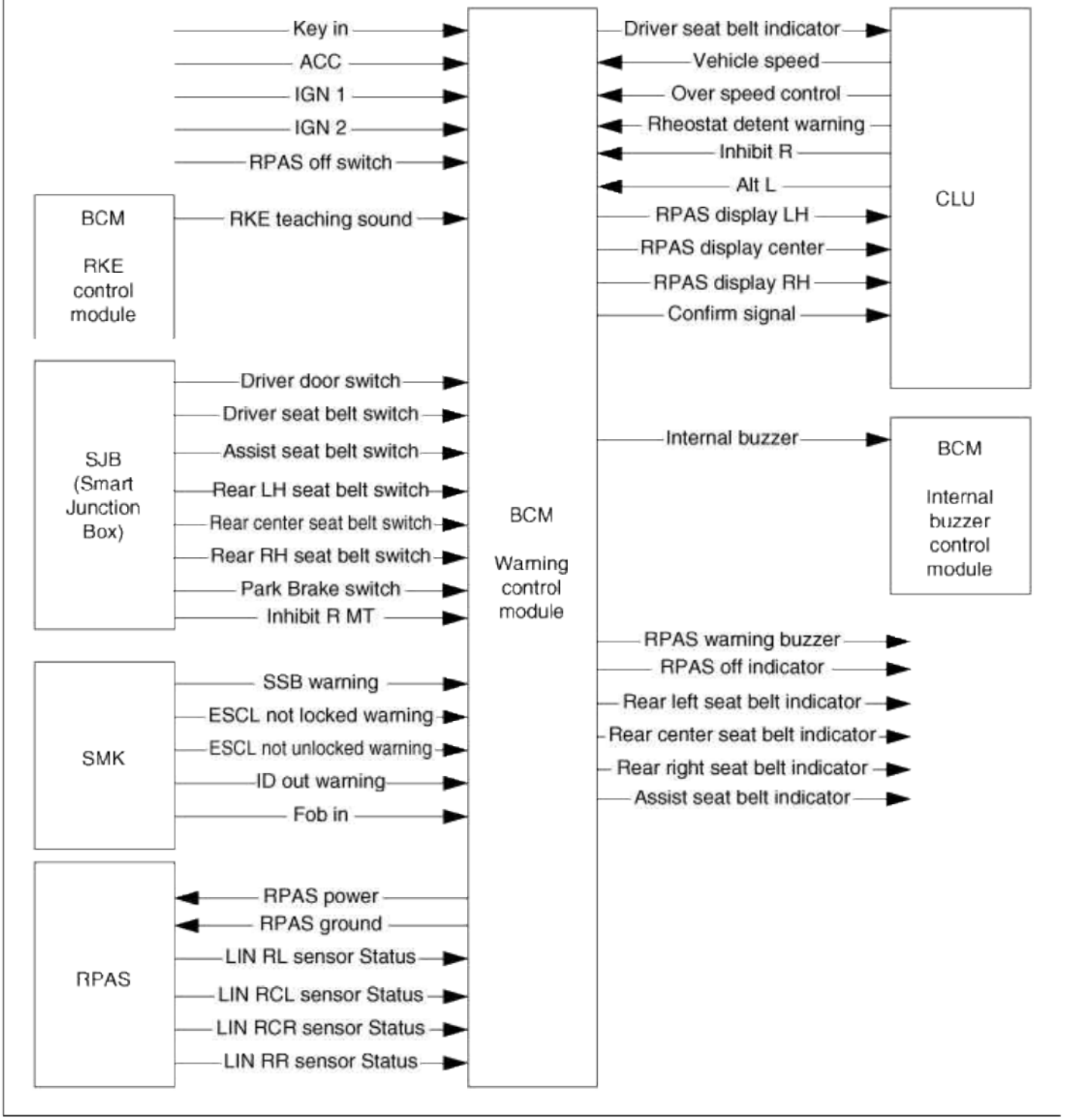

Function	Characteristics	Name	
		Hardware Label	Spec. Designation
	Logic	L_KeyIn	Key In Signal
		L_ACC	Accessory Input
		L_IGN2	Ignition 2 Input
		L_RPASOffSW	RPAS warning Off switch.
	Analog	A_IGN1	Ignition 1 Input
		C_FobIn	Fob In SW

cardiagn.com

Input	CAN Communication	C_10km	10km/h Vehicle Speed which CLU calculates
		C_VehicleSpeed	Vehicle speed from Power Train High CAN
		C_InhibitR	Inhibit R State
		C_AltL	Alternator Level
		C_OverSpeedCtrl	Over Speed Warning Control Command
		C_DRVSeatBeltSW	Driver Side Seat Belt Switch
		C_ASTSeatBeltSW	Assist Side Seat Belt Switch
		C_RearLHSeatBeltSW	Rear Left Side Seat Belt Switch
		C_RearCTRSeatBeltSW	Rear Center Seat Belt Switch
		C_RearRHSeatBeltSW	Rear Right Side Seat Belt Switch
		C_Rheostat_Detent_Warning	RHEOSTAT Detent Warning Control Command
		C_ParkBrakeSW	Parking Brake Switch
		C_DRVDRSW	Driver Door Open/Close State
		C_SSB_Warning	SSB Warning state
		C_IDOUT_WNG	ID Out Warning state
		C_ESCL_Notlocked_Warning	ESCL not locked warning State
		C_ESCL_Notunlocked_Warning	ESCL not unlocked warning State
	LIN Communication	LIN_RLSnsrStatus	RPAS Rear Left Sensor State
		LIN_RCLSnsrStatus	RPAS Rear Center Left Sensor State
		LIN_RCRSnsrStatus	RPAS Rear Center Right Sensor State
		LIN_RRSnsrStatus	RPAS Rear Right Sensor State
	Internal	b_RKETeachingSound	When each RKE key's teaching is ended, this event is triggered.
Output	CAN Communication	C_DRVSeatBeltIND	Driver Seatbelt Indicator state
		C_RPASDisplayLH	Status of the LH Sensor
		C_RPASDisplayCTR	Status of the LH&RH Center Sensor
		C_RPASDisplayRH	Status of the RH Sensor
		C_R_Confirm_Signal	"R" Gear Position Status for Cluster Display
	Logic	O_InternalBuzzer	Internal Buzzer Output
		V_RPASPwr	RPAS Power Output
		V_RPASGND	RPAS GND
		O_ASTSeatBeltIND	Assistant Side Seat Belt Indicator
		O_RLSeatBeltIND	Rear Left Side Seat Belt Indicator
		O_RCSeatBeltIND	Rear Center Seat Belt Indicator
		O_RRSeatBeltIND	Rear Right Side Seat Belt Indicator

cardiagn.com

		O_RPASOffIND	RPAS Off Indicator
		O_RPASWarningBuzzer	RPAS External Buzzer Output

Warning Control

1. The Warning function offers the following features
   A. Seat Belt Warning
   B. Seat Belt Re minder
   C. Over Speed Warning
   D. Key Reminder Warning
   E. Parking Brake Warning
   F. RKE Key Teaching sound
   G. SMK System Warning
   H. RAPS Warning
   I. Rheostat Detent Warning
2. Buzzer Operation
   A. For Warning Sound Control Function, two types of Buzzers are used. One is Internal Buzzer, and it is located in BCM. The other is External Buzzer, and it is located in SMK.

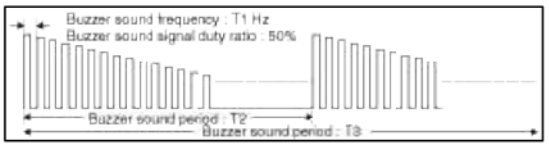

Name	Characteristics
Internal Buzzer Sound frequency	T1 Hz
Internal Buzzer Sound Signal Duty Ratio	50%
Internal Buzzer Sound Period	T2 sec + 5% sec
Internal Buzzer Sound duration	T3 sec + 5% sec

3. Priority of Warning Buzzer Condition
   A. If there are multiple warning conditions simultaneously, the warning shall activate the warning based on the pre-defined priority : (1st is the highest priority)

Priority	Name	Control Logic	Internal Buzzer Control
1	Diagnostic sound	BCM	BCM
2	Seat Belt warning / Seat Belt Re minder		
3	Over Speed Warning	CLU	
4	Key Reminder(Operated) warning	BCM	
5	Parking Brake Warning		
6	Steering Column Not Locked Warning	SMK	
7	ID Out Warning		
8	Steering Column Not Unlocked Warning		
9	SSB Button Warning		
10	RKE Key Teaching sound	BCM	
11	Rheostat Detent Warning	CLU	

cardiagn.com

Internal Buzzer Sound Description

- BCM has an Internal Buzzer and Cluster has a Warning Indicator.

1. New request while buzzer activate by a previous request
2. If a buzzer is active by a previous request, new request with higher priority cannot interrupt previous request. The new request will activate the buzzer as soon as the previous request sound period is completed.

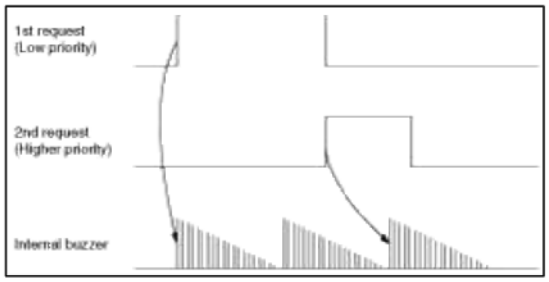

3. Synchronization of Internal Warning Buzzer Sound and Indicator. To synchronize Indicator and Internal Warning buzzer, BCM sends the Indicator Blinking and activate Internal Warning Buzzer. Cluster checks received request and operates indicator.

Seat Belt Warning

1. When driver or passengers have their seat belts unfasten during driving, sound or indicator warning re mind them of fastening their seat belts.
2. This function offers following features
   (1) Turn on/off and blinking Driver side seatbelt indicator depending on Driver side seatbelt switch input.
   (2) Turn on/off and blinking Assistant side seatbelt indicator depending on Assistant side seatbelt switch input.
   (3) Turn on/off Internal Warning Buzzer depending on Driver side or Assistant side seatbelt switch input.
   (4) If vehicle speed exceeds a specific value, seatbelt indicator and Internal Warning Buzzer should be activated in accordance with defined pattern.
3. General Description
   (1) When driver unfasten his seat belts during driving, BCM warns driver by warning sound or indicator.
   (2) Turn on/off and blinking Driver side seatbelt indicator depending on Driver side seatbelt switch input.
   (3) Turn on/off Internal Buzzer depending on Driver side seatbelt switch input.
   (4) Just after IGN1 On(A_IGN1 = On), to get the SeatBelt fastened/unfastened information, it takes about "SBIGN1Time(Typically 100 msec)", and before this time, J/Box indicates that seatbelt is fastened via CAN. So, from the moment IGN1is On(A_IGN1 = ON) and after "SBIGN1Time", the seat belt/unbelt logic can start.

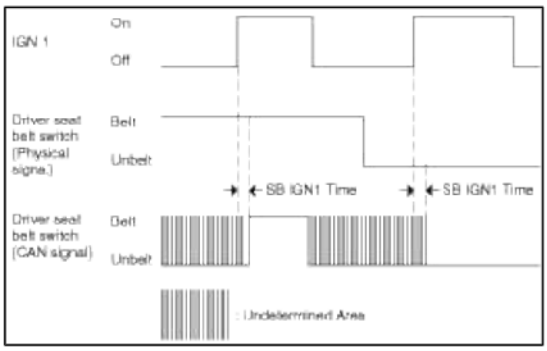

4. Seat Belt Reminder Function Description

cardiagn.com

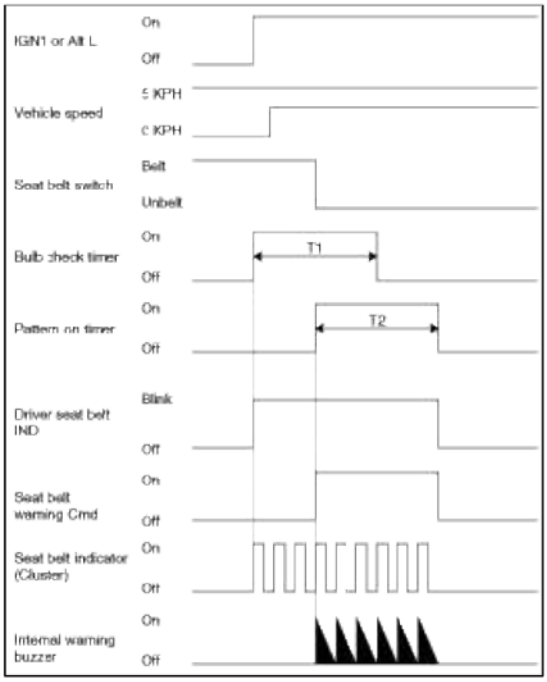

T1 : Bulb check time, T2 : Pattern on time

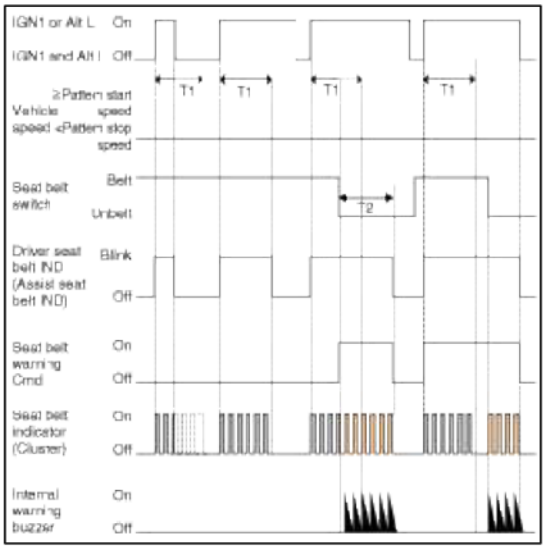

T1 : Bulb check time, T2 : Pattern on time

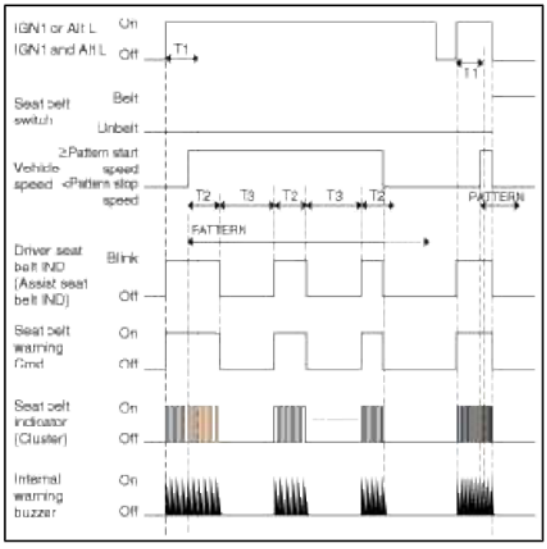

T1 : Bulb check time, T2 : Pattern on time,
T3 : Pattern off time
PATTERN : Pattern number times (T2 ON / T3 OFF)

cardiagn.com

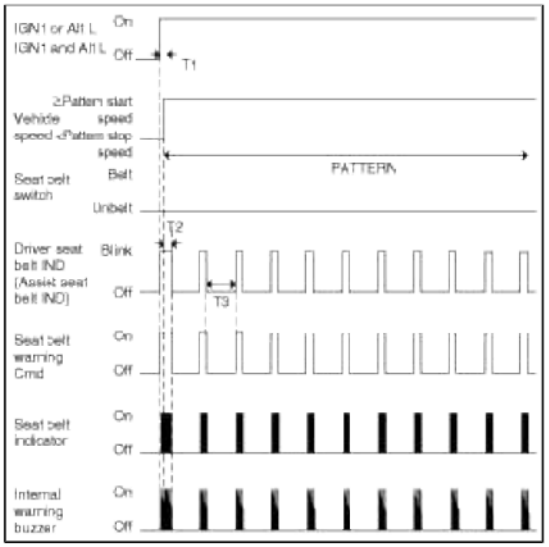

T1 : Bulb check time, T2 : Pattern on time,
T3 : Pattern off time
PATTERN : Pattern number times (T2 ON / T3 OFF)

Name	Value
SB IGN1 Time	100 ±10msec
Bulb Check Time	6 ± 0.1 sec
Pattern On Time	6 ± 0.1 sec
Pattern Off Time	24 ± 0.1 sec
Pattern Start Speed	10 km/h
Pattern Stop Speed	5 km/h
Pattern Number	11

Key Reminder Warning(Key Operated Warning) Function

1. Internal Buzzer Control by Key Reminder Warning function
2. If driver opens the driver side door and go away from the car during key is inserted or ACC state, a sound warning re minds a driver that key has to be taken off or ACC state has to be changed to Off state.
3. This warning Function does not operate in China Variant.

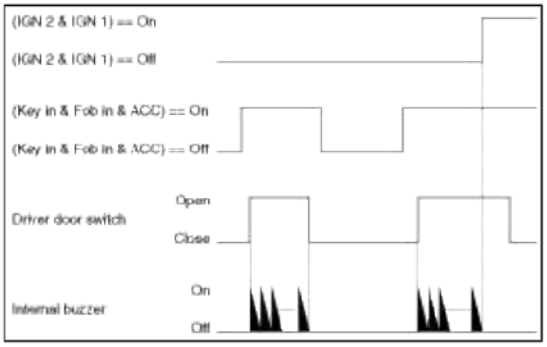

Parking Brake Warning

1. Internal Buzzer Control by Parking Brake Warning Function
2. If driver drives the vehicle with parking brake On or not completely released and vehicle speed exceeds the specific value of 10km/h, a sound warning re minds the driver that parking brake has to be released.

cardiagn.com

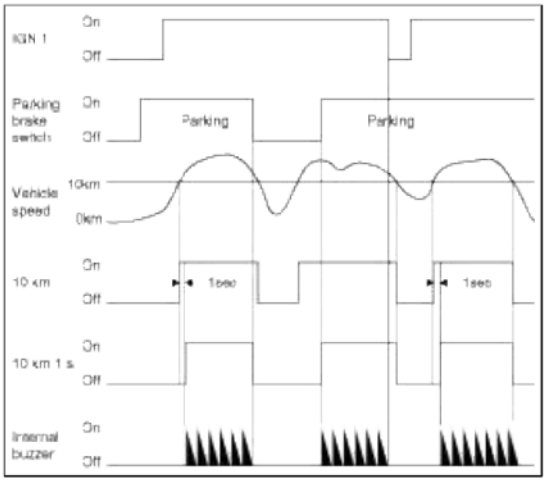

RKE Teaching Sound

1. Internal Buzzer Control by RKE Teaching Sound Function
2. When each RKE's Teaching is ended, Warning buzzer is operated, one time.

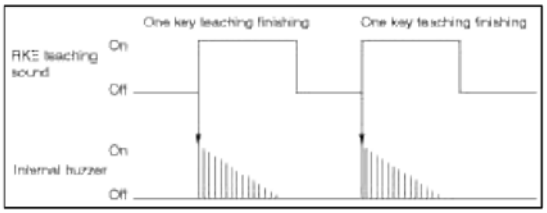

SMK System Warning Sound

1. Internal Buzzer control for SMK System warning
2. SMK System Warnings conditions of activation are controlled by the SMK unit. When a condition is satisfied, SMK unit sends corresponding warning request to BCM and cluster by CAN.
3. BCM only operates the Internal Buzzer.
4. The internal buzzer is controlled by the BCM and Sound duration is controlled by SMK.
   (1) Steering Column Not Locked Warning
      A. This warning requires activation of the Internal Buzzer during C_ESCL_Notlocked_Warning = On.
      B. SMK Warning Buzzer Sound Period : 0.6s + 0.06 sec
   (2) ID Out Warning1
      A. This warning requires activation of the Internal Buzzer during C_IDOUT_WNG = On.
      B. SMK Warning Buzzer Sound Period : 5s + 0.1 sec
   (3) Steering Column Not Unlock Warning
      A. This warning requires activation of the Internal Buzzer during C_ESCL_Notunlocked_Warning = On.
      B. SMK Warning Buzzer Sound Period : 1s + 0.1 sec
   (4) SSB Button Warning
      A. This warning requires activation of the Internal Buzzer during C_SSB_Warning = On.
      B. SMK Warning Buzzer Sound Period : 0.6s + 0.06 sec

Rheostat Detent Warning Sound

1. Internal Buzzer control for Rheostat Detent warning
2. Rheostat Detent System Warnings conditions of activation are controlled by the CLU unit. When a condition is satisfied, CLU unit sends corresponding warning request to BCM by CAN.
3. BCM only operates the Internal Buzzer
4. The internal buzzer is controlled by the BCM and Sound duration is controlled by BCM.

Turn and Hazard Control

cardiagn.com

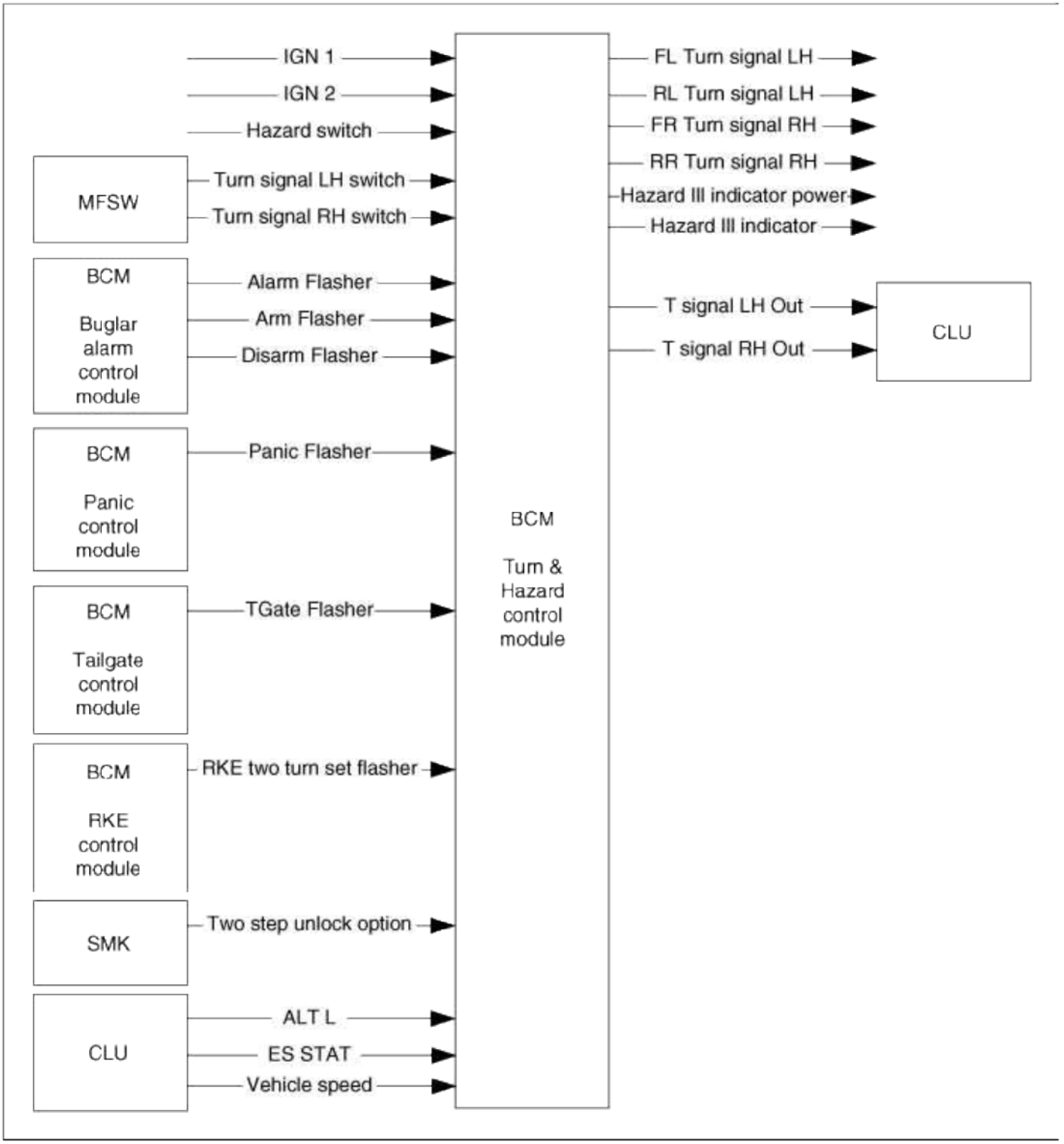

cardiagn.com

Function	Characteristics	Name	
		Hardware Label	Spec. Designation
Input	Logic	L_IGN2	Ignition 2 Input
		L_HazardSW	Hazard Switch
		L_TurnSigLHSW	Turn Left Signal Switch
		L_TurnSigRHSW	Turn Right Signal Switch
	Analog	A_IGN1	Ignition 1 Input
	CAN Communication	C_TwoStepUnlockOption	SMK RKE Two steps Unlock Mode Setting
		C_ALT_L	Engine is running
		C_ES_STAT	ESS system status
		C_VehicleSpeed	Vehicle speed from Power Train High CAN
	Internal	b_AlarmFlasher	Alarm Flasher Request
		b_ArmFlasher	ARM Flasher Request
		b_DisarmFlasher	DISARM Flasher Request
		b_PanicFlasher	Panic Flasher Request
		b_TGateFlasher	Tailgate Flasher Request
		b_RKETwoTurnSetFlasher	BCM Two steps Unlock Mode Setting
Output	Logic	O_TurnSigFLH	Flasher FLeft Lamp Output
		O_TurnSigRLH	Flasher RLeft Lamp Output
		O_TurnSigFRH	Flasher FRight Lamp Output
		O_TurnSigRRH	Flasher RRight Lamp Output
		V_HazardIlllNDPwr	Hazard IND Power Output
		O_HazardIlllND	Hazard IND Output
	CAN Communication	C_TSigLHOut	Turn LH Signal Lamp Out Status for indicator in CLU
		C_TSigRHOut	Turn RH Signal Lamp Out Status for indicator in CLU

Flasher Buzzer Control Function

1. To provide an audible feedback to the driver when flasher is active, a Flasher Buzzer is used.
2. While Flasher Lamp is operated, the flasher buzzer is activated at the time of Output On/Off transition.
3. Flasher Buzzer is controlled by the Cluster.
4. BCM turns on/off the turn left or/and turn Right flasher, cluster controls the flasher buzzer following the activation request from BCM.

cardiagn.com

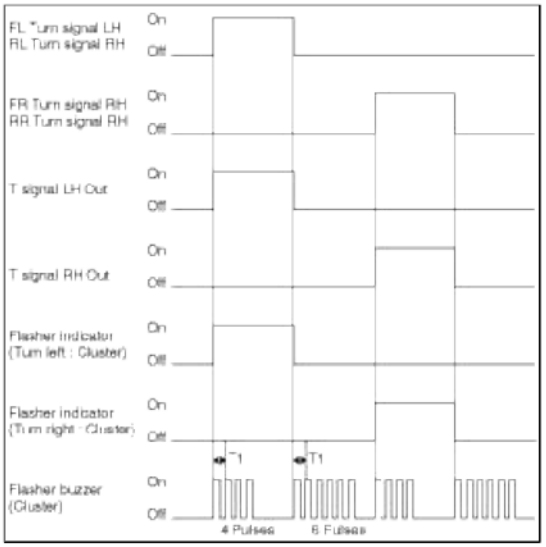

T1 : 2 [KHz], 50% duty

Hazard Control Function

1. Activating the Hazard switch generates the Hazard signal, regardless of the Ignition key position. The Hazard signal is a permanent sequence. It goes off when the Hazard switch is deactivated. The signal drives both the Left and Right sides.
2. If it is detected the Bulb failure, flasher starts fault flashing. But it is only possible in IGN1 and IGN2(A_IGN1 = On & L_IGN2 = On) on status.

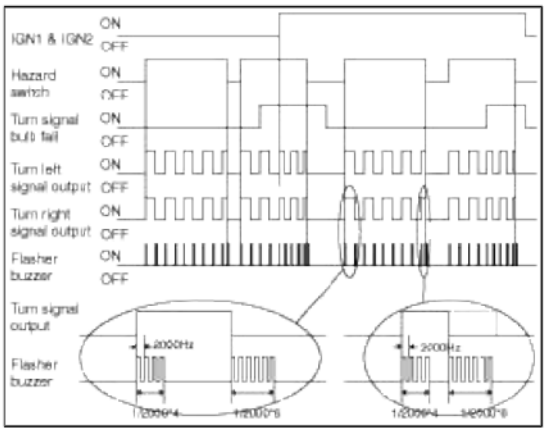

Turn Signal Control Function

1. If the Left (or Right) turn switch is active and if IGN2 is On, the left (or Right) turn signal outputs are driven.
2. The turn signal is active as long as both conditions ((L_TurnSigLHSW or L_TurnSigRHSW = On) and L_IGN2 = On) are true and is turned Off when one of these conditions is no longer detected.
3. If bulb failure(outage or open load) is detected on the activated turn signal side, the flasher is operated with fault flashing.
4. This failure can be detected only when IGN1 and IGN2 On (A_IGN1 == On and L_IGN2 == On).
5. While Turn switch is On and failure was detected, even if bulb failure is no longer detected, keep the fault flashing and after next Turn switch On or IGN On transition, flasher is activated with normal blinking.

cardiagn.com

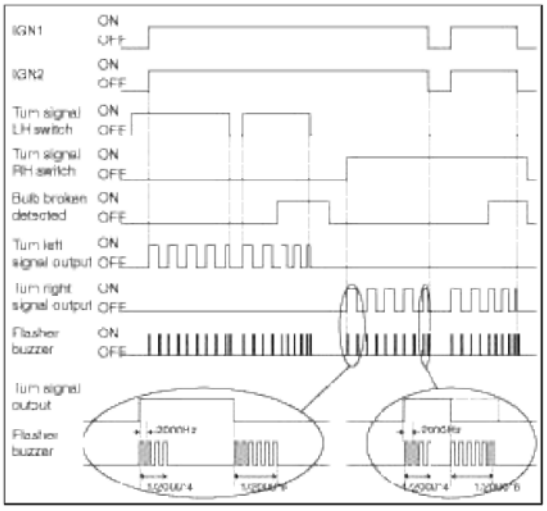

Lane Change Turn Signal Control Function

1. Flasher lane-change feature means that a momentary activation of the turn switch will cause 3 flashes on the indicator circuit.
2. This lane-change feature operates under the following conditions :
   A. Lane change mode enabled (b_LaneEnable = On)
   B. Ignition 2 shall be On, and the lane change feature is not available if Ignition 2 is Off.
   C. During flashing by lane change mode, it should detect the "Bulb-Failure" mode.
   D. During the Lane Change mode operation, if the user moves the turn switch to the other direction, then Lane change mode is finished and the other direction's flashing (Normal or Lane change flashing) will start depending on the Turn Switch On Period.

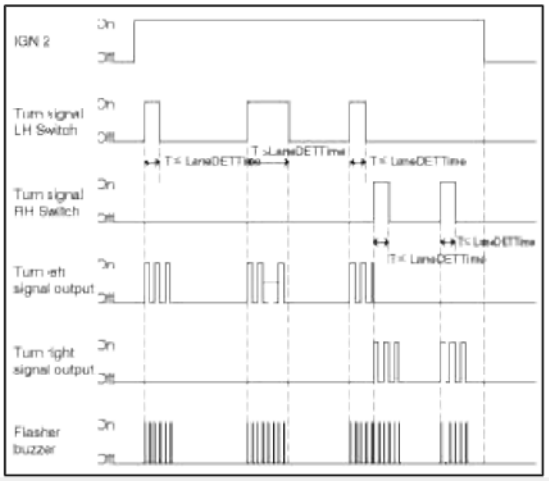

Flasher Failure Control Function

1. This function describes the following features
   A. Bulb Failure Detection
   B. SCG (SHORT to GND) Fault detection
2. BCM is monitoring the Turn Signal Output.
3. During Turn signal control or Hazard control, if Bulb failure detected, Flasher is operated with fault flashing.
4. Bulb Failure Detection Condition

Burglar Alarm Flashing Control Function

1. This function describes the following features :
   A. Management of request for Alarm flashing by Burglar Alarm Manager
   B. Alarm Flashing Control
   C. Arm Flashing Control
   D. Disarm Flashing Control

cardiagn.com

2. Alarm Flashing Control
   A. If there is a request for having the alarm flashing (b_AlarmFlasher == On), a pattern of Turn left and turn right bulb flashing is performed.
   B. When the request is no longer present (b_AlarmFlasher == Off) the driving of the turn left and turn right bulbs flashing by Alarm is stopped without delay.
   C. The flashing shall be synchronized with Horn Alarm activation.
   D. Depending on the variant setting, flashing pattern consist in 1 or 3 group of flashing as described in below figure.

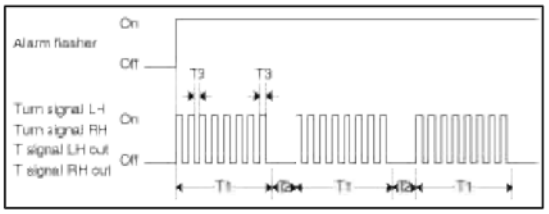

T1 : 27 sec + 0 sec / -2.7 sec,
T2 : 10 sec ± 1 sec,
T3 : 450 msec ± 45 msec

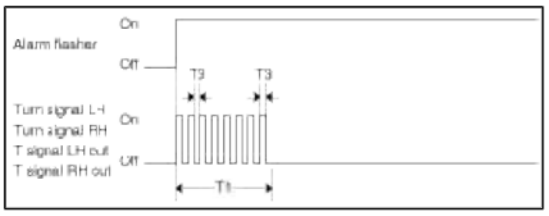

T1 : 27 sec + 0 sec / -2.7 sec,
T3 : 450 msec ± 45 msec

3. Arm/Disarm Flashing Control
   A. If there is a request for having the arm flashing (b_ArmFlasher == Off → On) or disarm flashing (b_DisarmFlasher == Off → On), a pattern of Turn left and turn right bulb flashing is performed.
   • Arm Flashing Pattern

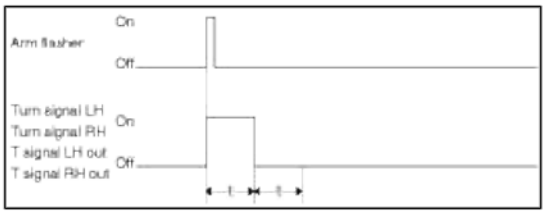

T : 1 sec ± 0.1 sec

   • Disarm Flashing Pattern

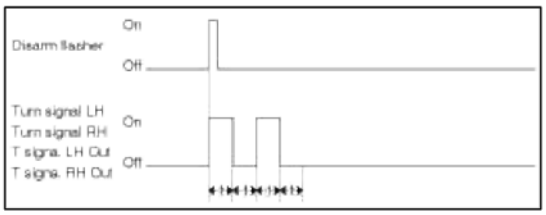

T : 500 msec ± 50 msec

Panic Flashing Control Function

1. If there is a request for having the Panic flashing (b_PanicFlasher == On), a pattern of Turn left and turn right bulb flashing is performed.
2. When the request is no longer present (b_PanicFlasher == Off) the driving of the turn left and turn right bulbs flashing by Panic is stopped without delay.
3. The flashing shall be synchronized with Horn activation.

cardiagn.com

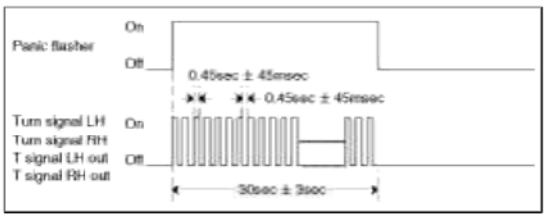

Tailgate Flashing Control Function

1. If there is a request for having the Tailgate flashing (b_TGateFlasher == Off→On), a pattern of Turn left and turn right bulb flashing is performed.
2. Tailgate flashing is two times flash ,each operation time is 500ms having 500ms pausing time.

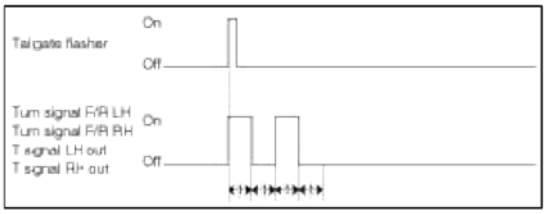

T : 500 msec ± 50 msec

RKE Two Turn Unlock Set Flashing Control Function

1. This function describes the following features :
   A. Management of request for RKE Two Turn Unlock Set/Reset complete flashing by RKE Lock Control Manager and SMK unit
2. Function Description
   A. If there is a request for having the Two Turn Unlock Set/Reset flashing by RKE (b_RKETwoTurnSetFlasher = Off→On) or by SMK RKE(C_TwoStepUnlockOption = Off→On), a pattern of Turn left and turn right bulb flashing is performed.
   B. RKE Two Turn Unlock Set/Reset flashing has four times flashing in 2s ,each operation has 250ms ON time and 250ms OFF time.

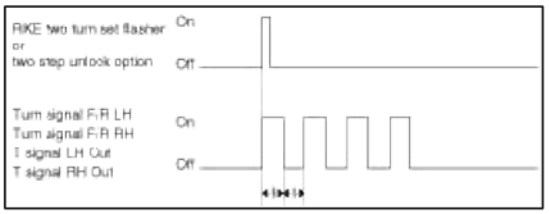

T : 250 msec ± 25 msec

Flasher Function Priority Control Function

1. If conditions of activating flashing conflict with each other, functional priorities are as following :

Priority	Flasher Function Name
1	Arm / Disarm Flashing (Burglar Alarm system)
2	Burglar Alarm Flashing (Burglar Alarm system)
3	Panic Flashing
4	Hazard Flashing
5	Turn Signal Flashing
6	Tailgate Flashing
7	RKE Two Turn Set/Reset Flasher

cardiagn.com

2. Turn Signal and Hazard Priority
   A. During Hazard flashing, if Turn Flashing is requested, keep the Hazard operation.
   B. During turn flashing, if Hazard flashing is requested, interrupt the turn flashing and start Hazard operation immediately.
   C. During Hazard operation if Hazard and Turn SW are On at the same time, if Hazard SW is turned Off, turn flashing starts to operate but, does not discontinue the running period.

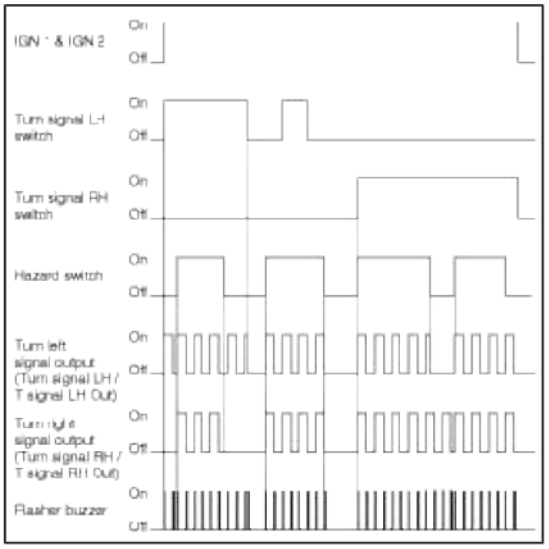

3. Burglar Alarm and Panic Priority
   (1) Panic Alarm must be independent of the Burglar Alarm state (ARM, DISARM, ALARM,...) but is stopped when entering in ARM mode.
      A. During Burglar Alarm is in progress, a panic alarm function can be started and stopped
      B. During Panic Alarm Flashing is in progress, a Burglar Alarm can start.
   (2) The activation of the horn and hazard lamps by Burglar Alarm is higher priority than Panic mode
   (3) If Alarm is in progress (3 Times pattern) during the 10s off time of the pattern the horn should be off.

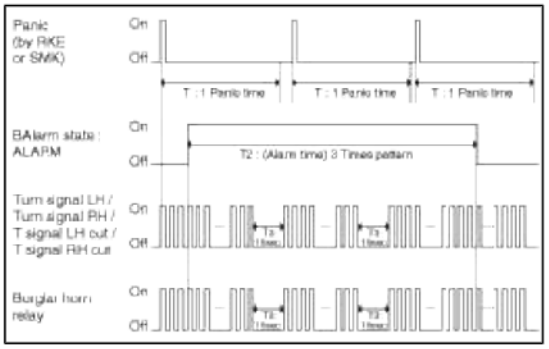

4. Autolock and Panic Priority
   (1) During the activation of Horn and Hazard by Panic-Alarm, if get a AutoLock(b_AutoLockCmd) request from Burglar Alarm Function, it keeps the activation of Horn and Hazard by Panic-Alarm but do lock flashing.

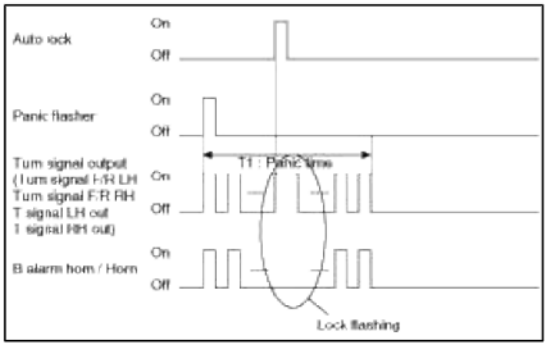

Doors Lock/Unlock Control

cardiagn.com

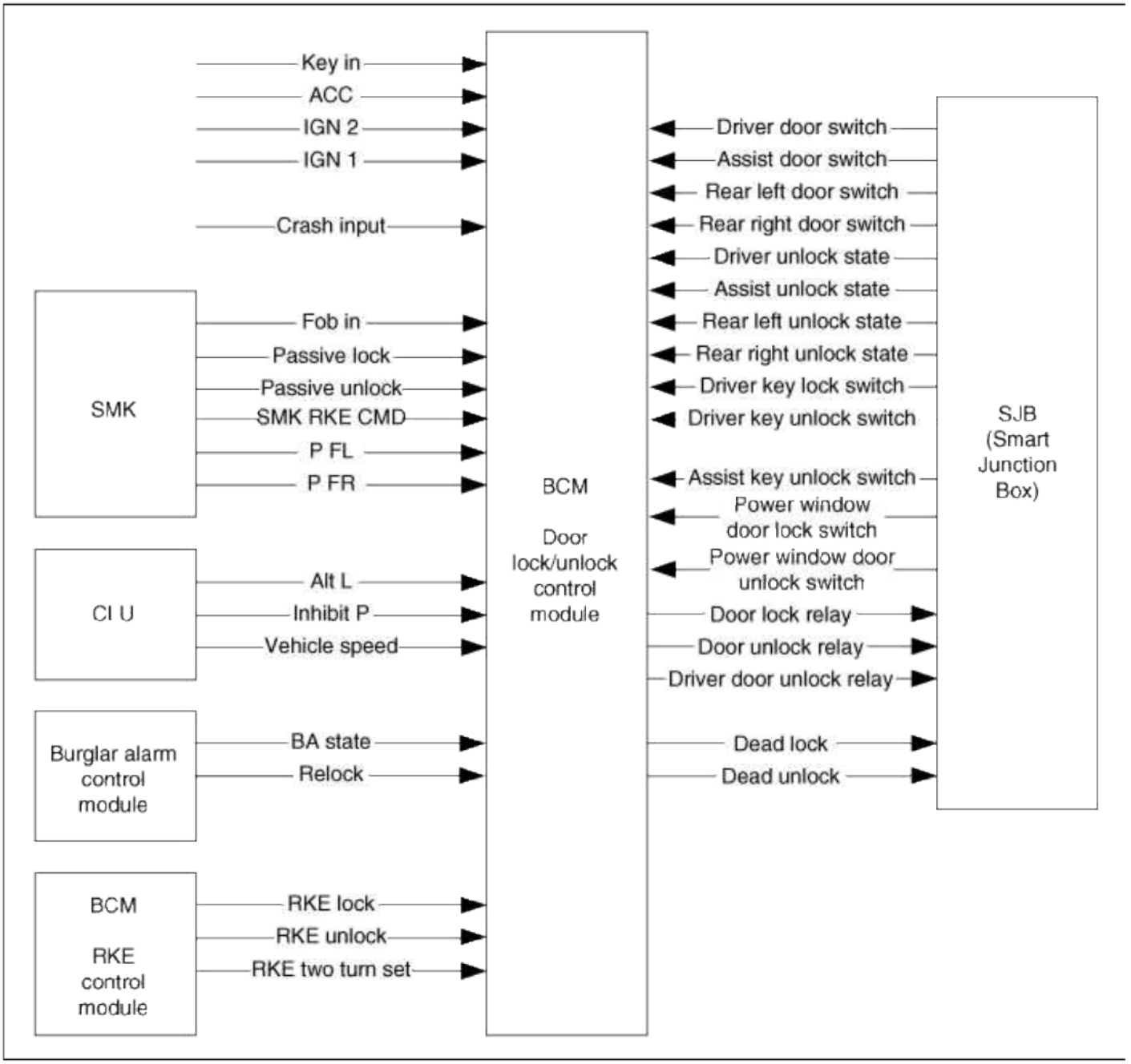

Function	Characteristics	Name	
		Hardware Label	Spec. Designation
	Logic	L_ACC	ACC
		L_IGN2	Ignition 2
		L_KeyIn	Key In Signal
	Analog	A_IGN1	Ignition 1 Input
	PWM	P_CrashInput	Crash Unlock Pulse
		C_ASTDRSW	Assistant Door Open/Close Status
		C_AltL	Engine is running
		C_ASTUnlockState	Assistant Door Unlock Status
		C_DRVDRSW	Driver Door Open/Close Status

cardiagn.com

Input	CAN Communication	C_DRVKeyLockSW	Key Cylinder Lock SW In Driver Door*
		C_DRVKeyUnlockSW	Key Cylinder Unlock SW In Driver Door *
		C_ASTKeyUnlockSW	Key Cylinder Unlock SW In Assist Door
		C_DRVUnlockState	Drive Door Unlock Status
		C_FobIn	Fob In SW
		C_InhibitP	Inhibit P State
		C_PassiveLock	PIC Passive access lock for door module
		C_PassiveUnlock	PIC Passive access unlock for door module
		C_P_FL	Passive command from Front Left
		C_P_FR	Passive command from Front Right
		C_PwdwDRLockSW	Central Door Lock Switch
		C_PwdwDRUnlockSW	Central Door Unlock Switch
		C_RLDRSW	Rear Left Door Open/Close Status
		C_RLUnlockState	Rear Left Door Unlock Status
		C_RRDRSW	Rear Right Door Open/Close Status
		C_RRUnlockState	Rear Right Door Unlock Status
		C_SMKRKECMD	SMK FOB RKE Command
		C_VehicleSpeed	Vehicle speed from power train CAN
	Internal	b_BAState	BurglarAlarm State Information
		b_PState	
		b_Relock	Lock command by Burglar Alarm
		b_RKELock	RKE Lock Command
		b_RKEUnlock	RKE Unlock Command
		m_RKETwoTurnSet	RKE Two Turn Unlock Set
		b_AutoLockState	Auto Door Lock Active Marker
		b_CRASHSts	Crash unlock State
		b_CtrLockREQ	Locking actuation in progress
		b_CtrUnlockREQ	Central Door Unlock Request
		b_KeyLockREQ	Lock Request by Mechanical Key
		b_KeyUnlockREQ	Unlock Request by Mechanical Key
		b_RKELockREQ	Lock Request by RKE
		b_RKEUnlockREQ	Unlock Request by RKE
		b_SMKLockREQ	Lock Request by SMK

cardiagn.com

Internal		b_SMKUnlockREQ	Unlock Request by SMK
		b_TwoTurnMarker	Two Turn unlock Status
		LockOutTime	Locking activation time
		OffDelayTime	After Locking/unlocking activation time
		TwoTurnTimer	Two Turn unlock timer
		TwoTurnTime	Two Turn unlock time
		UnlockOutTime	Unlocking activation time
		b_DeadLockMarker	Dead Lock Status
		b_TUnlockREQ	Unlock Request by Two Turn
Output	Internal	C_DEADLock	Dead Lock Command
	Communication	C_DEADUnlock	Dead Unlock Command
		C_DoorLockRly	Central Door Lock Output
		C_DoorUnlockRly	Central Door Unlock Output
		C_DRVDRUnlockRly	Driver Door Unlock Output

Central Door Lock/Unlock Function

1. If the central locking/unlocking request is detected, central locking function is operated and outputs all doors lock/unlock during LockOutTime / UnlockOutTime. (Generally this value is 500 msec).
   And then, it have delay time for next Lock/Unlock Operation for OffDelayTime(Generally this value is 100 msec). However Central lock shall be inhibited while crash unlock is active.
2. Central Lock/Unlock Operation Condition

Request	Central Lock	Central Unlock
Central Lock/Unlock SW	In Crash Unlock not Active State	b_BAState = Off (DISARM, AutoLockTimer1, AutoLockTimer2, ARMHOLD, PREARM)
Mechanical Key Lock/Unlock	1. Ter minal Off(b_KeyOn = Off)	All
	2. In Crash Unlock not Active State	
RKE Lock/Unlock	In Crash Unlock not Active State	All
Passive Lock/Unlock	In Crash Unlock not Active State	All

cardiagn.com

3. Action of Actuator

A. When reverse command (Lock/Unlock) input occurred during outputting (Lock/Unlock). → Command Output is stop and new command output is activated.

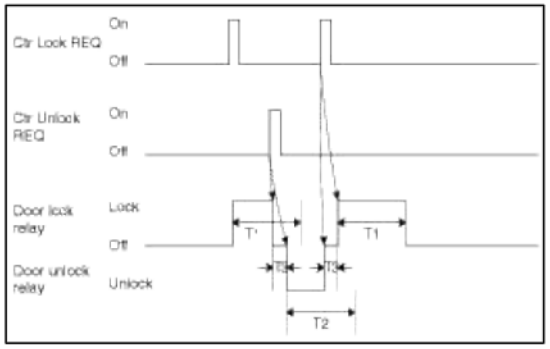

T1 : Lock out time, T2 : Unlock out time, T3 : Off delay time

B. When same input is occurred during output. → Don't care the second request.

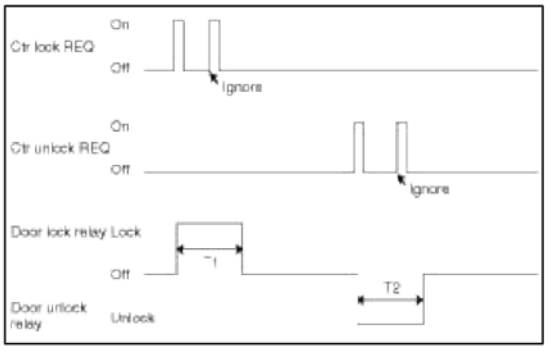

T1 : Lock out time, T2 : Unlock out time

C. When input is occurred during Off Delay Time → After Delay time, output.

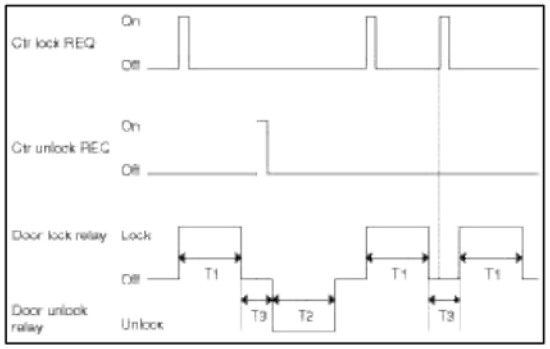

T1 : Lock out time, T2 : Unlock out time, T3 : Off delay time

Priority of Door Lock/Unlock

Priority	Function	Note
1	Crash Unlock	
2	Central Lock/Unlock	Lock/Unlock Request by SMK, RKE, Central Switch, and Mechanical Key have same priority.
3	AutoDoor Lock/Unlock	
4	Key Reminder Unlock	

Mechanical Door Lock/Unlock Function

cardiagn.com

1. Lock/Unlock Request by Mechanical Key
   A. When the mechanical Key is operated for a lock operation then for a duration of "MLockTimeoutTime" (3 sec) the BCM shall monitor the corresponding knob's state; if the knobs are in lock state within this MLockTimeoutTime then a central lock operation is issued; if any knob remains in unlock state at the end of this MLockTimeoutTime then no central lock operation is issued.
   B. When the mechanical Key is operated for an unlock operation then for a duration of "MUnlockTimeoutTime" (3 sec) the BCM shall monitor the corresponding knob's state; if the knobs are in unlock state within this MLockTimeoutTime then a central unlock operation is issued; if any knob remains in lock state at the end of this MLockTimeoutTime then no central unlock operation is issued.
   C. Mechanical key is applicable to driver side door and passenger side door.
   D. Outside Mirrors go Fold/Unfold state with relation to Mechanical Key Lock/Unlock operation.

Name	Value
MOffDelayTime	100 msec ± 10 msec
MLockTime	500 msec ± 50 msec
MUnlockTime	500 msec ± 50 msec
MLockTimeoutTime	3 sec ± 0.3 sec
MUnlockTimeoutTime	3 sec ± 0.3 sec

RKE / SMK FOB Door Lock/Unlock Function

1. Lock/Unlock Request by RKE
   A. Central Lock/Unlock operations by RKE are enabled in Key Out state(IGNSW =KeyOff), not managed in this module but in the modules generating the RKE commands.
   B. The central locking/unlocking function is operated at the reception of RKE lock/unlock command.
   C. Outside Mirrors go Fold/Unfold state with relation to RKE / SMK FOB Lock/Unlock operation.

Burglar Alarm Relock Door Lock Function

1. Lock Request by Burglar Alarm Function
   A. Central Lock Operation is possible by Burglar Alarm Function, this signal is considered as equivalent to Burglar Alarm Relock.

SMK Passive Access Door Lock/Unlock Function

1. Lock/Unlock Request by SMK
   A. Central Lock/Unlock operations by SMK are enabled in Key Out state(IGNSW =KeyOff), not managed in this module but in the modules generating the SMK commands.
   B. The central locking/unlocking function is operated at the reception of SMK lock/unlock command.
   C. Outside Mirrors go Fold/Unfold state with relation to SMK Passive Access Lock/Unlock operation.

Central Door Lock/Unlock Button Function

1. Lock/Unlock Request by Central Lock/Unlock Switch
   A. Central locking shall be inhibited in following condition
   1) Central lock inhibit condition : When crash unlock is active
   2) Central unlock inhibit condition : b_BAState is on (ARMWAIT, ARM, ALARM, REARM).

Crash Unlock Function (Without 30 sec timer)

cardiagn.com

1. Behavior Characteristics
   A. This function is to make unlock status in emergency case.
   B. If the crash is occurred (b_Crash ==On, when P_CrashUnlock signal is changed to crash status), output all doors unlock during "CrashUnlockTime"
   C. After crash unlocking, If safety knob state is changed unlock to lock, all doors are unlocked, again.
   D. After crash is activated, Central Lock and Auto Door Lock Function can not operate until Key off.
2. P_CrashInput signal (PWM)
   A. Before crash : When crash condition is not present, input is made as follows (b_Crash ==Off at P_CrashInput signal event is as follows)

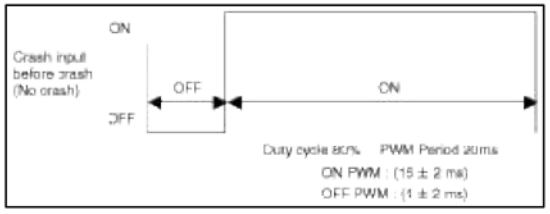

   B. After Crash :
   1) When crash happen, input is made as follow signal.
   2) BCM should be enabled (b_Crash ==On) when received at least one pulse during P_CrashInput signal appeared.
   3) P_CrashInput signal activated during 200 ms after crash.(10 cycle)

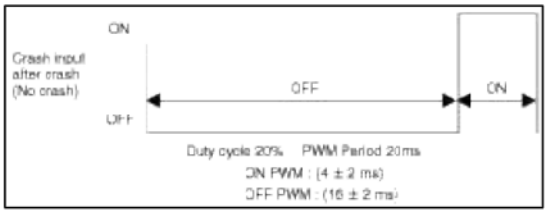

   C. State Description

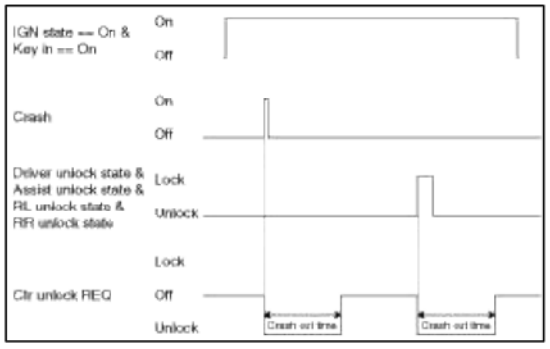

Name	Value
Crash Off Delay Time	0 msec
Crash Out Time	5 ± 0.5 sec

Auto Door Lock/Unlock Function

1. This function describes the following features
   A. Door Lock by Shift-Lever
   B. Door Lock by Vehicle Speed
   C. Door Unlock by Shift-Lever
   D. Door Unlock by Key Off
2. During driving, it makes lock state and after finish driving, makes unlock state, automatically
3. Auto Door Lock

cardiagn.com

A. Shift Lever Option : During ignition on and engine is running, and when all doors are closed and any door is unlocked, if the shift lever position is change P position to other position, all doors are locked.

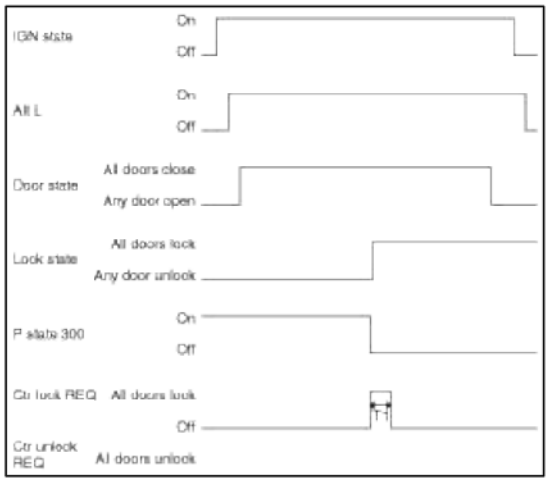

T1 : Auto lock time

B. Vehicle Speed Option

1) Vehicle Speed Auto Lock Condition

1) During ignition on, and when any door is unlocked, if vehicle speed is exceeded the "AutoDoorLockSpeed" Km/h, output all doors lock.
2) After output all doors lock, if any door is not locked, output all doors lock "AutoReLockNumber" times.
3) Between each lock output, it have "AutoLockDelayTime" time gap.
4) During "AutoReLockNumber" times all doors lock output, if all doors state are changed lock, stop this output.
5) During vehicle speed is over "AutoDoorLockSpeed" Km/h, if any door is unlocked, output all doors lock, again.
6) However after "AutoReLockNumber" times all doors lock output, even if any door is unlocked, before ignition off(b_IGNState == Off) or all doors is changed to lock, there is no additional lock output.

2) Vehicle Speed Auto Lock State Release Condition

1) After auto lock, it does not operate again. But in below condition, auto lock state is release and if it meet the Auto Lock condition, auto lock operate again.
2) Any Knob state is changed to unlock(So, when vehicle speed is exceeded the "AutoDoorLockSpeed" Km/h, any knob state change to unlock, auto lock function is operate, again.)
3) After Crash Unlock output(But, in Crash active state, Auto lock does not operate.)
4) Ignition off (b_IGNState == Off)
5) Vehicle Speed is below "AutoDoorLockSpeed" Km/h,(So, if vehicle speed is exceeded the "AutoDoorLockSpeed" Km/h and any knob states are unlock, auto lock function is operate, again)

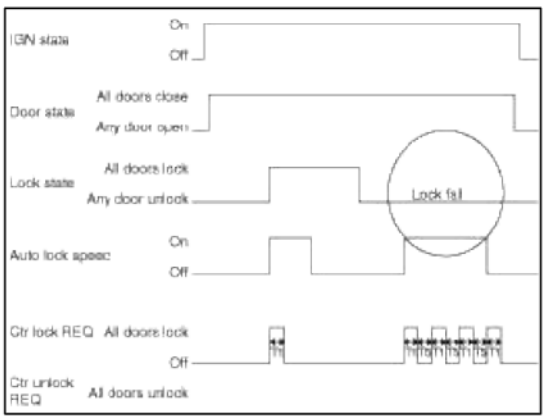

T1 : Auto lock time, T5 : Auto lock delay time

3) Knob Lock Fail Condition

1) After "AutoReLockNumber" times all doors lock output, failed Knob is enter the knob Fail mode.

cardiagn.com

2) So, when meet vehicle speed Auto Locking condition again, that time it does not consider the previously failed knob.(Auto Lock 3 times not operate.), However, another knob have a fail, operate Auto Lock 3 times.

3) This failed knob state is release in below condition.

4) The failed knob is changed unlock to lock.

5) Ignition off (b_IGNState == Off)

4. Auto Door Unlock

A. Shift Lever Option : During ignition on and engine is running, and when all doors are closed and any door is locked, if the shift lever position is change other position to P position, all doors are unlocked.

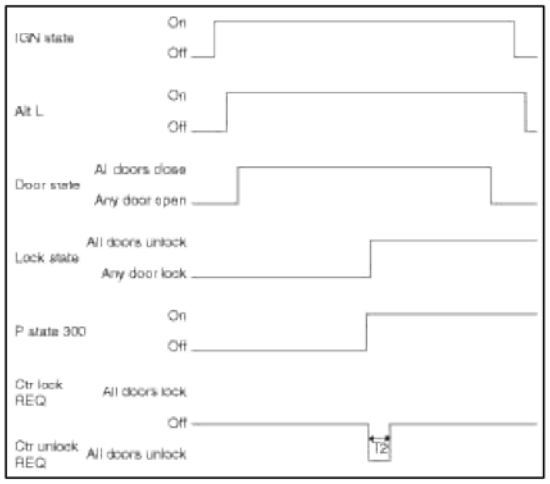

T2 : Auto lock time

B. Driver Safety Knob Unlock Option : When Autolock is not activated and all doors are closed, if the driver door safety knob is changed from lock to unlock, all doors are unlocked.

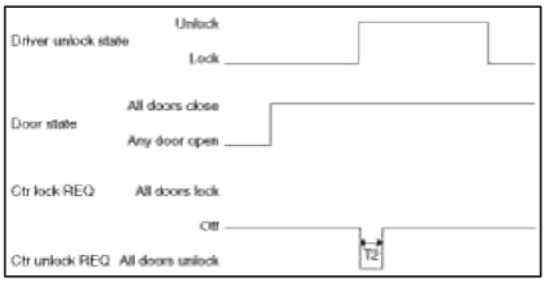

T2 : Auto lock time

C. Key Off Option : When Ignition key (or Fob) switch status is not off and any door is locked, if Ignition key (or Fob) switch status change to off, all doors are unlocked.

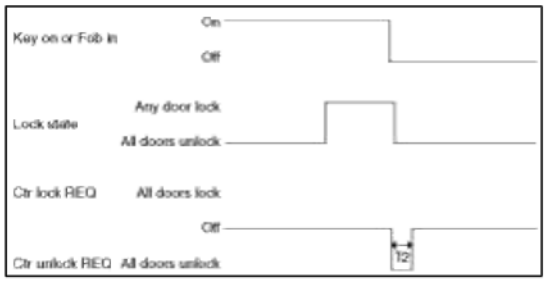

T2 : Auto lock time

Name	Value
Auto Lock Time	500 msec ± 50 msec
Auto Unlock Time	500 msec ± 50 msec
Auto ReLock Number	3 times
Auto Off Delay Time	500 msec ± 50 msec
Auto Door Lock Speed	15 km/h

cardiagn.com

Key Reminder Unlock Function

1. This function is making unlock status when user forget the key inside the vehicle and lock the door.

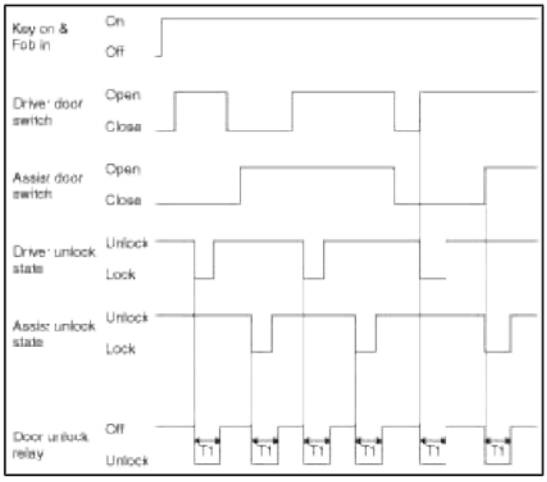

T1 : Key refirst unlock time

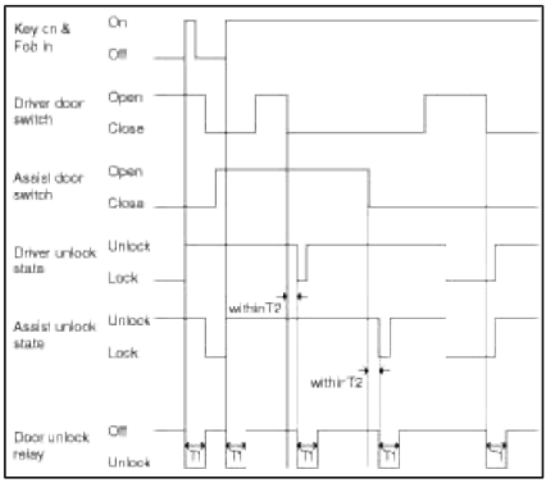

T1 : Key refirst unlock time, T2 : 0.5 sec

Name	Value
Key ReFirst Unlock Time	1 sec ± 0.1 sec
Key ReUnlock Time	500 msec ± 50 msec

Two Turn Unlock

In case of NA variant, if the unlock request from mechanical key, RKE, or Passive Unlock is detected, 2 Turn unlock function is operated.

1. If unlock by mechanical key(C_DRVKeyUnlockSW = On) in driver side, Driver Door is unlock by mechanical and start 4 sec counting.
2. If receive the unlock request from RKE, or Passive Unlock in Driver Side at driver side, output only driver side door and start 4 sec counting.
3. Within 4sec, if the unlock request from mechanical key, Passive Unlock at driver side at driver side is detected, outputs all doors unlock.
4. Without 4sec, if the unlock request from mechanical key, Passive Unlock at driver side or RKE is detected, Driver door is only unlocked, again.
5. Even if within 4sec, if Driver Knob Switch status is changed unlock to lock, stop 4sec counting. In that state, if the unlock request from mechanical key, Passive Unlock at driver side is detected, Driver door only is unlocked.

cardiagn.com

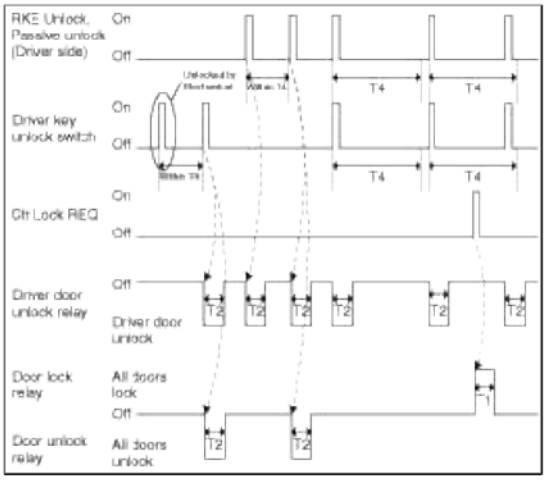

T1 : Lock out time, T2 : Unlock out time,
T4 : Two turn time

Tailgate Release Control

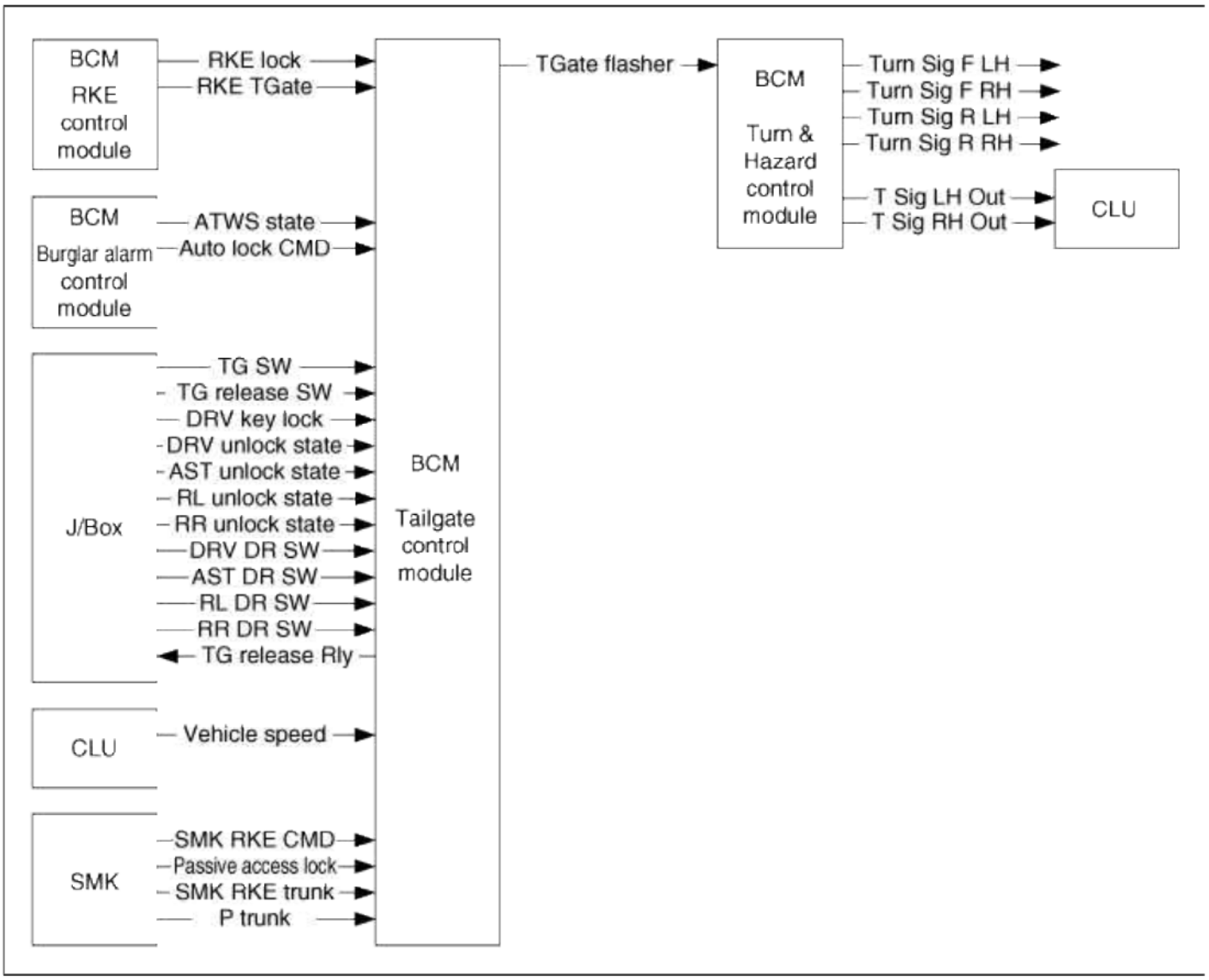

Function	Characteristics	Name	
		Hardware Label	Spec. Designation
		C_TGSW	Tailgate closing status
		C_TG_ReleaseSW	Tailgate Release SW

cardiagn.com

Input	CAN Communication	C_DRVUnlockState	Driver door unlock state
		C_ASTUnlockState	Assist door unlock state
		C_RLUnlockState	Rear Left door unlock state
		C_RRUnlockState	Rear Right door unlock state
		C_DRVDRSW	Driver door closing state
		C_ASTDRSW	Assist door closing state
		C_RLDRSW	Rear Left door closing state
		C_RRDRSW	Rear Right door closing state
		C_SMKRKECMD	SMK FOB Keyless Command
		C_PassiveAccessUnlock	PIC Passive access unlock for door module
		C_DRVKeyLock	Driver Key Lock signal
		C_SMKRKETrunk	RKE trunk/tailgate command
		C_VehicleSpeed	Vehicle speed from Power Train High CAN
		C_P_TRUNK	Passive command from trunk or tailgate
	Internal	ATWSState	Burglar Alarm State Information (all state indicated)
			DISARM, AUTOLOCKTIMER1, AUTOLOCKTIME2
			PREARM, ARMWAIT, ARM, ARMHOLD
			REARM, ALARM
		b_AutoLockCmd	Auto Lock Command(Event Signal)
			Off : After create On event, automatically turned Off.
		b_RKELock	RKE Lock command : (Non-SMK Variant)
		b_RKETailgate	RKE Tailgate Release command : (Non-SMK Variant)
		b_AllDoorUnlockState	All Door Unlock State
		b_AllDoorOpenState	All Door Open State
Output	Logic	O_TurnSigFLH	Flasher Lamp Output – Front Left
		O_TurnSigRLH	Flasher Lamp Output – Rear Left
		O_TurnSigFRH	Flasher Lamp Output – Front Right
		O_TurnSigRRH	Flasher Lamp Output – Rear Right
	Internal	b_TailgateFlasher	Tailgate Flasher Request(Event Signal)
			- After create On event, automatically turned Off.
		C_TSigLHOut	Turn LH Signal Lamp Out Status for indicator in CLU

cardiagn.com

	CAN Communication	C_TSigRHOut	Turn RH Signal Lamp Out Status for indicator in CLU
		C_TGReleaseRly	Trunk or Tailgate Release Relay Control Command

Tailgate Release Control

1. "Tailgate_Release_Mode" State

State	Description
Initial Condition	Tailgate Inhibition Mode State
Event	All Door Knob Unlock
Action	State is changed to Tailgate Release Mode State

State	Description
Initial Condition	Tailgate 30Sec Mode State
Event	All Door Knob Unlock
Action	• Cancel Tailgate 30SecTimer • State is changed to Tailgate Release Mode State

State	Description
Initial Condition	• Tailgate Release Mode State • All Door Knob Unlock
Event	Tailgate Release Command by RKE
Action	• Two Times Flashing • During 0.5 sec, turn on the Tailgate Release Relay • State is kept Tailgate Release Mode State

State	Description
Initial Condition	• Tailgate Release Mode State • Vehicle Speed is below 5km/h • All Door Knob Unlock(b AllDoorUnlockState == Unlock)
Event	Tailgate Release Command by Tailgate Release Switch
Action	• During 0.5 sec, turn on the Tailgate Release Relay • State is kept Tailgate Release Mode State

cardiagn.com

2. "Tailgate_30Sec_Mode" State

State	Description
Initial Condition	Tailgate Inhibition Mode State
Event	Tailgate Release Command by RKE
Action	• Start Tailgate30SecTimer • State is changed to Tailgate 30Sec Mode State

State	Description
Initial Condition	• Tailgate 30Sec Mode State • All Door Unlock State = Unlock
Event	Tailgate Release Command by RKE
Action	• Two Times Flashing • During 0.5 sec, turn on the Tailgate Release Relay • Re-Start Tailgate30SecTimer • State is kept Tailgate 30Sec Mode State

State	Description
Initial Condition	• Tailgate 30Sec Mode State • Vehicle Speed is below 5km/h • All Door Unlock State = Unlock
Event	Tailgate Release Command by Tailgate Release Switch
Action	• During 0.5 sec, turn on the Tailgate Release Relay • State is kept Tailgate 30Sec Mode State

3. "Tailgate_Inhibition_Mode" State

State	Description
Initial Condition	Tailgate Release Mode State
Event	• All Door Unlock State = Unlock
Action	State is changed to Tailgate Inhibition Mode State

cardiagn.com

State	Description
Initial Condition	• Tailgate 30Sec Mode State • All Door Unlock State = Unlock
Event	• Lock Command by RKE or SMK or Mechanical Key or AutoLock command • Tailgate Open • Expire Tailgate 30 sec Timer • Burglar Alarm State is changed to ARMWAIT
Action	• Cancel Tailgate30SecTimer • State is changed to Tailgate Inhibition Mode State

State	Description
Initial Condition	• Tailgate Inhibition Mode State • Vehicle Speed is below 5km/h • All Door Unlock State = Unlock
Event	Tailgate Release Command by SMK
Action	• Two Times Flashing • During 0.5 sec, turn on the Tailgate Release Relay • State is kept Tailgate Inhibition Mode State

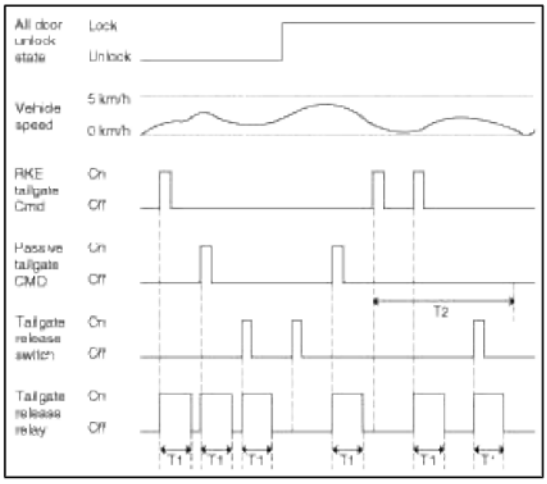

T1 : TGate release time, T2 : TGate 30 sec time

Name	Value
Tailgate Release Time	0.5 sec ± 50 msec
Tailgate 30Sec Time	30 sec ± 3 sec

Power Window Control

cardiagn.com

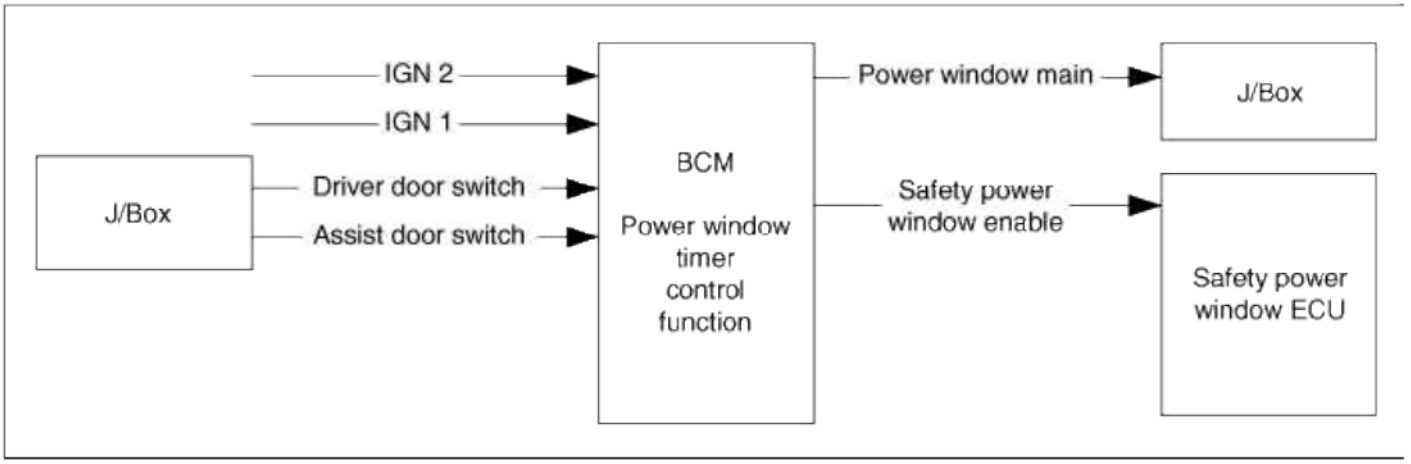

Function	Characteristics	Name	
		Hardware Label	Spec. Designation
Input	Logic	L_IGN2	Ignition 2 Power
		L_IGN1	Ignition 1 Input
	CAN Communication	C_DRVDRSW	Driver Door Switch
		C_ASTDRSW	Assist Door Switch
Internal		b_IGN1	On : A_IGN1 == On || L_IGN2 == On
			Off : A_IGN1 == Off & L_IGN2 == Off
Output	CAN Communication	C_PwdwMain	Power window Timer
	Logic	O_SafetyPwdwEnable	Safety Power Window ECU Enable Output

Power Window Timer Control

1. After IGN1 is On, Power Window can operate and after IGN1 Off, it is possible to operate the Power window, for "PwdwTime"(30 sec ±3 sec).
2. During counting the PwdwTime"(30 sec ±3 sec), if Driver or Assistant side Door is open, the working the Power Window is stopped.

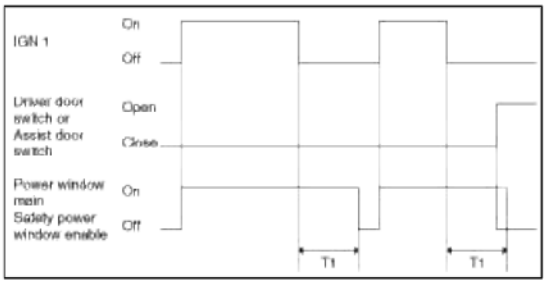

T1 : Pwdw time (30 sec ± 3 sec)

Defogger Control

cardiagn.com

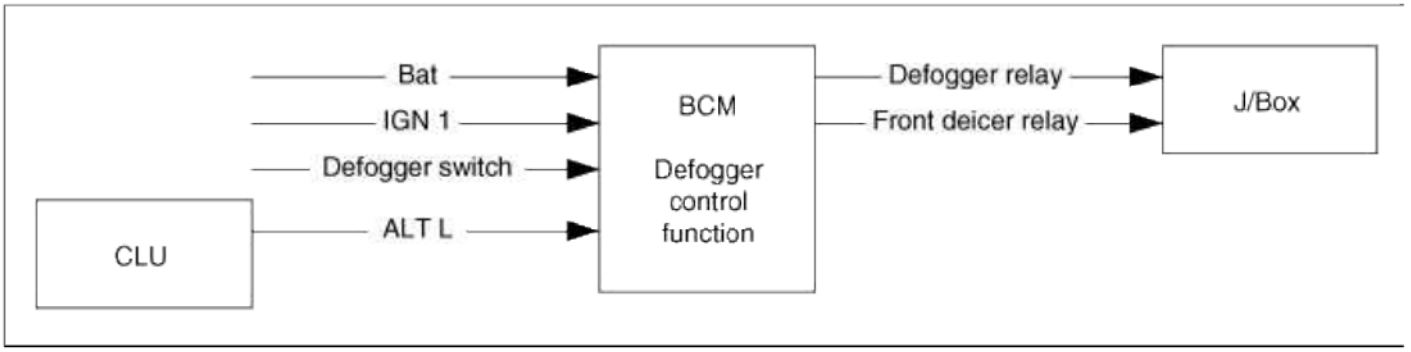

Function	Characteristics	Name	
		Hardware Label	Spec. Designation
Input	Logic	L_DefoggerSW	Defogger Switch Input
	Analog	A_IGN1	Ignition 1 Input
		V_Bat	Battery Voltage
	CAN Communication	C_ALT_L	Alternator Level(Engine is running)
Output	CAN Communication	C_DefoggerRly	Defogger Relay Control
		C_FrontDeicerRly	Front Deicer Control

Defogger Control

1. Defogger switch is self Return type. Therefore, when the switch is pressed, Defogger output is on. and user press the Switch again, the Defogger output is off.
2. There is no occurrence of an accident at low voltage, meaning that the Defoggers are not to be operated immediately of low voltage detection.
3. It is protected the battery from discharge.
4. State Description

State	Description
Initial Condition	IGN1 = On &ALT L = On & (Defogger Relay & Front Deicer Relay) = Off & Bat ≥ Low Battery
Event	Defogger switch= Off → On
Action	Defogger Relay = On Front Decier Relay = On

State	Description
Initial Condition	IGN1 = On & ALT L = On & (Defogger Relay or Front Deicer Relay) = On
Event	Bat < LowBattery or IGN1 = Off or Alt L = Off or Defogger switch = Off → On or From the Defogger output On, when pass "DefoggerTime"
Action	Defogger Relay = Off Front Decier Relay=Off

cardiagn.com

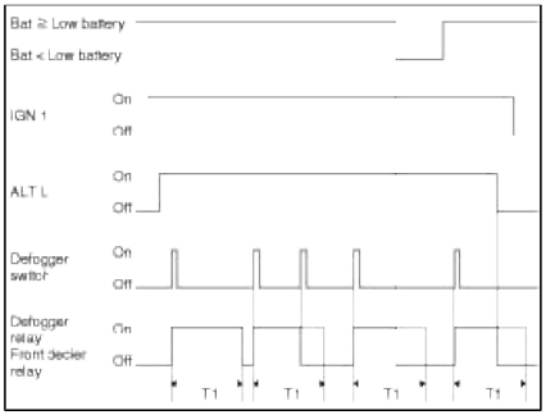

T1 : Defogger time (20 min ± 1 min)

Name	Value
Defogger Time	20 min ± 1 min
Low Battery	9 Voltage

Key Interlock Solenoid Control

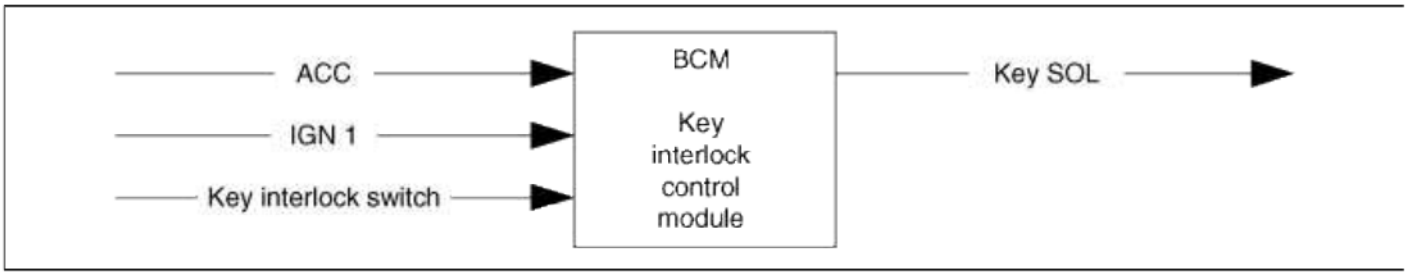

Function	Characteristics	Name	
		Hardware Label	Spec. Designation
Input	Logic	L_ACC	Accessory Input
		L_KeyInterlockSW	Gear Shift Lever P Position State
		L_IGN1	Ignition 1 Input
	Internal	b_KeyInterlockSW100	On : L_KeyInterlockSW = On after100ms confirm
			Off : L_KeyInterlockSW = Off after100ms confirm
Output	Logic	O_KeySOL	Key Interlock Solenoid Actual Output

Key Interlock Solenoid Control

cardiagn.com

1. General Description
   A. Key Interlock Function is to check the Key Interlock Switch Input and Ignition Ter minal position, and turn On or Off the key interlock solenoid.
   B. Key Solenoid is Pull Type.
   C. When IGN1 is On or ACC is On, if Key Interlock Switch is On, key interlock solenoid is Off
   D. When IGN1 is On or ACC is On, if Key Interlock Switch is Off, key interlock solenoid is On
   E. During IGN1 is Off and ACC is Off, key interlock solenoid is Off
   F. The internal value "b_KeyInterlockSW100" is the signal that means Key Interlock Switch value with 100 msec confirm time. So it is different from filtering time.

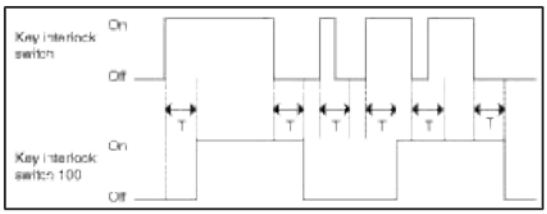

T : 100 msec

2. Go to Key Interlock OFF Condition

State	Description
Initial Condition	(IGN1 = On or ACC = On) & Key Interlock SW100 = Off
Event	• Key Interlock SW100 = On or • IGN1 = Off and ACC = Off
Action	Key SOL = Off

3. Go to Key Interlock ON Condition

State	Description
Initial Condition	(IGN1 = On or ACC = On) & Key Interlock SW100 = On
Event	Key Interlock SW100 = Off
Action	Key SOL = On

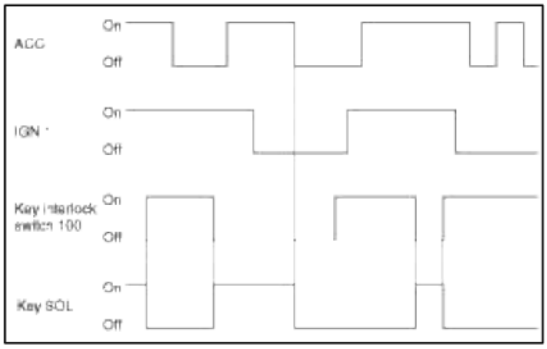

Body Electrical System > BCM (Body Control Module) > Body Control Module (BCM) > Repair procedures

Removal

1. Disconnect the negative (-) battery terminal.
2. Remove the crash pad lower panel.
   (Refer to the BD group - "Crash pad")

cardiagn.com

3. Remove the BCM (A) after removing the nuts, connectors and antenna cable.

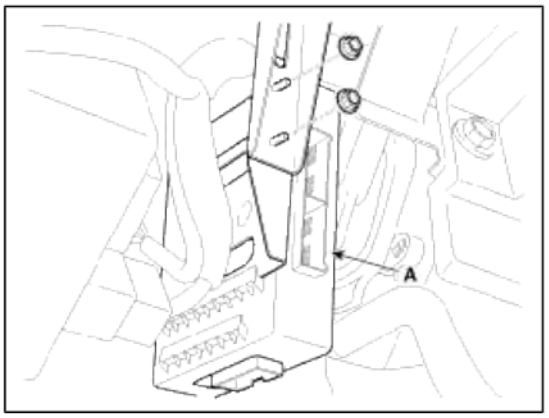

Installation

1. Install the BCM after connecting the connectors and cable.
2. Install the crash pad lower panel.
3. Connect the negative (-) battery terminal.

Inspection

BCM Pin Information

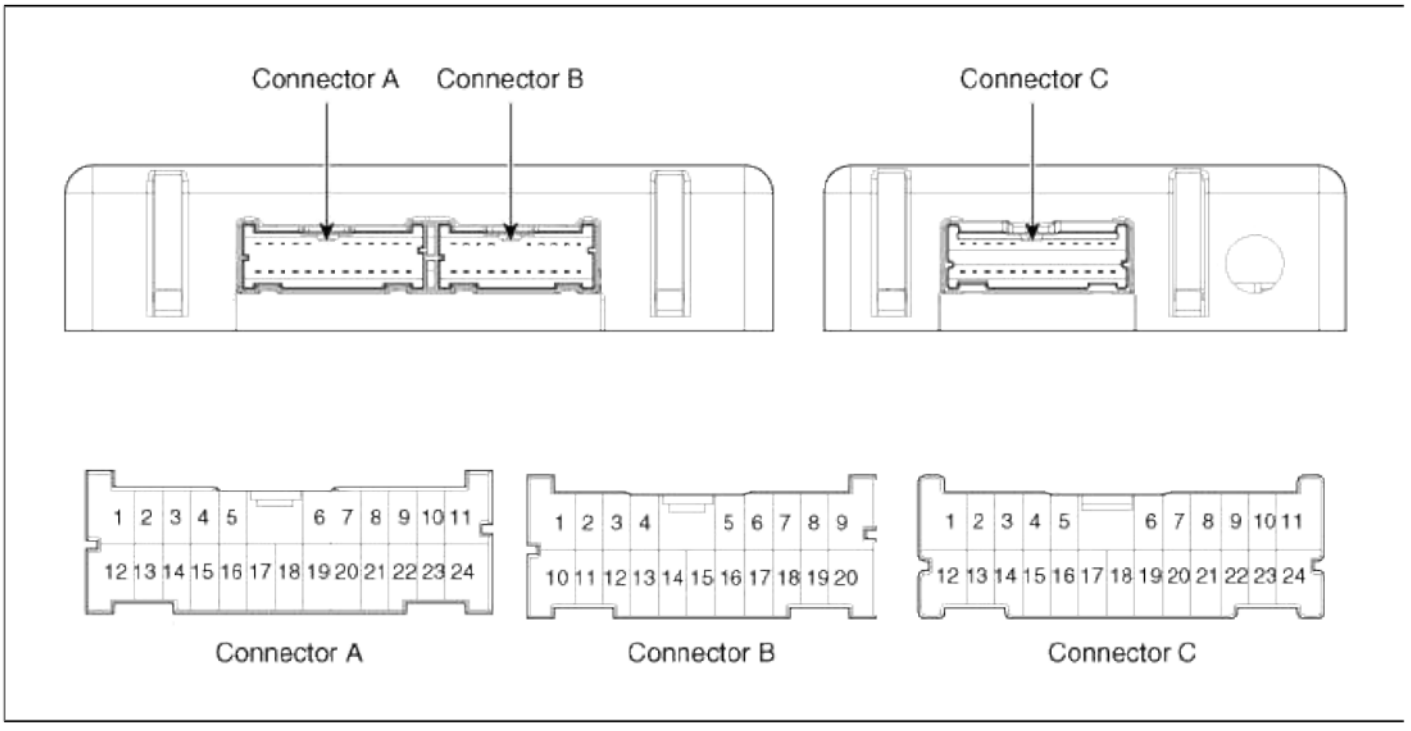

Connector (A/B/C)

cardiagn.com

NO	Description	NO	Description	NO	Description
A1	Battery power supply	B1	Head Lamp High swtich signal input	C1	RR SeatBelt IND ontrol
A2	IGN1 power supply	B2	Head Lamp Low swtich signal input	C2	RC SeatBeltI ND control
A3	IGN2 power supply	B3	Hazard IND control	C3	AST SeatBelt IND control
A4	ACC power supply	B4	K-Line communication	C4	Key SOL output
A5	Wiper Mist swtich signal input	B5	LIN_RCR Sensor Status output	C5	RoomLamp output
A6	Tail swtich signal input	B6	AutoLight Power supply	C6	TurnSig FLH output
A7	KeyIn swtich signal input	B7	CAN HIGH	C7	TurnSig FRH output
A8	CrashUnlock signal input	B8	AutoLight Sensor level signal input	C8	TurnSig RLH output
A9	Turn Sig RH swtich signal input	B9	RPAS Off IND control	C9	TurnSig RRH output
A10	Defogger swtich signal input	B10	Front Fog swtich signal input	C10	Battery power supply
A11	AutoLight swtich signal input	B11	Rear Fog swtich signal input	C11	Battery power supply
A12	Hazard IND Power supply	B12	LIN_BackUpSiren output	C12	GND
A13	RPAS Power supply	B13	LIN_RL Sensor Status output	C13	RL SeatBet IND control
A14	Rear Washer swtich signal input	B14	RPAS power GND	C14	AVTail output
A15	Rear Wiper swtich signal input	B15	LIN_RCL Sensor Status output	C15	Door Unlock signal control (to NAVI)
A16	Washer swtich signal input	B16	LIN_RR Sensor Status output	C16	Safety P/window Enable control
A17	Wiper INT swtich signal input	B17	-	C17	RPAS warning Buzzer output
A18	Rear Wiper INT swtich signal input	B18	CAN_LOW	C18	Key Hole Illum output
A19	Hazard swtich signal input	B19	AutoLight power GND	C19	HeadLamp Washer Relay output
A20	Key Interlock swtich signal input	B20	Head LampLow signal output	C20	Wiper Relay output
A21	Wiper INT Vol level signal input			C21	Cornering Lamp RH output
A22	Turn Sig LH swtich signal input			C22	Cornering Lamp LH output
A23	RPAS Off swtich signal input			C23	Rear Fog Relay output
A24	GND			C24	Horn output control

Inputs Description and Characteristics

cardiagn.com

Signal Name	Description	Input Characteristics(determinant conditionof connector base)	Power Source(Pull Up)
L_B+	Battery power supply	Pull down (Analog)	-
L_IGN1	IGN1 power supply	Pull down(B+ Backup Line)(ON:VB,OFF:Open)	-
L_IGN2	IGN2 power supply	Pull down(ON:VB,OFF:Open)	-
A_ACC	ACC power supply	Pull down(ON:VB,OFF:Open)	-
L_WiperMistSW	WiperMist SW signal input	Pull down(ON:VB,OFF:Open)	-
L_TailSW	Tail SW signal input	Pull up(ON:Gnd,OFF:Open)	B+
L_KeyIn	KeyIn SW signal input	Pull up(ON:Gnd,OFF:Open)	B+
P_CrashUnlock	CrashUnlock signal input	Pull up(ON:Gnd,OFF:Open)	B+
L_TurnSigRHSW	TurnSigRHSW signal input	Pull up(ON:Gnd,OFF:Open)	IGN1
L_DefoggerSW	DefoggerSW signal input	Pull up(ON:Gnd,OFF:Open)	IGN1
L_AutoLightSW	AutoLightSW signal input	Pull up(ON:Gnd,OFF:Open)	IGN1
L_RearWasherSW	RearWasherSW signal input	Pull down(ON:VB,OFF:Open)	-
L_RearWiperSW	RearWiperSW signal input	Pull down(ON:VB,OFF:Open)	-
L_WasherSW	WasherSW signal input	Pull down(ON:VB,OFF:Open)	-
L_WiperIntmtSW	WiperIntmtSW signal input	Pull down(ON:VB,OFF:Open)	-
L_RearWiperIntmtSW	RearWiperIntmtSW signal input	Pull down(ON:VB,OFF:Open)	-
L_HazardSW	HazardSW signal input	Pull up(ON:Gnd,OFF:Open)	B+
L_KeyInterlockSW	KeyInterlockSW signal input	Pull up(ON:Gnd,OFF:Open)	B+
A_WiperIntmtVol	WiperIntmtVol level signal input	Pull down(ON:VB,OFF:Open)	-
L_TurnSigLHSW	TurnSigLHSW signal input	Pull up(ON:Gnd,OFF:Open)	IGN1
L_RPASOffSW	RPASOffSW signal input	Pull up(ON:Gnd,OFF:Open)	B+
L_HeadLampHighSW	HeadLampHighSW signal input	Pull up(ON:Gnd,OFF:Open)	IGN1
L_HeadLampLowSW	HeadLampLowSW signal input	Pull up(ON:Gnd,OFF:Open)	IGN1
A_AutoLightSnsr	AutoLightSnsr level signal input	Pull down (Analog)	-
L_FrontFogSW	FrontFogSW signal input	Pull up(ON:Gnd,OFF:Open)	B+
L_RearFogSW	RearFogSW signal input	Pull up(ON:Gnd,OFF:Open)	IGN1

Outputs Description and Characteristics

cardiagn.com

Pin Name	Description	Load	Diagnosis
O_HazardIllIND	HazardIll IND control	LED	No
O_RPASOffIND	RPASOff IND control	LED	No
O_HeadLampLowCTRL	HeadLampLow signal output	-	No
O_RRSeatBeltIND	RRSeatBelt IND ontrol	LED	No
O_RCSeatBeltIND	RCSeatBeltI ND control	LED	No
O_ASTSeatBeltIND	ASTSeatBelt IND control	LED	No
O_KeySOL	KeySOL output	Solenoid	No
O_RoomLamp	RoomLamp output	Lamp	No
O_TurnSigFLH	TurnSig FLH output	Lamp	Yes
O_TurnSigFRH	TurnSig FRH output	Lamp	Yes
O_TurnSigRLH	TurnSig RLH output	Lamp	Yes
O_TurnSigRRH	TurnSig RRH output	Lamp	Yes
V_HazardIllINDPwr	HazardIllIND Power supply	-	
V_RPASPwr	RPAS Power supply	-	
V_AutoLightPwr	AutoLight Power supply	-	

Module Interface Description and Characteristics

Pin Name	Pin Description	Interface
L_B+	Supplying power with ECU	12V (Battery Voltage)
L_IGN1	High side SW	ON=12V
L_IGN2	High side SW	ON=12V
A_ACC	High side SW	ON=12V
L_WiperMistSW	High side SW	ON=12V
L_TailSW	Low Side SW	ON=GND
L_KeyIn	Low Side SW	ON=GND
P_CrashUnlock	PWM Input	H=12 L=0V
L_TurnSigRHSW	Low Side SW	ON=GND
L_DefoggerSW	Low Side SW	ON=GND
L_AutoLightSW	Low Side SW	ON=GND
V_HazardIllINDPwr	Power Output	ON=12V

cardiagn.com

V_RPASPwr	Power Output	ON=8.5V
L_RearWasherSW	High side SW	ON=12V
L_RearWiperSW	High side SW	ON=12V
L_WasherSW	High side SW	ON=12V
L_WiperIntmtSW	High side SW	ON=12V
L_RearWiperIntmtSW	High side SW	ON=12V
L_HazardSW	Low Side SW	ON=GND
L_KeyInterlockSW	Low Side SW	ON=GND
A_WiperIntmtVol	Analog Input	H=5V, L=0V
L_TurnSigLHSW	Low Side SW	ON=GND
L_RPASOffSW	Low Side SW	ON=GND
GND(Signal)	GND	
L_HeadLampHighSW	Low Side SW	ON=GND
L_HeadLampLowSW	Low Side SW	ON=GND
O_HazardIllIND	Output (Low Active)	
Diagnosis(K-Line)	K-LINE Communication	
LIN_RCRSnsrStatus	LIN Communication	
V_AutoLightPwr	Power Output	H=5V, L=0V
CAN_HIGH	CAN high Signal	
A_AutoLightSnsr	Analog Input	H=5V, L=0V
O_RPASOffIND	Output (Low Active)	
L_FrontFogSW	Low Side SW	ON=GND
L_RearFogSW	Low Side SW	ON=GND
LIN_BackUpSiren	LIN Communication	
LIN_RLSnsrStatus	LIN Communication	
V_RPASGND	GND	
LIN_RCLSnsrStatus	LIN Communication	
LIN_RRSnsrStatus	LIN Communication	-
NC	-	-
CAN_LOW	CAN low Signal	-
V_AutoLightGND	GND	-
O_HeadLampLowCTRL	Output (signal)	-
O_RRSeatBeltIND	Output (Low Active)	-
O_RCSeatBeltIND	Output (Low Active)	-
O_ASTSeatBeltIND	Output (Low Active)	-
O_KeySOL	Output (Low Active)	-

cardiagn.com

O_RoomLamp	Output (PWM)	-
O_TurnSigFLH	Output (High Active)	-
O_TurnSigFRH	Output (High Active)	-
O_TurnSigRLH	Output (High Active)	-
O_TurnSigRRH	Output (High Active)	-
B+(Pwr_1)	Supplying power (Turn signal)	-
B+(Pwr_2)	Supplying power (Turn signal)	-
GND(Power)	GND	-
O_RLSeatBeltIND	Output (Low Active)	-
O_AVTail	Output (Low Active)	-
O_DRUnlockOUT	Output (Pulse)	-
O_SafetyPwdwEnable	Output (Low Active)	-
O_RPASWarningBuzzer	Output (Low Active)	-
O_KeyHoleIllum	Output (Low Active)	-
O_HeadLampWasherRly	Output (Low Active)	-
O_WiperRly	Output (Low Active)	-
O_EuropeCorneringLampRH	Output (Low Active)	-
O_EuropeCorneringLampLH	Output (Low Active)	-
O_RearFoggrRLY	Output (Low Active)	-
O_Horn(NA)	Output (Low Active)	-

Trouble Diagnostics When Using GDS

1. The BCM can be diagnosed by using the GDS. The BCM communicates with the GDS which then displays inputs and outputs along with codes.
2. To diagnose the BCM function, select the vehicle model and BCM.

cardiagn.com

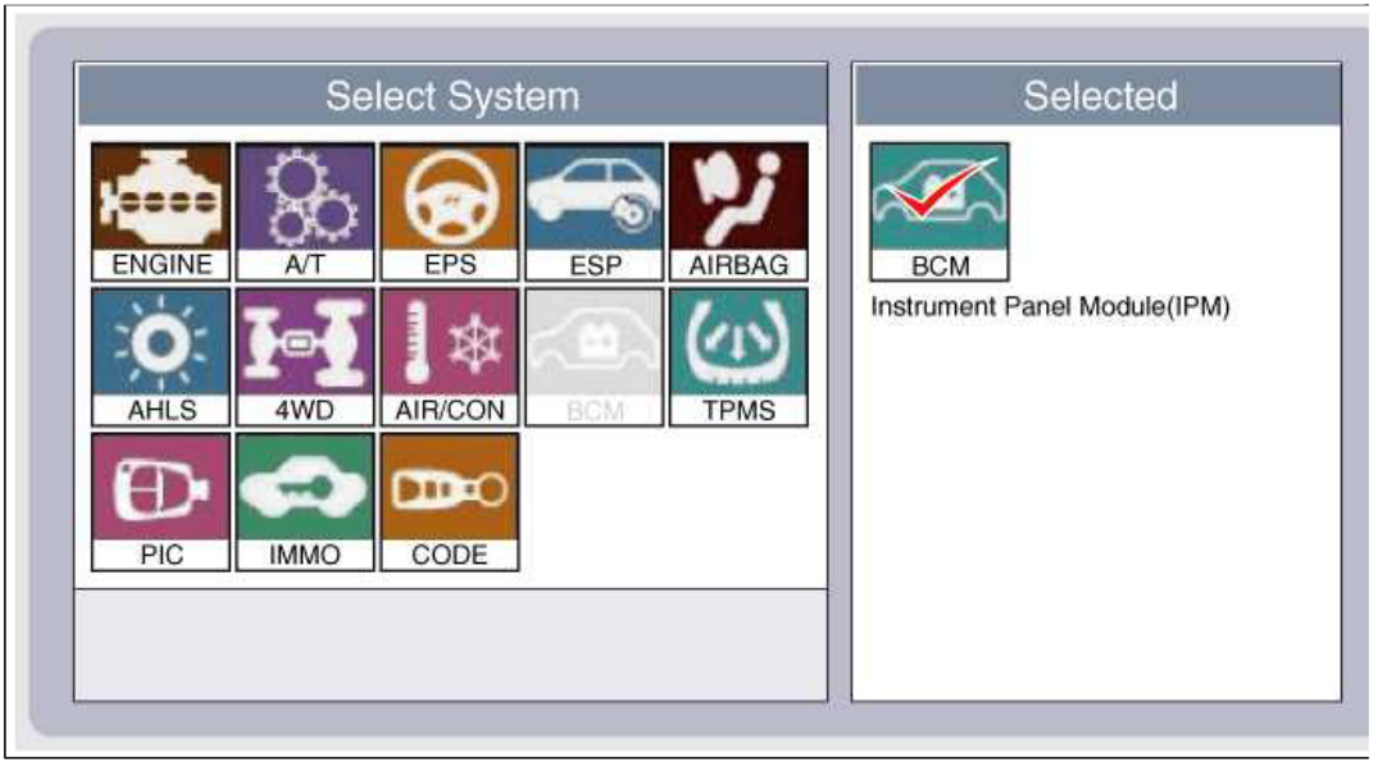

3. To consult the present input/out value of BCM, "Current DATA". It provides information of BCM input/output conditions of power supply, turn signal/brake lamp, headlamp, door locks, outside mirror, wiper, auto-light and transmitters etc.

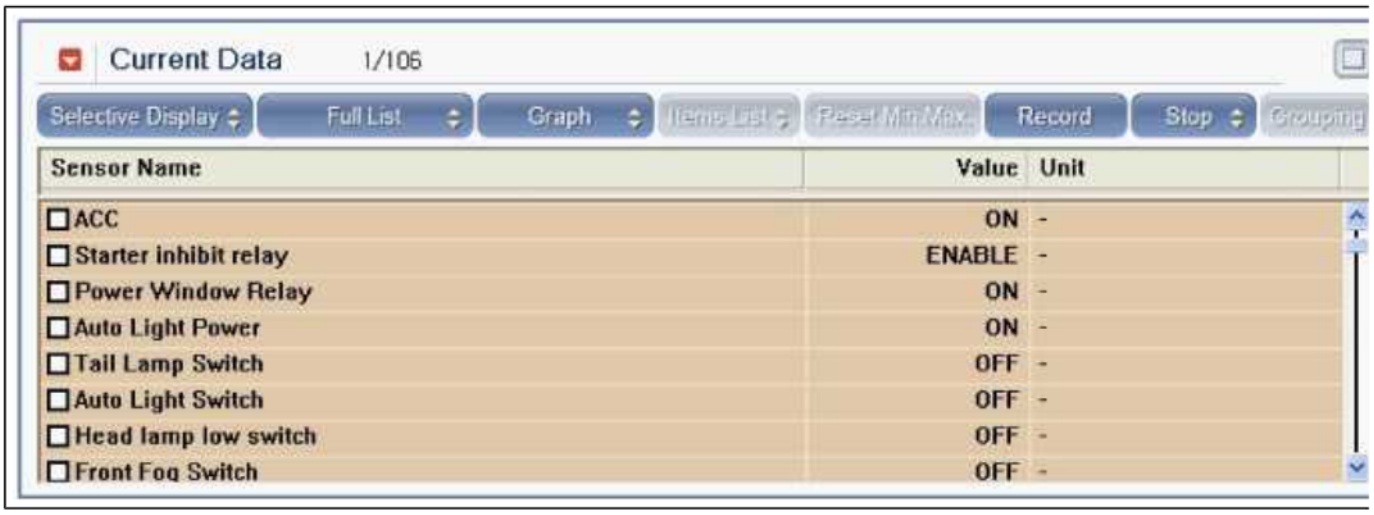

cardiagn.com

4. To perform functional test on BCM outputs, select "Actuation Test"



Body Electrical System > Seat Electrical > Components and Components Location

Component Location

cardiagn.com

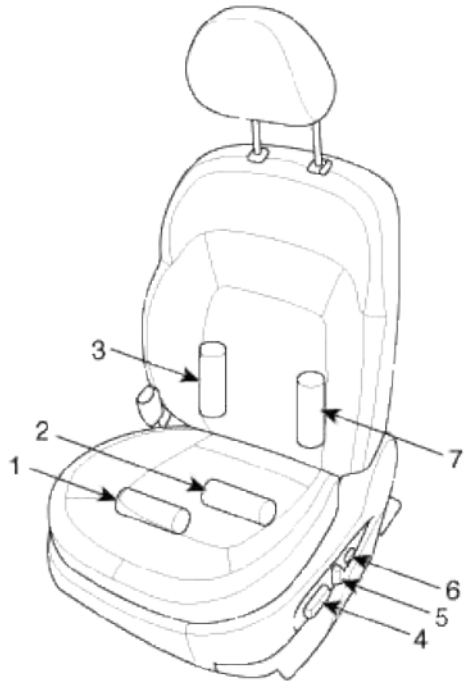

1. Slide motor 2. Rear height motor 3. Reclining motor 4. Power seat switch	5. Reclining switch 6. Lumbar support switch 7. Lumbar support motor

Body Electrical System > Seat Electrical > Power Seat Motor > Repair procedures

Inspection

Power Seat Motor

1. Remove the front seat.
   (Refer to BD group - "Front seat")

cardiagn.com

2. Disconnect the connectors for each motor.

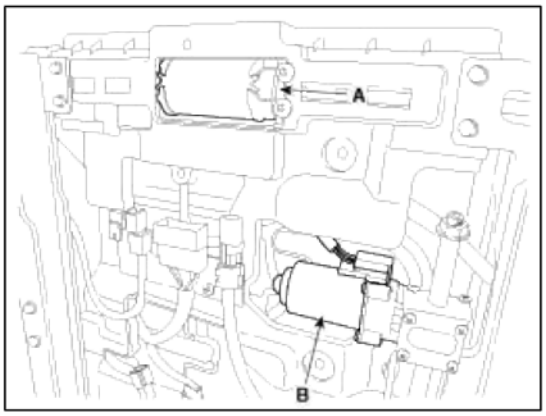

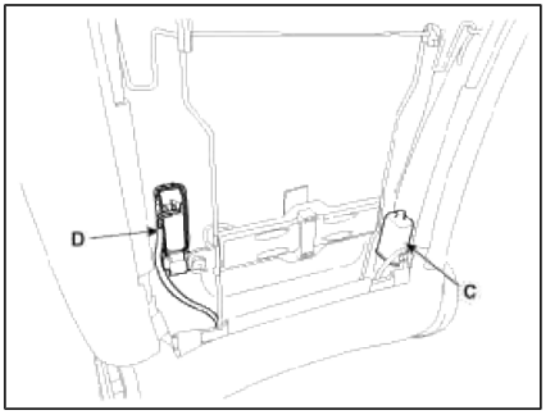

3. With the battery connected directly to the motor terminals, check if the motors run smoothly.

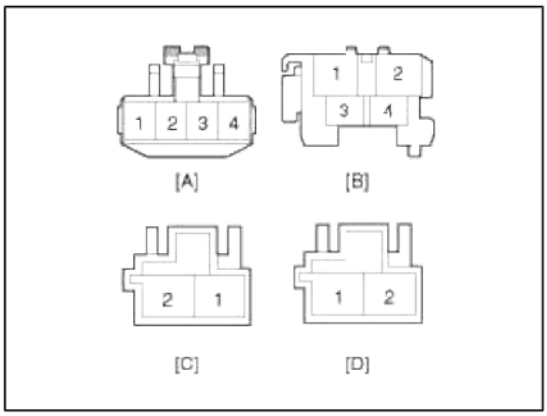

Position	Terminal	+	-
Slide motor A	Frontward	1	4
	Backward	4	1
Rear height motor B	Up	1	2
	Down	2	1
Reclining motor C	Forward	2	1
	Rearward	1	2
Lumbar support motor D	Forward	1	2
	Rearward	2	1

4. Reverse the connections and check that the motor turns in reverse.
5. If there is an abnormality, replace the motors.

Body Electrical System > Seat Electrical > Power Seat Control Switch > Repair procedures

Inspection

cardiagn.com

1. With the power seat switch in each position, make sure that continuity exists between the terminals below. If continuity is not as specified, replace the power seat switch.

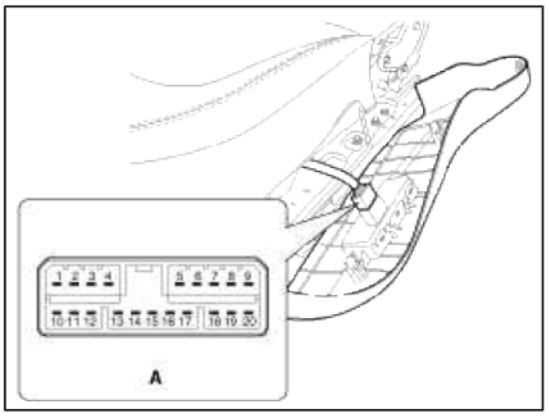

Driver Power Seat Control Switch (A)

	Slide Switch			Rear height switch		Reclining switch				Lumber switch			PIN name
	N	Driver		Up	Down	N		Driver		N	Driver		
	Seat	Forward	Backward			HEI	REC	Forward	Backward	-	Forward	Backward	
15		○	○	○	○			○	○		○	○	Battery +
17													GND
4	○		○										Backward slide moter
3	○	○											Forward slide moter
8	○												GND (relay)
2	○												GND (relay)
7				○		○							Rear height motor up
6					○	○							Rear height motor down
11							○	○					Front reclining motor
13							○		○				Rear reclining motor
12							○						Reclining limit switch⊕
10							○						Reclining limit switch⊕
1										○		○	Lumber motor backward
16										○	○		Lumber motor forward
5						○	○			○			GND

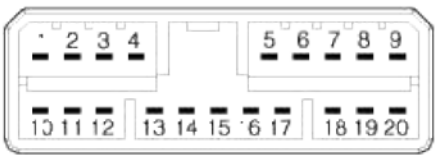

[Driver Power Seat Control Switch]

Removal

1. Disconnect the negative (-) battery terminal.
2. Remove the power seat recliner cover.
   (Refer to the BD group - "Front seat")

cardiagn.com

3. Remove the power seat control switch (A).

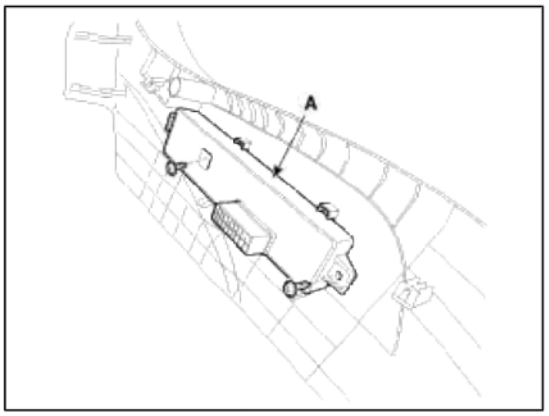

Installation

1. Install the power seat control switch after connecting the connector.
2. Install the recliner cover and front power seat.

Body Electrical System > Seat Electrical > Seat Heater Switch > Repair procedures

Inspection

Driver / Assist seat

1. Disconnect the negative (-) battery terminal.
2. Remove the gear knob. Remove the floor console upper cover (A) using the appropriate tool. (Refer to BD group - "Console")

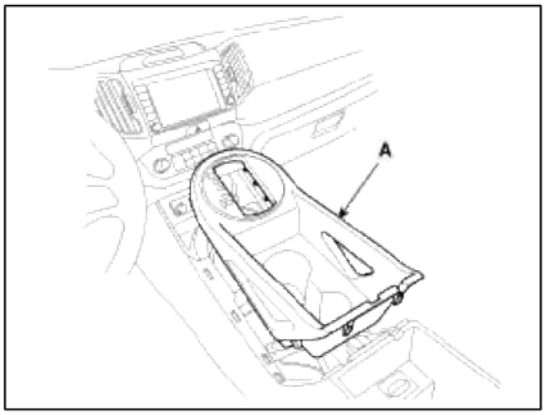

3. Remove the floor console tray (A).

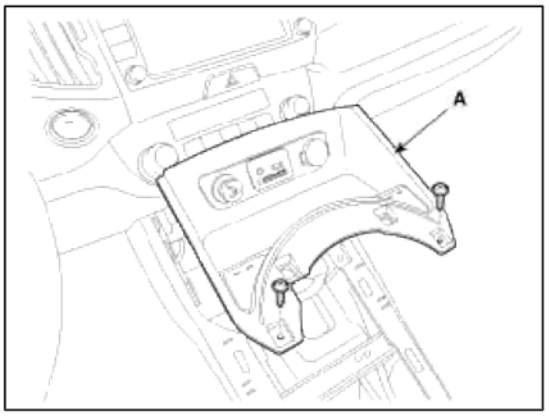

NOTE

Take care not to damage the hook when removing the switch.

4. Disconnect the driver / assist seat heater switch connector.

cardiagn.com

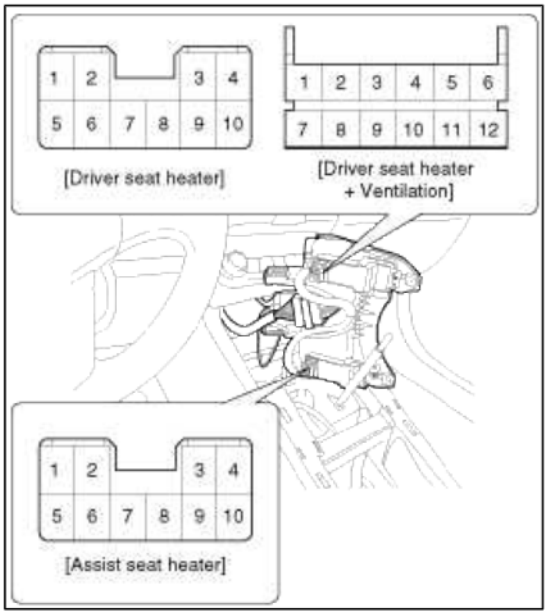

Driver [Heater]

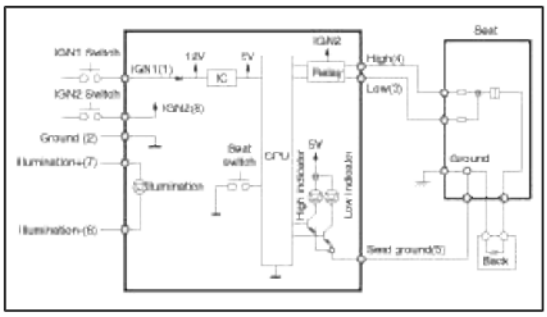

No	Description
1	IGN 1
2	Ground
3	Driver seat heater (Low)
4	Driver seat heater (High)
5	Indicator
6	Illumination (+)
7	Illumination (-)
8	IGN 2
9	-
10	-

Driver [Ventilation + Heater]

cardiagn.com

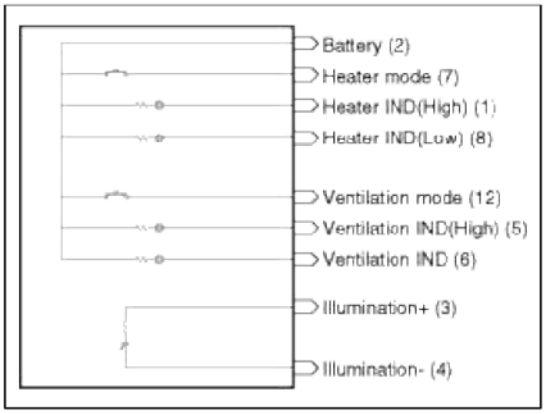

No	Description
1	Heater IND (High)
2	Battery
3	Illumination (+)
4	Illumination (-)
5	Ventilation IND (High)
6	Ventilation IND (Low)
7	Heater mode
8	Heater IND (Low)
9	-
10	-
11	-
12	Ventilation mode

Assist [Heater]

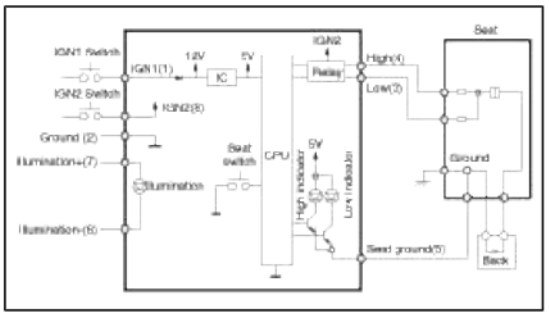

cardiagn.com

No	Description
1	IGN 1
2	Ground
3	Assist seat heater (Low)
4	Assist seat heater (High)
5	Indicator
6	Illumination (+)
7	Illumination (-)
8	IGN 2
9	-
10	-

5. Operate each seat heater switch and check that continuity exists between the terminals.

[Heater]

Terminal / Position	Inspection	Remarks
6	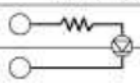	Illumination(-)
7		Illumination(+)
4	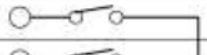	High
3	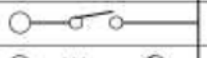	Low
5	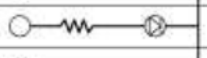	Indicator
2		Ground

Driver [Ventilation + Heater]

Position / Terminal	Driver seat	Remarks
2		IGN
7		Heater mode
1		Heater(High)
8		Heater(Low)
4		Illumination (-)
3		Illumination (+)

Driver [Ventilation + Heater]

Position / Terminal	Driver seat	Remarks
2	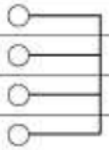	IGN
12		Ventilation mode
5		Ventilation(High)
6		Ventilation(Low)
4		Illumination (-)
3		Illumination (+)

cardiagn.com

6. Inspect the switch pin. If needed, replace the seat heater switch (A) after loosening the screws (3EA).

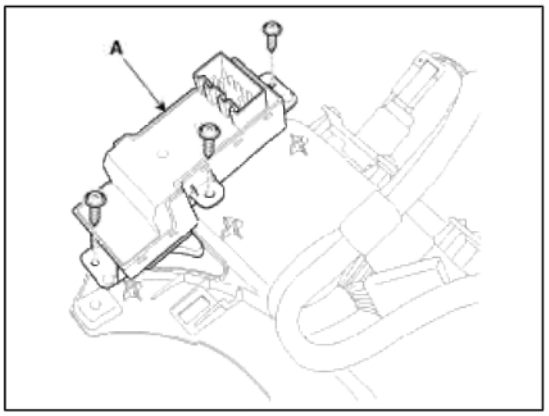

Rear Seat Heater Switch

1. Disconnect the negative (-) battery terminal.
2. Remove the power window switch from the rear door trim.
   (Refer to BE group - "Power window switch")

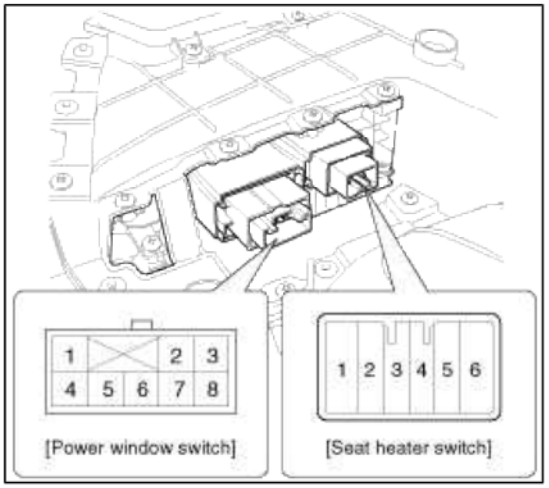

No	Description
1	Indicator (+)
2	Indicator (-)
3	IGN 2
4	Heater (+)
5	Illumination (-)
6	Illumination (+)

3. Inspect the switch pin. If needed, replace the seat heater switch.

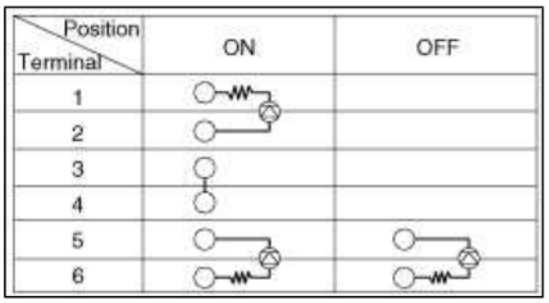

Body Electrical System > Seat Electrical > Seat Heater > Components and Components Location

Component Location

cardiagn.com

[Driver Seat / Assist Seat]



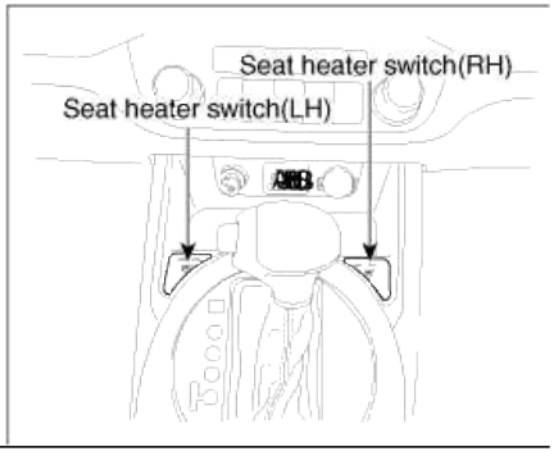

[Rear Seat]

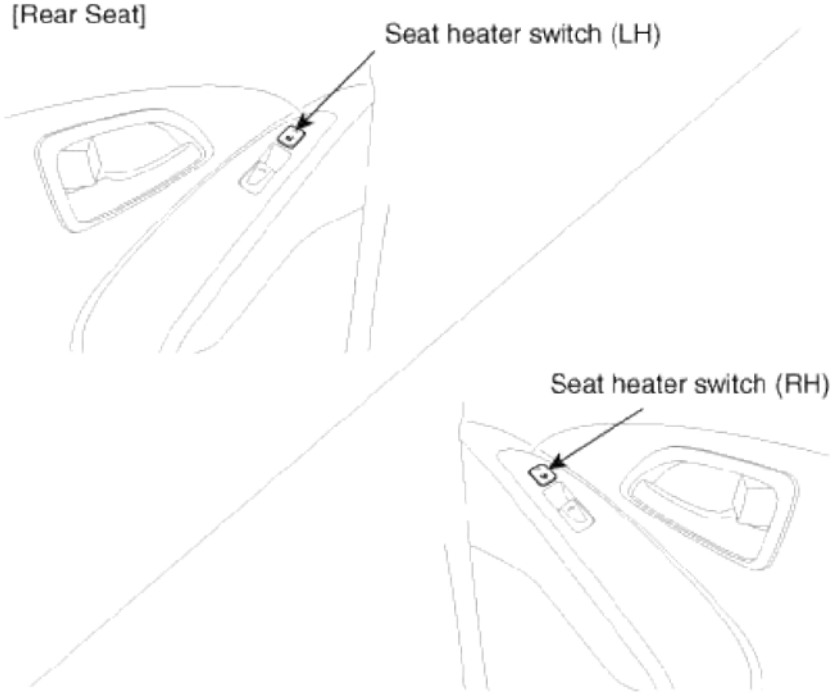

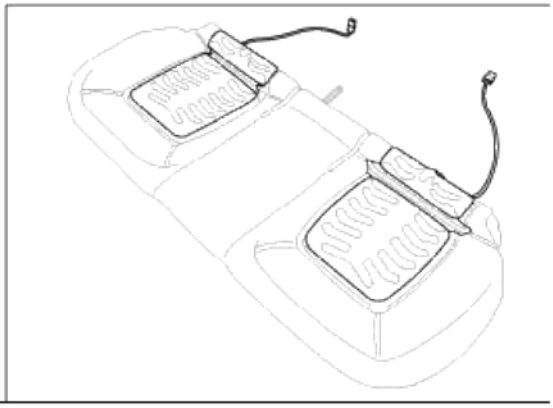

Body Electrical System > Seat Electrical > Seat Heater > Repair procedures

Removal

1. Remove the seat back cover and cushion cover.
   (Refer to the BD group - "Front seat")

cardiagn.com

2. Remove the driver / assist seat back heater (A) and cushion heater (B).

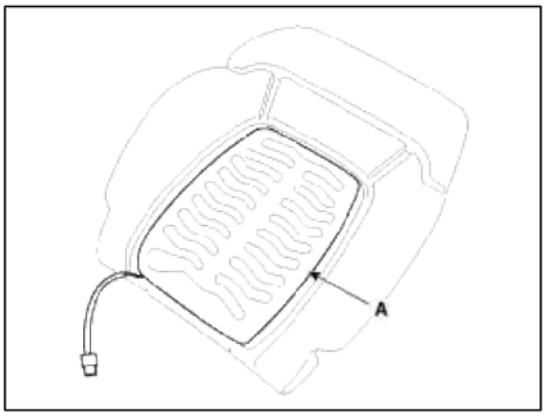

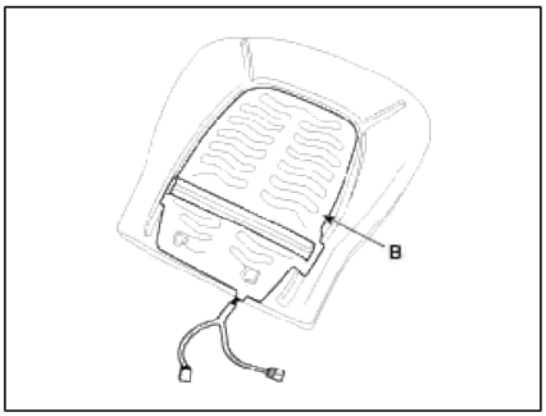

3. Remove the cushion cover of rear seat.
   (Refer to the BD group - "Rear seat")
4. Remove the heater (A) of rear seat (LH) and the heater (B) of rear seat (RH).

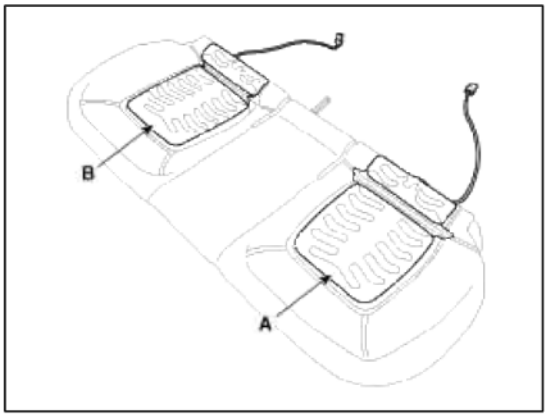

Installation

1. Install the driver / assist seat back and cushion heater.
   (Refer to the BD group - "Front seat")
2. Install the heater of rear seat (LH & RH).
   (Refer to the BD group - "Rear seat")

Inspection

Driver / Assist Seat

cardiagn.com

1. Check for continuity and measure the resistance between terminals as below.

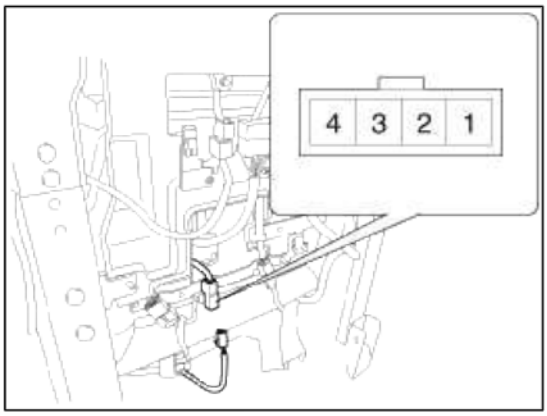

No.	Description	No.	Description
1	Indicator	3	Low
2	Ground	4	High

Standard value
Cushion : 1.39Ω ± 10% (leather/fabric)
Back : 1.41Ω ± 10% (leather/fabric)
Set : 2.8Ω ± 10% (leather/fabric)

2. Operate seat warmer after connecting the 4P connector, and then check the thermostat by measuring the temperature of seat surface.

Standard value
Cushion : 104 ± 3.6 °F(40 ± 2 °C) (LOW)
107.6 ± 3.6 °F(42 ± 2 °C) (HIGH)
Back : 114.8 ± 3.6 °F(46 ± 2 °C) (LOW),
125.6 ± 3.6 °F(52 ± 2 °C) (HIGH)

Rear Seat

1. Check for continuity and measure the resistance between terminal 2 and 3.

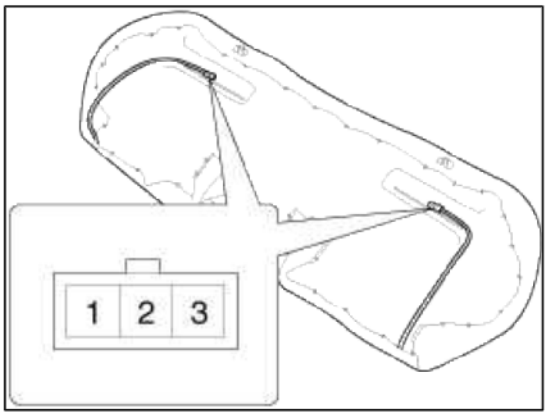

No	Description
1	Indicator
2	Ground
3	Heater

cardiagn.com

Standard value
Cushion : 5.29Ω ± 10% (leather/fabric)

2. Operate seat warmer after connecting the 4P connector, and then check the thermostat by measuring the temperature of seat surface.

Standard value
Cushion : 104 ± 3.6 °F (40 ± 2 °C)

Body Electrical System > Seat Electrical > Climate Seat > Components and Components Location

Components

[Front Seat]

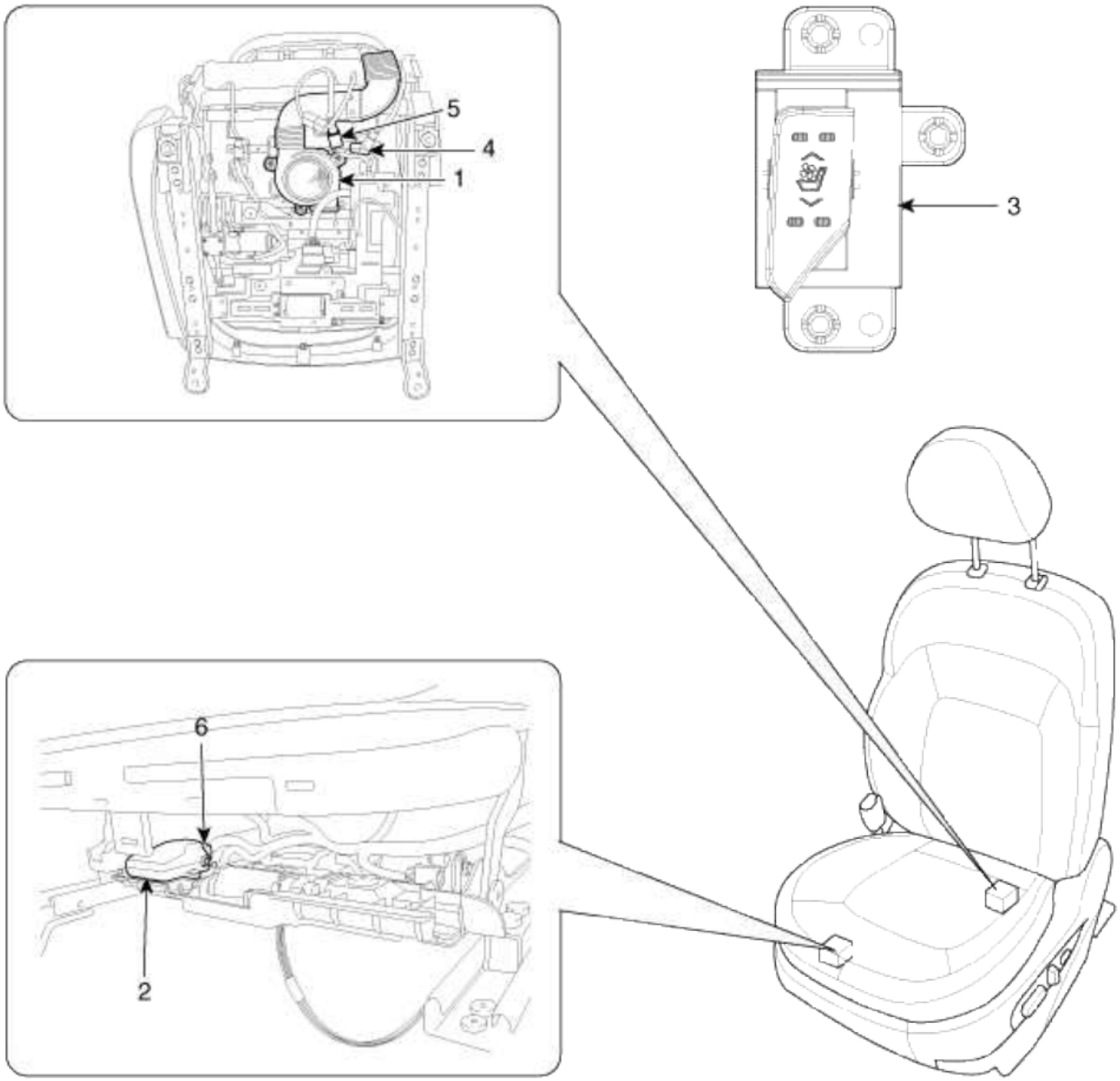

cardiagn.com

1. Ventilation blower 2. Ventilation ECU 3. Ventilation seat switch	4. Blower connector 5. Heater connector 6. Ventilation ECU connector

Body Electrical System > Seat Electrical > Climate Seat > Schematic Diagrams

Schematic Diagram

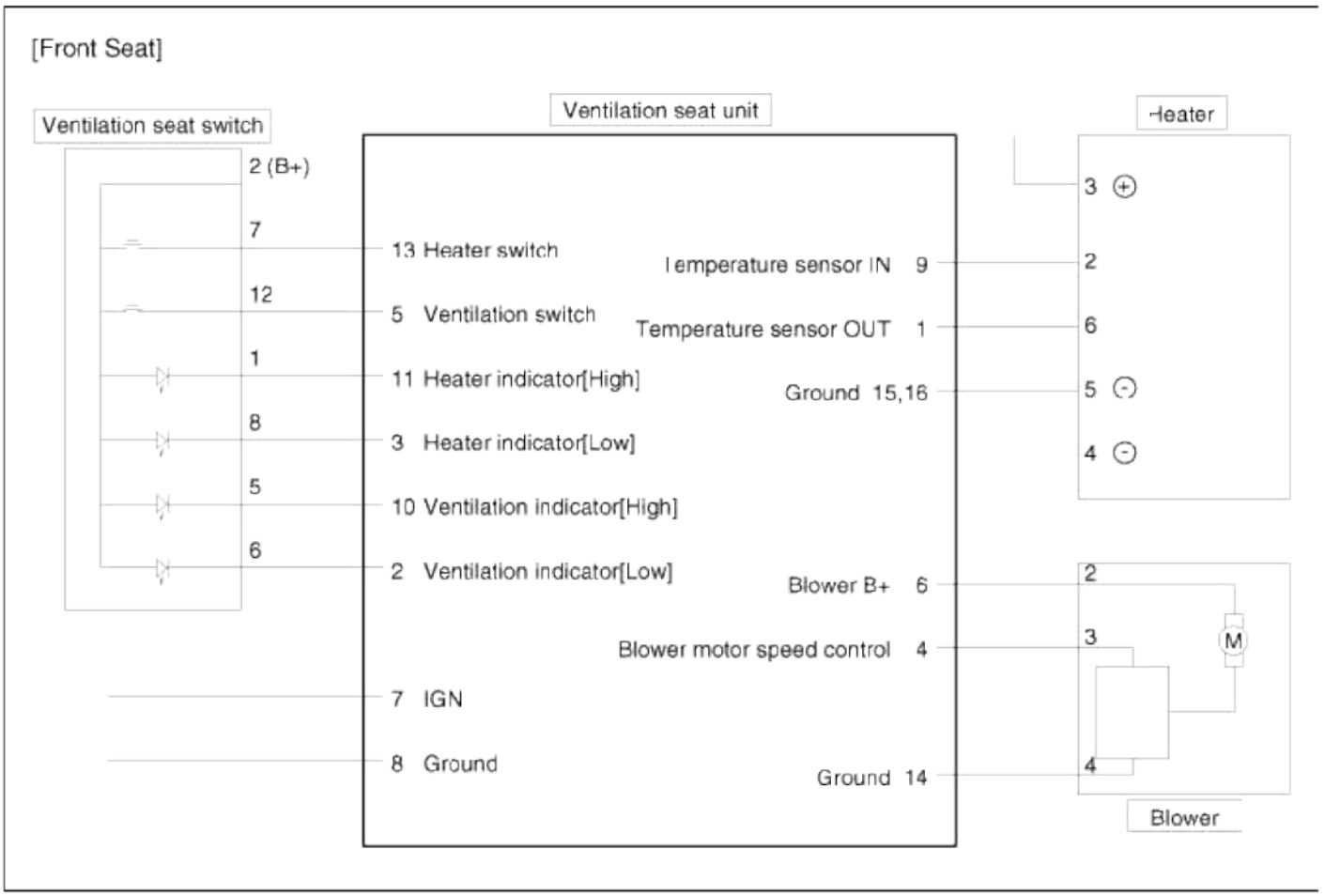

Connector Configurations

cardiagn.com

Blower connector	No	Description
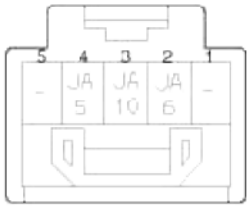	1	-
	2	Blower B+
	3	Blower speed control
	4	Blower ground
	5	-

Heater connector	No	Description
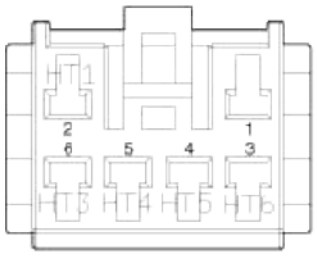	1	-
	2	NTC ground
	3	Vent B+
	4	Heater mat 2
	5	Heater mat 1
	6	NTC

Ventilation control unit connector	No	Description
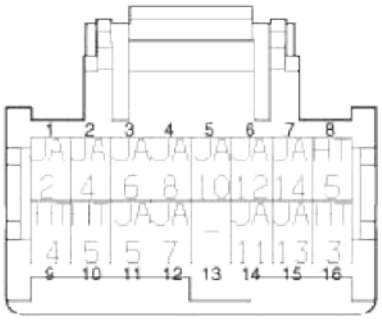	1	NTC ground
	2	Vent indicator (Low)
	3	Heater indicator (Low)
	4	Blower speed control
	5	Vent switch
	6	Blower B+
	7	IGN 1
	8	Vent ground
	9	NTC
	10	Vent indicator (High)
	11	Heater indicator (High)
	12	-
	13	Heater switch
	14	Blower ground
	15	Heater mat 2
	16	Heater mat 1

cardiagn.com

Body Electrical System > Seat Electrical > Climate Seat > Description and Operation

Description

The system uses a FAN under the seat to help remove the moisture and warmth from occupants and surface of the seats.

It pulls in cabin air through the blower installed under the seat cushion, and supplies the air into the seat cushion and the seat back through the duct.

CAUTION

1. Make sure not to spill liquid on the seat when equipping with ventilation system seats.
2. Because the ventilation system does not move great amounts of air, it is difficult to feel the air coming through the seat cover.

Body Electrical System > Seat Electrical > Climate Seat > Repair procedures

Removal

1. Remove the front seat assembly.
   (Refer to BD group - "Front Seat")
2. Remove the seat back cover and cushion cover.
   (Refer to BD group - "Front Seat")
3. Remove the ventilation duct (A) from the seat back after loosening the screw and rivet.

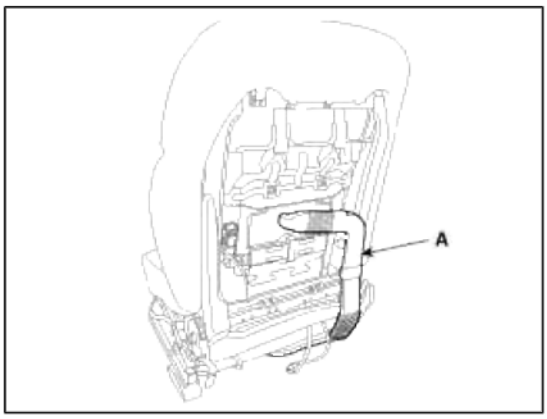

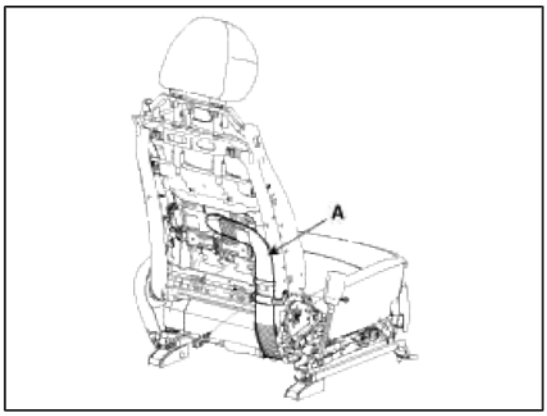

4. Remove the ventilation duct and blower (A) in the cushion and back after loosening the screw.

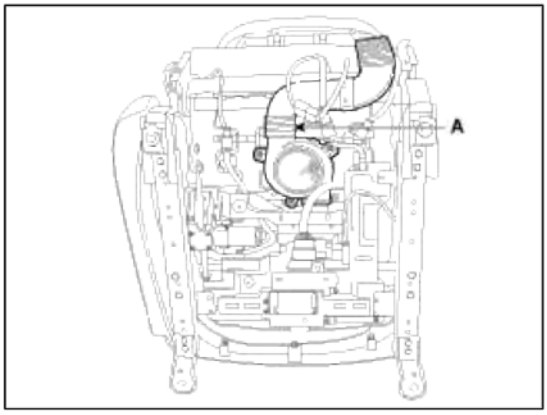

cardiagn.com

5. Remove the bracket and ventilation seat ECU (B) after loosening screws (A, 3EA).

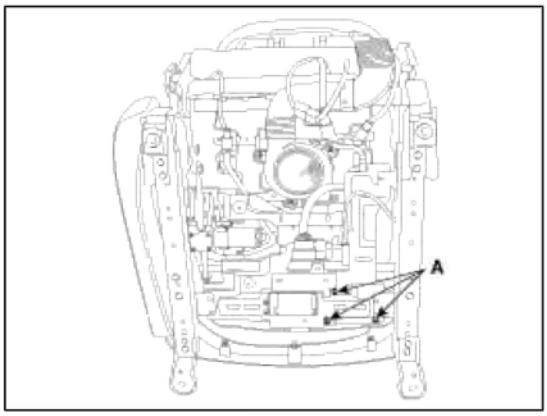

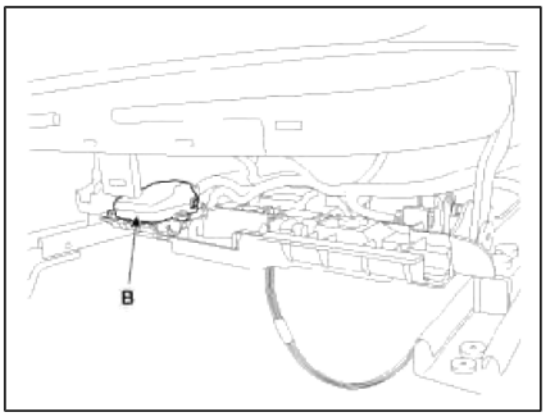

Installation

1. Install the connectors and air ventilation control unit.
2. Install the air ventilation duct and blower.
3. Install the seat back cover.
4. Install the seat assembly and seat track cover.

Body Electrical System > Fuses And Relays > Components and Components Location

Component Location

cardiagn.com

[Engine Room Relay Box]

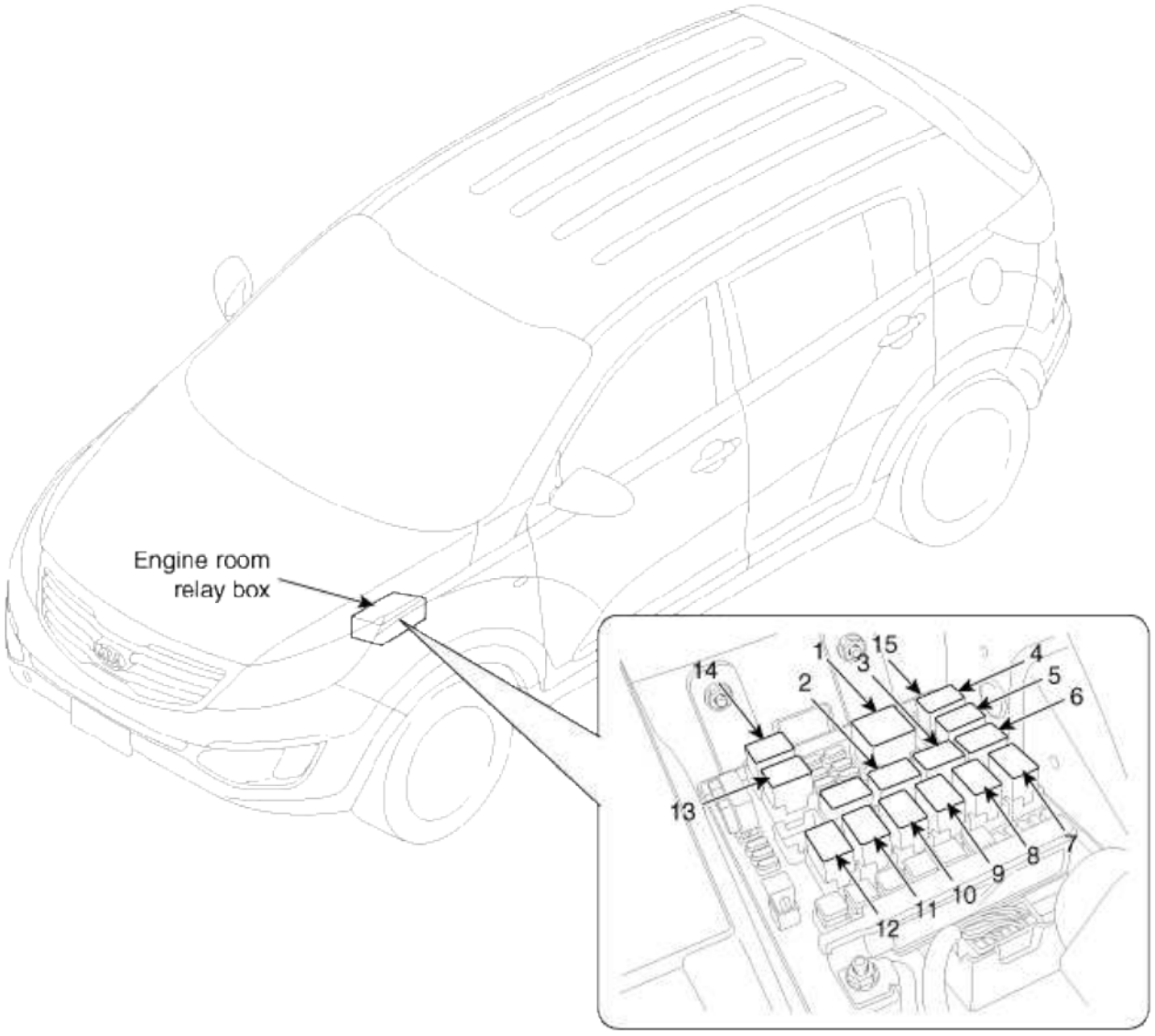

1. Main relay 2. Cooling fan relay (High) 3. Windshield deicer relay 4. Wiper relay (High) 5. Wiper relay (Low)	6. ATM relay 7. Rear glass defogger relay 8. Burglar horn relay 9. Start relay 10. Cooling fan relay (Low)	11. Horn relay 12. Blower relay 13. A/C relay 14. Fuel pump relay 15. Quick braking warning system relay

cardiagn.com

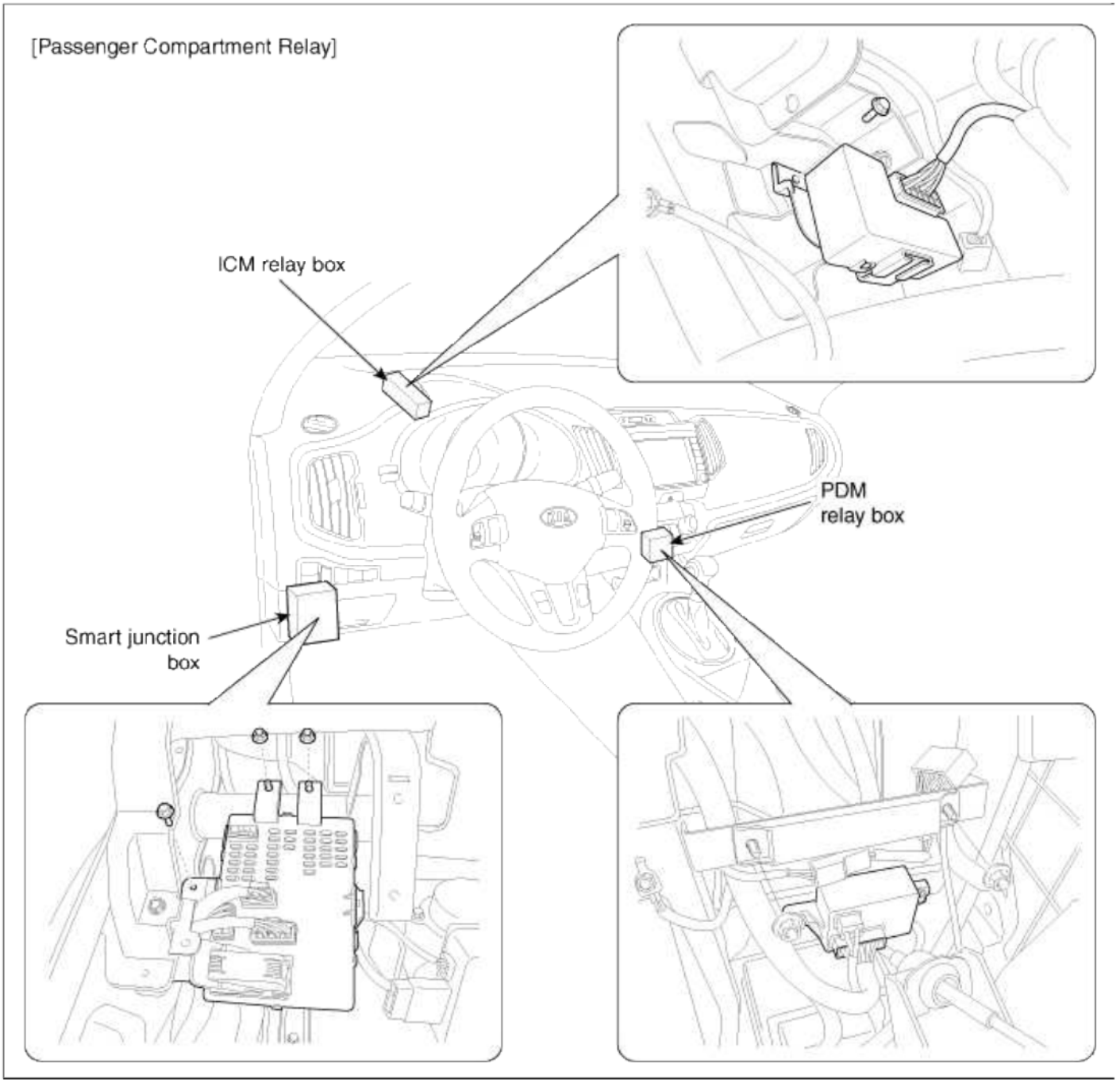

1. ICM relay : Rear wiper relay, DBC(Downhill Brake Control) relay
2. PDM relay : ACC relay, IG1 relay, IG2 relay

Body Electrical System > Fuses And Relays > Relay Box (Engine Compartment) > Components and Components Location

Component Location

cardiagn.com

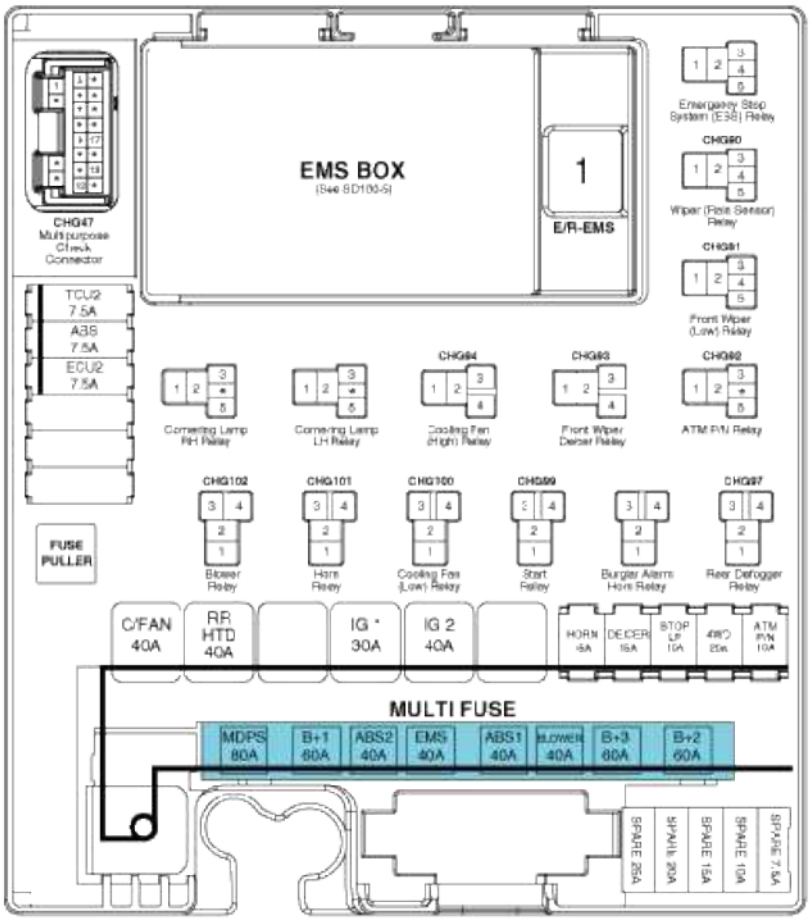

Relay Type

No	Relay Name	Type
-	Emergency Stop System (ESS) Relay(Not Used)	PLUG MICRO(5P)
CHG90	Wiper (Rain Sensor) Relay	PLUG MICRO(5P)
CHG91	Front Wiper (Low) Relay	PLUG MICRO(5P)
CHG92	ATM P/N Relay	PLUG MICRO(5P)
CHG93	Front Wiper Deicer Relay	PLUG MICRO(4P)
CHG94	Cooling Fan (High) Relay	PLUG MICRO(4P)
-	Cornering Lamp LH Relay (Not Used)	PLUG MICRO(5P)
-	Cornering Lamp RH Relay (Not Used)	PLUG MICRO(5P)
CHG97	Rear Defogger Relay	PLUG MICRO(4P)
-	Burglar Alarm Horn Relay (Not Used)	PLUG MICRO(4P)
CHG99	Start Relay	PLUG MICRO(4P)
CHG100	Cooling Fan (Low) Relay	PLUG MICRO(4P)
CHG101	Horn Relay	PLUG MICRO(4P)
CHG102	Blower Relay	PLUG MICRO(4P)

※ USE THE DESIGNATED FUSE AND RELAY ONLY

cardiagn.com

Circuit (E/R Fuse & Relay Box)

Fuse Name		(A)	Circuit Protected
MULTI FUSE	MDPS	80A	EPS Control Module
	B+1	60A	I/P Junction Box (PDM A 25A, DR LOCK 15A, HAZARD 15A, IPS 4~7)
	ABS 2	40A	ESC Modu e
	EMS	40A	EMS Box (TCU 1 15A, ECU 30A, A/CON 10A, F/PUMP 15A)
	ABS 1	40A	ESC Modu e
	BLOWER	40A	Blower Relay
	B+3	60A	I/P Junction Box (P/SEAT(DRV) 20A, SAFETY POWER WINDOW 20A, PDM B 10A, ATM K/L CCK 7.5A SEAT VENT 15A, Power Connector (AUDIO 20A, RF_ANT 7.5A), ROOM LP 10A)
	B+2	60A	I/P Junction Box (Power Window Relay, SUNROOF 15A, AMP 25A, MODULE B+ 10A, IPS 0~3, IPS 8~10)
FUSE	C/FAN	40A	Cooling Fan (High) Relay, Cooling Fan (Low) Relay
	RR HTD	40A	Rear Defogger Relay
	IG 1	30A	PDM Relay Box (IGN1/ACC Relay : With Smart Key), Ignition Switch (W/O Smart Key)
	IG 2	40A	PDM Relay Box (IGN2 Relay : With Smart Key), Ignition Switch (W/O Smart Key)
	HORN	15A	Horn Relay
	DEICER	15A	Front Wiper Deicer Relay
	STOP LP	10A	Stop Lamp Switch, Smart Key Control Module, ICM Relay Box (DBC Relay)
	4WD	20A	4WD ECM
	ATM P/N	10A	Battery Sensor
	TCU 2	7.5A	Transaxle Range Switch
	ABS	7.5A	ESC Modu e, ICM Relay Box (DBC Relay), Mult Switch
	ECU 2	7.5A	ATM P/N Relay, PCM, Multifunction Switch (Remote Control)

※ USE THE DESIGNATED FUSE AND RELAY ONLY

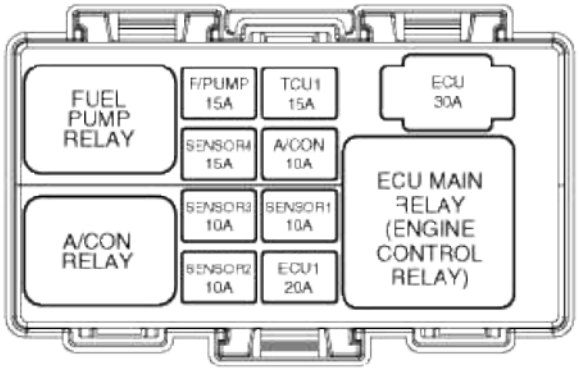

Relay Type

Relay Name	Type
Fuel Pump Relay	PLUG MICRO
A/CON Relay	PLUG MICRO
Engine Control Relay	PLUG MINI

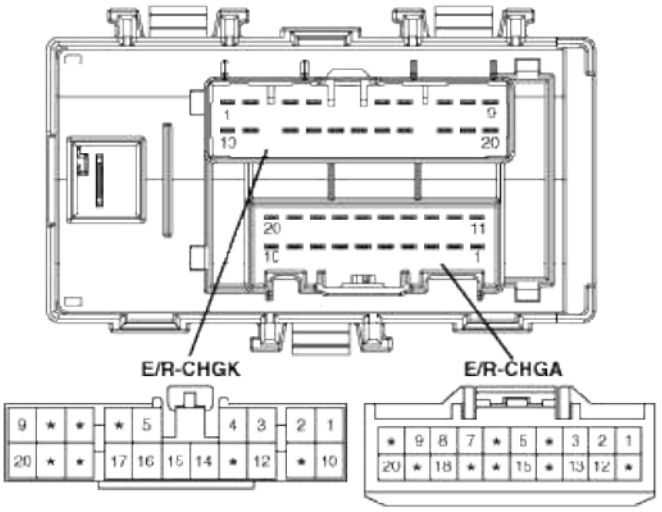

Circuit (EMS Box)

Fuse Name	(A)	Circuit Protected
F/PUMP	15A	Fuel Pump Relay
SENSOR 4	15A	Fuel Pump Relay, PCM, Oxygen Sensor (Up)/(Down), E/R Fuse & Relay Box (Cooling Fan (High)/(Low) Relay)
SENSOR 3	10A	A/CON Relay, Injector #1~#4
SENSOR 2	10A	(Not Used)
TCU 1	15A	PCM
A/CON	10A	A/CON Relay
SENSOR 1	10A	Immobilizer Module, Crankshaft Position Sensor, Camshaft Position Sensor #1/#2, Oil Control Valve #1/#2 Canister Purge Control Solenoid Valve, Variable Intake Solenoid Valve, Canister Close Valve
ECU 1	20A	Ignition Coil #1~#4, Condenser
ECU	30A	Engine Control Relay

※ USE THE DESIGNATED FUSE AND RELAY ONLY

cardiagn.com

Body Electrical System > Fuses And Relays > Relay Box (Engine Compartment) > Repair procedures

Inspection

1. Disconnect the negative (-) battery terminal.
2. Pull out the relay from the engine compartment relay box.

Power Relay (Type A)

Check for continuity between the terminals.

A : Blower relay
B : Horn relay
C : Cooling fan relay (Low)
D : Start relay
E : Burglar horn relay
F : Rear glass defogger relay
G : ATM relay
H : Windshield deicer relay
I : Cooling fan relay (High)
J : A/C relay
K : Fuel pump relay

1. There should be continuity between the No.30 and No.87 terminals when power and ground are connected to the No.85 and No.86 terminals.
2. There should be no continuity between the No.30 and No.87 terminals when power is disconnected.

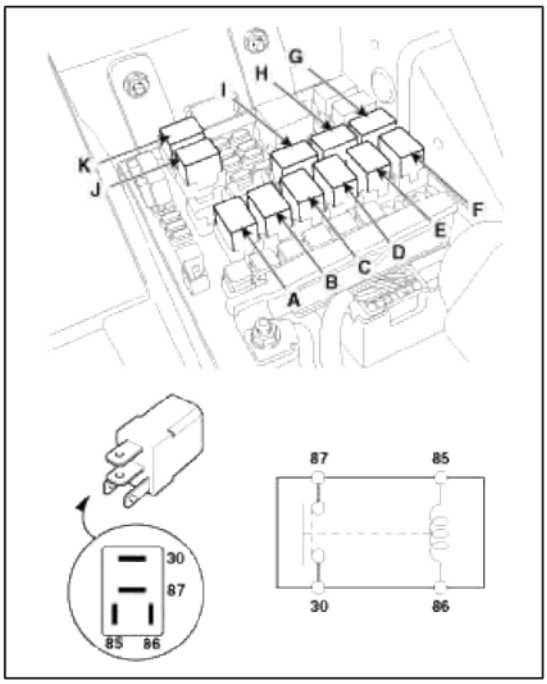

Terminal / Power	30	87	85	86
Disconnected			○	○
Connected	○	○	⊖	⊕

Power Relay (Type B)

Check for continuity between the terminals.

A : Wiper relay (High)
B : Wiper relay (Low)

1. There should be continuity between the No.30 and No.87 terminals when power and ground are connected to the No.85 and No.86 terminals.

cardiagn.com

2. There should be continuity between the No.30 and No.87 terminals when power is disconnected.

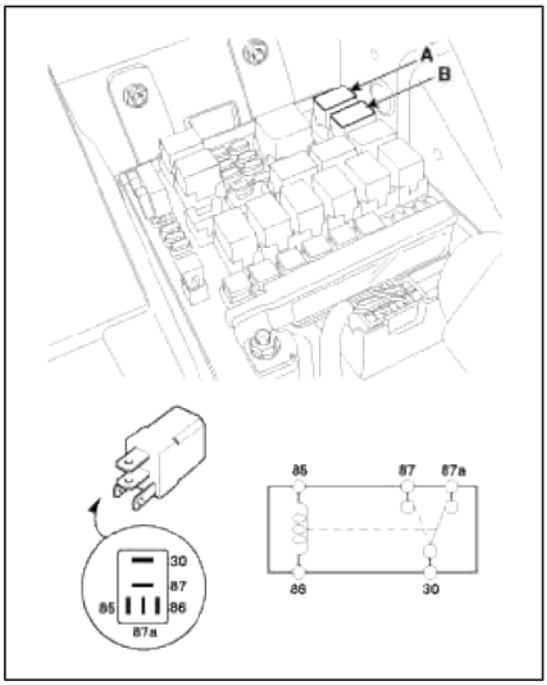

Terminal / Power	85	86	30	87	87a
Disconnected			○		○
Connected	⊖	⊕	○	○	

Power Relay (Type C)

Check for continuity between the terminals.

A : Main relay

1. There should be continuity between the No.30 and No.87 terminals when power and ground are connected to the No.85 and No.86 terminals.
2. There should be no continuity between the No.30 and No.87 terminals when power is disconnected.

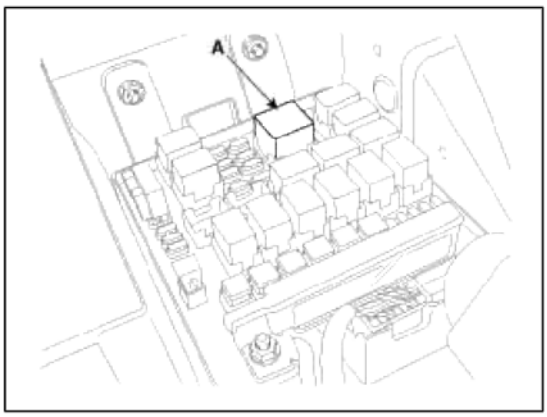

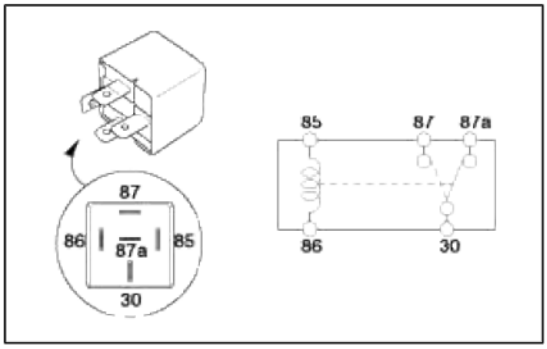

cardiagn.com

Terminal / Power	85	86	30	87	87A
Disconnected			○		○
Connected	⊕	⊖	○	○	

Fuse

1. Be sure there is no play in the fuse holders, and that the fuses are held securely.
2. Are the fuse capacities for each circuit correct?
3. Are there any blown fuses?
   If a fuse is to be replaced, be sure to use a new fuse of the same capacity. Always determine why the fuse blew first and completely eliminate the problem before installing a new fuse.

Multi Fuse

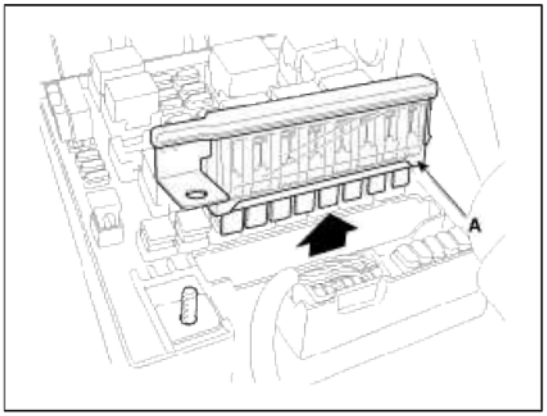

NOTE

- Multi fuse (A) is needed to replace in the mass when it damaged only one fuse.
- When replace the multi fuse, refer to the "Engine compartment - component location" diagram exactly.
- Use the multi fuse capacities for each circuit correctly.

Body Electrical System > Fuses And Relays > Relay Box (Passenger Compartment) > Components and Components Location

Component Location

cardiagn.com

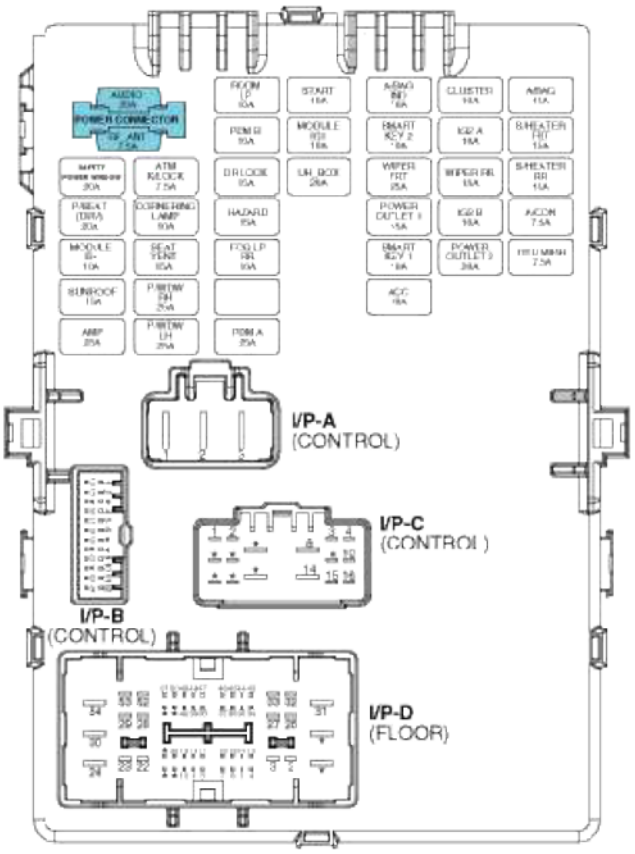

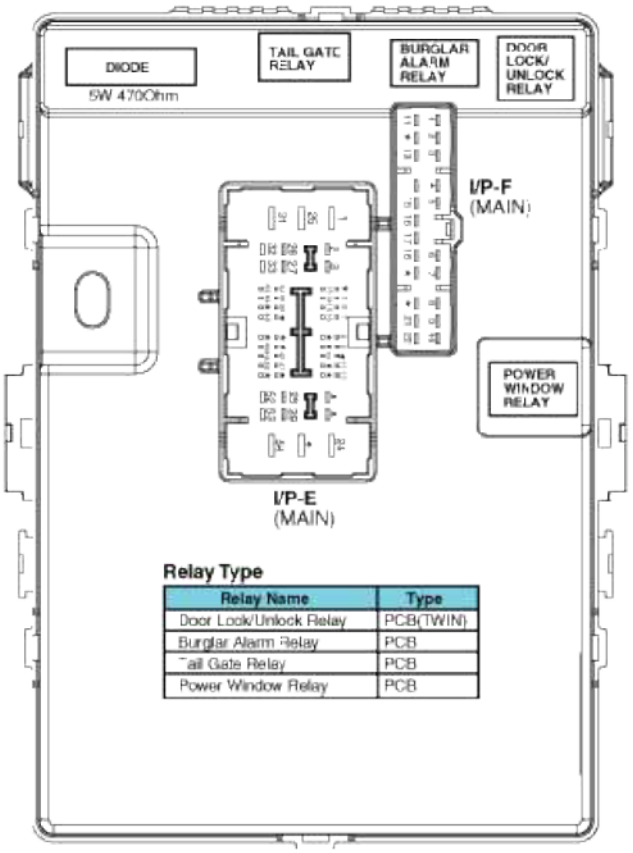

Relay Type

Relay Name	Type
Door Lock/Unlock Relay	PCB(TWIN)
Burglar Alarm Relay	PCB
Tail Gate Relay	PCB
Power Window Relay	PCB

※ USE THE DESIGNATED FUSE AND RELAY ONLY

cardiagn.com

Circuit (I/P Junction Box)

Fuse Name	(A)	Circuit Protected
POWER CONNECTOR AUDIO	20A	Audio
POWER CONNECTOR RF_ANT	7.5A	RF Receiver
A/BAG	15A	SRS Control Module, Passenger Occupant Detection Sensor, Telltale & SBR Lamp
S/HEATER FRT	15A	Driver/Passenger Seat Warmer Switch
S/HEATER RR	15A	Rear Seat Warmer LH/RH
A/CON	7.5A	A/C Control Module (Auto)
HTD MIRR	7.5A	A/C Control Module, Driver/Passenger Power Outside Mirror
CLUSTER	10A	Driver/Passenger Seat Warmer Switch, Driver CCS Control Module, Instrument Cluster, Tire Pressure Monitoring Mocule, Audio, Alternator BCM, A/C Control Module, Telltale & SBR Lamp
IG2 A	10A	BCM, Smart Key Control Module, IPS Control Module (IG2)
WIPER RR	15A	Rear Wiper Motor, Multifunction Switch (Wiper), ICM Relay Box (Rear Wiper Relay)
IG2 B	10A	Cluster Ionizer, A/C Control Module, Rain Sensor, Sunroof Motor, Electro Chromic Mirror, E/R Fuse & Relay Box (Blower Relay)
POWER OUTLET 2	20A	Rear Power Outlet, Front Power Outlet LH, Front Cigarette Lighter
A/BAG IND	10A	Instrument Cluster (A/Bag IND.)
SMART KEY 2	10A	Smart Key Control Module
WIPER FRT	25A	Front Wiper Motor, Multifunction Switch (Wiper), E/R Fuse & Relay Box (Front Wiper (Low) Relay, Wiper (Rain Sensor) Relay)
POWER OUTLET 1	15A	Front Power Outlet RH
SMART KEY 1	10A	BCM, Smart Key Control Module
ACC	10A	Audio, Amp, Sunroof Control Module, Power Outside Mirror Switch
START	10A	Burglar Alarm Relay (With Burglar Alarm), E/R Fuse & Relay Box (Start Relay : W/O Burglar Alarm & Smart Key) Smart Key Control Module (W/O Burglar Alarm & With Smart Key)
MODULE IG1	10A	EPS Control Module, ATM Shift Lever LL., 4WD ECM, Stop Lamp Switch, IPS Control Module (IG1)
UH_BOX	20A	E/R Fuse & Relay Box (ECU 2 7.5A, ABS 7.5A, TCU 2 7.5A)
ROOM LP	10A	BCM, Map Lamp, Room Lamp, Driver/Passenger Vanity Lamp, Electro Chromic Mirror, Luggage Lamp, Ignition Key ILL. & Door Warning Switch Tire Pressure Monitoring Module, Instrument Cluster (MCU, IND.), A/C Control Module, IPS Control Module (B+)
PDM B	10A	Start/Stop Button Switch, FOB Holder, Smart Key Control Module
DR LOCK	15A	Door Lock Relay, Door Unlock Relay, Tail Gate Relay, ICM Relay Box (Two Turn Unlock Relay)
HAZARD	15A	BCM
FOG LP RR	10A	(Not Used)
PDM A	25A	Smart Key Control Module
ATM K/LOCK	7.5A	ATM Shift Lever, Key Solenoid
CORNERING LAMP	10A	(Not Used)
SEAT VENT	15A	Driver CCS Seat Warmer
P/WDW RH	25A	Power Window Main Switch, Passenger Power Window Switch, Rear Power Window Switch RH
P/WDW LH	25A	Rear Power Window Switch LH, Power Window Main Switch
SAFETY POWER WINDOW	20A	Driver Safety Power Window Module
P/SEAT(DRV)	20A	Driver Seat Manual Switch
MODULE B+	10A	Multipurpose Check Connector, Data Link Connector, Driver CCS Switch, Rear Parking Assist Buzzer
SUNROOF	15A	Sunroof Motor, Sunroof Control Module
AMP	25A	Amp

※ USE THE DESIGNATED FUSE AND RELAY ONLY

Body Electrical System > Fuses And Relays > Relay Box (Passenger Compartment) > Description and Operation

Description

SJB (Smart Junction Box)

cardiagn.com

1. Specification

Item	Requirement	Remark
Rated voltage	DC 12V	
Voltage range	DC 9 ~ 16V	Normal operating in this range
Storage temperature	-40°C ~ +80°C	
Operating temperature	-30°C ~ +75°C	
Operating humidity	85%	PCB, Damp proofing, Coating, etc.
Dark current	Max. 200uA	All Load Open
Operation Voltage Range	DC 9 ~ 16V	Should activate normally in normal range
Max Use Humidity	85%	Regulated together with parts needing insulation such as PCB, damp-proofing, coating, etc
Insulation Resistance	Should be no ignition caused by electrical shorts	

2. Rated Burden

Item	Rated Burden
Head Lamp Low LH	55W
Head Lamp Low RH	55W
Head Lamp High LH	60W (Max)
Head Lamp High RH	60W (Max)
Tail Lamp LH	41W(Max)
Tail Lamp RH	31W(Max)
Front Fog Lamp LH+RH	54W
Interior Lamp	45W
B/Alarm Start Relay Coil Control	0.9W
RR FOG Relay Coil Control	0.6W
Tail Gate Latch or Luggage Room Lamp (Power Tail Gate) Relay Coil Control	0.6W
Back Up Relay Coil Control	0.45W
RR Wiper Relay Coil Control (External)	12W (Output Max)
B/Alarm Horn Relay Coil Control (External)	12W (Output Max)
RR.HTD Relay Coil Control (External)	12W (Output Max)
Front Deicer Relay Coil Control (External)	12W (Output Max)

cardiagn.com

3. System configuration

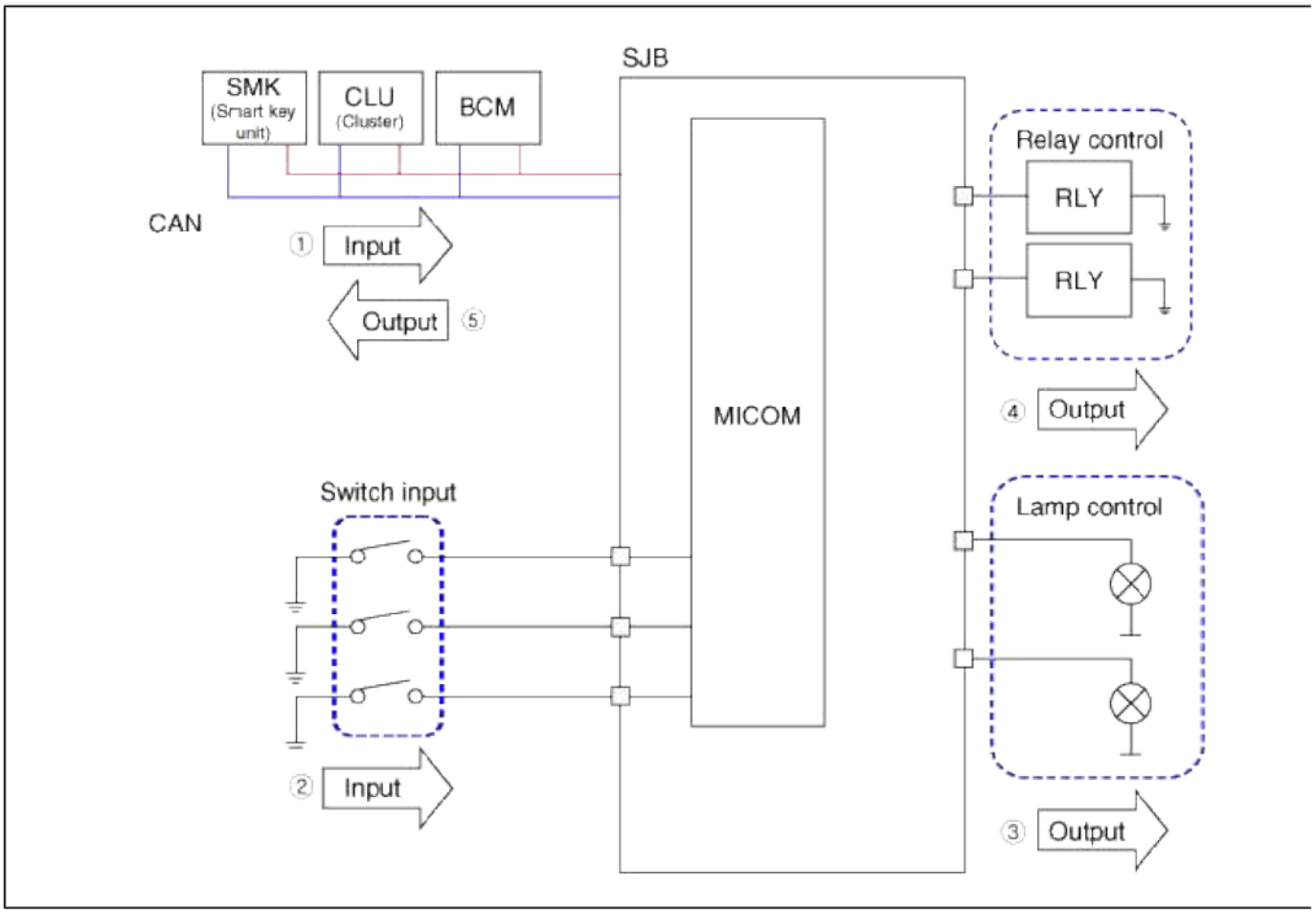

	Division	Form	Description
Input	①	CAN	Command the lamp and relay control.
	②	Switch	Switch signal input
Output	③	IPS control	Lamp control through IPS
	④	FET control	Relay control
	⑤	CAN	- Transfer the lamp control state - Transfer the switch input

4. System block diagram

cardiagn.com

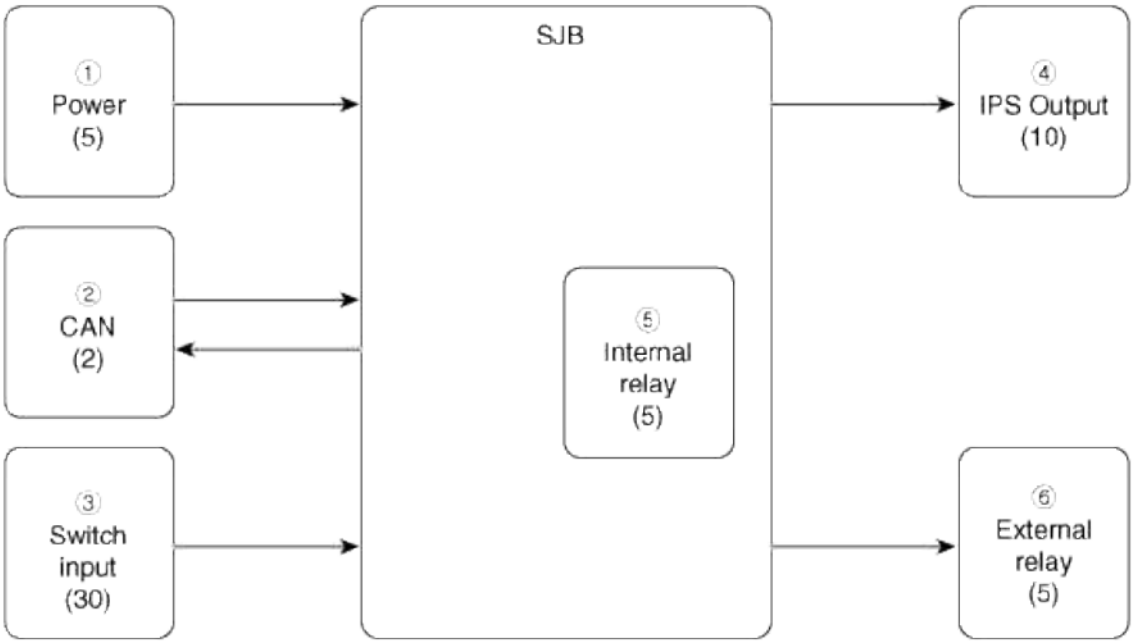

No.	1. Power input	No.	2. CAN
1	B+1	1	Tx
2	B+2	2	Rx
3	B+3		
4	IGN1		
5	IGN2		

No	3. Switch input		
1	Driver door switch	16	Rear door unlock state(LH)
2	Assist door switch	17	Rear door unlock state(RH)
3	Rear door switch(LH)	18	Driver seat belt switch
4	Rear door switch(RH)	19	Assist seat belt switch
5	Driver door key unlock switch	20	Rear seat belt switch(LH)
6	Assist door key unlock switch	21	Rear center seat belt switch
7	Driver door key lock switch	22	Rear seat belt switch(RH)
8	Assist door key lock switch	23	Brake fluid switch
9	Hood lock state	24	Parking brake switch
10	Tailgate release switch	25	Hand brake switch
11	Tailgate open switch	26	Shift lever reverse gear (M/T option)
12	Power window lock switch	27	-
13	Power window unlock switch	28	Headlamp low switch(M/F)
14	Driver door unlock state	29	HID option
15	Assist door unlock state	30	Wiper parking signal

cardiagn.com

No	4. IPS output	Power
1	Headlamp low(RH)	B+2
2	Headlamp high(RH)	
3	External tail(RH)	
4	Internal tail(LH,RH)	
5	Dedicated DRL LH/RH	
6	Backup lamp	
7	Headlamp low(LH)	B+3
8	Headlamp high(LH)	
9	Fog lamp(LH,RH)	
10	External tail(LH)	

No.	5. Internal relay	No.	6. External relay
1	Door lock relay	1	-
2	Door unlock relay	2	Rear defogger relay
3	Power window relay	3	Front deicer relay
4	Tailgate release relay	4	Burglar horn relay
5	Burglar alarm start relay	5	Rear wiper relay

5. Control function (Lamp)

cardiagn.com

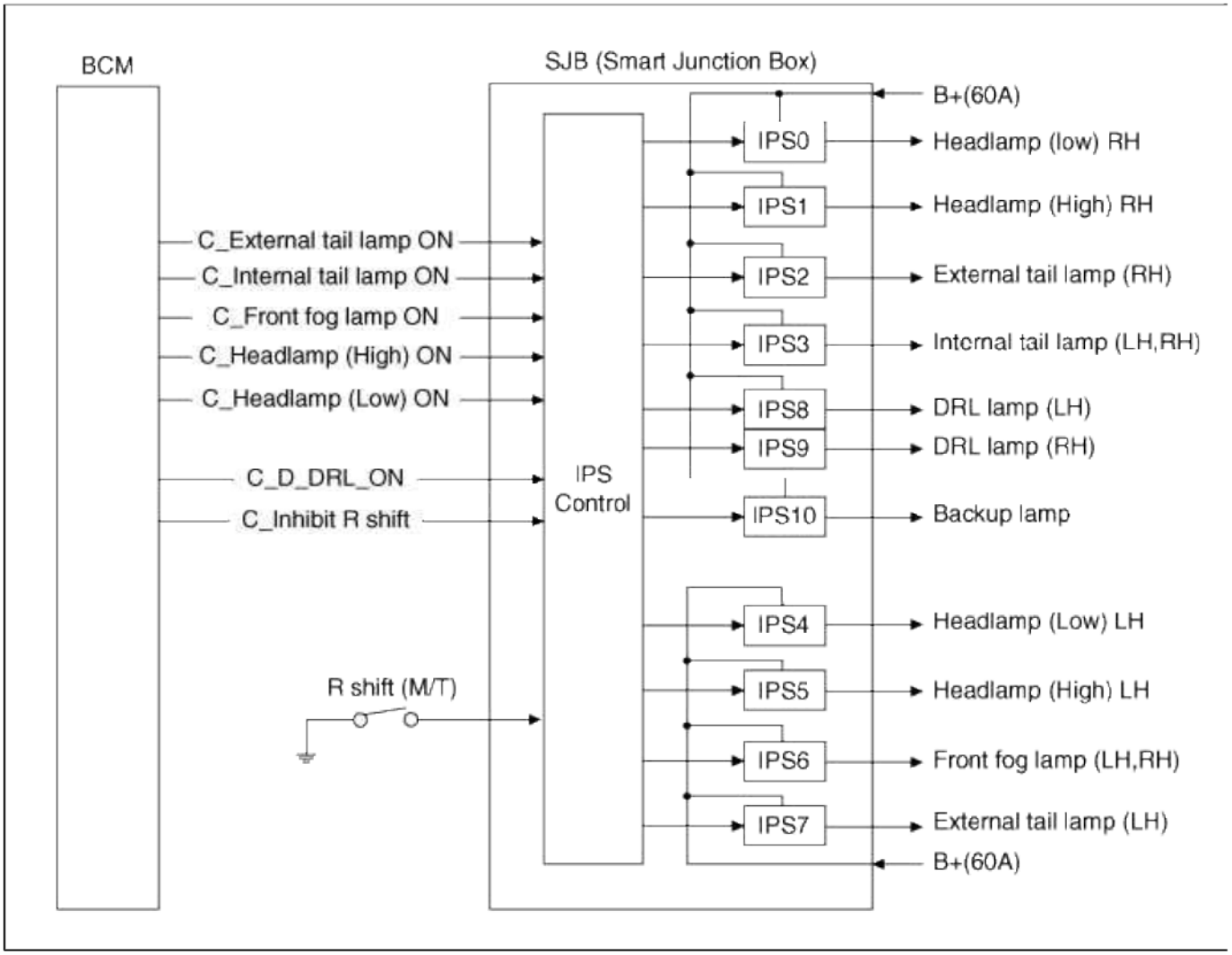

A. Smart Junction Box(SJB) controls tail lamp, headlamp(low), headlamp(high) and front fog lamp output. And it diagnoses.

B. It controls lamp after receiving CAN signal from BCM.

C. It sends results of control state and diagnosis to BCM through CAN.

(1) PWM(Pulse Width Modulation) control : Rated voltage control

If a battery voltage is over 13.2 ± 0.1 V, it controls IPS with PWM and prevents early bulb's burnt-out and Il device.

It controls bulbs with controlling IPS.

A frequency is 80 ± 10 Hz(TBD) at controlling with PWM.

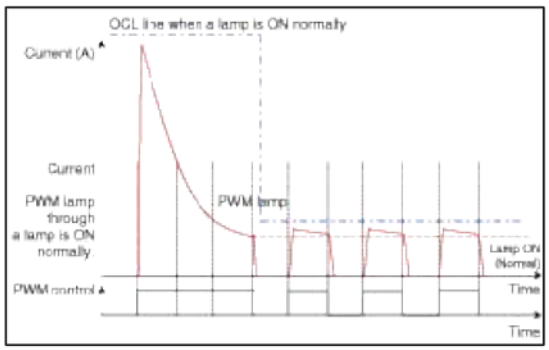

If a voltage is high, a bulb's life decreases. So, SJB keeps stable voltage to bulbs and ensures bulb's life.

cardiagn.com

(2) PCL : Programmed Current Limit

If current flowed into a wire is larger than basic current which is designated to a wire, it controls IPS with PWI control or stops IPS.



(3) Overheat diagnosis

If high current flows into SJB within short time like as a ground short, IPS blocks an output and protects wire and load.

6. Control function - Switch input

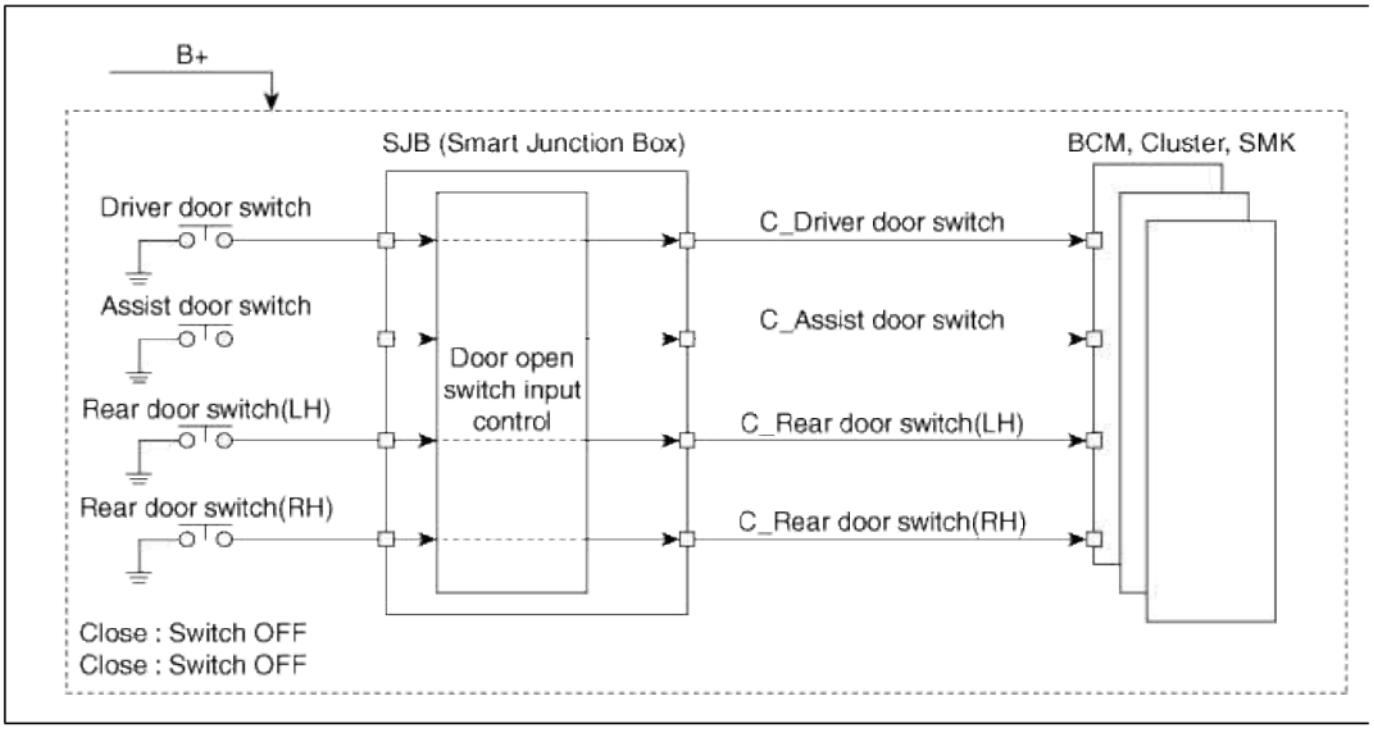

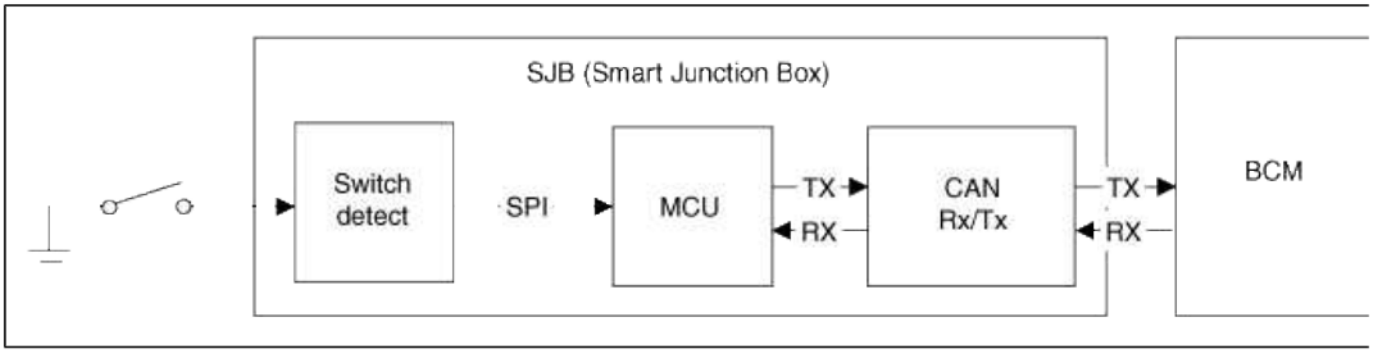

Movement explanation

A. It detects the switch state and transfers to BCM through CAN.

B. It detects the switch state in the sleep state and enables to SJB wakeup function.

cardiagn.com

7. Control function - relay

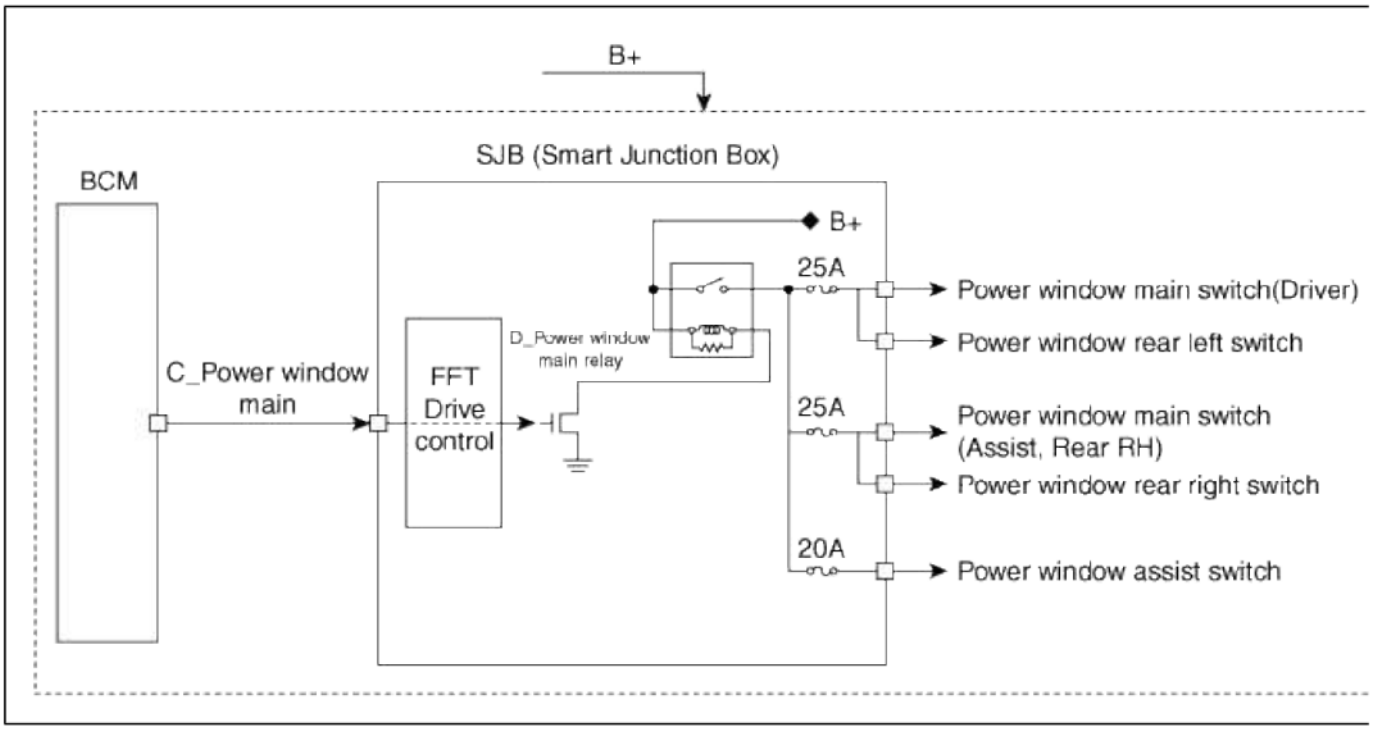

Movement explanation

A. It receives the power window relay control value from BCM through CAN and controls relays.

B. If C_PwdeMain(CAN signal) is ON, it makes power window relay output to ON.
If C_PwdeMain(CAN signal) is not ON, it makes power window relay output to OFF.

8. Control function - CAN fail

SJB, in case CAN fail and IGN2 is ON, turns on head lamp(low), external tail lamp and internal tail lamp by force

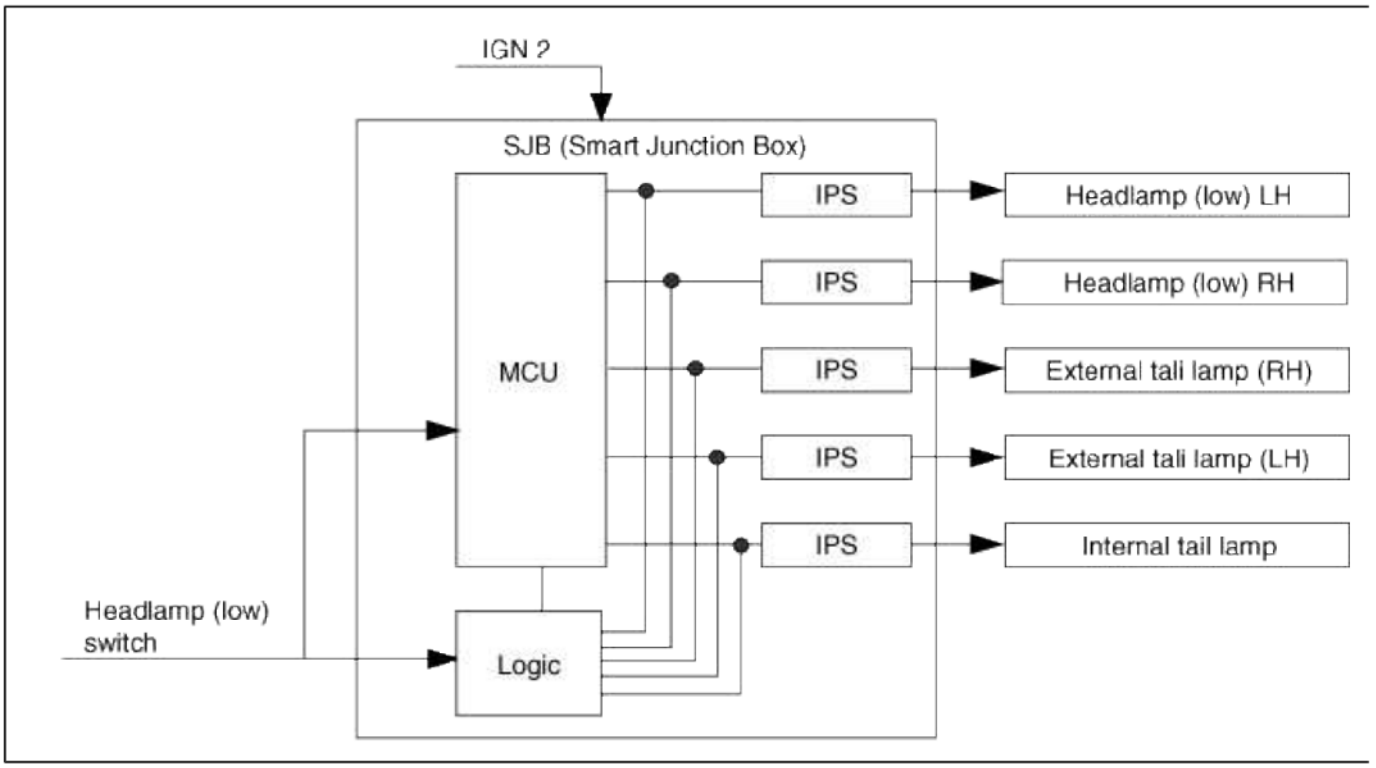

9. Hardware protection function

In case MCU is in the Dead state, SJB checks the headlamp switch state. If IGN2 is ON and headlamp(low) switch is ON, it turns on headlamp(low) by force and protects driver.

Body Electrical System > Fuses And Relays > Relay Box (Passenger Compartment) > Repair procedures

cardiagn.com

Inspection

Fuse

1. Be sure there is no play in the fuse holders, and that the fuses are held securely.
2. Are the fuse capacities for each circuit correct?
3. Are there any blown fuses?
   If a fuse is to be replaced, be sure to use a new fuse of the same capacity. Always determine why the fuse blew first and completely eliminate the problem before installing a new fuse.

SJB Connectors

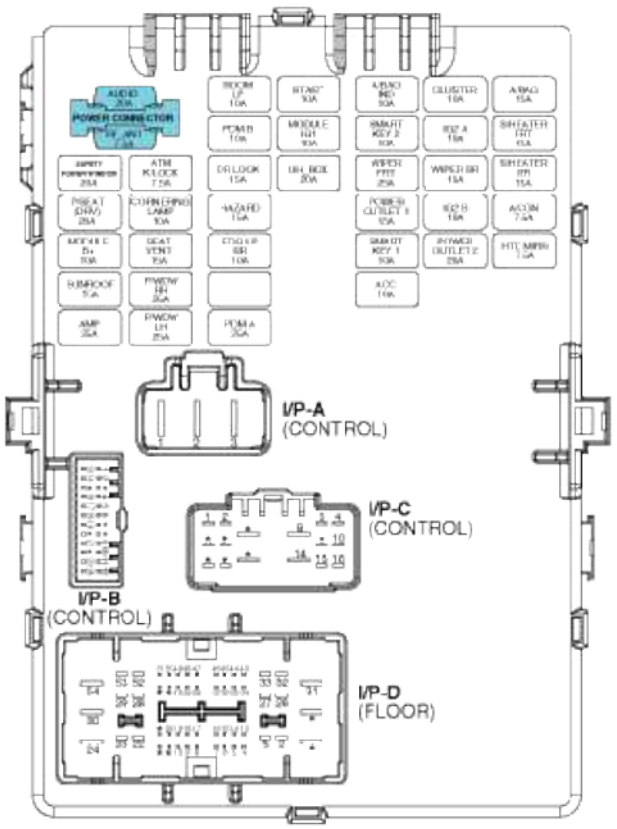

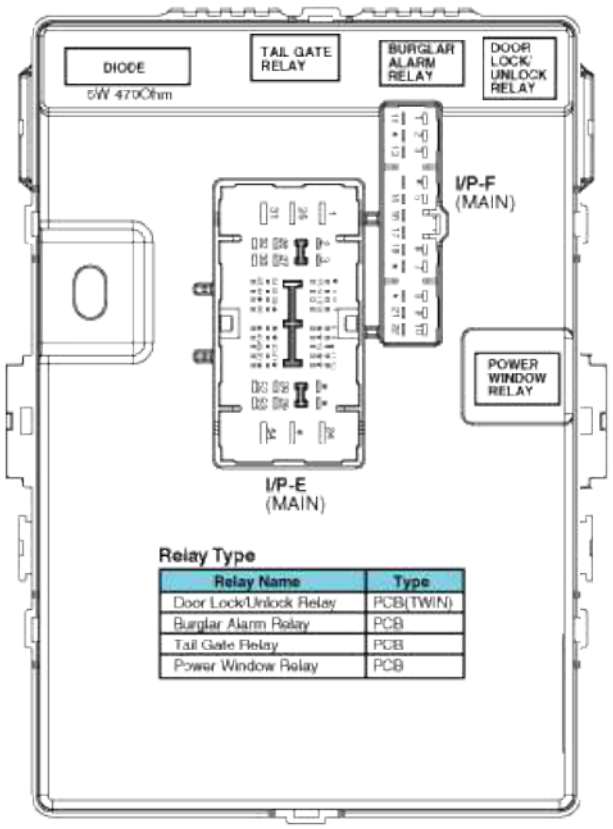

Relay Type

Relay Name	Type
Door Lock/Unlock Relay	PCB(TWIN)
Burglar Alarm Relay	PCB
Tail Gate Relay	PCB
Power Window Relay	PCB

Inspection

1. The SJB can be diagnosed by using the GDS. The SJB communicates with the GDS which then displays inputs and outputs along with codes.

cardiagn.com

2. To diagnose the SJB function, select the vehicle model, BCM and SJB.

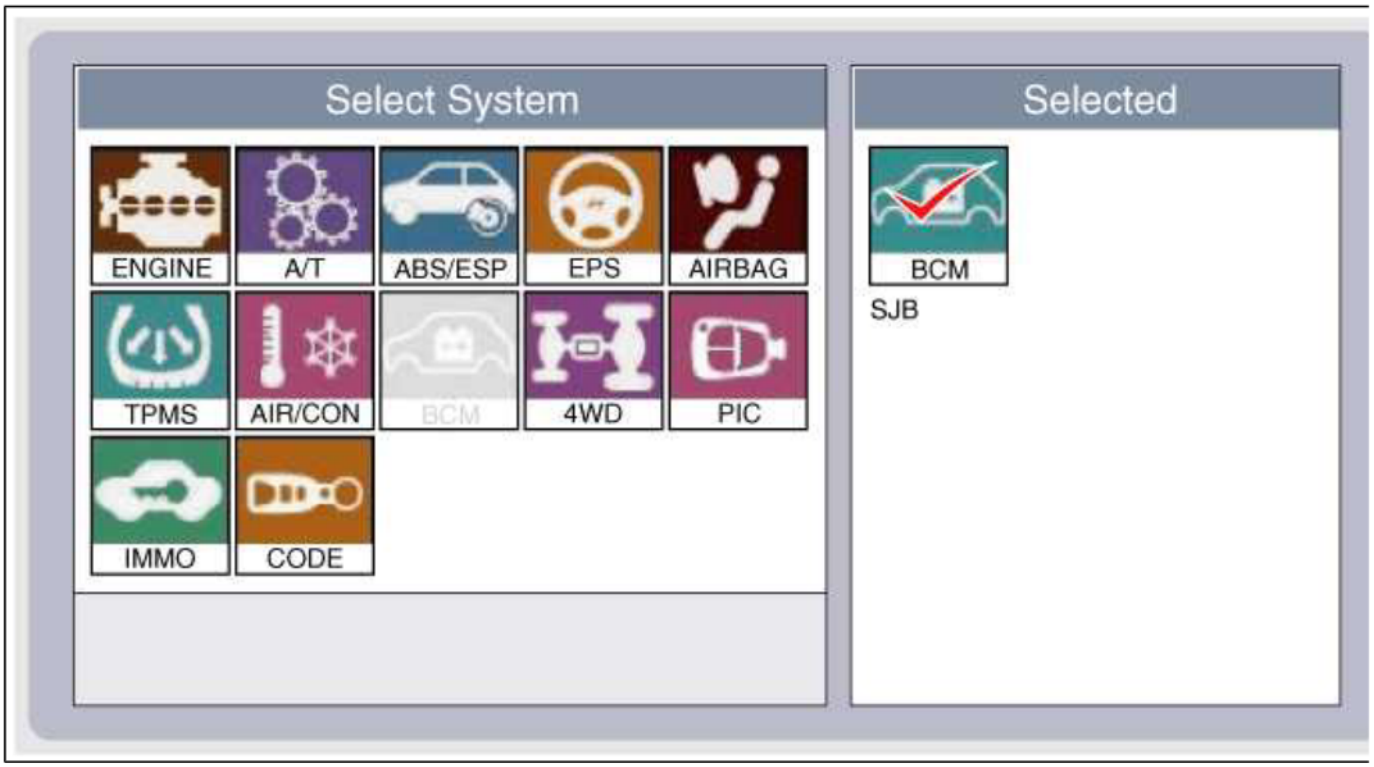

3. To consult the present input/out value of SJB, "Current DATA". It provides information of SJB input/output conditions.

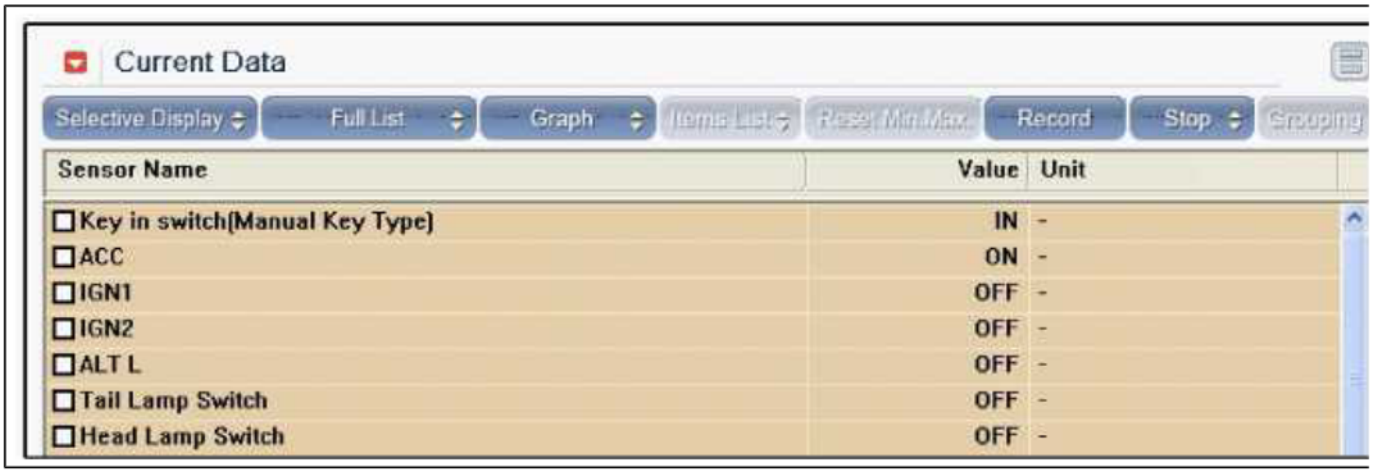

4. To perform functional test on SJB outputs, select "Actuation Test"

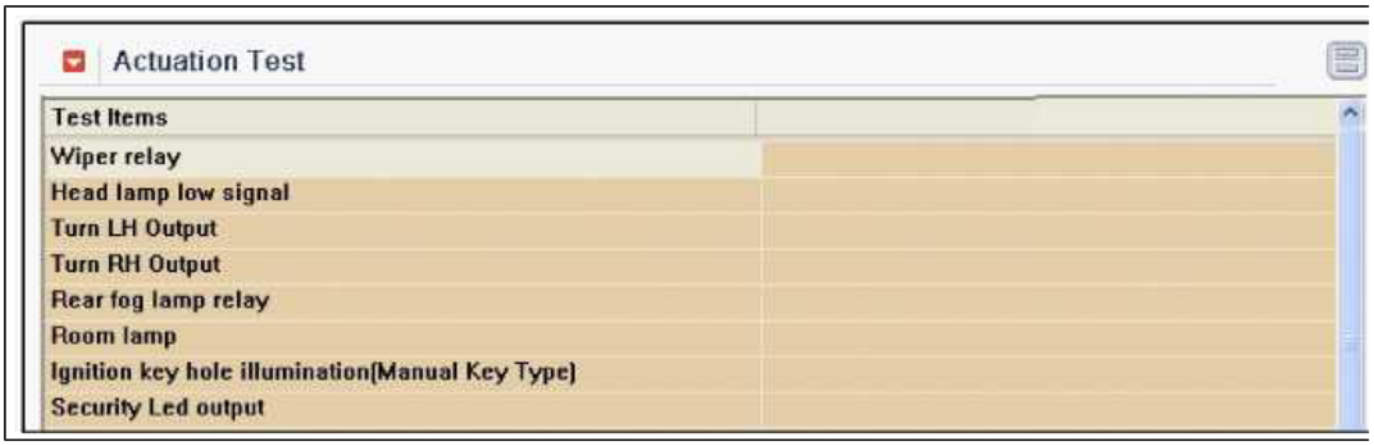

Removal

1. Disconnect the negative (-) battery terminal.

cardiagn.com

2. Remove the crash pad lower panel.
   (Refer to the BD group - "Crash pad")
3. Remove the SJB (A) (Smart Junction Box) after removing bolt, nuts (2EA) and connectors.

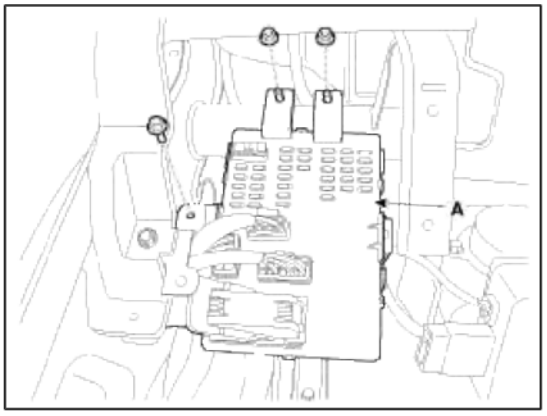

Installation

1. Install SJB (Smart Junction Box).
2. Connect the SJB connectors.
3. Install the crash pad lower panel.

Body Electrical System > Fuses And Relays > ICM (Integrated Circuit Module) Relay Box > Components and Components Location

Component

cardiagn.com

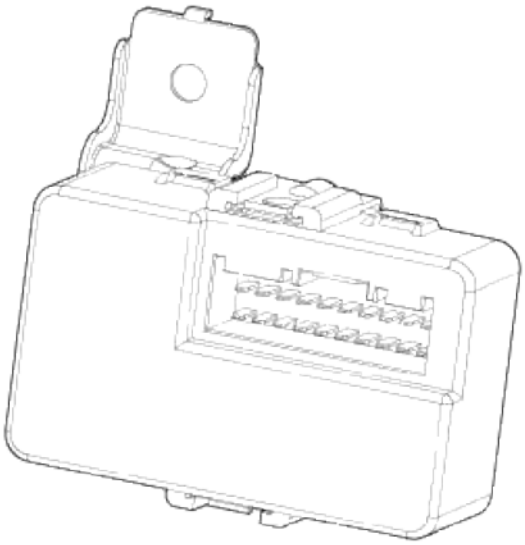

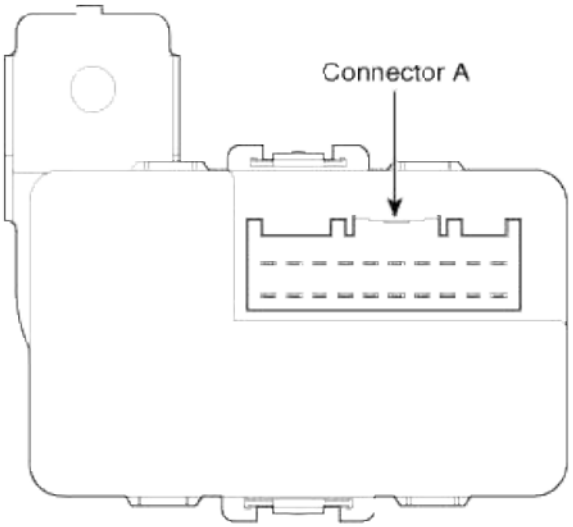

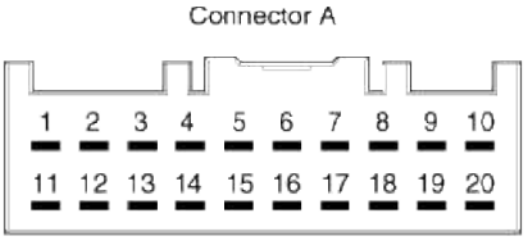

Pin Information

cardiagn.com

No	Connector A	No	Connector A
1	Rear wiper motor (Power)	11	IPM (Rear wiper 15A)
2	IPM	12	Rear wiper motor (Signal)
3	Stop lamp	13	-
4	-	14	-
5	ESC unit	15	GND
6	U_H_Box (ABS 7.5A fuse)	16	IPM (BCM)
7	Stop lamp switch	17	IPM (Door lock 15A)
8	Stop lamp 10A fuse	18	Door lock actuator - driver
9	-	19	-
10	-	20	-

Specification

Rated voltage	DC 12V
Operating voltage range	DC 9~16V
Operating temperature range	-22~167 °F(-30~75 °C)
Preservation temperature range	-40~185 °F(-40~85 °C)
Insulation resistance	100MΩ MIN. / 500VM

Voltage dropping specification

No.	Function	Current specification		Load type	Voltage dropping	Remarks
		Rated	Max.			
1	Rear wiper	10A	25A	Motor	Max. 0.5 V	Test voltage : 13.5 V
2	DBC(stop lamp)	10A	25A	Illumination		

Body Electrical System > Fuses And Relays > ICM (Integrated Circuit Module) Relay Box > Schematic Diagrams

Schematic Diagram

cardiagn.com

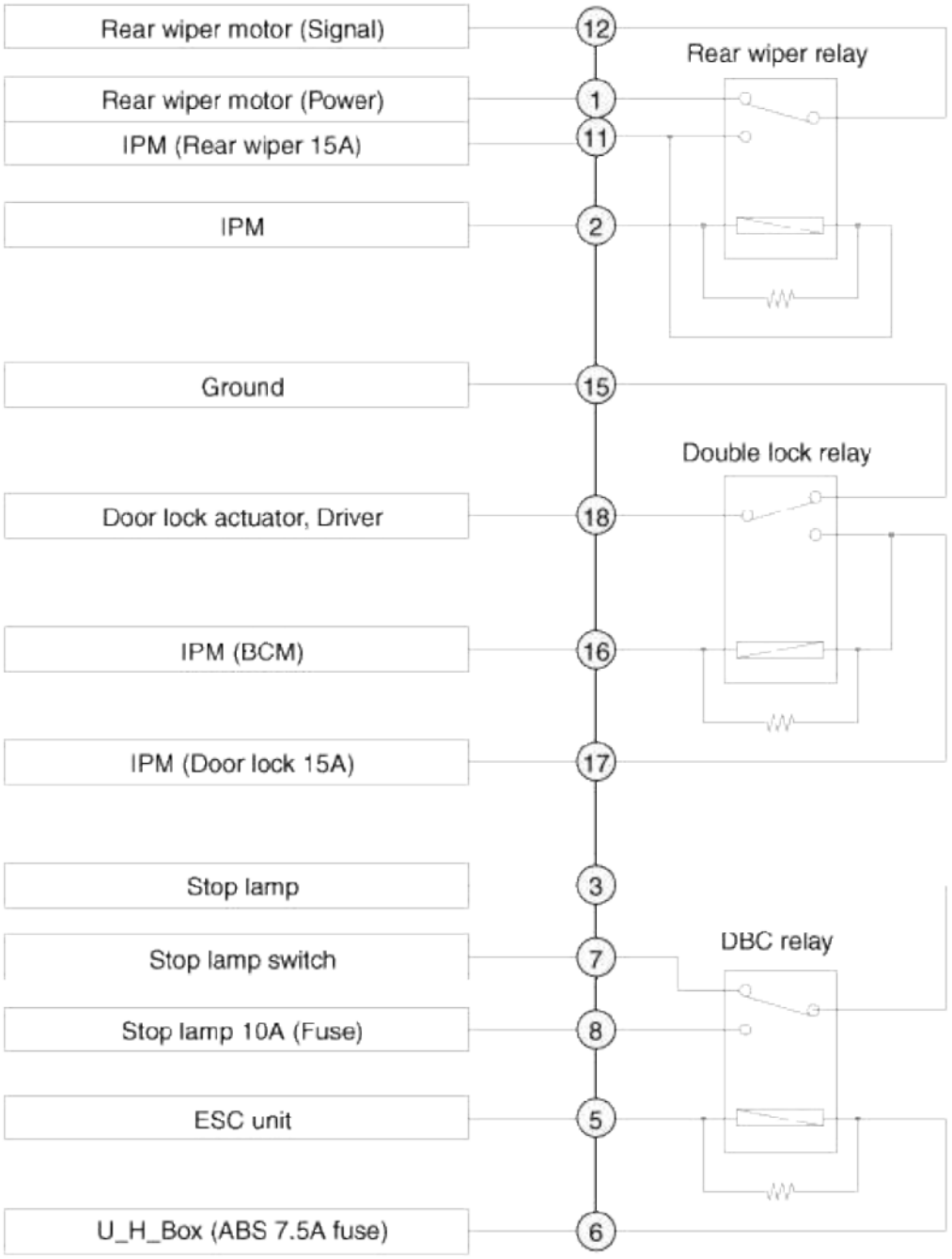

Body Electrical System > Fuses And Relays > ICM (Integrated Circuit Module) Relay Box > Description and Operation

Description

The ICM relay (A) is united with rear wiper relay, and DBC relay which installed inside the lower crash pad.

cardiagn.com

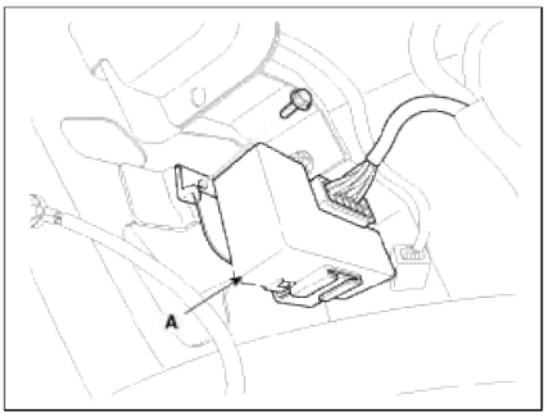

Body Electrical System > Fuses And Relays > ICM (Integrated Circuit Module) Relay Box > Repair procedures

Inspection

Rear Wiper Relay

Check for continuity between the terminals.

1. There should be continuity between the No.11 in the A and No.12 in the A terminals when power and ground are connected to the No.2 in the A and No.11 in the A terminals.
2. There should be no continuity between the No.11 in the A and No.12 in the A terminals when power is disconnected.

DBC Relay

Check for continuity between the terminals.

1. There should be continuity between the No.3 in the A and No.8 in the A terminals when power and ground are connected to the No.5 in the A and No.6 in the A terminals.
2. There should be no continuity between the No.3 in the A and No.8 in the A terminals when power is disconnected.

Double Lock Relay

Check for continuity between the terminals.

1. There should be continuity between the No.17 in the A and No.18 in the A terminals when power and ground are connected to the No.16 in the A and No.17 in the A terminals.
2. There should be no continuity between the No.17 in the A and No.18 in the A terminals when power is disconnected.

Body Electrical System > Fuses And Relays > PDM Relay Box > Components and Components Location

Components

cardiagn.com

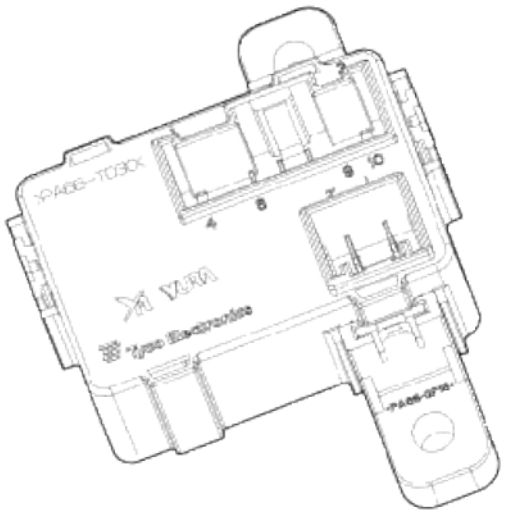

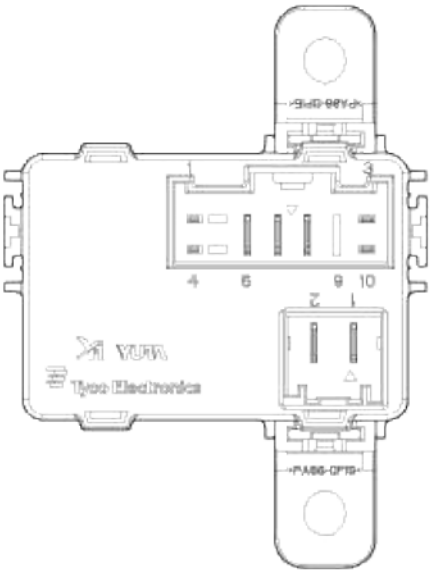

Connector		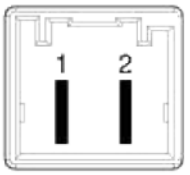
Pin No.	Connector A (10 pins)	Connector B (2 pins)
1	Smart key unit	IGN-2
2	-	Battery power (IGN-2)
3	Ground	
4	Smart key unit	
5	-	
6	ACC	
7	Battery power (IGN-1)	
8	IGN-1	
9	-	
10	Smart key unit	

cardiagn.com

Body Electrical System > Fuses And Relays > PDM Relay Box > Description and Operation

Description

The PDM relay (A) is united with IG1, IG2 and ACC relays and installed in the lower center fascia panel.

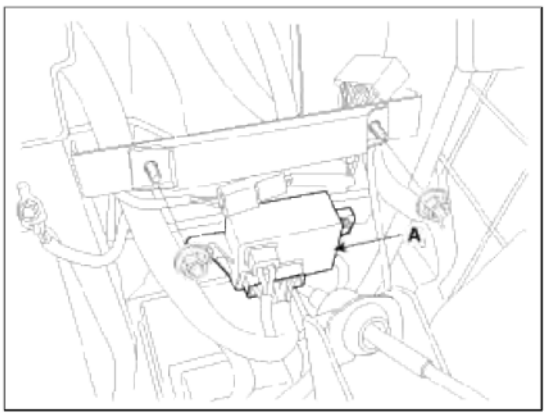

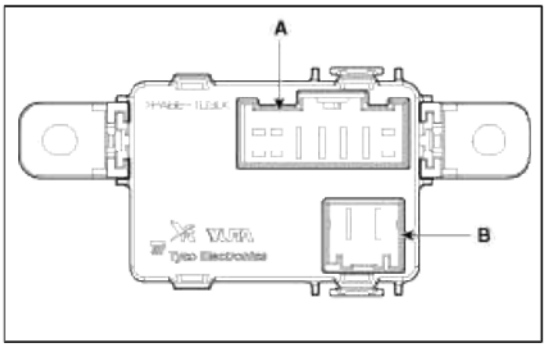

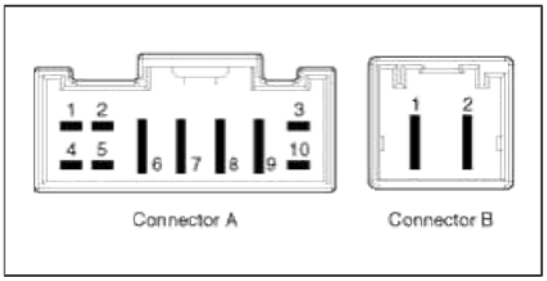

Body Electrical System > Fuses And Relays > PDM Relay Box > Repair procedures

Removal

PDM Relay

1. Disconnect the negative (-) battery terminal.
2. Remove the floor console assembly.
   (Refer to BD group - "Console")
3. Remove the PDM relay box (A) after loosening the bolts (2EA) and disconnecting the connector.

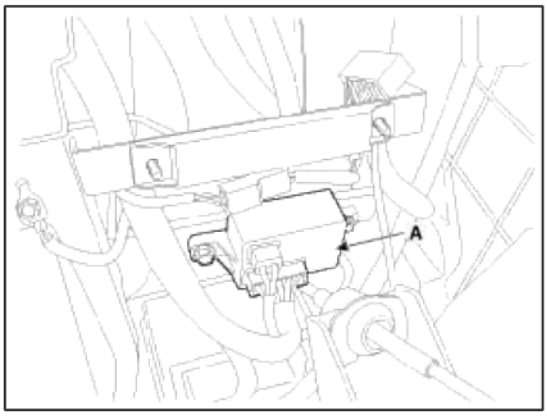

Installation

1. Install the PDM relay box.
2. Install the floor console assembly.

cardiagn.com

3. Connect the battery (-) cable.

Inspection

IG2 Relay

Check for continuity between the terminals.

1. There should be continuity between the No.1 and No.2 terminals in the B connector when power and ground are connected to the No.3 and No.4 terminals in the A connector.
2. There should be no continuity between the No.1 in the B and No.2 terminals in the B terminals when power is disconnected.

IG1 Relay

Check for continuity between the terminals.

1. There should be continuity between the No.7 and No.8 terminals in the A connector when power and ground are connected to the No.3 and No.10 terminals in the A connector.
2. There should be no continuity between the No.7 in the A and No.8 terminals in the A terminals when power is disconnected.

ACC Relays

Check for continuity between the terminals.

1. There should be continuity between the No.7 and No.6 terminals in the A connector when power and ground are connected to the No.1 and No.3 terminals in the A connector.
2. There should be no continuity between the No.7 in the A and No.6 terminals in the A terminals when power is disconnected.

Body Electrical System > Indicators And Gauges > Components and Components Location

Component Location

cardiagn.com

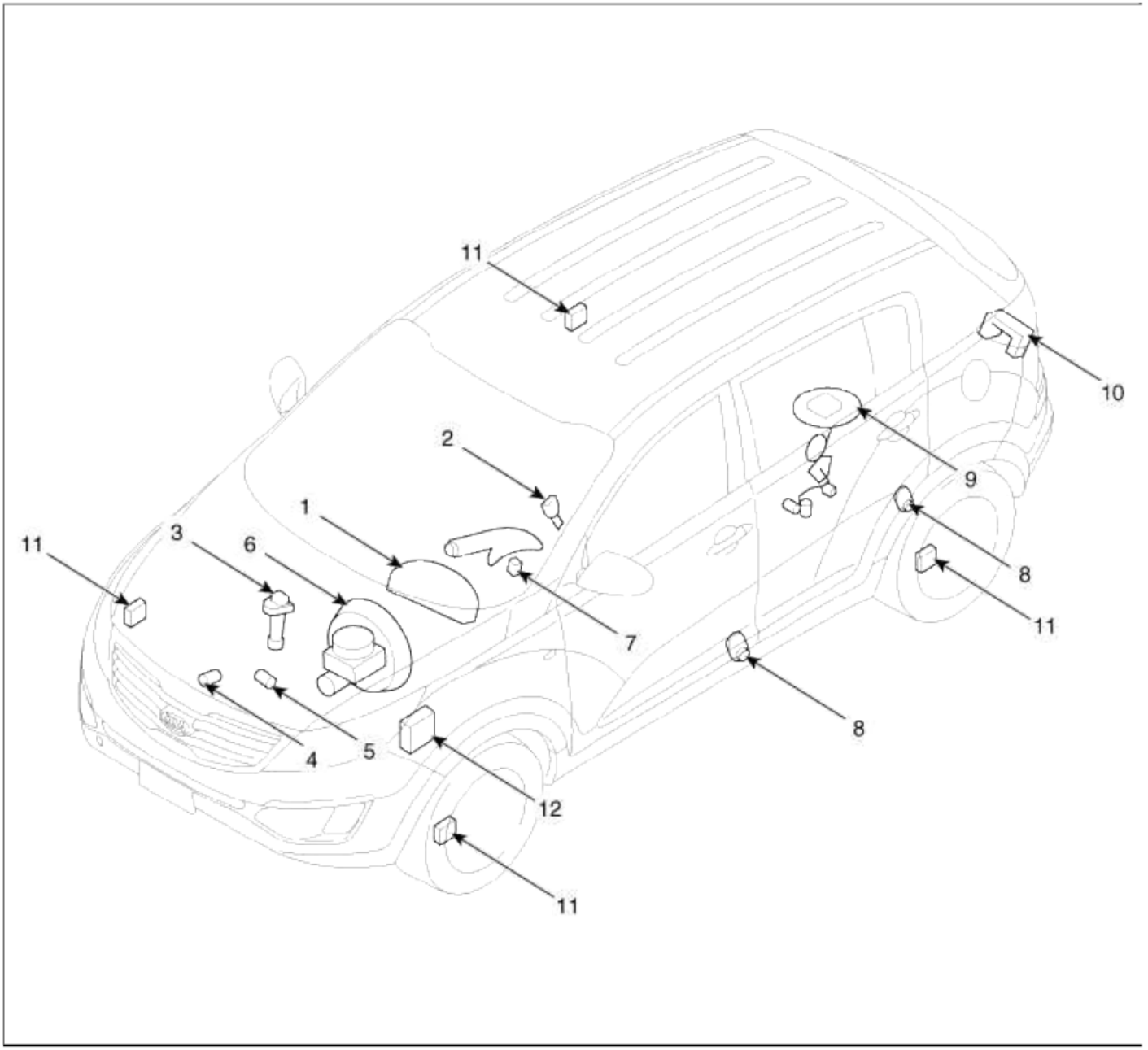

1. Cluster assembly 2. Seat belt switch 3. Vehicle speed sensor 4. Engine coolant temperature sender 5. Oil pressure switch 6. Brake fluid level warning switch	7. Parking brake switch 8. Door switch 9. Fuel gauge sender 10. Tailgate switch 11. Wheel speed sensor 12. ABS ECU

Body Electrical System > Indicators And Gauges > Instrument Cluster > Components and Components Location

Components

cardiagn.com

[General Type]

[Front View]

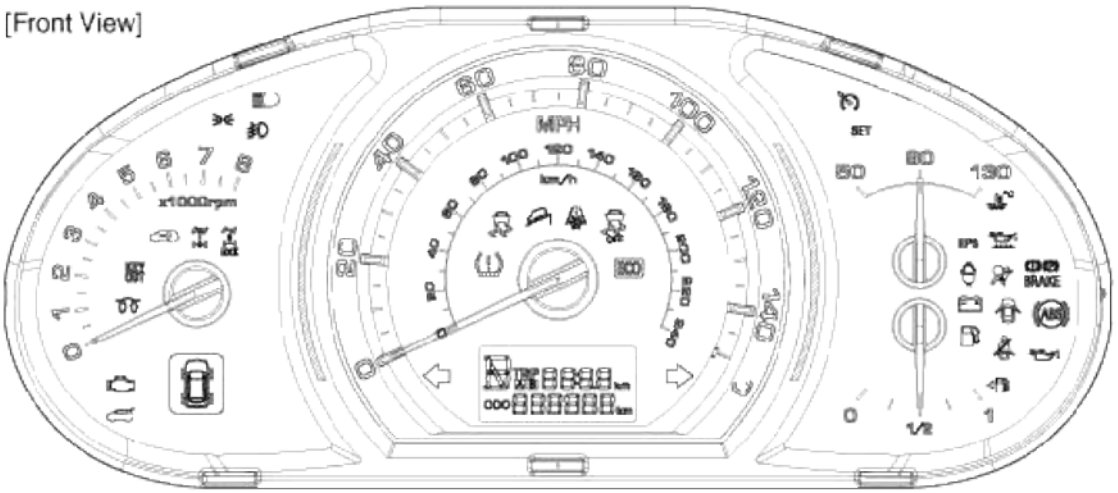

[Back View]

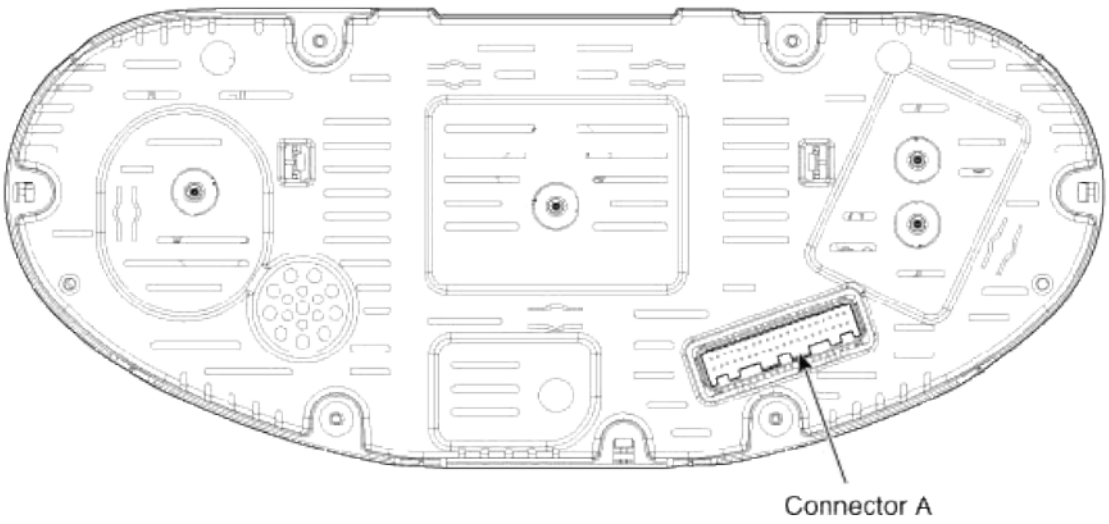

cardiagn.com

[Super Vision Cluster (SVC)]

[Front View]





Speed meter (CANADA)



Speed meter (USA)

[Back View]

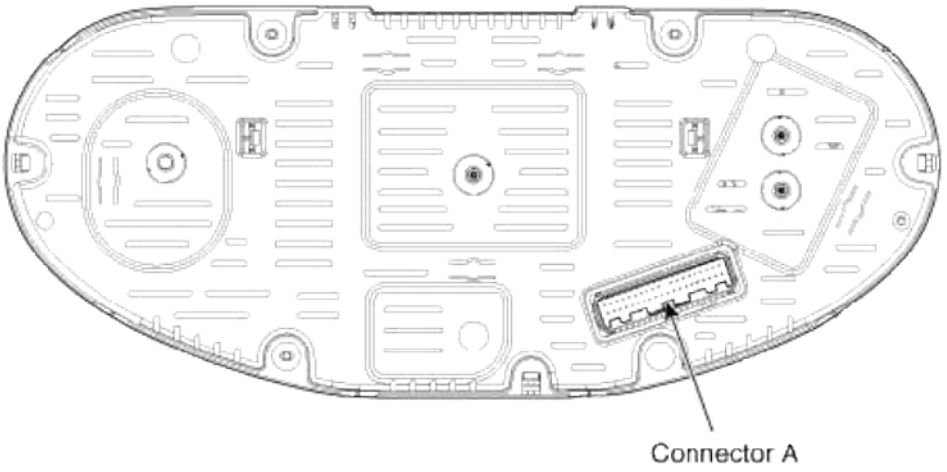

cardiagn.com

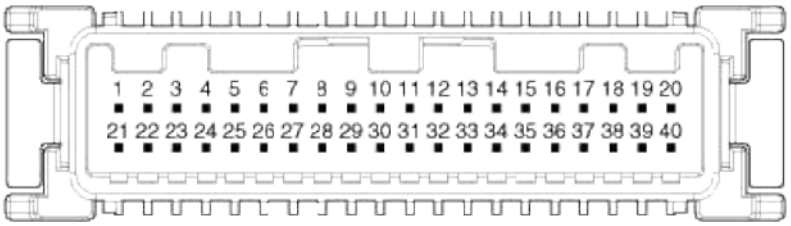

Connector A

Pin No.	Description	Pin No.	Description
1	-	21	P ground
2	Rheostat ground	22	AT P shift output
3	-	23	AT R shift output
4	-	24	AT N shift output
5	Rheostat output (illumination -)	25	AT D shift output
6	-	26	-
7	Charge	27	4 pin output
8	Water separator	28	Detent out
9	Oil pressure	29	Reset switch
10	Airbag input -	30	Mode switch
11	Aurbag input +	31	Rheostat down
12	Check engine	32	Rheostat up
13	Immobilizer	33	Fuel input
14	-	34	B CAN High
15	Active ECO	35	B CAN Low
16	-	36	C CAN High
17	ISG_DC	37	C CAN Low
18	-	38	Illumination +
19	Ground signal	39	IGN 1
20	Fuel ground (Fuel low)	40	Battery +

cardiagn.com

Body Electrical System > Indicators And Gauges > Instrument Cluster > Schematic Diagrams

Circuit Diagram (1)

[General type]

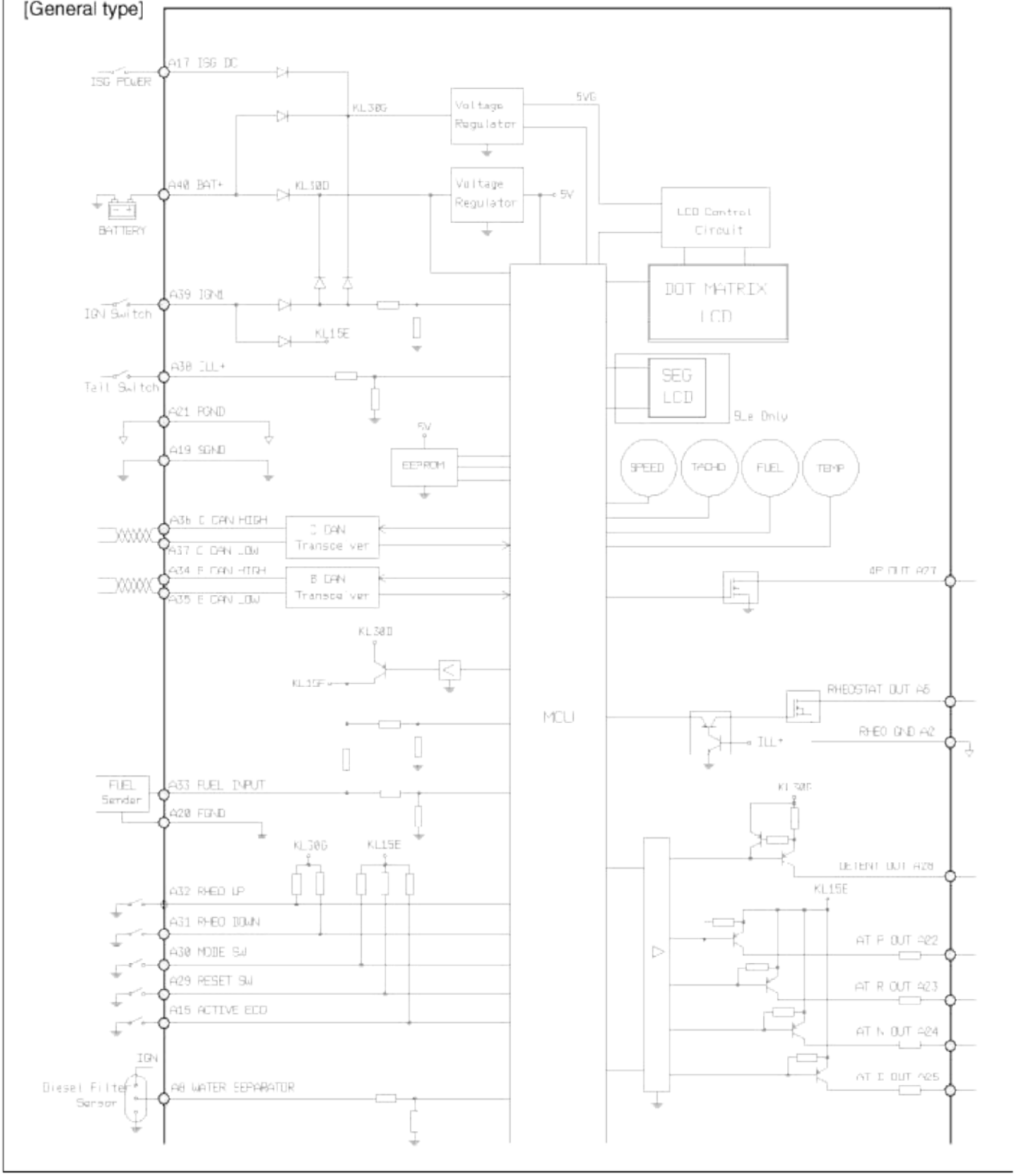

cardiagn.com

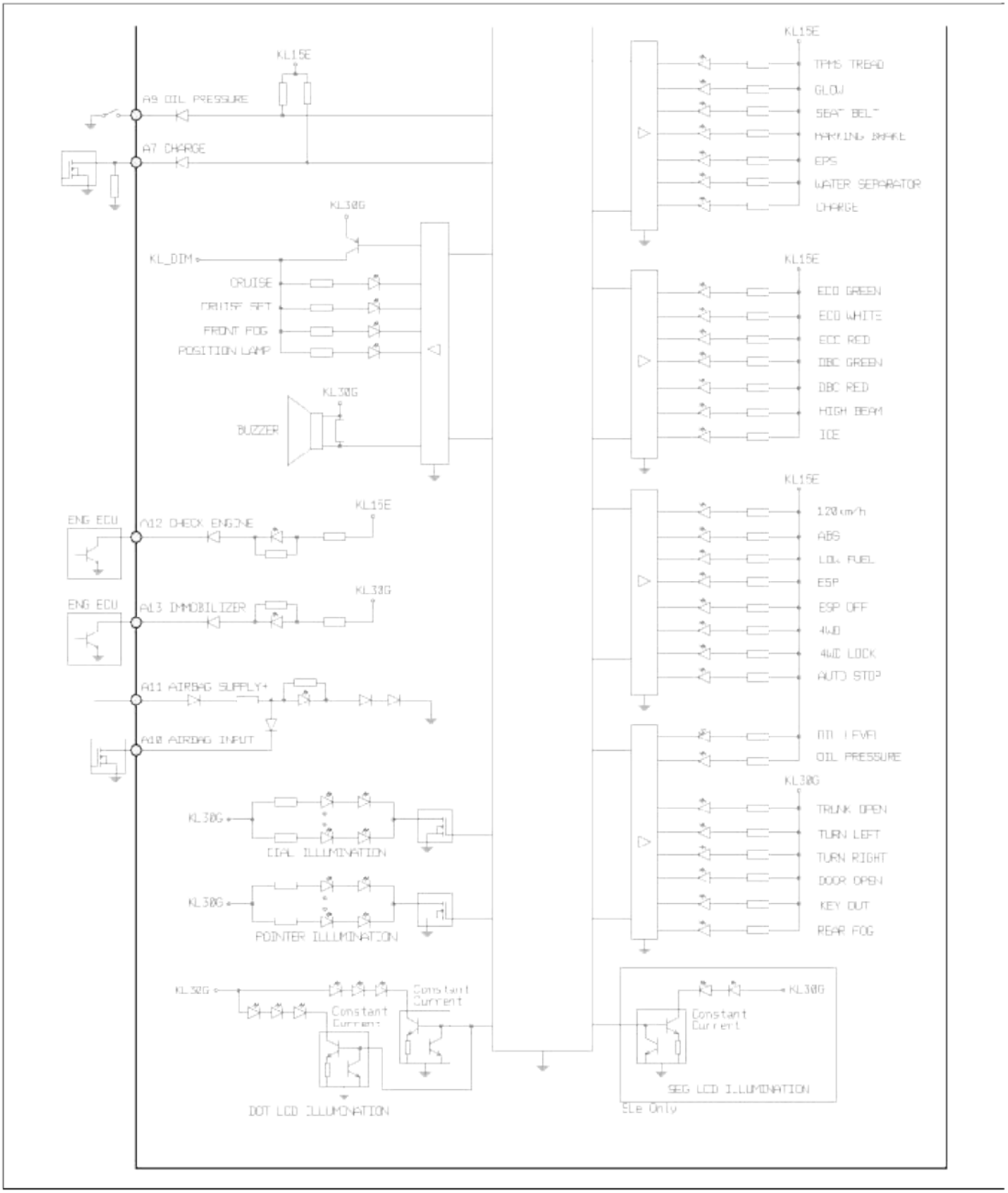

Circuit Diagram (2)

cardiagn.com

[Super Vision Cluster]

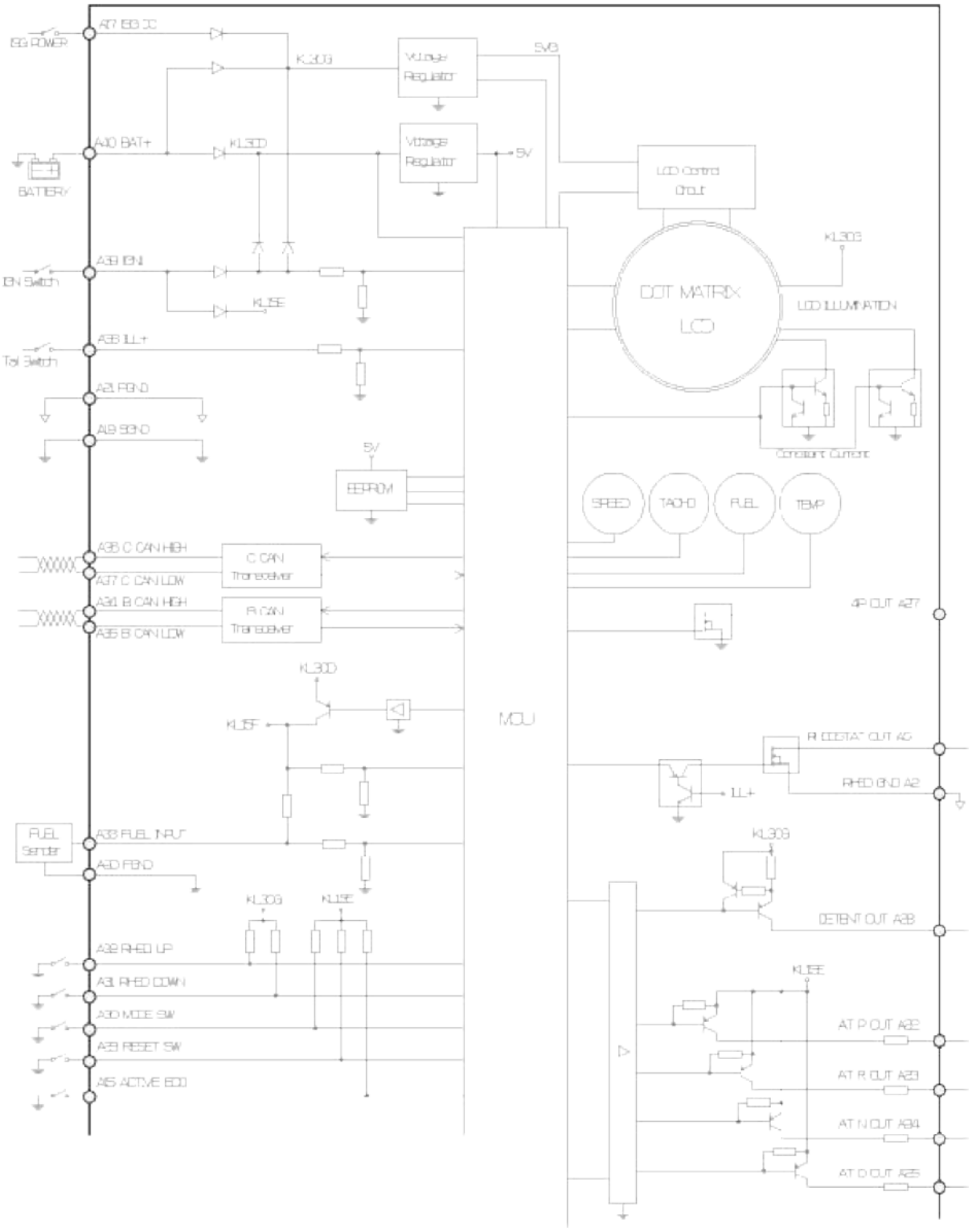

cardiagn.com

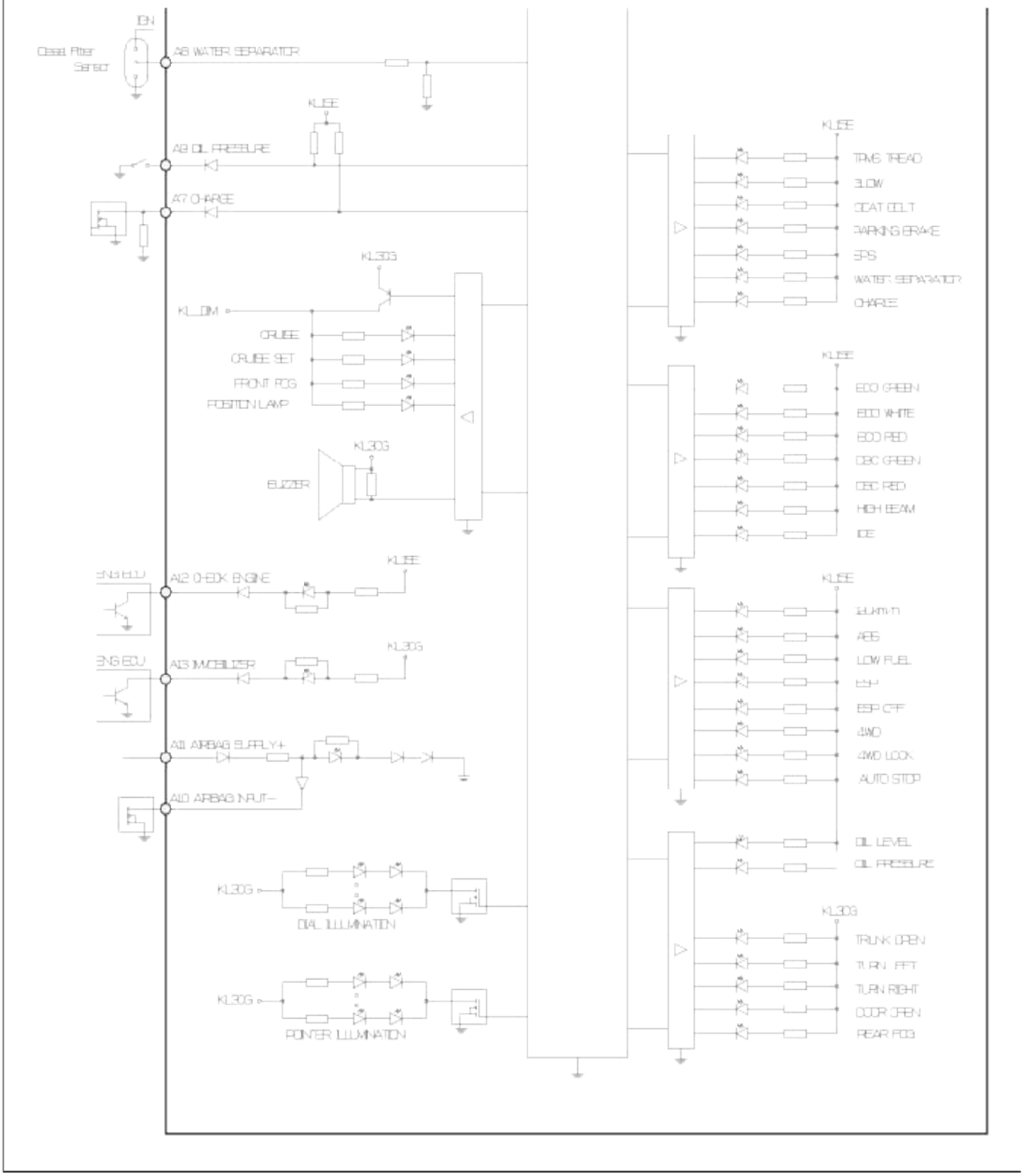

CLU1 message signal flow (B → C CAN gateway)

cardiagn.com

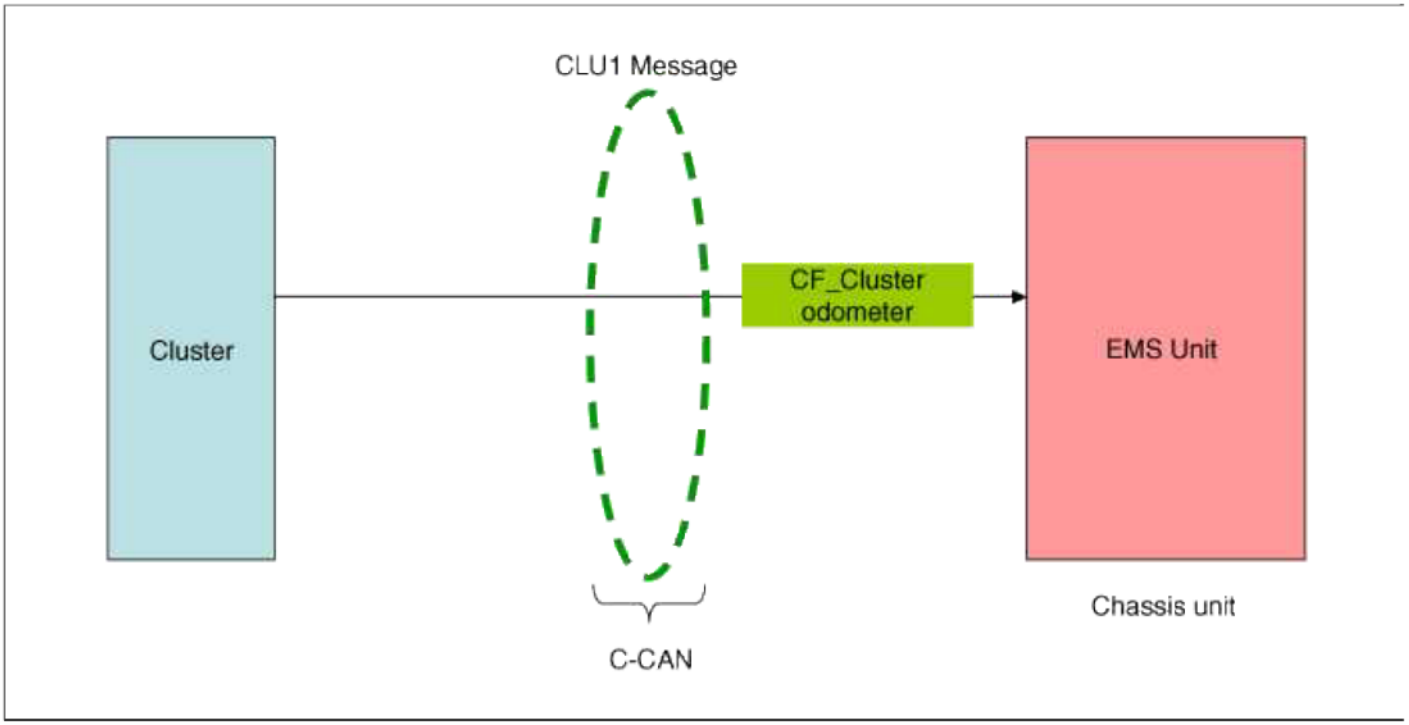

CLU2 message signal flow (B → C CAN gateway)

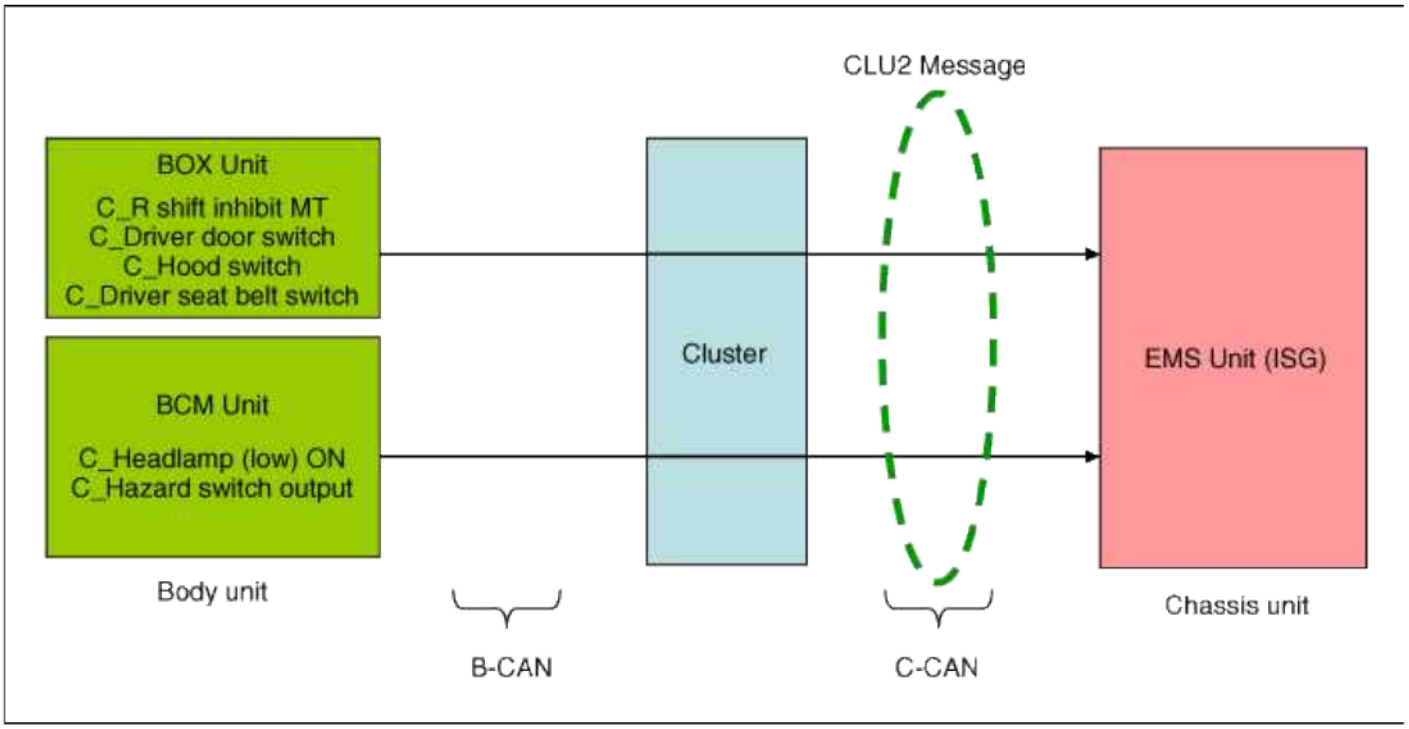

CLU message 1 signal flow (C → B CAN gateway)

cardiagn.com

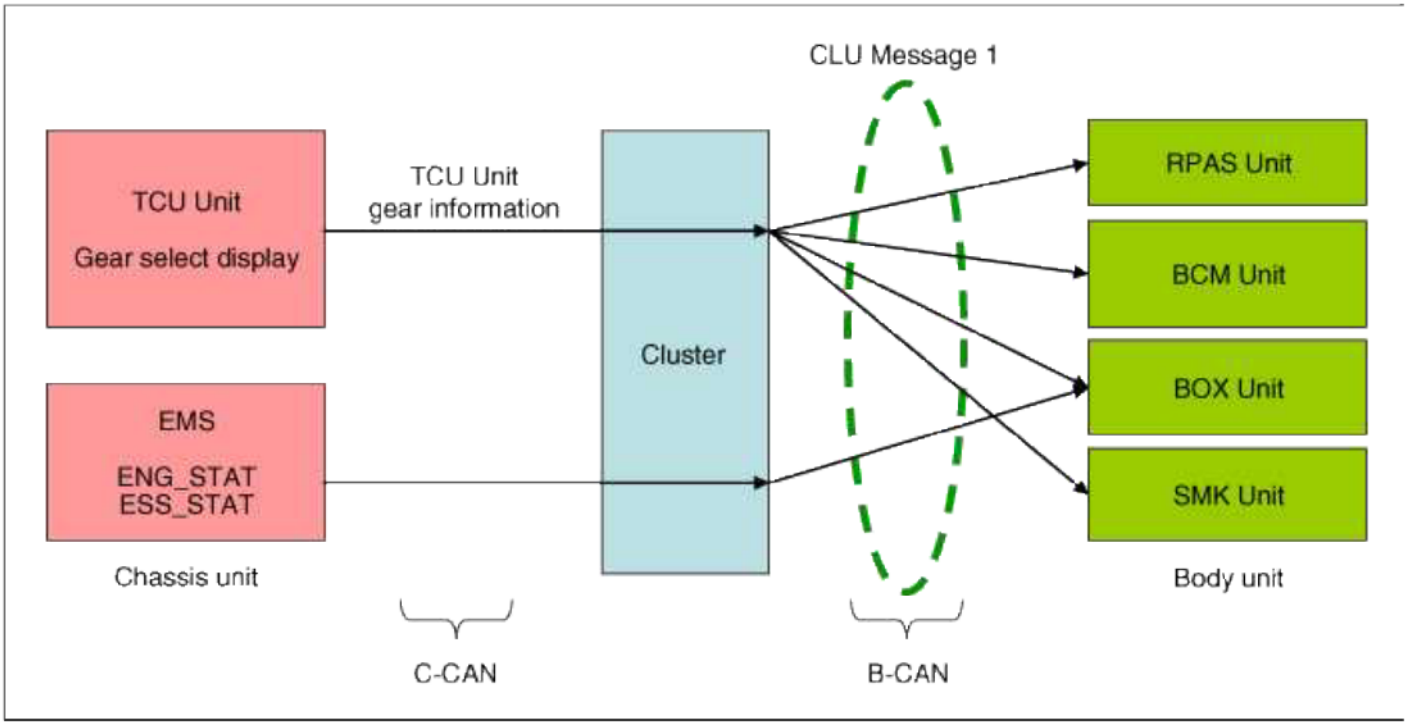

CLU message 3 signal flow (C → B CAN gateway)

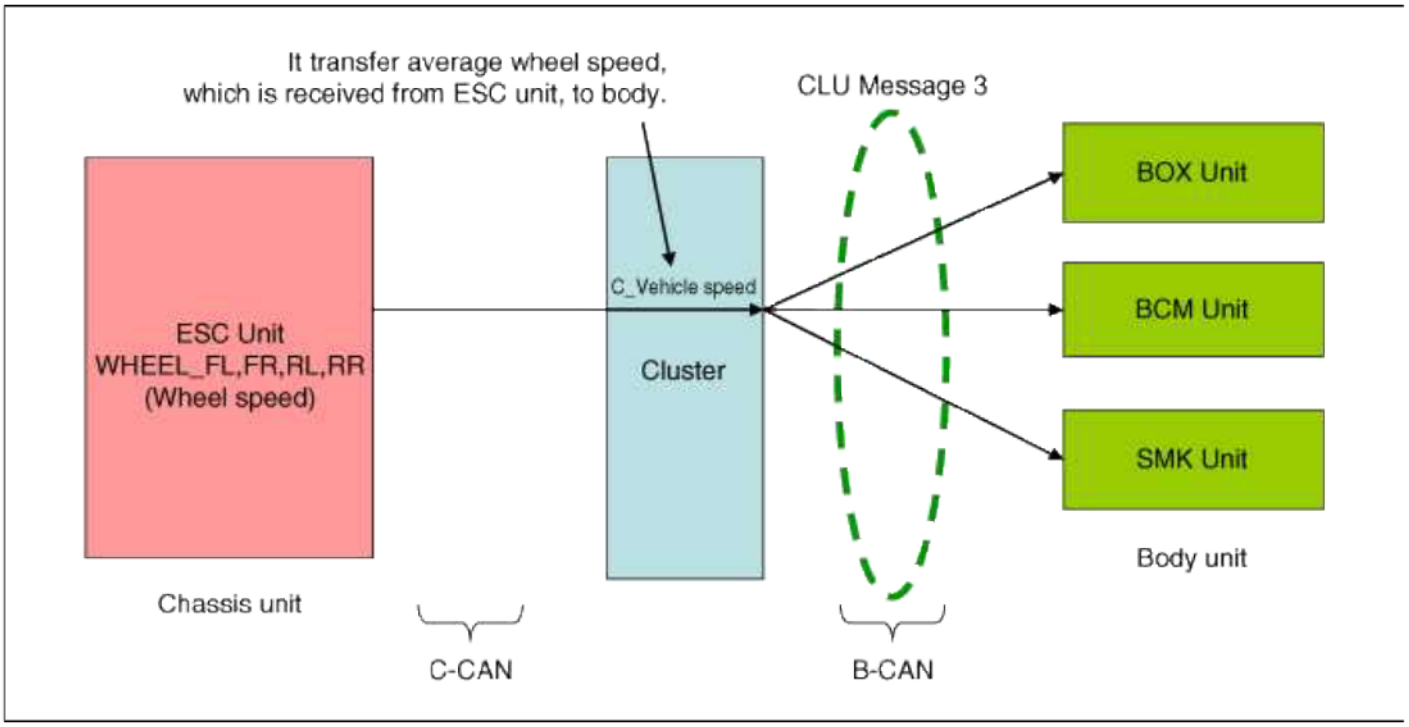

Body Electrical System > Indicators And Gauges > Instrument Cluster > Description and Operation

Description

ECO driving system

This system is designed to encourage eco-driving by providing real-time feedback to the driver.

The ECO indicator light assists you to drive in the most economical way.

The green indicator comes on when you drive with high fuel efficiency.

The fuel efficiency depends on driver's driving habit and road condition.

The system stops operation when the transaxle is in the P,R,N position or sports mode, or instantaneous fuel consumption mode is selected.

ECO indicator ON/OFF

cardiagn.com

1. ECO indicator system stops operation when instantaneous fuel consumption mode is selected.
2. ECO indicator light is always OFF when driver select the "ECO OFF" mode pushing the "Trip" button.
   A. Set the main LCD display to "ECO ON" pushing "Trip" button as below picture.



   B. And then set the "ECO OFF" pushing "Reset" button more than 1 second as below picture.
   In this option, ECO indicator light does not operate any trip mode.



Body Electrical System > Indicators And Gauges > Instrument Cluster > Repair procedures

Removal

1. Disconnect the negative (-) battery terminal.
2. Remove the cluster fascia panel (A).

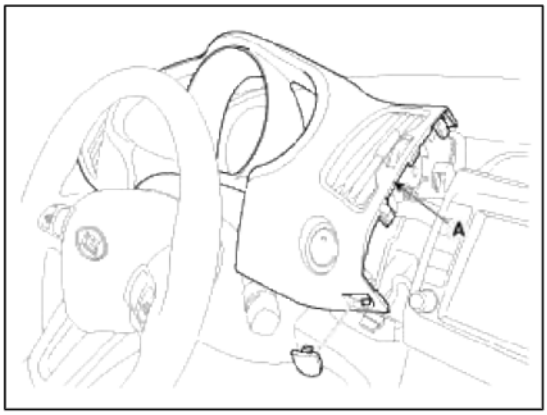

3. Remove the cluster assembly (A) after loosening 4 screws.

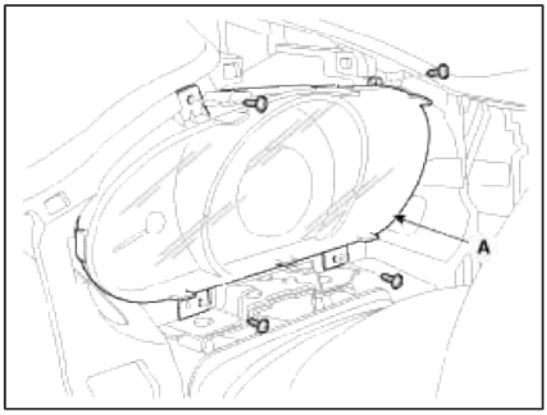

cardiagn.com

4. Disconnect the cluster fascia connector (A) and then remove the cluster.

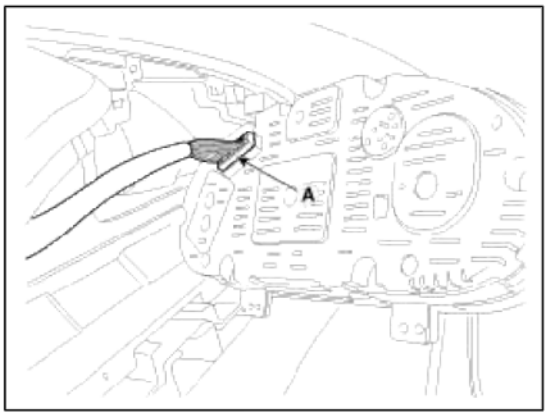

Installation

1. Connect the cluster connector.
2. Install the cluster assembly.
3. Install the cluster fascia panel.

Inspection

Speedometer

1. Adjust the pressure of the tires to the specified level.
2. Drive the vehicle onto a speedometer tester. Use wheel chocks (A) as appropriate.

[2WD]

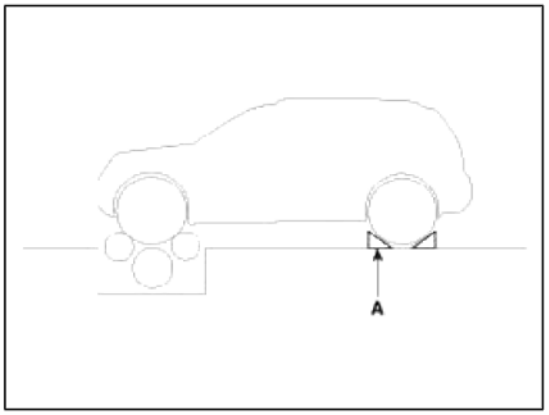

[4WD]

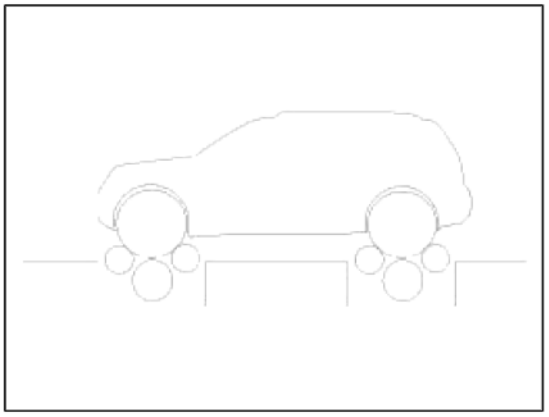

cardiagn.com

3. Check if the speedometer indicator range is within the standard values.

> CAUTION
>
> Do not operate the clutch suddenly or increase/ decrease speed rapidly while testing.

> NOTE
>
> Tire wear and tire over or under inflation will increase the indication error.

[Km/h]

Velocity (km/h)	20	40	60	80	100	120
Tolerance (km/h)	+2.0 0	+3.3 0	+3.4 0	+3.8 0	+4.1 0	+4.9 0
Velocity (km/h)	140	160	180	200	220	240
Tolerance (km/h)	+5.2 0	+5.7 0	+6.2 0	+6.5 0	+6.7 0	+7.0 0

[MPH]

Velocity (MPH)	10	20	40	60	80
Tolerance (MPH)	+2.3 0	+2.0 0	+2.5 0	+2.6 0	+2.7 0
Velocity (MPH)	100	120	140	160	
Tolerance (MPH)	+2.8 0	+2.9 0	+3.0 0	+3.2 0	

Tachometer

1. Connect the scan tool to the diagnostic link connector or install a tachometer.

cardiagn.com

2. With the engine started, compare the readings of the tester with that of the tachometer. Replace the tachometer if the tolerance is exceeded.

> CAUTION
>
> 1) Reversing the connections of the tachometer will damage the transistor and diodes inside.
> 2) When removing or installing the tachometer, be careful not to drop it or subject it to severe shock.

Revolution (rpm)	Tolerance (rpm)	
	Gasoline Max 8,000rpm Diesel Max 6,000rpm	
	Gasoline	Diesel
1,000	±100	±100
2,000	±100	±100
3,000	±100	±100
4,000	±100	±100
5,000	±100	±100
6,000	±100	±100
7,000	±100	-
8,000	±100	-

Fuel Gauge

1. Disconnect the fuel sender connector from the fuel sender.
2. Connect a 3.4 wattages, 12V test bulb to terminals 1 and 3 on the wire harness side connector.
3. Turn the ignition switch to the ON, and then check that the bulb lights up and the fuel gauge needle moves to full.

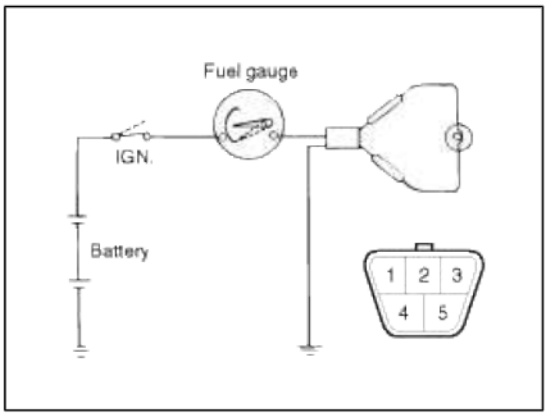

Fuel Gauge Sender

cardiagn.com

1. Using an ohmmeter, measure the resistance between terminals 1 and 3 of sender connector (A) at each float level.

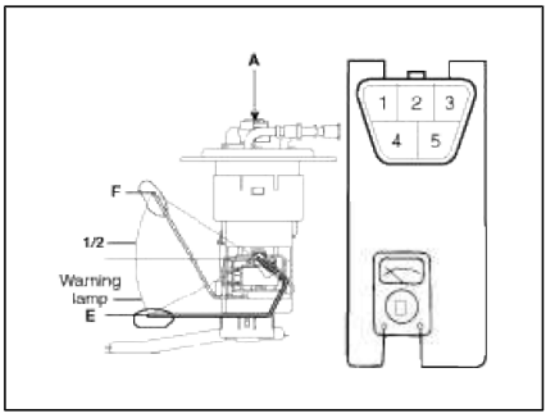

2. Also check that the resistance changes smoothly when the float is moved from "E" to "F".

Position	Resistance (Ω)
E	184 ± 2.5Ω
Warning lamp ON	170 ± 2.5Ω
1/2	66 ± 2.5Ω
F	15 ± 2.5Ω

3. If the height resistance is unsatisfied, replace the fuel sender as an assembly.

> CAUTION
>
> After completing this test, wipe the sender dry and reinstall it in the fuel tank.

Engine Coolant Temperature Sender

1. Using an ohmmeter, measure the resistance between the terminal 2 and ground.
2. If the resistance value is not as shown in the table, replace the temperature sender.

Temperature [°F(°C)]	Standard angle	Tolerance
<122(50)	-45°	±3°
122(50)	0°	±3°
159.8(71)	35°	±3°
230(110)	35°	±3°
266(130)	75°	±5°
>266(130)	80°	±5°

Brake Fluid Level Warning Switch

1. Remove the connector (A) from the switch located at the brake fluid reservoir.

cardiagn.com

2. Verify that continuity exists between switch terminals 1 and 2 while pressing the switch (float) down with a rod.

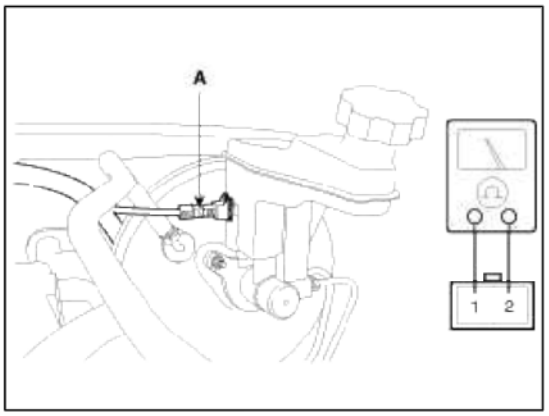

Brake Fluid Level Warning Lamp

1. Ignition "ON".
2. Release the parking brake.
3. Remove the connector from the brake fluid level warning switch.
4. Ground the connector at the harness side.
5. Verify that the warning lamp lights.

Parking Brake Switch

The parking brake switch is a pull type. It is located at the side of the parking brake lever.

1. Check that there is continuity between the terminal and switch body with the switch (A) ON.
2. Check that there is no continuity between the terminal and switch body with the switch OFF.
   If continuity is not as specified, replace the switch or inspect its ground connection.

[Pedal Type]

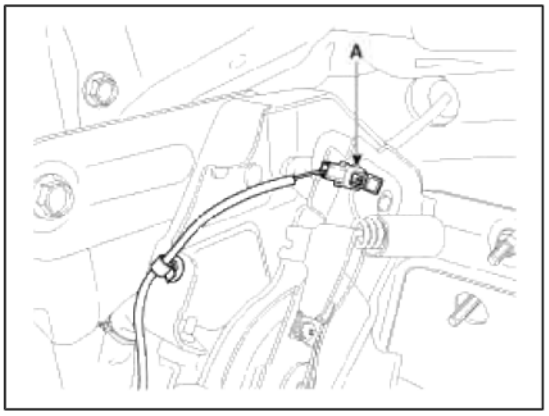

[Lever Type]

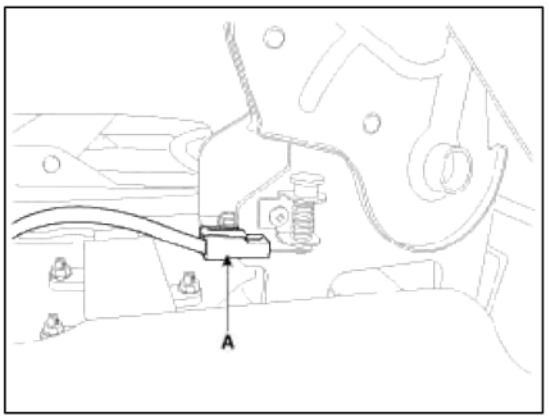

Door Switch

Remove the door switch and check for continuity between the terminals.

cardiagn.com

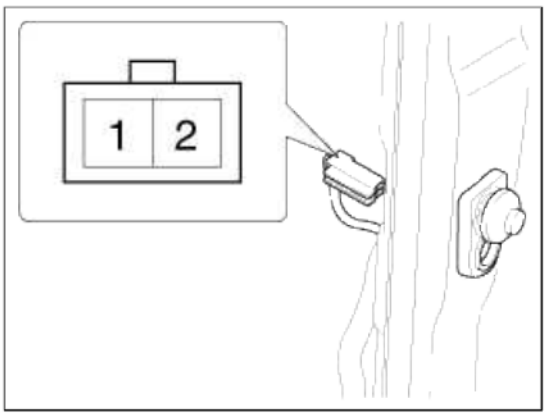

Terminal / Position	1	2	GND
Free(Door open)	○	○	○
Push(Door close)			

Seat Belt Switch

1. Remove the connector from the switch.
2. Check for continuity between terminals.

Seat belt condition	Continuity
Fastened	Non-conductive (∞Ω)
Not fastened	Conductive (0Ω)

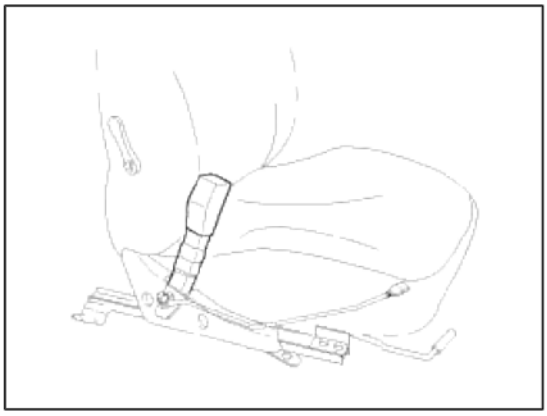

Seat Belt Warning Lamp

With the ignition switch turned ON, verify that the lamp glows.

Seat belt condition	Warning lamp
Fastened	OFF
Not fastened	ON

Body Electrical System > Indicators And Gauges > Troubleshooting

Troubleshooting

Symptom	Possible cause	Remedy
Speedometer does not operate	Cluster fuse (10A) blown	Check for short and replace fuse

cardiagn.com

	Speedometer faulty	Check speedometer
	CAN line faulty	Check the EMS
	Wiring or ground faulty	Repair if necessary
Tachometer does not operate	Cluster fuse (10A) blown	Check for short and replace fuse
	Tachometer faulty	Check tachometer
	CAN line faulty	Check the EMS
	Wiring or ground faulty	Repair if necessary
Fuel gauge does not operate	Cluster fuse (10A) blown	Check for short and replace fuse
	Fuel gauge faulty	Check gauge
	Fuel sender faulty	Check fuel sender
	Wiring or ground faulty	Repair if necessary
Low fuel warning lamp does not light up	Cluster fuse (10A) blown	Check for short and replace fuse
	Bulb burned out	Replace bulb
	Fuel sender faulty	Check fuel sender
	Wiring or ground faulty	Repair if necessary
Water temperature gauge does not operate	Cluster fuse (10A) blown	Check for short and replace fuse
	Water temperature gauge faulty	Check gauge
	Water temperature sender faulty	Check sender
	CAN line faulty	Check the EMS
	Wiring or ground faulty	Repair if necessary
Oil pressure warning lamp does not light up	Cluster fuse (10A) blown	Check for short and replace fuse
	Bulb burned out	Replace bulb
	Oil pressure switch faulty	Check switch
	Wiring or ground faulty	Repair if necessary
Parking brake warning lamp does not light up	Cluster fuse (10A) blown	Check for short and replace fuse
	Bulb burned out	Replace bulb
	Brake fluid level warning switch faulty	Check switch
	Parking brake switch faulty	Check switch
	Wiring or ground faulty	Repair if necessary
Open door warning lamp and tailgate warning lamp do not light up	Memory fuse (15A) blown	Check for short and replace fuse
	Bulb burned out	Replace bulb
	Door switch faulty	Check switch
	Wiring or ground faulty	Repair if necessary
Seat belt warning lamp does not light up	Cluster fuse (10A) blown	Check for short and replace fuse
	Bulb burned out	Replace bulb
	Seat belt switch faulty	Check switch

cardiagn.com

	Wiring or ground faulty	Repair if necessary
Speedometer and odometer does not operate	CAN line faulty	Check the ABS ECU
	Wheel speed sensor faulty	Check the wheel speed sensor

Body Electrical System > Power Door Locks > Components and Components Location

Component Location

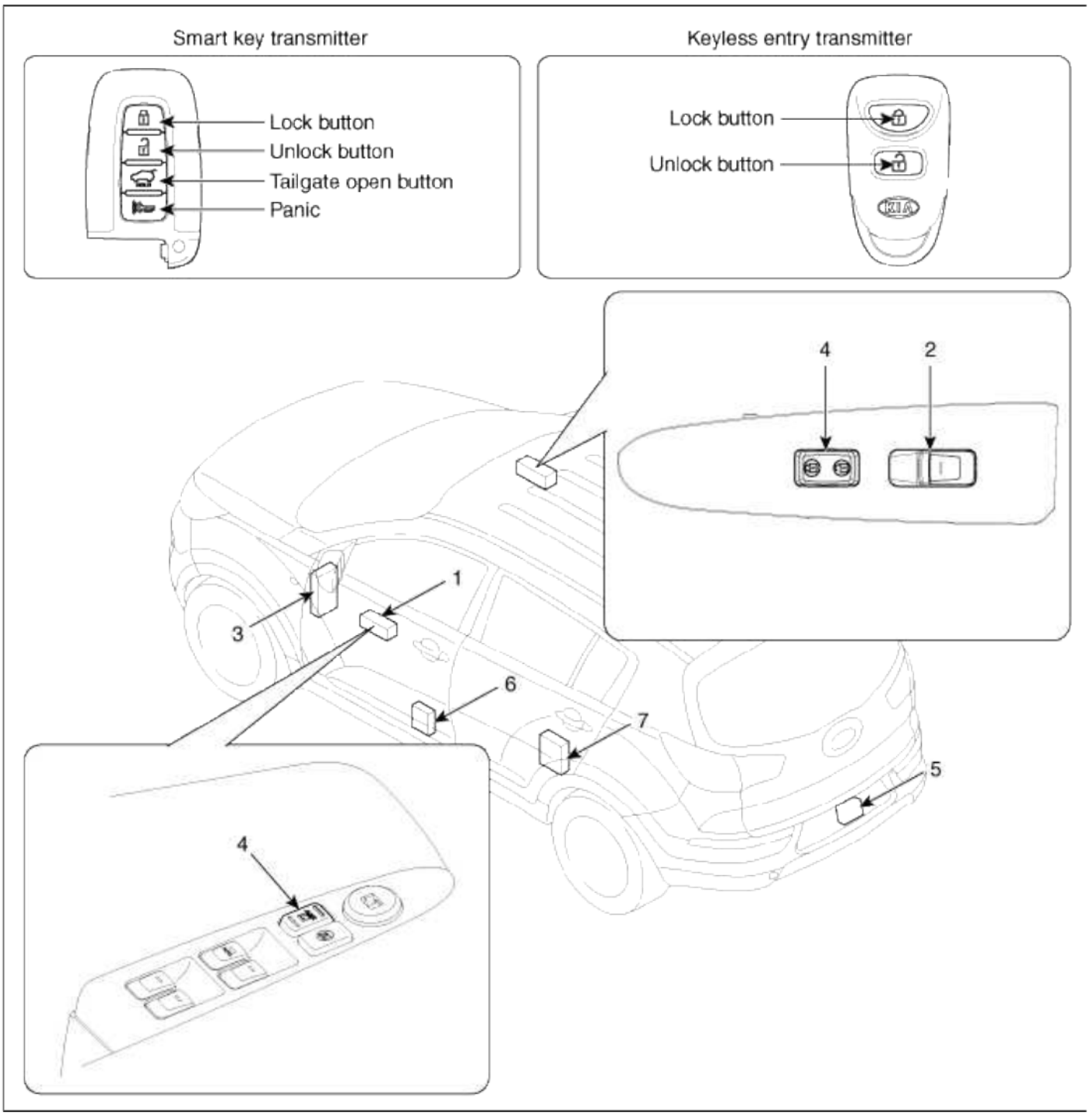

cardiagn.com

1. Driver power window switch 2. Assist power window switch 3. SJB (Smart Junction Box) 4. Door lock switch	5. Tailgate lock actuator & switch 6. Front door lock actuator & switch 7. Rear door lock actuator & switch

Body Electrical System > Power Door Locks > Power Door Lock Actuators > Repair procedures

Inspection

Front Door Lock Actuator

1. Remove the front door trim.
   (Refer to the BD group - "Front door")
2. Remove the front door module.
   (Refer to the BD group - "Front door")
3. Disconnect the connectors from the actuator.

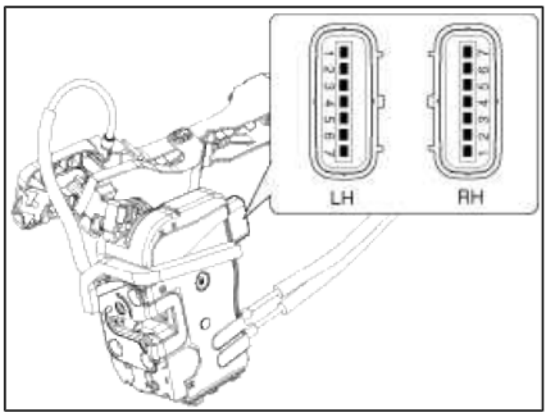

4. Check actuator operation by connecting power and ground according to the table. To prevent damage to the actuator, apply battery voltage only momentarily.

[Central Lock]

Position \ Terminal		2	1
Front left	Central Lock	⊕	⊖
	Central Unlock	⊖	⊕
Position \ Terminal		**7**	**6**
Front right	Central Lock	⊖	⊕
	Central Unlock	⊕	⊖

[Double Lock]

Position \ Terminal		2	1	7
Front Left	C/Lock	⊕	⊖	⊖
	C/Unlock	⊖	⊕	⊕
	D/Lock	⊖	⊖	⊕
	D/Unlock	⊕	⊕	⊖
Position \ Terminal		**6**	**7**	**1**
Front Right	C/Lock	⊕	⊖	⊖
	C/Unlock	⊖	⊕	⊕
	D/Lock	⊖	⊖	⊕
	D/Unlock	⊕	⊕	⊖

Rear Door Lock Actuator

cardiagn.com

1. Remove the rear door trim.
   (Refer to the BD group - "Rear door")
2. Remove the rear door module.
   (Refer to the BD group - "Rear door")
3. Disconnect the connectors from the actuator.

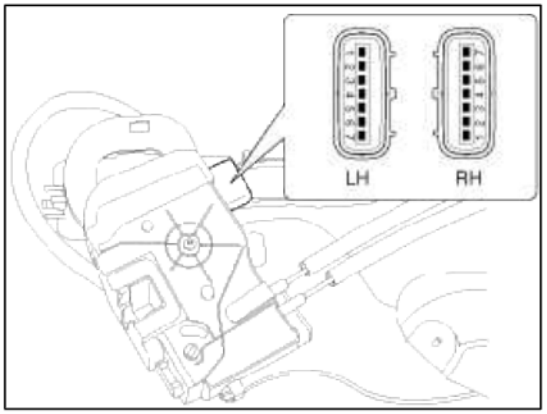

4. Check actuator operation by connecting power and ground according to the table. To prevent damage to the actuator, apply battery voltage only momentarily.

[Central Lock]

Position \ Terminal		2	1
Rear left	Central Lock	⊕	⊖
	Central Unlock	⊖	⊕
Position \ Terminal		7	6
Rear right	Central Lock	⊖	⊕
	Central Unlock	⊕	⊖

[Double Lock]

Position \ Terminal		2	1	7
Rear Left	C/Lock	⊕	⊖	⊖
	C/Unlock	⊖	⊕	⊕
	D/Lock	⊖	⊖	⊕
	D/Unlock	⊕	⊕	⊖
Position \ Terminal		6	7	1
Rear Right	C/Lock	⊕	⊖	⊖
	C/Unlock	⊖	⊕	⊕
	D/Lock	⊖	⊖	⊕
	D/Unlock	⊕	⊕	⊖

Tailgate Lock Actuator Inspection

1. Remove the tailgate trim.
   (Refer to the BD group - "Tailgate")

cardiagn.com

2. Disconnect the 4P connector from the actuator.

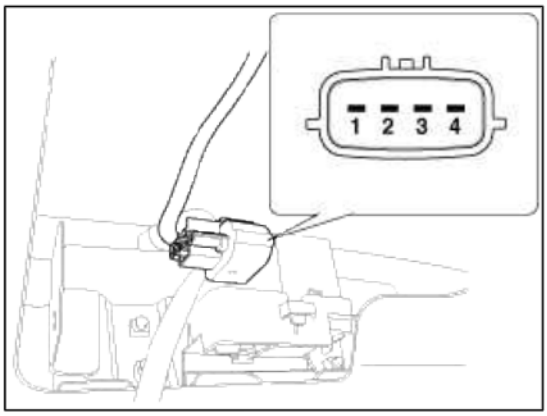

3. Check actuator operation by connecting power and ground according to the table. To prevent damage to the actuator, apply battery voltage only momentarily.

Position \ Terminal	3	4
Unlock	⊕	⊖

Front Door Lock Switch

1. Remove the front door trim.
   (Refer to the BD group - "Front door")
2. Remove the front door module.
   (Refer to the BD group - "Front door")
3. Disconnect the connectors from the actuator.

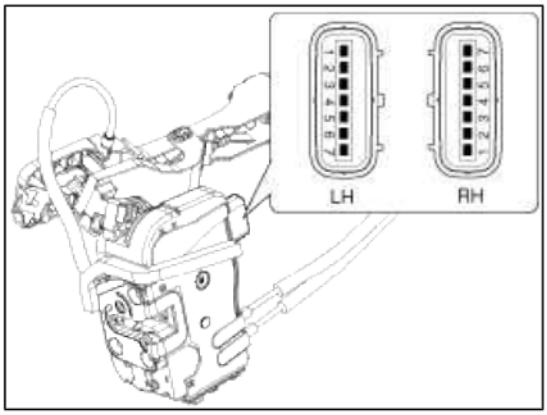

4. Check for continuity between the terminals in each switch position when inserting the key into the door according to the table.

[Central Lock]

Position \ Terminal		5	6	3	4
Front left	C/Unlock	○—○			
	Counter-clock wise	○—	—○		
	Clock wise	○—	—	—	—○
Position \ Terminal		3	2	5	4
Front right	C/Unlock	○—○			
	Clock wise	○—	—	—○	
	Counter-clock wise	○—	—	—	—○

[Double Lock]

cardiagn.com

Position \ Terminal		5	6	3	4
Front left	Counter-clock wise	○		○	
	Clock wise	○			○
Position \ Terminal		3	2	5	4
Front right	Clock wise	○		○	
	Counter-clock wise	○			○

Rear Door Lock Switch

1. Remove the rear door trim.
   (Refer to the BD group - "Rear door")
2. Remove the rear door module.
   (Refer to the BD group - "Rear door")
3. Disconnect the connectors from the actuator.

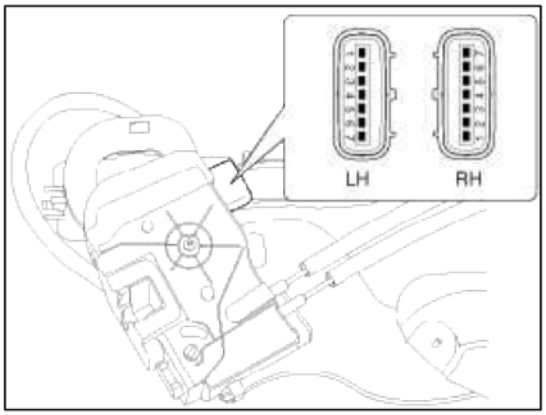

4. Check for continuity between the terminals in each switch position according to the table.

[Central Lock]

Position \ Terminal		5	6
Rear Left	C/Lock		
	C/Unlock	○	○
Position \ Terminal		2	3
Rear Right	C/Lock		
	C/Unlock	○	○

Tailgate Switch

1. Remove the tailgate trim.
   (Refer to the BD group - "Tailgate")
2. Disconnect the 4P connector from the actuator.

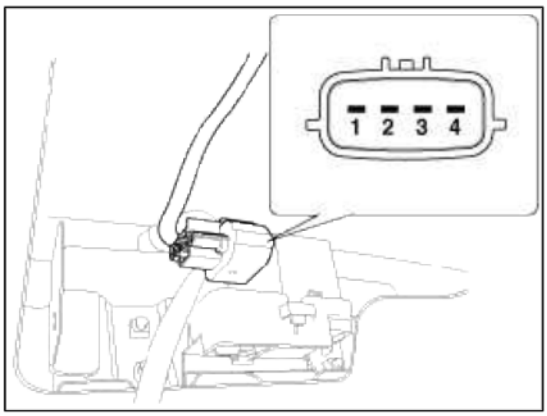

cardiagn.com

3. Check for continuity between the terminals in each switch position according to the table.

Position \ Terminal	1	2
Lock		
Unlock	○	○

Body Electrical System > Power Door Locks > Power Door Lock Switch > Repair procedures

Inspection

Driver Power Door Lock Switch

1. Disconnect the negative battery terminal.
2. Remove the front door trim.
   (Refer to the BD group - "Front door")
3. Disconnect the switch connector (16 pins) from wiring harness.

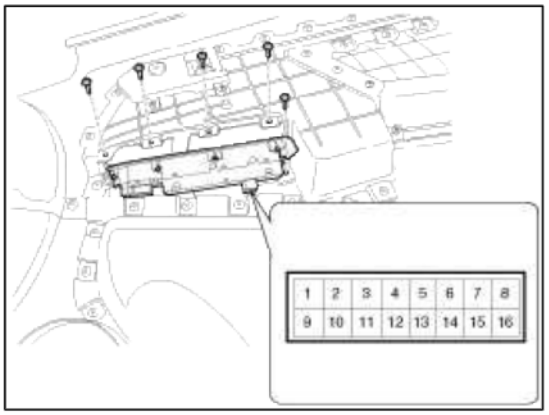

4. Check for continuity between the terminals. If needed, replace the switch.

Position \ Terminal	5	12	13
Lock		○	○
Unlock	○	○	

Removal

Driver Power Door Lock Switch

1. Disconnect the negative battery terminal.
2. Remove the front door trim.
   (Refer to the BD group - "Front door")
3. Remove the screws from power window switch (A) and connectors (B).

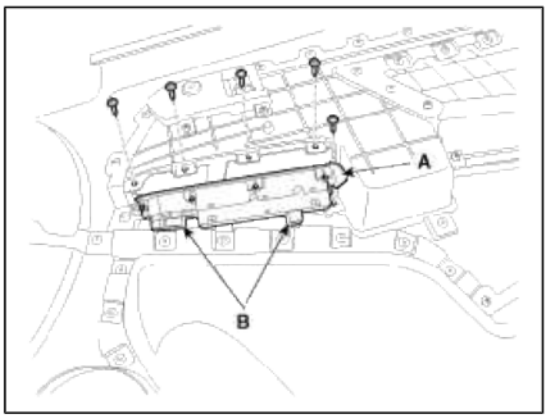

cardiagn.com

4. Remove the driver power window switch (A) from front door trim.

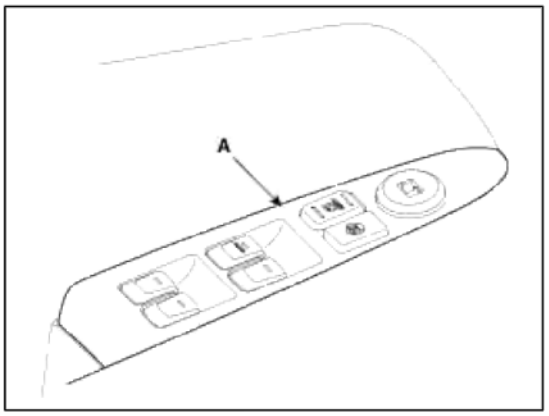

NOTE

Be careful not to damage the hook when removing the switch module.

Installation

Driver Power Door Lock Switch

1. Install the power window switch and connectors.
2. Install the front door trim.

Body Electrical System > Power Door Mirrors > Components and Components Location

Component Location

cardiagn.com

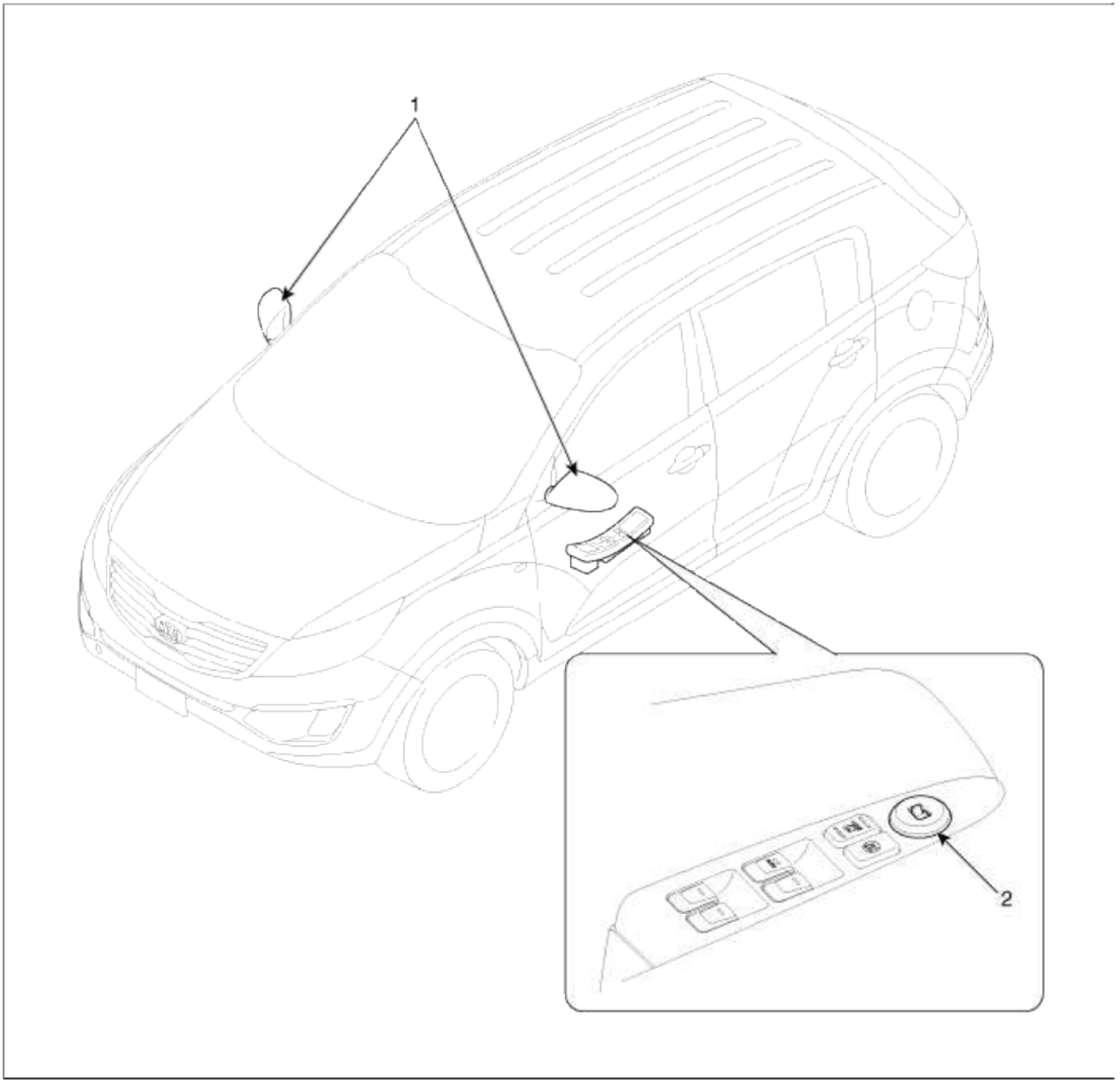

1. Power door mirror	2. Power door mirror switch

Body Electrical System > Power Door Mirrors > Power Door Mirror Switch > Schematic Diagrams

Circuit Diagram

cardiagn.com

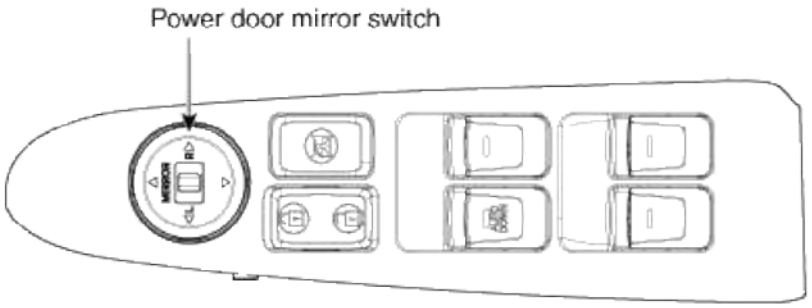

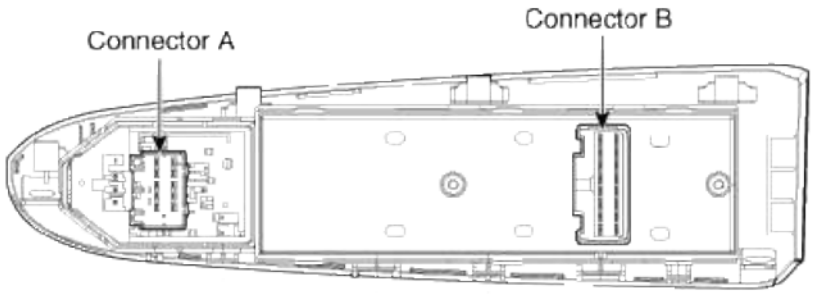

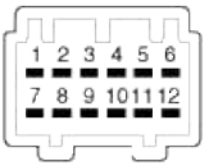

Pin	Connector A
1	-
2	-
3	-
4	Battery
5	GND
6	ACC
7	-
8	Driver door mirror motor (vertical)
9	Driver door mirror motor (horizontal)
10	Common
11	Assist door mirror motor (horizontal)
12	Assist door mirror motor (vertical)

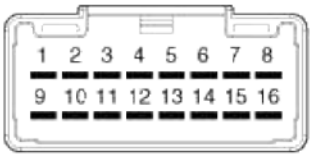

Pin	Connector B
1	Assist window switch up
2	Assist window switch down
3	Illumination
4	-
5	Door unlock
6	Driver switch Auto
7	Driver window switch up
8	Driver window switch down
9	Battery (+) R
10	Rear right window switch up
11	Rear right window switch down
12	GND
13	Door lock
14	Rear left window switch up
15	Rear left window switch down
16	Battery (+) L

cardiagn.com

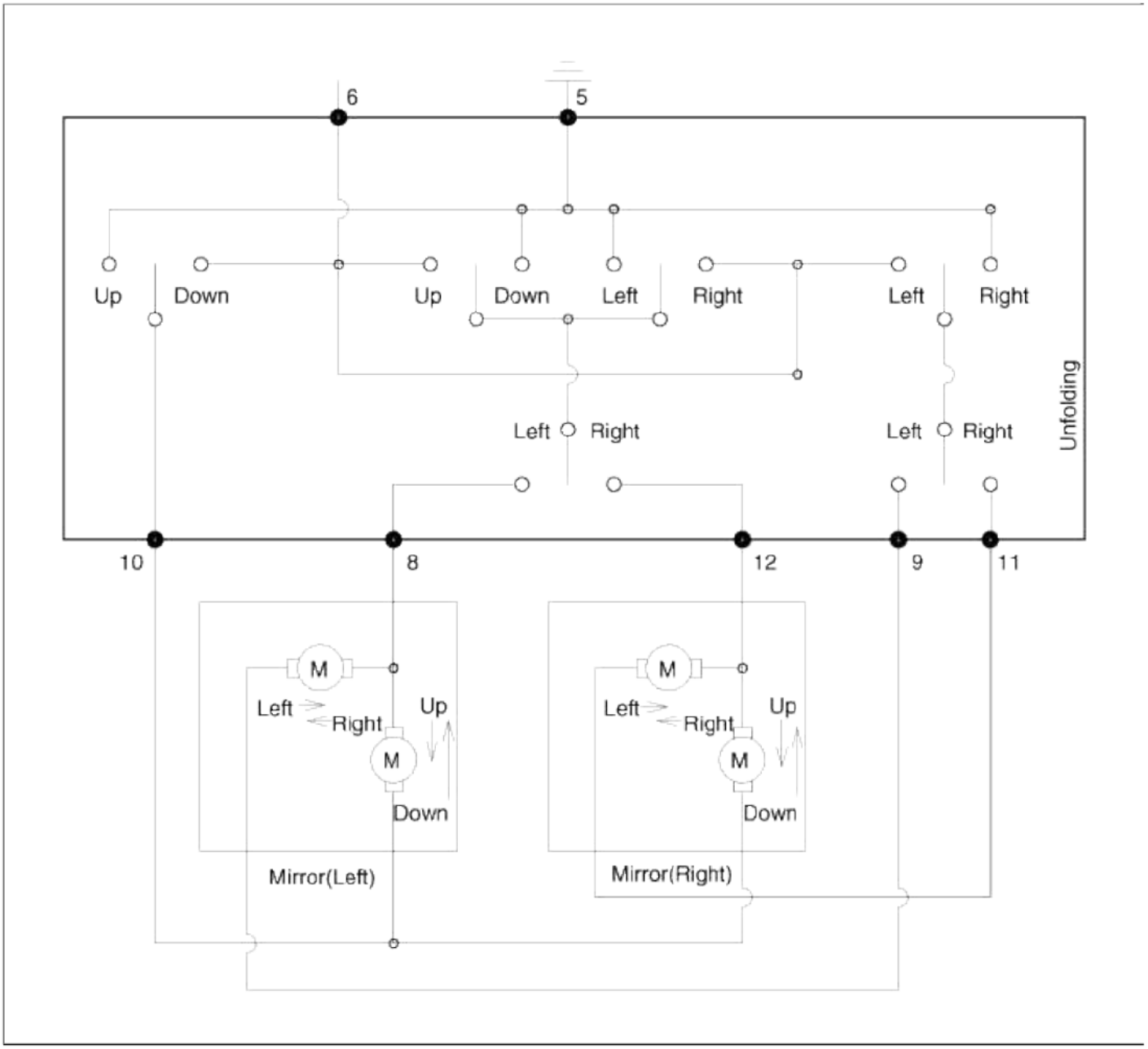

Body Electrical System > Power Door Mirrors > Power Door Mirror Switch > Repair procedures

Removal

Driver Door Mirror Switch

1. Disconnect the negative battery terminal.
2. Remove the front door trim.
   (Refer to the BD group - "Front door")

cardiagn.com

3. Remove the screws from power window switch (A) and connectors (B).

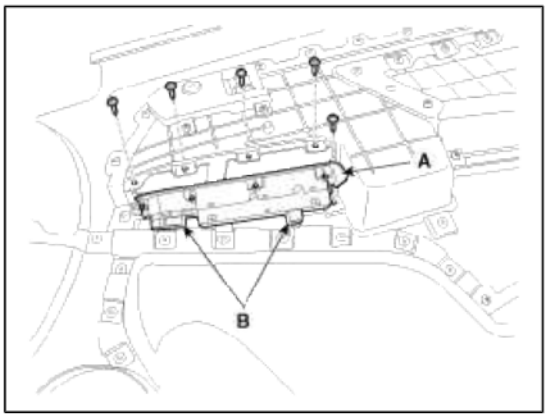

4. Remove the driver power window switch (A) from front door trim.

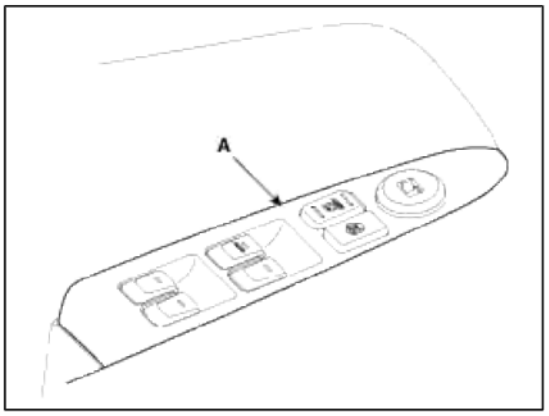

NOTE

Be careful not to damage the hook when removing the switch module.

Installation

Driver Door Mirror Switch

1. Install the driver power window switch and connectors.
2. Install the front door trim.

Inspection

1. Remove the front door trim and power door mirror switch module (A).

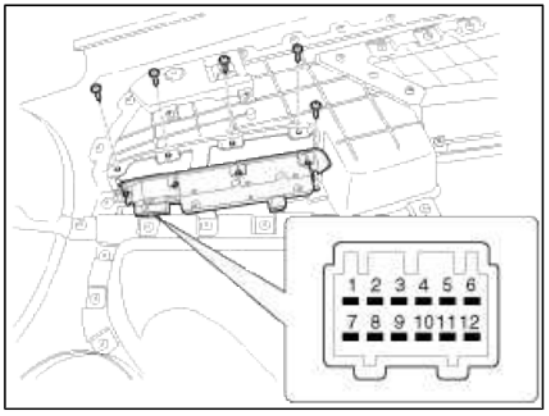

cardiagn.com

2. Check for the continuity between terminals of power door mirror switch according to the table.

Item	Terminal / Direction	6	5	8	9	10	11	12
Left	Up	○	○		○	○		
	Down	○	○		○			
	Off		○		○	○		
	Right	○	○		○	○		
	Left	○	○		○			
Right	Up	○	○			○	○	○
	Down	○	○			○	○	○
	Off		○			○	○	○
	Right	○	○			○	○	○
	Left	○	○			○		○

Body Electrical System > Power Door Mirrors > Power Door Mirror Actuator > Repair procedures

Inspection

1. Disconnect the negative (-) battery terminal.
2. Remove the front door delta cover.
   (Refer to the BD group - "Front door")
3. Disconnect the connector from the door mirror.
4. Verify that the mirror operates properly as shown in the table.

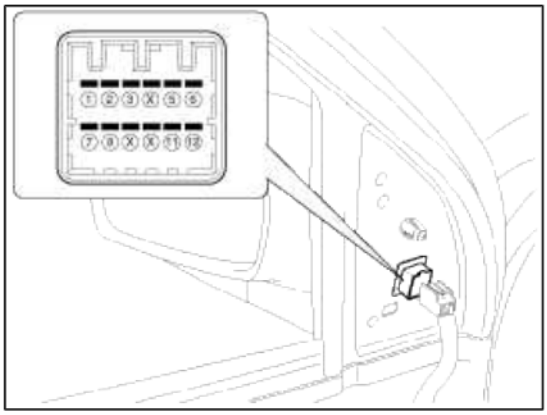

Position \ Terminal		3 (L)	1 (L)	3 (R)	1 (R)	2	B+	GND
LH	Up	○	○			○	○	○
	Down	○	○			○	○	○
	OFF	○	○				○	
	Right	○	○			○	○	○
	Left	○	○			○	○	○
RH	Up			○	○	○	○	○
	Down			○	○	○	○	○
	OFF			○	○		○	
	Right			○	○	○	○	○
	Left			○	○	○	○	○

Mirror Heater

Position \ Terminal	7	8
Heater	⊕	⊖

cardiagn.com

Turn Signal Lamp

Terminal / Position	11	12
Side repeater	⊕	⊖

Body Electrical System > Power Windows > Components and Components Location

Component Location

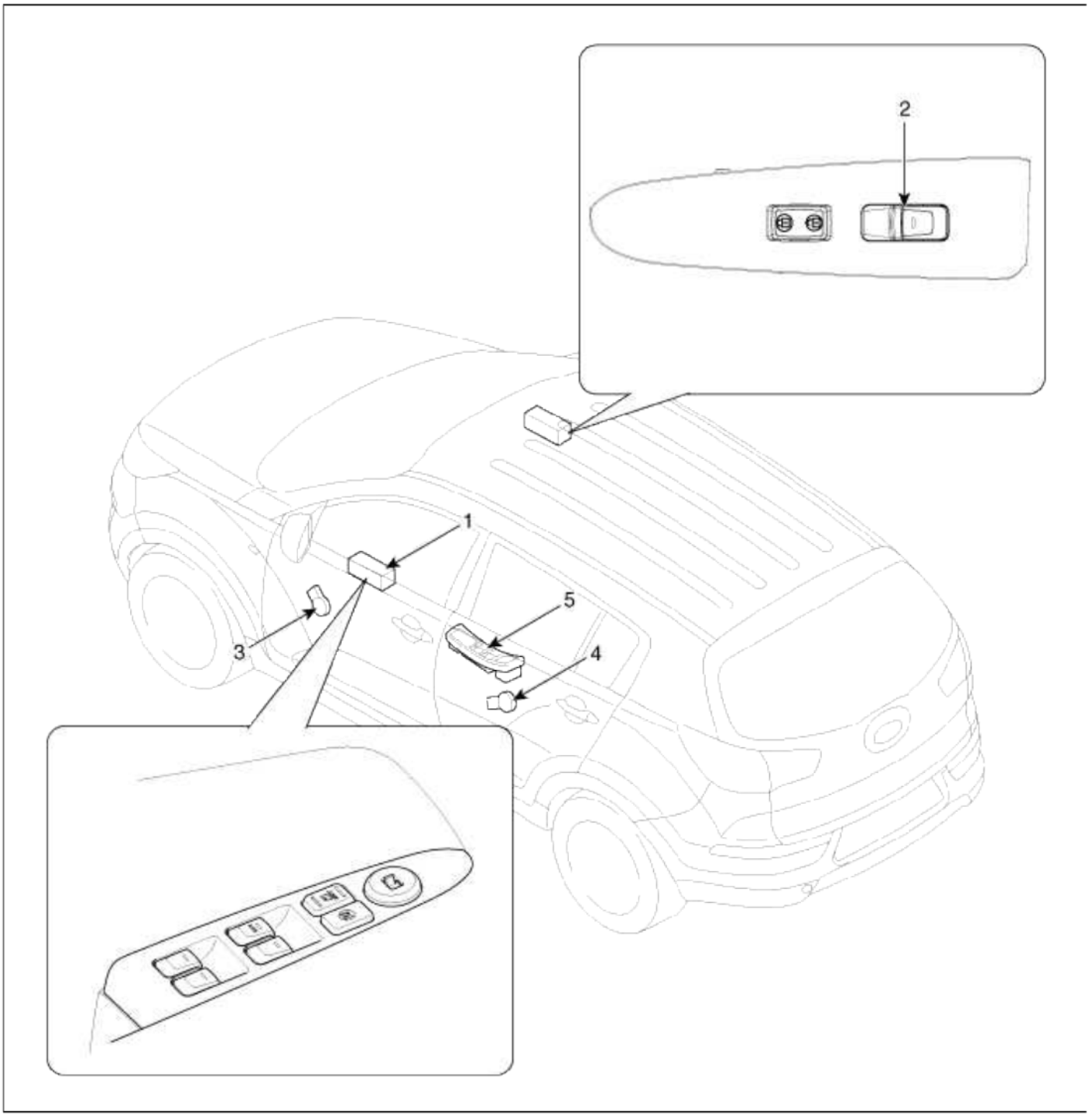

1. Driver power window main switch 2. Passenger window switch 3. Front window motor	4. Rear window motor 5. Rear window switch

cardiagn.com

Body Electrical System > Power Windows > Description and Operation

Operation

Function Of Safety Power Window

When all door (Front, Rear) power window auto-up switch is operated, safety function is activated.

1. Safety function condition
   When detect the force of 100N during the window rising, window is reversed.
2. Length of window reversing (except holding the auto-up switch)
   A. When detect the jamming during the 4mm ~ 250mm from top of the door.
      → Window is reversed until 300mm from top of the door.

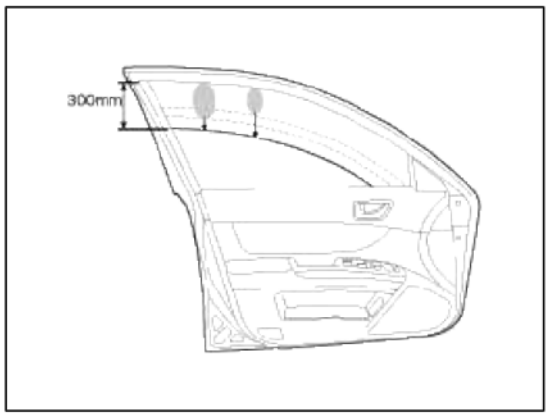

   B. When detect the jamming over the 250mm from top of the door.
      → Window is reversed until 50mm from jamming position.
      → Window is reversed 50mm or bottom position in case of 50mm reversing distance.

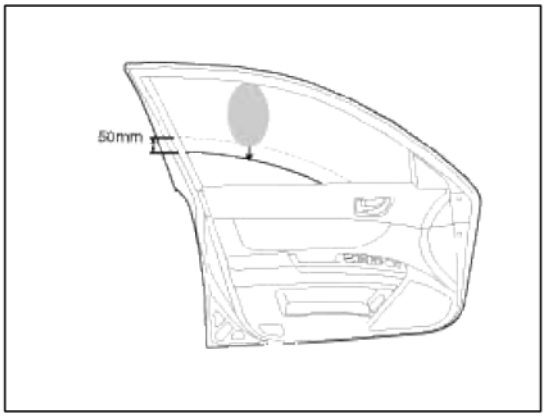

   C. When detect the jamming over 300mm from top of the door.
      → Window stops at reverse point.

cardiagn.com

3. Length of window reversing (holding the auto-up switch)
   A. When detect the jamming during holding the auto-up switch.
      → Window is reversed until 25mm from jamming position.
   B. Auto-up function is not available during the 5 seconds from above condition.
      → When holding the auto-up switch, window is operated as a manual-up function. (Safety function is not activated.)
   C. When detect the jamming during holding the auto-up switch again.
      → Window is reversed until 25mm from jamming position.
   D. When holding the auto-up switch after 5 seconds from above condition.
      → Window is reverse until 25mm from jamming position.

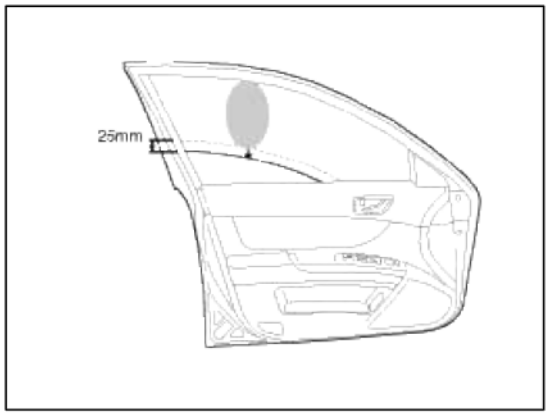

4. Safety function is not available area
   Safety function is not available during the 4mm from top of the door.

Initializing Method Of The Safety Power Window

1. Position counter and position initialization
   (1) Position counter
      Window position counting is implemented by use of one Hall Effect sensor (HEF) connected to timer capture unit of the Controller with a resolution of 180° electrical.
      Even the battery was separated from the car, it must keep the window position information.
   (2) Position initialization
      For position initialization, position counter detect the upper mechanical stop and lower mechanical Position.
      Motor control unit (MCU) allow only Manual mode activity (without ASD Anti-Squeeze Detection algorithm) feature) before to be initialized.
      Initialization means the condition to move the window system with full anti-pinch function and related functions by detecting the window travel distance (Upper/Lower mechanical limits).
      Conditions for initialization are
      A. de-initialized position counter
      B. Power window switch Up activated
      C. block condition detected
         (no motor movement of more than 1 count during 1sec/ SW dependent)
      Switch action with De-initialized condition :
      A. Up direction : Manual & Auto P/WDW sw input → manual mode;
      B. Down direction : Manual P/WDW sw input → manual mode, + Auto s/w input → auto mode

cardiagn.com

(3) Re-initialization

During re-initialization, position counter is set to "zero" at upper block position to compensate counting errors by software, mechanical tolerances or physics. Conditions for re-initialization are

A. initialized position counter.

B. window at upper block position (capture range EEPROM programmable)

C. block condition detected
(no motor movement of more than 1 count during 1 sec/ SW dependent)

(4) De-initialization

The system initialization/calibration will be lost in the following cases:

A. After parameter modification via diagnostic

B. Wrong EEPROM checksum at ECU wake-up or power-on

C. Movement outside predefined window stroke (above learned top position, below predefined bottom position)

D. De-initialization after a defined number (EEPROM) of reversals without re-initialization in the upper seal (activation /de-activation controlled by EEPROM value). A window down movement or switching off the window lifter permission resets the reversal counter value(activation by EEPROM bit).

E. De-initialization after a defined number of movements (EEPROM) without re-initialization in the upper seal (activation /de-activation controlled by EEPROM value)

F. Special de-initialization procedure :
The special window lifter de-initialization procedure works as follows:
- System is initialized
- Move window below soft-stop position (position EEPROM adjustable)
- Press MANU-down switch and keep it pressed
- Apply permission signal (serial-link = PIN 6) ON → OFF → ON within 2 seconds (time EEPROM adjustable)

(5) Soft stop function

In order to reduce noise and mechanical stress, the window movement is stopped under control of the ECU before the bottom position is reached.
The clearance is 0 / +10 mm (at 11.5 V to 14.5 V).
To activate the soft bottom stop function, the top reference position and bottom reference position have to be initialized. Therefore, the window is lifted into the top position until the block condition is detected. This position is taken as top reference position.
Afterwards, the window is moved to the bottom position until the block condition is detected (mechanical stop). This position is taken as bottom reference position.
The bottom reference position is re-initialized :

A. When window is operated down starting from soft stop position

B. Every "9" stops at soft stop position.

(6) Thermal protection

Thermal protection by software module is implemented to prevent from destruction of motor during overload condition. Motor temperature is estimated by integrating squared motor current as an estimate for heating power integral. When estimated motor temperature exceeds EEPROM programmable upper limit, motor is deactivated for fixed delay time (default value = 30 sec.)
Thermal shutdown during a window operation will not interrupt the operation due to safety reasons.

(7) Operation time limiter

Maximal operation time of power window motor is limited to 15 sec (EEPROM programmable).

cardiagn.com

(8) Continuous reverse

Current Number of Continuous reverse of window is 5. With the below condition, this counter Will be initialized.

A. IG OFF

B. DOWN signal ON

C. WINDOW CLOSE

Body Electrical System > Power Windows > Power Window Motor > Repair procedures

Inspection

Front Power Window Motor

1. Remove (-) negative battery terminal.
2. Remove the front door trim.
   (Refer to the BD group - "Front door")
3. Disconnect the connector from the motor.
   (A : Safety, B : Standard)

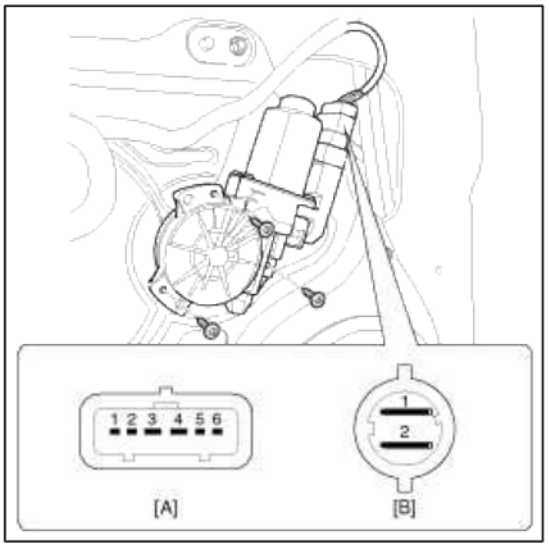

4. Connect the motor terminals directly to battery voltage (12V) and check that the motor operates smoothly. Next, reverse the polarity and check that the motor operates smoothly in the reverse direction. If the operation is abnormal, replace the motor.

   [Standard]

Position \ Terminal			1	2
Left	DOWN	Counter-clockwise	⊕	⊖
	UP	Clockwise	⊖	⊕
Right	DOWN	Clockwise	⊕	⊖
	UP	Counter-clockwise	⊖	⊕

5. Connect the terminal No. 2 and No. 3 to battery voltage (12V) and check that the motor operates smoothly when connecting the terminals below.

   [Safety]

Position \ Terminal		2	3	1
Left	UP	○	○	
	DOWN		○	○
Right	UP	○	○	
	DOWN		○	○

cardiagn.com

Rear Power Window Motor

1. Remove (-) negative battery terminal.
2. Remove the rear door trim.
   (Refer to the BD group - "Rear door")
3. Disconnect the connector from the motor.

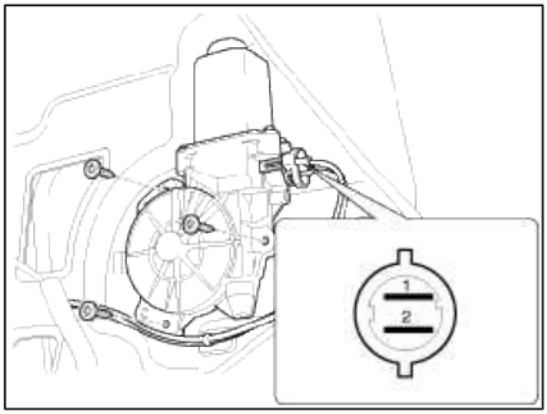

4. Connect the motor terminals directly to battery voltage (12V) and check that the motor operates smoothly. Next, reverse the polarity and check that the motor operates smoothly in the reverse direction. If the operation is abnormal, replace the motor.

Position		Terminal	1	2
Left	UP	Clockwise	⊖	⊕
	DOWN	Counter-clockwise	⊕	⊖
Right	UP	Clockwise	⊖	⊕
	DOWN	Counter-clockwise	⊕	⊖

Body Electrical System > Power Windows > Power Window Switch > Components and Components Location

Components

Power Window Main Switch

cardiagn.com

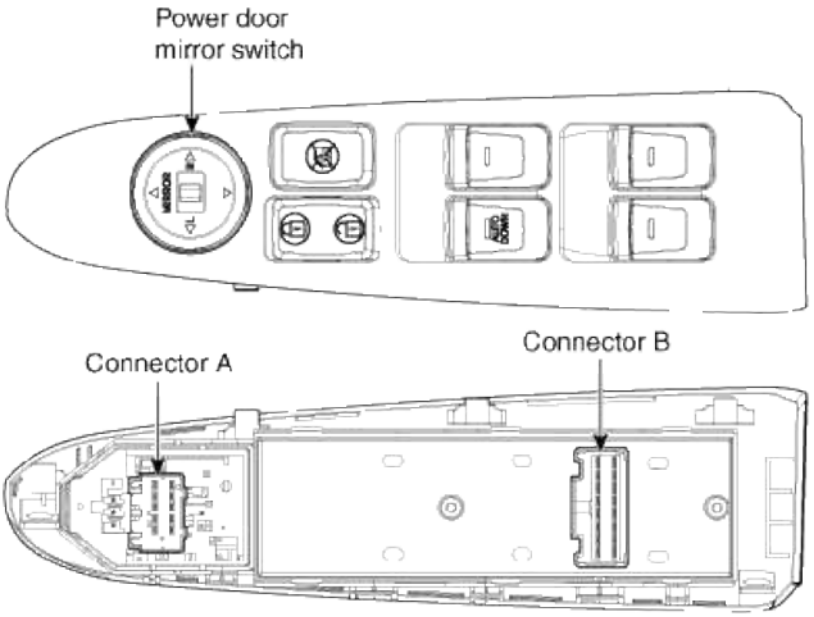

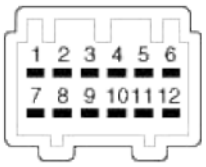

Pin	Connector A
1	-
2	-
3	-
4	Battery
5	GND
6	ACC
7	-
8	Driver door mirror motor (vertical)
9	Driver door mirror motor (horizontal)
10	Common
11	Assist door mirror motor (horizontal)
12	Assist door mirror motor (vertical)

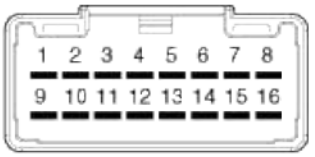

Pin	Connector B
1	Assist window switch up
2	Assist window switch down
3	Illumination
4	-
5	Door unlock
6	Driver switch Auto
7	Driver window switch up
8	Driver window switch down
9	Battery (+) R
10	Rear right window switch up
11	Rear right window switch down
12	GND
13	Door lock
14	Rear left window switch up
15	Rear left window switch down
16	Battery (+) L

cardiagn.com

[Auto Down]

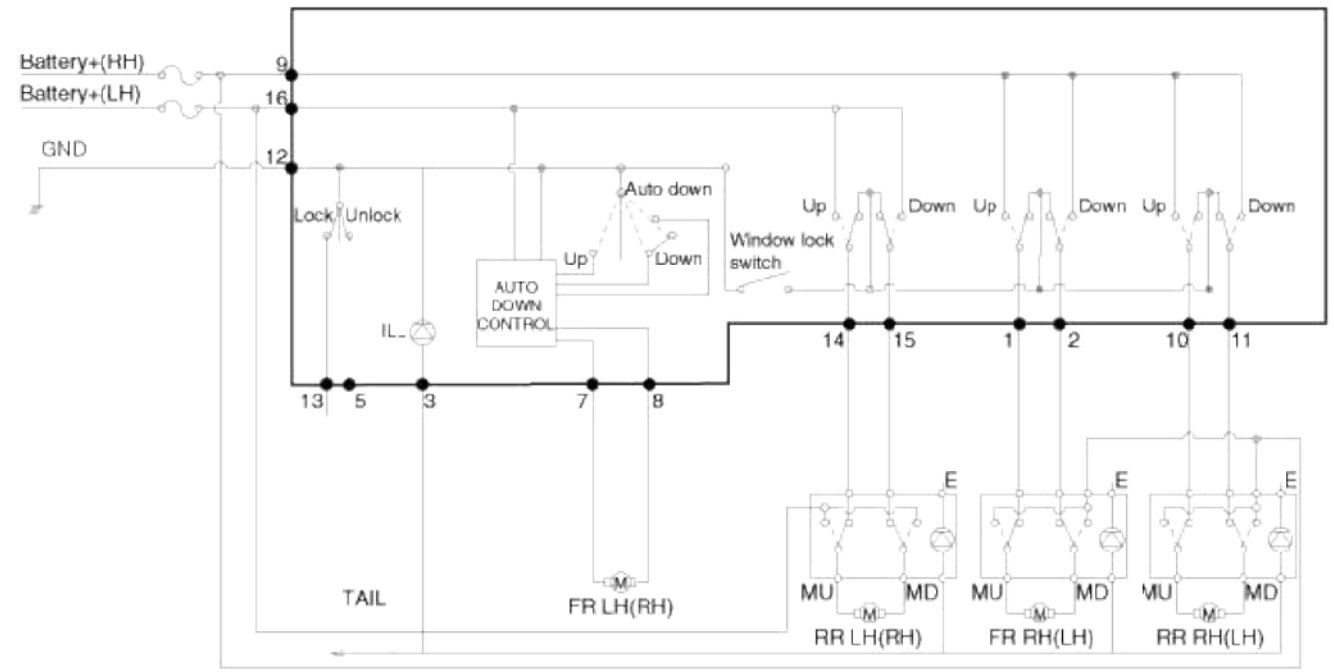

[Driver Safety]

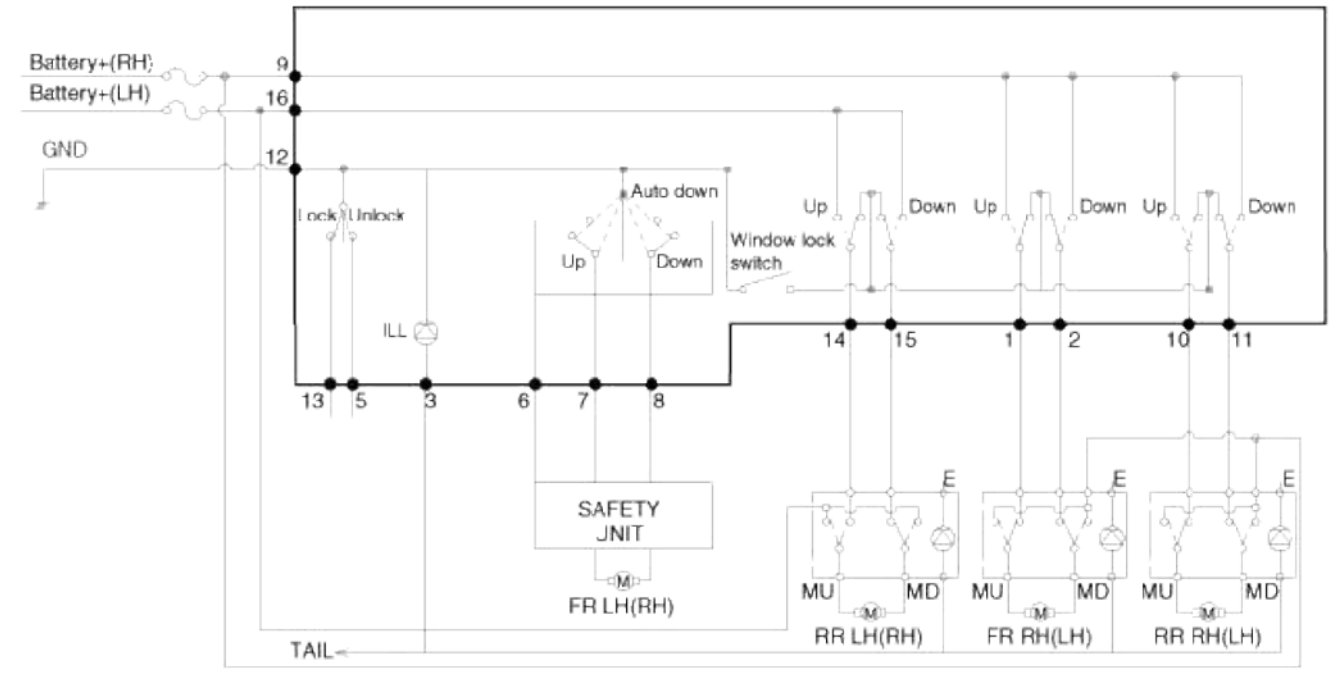

Passenger Power Window Switch

cardiagn.com

[Power Window Lock]

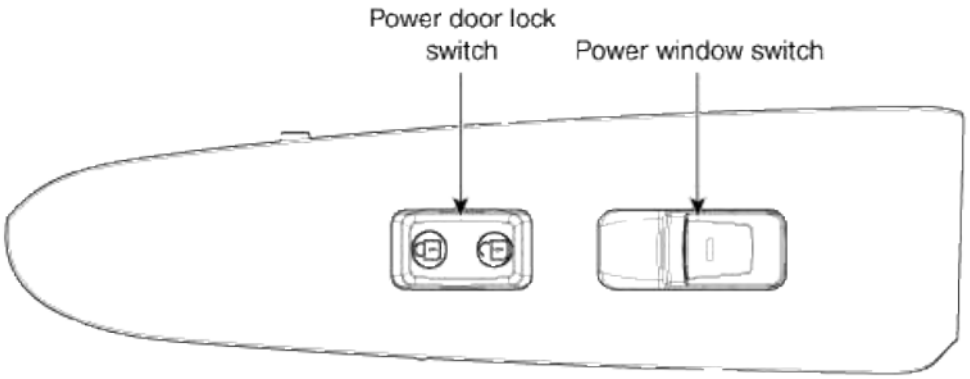

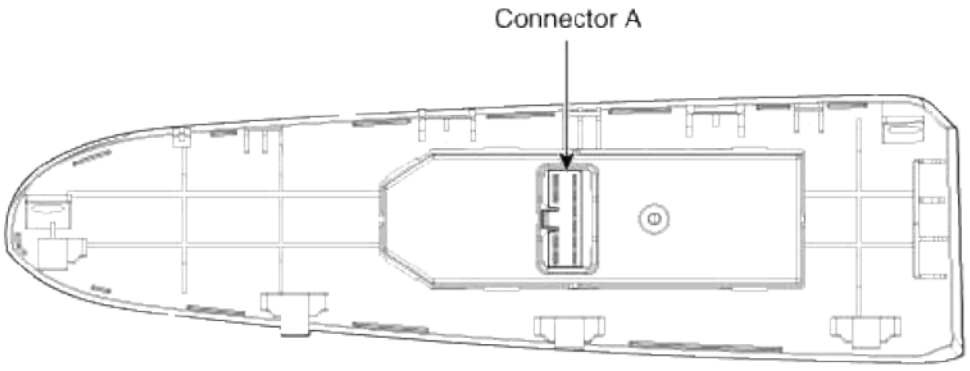

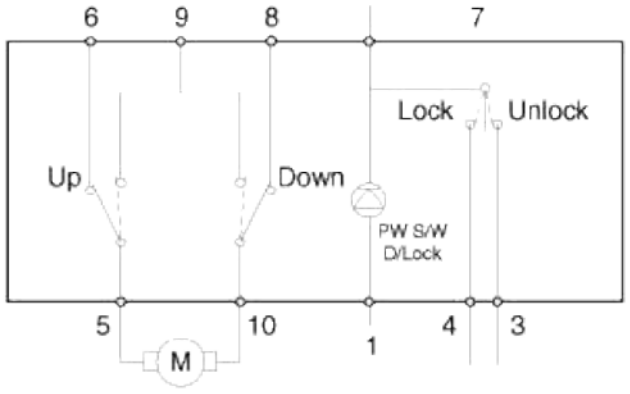

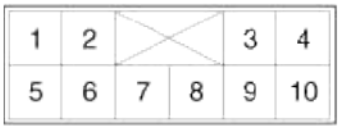

Pin	Connector A
1	Tail lamp
2	-
3	Door unlock
4	Door lock
5	Power window motor up
6	Power window switch up
7	GND
8	Power window switch down
9	Battery(+)
10	Power window motor down

cardiagn.com

[Power Window Only]

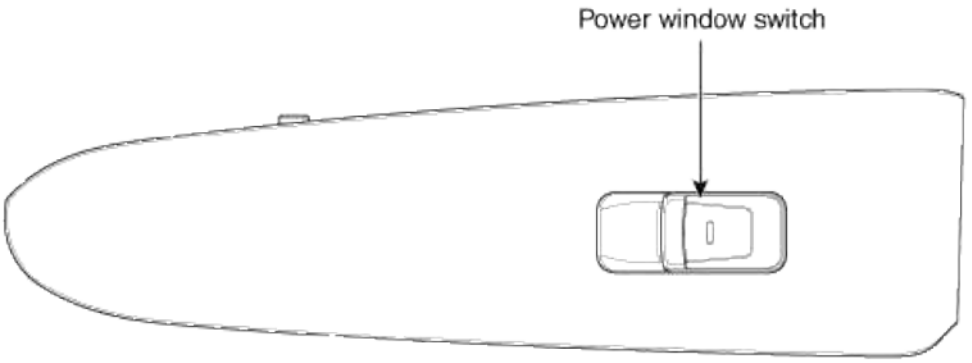

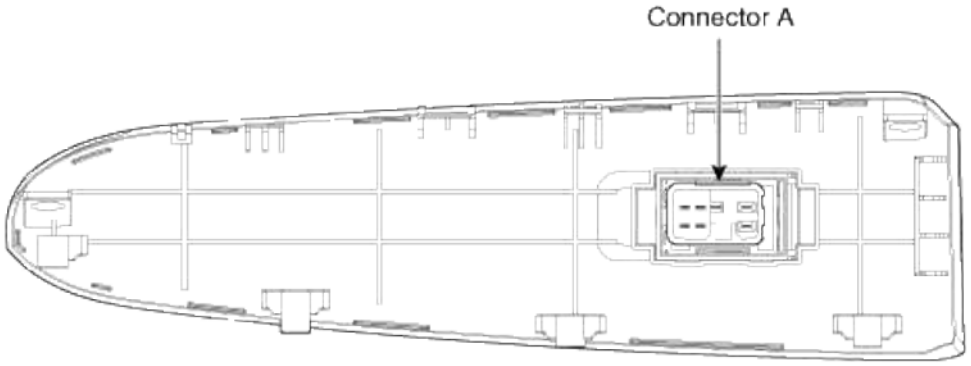

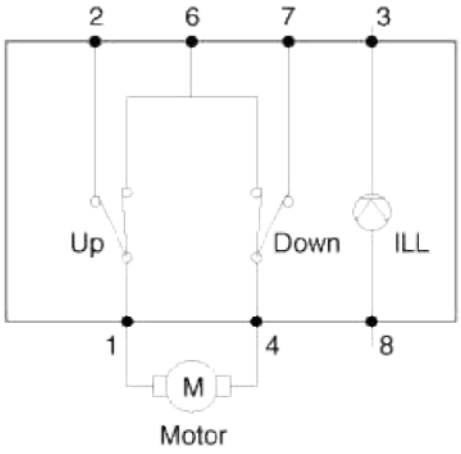

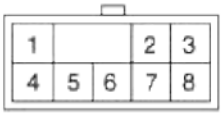

Pin	Connector A
1	Power window motor up
2	Power window switch up
3	GND
4	Power window motor down
5	-
6	Battery (-)
7	Power window switch down
8	Tail lamp

Rear Power Window Switch

cardiagn.com

[Power Window]

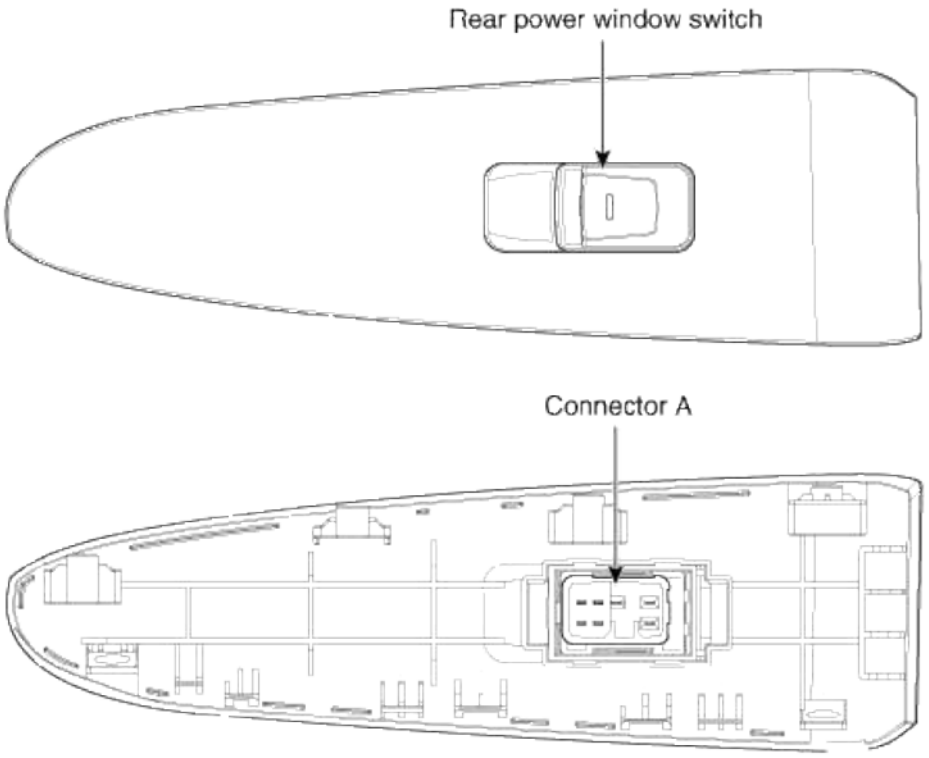

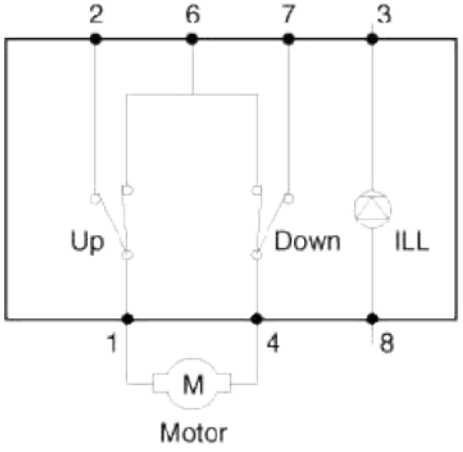

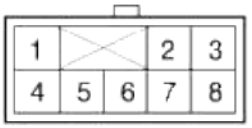

Pin	Connector A
1	Power window motor up
2	Power window switch up
3	GND
4	Power window motor down
5	Battery (+)
6	-
7	Power window switch down
8	Tail lamp

cardiagn.com

[Seat Heater + Power Window]

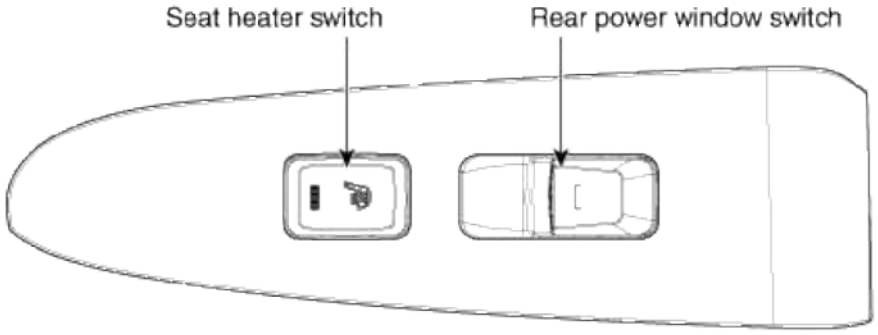

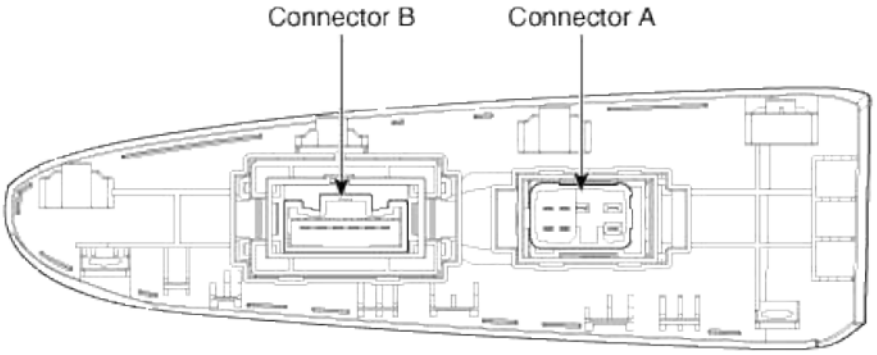

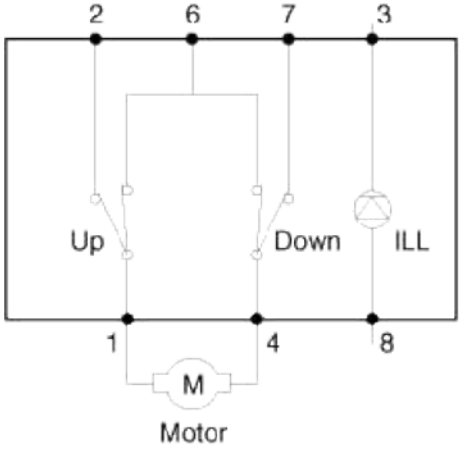

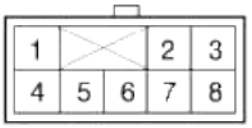

Pin	Connector A
1	Power window motor up
2	Power window switch up
3	GND
4	Power window motor down
5	Battery (+)
6	-
7	Power window switch down
8	Tail lamp

Body Electrical System > Power Windows > Power Window Switch > Repair procedures

Inspection

Main Power Window Switch Inspection

1. Disconnect the negative (-) battery terminal.
2. Remove the front door trim and power window switch.
   (Refer to the BD group - "Front door")

cardiagn.com

3. Check for continuity between the terminals in each switch position according to the table. If the continuity condition is not normal, replace the switch.

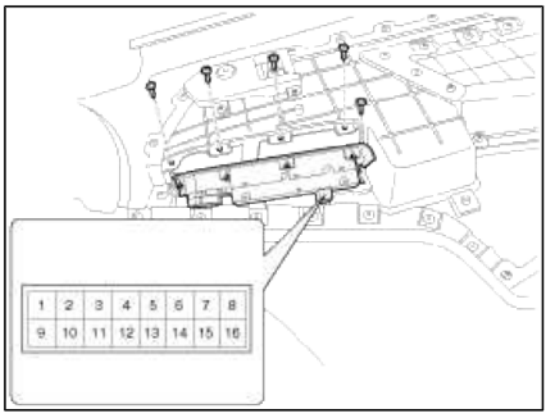

Position \ Terminal	5	12	13
Lock		○—○	
Unlock	○—○		

[Driver Auto Up/Down]

Position \ Terminal	Front left				Front right			
	12	7	8	6	9	1	2	12
Up	○—○				○—○		○—○	
Auto up	○—○		○—○					
Off						○—○	○—○	
Down	○—○		○—○		○—○			
						○—○		
Auto down	○—○		○—○					

Position \ Terminal	Rear left				Rear right			
	16	14	15	12	9	10	11	12
Up	○—○		○—○		○—○		○—○	
Off		○—○	○—○			○—○	○—○	
Down	○—○		○—○		○—○			
		○—○				○—○		

Passenger Power Window Switch Inspection

1. Disconnect the negative (-) battery terminal.
2. Remove the front door trim and power window switch.
   (Refer to the BD group - "Front door")
3. Check for continuity between the terminals in each switch position according to the table. If the continuity condition is not normal, replace the switch.

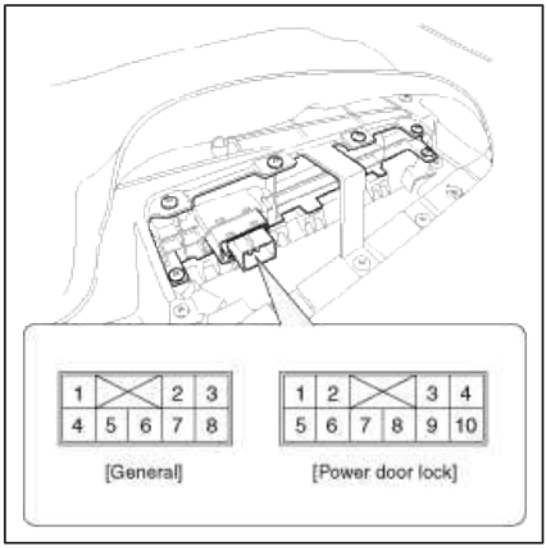

[General]

cardiagn.com

Position \ Terminal	1	4	2	6	7
Up	○	○		○	○
Off	○		○		○
Down	○		○	○	

[Power Door Lock]

Position \ Terminal	5	10	6	9	8
Up	○	○		○	○
Off	○		○		○
Down	○		○	○	

Rear Power Window Switch Inspection

1. Disconnect the negative (-) battery terminal.
2. Remove the rear door trim.
   (Refer to the BD group - "Rear door")
3. Remove the rear power window switch module.

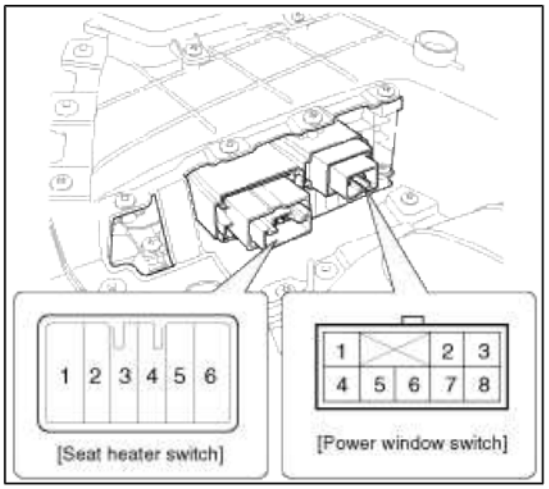

4. Check for continuity between the terminals in each switch position according to the table. If the continuity condition is not normal, replace the switch.

[General]

Position \ Terminal	6	2	7	4	1
Up	○		○	○	○
Off		○	○		○
Down	○	○		○	○

Body Electrical System > Power Windows > Troubleshooting

Troubleshooting

cardiagn.com

1. No windows operate from the main switch on the driver's door.

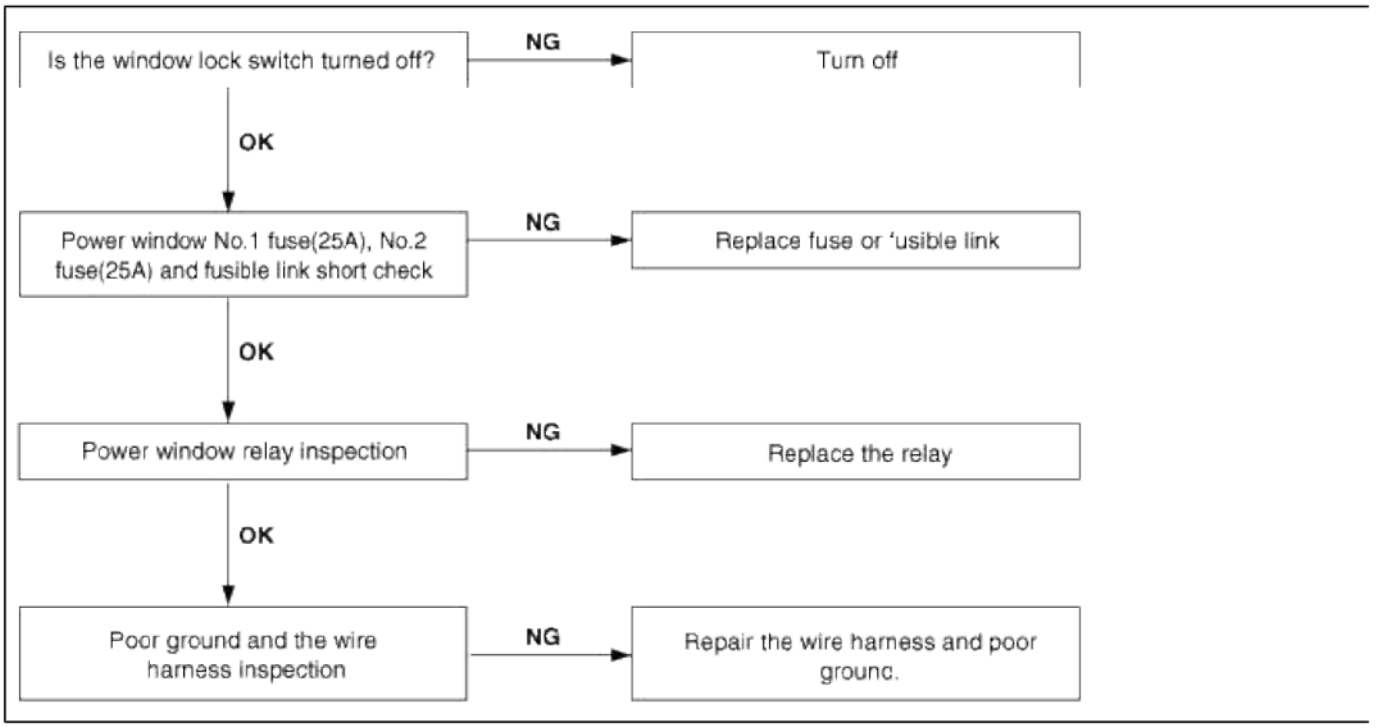

2. Driver's side window does not operate.

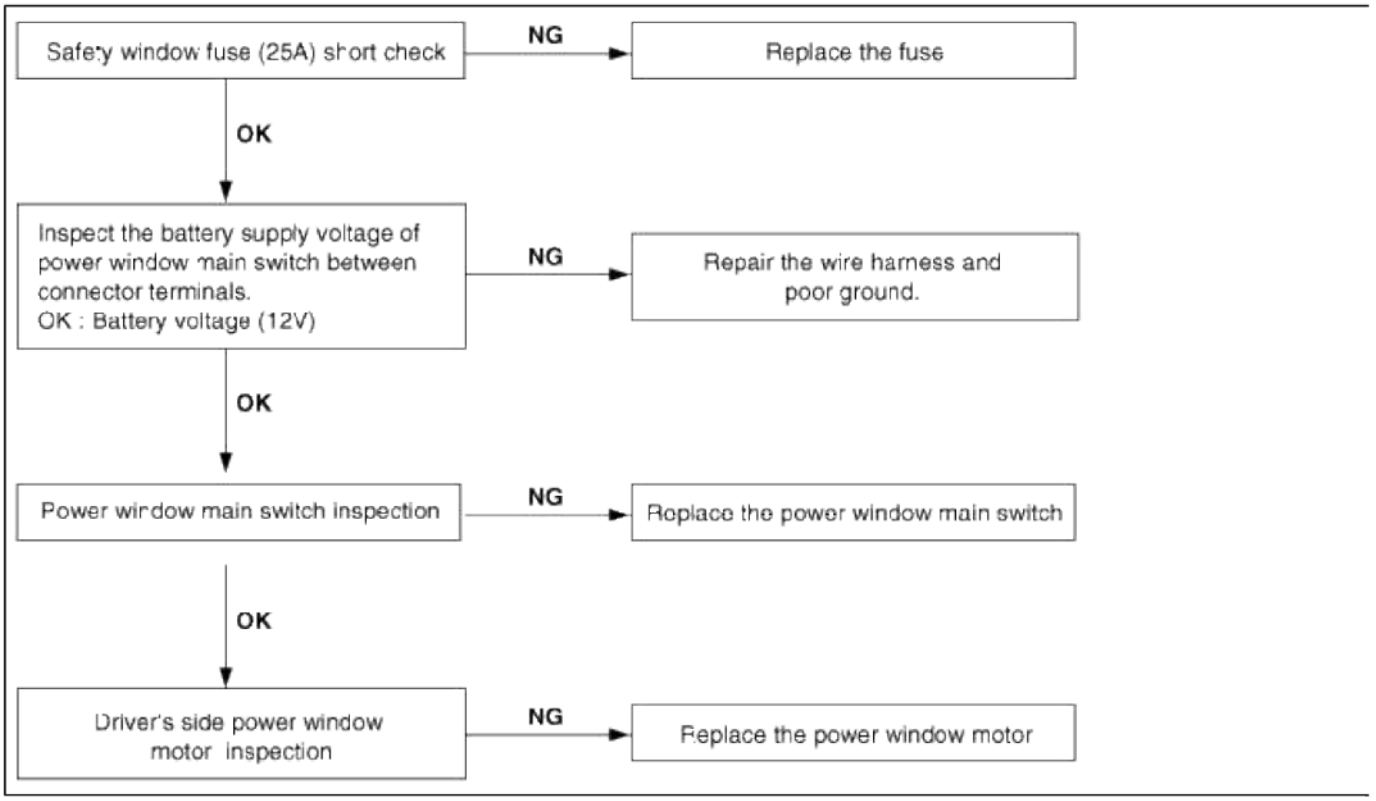

cardiagn.com

3. Passenger's side window does not operate.

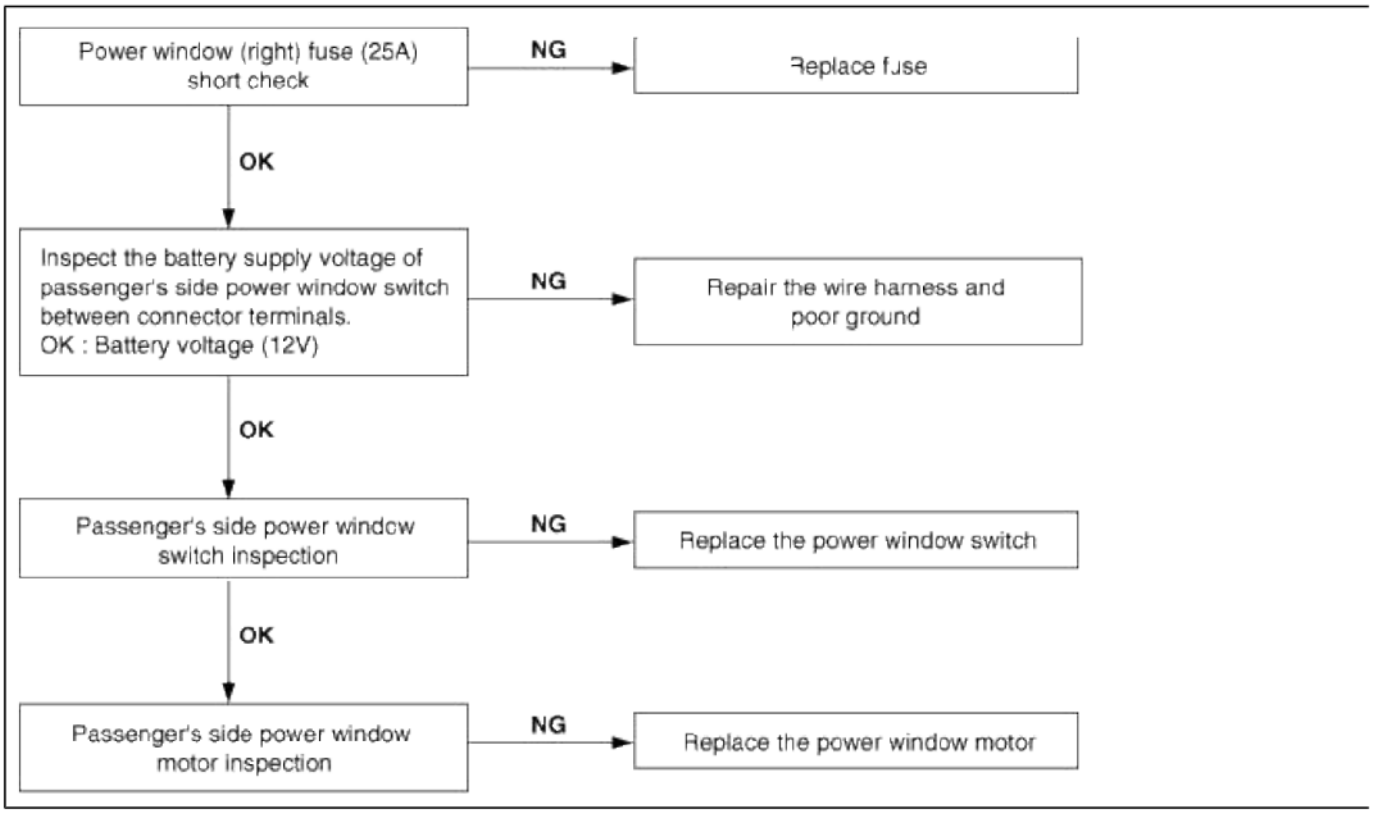

Body Electrical System > Windshield Deicer > Components and Components Location

Component Location

cardiagn.com

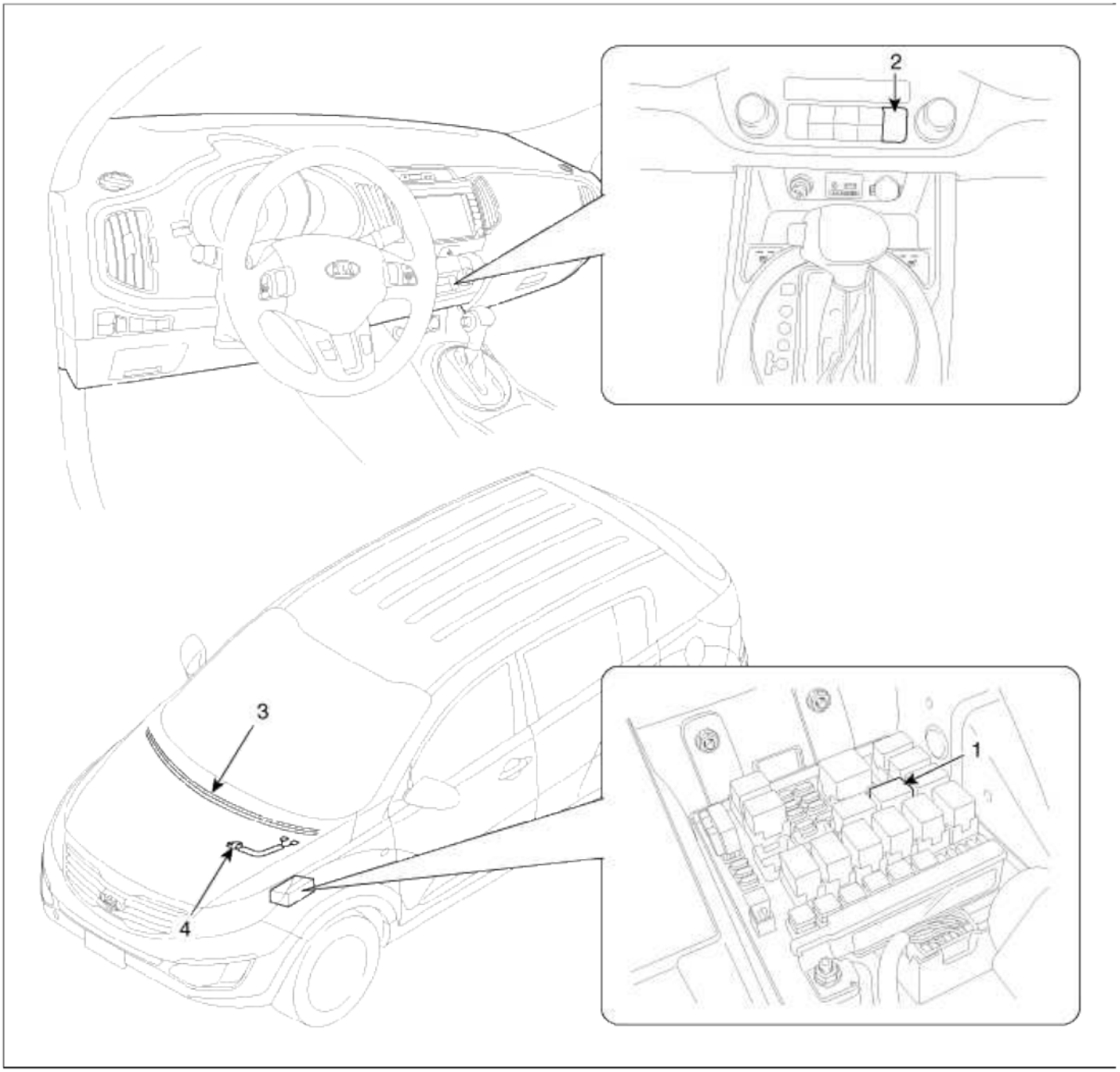

1. Windshield deicer relay 2. Windshield deicer switch	3. Windshield deicer 4. Deicer connector

Body Electrical System > Windshield Deicer > Description and Operation

Description

Windshield deicer system prevent windshield wiper from freezing in the winter season. It consists of deicer in the lower part of windshield, switch and relay.

Body control module receives an input signal from the deicer switch, then controls relay.

Since the generator "L" is switched ON, if the deicer switch is ON, then deicer output is ON for 20 minutes.

Body Electrical System > Windshield Deicer > Windshield Deicer > Repair procedures

cardiagn.com

Inspection

1. Remove the cowl top cover.
   (Refer to the wiper)
2. Disconnect the windshield deicer connector (A) from the wiper motor linkage.

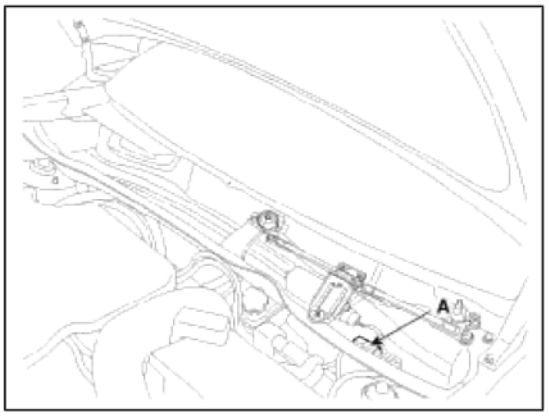

3. Check for continuity between the terminals of deicer lines.

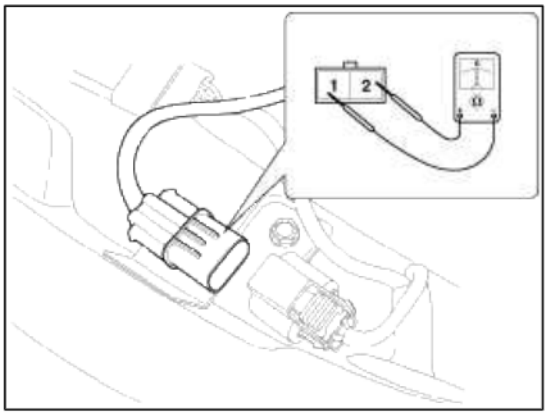

4. Turn the ignition switch ON and the windshield deicer switch ON, then measure the voltage between the terminals of harness side deicer connector.

OK : approx. Battery voltage (12V)

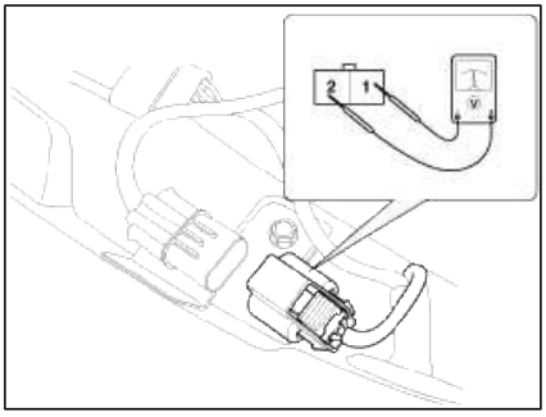

Body Electrical System > Windshield Deicer > Windshield Deicer Switch > Repair procedures

Removal

1. Disconnect the negative (-) battery terminal.
2. Remove the center fascia panel.
   (Refer to BE - "Audio")

cardiagn.com

3. Remove the heater and A/C controller (A) after disconnecting the connector (B).

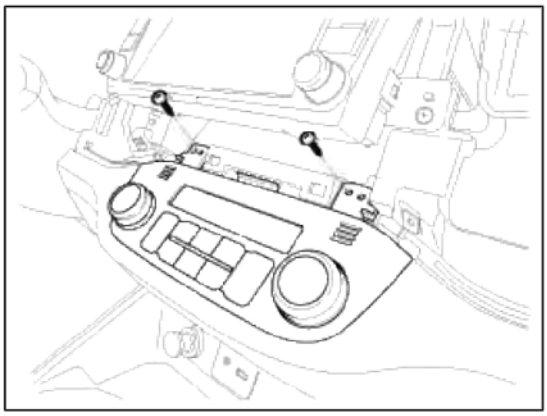

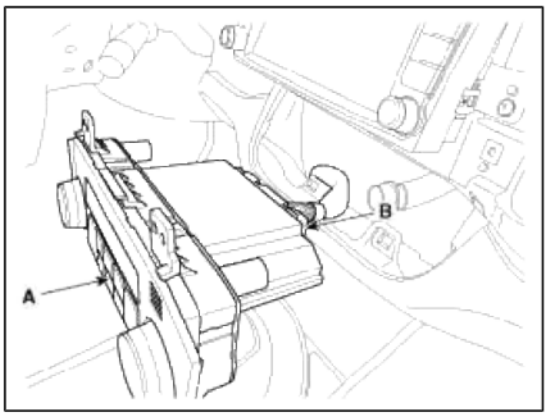

NOTE

Take care not to damage the hook when removing the heater and A/C controller.

Installation

1. Install the heater and A/C controller.
2. Install the center fascia panel.

Inspection

1. The windshield deicer switch inputs can be checked using the GDS.
2. To check the input value of windshield deicer switch, select option "BCM".
3. Select option "Current Data".

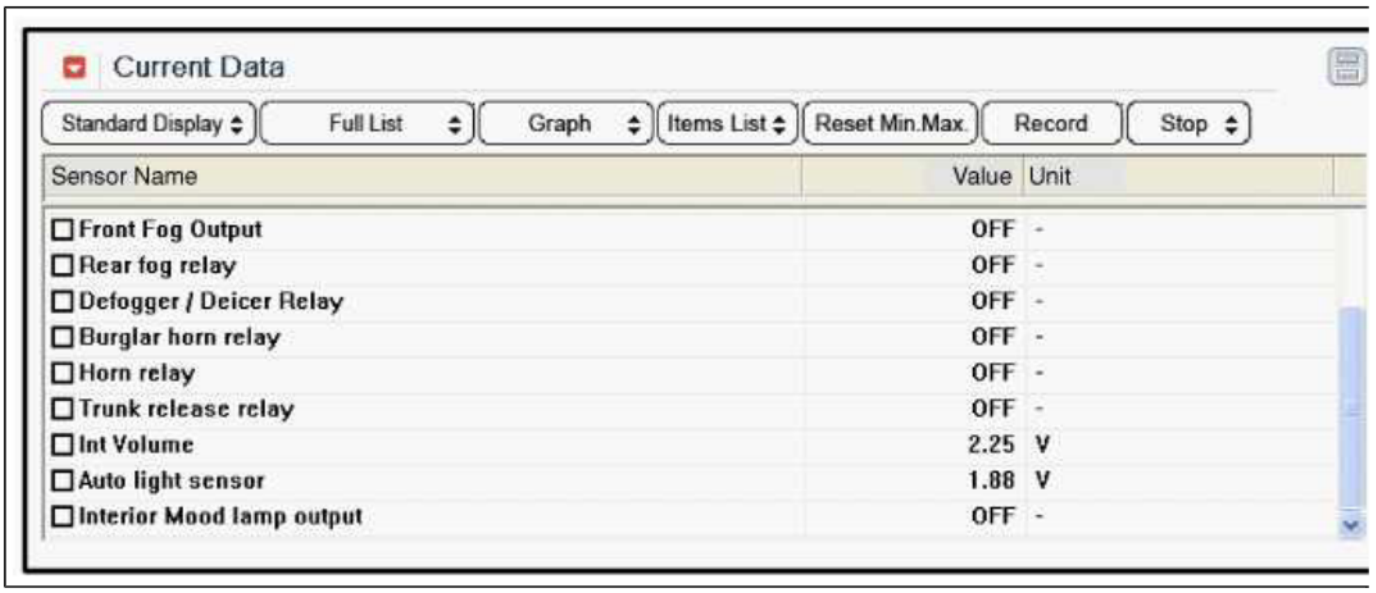

cardiagn.com

4. To check the input value of windshield deicer switch in force mode, select option.

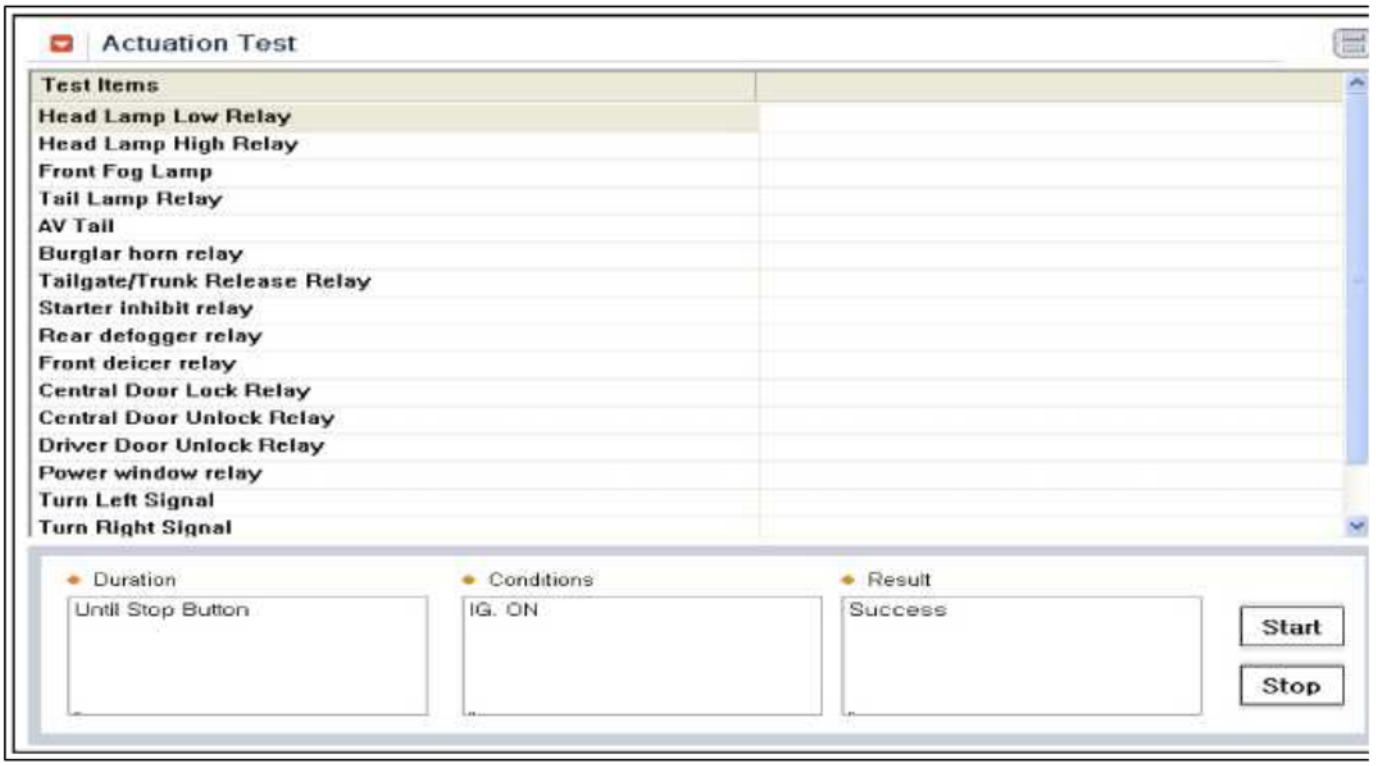

Body Electrical System > Rear Glass Defogger > Components and Components Location

Component Location

cardiagn.com

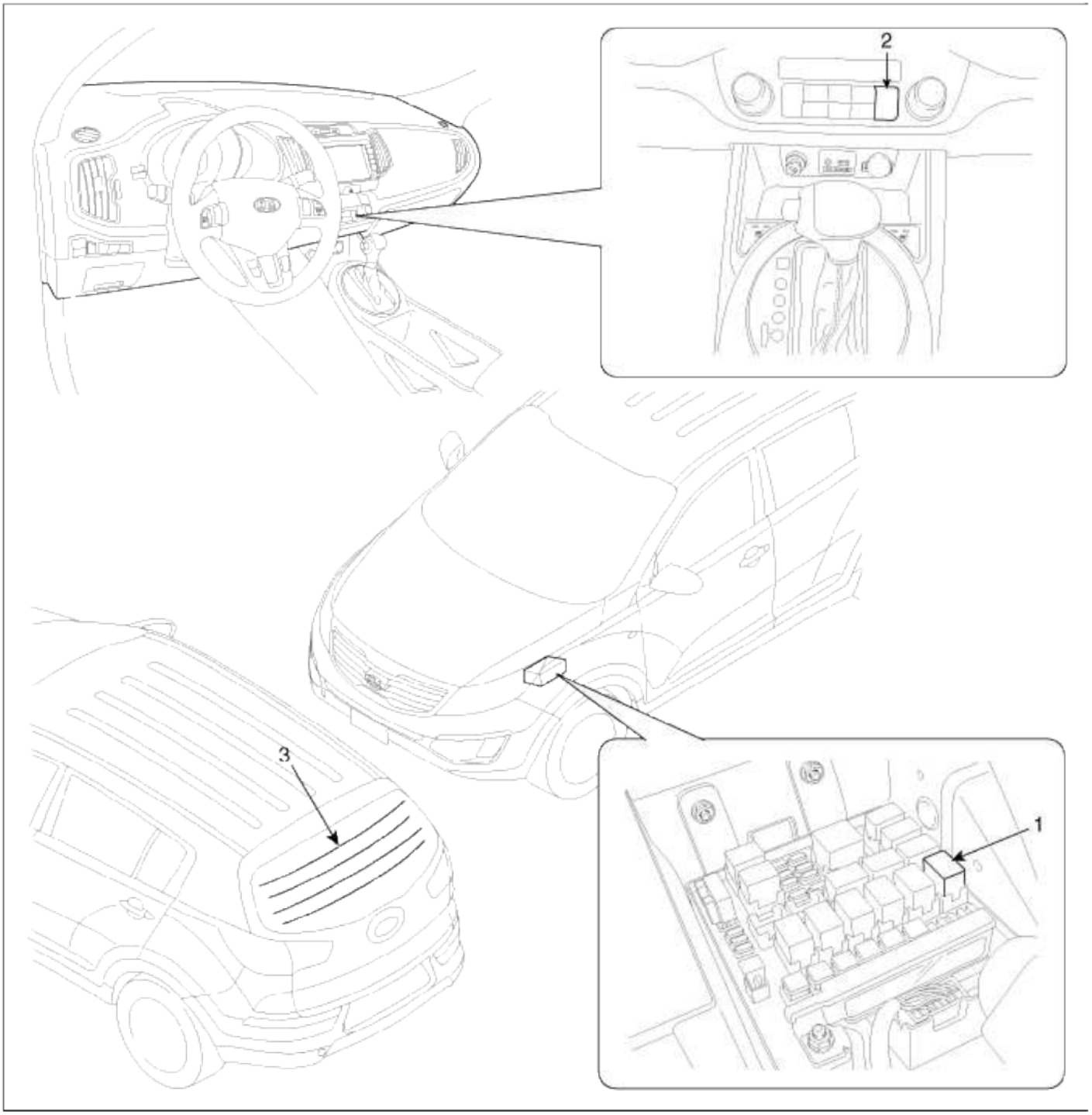

1. Rear glass defogger relay 2. Rear glass defogger switch	3. Rear glass defogger

Body Electrical System > Rear Glass Defogger > Rear Glass Defogger Printed Heater > Repair procedures

Inspection

CAUTION

Wrap tin foil around the end of the voltmeter test lead to prevent damaging the heater line. Apply finger pressure on the tin foil, moving the tin foil along the grid line to check for open circuits.

cardiagn.com

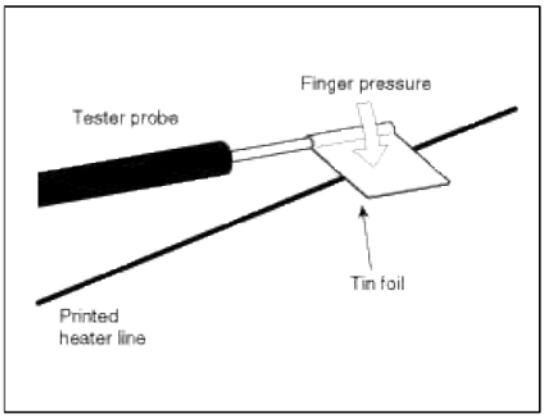

1. Turn on the defogger switch and use a voltmeter to measure the voltage of each heater line at the glass center point. If a voltage of approximately 6V is indicated by the voltmeter, the heater line of the rear window is considered satisfactory.

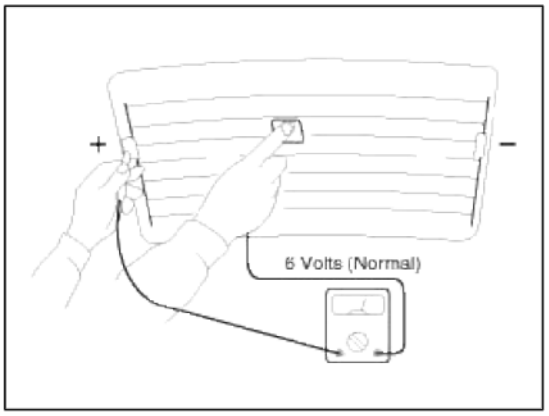

2. If a heater line is burned out between the center point and (+) terminal, the voltmeter will indicate 12V.

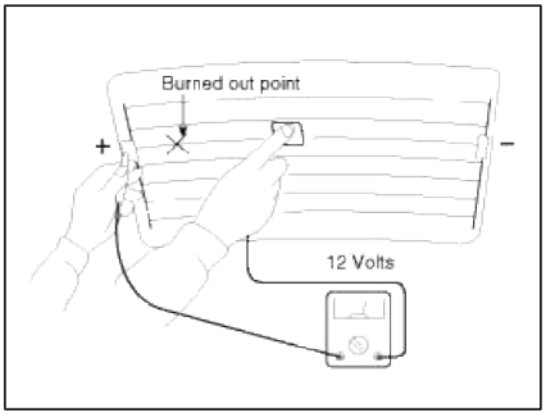

3. If a heater line is burned out between the center point and (-) terminal, the voltmeter will indicate 0V.

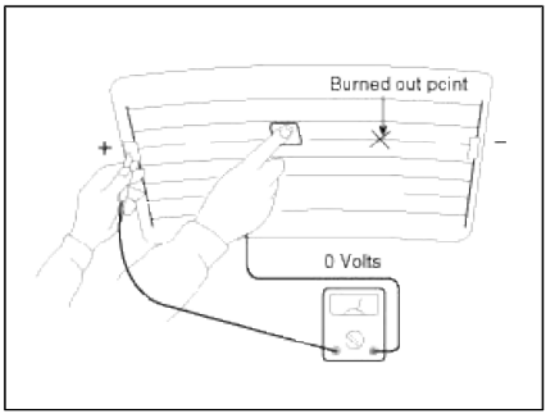

cardiagn.com

4. To check for open circuits, slowly move the test lead in the direction that the open circuit seems to exist. Try to find a point where a voltage is generated or changes to 0V. The point where the voltage has changed is the open-circuit point.

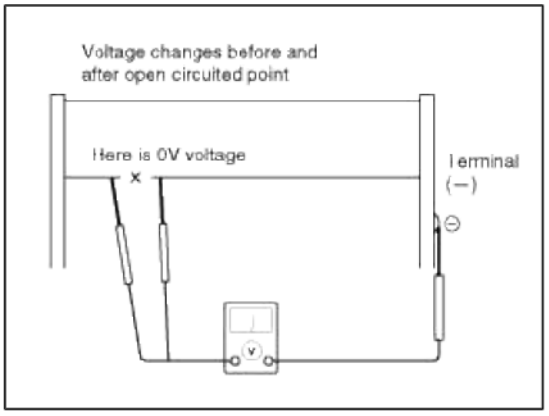

5. Use an ohmmeter to measure the resistance of each heater line between a terminal and the center of a grid line, and between the same terminal and the center of one adjacent heater line. The section with a broken heater line will have a resistance twice as that in other sections. In the affected section, move the test lead to a position where the resistance sharply changes.

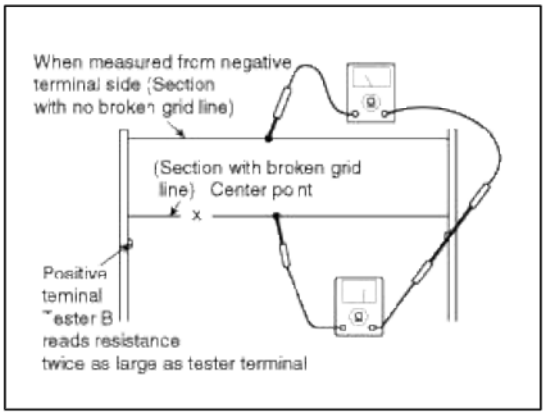

Repair Of Broken Heater Line

Prepare the following items :

1. Conductive paint.
2. Paint thinner.
3. Masking tape.
4. Silicone remover.
5. Using a thin brush :

   Wipe the glass adjacent to the broken heater line, clean with silicone remover and attach the masking tape as shown. Shake the conductive paint container well, and apply three coats with a brush at intervals of about 15 minutes apart. Remove the tape and allow sufficient time for drying before applying power. For a better finish, scrape away excess deposits with a knife after the paint has completely dried. (Allow 24 hours).

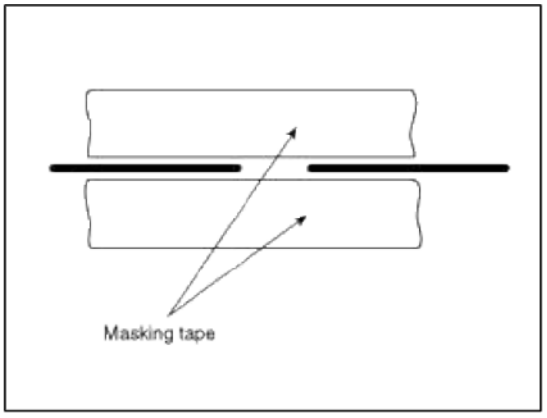

cardiagn.com

Body Electrical System > Rear Glass Defogger > Rear Glass Defogger Switch > Repair procedures

Removal

1. Disconnect the negative (-) battery terminal.
2. Remove the center fascia panel.
   (Refer to BE - "Audio")
3. Remove the heater and A/C controller (A) after disconnecting the connector (B).

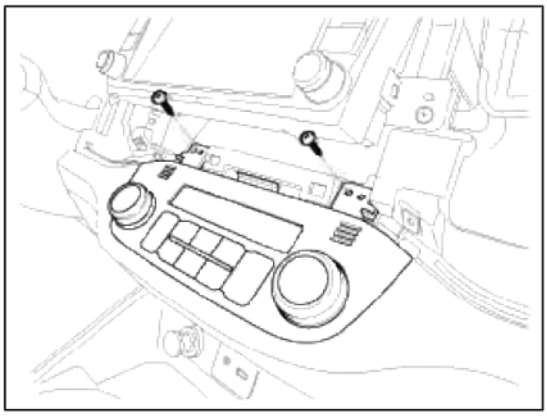

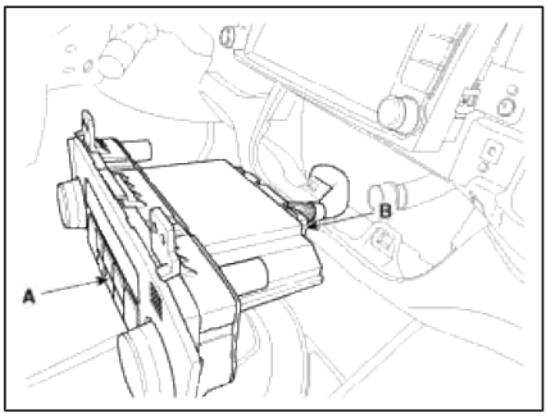

NOTE

Take care not to damage the hook when removing the heater and A/C controller.

Installation

1. Install the heater and A/C controller.
2. Install the center fascia panel.

Inspection

1. The rear glass defogger switch inputs can be checked using the GDS.
2. To check the input value of rear glass defogger switch, select option "BCM".

cardiagn.com

3. Select option "Current Data".

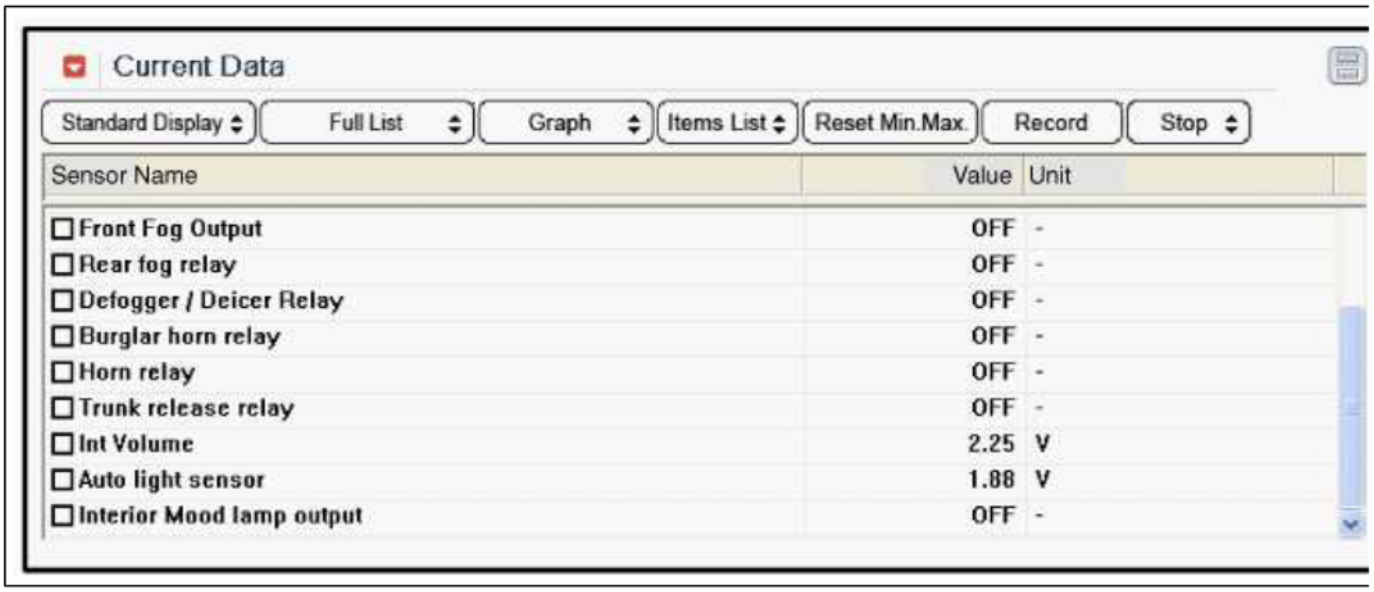

4. To check the input value of rear glass defogger switch in force mode, select option.

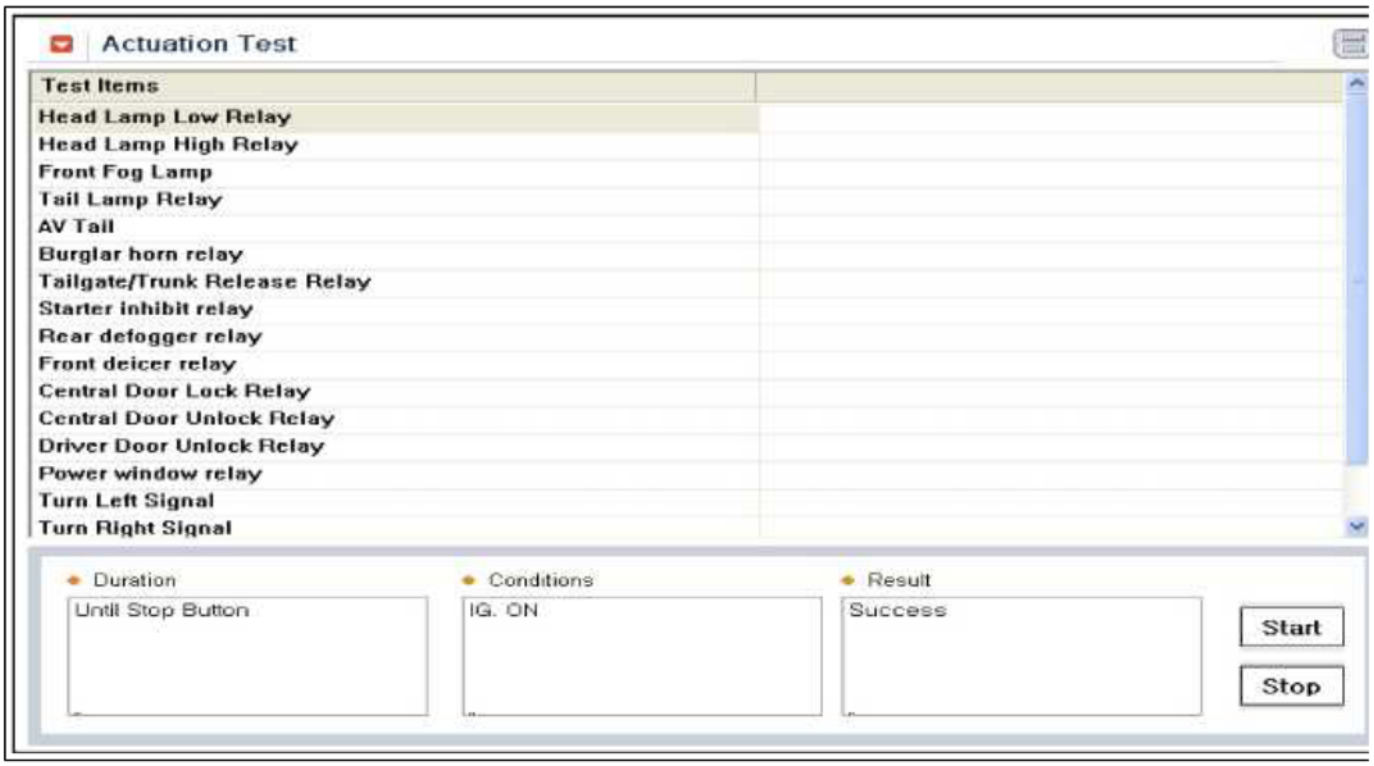

cardiagn.com

Body Electrical System > Windshield Wiper/Washer > Components and Components Location

Component Location

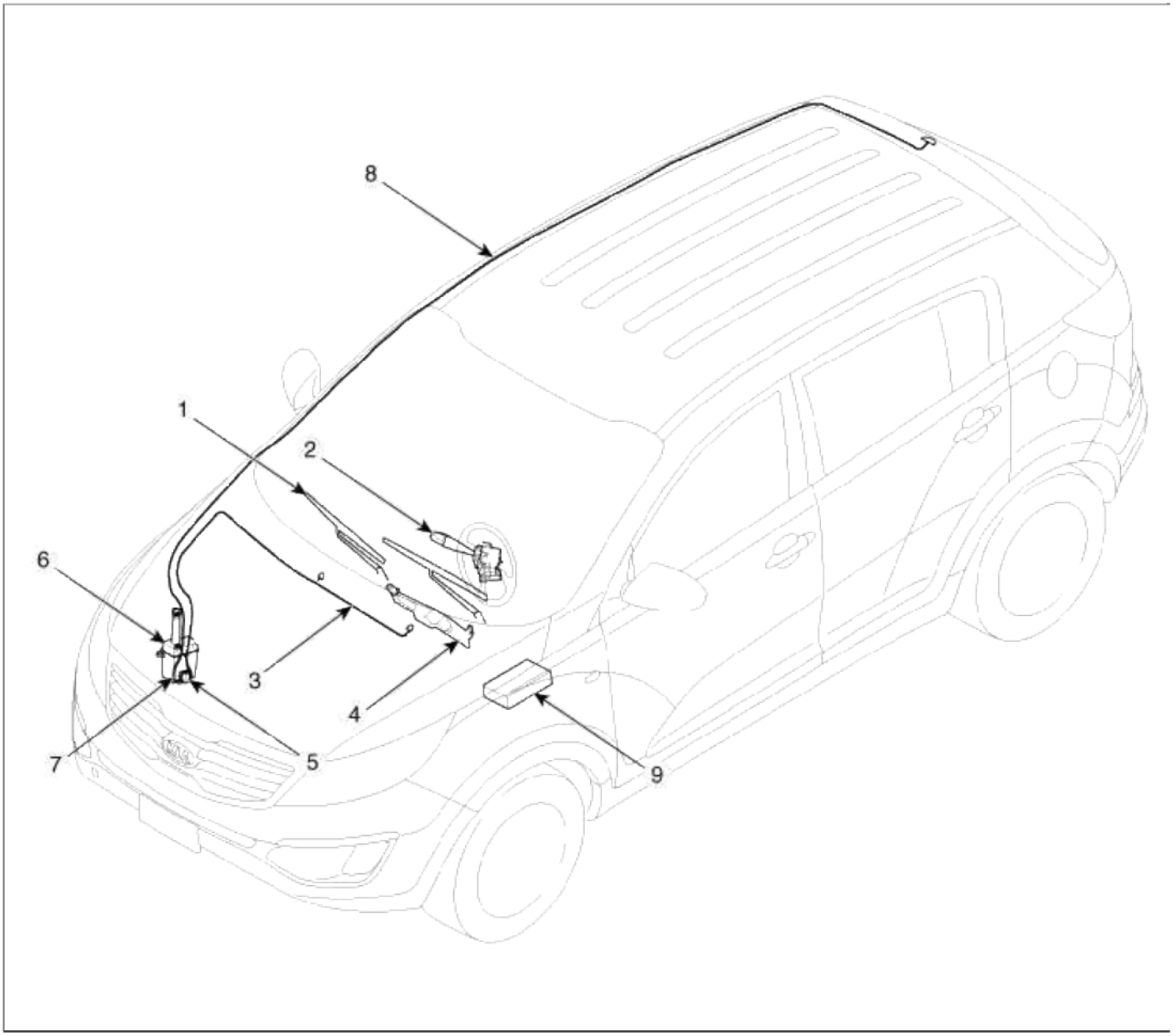

1. Windshield wiper arm & blade	6. Washer reservoir
2. Wiper & washer switch	7. Washer motor (Rear)
3. Windshield washer hose	8. Rear washer hose & nozzle
4. Windshield wiper motor & linkage	9. Front wiper relay (Engine room relay box)
5. Washer motor (Front)	

Body Electrical System > Windshield Wiper/Washer > Windshield Wiper-Washer Switch > Repair procedures

Removal

1. Disconnect the negative (-) battery terminal.

cardiagn.com

2. Remove the steering column upper and lower shrouds (A) after removing 3 screws.

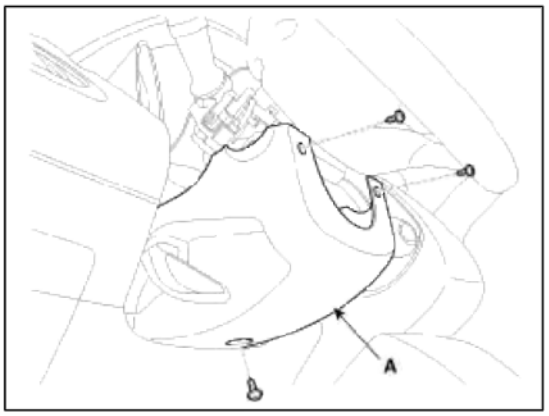

NOTE

Take care not to damage and scratch the shrouds and its related parts.
Take care not to damage the hook when removing the upper and lower shrouds.

3. Disconnect the light switch connector (A) and the wiper switch connector (B).

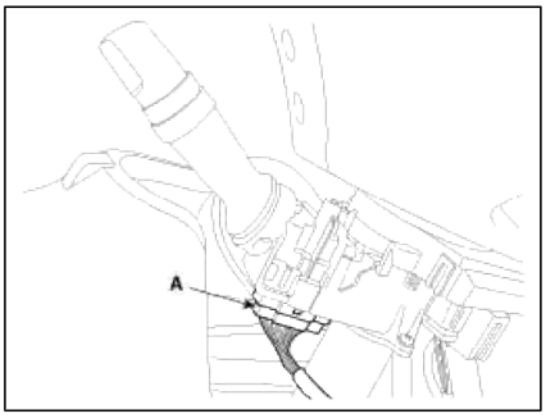

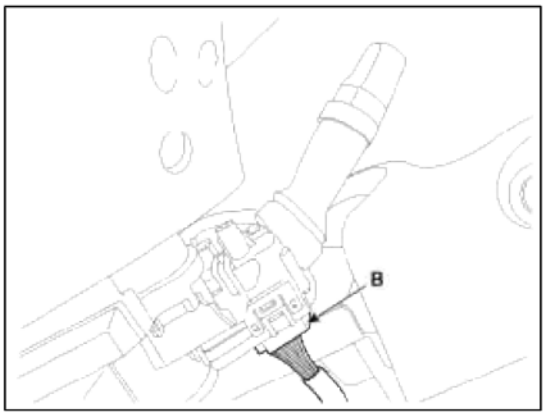

cardiagn.com

4. Remove the wiper switch (A) by pushing the lock pin (B).

NOTE

When removing the wiper & washer switch only, release the lock of wiper switch without removing the steering wheel.

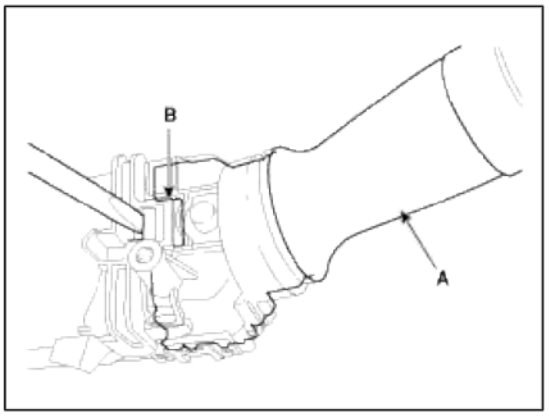

5. Remove the steering wheel.
   (Refer to ST group - "Steering column and shaft")
6. Remove the clock spring.
   (Refer to RT group - "Airbag module")
7. Remove the multifunction switch assembly (A) after loosening screws (2EA).

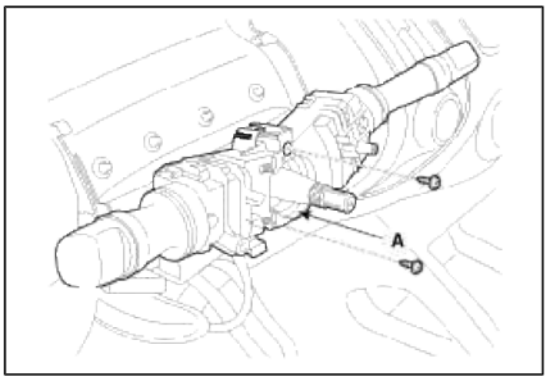

Installation

1. Install the multifunction switch after connecting the connector.
2. Install the clock spring and steering wheel.
3. Install the steering column upper and lower shrouds.

Inspection

Check for continuity between the terminals while operating the wiper and washer switch. If it is not normal condition, replace wiper and washer switch.

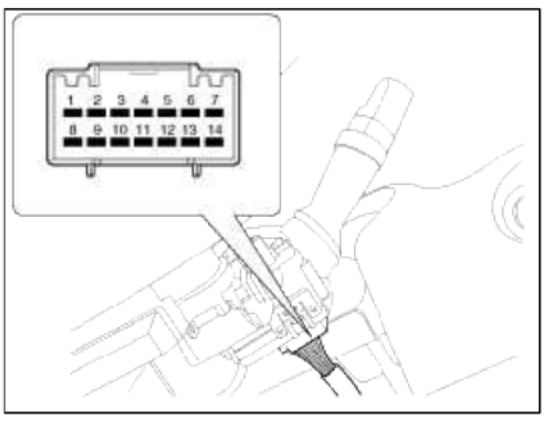

cardiagn.com

Wiper Switch

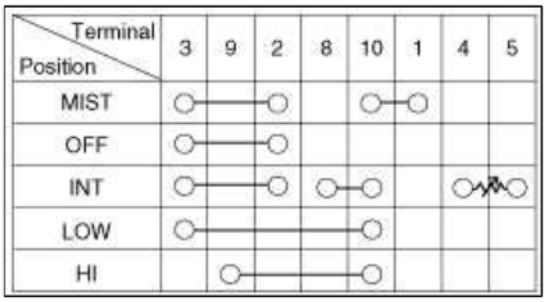

Terminal / Position	3	9	2	8	10	1	4	5
MIST	○		○		○	○		
OFF	○		○					
INT	○		○	○	○		○	○
LOW	○				○			
HI		○			○			

Washer Switch

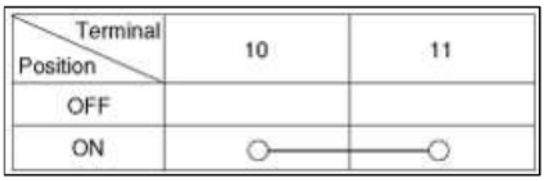

Terminal / Position	10	11
OFF		
ON	○	○

Rear Wiper Switch

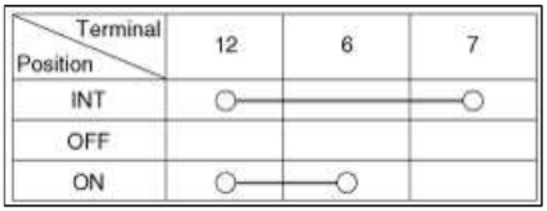

Terminal / Position	12	6	7
INT	○		○
OFF			
ON	○	○	

Rear Washer Switch

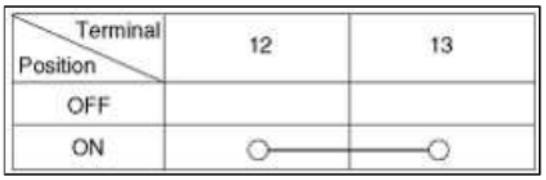

Terminal / Position	12	13
OFF		
ON	○	○

Body Electrical System > Windshield Wiper/Washer > Front Wiper Motor > Components and Components Location

Component Location

cardiagn.com

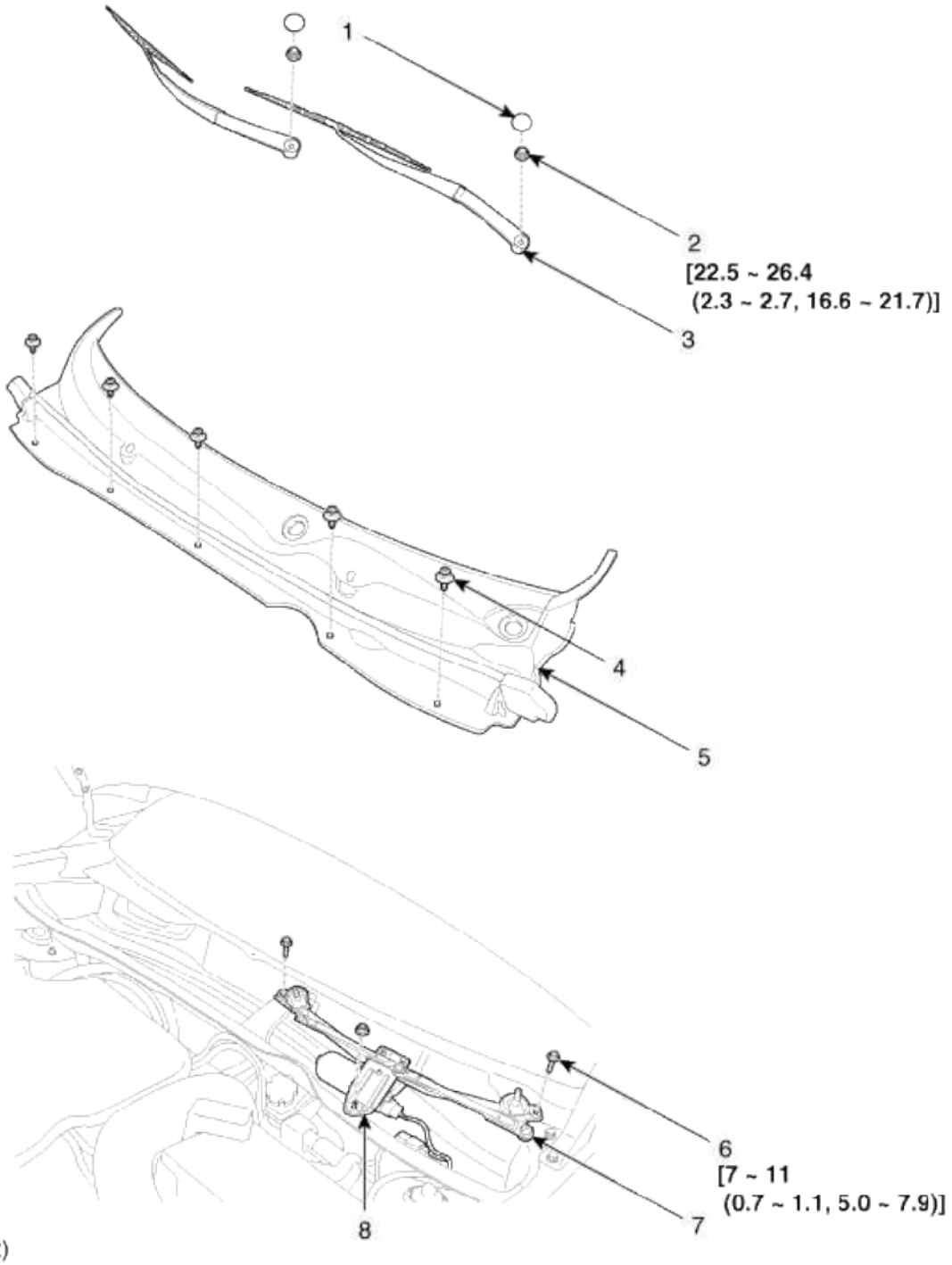

1. Cap 2. Nut 3. Wiper arm & blade 4. Clip	5. Cowl top cover 6. Bolt 7. Wiper motor & linkage assembly 8. Wiper motor connector

Body Electrical System > Windshield Wiper/Washer > Front Wiper Motor > Repair procedures

Removal

cardiagn.com

1. Remove the windshield wiper arm and blade after removing a nut (B) and wiper cap (A).

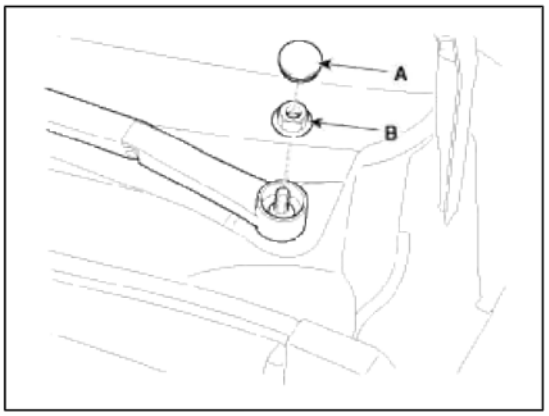

2. Remove the windshield wiper arm and blade (A).

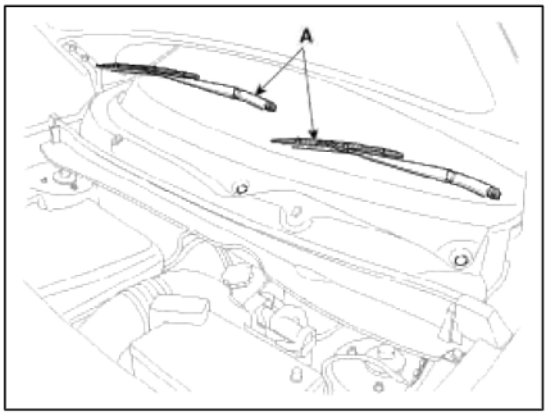

3. If necessary, release the wiper blade fixing clip by pulling up and remove the wiper blade from the inside radius of wiper arm.

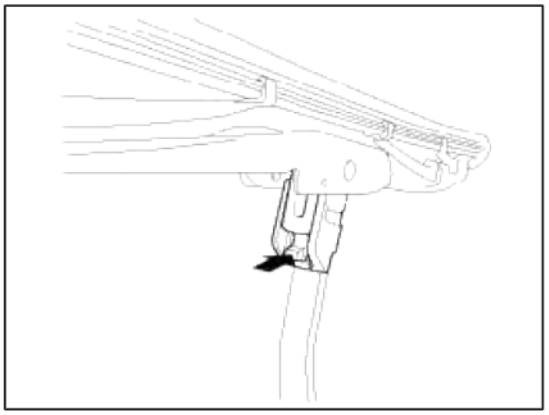

4. Remove the cowl top cover (A) after removing clips (5EA).

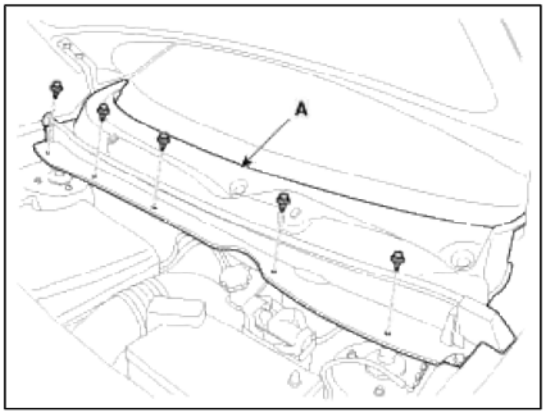

cardiagn.com

5. Disconnect the wiper motor connector (A) from the wiper motor & linkage assembly.

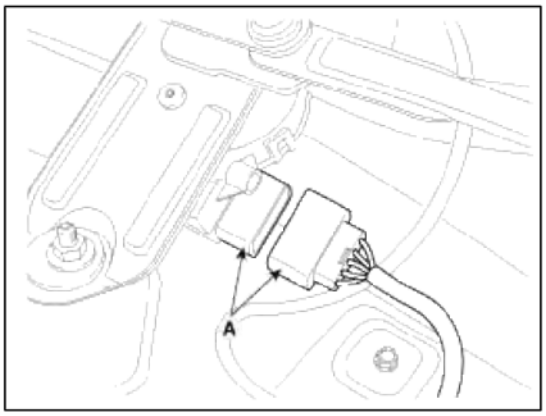

6. Remove the windshield wiper motor and linkage assembly (A) after removing 2 bolts and nut.

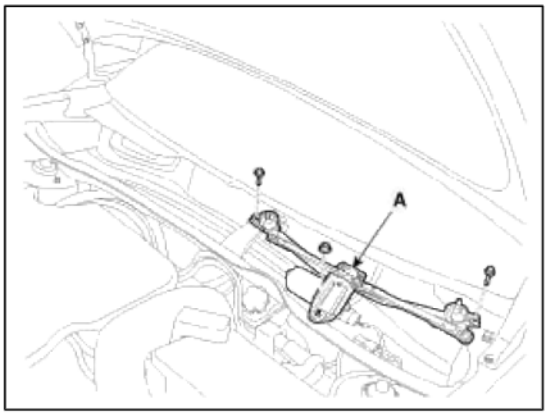

7. Hold the wiper motor crank arm and remove the upper linkage (A) from the wiper motor crank arm.

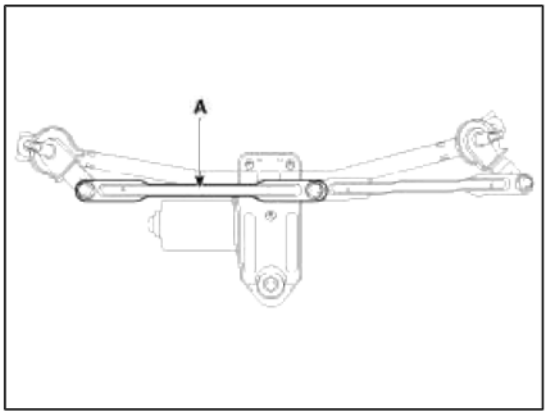

CAUTION

Before remove the wiper motor and linkage assembly, make sure that the linkage is stopped at automatic stop position.
To install the wiper motor crank arm exactly, check that the linkage is aligned with the crank arm in straight line and the angle of each linkages.
Put the matchmark on the wiper motor and linkage assembly.
Be careful not to bend the linkage.

cardiagn.com

8. Remove the lower linkage (A) from the wiper motor crank arm.

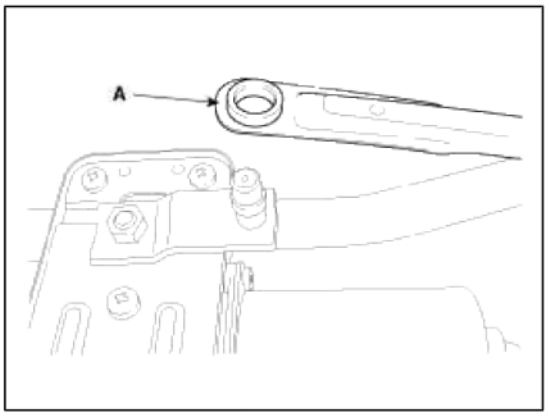

CAUTION

To install the wiper motor crank arm exactly, check that the linkage is aligned with the crank arm in straight line and the angle of each linkages.
Be careful not to bend the linkage.

9. Remove the crank arm (A) after loosening a nut (B).

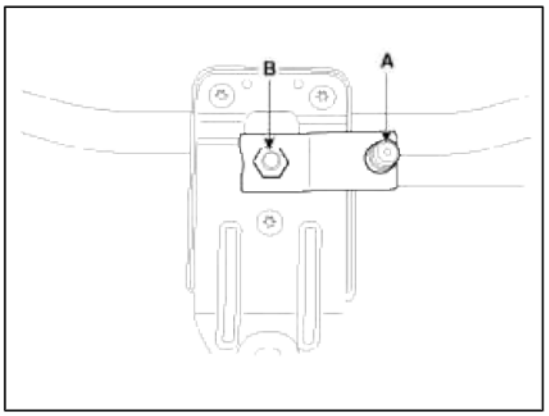

10. Remove the wiper motor after loosening the 3 screws.

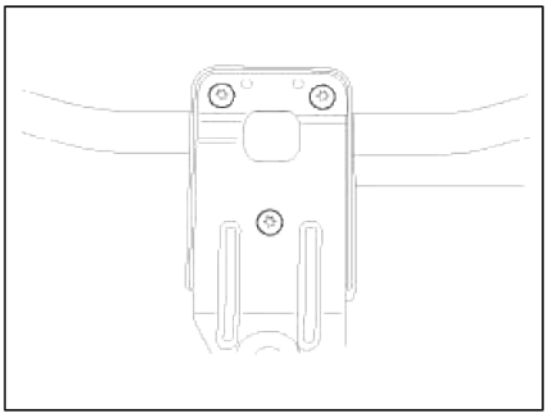

Installation

CAUTION

Do not allow the wiper arm to fall against the windshield, since it may chip or crack the windshield.

1. Install the wiper motor.

cardiagn.com

2. Install the crank arm.

Torque :
12.7-17.6 N.m (1.3-1.8 kgf.m, 9.4-13.0 lbf.ft)

CAUTION

To install the wiper motor crank arm, make sure that the linkage is aligned with the crank arm in straight line and set the angle of each linkages exactly using match mark.

3. Install the lower and upper linkage to the wiper motor crank arm.

CAUTION

To install the wiper motor crank arm, make sure that the linkage is aligned with the crank arm in straight line and set the angle of each linkages exactly.
Be careful not to bend the linkage.

4. Install the wiper motor and linkage assembly and then connect the wiper motor connector.

Torque :
7-11N.m (0.7-1.1 kgf.m, 5.0-7.9 lbf.ft)

5. Install the cowl top cover.
6. Install the windshield wiper arm and blade.

Torque :
22.5~26.4 N.m (2.3~2.7 kgf.m, 16.6~21.7 lbf.ft)

NOTE

- The windshield wiper motor must be cycled to make sure that it is in the park position. If necessary, adjust the wiper arm and blade.

7. Install the wiper arm and blade to the specified position (A).

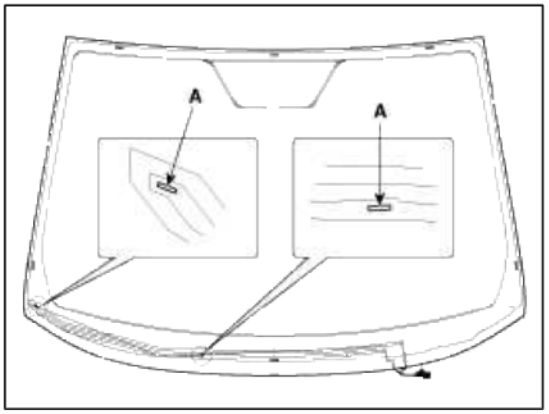

cardiagn.com

8. Set the cowl top cover on the specified spray position.

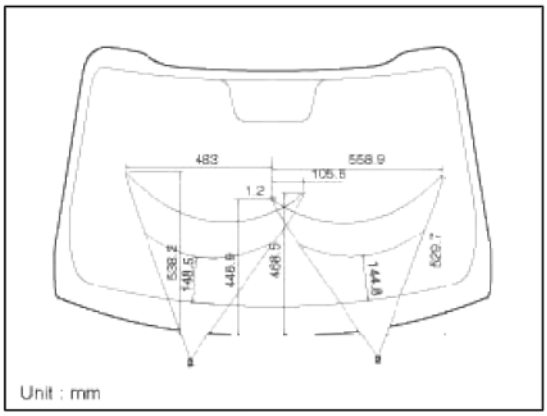

Inspection

Speed Operation Check

1. Remove the connector (A) from the wiper motor.

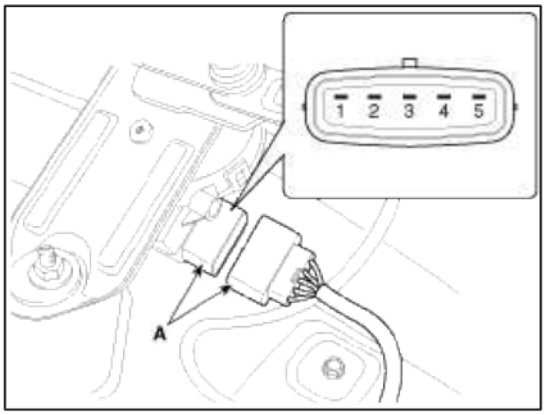

No	Description	No	Description
1	Ground	4	Low
2	P (Parking)	5	High
3	Battery (+)		

2. Attach the positive (+) lead from the battery to terminal 3 and the negative (-) lead to terminal 1.
3. Check that the motor operates at low or high speed as below table.

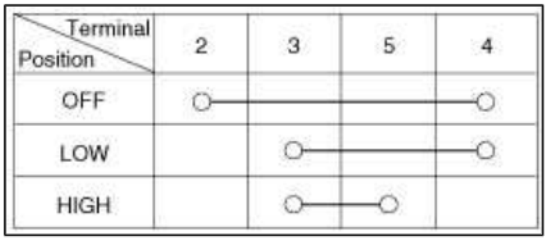

CAUTION

Common sources of contamination are insects, tree sap, and hot wax treatments used by some commercial car washes. If the blades are not wiping properly, clean both the window and the blades with a good cleaner or mild detergent, and rinse thoroughly with clean water.

Body Electrical System > Windshield Wiper/Washer > Front Washer Motor > Repair procedures

Inspection

cardiagn.com

Front Washer Motor

1. With the washer motor connected to the reservoir tank, fill the reservoir tank with washer fluid.

> NOTE
>
> Before filling the reservoir tank with water, check the filter for foreign material or contamination. if necessary, clean the filter.

2. Connect positive (+) battery cables to terminal 1 and negative (-) battery cables to terminal 2 respectively.
3. Check that the motor operates normally and the washer motor runs and water sprays from the front nozzles.
4. If they are abnormal, replace the washer motor.

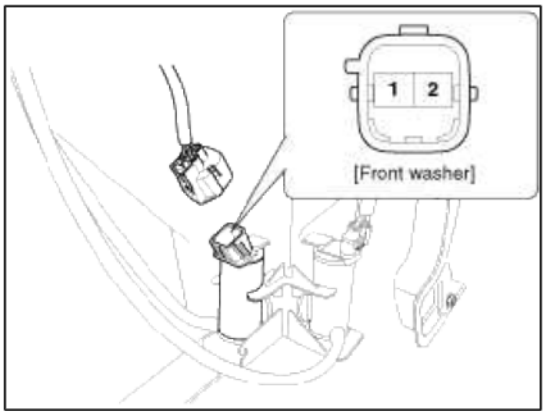

No	Description	No	Description
1	Ground	2	Windshield washer (+)

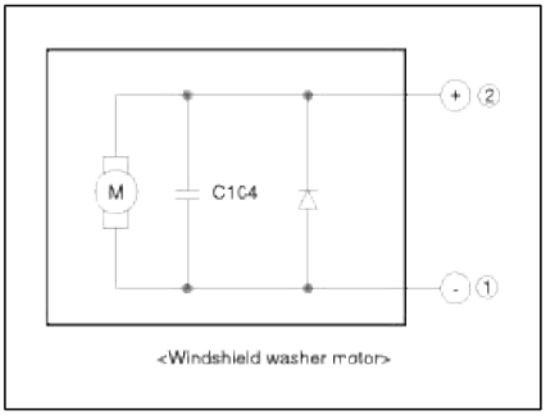

Removal

> CAUTION
>
> - When servicing the washer pump, be careful not to damage the washer pump seal.
> - Do not operate the washer pump before filling the washer reservoir.
>   Failure to do so could result in premature pump failure.

1. Disconnect the negative (-) battery terminal.
2. Remove the front bumper cover.
   (Refer to the BD group - "Front bumper")

cardiagn.com

3. Remove the front washer motor connector (A).

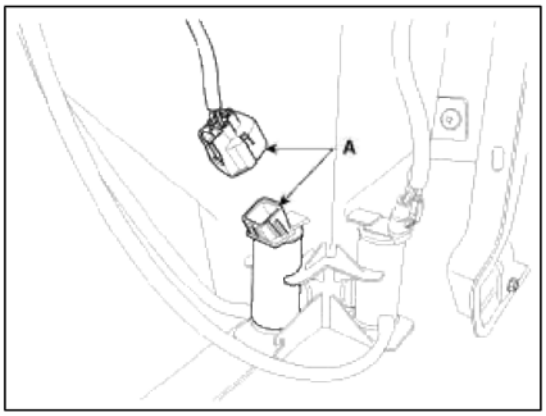

4. Remove the rear washer motor connector (A).

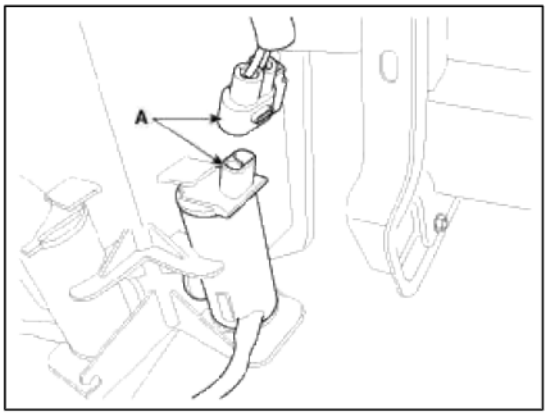

5. Remove the washer hose, the front washer motor and the rear washer motor.
6. Remove the washer reservoir (A) after removing 3 bolts.

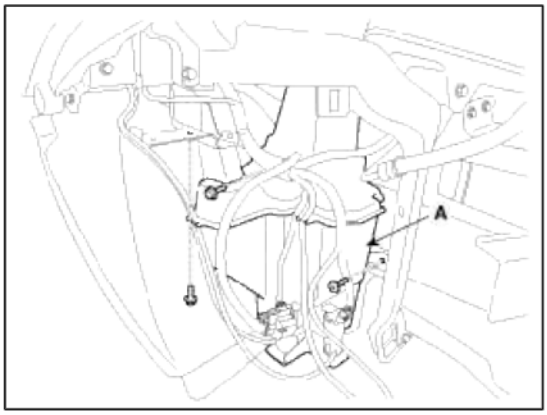

Installation

1. Reassemble the washer reservoir.

> NOTE
>
> Before installing the pump motor, check the filter for foreign material or contamination. if necessary, clean the filter into the pump motor.

2. Connect the washer motor connectors and washer hoses.
3. Install the front and rear washer motor.
4. Install the front and rear washer nozzle.

Tightening torque (Bolt)
4 ~ 6 N.m (0.4 ~ 0.6 kgf.m, 2.9 ~4.3 lbf.ft)

cardiagn.com

5. Install the front bumper cover.
6. Refill the washer fluid.

Body Electrical System > Windshield Wiper/Washer > Rain Sensor > Schematic Diagrams

Circuit Diagram

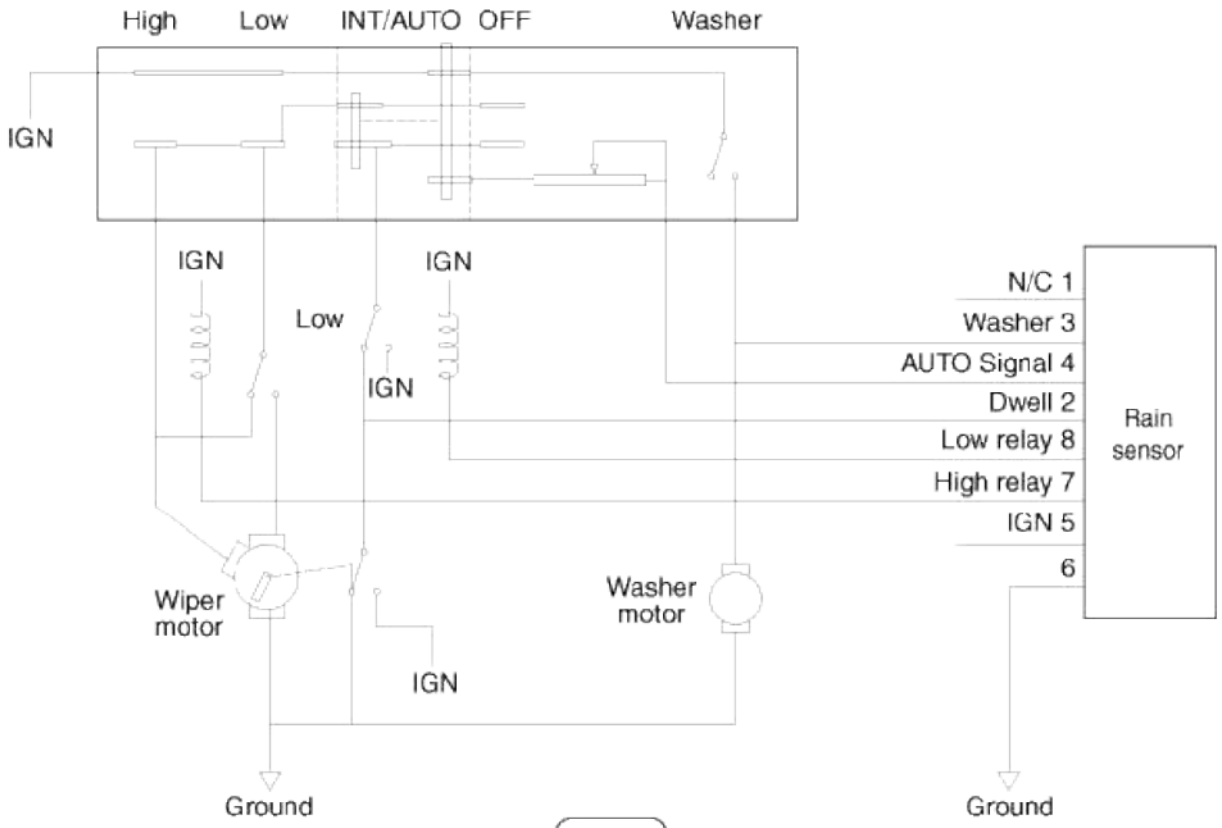

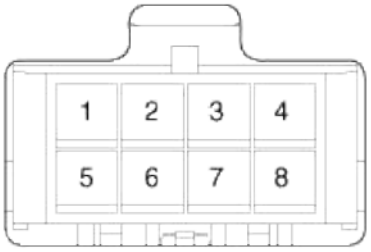

Position \ Terminal	2	8	7	4	3	5
Washer					○—○	
Low		○————				○
High			○————			○
OFF	○—○					
AUTO/INT	○—○			○————		○

Body Electrical System > Windshield Wiper/Washer > Rain Sensor > Description and Operation

Description

cardiagn.com

The Rain sensing windshield wiper system is a wiper system that, in addition to providing normal wiper functions off, mist, manual low speed, manual high speed, and wash, provides automatic control of automatic intermittent automatic low, and automatic high speeds.
When the ignition key is in the ON position, the rain sensor (A) will be activated.

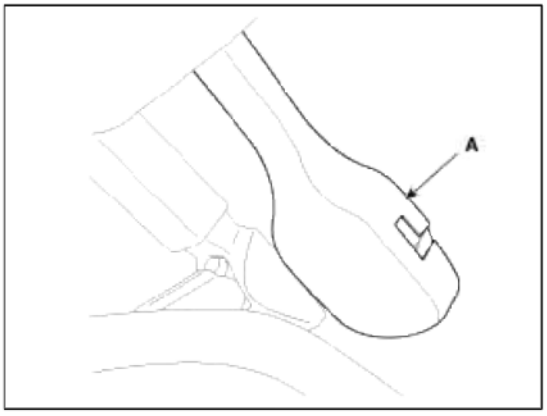

System Function

Basic Principle

Emitted Beam from luminosity diode is reflected entirely against the windshield exterior, and then turn into photo diode.
If there is water on the windshield exterior, beam separates optically, and the degree of remained beam is measured in the photo diode.
What there is water in the windshield, it means beam is not reflected all, so the degree of lost beam indicates the degree of glass surface wet.

NOTE

Rain sensor consist of two luminosity diode, two photo diode, optic fiber and coupling pad.

Operation Control

Wiper ECU transmits the signal as a rain sensor, and then the rain sensor perceives the rainwater to transmit to the wiping order wiper ECU, wiper ECU controls the wiper motor according to the signal.

Contact Influence

The rain sensor can malfunction due to following condition

- Contamination of the measurement surface.
- Air bubbles between the windshield and the coupling pad contact surface.
- The movement of coupling pad by vibration.
- Damaged wiper blade.

Operation Condition

In case that engine starts under wiper switch AUTO, rain sensor activates after once wiper operation to inform the driver that the system is under AUTO.

NOTE

In case that the rain sensor doesn't work or malfunction, it is needed manual wiper switch operation by the driver.

Body Electrical System > Windshield Wiper/Washer > Rain Sensor > Repair procedures

Inspection

Rain Sensing Wiper

1. In IGN2 ON state, if auto switch input (LIN communication) is ON then both wiper low relay and wiper high relay outputs are controlled by the rain sensor input signal.

cardiagn.com

2. If the wiper switch has been left in automatic mode with the vehicle ignition OFF, and then the vehicle ignition switch is turned on, a single wipe will be performed.

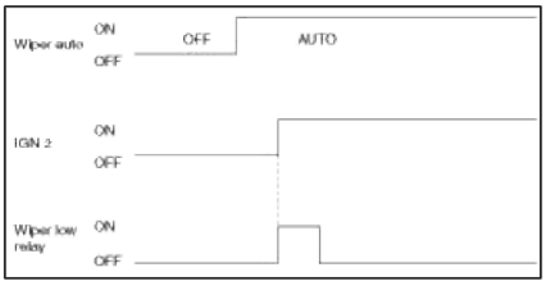

3. A single wipe will be performed whenever rain has been detected (Rain Detected signal from Rain sensor) and the wiper switch is moved to the AUTO position. But a single wipe will not be performed when the wiper switch is moved to the AUTO position and OFF signal is being received from Rain sensor. But if the wiper switch is moved to AUTO position for the first time since vehicle ignition switch is turned on then a single wipe will be performed regardless of Rain Detected or OFF signal.

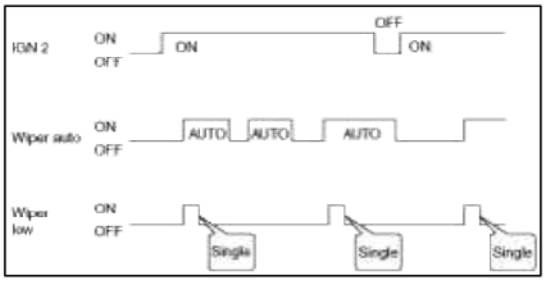

4. The drive may adjust the rain sensor performance by adjusting the sensitivity input. When in automatic mode, the BCM will perform a single wipe each time the sensitivity is adjusted upward to a more sensitive setting (downward more then one step). This single wipe will only be performed if Rain Detected signal is being received from the Rain sensor. If the sensitivity adjustment is adjusted upward more than one sensitivity, the BCM will only perform a single wipe unless the time between Increases is more than 2 seconds.

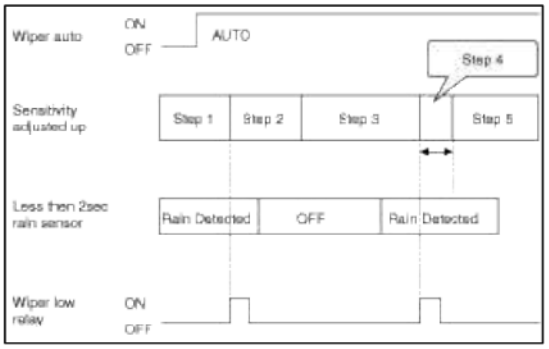

cardiagn.com

5. Fault strategy for the rain sensor

Rain Sensor Fault 1 - Internal Fault Detected

This failure is detected when the wiper is in automatic mode and the input faulty rain sensor from the rain sensor has a duty cycle corresponding to Fault 1. The confirmation delay for the failure is of 1 sec.

When this failure is detected, the wiper outputs are OFF and the wiper will also do a wipe in slow speed on the transition from sensitivity 3 to sensitivity 2 (Step 2 to 3) in order to signal the presence of this fault. If another sensitivity is set, the wiper won't make any additional wipe.

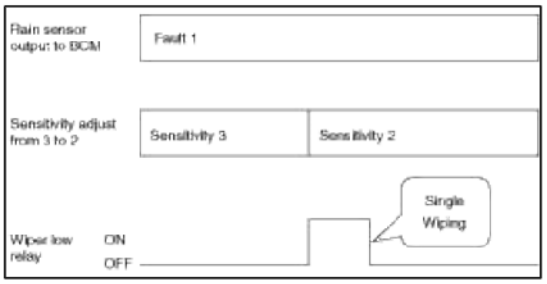

Rain Sensor Fault 2 - Glass Attachment Fault Detected

This failure is detected when the wiper is in automatic mode and the input faulty rain sensor from the rain sensor has a duty cycle corresponding to Fault 2. The confirmation delay for the failure is of 1 s.

When this failure is detected, the wiper outputs are OFF and the wiper will also do a wipe on the transition from sensitivity 4 to sensitivity 3 (Step 1 to 2) in order to signal the presence of this fault. If another sensitivity is set, the wiper won't make any additional wipe.

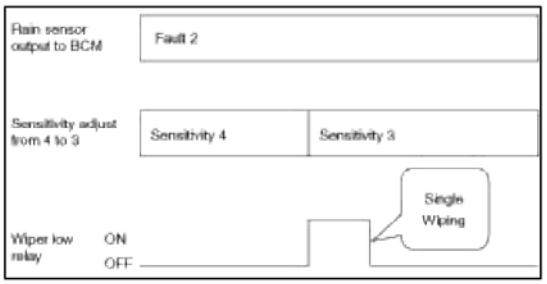

Rain Sensor Fault 3 - No Input Signal Present

This failure is detected when the wiper is in automatic mode and the input faulty rain sensor from the rain sensor has a duty cycle corresponding to Fault 3 or in case the duty cycle of the input faulty rain sensor is 0% or 100%. The confirmation delay for the failure is of 1 s.

When this failure is detected, the wiper outputs are OFF.

Removal

CAUTION

The rain sensor may not operate properly if contaminated. Protect the rain sensor surface by not removing the cover until installation time. The coupling pad on the rain sensor surface has adhesive strength. Take care when installing the sensor. If the sensor is separated from the windshield by force, the sensor or windshield may be damaged. Take care when removing the sensor.

cardiagn.com

1. Remove the rain sensor cover (A) first.
   Be careful not to damage the cover latch by applying excessive force. To remove the latch, pull aside the latch using the cover hole (B) with the little (-) screwdriver (C).

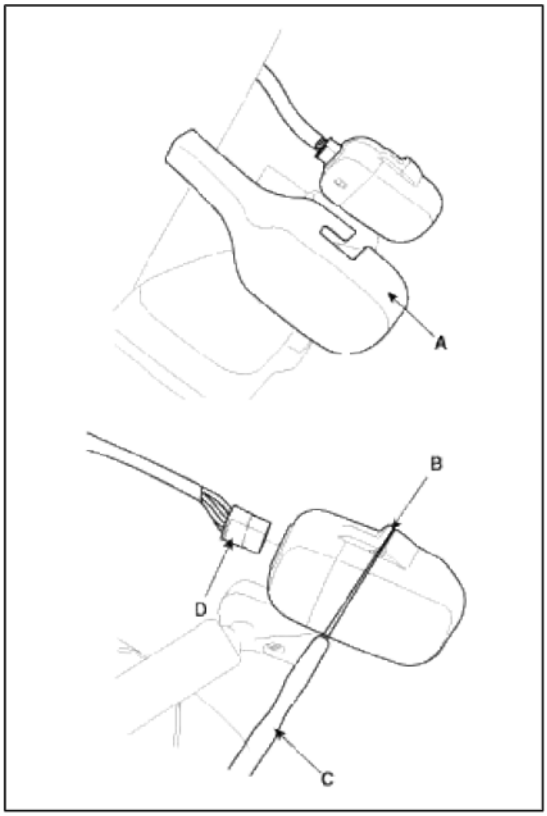

2. Remove the wiring harness connector (D) from sensor.
3. Rain sensor module is attached to the front windshield by glue replacing the front windshield, remove the rain sensor module from the existing front windshield and install on the new front windshield.

Installation

NOTE

- In case of the windshield with reflection layer which reflects the infrared rays in sensing field, remove the reflection layer from the rain sensor mounting position prior to installation.
- Avoid contamination of the sensor during installation.

1. Install the rain sensor bracket to the windshield glass using the tape.

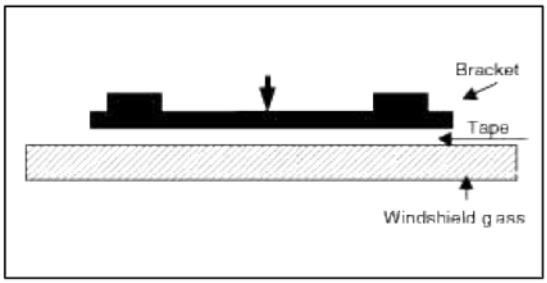

CAUTION

It is very important that the coupling pad pushes against the windshield completely to prevent bubbles from forming at the contact surface.

2. Connect the rain sensor connector, and then install the sensor cover.

Body Electrical System > Rear Wiper/Washer > Components and Components Location

cardiagn.com

Component Location

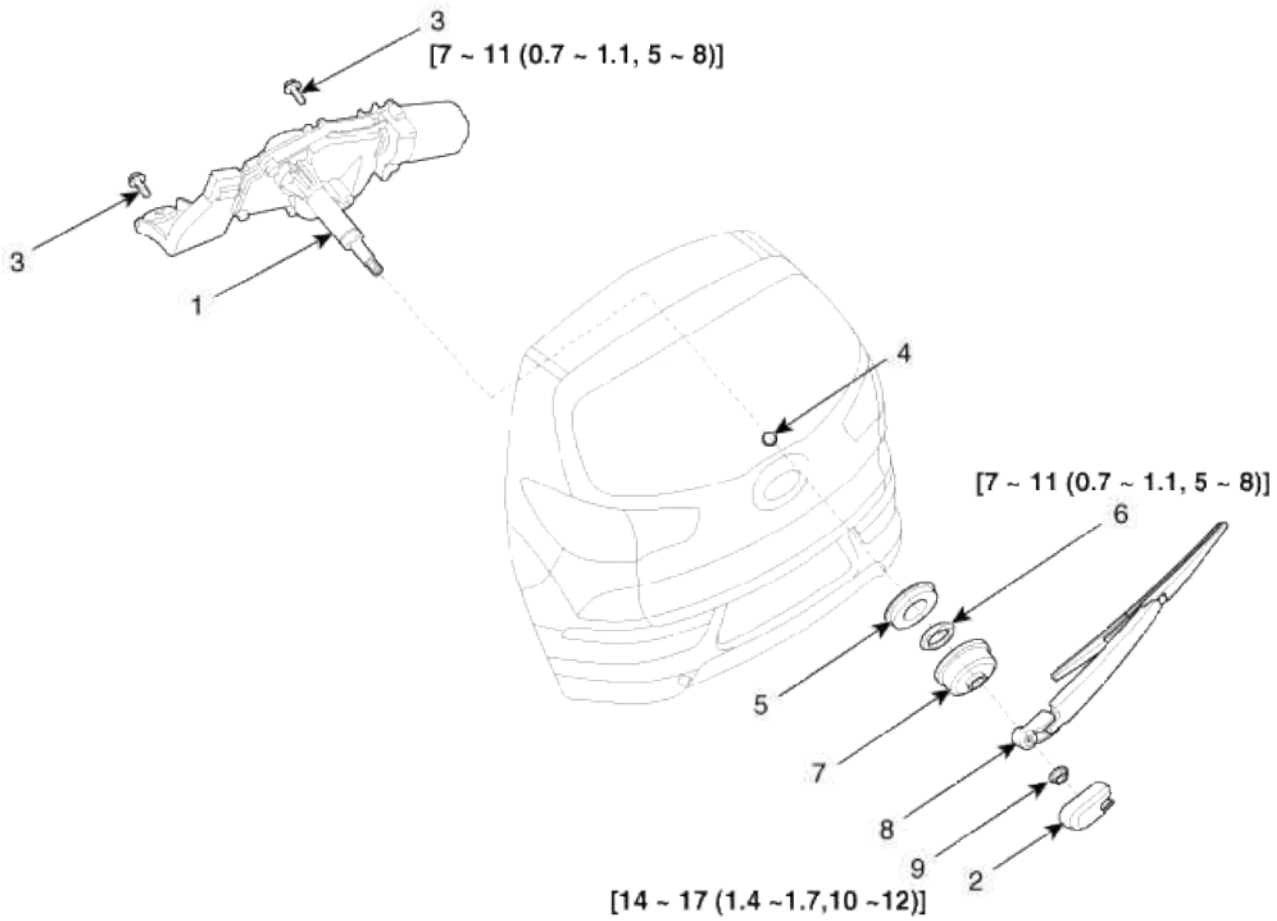

Torque : N.m (kgf.m, lbf.ft)

1. Rear wiper motor assembly 2. Head cap 3. Rear wiper motor mounting bolt 4. Rear wiper motor mounting hole 5. Pad cap	6. Hexagonal nut 7. Cover 8. Rear wiper arm & blade 9. Rear wiper arm nut

Body Electrical System > Rear Wiper/Washer > Rear Wiper Motor > Repair procedures

Inspection

Rear Wiper Motor

1. Remove the 4P connector from the rear wiper motor.
2. Connect battery positive (+) and negative (-) cables to terminals 2 and 1 respectively.

cardiagn.com

3. Check that the motor operates normally. Replace the motor if it operates abnormally.

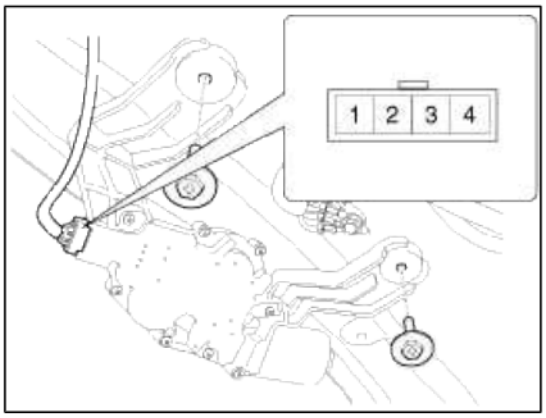

No	Description	No	Description
1	GND	3	Parking
2	Switch	4	IGN(+)

Automatic Stop Operation Check

1. Operate the motor at low speed using the stalk control.
2. Stop the motor operation anywhere except at the off position by disconnecting terminal 2.
3. Connect terminals 2 and 3.
4. Connect the positive (+) lead from the battery to terminal 4 and the negative (-) lead to terminal 1.
5. Check that the motor stops running at the off position.

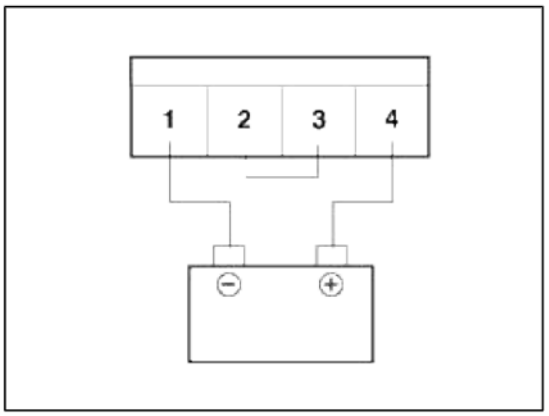

Removal

1. Detach the rear wiper head cap (A).

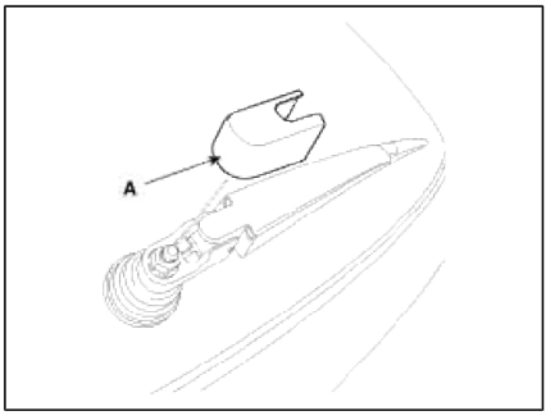

cardiagn.com

2. Remove the rear wiper arm & blade (A) after removing rear wiper arm nut (B).

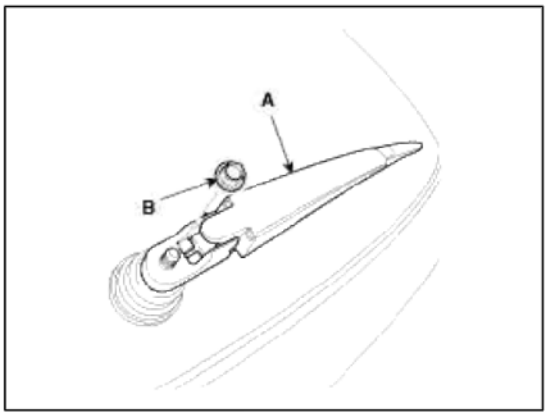

3. Remove the rear wiper cover (A) and HEX nut (B).

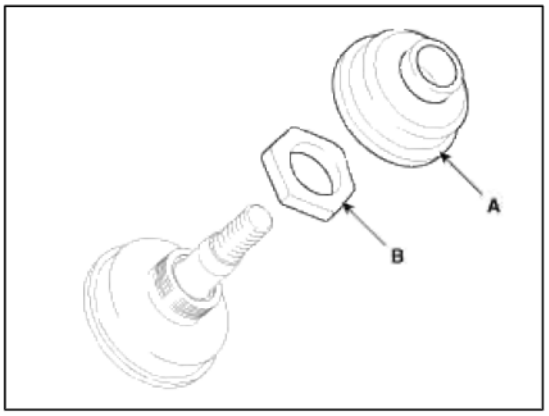

4. Remove the pad cap (A).

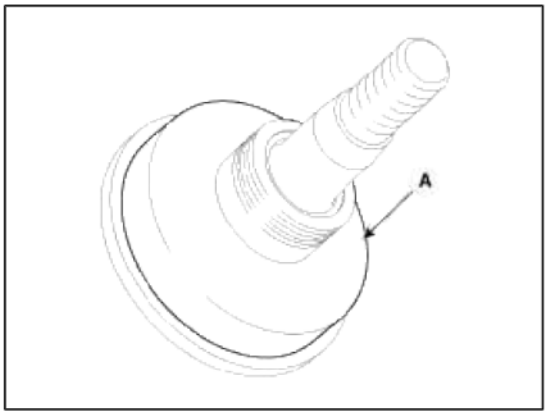

5. Open the tailgate then remove the tailgate trim.
   (Refer to the BD group - "Tailgate")
6. Disconnect the rear wiper motor connector (A) then remove the rear wiper motor (B) after loosening bolts (2EA).

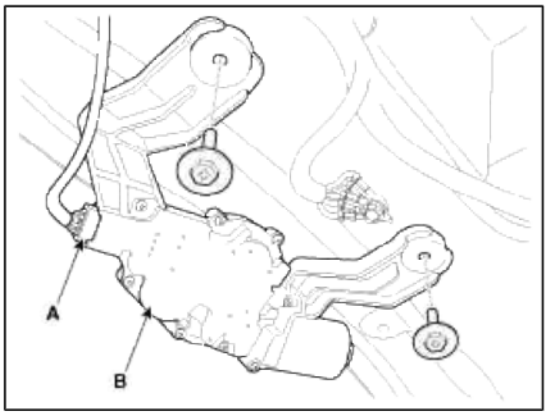

Installation

cardiagn.com

1. Install the rear wiper motor assembly.

Tightening torque Nut :
7 ~ 11 N.m (0.7 ~ 1.1 kgf.m, 5 ~ 8 lbf.ft)

NOTE

Do not reuse the rubber pad if it is damaged.

2. Install the tailgate trim.
   (Refer to the BD group - "Tailgate")
3. Insert the pad cap and HEX nut.

Tightening torque :
7 ~ 11 N.m (0.7 ~ 1.1 kgf.m, 5 ~ 8 lbf.ft)

4. Install the rear wiper arm and blade to align with black lowest rear defogger line (A).

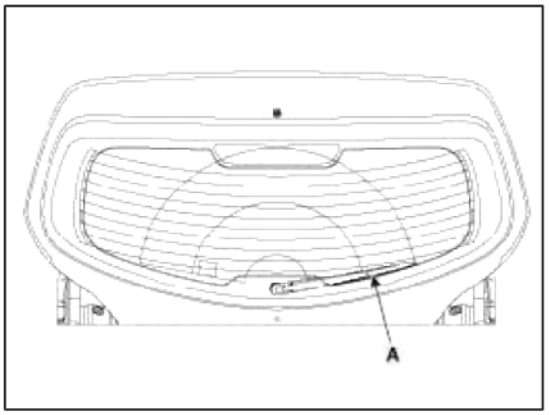

5. Install the rear wiper arm and rear wiper nut.

Tightening torque Nut :
14 ~ 17 N.m (1.4 ~ 1.7 kgf.m, 10 ~ 12 lbf.ft)

Body Electrical System > Rear Wiper/Washer > Rear Washer Switch > Repair procedures

Inspection

Check for continuity between the terminals while operating the wiper and washer switch. If it is not normal condition, replace wiper and washer switch.

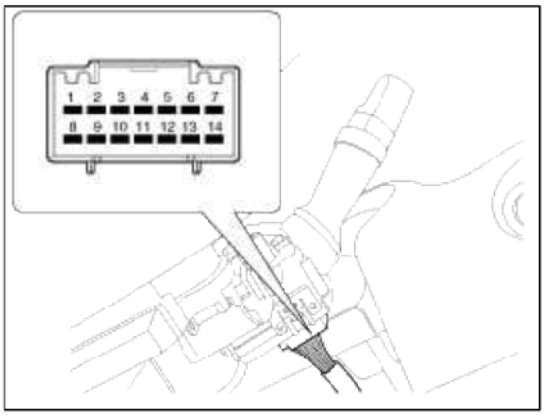

cardiagn.com

Rear Wiper Switch

Position \ Terminal	12	6	7
INT	○		○
OFF			
ON	○	○	

Rear Washer Switch

Position \ Terminal	12	13
OFF		
ON	○	○

Body Electrical System > Rear Wiper/Washer > Rear Washer Motor > Repair procedures

Inspection

1. With the washer motor connected to the reservoir tank, fill the reservoir tank with water.

> NOTE
>
> Before filling the reservoir tank with water, check the filter for foreign material or contamination. if necessary, clean the filter.

2. Remove the front bumper cover.
   (Refer to the BD group - "Front bumper")
3. Connect positive (+) and negative (-) battery cables to terminals 2 and 1 respectively to see that the washer motor runs and water is pumped.
4. Check that the motor operates normally.
   Replace the motor if it operates abnormally.

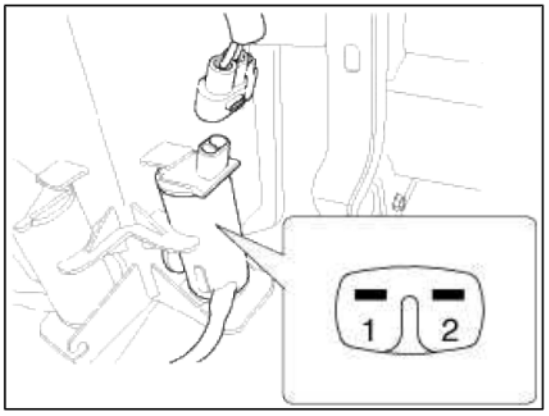

No	Description	No	Description
1	GND	2	Washer (+)

cardiagn.com

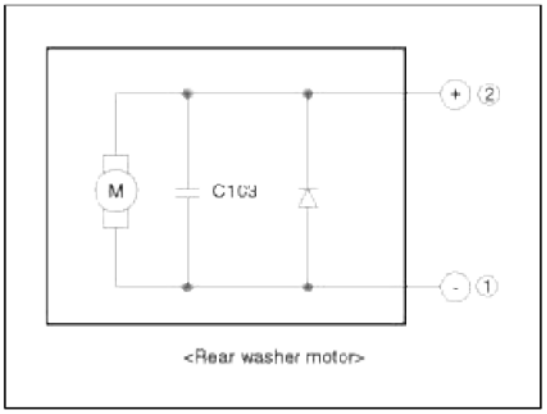

<Rear washer motor>

Body Electrical System > Electro chromic Inside Rear View Mirror > Components and Components Location

Components Location

cardiagn.com

[ECM]

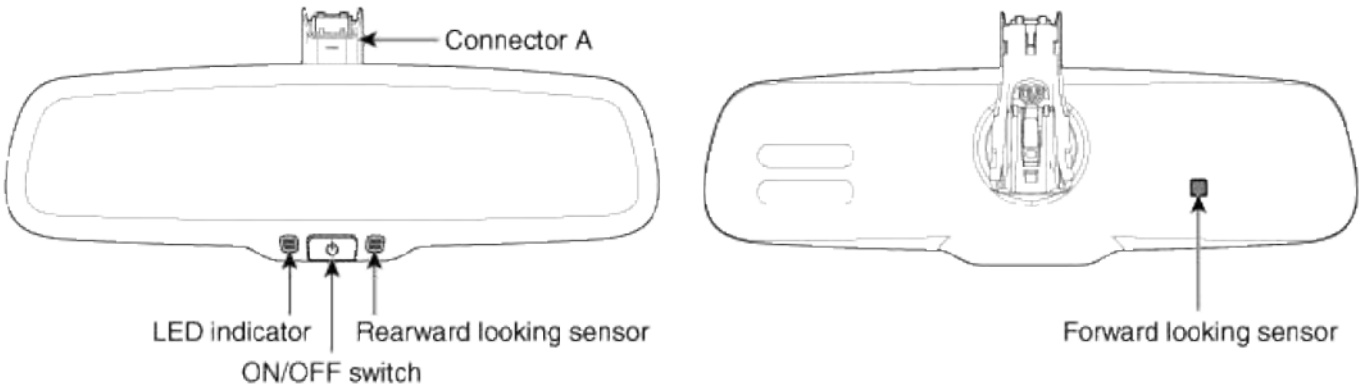

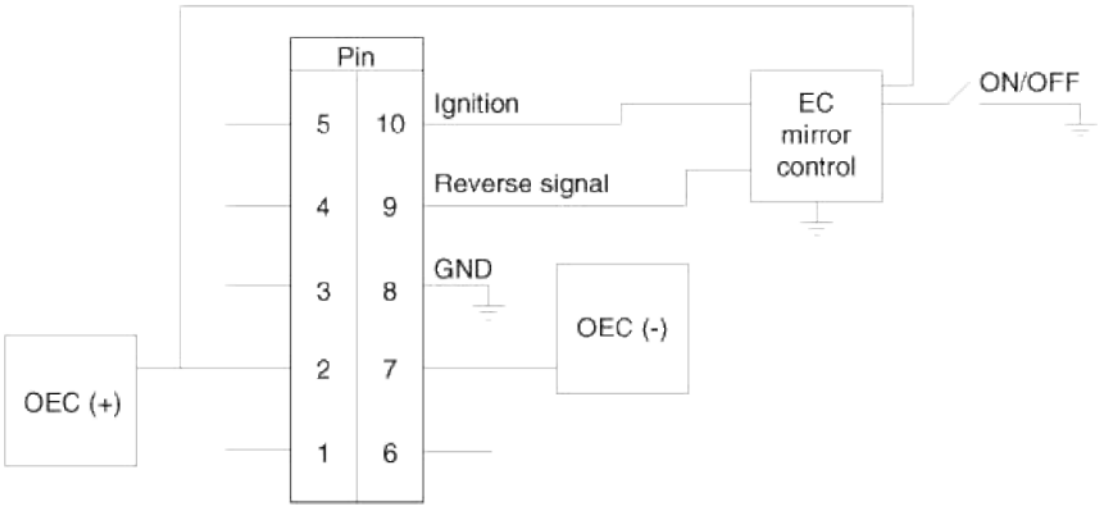

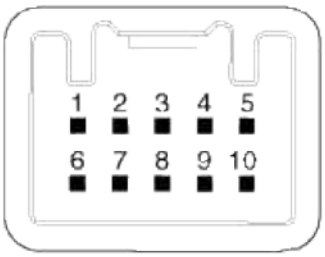

Pin	Description
1	-
2	OEC (+)
3	-
4	-
5	-
6	-
7	OEC (-)
8	GND
9	Reverse signal
10	IGN (+)

cardiagn.com

[Reverse Display]

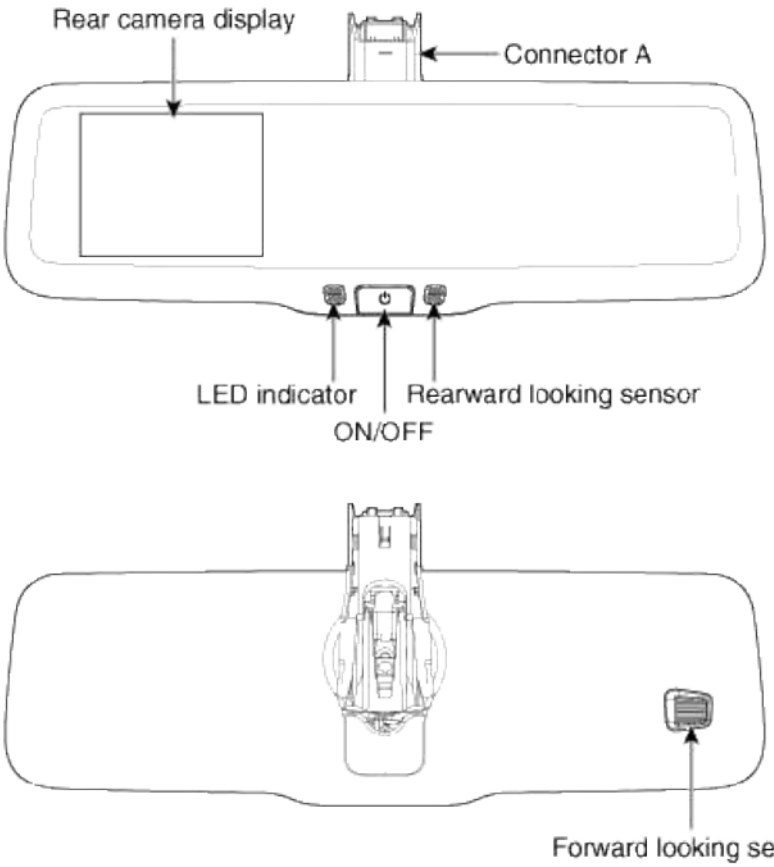

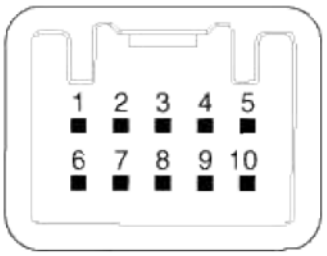

Pin	Description
1	Camera power (-)
2	OEC (+)
3	Camera power (+)
4	Video (+)
5	Video (-)
6	-
7	OEC (-)
8	GND
9	Reverse signal
10	IGN (+)

Body Electrical System > Electro chromic Inside Rear View Mirror > Description and Operation

Description

The ECM (Electro Chromatic inside rear view Mirror) is for dimming the reflecting light from a vehicle behind at night, in order the user not to be dazzled by the light. The forward facing sensor detects brightness of the surroundings, while the rearward looking sensor the strength of the reflecting light so that adjusts the reflexibility of the mirror in the range of 7~85%. But, when the reverse gear is engaged, it stops functioning.

1. The forward facing sensor sees if the brightness of the surroundings is low enough for the mirror to operate its function.
2. The rearward looking sensor detects glaring of the reflecting light from a vehicle behind.

cardiagn.com

3. The ECM is darkened to the level as determined by the rearward looking sensor. When the glaring is no longer detected, the mirror stops functioning.
   1. LED indicator
   2. ON/OFF Switch
   3. Rearward looking sensor
   4. Forward facing sensor

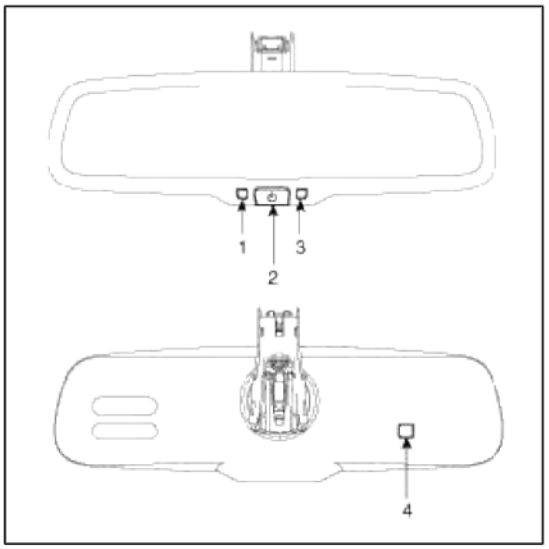

Reverse Display Room Mirror

Description

The back view camera system, located on the tailgate, provides a video image (which appears in the rear view mirror) of the area behind the vehicle. It adds assistance to the driver while reversing or reverse parking the vehicle. To use the back view camera system, place the transmission in R (Reverse); an image will display on the left portion of the rear view mirror. The area displayed on the screen may vary according to the vehicle orientation and/or road condition.

1. Rear camera display
2. Rearward looking sensor
3. Power button
4. Forward facing sensor

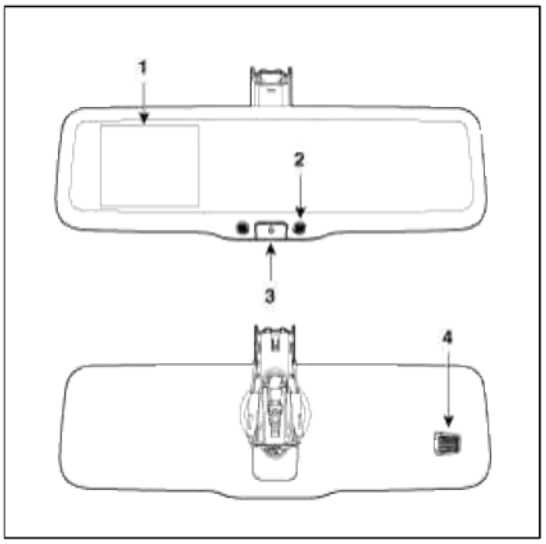

Use the side mirrors and back view mirror to get better coverage on both sides and rear of the vehicle. When shifting out of reverse and into any other gear, the image will remain on for a few seconds before it shuts off to assist in parking or trailer hookup.

The camera lens for the back view camera system is located on the tailgate, near the tailgate handle. Keep the lens clean so the video image remains clear and undistorted. Clean the lens with a soft, lint-free cloth and non-abrasive

cardiagn.com

cleaner.

NOTE

If the back view camera system image is not clear or seems distorted, it may be covered with water droplets, snow, mud or any other substance. If this occurs, clean the camera lens before using the reverse camera system.

WARNING

The back view camera system is a reverse aid supplement device that still requires the driver to use it in conjunction with the back view mirror and the side mirrors for maximum coverage.

WARNING

Objects that are close to either corner of the bumper or under the bumper, might not be seen on the screen due to the limited coverage of the back view camera system.

WARNING

Backup as slow as possible since higher speeds might limit your reaction time to stop the vehicle.

WARNING

Do not use the back view camera system with the tailgate open.

If the back end of the vehicle is hit or damaged, then check with your authorized dealer to have your rear video system checked for proper coverage and operation.

Nighttime and dark area use

At night time or in dark areas, the back view camera system relies on the reverse lamp lighting to produce an image. Therefore it is necessary that both reverse lamps are operating in order to get a clear image in the dark. If either of the lamps are not operating, stop using the back view camera system, at least in the dark, until the lamp(s) are replaced and functioning.

Automatic-dimming Function

To protect your vision during nighttime driving, your mirror will automatically dim upon detecting glare from the vehicles traveling behind you. The auto-dimming function can be controlled by the Dimming ON/OFF Button :

1. Pressing and holding the Feature Control button for more than 3 but less than 6 seconds turns the auto-dimming function OFF which is indicated by the green Status Indicator LED turning off.
2. Pressing and holding the Feature Control button again for more than 3 but less than 6 seconds turns the auto-dimming function ON which is indicated by the green Status Indicator LED turning on.

NOTE

The mirror defaults to the "ON" position each time the vehicle is started.

Body Electrical System > Electro chromic Inside Rear View Mirror > Repair procedures

Inspection

Check it by the procedure below to see if the function of the ECM is normal.

1. Turn the ignition key to the "ON" position.
2. Cover the forward facing sensor.
3. Head a light to the rearward looking sensor.

cardiagn.com

4. The ECM should be darkened as soon as the rearward looking sensor detects the light.

> NOTE
>
> If this test is performed in daytime, the ECM may be darkened as soon as the forward facing sensor is covered.

5. When the reverse gear is engaged, the ECM should not be darkened.
   When heading lights to both the forward facing and rearward looking sensors, the ECM should not be darkened.

Removal

1. Remove the mirror wiring cover (A).

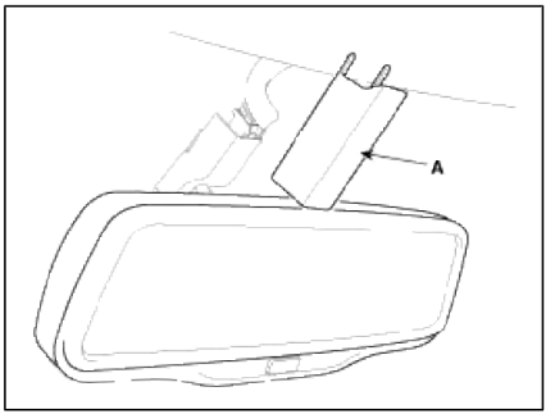

2. Remove the mirror mounting screw (A) and connector (B).

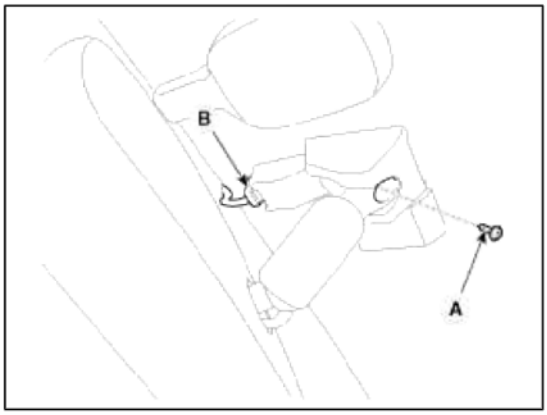

3. Remove the mirror (A) pulling up in the arrow direction.

> NOTE
>
> Make sure not to damage the mounting bracket (B) when removing the mirror.

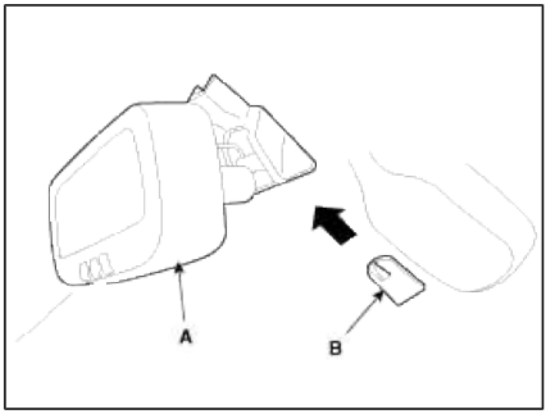

Installation

cardiagn.com

1. Install the mirror making sure the mounting bracket not to be damaged.
2. Install the mirror wiring cover after reconnecting the connector and tightening the screw.

Body Electrical System > Hands Free System > Components and Components Location

Components

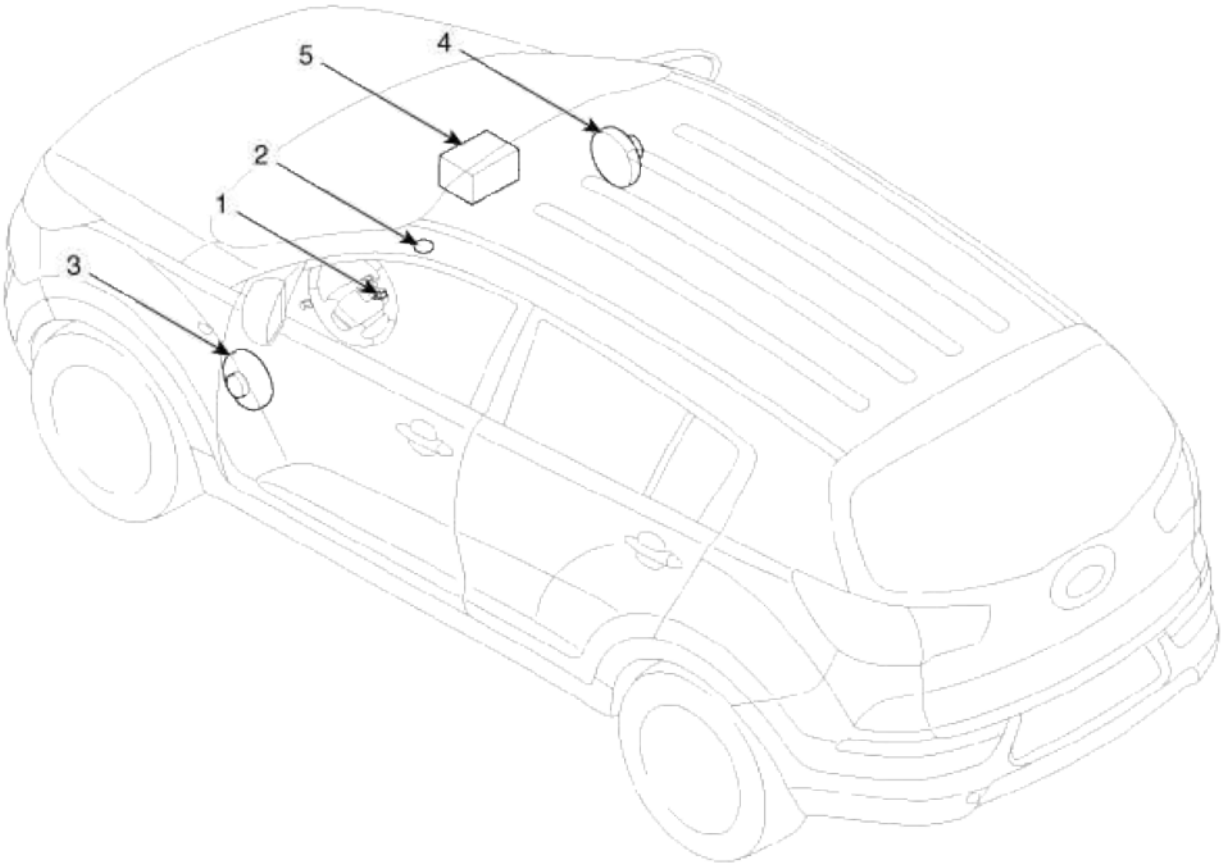

1. Hands free call switch 2. Mic 3. Front left speaker	4. Front right speaker 5. Audio head unit (hands free control)

There is no hands free jack. This system supports Bluetooth(wireless system).

Body Electrical System > Hands Free System > Description and Operation

Function

Bluetooth Audio System

Bluetooth

You can use a Bluetooth device in your car to make a hands-free phone call or to stream music onto your in-car speakers (via this Head Unit). This Head Unit supports HFP, A2DP and AVRCP connection.

cardiagn.com

Advanced Audio Distribution Profile (A2DP)

This profile defines how high quality audio(stereo or mono) can be streamed from one device to another over a Bluetooth connection. For example: music streamed from a mobile phone to a wireless headset or caraudio.

Audio/Video Remote Control Profile (AVRCP)

This profile is designed to provide a standard interface to control TVs, Hi-fi equipment,etc. to allow a single remote control (or other device) to control all of the A/V equipment to which a user has access. It may be used in concert with A2DP or VDP.

Hands-Free Profile (HFP)

This is commonly used to allow car handsfree kits to communicate with mobile phones in the car.

Notes for mobile phones

Some functions (e.g. starting of speech recognition) are not supported by all mobile phones. We cannot guarantee that all functions described will be supported by all mobile phones with Bluetooth.

New device

This function allows you to add a new phone to the Head Units Bluetooth Device List. Maximum of 5 devices can be added to the list. If the list is full, the oldest device will be replaced by the newly added Bluetooth device, based on last pairing date.

Voice Recognition Activation

- The voice recognition engine contained in the Bluetooth System can be activated in the following conditions :
  - Button Activation
  The voice recognition system will be active when the button is pressed and after the sound of a Beep.
  - Active Listening
  The voice recognition system will be active for a period of time when the Voice Recognition system has asked for a customer response.
- The system can recognize single digits from zero to nine while number greater than ten will not be recognized.
- If the command is not recognized, the system will announce "Pardon" or No input voice signal from microphone. (No response)
- The system shall cancel voice recognition mode in following cases : When pressing the button and saying cancel following the beep. When not making a call and pressing the button. When voice recognition has failed 3 consecutive times.
- At any time if you say "help", the system will announce what commands are available.

Menu tree

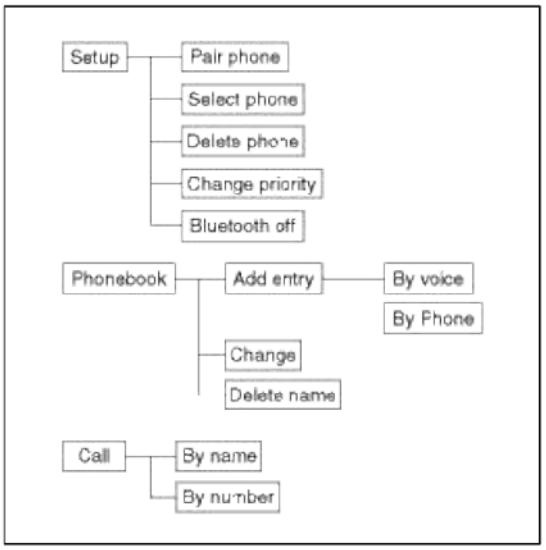

Body Electrical System > Hands Free System > Hands Free Switch > Components and Components Location

cardiagn.com

Component Location

[Audio + Cruise + Bluetooth]

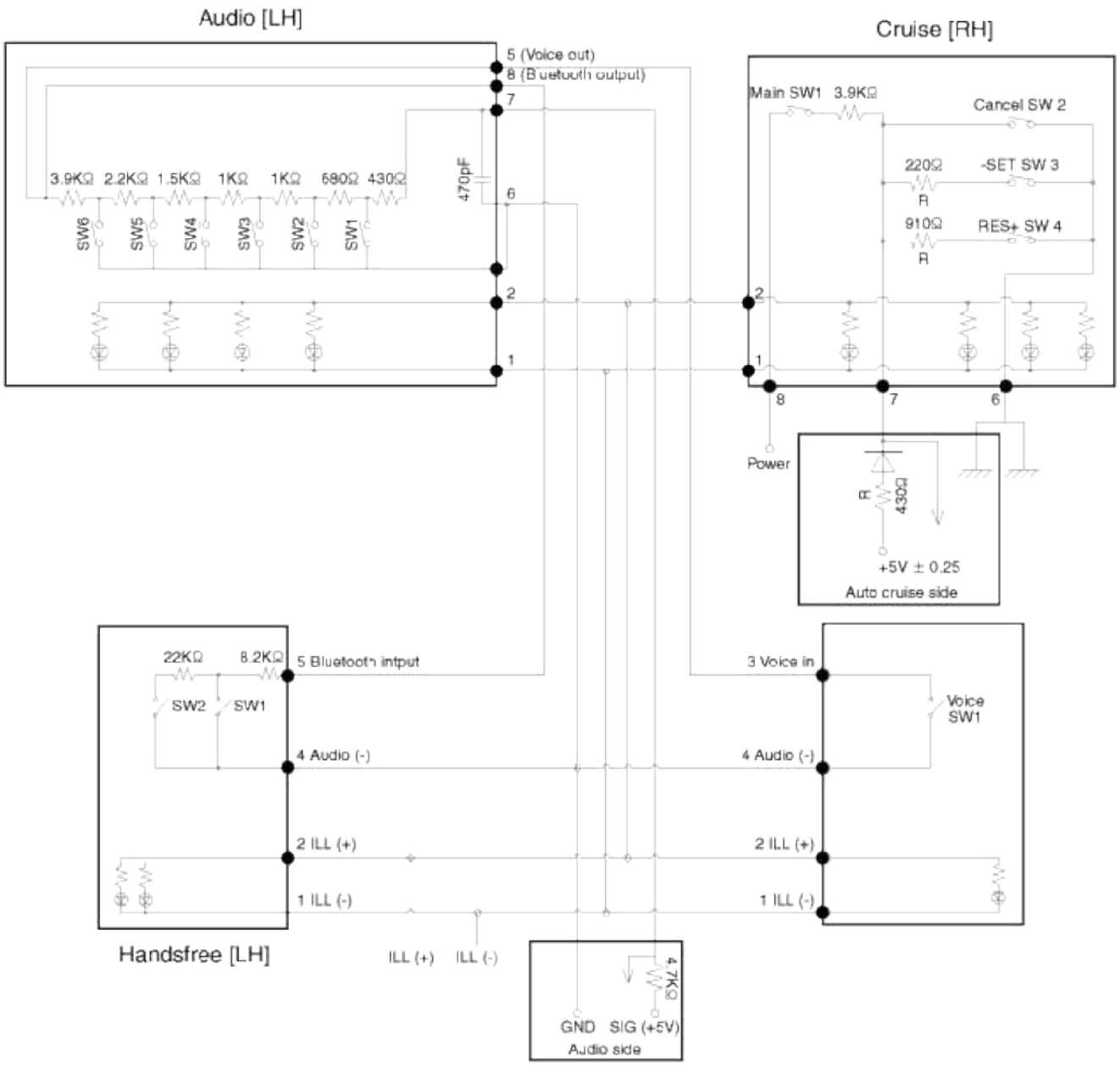

cardiagn.com

[Audio + Cruise + Bluetooth]

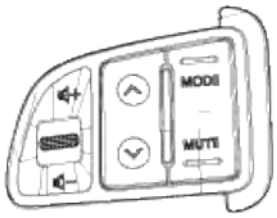

Audio (LH)		Cruise (RH)	
		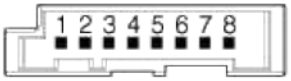	
Pin	Description	Pin	Description
1	Illumination (-)	1	Illumination (-)
2	Illumination (+)	2	Illumination (+)
3	-	3	-
4	-	4	-
5	-	5	-
6	Audio (-)	6	ACC GND
7	Audio (+)	7	ACC signal
8	Bluetooth output	8	ACC power

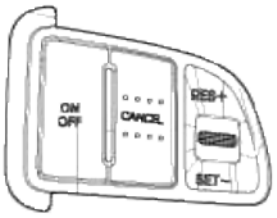

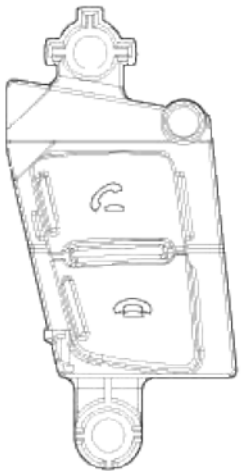

Bluetooth (LH)		Voice (RH)	
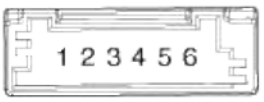		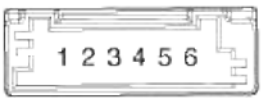	
Pin	Description	Pin	Description
1	Illumination (-)	1	Illumination (-)
2	Illumination (+)	2	Illumination (+)
3	-	3	Voice input
4	Audio (-)	4	Audio (-)
5	Bluetooth input	5	-
6	-	6	-



cardiagn.com

Body Electrical System > Hands Free System > Hands Free Switch > Repair procedures

Inspection

1. Check the handsfree remote control switch for resistance between No.3 and No.4 terminals in each switch position.

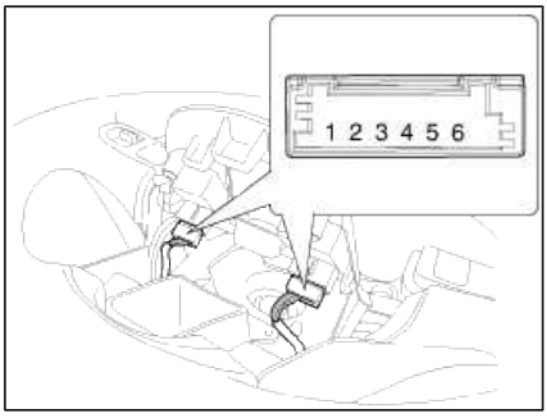

[Call + Hang Up]

Switch	Connector terminal	Resistance (±5%)	Output voltage (±0.22V)
Call	3 - 4 (Left)	40.91 kΩ	4V
Hang up	3 - 4 (Left)	18.91 kΩ	4.5V

[Voice]

Switch	Connector terminal	Resistance (±5%)	Output voltage (±0.22V)
Voice	4 - 5 (Right)	10.71 kΩ	3.5V

Removal

1. Remove the driver airbag module.
   (Refer to the RT group - "Airbag module")
2. Remove the steering wheel.
   (Refer to the ST group - "Steering column and shaft")
3. Remove the steering lower bezel (A) after loosening 2 screws and connector (B).

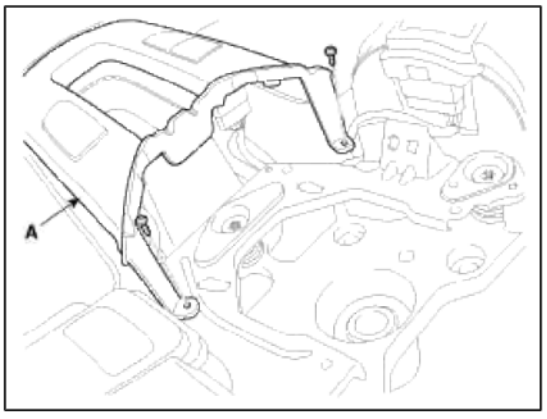

cardiagn.com

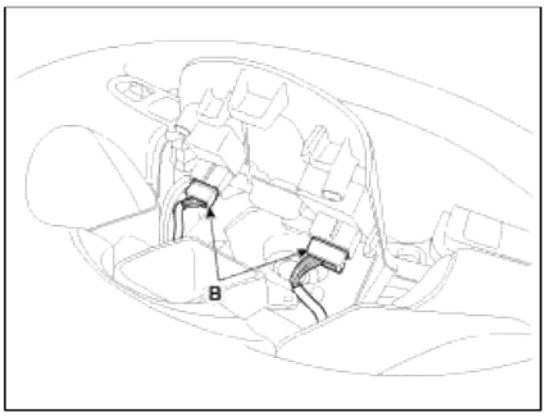

4. Remove the handsfree remote control switch.

Installation

1. Install the handsfree remote switch to the steering wheel bezel.
2. Install the steering wheel and bezel.
3. Reconnect the handsfree remote control switch connector and airbag connectors.

> NOTE
>
> Make sure that the switch connector is plugged in properly.

4. Install the driver airbag module.

Body Electrical System > Hands Free System > Hands Free Mic > Repair procedures

Inspection

1. Disconnect the negative(-) battery terminal.
2. Remove the roof trim.
   (Refer to the BD group - "Roof trim")
3. Remove the handsfree mic (A) after loosening the connector and screws (3EA) from roof top.

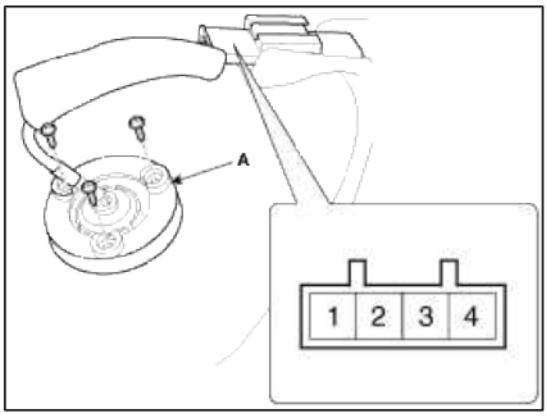

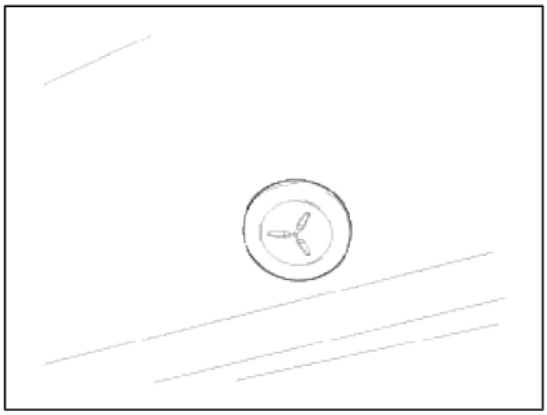

cardiagn.com

4. Check the continuity of Mic between terminals.

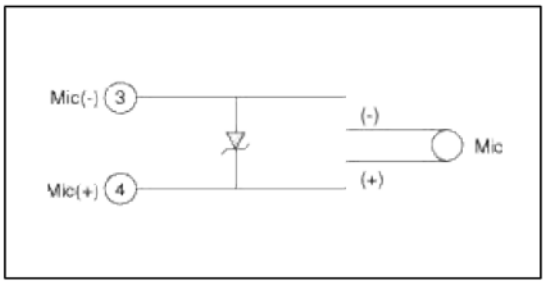

Body Electrical System > Hands Free System > Troubleshooting

Troubleshooting

Problem	Possible cause	Solution
Not pairing	Bluetooth device of Car is not discoverable mode	Enter Bluetooth pairing (searching) mode
	User's phone is Bluetooth off mode	User's phone set Bluetooth on
	Making an attempt pairing others Bluetooth system	Check Bluetooth device name and address (12 word) to attempt paring Ex) 000B24FFF123
	Pass key error	Input the passkey displayed on the audio screen into the phone.
	5 phones have already been registered.	Delete paired phone list
	Bluetooth system cannot communicate with the phone.	Refer to IOP sheet IOP : Inter-operability
Not connection	User's phone or Bluetooth device of Car does not register Bluetooth device to connect	Retry pairing
	Bluetooth system cannot communicate with the phone.	Waiting 1minute then Retry connection or phone power off/on. Refer to IOP sheet
Not redial	User phone system issue	Push the 2 times Send button
Not accept call	User phone system issue	Refer to IOP sheet
Not dialing	User's phone playing other menu (internet, mp3, game, etc..)	Stop other menu then set normal mode
	Bluetooth system cannot communicate with the phone	Refer to IOP sheet

Body Electrical System > Panoramaroof > Components and Components Location

Component Location

cardiagn.com

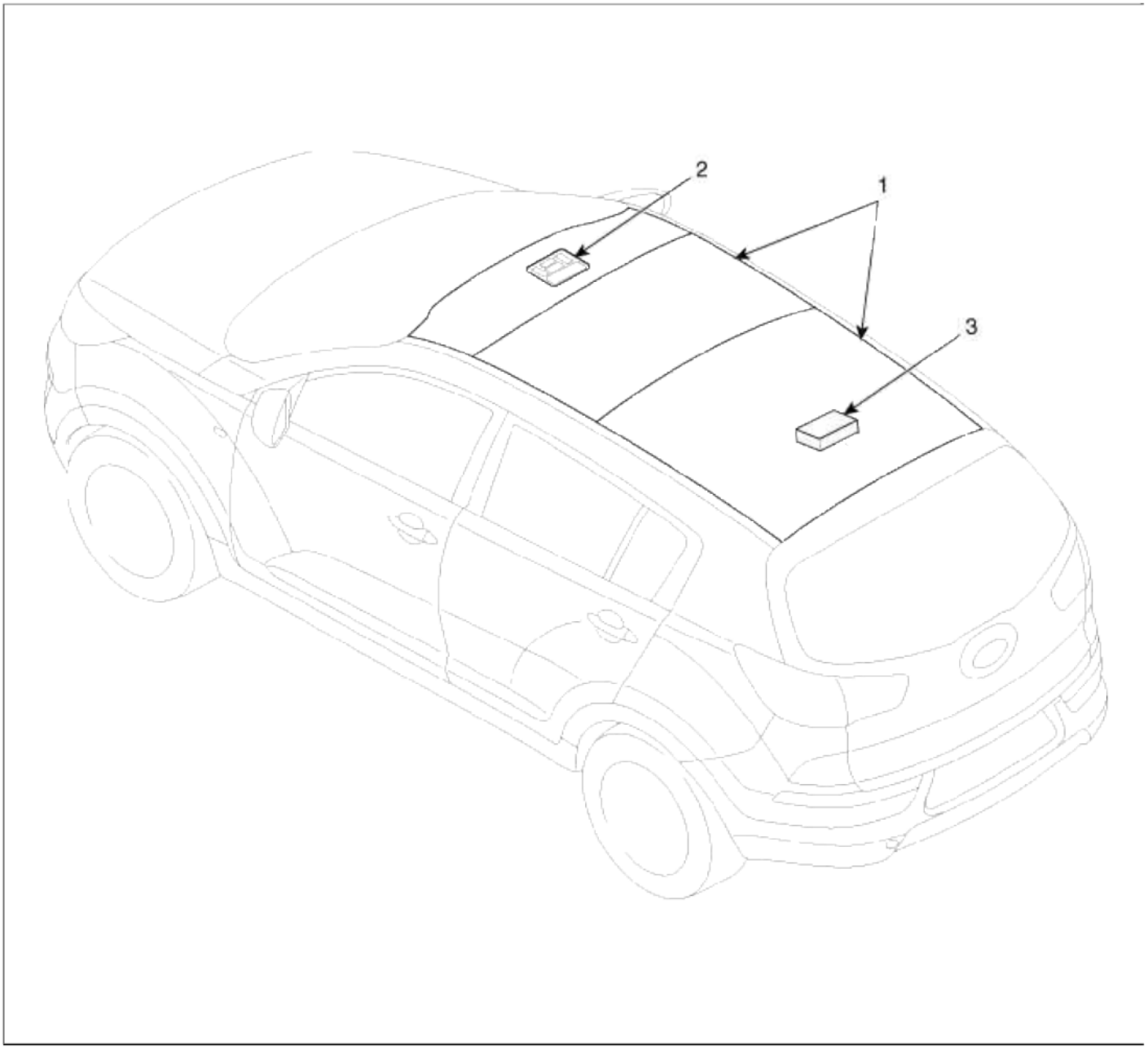

1. Panoramaroof 2. Panoramaroof switch	3. Panoramaroof motor & controller

Components

cardiagn.com

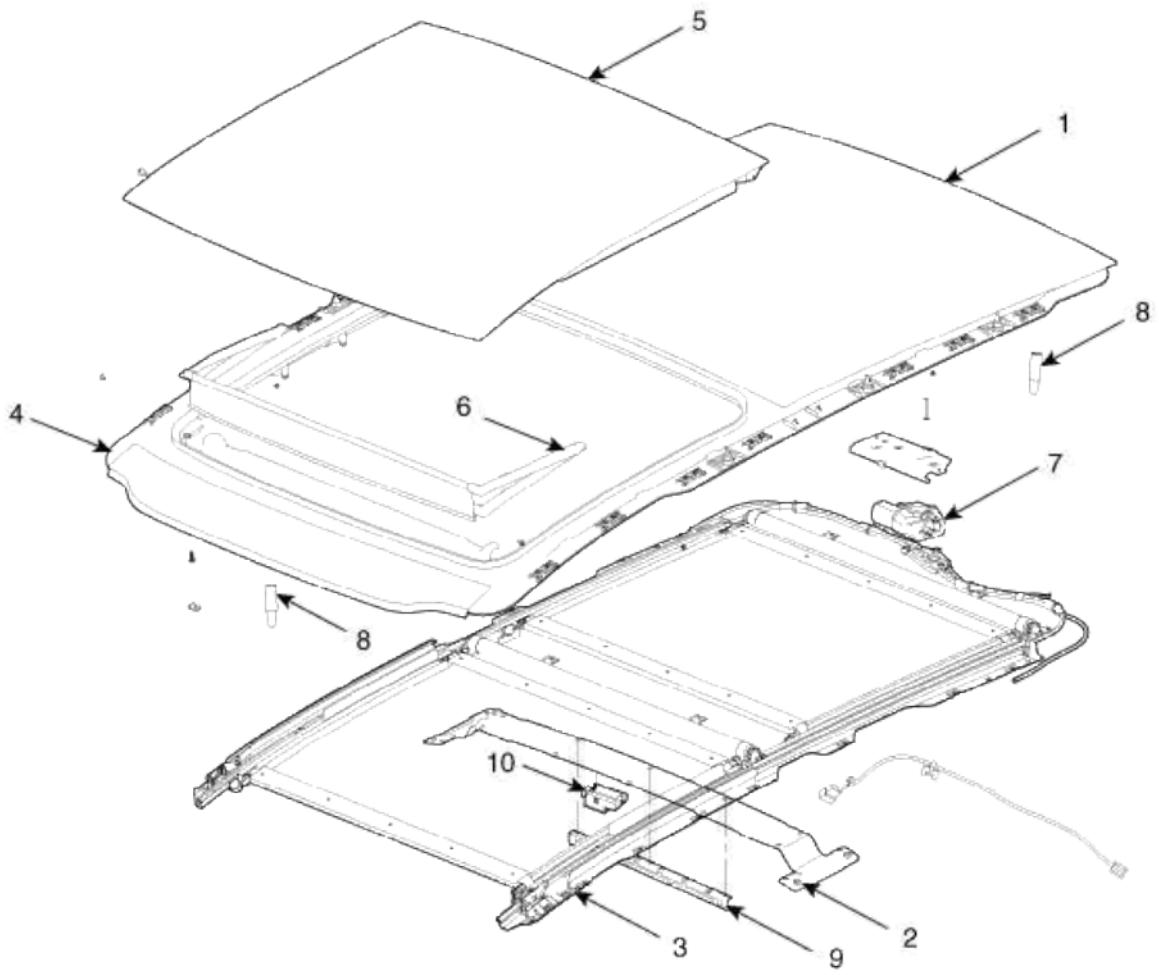

1. Panoramaroof frame assembly 2. Panoramaroof impact cross member assembly 3. Panoramaroof mechanism assembly 4. Panoramaroof front glass panel assembly 5. Panoramaroof moving glass panel assembly	6. Panoramaroof deflector assembly 7. Panoramaroof motor assembly 8. Panoramaroof center device 9. Impact bracket 10. Warning controller assembly

Body Electrical System > Panoramaroof > Schematic Diagrams

Circuit Diagram (1)

cardiagn.com

[Motor]

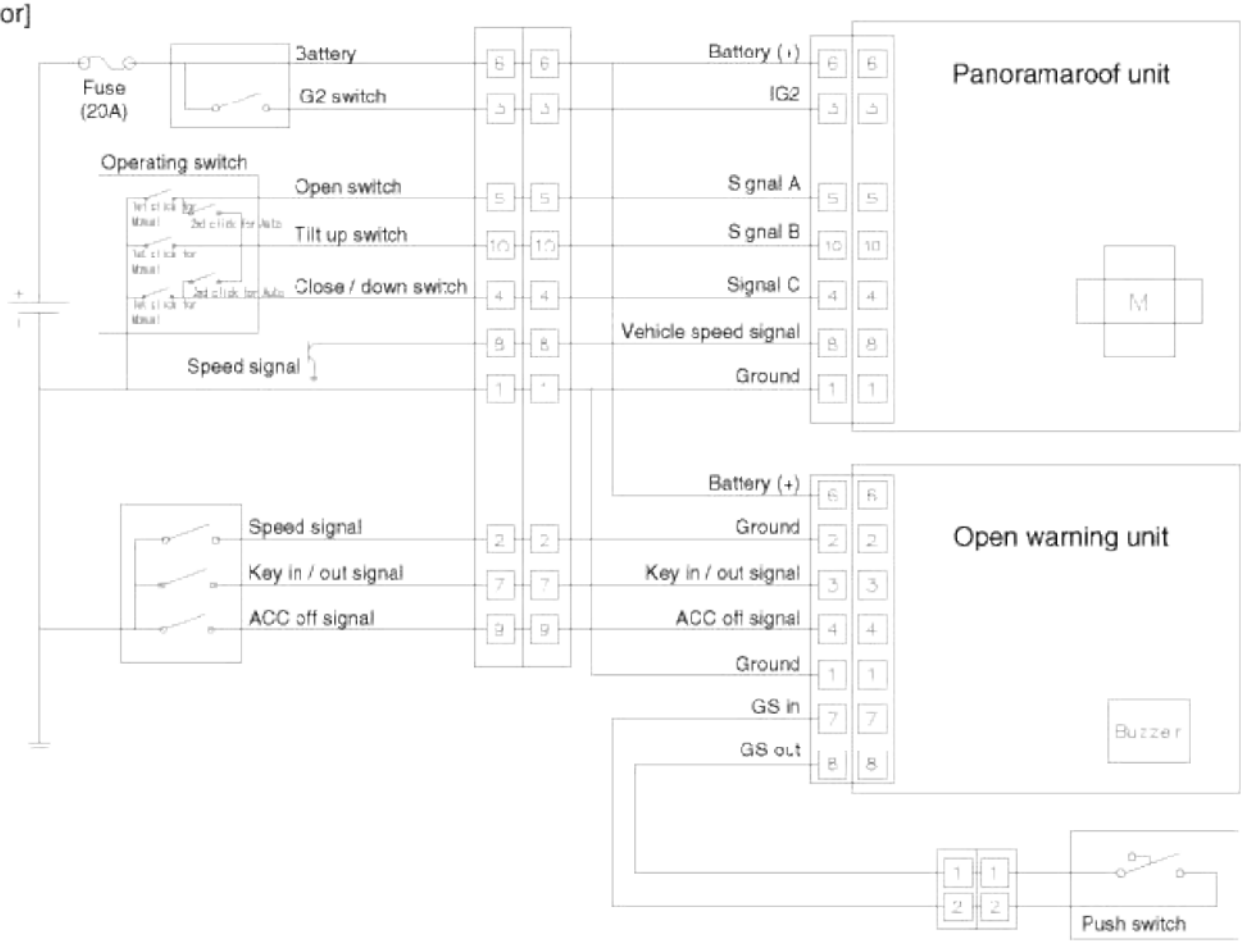

[Connector]

Pin No.	Motor connector	Colsole connector
1	Ground	Ground
2	-	Door signal
3	IG2	IG2
4	Signal C	Signal C
5	Signal A	Signal A
6	Battery (+)	Battery (+)
7	-	Key signal
8	Vehicle speed	Vehicle speed
9	-	ACC signal
10	Signal B	Signal B

[Connector configuration]

	Motor connector	Console connector
Configuration		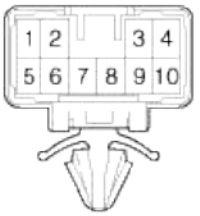

Circuit Diagram (2)

cardiagn.com

[Panoramaroof Switch]

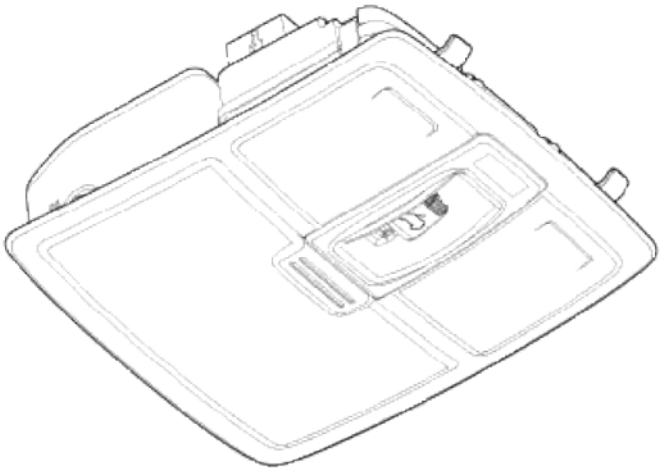

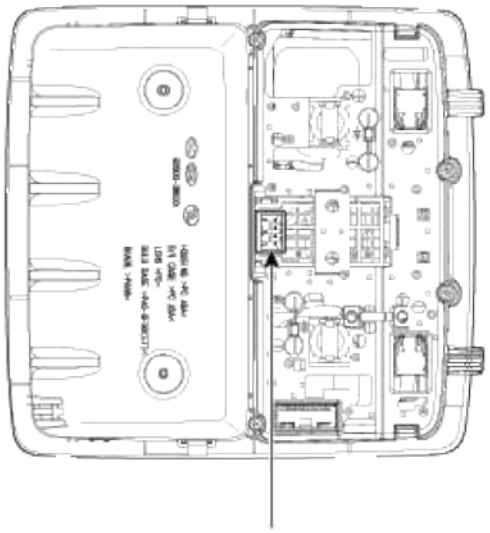

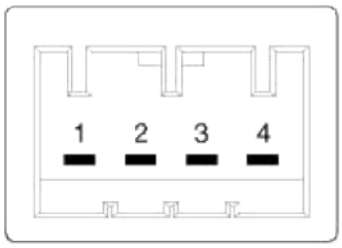

[Operation logic & pin information]

Pin No.	Description	Switch operation					
		Manual/ Close	Manual/ Open	Automatic/ Open	Manual/ Tilt down	Manual/ Tilt up	Tilt up/ Close
1	Signal A	OFF	ON	ON	OFF	OFF	OFF
2	Ground	ON	ON	ON	ON	ON	ON
3	Signal B	OFF	OFF	ON	OFF	ON	ON
4	Signal C	ON	OFF	OFF	ON	OFF	ON

Body Electrical System > Panoramaroof > Panoramaroof Switch > Repair procedures

Inspection

1. Disconnect the negative (-) battery terminal.
2. Remove the overhead console lamp assembly.
   (Refer to the BD group - "Roof trim")

cardiagn.com

3. Check for continuity between the terminals. If the continuity is not as specified, replace the sunroof switch.

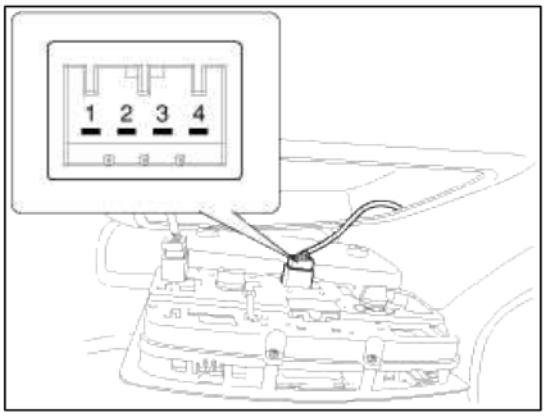

Position \ Terminal	1	2	3	4
Manual close		○		○
Manual open	○	○		
Auto open	○	○	○	
Manual tilt down		○		○
Manual tilt up		○	○	
Auto close		○	○	○

Body Electrical System > Panoramaroof > Panoramaroof Motor > Repair procedures

Replacement

1. Disconnect the negative (-) battery terminal.
2. Remove the roof trim.
   (Refer to the BD group - "Roof trim")
3. Remove the panoramaroof motor (A) after disconnecting the connector (10 Pin).

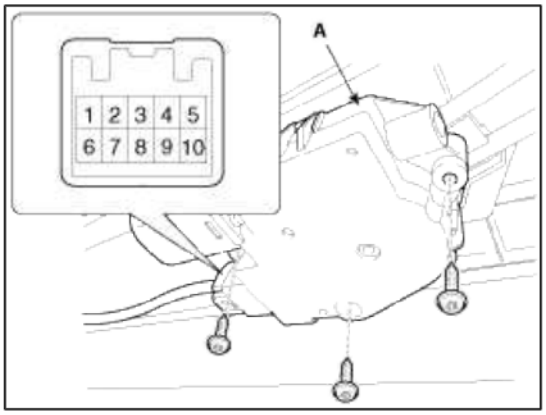

4. Ground the terminals as below table, and check that the panoramaroof unit operates as below table.

Position \ Terminal	6	4	5	10
Manual OPEN	⊕		⊖	
Auto OPEN	⊕		⊖	⊖
Manual CLOSE, Manual tilt DOWN	⊕	⊖		
Auto CLOSE	⊕	⊖		⊖
Manual tilt UP	⊕			⊖

cardiagn.com

5. Make these input tests at the motor connector of panoramaroof harness.
   if any test indicates a problem, find and correct the cause, then recheck the system.
   If all the input tests prove OK, the sunroof motor must be faulty; replace it.

Terminal	Test condition	Test : Desired result
3	IG2 ON	Check for voltage to ground : There should be battery voltage
1	Under all conditions	Check for continuity to ground : There should be continuity.
6	Under all conditions	Check for voltage to ground : There should be battery voltage.

6. Make these input tests at the console connector of panoramaroof harness
   if any test indicates a problem, find and correct the cause, then recheck the system.
   If all the input tests prove OK, the sunroof motor must be faulty; replace it.

Terminal	Test condition	Test : Desired result
3	IG2 ON	Check for voltage to ground : There should be battery voltage
1	Under all conditions	Check for continuity to ground : There should be continuity.
6	Under all conditions	Check for voltage to ground : There should be battery voltage.

Resetting The Panoramaroof

Whenever the vehicle battery is disconnected or discharged, or you use the emergency handle to operate the Panoramaroof, you have to reset your Panoramaroof system as follows :

1. Turn the ignition key to the ON position and then close the panoramaroof completely.
2. Release the panoramaroof control lever.
3. Press and hold the CLOSE button for more than 10 seconds until the sunroof has moved slightly.
4. Release the panoramaroof control lever.
5. Press and hold the CLOSE button once again until the sunroof do as follows;
   A. Tilt → Slide Open → Slide Close
      Then release the lever.
6. Reset procedure of panoramaroof system is finished.

Protecting The Overheated Motor

In order to protect the overheated Panoramaroof motor by continuous motor operation, the Panoramaroof ECU controls the Run-time and Cool-time of motor as followings;

1. The Panoramaroof ECU detects the Run- time of motor
2. Motor can be operated continuously for the 1st Run-time(120 ± 10sec.).
3. Motor which is operated continuously stops operating after the 1st Run-time(120 ± 10sec.).
4. And then Motor is not operated for the 1st Cool-time(18 ± 2sec.).
5. Motor is operated for the 2nd Run-time(10 ± 2sec.) at the continued motor operation after 1st Cool-time(18 ± 2sec.)
6. Motor which is operated continuously stops operating after the 2nd Run-time(10 ± 2sec.)
7. Motor is not operated for the 2nd Cool-time(18 ± 2sec.).

cardiagn.com

8. Motor repeats the 2nd Run-time and 2nd Cool-time at the continued motor operation.
   A. In case that motor is not operated continuously, the Run-time which is limited for protecting the overheated motor is increased.
   B. The Run-Time of motor is initialized to "0" if the battery or fuse is reconnected after being disconnected, discharged or blown.

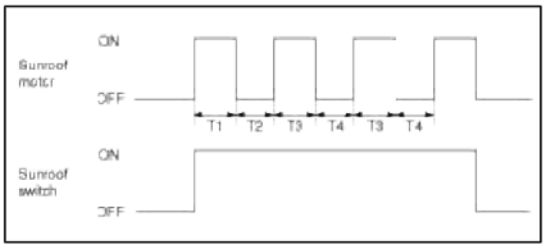

T1 : 120 ± 10 sec., T2 : 18 ± 2 sec.,
T3 : 10 ± 2 sec., T4 : 18 ± 2 sec.

Body Electrical System > Lighting System > Specifications

Specifications

Items		Bulb Wattage (W)
Front (General)	Head lamp (High/Low)	55/55
	Front turn signal lamp	28
	Front position lamp	8 or LED
	Front fog lamp	27
	Turn signal lamp (Door mirror)	LED
Rear	Rear stop lamp (Outside)	28
	Rear turn signal (Outside)	27
	Tail lamp (Outside)	5
	Tail lamp (Inside)	5
	Back up lamp (Inside)	16
	License plate lamp	5
	High mounted stop lamp	5 x 5 or LED
	Side marker	5
Room	Room lamp	10
	Overhead console lamp	6 x 2
	Luggage room lamp	5
	Vanity lamp	5

Body Electrical System > Lighting System > Components and Components Location

Component Location (1)

cardiagn.com

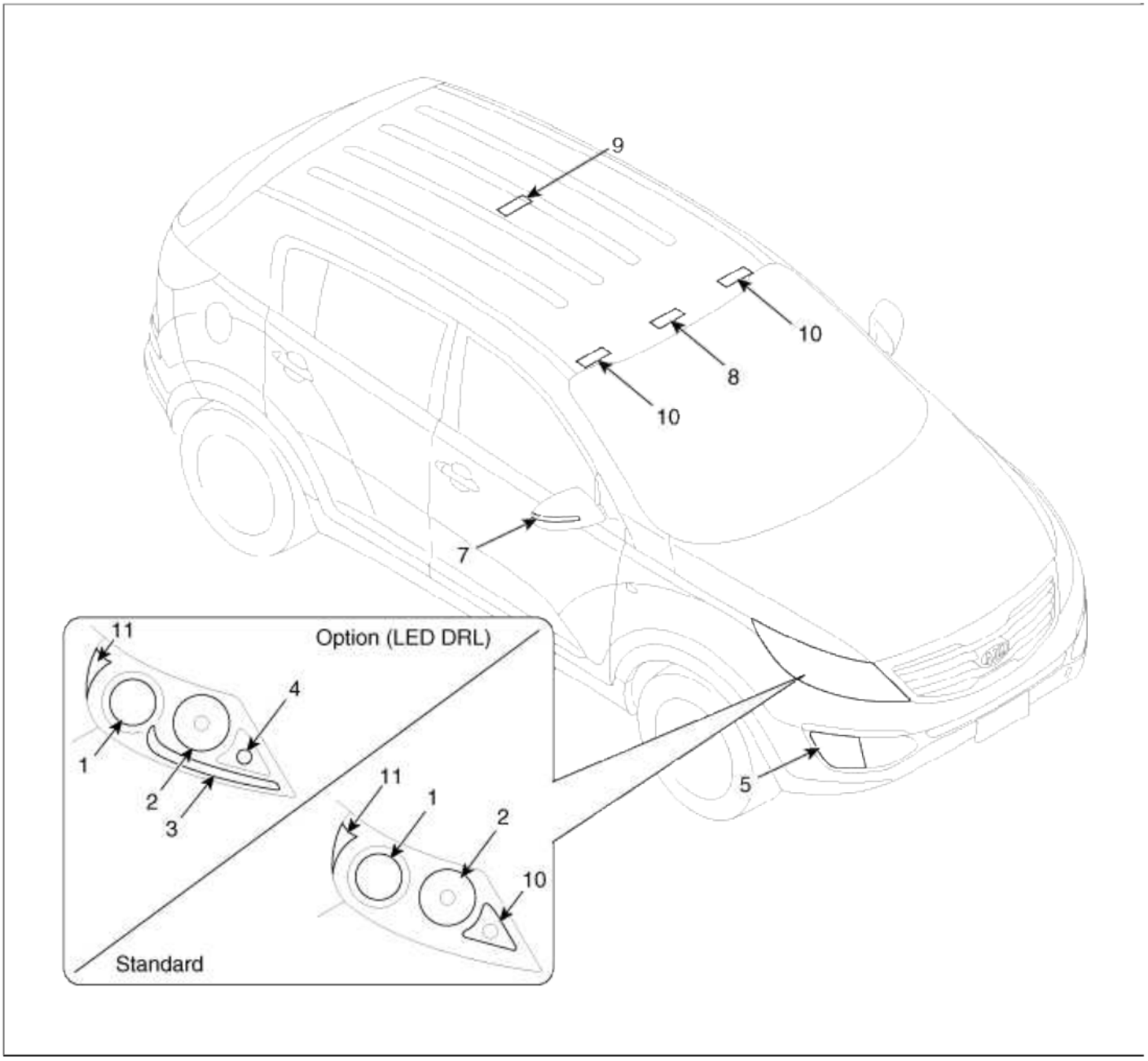

1. Head lamp(Low) 2. Head lamp(High) 3. DRL & position LED 4. Front turn signal lamp 5. Front fog lamp 6. Door mirror turn signal lamp (LED)	7. Overhead lamp 8. Room lamp 9. Vanity lamp 10. Turn signal & position lamp 11. Side marker

Component Location (2)

cardiagn.com

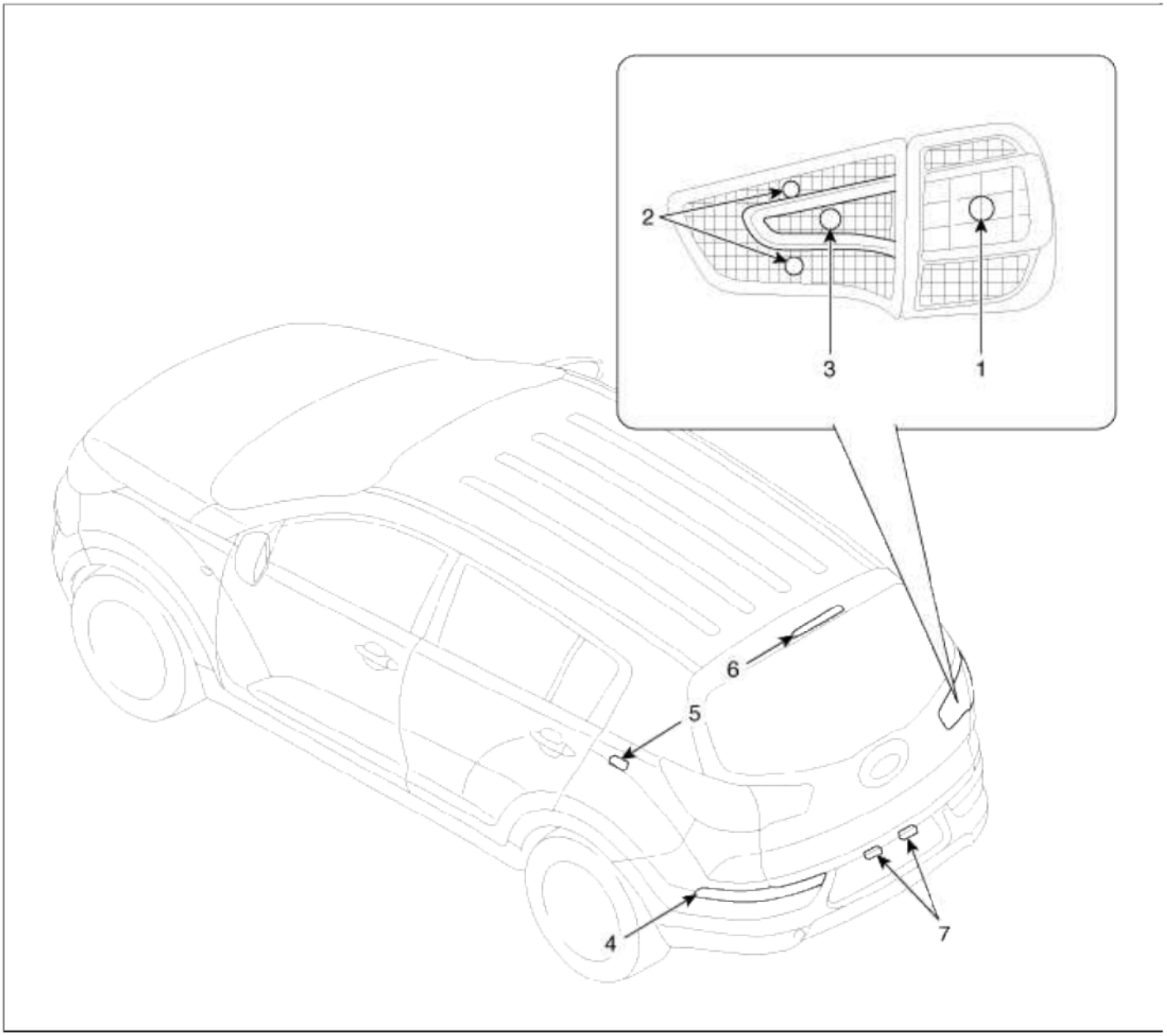

1. Tail/Stop lamp	5. Luggage room lamp
2. Position lamp	6. High mounted stop lamp
3. Back up lamp	
4. Rear turn signal lamp	7. License plate lamp

Body Electrical System > Lighting System > Head Lamps > Components and Components Location

Component

cardiagn.com

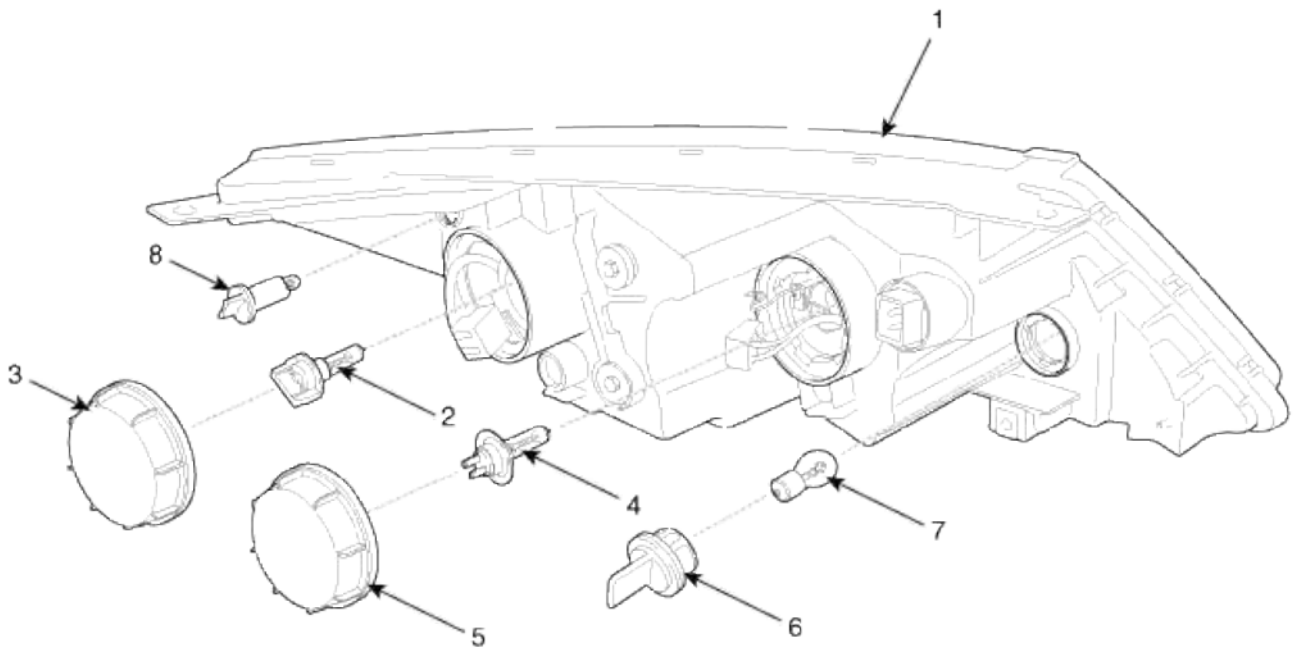

1. Head lamp assembly lens and housing 2. Head lamp(low) bulb 3. Dust cap 4. Head lamp(high) bulb	5. Dust cap 6. Turn signal lamp/tail lamp socket 7. Turn signal lamp/tail lamp bulb 8. Side marker bulb

Body Electrical System > Lighting System > Head Lamps > Repair procedures

Removal

CAUTION

Head lamps become very hot during use; do not touch them or any attaching hardware immediately after they have been turned off.

NOTE

The headlamp bulb should not be removed from the headlamp assembly until just before a new bulb is installed.
Removing bulb for an extended period of time may affect headlamp bulb performance.
Contaminants may enter the headlamp assembly where they can settle on the lens and reflector.
Never turn on the head lamps with the bulb removed from the headlamp assembly.

1. Disconnect the negative (-) battery terminal.

cardiagn.com

2. Loosen the mounting bolts (3EA) of head lamp. Disconnect the connector.

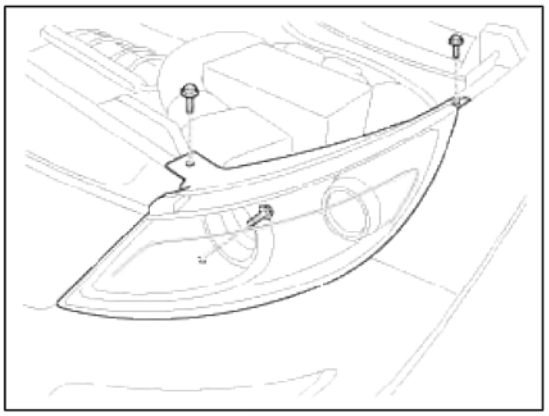

3. Remove the bolts and fasteners installed with the front bumper upper cover (A).

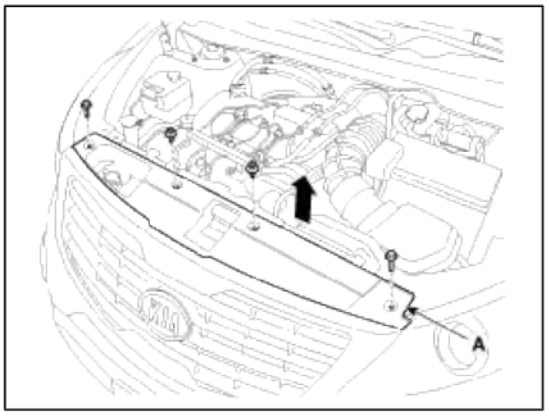

4. Remove the headlamp assembly (B) with spreading the radiator grill (A).

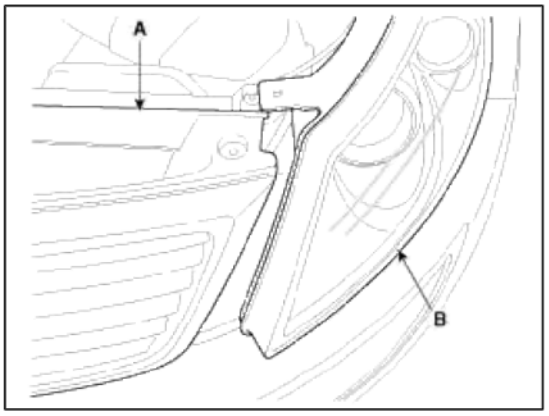

Installation

1. Install the head lamp bulbs.
2. Reassemble the head lamp bulb covers.
3. Reassemble the head lamp assembly after connecting the lamp connector.

Replacement

Head Lamp Bulb (Low)

1. Turn the head lamp switch off.

cardiagn.com

2. Remove the dust cover. Turn the bulb counterclockwise and remove it.

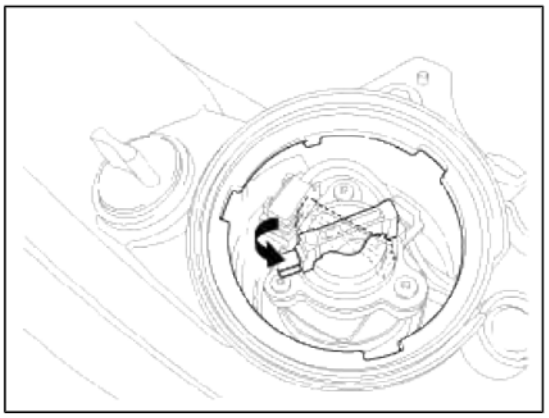

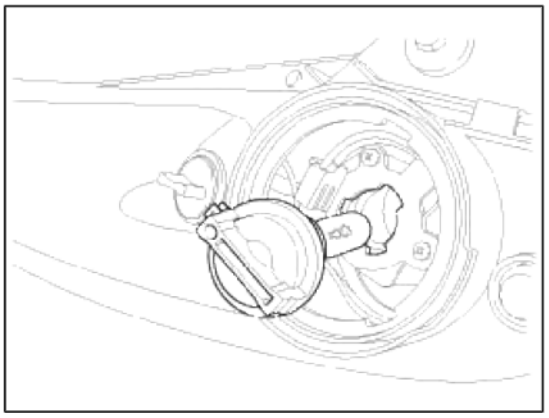

3. Installation is the reverse of removal.

Head Lamp Bulb (High)

1. Turn the head lamp switch off.
2. Remove the dust cap.
3. Disconnect the connector (A) and pin (B), remove the bulb.

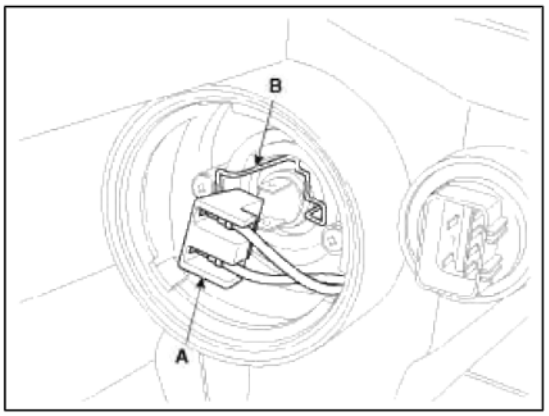

4. Installation is the reverse of removal.

Turn Signal Lamp

1. Turn the head lamp switch off.

cardiagn.com

2. Turn the bulb socket counterclockwise to remove the turn signal bulb (A).

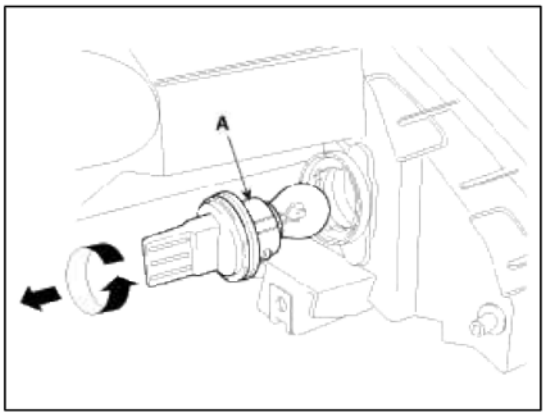

3. Installation is the reverse of removal.

Side Marker Bulb

1. Turn the bulb (A) counterclockwise and remove it.

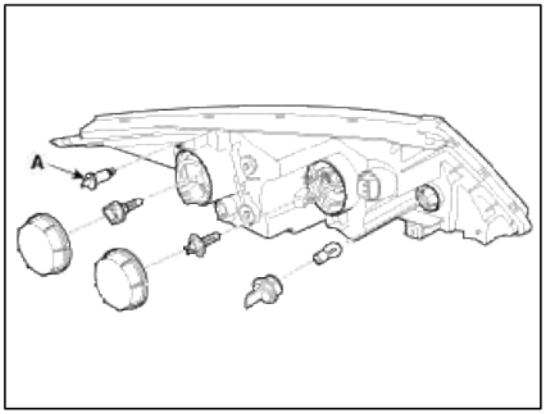

2. Installation is the reverse of removal.

Adjustment

Head Lamp Aiming Instructions

The head lamps should be aimed with the proper beam-setting equipment, and in accordance with the equipment manufacturer's instructions.

NOTE

If there are any regulations pertinent to the aiming of head lamps in the area where the vehicle is to be used, adjust so as to meet those requirements.

Alternately turn the adjusting gear to adjust the head lamp aiming. If beam-setting equipment is not available, proceed as follows :

1. Inflate the tires to the specified pressure and remove any loads from the vehicle except the driver, spare tire, and tools.
2. The vehicle should be placed on a flat floor.
3. Draw vertical lines (Vertical lines passing through respective head lamp centers) and a horizontal line (Horizontal line passing through center of head lamps) on the screen.

cardiagn.com

4. With the head lamp and battery in normal condition, aim the head lamps so the brightest portion falls on the vertical lines.
   Make horizontal (A) adjustment to the lower beam using the adjusting wheel.
   (1) General type

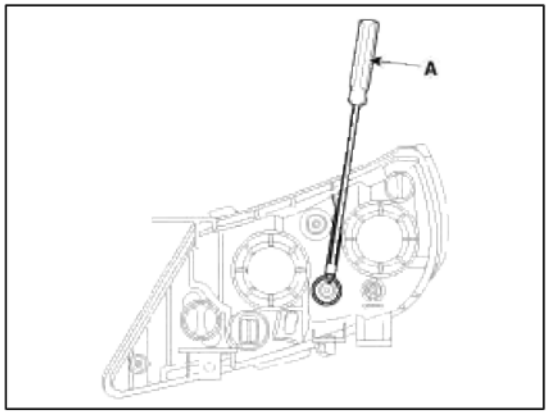

Front Fog Lamp Aiming

The front fog lamps should be aimed as the same manner of the head lamps aiming.

With the front fog lamps and battery normal condition, aim the front fog lamps by turning the adjusting gear (A).

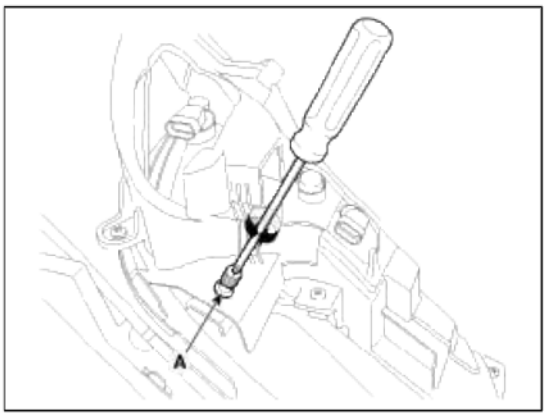

Head Lamp And Fog Lamp Aiming Point

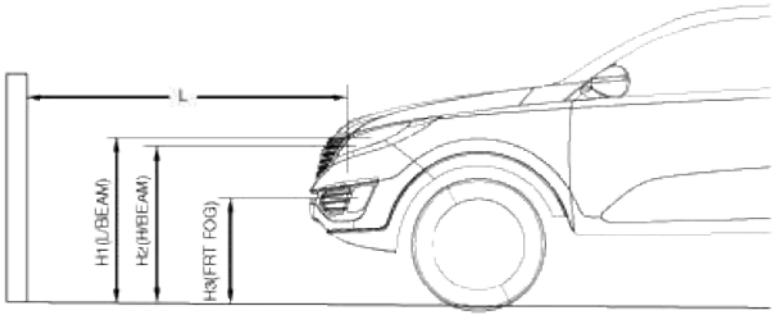



H1 : Height between the head lamp bulb center and ground (Low beam)
H2 : Height between the head lamp bulb center and ground (High beam)
H3 : Height between the fog lamp bulb center and ground
W1 : Distance between the two head lamp bulbs centers (Low beam)
W2 : Distance between the two head lamp bulbs centers (High beam)
W3 : Distance between the two fog lamp bulbs centers
L : Distance between the head lamp bulb center and screen

cardiagn.com

Unit : in(mm)

Vehicle condition	H1	H2	H3	W1	W2	W3	L
Without driver	35.4(899)	33.9(860)	22.1(562)	55.5(1,410)	46.5(1,180)	57.5(1,460)	Refer to adjusting standard
With driver	35.1(892)	33.6(853)	21.8(555)				

1. General Type
   A. Turn the low beam on without driver aboard.
   B. The cut-off line should be projected in the allowable range (shaded region) shown in the picture.
   C. If head lamp leveling device is equipped, adjust the head lamp leveling device switch with 0 positions.

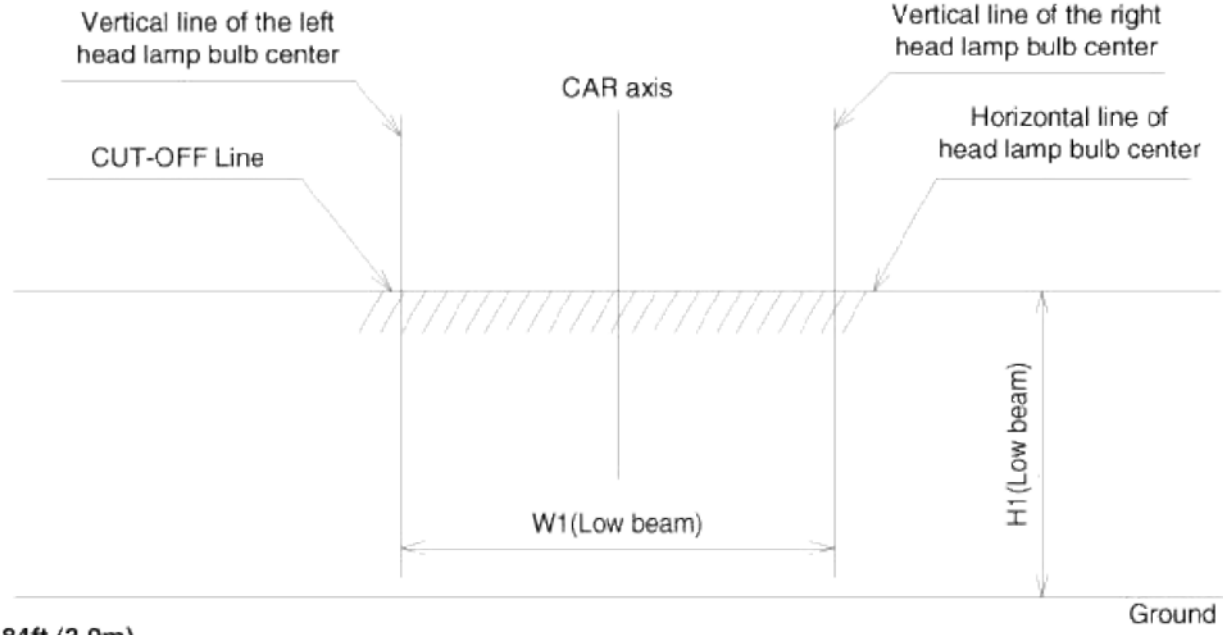

L : 9.84ft (3.0m)
Unit : in.(mm)

2. Turn the front fog lamp on with driver seated in the vehicle.
   The cut-off line should be projected in the allowable range shown in the picture.

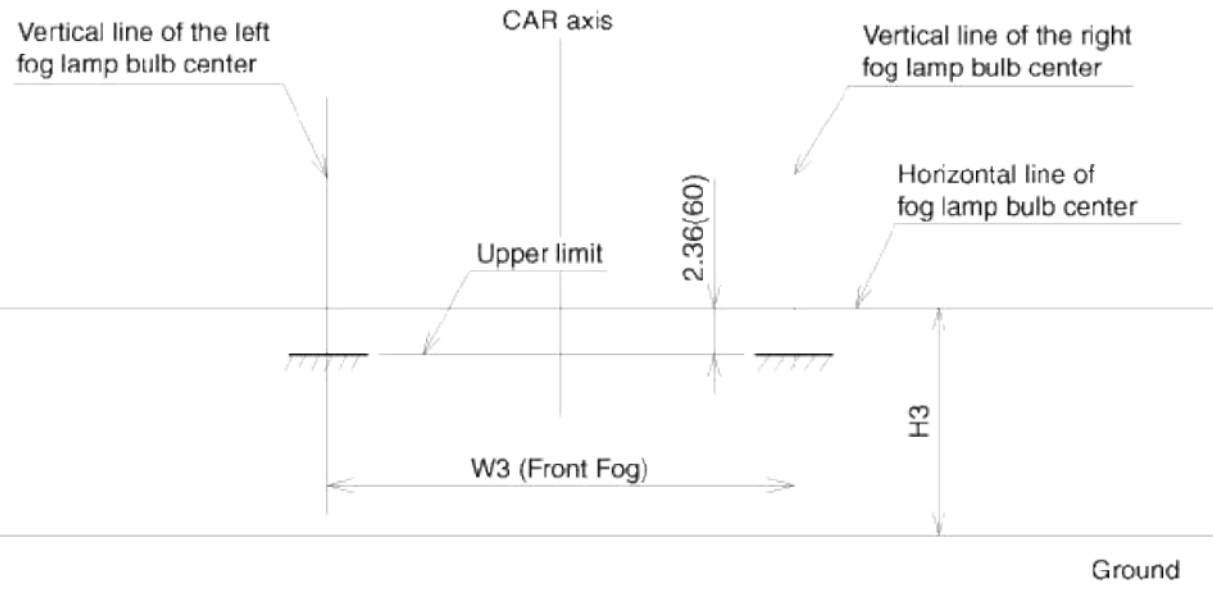

L : 118 in (3,000mm)
Unit : in.(mm)

Body Electrical System > Lighting System > Turn Signal Lamp > Repair procedures

cardiagn.com

Removal

Rear Turn Signal Lamp

1. Disconnect the negative (-) battery terminal.
2. Remove the rear bumper.
   (Refer to BD group - "Rear Bumper")
3. Disconnect the connector. Remove the rear turn signal lamp (A) after loosening 5 screws.

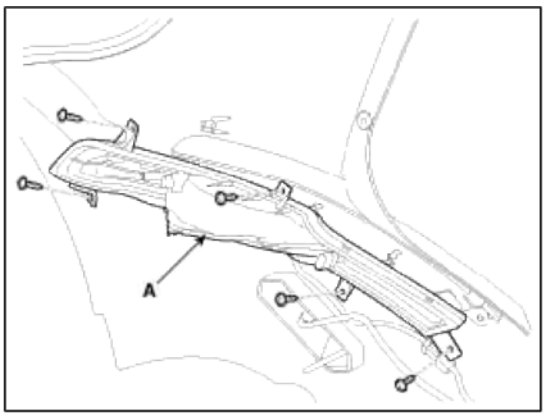

4. Replace the bulb (A) of rear turn signal lamp.
   If replacing the bulb only, you could work it without removing the rear bumper.

Door Mirror Turn Signal Lamp

1. Disconnect the negative (-) battery terminal.
2. Remove the mirror from the mirror holder.
   Be careful not to damage to the clip.
3. Remove the door mirror turn signal lamp (A) after disassembling screw and connector.

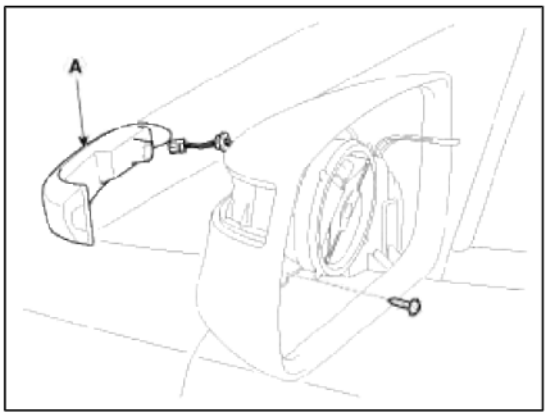

Installation

Rear Turn Signal Lamp

1. Install the bulb to the rear turn signal lamp assembly.
2. Install the rear turn signal lamp to the rear bumper.

Door Mirror Turn Signal Lamp

1. Install the door mirror turn signal lamp to the door mirror.
2. Install the door mirror.
3. Connect the battery terminal (-).

Body Electrical System > Lighting System > Room Lamp > Repair procedures

Inspection

cardiagn.com

1. Remove the room lamp assembly connector then check for continuity between terminals.

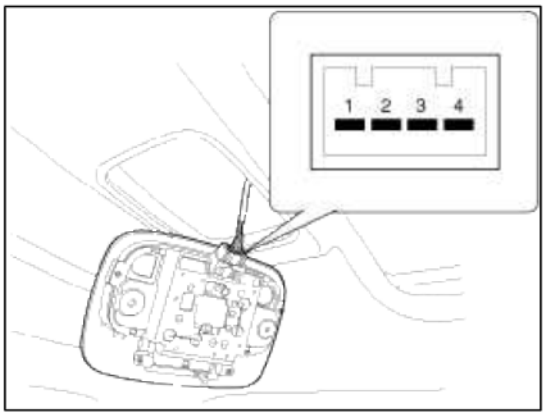

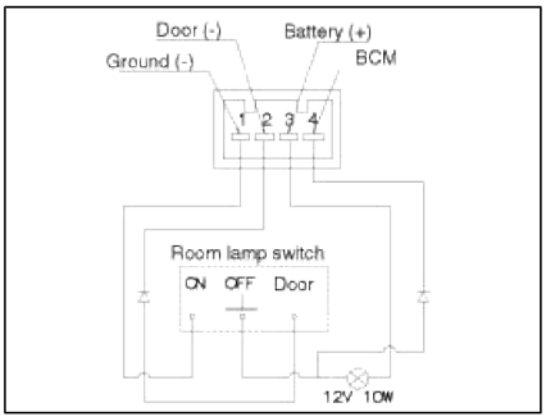

Position \ Terminal	1	3
ON	○	○
OFF		

Removal

1. Disconnect the negative (-) battery terminal.
2. Detach the lamp lens (A) from the room lamp with a flat-tip screwdriver.

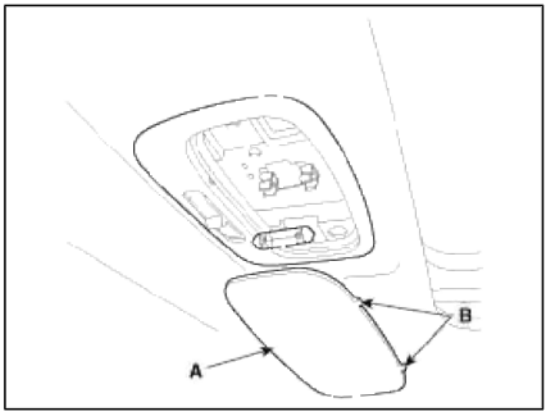

NOTE

Take care not to damage the part (B).

3. Loosen the fixing screws (2EA).

cardiagn.com

4. Remove the room lamp assembly (A) after disconnecting the connector (B).

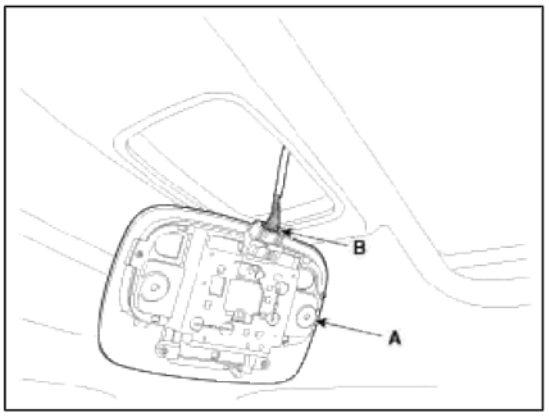

Installation

1. Install the room lamp assembly after connecting the lamp connector.
2. Install the lamp lens after assembling the bulb.

Body Electrical System > Lighting System > Overhead Console Lamp > Repair procedures

Inspection

Remove the overhead console lamp assembly then check for continuity between terminals. If the continuity is not as specified, replace the map lamp switch.

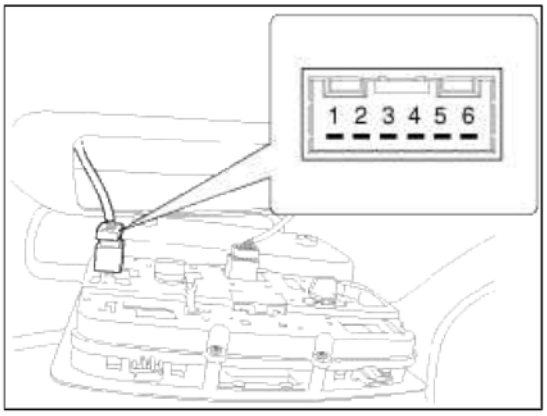

No.	Description	No.	Description
1	Ground	4	Door (-)
2	-	5	Battery (+)
3	-	6	-

Item / Position / Terminal	Map lamp switch			
	Left		Right	
	ON	OFF	ON	OFF
1	○		○	
5	○		○	

cardiagn.com

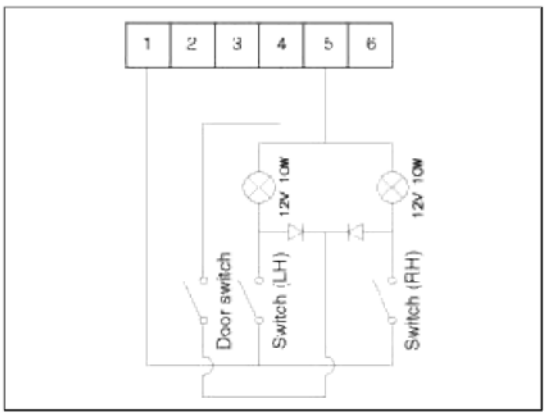

Removal

1. Disconnect the negative (-) battery terminal.
2. Remove the overhead console lamp assembly.
   (Refer to the BD group - "Roof trim")
3. Remove the overhead console bulb (B) after disconnecting the panoramaroof switch connector and lamp connector (A).

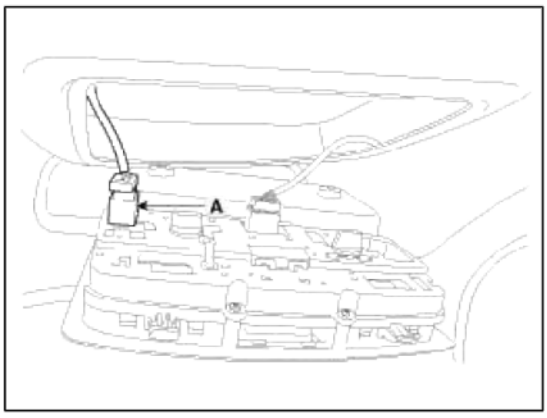

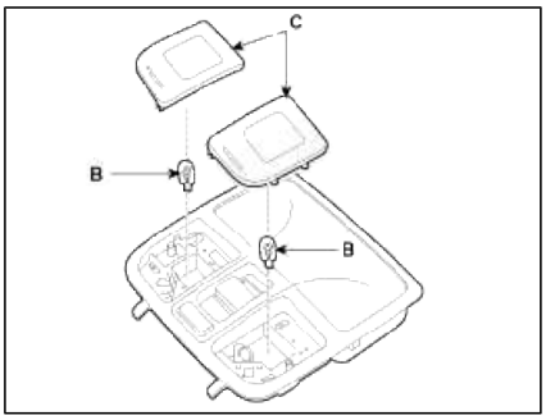

4. When replacing the bulb only, release the lens (C) cover from the roof without removing the overhead console lamp assembly.

Installation

1. Install the bulbs and connect the connectors.
2. Install the overhead console lamp assembly.

Body Electrical System > Lighting System > Hazard Lamp Switch > Repair procedures

Removal

1. Disconnect the negative (-) battery terminal.

cardiagn.com

2. Remove the center fascia panel (A).
(Refer to BE group - "Audio unit")

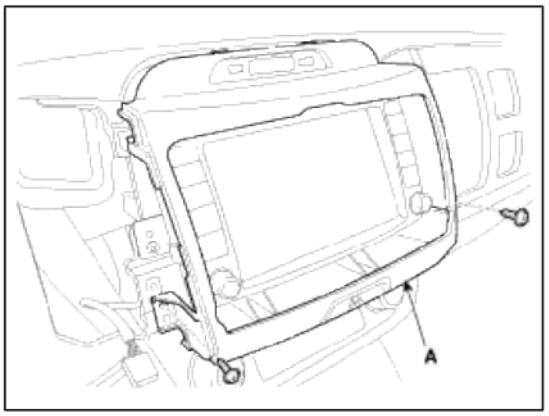

NOTE

Take care not to damage and scratch the center fascia panel and its related parts.
Apply the protective tapes to the center fascia panel and its related parts.

3. Disconnect the hazard switch unit connector (A).

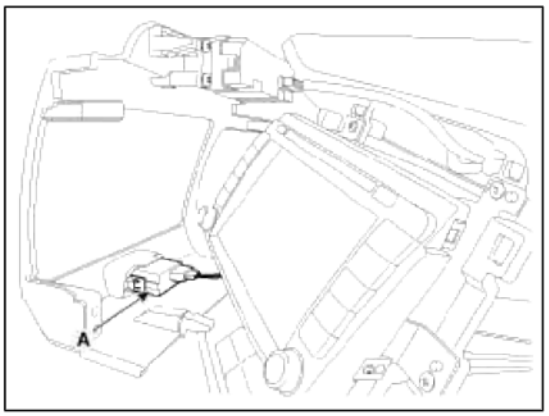

4. If the hazard lamp switch is not as specified, replace it carefully and take care not to damage the hook (A).

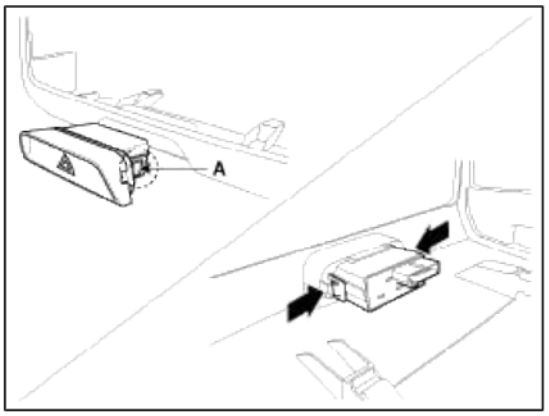

Installation

1. Connect the hazard switch connector.
2. Install the hazard switch assembly to the center fascia panel.

Inspection

cardiagn.com

1. Operate the switch and check for continuity between terminals with an ohmmeter.

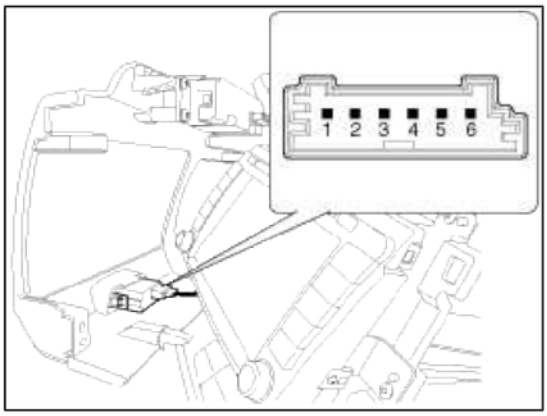

Terminal / Position	ON	OFF	Remark
1			Switch (input)
2			Ground
3			Illumination(+)
4			Illumination(-)
5			
6			

Body Electrical System > Lighting System > Rheostat > Repair procedures

Inspection

1. Disconnect the negative (-) battery terminal.
2. Remove the crash pad lower panel.
   (Refer to the BD group - "Crash pad")
3. Remove the crash pad side switch assembly (A) after loosening 2 screws.

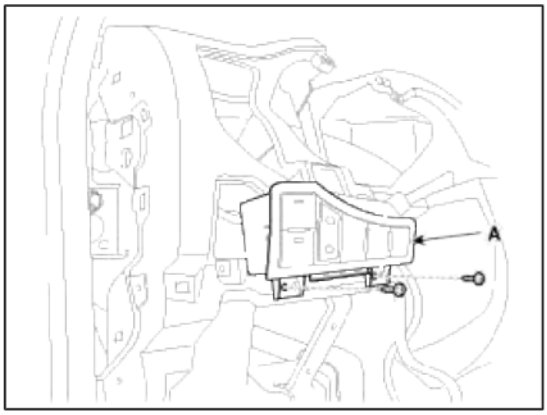

NOTE

Put on gloves to protect your hands.

cardiagn.com

4. Remove the side crash pad switch after disconnecting the connectors (A).

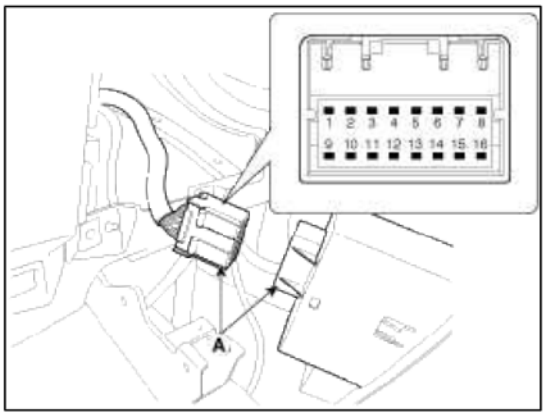

5. Operate the switch and check for continuity between terminals with an ohmmeter.

Terminal / Position	UP(+)	DOWN(-)	Description
3		○	Down
14	○	○	GND
5	○		Up
7	○		Illumination (-)
15	○		Illumination (+)

Body Electrical System > Lighting System > Front Fog Lamps > Repair procedures

Inspection

Front Fog Lamp Switch

1. With the fog lamp switch in each position, make sure that continuity exists between the terminals below. If continuity is not as specified, replace the multifunction switch.

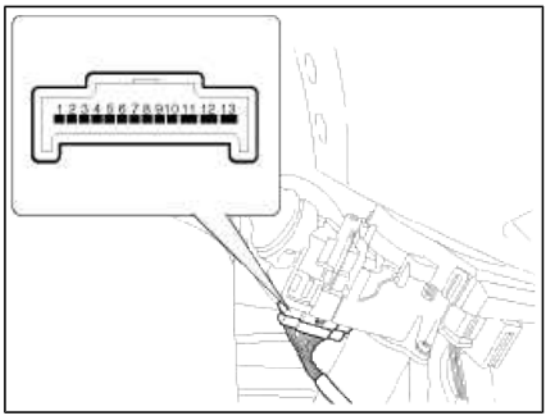

Terminal / Position	5	6
ON	○	○
OFF		

Removal

1. Disconnect the negative (-) battery terminal.
2. Remove the front bumper.
   (Refer to the BD group - "Front bumper")

cardiagn.com

3. Remove the front fog lamp (A) by turning in the counterclockwise direction after disconnecting the connector.

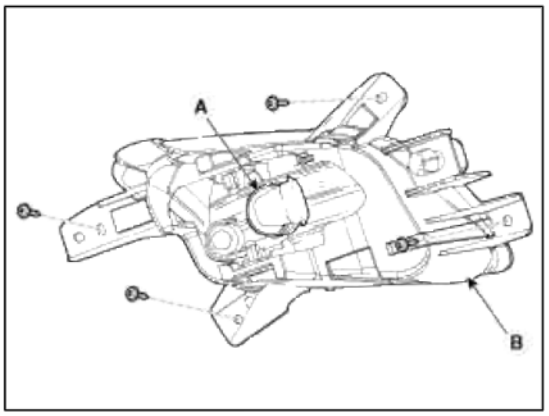

4. Remove the front fog lamp (B) after loosening the screws.

Installation

1. Install the front fog lamp bulb.
2. Connect the front fog lamp connector.
3. Install the front bumper.

Body Electrical System > Lighting System > License Lamps > Repair procedures

Removal

1. Disconnect the negative (-) battery terminal.
2. Remove the lens (A) and license lamp (B) after loosening 2 screws.

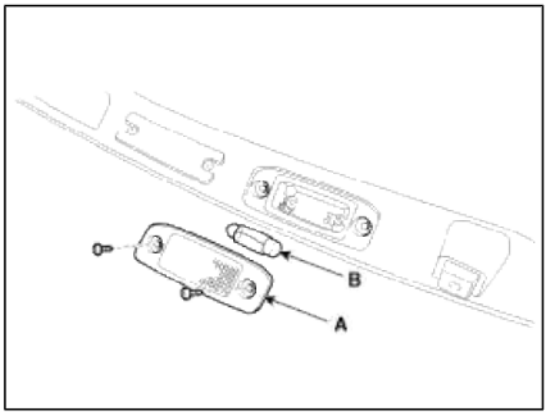

Installation

1. Install the bulb.
2. Install the license lamp lens.

Body Electrical System > Lighting System > High Mounted stop lamp > Repair procedures

Removal

High Mounted Stop Lamp

1. Disconnect the negative (-) battery terminal.
2. Remove the tailgate trim.
   (Refer to the BD group - "Tailgate")
3. Remove the spoiler.
   (Refer to the BD group - "Tailgate")

cardiagn.com

4. Remove the high mounted stop lamp assembly (B) after disconnecting the connector (A).

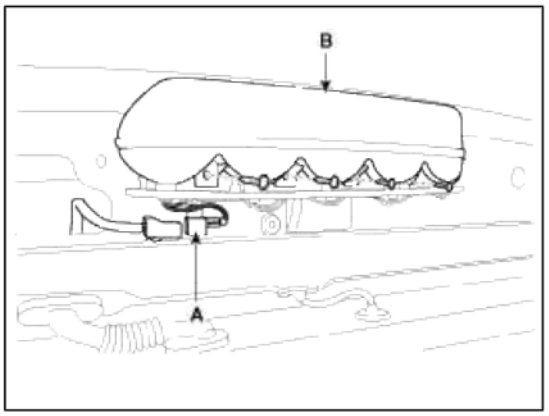

Installation

1. Install the high mounted stop lamp and washer nozzle.
2. Install the spoiler and tailgate trim.

Body Electrical System > Lighting System > Luggage Room Lamp > Repair procedures

Removal

1. Disconnect the negative (-) battery terminal.
2. Remove the luggage room lamp (B) when prying the hole (A) with a flat-up screwdriver.

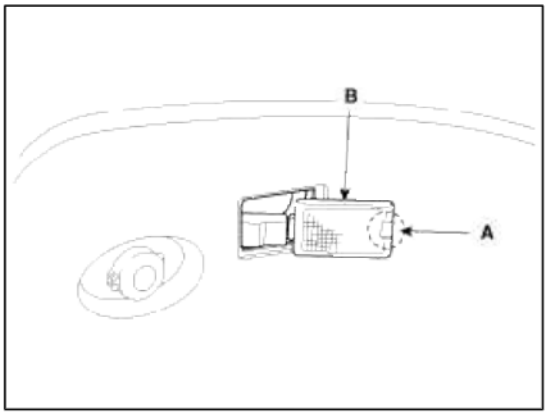

3. Remove the luggage room lamp bulb in case of necessity.

Installation

1. Replace the lamp bulb.
2. Install the luggage room lamp assembly after connecting the lamp connector.

Body Electrical System > Lighting System > Rear combination lamp > Repair procedures

Removal

1. Disconnect the negative (-) battery terminal.

cardiagn.com

2. Loose screws (2EA) holding the rear combination lamp then disconnect the connector (A) then remove the outside rear combination lamp (B).

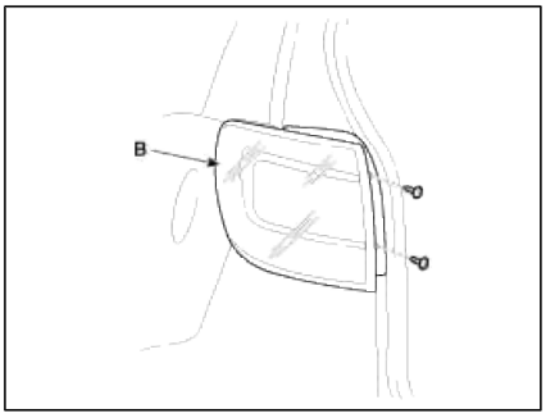

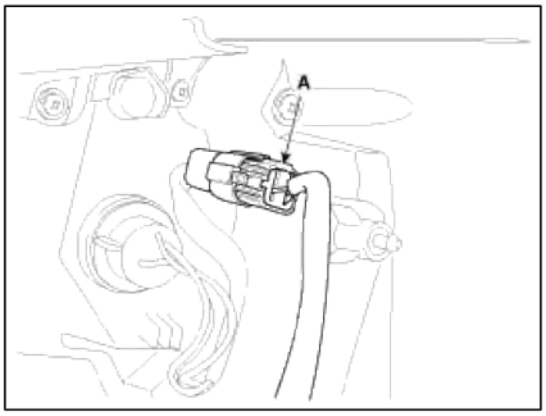

3. Turn the socket counterclockwise to remove the tail/stop lamp bulb (A).

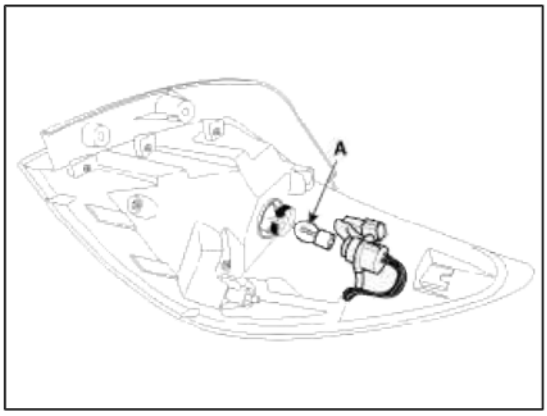

4. Loosen the nuts (A) after removing the tailgate lamp cover.

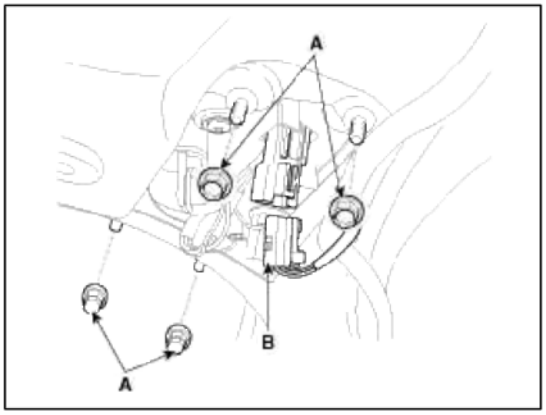

5. Remove the tailgate lamp after disconnecting the connector (B).

cardiagn.com

6. Turn the socket counterclockwise to remove the back up lamp bulb (A) and tail lamp bulb (B).

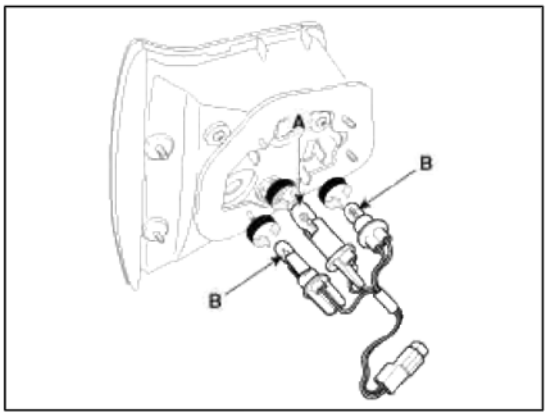

7. If the bulbs should be only replaced without removing lamp assembly, replace the back up lamp bulb (A) and tail lamp bulb (B) after removing the tailgate lamp cover inside tailgate.

Installation

1. Install the tailgate combination lamp assembly after assembling the bulb.
2. Install the lamp cover to the tailgate after connecting the lamp connector.
3. Install the rear combination lamp assembly after assembling the bulbs and connecting the lamp connector.

Body Electrical System > Lighting System > Troubleshooting

Troubleshooting

Symptom	Possible cause	Remedy
One lamp does not light (all exterior)	Bulb burned out	Replace bulb
	Socket, wiring or ground faulty	Repair if necessary
Head lamps do not light	Bulb burned out	Replace bulb
	Ignition fuse (LOW:10A, HIGH:20A) blown	Check for short and replace fuse
	Head lamp fuse (15A) blown	Check for short and replace fuse
	Head lamp relay faulty	Check relay
	Lighting switch faulty	Check switch
	Wiring or ground faulty	Repair if necessary
Tail lamps and license plate lamps do not light	Bulb burned out	Replace bulb
	Tail lamp fuse (10A) blown	Check for short and replace fuse
	Tail lamp relay faulty	Check relay
	Lighting switch faulty	Check switch
	Wiring or ground faulty	Repair if necessary
Stop lamps do not light	Bulb burned out	Replace bulb
	Stop lamp fuse (15A) blown	Check for short and replace fuse
	Stop lamp switch faulty	Adjust or replace switch

cardiagn.com

	Wiring or ground faulty	Repair if necessary
Stop lamps do not turn off	Stop lamp switch faulty	Repair or replace switch
Instrument lamps do not light (Tail lamps light)	Rheostat faulty	Check rheostat
	Wiring or ground faulty	Repair if necessary
Turn signal lamp does not flash on one side	Bulb burned out	Replace bulb
	Turn signal switch faulty	Check switch
	Wiring or ground faulty	Repair if necessary
Turn signal lamps do not light	Bulb burned out	Replace bulb
	Turn signal lamp fuse (10A) blown	Check for short and replace fuse
	Flasher unit faulty	Check flasher unit
	Turn signal switch faulty	Check switch
	Wiring or ground faulty	Repair if necessary
Hazard warning lamps do not light	Bulb burned out	Replace bulb
	Hazard warning lamp fuse (15A) blown	Check for short and replace fuse
	Flasher unit faulty	Check flasher unit
	Hazard switch faulty	Check switch
	Wiring or ground faulty	Repair if necessary
Flasher rate too slow or too fast	Lamps' wattages are smaller or larger than specified	Replace lamps
	Flasher unit faulty	Check flasher unit
Back up lamps do not light	Bulb burned out	Replace bulb
	Back up lamp fuse (10A) blown	Check for short and replace fuse
	Back up lamp switch (M/T) faulty	Check switch
	Transaxle range switch (A/T) faulty	Check switch
	Wiring or ground faulty	Repair if necessary
Room lamp does not light	Bulb burned out	Replace bulb
	Room lamp fuse (10A) blown	Check for short and replace fuse
	Room lamp switch faulty	Check switch
	Wiring or ground faulty	Repair if necessary
Front fog lamps do not light	Bulb burned out	Replace bulb
	Front fog lamp fuse (15A) blown	Check for short and replace fuse
	Front fog lamp relay faulty	Check relay
	Front fog lamp switch faulty	Check switch

cardiagn.com

	Wiring or ground faulty	Repair if necessary
Rear fog lamps do not light	Rear fog lamp fuse (15A) blown	Check for short and replace fuse
	Rear fog lamp fuse (15A) blown	Check for short and replace fuse
	Rear fog lamp switch faulty	Check switch
	Rear fog lamp relay faulty	Check relay
	Wiring or ground faulty	Repair if necessary
Map lamp does not light	Bulb burned out	Replace bulb
	Room lamp fuse (10A) blown	Check for short and replace fuse
	Map lamp switch faulty	Check switch
	Wiring or ground faulty	Repair if necessary
Trunk room lamp does not light	Bulb burned out	Replace bulb
	Room lamp fuse (10A) blown	Check for short and replace fuse
	Trunk room lamp switch faulty	Check switch
	Wiring or ground faulty	Repair if necessary

Body Electrical System > Auto Lighting Control System > Specifications

Specifications

Items		Specifications
Rated voltage		5V
Load		Max. 1mA
Detection illuminations	Tail lamp	ON : 1.57 ± 0.10 (V) OFF : 2.56 ± 0.20 (V)
	Head lamp	ON : 1.57 ± 0.10 (V) OFF : 2.56 ± 0.20 (V)

Body Electrical System > Auto Lighting Control System > Components and Components Location

Component Location

cardiagn.com

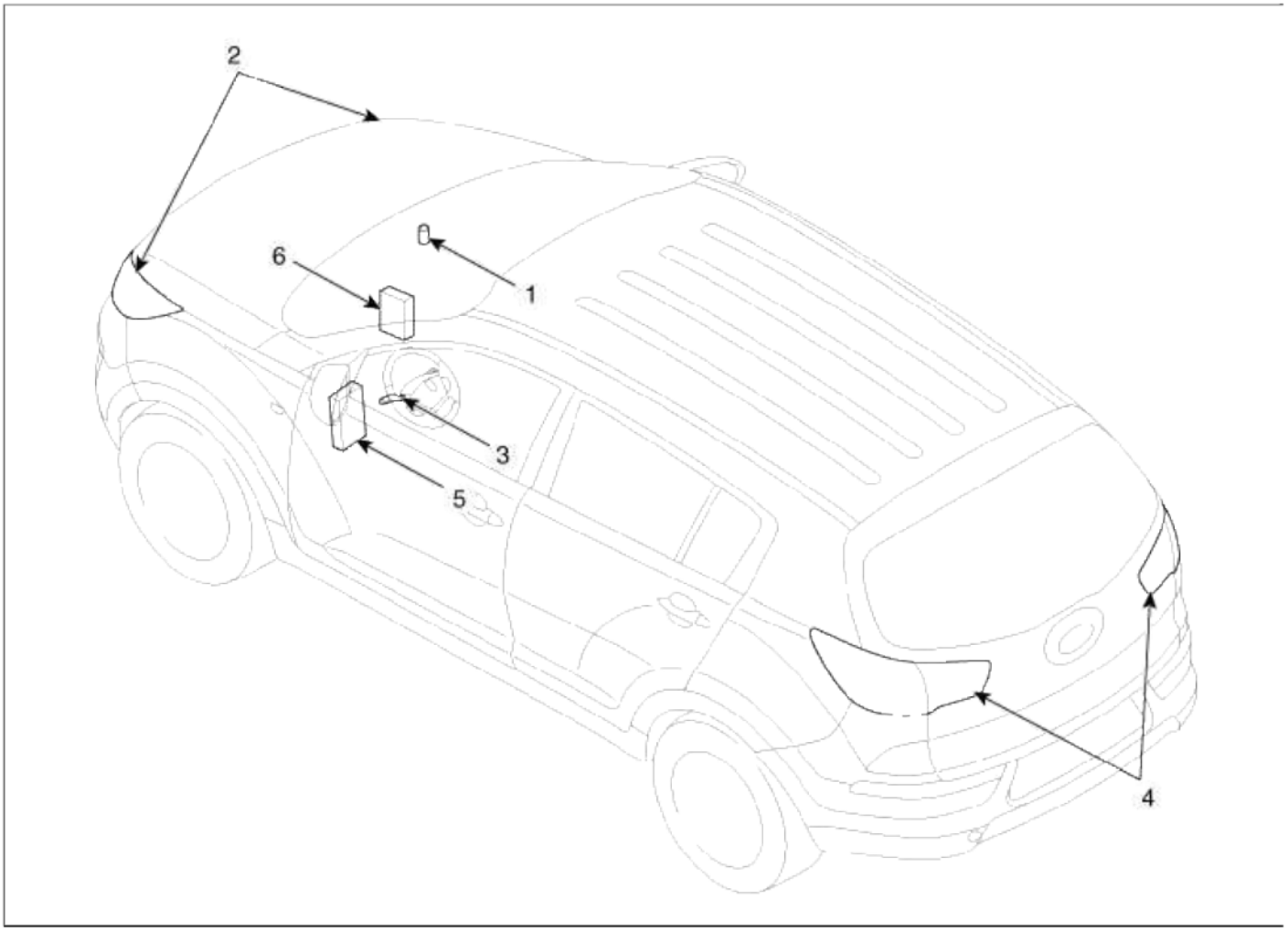

1. Auto light sensor 2. Head lamps 3. Lighting switch (Auto)	4. Tail lamps 5. SJB (Smart Junction Box) 6. BCM (Body Control Module)

Body Electrical System > Auto Lighting Control System > Schematic Diagrams

Circuit Diagram

cardiagn.com

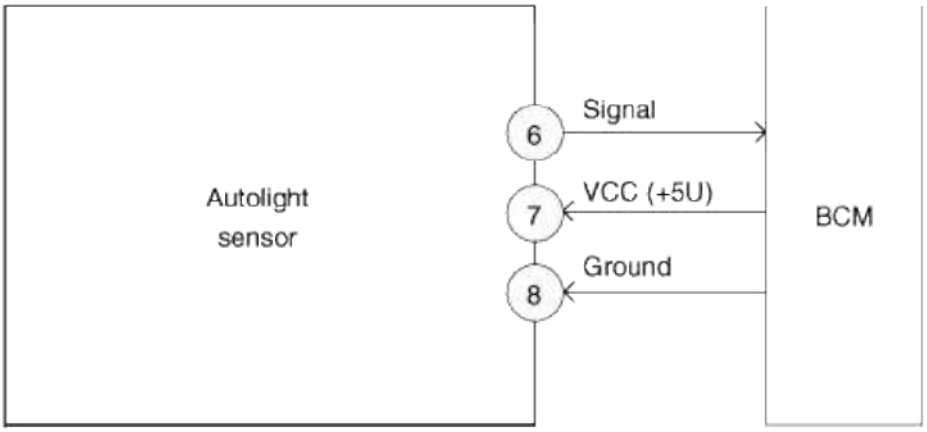



[Autolight sensor connector]

Pin No.	Description
1	Photo signal (+)
2	
3	Photo signal, RH (-)
4	
5	Photo signal, LH (-)
6	Signal
7	VCC (+5V)
8	Ground

Body Electrical System > Auto Lighting Control System > Description and Operation

Description

This function describes the following features

- Input detection by Auto Light Sensor.
- Generate Auto Light Out Status data.
- Send Auto Light Out Status.
- Tail Lamp Control by Auto light Mode.
- Head Lamp Low Control by Auto light Mode.
- AV Tail Control by Auto Light sensor level.

• Auto Light Mode State Diagram is based on Auto Light Sensor's level.

• Power condition of Auto Light Action

- When ACC, IGN, START terminal states, Auto Light Sensor operates.

Body Electrical System > Auto Lighting Control System > Auto Light Sensor > Repair procedures

Inspection

In the state of IGN1 ON, when multi function switch module detects auto light switch on, tail lamp relay output and head lamp low relay output are controlled according to auto light sensor's input.

The auto light control doesn't work if the pin sunlight supply (5V regulated power from Ignition 1 power to sunlight

cardiagn.com

sensor) is in short circuit with the ground.
If IGN1 ON, The IPM monitors the range of this supply and raises up a failure as soon as the supply's voltage is out of range. Then this failure occurs and as long as this is present, the head lamp must be turned on without taking care about the sunlight level provided by the sensor.
This is designed to prevent any head lamp cut off when the failure occurs during the night.

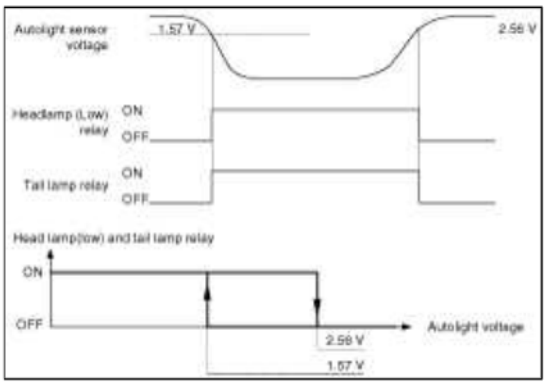

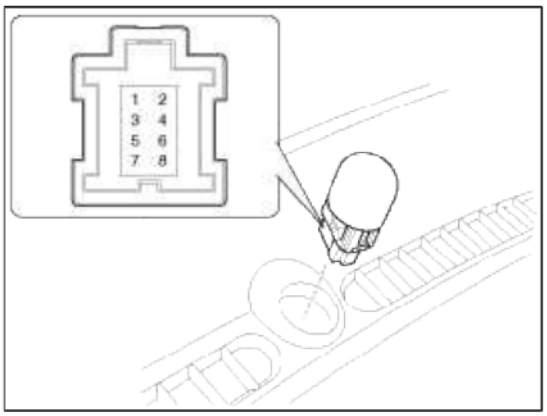

Removal

1. Disconnect the negative (-) battery terminal.
2. Remove the photo & auto light sensor (A) from crash pad upper side by using a flat-up screwdriver.

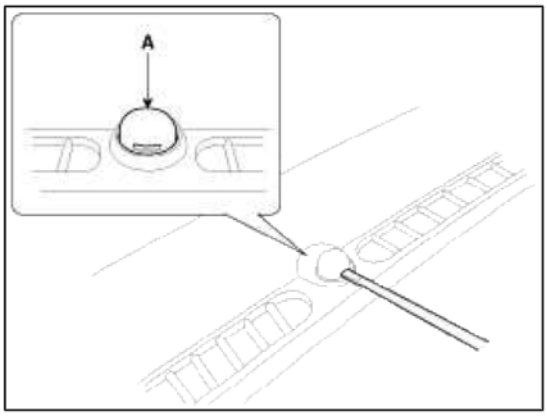

3. Remove the auto light sensor connector.

Installation

1. Reconnect the auto light sensor connector.
2. Install the auto light sensor.

Body Electrical System > Immobilizer System > Schematic Diagrams

Circuit Diagram

cardiagn.com

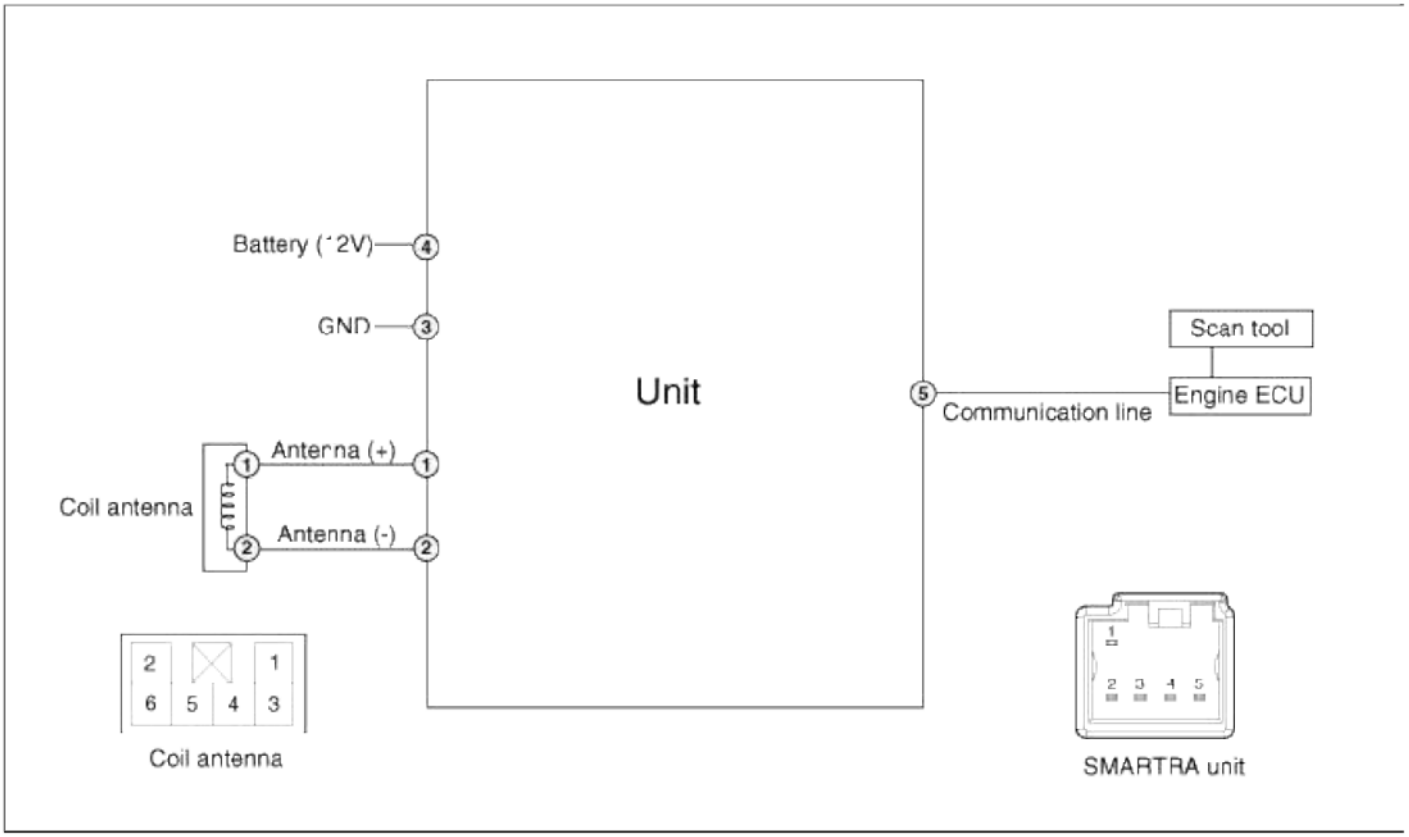

Body Electrical System > Immobilizer System > Description and Operation

Description

The immobilizer system will disable the vehicle unless the proper ignition key is used, in addition to the currently available anti-theft systems such as car alarms, the immobilizer system aims to drastically reduce the rate of auto theft.

1. Encrypted SMARTRA type immobilizer
   A. The SMARTRA system consists of a passive challenge - response (mutual authentication)transponder located in the ignition key, an antenna coil, an encoded SMARTRA unit, an indicator light and the PCM(ECM).
   B. The SMARTRA communicates to the PCM(ECM) (Engine Control Module) via a dedicated communications line. Since the vehicle engine management system is able to control engine mobilization, it is the most suitable unit to control the SMARTRA.
   C. When the key is inserted in the ignition and turned to the ON position, the antenna coil sends power to the transponder in the ignition key. The transponder then sends a coded signal back through the SMARTRA unit to the PCM(ECM).
   D. If the proper key has been used, the PCM(ECM) will energize the fuel supply system. The immobilizer indicator light in the cluster will simultaneously come on for more than five seconds, indicating that the SMARTRA unit has recognized the code sent by the transponder.
   E. If the wrong key has been used and the code was not received or recognized by the PCM(ECM) the indicator light will continue turning off until the ignition switch is turned OFF.
   F. If it is necessary to rewrite the PCM(ECM) to learn a new key, the dealer needs the customer's vehicle, all its keys and the Hi-scan (pro) equipped with an immobilizer program card. Any key that is not learned during rewriting will no longer start the engine.
   G. The immobilizer system can store up to eight key codes.
   H. If the customer has lost his key, and cannot start the engine, contact Kia motor service station.

cardiagn.com

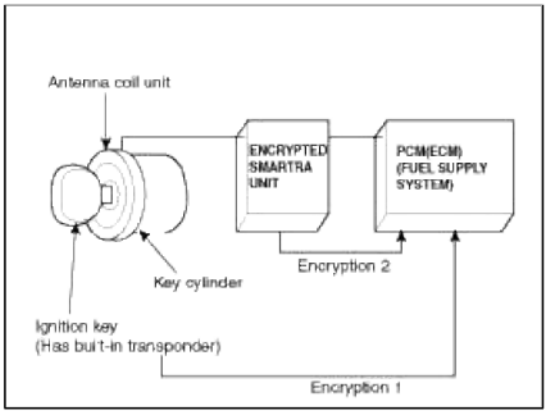

Components Operations

PCM (Power Train Control Module)

1. The PCM(ECM) (A) carries out a check of the ignition key using a special encryption algorithm, which is programmed into the transponder as well as the PCM(ECM) simultaneously. Only if the results are equal, the engine can be started. The data of all transponders, which are valid for the vehicle, are stored in the PCM(ECM). ERN (Encrypted Random Number) value between EMS and encrypted smartra unit is checked and the validity of coded key is decided by EMS.

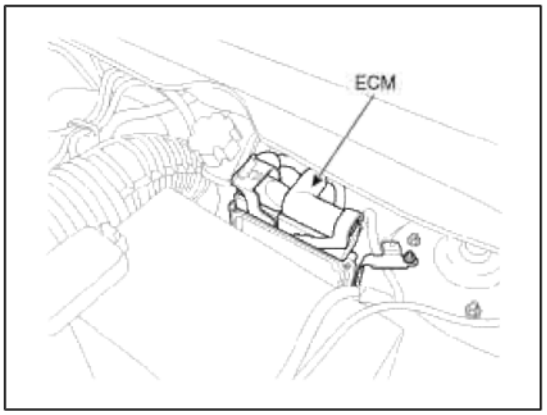

ENCRYPTED SMARTRA unit (A)

The SMARTRA carries out communication with the built-in transponder in the ignition key. This wireless communication runs on RF (Radio frequency of 125 kHz). The SMARTRA is mounted behind of the crash pad close to center cross bar.

The RF signal from the transponder, received by the antenna coil, is converted into messages for serial communication by the SMARTRA device. And, the received messages from the PCM(ECM) are converted into an RF signal, which is transmitted to the transponder by the antenna.

The SMARTRA does not carry out the validity check of the transponder or the calculation of encryption algorithm. This device is only an advanced interface, which converts the RF data flow of the transponder into serial communication to the PCM(ECM) and vice versa.

[USA]

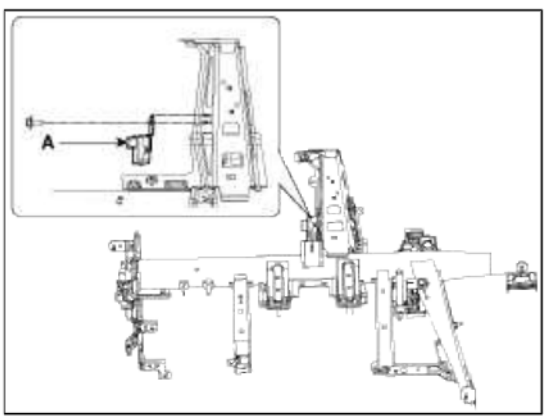

cardiagn.com

[Canada]

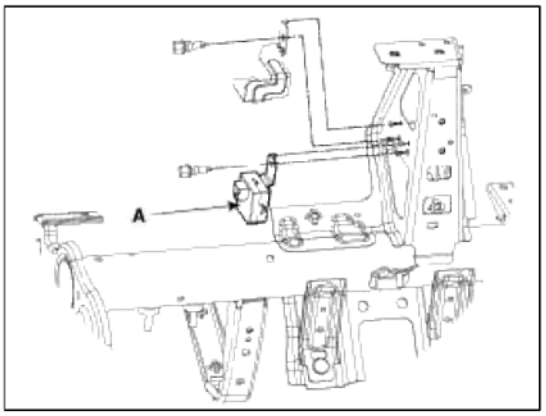

TRANSPONDER (Built-in keys)
The transponder (A) has an advanced encryption algorithm. During the key teaching procedure, the transponder will be programmed with vehicle specific data. The vehicle specific data are written into the transponder memory. The write procedure is once only; therefore, the contents of the transponder can never be modified or changed.

[Key Type]

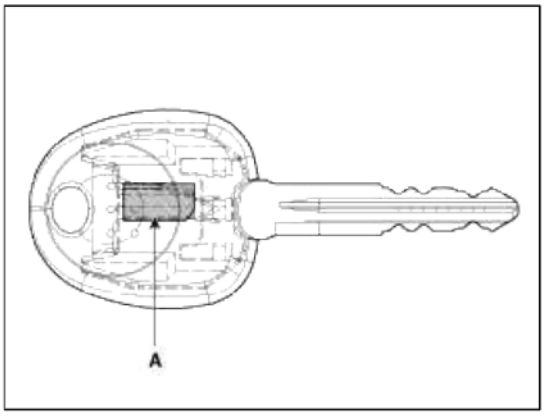

Antenna coil
The antenna coil (A) has the following functions.

- The antenna coil supplies energy to the transponder.
- The antenna coil receives signal from the transponder.
- The antenna coil sends transponder signal to the SMARTRA.
  It is located directly in front of the steering handle lock.

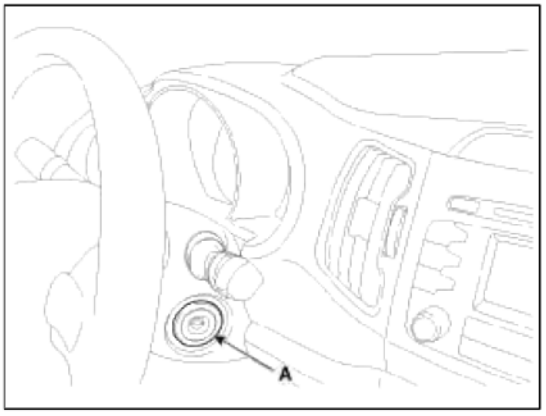

Body Electrical System > Immobilizer System > Repair procedures

Replacement

cardiagn.com

Problems And Replacement Parts:

Problem	Part set	Scan tool required?
All keys have been lost	Blank key (4)	YES
Antenna coil unit does not work	Antenna coil unit	NO
ECM does not work	PCM(ECM)	YES
Ignition switch does not work	Ignition switch with Antenna coil unit	YES
Unidentified vehicle specific data occurs	Key, PCM(ECM)	YES
SMARTRA unit does not work	SMARTRA unit	YES

Replacement Of ECM And SMARTRA

In case of a defective ECM, the unit has to be replaced with a "virgin" or "neutral" ECM. All keys have to be taught to the new ECM. Keys, which are not taught to the ECM, are invalid for the new ECM (Refer to key teaching procedure). The vehicle specific data have to be left unchanged due to the unique programming of transponder.
In case of a defective SMARTRA, it needs teaching the smartra. A new SMARTRA device replaces the old one and smartra need teaching.

1. Things to remember before a replacement (PCM(ECM))

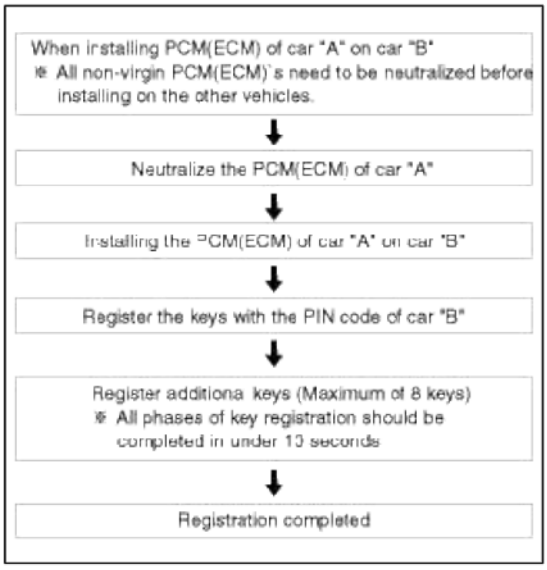

cardiagn.com

2. Things to remember before a replacement (Keys & Additional registration)

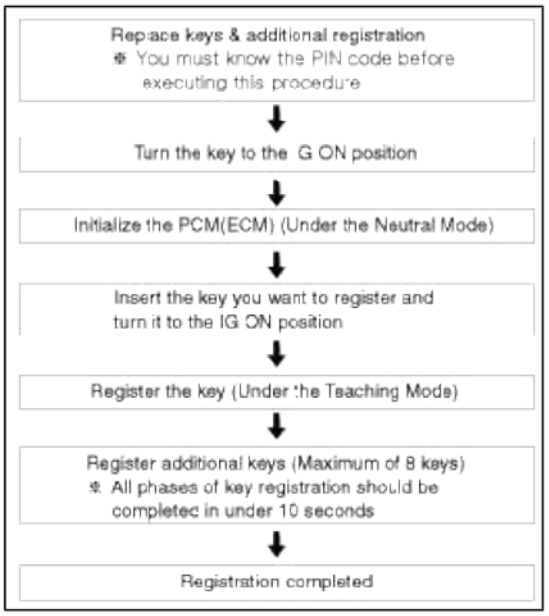

NOTE

1. When there is only one key registered and you wish to register another key, you need to re-register the key which was already registered.
2. When the key #1 is registered and master key #2 is not registered, Put the key #1 in the IG/ON or the start position and remove it. The engine can be started with the unregistered key #2.
   (Note that key #2 must be used within 10 seconds of removing key #1)
3. When the key #1 is registered and key #2 is not registered, put the unregistered master key #2 in the IG/ON or the start position.
   The engine cannot be started even with the registered key #1.
4. When you inspect the immobilizer system, refer to the above paragraphs 1, 2 and 3.
   Always remember the 10 seconds zone.
5. If the pin code & password are entered incorrectly on three consecutive inputs, the system will be locked for one hour.
6. Be cautious not to overlap the transponder areas.
7. Problems can occur at key registration or vehicle starting if the transponders should overlap.

Neutralizing Of ECM

The PCM(ECM) can be set to the "neutral" status by a tester.

A valid ignition key is inserted and after ignition on is recorded, the PCM(ECM) requests the vehicle specific data from the tester. The communication messages are described at "Neutral Mode" After successfully receiving the data, the PCM(ECM) is neutralized.

The ECM remains locked. Neither the limp home mode nor the "twice ignition on" function, is accepted by the PCM(ECM).

The teaching of keys follows the procedure described for the virgin PCM(ECM). The vehicle specific data have to be unchanged due to the unique programming of the transponder. If data should be changed, new keys with a virgin transponder are requested.

This function is for neutralizing the PCM(ECM) and Key. Ex) when lost key, Neutralize the PCM(ECM) then teach keys.

(Refer to the Things to do when Key & PIN Code the PCM(ECM) can be set to the "neutral" status by a scanner.

If wrong vehicle specific data have been sent to SMATRA three times continuously or intermittently, the SMATRA will reject the request to enter neutral mode for one hour. Disconnecting the battery or other manipulation cannot reduce this time. After connecting the battery the timer starts again for one hour.

cardiagn.com

NOTE

- Neutralizing setting condition
  - In case of PCM(ECM) status "Learnt" regardless of user password "Virgin or Learnt"
  - Input correct PIN code by scanner.
  - Neutralizing meaning .
    : PIN code (6) & user password (4) deletion.
    : Locking of ECM (except key teaching permission)
- Neutralizing meaning:
  - PIN Code(6) & User password (4) deletion
  - Locking of EMS(except Key Learning permission)

Function / EMS	Engine Running			Learning	
	Learnt Key	Limp home	Twice Ignition	Key	User Password
Neutral	No	No	No	Yes	No

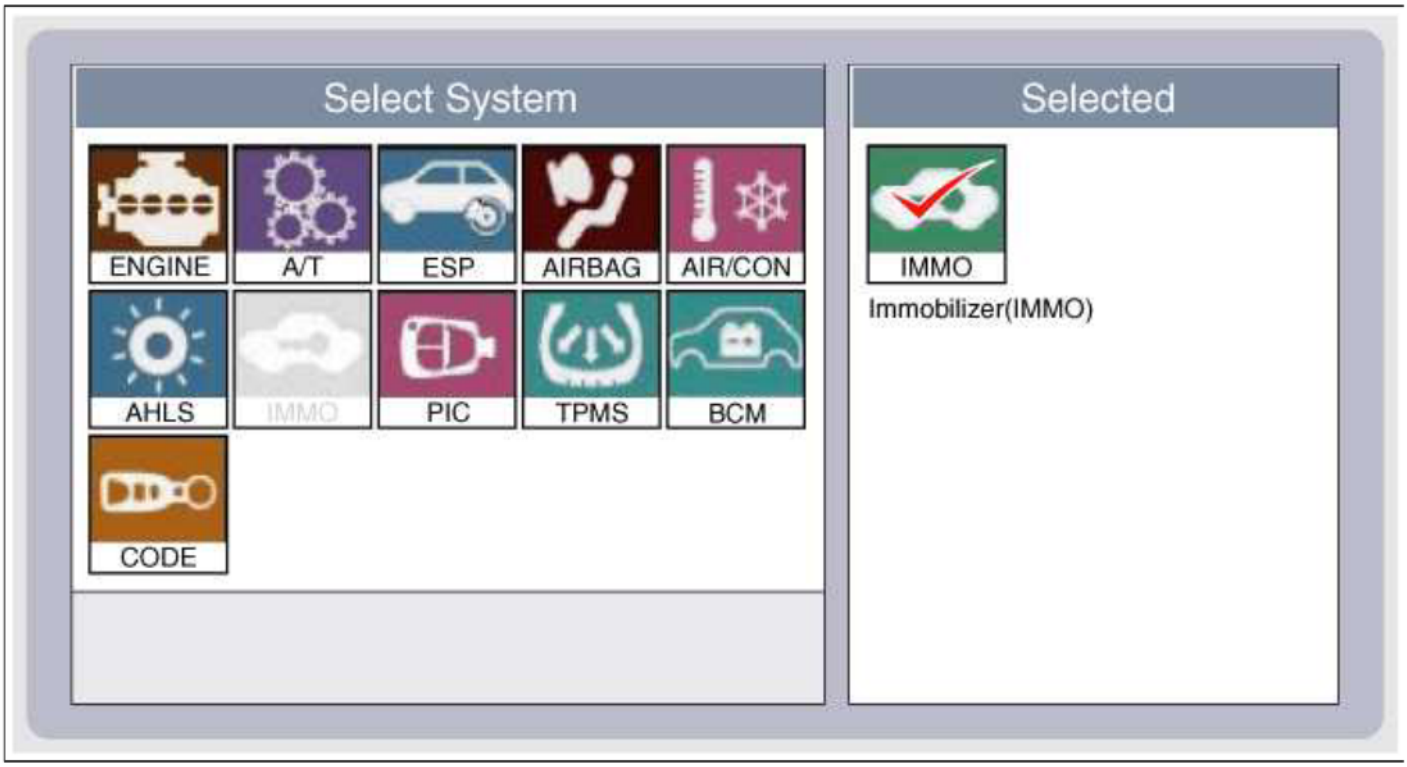

cardiagn.com

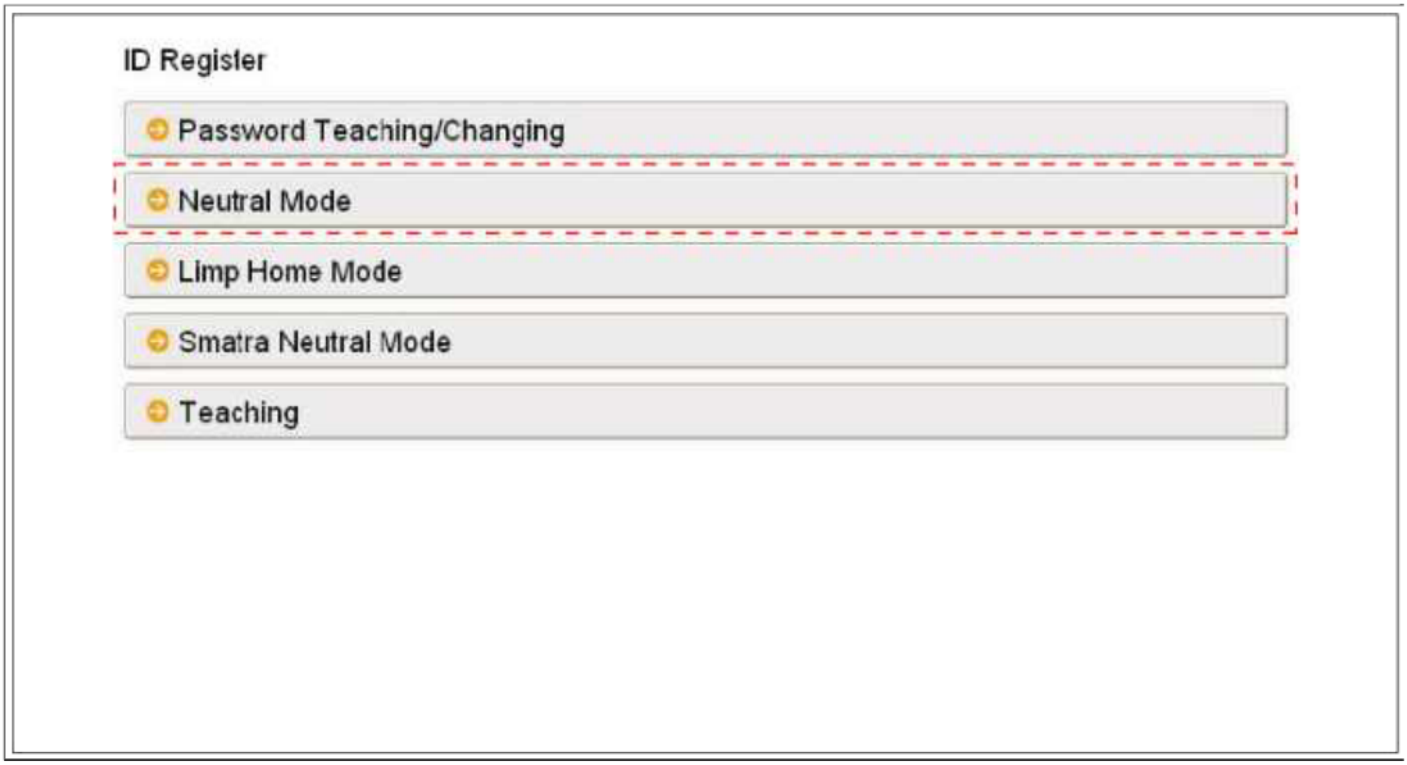

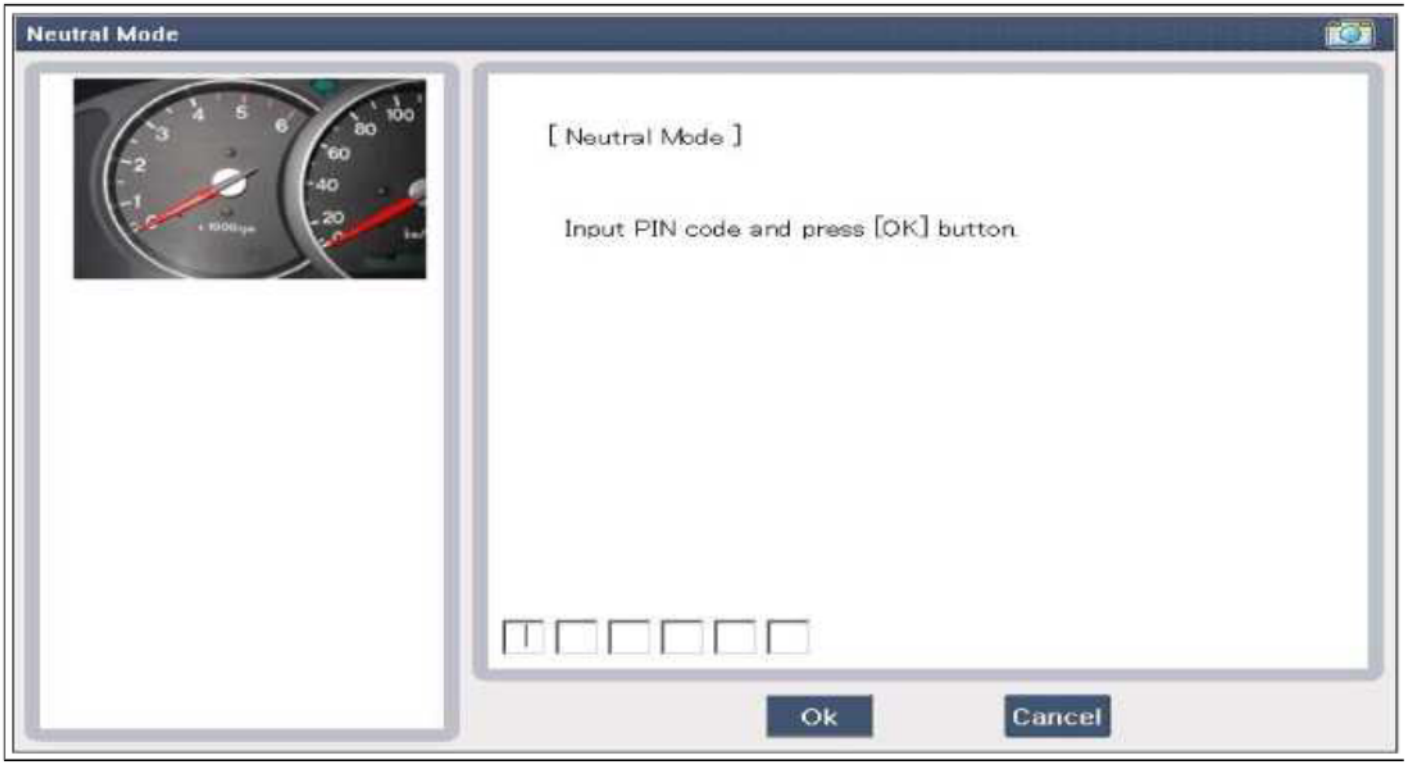

cardiagn.com

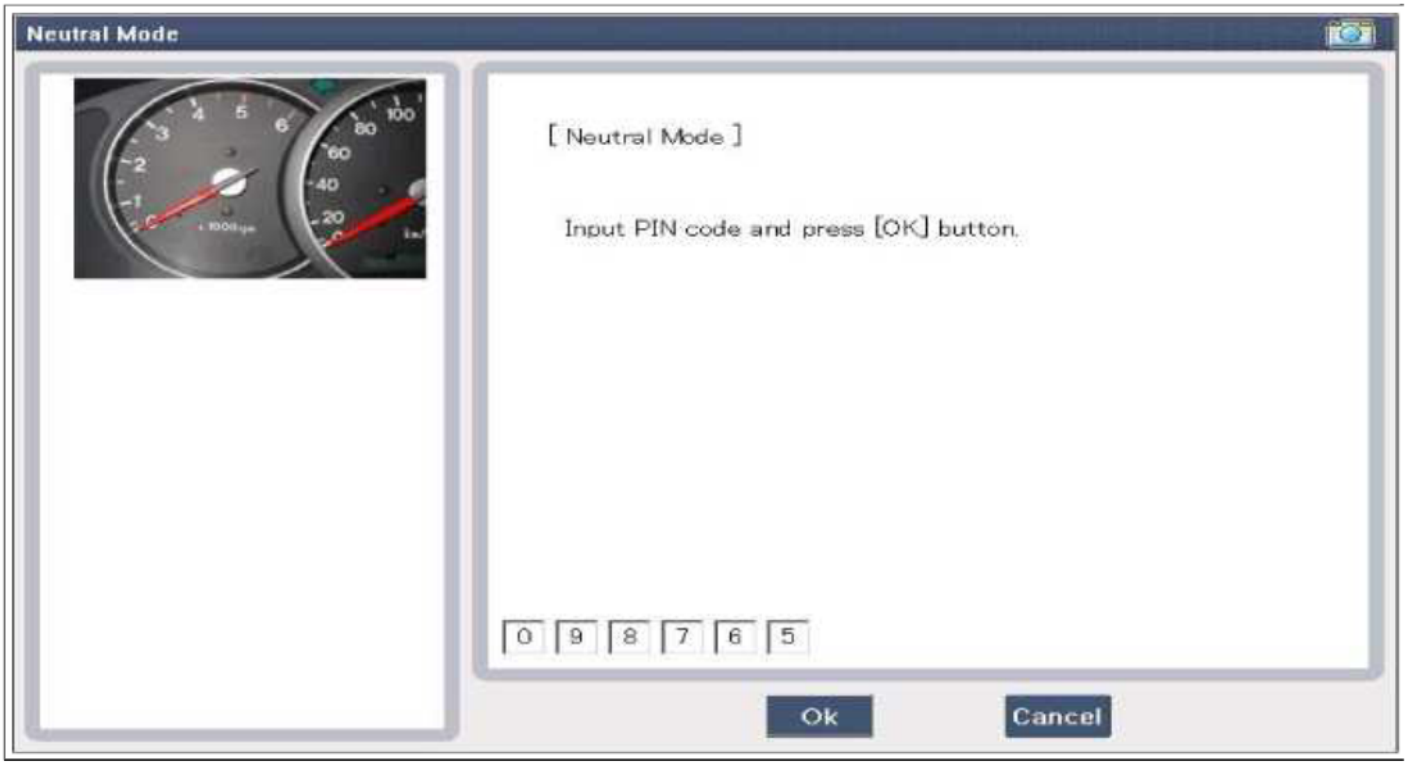

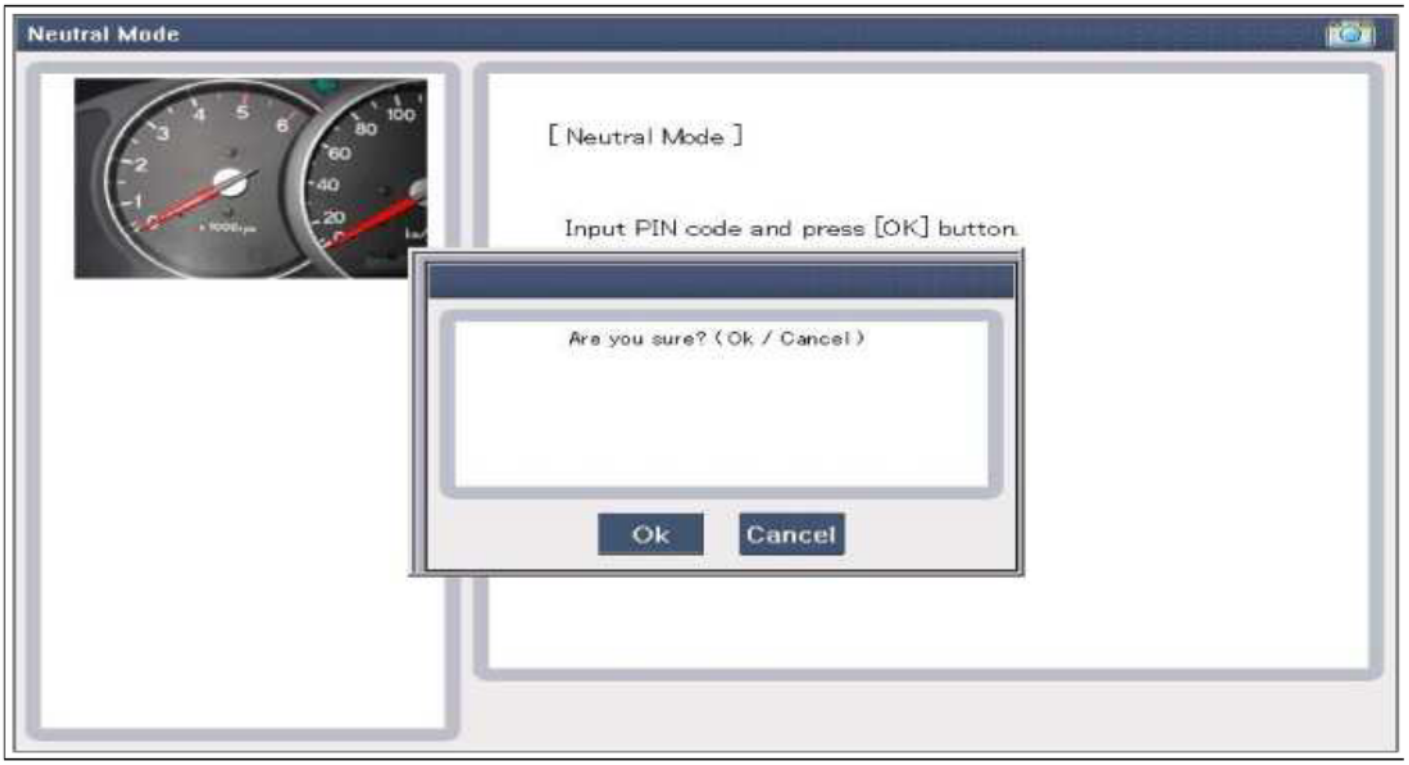

cardiagn.com

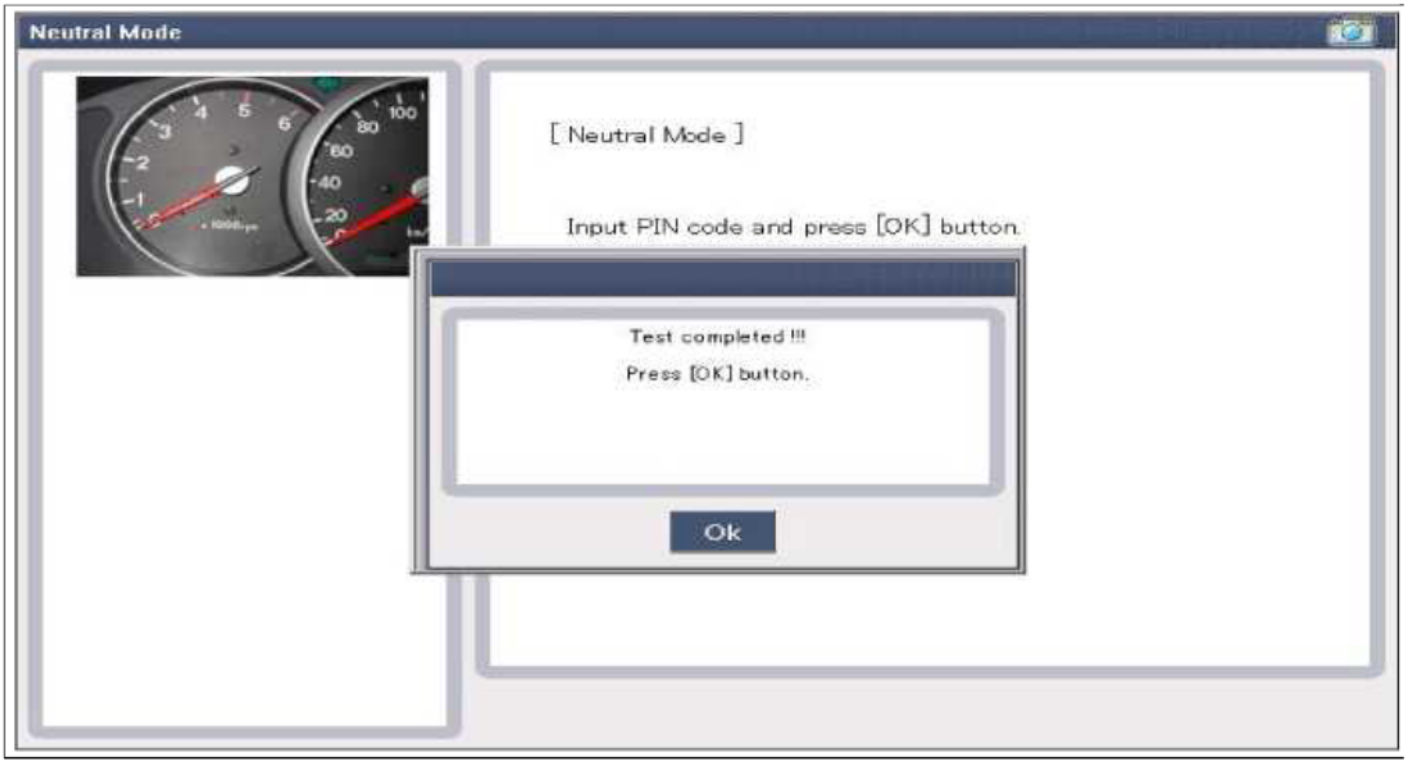

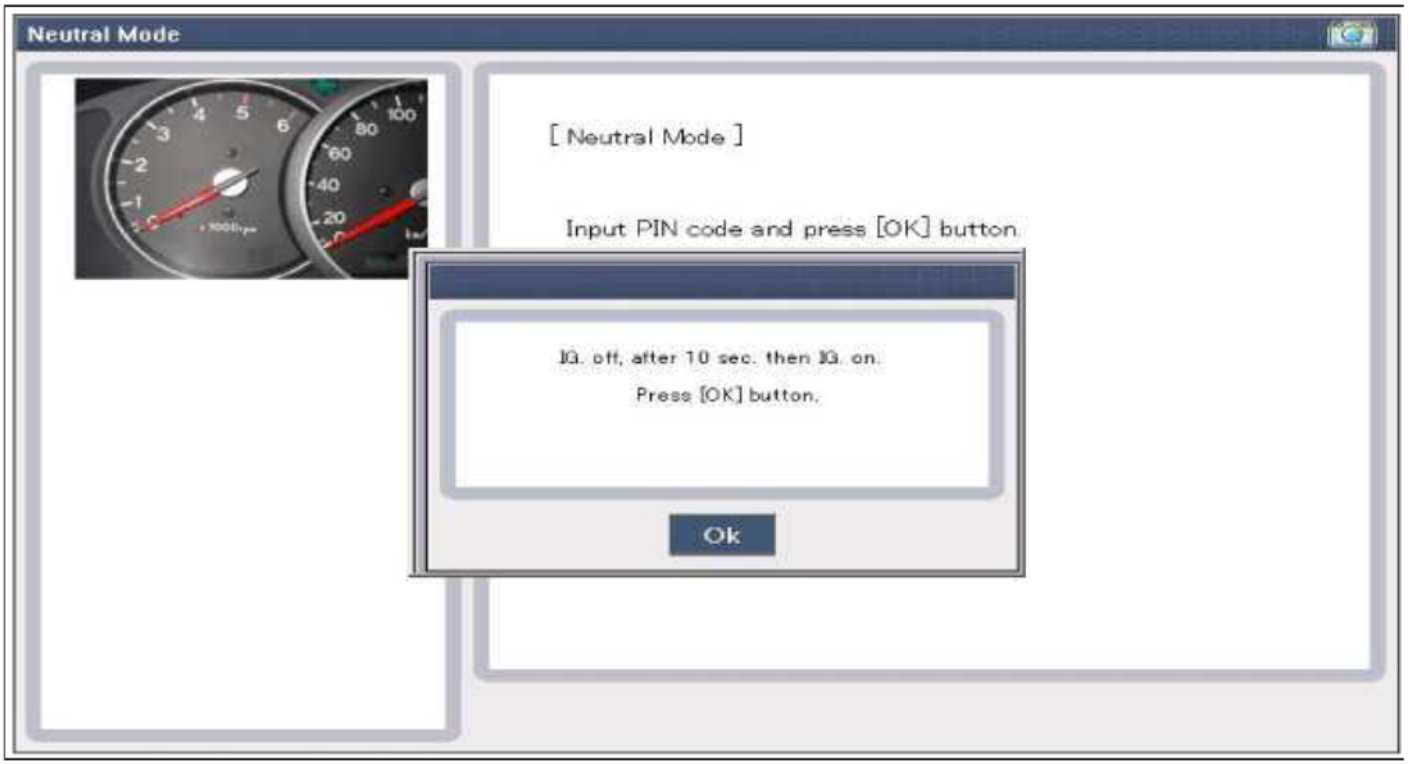

cardiagn.com

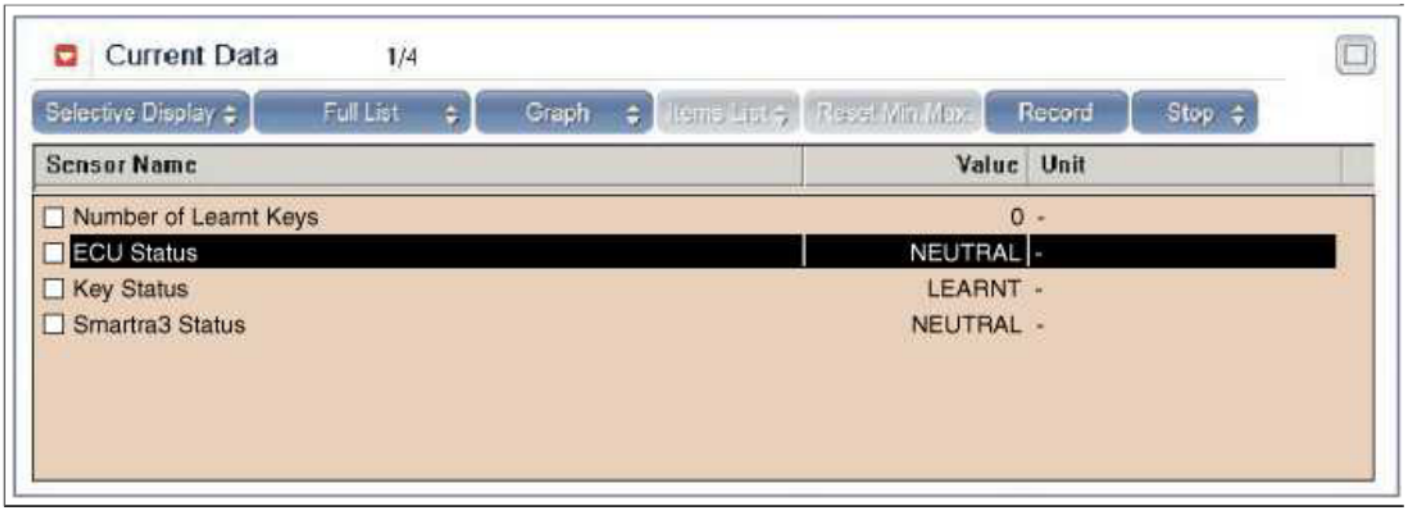

Neutralizing Of SMARTRA

The EMS can be set to the status "neutral" by tester

Ignition key (regardless of key status) is inserted and after IGN ON. If receiving the correct vehicle password from GST, SMARTRA can be neutralized. The neutralization of SMARTRA is possible if DPN is same as the value inputted by GST.

In case that the SMARTRA status is neutral, the EMS keeps the lock state. And the start is not possible by "twice ignition".

In case of changing the vehicle password, new virgin transponder must be only used. And in case of virgin key, after Learning the key of vehicle password, it can be used.

If wrong vehicle specific data have been sent to SMATRA three times continuously or intermittently, the SMATRA will reject the request to enter neutral mode for one hour. Disconnecting the battery or other manipulation cannot reduce this time. After connecting the battery the timer starts again for one hour.

NOTE

- Neutralizing Setting condition :
  - In case of "SMARTRA status", "Learned"
  - Input correct Pin code by tester
- Neutralizing meaning :
  - Vehicle password(DPN Code) & SEK Code deletion.
  - Permission of New DPN Learning.

Function / SMARTRA	Engine Running			Learning	
	Learnt Key	Limp home	Twice Ignition	Key	User Password
Neutral	No	Yes (EMS learnt)	No	Yes	No

cardiagn.com

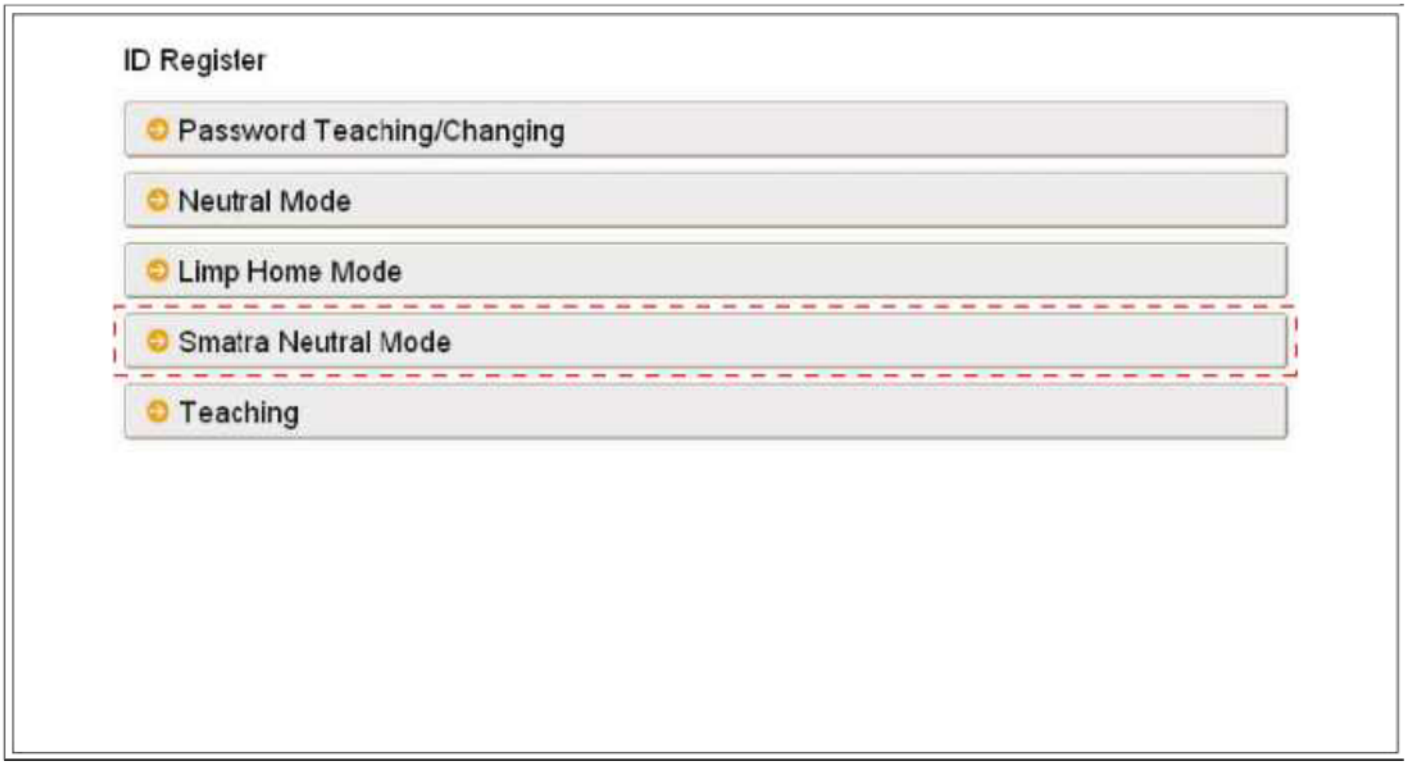

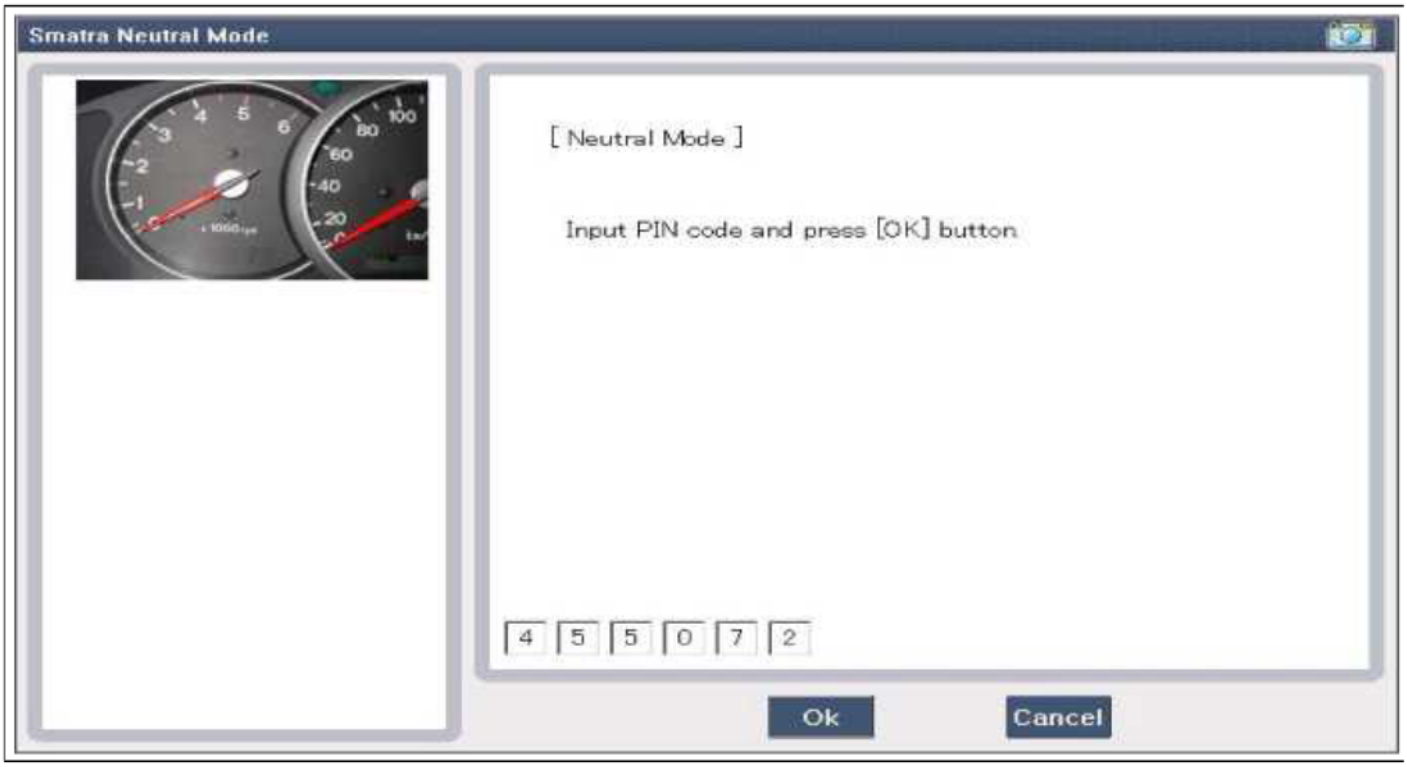

cardiagn.com

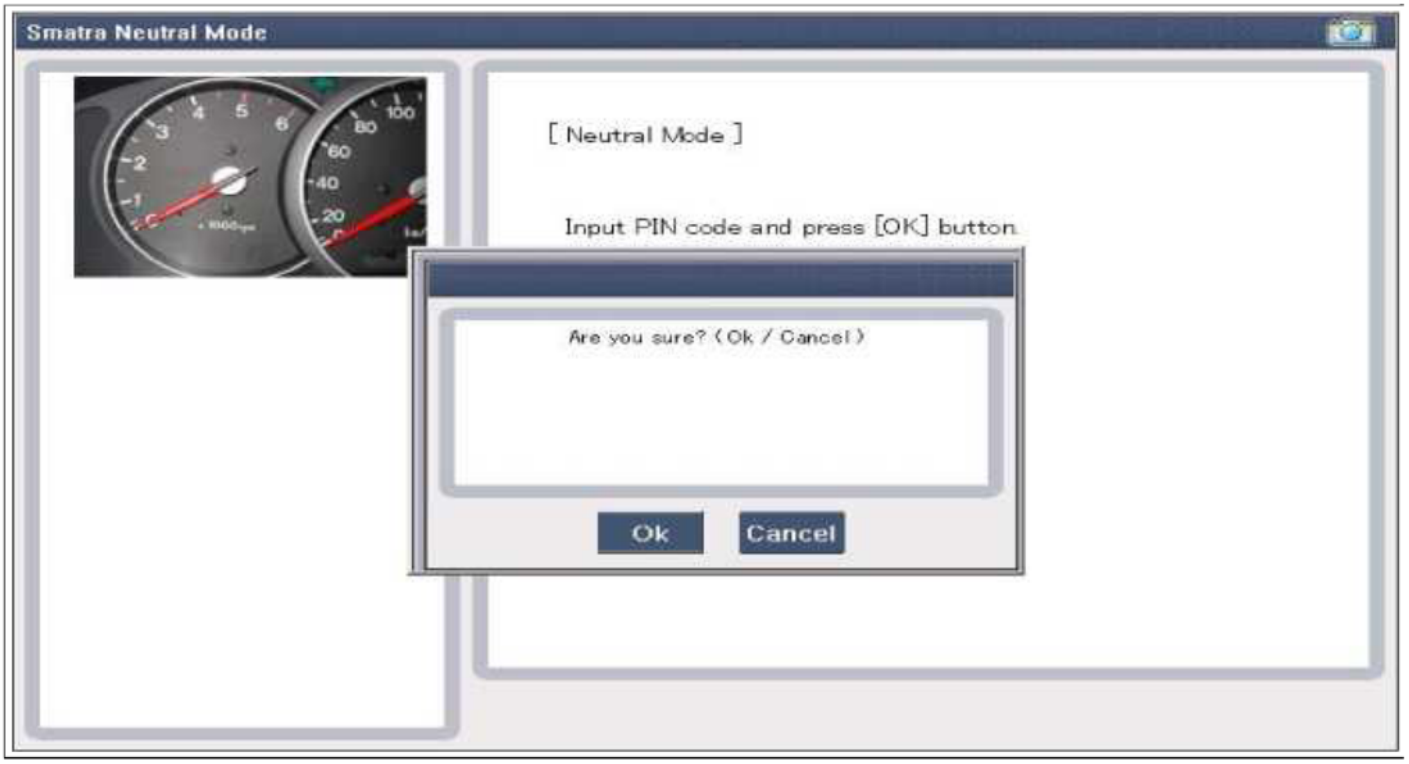

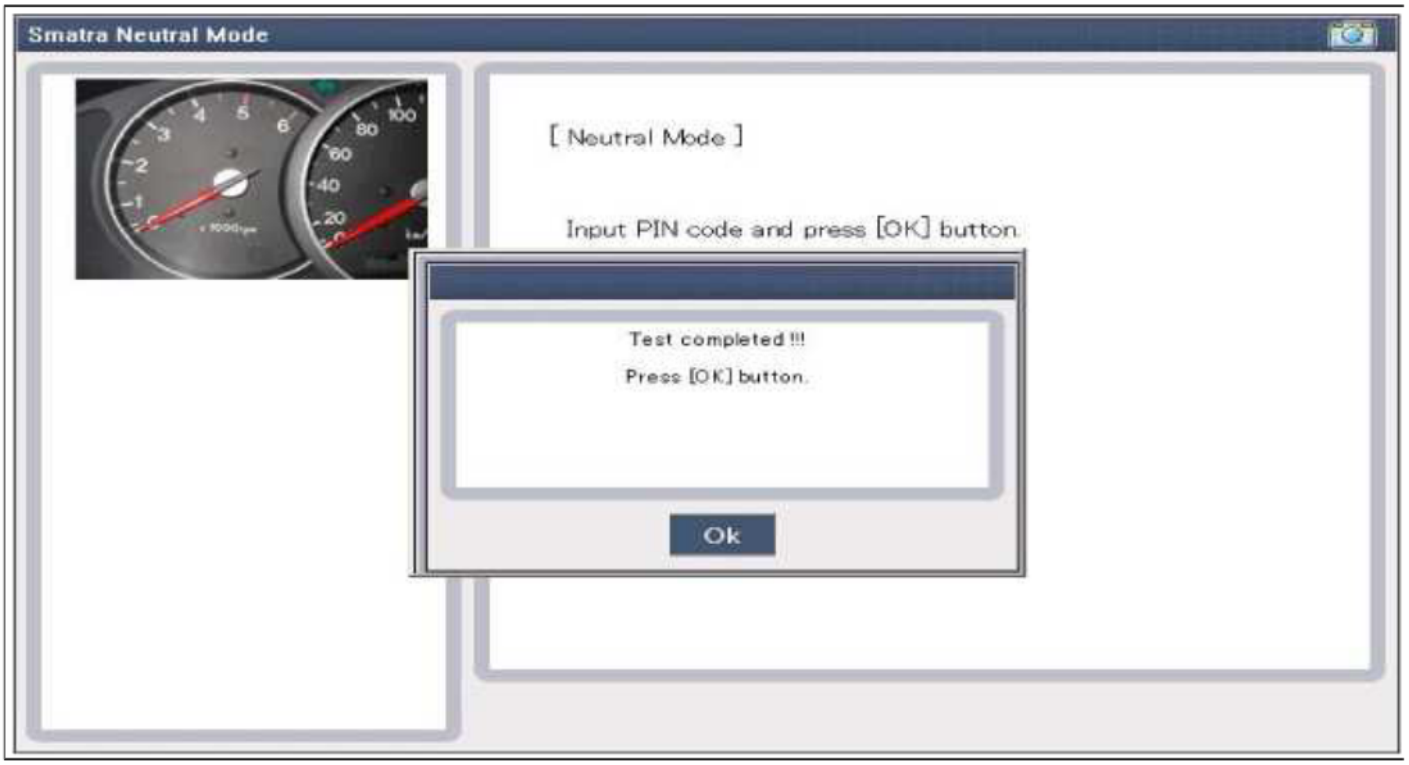

cardiagn.com

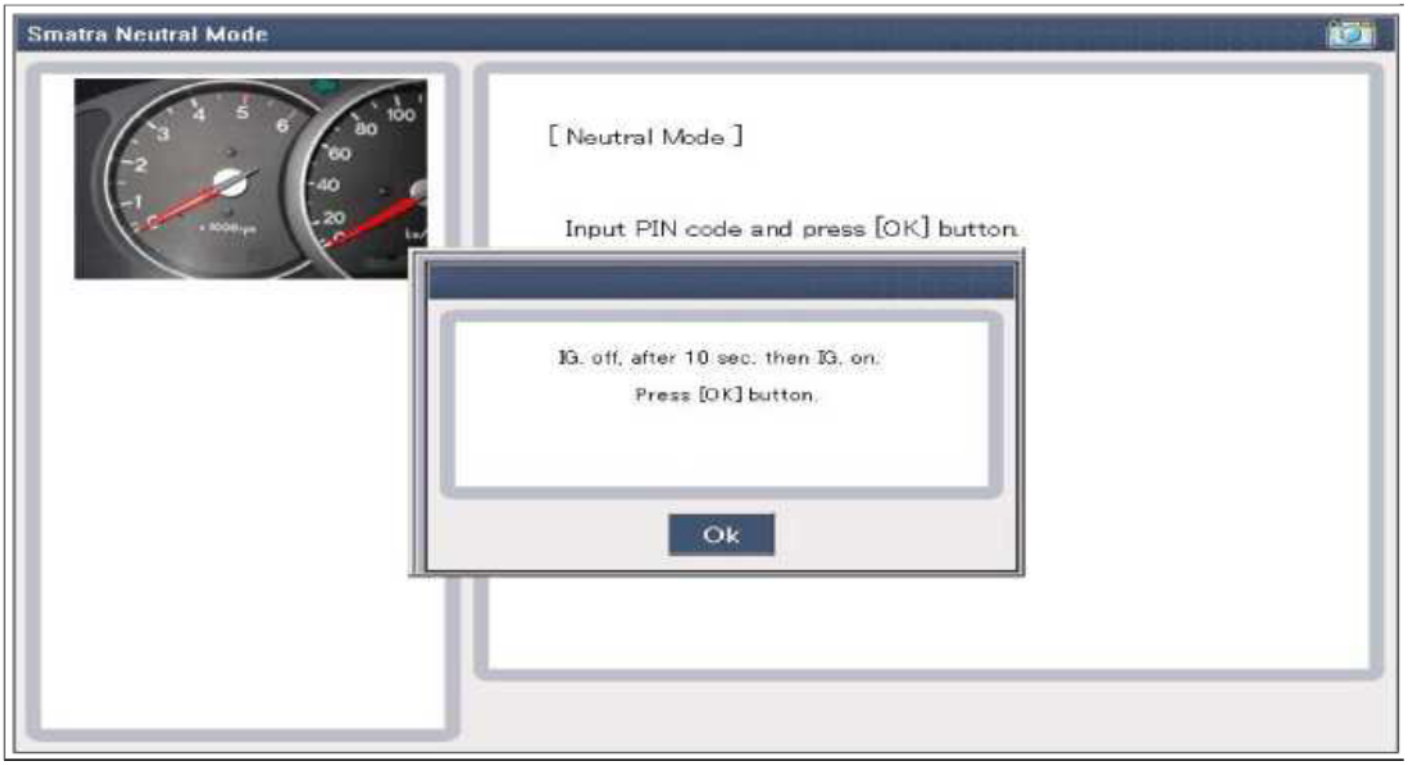

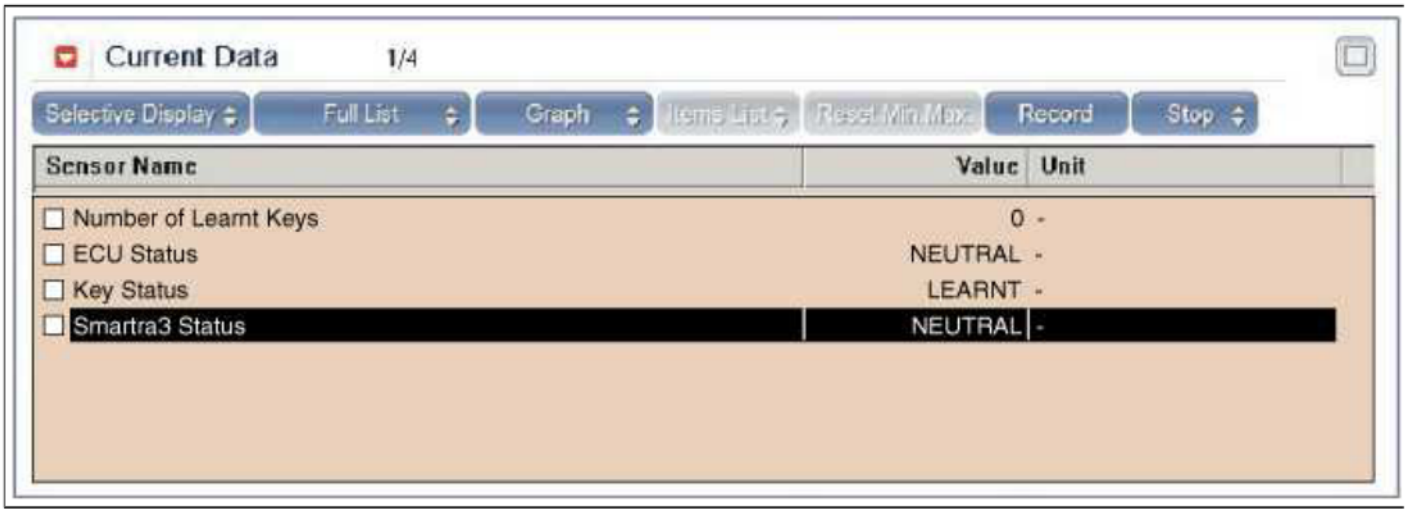

Teaching Procedures

1. Key Teaching Procedure

Key teaching must be done after replacing a defective PCM(ECM) or when providing additional keys to the vehic owner.

The procedure starts with an PCM(ECM) request for vehicle specific data (PIN code: 6digits) from the tester. Th "virgin" PCM(ECM) stores the vehicle specific data and the key teaching can be started. The "learnt" PCM(ECM compares the vehicle specific data from the tester with the stored data. If the data are correct, the teaching can pr If incorrect vehicle specific data have been sent to the PCM(ECM) three times, the PCM(ECM) will reject the re of key teaching for one hour. This time cannot be reduced by disconnecting the battery or any other manipulation. reconnecting the battery, the timer starts again for one hour.

The key teaching is done by ignition on with the key and additional tester commands. The PCM(ECM) stores the relevant data in the EEPROM and in the transponder. Then the PCM(ECM) runs the authentication required for confirmation of the teaching process. The successful programming is then confirmed by a message to the tester.

If the key is already known to the PCM(ECM) from a previous teaching, the authentication will be accepted and t EEPROM data are updated. There is no changed transponder content (this is impossible for a learnt transponder)

The attempt to repeatedly teach a key, which has been taught already during the same teaching cycle, is recognize the PCM(ECM). This rejects the key and a message is sent to the tester.

cardiagn.com

The PCM(ECM) rejects invalid keys, which are presented for teaching. A message is sent to the tester. The key c
invalid due to faults in the transponder or other reasons, which result from unsuccessful programming of data. If the
PCM(ECM) detects different authenticators of a transponder and an PCM(ECM), the key is considered to be inv
The maximum number of taught keys is 8
If an error occurs during the Immobilizer Service Menu, the PCM(ECM) status remains unchanged and a specific
code is stored.
If the PCM(ECM) status and the key status do not match for teaching of keys, the tester procedure will be stoppe
a specific fault code will be stored at PCM(ECM).

NOTE

When teaching the 1st key, Smartra registers at the same time.

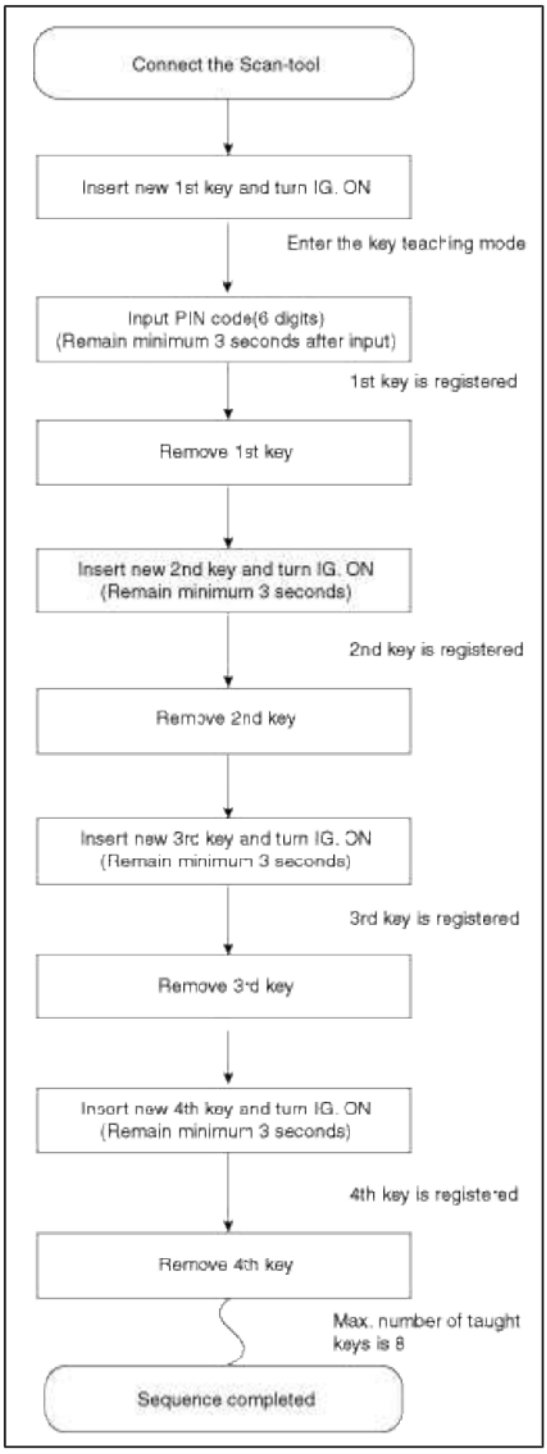

(1) PCM(ECM) learnt status.

cardiagn.com

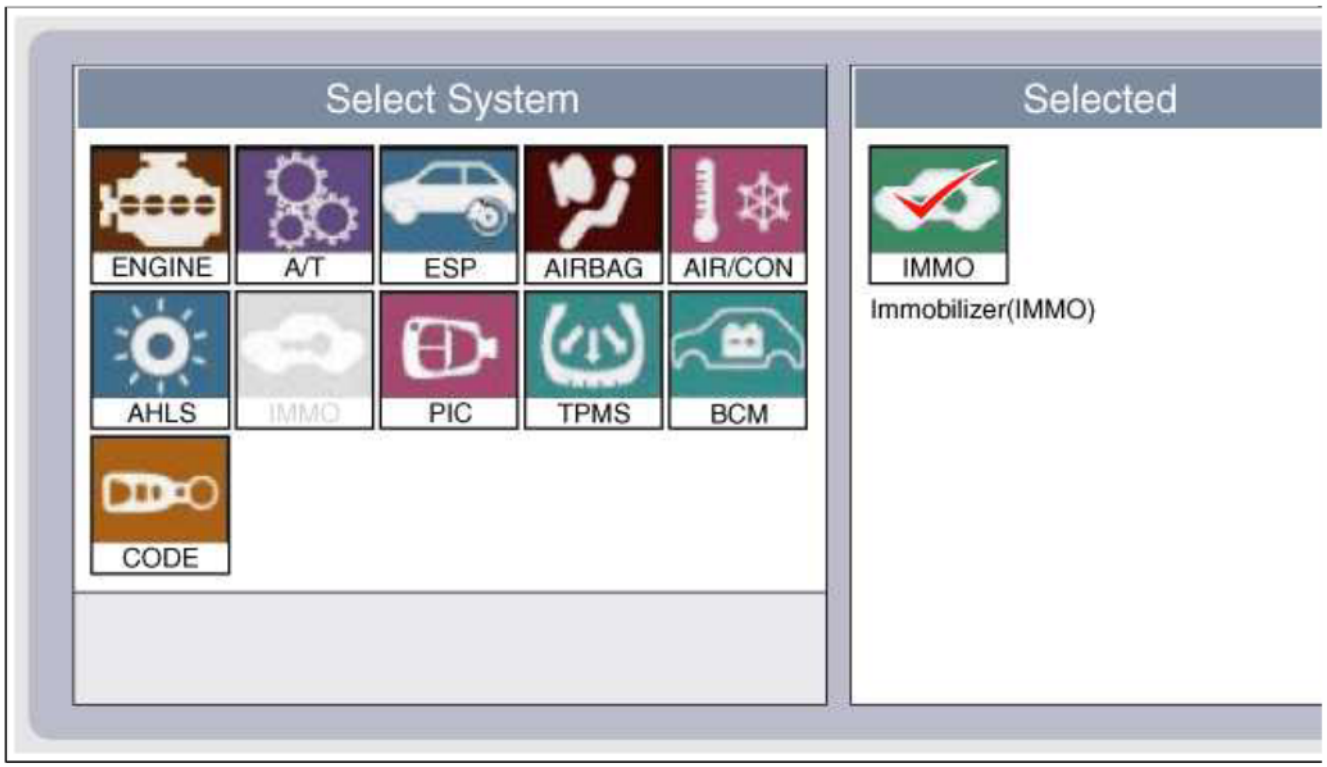

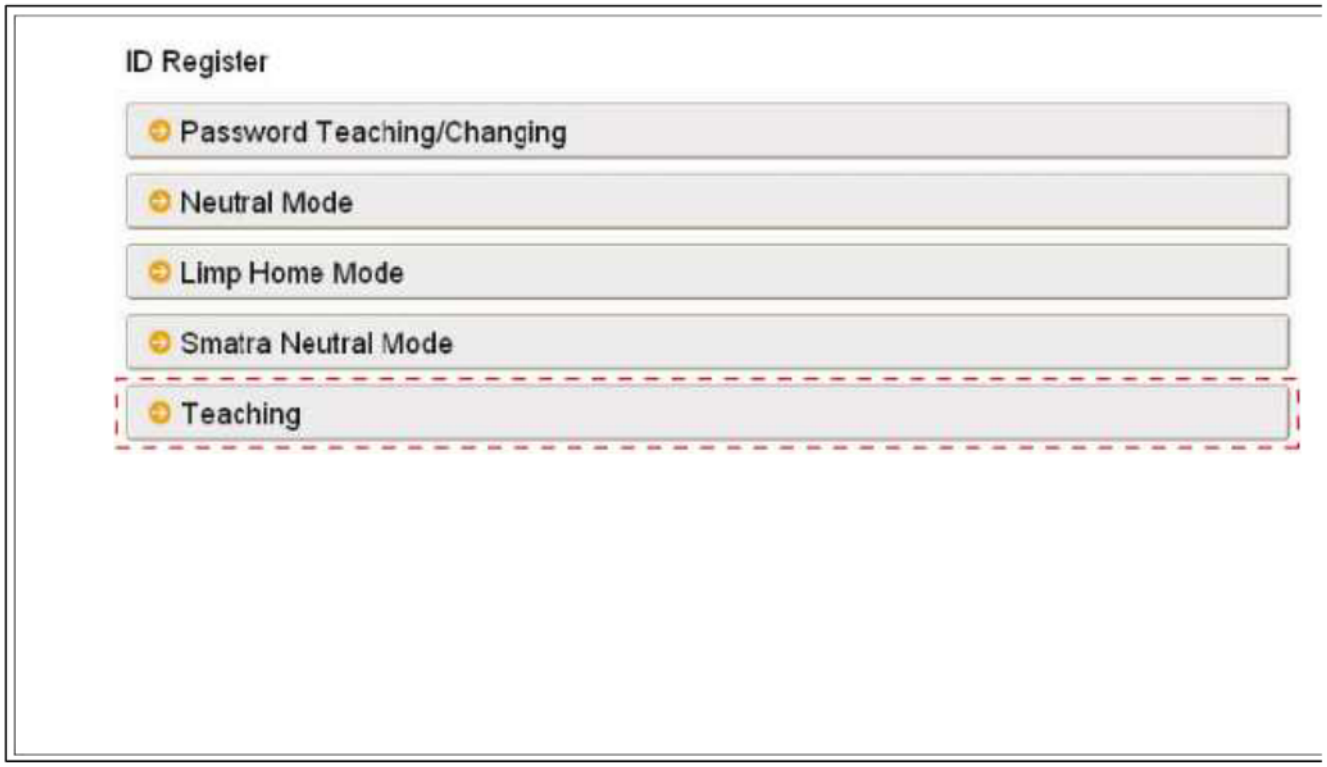

cardiagn.com

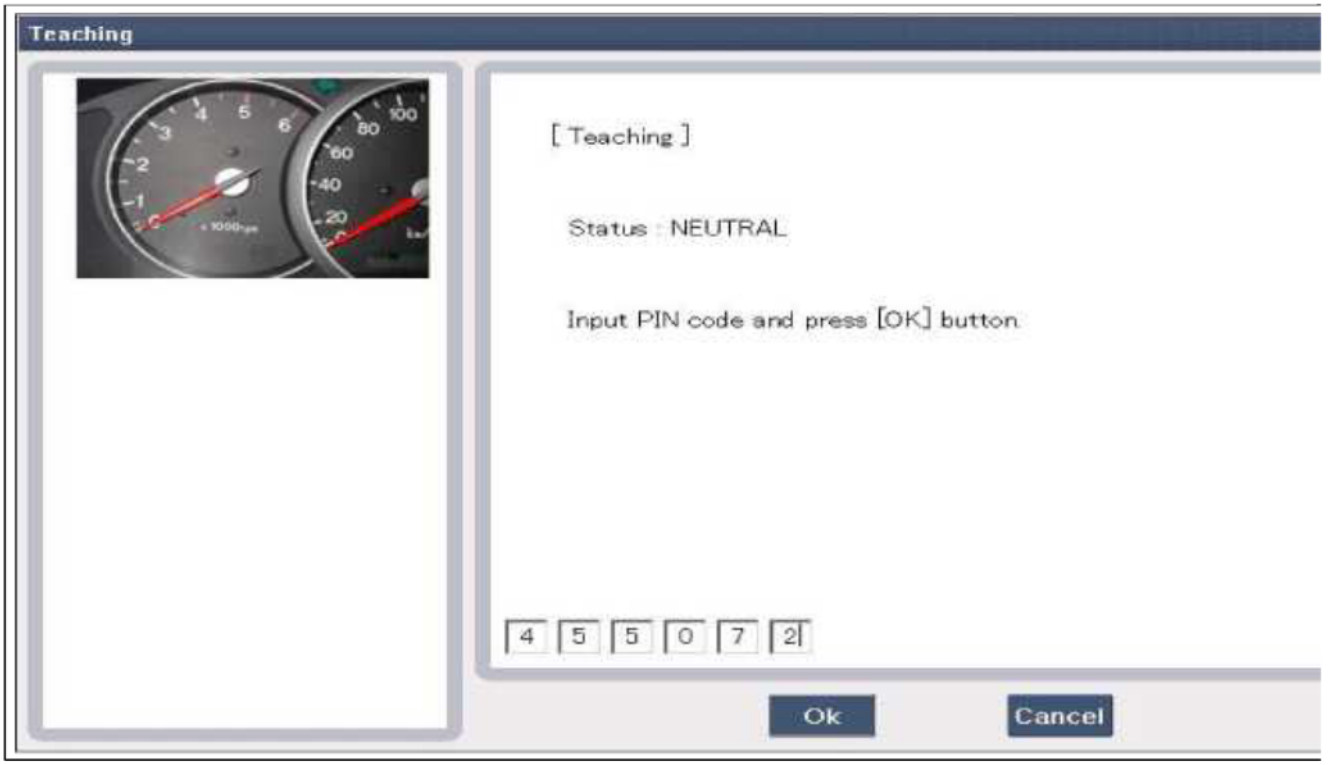

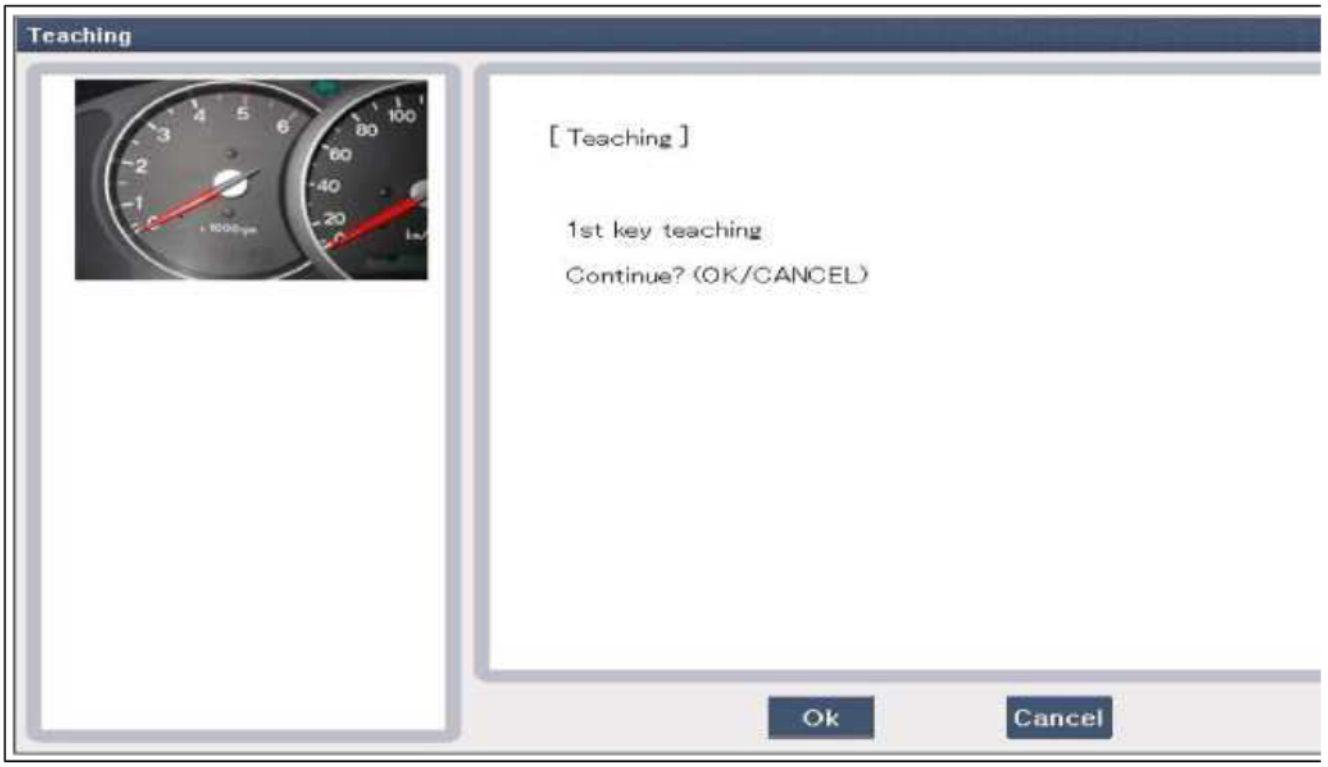

cardiagn.com

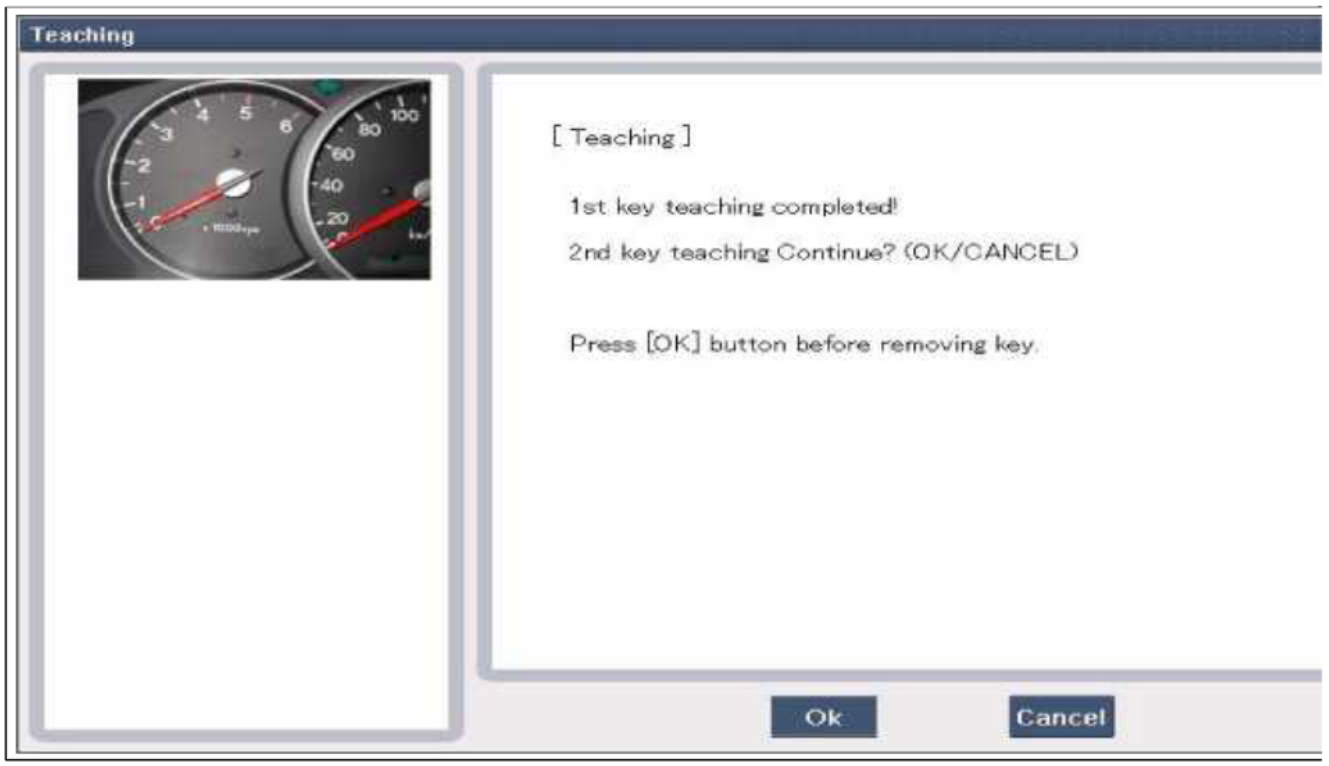

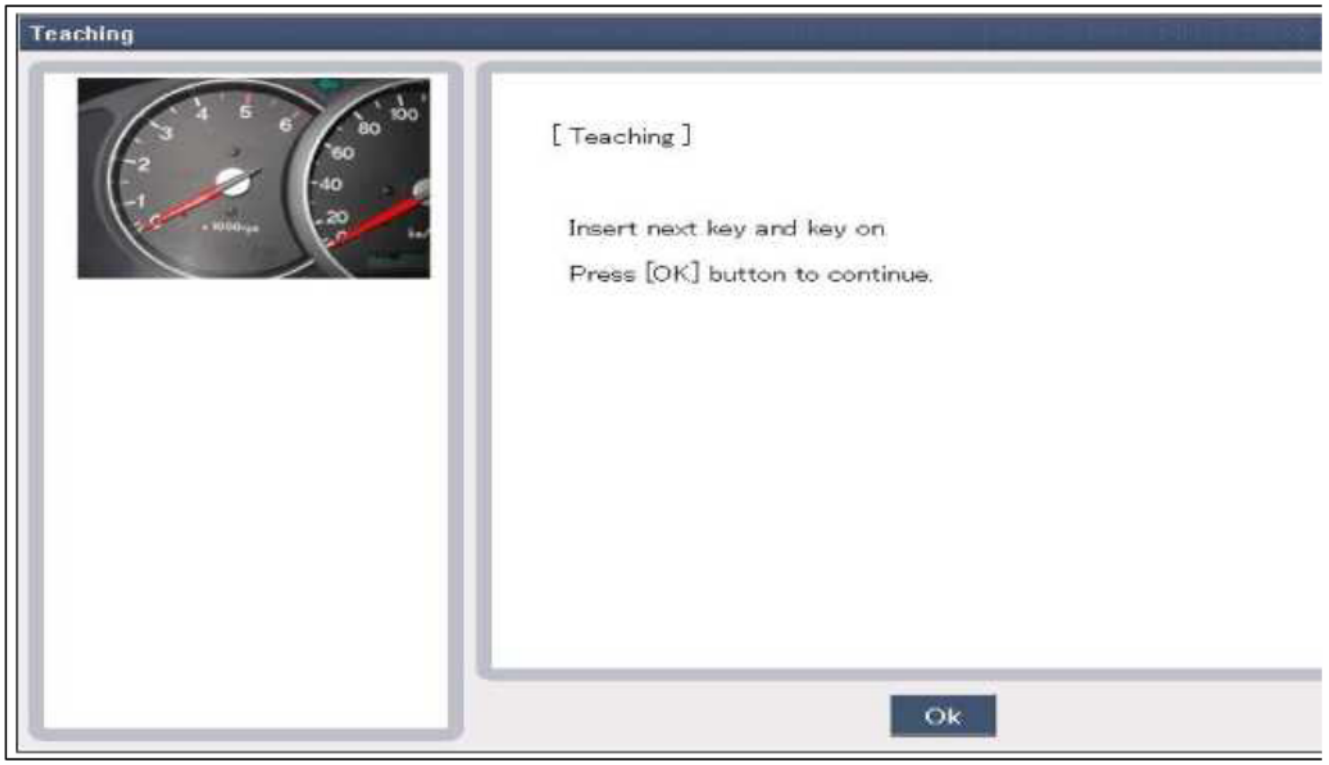

cardiagn.com

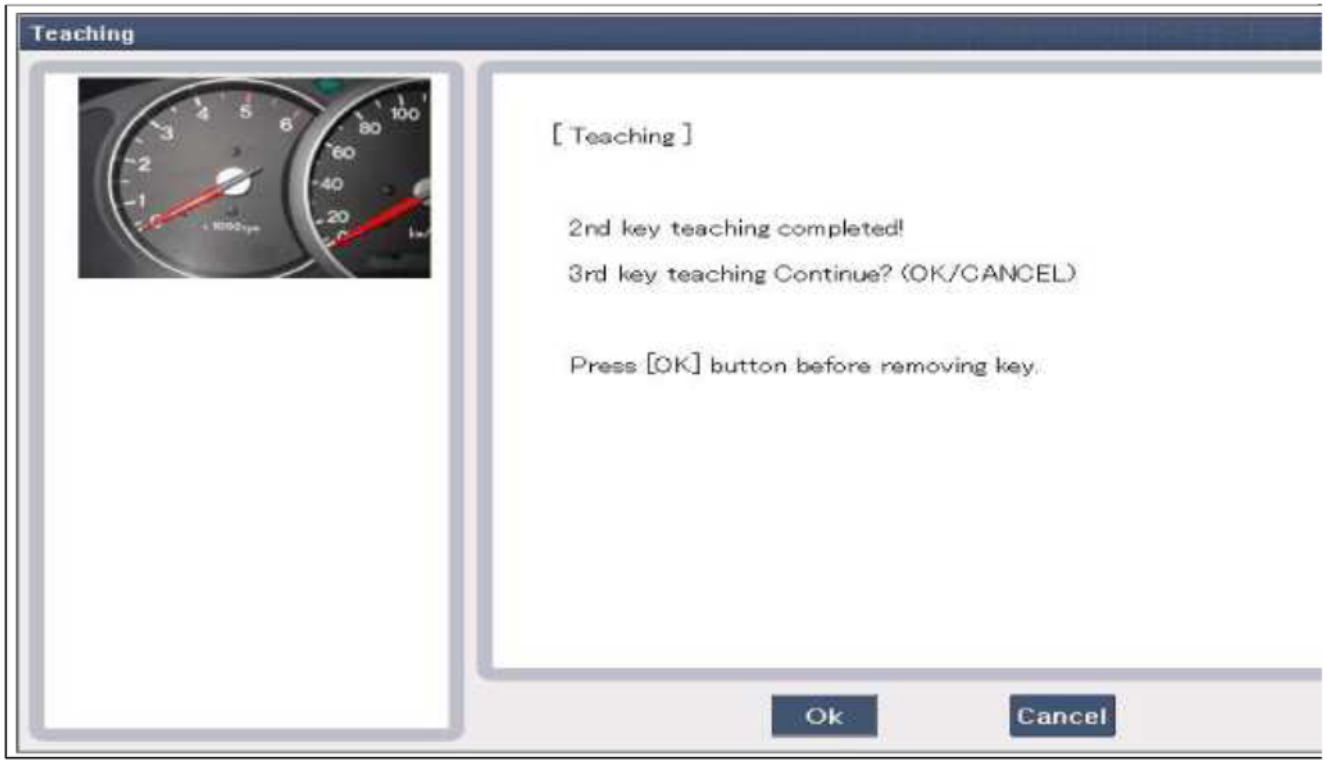

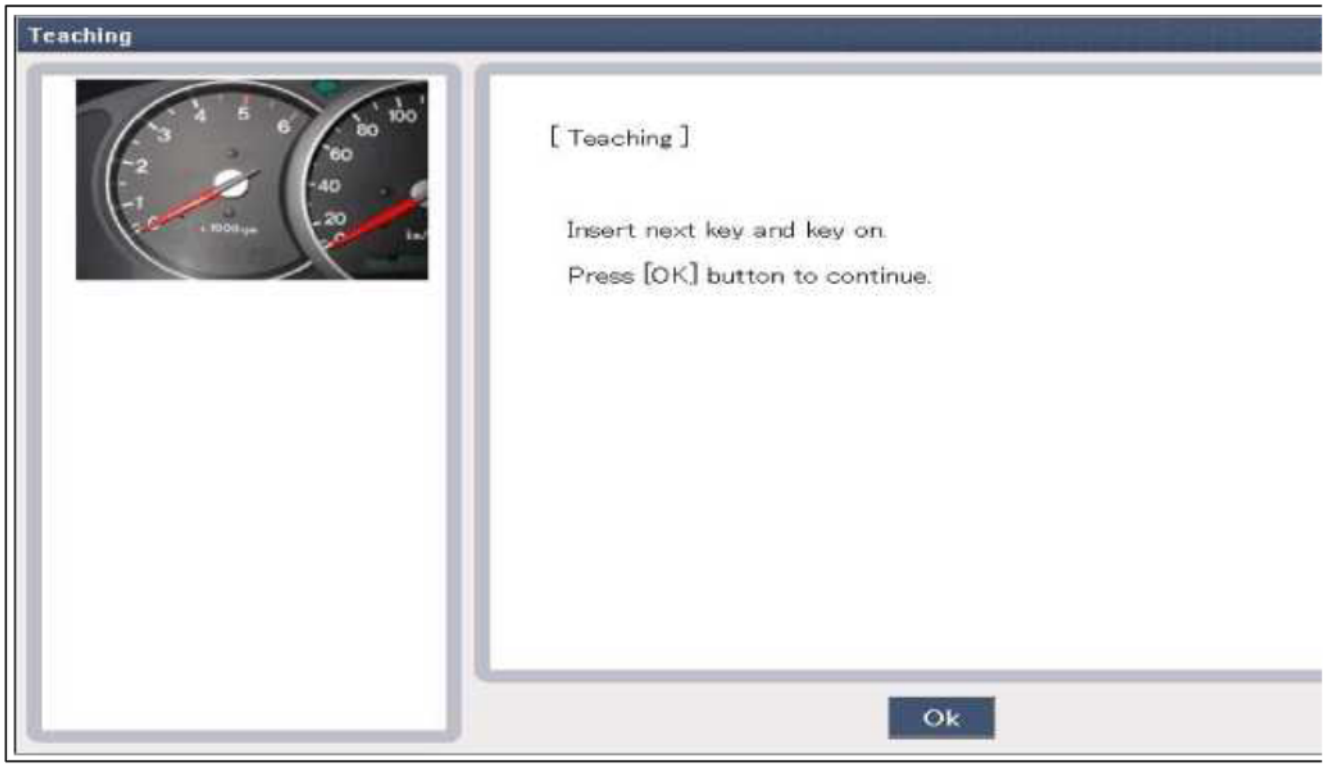

cardiagn.com

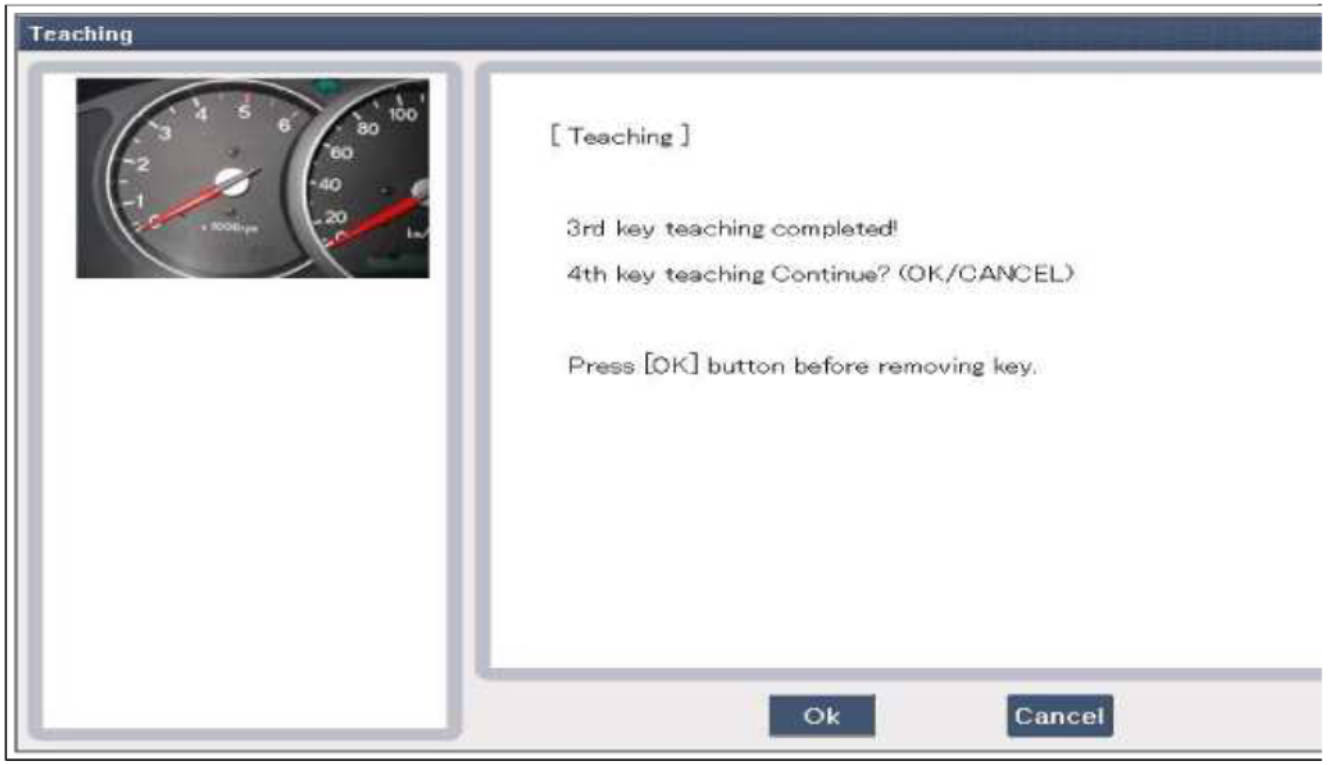

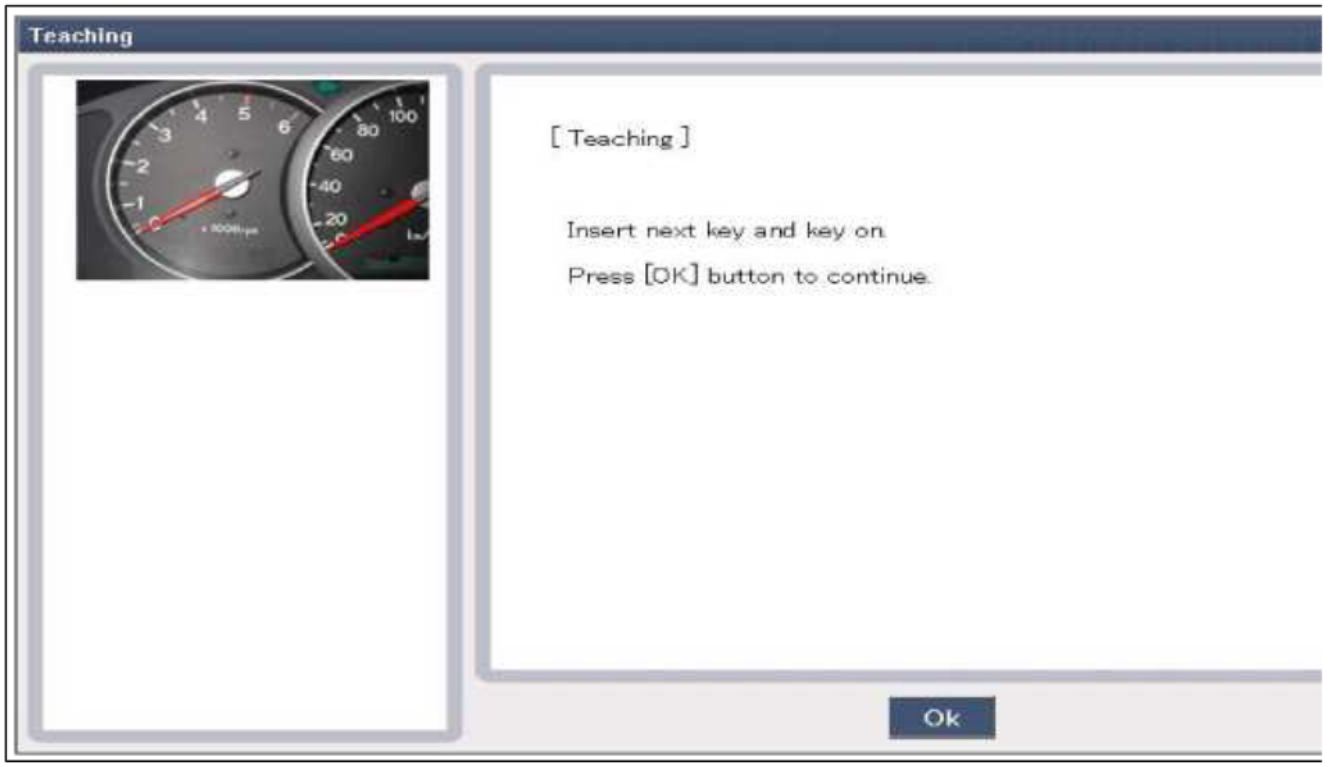

cardiagn.com

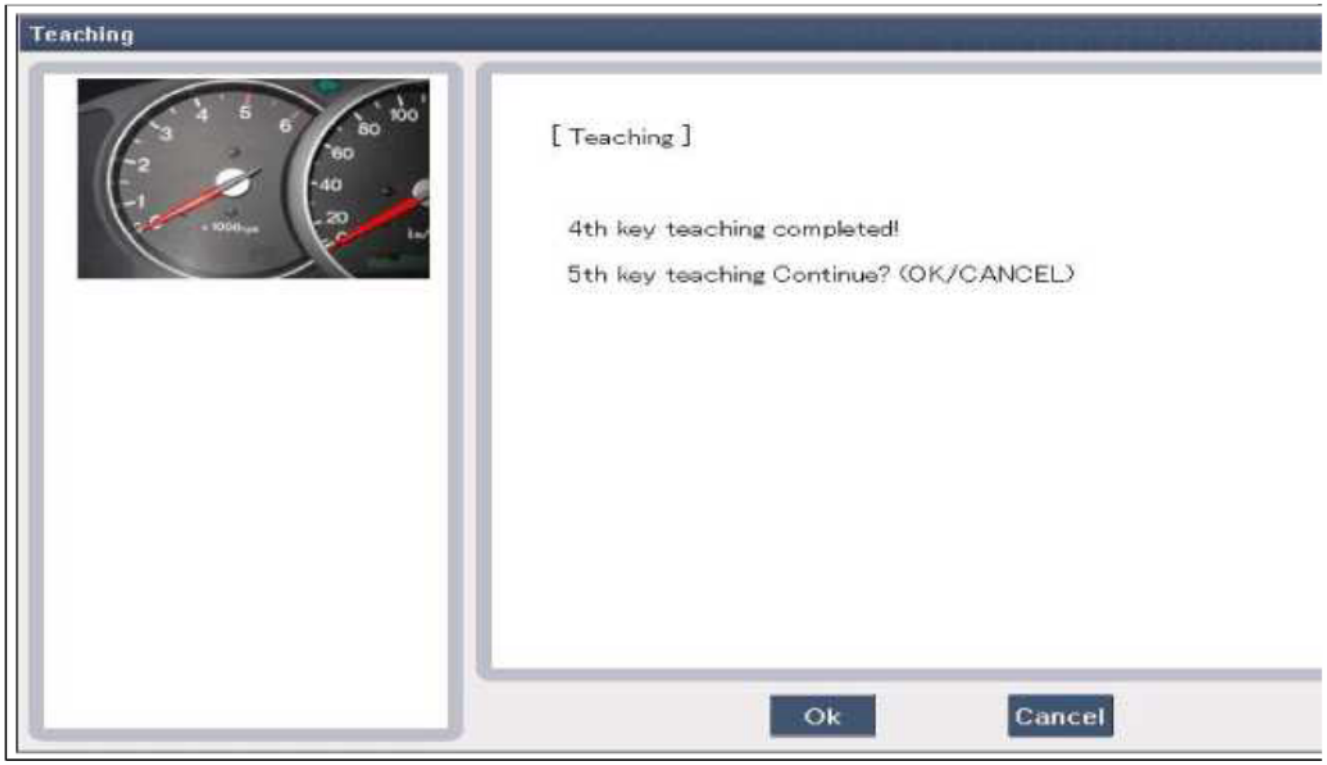

(2) PCM(ECM) virgin status.

After replacing new "PCM(ECM)" scan tool displays that PCM(ECM) is virgin status in Key Teaching mode. "VIRGIN" status means that PCM(ECM) has not matched any PIN code before.

Password Teaching/changing

1. User Password Teaching Procedure

The user password for limp home is taught at the service station. The owner of the vehicle can select a number with four digits.

The user password teaching is only accepted by a "learnt" PCM(ECM). Before first teaching of user password to an PCM(ECM), the status of the password is "virgin" No limp home function is possible.

The teaching is started by ignition on, with a valid key(learnt key) and sending the user password by tester. After successful teaching, the status of the user password changes from "virgin" to "learnt"

The learnt user password can also be changed. This can be done if the user password status is "learnt" and the tester sends authorization of access, either the old user password or the vehicle specific data. After correct authorization, the PCM(ECM) requests the new user password. The status remains "learnt" and the new user password will be valid for the next limp home mode.

If wrong user passwords or wrong vehicle specific data have been sent to the PCM(ECM) three times continuously or intermittently, the PCM(ECM) will reject the request to change the password for one hour. This time cannot be reduced by disconnecting the battery or any other actions. After reconnecting the battery, the timer starts again for one hour.

2. User password teaching

cardiagn.com

ID Register

- Password Teaching/Changing
- Neutral Mode
- Limp Home Mode
- Smatra Neutral Mode
- Teaching

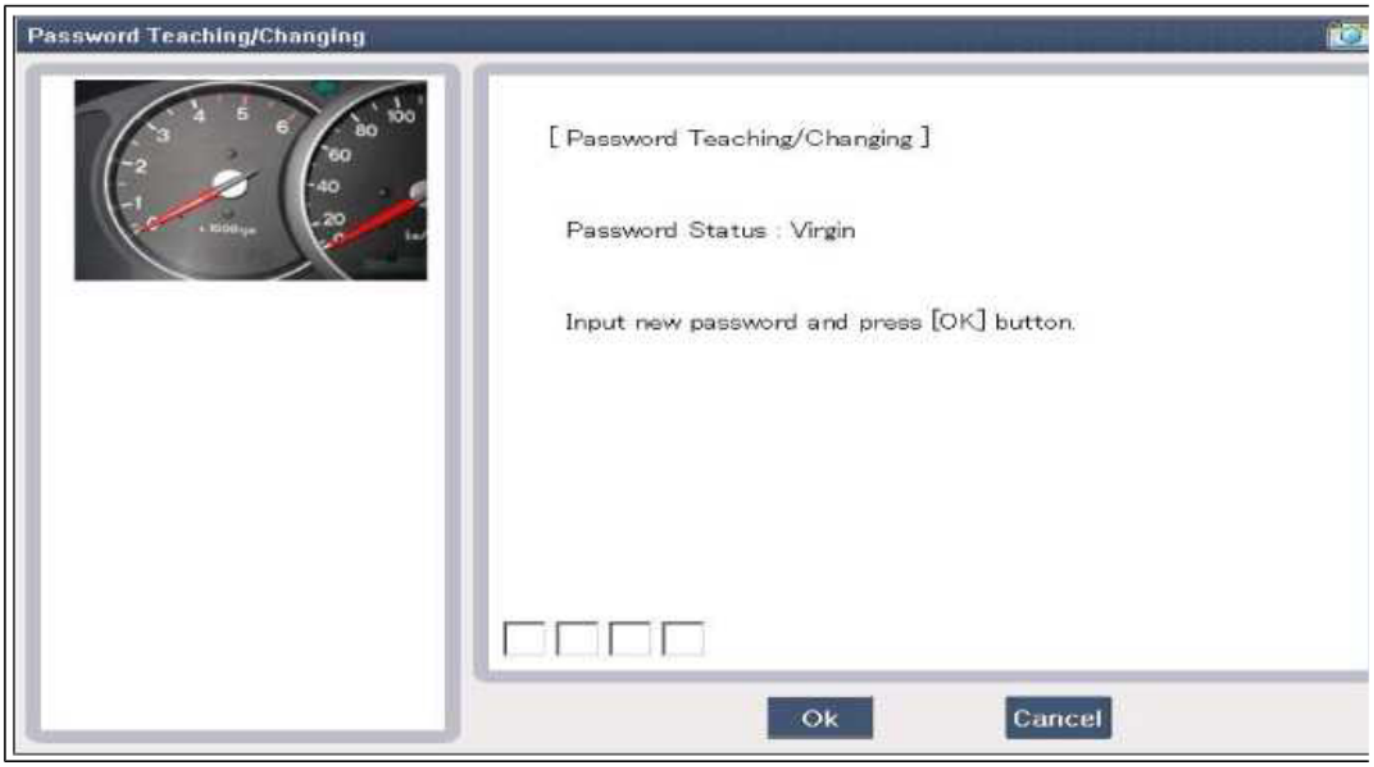

cardiagn.com

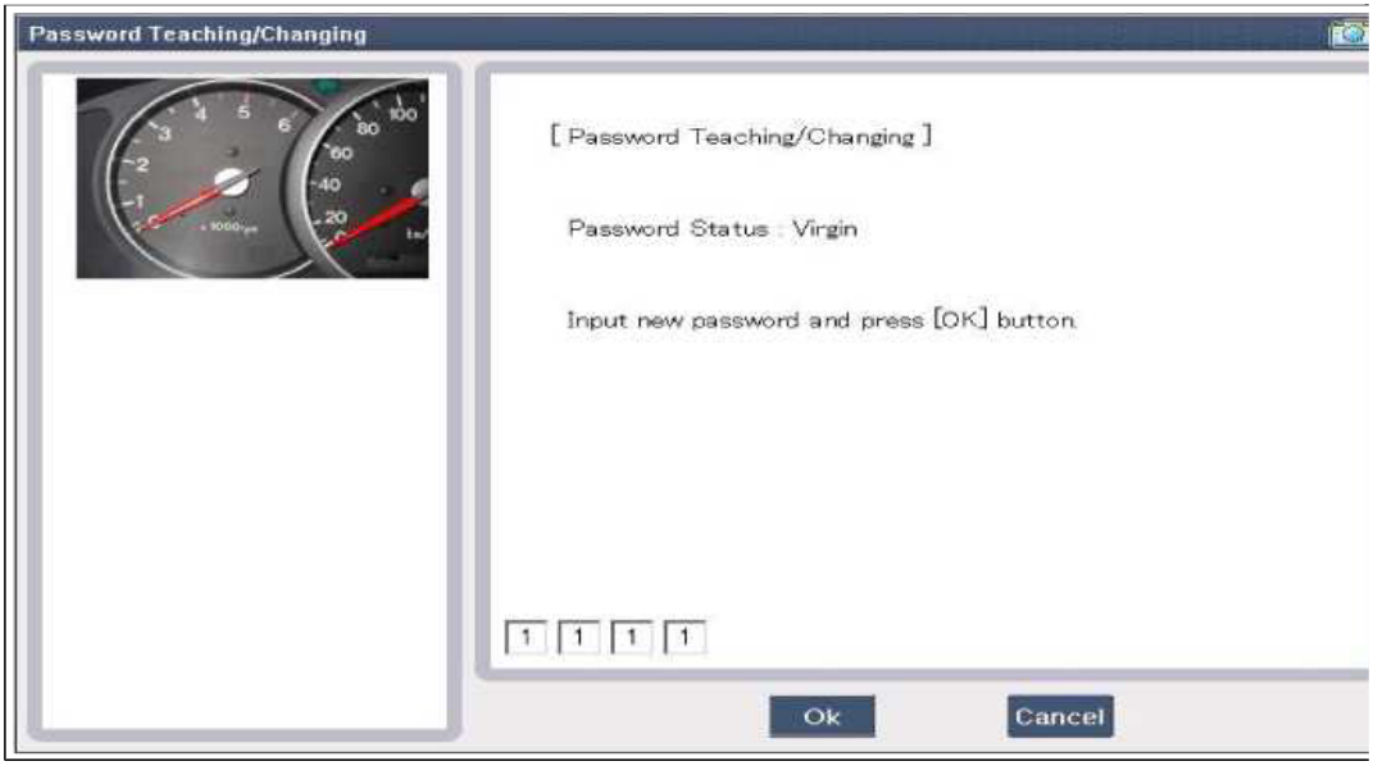

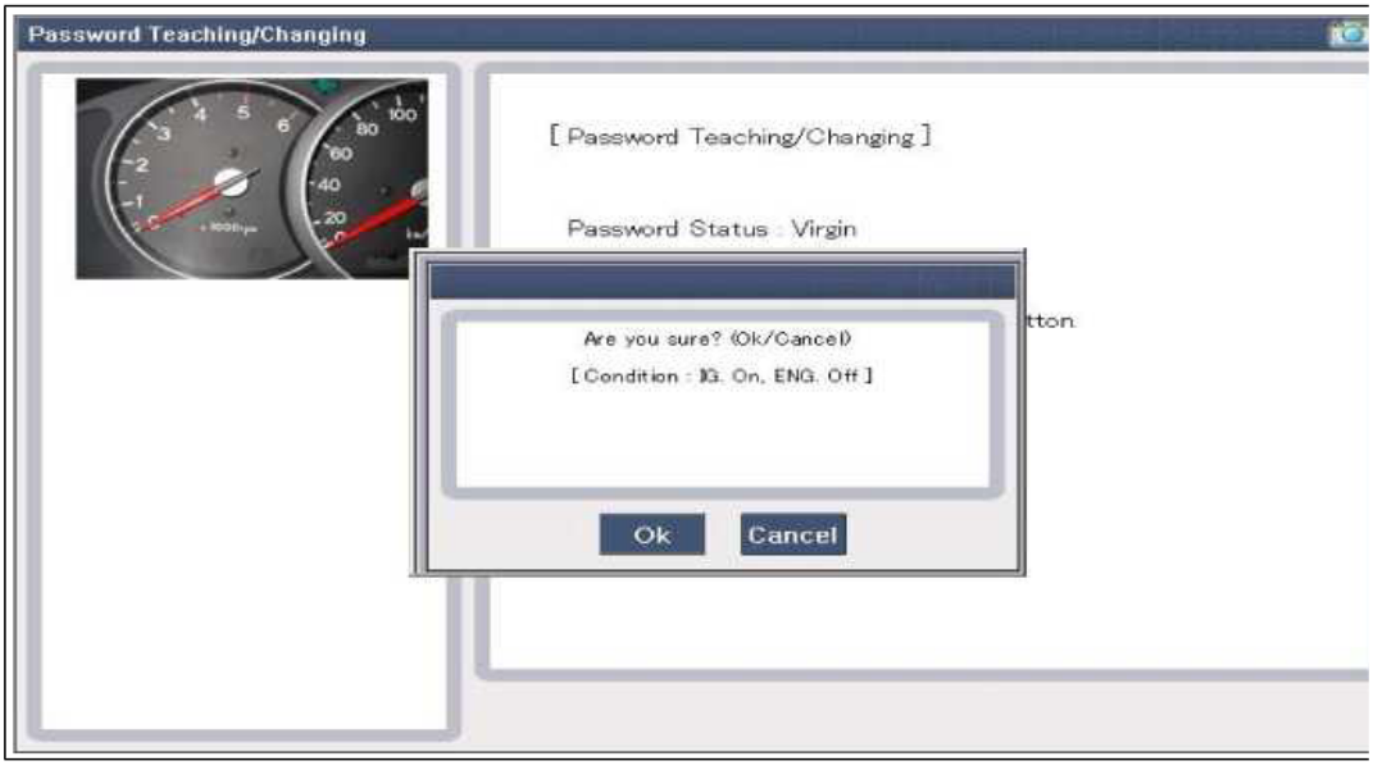

cardiagn.com

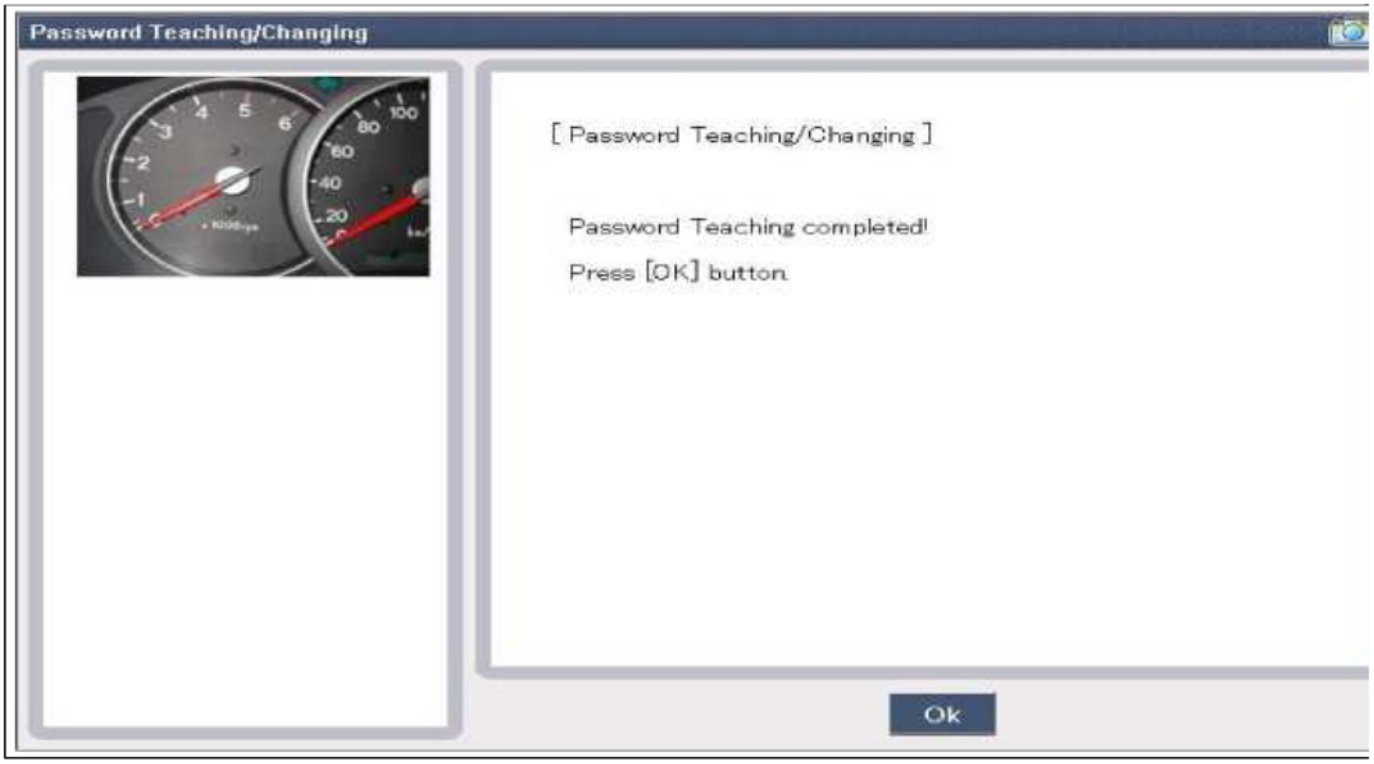

In case of putting wrong password, retry from first step after 10 seconds.

3. User password changing

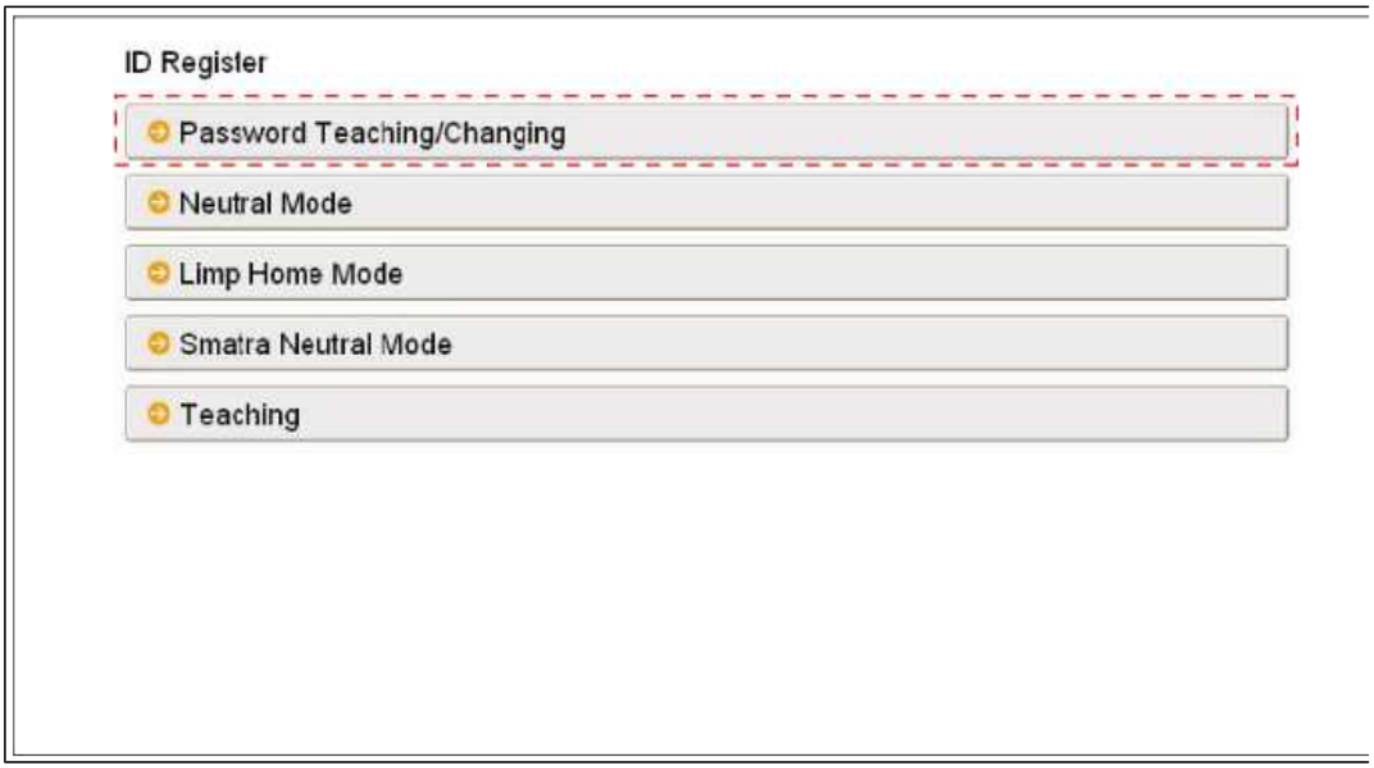

cardiagn.com

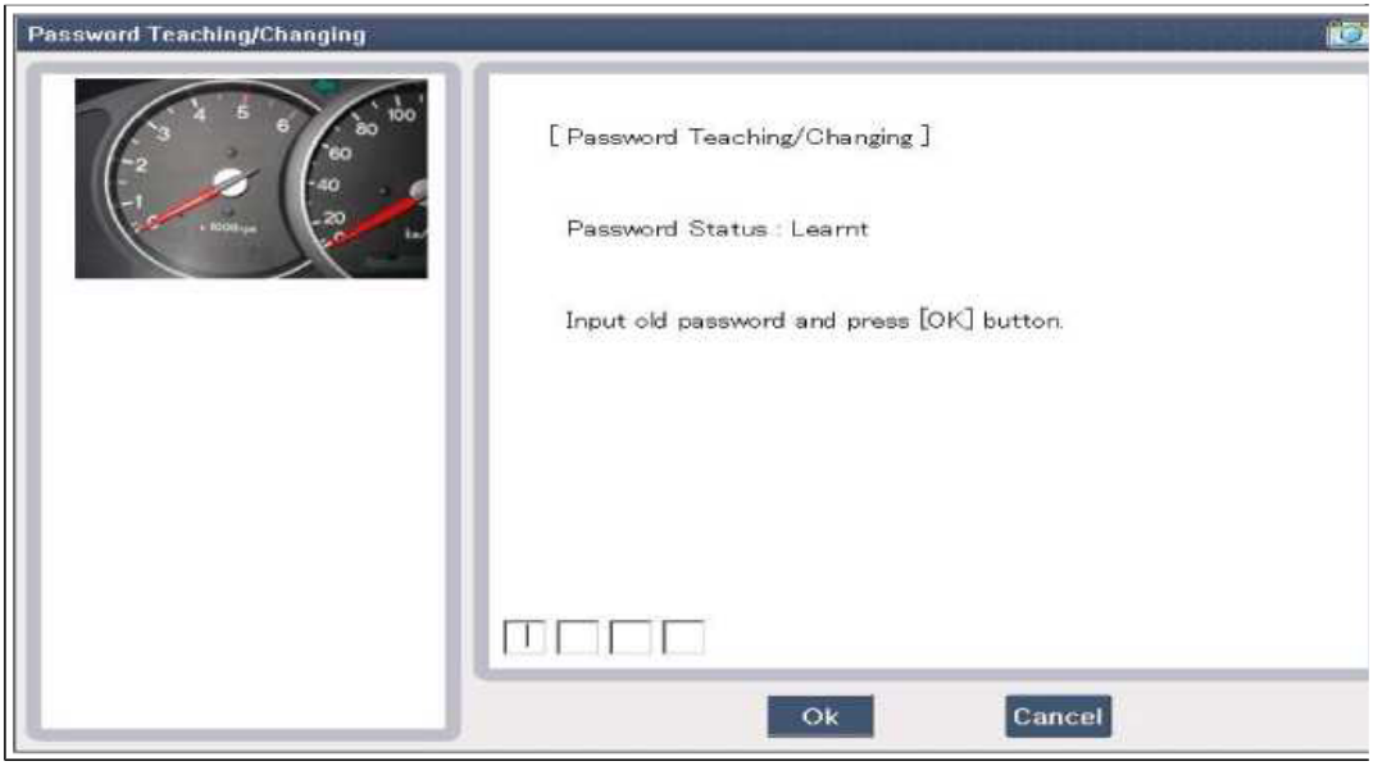

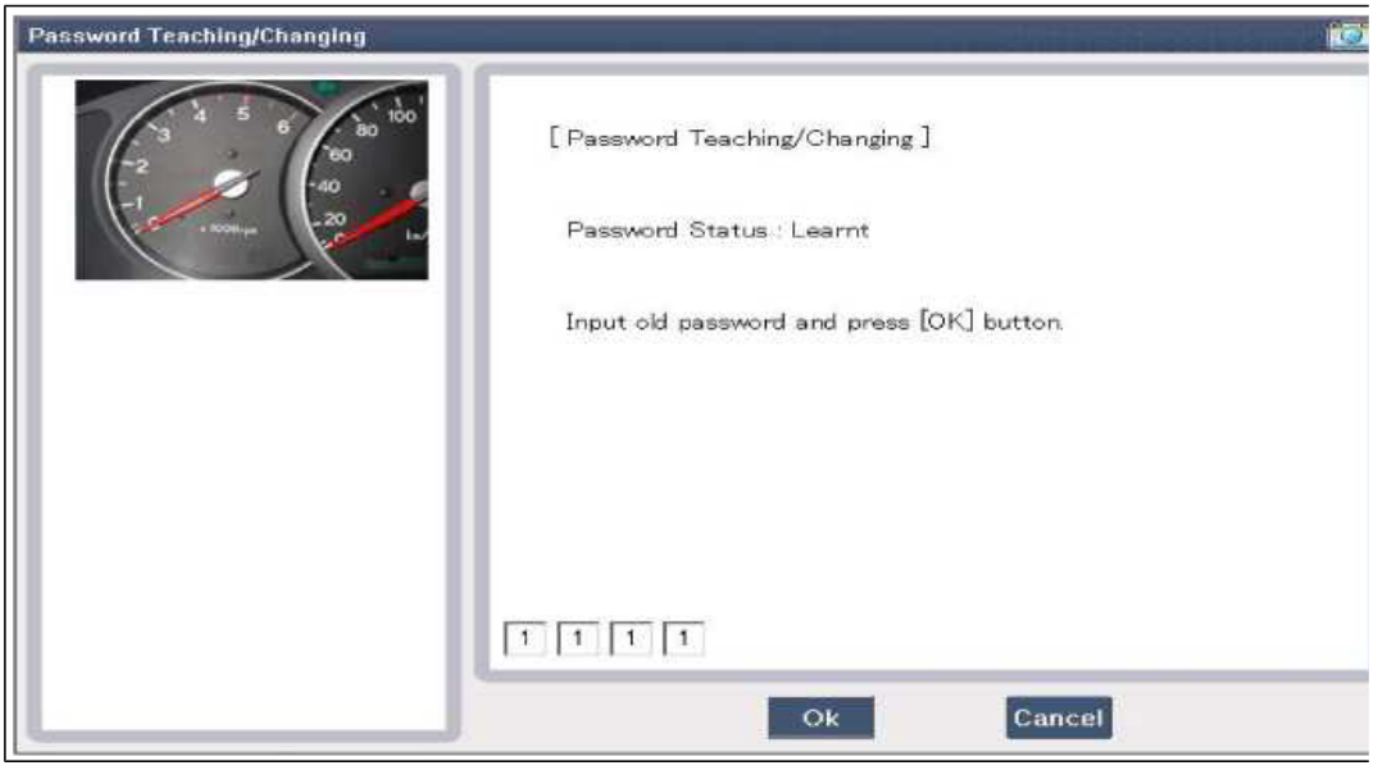

cardiagn.com

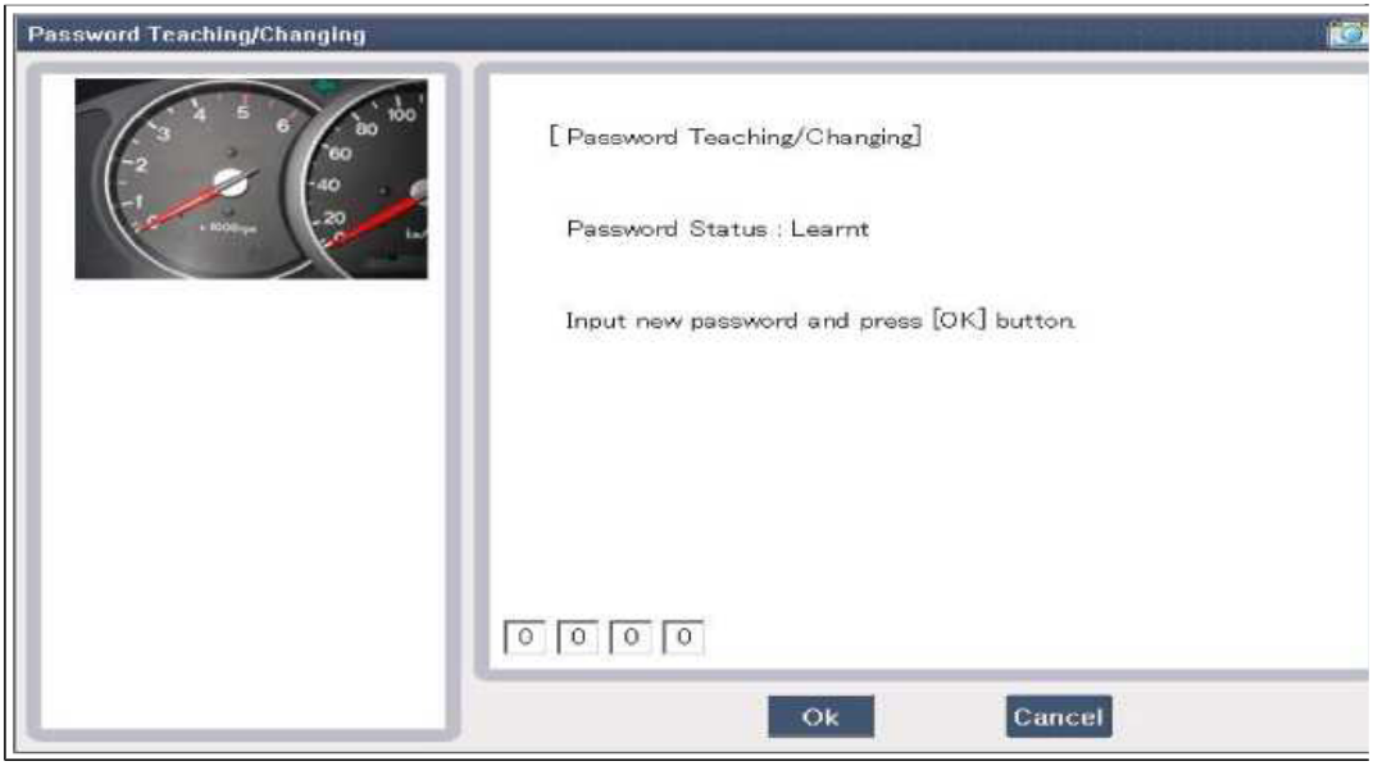

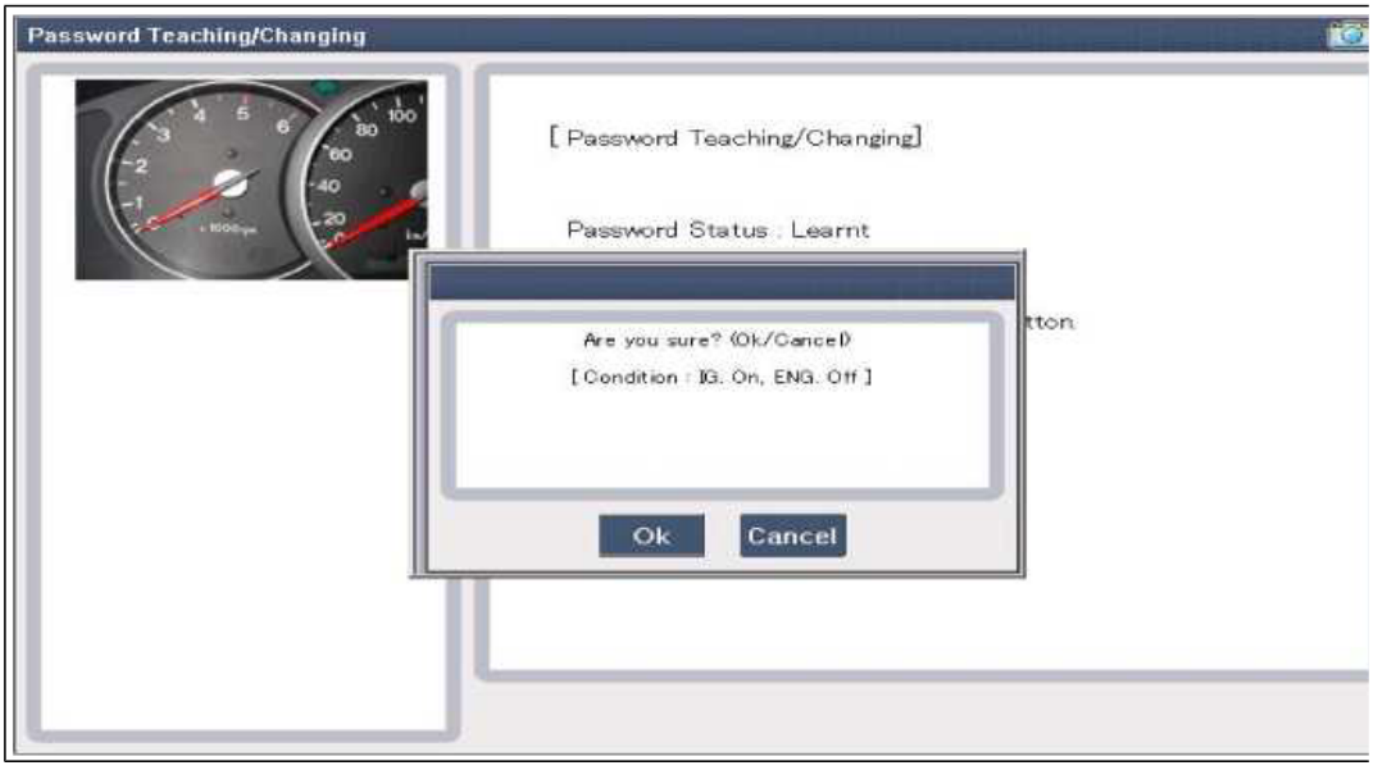

cardiagn.com

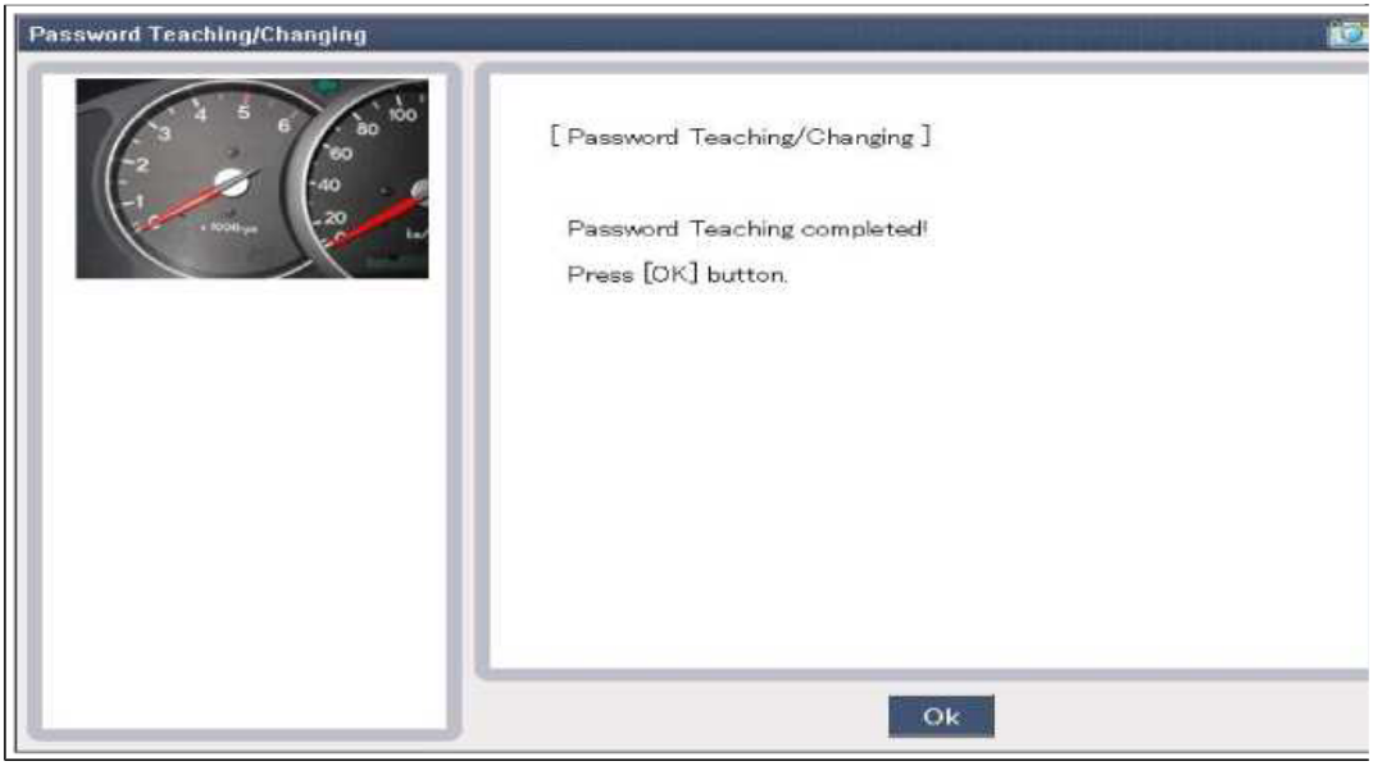

Limp Home Function

1. Limp Home By Tester

If the PCM(ECM) detects the fault of the SMARTRA or transponder, the PCM(ECM) will allow limp home function of the immobilizer. Limp home is only possible if the user password (4 digits) has been given to the PCM(ECM) before. This password can be selected by the vehicle owner and is programmed at the service statio The user password can be sent to the PCM(ECM) via the special tester menu.

Only if the PCM(ECM) is in status "learnt" and the user password status is "learnt" and the user password is corre the PCM(ECM) will be unlocked for a period of time (30 sec.). The engine can only be started during this time. After the time has elapsed, engine start is not possible.

If the wrong user password is sent, the PCM(ECM) will reject the request of limp home for one hour. Disconnecti the battery or any other action cannot reduce this time. After connecting the battery to the PCM(ECM), the timer starts again for one hour.

cardiagn.com

ID Register

- Password Teaching/Changing
- Neutral Mode
- Limp Home Mode
- Smatra Neutral Mode
- Teaching

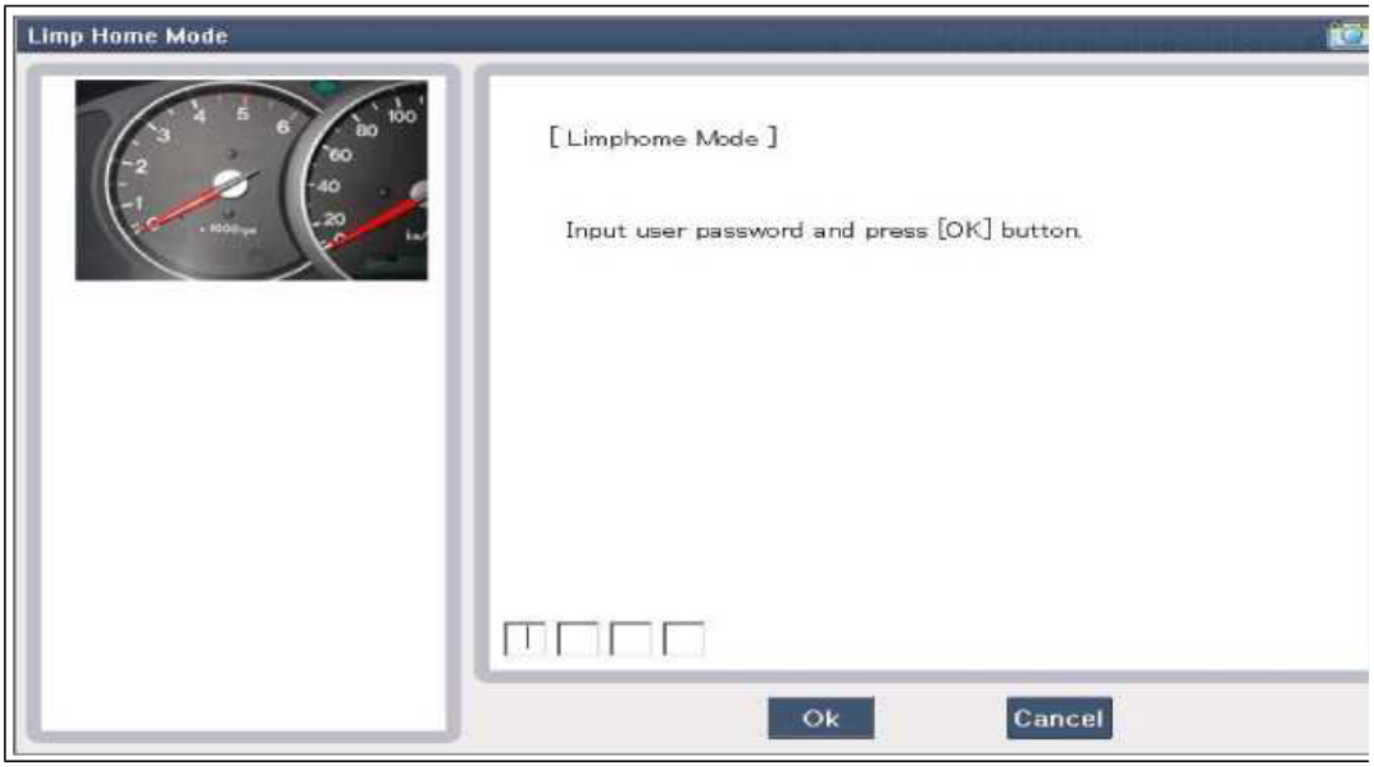

cardiagn.com

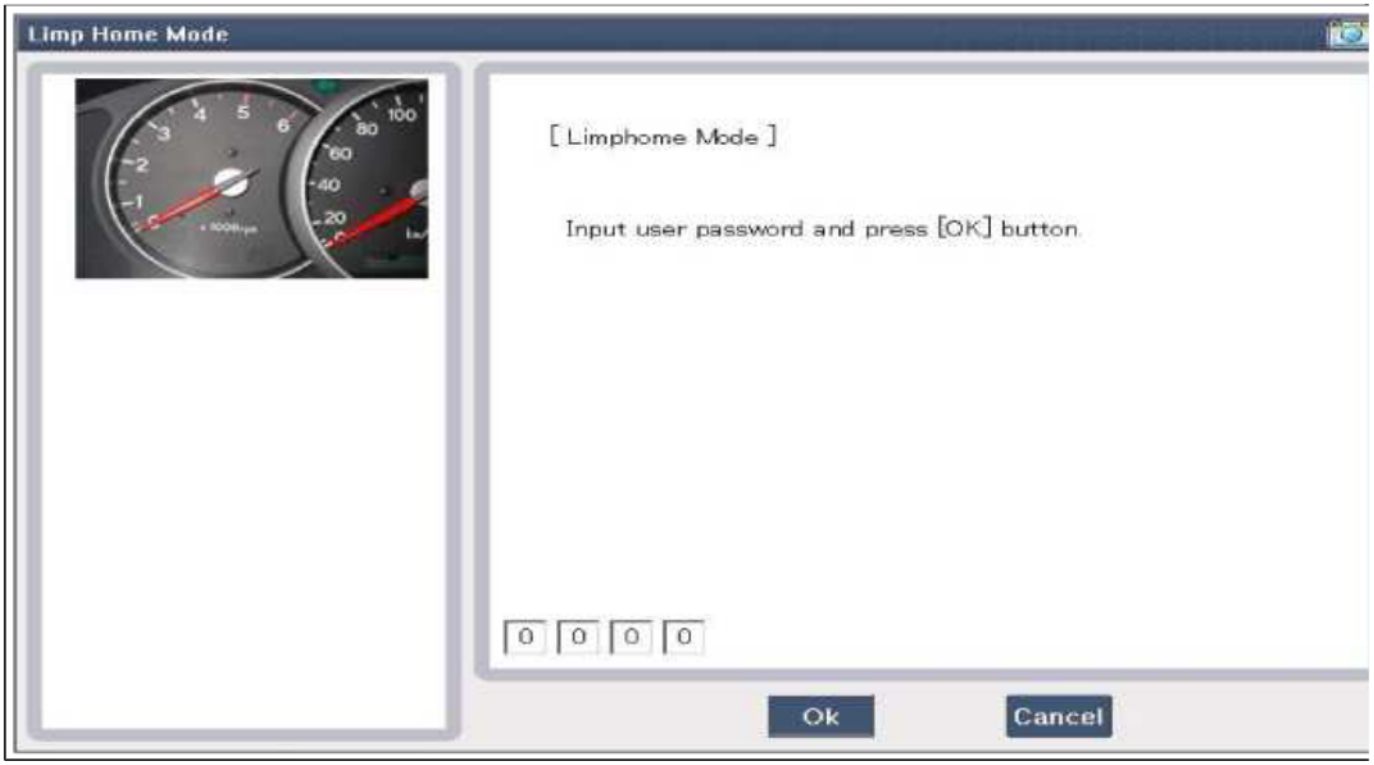

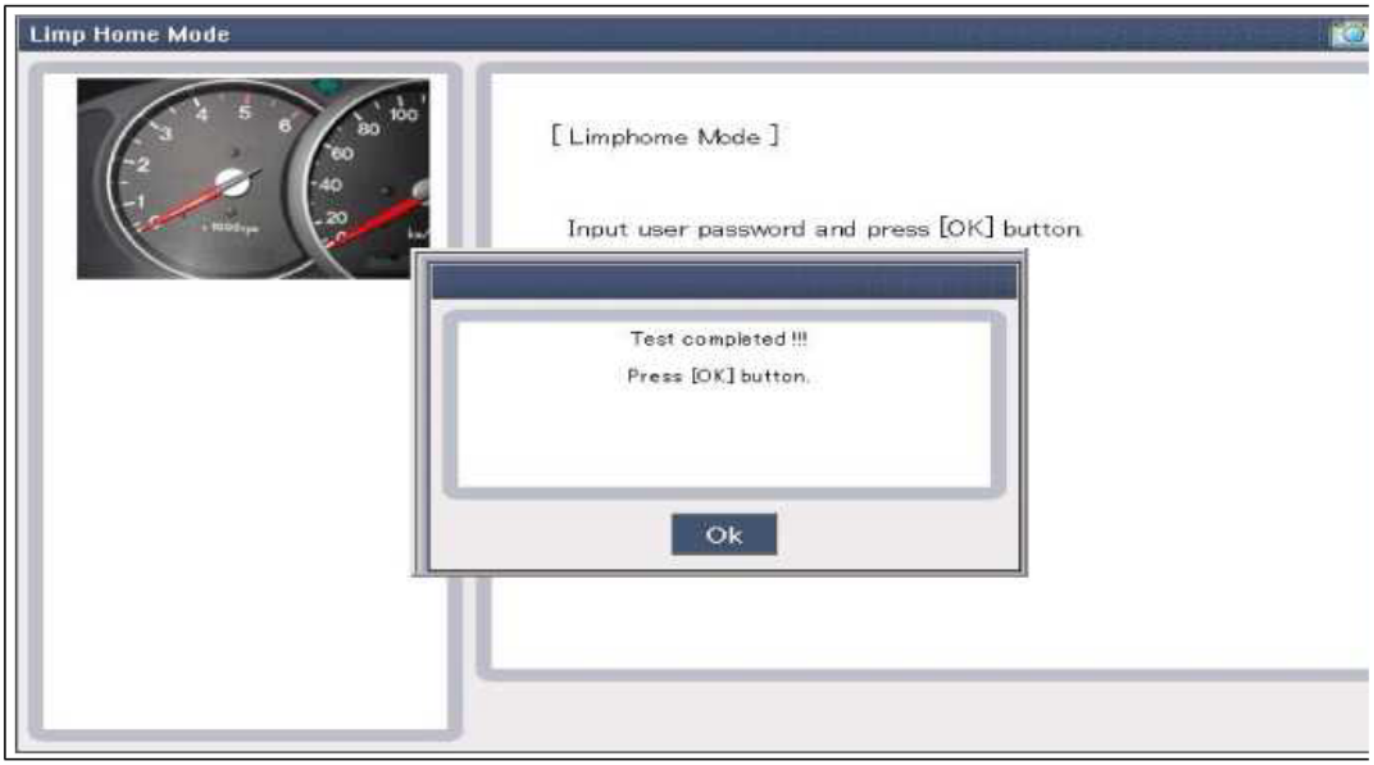

2. Limp Home By Ignition Key

The limp home can be activated also by the ignition key. The user password can be input to the PCM(ECM) by a special sequence of ignition on/off.

Only if the PCM(ECM) is in status "learnt" and the user password status is "learnt" and the user password is correct, the PCM(ECM) will be unlocked for a period of time (30 sec.).

The engine can be started during this time. After the time has elapsed, engine start is not possible. After a new password has been input, the timer (30 sec.) will start again.

After ignition off, the PCM(ECM) is locked if the timer has elapsed 8 seconds. For the next start, the input of the user password is requested again.

cardiagn.com

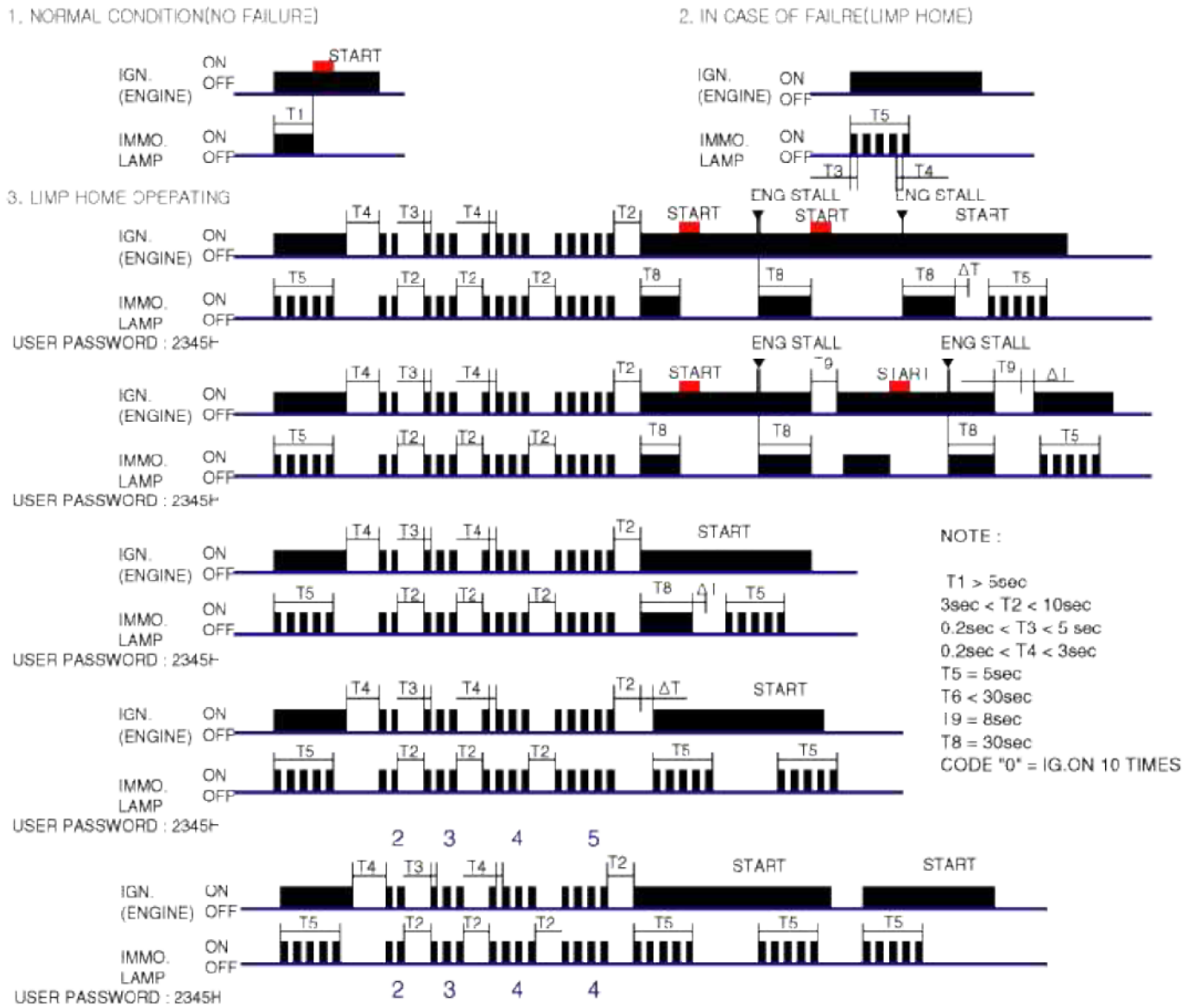

Body Electrical System > Immobilizer System > Immobilizer Control Unit > Repair procedures

Removal

1. Disconnect the negative (-) battery terminal.
2. Remove the crash pad lower panel.
   (Refer to the BD group - "Crash pad")
3. Remove the steering column assembly.
   (Refer to the ST group - "steering column & shaft")

cardiagn.com

4. Disconnect the connector of the SMARTRA unit and then remove the SMARTRA unit (A) after loosening a bolt.

[USA]

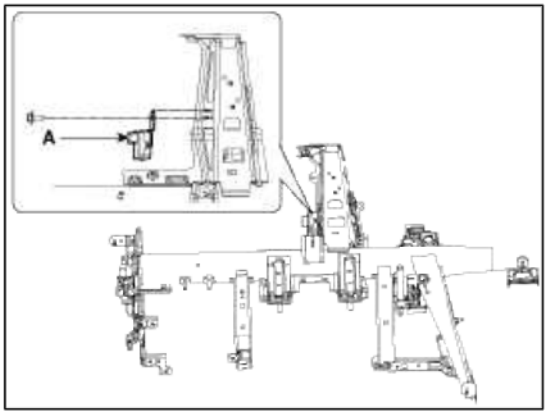

[Canada]
Disconnect the connector of the SMARTRA unit(A) and then remove the bracket and immobilizer unit.

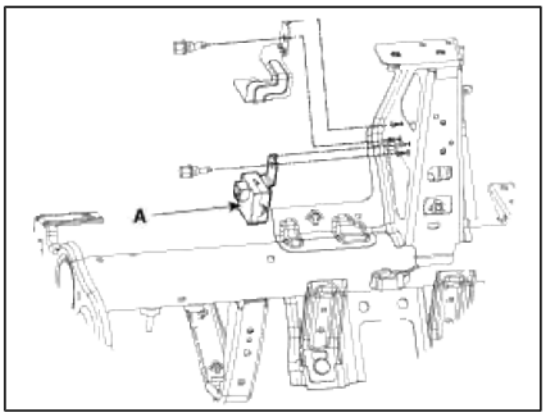

Installation

1. Install the immobilizer control unit after connecting the unit connector.
2. Install the steering column assembly.
3. Install the crash pad lower panel.

Body Electrical System > Immobilizer System > Antenna Coil > Repair procedures

Removal

1. Disconnect the negative (-) battery terminal.

cardiagn.com

2. Remove the steering column upper and lower shrouds (A).

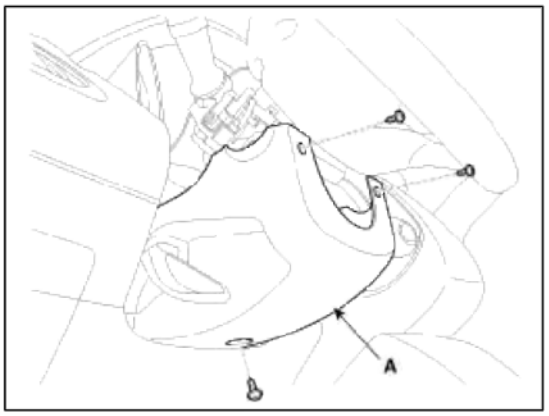

NOTE

Take care not to damage and scratch the shrouds and its related parts.
Take care not to damage the hook when removing the upper and lower shrouds.

3. Disconnect the 6P connector (B) of the coil antenna and then remove the coil antenna (A).

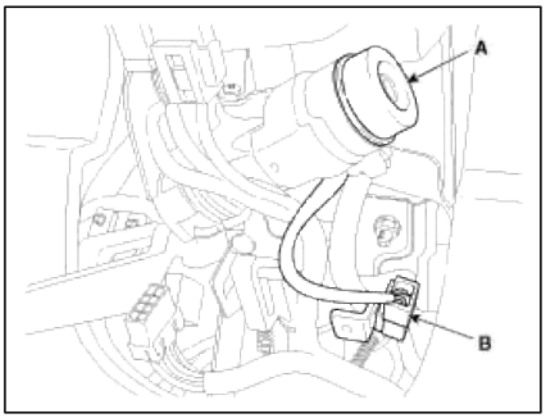

Installation

1. Install the coil antenna and connect the 6P connector.
2. Install the steering column upper and lower shrouds.

Body Electrical System > Immobilizer System > Troubleshooting

Diagnosis Of Immobilizer Faults

- Communication between the ECM and the SMARTRA.
- Function of the SMARTRA and the transponder.
- Data (stored in the ECM related to the immobilizer function.

Body Electrical System > Rear Parking Assist System > Rear Parking Assist System Control Unit > Specifications

Specifications

cardiagn.com

Description		Specification
Ultrasonic sensor	Detecting range	9.8~47.2 in (250 ~ 1,200 mm)
	Operating voltage	DC 8~10 V
	Rated current	MAX. 20 mA
	Operating temperature	-22°F~+176°F(-30°C ~ +80°C)
	Preservation temperature	-40°F~+185°F(-40°C ~ +85°C)
	Frequency	48 ± 5 KHZ
	Number of sensors	4 EA(Right, Center-right, Center-left, Left)
Piezo buzzer	Rated voltage	DC 12 V
	Operating voltage	DC 9~16 V
	Operating temperature	-22°F~+176°F(-30°C ~ +80°C)
	Preservation temperature	-40°F~+185°F(-40°C ~ +85°C)
	Rated current	MAX. 60 mA
	Sound, tone	Oscillation frequency : 2.0 ± 0.5 KHz
		Sound level : MIN 65 dB (DC 13 V/m)

The BCM contains the rear parking assist system function.

Body Electrical System > Rear Parking Assist System > Rear Parking Assist System Control Unit > Components and Components Location

Component Location

cardiagn.com

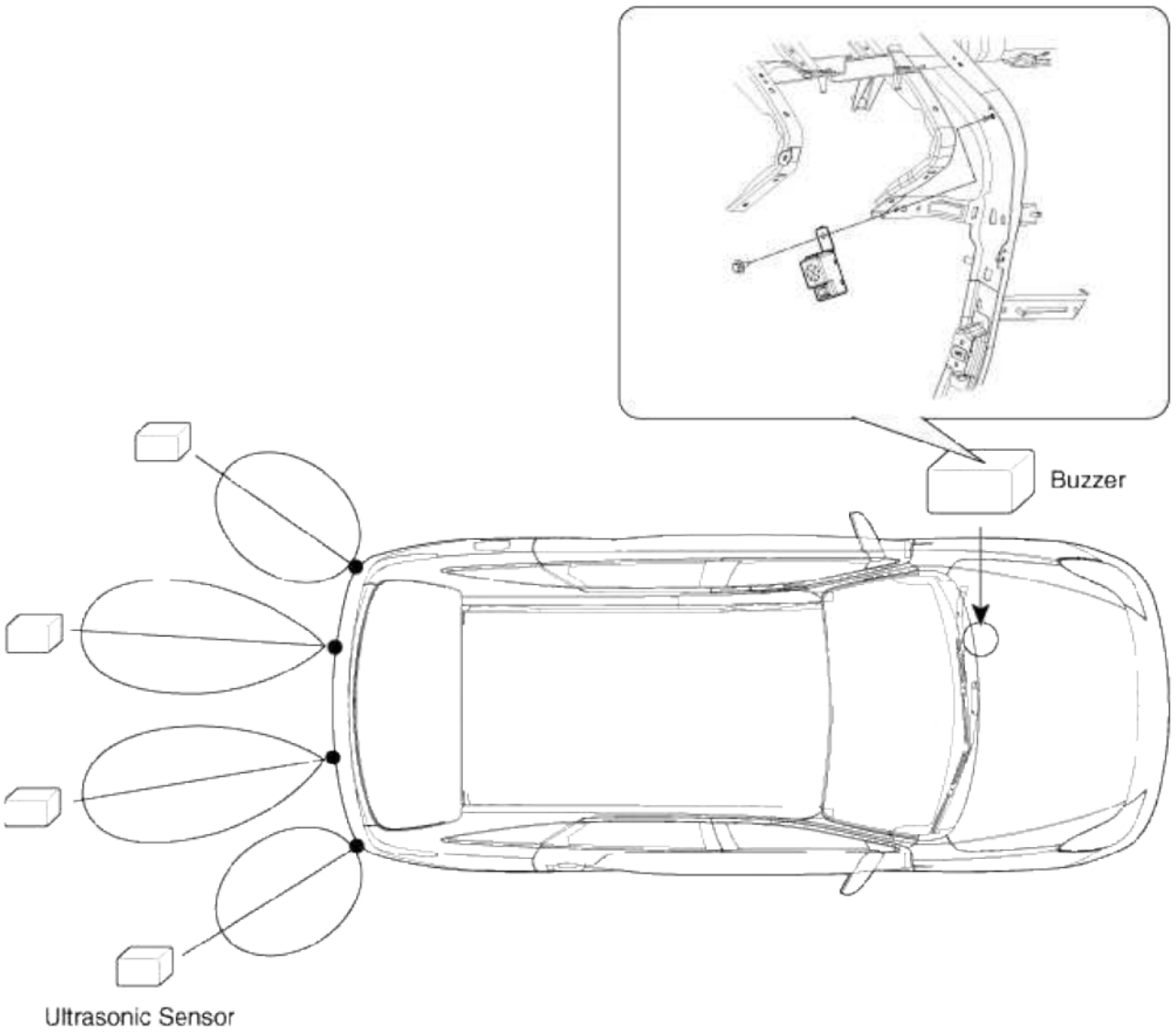

- First alarm : Object comes near to the sensor located at the rear of vehicle, within 81-120cm ± 15cm
- Second alarm : Object comes near to the sensor located at the rear of vehicle, within 41-80cm ± 10cm
- Third alarm : Object comes near to the sensor located at the rear of vehicle, within 40cm ± 10cm

cardiagn.com

Body Electrical System > Rear Parking Assist System > Rear Parking Assist System Control Unit > Description and Operation

Description

When reversing, the driver is not easy to find objects in the blind spots and to determine the distance from the object. In order to provide the driver safety and convenience, back warning system will operate upon shifting to "R" Ultrasonic sensor will emit ultrasonic wave rearward and detect the reflected wave.

Control unit (BCM) will calculate distance to the object using the sensor signal input and output buzzer alarm in three steps (first, second and third alarm).

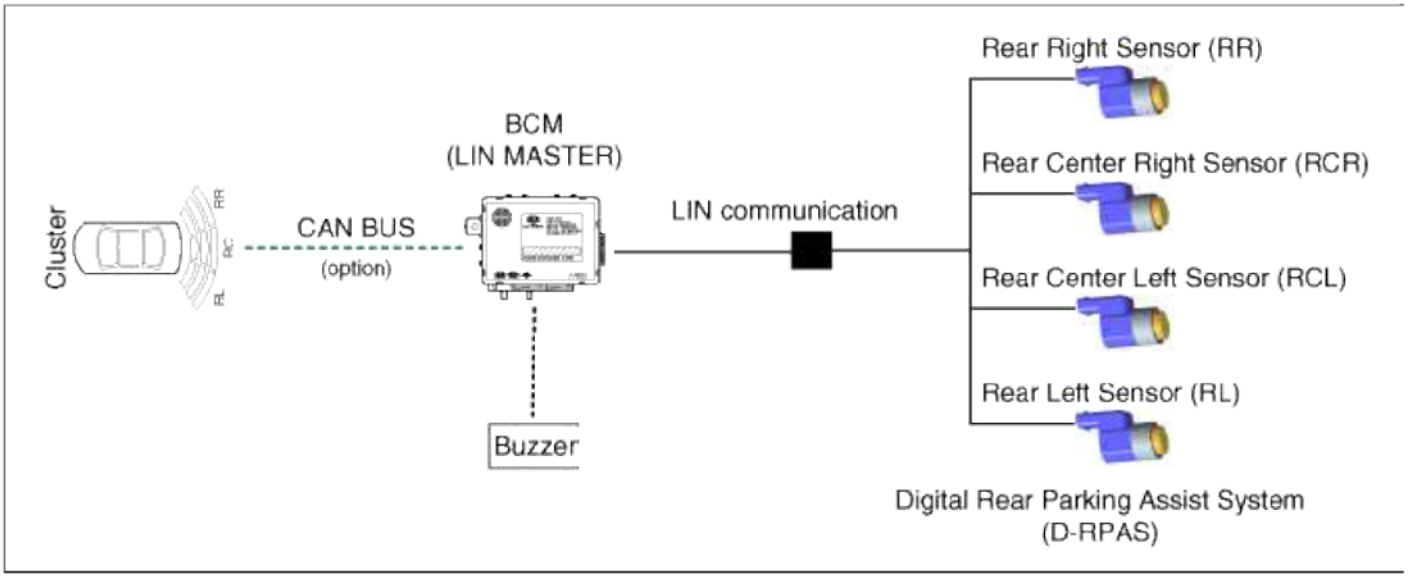

Block Diagram

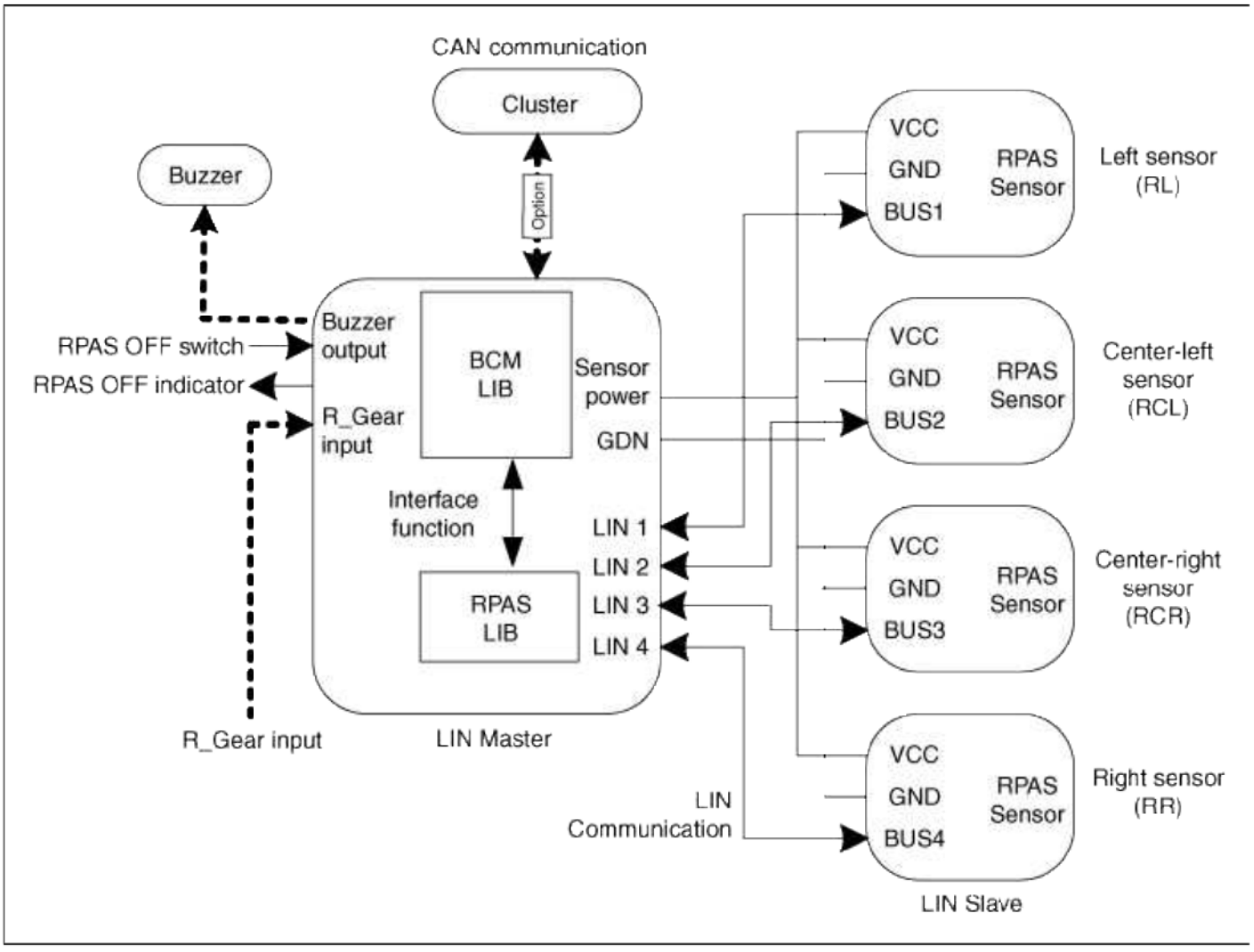

Operation

System Operation

Initial Mode

1. RPAS checks the ID and Reference (shaping table) during the initialization using LIN communication.

cardiagn.com

2. If sensor ID or sensor parameter is same with expected value, RPAS system is initialized within 500ms after turning IGN1 and shifting R gear.
3. If Sensor ID or sensor parameter is different with expected value, initial mode can take about 1.2 second after turning IGN1 and shifting R gear because of teaching sensor ID or sensor parameter.
4. RPAS executes the diagnosis of each sensor during the initialization.

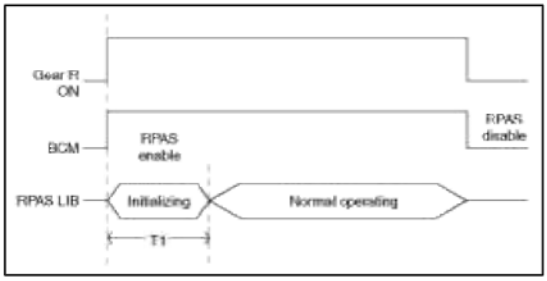

T1 : RPAS initializing time

(1) In case of sensor teaching, T1 : within 1.2 second

(2) In case of normal condition, T1 : 500ms ± 10%

Normal Mode

Normal mode of RPAS can divide as two steps.

First step is a mode to inform the driver of the RPAS system ON and diagnosis results which is executed during the initialization.

Second step is the obstacle detection mode to give driver warning when detecting the obstacle.

1. Driver info mode for RPAS ON

(1) If there aren't any diagnosis messages from sensors, the normal RPAS ON sound with ON-period 300ms warn after initializing time since R gear is shifted. The obstacle detection warning starts after the delay of 100ms since finishing the normal RPAS ON warning sound.

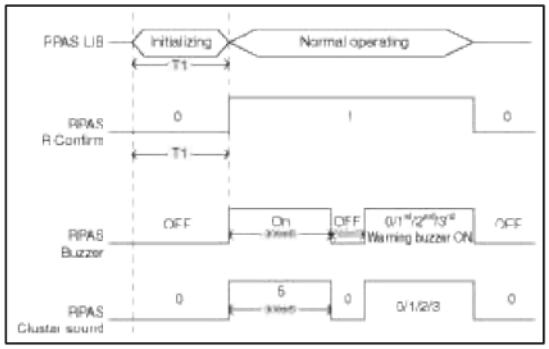

(2) If there are any failure sensor, "Warning of sensor fail" sound is driven during the fixed period and if there is any display unit, it displays the diagnosis.

Refer to the Diagnosis buzzer sound for more detail Information.

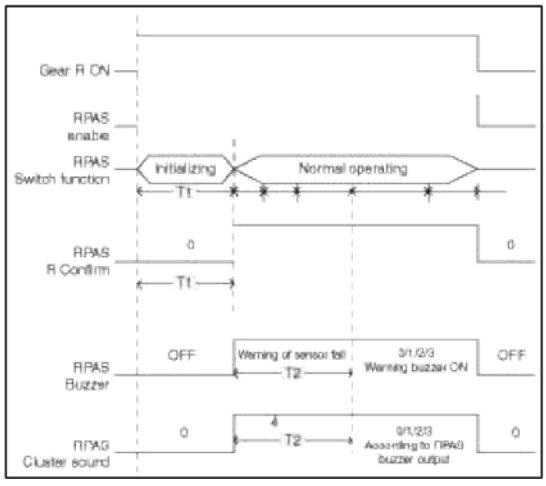

T1 : RPAS initializing time

(1) In case of sensor teaching, T1 : within 1.2 second

cardiagn.com

(2) In case of normal condition, T1 : 500ms ± 10%

T2 : Refer to the spec for warning of fail

(3) "Diagnosis-buzzer" is driven only one time but the display unit continue to display the diagnosis according each failure sensor's location.

2. Obstacle detection mode

(1) There are 3 kinds of warning sound for detecting the obstacle, the 1st warning and the 2nd warning are the intermittent sound and the 3rd warning is the continuous sound.

(2) The vehicle speed for the operation of RPAS is below 10Km/h .

(3) There are 2 kinds of detection mode. One is for normal operating mode using normal 4 sensors. Even if any sensor is on failure condition, the RPAS system will be entered to degrade mode excepting a failure sensor.

(4) Operating procedure

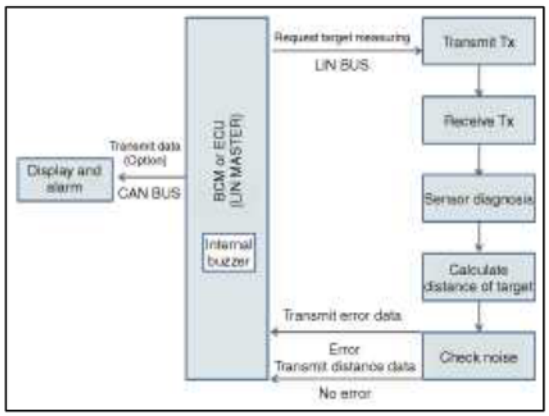

Detection Area

1. Test condition – PVC pole(Diameter 75mm, Length 1m) & At the room temperature
2. Distance tolerance (measured at the front of sensor)
   81 cm ~ 120 cm : ± 15 cm
   41 cm ~ 80 cm : ± 10 cm
   Below 40 cm : ± 10 cm
3. Below 30 cm may not be detected.
4. Sensing zone specification
   Sound pulse has a fixed duration.
   Pause between pulses is related to the distance from the obstacle and is not variable.
   Although the position of the obstacle is not moving during sometime, the buzzer should keep warning. And although an obstacle that is currently warned is getting far, the buzzer should keep warning according to obstacle distance.
   The warning sound is generated by the algorithm of ECU which measures the distance of the obstacle from the sensor.
   The distance is divided into three detection ranges. Obstacles below 30cm from the sensor may not be detected.

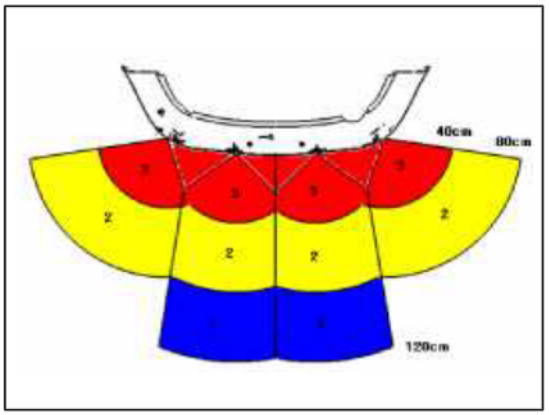

Each Warning Zone Hysteresis Function for buzzer and display.

cardiagn.com

Condition	1st Warning (120cm)	2nd Warning (80cm)	3rd Warning (40cm)
the distance between vehicle and obstacle is getting close	Immediately warning		
the distance between vehicle and obstacle is getting far	2sec warning delay	2sec warning delay	1sec warning delay

Warning method of RPAS

If RPAS sensor detects the obstacle, the acoustic device makes warning sound and the display module (Cluster) indicates each warning level as like followings.
RPAS sensor sends the distance data to BCM through LIN communication and BCM received the distance data from each sensor.
BCM has the responsibility of the acoustic function.
BCM has the responsibility of the gateway function that BCM sends the warning data to Cluster as like below timing diagram.

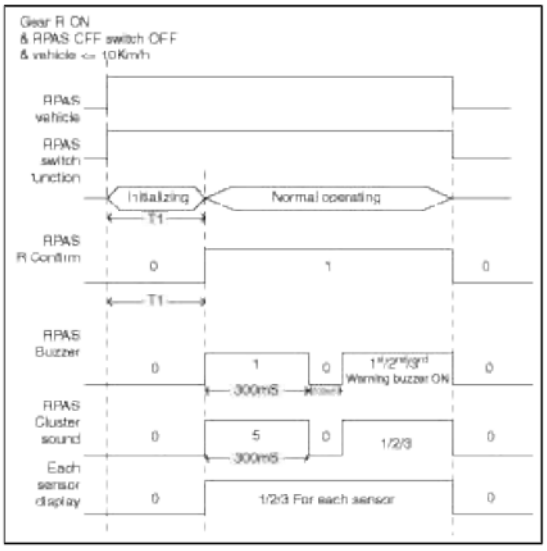

When change from a warning area to the different zone, after finishing one cycle of warning output, the next warning sound has to start for different zone necessarily.

Timing Chart for RPAS Warning Sound

If Power is supplied to the system (turning IGN1 and shifting R gear), BCM checks the channel of each sensor and if no problems, the buzzer sound with turn-on period 300ms is generated after 500ms, but even if one sensor has a problem, the buzzer sound not for “Start-buzzer of RPAS” but for “Diagnosis-buzzer of RPAS”, The next action for Normal mode is like followings.

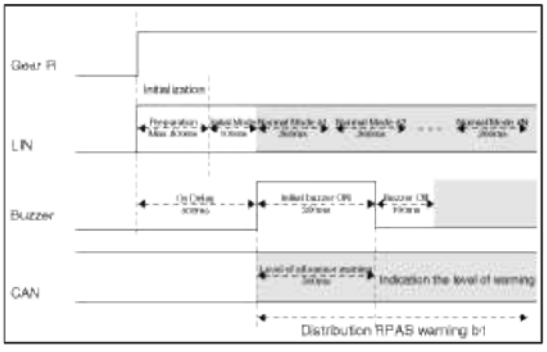

After R gear is armed, the system operation is like followings.

cardiagn.com

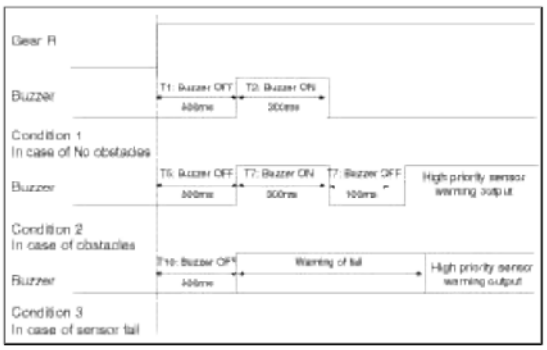

Time tolerance: ±10%
After R gear is disarmed, the system operation is like followings.

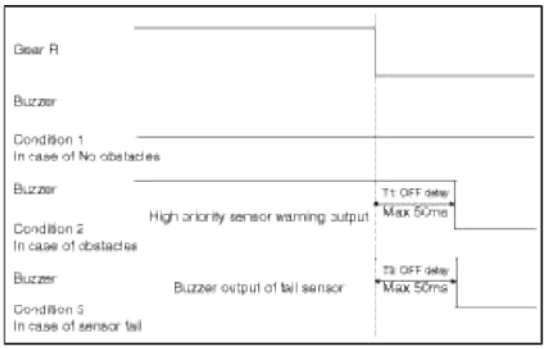

Time tolerance: ±10%

Sensor interval distance dividing alarm output specification

The condition logic is as below according to phase logic in priority. (In same sensor)

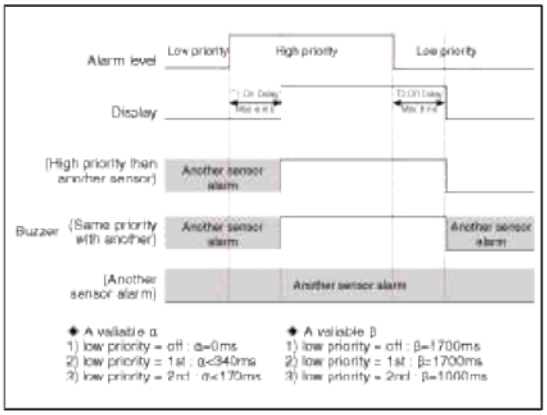

RPAS operation ranges according to distance are as below.

1. First alarm (81 cm ~ 120 cm)

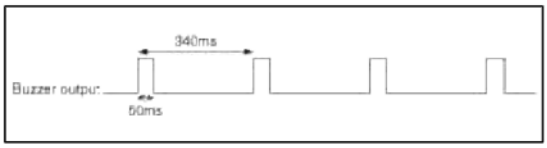

2. Secondary alarm (41 cm ~ 80 cm)

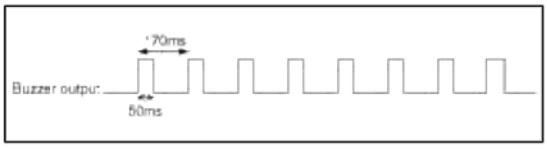

3. Third alarm (40 cm or less)

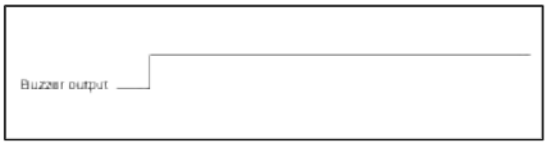

cardiagn.com

4. Failure alarm cycle

When the system starts and sensor has errors, the warning sound as the sensor position is like following.

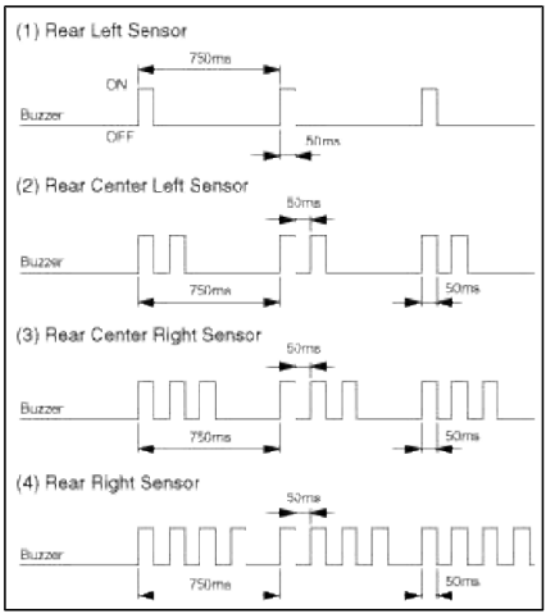

In the case that the multiple sensors have errors, the sequence of sensor's warning is like followings.

RL → RCL → RCR → RR

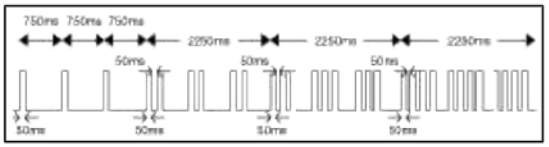

After the warning sound for diagnosis is generated, the other normal sensors execute the normal function such as the detection and the transmission of distance data.

NOTE

1. Time tolerance of the above waveform : Time ± 10%
2. At nearer distance than 30cm, detection may not occur.
3. Alarm will be generated with vehicle reversing speed 10km/h or less.
4. For moving target, maximum operation speed shall be target approach speed of 10km/h.
5. When the vehicle or the target is moving, sequential alarm generation or effective alarm may be failed.
6. False alarm, or failure of the alarm to trigger may occur in the following conditions.
   - Irregular road surface, gravel road, reversing toward grass.
   - Horn, motor cycle engine noise, large vehicle air brake, or other object generating ultrasonic wave is near.
   - When a wireless transmitter is used near to the sensor.
   - Dirt on the sensor.
   - Sequential alarm may not occur due to the reversing speed or the target shape.

Method of error handling

■ LIN BUS Off error

Division	Condition for error	Condition for the disarmed
Initial routine	Detecting LIN BUS OFF one time	Disarmed (if LIN BUS ON is detected 4 consecutive times in general routine)
Normal routine	Detecting LIN BUS OFF 4 consecutive times	Disarmed (if LIN BUS ON is detected 4 consecutive times)

cardiagn.com

Remarks

1. LIN BUS OFF means no response from sensors when BCM send request to sensors.
2. In the case that error happens to the initial routine, diagnosis warning sound + display for error
3. In the case that error happens to the Normal routine, the only display for error
4. If error happens to the direct condition of each sensor, after that, error is transmitted at the indirect condition (sensor side).

■ **In the case of sensor error**

Division	Condition for error	Condition for the disarmed
Initial routine	Detecting the message of sensor error	Disarmed(if the message which sensor is normal is detected 4 consecutive times , but it is impossible to be disarmed in the initial routine)
General routine	Detecting the message of sensor error 4 consecutive times	Disarmed(if the message which sensor is normal is detected 4 consecutive times)

Remarks

1. In the case of fault counting output message or signal with last valid should be transmitted.
2. In the case that error happens to the initial routine, diagnosis warning sound + display for error
3. In the case that error happens to the general routine, the only display for error

Body Electrical System > Rear Parking Assist System > Ultrasonic Sensor > Components and Components Location

Components Location

cardiagn.com

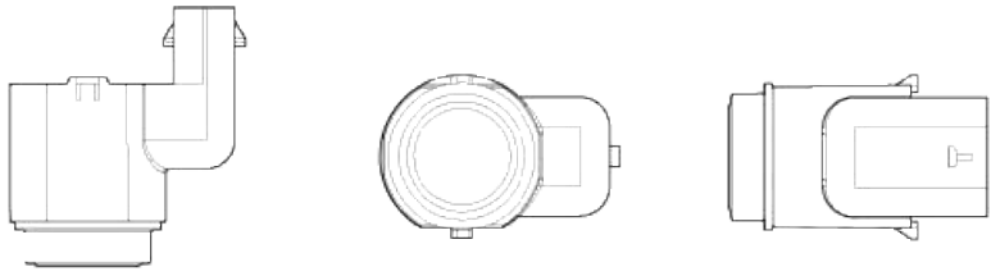

[Center-right sensor, Center-left sensor]

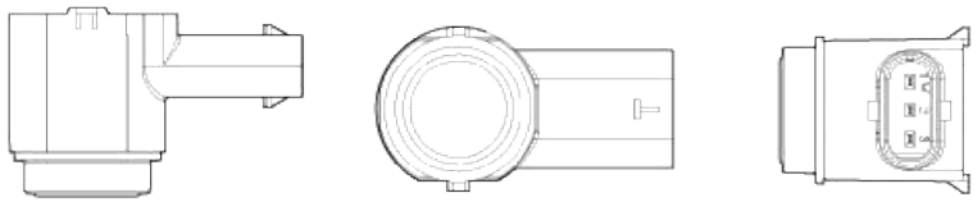

[Right sensor, Left sensor]

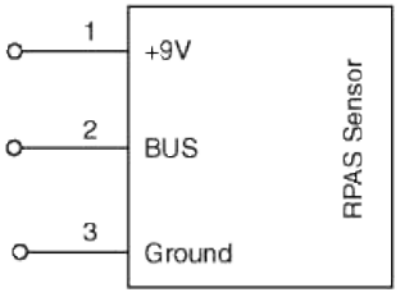

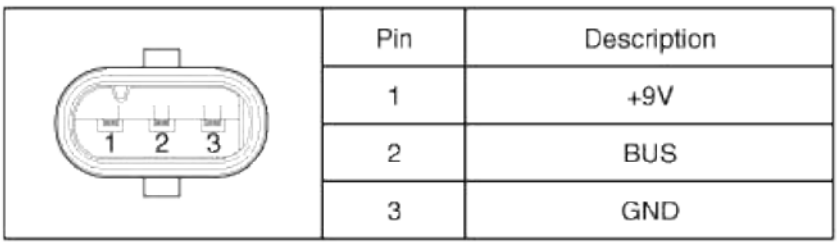

Pin	Description
1	+9V
2	BUS
3	GND

cardiagn.com

Body Electrical System > Rear Parking Assist System > Ultrasonic Sensor > Repair procedures

Removal

1. Lift up the vehicle.
   (Refer to GI group - "Lift and support points")
2. Remove the rear bumper.
   (Refer to the BD group - "Rear bumper")
3. Pull out the sensor by opening the sensor holder out.
4. Disconnect the connector from the ultrasonic sensor.

Installation

1. Install the sensor and connector.

Body Electrical System > Button Engine Start System > Components and Components Location

Component Location

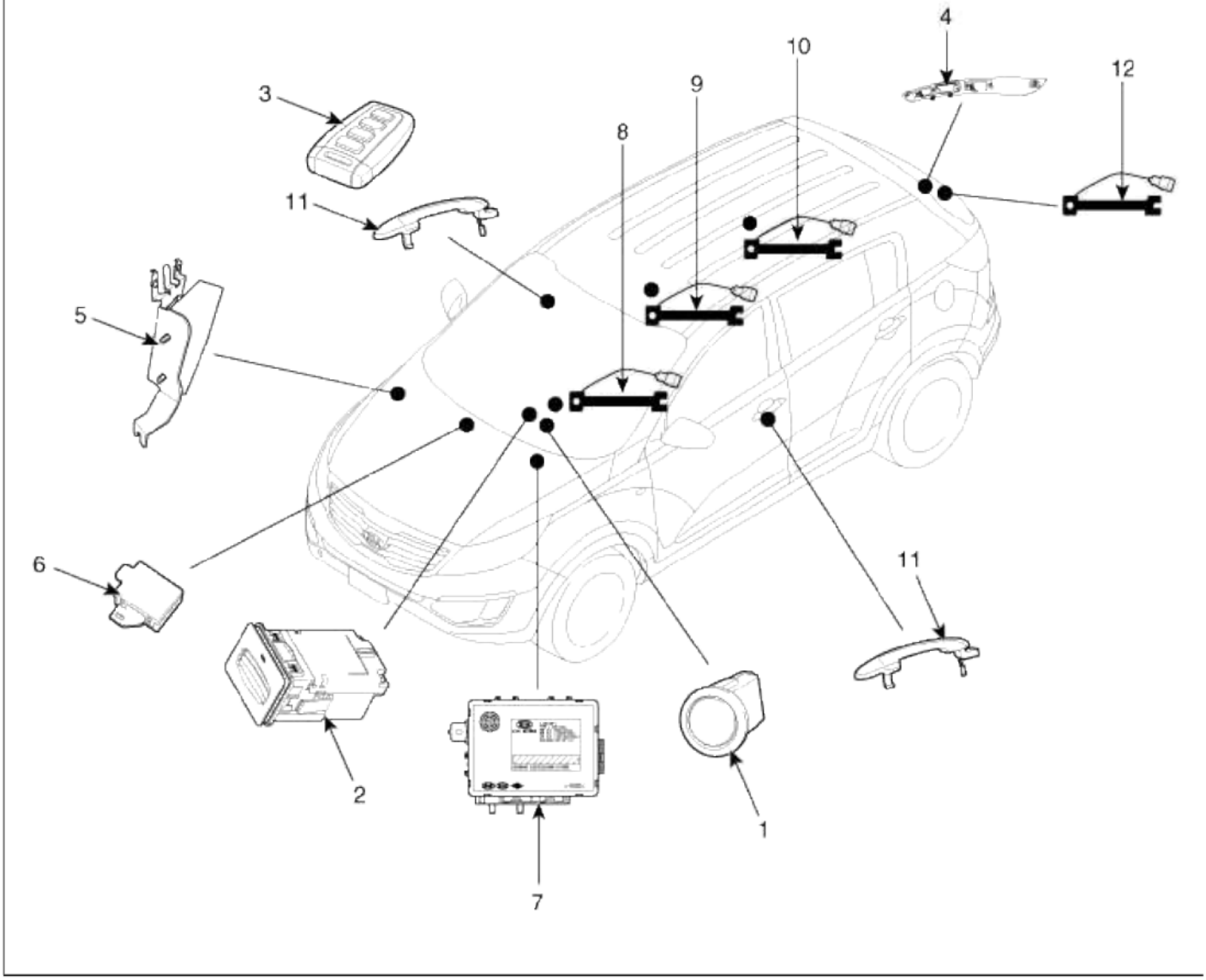

1. Start Stop Button (SSB) 2. FOB key holder 3. FOB key 4. Tailgate switch 5. Smart key unit 6. RF receiver	7. BCM (Body Control Module) 8. Interior antenna 1 9. Interior antenna 2 10. Interior antenna 3 11. Door handle & door antenna 12. Bumper antenna

Body Electrical System > Button Engine Start System > Schematic Diagrams

Circuit Diagram (1)

cardiagn.com

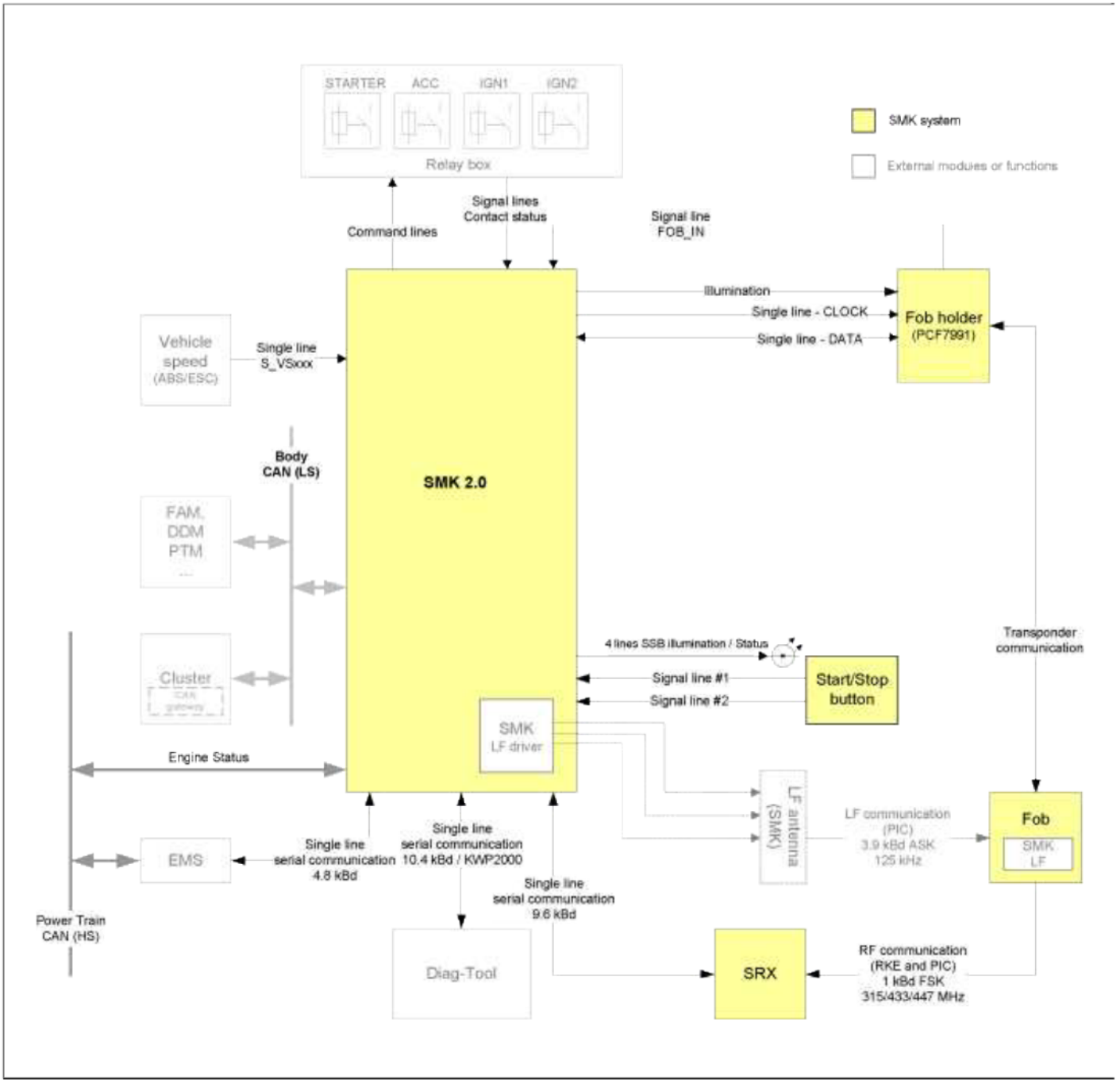

Circuit Diagram (2)

cardiagn.com

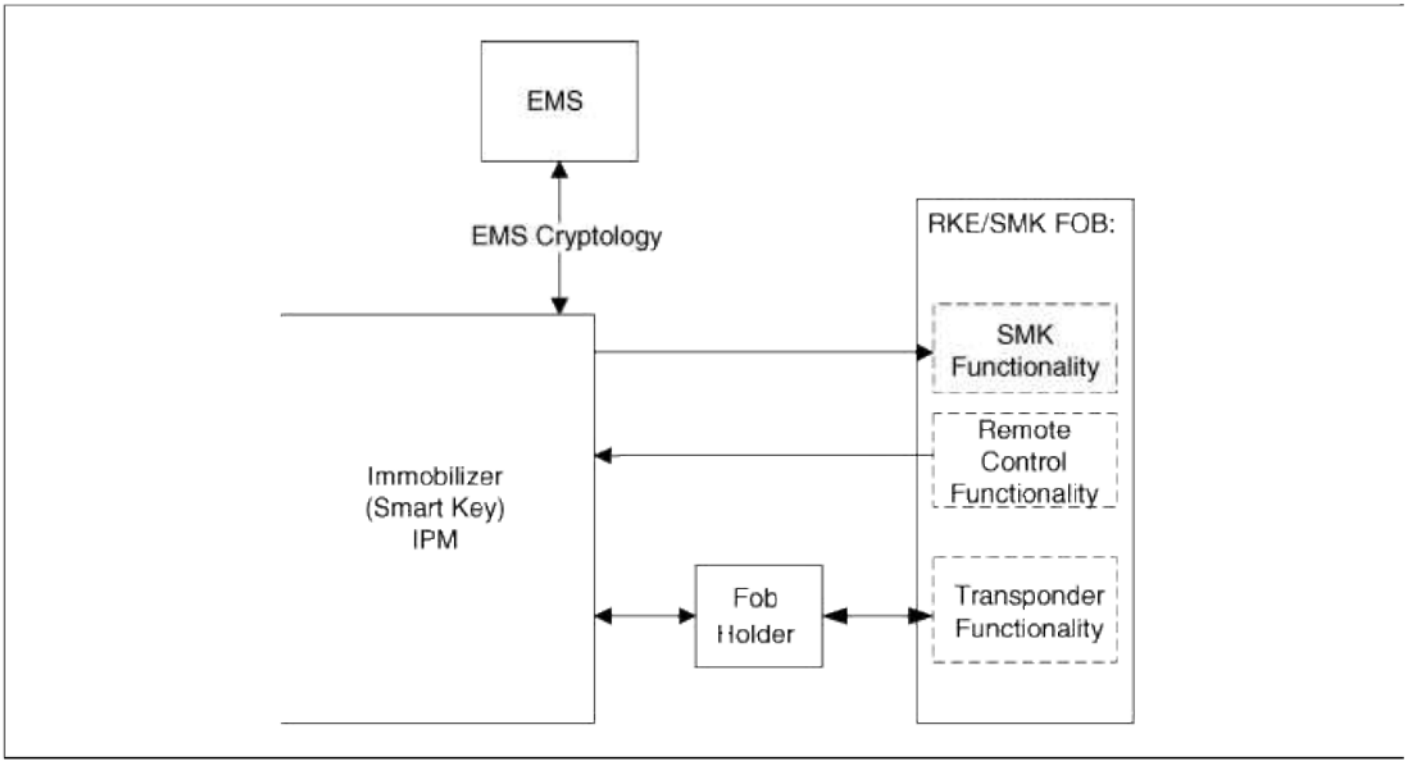

Body Electrical System > Button Engine Start System > Description and Operation

Description

System Overview

The System offers the following features:

- Human machine interface through a 1-stage button, for terminal switching and engine start.
- Control of external relays for ACC / IGN1 / IGN2 terminal switching and STARTER, without use of mechanical ignition switch.
- Indication of vehicle status through LED or explicit messages on display.
- Immobilizer function by LF transponder communication between fob and fob holder.
- Redundant architecture for high system dependability .
- Interface with Low Speed CAN vehicle communication network.
- Interface with LIN vehicle communication network depending on platform .

The RKE and SMART KEY functions are not considered part of this Button Engine Start system and are specified in separated system.

System Main Function

- Switching of ACC / IGN1 / IGN2 terminals.
- Control of the STARTER relay BAT line (high side) based on communication with EMS ECU.
- Management of the Immobilizer function.
- Management of BES warning function.

Button Engine Start System

The Button Start System allows the driver to operate the vehicle by simply pressing a button (called as SSB) instead of using a standard mechanical key.

If the driver press the SSB while prerequisites on brakes, fob authentication and transmission status are satisfied, the BES System will proceed with the locking/unlocking of the steering column, the control of the terminal, and the cranking of the engine.

The driver can release the SSB as soon as this sequence initiated. After positive response from immobilizer interrogation, the system will activate the starter motor and communicate with the EMS to check the engine running status for starter release.

cardiagn.com

The driver will be able to stop the engine by a short push on the SSB if the vehicle is already in standstill. Emergency engine stop will be possible by a long press of the SSB or 3 consecutive presses in case the vehicle is in ENGINE RUNNING.
If the conditions for engine cranking are not satisfied while a push on the SSB is detected and a valid fob authenticated, the system will unlock the steering column and switch the terminals to IGN. Another push on the SSB will be necessary to start the engine.
In case of a vehicle equipped with SMART KEY system, fob authentication will not require any action from the driver. For limp home start or in case of vehicle without SMART KEY, the driver will have to insert the fob into the fob holder.

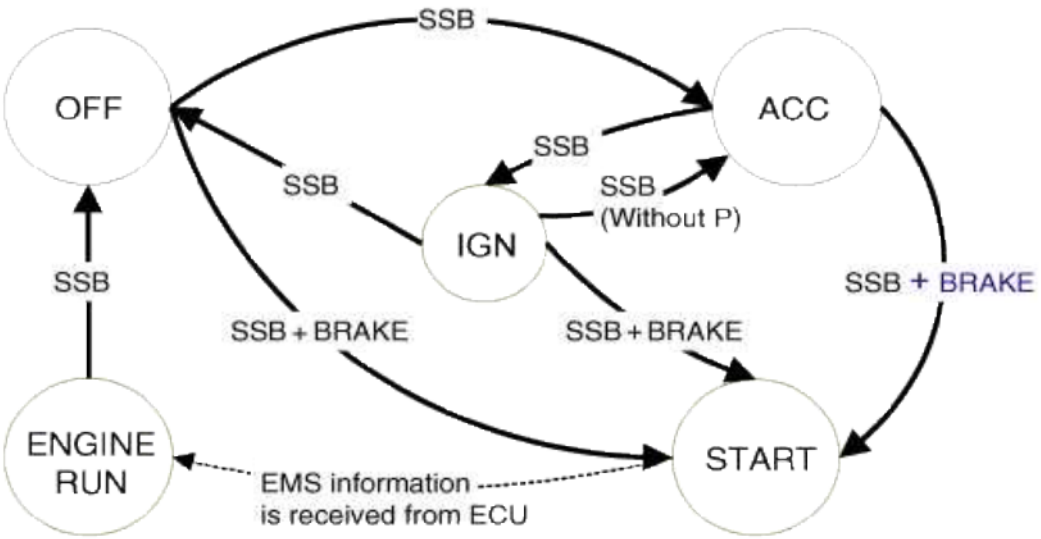

- Control Ignition and engine ON/OFF by Sending signal to IPM.
- Display status by LED Lamp ON/OFF. (Amber or Green)

Indicator ON/OFF Condition At Ignition Key Off Condition

No.	Character lamp	Conditions
1	Indicator Lamp ON	Door open, Tail lamp ON, ACC, IG ON
2	Indicator Lamp 30sec ON → Lamp OFF	Door close, Tail lamp OFF, IG OFF
3	Indicator Lamp OFF	Remote LOCK, Passive LOCK
4	Rheostat at tail lamp ON (Illumination lamp)	

Indicator ON/OFF Condition According To Ignition Key's Position

No.	Ignition conditions	Start Button LED status
1	IG OFF	LED OFF
2	IG ACC	Amber color LED ON
3	IG ON (Engine OFF)	Green color LED ON
4	Cranking	Maintain LED status before cranking
5	Engine running	LED OFF

cardiagn.com

Smart Key Unit

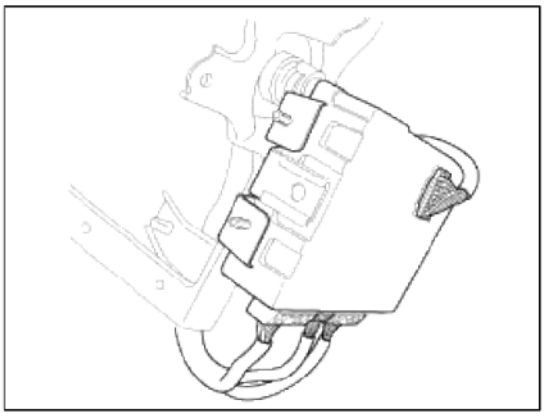

The SMK manages all function related to:

- "Start Stop Button (SSB) monitoring",
- "Immobilizer communication" (with Engine Management System unit for immobilizer release),
- "Authentication server" (Validity of Transponder and in case of Smart Key option Passive Fob authentication),
- "System consistency monitoring",
- "System diagnosis",
- Control of display message / warning buzzer .

The unit behaves as Master role in the whole system.
In case of SMART KEY application, for example “Passive Access”, “Passive Locking” and “Passive Authorization are integrated for Terminal switching Operations”.
It collects information about vehicle status from other modules (vehicle speed, alarm status, driver door open...), reads the inputs (e.g. SSB, Capacitive Sensor / Lock Button, PARK position Switch), controls the outputs (e.g. exterior and interior antennas), and communicates with others devices via the CAN network as well as a single line interfaces.
The diagnosis and learning of the components of the BES System are also handled by the SMK.
The SMK manages the functions related to the "terminal control" by activating external relays for ACC, IGN1 and IGN2. This unit is also responsible for the control of the STARTER relay.
The SMK is also controlling the illumination of the SSB as well as the "system status indicator", which consists of 2 LEDs of different color. The illumination of the fob holder is also managed by the SMK.
The SMK reads the inputs (Engine fob in, vehicle speed, relays contact status), controls the outputs (Engine relay output drivers), and communicates with others devices via the CAN.
The internal architecture of the SMK is defined in a way that the control of the terminal is secured even in case of failure of one of the two microcontrollers, system inconsistency or interruption of communication on the CAN network.
In case, failure of one of the two controllers, the remaining controller shall disable the starter relay. The IGN1 and IGN2 terminals relays shall be maintained in the state memorized before the failure and the driver shall be able to switch those IGN terminals off by pressing the SSB with EMERGENCY_STOP pressing sequence. However, engine restart will not be allowed. The state of the ACC relay will depend on the type of failure.
The main functions of the SMK are:

- Control of Terminal relays
- Monitoring of the Vehicle speed received from sensor or ABS/ESC ECU.
- Control of SSB LEDs (illumination, clamp state) and FOB HOLDER illumination.
- Control of the base station located in fob holder through direct serial interface.
- System consistency monitoring to diagnose SMK failure and to switch to relevant limp home mode.
- Providing vehicle speed information
- Start Stop Button (SSB) monitoring

cardiagn.com

• Starter power control

Fob Holder

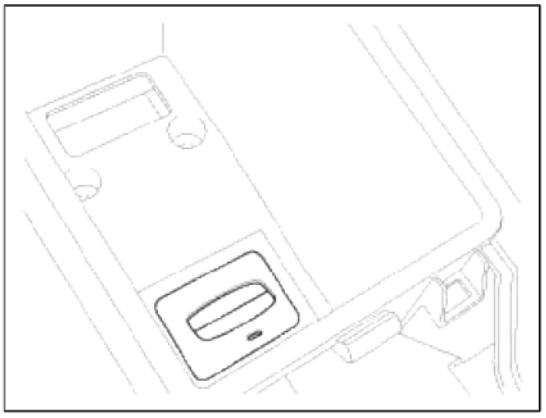

This unit is used for transponder authentication. In case of a vehicle equipped with Smart key, this transponder authentication is necessary in case of failure of the passive fob authentication (Engine loss of RF or LF link with the fob).

The Fob holder module integrates a slot where to insert the fob. The fob is maintained in position with a push-push mechanical locking (not electrically driven) and a signal (FOB IN) is sent back to the SMK as soon as its insertion is detected.

The power supply of the fob holder is active only if a communication is initiated by the SMK.

The insertion of the fob into the holder and the communication with the transponder should be possible regardless of the insertion direction of fob to the holder (buttons facing up or bottom).

A lighting device is also integrated for illumination of the Fob Holder and it is driven directly by the SMK.

The main functions of the Fob holder are:

- Transponder base station
- Fob mechanical lock
- Illumination

Transponder

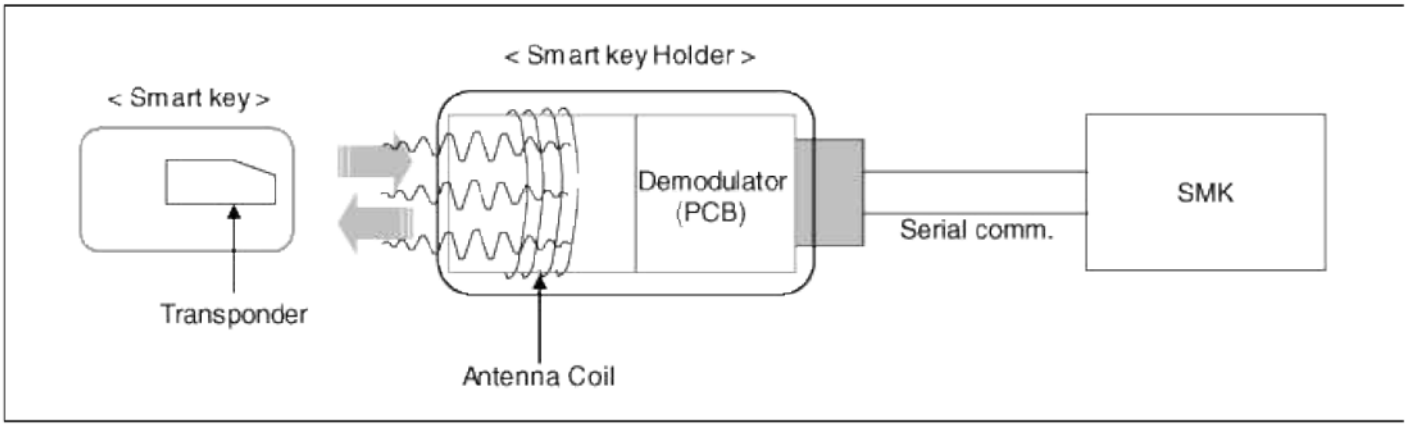

External Receiver(SRX)

cardiagn.com

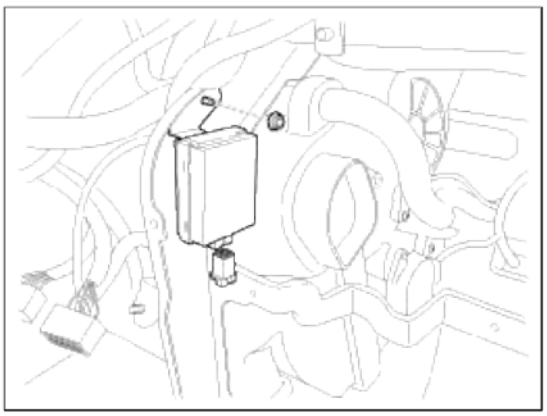

The data transmitted by the RKE or Smart key Fob is received by an external RF receiver called as SRX. This receiver will be same as that one for the SMK applications, with respect to electronics, housing, connector and software.
This receiver is connected to the SMK via a serial communication line.
Terminal And Starter Relays
Relays will be used to switch the terminals ACC / IGN1 / IGN2. Those normally-open relays will be driven by the SMK and located either in the passenger or engine compartment depending on the vehicle architecture.
Only one relay coil is connected to the terminal outputs of the SMK.
Those relays should integrate a resistor connected in parallel to the coil in order to reduce the transients during commutation.
Start/Stop Button (SSB)
A single stage push button is used for the driver to operate the vehicle. Pressing this button allows:

- To activate the power modes ‘Off’, ’Accessory’, ‘Ignition’ and 'Start' by switching the corresponding terminals
- To start the engine
- To stop the engine

The contact will be insured by a micro-switch and a backlighting is provided to highlight the marking of the button whenever necessary.
Two (2) LED colors are located in the center of the button to display of the status of the system. Another illumination LED is also integrated into the SSB for the lighting of the "Engine Start/Stop" characters.

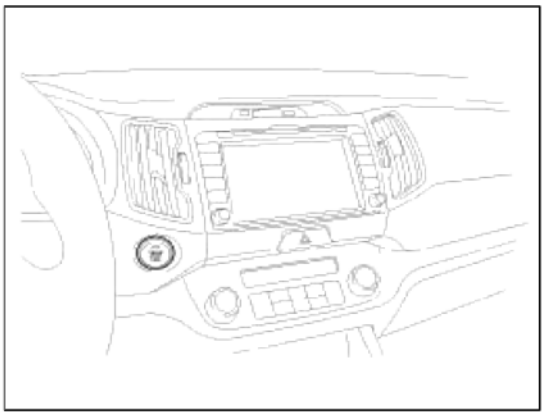

BES(Button Engine Start) System State Chart
System STATES in LEARNT MODE
In learnt mode, the BES System can be set in 6 different sates, depending on the status of the terminals and Engine status:

cardiagn.com

System State	Terminal Status	Engine status
1. OFF - Locked	OFF	Stopped
2. OFF - Unlocked	OFF	Stopped
3. ACC	ACC	Stopped
4. IGN	IGN1, IGN2, ACC	Stopped
5. Start	IGN1, Start	Cranking
6. IGN - Engine	IGN1, IGN2, ACC	Running (means "self-running")

Referring to the terminals, the system states described in the table above are same as those one found in a system based on a mechanical ignition switch.
The one of distinction with Mechanical-Ignition-Switch based system is that the BES system allows specific transition from [OFF] to [START] without going through [ACC] and [IGN] states.
System STATES IN VIRGIN MODE
The BES System can be set in 5 different states (OFF LOCKED is not available in virgin mode), depending on the status of the terminals and Engine status :

System State	Terminal Status	Engine status
1. OFF - UNLOCKED	OFF	Stopped
2. ACC	ACC	Stopped
3. IGN	IGN1, IGN2, ACC	Stopped
4. Start	IGN1, START with special pattern of activation	Cranking
5. IGN - Engine	IGN1, IGN2, ACC	Running (means "self-running")

Referring to the terminals, the system states described in the table above are same as those one found in a system based on a mechanical ignition switch.
The one of distinction with Mechanical-Ignition-Switch based system is that the BES system allows specific transition from [OFF] to [START] without going through [ACC] and [IGN] states.

Body Electrical System > Button Engine Start System > Start/Stop Button > Components and Components Location

Component

cardiagn.com

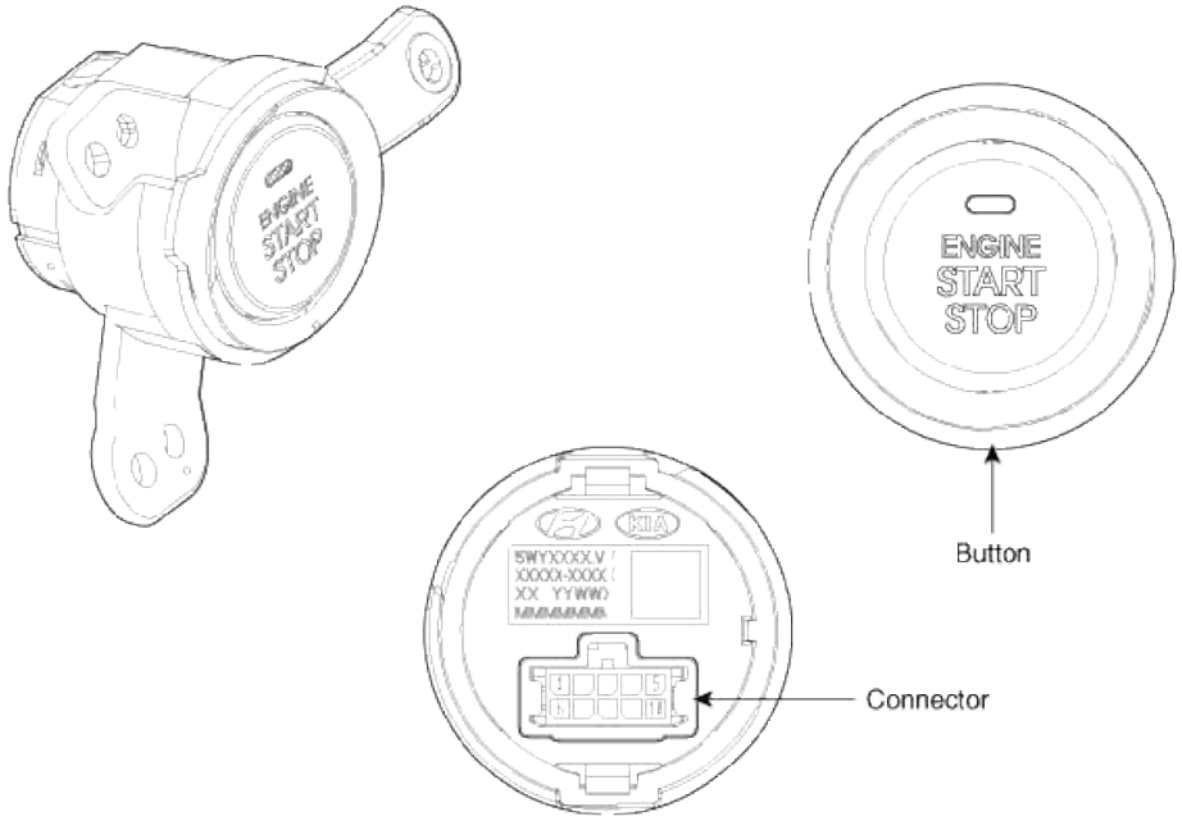

Connector (10 pins)	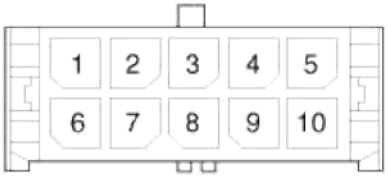		
Pin No.	Description	Pin No.	Description
1	Start stop button switch1	6	Ground
2	LED illumination power	7	Start stop button switch 2
3	Amber LED	8	Green LED
4	Start stop button illumination GND	9	Rheostat
5	Start stop button illumination Power	10	-

Body Electrical System > Button Engine Start System > Start/Stop Button > Repair procedures

Removal

1. Disconnect the negative(-) battery terminal.
2. Remove the cluster fascia panel.
   (Refer to the BD group - "Crash pad")

cardiagn.com

3. Disconnect the connector (A).

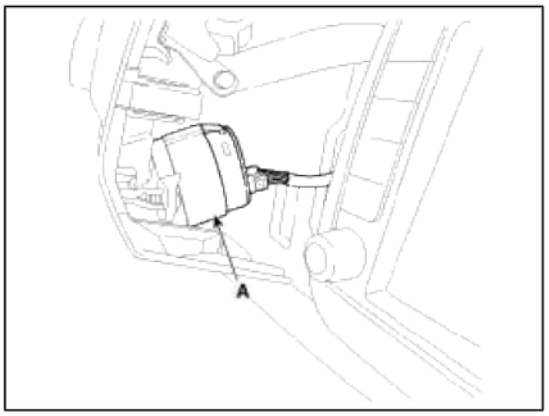

4. Remove the start/stop button (A) after loosening the mounting 3 screws.

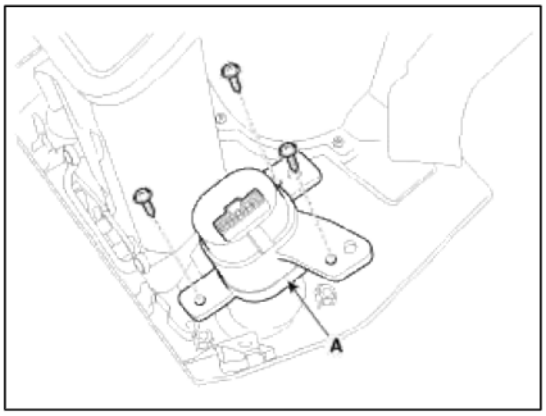

Installation

1. Install the start/stop button.
2. Install the left air vent.

Body Electrical System > Button Engine Start System > Fob Holder > Components and Components Location

Component

cardiagn.com

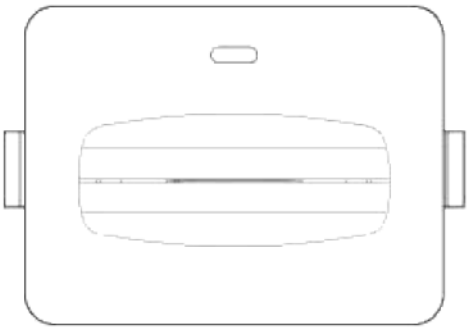

Connector (10 pins)	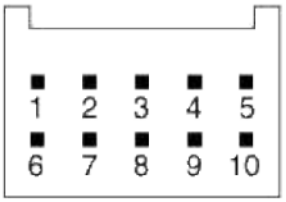		
Pin No.	Description	Pin No.	Description
1	-	6	Battery
2	Immobilizer clock	7	Immobilizer data
3	Holder illumination	8	Illumination battery
4	GND	9	Fob in
5	GND	10	-

cardiagn.com

Body Electrical System > Button Engine Start System > Fob Holder > Repair procedures

Removal

1. Disconnect the negative(-) battery terminal.
2. Remove the floor console.
   (Refer to the BD group - "Console")

3. Disconnect the connector (B), then remove the fob holder assembly (A) after releasing the hook (C).

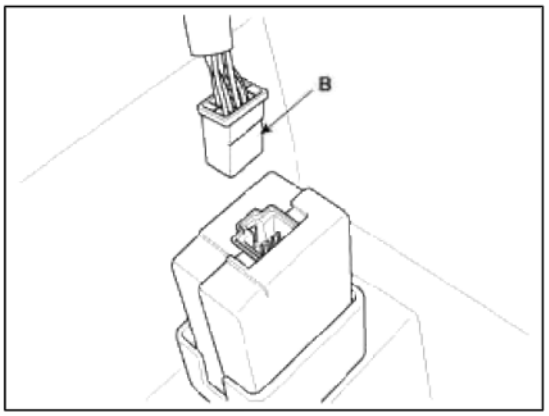

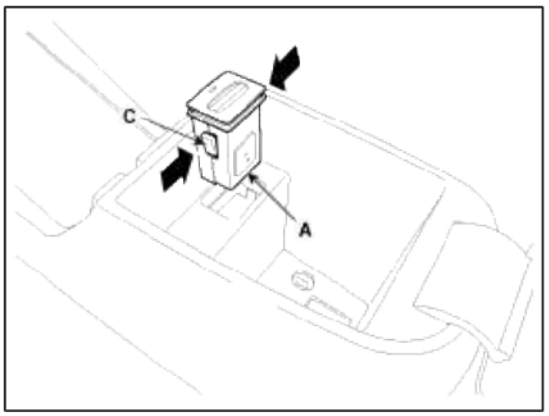

Installation

1. Install the fob holder assembly.
2. Install the floor console.
3. Install the negative(-) battery terminal.

Body Electrical System > Ignition Switch Assembly > Repair procedures

Inspection

1. Disconnect the ignition switch connector (B) and key warning switch connector (A) from under the steering column.

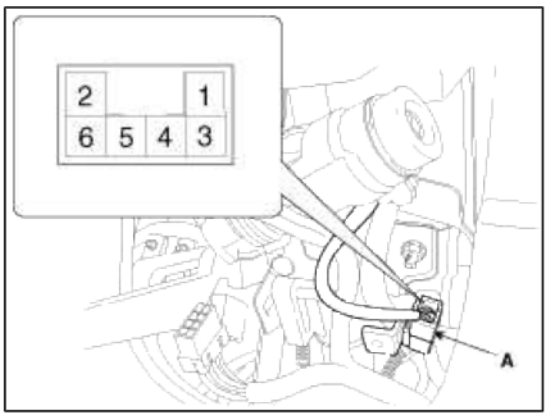

cardiagn.com

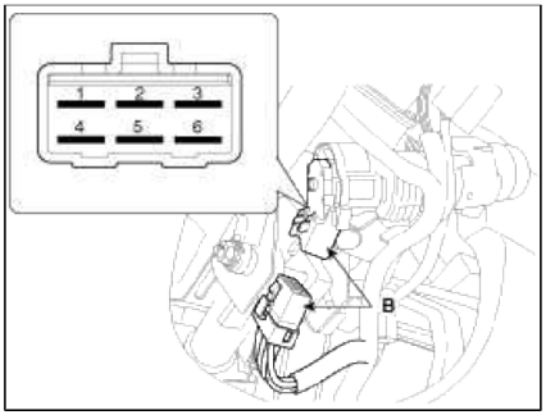

2. Check for continuity between the terminals.
3. If continuity is not specified, replace the switch.

Terminal / Position	Key	Ignition switch (B) 5 (B1)	6 (ACC)	4 (IG1)	1 (B2)	2 (IG2)	3 (ST)	Steering Travel	Travel	Key warning switch (A) 3	4	Key hole illumination 5	6
Lock	Removal							Lock					
	Insert							Lock	Unlock				
ACC		○	○					Unlock		○	○		
ON		○	○	○	○	○							
Start		○		○	○	○	○						

Removal

1. Disconnect the negative (-) battery terminal.
2. Remove the steering column upper and lower shrouds.
   (Refer to the ST group - "Steering column")
3. Remove the ignition switch (A) after disconnecting the 6P connector (B).

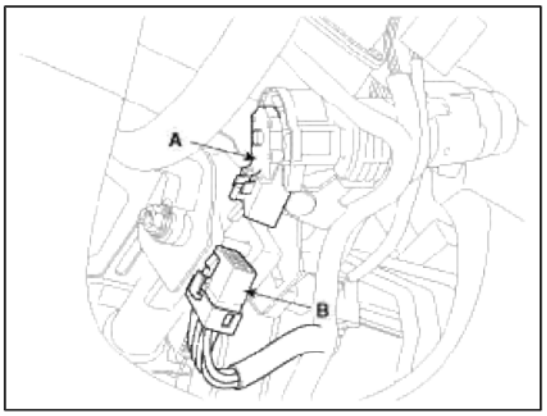

cardiagn.com

4. Remove the key warning and immobilizer connector (A).

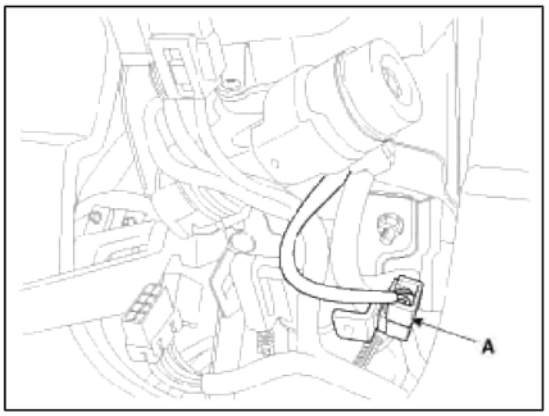

5. Remove the key illumination cover.
6. If it is necessary to remove the key lock cylinder (A), remove the key lock cylinder after pushing lock pin (B) with key ACC.

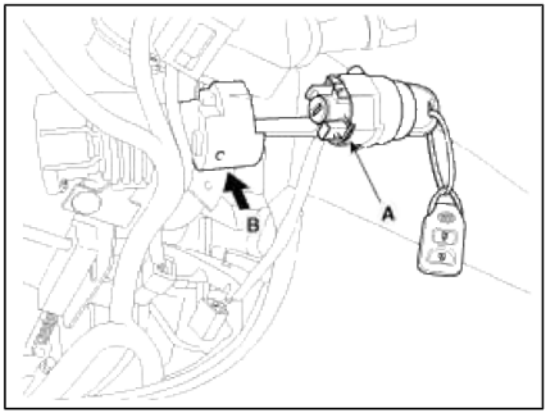

Installation

1. Install the key lock cylinder.
2. Install the illumination cover.
3. Install the key warning and immobilizer connector.
4. Install the ignition switch.
5. Install the steering column shrouds and crash pad lower panel.

Body Electrical System > Back View Camera System > Components and Components Location

Component Location

cardiagn.com

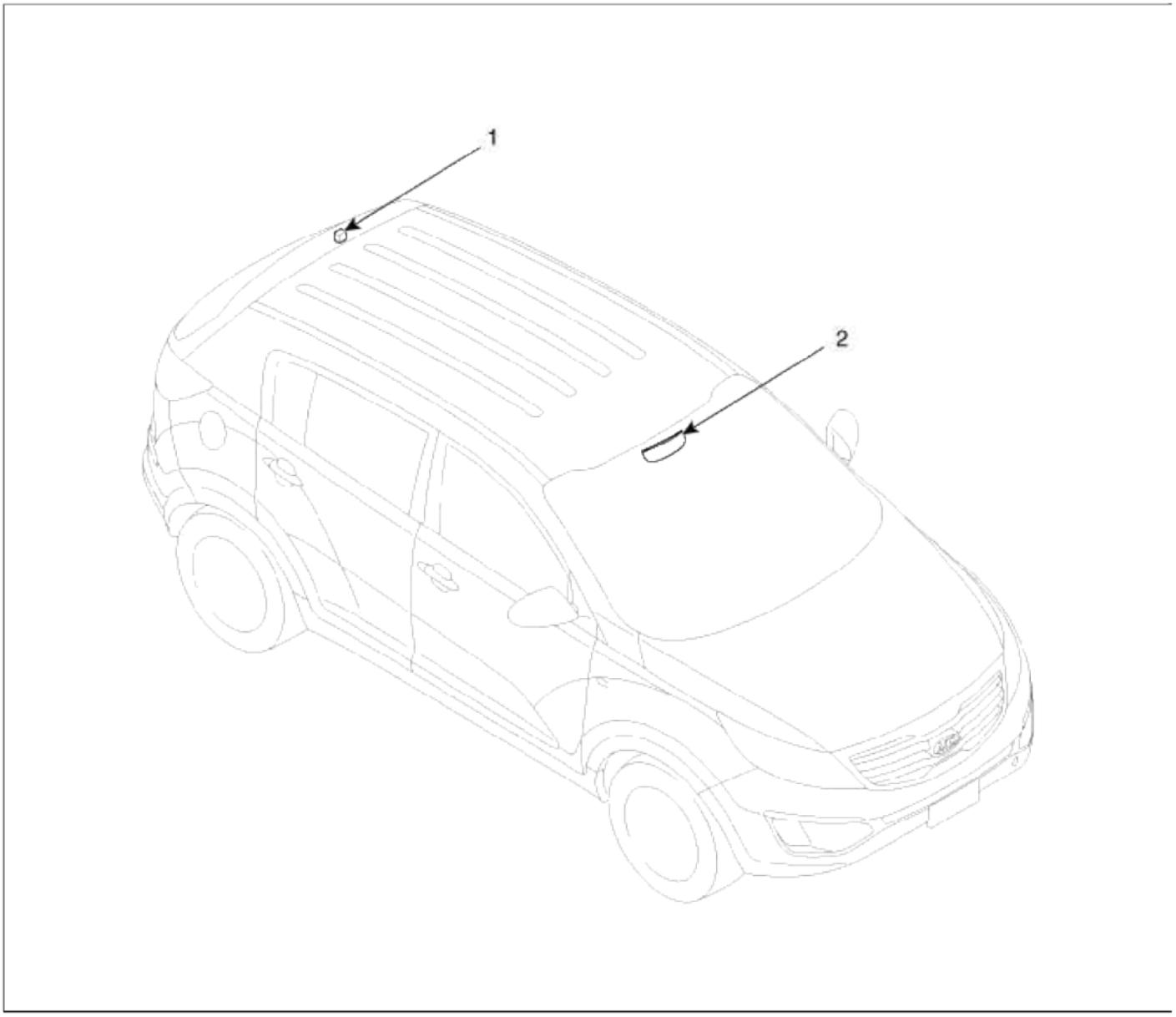

1. Back view camera	2. ECM mirror

Body Electrical System > Back View Camera System > Schematic Diagrams

Circuit Diagram

cardiagn.com

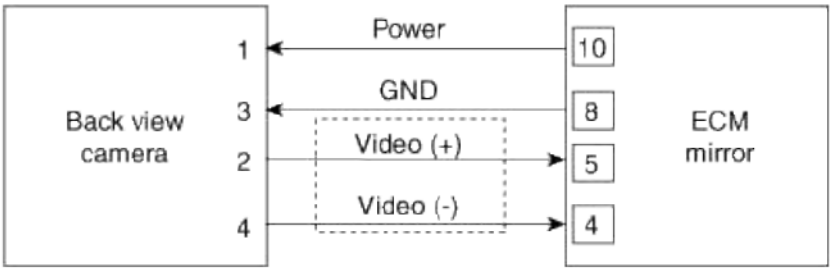

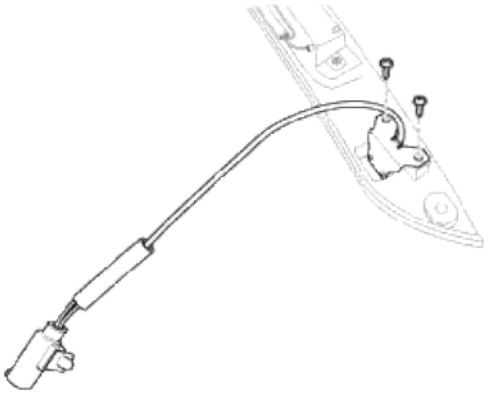

Back view camera connector

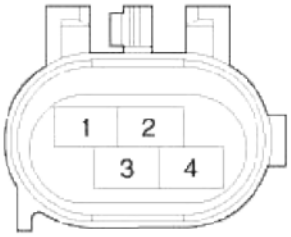

Pin No.	Description
1	Power
2	Video (+)
3	Ground
4	Video (-)

cardiagn.com

Body Electrical System > Back View Camera System > Description and Operation

Description

Back view camera will activate when the backup light is ON with the ignition switch ON and the shift lever in the R position.

This system is a supplemental system that shows behind the vehicle through the ECM (Reverse Display Room Mirror) mirror or the Navigation unit while backing-up.

WARNING

This system is a supplementary function only. It is the responsibility of the driver or always check the inside/ outside rearview mirror and the area behind the vehicle before and while backing up because there is a dead zone that can't see through the camera.

Body Electrical System > Back View Camera System > Repair procedures

Removal

1. Remove the tailgate trim in the trunk after removing the screws and clips.
   (Refer to the BD group - "Tailgate")
2. Remove the tailgate garnish (A) after disconnecting the connector and removing the bolts.

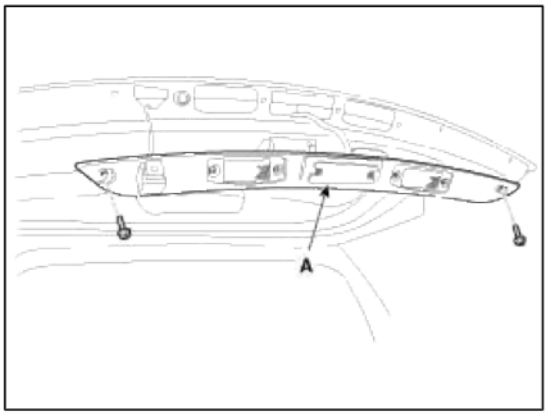

3. Remove the back view camera (A) after loosening the screws (2EA).

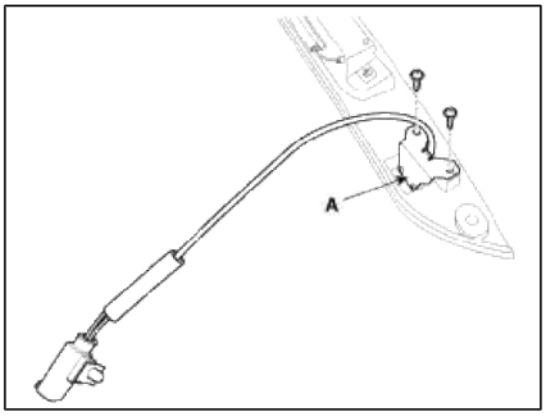

Installation

1. Install the back view camera.
2. Install the tailgate garnish and trim.

cardiagn.com