2004 GENERAL MOTORS

Avalanche, Escalade, Escalade ESV, Escalade EXT, Suburban, Tahoe,Yukon & Yukon XL

BUZZERS, RELAYS & TIMERS

BUZZERS, RELAYS & TIMERS LOCATION

Component	Location
A/C COMP Relay	In underhood fuse block. See **Fig. 29** .
Automatic Level Control Compressor Relay	Near underhood fuse block. See **Fig. 54** .
Auxiliary Battery Relay	Right rear of engine compartment. See **Fig. 33** .
Auxiliary Battery Relay Electrical Connector	Right rear of engine compartment. See **Fig. 33** .
DEFOG Relay	In body relay block. See **Fig. 32** .
DRIVER UNLOCK Relay	In left I/P fuse block.
DRL Relay	In underhood fuse block. See **Fig. 29** .
Electronic Adjustable Pedals Relay	Behind lower left of dash.
FOG LP Relay	In underhood fuse block. See **Fig. 29** .
Fuel Pump (F/PMP) Relay	In underhood fuse block. See **Fig. 29** .
Fuel Pump Relay (Secondary) (W/Dual Tanks)	At left side of engine compartment, on underhood fuse block bracket.
HDLP-HI Relay	In underhood fuse block. See **Fig. 29** .
HDLP-LOW Relay	In underhood fuse block. See **Fig. 29** .
HORN Relay	In underhood fuse block. See **Fig. 29** .
IGN 1 Relay	In underhood fuse block. See **Fig. 29** .
LOCK Relay	In left I/P fuse block. See **Fig. 30** .
PARK LP Relay	In underhood fuse block. See **Fig. 29** .
Power Take-Off (PTO) Relay	Behind underhood fuse block. See **Fig. 120** .
PRIME F/PMP Relay	In underhood fuse block.
Roof Beacon Relay	At lower left "B" pillar. See **Fig. 23** .
RR FOG LP Relay	In left I/P fuse block. See **Fig. 30** .
STARTER Relay	In underhood fuse block. See **Fig. 29** .
Sun Roof Relay	At lower side of right "A" pillar. See **Fig. 113** .
UNLOCK Relay	In left I/P fuse block. See **Fig. 30** .
W/S WASH Relay	In underhood fuse block. See **Fig. 29** .

CIRCUIT PROTECTION DEVICES

CIRCUIT PROTECTION DEVICES LOCATION

Component	Location
Body Relay Block	Under left side of dash, near kick panel. See **Fig. 102** .
Left I/P Fuse Block	Behind lower left side of dash.

cardiagn.com

Rear Lamps Junction Block	On rear inner side of right frame rail.
Right I/P Fuse Block	On lower right side of dash. See **Fig. 14** .
Underhood Fuse Block	At left side of engine compartment, near battery. See **Fig. 3** .

CONTROL UNITS

CONTROL UNITS LOCATION

Component	Location
Blower Motor Control Processor	Behind right side of dash. See **Fig. 39** .
Blower Motor Control Processor (Auxiliary) (Suburban & Yukon XL)	Below auxiliary blower motor. See **Fig. 47** .
Blower Motor Control Processor (Auxiliary) (Tahoe & Yukon)	Below auxiliary blower motor. See **Fig. 48** .
Body Control Module	On lower left side of dash, below steering column. See **Fig. 98** .
Body Control Module (BCM) Connector	Below left side of dash. See **Fig. 17** .
Cruise Control Module (CCM)	Left rear of engine compartment. See **Fig. 9** .
Cruise Control Module (CCM) Electrical Connector	Left rear of engine compartment. See **Fig. 9** .
Driver Door Module (DDM)	In driver's door. See **Fig. 103** .
Electronic Brake Control Module Connectors (EBCM)	On electronic brake control module. See **Fig. 66** .
Electronic Brake Control Module (EBCM)	On left rear frame rail. See **Fig. 20** .
Electronic Suspension Control Module Connector (Escalade EXT)	On electronic suspension control module. See **Fig. 57** .
Electronic Suspension Control Module Connector (Except Avalanche & Escalade EXT)	On electronic suspension control module.**Fig. 60** .
Electronic Suspension Control Module (Escalade EXT)	Below left rear seat. See **Fig. 57** .
Electronic Suspension Control Module (Suburban & Yukon XL)	Below rear HVAC blower motor. See **Fig. 47** .
Flasher Module	Bottom of left I/P fuse block. See **Fig. 31** .
FM Impedance Matching Module	In right rear quarter glass. See **Fig. 119** .
Front Passenger Door Module (FPDM)	In right front door. See **Fig. 104** .
Heated Seat Module (Left Rear)	Under left rear seat.
Heated Seat Module (Right Rear)	Under right rear seat.
HVAC Control Assembly (Rear Auxiliary Connector)	Center of headliner. See **Fig. 40** .
HVAC Control Module	Behind center of dash. See **Fig. 37** .
HVAC Control Module (Auxiliary)	Right rear of vehicle. See **Fig. 47** .
HVAC Control Processor (Auxiliary)	Center of headliner. See **Fig. 40** .
HVAC Module Assembly	Below instrument panel. See **Fig. 38** .

cardiagn.com

HVAC Module Assembly (Auxiliary)	Right rear passenger compartment. See **Fig. 41** .
HVAC Module (Auxiliary)	Right rear passenger compartment. See **Fig. 25** .
Inflatable Restraint Passenger Presence System (PPS) Module	Below right front seat. See **Fig. 92** .
Inflatable Restraint Sensing & Diagnostic Module (SDM)	Under left front seat. See **Fig. 91** .
Memory Seat Module	Below driver's seat. See **Fig. 114** .
Powertrain Control Module (PCM)	Left front of engine compartment. See **Fig. 85** .
Powertrain Control Module (PCM) Connectors	Left front of engine compartment. See **Fig. 85** .
Radio Antenna Module	Above right rear quarter glass, in headliner. See **Fig. 119** .
Rear Object Sensor Control Module Connector (Escalade EXT)	On rear object sensor control module. See **Fig. 57** .
Rear Object Sensor Control Module (Escalade EXT)	Under 2nd row seat. See **Fig. 57** .
Rear Wheel Steering Control Module	Below vehicle, between spare tire & rear bumper. See **Fig. 51** .
Rear Window Wiper Module	In liftgate, below rear glass. See **Fig. 99** .
Sun Roof Module	Above front of headliner.
Theft Deterrent Control Module	On ignition switch. See **Fig. 97** .
Throttle Actuator Control (TAC) Module	Right rear of engine compartment. See **Fig. 81** .
Throttle Actuator Control (TAC) Module Connector	Right rear of engine compartment. See **Fig. 81** .
Transfer Case Shift Control Module	Behind headlamp switch.
Vehicle Communication Interface Module	Behind right side of dash.
Windshield Wiper Motor Module	Left side of cowl. See **Fig. 9** .
Windshield Wiper Motor Module Connector	Left side of cowl. See **Fig. 9** .

MOTORS

MOTORS LOCATION

Component	Location
Air Temperature Actuator	At bottom of HVAC module. See **Fig. 15** .
Air Temperature Actuator (Auxiliary) (Suburban & Yukon XL)	On auxiliary HVAC module assembly. See **Fig. 47** .
Air Temperature Actuator (Auxiliary) (Tahoe & Yukon)	On auxiliary HVAC module assembly. See **Fig. 48** .
Air Temperature Actuator Connector	On bottom of HVAC module. See **Fig. 15** .
Air Temperature Actuator (Left)	On bottom of HVAC module. See **Fig. 39** .
Air Temperature Actuator (Right)	Behind dash, at top of HVAC module. See **Fig. 38** .
A/T Shift Lock Control Actuator	On steering column. See **Fig. 86** .
Automatic Level Control (ALC) Air Compressor	At rear crossmember. See **Fig. 55** .
	Mounted to auxiliary HVAC box, near blower

cardiagn.com

Auxiliary Temperature Actuator	motor. See **Fig. 41** .
Blower Motor	Under right side of dash. See **Fig. 39** .
Blower Motor (Auxiliary) (Suburban & Yukon XL)	Behind right rear quarterpanel. See **Fig. 25** .
Blower Motor (Auxiliary) (Tahoe & Yukon)	Right rear of passenger compartment. See **Fig. 48** .
Door Lock Actuator (Cargo)	In right cargo door. See **Fig. 100** .
Door Lock Actuator (Liftgate)	Near center of lift gate. See **Fig. 99** .
Front Axle Actuator Connector (1500 Series)	On front axle housing. See **Fig. 10** .
Front Axle Actuator Connector (2500 Series)	On front axle housing. See **Fig. 11** .
Front Axle Actuator (1500 Series)	On front axle housing. See **Fig. 10** .
Front Axle Actuator (2500 Series)	On front axle housing. See **Fig. 11** .
Fuel Pump & Sender Assembly Connector (Primary)	On primary fuel pump assembly. See **Fig. 109** .
Fuel Pump & Sender Assembly Connector (Secondary) (W/Dual Tanks)	On secondary fuel pump assembly. See **Fig. 110** .
Fuel Pump & Sender Assembly (Primary)	In primary fuel tank. See **Fig. 109** .
Fuel Pump & Sender Assembly (Secondary) (W/Dual Tanks)	In secondary fuel tank. See **Fig. 110** .
Idle Air Control Valve (4.8L, 5.3L & 6.0L)	Top front of intake manifold. See **Fig. 72** .
Mode Actuator	On left side of HVAC module. See **Fig. 15** .
Mode Actuator (Auxiliary) (Suburban & Yukon XL)	At front of auxiliary HVAC module. See **Fig. 25** .
Mode Actuator (Auxiliary) (Tahoe & Yukon)	On auxiliary HVAC module assembly. See **Fig. 48** .
Mode Actuator Connector (Auxiliary)	At front of auxiliary HVAC module. See **Fig. 25** .
Precharge Pump	Left side of engine compartment. See **Fig. 67** .
Precharge Pump Connector	On precharge pump. See **Fig. 67** .
Rear Steering Gear Motor	On rear steering actuator. See **Fig. 52** .
Recirculation Actuator	Upper right of HVAC module. See **Fig. 38** .
Recirculation Actuator Connector	Upper right of HVAC module. See **Fig. 15** .
Seat Bolster Motor (Driver)	In driver's seat back. See **Fig. 115** .
Seat Bolster Motor (Right Front)	In right front seat back. See **Fig. 117** .
Seat Front Vertical Motor (Driver)	Below driver's seat. See **Fig. 114** .
Seat Front Vertical Motor (Right)	Below right front seat. See **Fig. 92** .
Seat Horizontal Motor (Driver)	Below driver's seat. See **Fig. 114** .
Seat Horizontal Motor (Right)	Below right front seat. See **Fig. 92** .
Seat Lumbar Motor (Driver)	Below driver's seat. See **Fig. 115** .
Seat Lumbar Motor (Right Front)	In right front seat back. See **Fig. 117** .
Seat Rear Vertical Motor (Driver)	Below driver's seat. See **Fig. 114** .
Seat Rear Vertical Motor (Right)	Below right front seat. See **Fig. 92** .
Seat Recliner Motor (Driver)	Below driver's seat. See **Fig. 114** .
Seat Recliner Motor (Right)	Below right front seat. See **Fig. 92** .
Starter	Lower right rear of engine. See **Fig. 34** .

cardiagn.com

Sun Roof Motor	Part of sun roof module.
Supplemental Brake Assist Pump Motor	On brake booster assembly. See **Fig. 65** .
Supplemental Brake Assist Pump Motor Connector	Near brake booster assembly. See **Fig. 65** .
Throttle Actuator Control (TAC) Motor	On front of engine. See **Fig. 76** .
Throttle Actuator Control (TAC) Motor Connector	On throttle actuator control (TAC) motor. See **Fig. 76** .
Window Motor (Driver)	In driver's door. See **Fig. 103** .
Window Motor (Left Rear)	In left rear door. See **Fig. 95** .
Window Motor (Left Rear)	In left rear door. See **Fig. 105** .
Window Motor (Right Front)	In right front door. See **Fig. 104** .
Window Motor (Right Rear)	In right rear door. See **Fig. 106** .
Windshield Washer Fluid Pump Connector	On washer fluid pump. See **Fig. 112** .

SENDING UNITS & SENSORS

SENDING UNITS & SENSORS LOCATION

Component	Location
Accelerator Pedal Position Sensor	Behind accelerator pedal.
A/C Refrigerant Pressure Sensor	In high side pressure line, near compressor. See **Fig. 35** .
A/C Refrigerant Pressure Sensor Connector	On A/C refrigerant pressure sensor. See **Fig. 35** .
Air Temperature Sensor Assembly (Inside)	In headliner, above driver.
Air Temperature Sensor Connector (Lower Right)	On lower right air temperature sensor. See **Fig. 39** .
Air Temperature Sensor Connector (Upper Auxiliary)	On upper auxiliary air temperature sensor. See **Fig. 46** .
Air Temperature Sensor Connector (Upper Left)	On upper left air temperature sensor. See **Fig. 43** .
Air Temperature Sensor Connector (Upper Right)	On upper right air temperature sensor. See **Fig. 43** .
Air Temperature Sensor (Lower Auxiliary) (Suburban & Yukon XL)	Behind right "C" pillar, at front of HVAC. See **Fig. 25** .
Air Temperature Sensor (Lower Auxiliary) (Tahoe & Yukon)	Behind right "C" pillar, at front of HVAC. See **Fig. 48** .
Air Temperature Sensor (Lower Left)	Behind dash, at left end of HVAC module. See **Fig. 44** .
Air Temperature Sensor (Lower Right)	Behind dash, at bottom of HVAC module. See **Fig. 45** .
Air Temperature Sensor (Outside)	Mounted to radiator core support. See **Fig. 118** .
Air Temperature Sensor (Upper Auxiliary) (Except Tahoe & Yukon)	In rear auxiliary HVAC upper duct, near "C" pillar. See **Fig. 46** .
Air Temperature Sensor (Upper Auxiliary) (Tahoe & Yukon)	In right "C" pillar. See **Fig. 48** .
Air Temperature Sensor (Upper Left)	At center of dash, below dash trim panel. See **Fig. 43** .

cardiagn.com

Air Temperature Sensor (Upper Right)	At center of dash, below dash trim panel. See **Fig. 43** .
Ambient Air Temperature Sensor	In right front bumper filler assembly. See **Fig. 36** .
Ambient Light Sensor	On top center of dash.
Automatic Transmission Fluid Temperature Sensor	In automatic transmission.
Automatic Transmission Input Shaft Speed Sensor	In automatic transmission.
Camshaft Position (CMP) Sensor Connector (Except 8.1L)	On top center rear of engine. See **Fig. 77** .
Camshaft Position (CMP) Sensor (Except 8.1L)	On top center rear of engine. See **Fig. 77** .
Camshaft Position Sensor (8.1L)	On left side of timing cover.
Crankshaft Position (CKP) Sensor Connector (8.1L)	On crankshaft position (CKP) sensor. See **Fig. 111** .
Crankshaft Position (CKP) Sensor (4.8L, 5.3L & 6.0L)	On lower right rear of engine block. See **Fig. 79** .
Crankshaft Position (CKP) Sensor (5.3L VIN T)	On lower right rear of engine block.
Crankshaft Position (CKP) Sensor (6.0L VIN U)	On lower right rear of engine block.
Crankshaft Position (CKP) Sensor (8.1L VIN G)	On top left rear of engine block, near bellhousing. See **Fig. 111** .
Engine Coolant Temperature (ECT) Sensor Connector (4.8L, 5.3L & 6.0L)	Left side of engine. See **Fig. 6** .
Engine Coolant Temperature (ECT) Sensor Connector (8.1L)	Center of right cylinder head. See **Fig. 108** .
Engine Coolant Temperature (ECT) Sensor Connector (8.1L)	Top right side of engine. See **Fig. 73** .
Engine Coolant Temperature (ECT) Sensor (4.3L)	On side of left cylinder head. See **Fig. 74** .
Engine Coolant Temperature (ECT) Sensor (4.8L, 5.3L & 6.0L)	On front side of left cylinder head. See **Fig. 72** .
Engine Coolant Temperature (ECT) Sensor (8.1L VIN G)	At middle of right cylinder head.
Engine Oil Pressure (EOP) Sensor (4.8L, 5.3L & 6.0L)	On top rear of engine. See **Fig. 72** .
Engine Oil Pressure (EOP) Sensor (8.1L)	On top rear of engine. See **Fig. 8** .
Fuel Composition Sensor (Except 8.1L)	Inside left frame rail, forward of electronic brake control module.
Fuel Level Sensor (Primary)	In primary fuel tank.
Fuel Level Sensor (Secondary)	In secondary fuel tank.
Fuel Pump & Sender Assembly (Primary)	In primary fuel tank.
Fuel Pump & Sender Assembly (Secondary) (W/Dual Tanks)	In secondary fuel tank.
Fuel Sender	In fuel tank. See **Fig. 24** .
Fuel Tank Pressure Sensor	On fuel tank, integral to fuel pump & sender assembly.
Heated Oxygen Sensor (HO2S) Bank 1 Sensor 1 (4.8L & 5.3L)	In left exhaust pipe, before catalytic converter. See **Fig. 83** .

cardiagn.com

Heated Oxygen Sensor (HO2S) Bank 1 Sensor 1 (6.0L)	In left exhaust pipe, before catalytic converter. See **Fig. 84** .
Heated Oxygen Sensor (HO2S) Bank 1 Sensor 2 (4.8L & 5.3L)	In left exhaust pipe, after catalytic converter. See **Fig. 83** .
Heated Oxygen Sensor (HO2S) Bank 1 Sensor 2 (6.0L)	After left catalytic converter. See **Fig. 84** .
Heated Oxygen Sensor (HO2S) Bank 2 Sensor 1 (4.8L & 5.3L)	In right exhaust pipe, before catalytic converter. See **Fig. 83** .
Heated Oxygen Sensor (HO2S) Bank 2 Sensor 1 (6.0L)	Right exhaust pipe, before catalytic converter. See **Fig. 84** .
Heated Oxygen Sensor (HO2S) Bank 2 Sensor 2 (4.8L & 5.3L)	In right exhaust pipe, after catalytic converter. See **Fig. 83** .
Heated Oxygen Sensor (HO2S) Bank 2 Sensor 2 (6.0L)	In right exhaust pipe, after catalytic converter. See **Fig. 84** .
HO2 Sensor Connector - Bank 1, Sensor 1	Left front of transmission. See **Fig. 5** .
Inflatable Restraint Electronic Front End Sensor (Left)	On left front of vehicle, by core support.
Inflatable Restraint Electronic Front End Sensor (Right)	On right front of vehicle, by core support.
Inflatable Restraint Front End Discriminating Sensor	In front of radiator. See **Fig. 91** .
Inflatable Restraint Passenger Presence System (PPS) Sensor	Below right front seat. See **Fig. 92** .
Inflatable Restraint Side Impact Sensor (SIS) (Left)	Mounted inside driver door, behind trim panel. See **Fig. 91** .
Inflatable Restraint Side Impact Sensor (SIS) (Right)	Mounted inside passenger door, behind trim panel. See **Fig. 91** .
Inside Auxiliary Air Temperature Sensor Assembly	In headliner, near left "C" pillar.
Intake Air Temperature (IAT)/Mass Airflow (MAF) Sensor	In air induction tube. See **Fig. 82** .
Knock Sensor Bank No.1 (8.1L)	On left side of engine, forward of oil filter.
Knock Sensor (KS) 1 (4.8L, 5.3L & 6.0L)	In valley, under intake manifold. See **Fig. 78** .
Knock Sensor (KS) 2 Connector (8.1L)	Left side of engine. See **Fig. 7** .
Knock Sensor (KS) 2 (4.8L, 5.3L & 6.0L)	In valley, under intake manifold. See **Fig. 78** .
Knock Sensor (KS) 2 (8.1L)	On left side of engine. See **Fig. 7** .
Manifold Absolute Pressure (MAP) Sensor Connector (8.1L)	On top rear of engine, on intake manifold. See **Fig. 73** .
Manifold Absolute Pressure (MAP) Sensor (4.8L, 5.3L & 6.0L)	On top rear of engine. See **Fig. 72** .
Manifold Absolute Pressure (MAP) Sensor (8.1L)	Top of intake manifold. See **Fig. 108** .
Mass Air Flow (MAF) Sensor	Right rear of engine compartment. See **Fig. 33** .
Object Sensor (Left Rear Corner)	On left side of rear bumper.
Object Sensor (Left Rear Middle)	On left middle of rear bumper.

cardiagn.com

Object Sensor (Right Rear Corner)	On right side of rear bumper.
Object Sensor (Right Rear Middle)	On right middle of rear bumper.
Passlock Sensor	On ignition switch. See **Fig. 96** .
Propshaft Speed Sensor (Front)	On left front side of transfer case.
Propshaft Speed Sensor (Rear)	On transfer case extension housing.
Rear Wheel Position Sensor	On bottom of rear steering actuator. See **Fig. 53** .
Steering Wheel Speed/Position Sensor	Near base of steering column. See **Fig. 50** .
Sunload Sensor Assembly	On center of dash, near defrost deflectors. See **Fig. 49** .
Sunload Sensor Connector	On sunload sensor. See **Fig. 49** .
Sunload Sensor Harness	Under top in instrument panel. See **Fig. 49** .
Suspension Position Sensor Chassis Connector (Left Front)	Near left front wheel. See **Fig. 56** .
Suspension Position Sensor Chassis Connector (Right Front)	Near right front wheel. See **Fig. 56** .
Suspension Position Sensor Connector (Left Front)	On left front suspension position sensor. See **Fig. 62** .
Suspension Position Sensor Connector (Left Rear)	On left rear suspension position sensor. See **Fig. 59** .
Suspension Position Sensor Connector (Right Rear)	On right rear suspension position sensor. See **Fig. 61** .
Suspension Position Sensor (Left Front)	On control arm, behind left front shock. See **Fig. 62** .
Suspension Position Sensor (Left Rear)	Behind left rear shock, near frame rail. See **Fig. 59** .
Suspension Position Sensor Pigtail Connector (Left Front)	Near left front wheel. See **Fig. 56** .
Suspension Position Sensor (Right Front)	On control arm, behind right front shock.
Suspension Position Sensor (Right Rear)	Right rear frame rail. See **Fig. 61** .
Throttle Position (TP) Sensor (4.8L, 5.3L & 6.0L)	On throttle body. See **Fig. 72** .
Vehicle Speed Sensor (VSS) (A/T)	Right rear of transmission. See **Fig. 87** .
Vehicle Speed Sensor (VSS) (M/T)	On rear of transmission. See **Fig. 80** .
Vehicle Speed Sensor (VSS) (Transfer Case)	On rear of transfer case. See **Fig. 89** .
Washer Fluid Level Sensor Connector	On washer fluid reservoir. See **Fig. 112** .
Wheel Speed Sensor (WSS) Chassis Connector (Left Front)	Near left front wheel. See **Fig. 56** .
Wheel Speed Sensor (WSS) Chassis Connector (Right Front)	Near right front wheel. See **Fig. 56** .
Wheel Speed Sensor (WSS) Pigtail Connector (Left Front)	Near left front wheel. See **Fig. 56** .
Wheel Speed Sensor (WSS) (2WD) (Right Front)	On right front hub assembly. See **Fig. 68** .
Wheel Speed Sensor (WSS) (4WD) (Right Front)	On right front hub assembly. See **Fig. 69** .
Yaw & Lateral Acceleration Sensor Connector	Below right front seat. See **Fig. 71** .

cardiagn.com

(Escalade EXT)	
Yaw & Lateral Acceleration Sensor (Escalade)	Below center console. See **Fig. 70** .
Yaw & Lateral Acceleration Sensor (Escalade EXT)	Under right front seat. See **Fig. 71** .

SOLENOIDS & SOLENOID VALVES

SOLENOIDS & SOLENOID VALVES LOCATION

Component	Location
A/C Compressor Clutch Connector (4.3L)	On A/C compressor clutch. See **Fig. 42** .
A/C Compressor Clutch Connector (4.8L, 5.3L & 6.0L)	On A/C compressor clutch. See **Fig. 34** .
A/C Compressor Clutch (4.8L, 5.3L & 6.0L)	On A/C compressor. See **Fig. 34** .
Evaporative Emissions Canister Vent Solenoid	On right front side of fuel tank. See **Fig. 75** .
Evaporative Emissions (EVAP) Canister Purge Solenoid (4.8L, 5.3L & 6.0L)	Behind throttle body, near front of engine. See **Fig. 72** .
Evaporative Emissions (EVAP) Canister Purge Solenoid (8.1L VIN G)	To left of throttle body, near front of engine.
Exhaust Gas Recirculation (EGR) Valve Connector (4.3L)	Top front of engine. See **Fig. 42** .
Exhaust Gas Recirculation (EGR) Valve Connector (4.8L, 5.3L & 6.0L)	Right front of engine. See **Fig. 76** .
Exhaust Gas Recirculation (EGR) Valve (4.8L, 5.3L & 6.0L)	Right front of engine. See **Fig. 76** .
Exhaust Gas Recirculation (EGR) Valve (8.1L)	On top rear of engine. See **Fig. 8** .
Fuel Injector 2 Connector	Right side of engine. See **Fig. 76** .
Fuel Injector 6	Right side of engine. See **Fig. 76** .
Fuel Injector 8	Right side of engine. See **Fig. 76** .
Pressure Control Solenoid Valve	In automatic transmission. See **Fig. 87** .
Shock Absorber Solenoid (Left Front)	Part of left front shock.
Shock Absorber Solenoid (Left Rear)	Part of left rear shock.
Shock Absorber Solenoid (Right Front)	Part of right front shock.
Shock Absorber Solenoid (Right Rear)	Part of right rear shock.
Starter Solenoid Connector	On starter solenoid. See **Fig. 34** .
Suspension Damper Solenoid Connector (Left Front)	Top of left front suspension damper. See **Fig. 56** .
Suspension Damper Solenoid Connector (Left Rear)	Near left rear suspension damper. See **Fig. 58** .
Suspension Damper Solenoid Connector (Right Front)	Top of right front suspension damper. See **Fig. 56** .
Torque Converter Clutch Pulse Width Modulation (TCC PWM) Solenoid Valve	In automatic transmission. See **Fig. 87** .
Torque Converter Clutch (TCC) Solenoid Valve	In automatic transmission. See **Fig. 87** .
1-2 Shift Solenoid (SS) Valve	In automatic transmission. See **Fig. 87** .

cardiagn.com

2-3 Shift Solenoid (SS) Valve	In automatic transmission. See **Fig. 87** .
3-2 Shift Solenoid (SS) Valve	In automatic transmission. See **Fig. 87** .

SWITCHES

SWITCHES LOCATION

Component	Location
A/C High Pressure Switch	On rear of A/C compressor. See **Fig. 34** .
A/C High Pressure Switch Connector (Except 4.3L)	On A/C high pressure switch. See **Fig. 34** .
A/C High Pressure Switch Connector (4.3L)	On A/C high pressure switch. See **Fig. 42** .
A/C Low Pressure Switch	On right side of accumulator. See **Fig. 33** .
Automatic Transmission Fluid Pressure (TFP) Manual Valve Position Switch	In automatic transmission. See **Fig. 87** .
Brake Fluid Level Switch	On left side of brake fluid reservoir. See **Fig. 64** .
Brake Fluid Level Switch Connector	On brake fluid level switch. See **Fig. 64** .
Brake Pressure Differential Switch	Mounted to power brake booster, below master cylinder. See **Fig. 67** .
Brake Pressure Differential Switch Connector	On brake pressure differential switch. See **Fig. 67** .
Coolant Level Switch	In coolant reservoir.
Coolant Level Switch Connector	Near coolant reservoir. See **Fig. 33** .
Door Ajar Switch (Cargo)	In right cargo door. See **Fig. 100** .
Door Jamb Switch Connectors (Mini Wedge) (Left Rear)	In left rear door. See **Fig. 105** .
Door Jamb Switch Connectors (Mini Wedge) (Right Rear)	In right rear door. See **Fig. 106** .
Door Jamb Switch (Mini Wedge) (Driver)	Rear of driver's door. See **Fig. 103** .
Door Jamb Switch (Mini Wedge) (Right Front)	At rear of right front door. See **Fig. 104** .
Engine Oil Level Switch	On lower right side of oil pan. See **Fig. 34** .
Inflatable Restraint Seat Position Switch (Right)	Below right front seat. See **Fig. 92** .
Lift Gate Ajar Switch Connector (Left)	Left side of lift gate. See **Fig. 99** .
Lift Gate Ajar Switch Connector (Right)	Right side of lift gate. See **Fig. 99** .
Lift Glass Ajar Switch	Center of lift gate. See **Fig. 99** .
Park Brake Switch	Part of park brake assembly.
Park/Neutral Position (PNP) Switch	On left side of transmission. See **Fig. 88** .
Seat Belt Switch Connector	Near driver seat belt buckle. See **Fig. 90** .
Stoplamp Switch	On top of brake pedal bracket. See **Fig. 63** .

MISCELLANEOUS

MISCELLANEOUS LOCATION

Component	Location

cardiagn.com

AM-FM Antenna	Right rear of vehicle. See **Fig. 119** .
Audio Amplifier	Under center console.
Blower Motor Resistor Assembly	On HVAC module. See **Fig. 15** .
Blower Motor Resistor Assembly (Auxiliary)	Mounted to auxiliary HVAC box, below blower motor. See **Fig. 41** .
Blower Motor Resistor Assembly Connector	On HVAC module. See **Fig. 15** .
Body Harness	Right rocker panel. See **Fig. 13** .
Camper Wiring Harness	Left rear frame rail. See **Fig. 28** .
Camper Wiring Harness Connector	Left rear frame rail. See **Fig. 28** .
Data Link Connector	Below left side of dash. See **Fig. 17** .
Digital Radio Receiver	Behind right side of dash. See **Fig. 94** .
Digital Radio Receiver Connector	Behind right side of dash. See **Fig. 94** .
Driver Power Seat Harness	Below driver's seat. See **Fig. 22** .
Emergency Roof Lamp Harness	Left "B" pillar. See **Fig. 23** .
Engine Coil Connector (8.1L) (Right)	Top right side of engine. See **Fig. 73** .
Engine Coil Harness Connector (8.1L) (Right)	Top or right valve cover. See **Fig. 73** .
Engine Harness (4.8L, 5.3L & 6.0L)	Engine compartment. See **Fig. 6** .
Engine Harness (8.1L)	Rear of engine compartment. See **Fig. 73** .
FM Antenna	Left rear of vehicle. See **Fig. 119** .
Heated Seat Element Connector (Driver Cushion)	On driver's heated seat cushion element. See **Fig. 115** .
Heated Seat Element (Driver Cushion)	In driver's seat cushion. See **Fig. 115** .
Heated Seat Element (Right Front Cushion)	In right front seat cushion. See **Fig. 117** .
Horn (High Note)	Right side of radiator support. See **Fig. 107** .
Horn (Low Note)	Left side of radiator support. See **Fig. 107** .
HVAC Harness (Auxiliary)	Right rear of vehicle. See **Fig. 46** .
Ignition Coil Connector (Component Side) (8.1L)	Center of right valve cover. See **Fig. 108** .
Ignition Coil Connector (Harness Side) (8.1L)	Center of right valve cover. See **Fig. 108** .
Ignition Coils (Left Bank)	On top of left valve covers. See **Fig. 72** .
Ignition Coil 2 (4.8L, 5.3L & 6.0L)	Right side of engine. See **Fig. 76** .
Ignition Coil 4 (4.8L, 5.3L & 6.0L)	Right side of engine. See **Fig. 76** .
Ignition Coil 6 (4.8L, 5.3L & 6.0L)	Right side of engine. See **Fig. 76** .
Ignition Coil 8 (4.8L, 5.3L & 6.0L)	Right side of engine. See **Fig. 76** .
Inflatable Restraint I/P Module	Right side of instrument panel. See **Fig. 91** .
Inflatable Restraint Side Impact Module (Left)	On side of left front seat back. See **Fig. 91** .
Inflatable Restraint Side Impact Module (Right)	On side of right front seat back. See **Fig. 91** .
Inflatable Restraint Steering Wheel Module	On steering wheel. See **Fig. 91** .
Inflatable Restraint Steering Wheel Module Coil	Below steering wheel module. See **Fig. 91** .
Instrument Panel Extension Harness	Left kick panel. See **Fig. 102** .
Liftgate Latch Connector	In liftgate. See **Fig. 123** .
Liftgate Lower Latch Connector	In liftgate. See **Fig. 123** .

cardiagn.com

Negative Battery Cable (G100)	Left front of engine compartment. See **Fig. 1** .
Trailer Wiring Connector	Center rear of vehicle. See **Fig. 27** .
Trailer Wiring Receptacle	Center rear of vehicle. See **Fig. 26** .
Wiper Motor Connector (Rear)	In center of lift gate. See **Fig. 123** .

CONNECTORS

CONNECTORS LOCATION

Component	Location
C100 (Black, 16 Pin)	Below underhood fuse block. See **Fig. 120** .
C102 (Black, 10 Pin)	Near underhood fuse block. See **Fig. 120** .
C103 (Black, 12 Pin)	Near underhood fuse block. See **Fig. 2** .
C104 (Black, 12 Pin)	Near underhood fuse block. See **Fig. 2** .
C114 (Black, 10 Pin)	At front side of underhood fuse block. See **Fig. 120** .
C115 (Black, 24 Pin)	Behind underhood fuse block.
C125 (Light Gray, 8 Pin)	On radiator support.
C127 (Light Gray, 8 Pin)	On radiator support.
C148 (Light Gray, 8 Pin)	On top left side of engine.
C149 (Light Gray, 8 Pin)	On top right side of engine.
C150 (Black, 4 Pin)	On left inner fender. See **Fig. 120** .
C151 (Black, 12 Pin)	Behind underhood fuse block. See **Fig. 120** .
C152 (Natural, 12 Pin)	Below underhood fuse block. See **Fig. 120** .
C153 (Black, 3 Pin)	Attached to underhood fuse block mounting bracket. See **Fig. 120** .
C154 (Black, 3 Pin)	Near underhood fuse block. See **Fig. 120** .
C155 (Black, 10 Pin)	Near left top front of engine.
C198 (Black, 1 Pin)	Near underhood fuse block.
C201 (Black, 32 Pin)	On steering column. See **Fig. 50** .
C202 (Black, 18 Pin)	Behind top of dash. See **Fig. 93** .
C203 (Black, 3 Pin)	Near left I/P fuse block.
C206 (Light Gray, 22 Pin)	Behind left kick panel.
C209 (Black, 16 Pin)	Behind right kick panel. See **Fig. 13** .
C210 (Black, 2 Pin)	Brake/clutch jumper harness to SEO jumper harness.
C214 (Black, 16 Pin)	Behind upper left side of dash.
C220 (Black, 24 Pin)	Behind center of dash.
C221 (Yellow, 4 Pin)	Behind left kick panel.
C222 (Yellow, 4 Pin)	Behind right kick panel. See **Fig. 13** .
C249 (Black, 4 Pin)	Behind center of dash.
C250 (Gray, 6 Pin)	Behind left side of dash.

cardiagn.com

C305 (Black, 16 Pin)	Under left front seat. See **Fig. 114** .
C306 (Black, 40 Pin)	Under front floor console. See **Fig. 70** .
C310 (Natural, 17 Pin)	Behind left "B" pillar trim panel. See **Fig. 105** .
C312 (Blue, 8 Pin)	In right rear of vehicle. See **Fig. 41** .
C313 (Black, 3 Pin)	Behind left kick panel.
C315 (Black, 3 Pin)	Behind right kick panel. See **Fig. 13** .
C320 (Gray, 13 Pin)	Under left front seat. See **Fig. 114** .
C321 (Light Blue, 24 Pin)	Under left front seat. See **Fig. 114** .
C322 (Natural, 10 Pin)	Under left front seat. See **Fig. 114** .
C323 (Black, 6 Pin)	Under left front seat. See **Fig. 114** .
C324 (Black, 8 Pin)	Under left front seat. See **Fig. 115** .
C325 (Gray, 6 Pin)	Under left front seat. See **Fig. 114** .
C326 (Gray, 6 Pin)	Under right front seat. See **Fig. 116** .
C329 (Black, 4 Pin)	Under right front seat. See **Fig. 117** .
C350 (Black, 2 Pin)	At top of transfer case.
C370 (Black, 14 Pin)	Below center console.
C388 (Black, 6 Pin)	Under right front seat. See **Fig. 116** .
C390 (Black, 4 Pin)	Body harness to center sail harness.
C396 (Natural, 17 Pin)	Behind right "B" pillar trim panel. See **Fig. 106** .
C397 (Except Tahoe & Yukon) (Black, 6 Pin)	Behind right rear quarterpanel. See **Fig. 25** .
C397 (Tahoe & Yukon) (Black, 6 Pin)	Left rear passenger compartment. See **Fig. 41** .
C399 (Black, 16 Pin)	Under right front seat. See **Fig. 92** .
C402 (Gray, 7 Pin)	Near left rear frame rail. See **Fig. 121** .
C405 (Black, 2 Pin)	Near left taillight assembly. See **Fig. 122** .
C410 (Black, 2 Pin)	At right rear of vehicle.
C411 (Black, 2 Pin)	At left rear of vehicle.
C450 (Black, 38 Pin)	At right rear of vehicle. See **Fig. 122** .
C499 (Gray, 12 Pin)	Behind right quarterpanel, near "D" pillar. See **Fig. 123** .
C900 (Black, 3 Pin)	In rear liftgate.
C901 (Black, 8 Pin)	In rear liftgate.
Driver Power Seat Inline Connector	Below driver's seat. See **Fig. 22** .
Forward Lamp Inline Connector	Near underhood fuse block. See **Fig. 4** .
I/P Harness Inline Connector	Near underhood fuse block. See **Fig. 4** .
I/P Inline Connectors	Near underhood fuse block. See **Fig. 4** .

GROUNDS

GROUNDS LOCATION

Component	Location
Automatic Transfer Case/ABS Ground	Left rear frame rail. See **Fig. 18** .

cardiagn.com

Electronic Brake Control Module (EBCM) Ground (GNO)	On left frame rail. See **Fig. 18** .
Engine Ground Strap (8.1L)	Rear of engine. See **Fig. 8** .
G100	On left front body mount. See **Fig. 1** .
G102 (4.8L, 5.3L & 6.0L)	On left side of engine block. See **Fig. 6** .
G102 (8.1L)	On left side of engine block. See **Fig. 7** .
G103	On right rear of engine block. See **Fig. 5** .
G104 (4.8L, 5.3L & 6.0L)	On left rear of engine block. See **Fig. 5** .
G104 (8.1L)	On left rear of engine block. See **Fig. 8** .
G105	On lower left front of engine block.
G106	On right front of engine block. See **Fig. 5** .
G107	Engine ground strap. See **Fig. 5** .
G110 (1500 Series)	On left front body mount. See **Fig. 10** .
G110 (2500 Series)	On left front body mount. See **Fig. 11** .
G200	Near right "A" pillar. See **Fig. 12** .
G203	Near left "A" pillar. See **Fig. 16** .
G302	On left rear body mount. See **Fig. 18** .
G304	Under left front seat. See **Fig. 22** .
G305	On left "B" pillar. See **Fig. 19** .
G306	On right "B" pillar. See **Fig. 21** .
G401	On left rear body mount.
G402	Near rear bumper.
G403	On left rear body mount. See **Fig. 24** .
G410	Behind right rear quarterpanel. See **Fig. 41** .

SPLICES

SPLICES LOCATION

Component	Location
SP203	Near left "A" pillar. See **Fig. 16** .
SP205	Behind left I/P fuse block. See **Fig. 17** .
SP206	On left "B" pillar. See **Fig. 101** .
SP207	Behind left kick panel. See **Fig. 102** .
SP250	Left end of instrument panel. See **Fig. 93** .
SP410	Right rear passenger compartment. See **Fig. 25** .
SP410A	Behind right rear quarterpanel. See **Fig. 25** .
SP410B	Behind right rear quarterpanel.
S100	In forward lamp harness.
S101	In forward lamp harness.
S102	In engine harness.
S103	In engine harness.

cardiagn.com

S104	In engine harness.
S107	In forward lamp harness.
S110	In engine harness.
S112	In chassis harness.
S150	In chassis harness.
S151	In left engine ignition coil jumper harness.
S152	In left engine ignition coil jumper harness.
S153	In right engine ignition coil jumper harness.
S154	In right engine ignition coil jumper harness.
S156	In engine harness.
S157	In right engine ignition coil jumper harness.
S159	In left engine ignition coil jumper harness.
S160	In right engine ignition coil jumper harness.
S200	In roof marker harness.
S201	In roof marker harness.
S202	In I/P harness.
S205	In I/P harness.
S207	In headliner harness.
S208	In roof marker harness.
S210	In I/P harness.
S211	In I/P harness.
S212	In I/P harness.
S213	In I/P harness.
S214	In I/P harness.
S216	In steering column harness.
S217	In steering column harness.
S218	In I/P harness.
S240	In steering column harness.
S241	In steering column harness.
S303	In console harness.
S307	In console harness.
S308	In body harness.
S309	In driver seat jumper harness.
S310	In driver seat jumper harness.
S311	In driver seat harness.
S312	In chassis harness.
S313	In chassis harness.
S314	In driver seat jumper harness.
S315	In driver seat jumper harness.
S319	In body harness.
S321	In headliner harness.

cardiagn.com

	In left rear heated seat harness.
S333	In console harness.
S335	In I/P harness.
S340	In roof marker harness.
S351	In headliner harness.
S389	In right rear heated seat harness.
S408	In left rear taillamp harness.
S412	In left rear taillamp harness.
S413	In right rear taillamp harness.
S423	In license lamp harness.
S424	In license lamp harness.
S480	In right rear taillamp harness.
S500	In left front door harness.
S601	In front passenger door harness.
S710	In left rear door harness.
S810	In right rear door harness.
S901	In liftgate harness.
S902	In liftgate harness.
S903	In right hip lamp harness.
S904	In right hip lamp harness.
S905	In left hip lamp harness.
S907	In license lamp harness.
S910	In liftgate harness.
S911	In liftgate harness.

cardiagn.com

COMPONENT LOCATION GRAPHICS

NOTE: **Figures may show multiple component locations. Refer to appropriate table for proper figure references.**

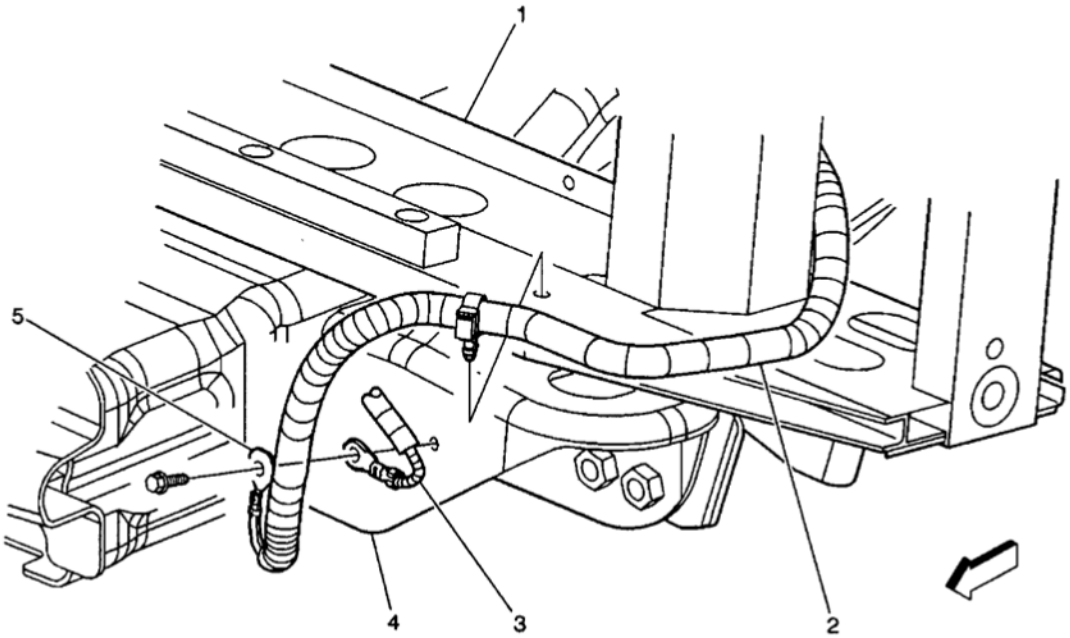

(1) LH Lower Radiator Support
(2) Forward Lamp Harness
(3) Negative Battery Cable (G100)
(4) Frame
(5) Ground 100 (G100)

G00261588

Fig. 1: Lower Left Radiator Support
Courtesy of GENERAL MOTORS CORP.

cardiagn.com

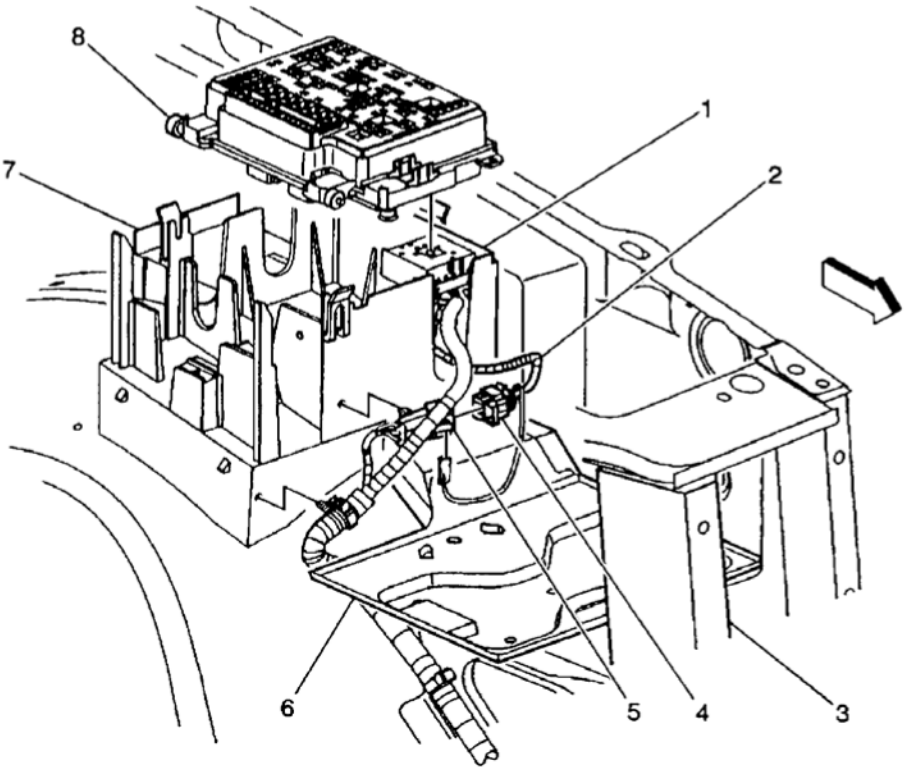

(1) Fuse Block-Underhood Bracket
(2) I/P Harness
(3) Radiator Support
(4) Inline Connector C103 or C104-I/P Harness Side
(5) Inline Connector C103 or C104-Forward Lamp Harness Side
(6) LH Battery Tray
(7) Fuse Block-Underhood Bracket
(8) Fuse Block-Underhood Bracket

G00261589

Fig. 2: Left Front Engine Compartment
Courtesy of GENERAL MOTORS CORP.

cardiagn.com

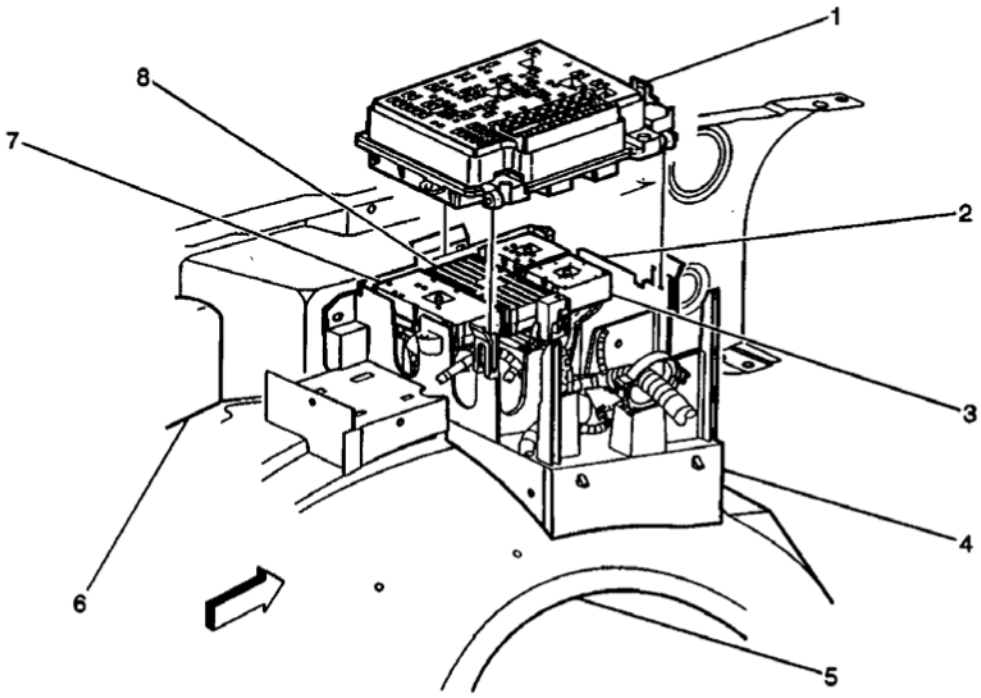

(1) Fuse Block-Underhood
(2) C4 (GRN)
(3) C3 (RED)
(4) Fuse Block-Underhood Bracket
(5) LH Inner Fender (Shield)
(6) LH Inner Fender
(7) C1 (LT GRY)
(8) C2 (BLK)

G00261590

Fig. 3: Underhood Fuse Block
Courtesy of GENERAL MOTORS CORP.

cardiagn.com

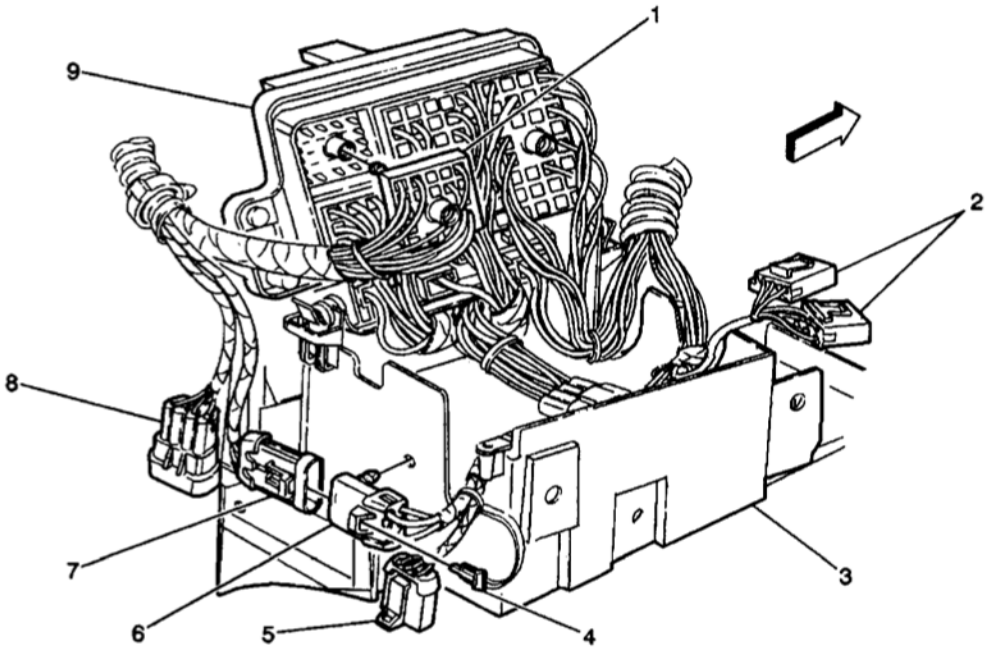

(1) C4 (GRN)
(2) I/P Inline Connectors
(3) Fuse Block-Underhood Bracket
(4) Connector Tether
(5) I/P Harness Inline Connector
(6) C103 (I/P Side)
(7) C103 (FWD Lamp Side)
(8) Forward Lamp Inline Connector
(9) Fuse Block-Underhood

G00261594

Fig. 4: Underhood Fuse Block
Courtesy of GENERAL MOTORS CORP.

cardiagn.com

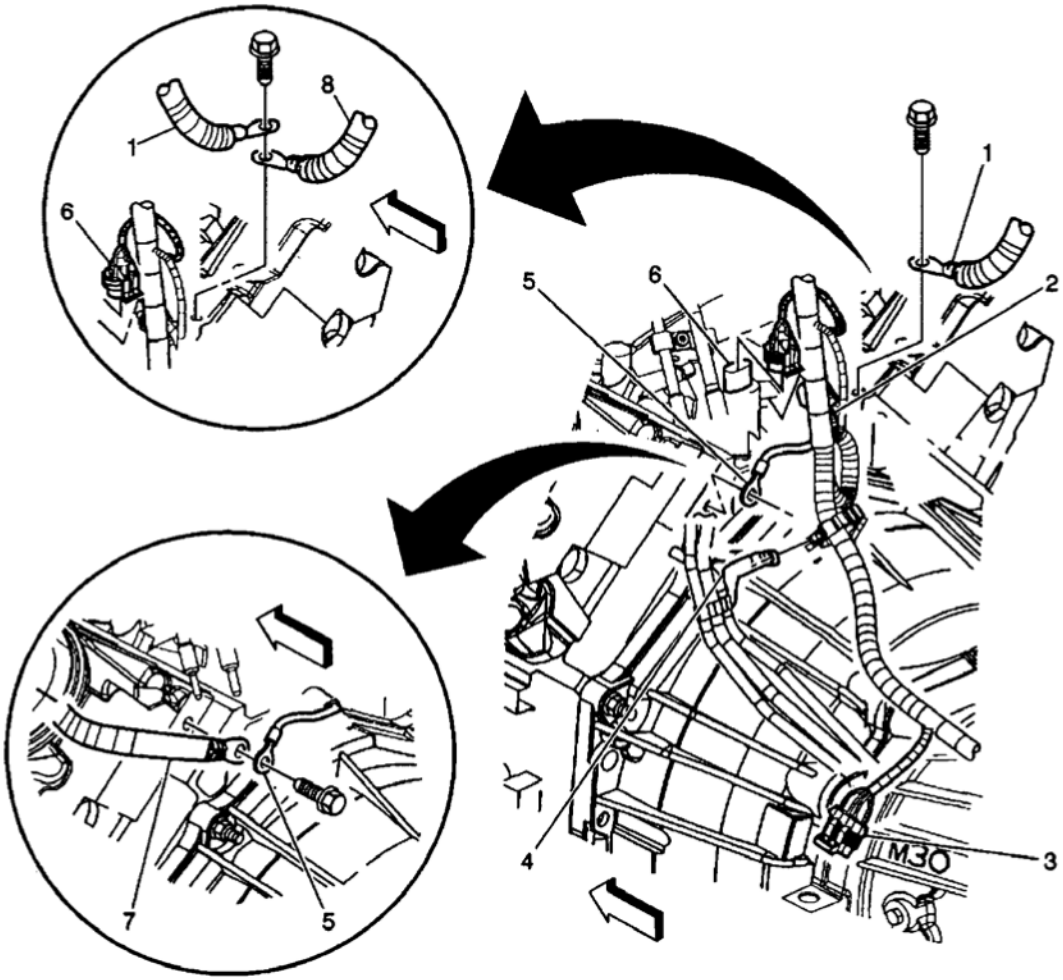

(1) Ground 103 (G103)
(1) Ground 103 (G103)
(2) Engine Harness- H02S
(3) HO2 Sensor connector- Bank 1, Sensor 1
(4) Fuel Line Bracket
(5) Ground 104 (G104)
(5) Ground 104 (G104)
(6) Oil Pressure Sensor Connector
(6) Oil Pressure Sensor
(7) Engine Ground Strap (G107)
(8) TP 1 Battery Cable (G106)

G00261595

Fig. 5: Rear Of Engine (4.8L, 5.3L & 6.0L)
Courtesy of GENERAL MOTORS CORP.

cardiagn.com

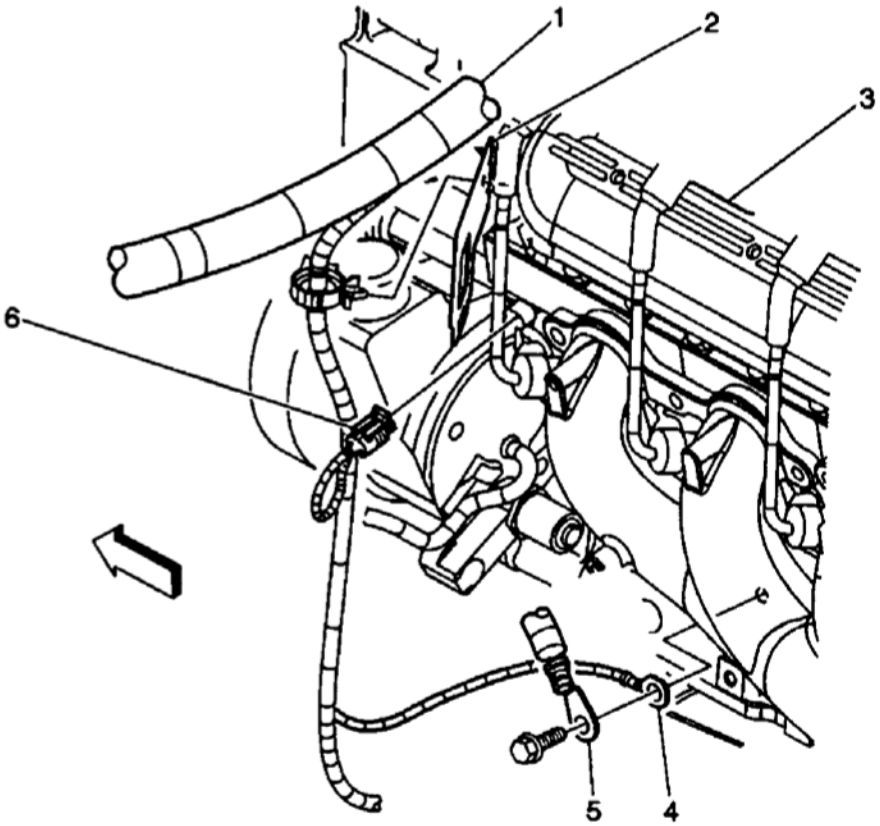

(1) Engine Harness
(2) Battery Cable Junction Block Bracket
(3) LH Rocker Cover
(4) Ground 102 (G102)
(5) Negative Battery Cable
(6) Engine Coolant Temperature (ECT) Sensor Connector

G00261596

Fig. 6: Lower Left Rear Of Engine (4.8L, 5.3L & 6.0L)
Courtesy of GENERAL MOTORS CORP.

cardiagn.com

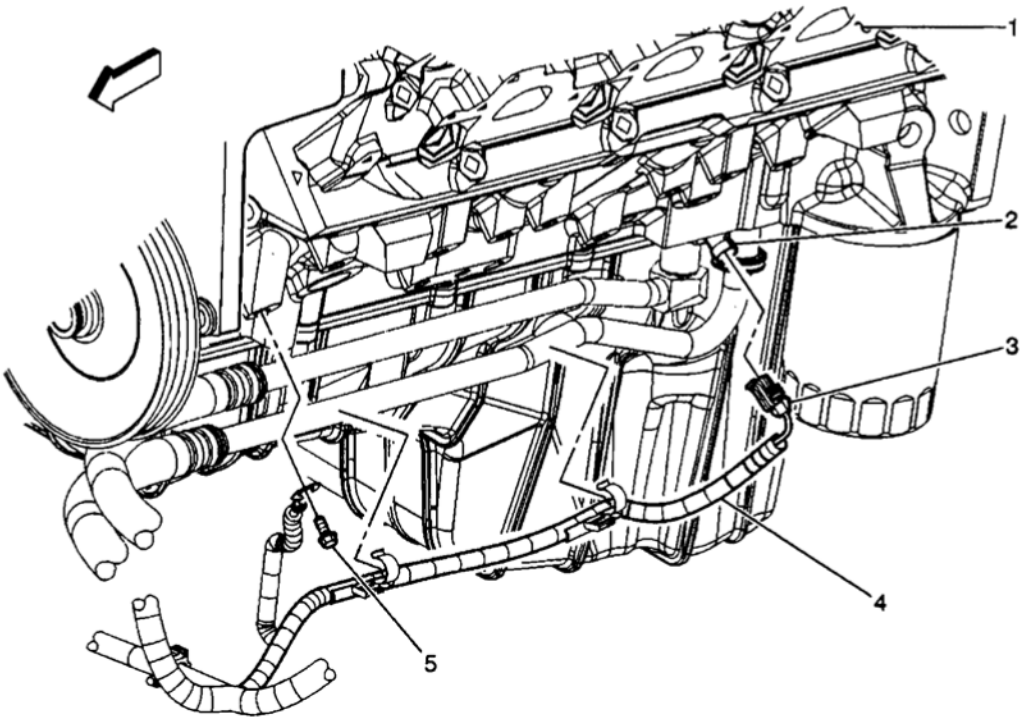

(1) Engine-8.1L
(2) Engine Knock Sensor (KS) - 2
(3) Engine Knock Sensor (KS) - 2 Connector
(4) Engine Harness
(5) G102-Engine Harness Ground

G00261598

Fig. 7: Lower Left Side Of Engine (8.1L)
Courtesy of GENERAL MOTORS CORP.

cardiagn.com

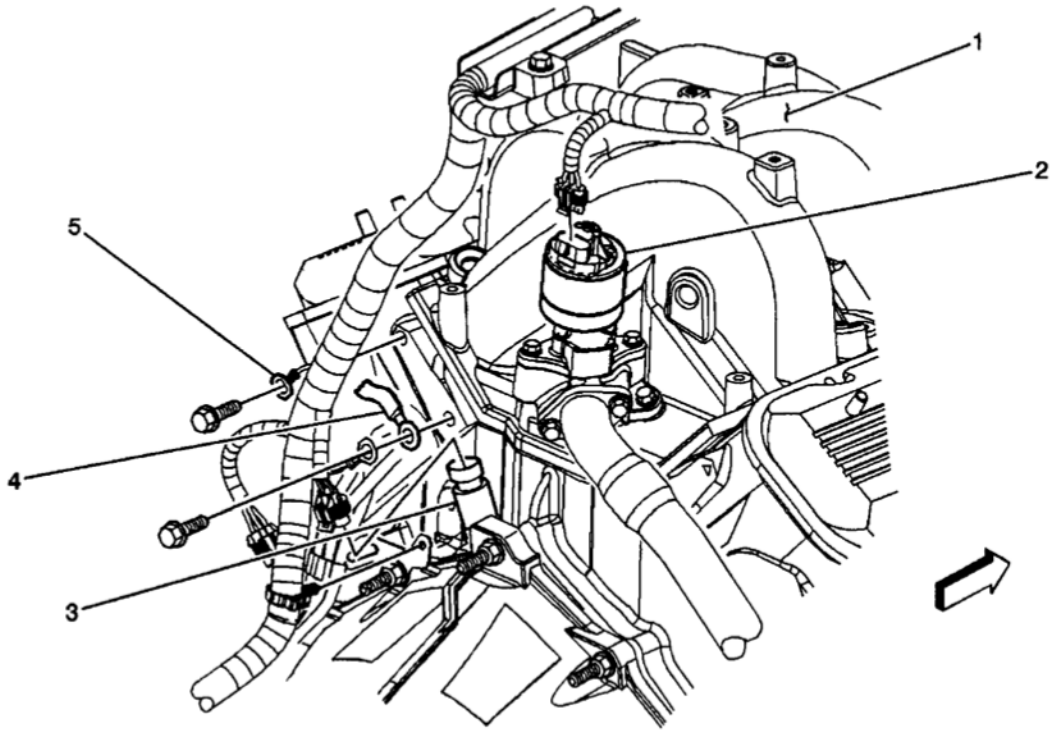

(1) Engine-8.1L
(2) EGR Valve
(3) Engine Oil Pressure (EOP) Sensor
(4) Engine Ground Strap
(5) G104-Engine Harness Ground
G00261599

Fig. 8: Top Rear Of Engine (8.1L)
Courtesy of GENERAL MOTORS CORP.

cardiagn.com

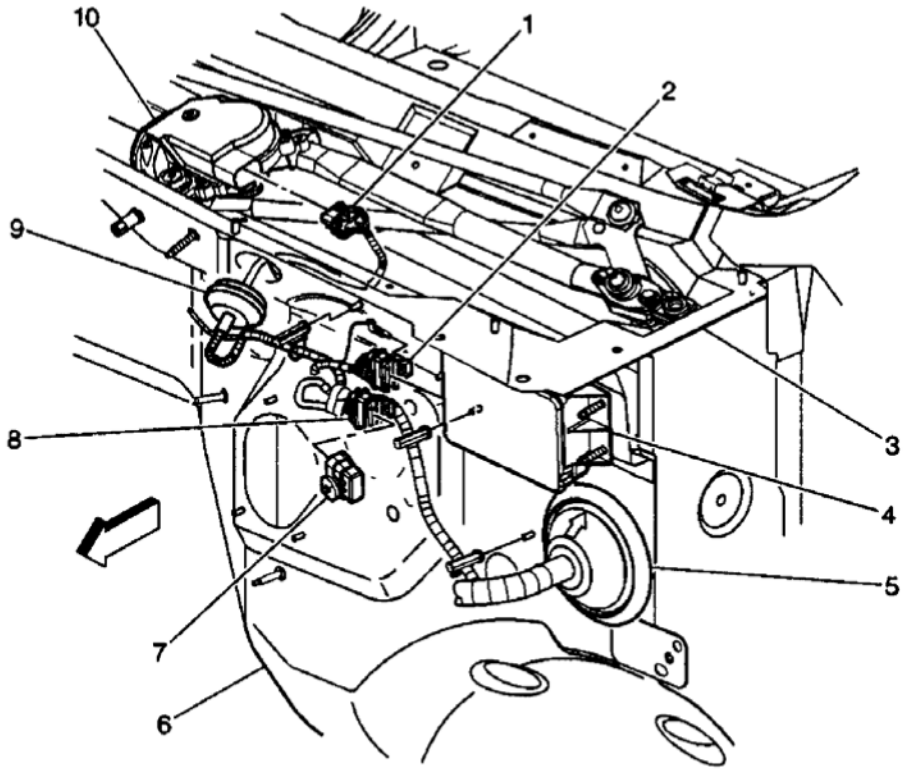

(1) Windshield Wiper Motor Module Electrical Connector
(2) Cruise Control Module (CCM) Electrical Connector
(3) Plenum Panel
(4) Cruise Control Module (CCM)
(5) Pass-Through 100 (P100)
(6) Dash Panel
(7) Cap For Connector (Without Cruise Control)
(8) Cruise Control Module (CCM) Electrical Connector
(9) Harness Pass-Through
(10) Windshield Wiper Motor Module

G00261600

Fig. 9: Left Rear Of Engine Compartment
Courtesy of GENERAL MOTORS CORP.

cardiagn.com

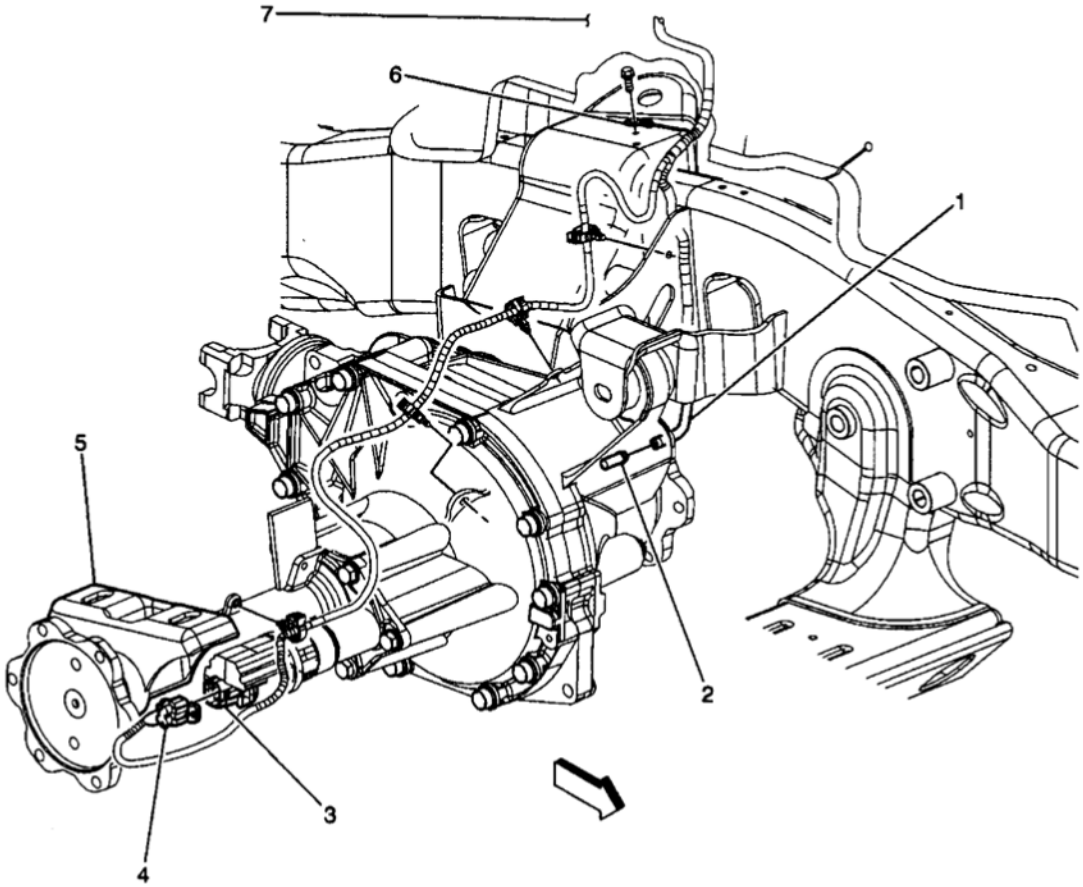

(1) Vent Tube
(2) Vent Tube Connection
(3) Front Axle Actuator
(4) Front Axle Actuator Connector
(5) Front Drive Axle Assembly (Mount)
(6) Ground 110 (G110)
(7) Left Inner Fender

G00261601

Fig. 10: Front Axle (1500 Series)
Courtesy of GENERAL MOTORS CORP.

cardiagn.com

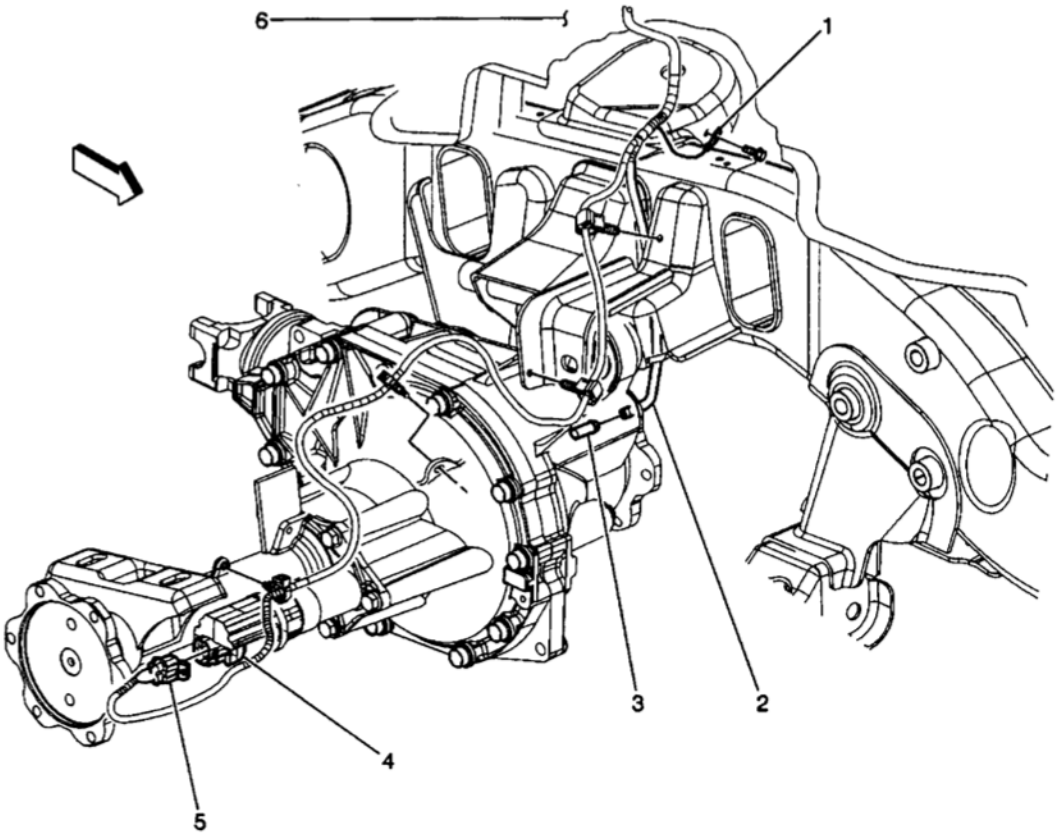

(1) Ground 110 (G110)
(2) Vent Tube
(3) Vent Tube Connection
(4) Front Axle Actuator
(5) Front Axle Actuator Connector
(6) Left Inner Fender

G00261602

Fig. 11: Front Axle (2500 Series)
Courtesy of GENERAL MOTORS CORP.

cardiagn.com

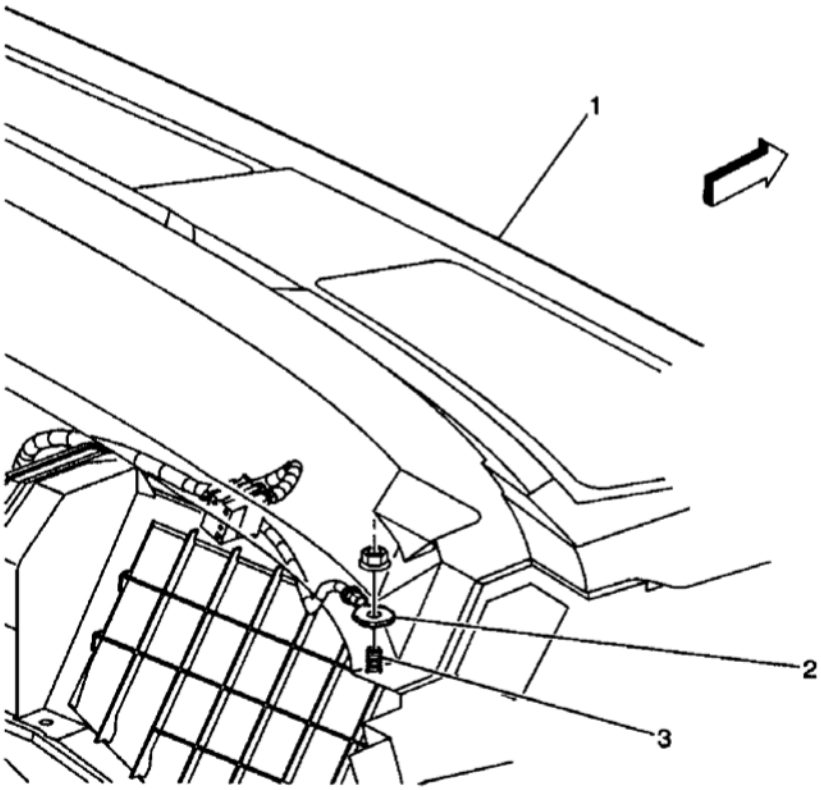

(1) Instrument Panel
(2) Ground 200 (G200)
(3) Ground Stud

G00261603

Fig. 12: Upper Right Dash
Courtesy of GENERAL MOTORS CORP.

cardiagn.com

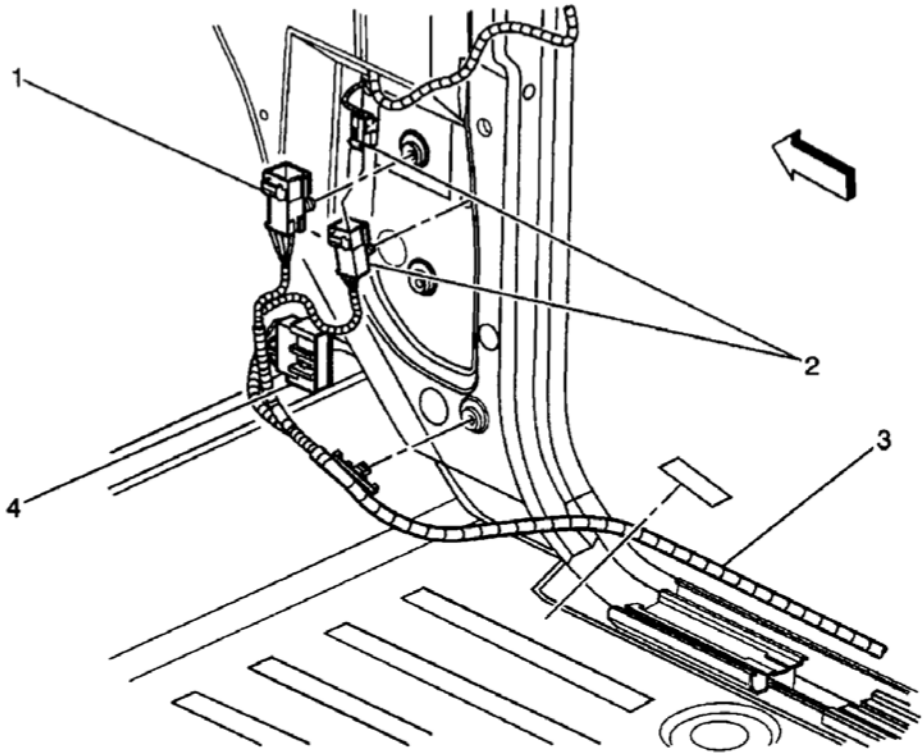

(1) C222
(2) C315 (AJ7)
(3) Body Harness
(4) C209

G00261604

Fig. 13: Right Kick Panel
Courtesy of GENERAL MOTORS CORP.

cardiagn.com

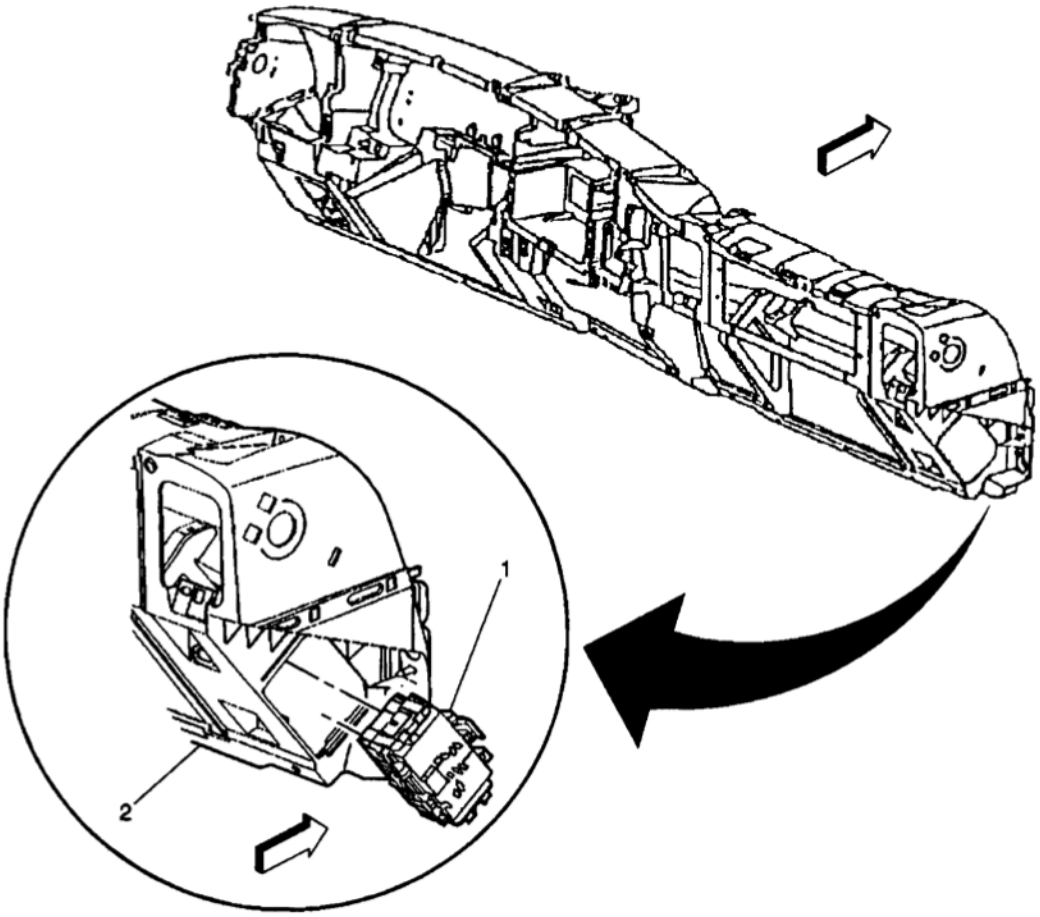

(1) Fuse Block-Right I/P
(2) Instrument Panel

G00261606

Fig. 14: Right Instrument Panel Fuse Block
Courtesy of GENERAL MOTORS CORP.

cardiagn.com

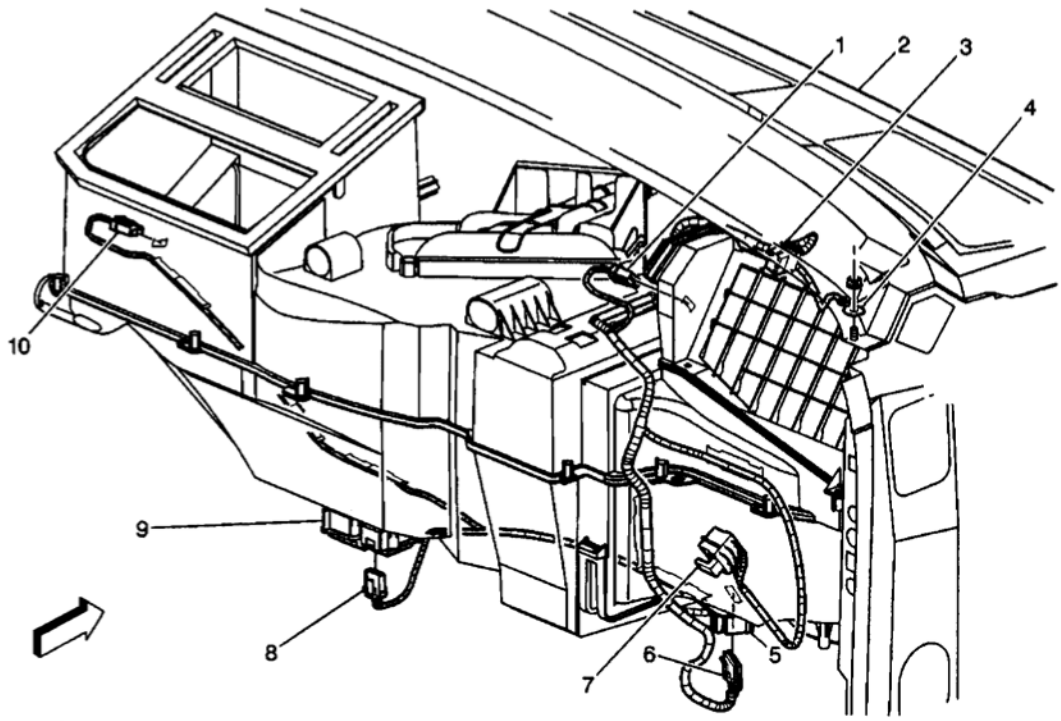

(1) Recirculation Actuator Connector
(2) Instrument Panel
(3) Electrical Harness Connector
(4) Ground 200 (G200)
(5) Blower Motor Resistor Assembly
(6) Blower Motor Resistor Connector
(7) Harness Inline Connector (C296)
(8) Air Temperature Actuator Connector
(9) Air Temperature Actuator
(10) Mode Actuator

G00261607

Fig. 15: HVAC Module Assembly
Courtesy of GENERAL MOTORS CORP.

cardiagn.com

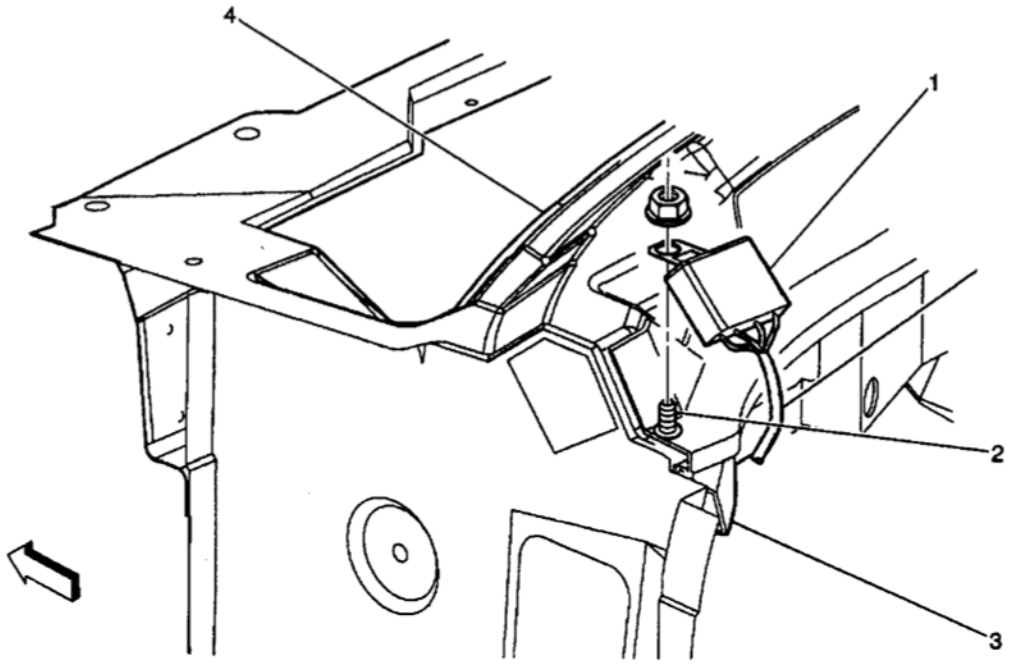

(1) Splice Pack 203 (SP203)
(2) Ground 203 (G203)
(3) Dash
(4) A-Pillar

G00261608

Fig. 16: Upper Left Dash
Courtesy of GENERAL MOTORS CORP.

cardiagn.com

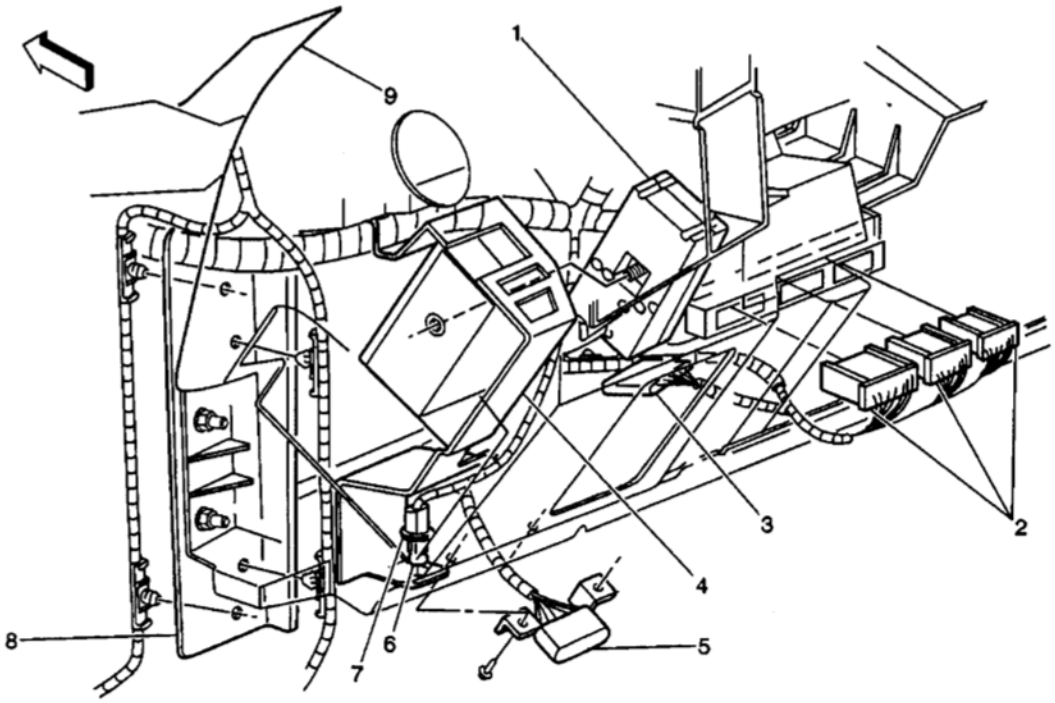

(1) Fuse Block Connector
(2) Body Control Module (BCM) Connector
(3) Splice Pack 205 (SP205)
(4) Fuse Block
(5) Data Link Connector (DLC)
(6) LH IP Courtesy Lamp
(7) LH IP Courtesy Lamp Socket
(8) LH IP Support to Dash
(9) Left Windshield Pillar Trim Panel

G00261609

Fig. 17: Left Side Of Dash
Courtesy of GENERAL MOTORS CORP.

cardiagn.com

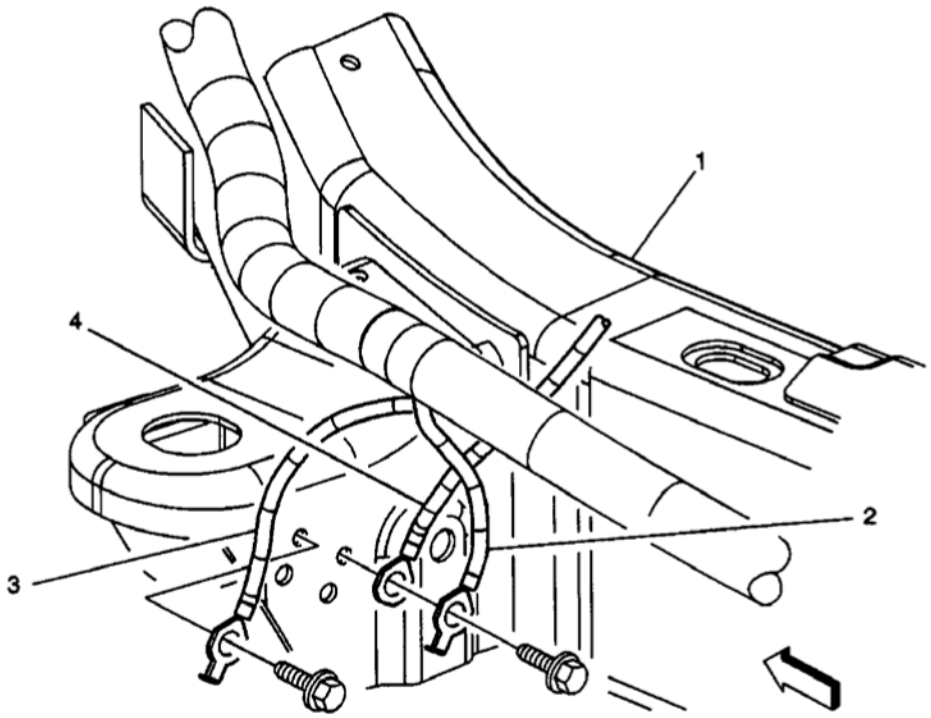

(1) Frame
(2) Electronic Brake Control Module (EBCM) Ground (GNO)
(3) Manual Selectable Ride Ground (G302)
(4) Automatic Transfer Case/ABS Ground (G110)

G00261610

Fig. 18: Left Frame Rail
Courtesy of GENERAL MOTORS CORP.

cardiagn.com

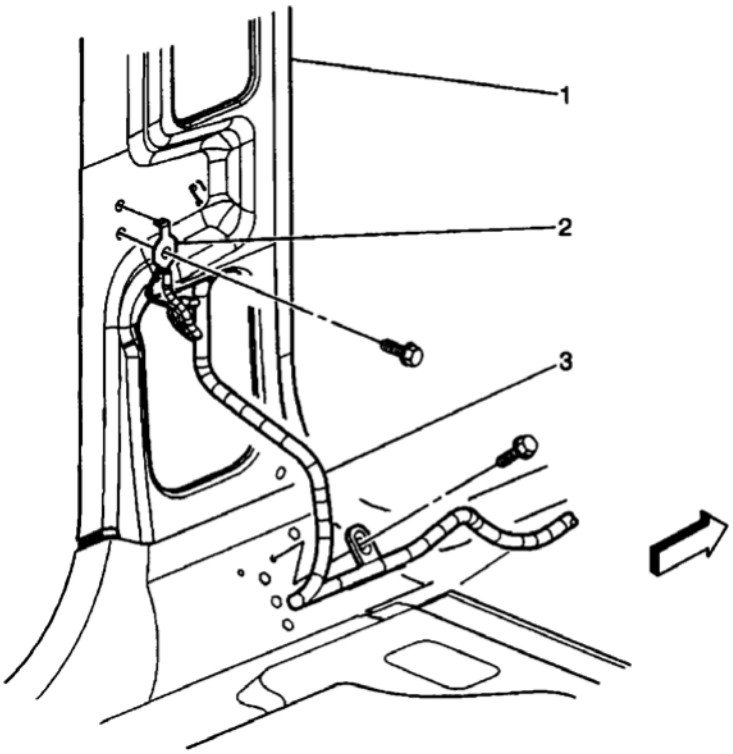

(1) LH B-Pillar
(2) G305
(3) LH Body Harness

G00261611

Fig. 19: Left "B" Pillar
Courtesy of GENERAL MOTORS CORP.

cardiagn.com

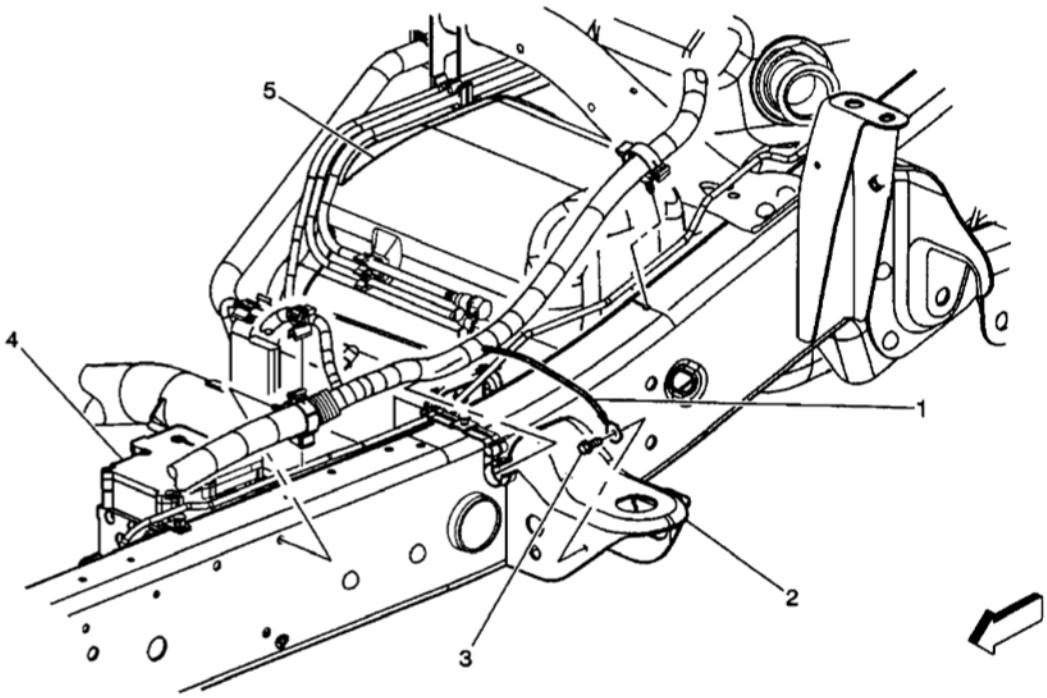

(1) Ground 302 (G302)
(2) LH Body Mount
(3) Ground Screw
(4) Electronic Brake Control Module (EBCM)
(5) Fuel Tank

G00261612

Fig. 20: Left Frame Rail
Courtesy of GENERAL MOTORS CORP.

cardiagn.com

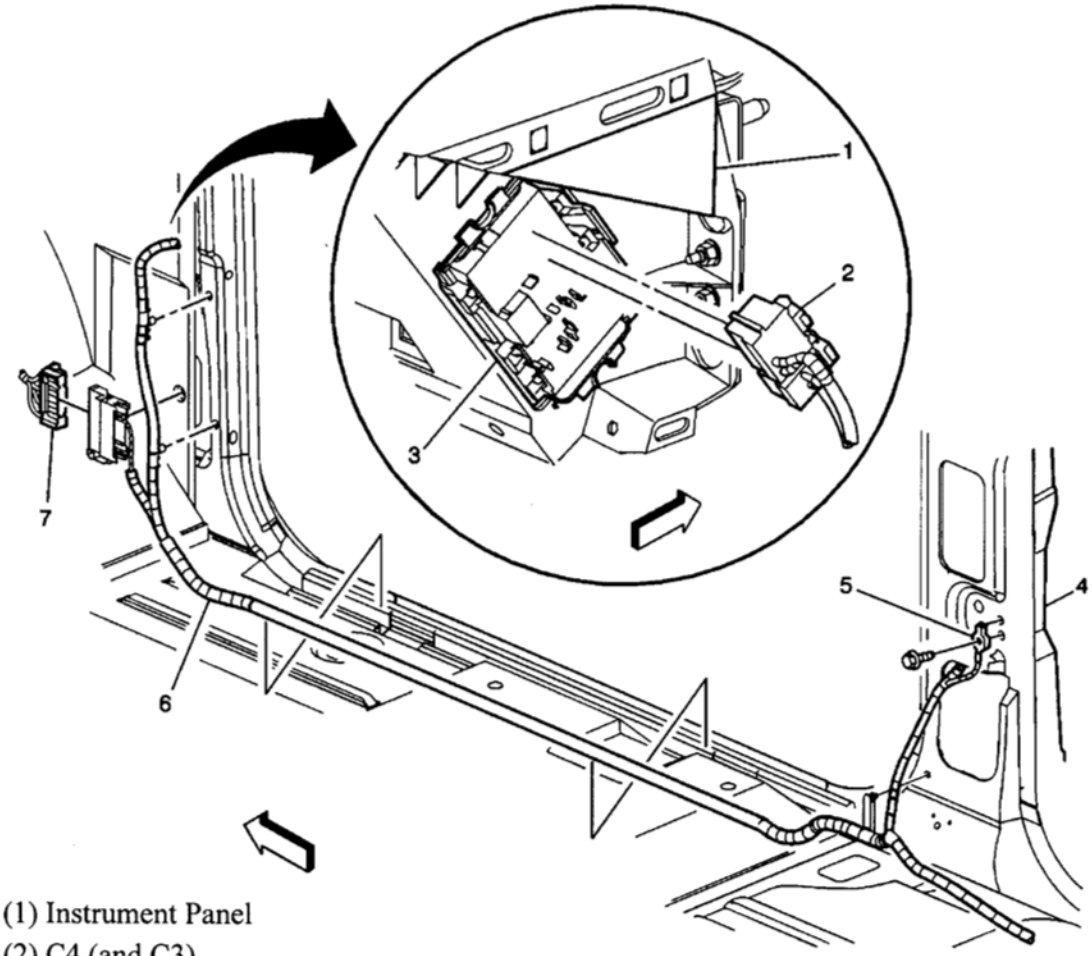

(1) Instrument Panel
(2) C4 (and C3)
(3) Junction Block-I/P
(4) RT-B-Pillar
(5) Ground 306 (G306)
(6) RH Body Harness
(7) I/P Harness Inline Connector C208

G00261613

Fig. 21: Right "B" Pillar
Courtesy of GENERAL MOTORS CORP.

cardiagn.com

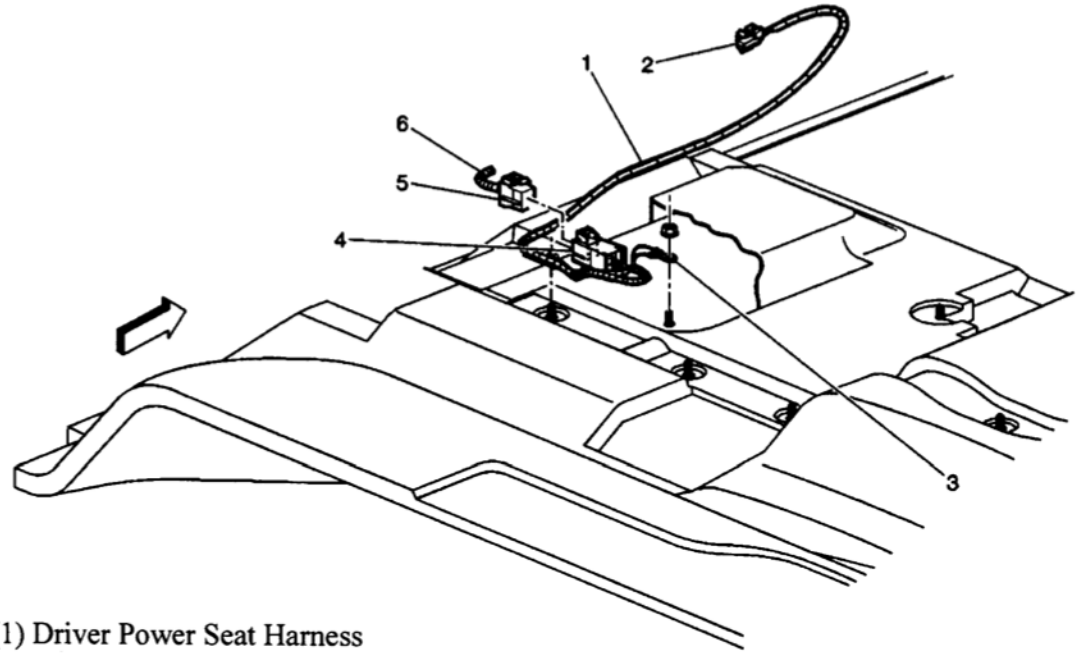

(1) Driver Power Seat Harness
(2) Driver Power Seat Connector
(3) Driver Power Seat Ground 304 (G304)
(4) Driver Power Seat Inline Connector
(5) Harness to IP Electrical Connector
(6) Harness to IP

G00261614

Fig. 22: Below Driver Seat (W/Power Seat)
Courtesy of GENERAL MOTORS CORP.

cardiagn.com

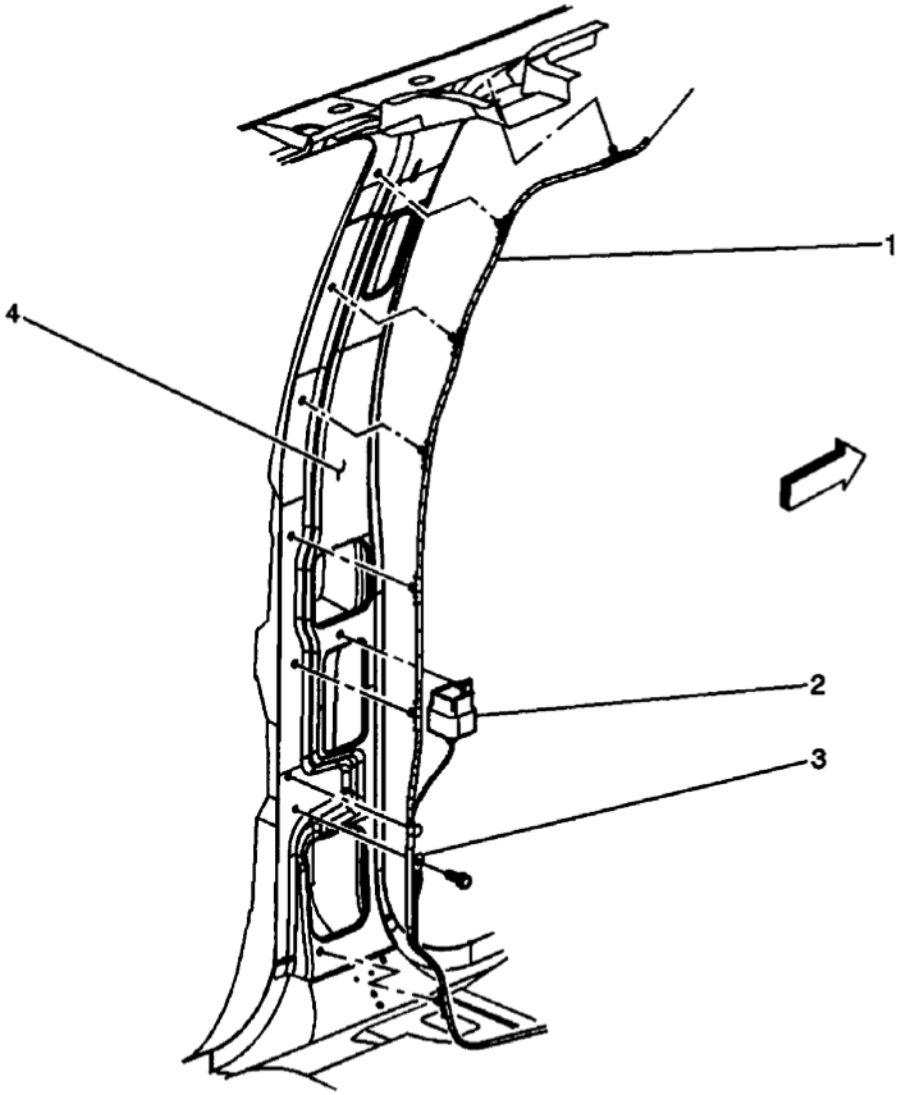

(1) Emergency Roof Lamp Harness
(2) Roof Beacon Relay
(3) G305
(4) B Pillar-LH Side

G00261615

Fig. 23: Emergency Light Relay
Courtesy of GENERAL MOTORS CORP.

cardiagn.com

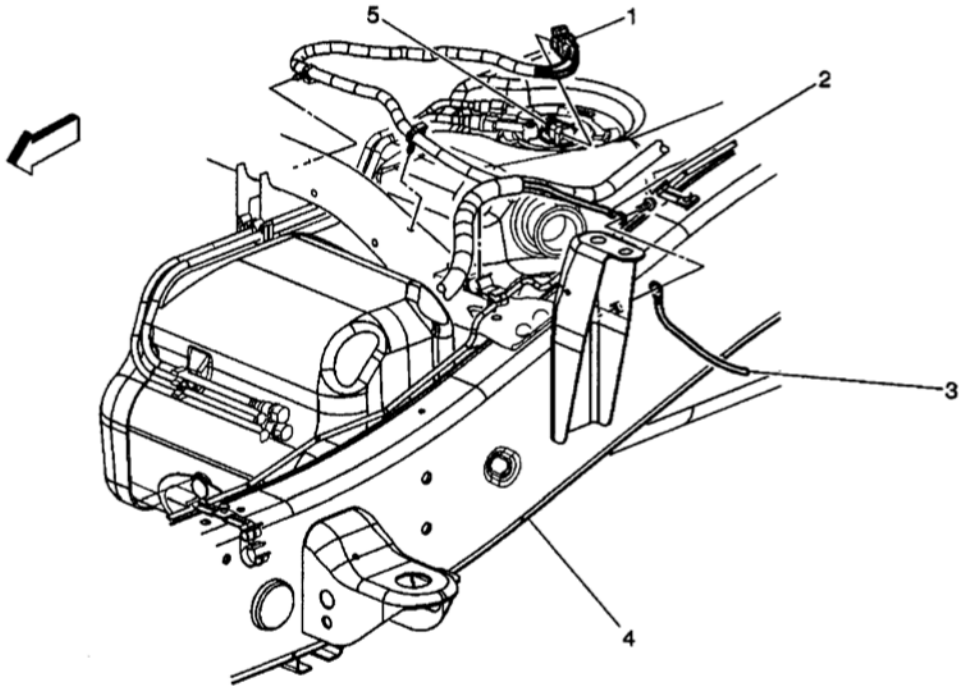

(1) Fuel Sender
(2) Ground 403 (G403)
(3) Fuel Filler Ground 302 (G-403)
(4) LH Frame
(5) Fuel Sender (Typical)
G00261618

Fig. 24: Fuel Tank
Courtesy of GENERAL MOTORS CORP.

cardiagn.com

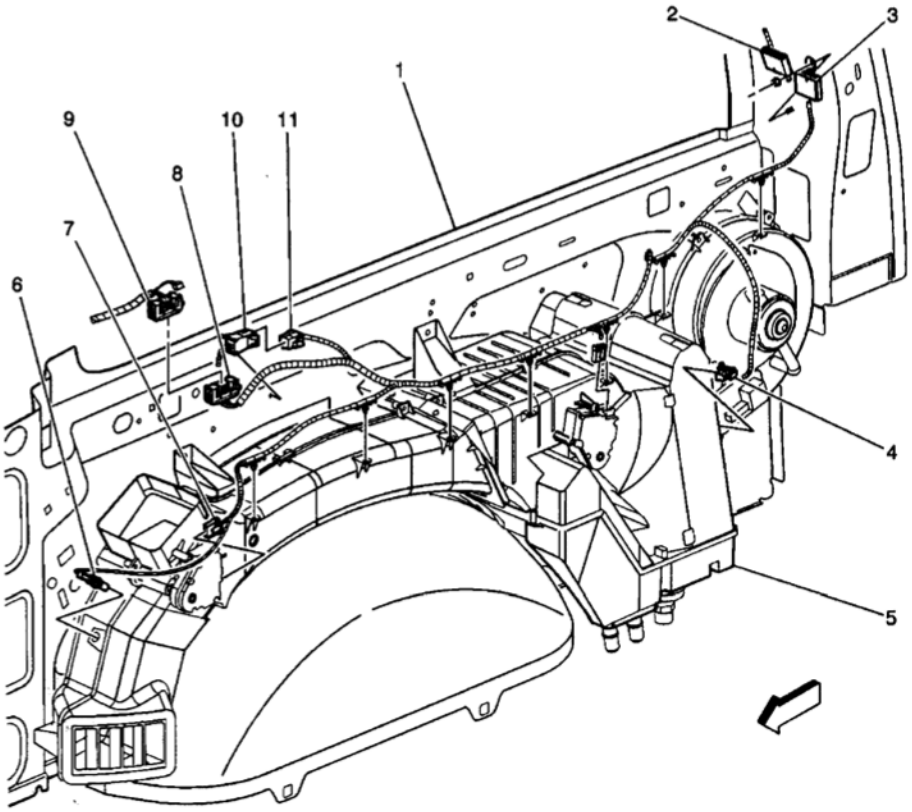

(1) Inner Body Side Panel
(2) Splice Pack 410 (SP410)
(3) Splice Pack 410A (SP410A)
(4) Blower Motor-Auxiliary
(5) HVAC Module-Rear Auxiliary
(6) Air Temperature Sensor-Lower Auxiliary
(7) Mode Actuator Connector
(8) Inline Connector 350 (Auxiliary HVAC Harness Side)
(9) Inline Connector 350 (Headliner Harness Side)
(10) Inline Connector 397 (Auxiliary HVAC Harness Side)
(11) Inline Connector 397 (RH Body Harness Side)

G00261619

Fig. 25: Right Rear Of Passenger Compartment (W/Auxiliary HVAC)
Courtesy of GENERAL MOTORS CORP.

cardiagn.com

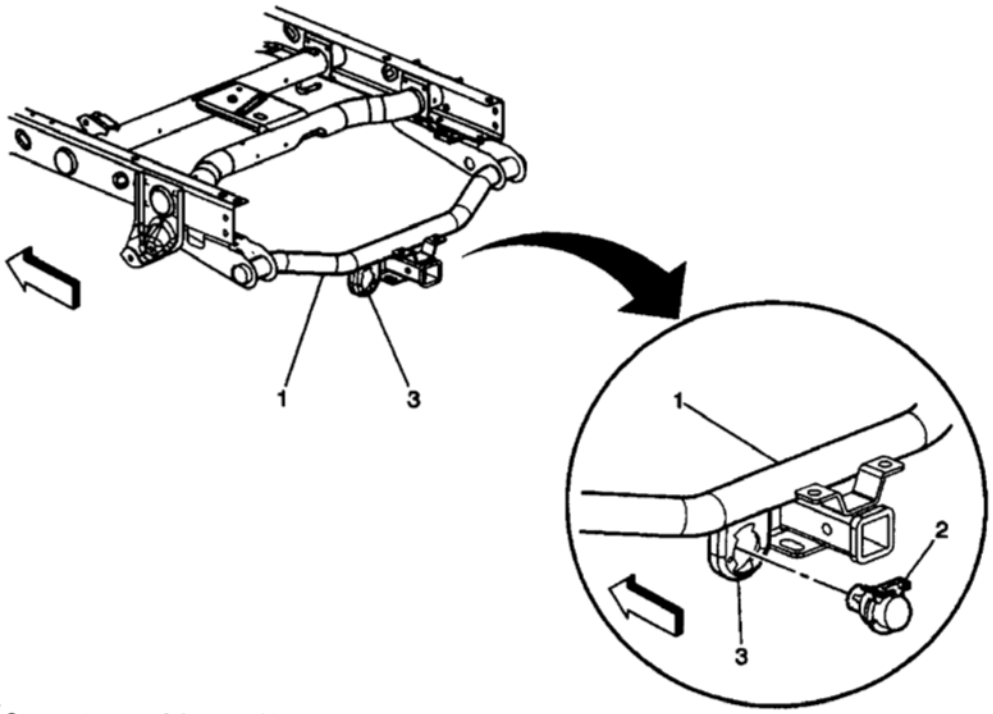

(1) Platform Assembly Trailer Weight Distribution Hitch
(1) Platform Assembly Trailer Weight Distribution Hitch
(2) Trailer Wiring Receptacle
(3) Trailer Wiring Receptacle Bracket
(3) Trailer Wiring Receptacle Bracket

G00261620

Fig. 26: Trailer Receptacle
Courtesy of GENERAL MOTORS CORP.

cardiagn.com

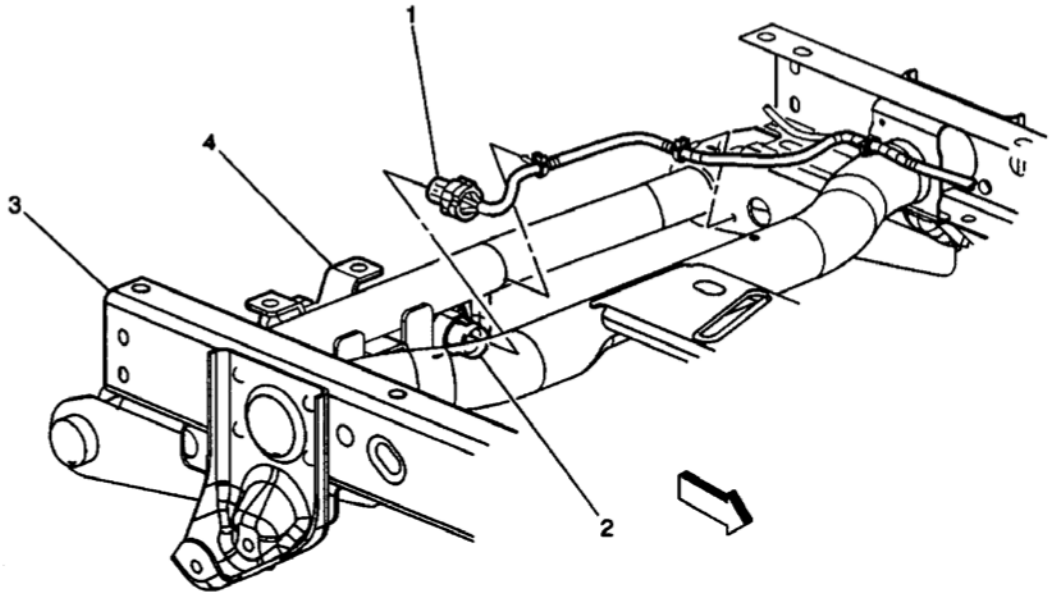

(1) Trailer Wiring Connector
(2) Trailer Wiring Receptacle
(3) Frame
(4) Trailer Hitch Receiver

G00261621

Fig. 27: Trailer Connector
Courtesy of GENERAL MOTORS CORP.

cardiagn.com

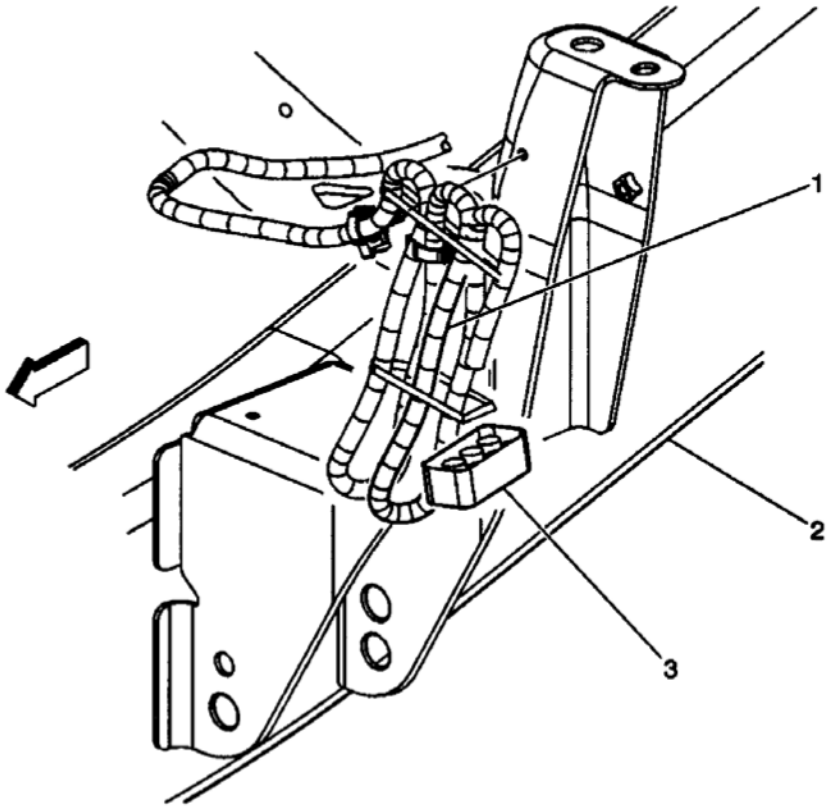

(1) Camper Wiring Harness
(2) Frame
(3) Camper Wiring Harness Connector

G00261623

Fig. 28: Left Rear Frame
Courtesy of GENERAL MOTORS CORP.

cardiagn.com

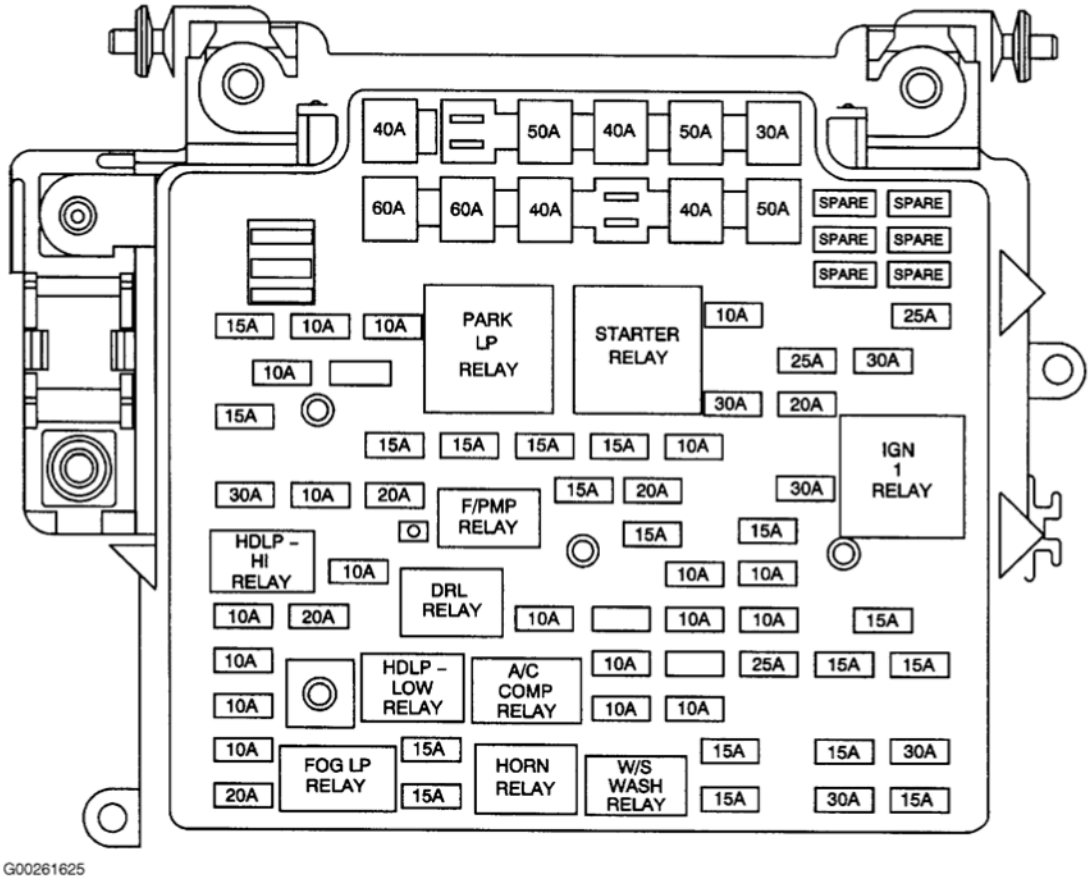

Fig. 29: Underhood Fuse Block
Courtesy of GENERAL MOTORS CORP.

cardiagn.com

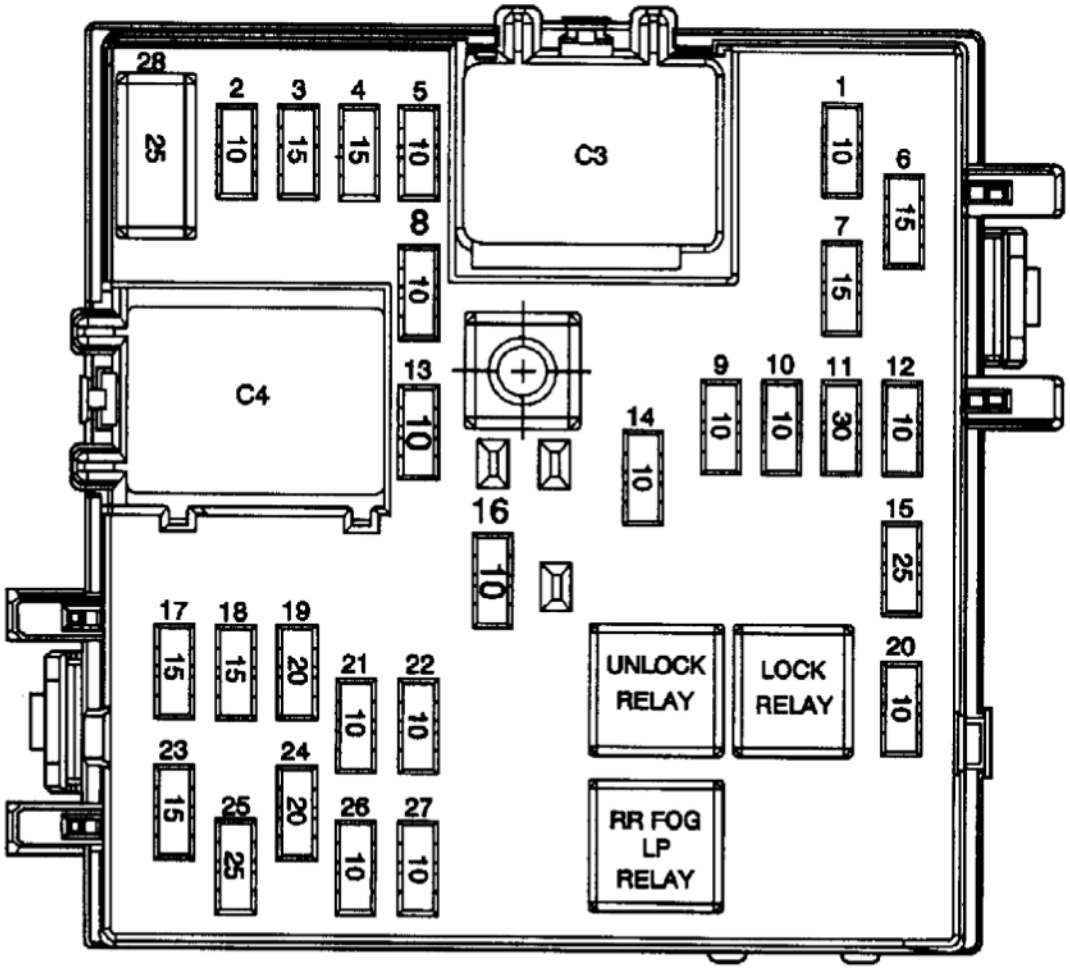

Fig. 30: Left Instrument Panel Fuse Block
Courtesy of GENERAL MOTORS CORP.

cardiagn.com

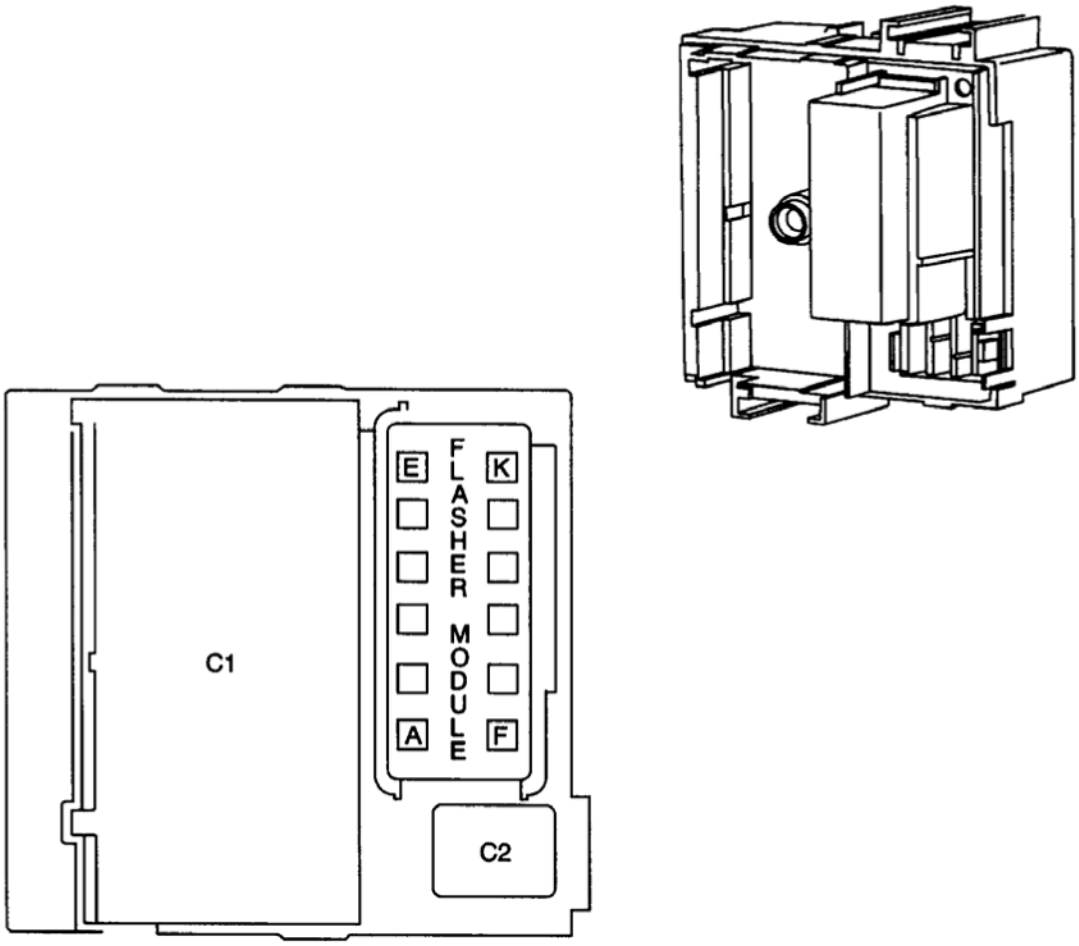

G00261627

Fig. 31: Left Instrument Panel Fuse Block (Bottom View)
Courtesy of GENERAL MOTORS CORP.

cardiagn.com

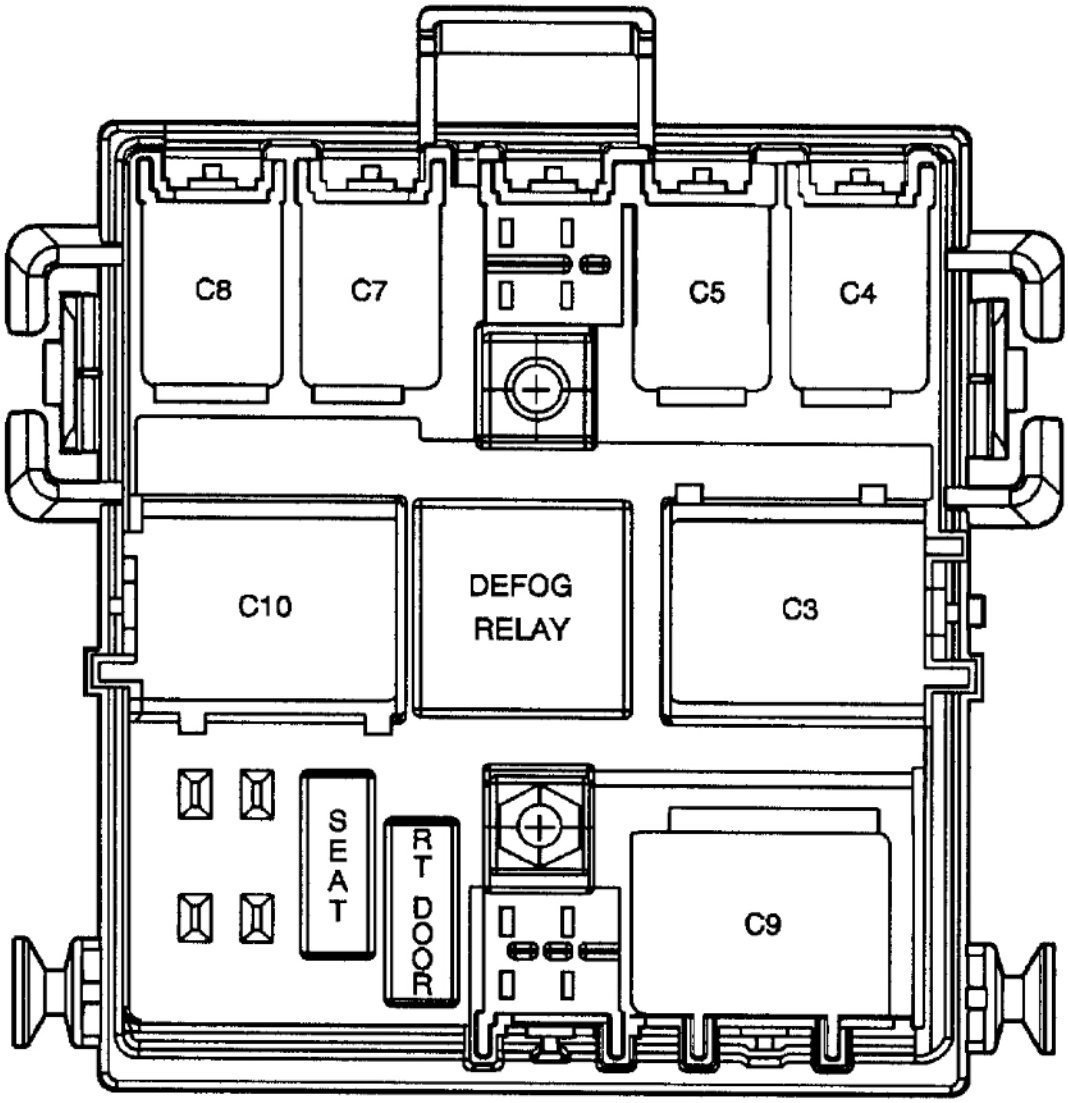

Fig. 32: Body Relay Block
Courtesy of GENERAL MOTORS CORP.

cardiagn.com

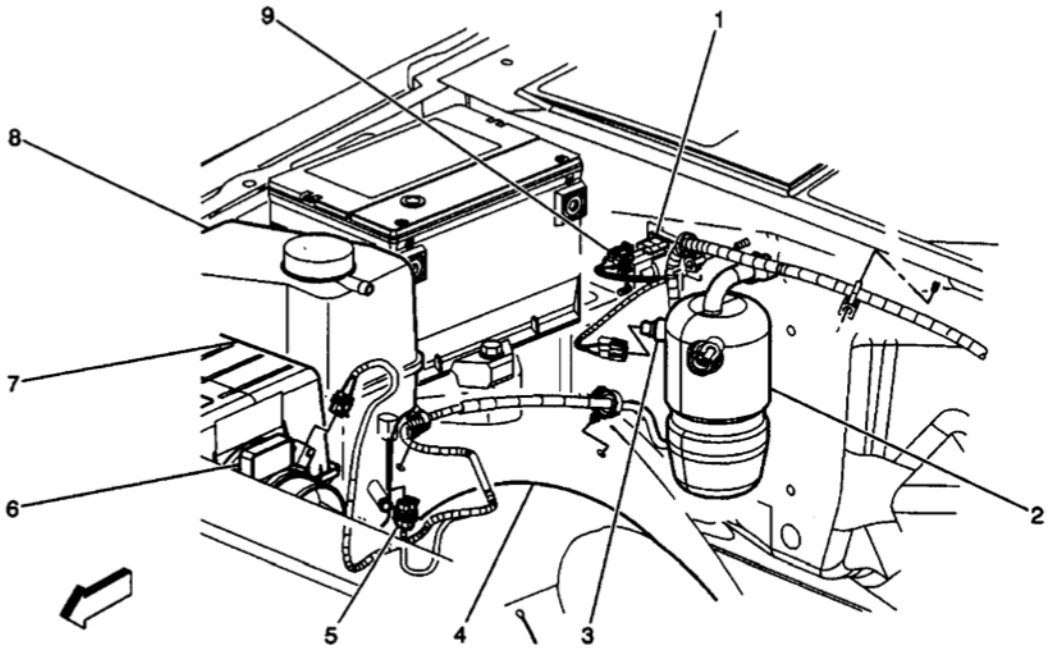

(1) Auxiliary Battery Relay
(2) A/C Accumulator
(3) A/C Low Pressure Switch
(4) Inner Wheel Well
(5) Coolant Level Switch Connector
(6) Mass Air Flow (MAF) Sensor
(7) Air Cleaner Assembly
(8) Engine Coolant Recovery Reservoir
(9) Auxiliary Battery Relay Electrical Connector

G00261630

Fig. 33: Right Rear Engine Compartment
Courtesy of GENERAL MOTORS CORP.

cardiagn.com

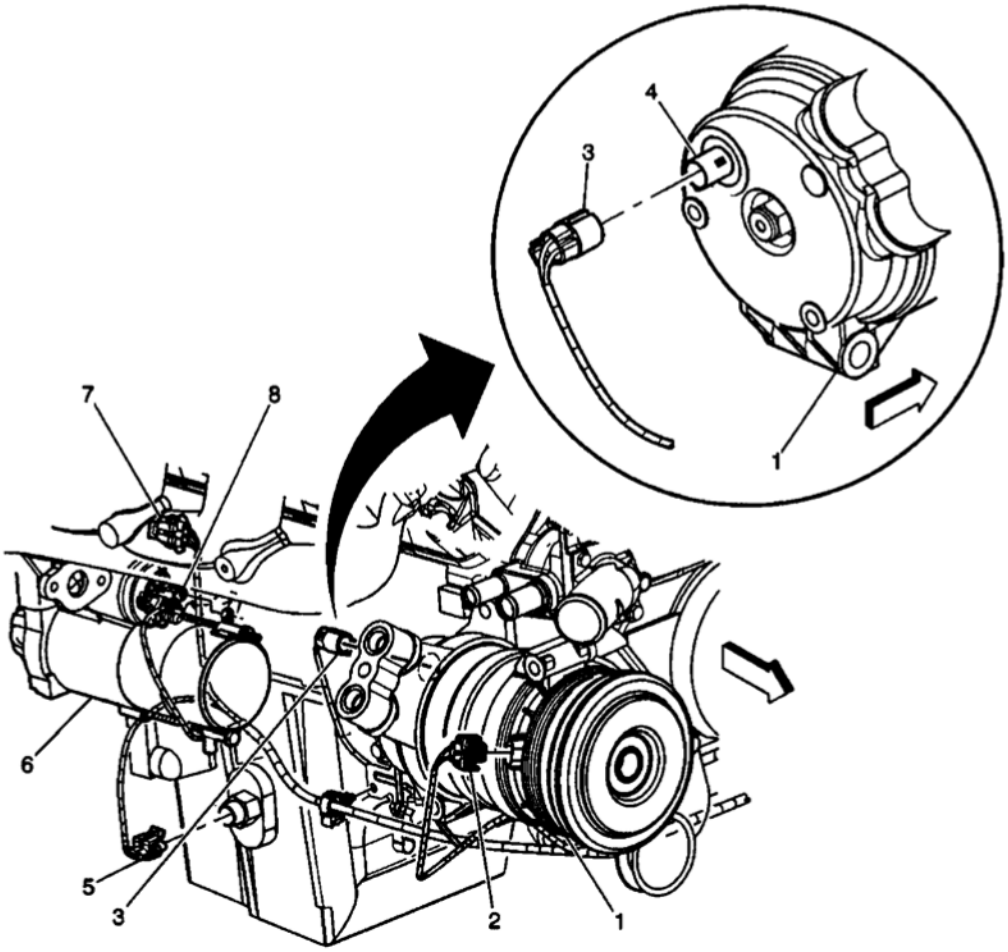

(1) A/C Compressor Clutch
(1) A/C Compressor Clutch
(2) A/C Compressor Clutch Connector
(3) A/C High Pressure Switch Connector
(3) A/C High Pressure Switch Connector
(4) A/C High Pressure Switch
(5) Engine Oil Level Switch
(6) Starter
(7) Crankshaft Position (CKP) Sensor
(8) Starter Solenoid Connector

G00261631

Fig. 34: A/C Compressor (4.8L, 5.3L & 6.0L)
Courtesy of GENERAL MOTORS CORP.

cardiagn.com

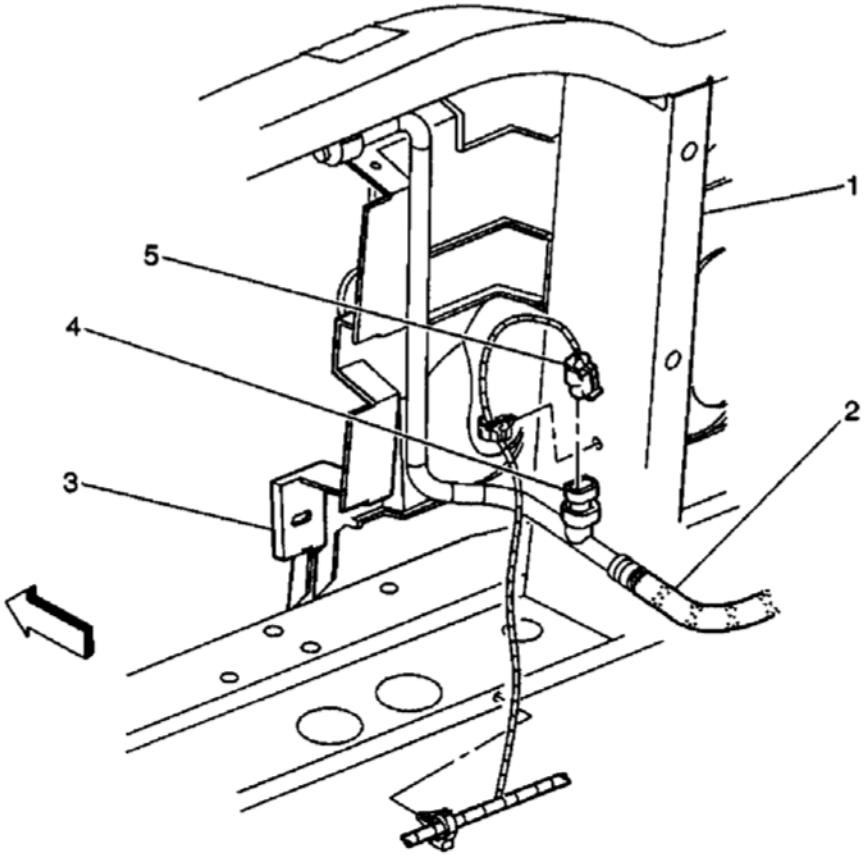

(1) Radiator Core Support
(2) A/C High Pressure Line
(3) Headlamp Support
(4) A/C Refrigerant Pressure Sensor
(5) A/C Refrigerant Pressure Sensor Conector
G00261632

Fig. 35: Right Radiator Support
Courtesy of GENERAL MOTORS CORP.

cardiagn.com

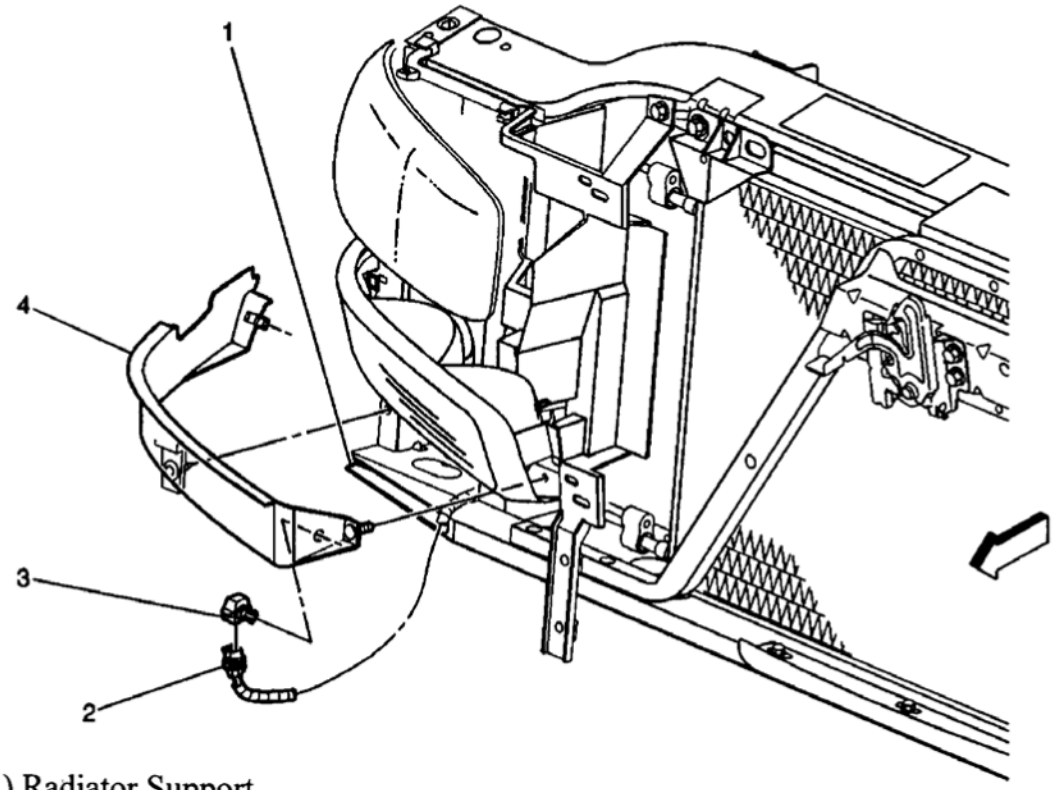

(1) Radiator Support
(2) Forward Lamp Harness Connector
(3) Ambient Air Temperature Sensor
(4) Front Bumper Filler

G00261633

Fig. 36: Right Side Of Grille
Courtesy of GENERAL MOTORS CORP.

cardiagn.com

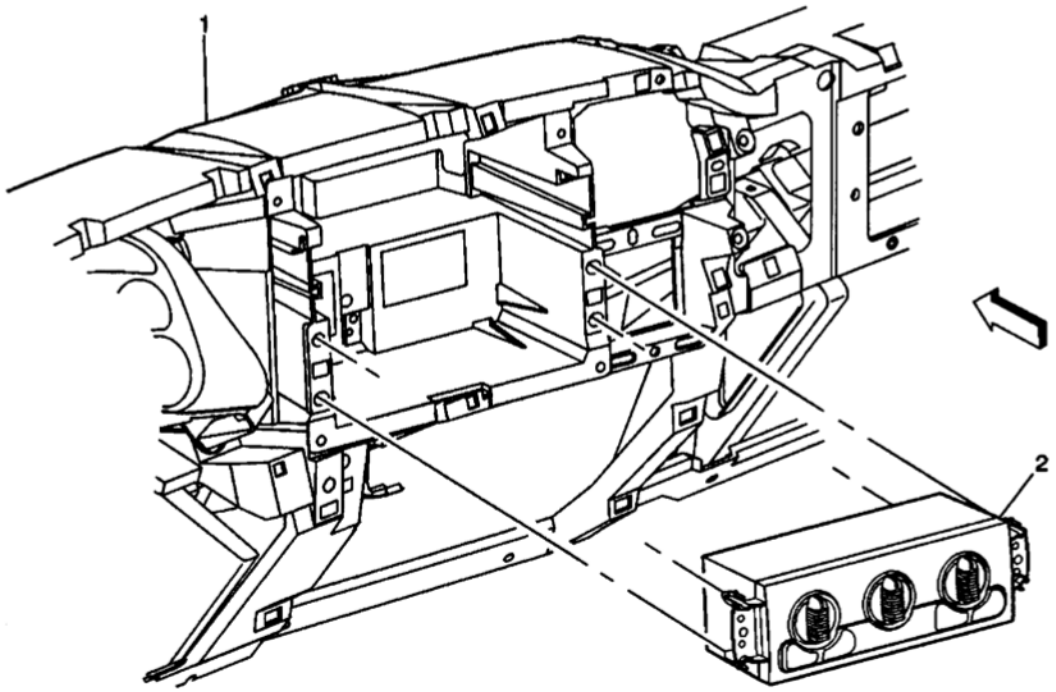

(1) Instrument Panel
(2) HVAC Control Module
G00261634

Fig. 37: Center Of Dash
Courtesy of GENERAL MOTORS CORP.

cardiagn.com

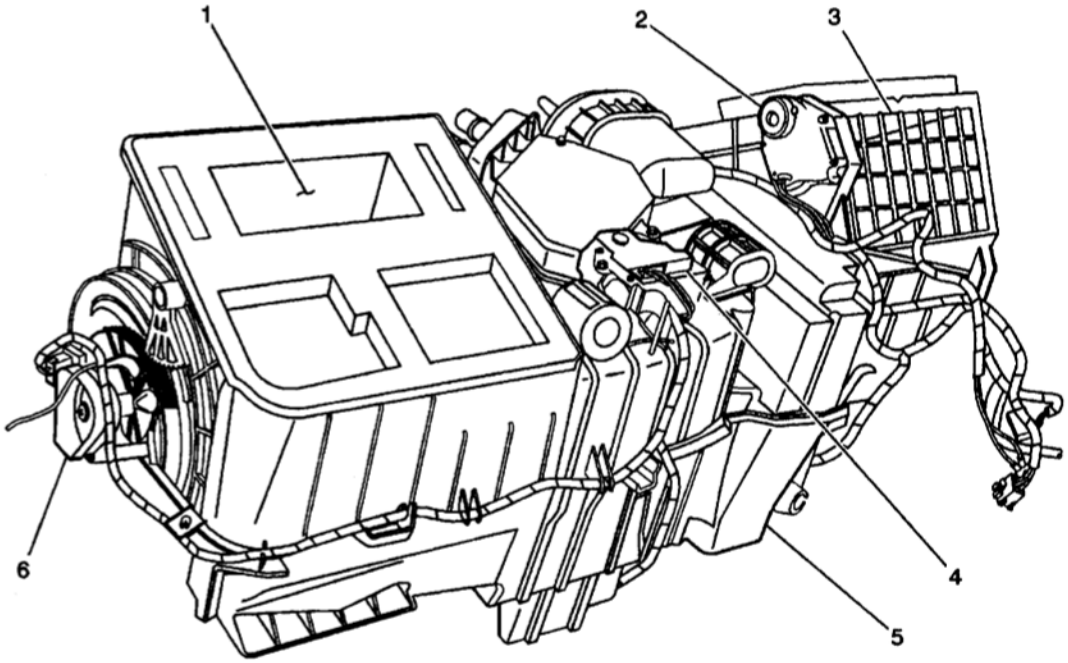

(1) Mode Door
(2) Recirculation Actuator
(3) Recirculation door
(4) Air Temperature Actuator - Right
(5) HVAC Module Assembly
(6) Mode Actuator

G00261635

Fig. 38: Top Of HVAC Module Assembly
Courtesy of GENERAL MOTORS CORP.

cardiagn.com

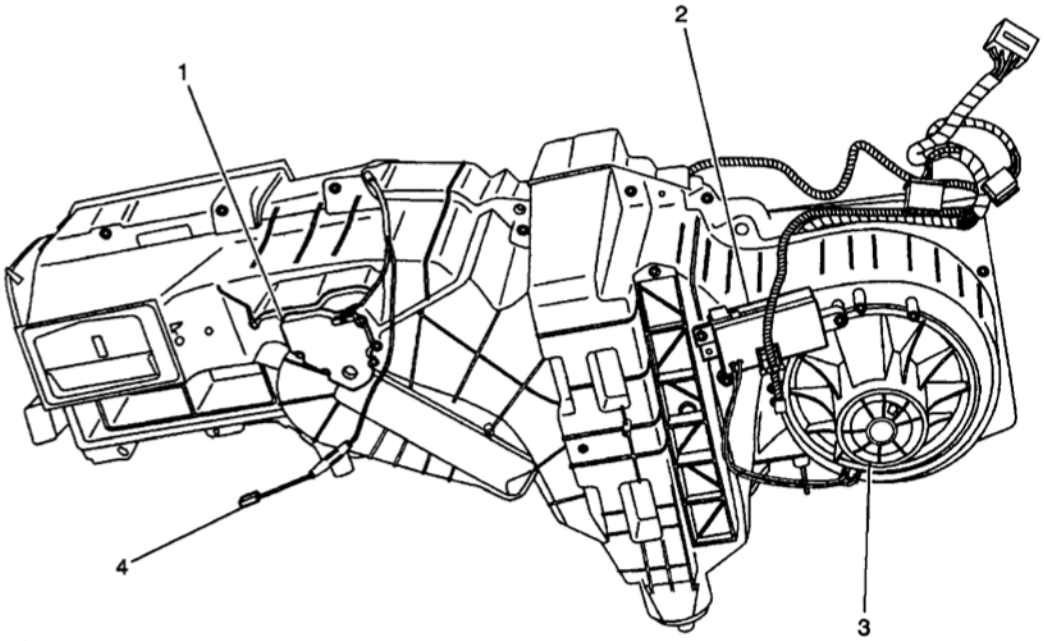

(1) Air Temperature Actuator - Left
(2) Blower Motor Control Processor
(3) Blower Motor
(4) Air Temperature Sensor Connector - Lower Right

G00261636

Fig. 39: Bottom Of HVAC Module Assembly
Courtesy of GENERAL MOTORS CORP.

cardiagn.com

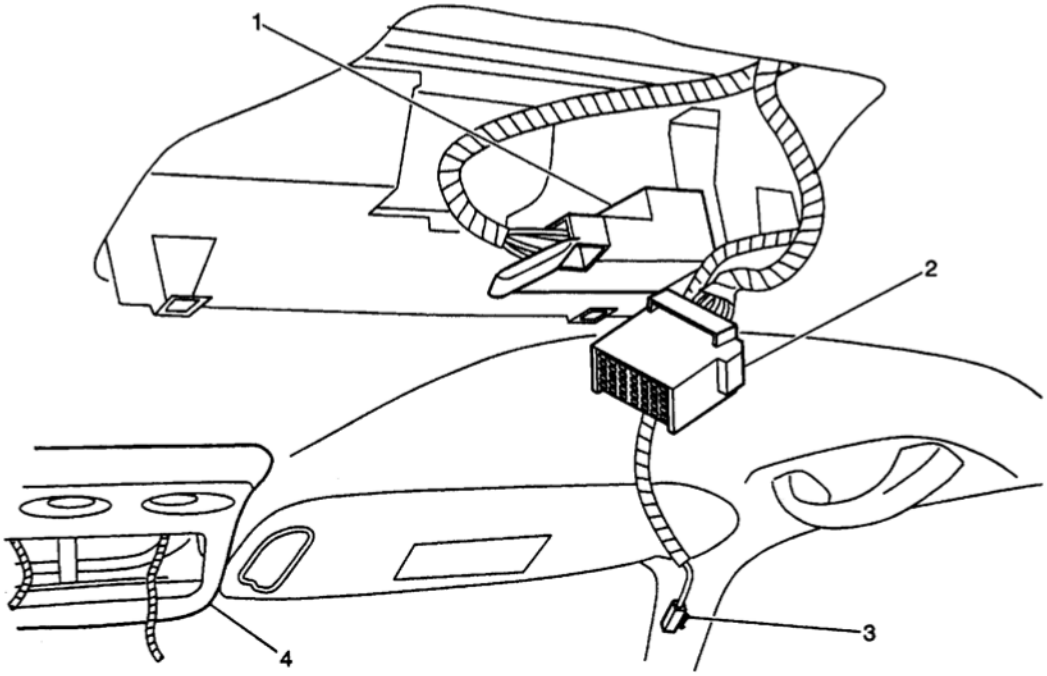

(1) HVAC Control Processor - Auxiliary
(2) HVAC Control Assembly - Rear Auxiliary Connector
(3) Courtesy/Reading Lamp - Mid Connector
(4) Overhead Console

G00261637

Fig. 40: HVAC Control Processor
Courtesy of GENERAL MOTORS CORP.

cardiagn.com

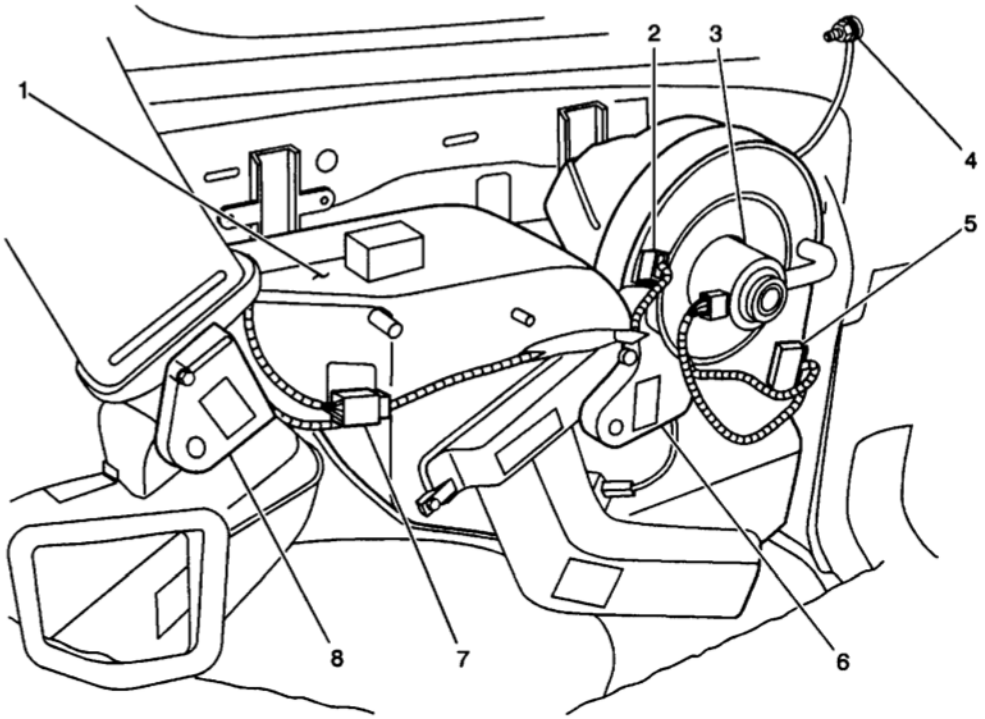

(1) Auxiliary HVAC Module Assembly
(2) C397
(3) Blower Motor - Auxiliary
(4) G410
(5) Blower Motor Resistor Assembly - Auxiliary
(6) Auxiliary Temperature Actuator
(7) C312
(8) Auxiliary Mode Actuator

G00261638

Fig. 41: Right Rear Passenger Compartment
Courtesy of GENERAL MOTORS CORP.

cardiagn.com

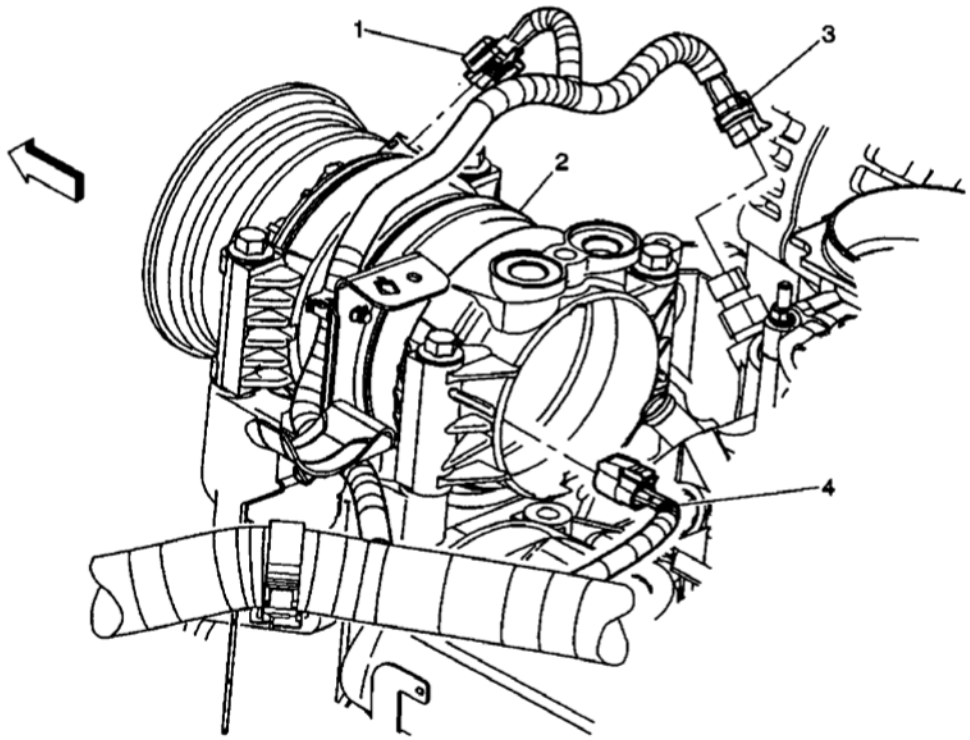

(1) A/C Compressor Clutch Connector
(2) A/C Compressor
(3) Exhaust Gas Recirculation (EGR) Valve Connector
(4) A/C High Pressure Switch Connector

G00261639

Fig. 42: A/C Compressor (4.3L)
Courtesy of GENERAL MOTORS CORP.

cardiagn.com

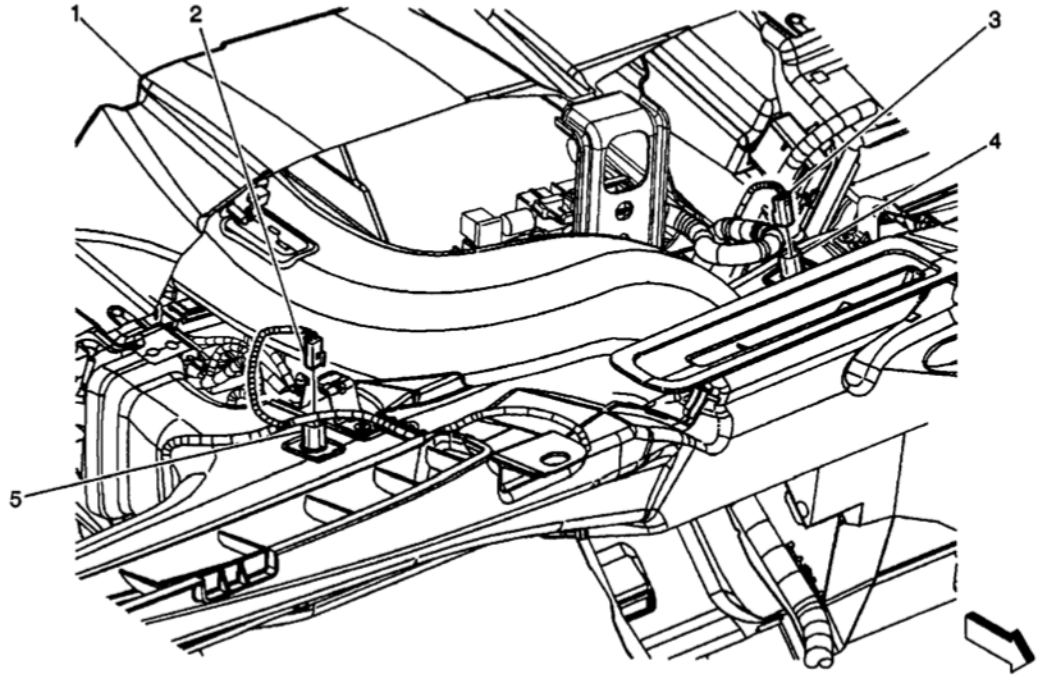

(1) Instrument Panel
(2) Air Temperature Sensor Connector - Upper Right
(3) Air Temperature Sensor Connector - Upper Left
(4) Air Temperature Sensor - Upper Left
(5) Air Temperature Sensor - Upper Right

G00261640

Fig. 43: Air Temperature Sensors
Courtesy of GENERAL MOTORS CORP.

cardiagn.com

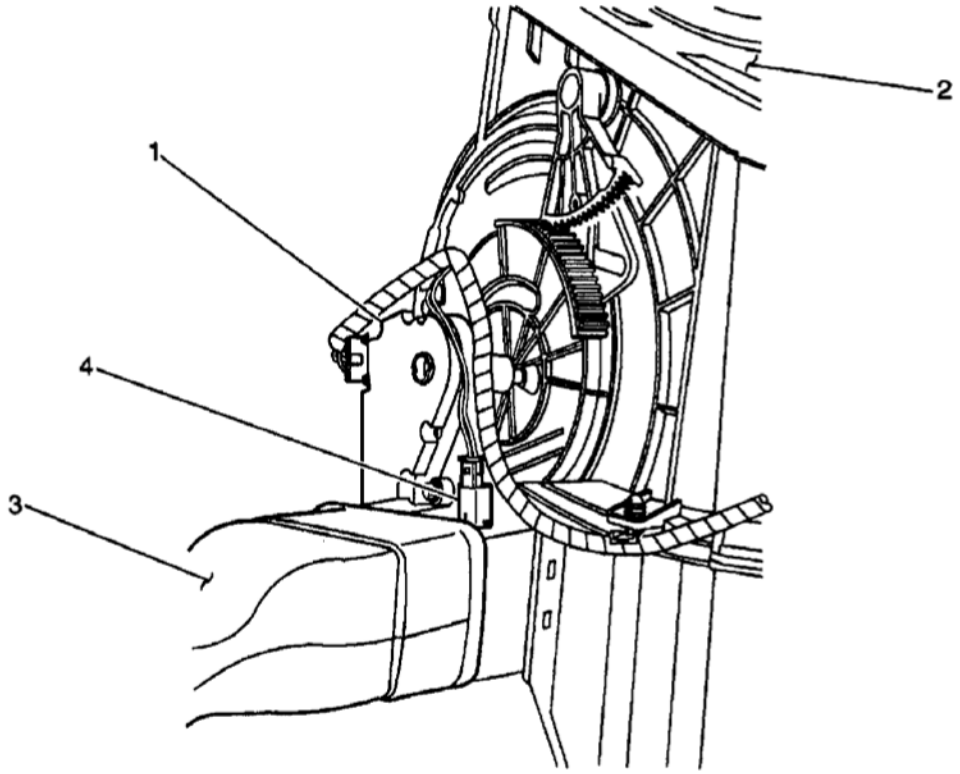

(1) Mode Actuator
(2) HVAC Module Assembly
(3) Lower Left Air Duct
(4) Air Temperature Sensor - Lower Left

G00261641

Fig. 44: Air Temperature Sensor (Lower Left)
Courtesy of GENERAL MOTORS CORP.

cardiagn.com

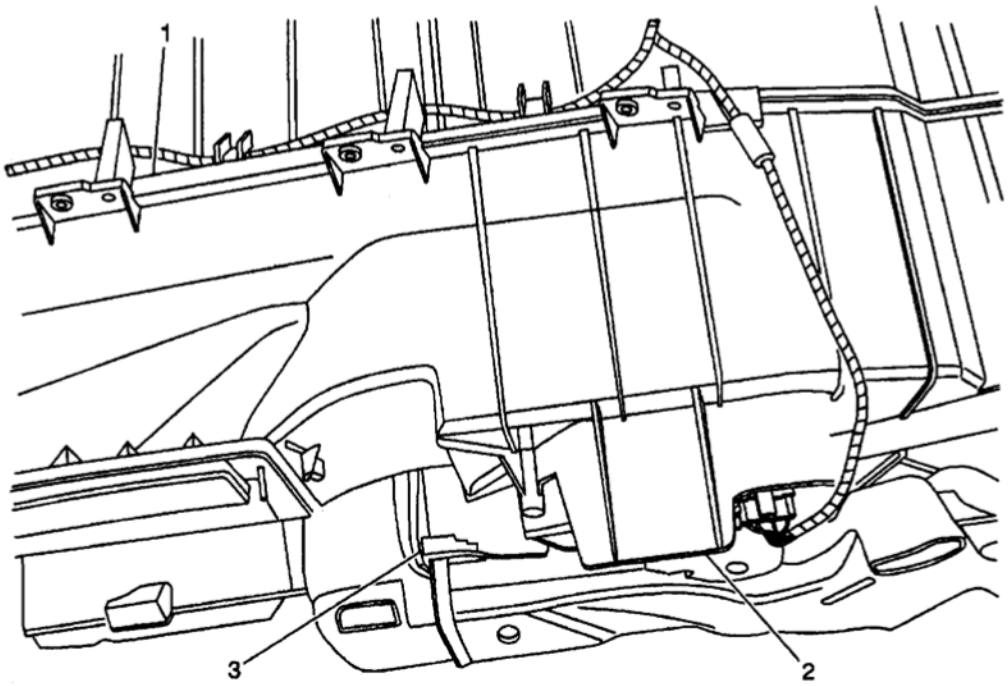

(1) HVAC Module Assembly
(2) Air Temperature Actuator - Left
(3) Air Temperature Sensor - Lower Right

G00261642

Fig. 45: Air Temperature Sensor (Lower Right)
Courtesy of GENERAL MOTORS CORP.

cardiagn.com

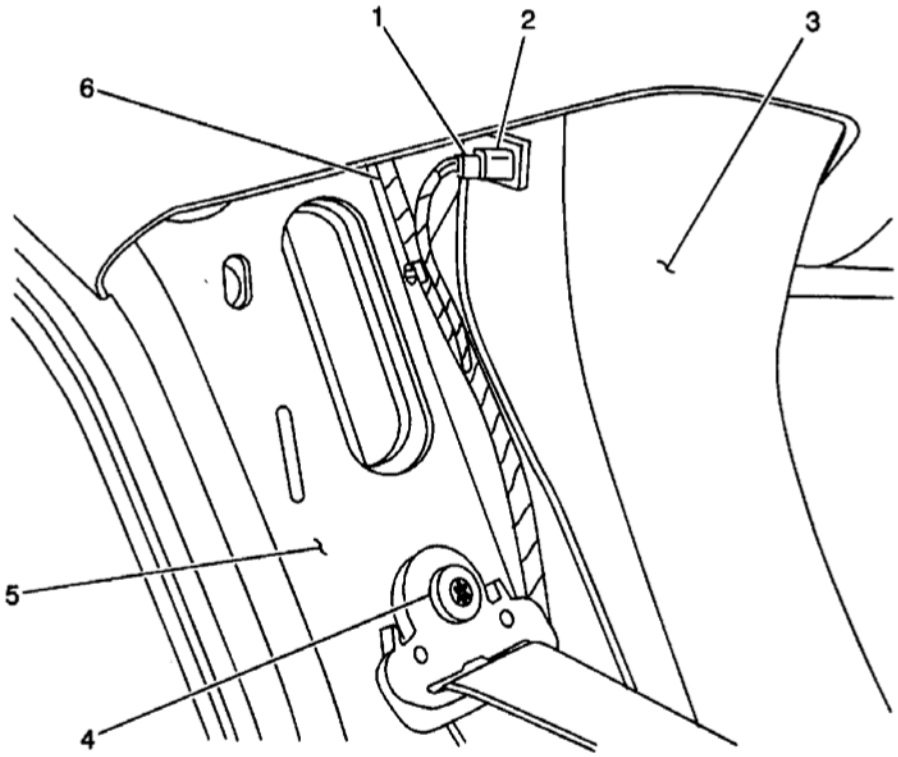

(1) Air Temperature Sensor - Upper Auxiliary Connector
(2) Air Temperature Sensor - Upper Auxiliary
(3) Upper Air Duct - Auxiliary
(4) RR Passenger Seat Belt Anchor Bolt
(5) Passenger Side C - Pillar
(6) Auxiliary HVAC Harness

G00261643

Fig. 46: Air Temperature Sensor (Upper Auxiliary)
Courtesy of GENERAL MOTORS CORP.

cardiagn.com

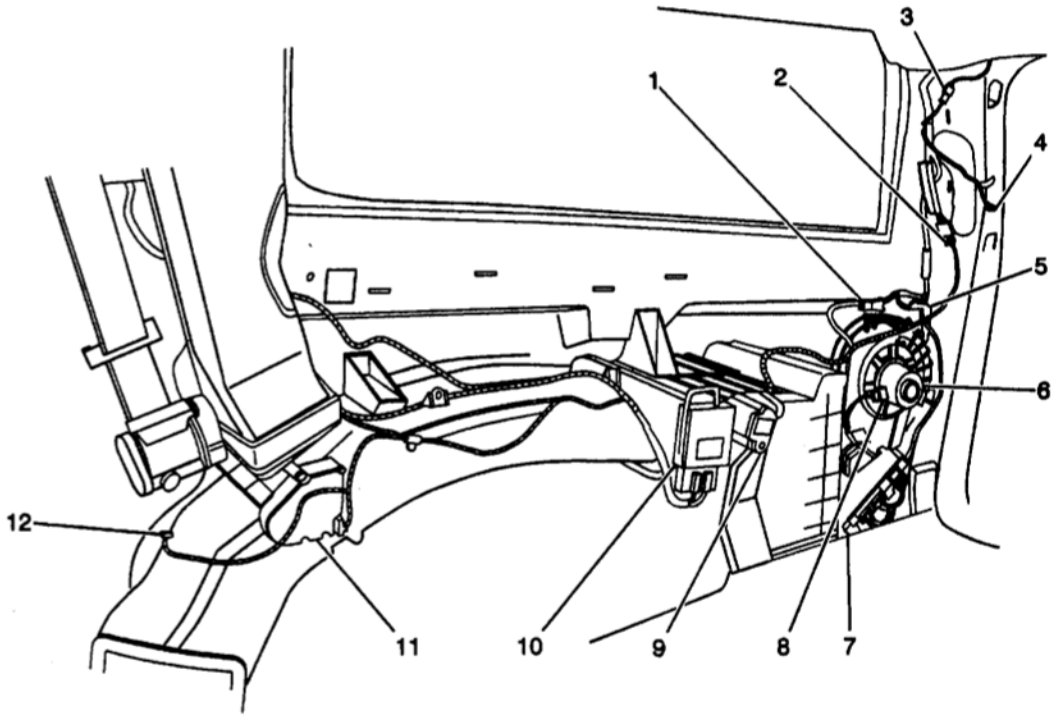

(1) C397
(2) G410
(3) C395
(4) Speaker - Right D - Pillar Conector
(5) Auxiliary Power Outlet - Rear
(6) Blower Motor - Auxiliary
(7) Electronic Suspension Control (ESC) Module
(8) Blower Motor Control Processor - Auxiliary
(9) Air Temperature Actuator - Auxiliary
(10) HVAC Control Module - Auxiliary
(11) Mode Actuator - Auxiliary
(12) Air Temperature Sensor - Lower Auxiliary

G00261644

Fig. 47: Right Rear Passenger Compartment (Suburban & Yukon XL)
Courtesy of GENERAL MOTORS CORP.

cardiagn.com

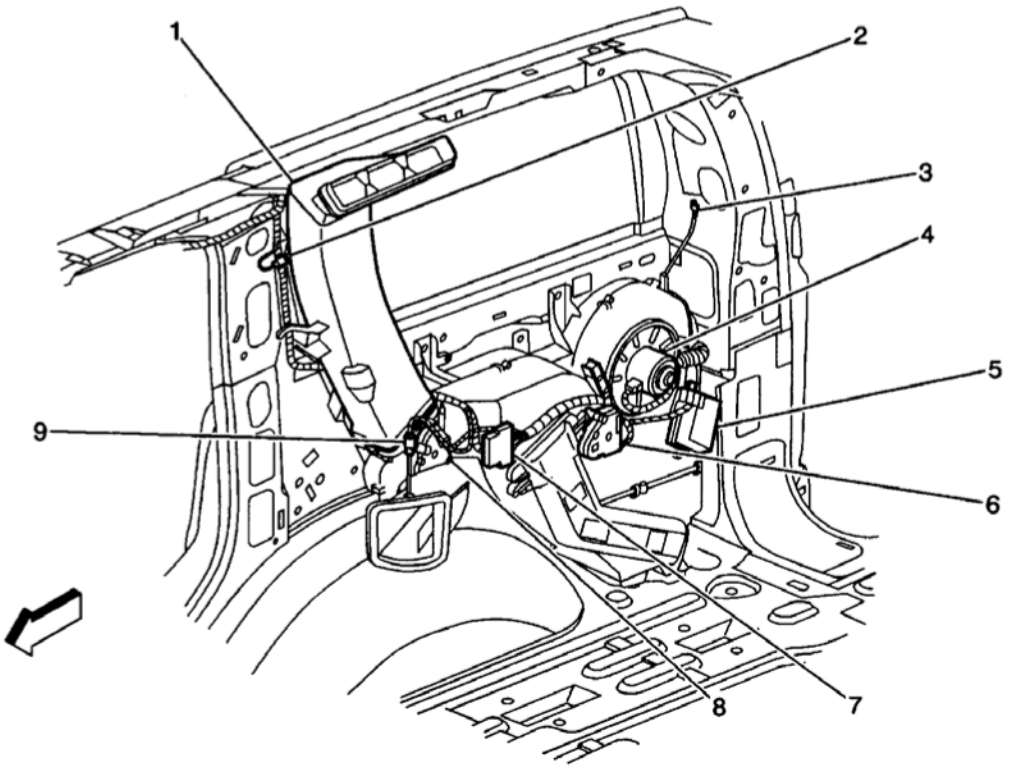

(1) Upper Duct Assembly
(2) Air Temperature Sensor - Upper Auxiliary
(3) G410
(4) Blower Motor - Auxiliary
(5) Blower Motor Control Processor - Auxiliary
(6) Air Temperature Actuator - Auxiliary
(7) C397
(8) Mode Actuator - Auxiliary
(9) Air Temperature Sensor - Lower Auxiliary

G00261645

Fig. 48: Right Rear Passenger Compartment (Tahoe & Yukon)
Courtesy of GENERAL MOTORS CORP.

cardiagn.com

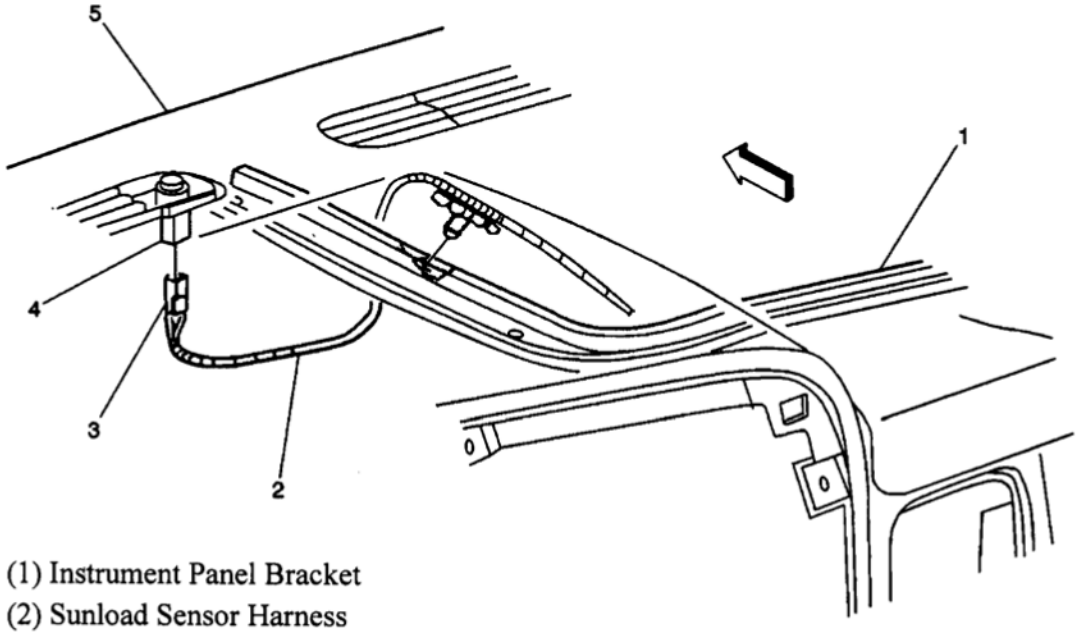

(1) Instrument Panel Bracket
(2) Sunload Sensor Harness
(3) Sunload Sensor Connector
(4) Sunload Sensor Assembly
(5) Instrument Panel

G00261646

Fig. 49: Top Front Of Dash
Courtesy of GENERAL MOTORS CORP.

cardiagn.com

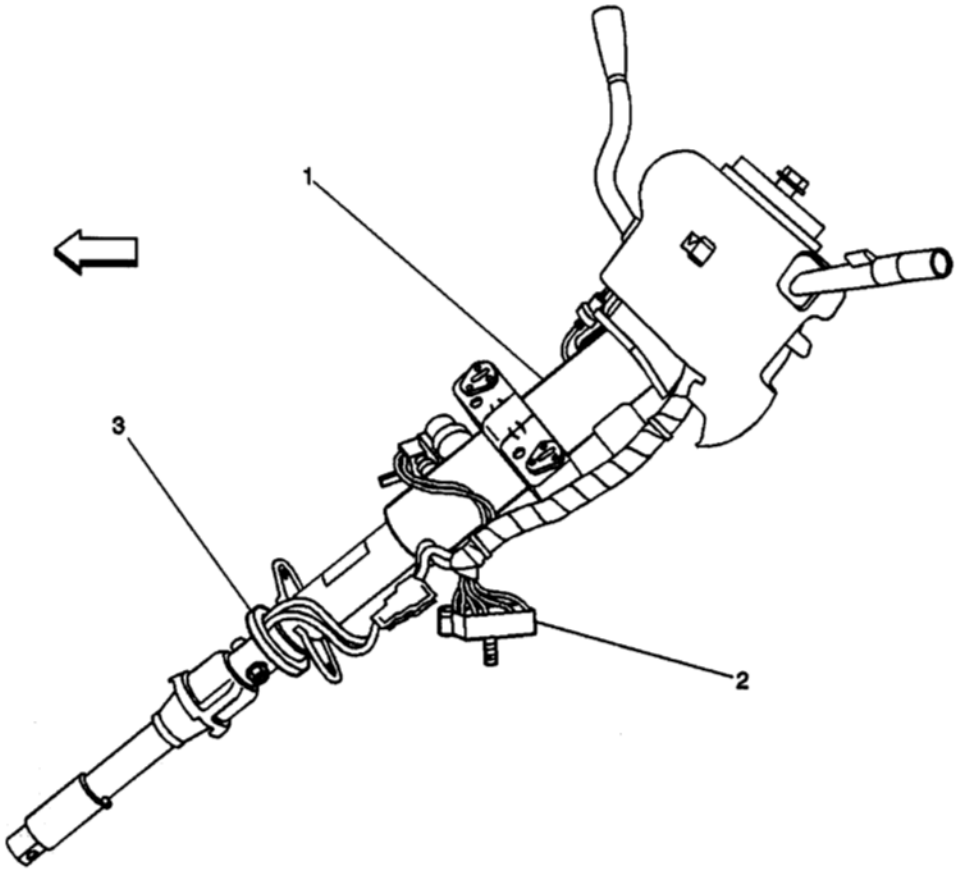

(1) Steering Column
(2) C201
(3) Steering Wheel Speed/Position Sensor

G00261651

Fig. 50: Steering Wheel Speed/Position Sensor
Courtesy of GENERAL MOTORS CORP.

cardiagn.com

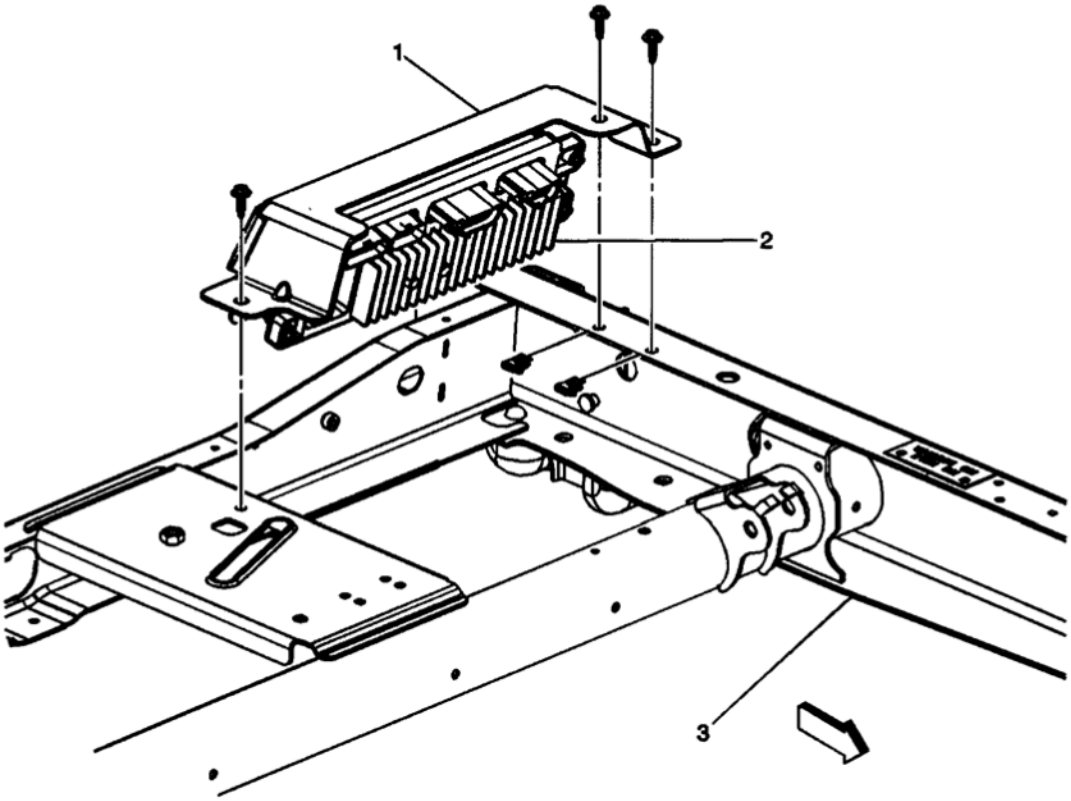

(1) Mounting Bracket
(2) Rear Wheel Steering Control Module
(3) Frame

G00261652

Fig. 51: Rear Steering Control Module
Courtesy of GENERAL MOTORS CORP.

cardiagn.com

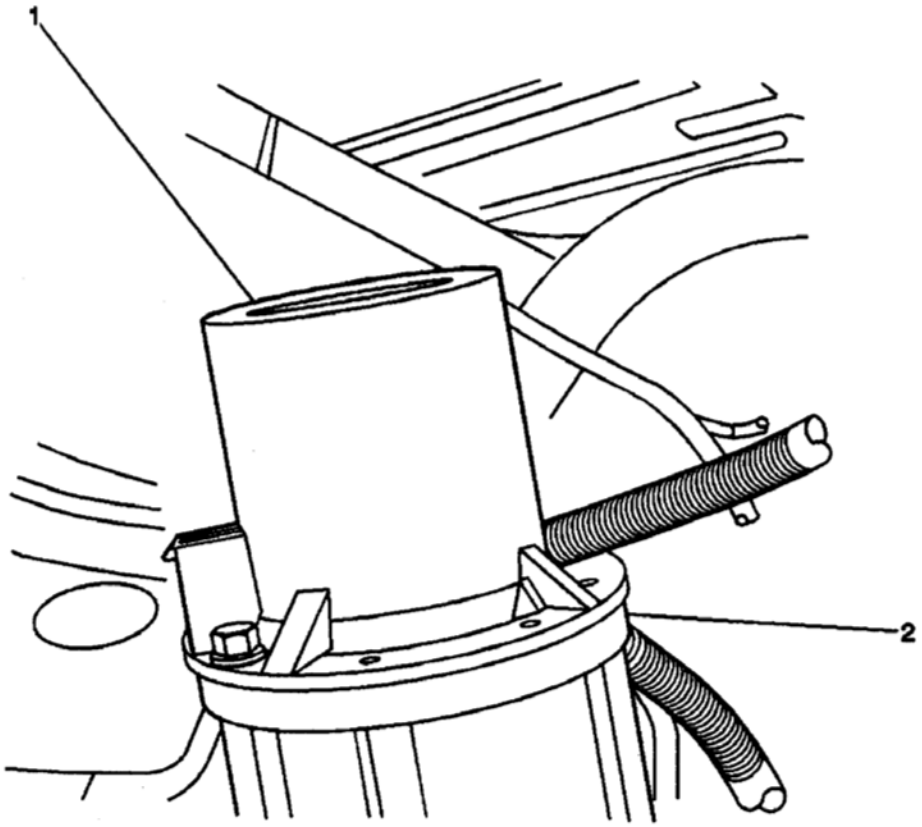

(1) Rear Steering Gear Motor
(2) Steering Gear Assembly

G00261653

Fig. 52: Rear Steering Gear Motor
Courtesy of GENERAL MOTORS CORP.

cardiagn.com

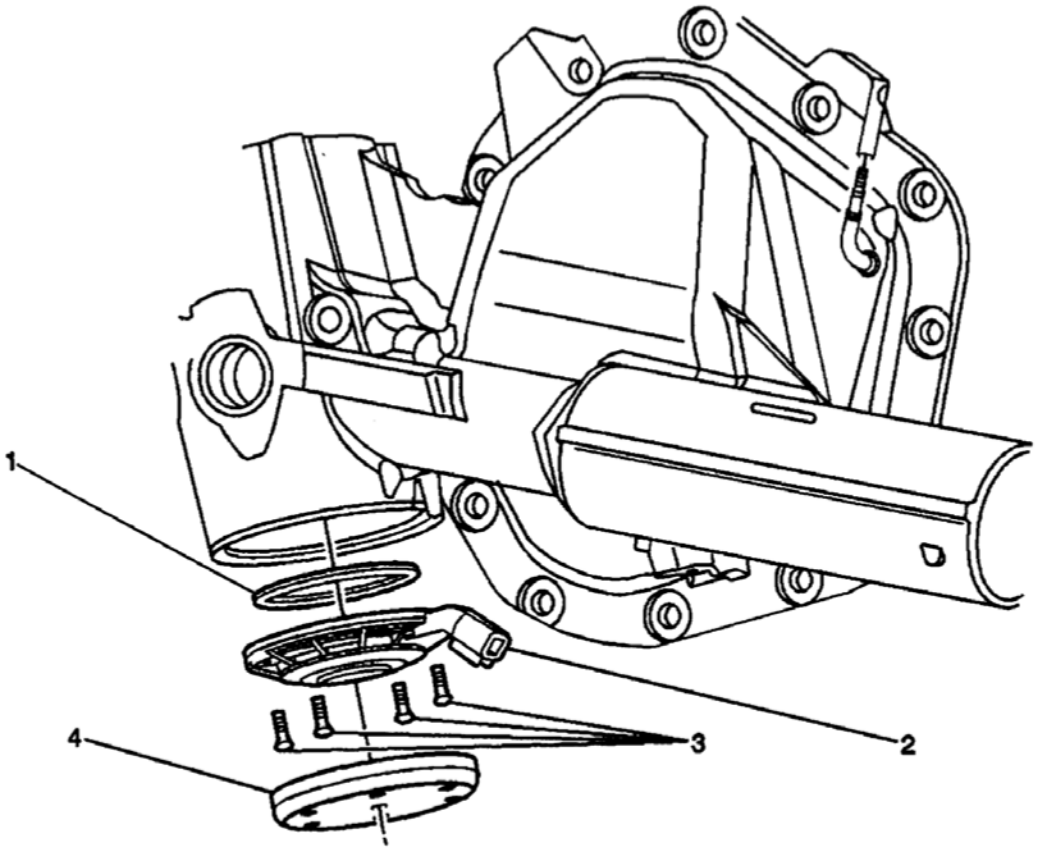

(1) O-Ring
(2) Rear Wheel Position Sensor
(3) Retaining Bolts
(4) Sensor Cover

G00261654

Fig. 53: Rear Wheel Position Sensor
Courtesy of GENERAL MOTORS CORP.

cardiagn.com

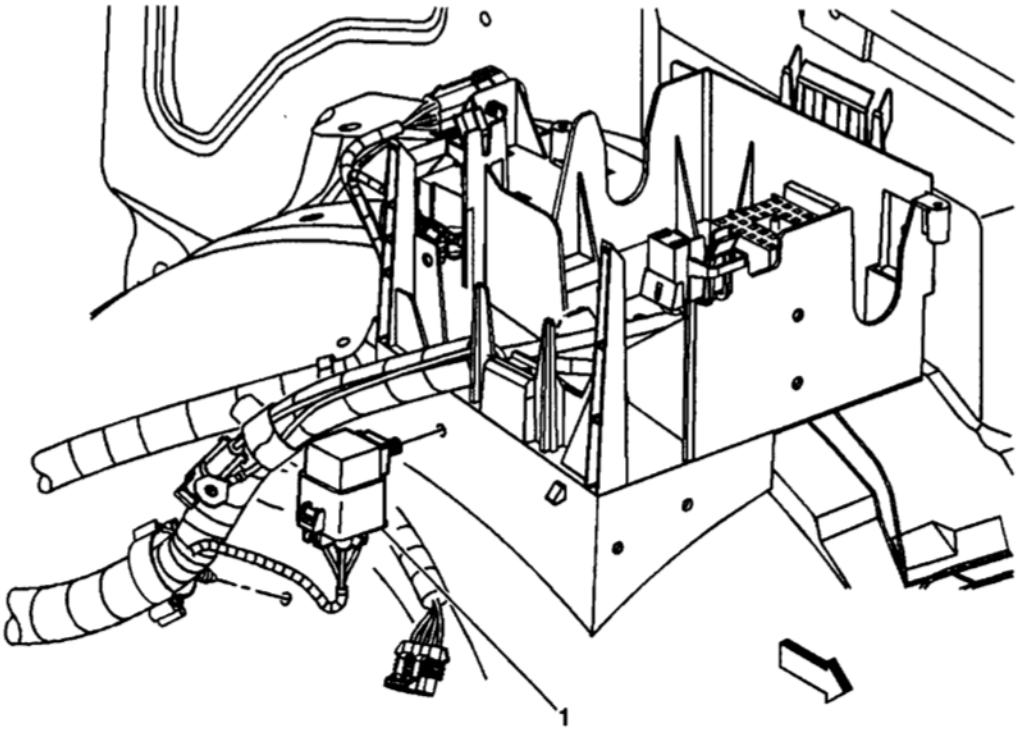

(1) Automatic Level Control (ALC) Compressor Relay

G00261655

Fig. 54: Left Side Of Engine Compartment
Courtesy of GENERAL MOTORS CORP.

cardiagn.com

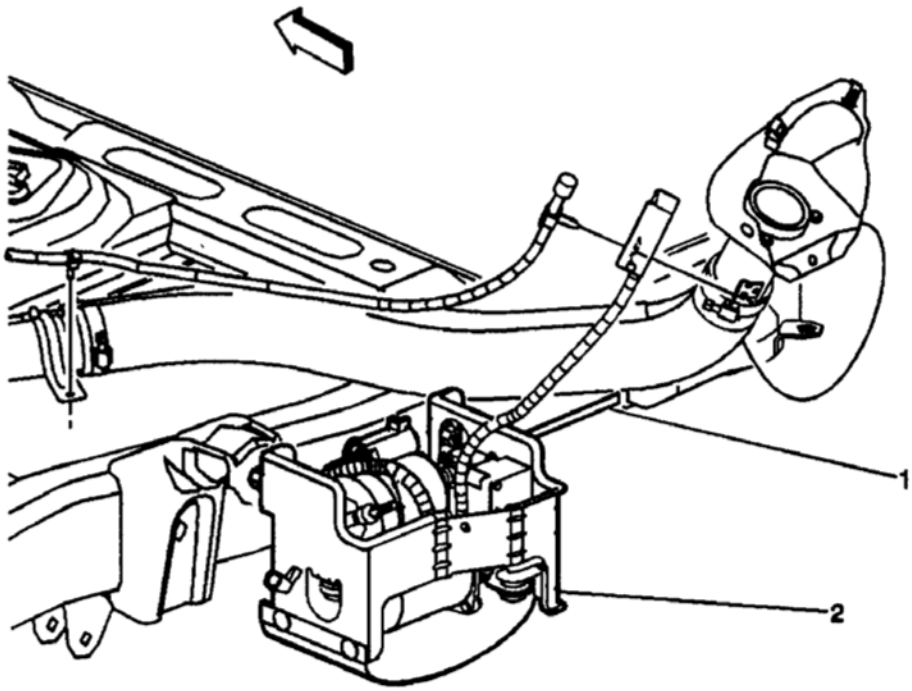

(1) Rear Crossmember Frame

(2) Automatic Level Control (ALC) Air Compressor

G00261656

Fig. 55: Right Rear Of Vehicle
Courtesy of GENERAL MOTORS CORP.

cardiagn.com

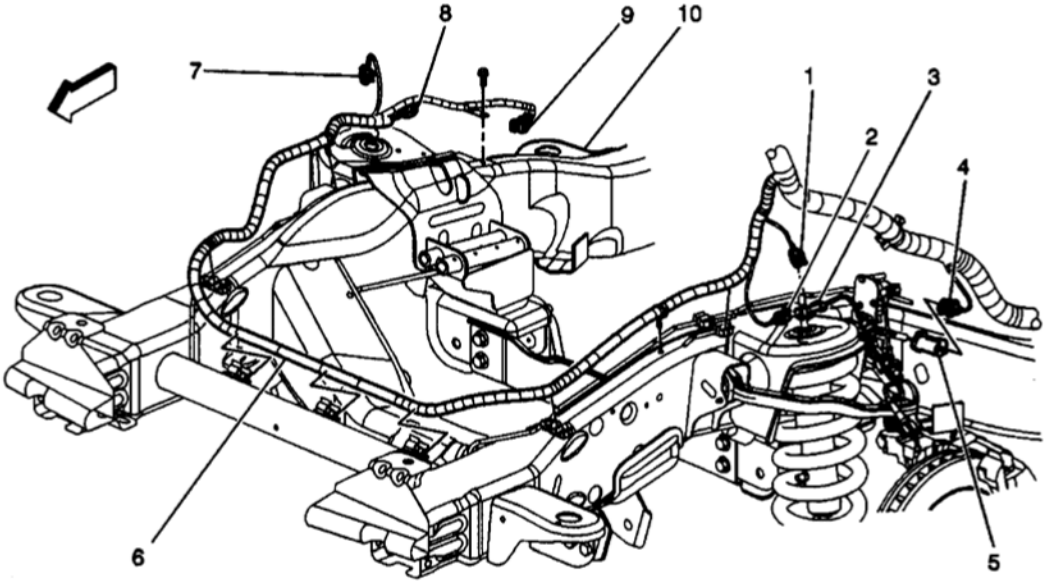

(1) Suspension Damper Solenoid - LF Connector
(2) Wheel Speed Sensor (WSS) - LF Chassis Connector
(3) Wheel Speed Sensor (WSS) - LF Pigtail Connector
(4) Suspension Position Sensor - LF Chassis Connector
(5) Suspension Position Sensor - LF Pigtail Connector
(6) Chassis Harness
(7) Suspension Damper Solenoid - RF Connector
(8) Wheel Speed Sensor (WSS) - RF Chassis Connector
(9) Suspension Position Sensor - RF Chassis Connector
(10) Frame

G00261658

Fig. 56: Front Frame
Courtesy of GENERAL MOTORS CORP.

cardiagn.com

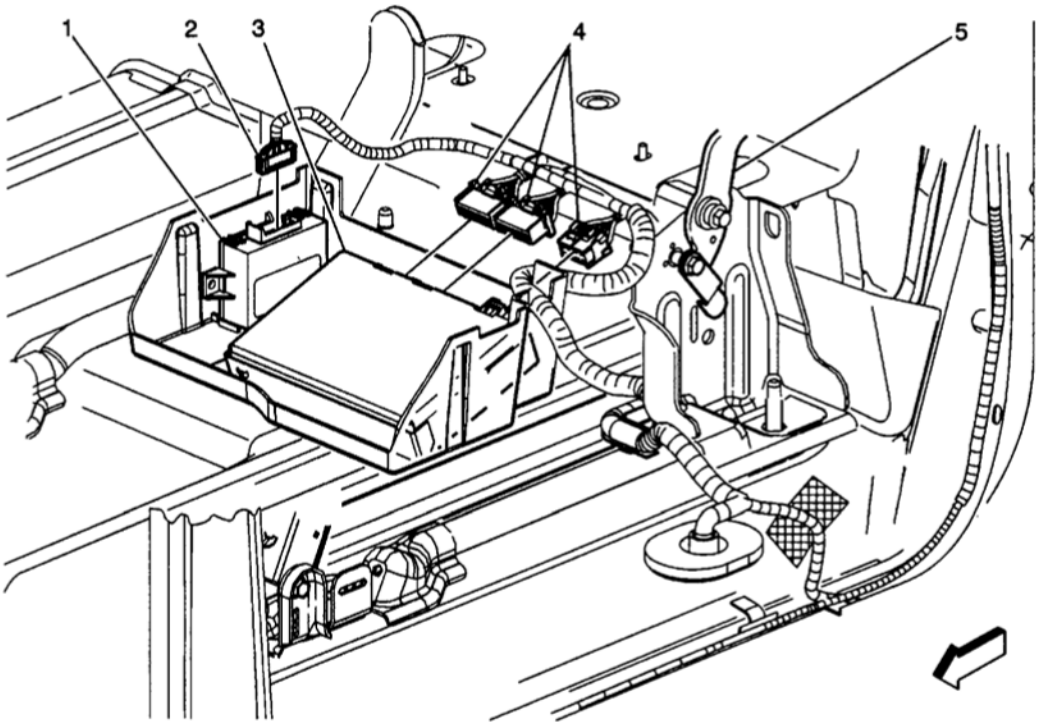

(1) Rear Object Sensor Control Module
(2) Rear Object Sensor Control Module Connector
(3) Electronic Suspension Control (ESC) Module
(4) Electronic Suspension Control (ESC) Module Connectors
(5) LR Passenger Seat Bracket

G00261659

Fig. 57: Left Rear Passenger Compartment (Escalade EXT)
Courtesy of GENERAL MOTORS CORP.

cardiagn.com

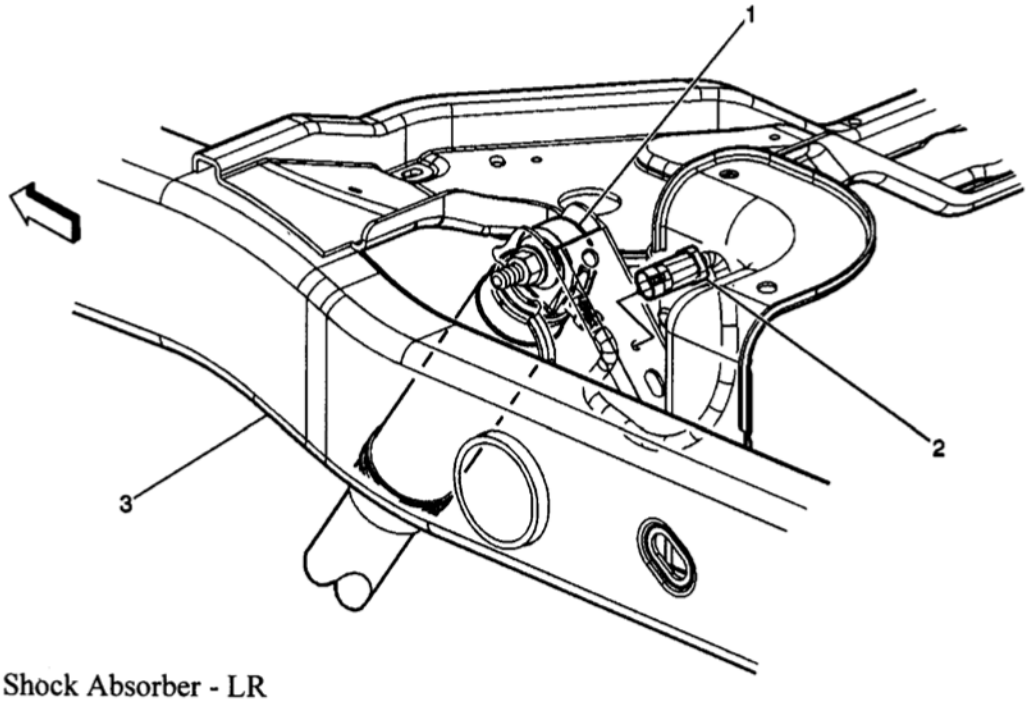

(1) Shock Absorber - LR
(2) Suspension Damper Solenoid - LR Connector
(3) Frame

G00261660

Fig. 58: Left Rear Frame (Except 1500 Series)
Courtesy of GENERAL MOTORS CORP.

cardiagn.com

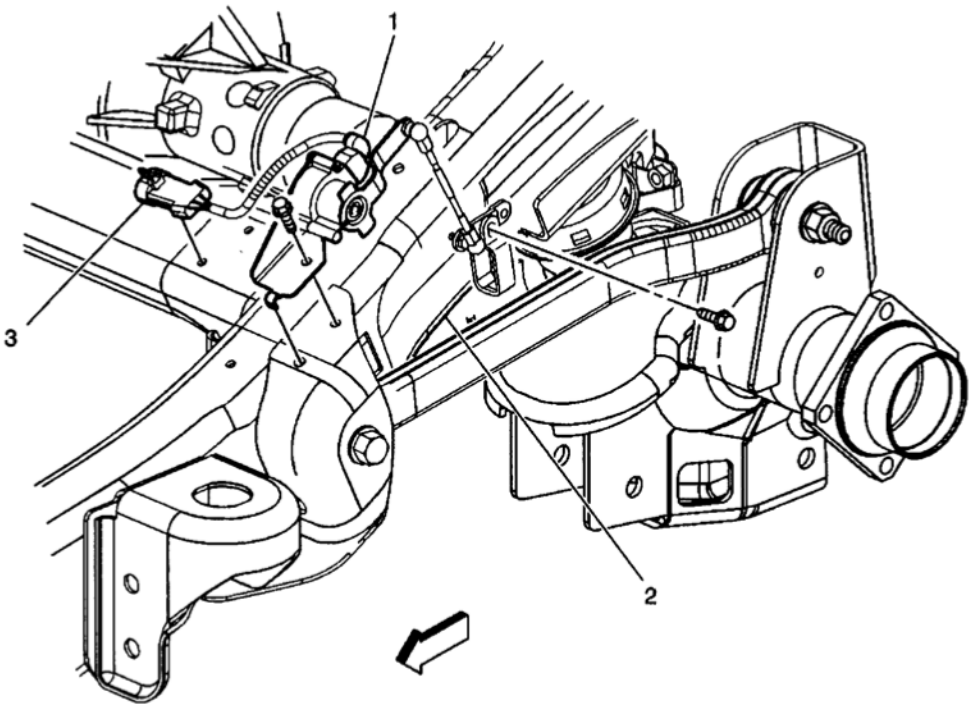

(1) Suspension Position Sensor - LR
(2) Frame
(3) Suspension Position Sensor - LR Connector

G00261661

Fig. 59: Left Rear Frame (1500 Series)
Courtesy of GENERAL MOTORS CORP.

cardiagn.com

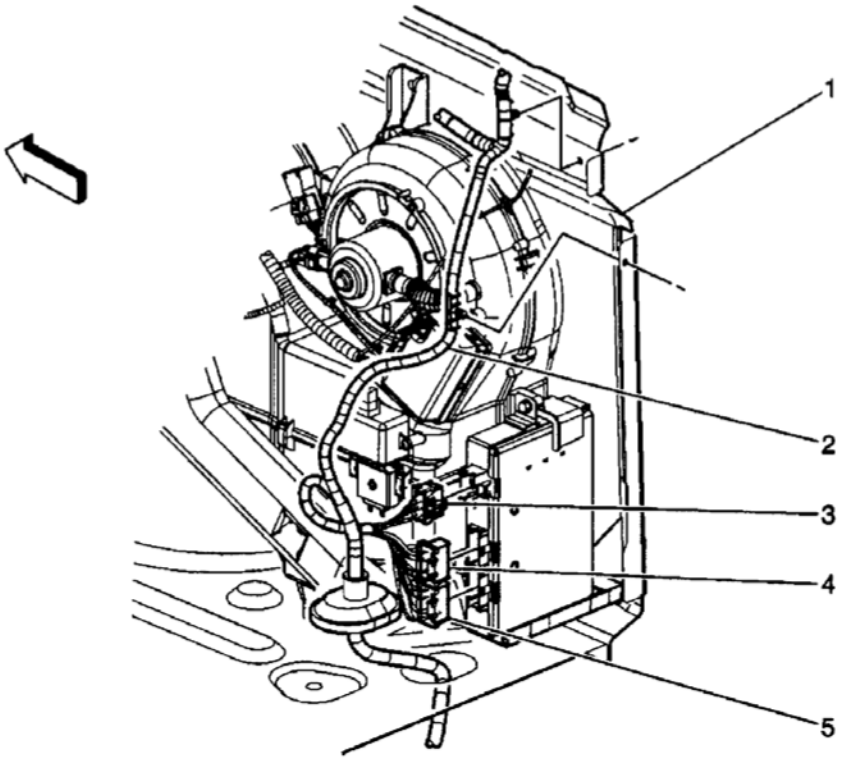

(1) Body Side Inner Panel
(2) Body Wiring Harness
(3) Electronic Suspension Control (ESC) Module Connector C1
(4) Electronic Suspension Control (ESC) Module Connector C2
(5) Electronic Suspension Control (ESC) Module Connector C3

G00261662

Fig. 60: Right Rear Of Vehicle (Except Avalanche & Escalade EXT)
Courtesy of GENERAL MOTORS CORP.

cardiagn.com

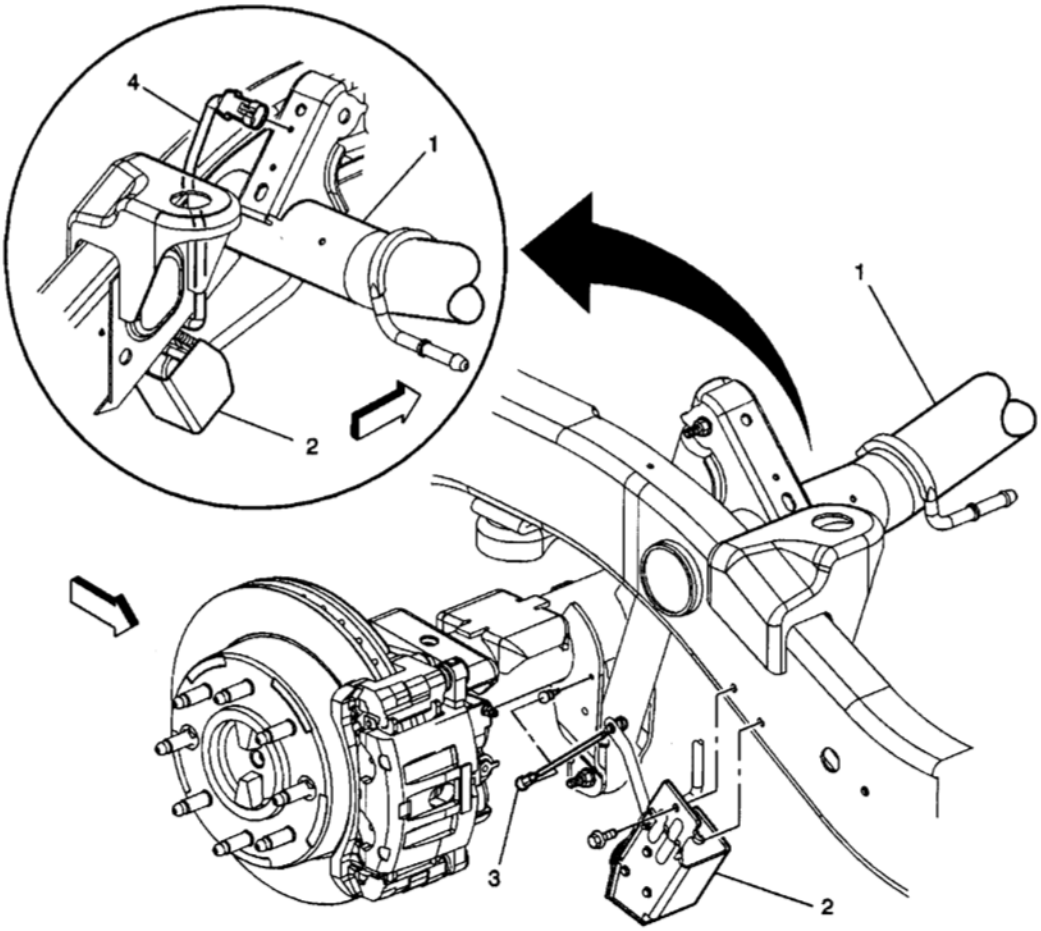

(1) Axle
(2) Suspension Position Sensor - RR
(3) Sensor Arm
(4) Suspension Position Sensor - RR Connector

G00261663

Fig. 61: Right Rear Frame
Courtesy of GENERAL MOTORS CORP.

cardiagn.com

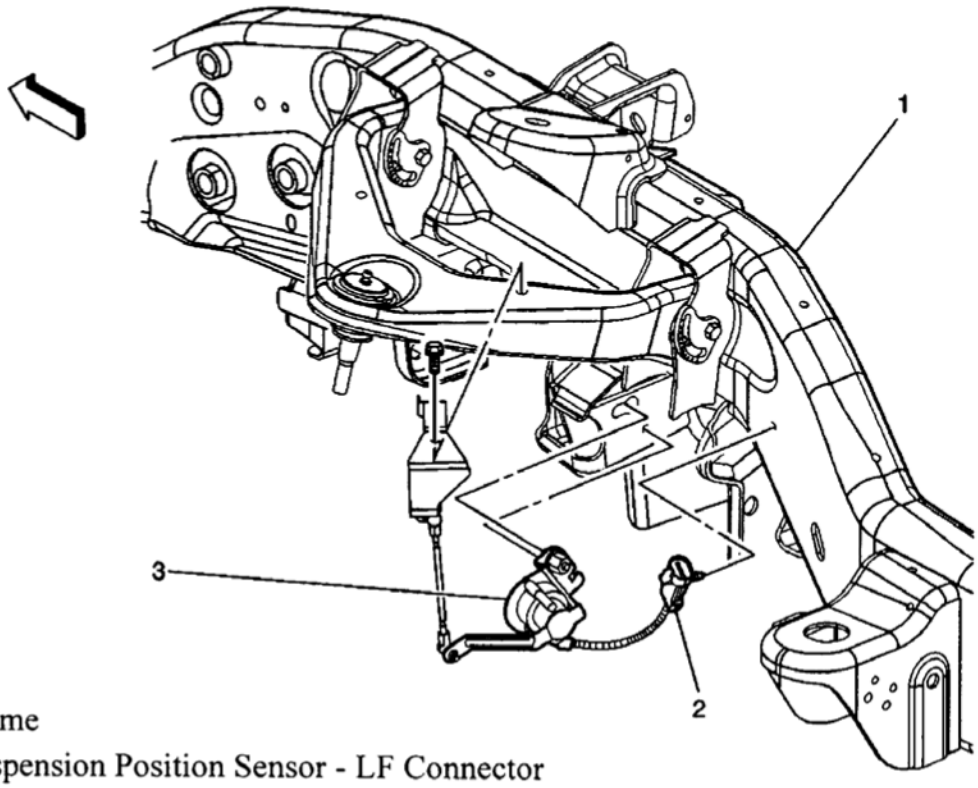

(1) Frame
(2) Suspension Position Sensor - LF Connector
(3) Suspension Position Sensor - LF

G00261664

Fig. 62: Left Front Frame (Suburban & Yukon XL)
Courtesy of GENERAL MOTORS CORP.

cardiagn.com

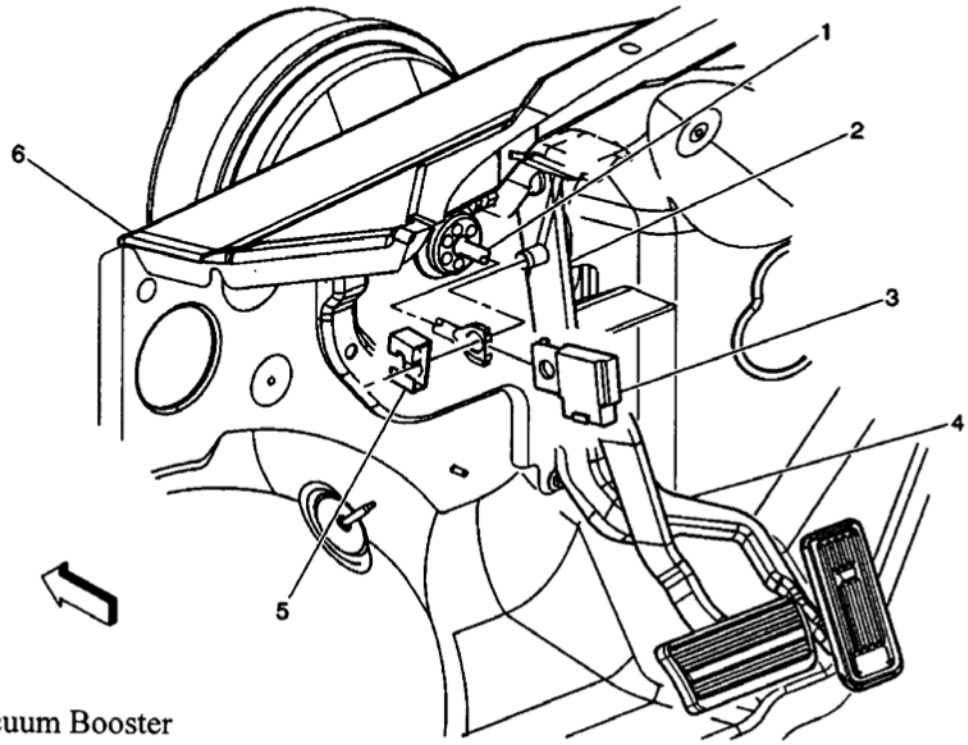

(1) Vacuum Booster
(2) Brake Pedal
(3) Stoplamp Switch
(4) Accelerator Pedal
(5) Stoplamp Switch Retainer
(6) Dash Panel

G00261665

Fig. 63: Brake Pedal Components
Courtesy of GENERAL MOTORS CORP.

cardiagn.com

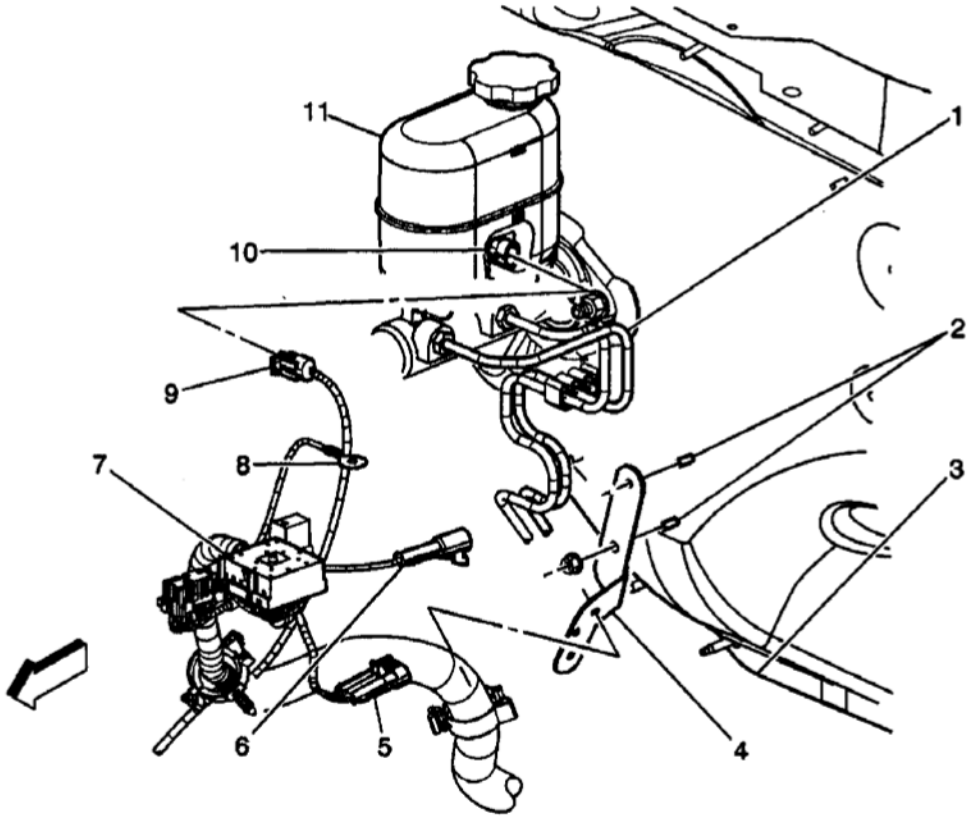

(1) Hydraulic Brake Line
(2) Bracket for Chassis Harness Studs
(3) LH Front Lower Dash Panel
(4) Bracket for Chassis Harness
(5) Inline Connector
(6) Inline Connector
(7) Junction Block Underhood Connector
(8) Junction Block Underhood Eyelet Connector
(9) Brake Fluid Level Switch Connector
(10) Brake Fluid Level Switch
(11) Brake Fluid Reservoir

G00261666

Fig. 64: Left Rear Of Engine Compartment
Courtesy of GENERAL MOTORS CORP.

cardiagn.com

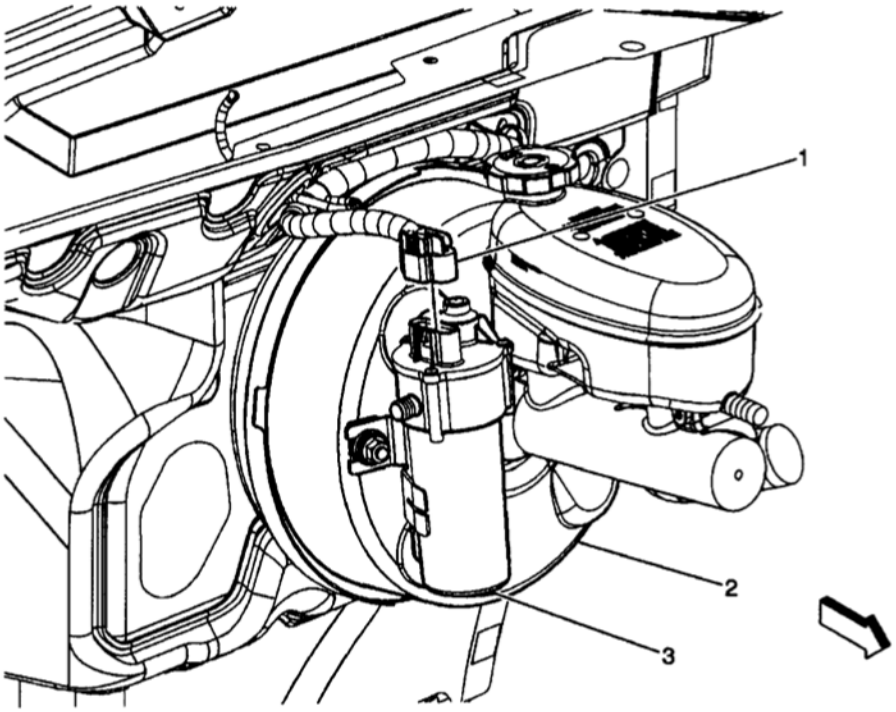

(1) Supplemental Brake Assist Pump Motor Connector
(2) Brake Booster Assembly
(3) Supplemental Brake Assist Pump Motor

G00261667

Fig. 65: Master Cylinder
Courtesy of GENERAL MOTORS CORP.

cardiagn.com

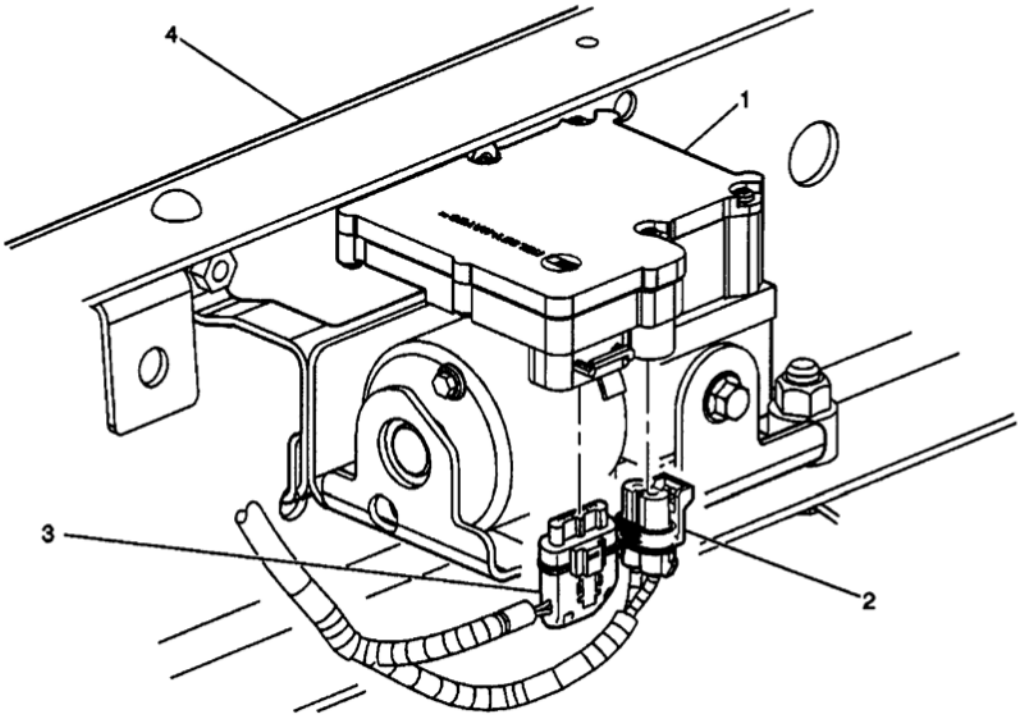

(1) Electronic Brake Control Module (EBCM)
(2) Electronic Brake Control Module (EBCM) Electrical Connector -- C1
(3) Electronic Brake Control Module (EBCM) Electrical Connector -- C2
(4) Frame

G00261668

Fig. 66: Left Frame Rail
Courtesy of GENERAL MOTORS CORP.

cardiagn.com

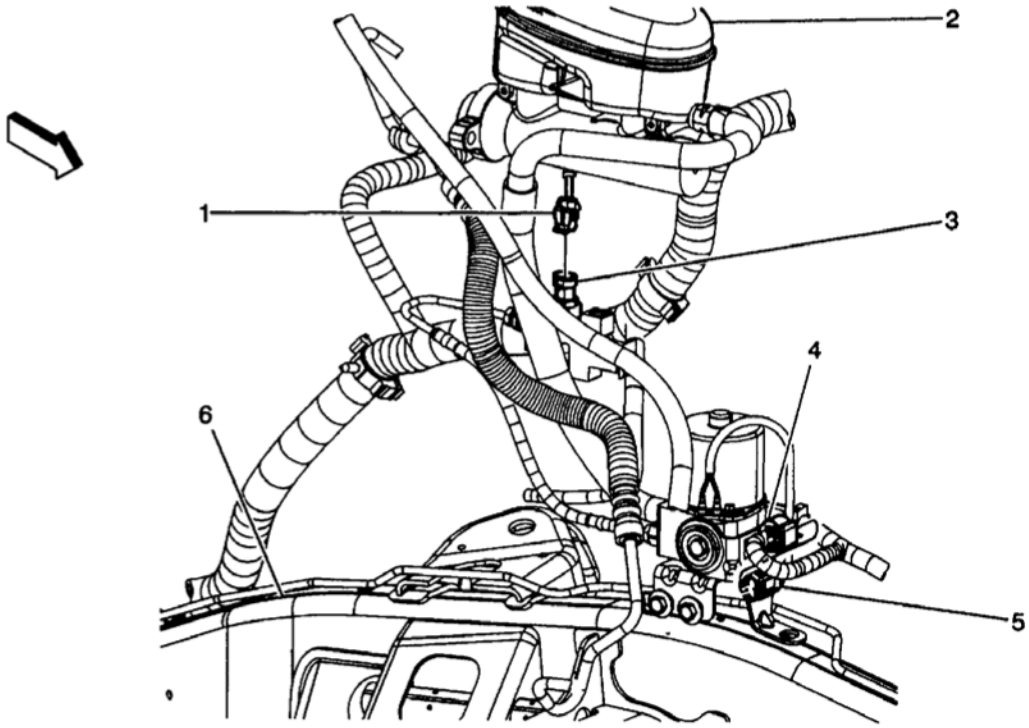

(1) Brake Pressure Differential Switch Connector
(2) Master Cylinder Fluid Reservoir
(3) Brake Pressure Differential Switch
(4) Precharge Pump Connector
(5) Precharge Pump
(6) Frame

G00261669

Fig. 67: Left Rear Of Engine Compartment
Courtesy of GENERAL MOTORS CORP.

cardiagn.com

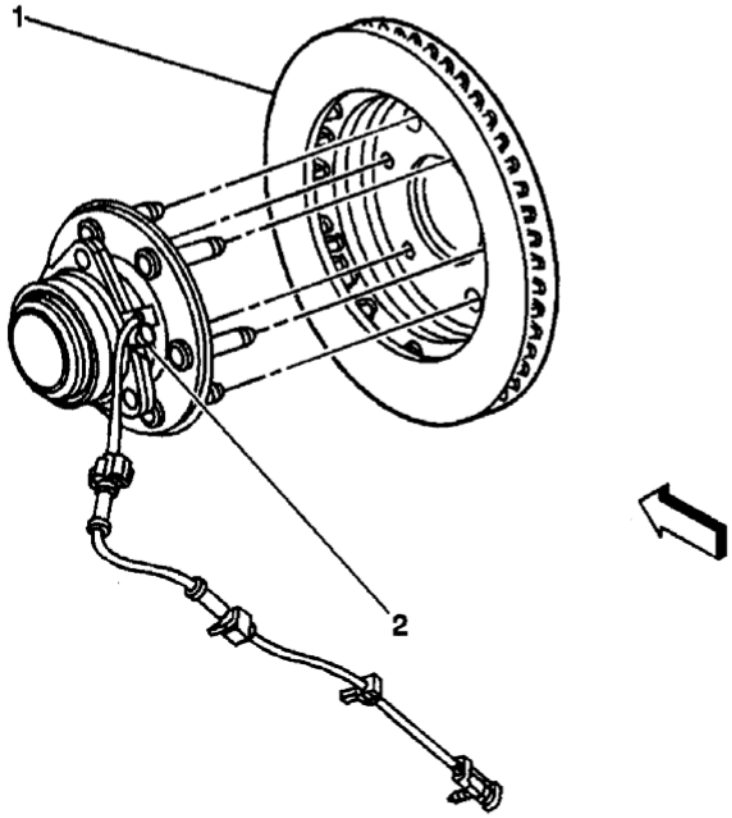

(1) Rotor
(2) Wheel Speed Sensor (WSS)

G00261670

Fig. 68: Right Front Wheel (2WD)
Courtesy of GENERAL MOTORS CORP.

cardiagn.com

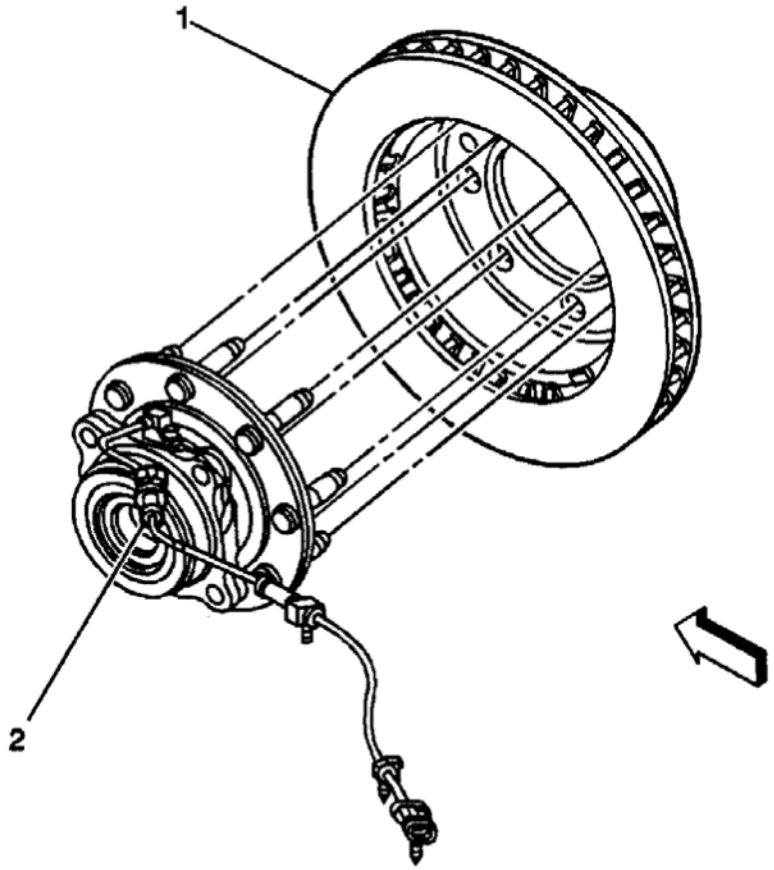

(1) Rotor

(2) Wheel Speed Sensor (WSS)

G00261671

Fig. 69: Right Front Wheel (4WD)
Courtesy of GENERAL MOTORS CORP.

cardiagn.com

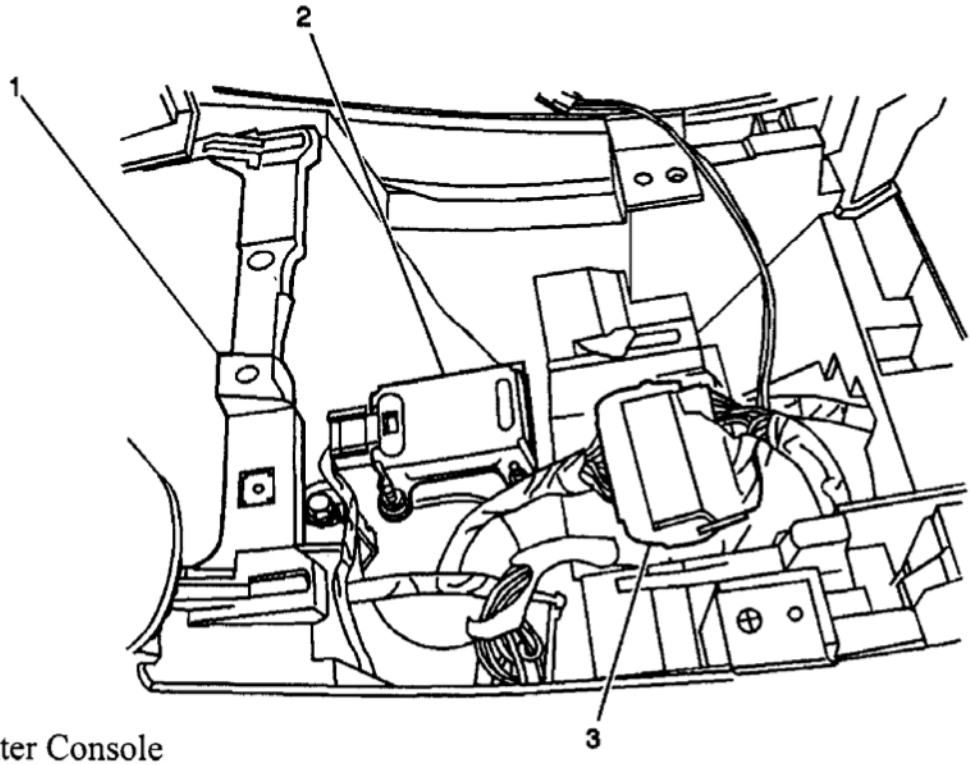

(1) Center Console

(2) YAW and Lateral Acceleration Sensor

(3) C306

G00261672

Fig. 70: Below Center Console (Escalade)
Courtesy of GENERAL MOTORS CORP.

cardiagn.com

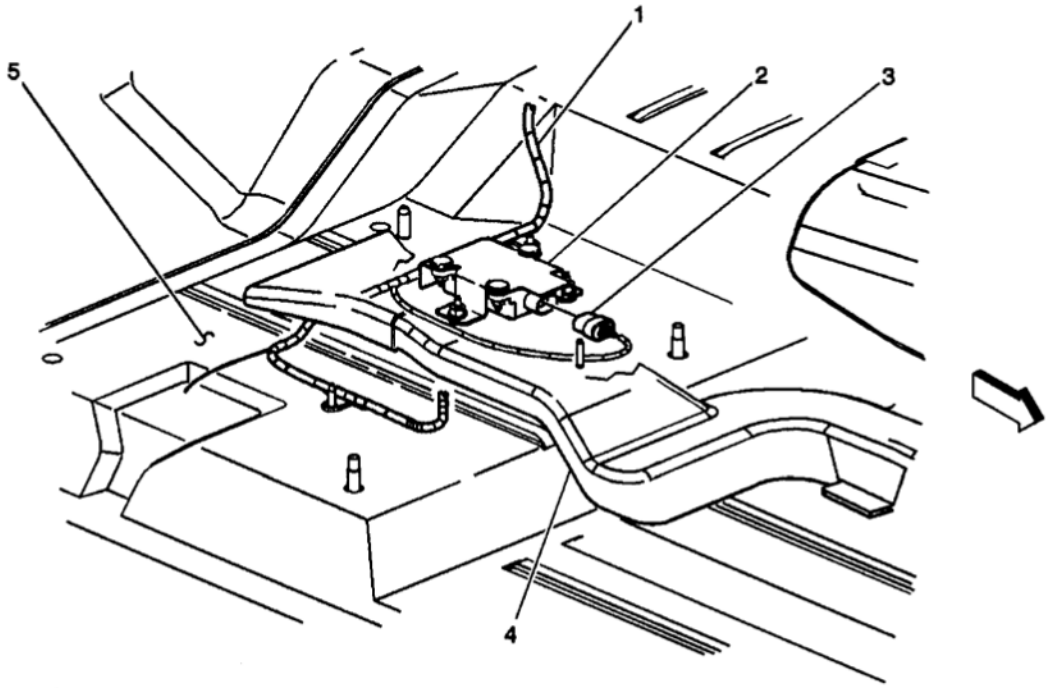

(1) Body Harness
(2) YAW and Lateral Acceleration Sensor
(3) YAW and Lateral Acceleration Sensor Connector
(4) HVAC Duct - Passenger Side
(5) Front Floor Panel - Passenger Side

G00261673

Fig. 71: Below Passenger Seat
Courtesy of GENERAL MOTORS CORP.

cardiagn.com

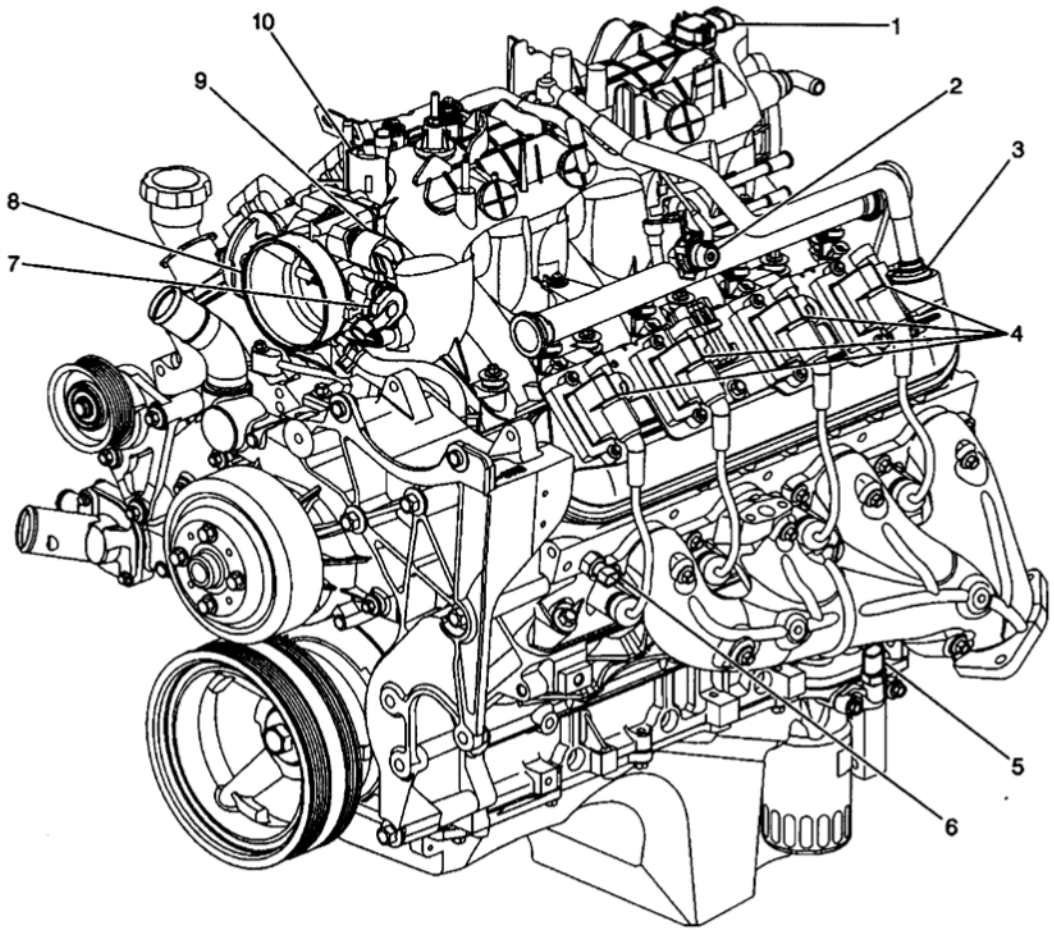

(1) Manifold Absolute Pressure (MAP) sensor
(2) Fuel Pressure Regulator
(3) Positive Crankcase Ventilation (PCV) Valve
(4) Left Bank Ignition Coils
(5) Engine Oil Pressure (EOP) Sensor
(6) Engine Coolant Temperature (ECT) Sensor
(7) Throttle Position (TP) Sensor
(8) Throttle Body
(9) Idle Air Control (IAC) Valve
(10) Evaporative Emission (EVAP) Canister Purge Solenoid

G00261674

Fig. 72: Left Side Of Engine (4.8L, 5.3L & 6.0L)
Courtesy of GENERAL MOTORS CORP.

cardiagn.com

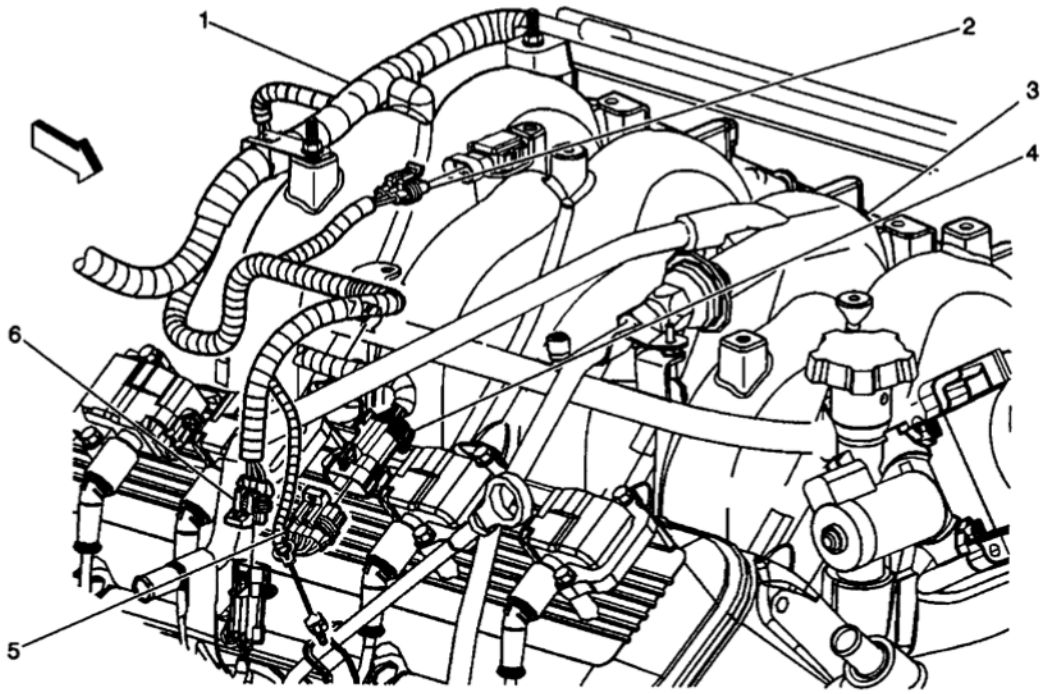

(1) Engine Harness
(2) Manifold Absolute Pressure (MAP) Sensor Connector
(3) Engine
(4) Engine Coil Harness Connector
(5) Engine Coil Connector
(6) Engine Coolant Temperature (ECT) Sensor Connector

G00261675

Fig. 73: Upper Right Side Of Engine (8.1L)
Courtesy of GENERAL MOTORS CORP.

cardiagn.com

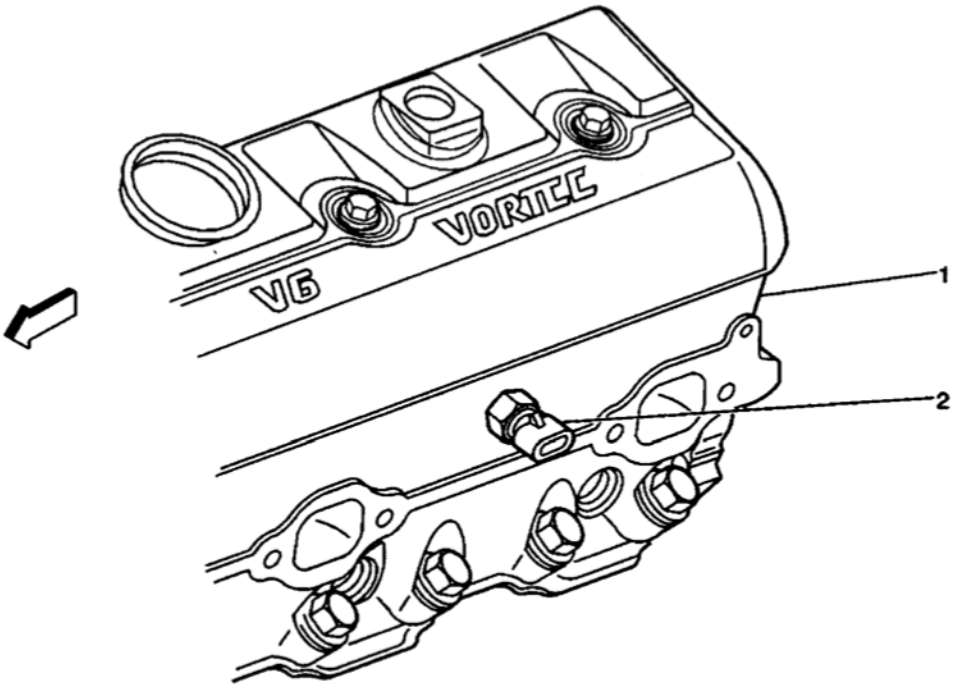

(1) Bank 1 Cylinder Head
(2) Engine Coolant Temperature (ECT) Sensor

G00261676

Fig. 74: Left Cylinder Head (4.3L)
Courtesy of GENERAL MOTORS CORP.

cardiagn.com

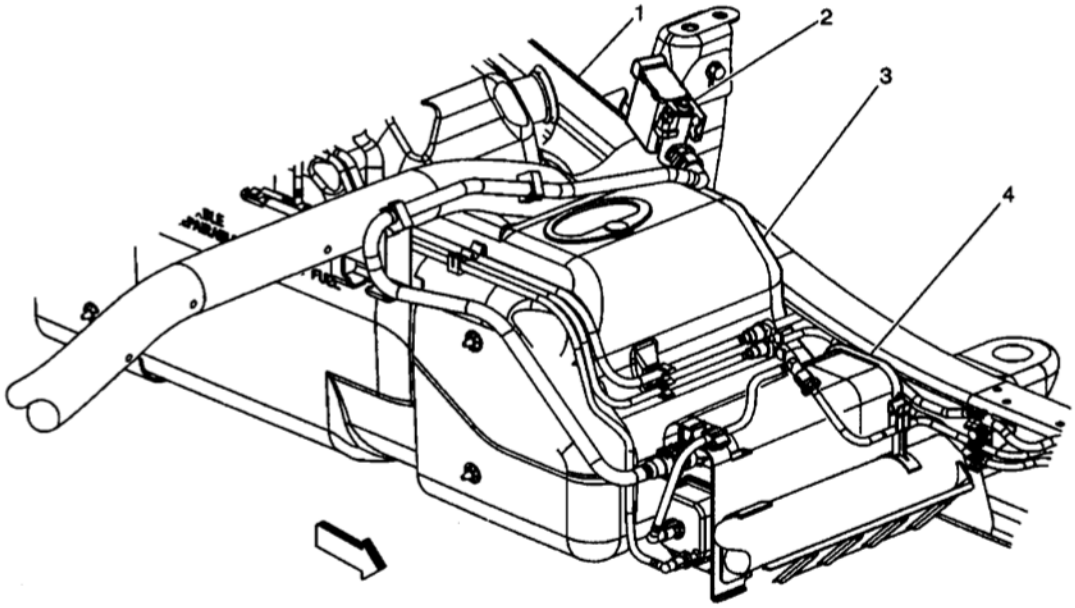

(1) Left Frame Rail
(2) Evaporative Emissions (EVAP) Canister Vent Solenoid
(3) Fuel Tank
(4) Evaporative Emissions (EVAP) Canister

G00261681

Fig. 75: Left Frame Rail
Courtesy of GENERAL MOTORS CORP.

cardiagn.com

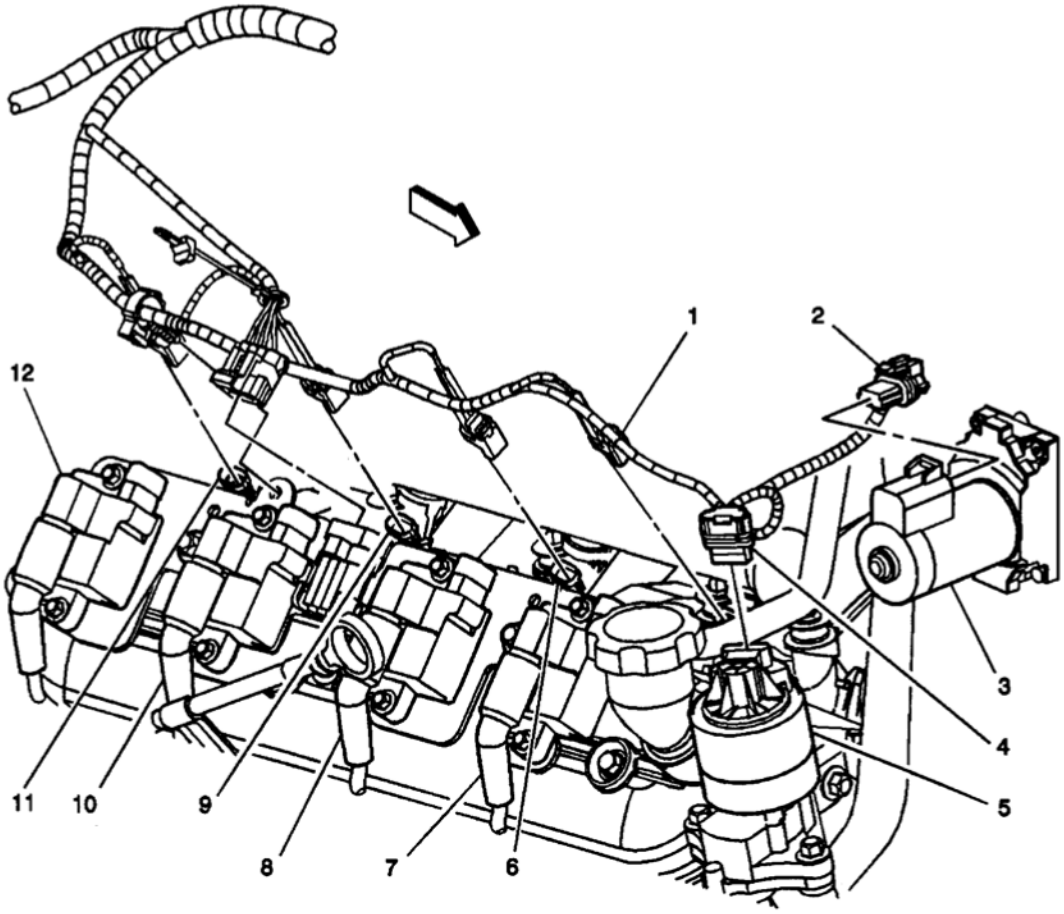

(1) Fuel Injector 2 Connector
(2) Throttle Actuator Control (TAC) Motor Connector
(3) Throttle Actuator Control (TAC) Motor
(4) Exhaust Gas Recirculation (EGR) Valve Connector
(5) Exhaust Gas Recirculation (EGR) Valve
(6) Fuel Injector 6
(7) Ignition Coil 2
(8) Ignition Coil 4
(9) Fuel Injector 6
(10) Ignition Coil 6
(11) Fuel Injector 8
(12) Ignition Coil 8

G00261682

Fig. 76: Right Valve Cover (4.8L, 5.3L & 6.0L)
Courtesy of GENERAL MOTORS CORP.

cardiagn.com

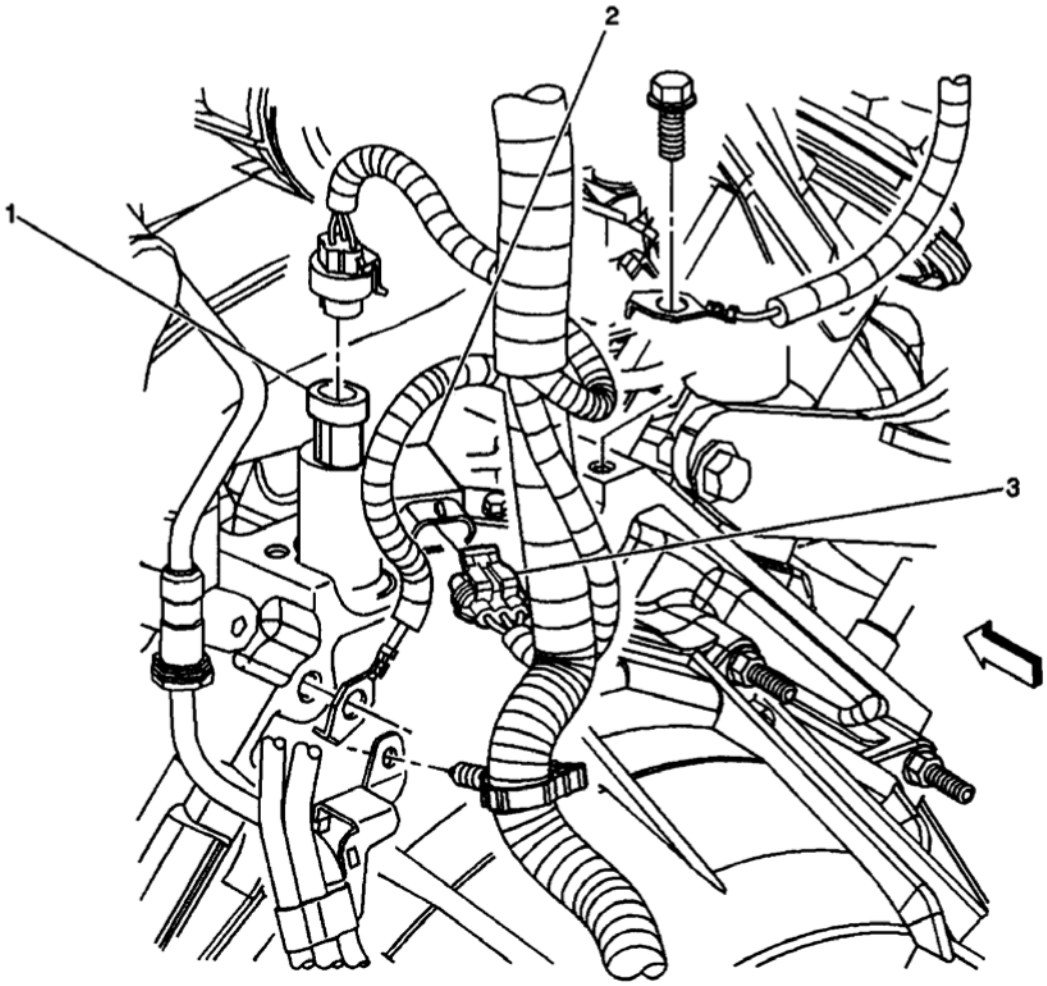

(1) Engine Oil Pressure (EOP) Sensor
(2) Camshaft Position (CMP) Sensor
(3) Camshaft Position (CMP) Sensor Connector

G00261683

Fig. 77: Top Rear Of Engine
Courtesy of GENERAL MOTORS CORP.

cardiagn.com

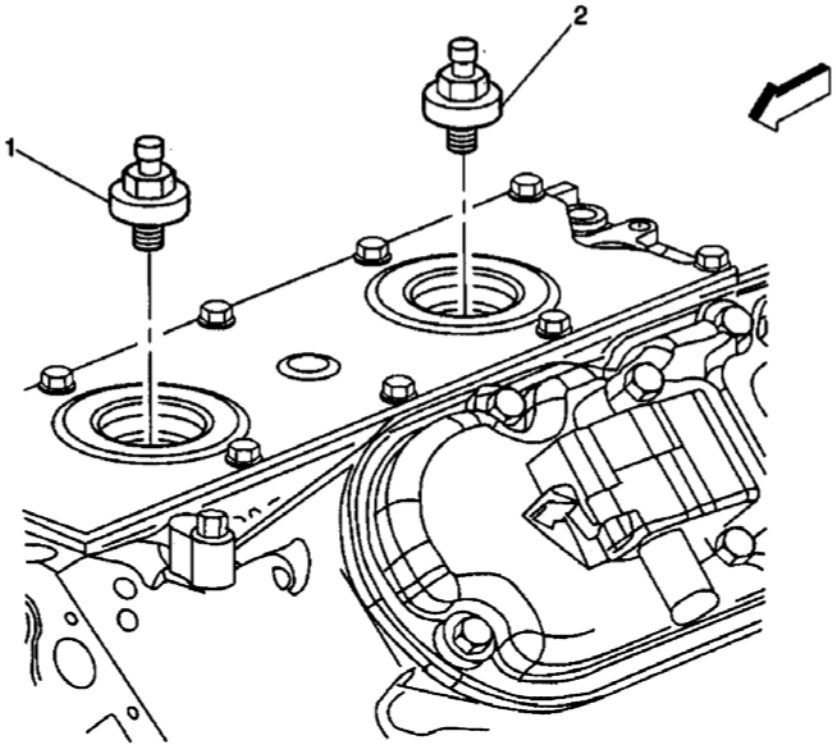

(1) Knock Sensor (KS) 1
(2) Knock Sensor (KS) 2

G00261684

Fig. 78: Below Intake Manifold
Courtesy of GENERAL MOTORS CORP.

cardiagn.com

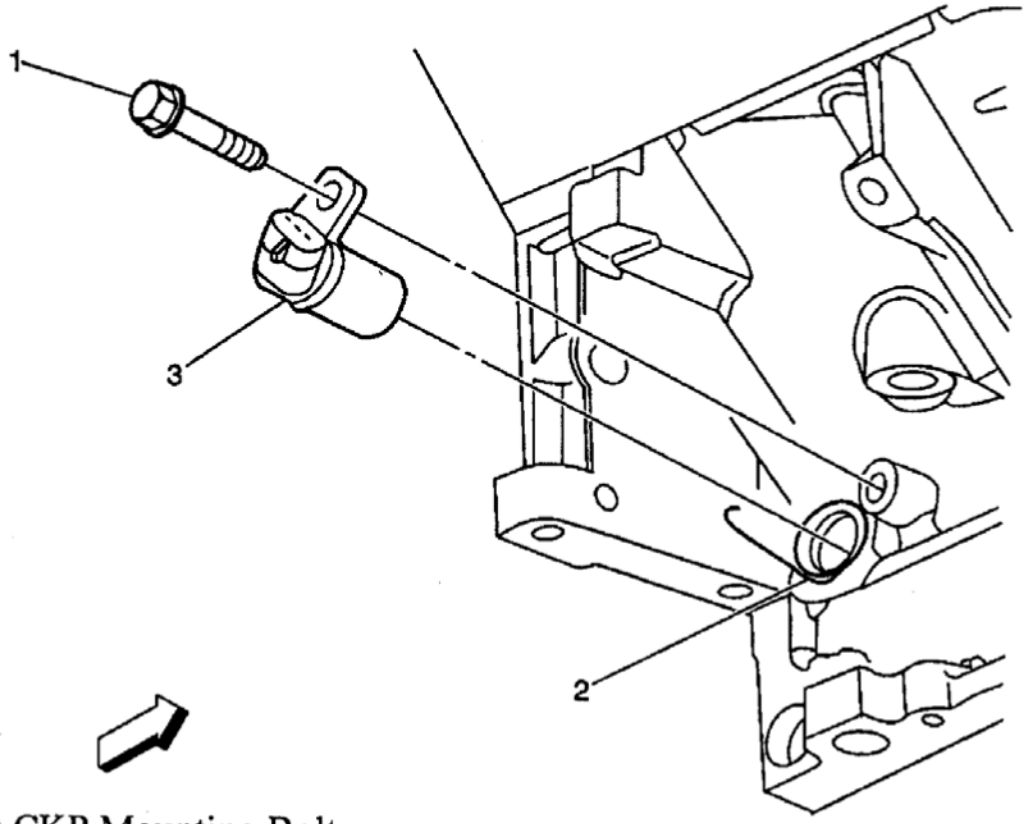

(1) CKP Mounting Bolt
(2) CKP Mounting Location
(3) Crankshaft Position (CKP) Sensor

G00261685

Fig. 79: Right Rear Of Engine
Courtesy of GENERAL MOTORS CORP.

cardiagn.com

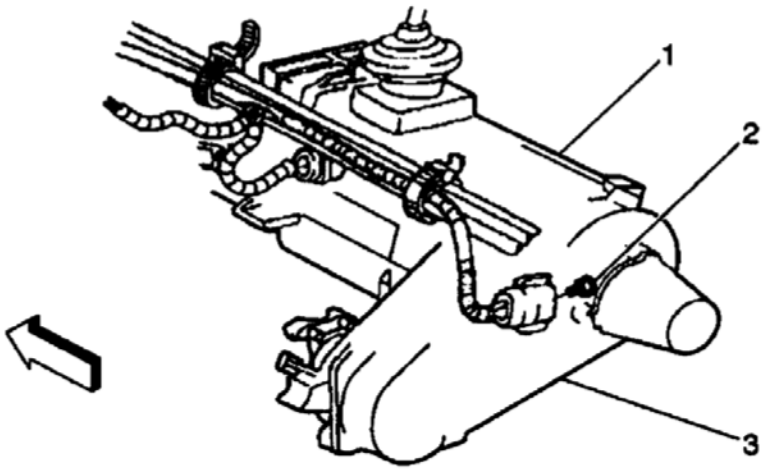

(1) Manual Transmission
(2) Vehicle Speed Sensor (VSS)
(3) Transfer Case (4WD)

G00261686

Fig. 80: Rear Of Transmission (4WD) (M/T)
Courtesy of GENERAL MOTORS CORP.

cardiagn.com

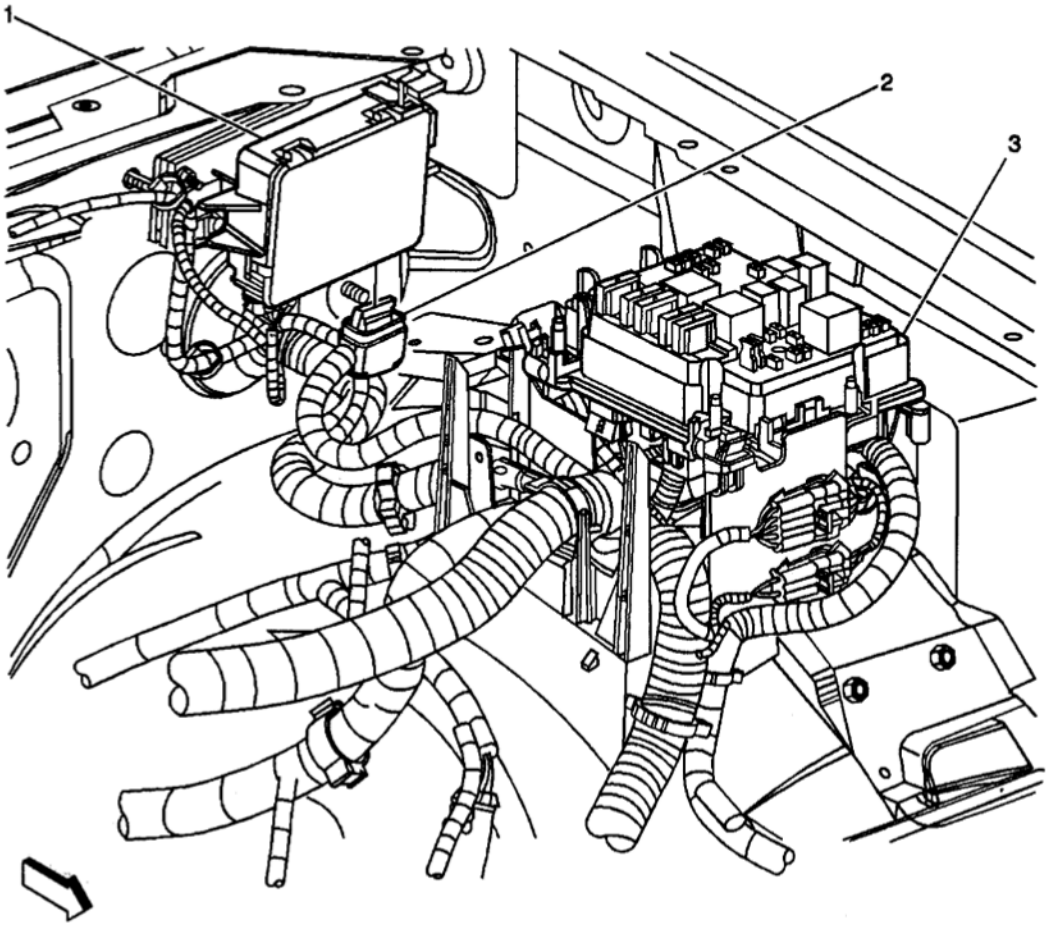

(1) Throttle Actuator Control (TAC) Module
(2) Throttle Actuator Control (TAC) Connector
(3) Fuse Block-Underhood

G00261687

Fig. 81: Left Side Of Engine Compartment
Courtesy of GENERAL MOTORS CORP.

cardiagn.com

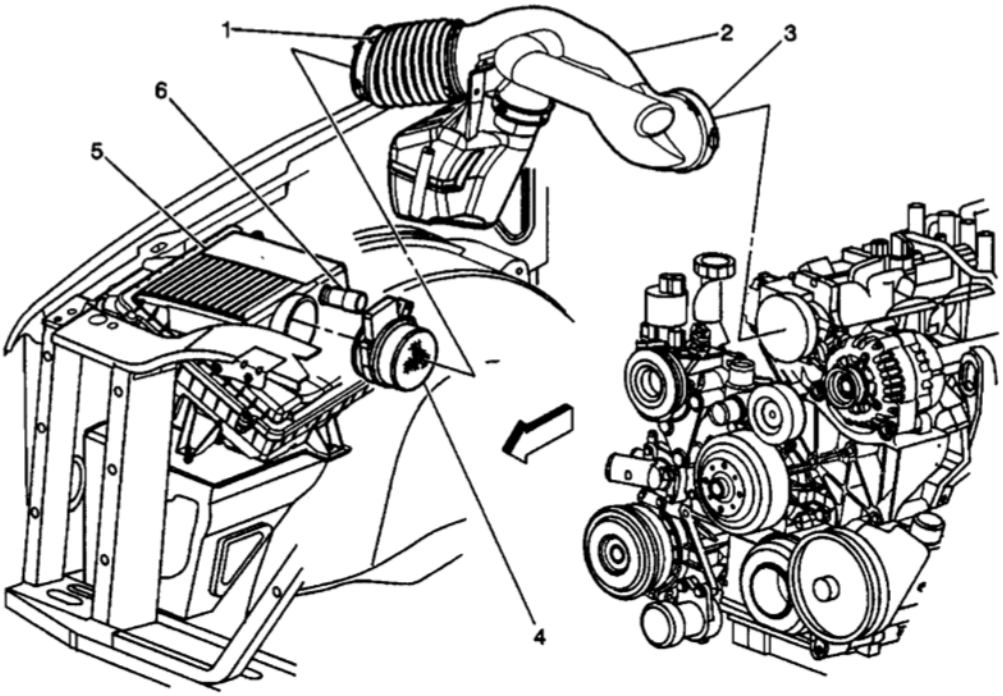

(1) Clamp
(2) Air Duct
(3) Clamp
(4) Intake Air Temperature (IAT)/Mass Air Flow (MAF) Sensor
(5) Air Cleaner Assembly
(6) Air Restriction Indicator

G00261688

Fig. 82: Right Front Of Engine Compartment
Courtesy of GENERAL MOTORS CORP.

cardiagn.com

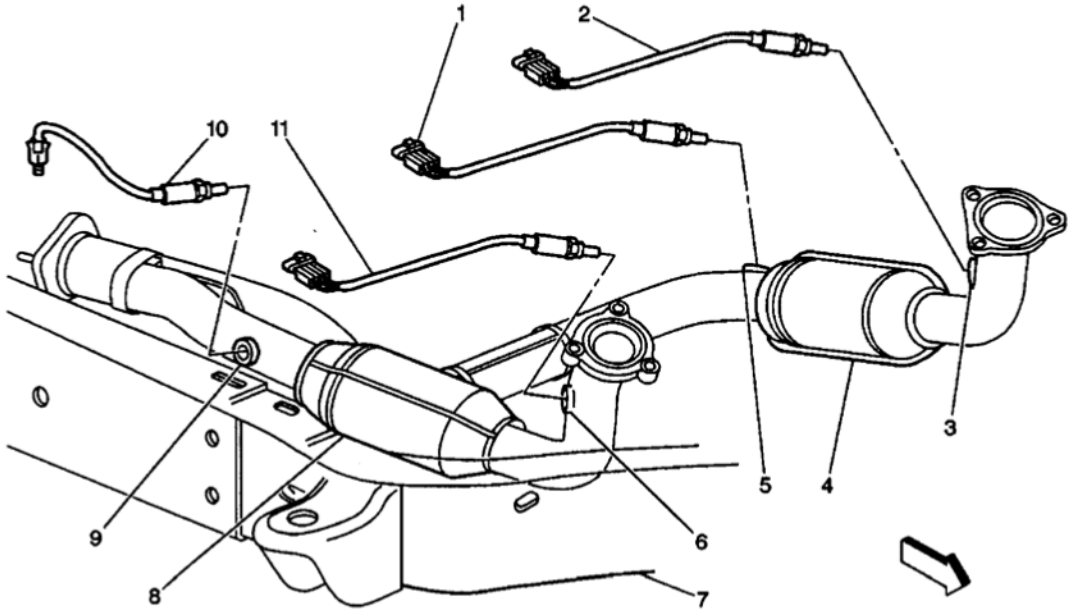

(1) Bank 1 Sensor 2 HO2S
(2) Bank 1 Sensor 1 HO2S
(3) Bank 1 Sensor 1 HO2S Threaded Boss
(4) Left Bank Catalytic Convertor
(5) Bank 1 Sensor 2 HO2S Threaded Boss
(6) Bank 2 Sensor 1 HO2S Threaded Boss
(7) Right Side Frame Rail
(8) Right Bank Catalytic Convertor
(9) Bank 2 Sensor 2 HO2S Threaded Boss
(10) Bank 2 Sensor 2 HO2S
(11) Bank 2 Sensor 1 HO2S

G00261689

Fig. 83: Exhaust System (4.8L & 5.3L)
Courtesy of GENERAL MOTORS CORP.

cardiagn.com

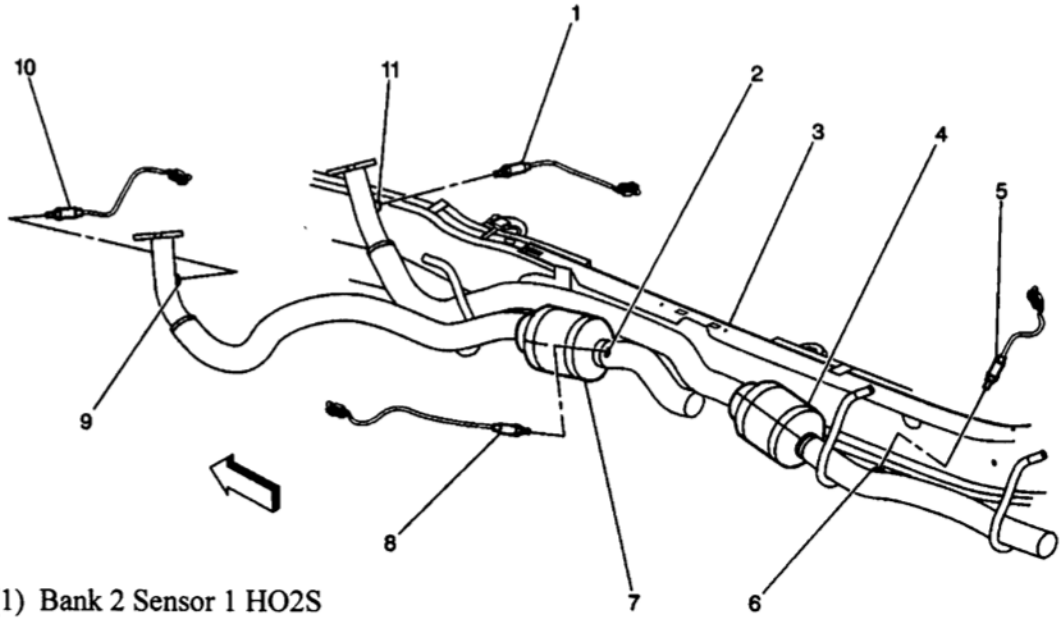

(1) Bank 2 Sensor 1 HO2S
(2) Bank 1 Sensor 2 HO2S Threaded Boss
(3) Right Side Frame Rail
(4) Right Bank Catalytic Convertor
(5) Bank 2 Sensor 2 HO2S
(6) Bank 2 Sensor 2 HO2S Threaded Boss
(7) Left Bank Catalytic Convertor
(8) Bank 1 Sensor 2 HO2S
(9) Bank 1 Sensor 1 HO2S Threaded Boss
(10) Bank 1 Sensor 1 HO2S
(11) Bank 2 Sensor 1 HO2S Threaded Boss

G00261690

Fig. 84: Exhaust System (6.0L)
Courtesy of GENERAL MOTORS CORP.

cardiagn.com

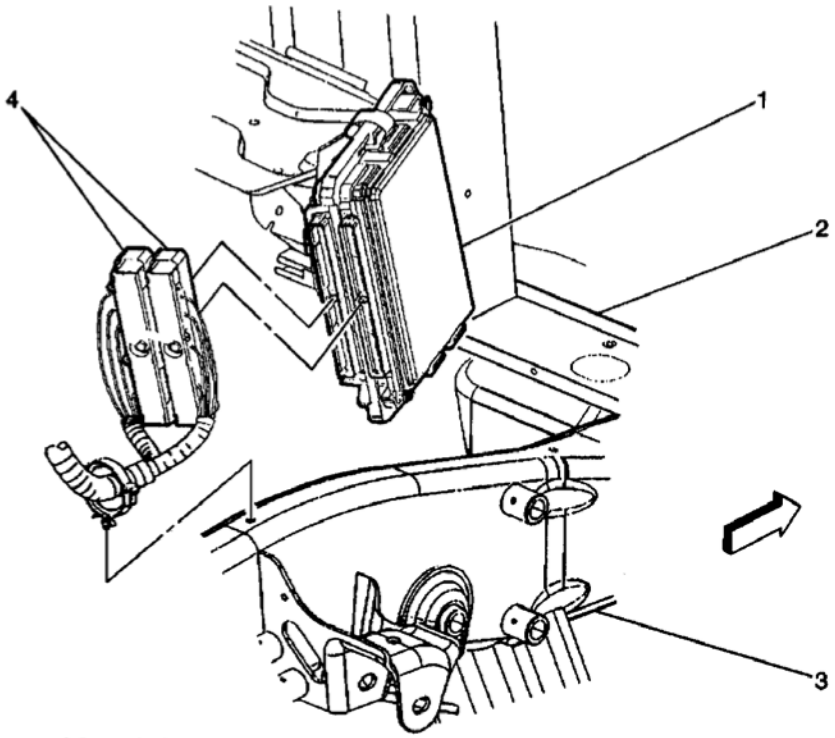

(1) Powertrain Control Module (PCM)
(2) Radiator Support
(3) Left Frame Rail
(4) PCM Wire Harness Connectors

G00261691

Fig. 85: Left Front Engine Compartment
Courtesy of GENERAL MOTORS CORP.

cardiagn.com

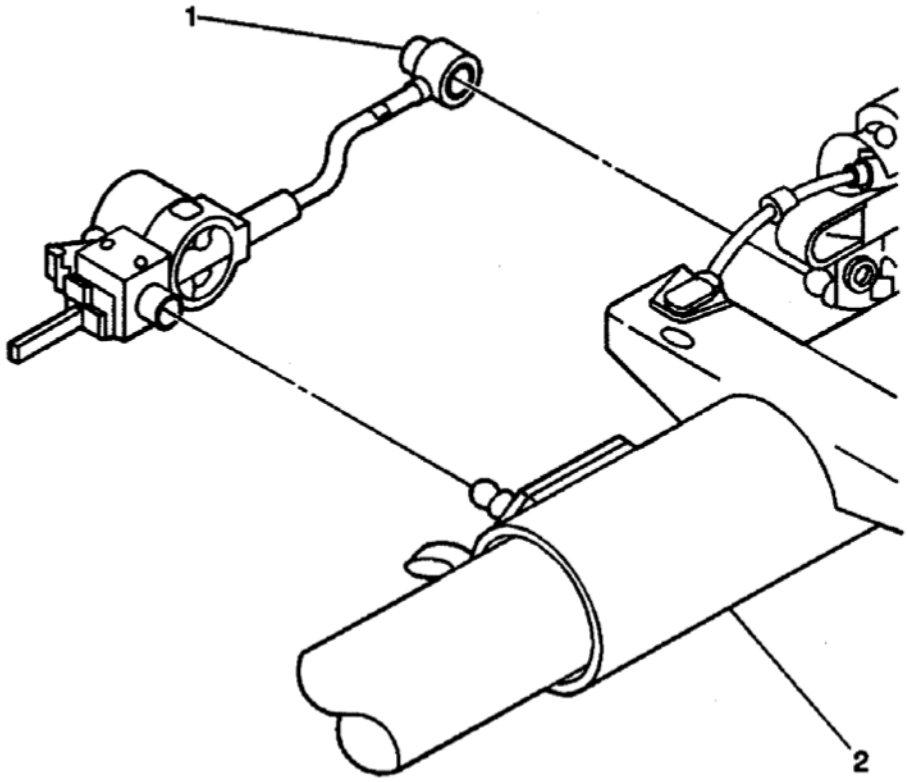

(1) A/T Shift Lock Control Actuator
(2) Steering Column

G00261692

Fig. 86: Steering Column
Courtesy of GENERAL MOTORS CORP.

cardiagn.com

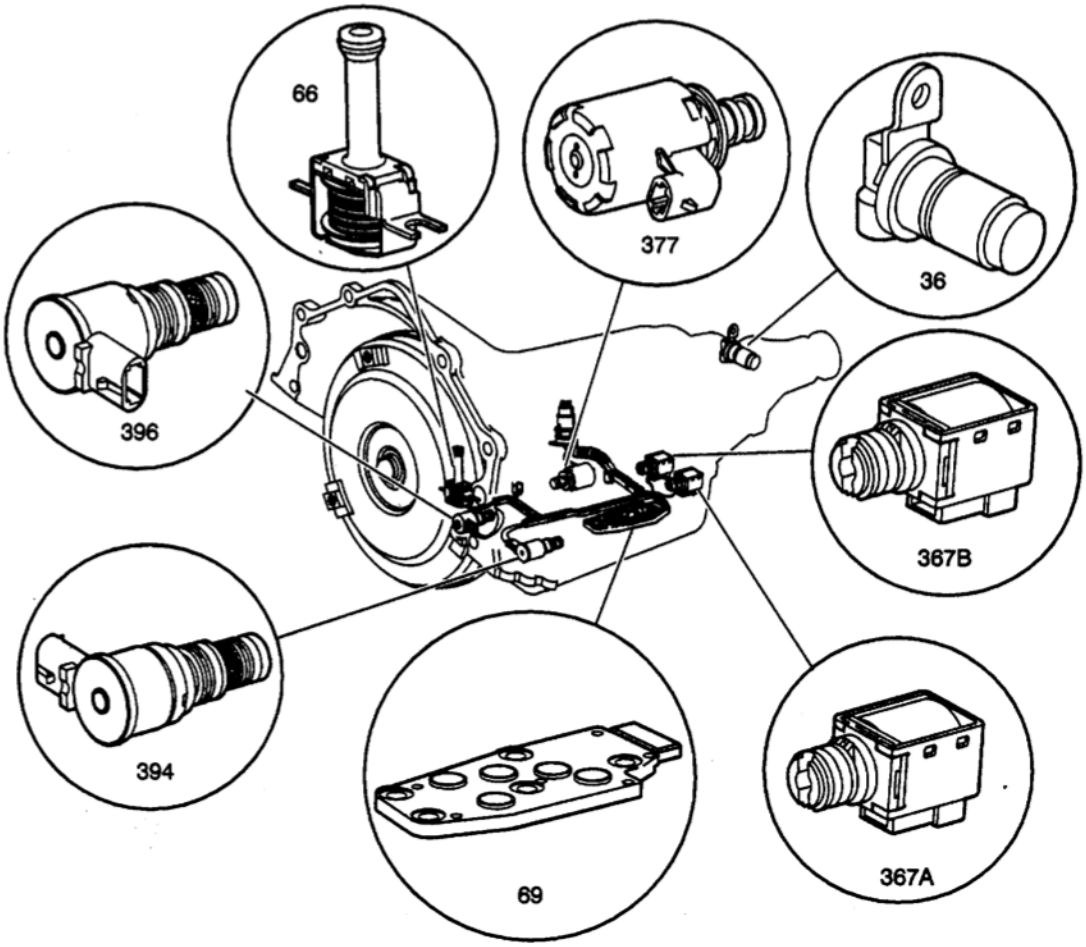

(36) Vehicle Speed Sensor (VSS)
(66) Torque Converter Clutch (TCC) Solenoid Valve
(69) Automatic Transmission Fluid Pressure (TFP) Manual Valve Position Switch
(367a) 1-2 Shift Solenoid (SS) Valve
(367b) 2-3 Shift Solenoid (SS) Valve
(377) Pressure Control (PC) Solenoid Valve
(394) 3-2 Shift Solenoid (SS) Valve Assembly
(396) Torque Converter Clutch Pulse Width Modulation (TCC PWM) Solenoid Valve

G00261693

Fig. 87: Transmission Components
Courtesy of GENERAL MOTORS CORP.

cardiagn.com

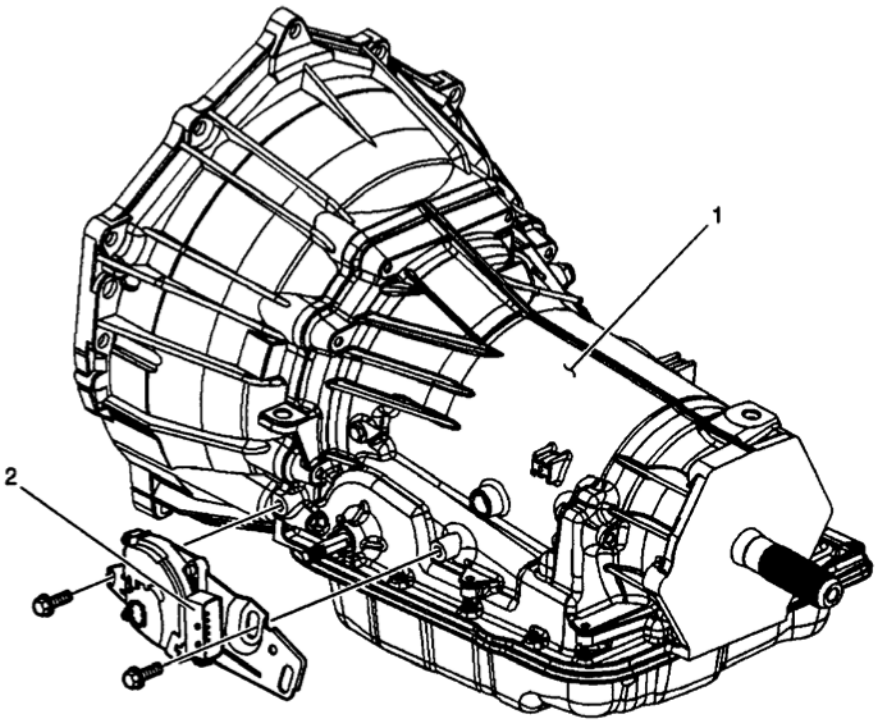

(1) Automatic Transmission 4L60-E
(2) PNP Switch

G00261694

Fig. 88: Left Side Of Transmission
Courtesy of GENERAL MOTORS CORP.

cardiagn.com

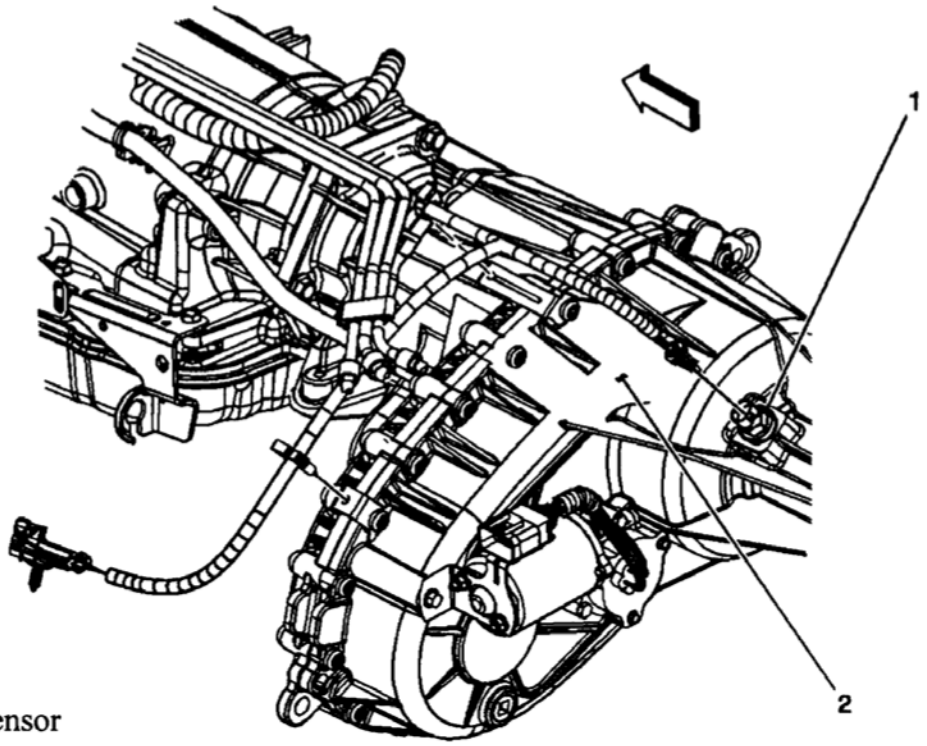

(1) VSS Sensor
(2) Transfer Case
G00261696

Fig. 89: Transfer Case
Courtesy of GENERAL MOTORS CORP.

cardiagn.com

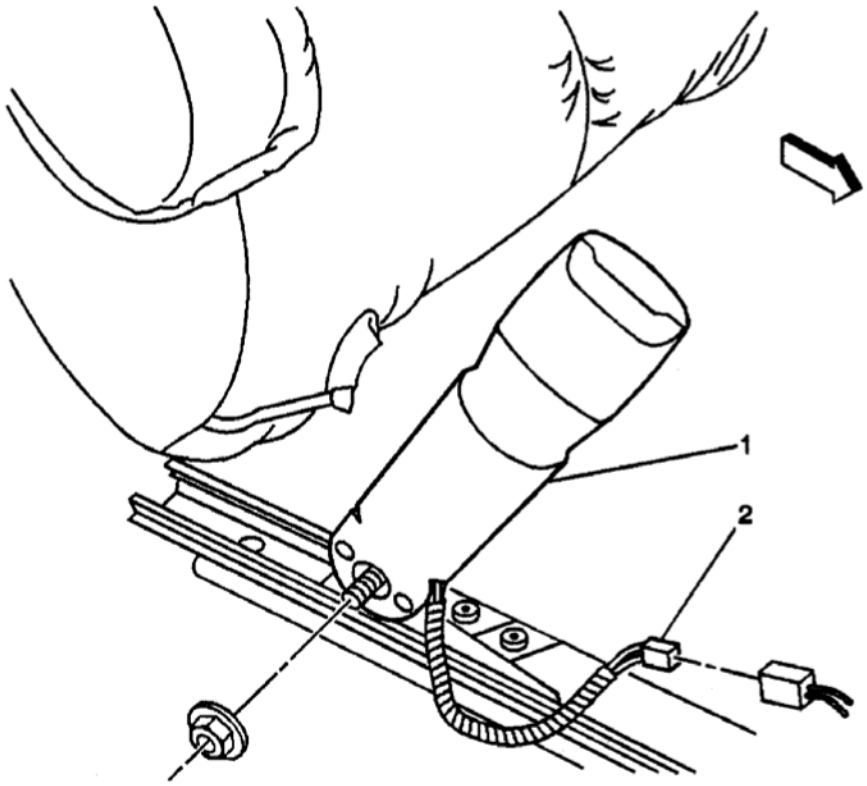

(1) Seat Belt Buckle

(2) Seat Belt Switch Connector

G00261699

Fig. 90: Driver Seat Belt
Courtesy of GENERAL MOTORS CORP.

cardiagn.com

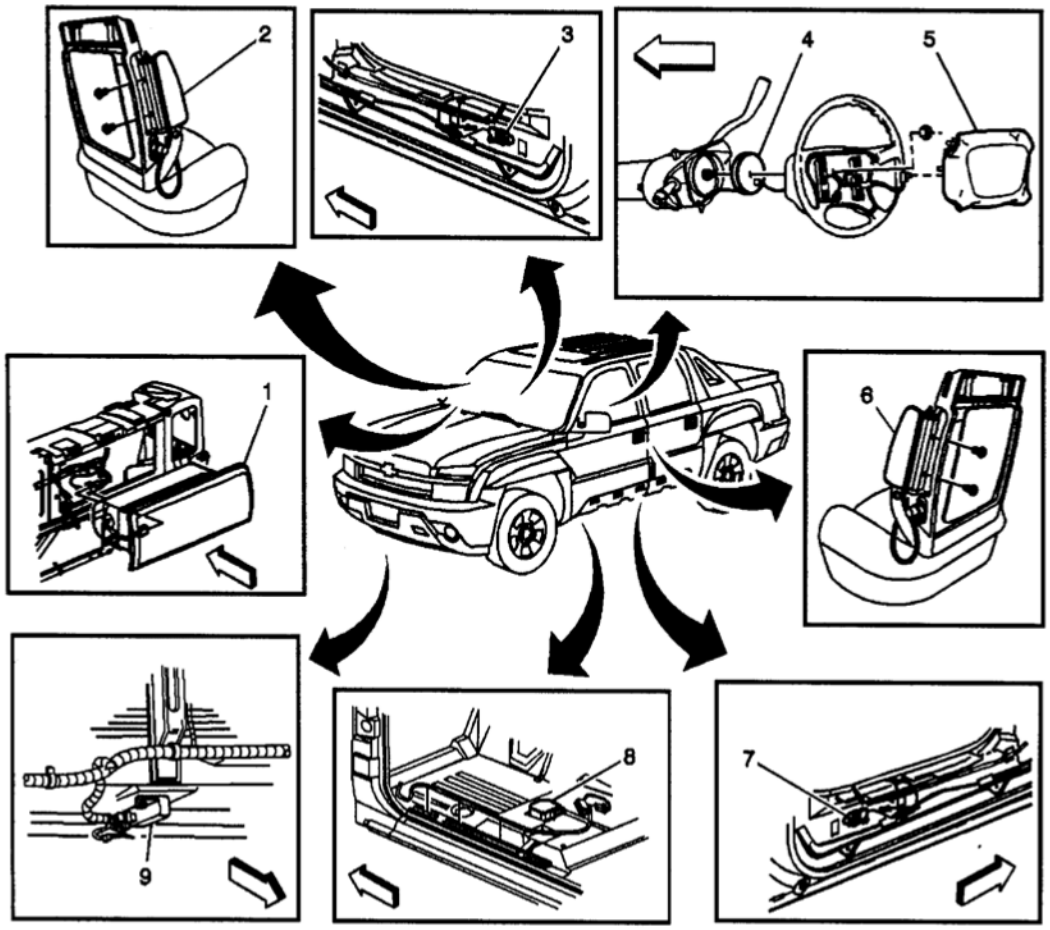

(1) Inflatable Restraint I/P Module
(2) Inflatable Restraint Side Impact Module - Right
(3) Inflatable Restraint Side Impact Sensor (SIS) - Right
(4) Inflatable Restraint Steering Wheel Module Coil
(5) Inflatable Restraint Steering Wheel Module
(6) Inflatable Restraint Side Impact Module - Left
(7) Inflatable Restraint Side Impact Sensor (SIS) - Left
(8) Inflatable Restraint Sensing and Diagnostic Module (SDM)
(9) Inflatable Restraint Front End Discriminating Sensor

G00261700

Fig. 91: SIR Components
Courtesy of GENERAL MOTORS CORP.

cardiagn.com

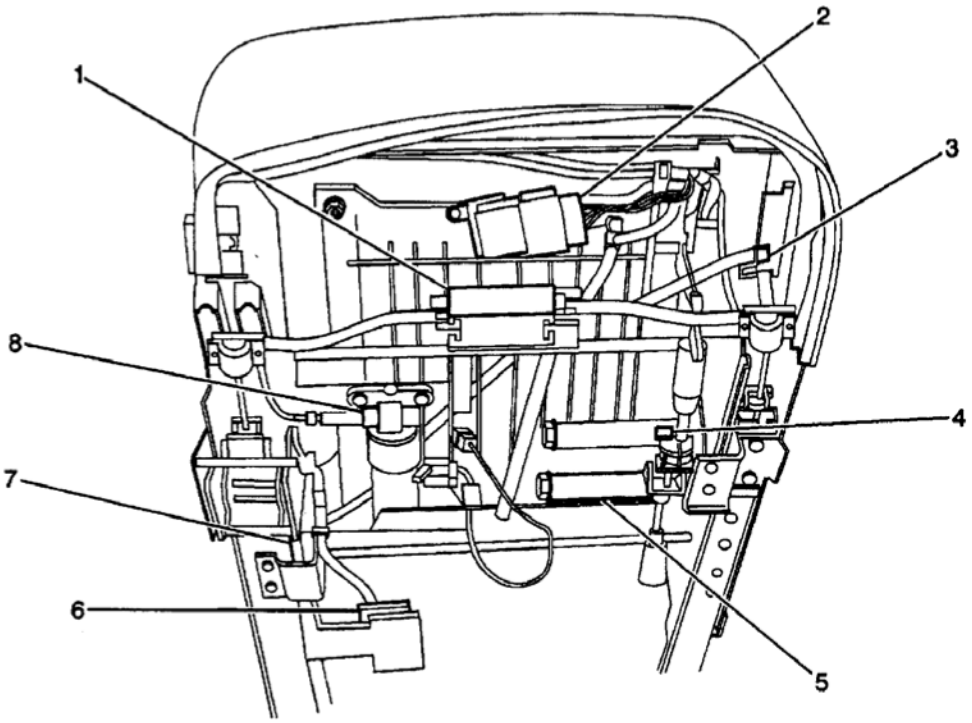

(1) Seat Horizontal Motor - Front Passenger (AN3)
(2) Inflatable Restraint Passenger Presence System (PPS) Module
(3) Inflatable Restraint Passenger Presence System (PPS) Sensor
(4) Seat Front Vertical Motor - Front Passenger (AN3)
(5) Seat Rear Vertical Motor - Front Passenger (AN3)
(6) C399
(7) Inflatable Restraint Seat Position Switch - Right
(8) Seat Recliner Motor - Front Passenger (AN3)

G00261701

Fig. 92: Below Right Front Seat
Courtesy of GENERAL MOTORS CORP.

cardiagn.com

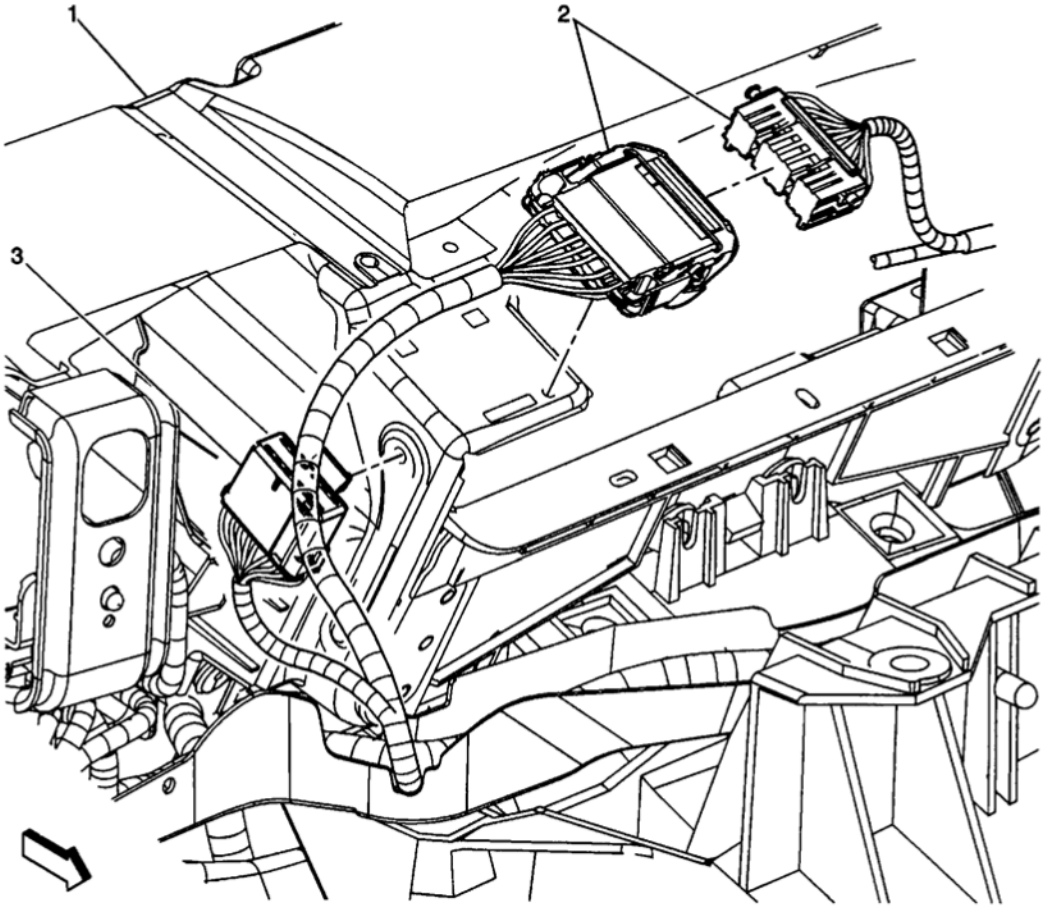

(1) Instrument Panel
(2) C202
(3) SP250

G00261705

Fig. 93: Rear Of Dash
Courtesy of GENERAL MOTORS CORP.

cardiagn.com

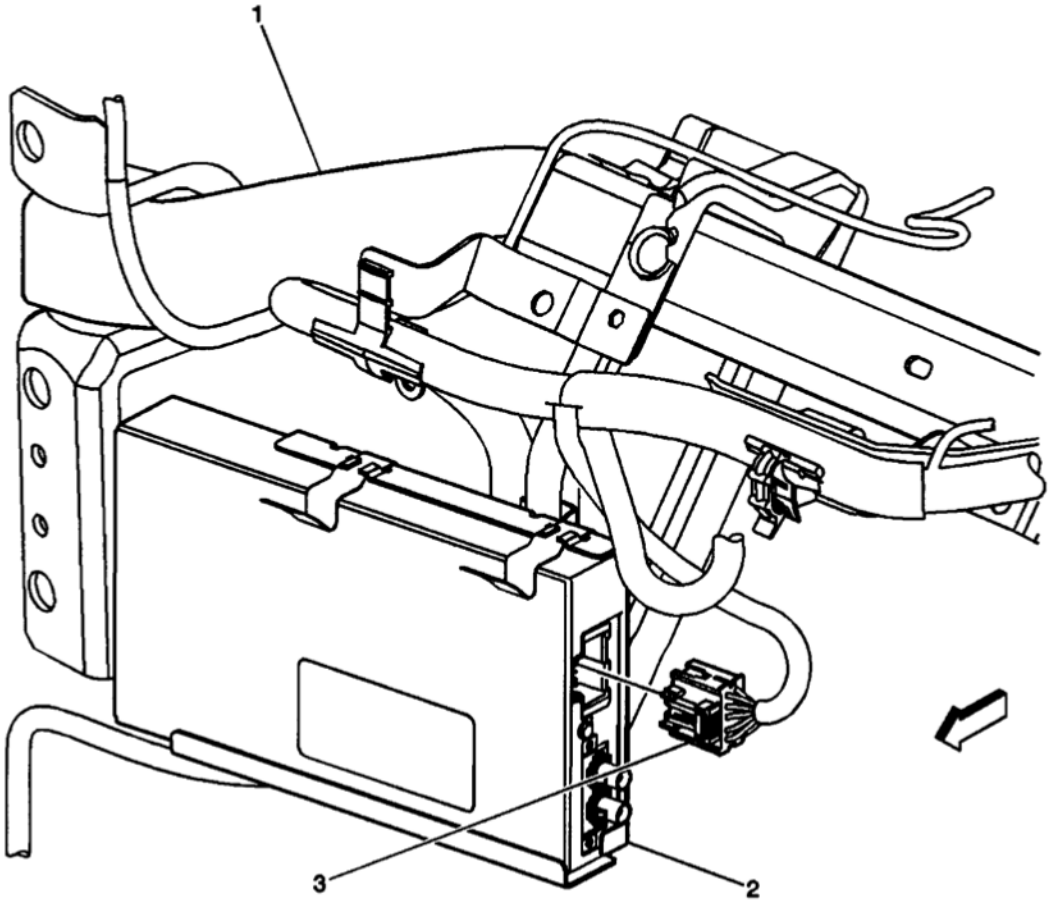

(1) Right Side of Instrument Panel
(2) Digital Radio Receiver
(3) Digital Radio Receiver Connector

G00261708

Fig. 94: Right Side Of Dash
Courtesy of GENERAL MOTORS CORP.

cardiagn.com

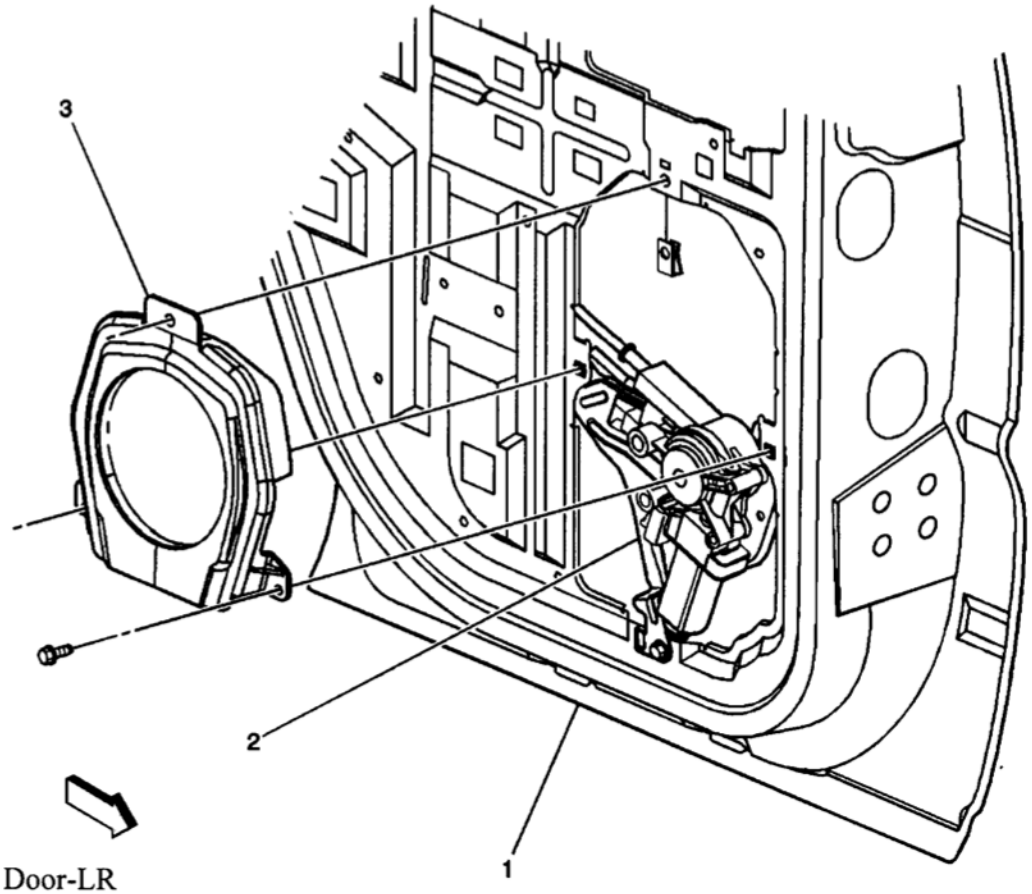

(1) Door-LR
(2) Window Motor-LR
(3) Speaker-LR

G00261710

Fig. 95: Left Rear Door (Right Rear Similar)
Courtesy of GENERAL MOTORS CORP.

cardiagn.com

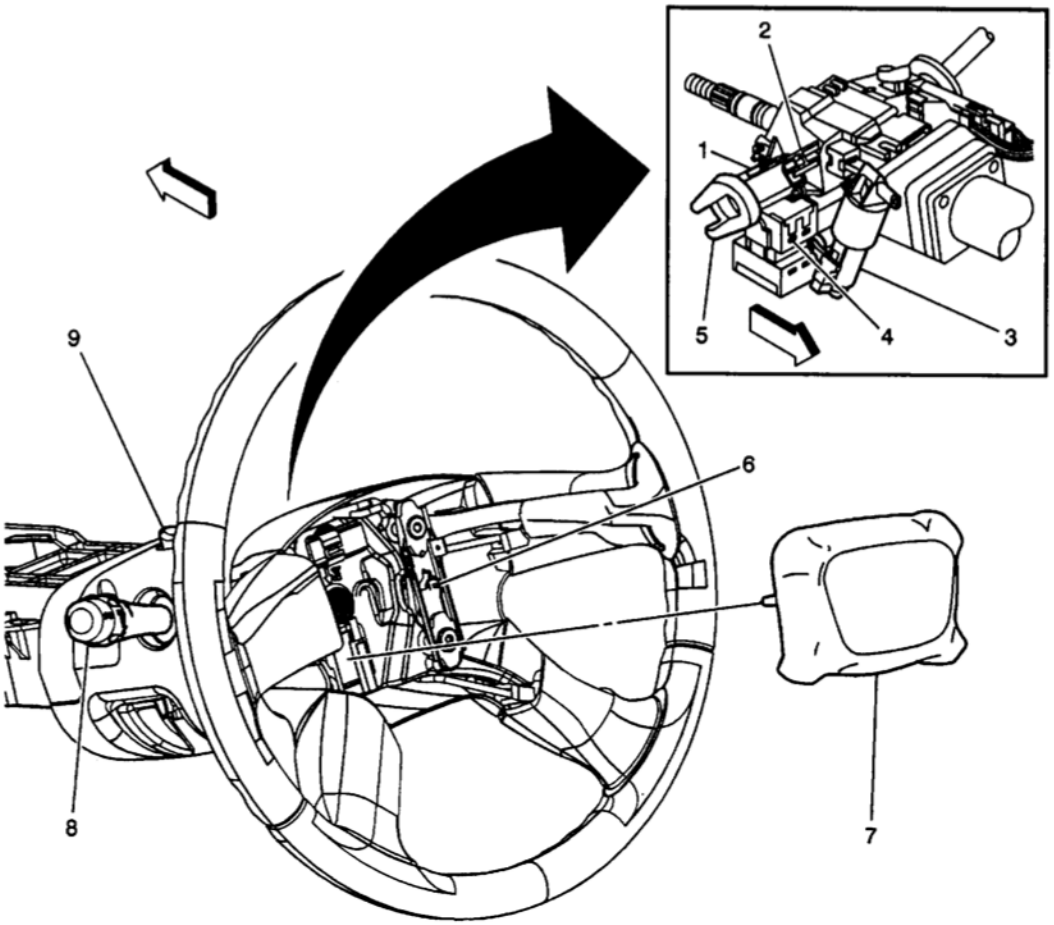

(1) Passlock Sensor
(2) Ignition Key Alarm Switch
(3) Ignition Lock Cylinder Control Actuator
(4) Ignition Switch
(5) Ignition Key Cylinder
(6) Horn Contact
(7) Inflatable Restraint Steering Wheel Module
(8) Turn Signal/Multifunction Switch
(9) Hazard Switch

G00261712

Fig. 96: Upper Steering Column
Courtesy of GENERAL MOTORS CORP.

cardiagn.com

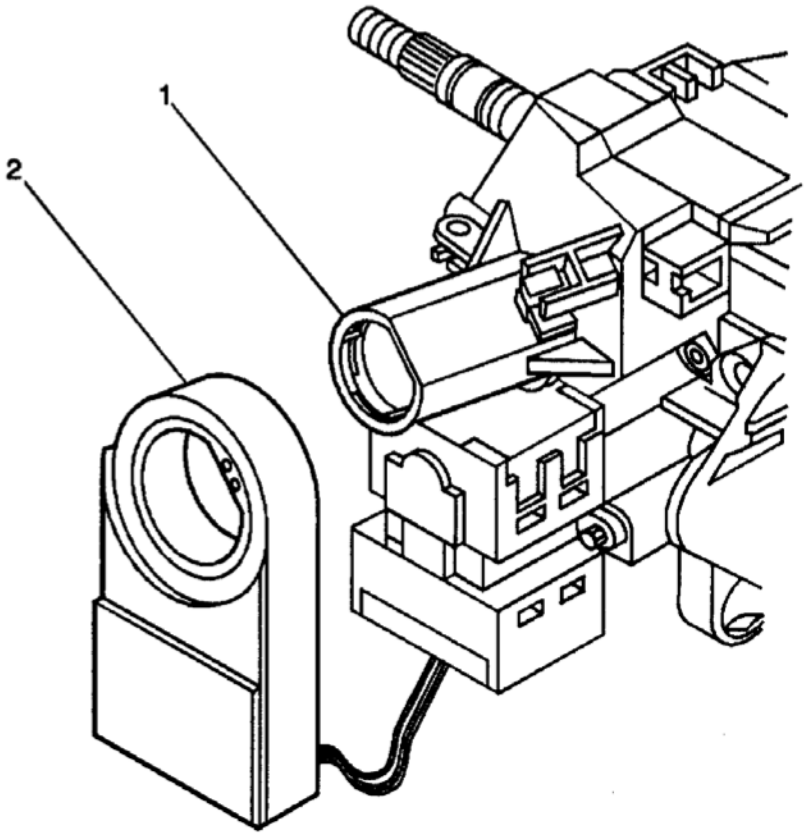

(1) Lock Cylinder Housing
(2) Theft Deterrent Control Module

G00261713

Fig. 97: Theft Deterrent Control Module
Courtesy of GENERAL MOTORS CORP.

cardiagn.com

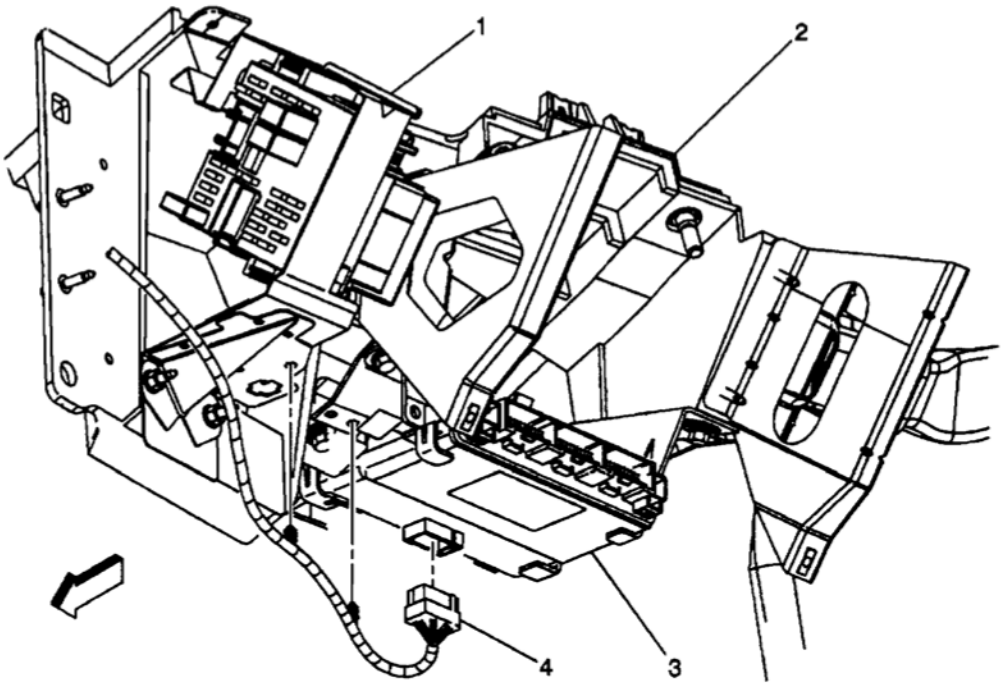

(1) Fuse Block - I/P
(2) Instrument Panel
(3) Body Control Module (BCM)
(4) Body Harness to Body Control Module (BCM)

G00261714

Fig. 98: Below Steering Column
Courtesy of GENERAL MOTORS CORP.

cardiagn.com

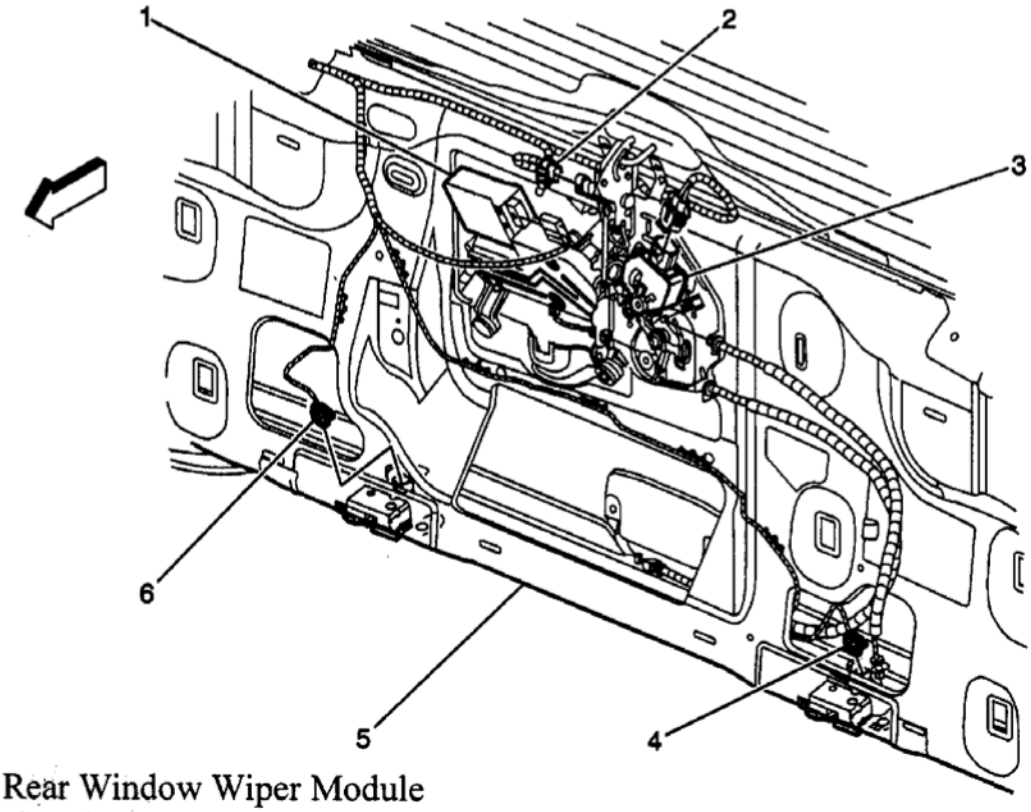

(1) Rear Window Wiper Module
(2) Lift Glass Ajar Switch
(3) Door Lock Actuator - Lift Gate
(4) Lift Gate Ajar Switch - Left Connector
(5) Lift Gate
(6) Lift Gate Ajar Switch - Right Connector

G00261715

Fig. 99: Lift Gate
Courtesy of GENERAL MOTORS CORP.

cardiagn.com

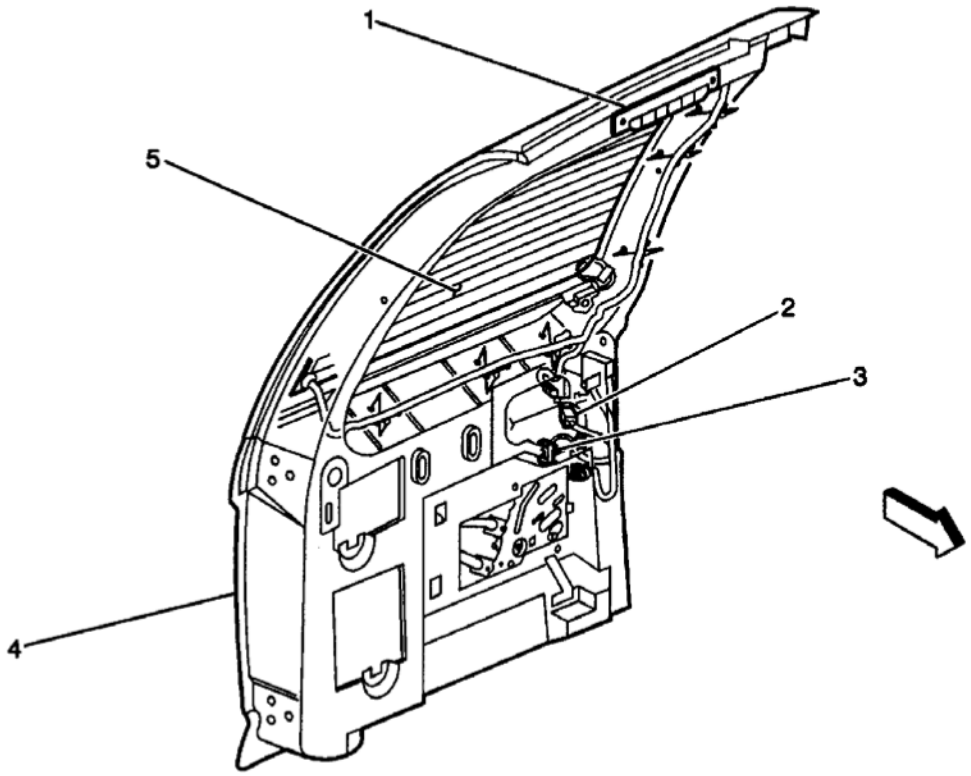

(1) Door Contact Plate - Right Cargo (Door)
(2) Door Ajar Switch - Right Cargo
(3) Door Lock Actuator - Cargo
(4) Right Cargo Door
(5) Rear Window Defogger Grid - Right Cargo

G00261717

Fig. 100: Right Cargo Door
Courtesy of GENERAL MOTORS CORP.

cardiagn.com

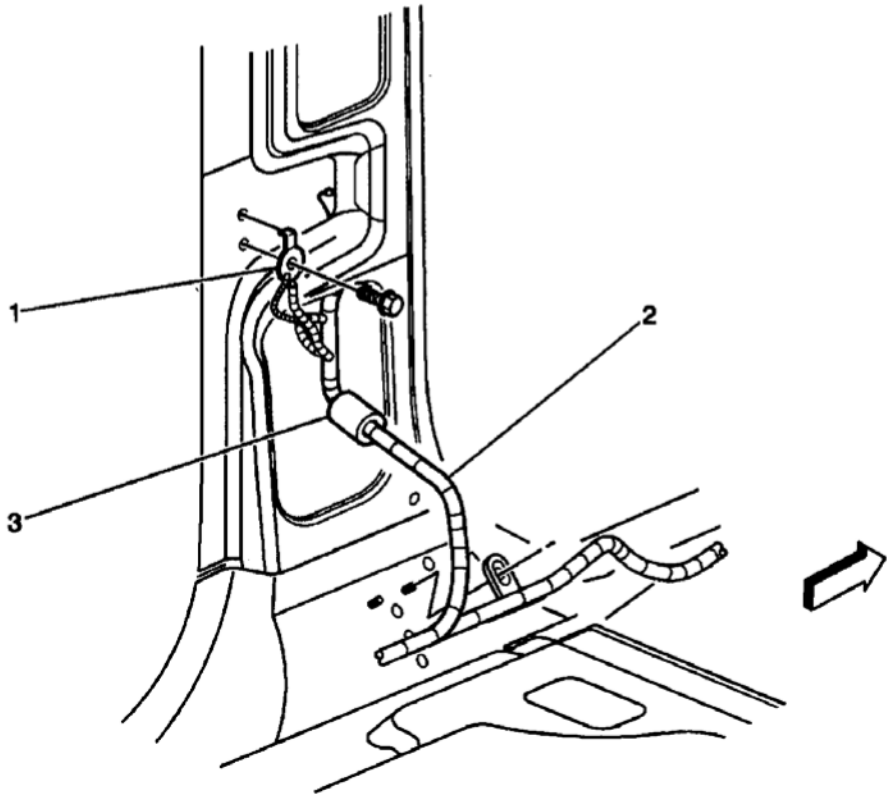

(1) G305
(2) Body Harness
(3) Splice Pack - SP206

G00261719

Fig. 101: Left "B" Pillar
Courtesy of GENERAL MOTORS CORP.

cardiagn.com

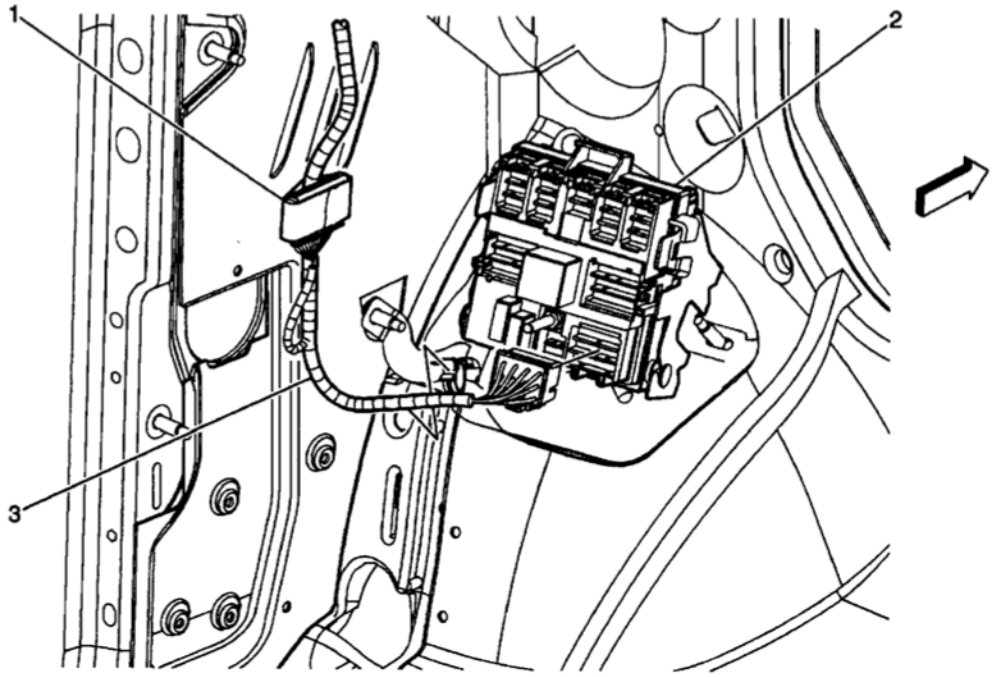

(1) Splice Pack - SP207
(2) Relay Block - I/P
(3) I/P Extension Harness

G00261720

Fig. 102: Behind Instrument Panel Fuse Block
Courtesy of GENERAL MOTORS CORP.

cardiagn.com

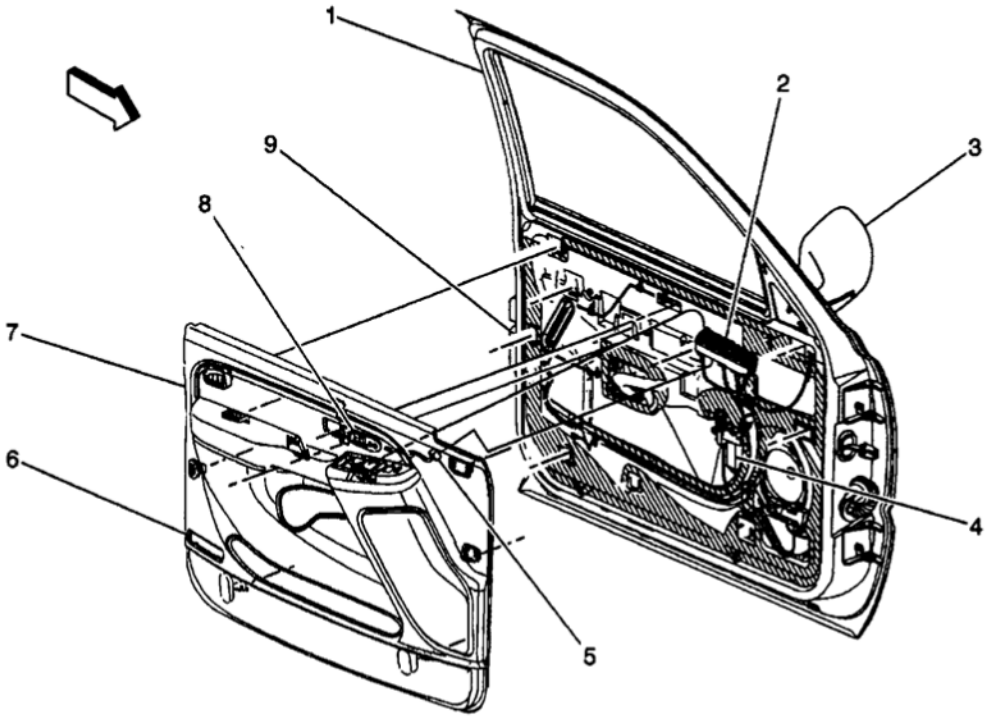

(1) Driver Door
(2) Driver Door Module (DDM)
(3) Outside Rearview Mirror - Driver
(4) Window Motor - Driver
(5) Memory/Heated Seat Switch Connector
(6) Door Courtesy Lamp - Left Front
(7) Driver Door Panel
(8) Memory/Heated Seat Switch
(9) Mini Wedge (Door Jamb Switch) - Driver

G00261721

Fig. 103: Driver Door
Courtesy of GENERAL MOTORS CORP.

cardiagn.com

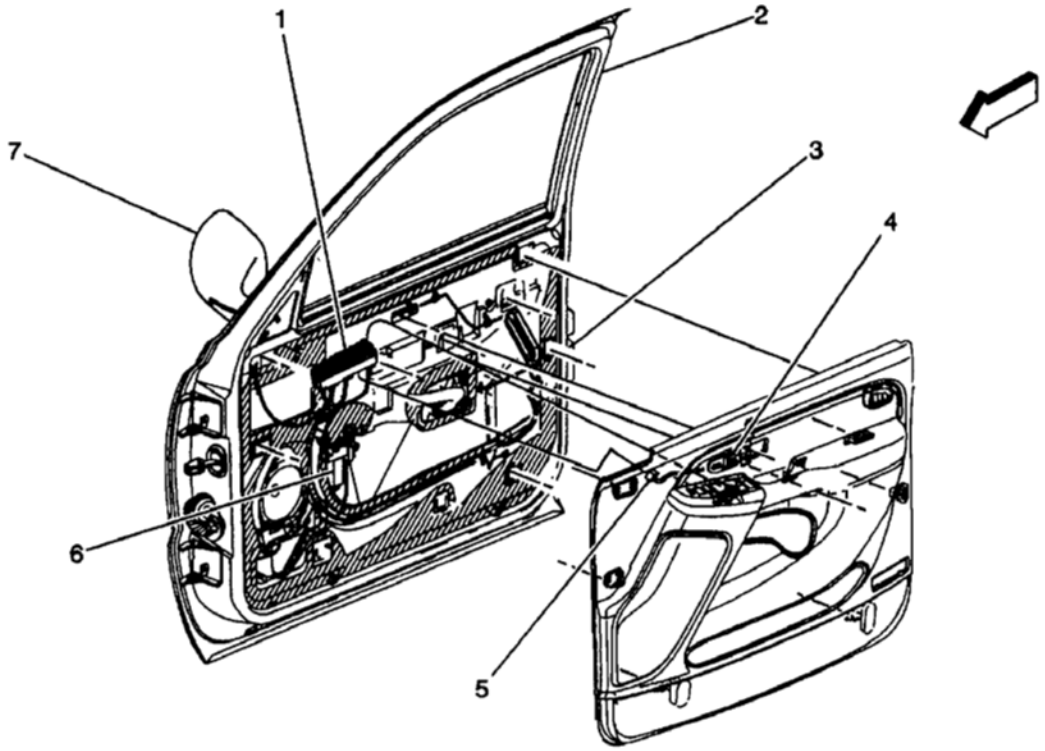

(1) Front Passenger Door Module (FPDM)
(2) Front Passenger Door
(3) Mini Wedge (Door Jamb Switch) - Front Passenger
(4) Heated Seat Switch - Front Passenger
(5) Heated Seat Switch Connector
(6) Window Motor - Front Passenger
(7) Outside Rearview Mirror - Front Passenger

G00261722

Fig. 104: Right Front Door
Courtesy of GENERAL MOTORS CORP.

cardiagn.com

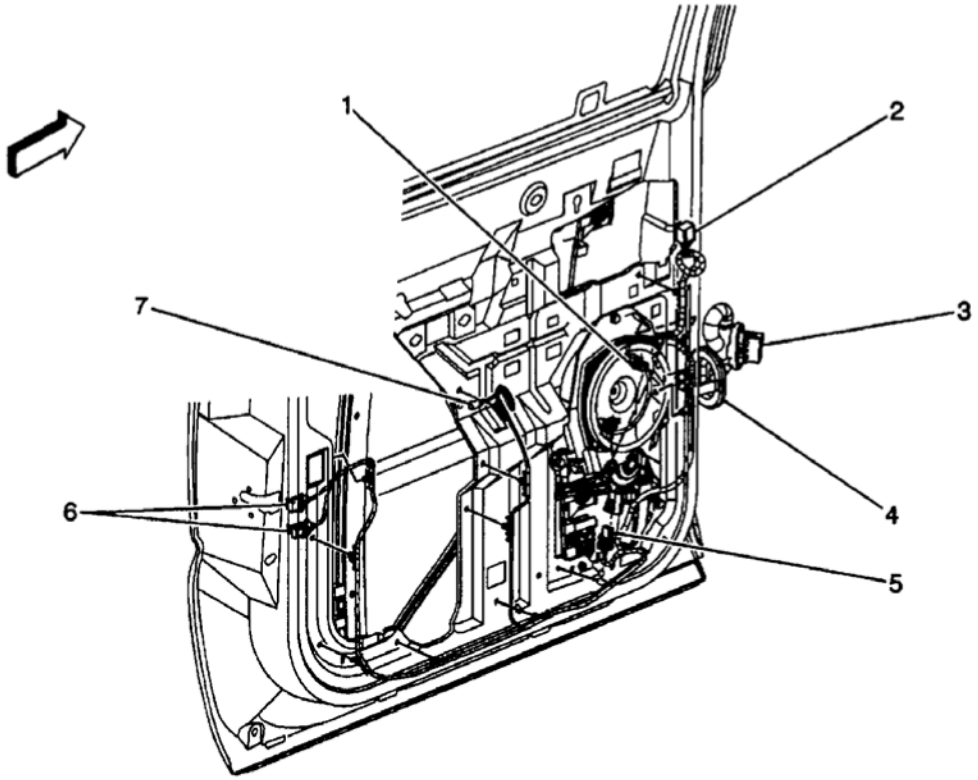

(1) Speaker - LR Door
(2) Window Switch Connector - LR
(3) C310
(4) P700
(5) Window Motor - LR
(6) Mini Wedge (Door Jamb Switch) Connectors - LR
(7) Door Courtesy Lamp Connector - LR

G00261723

Fig. 105: Left Rear Door
Courtesy of GENERAL MOTORS CORP.

cardiagn.com

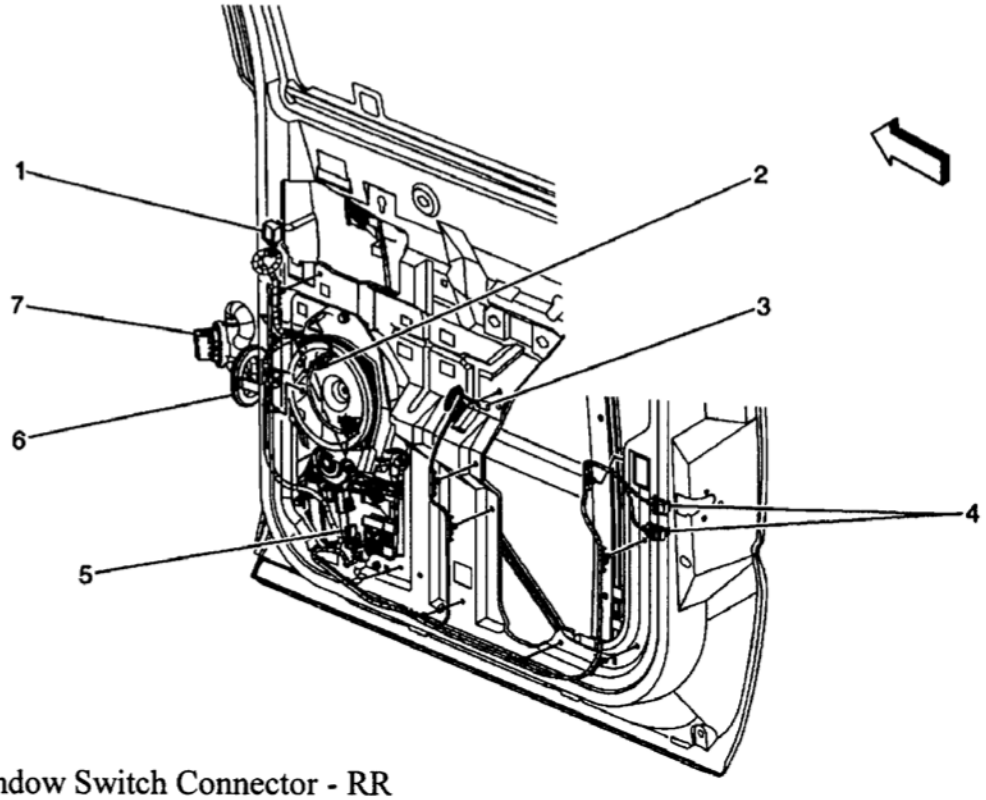

(1) Window Switch Connector - RR
(2) Speaker - RR Door
(3) Door Courtesy Lamp Connector - RR
(4) Mini Wedge (Door Jamb Switch) Connectors - RR
(5) Window Motor - RR
(6) P800
(7) C396

G00261724

Fig. 106: Right Rear Door
Courtesy of GENERAL MOTORS CORP.

cardiagn.com

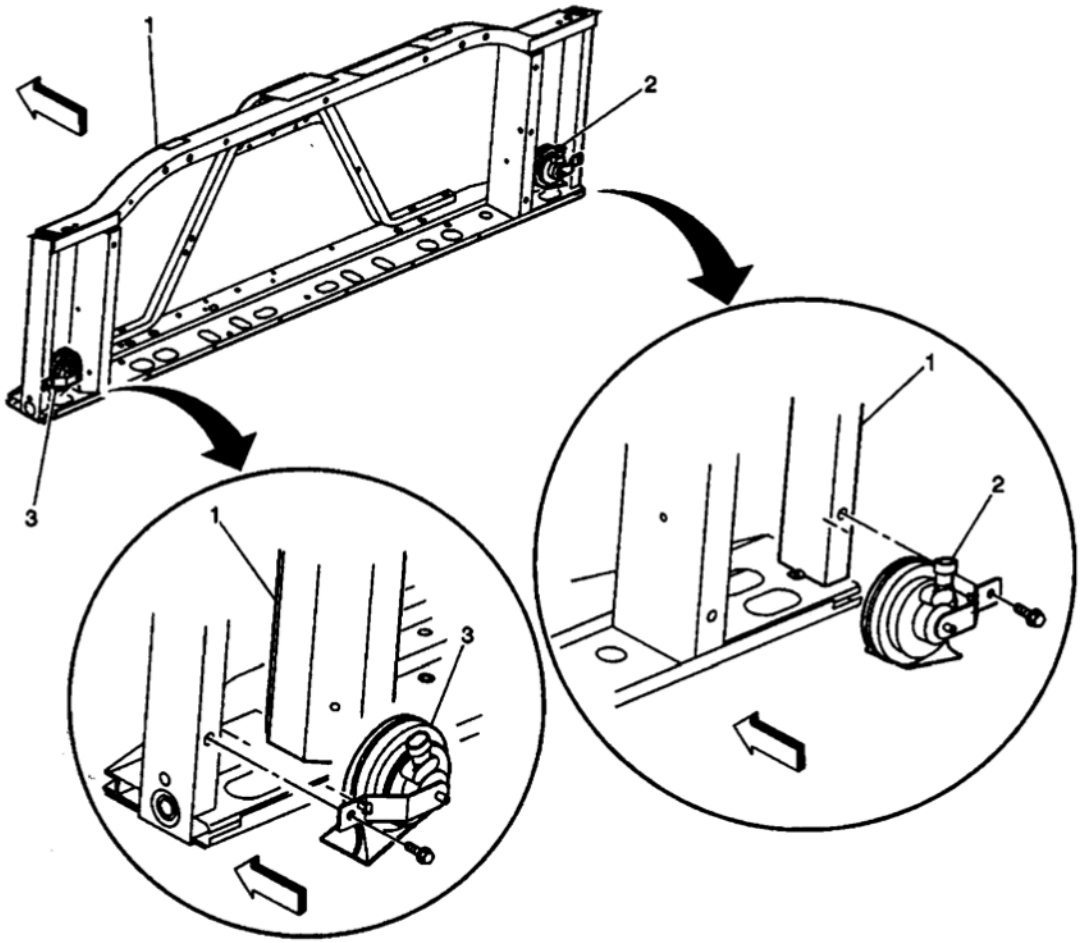

(1) Radiator Support
(1) Radiator Support
(1) Radiator Support
(2) Horn-High Note (Uplevel)
(2) Horn-High Note (Uplevel)
(3) Horn-Low Note
(3) Horn-Low Note

G00261726

Fig. 107: Horns
Courtesy of GENERAL MOTORS CORP.

cardiagn.com

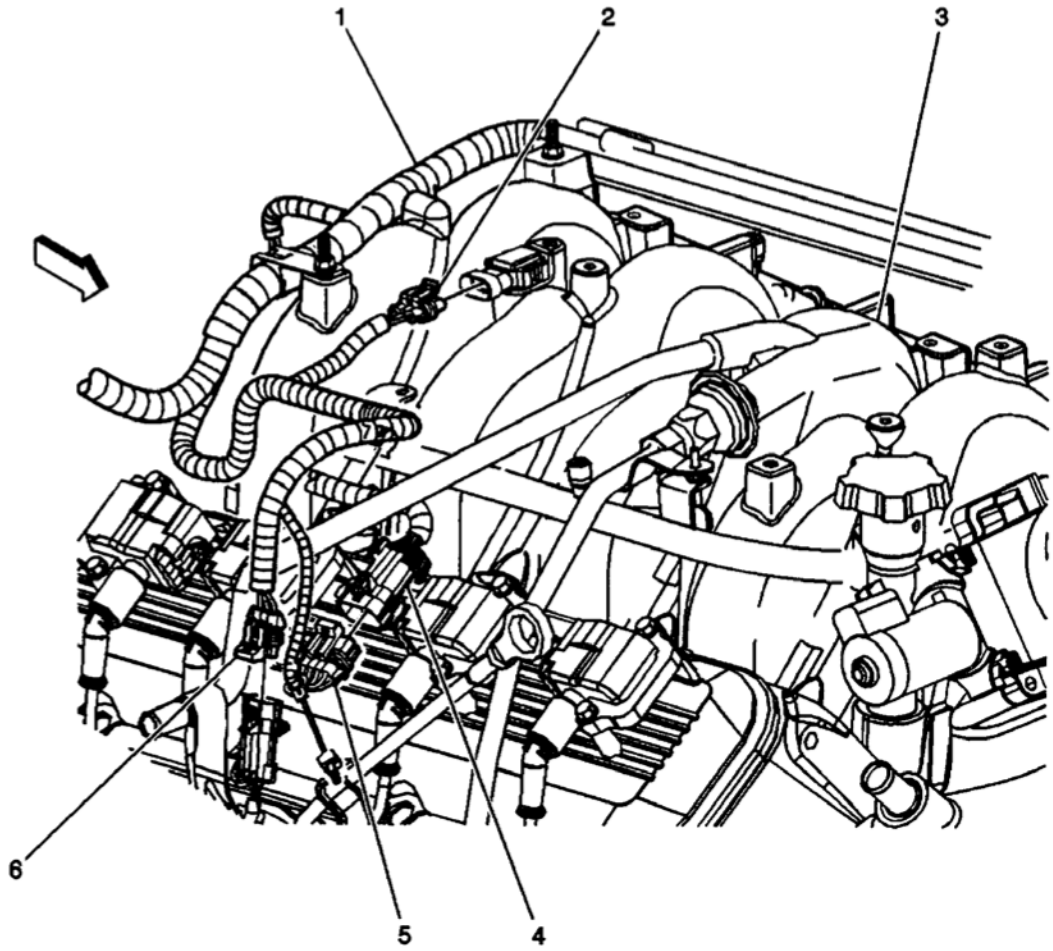

(1) Engine Harness
(2) Manifold Absolute Pressure (MAP) Sensor
(3) Intake Manifold
(4) Ignition Coil Connector-Harness Side
(5) Ignition Coil Connector-Component Side
(6) Engine Coolant Temperature (ECT) Sensor Connector

G00261728

Fig. 108: Upper Right Side Of Engine (8.1L)
Courtesy of GENERAL MOTORS CORP.

cardiagn.com

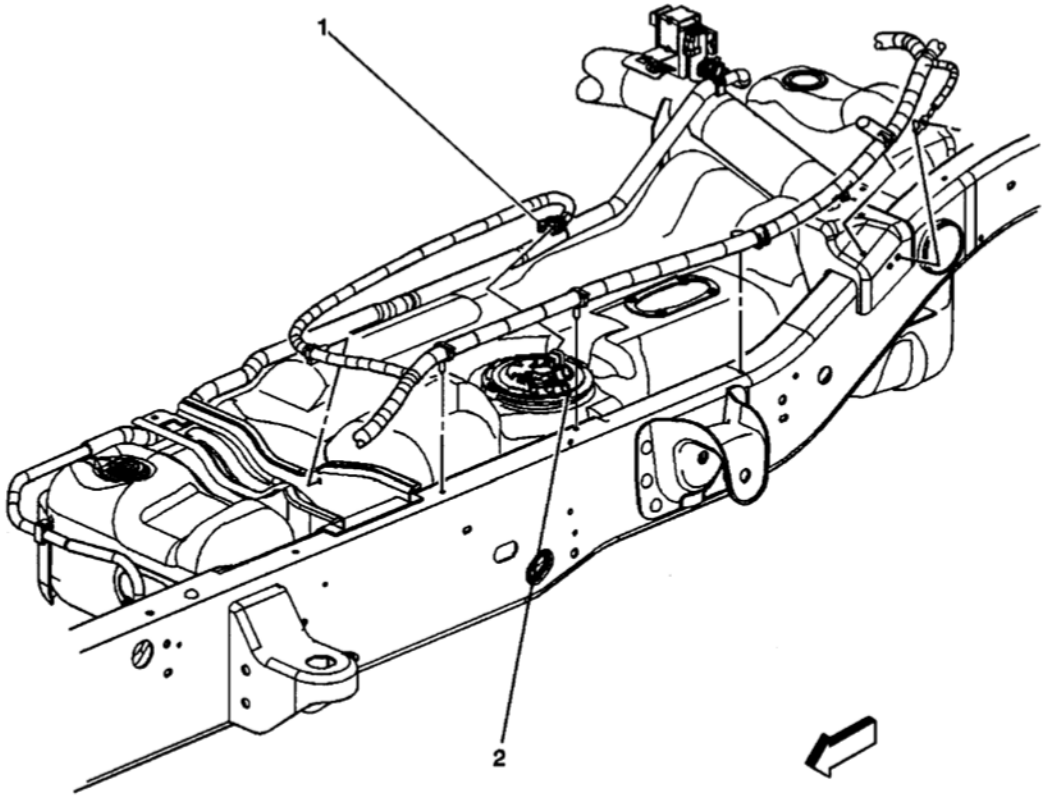

(1) Fuel Pump and Sender Assembly-Primary Connector
(2) Fuel Pump and Sender Assembly-Primary

G00261730

Fig. 109: Fuel Tank (Primary)
Courtesy of GENERAL MOTORS CORP.

cardiagn.com

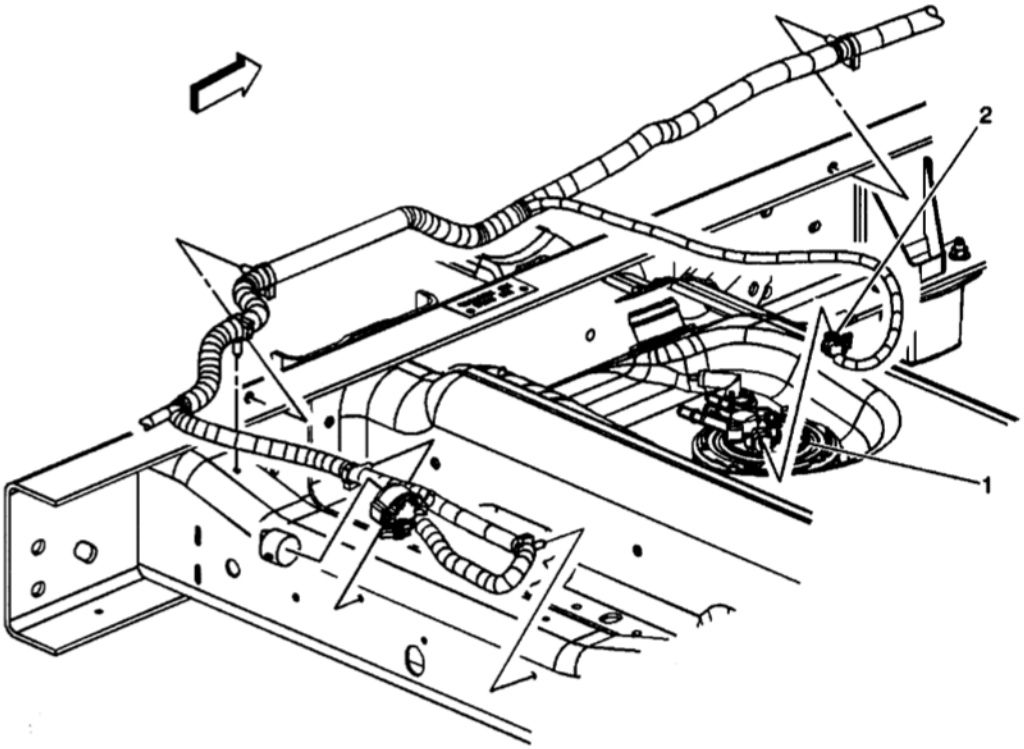

(1) Fuel Pump and Sender Assembly-Secondary
(2) Fuel Pump and Sender Assembly-Secondary Connector

G00261731

Fig. 110: Fuel Tank (Secondary)
Courtesy of GENERAL MOTORS CORP.

cardiagn.com

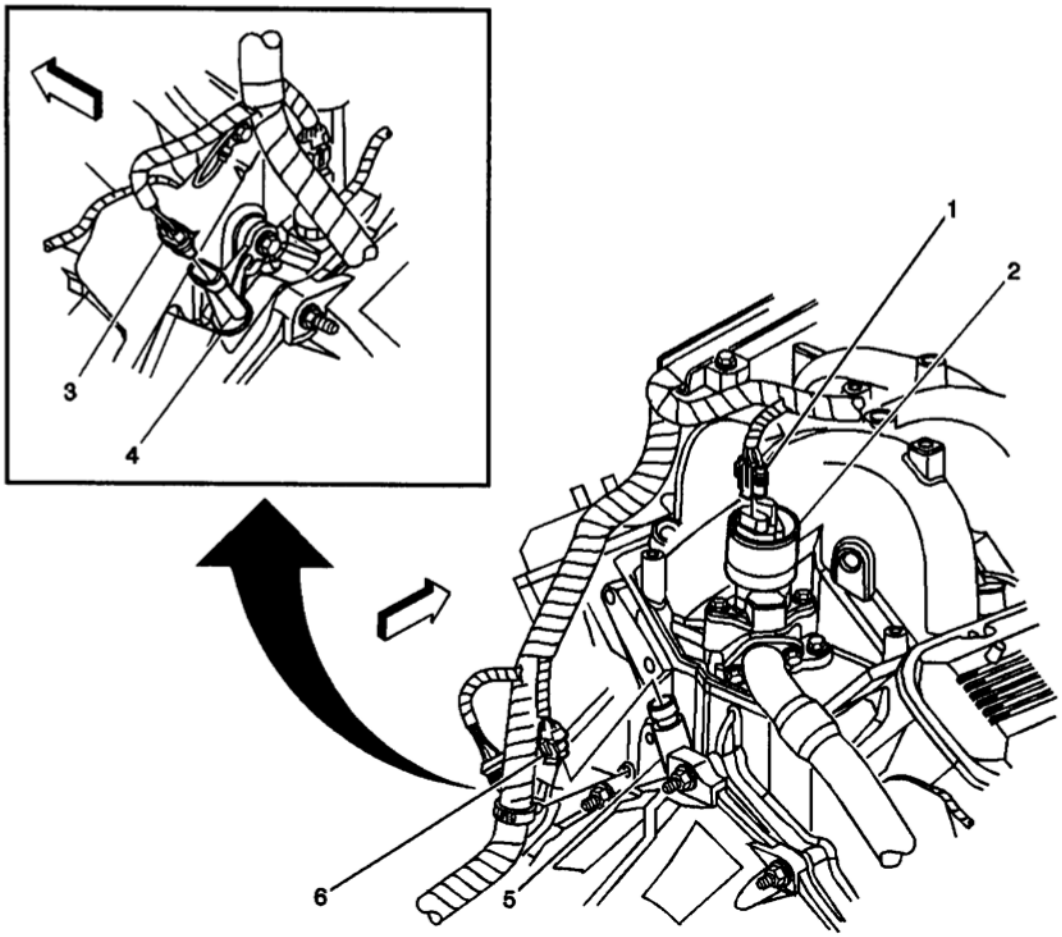

(1) Exhaust Gas Recirculation (EGR) Connector
(2) Exhaust Gas Recirculation (EGR) Valve
(3) Crankshaft Position (CKP) Sensor Connector
(4) Crankshaft Position (CKP) Sensor
(5) Engine Oil Pressure (EOP) Sensor
(6) Engine Oil Pressure (EOP) Sensor Connector

G00261733

Fig. 111: Rear Of Engine (8.1L)
Courtesy of GENERAL MOTORS CORP.

cardiagn.com

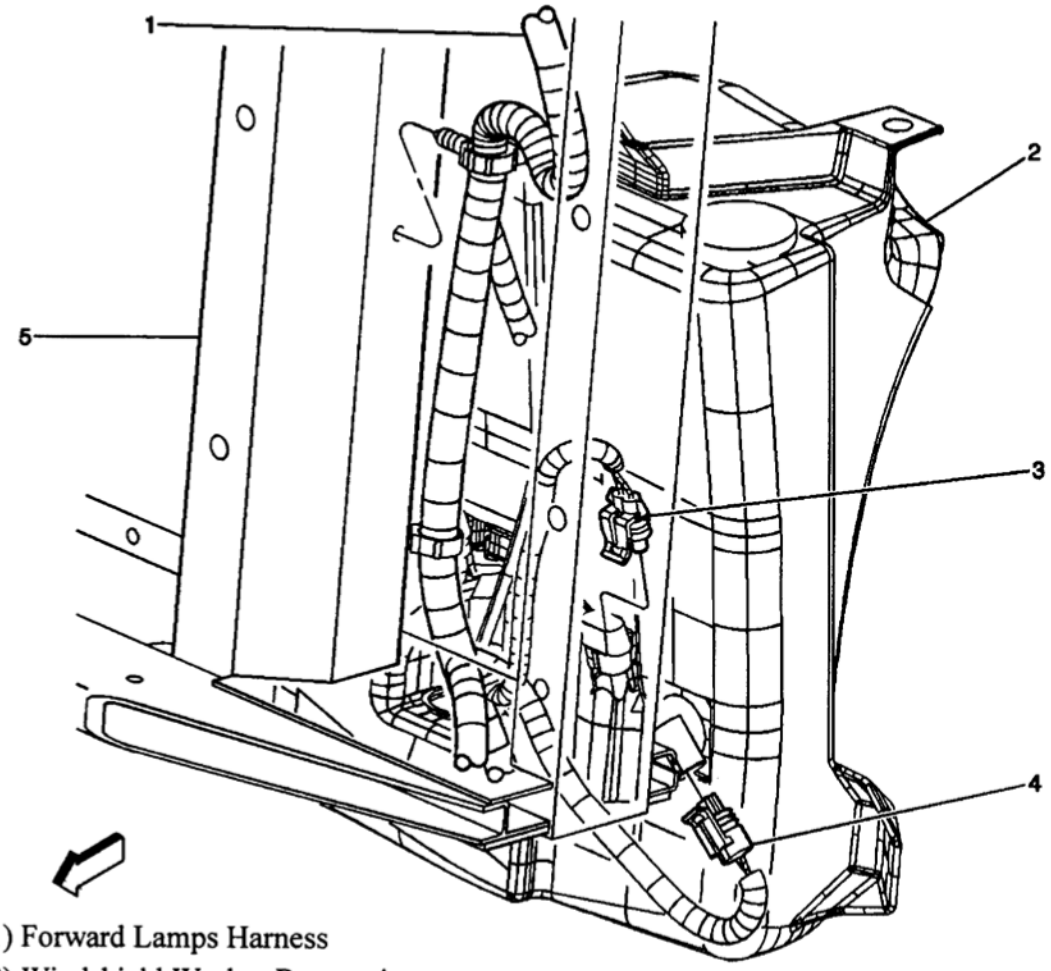

(1) Forward Lamps Harness
(2) Windshield Washer Reservoir
(3) Windshield Washer Fluid Pump Connector
(4) Washer Fluid Level Sensor Connector
(5) Radiator Support

G00261734

Fig. 112: Windshield Washer Reservoir
Courtesy of GENERAL MOTORS CORP.

cardiagn.com

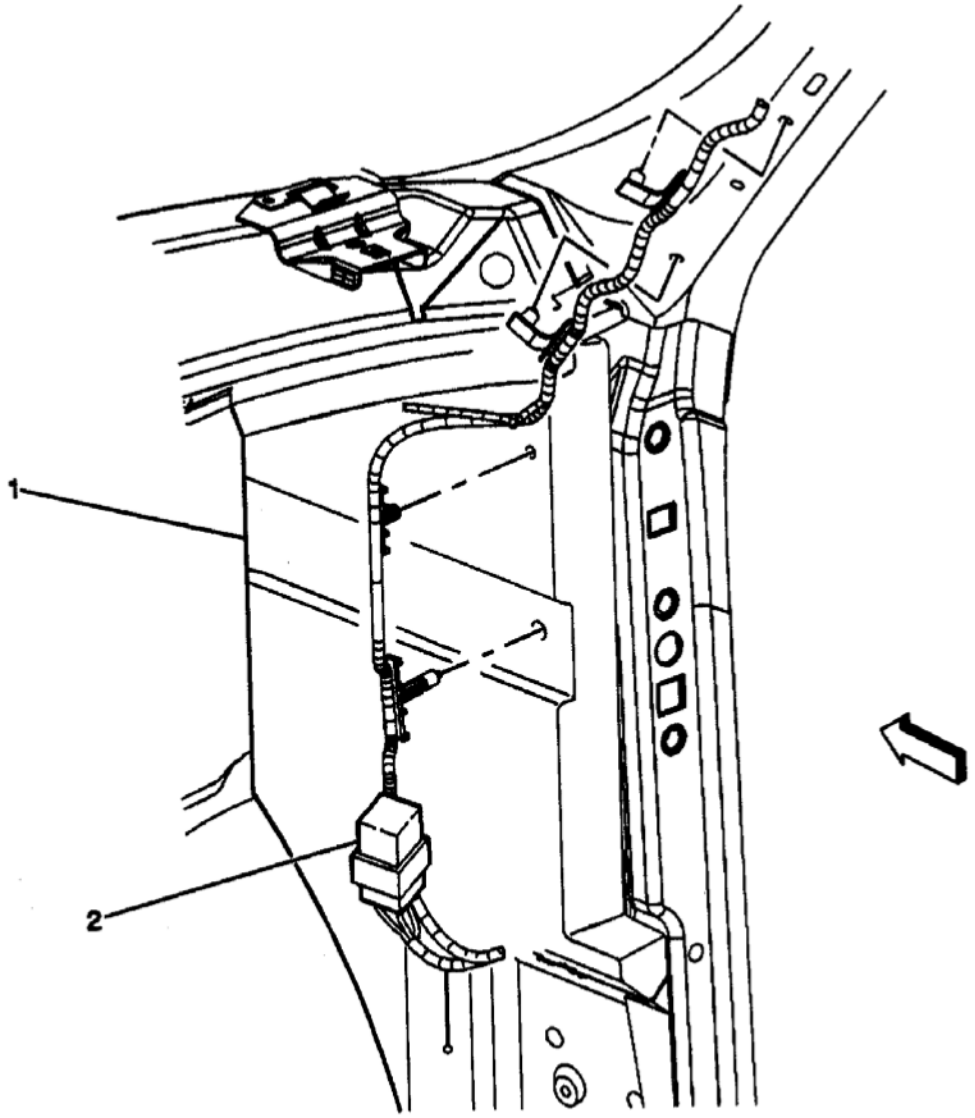

(1) Right A-Pillar
(2) Sunroof Relay

G00261741

Fig. 113: Right "A" Pillar
Courtesy of GENERAL MOTORS CORP.

cardiagn.com

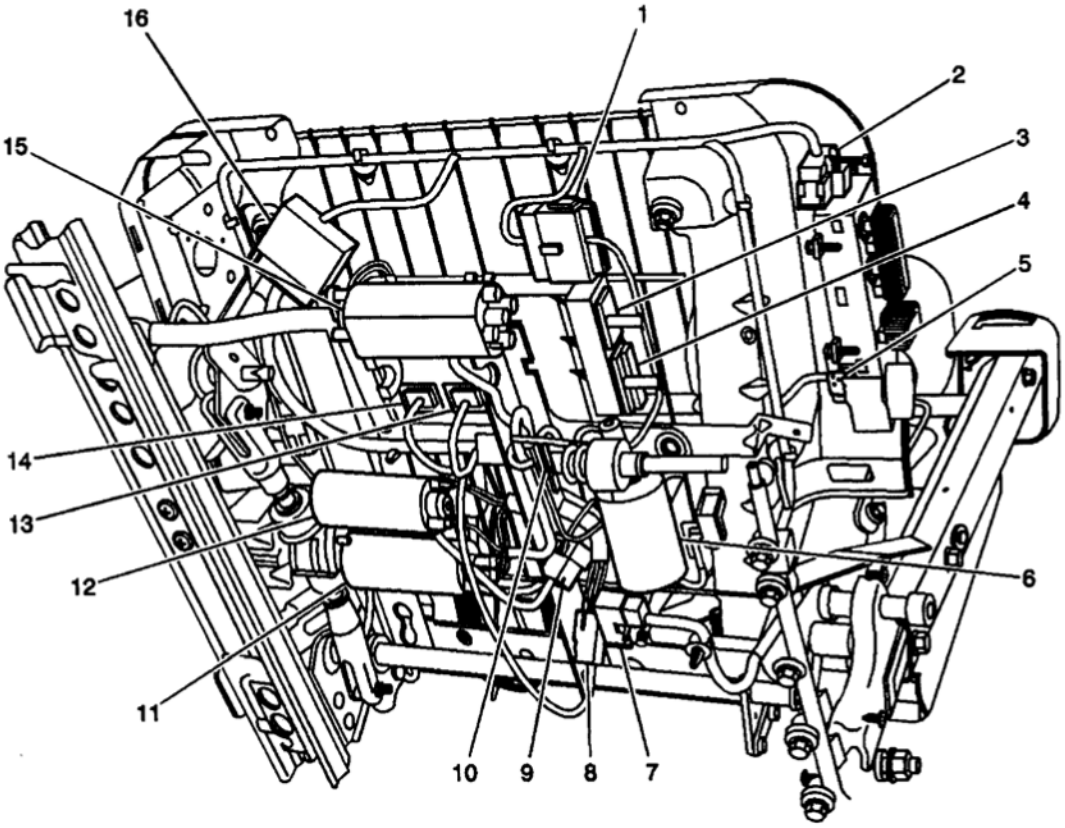

(1) C321
(2) Seat Adjuster Switch - Driver
(3) Memory Seat Module - C4
(4) Memory Seat Module - C3
(5) Seat Bolster/Lumbar Switch - Driver
(6) Seat Recliner Motor - Driver
(7) C305
(8) C323
(9) C325
(10) C322
(11) Seat Rear Vertical Motor - Driver
(12) Seat Front Vertical Motor - Driver
(13) Memory Seat Module - C2
(14) Memory Seat Module - C1
(15) Seat Horizontal Motor - Driver
(16) C320

G00261742

Fig. 114: Bottom Of Driver Seat
Courtesy of GENERAL MOTORS CORP.

cardiagn.com

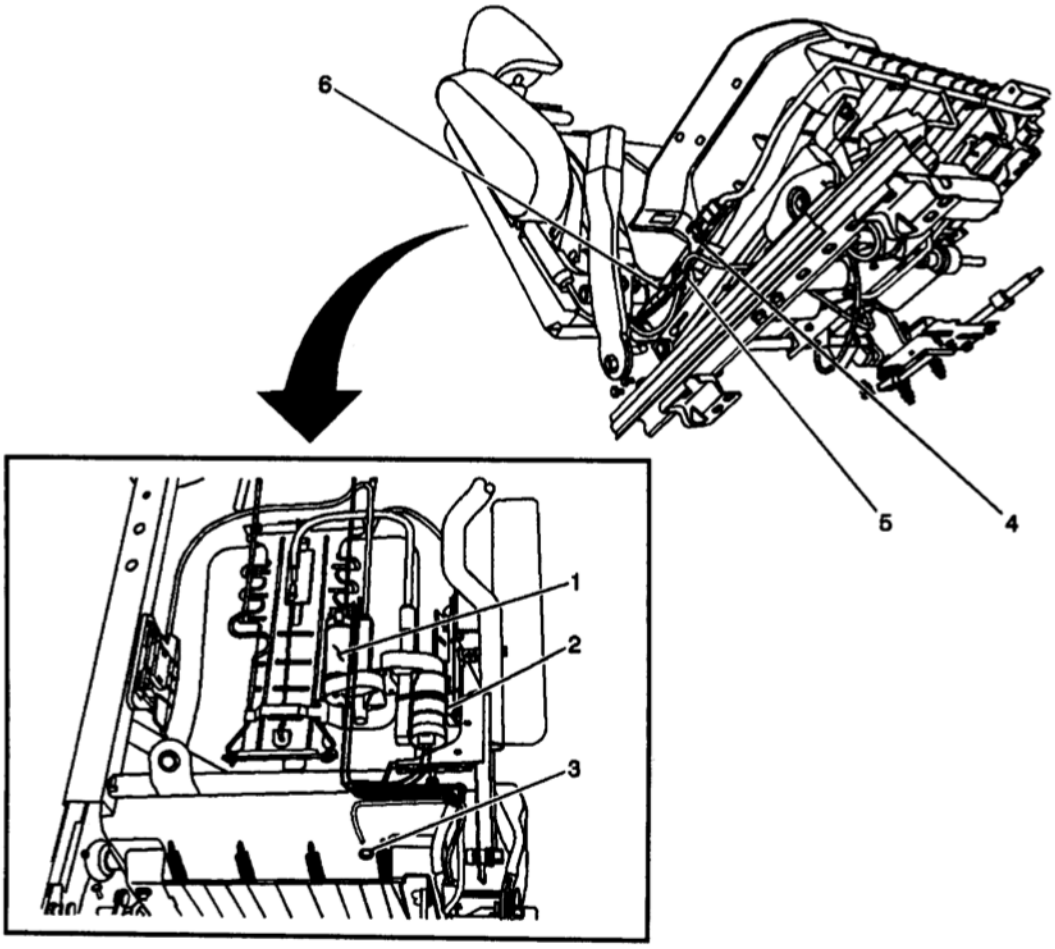

(1) Seat Bolster Motor - Driver
(2) Seat Lumbar Motor - Driver
(3) Heated Seat Element - Driver Cushion
(4) C324
(5) Seat Belt Switch Connector
(6) Heated Seat Element - Driver Cushion Connector

G00261743

Fig. 115: Side Of Driver Seat
Courtesy of GENERAL MOTORS CORP.

cardiagn.com

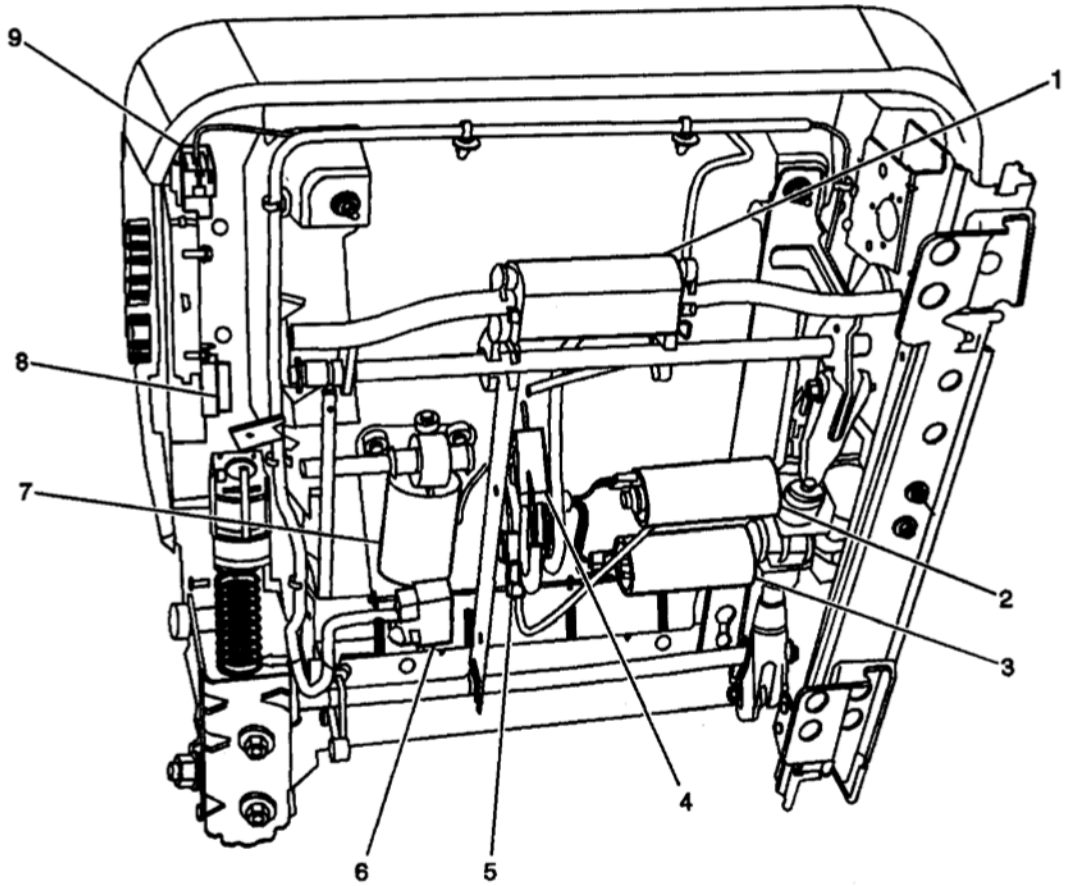

(1) Seat Horizontal Motor - Front Passenger
(2) Seat Front Vertical Motor - Front Passenger
(3) Seat Rear Vertical Motor - Front Passenger
(4) C388
(5) C326
(6) C399
(7) Seat Recliner Motor - Front Passenger
(8) Seat Adjuster Switch - Front Passenger
(9) Seat Adjuster Switch Connector

G00261744

Fig. 116: Bottom Of Right Front Seat
Courtesy of GENERAL MOTORS CORP.

cardiagn.com

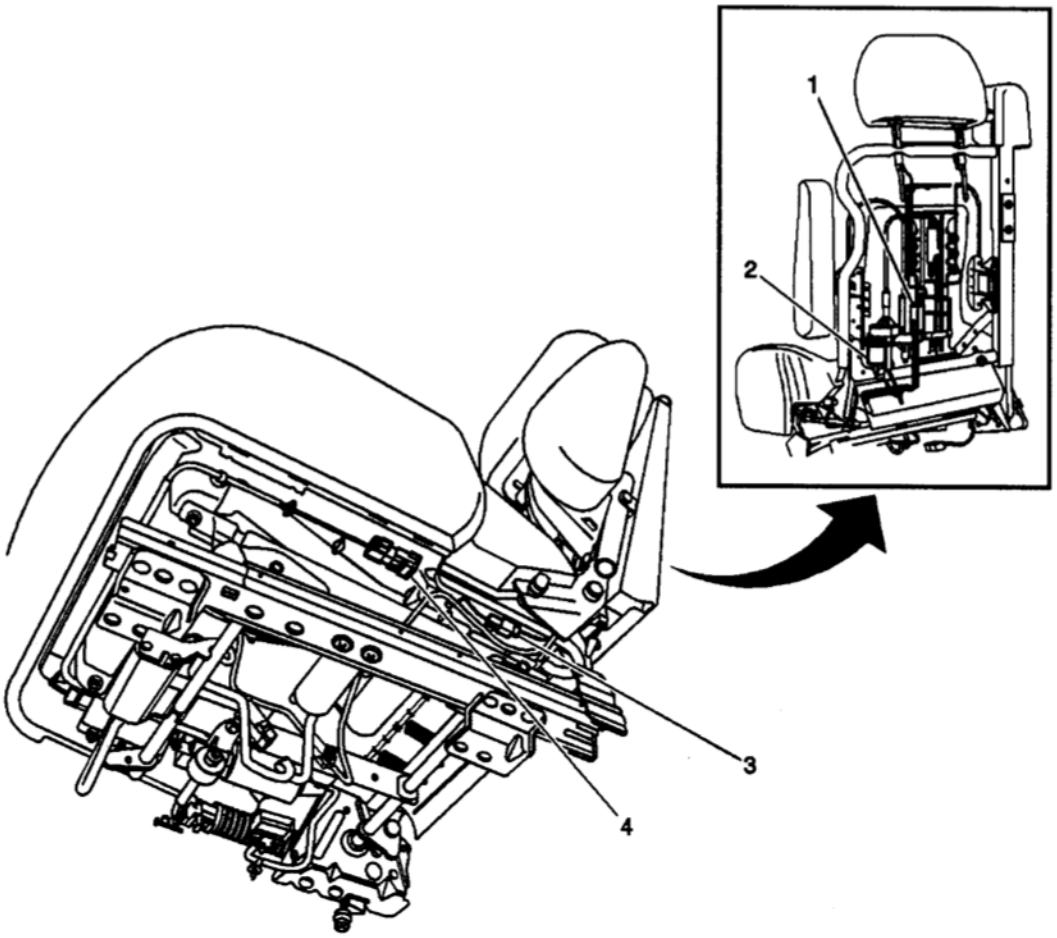

(1) Seat Bolster Motor - Front Passenger
(2) Seat Lumbar Motor - Front Passenger
(3) Heated Seat Element - Front Passenger Cushion Connector
(4) C329

G00261745

Fig. 117: Side Of Right Front Seat
Courtesy of GENERAL MOTORS CORP.

cardiagn.com

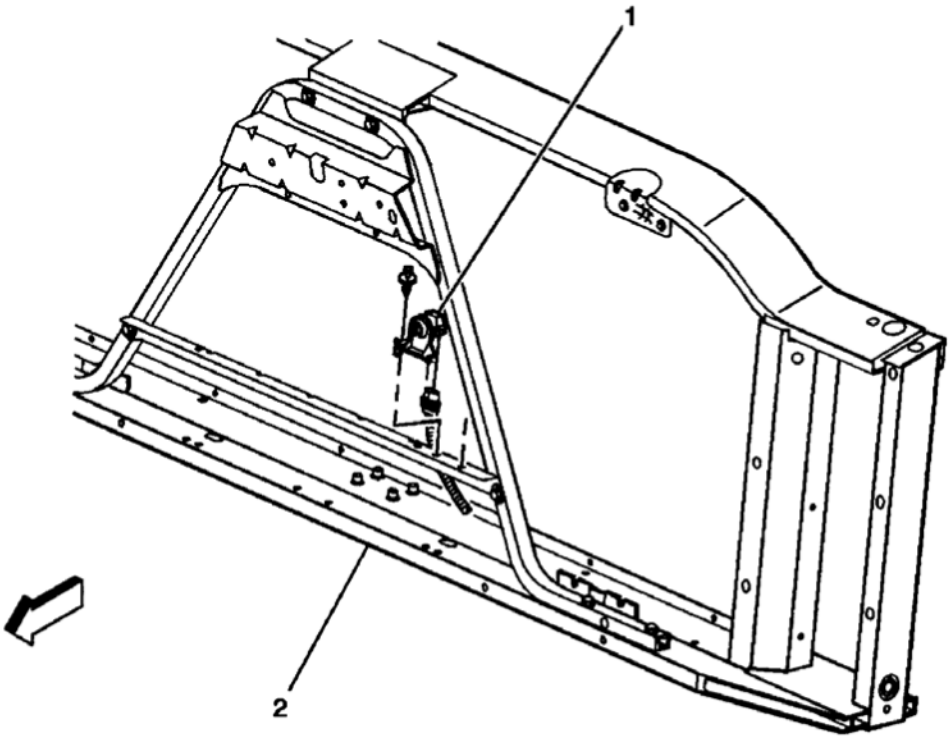

(1) Air Temperature Sensor - Outside
(2) Radiator Core Support

G00261747

Fig. 118: Front Of Radiator
Courtesy of GENERAL MOTORS CORP.

cardiagn.com

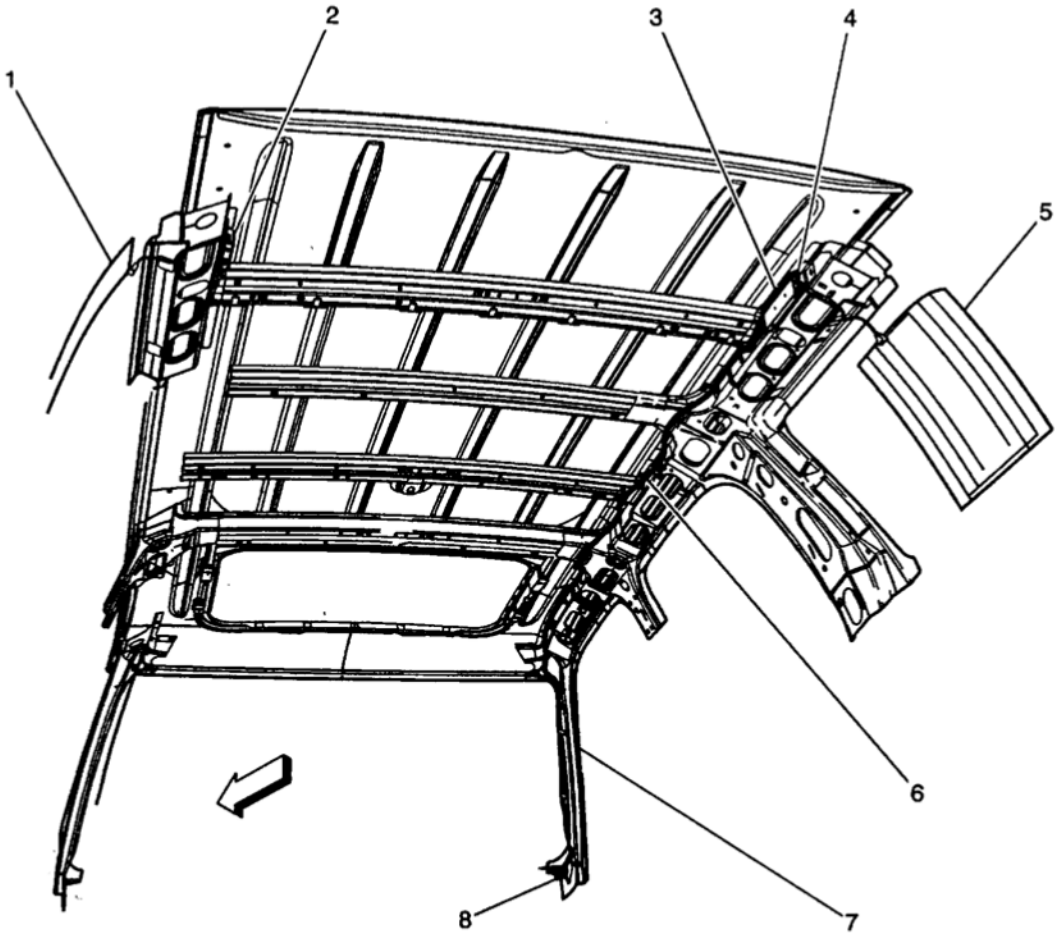

(1) FM Antenna
(2) FM Impedance Matching Module
(3) Radio Antenna Module
(4) Module C1
(5) AM-FM Antenna
(6) Radio Antenna Module Cable
(7) Right A-Pillar
(8) C231

G00261472

Fig. 119: Roof
Courtesy of GENERAL MOTORS CORP.

cardiagn.com

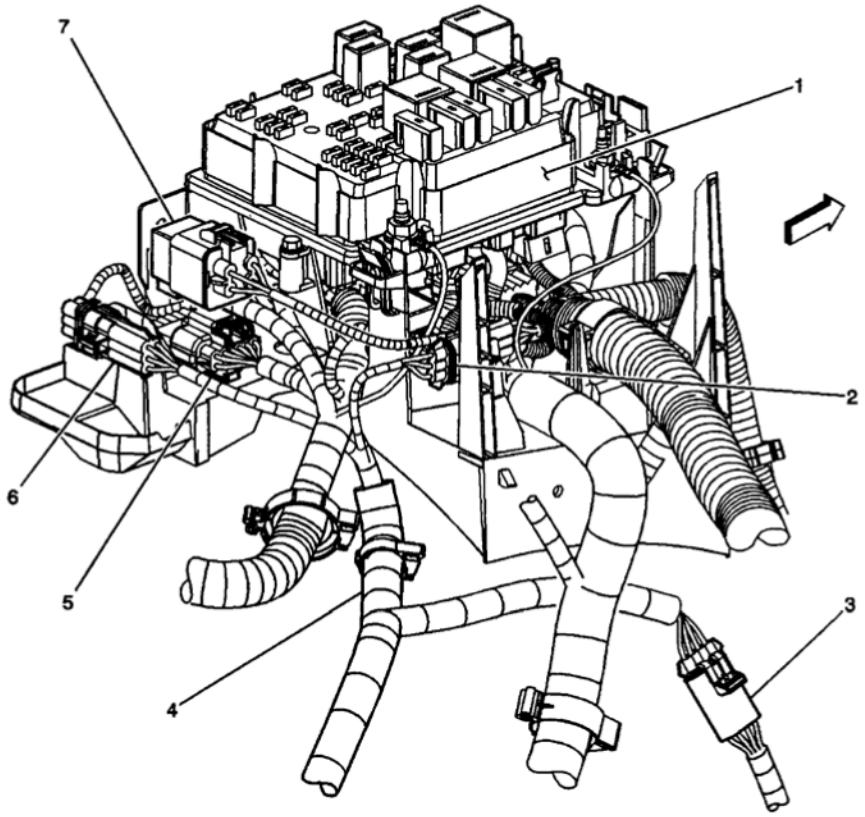

(1) Fuse Block - Underhood
(2) C153 - Engine Harness to Transfer Case Harness
(3) C150 - Transfer Case Harness to Axle Jumper Harness
(4) Transfer Case Harness
(5) C151 - I/P Harness to Automatic Transfer Case Harness (w/NP8/NR4) or C104 - I/P Harness to Forward Lamp Harness (w/o NP8/NR4)
(6) C154 - I/P Harness to Automatic Transfer Case Harness (w/NP8/NR4) or C114 - Chassis Harness to I/P Harness (w/JL4/NYS)
(7) Power Take-Off (PTO) Relay

G00261473

Fig. 120: Left Front Engine Compartment
Courtesy of GENERAL MOTORS CORP.

cardiagn.com

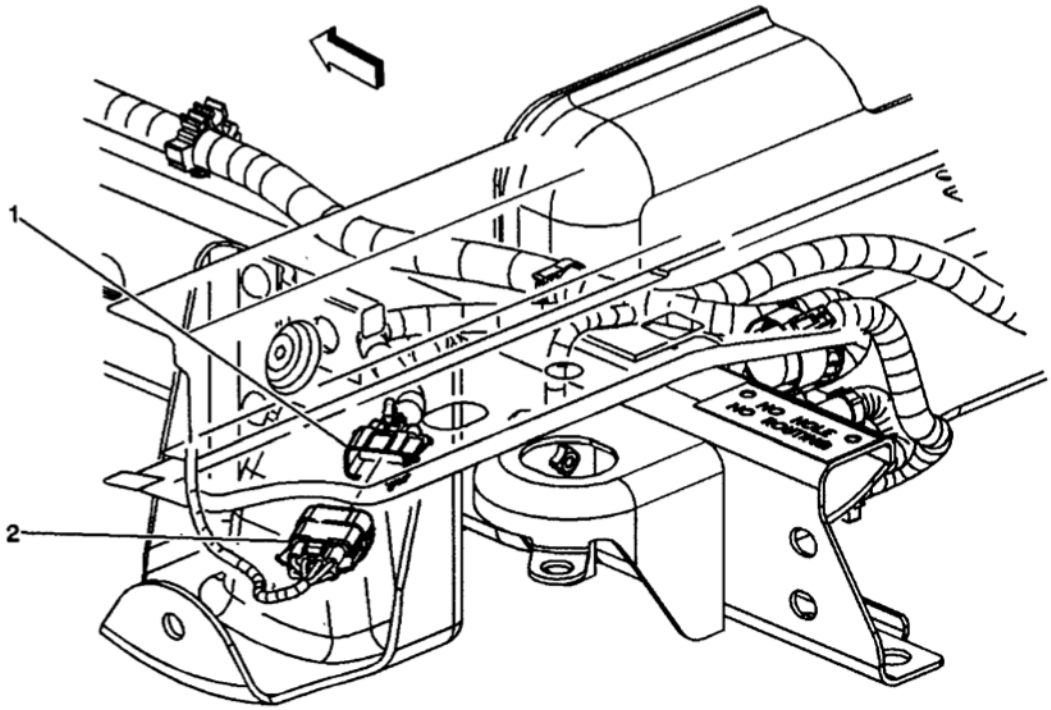

(1) C402-Chassis Harness Side

(2) C402-Tail Lamp Harness Side

G00261477

Fig. 121: Left Rear Frame Rail
Courtesy of GENERAL MOTORS CORP.

cardiagn.com

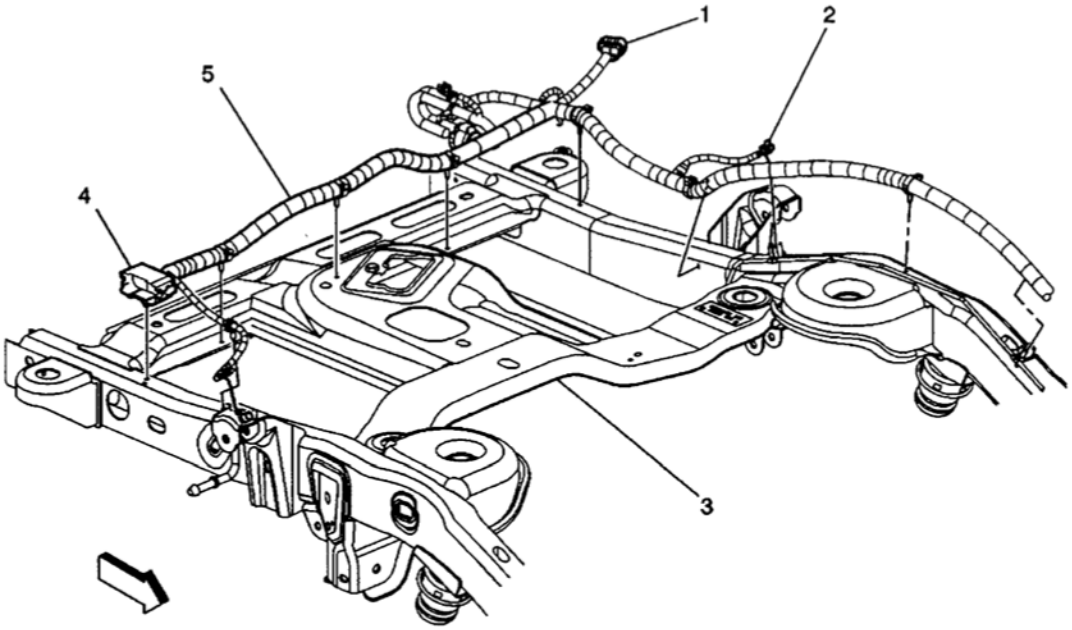

(1) Inline Connector C405 to Tail Lamp Harness
(2) Shock Absorber Solenoid Connector-RR
(3) Frame
(4) Inline Connector C450
(5) Chassis Harness

G00261478

Fig. 122: Rear Frame
Courtesy of GENERAL MOTORS CORP.

cardiagn.com

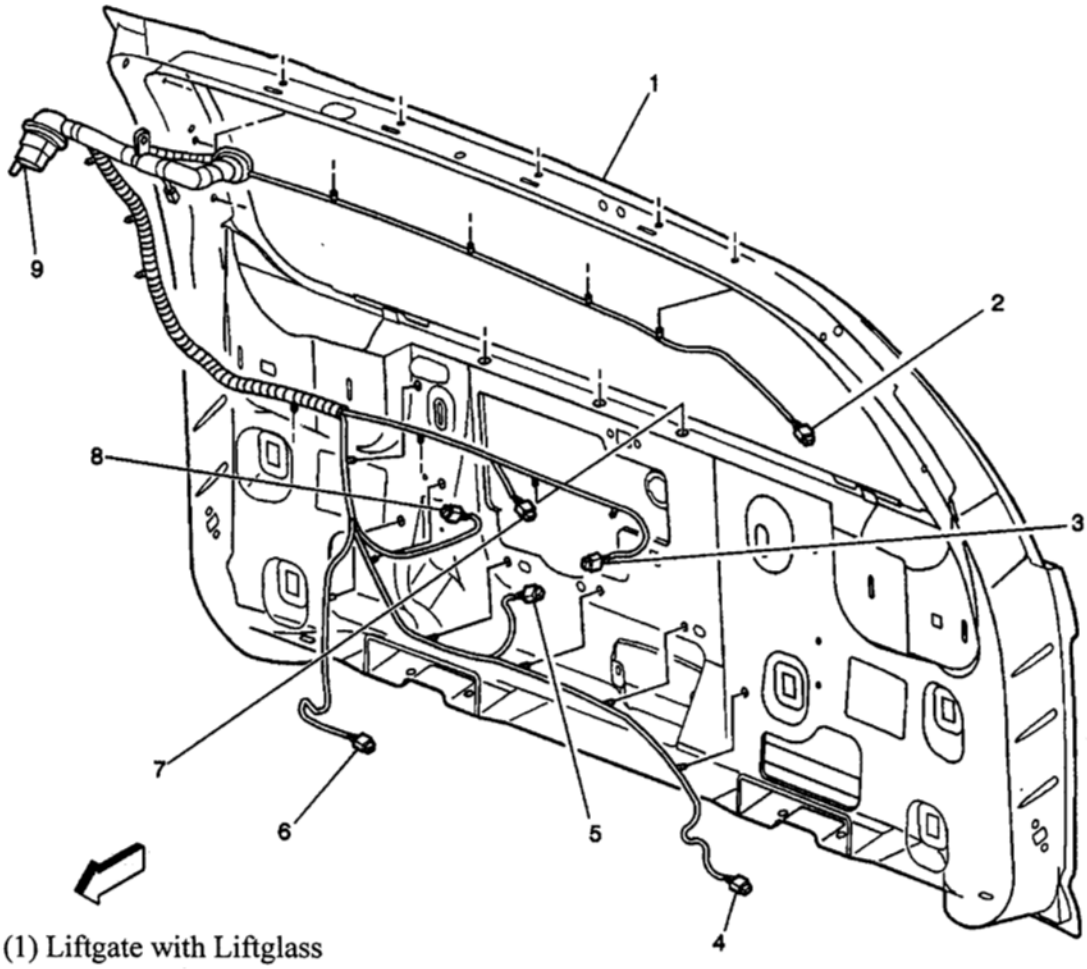

(1) Liftgate with Liftglass
(2) Liftglass Defog Connector
(3) Liftgate Latch Connector
(4) Liftgate Lower Latch Connector
(5) Liftgate Latch Connector
(6) Liftgate Lower Latch Connector
(7) Liftgate Latch Connector
(8) Wiper Motor Connector
(9) Inline Connector C499

G00261479

Fig. 123: Lift Gate Wiring Harness
Courtesy of GENERAL MOTORS CORP.

cardiagn.com