Draining Fluids and Oil Filter Removal

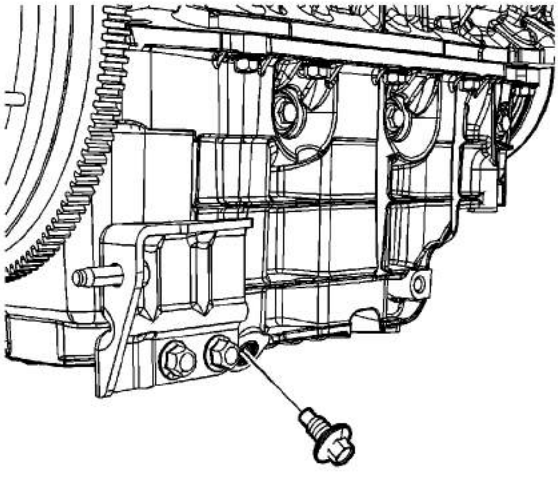

1. Remove the oil pan drain plug.
2. Drain the engine oil.

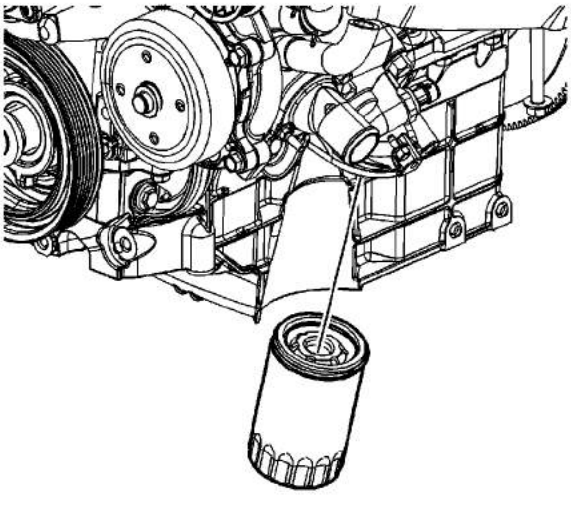

3. Remove the oil filter.

cardiagn.com

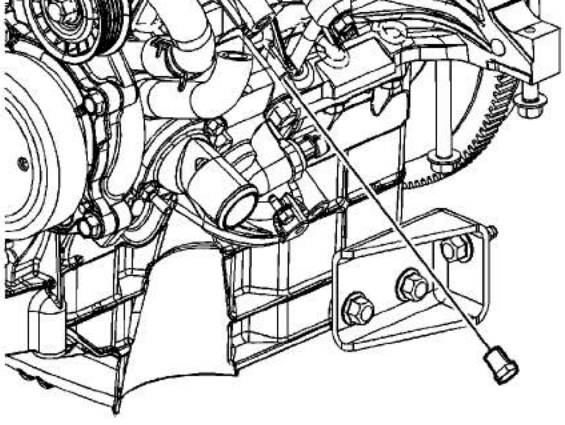

4. Remove the coolant drain plug from the left side.

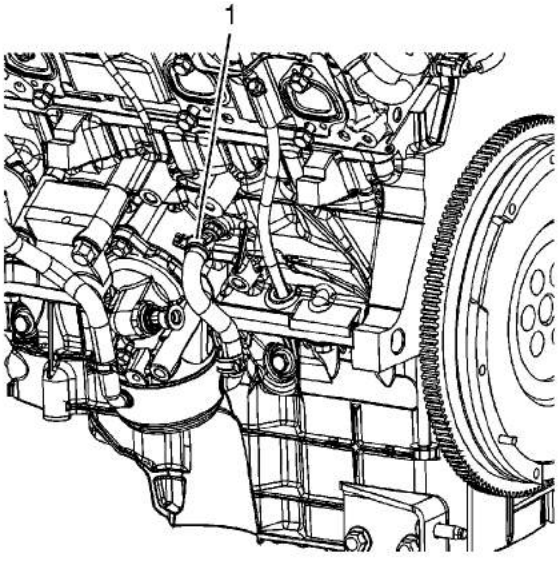

5. If equipped with an oil cooler (RPO-KC4), reposition the upper inlet hose clamp (1).
6. Remove the oil cooler inlet hose from the block outlet.

cardiagn.com

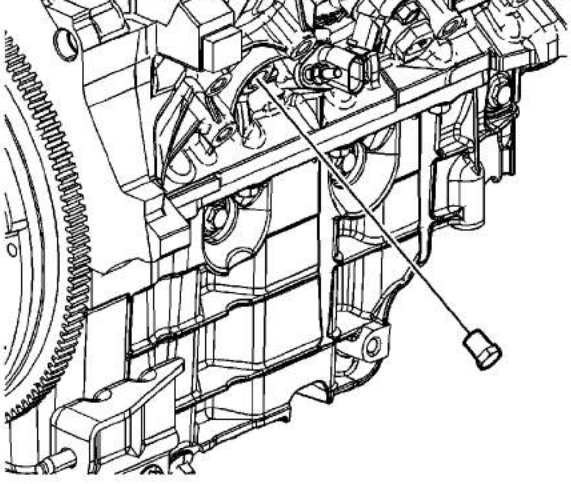

7. If not equipped with an oil cooler (RPO-KC4), remove the coolant drain plug from the right side.
8. Drain the coolant.

cardiagn.com

Crankshaft Balancer Removal

Special Tools

- *EN-46539* Puller End Protector
- *J-41816* Crankshaft Balancer Remover

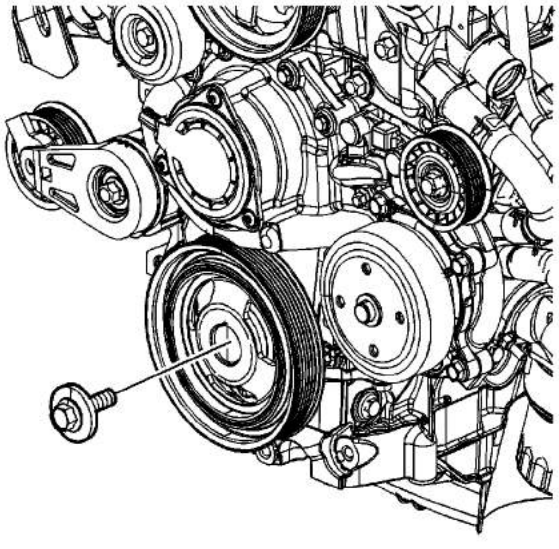

1. Remove the crankshaft balancer bolt and washer.

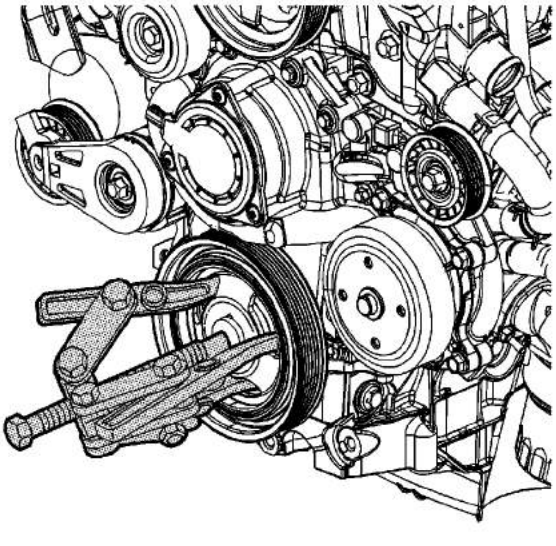

cardiagn.com

assisted tool, and this can damage the component.

2. Remove the crankshaft balancer using the *J-41816* Crankshaft Balancer Remover along with *EN-46539* Puller End Protector .

cardiagn.com

Engine Flywheel Removal (Manual Transmission)

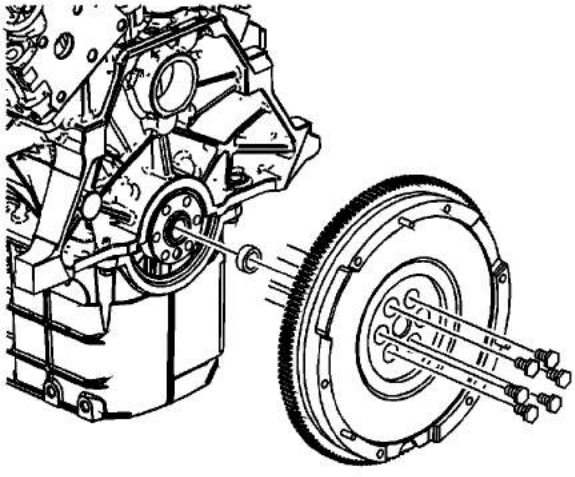

1. Remove the flywheel/pressure plate bolts.
2. Remove the flywheel/pressure plate.
3. Remove the clutch pilot bearing.

cardiagn.com

Crankshaft Balancer Cleaning and Inspection

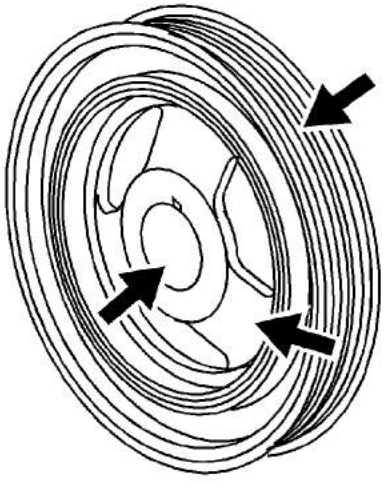

Warning: Bodily injury may occur if the cleaning solvent is inhaled or exposed to the skin.

1. Clean the crankshaft balancer in solvent.
2. Clean the belt grooves of all dirt or debris with a wire brush.
3. Inspect the crankshaft balancer for the following:

Note: A crankshaft balancer hub seal surface with excessive scoring, grooves, rust or other damage must be replaced. Minor imperfections on the hub seal surface may be removed with polishing compound or fine grade emery cloth.

- Worn, grooved, or damaged hub seal surface

Note: In order for the belt to track properly, the belt grooves should be free of all dirt, debris, nicks, gouges or other damage. Minor imperfections may be removed with a fine file.

- Dirty or damaged belt grooves.
- Worn, chunking or deteriorated rubber between the hub and pulley

cardiagn.com

Drive Belt Tensioner Removal

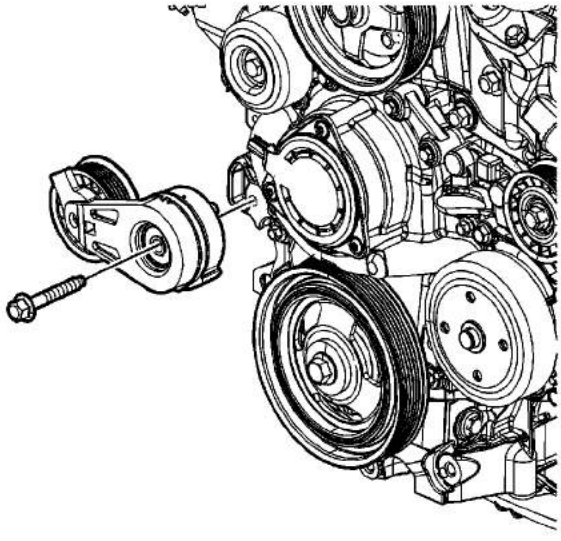

1. Remove the drive belt tensioner bolt.
2. Remove the drive belt tensioner.

cardiagn.com

Engine Coolant Crossover Pipe Removal

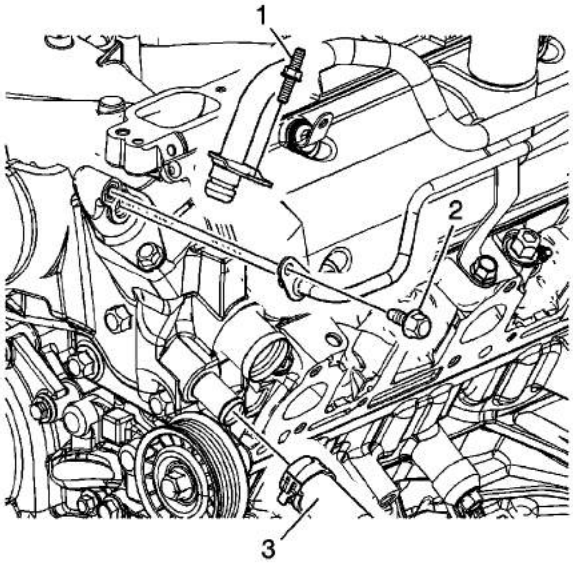

1. Loosen thermal bypass hose clamp (3) and remove hose from the coolant crossover pipe.
2. Remove the heater inlet/outlet pipe bolt (1) and remove the heater inlet/outlet pipe.
3. Remove the coolant vent pipe bolt (2) and the coolant vent pipe.

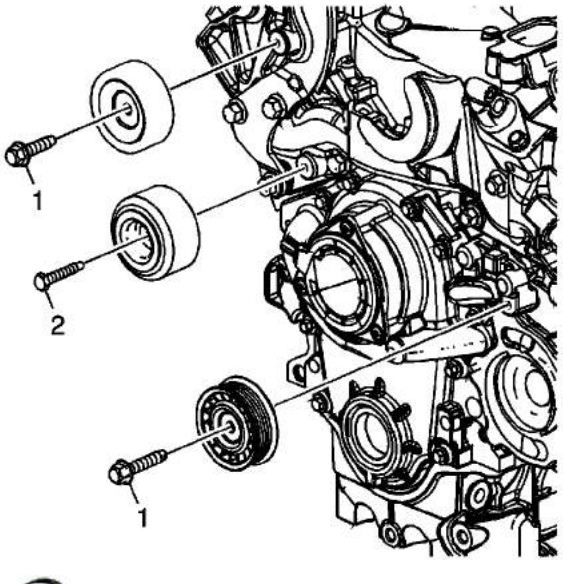

4. Remove the idler pulley bolts and pulleys (1, 2).

cardiagn.com

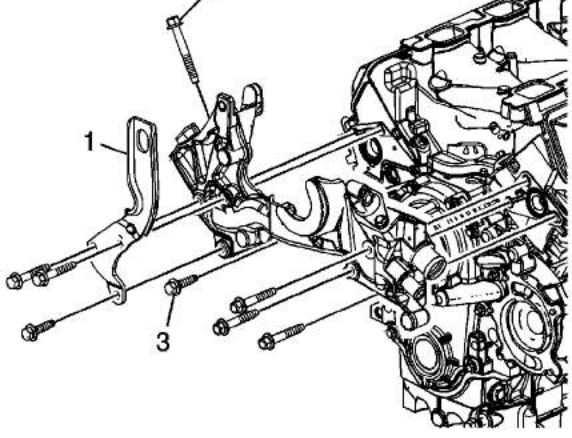

5. Remove the coolant crossover pipe bolts (2, 3), engine lift bracket (1), and the coolant crossover pipe assembly.

cardiagn.com

Engine Lift Rear Bracket Removal

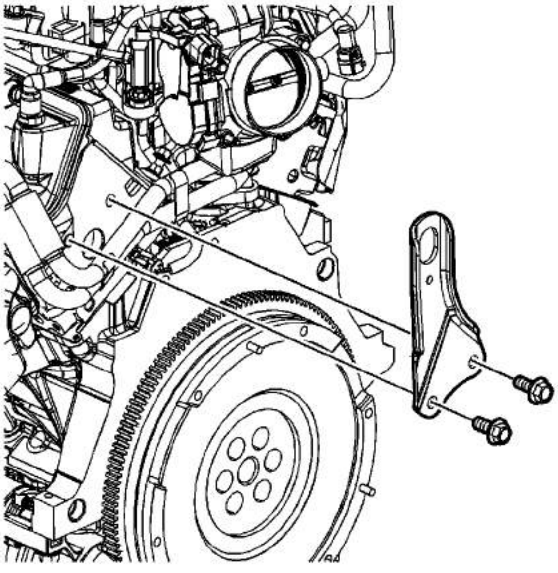

1. Remove the rear engine lift bracket bolts.
2. Remove the rear engine lift bracket.

cardiagn.com

Oil Level Indicator and Tube Removal

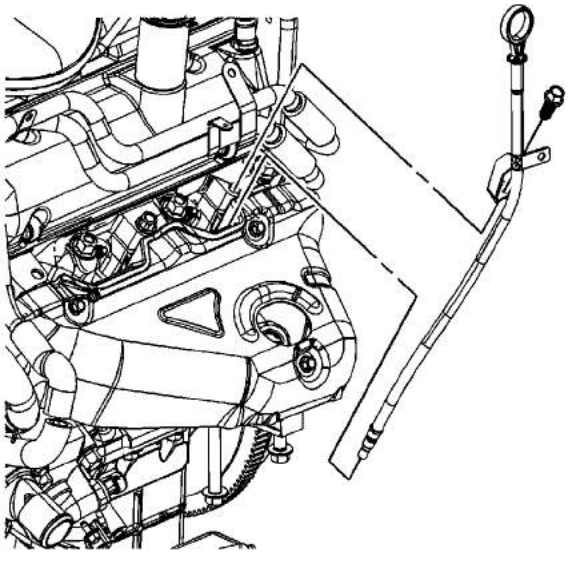

1. Remove the oil level indicator tube bolt.
2. Remove the oil level indicator and oil level indicator tube.

cardiagn.com

Oil Filter Adapter Removal

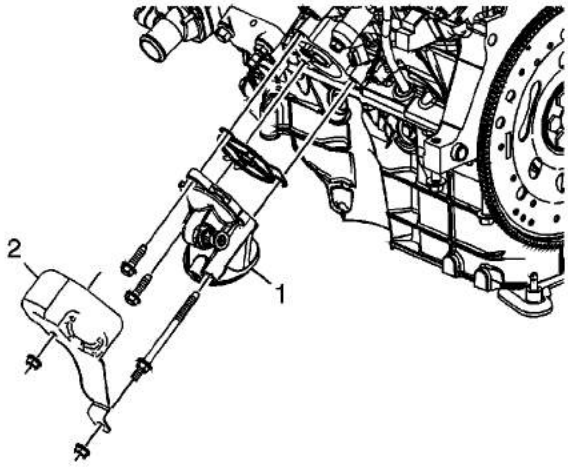

1. Remove the oil filter adapter heat shield nuts.
2. Remove the oil filter adapter heat shield (2).
3. Remove the oil filter adapter bolts.
4. Remove the oil filter adapter (1) and gasket.

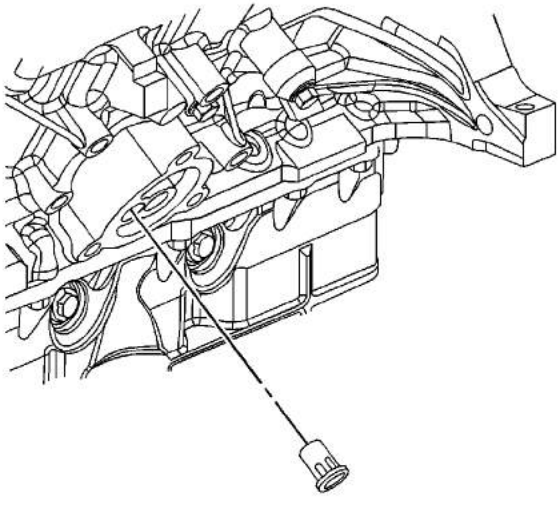

5. Insert a flat-bladed tool into the oil filter bypass hole and remove the oil filter bypass valve.

cardiagn.com

Exhaust Manifold Removal - Left Side

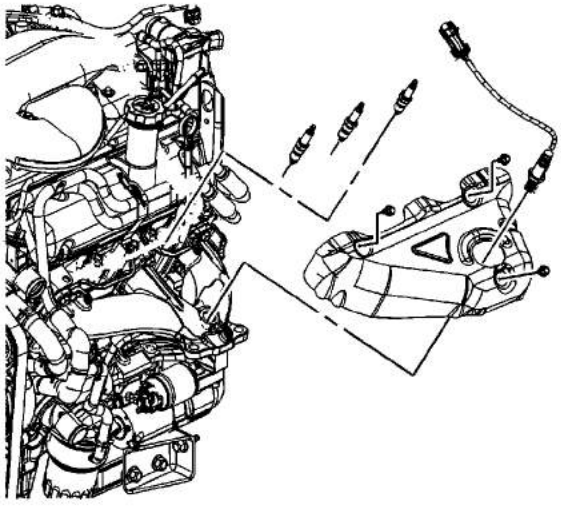

1. Remove the heated oxygen sensor.
2. Remove the spark plug wires from the spark plugs and set aside.
3. Remove the spark plugs.
4. Remove the exhaust manifold heat shield bolts.
5. Remove the exhaust manifold heat shield.

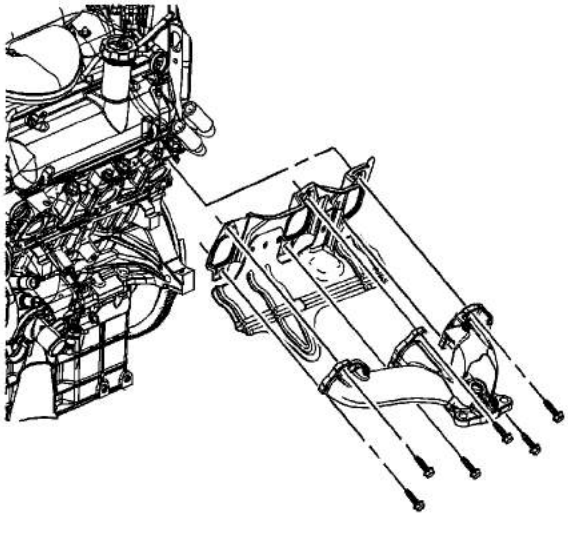

6. Remove the exhaust manifold bolts.
7. Remove the exhaust manifold.
8. Remove the exhaust manifold gasket.

© 2010 General Motors Corporation. All rights reserved.

cardiagn.com

Exhaust Manifold Removal - Right Side

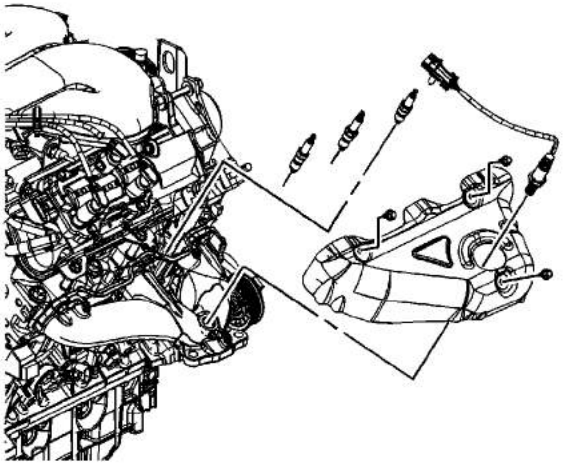

1. Remove the heated oxygen sensor.
2. Remove the spark plug wires.
3. Remove the spark plugs.
4. Remove the exhaust manifold heat shield bolts.
5. Remove the exhaust manifold heat shields.

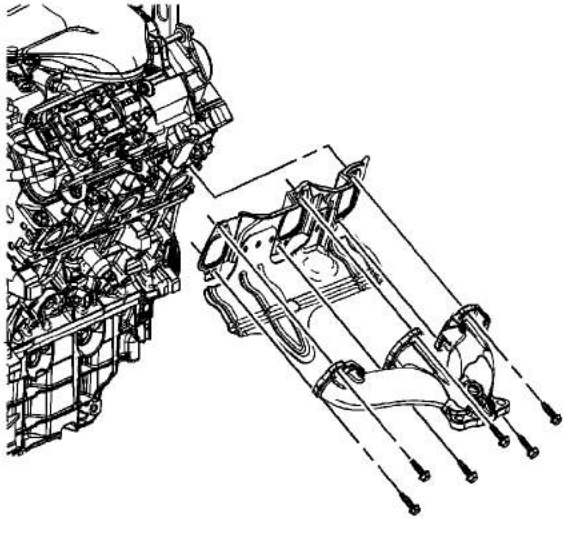

6. Remove the exhaust manifold bolts.
7. Remove the exhaust manifold.
8. Remove the exhaust manifold gasket.

© 2010 General Motors Corporation. All rights reserved.

cardiagn.com

Water Inlet and Engine Coolant Thermostat Removal

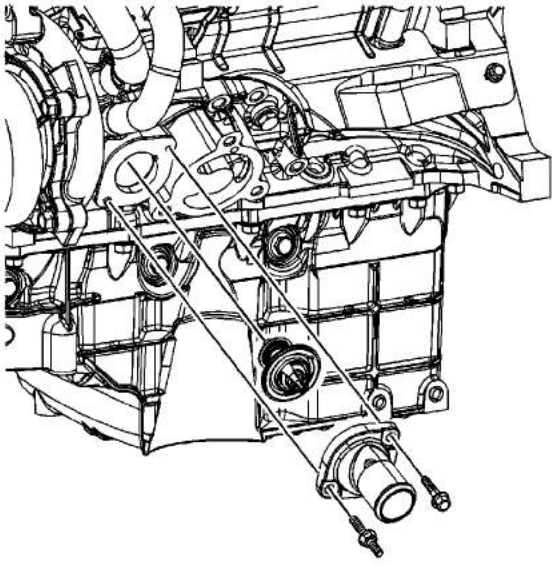

1. Remove the water inlet bolts.
2. Remove the water inlet.
3. Remove the thermostat.

cardiagn.com

Valve Rocker Arm Cover Removal - Left Side

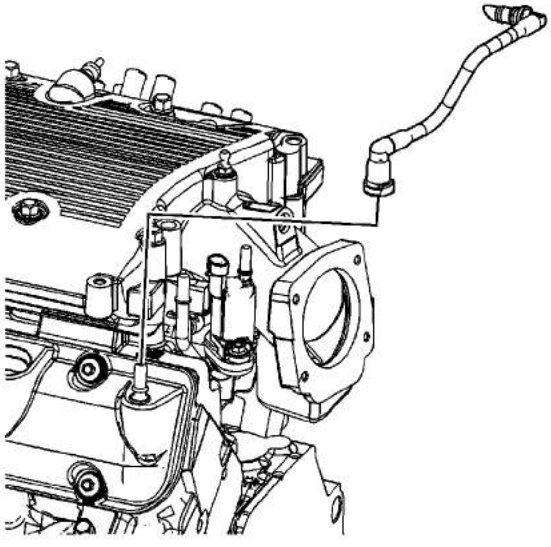

1. Remove the positive crankcase ventilation (PCV) tube.

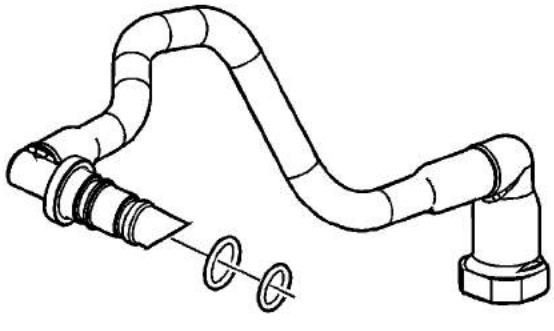

2. Remove and discard both PCV tube O-rings.

cardiagn.com

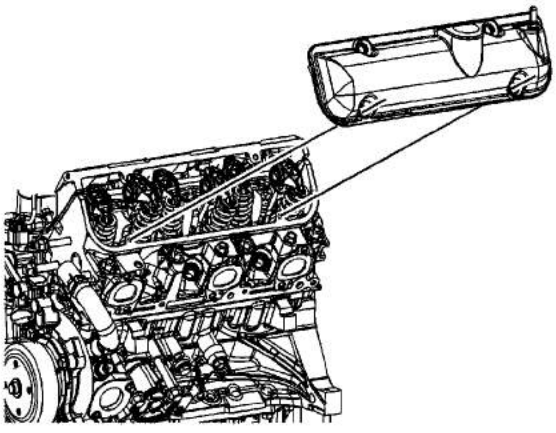

3. Remove the valve rocker arm cover bolts.

   Important: When removing the valve rocker arm cover make sure the gasket stays in place attached to the cylinder head.

4. Remove the valve rocker arm cover.
5. Cut the room temperature vulcanizing (RTV) in the channel where the intake, cylinder head and valve rocker arm cover meet with a suitable tool.
6. Remove and discard the valve rocker arm cover gasket, valve rocker arm cover grommets and valve rocker arm cover bolts if they are serviced with the grommet.

cardiagn.com

Valve Rocker Arm Cover Removal - Right Side

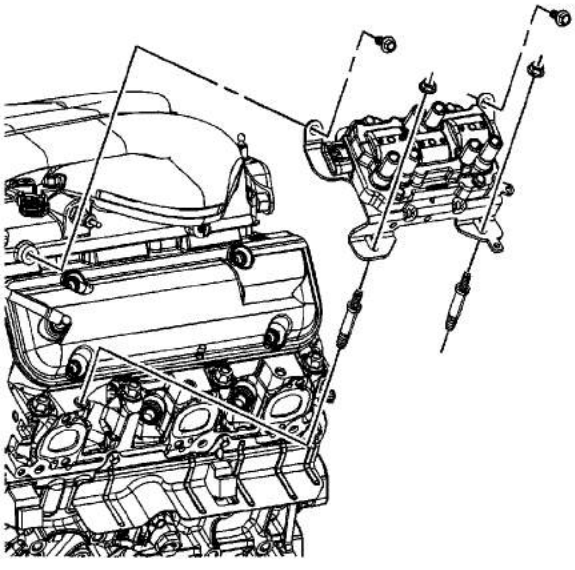

1. Remove any remaining spark plug wires from their retainers.
2. Remove the ignition coil assembly bolts and nuts.
3. Remove the ignition coil assembly.
4. Remove the ignition coil assembly studs, if necessary.

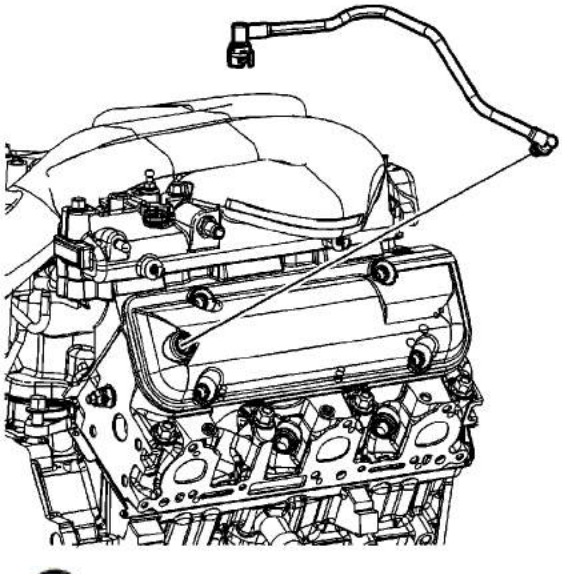

5. Remove the fresh air tube from the valve rocker arm cover.

cardiagn.com

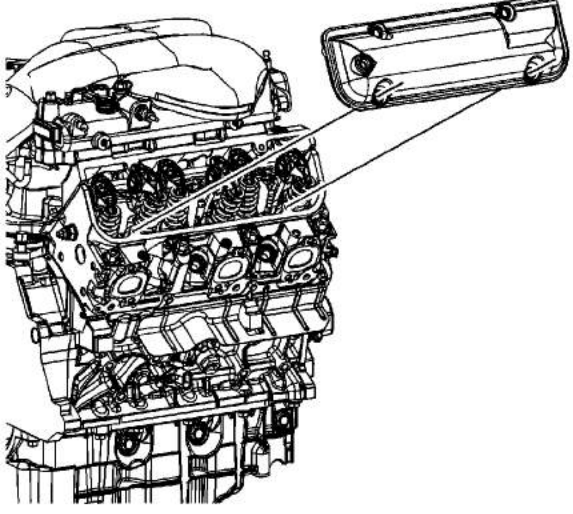

6. Remove the valve rocker arm cover bolts.

   Important: When removing the valve rocker arm cover make sure the gasket stays in place attached to the cylinder head.

7. Remove the valve rocker arm cover.
8. Cut the room temperature vulcanizing (RTV) in the channel where the intake, cylinder head and valve rocker arm cover meet with a suitable tool.
9. Remove and discard the valve rocker arm cover gasket, valve rocker arm cover grommets and valve rocker arm cover bolts if they are serviced with the grommet.

cardiagn.com

Upper Intake Manifold Removal

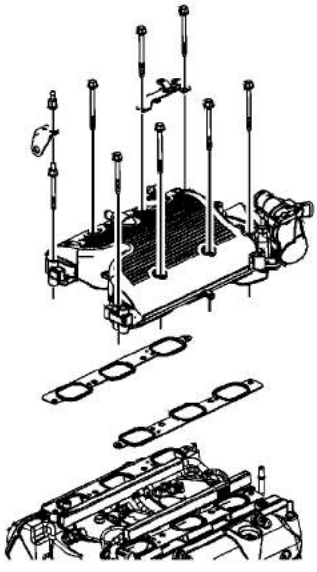

1. Remove the upper intake manifold bolts and stud.
2. Remove the manifold absolute pressure (MAP) sensor bracket.
3. Remove the upper intake manifold and gaskets.

cardiagn.com

Lower Intake Manifold Removal

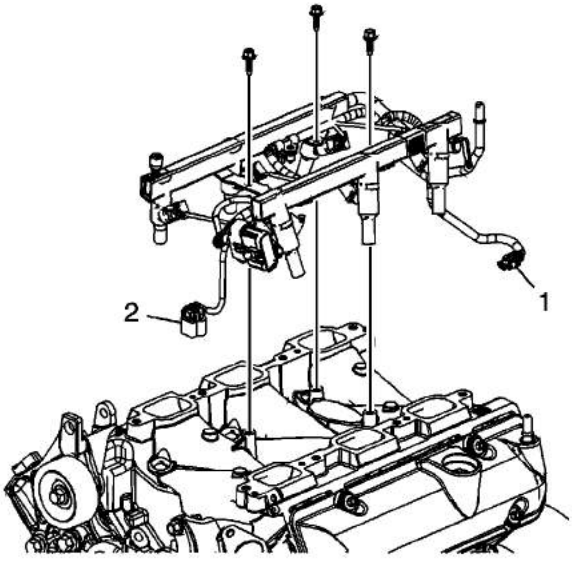

1. Disconnect the coolant temperature sensor (1).
2. Disconnect the camshaft position (CMP) sensor (2).
3. Remove the fuel injector rail bolts.
4. Remove the fuel rail assembly.

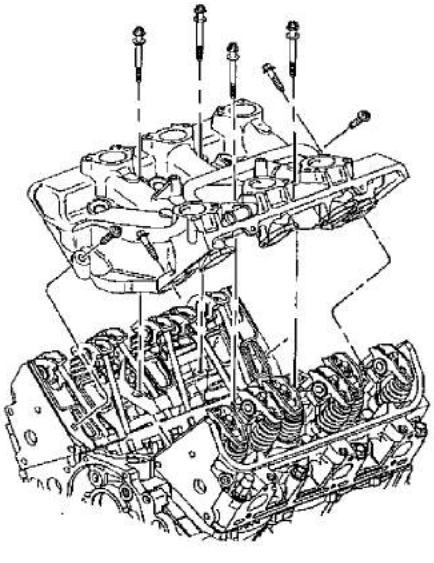

5. Remove the lower intake manifold bolts and discard.
6. Remove the lower intake manifold.

cardiagn.com

Valve Rocker Arm and Push Rod Removal

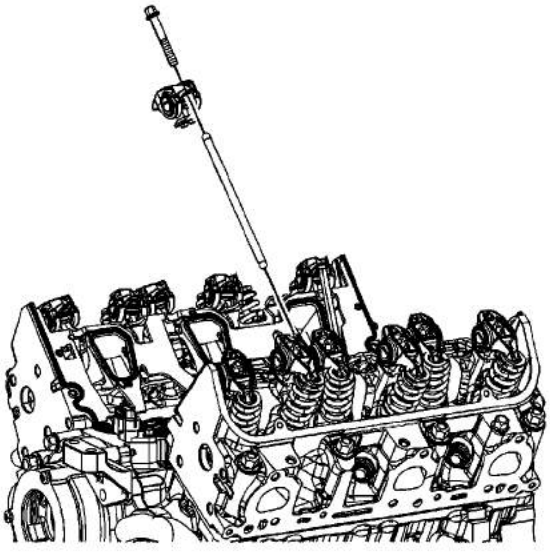

1. Loosen the valve rocker arm bolts.

   Important: Place the valve train components in a rack in order to ensure that the components are installed in the same location from which they where removed.

2. Remove the valve rocker arms.
3. Remove the push rods.
   - The intake push rods measure 147.51 mm (5.81 in).
   - The exhaust push rods measure 154.87 mm (6.1 in).

cardiagn.com

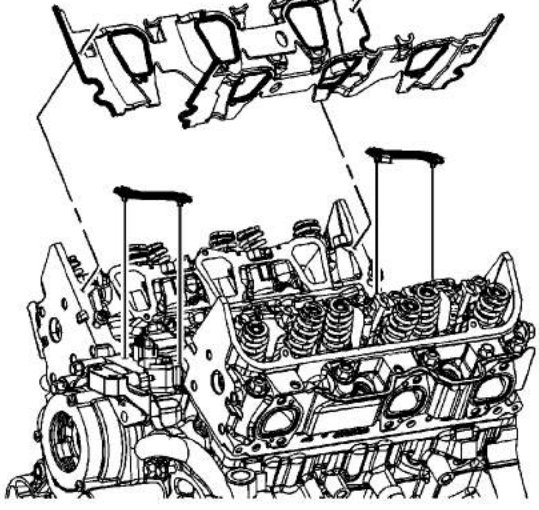

4. Remove the intake manifold gaskets.

cardiagn.com

Valve Lifter Removal

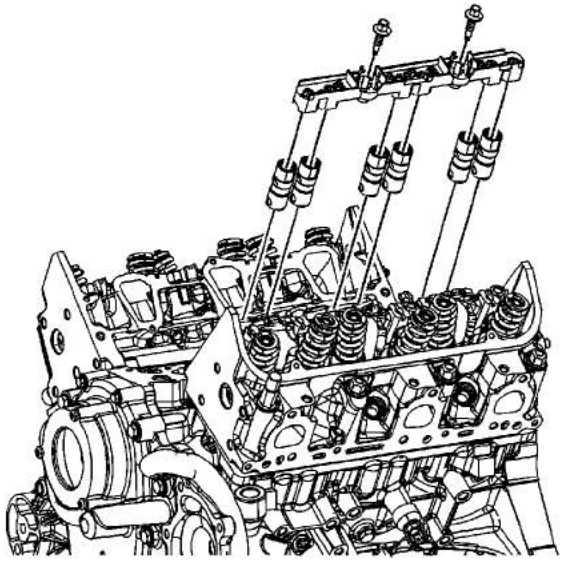

1. Remove the valve lifter guide bolts.
2. Remove the valve lifter guides.

   Important: Once removed, place the valve lifters in an organized order so the valve lifters can be installed into the original locations.

3. Remove the valve lifters.

cardiagn.com

Water Pump Removal

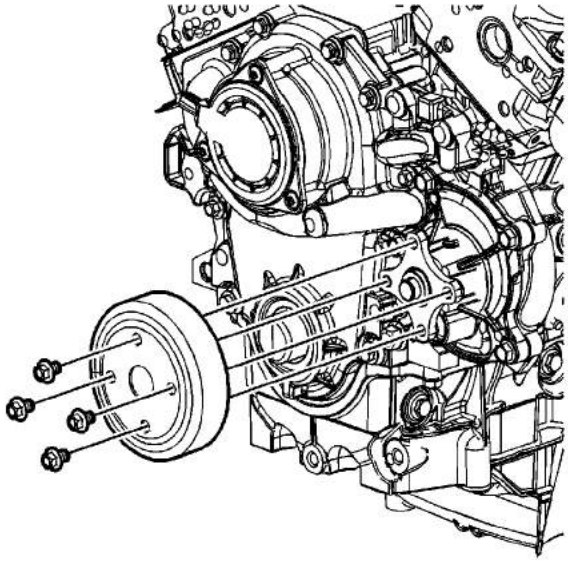

1. Remove the water pump pulley bolts.
2. Remove the water pump pulley.

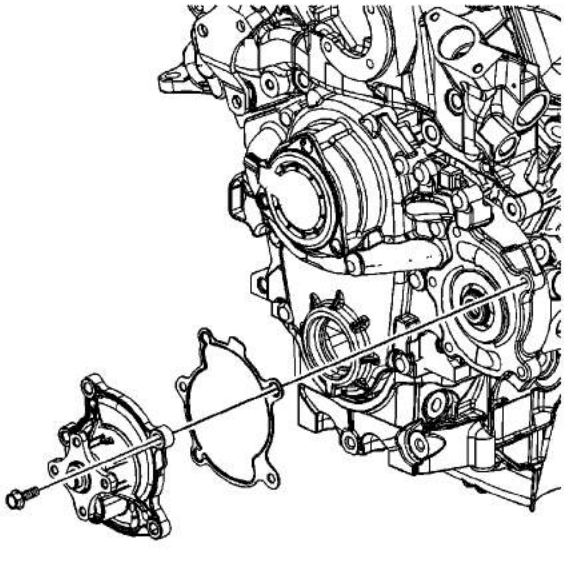

3. Remove the water pump bolts.
4. Remove the water pump.
5. Remove the water pump gasket.

cardiagn.com

Cylinder Head Removal - Left Side

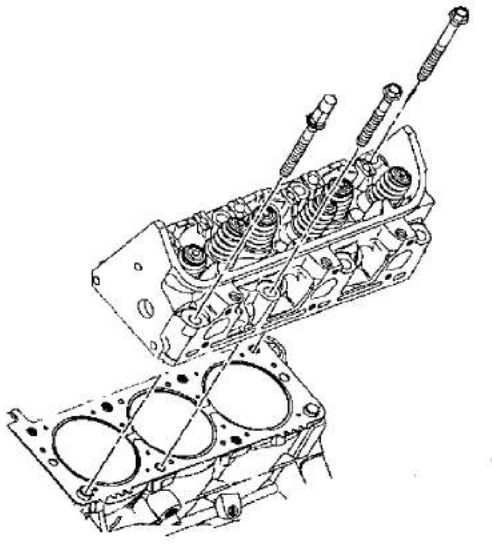

1. Remove the cylinder head bolt and discards.
2. Remove the cylinder head.

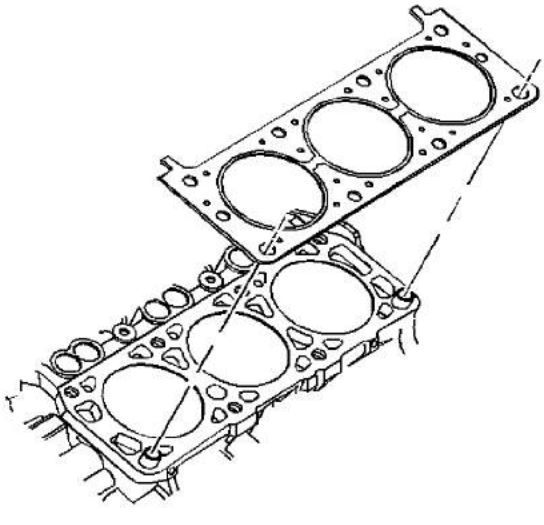

3. Remove the cylinder head gasket.
4. Remove the cylinder head locator dowel pins , if required.

cardiagn.com

Cylinder Head Removal - Right Side

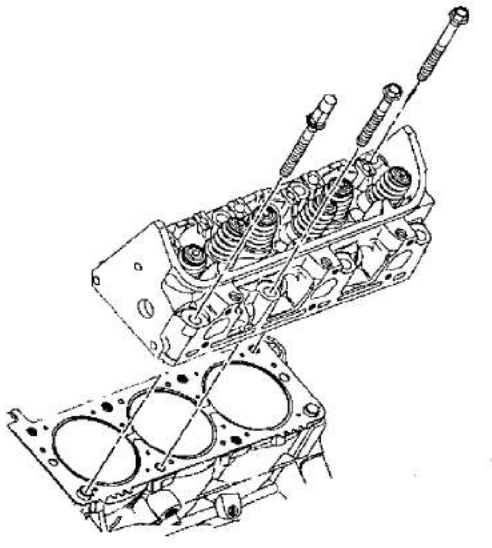

1. Remove the cylinder head bolts and discard.
2. Remove the cylinder head.

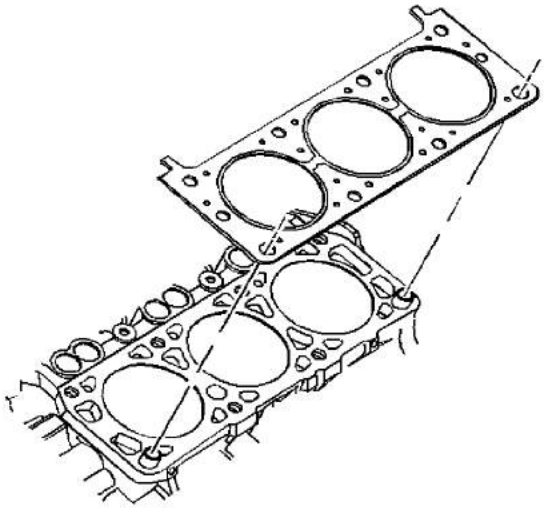

3. Remove the cylinder head gasket.
4. Remove the cylinder head locator dowel pins, if required.

cardiagn.com

Oil Pan Removal

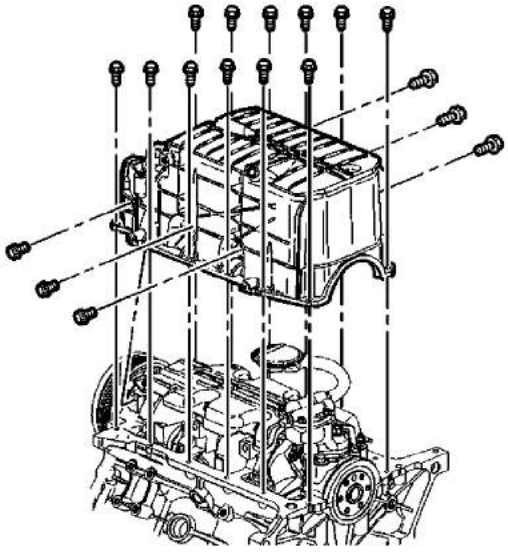

1. Remove the oil pan support bracket bolts and brackets as needed
2. Remove the oil pan side bolts.
3. Remove the oil pan bolts.
4. Remove the oil pan.
5. Remove the oil pan gasket.

cardiagn.com

Oil Pump Removal

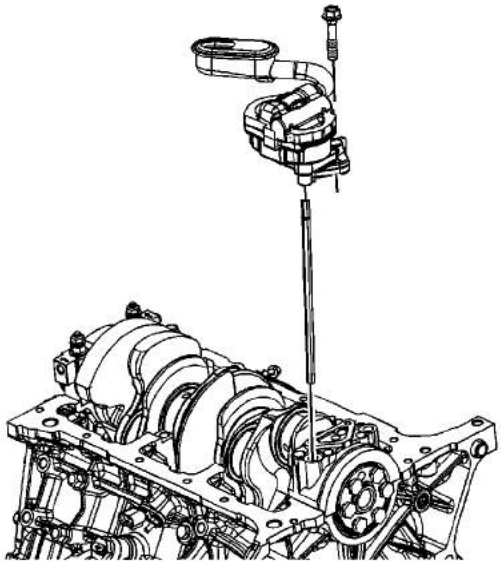

1. Remove the oil pump bolt.
2. Remove the oil pump and oil pump drive shaft.

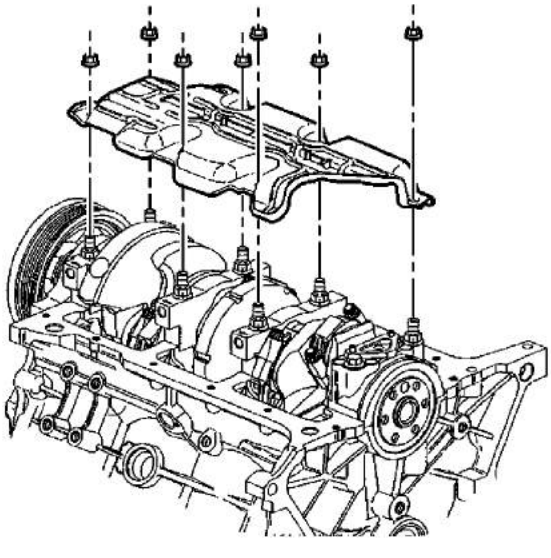

3. Remove the crankshaft oil deflector nuts.
4. Remove the crankshaft oil deflector.

cardiagn.com

Camshaft Position Actuator Magnet Removal

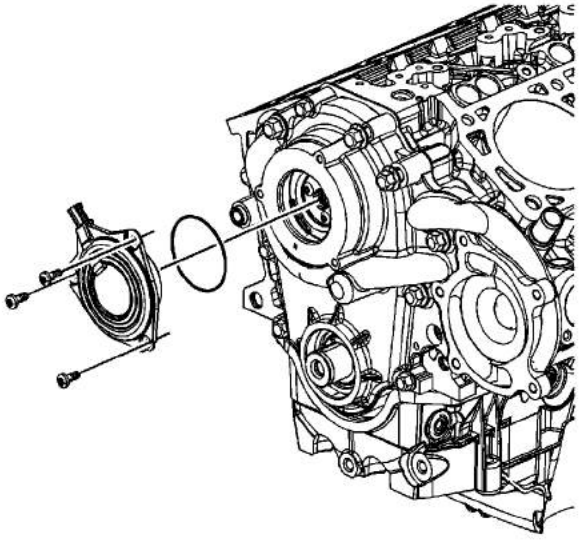

1. Remove the camshaft position actuator magnet bolts.
2. Remove the camshaft position actuator magnet and O-ring seal.

cardiagn.com

Oil Pump Drive Removal

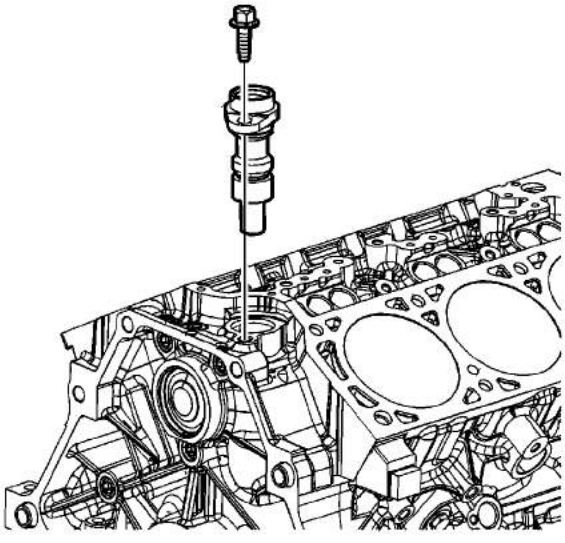

1. Remove the oil pump drive clamp bolt.
2. Remove the oil pump drive clamp.
3. Remove the oil pump drive.

cardiagn.com

Crankshaft Front Oil Seal Removal

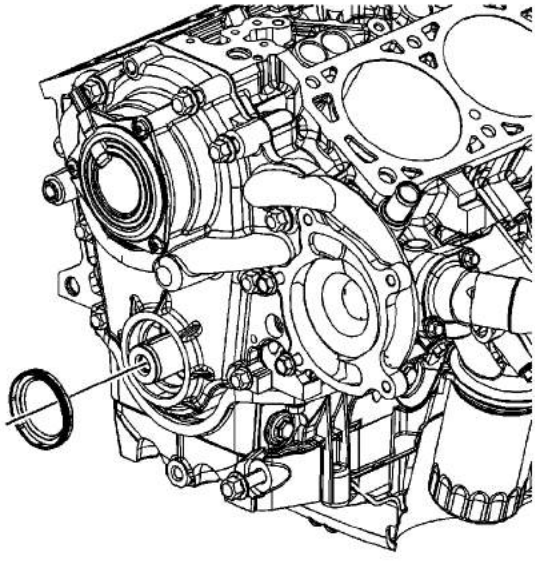

Pry out the crankshaft front oil seal using a suitable tool. Use care not to damage the engine front cover or the crankshaft.

cardiagn.com

Engine Front Cover Removal

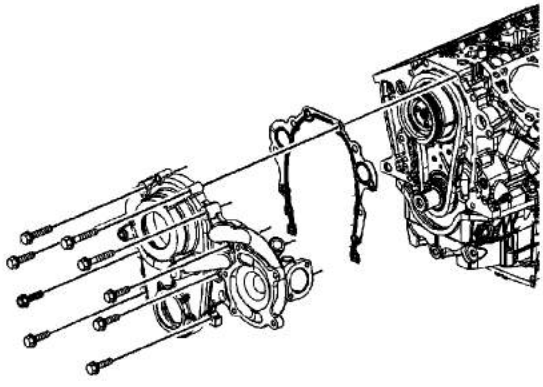

1. Remove the engine front cover bolts.
2. Remove the engine front cover.
3. Remove the engine front cover gasket.

cardiagn.com

Timing Chain and Sprocket Removal

Tools Required

EN-47719 Tensioner Compressor

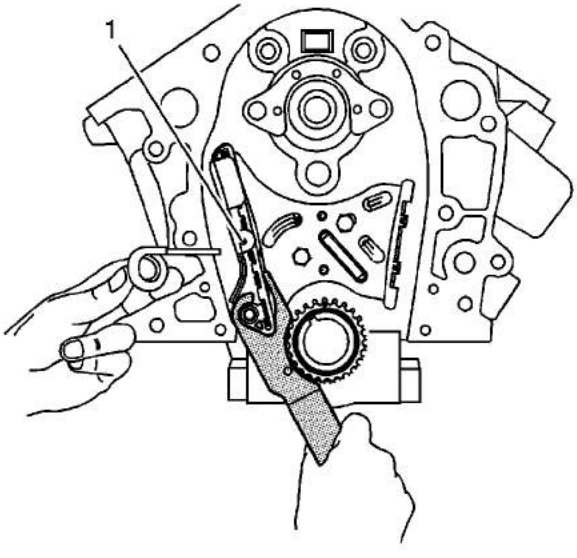

1. Using the EN-47719 fully collapse the tensioner and place the tensioner retaining pin into the retaining hole (1).

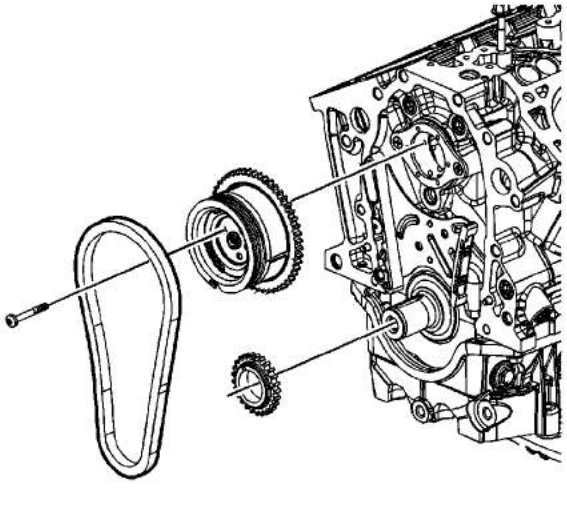

2. Remove the camshaft sprocket bolts.

cardiagn.com

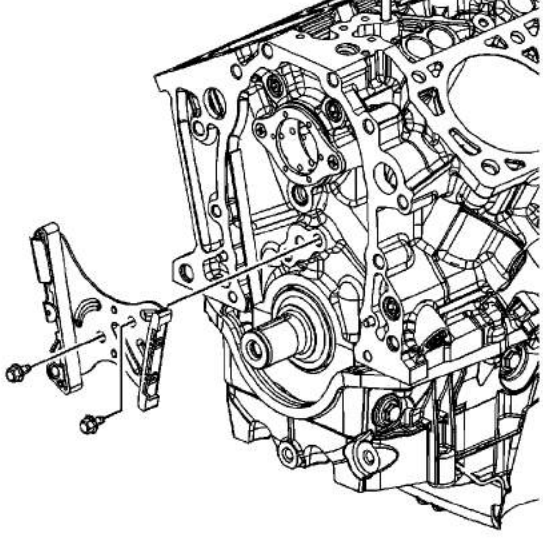

4. Remove the timing chain tensioner bolts.
5. Remove the timing chain tensioner.

cardiagn.com

Camshaft Removal

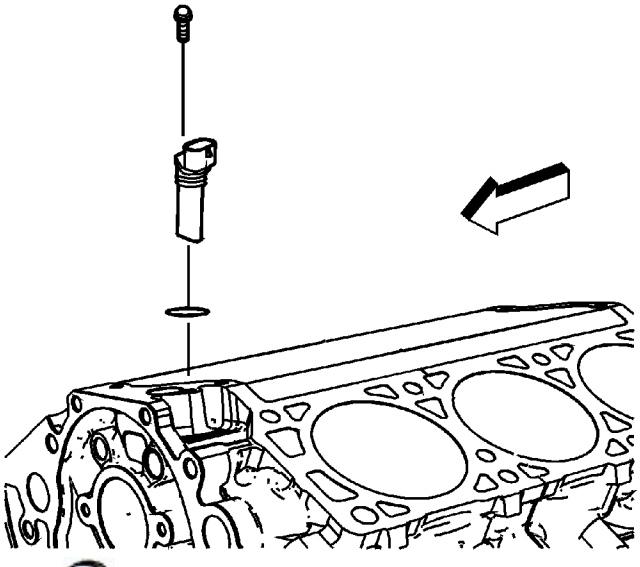

1. Remove the camshaft position sensor bolt.
2. Remove the camshaft position sensor.

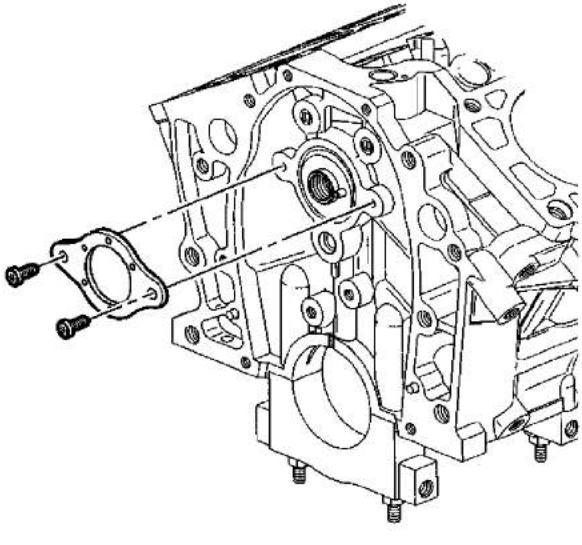

3. Remove the camshaft thrust plate screws.
4. Remove the camshaft thrust plate.

cardiagn.com

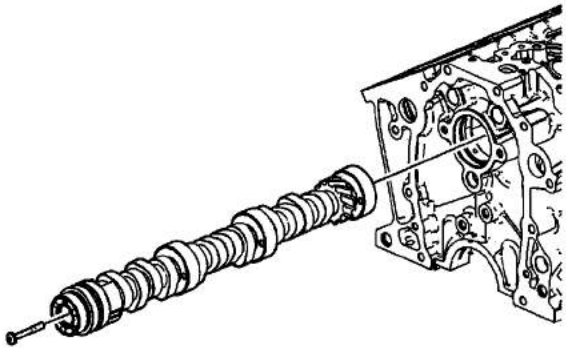

Caution: All camshaft journals are the same diameter, so care must be used in removing or installing the camshaft to avoid damage to the camshaft bearings.

5. Complete the following steps in order to remove the camshaft.
   5.1. Install a camshaft sprocket bolt into the camshaft. Tighten finger tight only.
   5.2. Carefully rotate and remove the camshaft from the engine block.

cardiagn.com

Piston, Connecting Rod, and Bearing Removal

Special Tools

- *J 24270* Cylinder Bore Ridge Reamer
- *J 41556* Connecting Rod Guide

For equivalent regional tools, refer to Tools and Equipment.

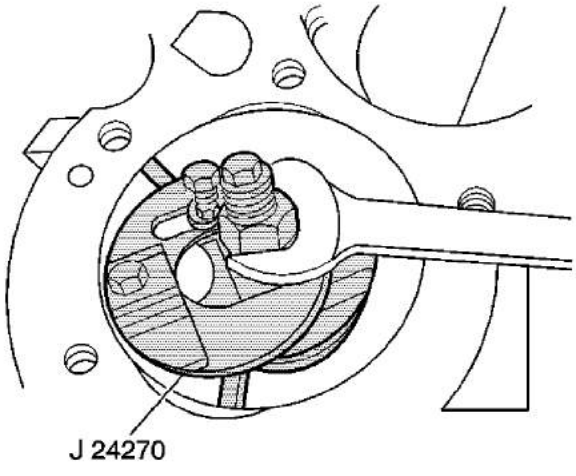

1. Mark the piston with the number of the cylinder from which the piston is being removed.
2. Mark the connecting rod and the connecting rod cap in order to ensure correct assembly.

   Caution: If there is a pronounced ridge at the top of the piston travel, the ridge must be removed with a ridge reamer before the piston and connecting rod assembly are removed. Applying force may break the piston rings or damage the piston.

3. Use the *J 24270* reamer in order to remove the cylinder bore ring ridge. Complete the following steps:
   3.1. Turn the crankshaft until the piston is at the bottom of the stroke.
   3.2. Cover the piston with a cloth.
   3.3. Remove the cylinder ring ridge.
   3.4. Turn the crankshaft until the piston is at the top of the stroke.
   3.5. Remove the cloth.
   3.6. Remove the metal shavings from the cylinder and piston.

cardiagn.com

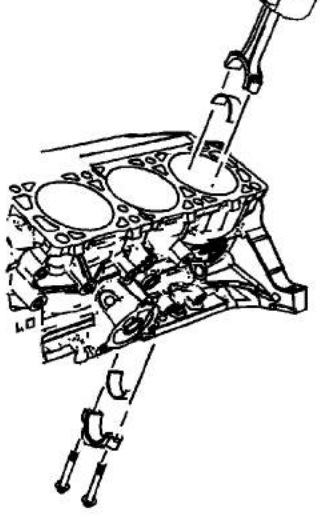

4. Remove the connecting rod bolts.
5. Remove the connecting rod cap.
6. Remove the connecting rod bearing half.
7. Install *J 41556* guide into the connecting rod.
8. Remove the connecting rod and piston assembly from the engine with a suitable tool.

cardiagn.com

Crankshaft Rear Oil Seal Removal

Important: Do not nick the crankshaft sealing surface when removing the seal.

1. Remove crankshaft rear main oil seal using one of the following techniques:
   - Refer to step #2 for the removal of new style crankshaft rear main oil seal.
   - Refer to step #3 for the removal of old style crankshaft rear main oil seal.

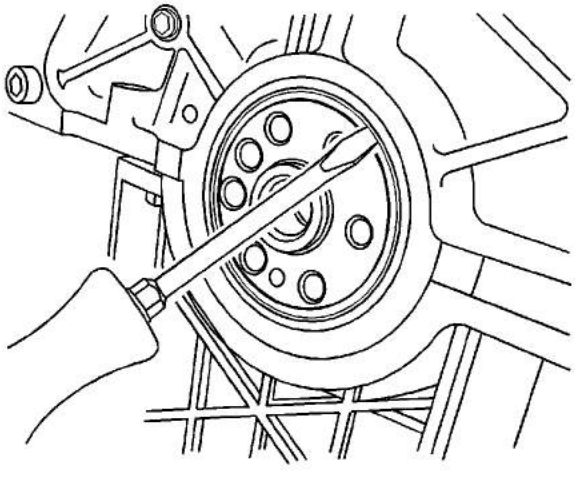

2. If removing a new style seal--seal lip is facing outward, insert a flat-bladed or similar tool between the sealing lip and the outer casing of the seal at an angle, and gently pry seal out by moving tool towards the center of the crankshaft.

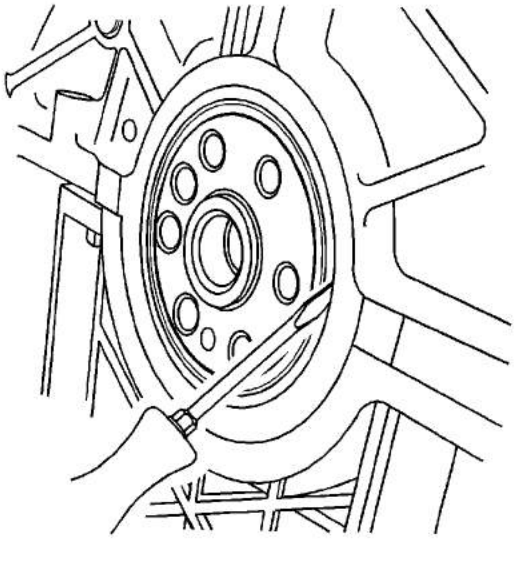

cardiagn.com

3. If removing an old style--seal lip faces inward, insert a flat-bladed or similar tool between the outer seal casing and the engine block casting and gently pry seal out.
4. Repeat above steps as necessary around the crankshaft rear oil seal, until the seal is removed.

cardiagn.com

Crankshaft and Bearing Removal

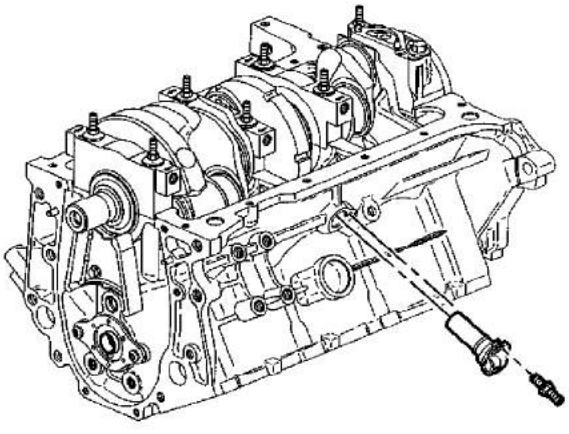

1. Remove the crankshaft position sensor heat shield nut and heat shield.
2. Remove the crankshaft position sensor stud.
3. Remove the crankshaft position sensor from the side of the block.

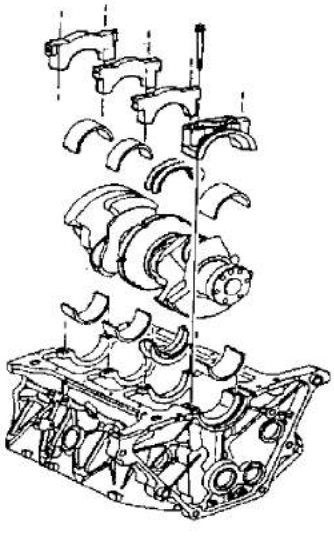

4. Remove the crankshaft main bearing cap bolt and studs.
5. Remove the crankshaft main bearing caps and lower crankshaft main bearing halves.

Important: Use Care when handling the crankshaft. Avoid damage to the crankshaft

cardiagn.com

6. Remove the crankshaft.
7. Remove the upper crankshaft main bearing halves.

cardiagn.com

Piston Oil Nozzle Removal

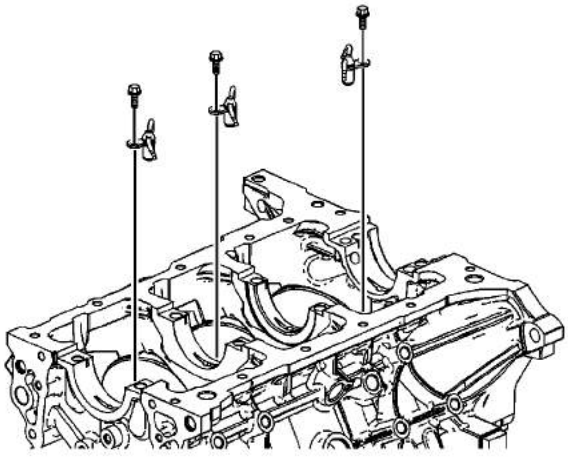

1. Remove the bolts retaining the piston oil nozzles to the engine block.
2. Remove the piston oil nozzles.

cardiagn.com

Camshaft Bearing Removal

Tools Required

J 33049 Camshaft Bearing Service Set

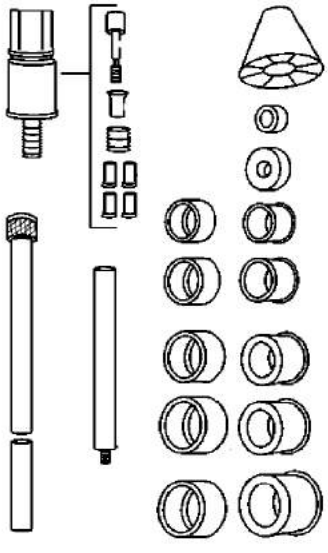

1. Select the expander assembly and driving washer.
2. Assemble the J 33049 .

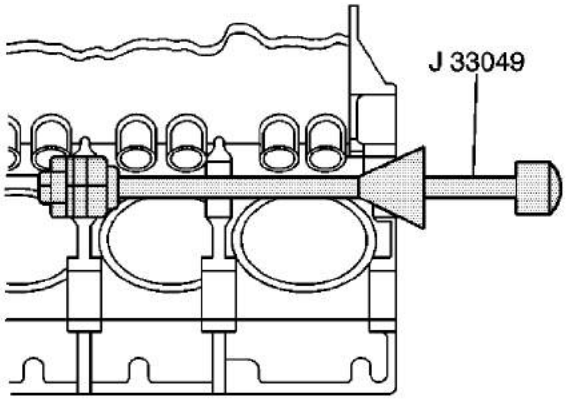

3. Drive out the camshaft bearings. Use the J 33049 .

cardiagn.com

Engine Block Disassemble

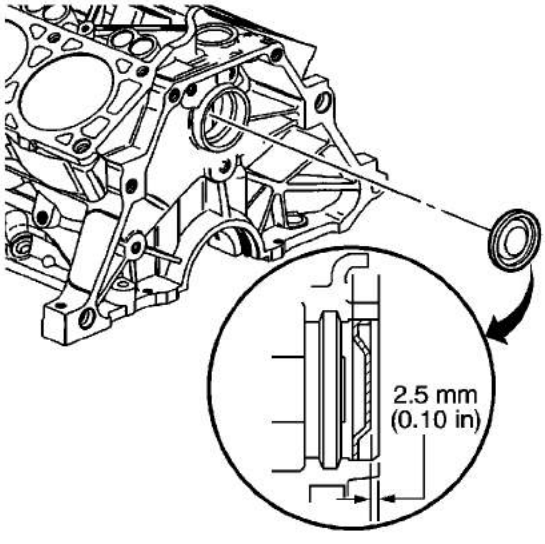

Caution: Maximum gasket performance is achieved when using new fasteners, which contain a thread-locking patch. If the fasteners are not replaced, a thread locking chemical must be applied to the fastener threads. Failure to replace the fasteners or apply a thread-locking chemical MAY reduce gasket sealing capability.

1. Remove the camshaft rear bearing hole plug.

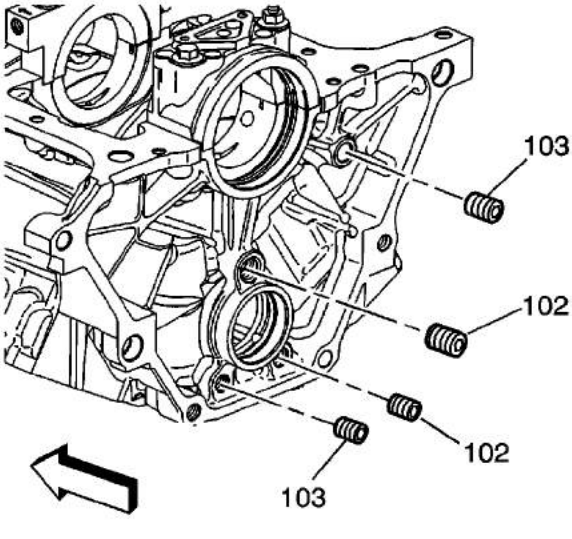

cardiagn.com

2. Remove the rear oil gallery plugs (102, 103).

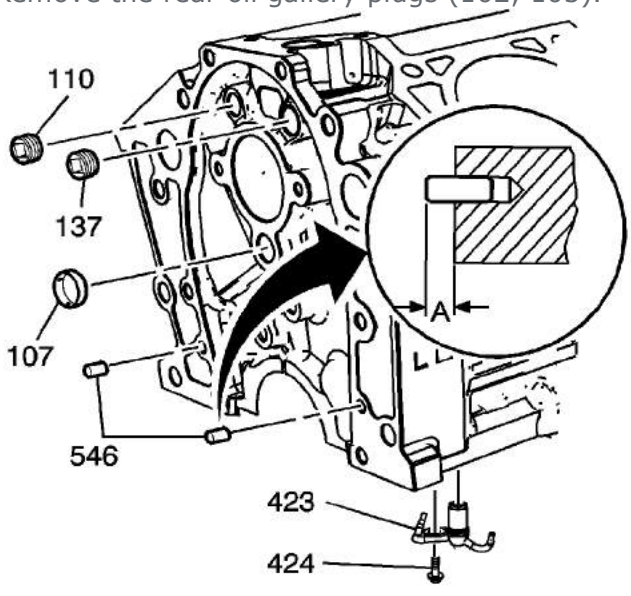

3. Remove the front oil gallery plugs (107, 110, 137).
4. Remove the engine front cover locating pins (546).

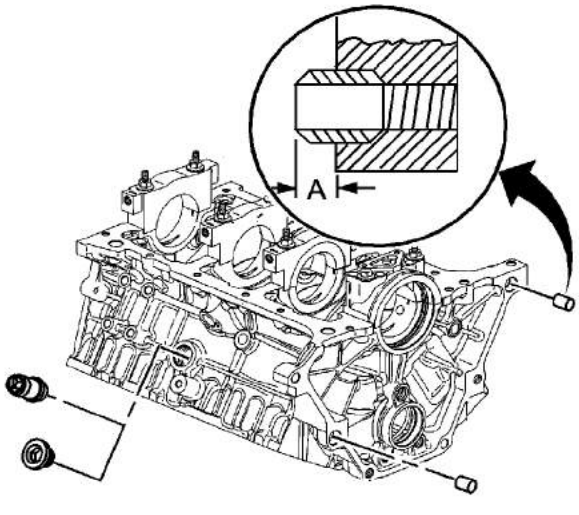

5. Remove the engine block plug.
6. Remove the transmission locating pins (A).

cardiagn.com

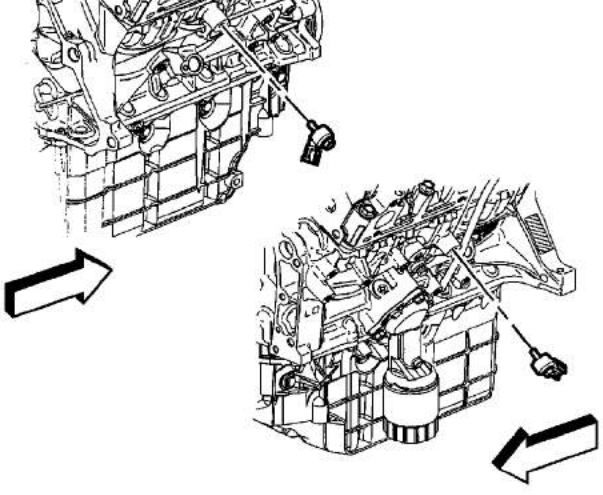

7. Remove the knock sensors.

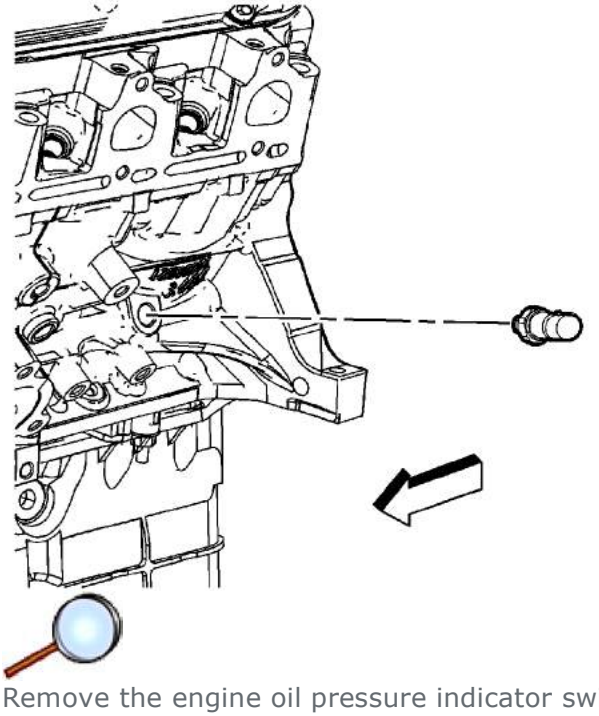

8. Remove the engine oil pressure indicator switch.

cardiagn.com

Engine Block Heater Removal

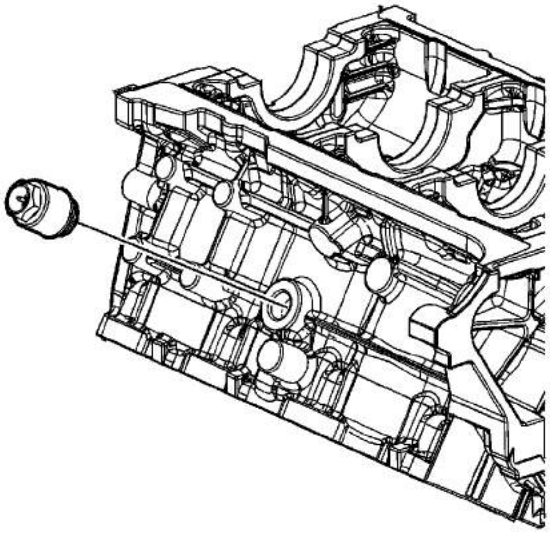

Remove the engine block heater from engine block.

cardiagn.com

Engine Block Cleaning and Inspection

Special Tools

- *J-8001* Dial Indicator Set
- *J-8087* Cylinder Bore Gage

For equivalent regional tools, refer to Special Tools

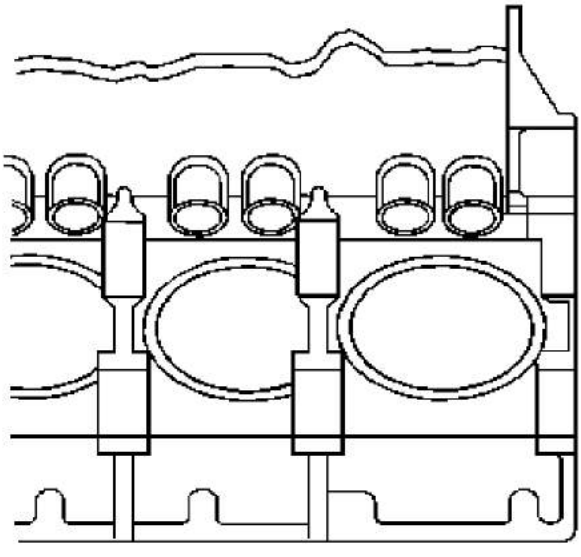

1. Clean the sealing material from the gasket mating surfaces.
2. Boil the engine block in caustic solution.
3. Flush the engine block with clean water or steam.
4. Clean the oil passages.
5. Clean the blind holes.
6. Spray the cylinder bores and the machined surfaces with engine oil.
7. Inspect the threaded holes.
8. Clean the holes with a tap. Drill out the holes and install thread inserts, as needed.

cardiagn.com

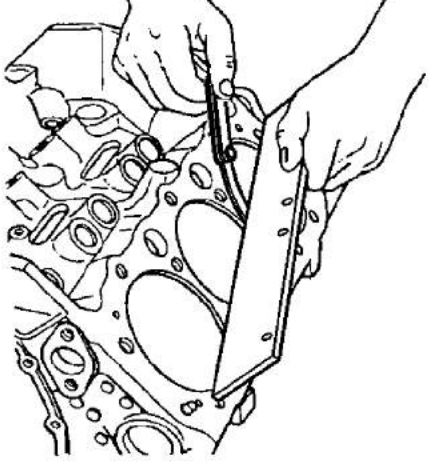

9. Use a straight edge and a feeler gauge in order to test the deck surface for flatness. Replace the block if it is outside of the specification limit.
10. Inspect the oil pan rail for nicks.
11. Inspect the front cover attaching area for nicks. Use a flat mill file in order to remove any nicks.

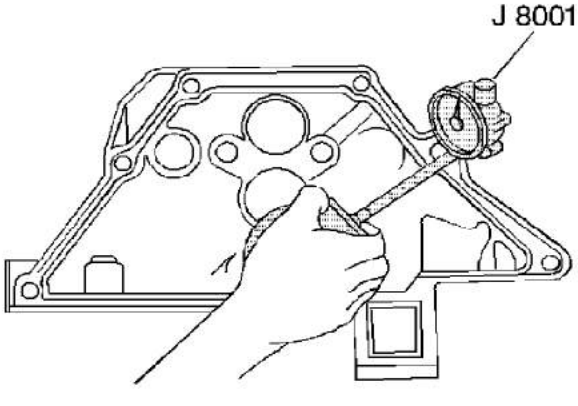

12. Inspect the mating surfaces of the transmission case.

    Caution: A broken flywheel may result if the transmission case mating surface is not flat.

13. Use the following procedure in order to measure the engine block flange runout at the 6 mounting bolt hole bosses:
    13.1. Temporarily install the crankshaft. Measure the crankshaft flange runout.
    13.2. Hold the *J-8001* Dial Indicator Set gage plate flat against the crankshaft flange.

cardiagn.com

13.4. Record the readings obtained from all of the bolt hole bosses. The measurements should not vary more than 0.25 mm (0.010 in).

13.5. Retest the crankshaft flange runout if the readings vary more than 0.25 mm (0.010 in). If the crankshaft flange runout is not within the specification, replace the engine block.

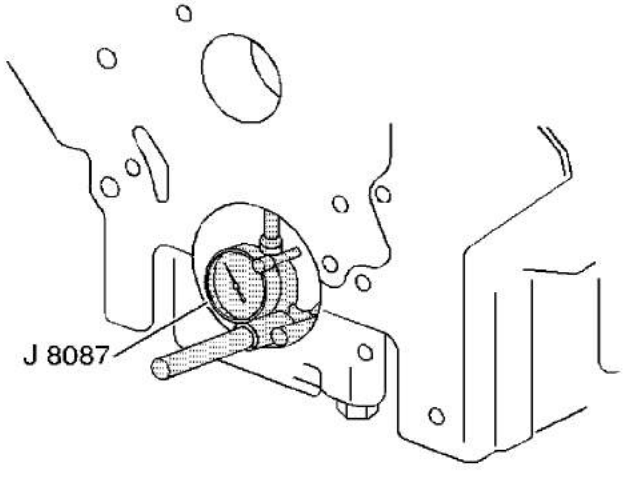

Note: Perform the following inspections, and reconditioning if necessary, with the crankshaft main bearing caps installed and tightened to specification.

14. Inspect the crankshaft main bearing bores. Use the *J-8087* Cylinder Bore Gage in order to measure the bearing bore concentricity and alignment at the following locations:
    - The camshaft
    - The crankshaft
15. Replace the engine block if the bores are out of specification.

cardiagn.com

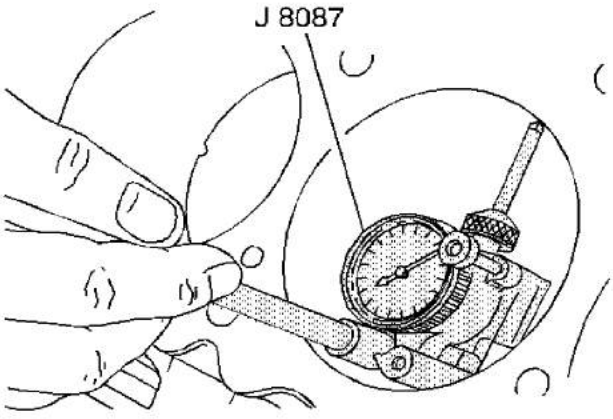

16. Use the *J-8087* Gage in order to inspect the cylinder bores. Inspect the bores for the following conditions:
    - Wear
    - Taper
    - Runout
    - Ridging

    Note: If the bore is worn beyond the limits, refit the bore with 0.5 mm (0.02 in) oversized pistons.

17. Leave sufficient material in order to allow honing when fitting the piston.

cardiagn.com

Cylinder Boring and Honing

Boring Procedure

1. Before honing or boring, measure all of the new pistons. Select the smallest piston for the piston fitting. Slightly varied pistons in a set may provide correction, if the first piston is too loosely fitted.
2. Before using any type of boring bar, file the top of the engine block to remove any dirt or burrs. If the cylinder block is not straight, the boring bar may be tilted, causing the bored cylinder wall to have incorrect right angles to the crankshaft.
3. Carefully follow the instructions furnished by the manufacturer regarding use of equipment.
4. Install all crankshaft main bearing caps to specification when boring cylinders. Cover or tape the crankshaft bearings and other internal parts to protect these parts during the boring or honing operation.
5. Leave 0.03 mm (0.001 in) on the diameter for finish honing when performing the final cut with a boring bar. Carefully perform the honing and boring operation to maintain the specified clearances between pistons, rings, and cylinder bores.

Honing Procedure

1. Follow the manufacturer's recommendations for use, cleaning, and lubrication when honing the cylinders. Use only clean, sharp stones of the proper grade for the amount of material to be removed. Dull, dirty stones cut unevenly and generate excessive heat. When using coarse or medium-grade stones, leave sufficient metal so all stone marks may be removed with the fine stones used for finishing to provide the proper clearance.
2. During the honing operation, thoroughly clean the cylinder bore. Check for the correct piston fit.

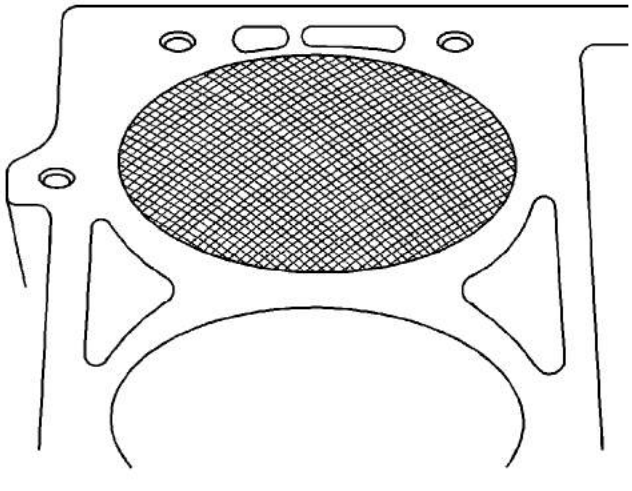

3. Make full strokes in the cylinder to eliminate taper. Repeatedly check the measurement at the top, the middle, and the bottom of the cylinder bore.

cardiagn.com

handling.

4. When finish honing a cylinder bore to fit a piston, move the hone up and down at a sufficient speed to obtain a fine and uniform surface finish in a cross hatch pattern.
5. The finish marks should be clean but not sharp. The finish marks should be free from imbedded particles and torn or folded metal.
6. Determine the finish hone cylinder measurement by measuring the piston to be installed, and by adding the average of the clearance specification. Measure the block and the piston at normal room temperature.
7. True up the refinished cylinder bores. Final hone each cylinder bore to remove all stone or cutter marks.
8. After final honing and before the piston is checked for fit, clean the bores with hot water and detergent. Scrub the bores with a stiff bristle brush and rinse the bores thoroughly with hot water. Do not allow any abrasive material to remain in the cylinder bores. This abrasive material will wear the new rings, the cylinder bores, and the bearings lubricated by the contaminated oil. After washing dry the bore.
9. Permanently mark the piston for the cylinder to which the piston has been fitted.
10. Apply clean engine oil to each bore to prevent rusting.

cardiagn.com

Engine Block Assemble

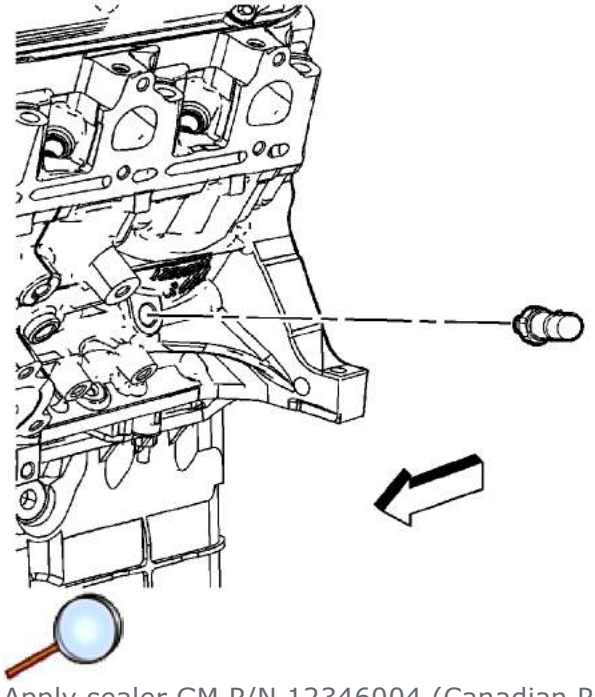

1. Apply sealer GM P/N 12346004 (Canadian P/N 10953480), or equivalent to the oil pressure switch threads.

   Caution: Refer to Fastener Caution in the Preface section.

2. Install the engine oil pressure switch and tighten to **16 N·m (12 lb ft)**.

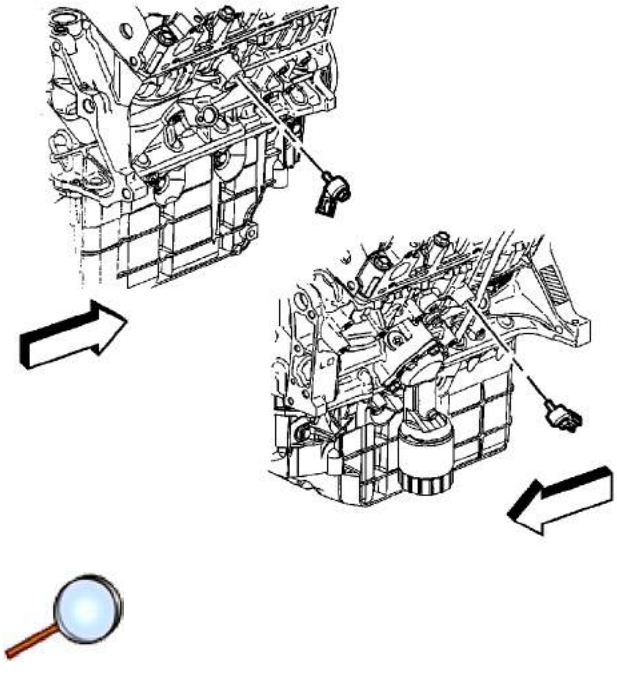

cardiagn.com

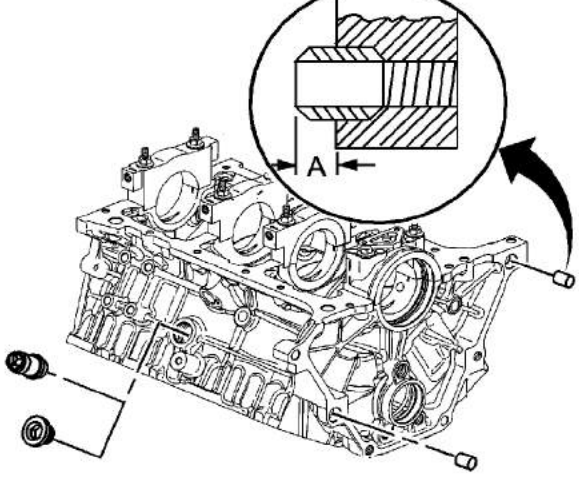

4. Apply sealer GM P/N 12346004 (Canadian P/N 10953480), or equivalent to the engine block plug.
5. Install a NEW engine block plug and tighten to **60 N·m (44 lb ft)**.
6. Install the transmission locating pins. The installation height should be 8.3-9.3 mm (0.327-0.366 in) (A).

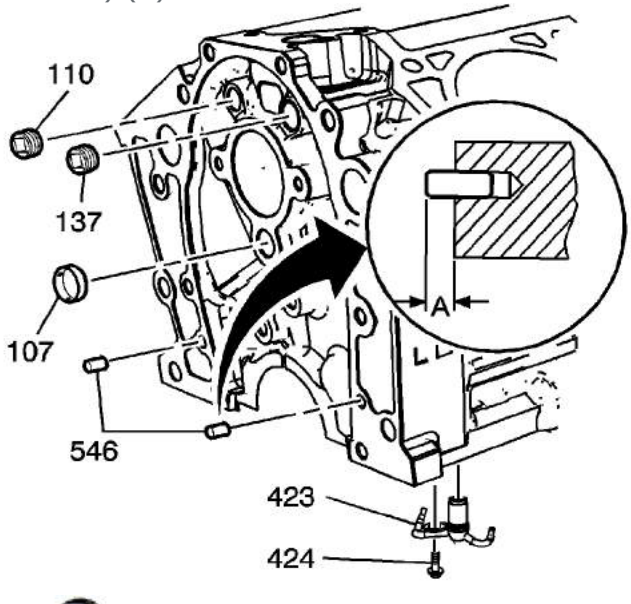

7. Apply sealer GM P/N 12346004 (Canadian P/N 10953480), or equivalent to the front oil gallery plug threads (110, 137).
8. Install the front oil gallery plug (110) and tighten to **19 N·m (14 lb ft)**.
9. Install the front oil gallery plug (137) and tighten to **33 N·m (24 lb ft)**.
10. Apply sealer GM P/N 12377901 (Canadian P/N 10953504), or equivalent to the front oil gallery plug (107).
11. Install the front oil gallery plug (107) so that it is 1.5 mm (0.06 in) below flush of the engine block.

cardiagn.com

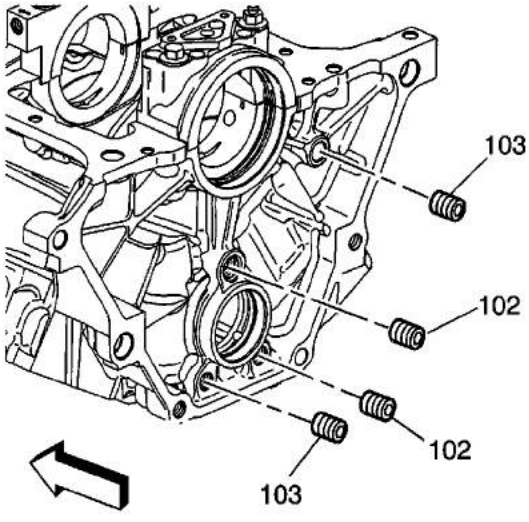

13. Apply Sealer GM P/N 12346004 (Canadian P/N 10953480), or equivalent to the rear oil gallery plugs.
14. Install the rear oil gallery plugs (103) and tighten to **19 N·m (14 lb ft)**.
15. Install the rear oil gallery plugs (102) and tighten to **33 N·m (24 lb ft)**.

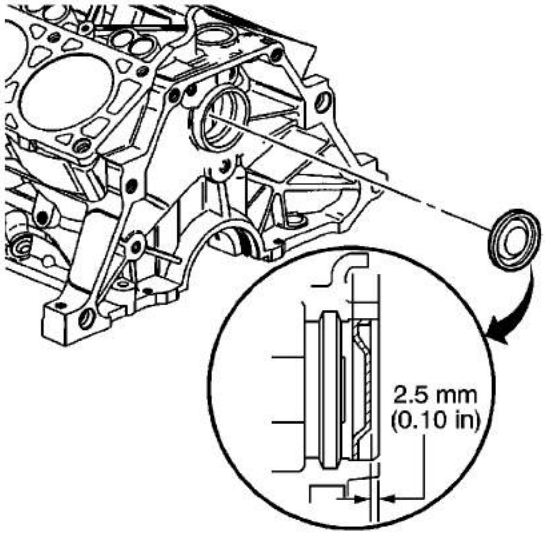

16. Apply sealer GM P/N 12377901 (Canadian P/N 10953504), or equivalent to the camshaft rear bearing hole plug.
17. Install the camshaft rear bearing hole plug.

cardiagn.com

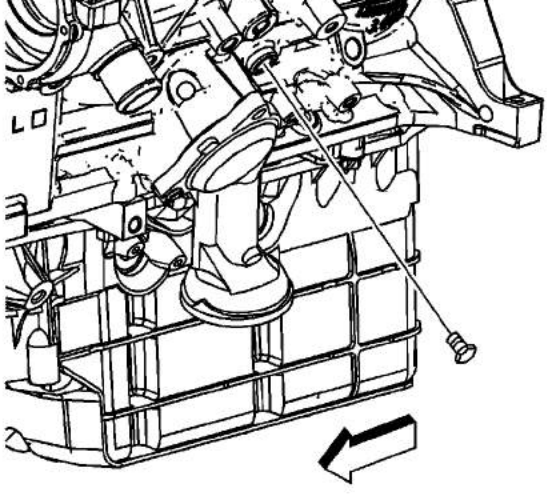

Caution: Maximum gasket performance is achieved when using new fasteners, which contain a thread-locking patch. If the fasteners are not replaced, a thread locking chemical must be applied to the fastener threads. Failure to replace the fasteners or apply a thread-locking chemical MAY reduce gasket sealing capability.

18. Apply sealer GM P/N 12346004 (Canadian P/N 10953480), or equivalent to the left and right coolant drain plug threads.
19. Install the left coolant drain plug and tighten to **19 N·m (14 lb ft)**.

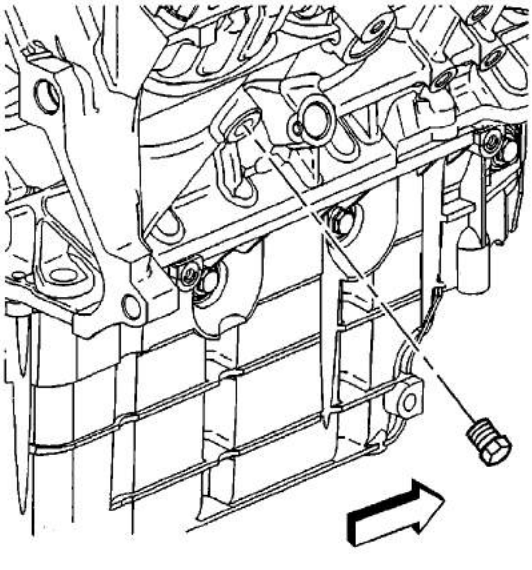

20. Install the right coolant drain plug and tighten to **19 N·m (14 lb ft)**.

cardiagn.com

Engine Block Heater Installation

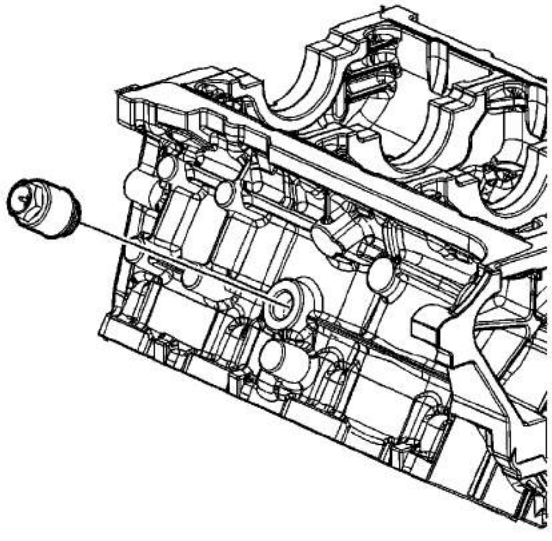

1. Apply sealer GM P/N 12346004 (Canadian P/N 1095380), or equivalent to the engine block heater.

   Caution: Refer to Fastener Caution in the Preface section.

2. Install the engine block heater into the engine block and tighten to **50 N·m (37 lb ft)**.

cardiagn.com

Piston Oil Nozzle Cleaning and Inspection

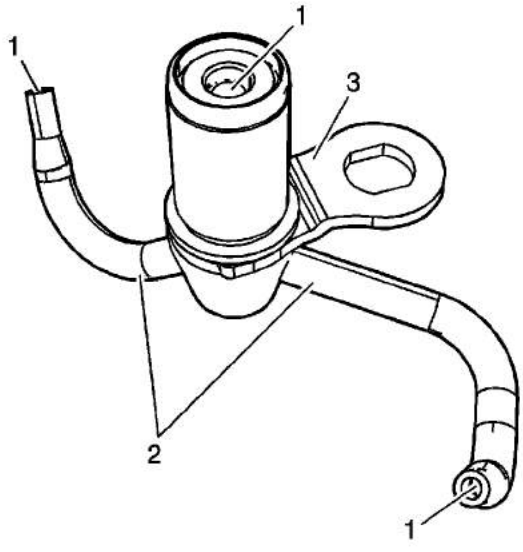

1. Clean the piston oil nozzle in cleaning solvent.

   Warning: Wear safety glasses in order to avoid eye damage.

2. Dry the nozzle with compressed air.
3. Inspect the piston oil nozzle for the following:
   - For cracks or damage
   - Plugged oil passages (1)
   - Bent, misaligned, or cracked oil nozzle tubes (2)
   - Bent or broken clip (3)

cardiagn.com

Crankshaft and Bearing Cleaning and Inspection

Special Tools

- *J-8087* Cylinder Bore Gage
- *J-45059* Angle Meter

For equivalent regional tools, refer to Special Tools

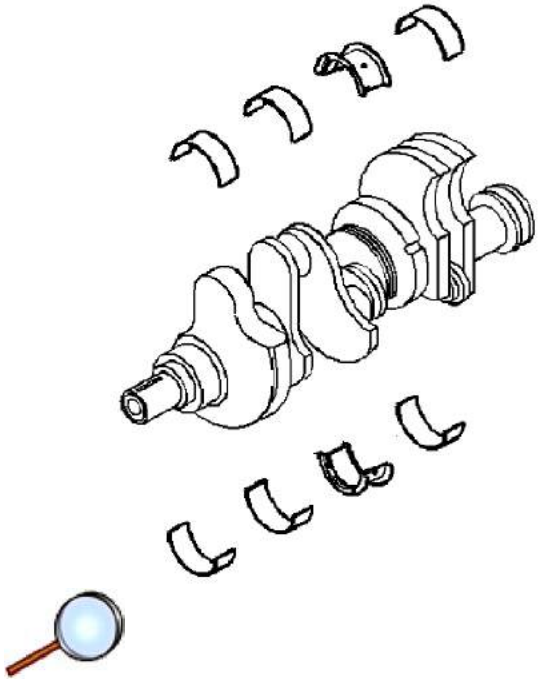

Note: Use care when handling the crankshaft. Avoid damage to the crankshaft position sensor reluctor wheel teeth. Nicks, burrs or other damage to the teeth may effect on-board diagnostics (OBD) 2 system performance.

1. Clean the crankshaft of the following elements:
   - Oil
   - Sludge
   - Carbon
2. Inspect the crankshaft oil passages for obstructions.

cardiagn.com

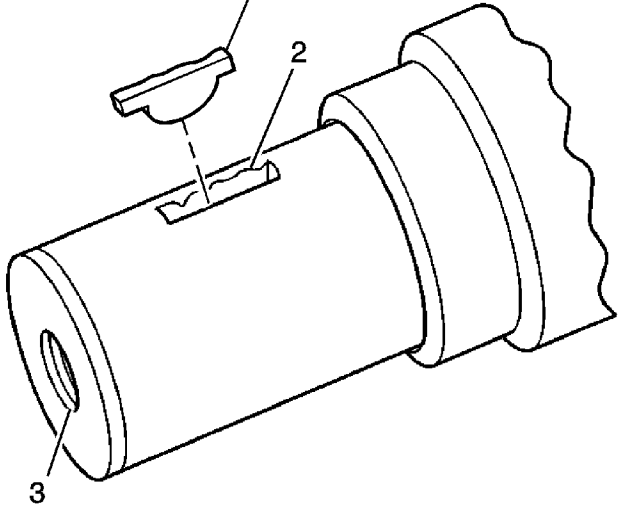

3. Inspect the crankshaft keyway for the following conditions:
   - A worn crankshaft key (1)
   - A worn crankshaft keyway (2)
4. Inspect the crankshaft threads (3) for damage.

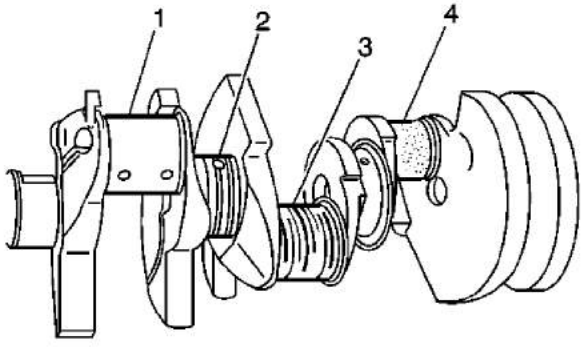

Note: If cracks, severe gouges or burned spots are found, replace the crankshaft. Remove slight roughness using a fine polishing cloth soaked in clean engine oil. Remove any burrs using a fine oil stone.

5. Inspect the crankshaft bearing journals and the crankshaft thrust surfaces for the following conditions:
   - Wear without any grooves or scratches (1)

cardiagn.com

- Scratches or excessive wear (3)
- Pitting or embedded bearing material (4)--Inspect the corresponding crankshaft bearing inserts for embedded material and determine the source of the material.
- Overheating or discoloration

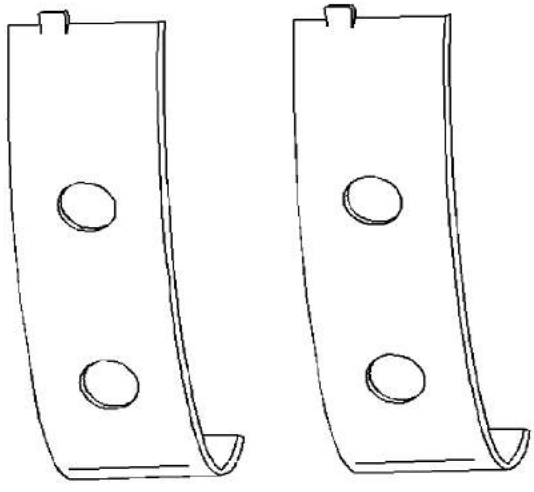

6. The crankshaft bearings are the precision insert type.
7. Inspect the outer surfaces of the crankshaft bearings for the following conditions:
   - Wear--surface wear indicates either movement of the insert, or high spots in the surrounding material - spot wear.
   - Overheating or discoloration
   - Looseness or rotation indicated by flattened tangs and wear grooves

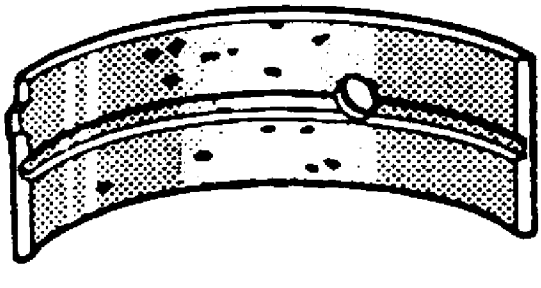

cardiagn.com

Note: Note the location of the crankshaft main bearing high spots. If the spots are not in line, the crankshaft is bent. Replace the crankshaft.

8. Inspect the crankshaft main bearings for craters or pockets. Flattened sections on the crankshaft bearing halves also indicate fatigue.
9. Inspect the thrust surfaces of the main thrust bearing for the following conditions:
   - Wear
   - Grooving--Grooves are caused by irregularities of the crankshaft thrust surface.

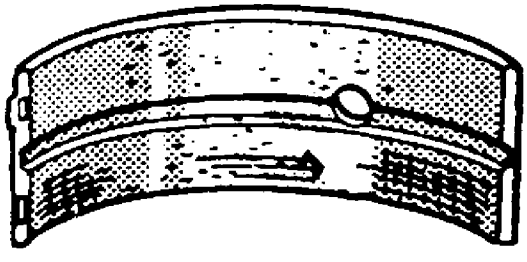

10. Inspect the crankshaft bearings for excessive scoring or discoloration.
11. Inspect the crankshaft main bearings for dirt or imbedded debris.

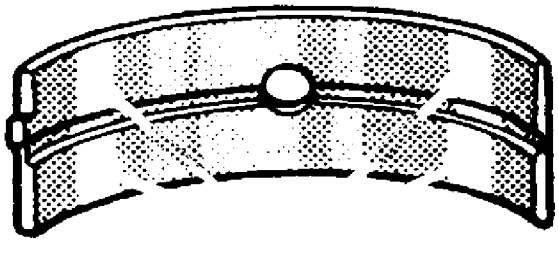

cardiagn.com

12. Inspect the crankshaft main bearings for improper seating indicated by bright, polished sections.
13. Inspect the crankshaft bearings for uneven side-to-side wear. This may indicate a bent crankshaft or a tapered bearing journal.

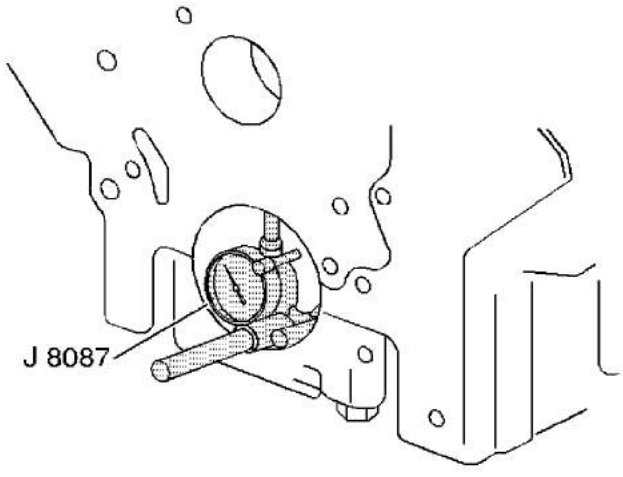

Note: If crankshaft bearing failure is due to conditions other than normal wear, investigate the cause of the condition. Inspect the crankshaft or connecting rod bearing bores.

14. Inspect the connecting rod bearing bores or crankshaft main bearing bores using the following procedure:
    14.1. Tighten the bearing cap to specification.
    14.2. Use the *J-8087* Cylinder Bore Gage in order to measure the bearing bore for taper and out-of-round. Record the readings for bearing selection.
    14.3. No taper or out-of-round should exist.

Bearing Selection

Measure the bearing clearance to determine the correct replacement bearing insert size. There are two methods to measure bearing clearance. Method A gives more reliable results and is preferred.

- Method A yields measurement from which the bearing clearance can be computed.
- Method B yields the bearing clearance directly. Method B does not give any indication of bearing run-out.

Method A

cardiagn.com

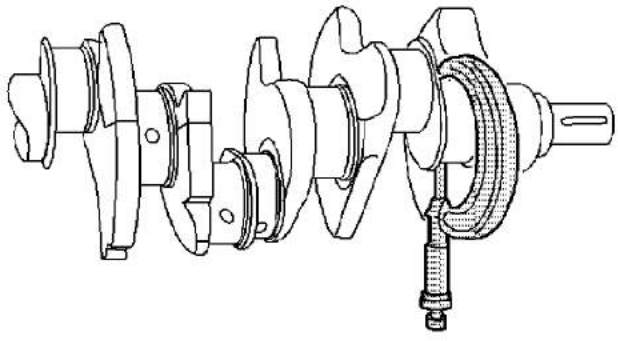

Note: Do not mix inserts of different nominal size in the same bearing bore.

1. Measure the crankshaft bearing journal diameter with a micrometer in several places, 90 degrees apart. Average the measurements.
2. Measure the crankshaft bearing journal taper and runout.
3. Install the crankshaft bearing inserts. Tighten the bearing cap bolts to specification using *J-45059* Angle Meter .
4. Measure the connecting rod inside diameter in the same direction as the length of the rod with an inside micrometer.
5. Measure the crankshaft main bearing inside diameter with an inside micrometer.
6. Select a set of bearing inserts that will produce the desired clearance.
7. If the specified clearances cannot be met, the crankshaft journals must be reconditioned and undersized bearing inserts installed.

Method B

cardiagn.com

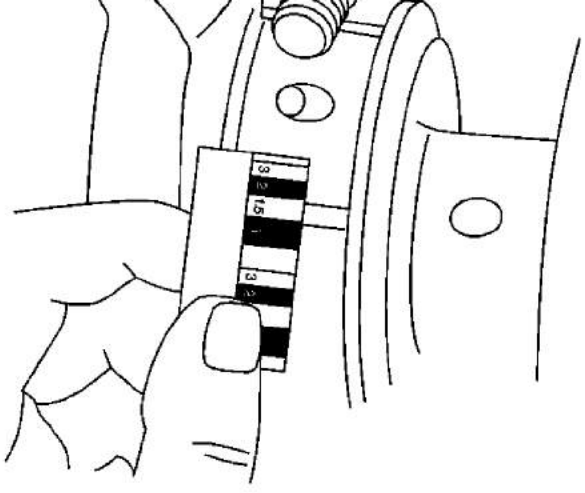

Note: Do not mix inserts of different nominal size in the same bearing bore.

1. Clean the used bearing inserts.
2. Install the used bearing inserts.
3. Place a piece of gaging plastic across the entire bearing width.
4. Install the bearing caps.

   Caution: In order to prevent the possibility of cylinder block or crankshaft bearing cap damage, the crankshaft bearing caps are tapped into the cylinder block cavity using a brass, lead, or a leather mallet before the attaching bolts are installed. Do not use attaching bolts to pull the crankshaft bearing caps into the seats. Failure to use this process may damage a cylinder block or a bearing cap.

5. Install the bearing cap bolts to specification using *J-45059* Meter .

   Note: Do not rotate the crankshaft.

6. Remove the bearing cap, leaving the gaging plastic in place. It does not matter whether the gaging plastic adheres to the journal or to the bearing cap.
7. Measure the gaging plastic at its widest point with the scale printed on the gaging plastic package.
8. Remove the gaging plastic.
9. Select a set of bearing inserts that will produce the desired clearance.

cardiagn.com

Crankshaft Balancer Cleaning and Inspection

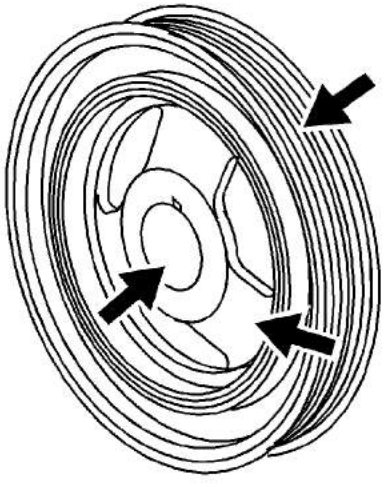

Warning: Bodily injury may occur if the cleaning solvent is inhaled or exposed to the skin.

1. Clean the crankshaft balancer in solvent.
2. Clean the belt grooves of all dirt or debris with a wire brush.
3. Inspect the crankshaft balancer for the following:

Note: A crankshaft balancer hub seal surface with excessive scoring, grooves, rust or other damage must be replaced. Minor imperfections on the hub seal surface may be removed with polishing compound or fine grade emery cloth.

- Worn, grooved, or damaged hub seal surface

Note: In order for the belt to track properly, the belt grooves should be free of all dirt, debris, nicks, gouges or other damage. Minor imperfections may be removed with a fine file.

- Dirty or damaged belt grooves.
- Worn, chunking or deteriorated rubber between the hub and pulley

cardiagn.com

Engine Flywheel Cleaning and Inspection

Warning: Bodily injury may occur if the cleaning solvent is inhaled or exposed to the skin.

Note: In order to maintain the proper component balance, contact surface taper and heat transfer, manual transmission flywheels are NOT to be machined.

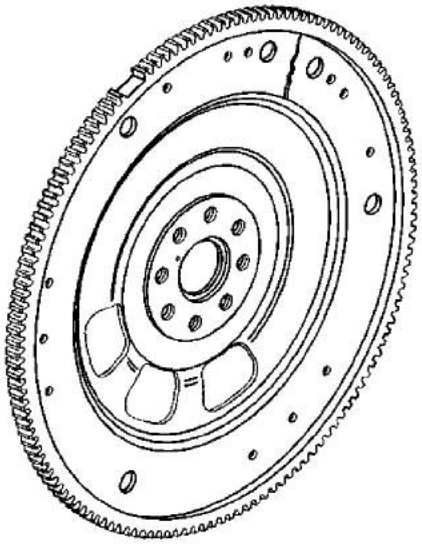

1. Clean the engine flywheel with solvent.
2. Dry the engine flywheel with compressed air.
3. Inspect the engine flywheel for the following:
   - Damaged ring gear teeth
   - Stress cracks around the flywheel-to-crankshaft bolt hole locations

cardiagn.com

Piston, Connecting Rod, and Bearing Cleaning and Inspection

Tools Required

- *J 8087* Cylinder Bore Gage
- *EN-46745* Piston Pin Retainer Remover and Installer

For equivalent regional tools, refer to Tools and Equipment.

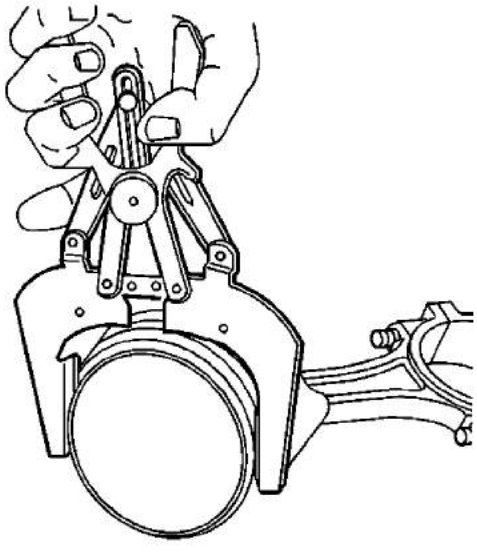

Warning: Bodily injury may occur if the cleaning solvent is inhaled or exposed to the skin.

Note: Measurement of all components should be taken with the components at room temperature. Do not use a wire brush in order to clean any part of the piston or connecting rod assembly.

Note: Some steps in this procedure may reflect on a disassembled oversized piston. Others will only apply to the standard size pistons that are NOT to be disassembled.

1. Clean the piston and connecting rod in solvent.
2. Dry off the piston and connecting rod with compressed air.
3. Clean the piston ring grooves with a suitable ring groove cleaning tool.
4. Clean the piston oil lubrication holes and slots.

cardiagn.com

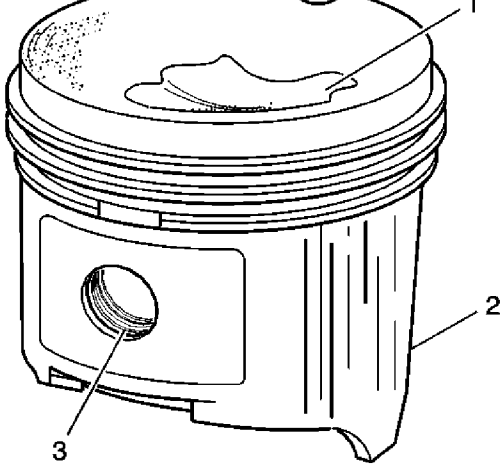

5. Inspect the piston for the following:
   - Eroded areas (1) on the top of the piston
   - Scuffed or damaged skirt (2)
   - Damage to the pin bore (3)
   - Cracks in the piston ring lands, the piston skirt, or the pin bosses
   - Piston ring grooves for nicks, burrs, or other warpage which may cause the piston ring to bind
6. Inspect the piston pin for scoring, wear or other damage.

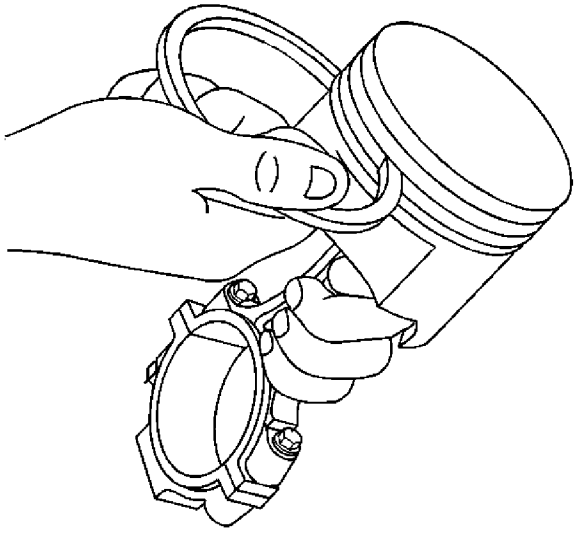

7. Measure the piston ring-to-piston ring groove side clearance.
   7.1. Insert the edge of the piston ring into the piston ring groove.
   7.2. Roll the piston ring completely around the piston ring groove.

cardiagn.com

- If binding is caused by a distorted piston ring, replace the piston ring.

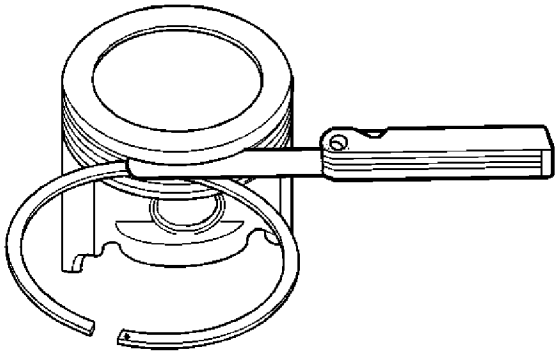

8. Measure the piston ring side clearance with a feeler gage.
9. If the side clearance is too small try another ring set.
10. If the proper piston ring-to-piston ring groove clearance cannot be achieved, replace the piston and pin assembly.
    - Proper ring-to-piston ring groove clearance for the top ring is 0.03-0.065 mm (0.001-0.002 in).
    - Proper ring-to-piston ring groove clearance for the second ring is 0.04-0.078 mm (0.002-0.003 in).

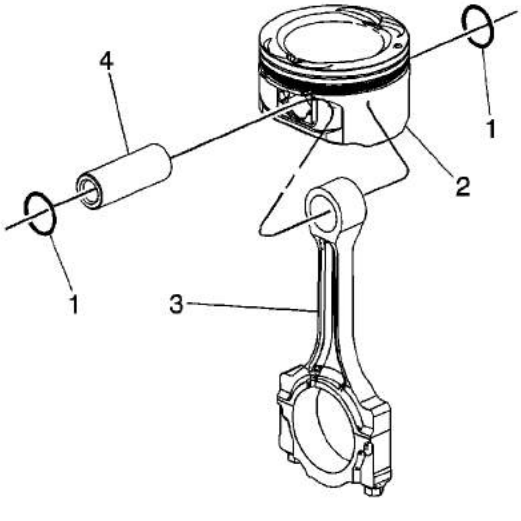

cardiagn.com

13. Slide the piston pin (4) out of the piston (2), disconnecting the piston from the connecting rod (3).

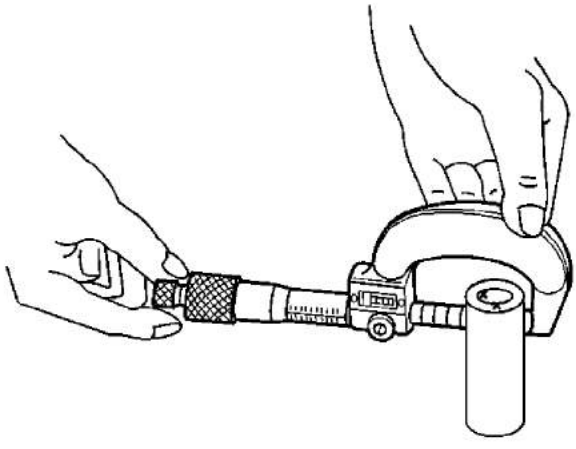

14. Measure the piston pin diameter using and outside micrometer.

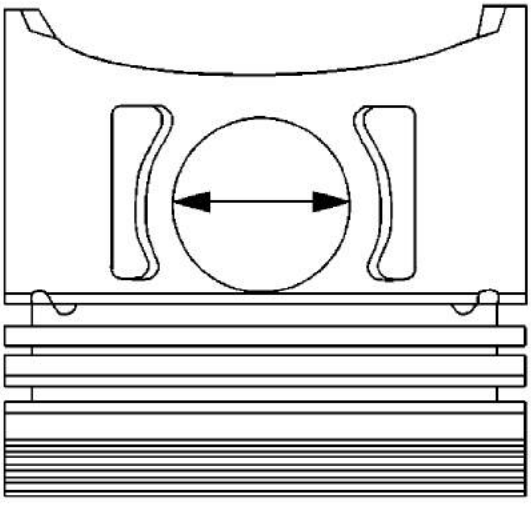

Note: When fitting pistons, consider both the pistons and the cylinder bore conditions together. Production and service pistons have the same nominal weight and may be intermixed without affecting engine balance. If necessary, used pistons may be fitted selectively to any cylinder of the engine, providing the pistons are in good condition and the same weight. Do not cut oversize pistons down or the engine balance may be affected. Finish hone when selecting the pistons.

cardiagn.com

piston pin-to-piston pin bore clearance.

17. Piston-to-piston pin bore clearance must measure 0.002-0.010 mm (0.00008-0.0004 in). Replace the piston and the piston pin if the piston and the piston pin are not within specifications.

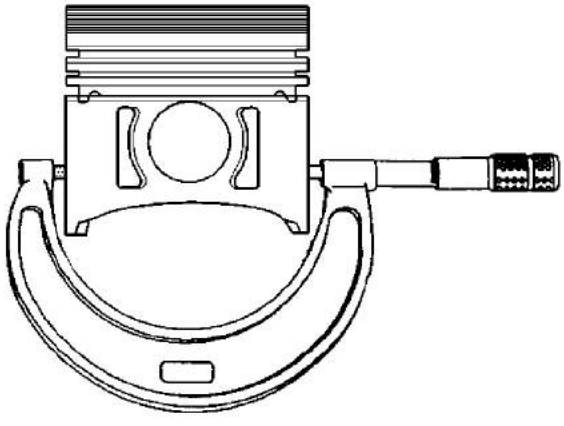

18. Measure the piston diameter with a micrometer at a right angle to the piston bore with the piston pin removed, and record the measurement. Measure the piston at 43 mm (1.692 in) from dome of piston. Piston diameter must measure no less than 98.950 mm (3.895 in). Replace the piston and the pin as an assembly if the piston is not within specifications.

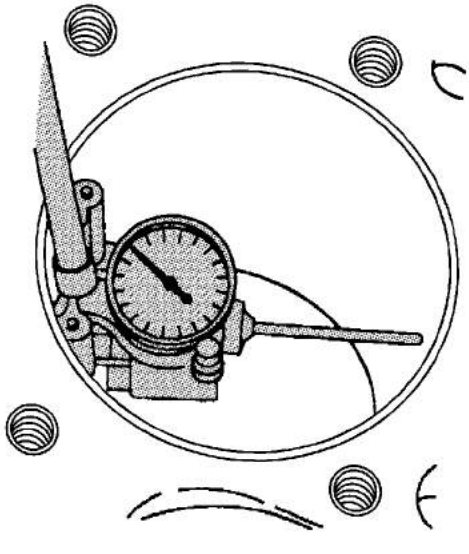

19. Measure the cylinder bore, using *J 8087* gage .

cardiagn.com

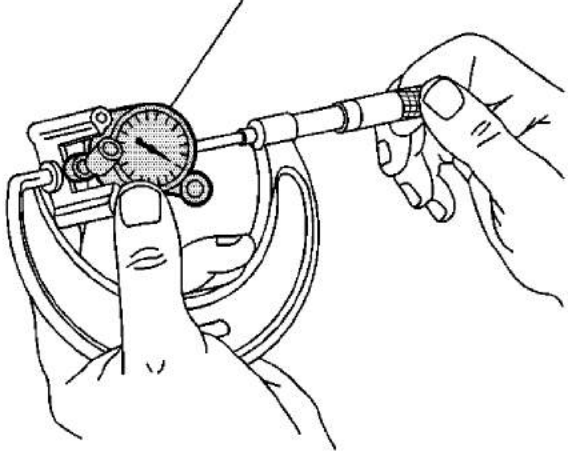

20. Measure the *J 8087* gage . Record this reading.
21. Subtract the diameter of the piston from the diameter of the cylinder bore to determine the piston-to-bore clearance. The cylinder bore clearance must be no more than 0.080 mm (0.003 in).
22. If a used piston is not acceptable, inspect the service piston size and determine if a new piston may be selected. Service pistons are available in standard and 0.5 mm (0.012 in) oversize.
23. When a piston has been selected, mark the piston in order to identify the cylinder for which the piston was fitted.

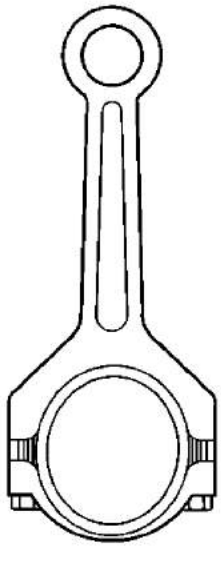

24. Inspect the connecting rod for an out-of-round bearing bore. If the out-of-round measurement exceeds 0.005 mm (0.0002 in) the connecting rod must be replaced.

cardiagn.com

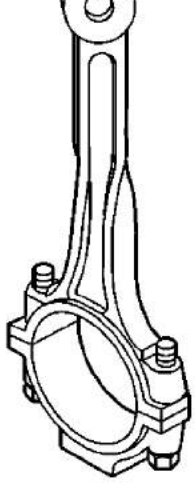

25. Inspect the connecting rod for twisting.
    25.1. Install the connecting rod cap.
    25.2. Place the connecting rod assembly on a checking fixture. Inspect the assembly for bending or twisting.
    25.3. Do not attempt to straighten the connecting rod. Ensure that the connecting rod meets the following conditions:
    - The connecting rods are not bent more than 0.18 mm (0.007 in).
    - The connecting rods are not twisted more than 0.38 mm (0.015 in).

    25.4. Replace any bent or twisted connecting rods.
    25.5. Inspect the new connecting rods before using the new rods.
26. Inspect the connecting rod for damage to the bearing cap and bolt threads.

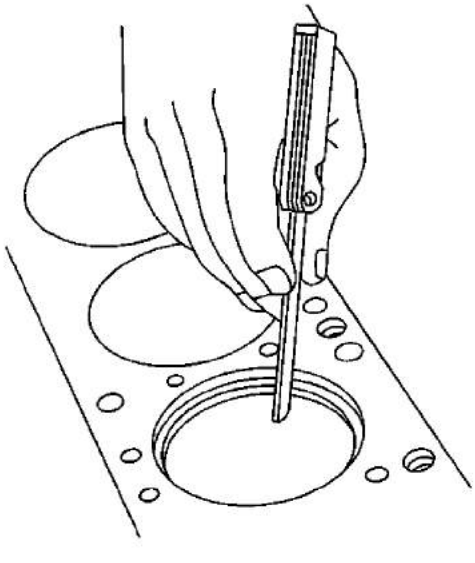

cardiagn.com

Note: Fit each compression ring to the cylinder in which it will be used.

27.1. Place the compression ring into the cylinder bore.

27.2. Push the compression ring into the bottom of the cylinder bore to approximately 6.5 mm (0.25 in) above ring travel. The ring must be square to the cylinder wall.

27.3. Use a feeler gage in order to measure the end gap. The first compression ring end gap must measure 0.15-0.30 mm (0.006-0.011 in), the second compression ring must measure 0.25-0.45 mm (0.009-0.017 in).

27.4. Select another size ring set if the end gap exceeds specifications. If ring gap clearance is below specifications, increase the gap by carefully filing off excess material.

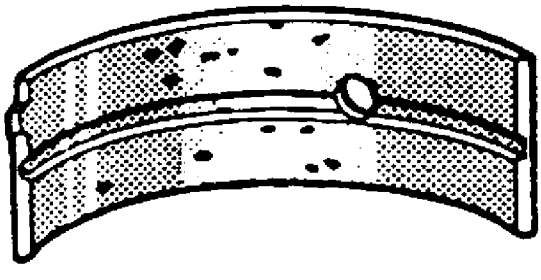

28. Inspect the connecting rod bearings for craters or pockets. Flattened sections on the connecting rod bearing halves may indicate fatigue.

cardiagn.com

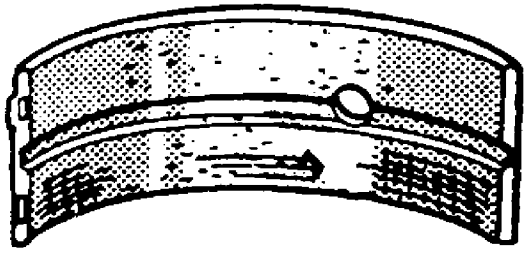

29. Inspect the connecting rod bearings for excess scoring or discoloration.
30. Inspect the connecting rod bearings for dirt or debris imbedded into the connecting rod bearing halves.

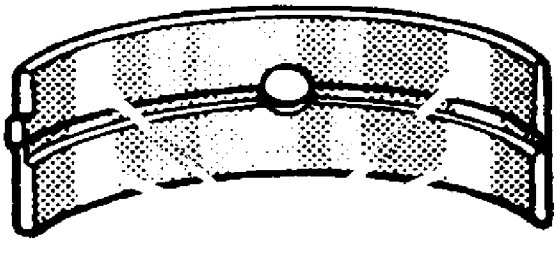

31. Inspect the connecting rod bearings for improper seating indicated by bright, polished sections of the bearings.
32. Inspect the inside of the connecting rod bearing and the outside diameter of the connecting rod bearing journal for wear. This indicates high spots.

cardiagn.com

Camshaft and Bearings Cleaning and Inspection

Special Tools

J-7872 Magnetic Base Dial Indicator

For equivalent regional tools, refer to Special Tools

1. Remove and discard the camshaft position actuator filter (1).
2. Clean the camshaft with cleaning solvent.

   Warning: Refer to Cleaning Solvent Warning in the Preface section.

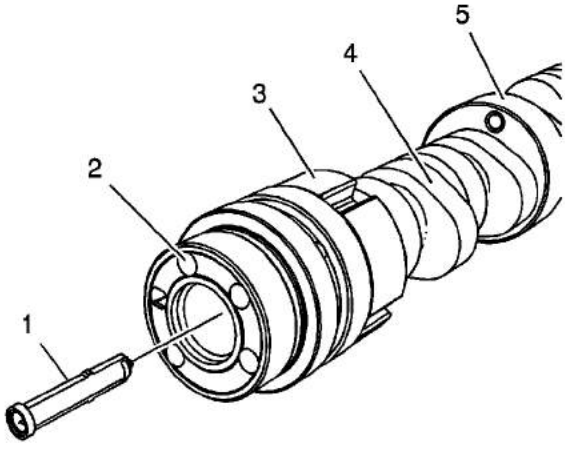

3. Inspect the camshaft for the following conditions:
   - Scored camshaft bearing journals (5)
   - Damaged camshaft lobes (4)
   - Damaged camshaft position sensor reluctor area (3)
   - Damaged threads (2)

cardiagn.com

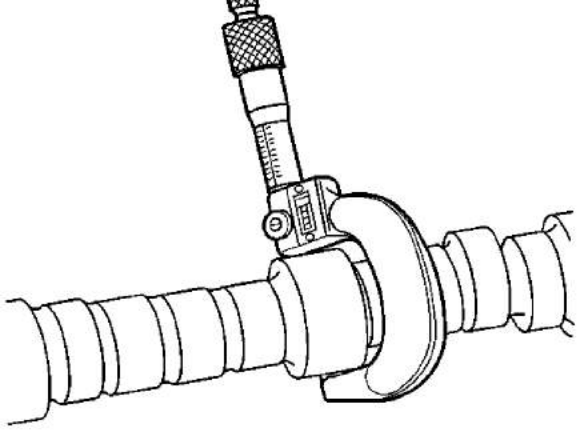

4. Measure the camshaft journals using a micrometer.

   If the camshaft journals are not within specifications, replace the camshaft.

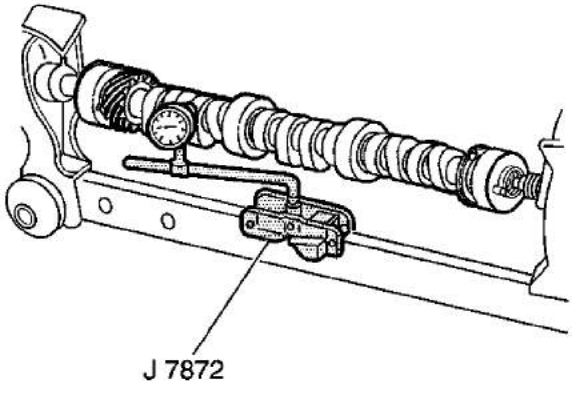

5. Measure the camshaft runout using the *J-7872* Magnetic Base Dial Indicator .
   5.1. Mount the camshaft in V-blocks between the centers.
   5.2. Use the *J-7872* Indicator in order to measure the intermediate camshaft journal.
6. Measure the camshaft lobe lift using the *J-7872* Indicator .
   6.1. Lubricate the camshaft using GM P/N 12345501 (Canadian P/N 992704) or the equivalent.
   6.2. Set the camshaft on V-blocks.

cardiagn.com

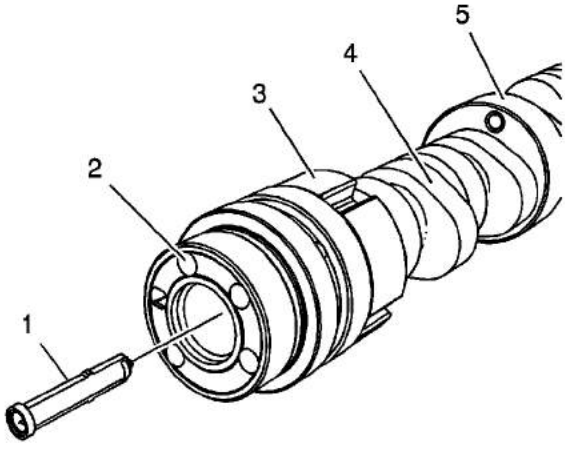

Note: Always install a NEW camshaft position actuator filter anytime the camshaft position actuator is removed or installed.

8. Install a NEW camshaft position actuator filter (1).

cardiagn.com

Camshaft Timing Chain and Sprocket Cleaning and Inspection

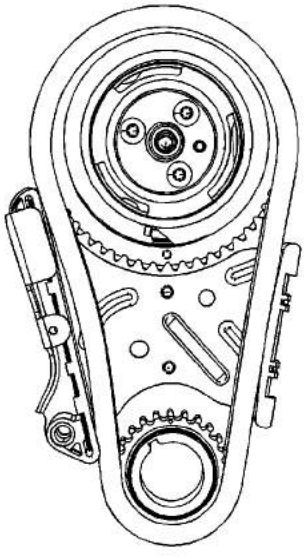

Warning: Bodily injury may occur if the cleaning solvent is inhaled or exposed to the skin.

1. Clean all components with cleaning solvent.
2. Dry the components with compressed air.
3. Inspect the timing chain for binding or wear.

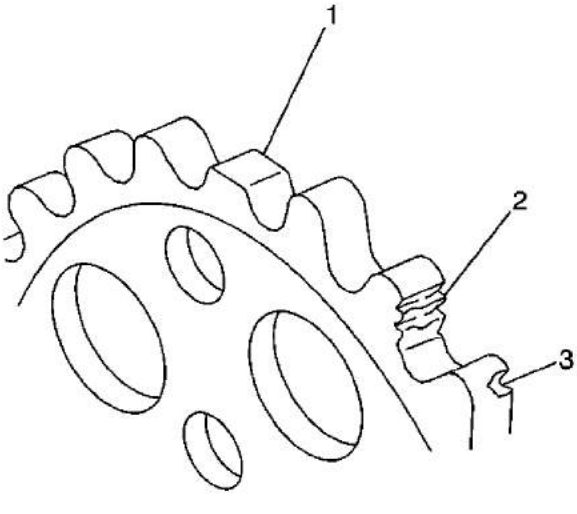

cardiagn.com

- Broken teeth (2)
- Chipped teeth (3)

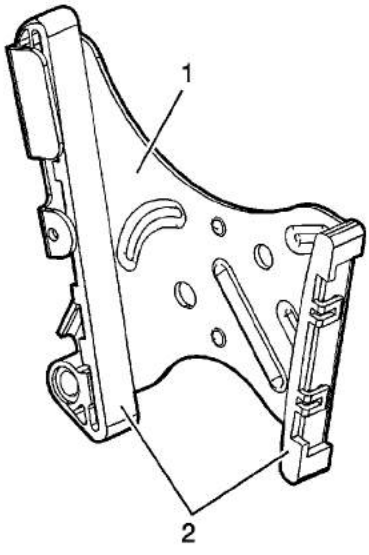

5. Inspect the timing chain tensioner (1) and timing chain tensioner slides (2) for excessive wear or cracks. Repair or replace as required.

cardiagn.com

Camshaft Position Actuator Magnet Cleaning and Inspection

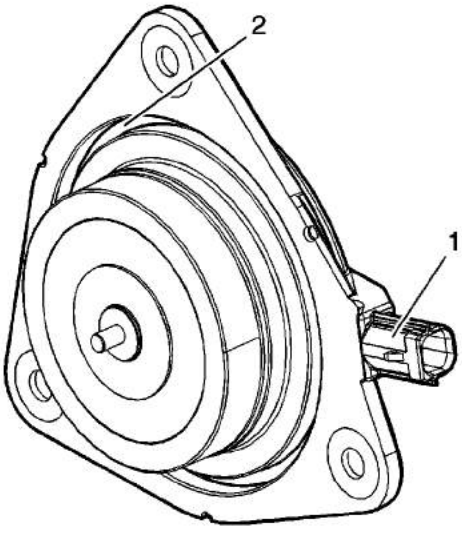

1. Inspect the camshaft position actuator magnet for the following conditions:
   - The camshaft position actuator magnet wiring connector (1) for damage.
   - The camshaft position actuator magnet O-ring seal and sealing area (2) for damage.
2. Repair or replace the camshaft position actuator housing and/or components as necessary.

cardiagn.com

Camshaft Position Actuator Cleaning and Inspection

Warning: Refer to Cleaning Solvent Warning in the Preface section.

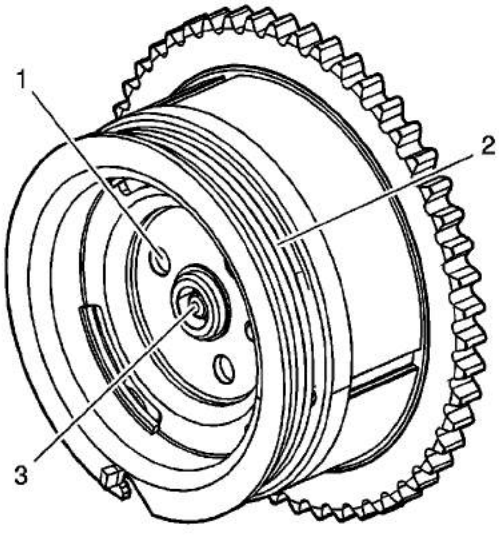

1. Clean the camshaft position actuator components with solvent.

   Warning: Refer to Safety Glasses Warning in the Preface section.

2. Dry the camshaft position actuator components with compressed air.
3. Inspect the camshaft position actuator for the following conditions:
   - The camshaft position actuator mounting bores (1) for damage
   - The camshaft position actuator return spring (2) for nicks or damage
   - The camshaft position actuator valve surface for pitting or damage (3)
4. Replace the camshaft position actuator as necessary.

cardiagn.com

Valve Lifters Cleaning and Inspection

1. Clean the valve lifters in cleaning solvent.

   Warning: Refer to Safety Glasses Warning in the Preface section.

2. Dry the valve lifters with compressed air.

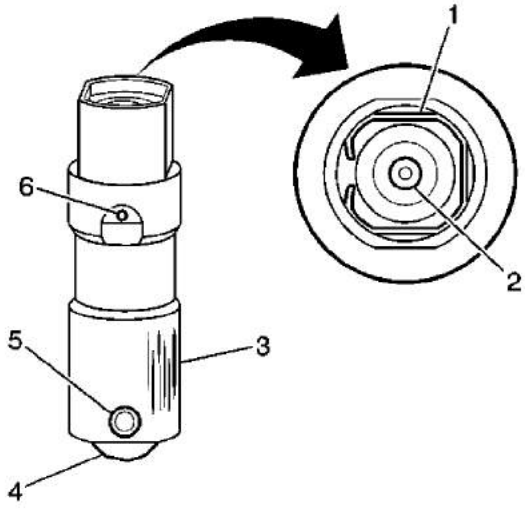

3. Inspect the valve lifters for the following:
   - Bent or broken clip (1)
   - Worn push rod socket (2)
   - Scuffed or worn sides (3)

     If the valve lifter shows wear, inspect the engine block lifter bores for wear or damage.
   - Flat spots on the roller (4)
   - Loose or damaged pin (5)
   - Plugged oil hole (6)
   - Worn or damaged roller bearing

     The roller should rotate freely with no binding or roughness.

cardiagn.com

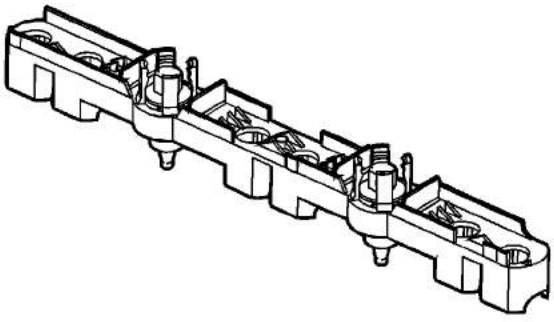

4. Inspect the valve lifter guides for the following:
   - For cracks or damage
   - Excessive wear in the lifter mounting bores

cardiagn.com

Valve Rocker Arm and Push Rod Cleaning and Inspection

Warning: Refer to Cleaning Solvent Warning in the Preface section.

1. Clean the valve rocker arms and push rods in cleaning solvent.

   Warning: Refer to Safety Glasses Warning in the Preface section.

2. Dry the valve rocker arms and push rods with compressed air.

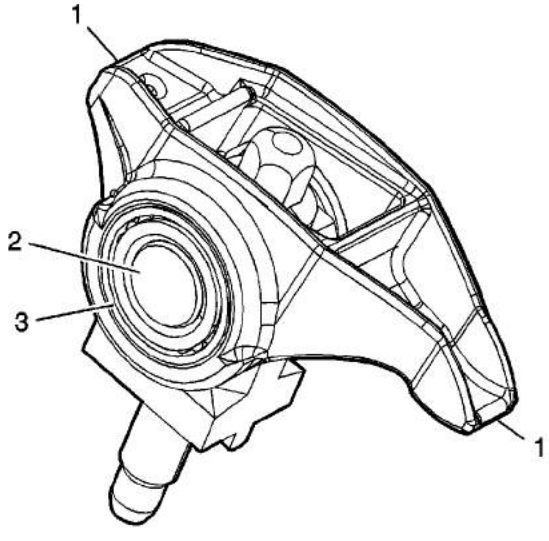

3. Inspect the valve rocker arms for the following conditions:
   - Excessive wear at the valve contact or push rod socket area (1)
   - A loose or damaged pin (2)
   - A worn or damaged roller bearing (3)--The roller should rotate freely with no binding or roughness.
   - The bolt threads for damage

cardiagn.com

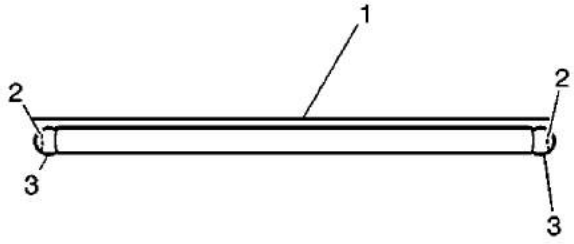

Note: Keep the push rods in order. The intake and exhaust are different lengths.

4. Inspect the push rods for the following conditions:
   - Straightness using a straight edge (1)
   - Excessive wear on the push rod ends (3)
   - Clogging of the oil passage (2)

cardiagn.com

Cylinder Head Disassemble

Special Tools

- *EN-47823* Valve Spring Compressor Adapter
- *J 5892-D* Valve Spring Compressor

For equivalent regional tools, refer to Tools and Equipment.

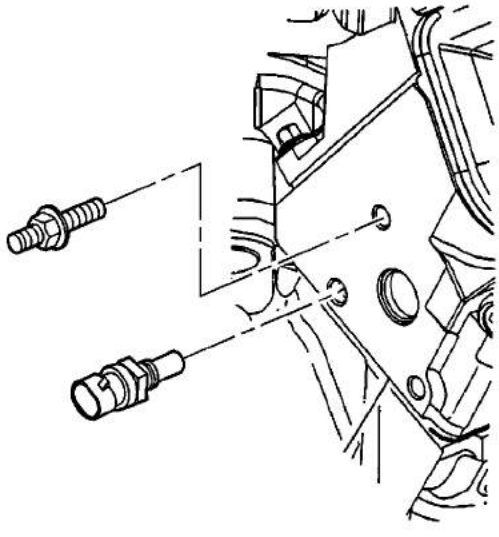

1. Remove the heater inlet pipe stud from the right cylinder head, if required.
2. Remove the coolant temperature sensor from the right cylinder head, if required.

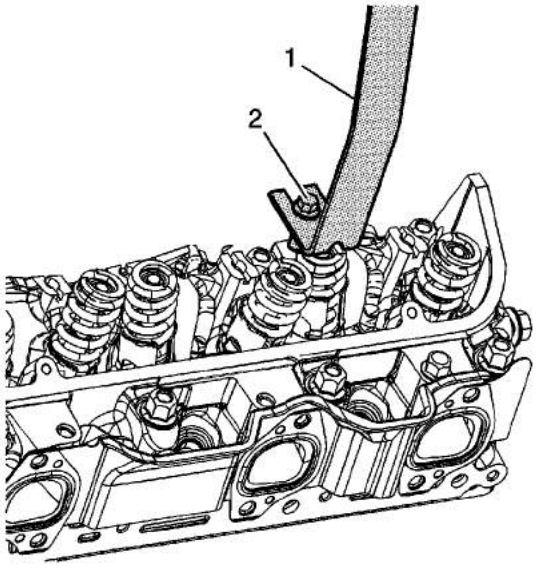

cardiagn.com

3. Using caution so as not to damage the valve spring or valve spring dampener, compress the valve springs using the *J 5892-D* compressor (1) and the *EN-47823* adapter (2).

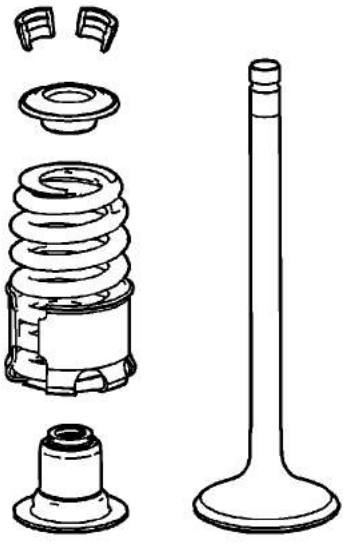

Caution: Do not damage the valve guide. Remove any burrs that have formed at the key groove by chamfering the valve stem with an oil stone or a file.

Note: Ensure that the valve train components are marked, organized or sorted when disassembling the cylinder head. Install the valve train components in the original location from which the component were removed.

4. Remove the valve spring cap keys.
5. Remove the valve spring caps.
6. Remove the valve spring assembly.
7. Remove the valves.
8. Remove the valve stem oil seals and spring seats as an assembly.
9. Inspect all valve components for any damage or excess wear. Repair or replace as necessary.

cardiagn.com

Cylinder Head Cleaning and Inspection

Special Tools

- *J-8089* Carbon Removing Brush
- *J-9666* Valve Spring Tester

For equivalent regional tools, refer to Special Tools

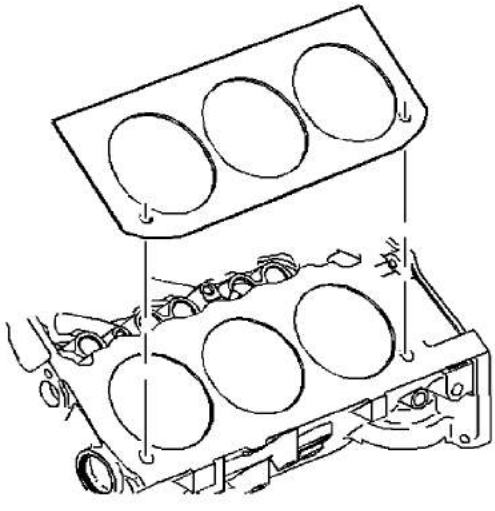

1. Inspect the cylinder head gasket and the mating surfaces. Inspect for leaks, corrosion, and blowby.
2. If the gasket failed, determine the cause. The following conditions may cause gasket failure:
   - Improper installation
   - A loose or warped cylinder head
   - Missing, off location, or not fully seated dowel pins
   - Low torque on the cylinder head bolts
   - Cylinder head bolts with the incorrect length
   - A warped engine block surface
   - Scratched surfaces
   - Excessive intake manifold torque
   - Cracked engine block threaded holes
   - Porosity

   Warning: Refer to Safety Glasses Warning in the Preface section.

cardiagn.com

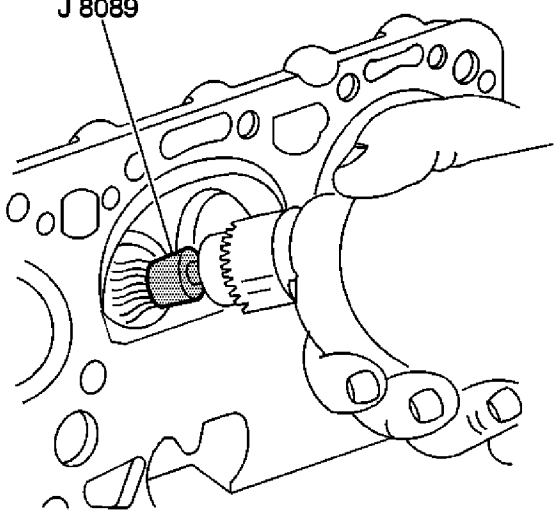

Note: Do not scuff the chamber.

3. Use the *J-8089* Carbon Removing Brush in order to remove the carbon from the combustion chambers.
4. Clean the following components:
   - The gasket surfaces

     Do not use a motorized brush on any gasket sealing surface.
   - Valve stems and heads on a buffing wheel
   - The bolt hole threads

     Remove all dirt, debris, or threadlocking material from the bolt holes.

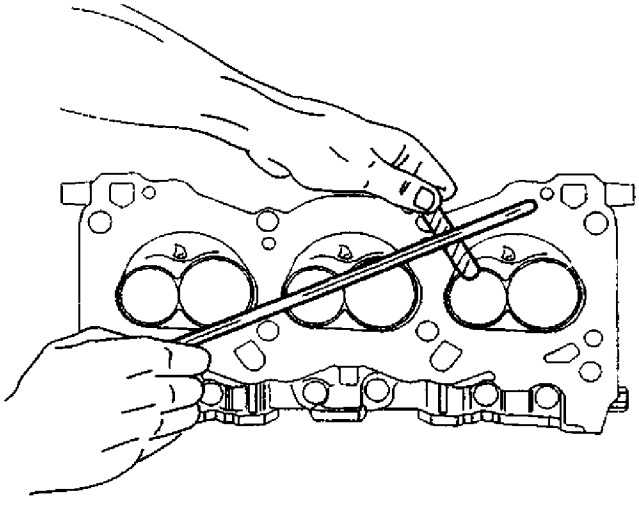

cardiagn.com

5. Inspect the cylinder head mating surfaces for flatness. Replace the cylinder head if it is outside of the specification limit.
6. Inspect the cylinder head for cracks.
7. Inspect the cylinder head deck for corrosion. Do not attempt to weld the cylinder head. If the cylinder head is damaged, replace the cylinder head.

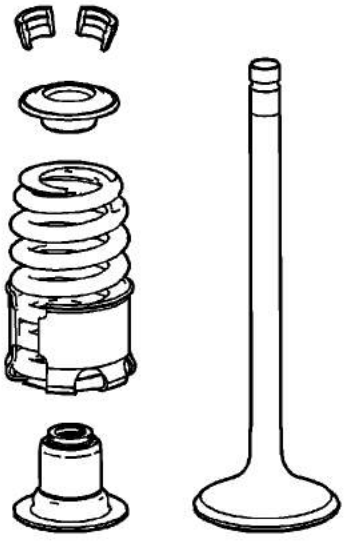

8. Remove the valve spring dampener.

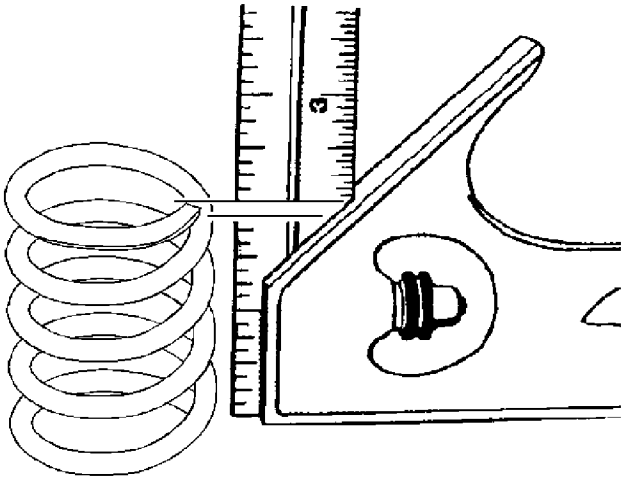

9. Inspect the valve springs for squareness.

cardiagn.com

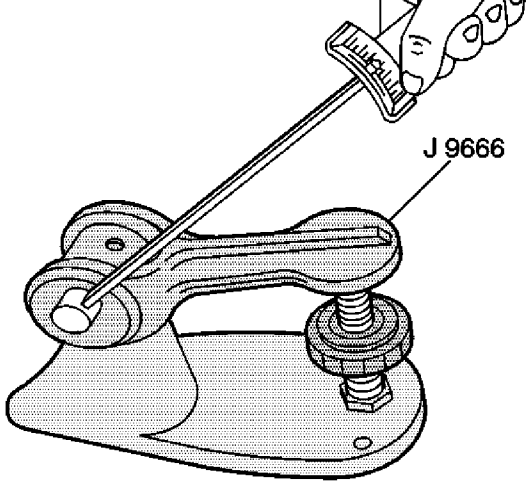

10. Use the *J-9666* Valve Spring Tester in order to measure the valve spring tension.

    Replace the spring if the spring tension is not within specification.

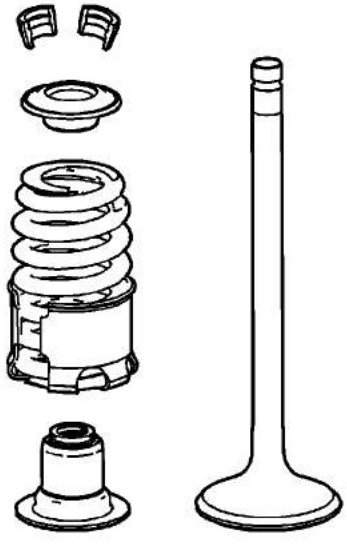

11. Install the valve spring dampener.

cardiagn.com

Valve Guide Reaming, and Valve and Seat Grinding

Special Tools

J-8520 Cam Lobe Lift Indicator

For equivalent regional tools, refer to Special Tools

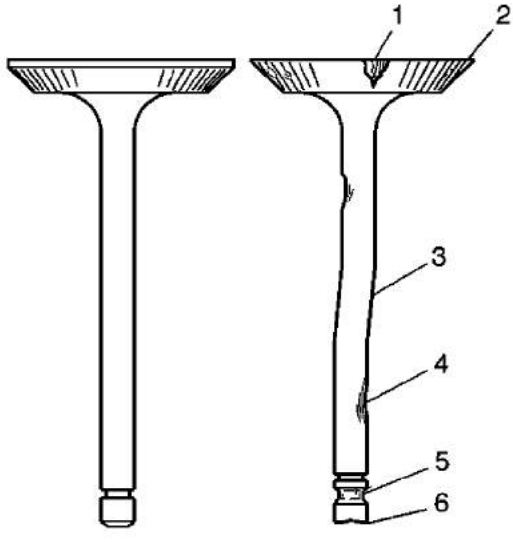

1. Inspect the valves for the following conditions:
   - Burnt or eroded areas (1)
   - A worn margin (2)
   - A bent stem (3)
   - A worn or scored stem (4)
   - A worn key groove (5)
   - A worn stem tip (6)

cardiagn.com

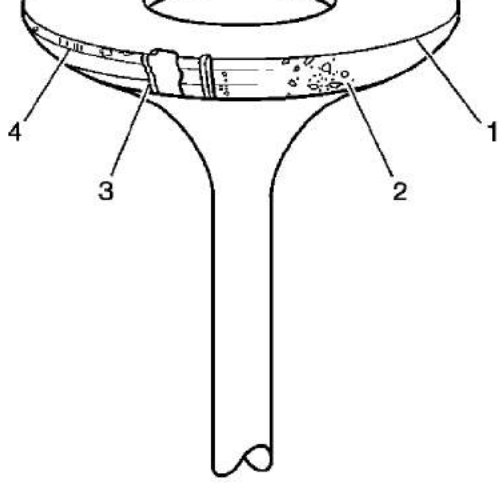

2. Inspect the valve face for the following conditions:
   - Worn margin (4)
   - No margin (1)
   - Pitted surfaces (2)
   - Burnt or eroded areas (3)
3. Inspect the valve seats for a loose fit in the cylinder head.

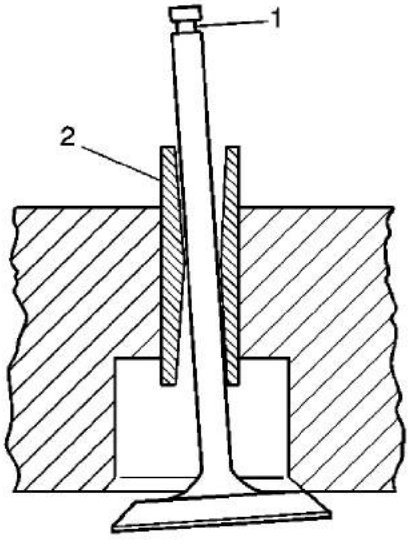

Caution: Proper valve stem-to-valve guide clearance is necessary for proper engine operation and component life. Excessive clearance may cause a noisy valve train, premature valve stem oil seal failure, excessive oil consumption and related component damage. Insufficient clearance may cause a noisy valve train, rough engine operation or sticking valves that may lead to related component damage. Failure to inspect valve stem-to-valve

cardiagn.com

Note: Excessive valve stem-to-guide clearance may cause the following conditions:

- A noisy valve train
- Premature valve stem oil seal wear
- Component damage
- Excessive engine oil consumption

4. Inspect for excessive valve stem (1) to guide (2) clearance.

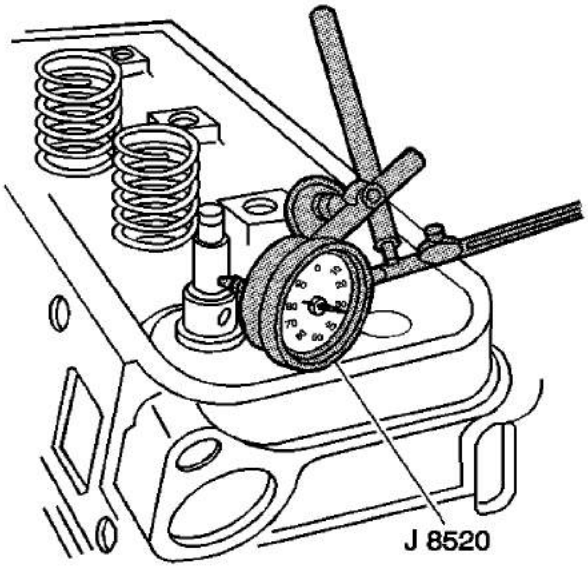

5. Use a dial indicator in order to measure the valve stem-to-guide clearance. Complete the following steps:
   5.1. Install the valve into the guide.
   5.2. Install the *J-8520* Cam Lobe Lift Indicator onto the cylinder head.
   5.3. Locate the dial indicator so that the movement of the valve stem from side to side, crosswise to the cylinder head, will cause a direct movement on the indicator stem.
   5.4. Ensure that the indicator stem contacts the side of the valve stem just above the valve guide.
   5.5. Drop the valve head about 2 mm (1/8 in) off the valve seat.
   5.6. Use light pressure and move the valve stem side to side in order to obtain a clearance reading.
   5.7. If the valve stem to guide clearance is not within specification, replace the valve and/or repair the guide in order to obtain the proper clearances.

cardiagn.com

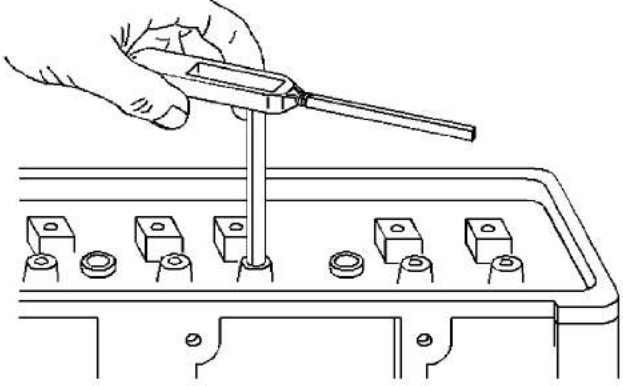

Note: Replace a valve stem that has excessive scoring or wear. A valve guide that is worn and has excessive stem-to-guide clearance may need to be sleeved.

6. Ream the valve guides for oversize valves if the clearance exceeds the specifications.

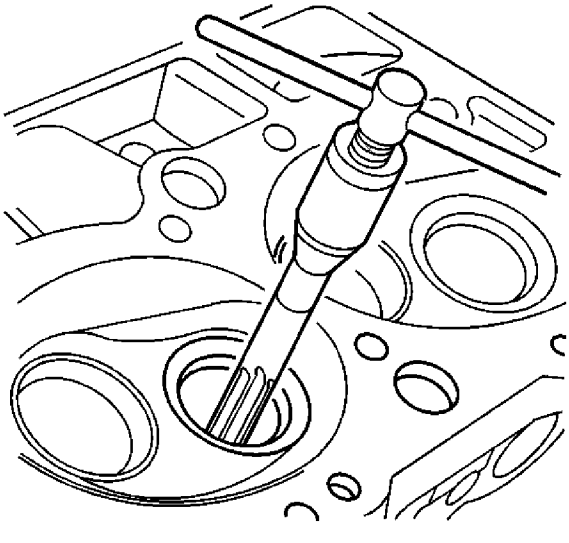

Note: Follow the manufacturers instructions when using valve guide reamers, sleeves, and installers.

7. Ream the valve guide in order to obtain the proper specification.

cardiagn.com

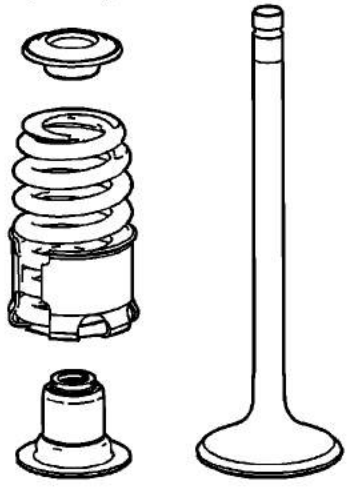

Note: Valves that are pitted must be refaced to the proper angle. Replace valve stems that show excessive wear, or replace valves that are warped. Several different types of equipment are available for refacing valves and valve seats. Follow the manufacturers recommendations when performing these procedures.

8. Inspect the valves for excessive scoring.

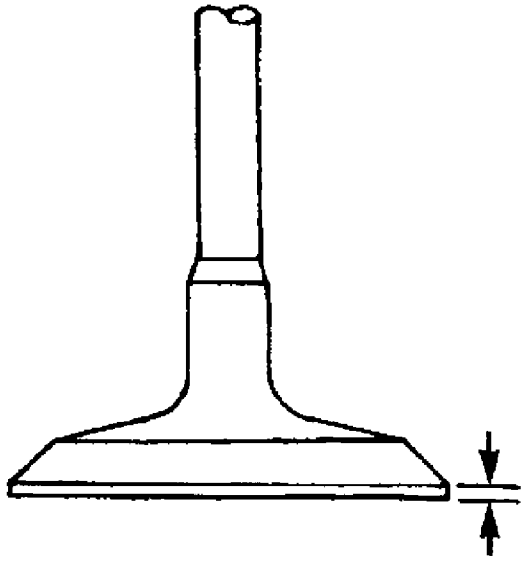

9. Inspect the valve face.

   Replace the valve if the valve margin is not within specifications after grinding.

10. Reface pitted valves on a valve refacing machine in order to ensure the correct relationship between the head and the stem.

cardiagn.com

all debris and dirt before grinding the valve seat.

11. Recondition the valve seats after reaming the valve guide bores or installing the new valve guides.
12. The valve seats should be concentric to within 0.05 mm (0.031 in) total indicator reading.

cardiagn.com

Cylinder Head Assemble

Special Tools

- *EN-47823* Valve Spring Compressor Adapter
- *J 5892-D* Valve Spring Compressor

For equivalent regional tools, refer to Tools and Equipment.

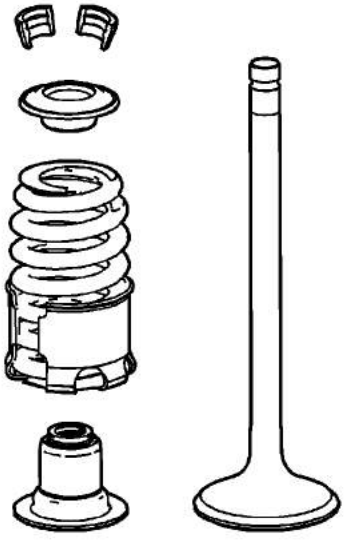

Note: Use oversize valve stem seals if you install oversize valves.

1. Lubricate the valve stem with clean engine oil.
2. Install the valves.
3. Lightly tap the new or reconditioned valves into the valve seat.
4. Install the valve stem oil seals, ensuring proper intake - black seal and exhaust - brown seal, seals are installed.
5. Install the valve springs.
6. Install the valve spring caps.

cardiagn.com

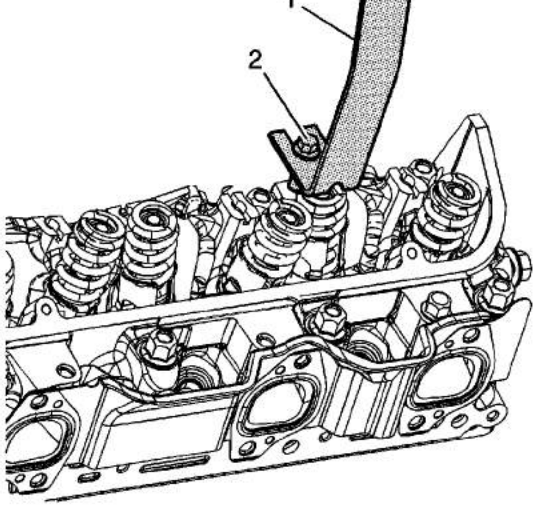

7. Using caution so as not to damage the valve spring or valve spring dampener, compress the valve springs using the *J 5892-D* compressor (1) and the *EN-47823* adapter (2).
8. Install the valve spring cap keys. Hold the valves in place with grease, if necessary.
9. Release the valve springs.
10. Ensure that the valve locks are seated.

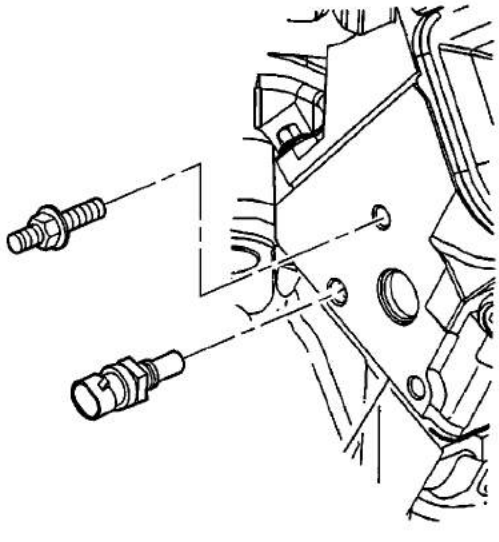

11. Apply sealer P/N 21485278 to the coolant temperature sensor.

    Caution: Refer to Fastener Caution in the Preface section.

12. Install the coolant temperature sensor, if required. Tighten the coolant temperature sensor to **23 N·m (17 lb ft)**.
13. Install the heater inlet pipe stud, if required. Tighten the heater inlet pipe stud to **35 N·m (26 lb ft)**.

cardiagn.com

Oil Pump Disassemble

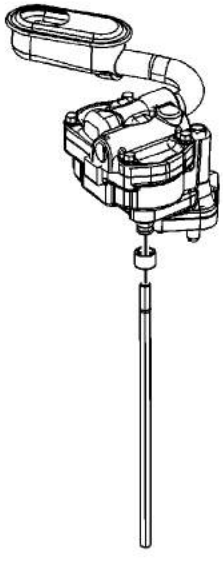

1. Remove the oil pump driveshaft and oil pump driveshaft retainer.

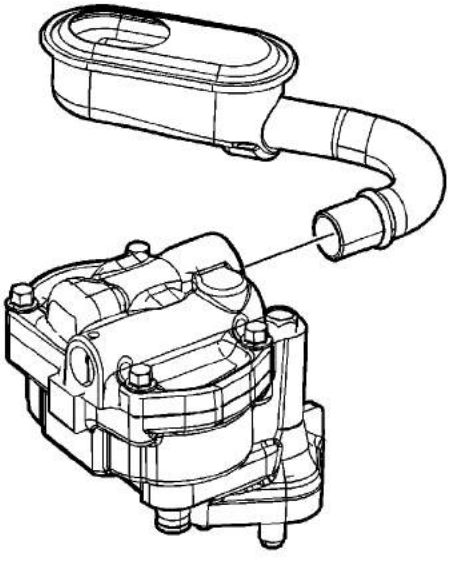

Note: DO NOT remove the oil pump screen from the pipe. The pipe and oil pump screen are serviced as a complete assembly.

2. Remove the oil pump screen, if necessary.

cardiagn.com

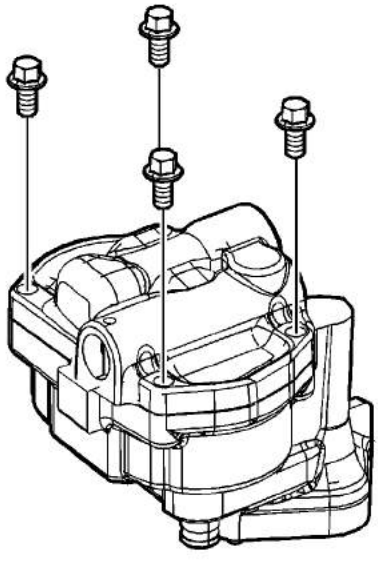

3. Remove the oil pump cover bolts.

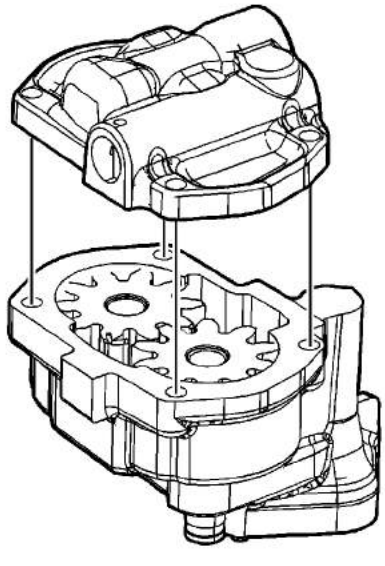

4. Remove the oil pump cover.

cardiagn.com

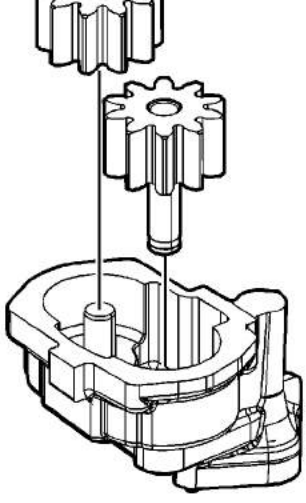

5. Remove the oil pump drive gear and the oil pump driven gear.
6. Matchmark the gear teeth for assembly.

Warning: Refer to Safety Glasses Warning in the Preface section.

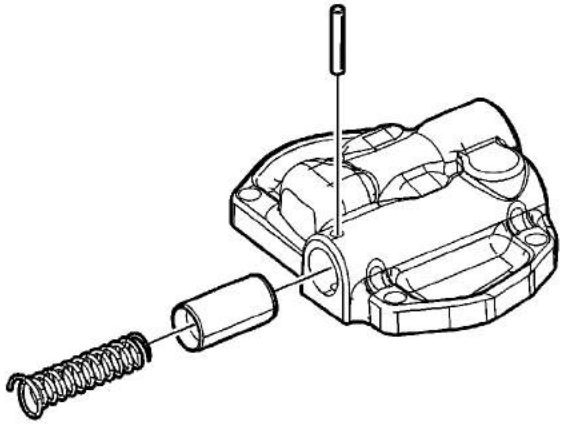

Warning: In some models, the pressure regulator valve spring is under pressure. Remove the retaining pin carefully in order to avoid bodily injury.

7. Remove the following items:
   7.1. The oil pump pressure relief valve spring straight pin

cardiagn.com

Warning: Refer to Cleaning Solvent Warning in the Preface section.

7.3. The oil pump pressure relief valve--If the valve is stuck, soak the pump housing in cleaning solvent.

cardiagn.com

Oil Pump Cleaning and Inspection

Warning: Refer to Cleaning Solvent Warning in the Preface section.

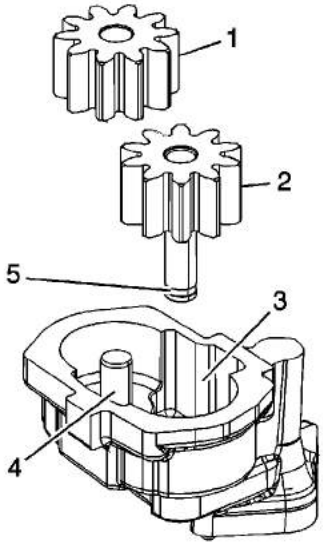

1. Clean all parts of sludge, oil, and varnish by soaking in cleaning solvent.
2. Inspect for foreign material and determine the source of the foreign material.
3. Inspect the pump housing and cover for the following conditions:
   - Cracks or casting imperfections
   - Scoring (3)
   - Damaged threads
4. Do not attempt to repair the pump housing.

   Replace the pump housing.

5. Inspect the oil pump gears for the following conditions:
   - Scoring (1)
   - Excessive wear (2)
6. Inspect the idler shaft for looseness or scoring (4).

   If loose or damaged, replace the oil pump.

7. Inspect the drive gear shaft for looseness or scoring (5).

cardiagn.com

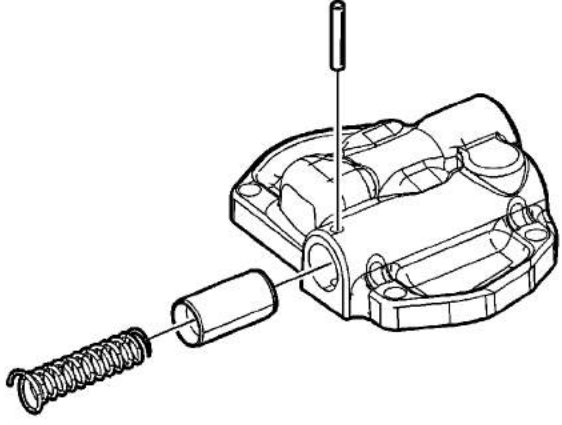

8. Inspect the pressure regulator valve for the following conditions:
   - Scoring
   - Sticking

   Burrs may be removed using a fine oil stone.
9. Inspect the pressure regulator valve spring for the following conditions:
   - Loss of tension
   - Bending
10. Inspect the suction pipe and screen assembly for the following conditions:
    - Looseness--If the suction pipe is loose, bent or has been removed, replace the pump body cover and suction pipe.
    - Broken wire mesh or screen

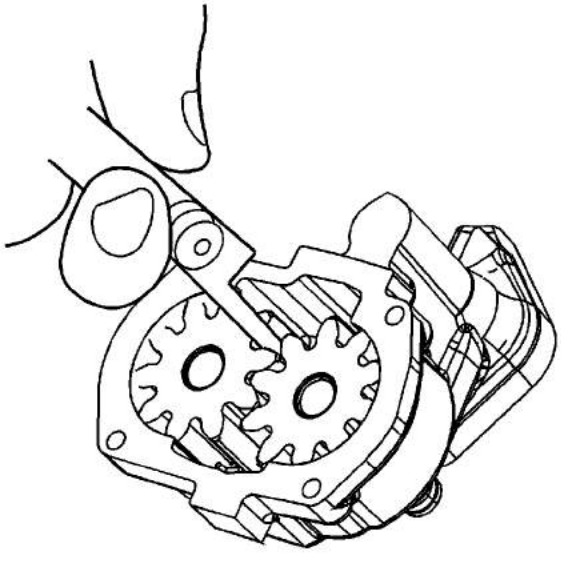

cardiagn.com

11. Measure the oil pump gear lash. Install the gears, and measure in several places.

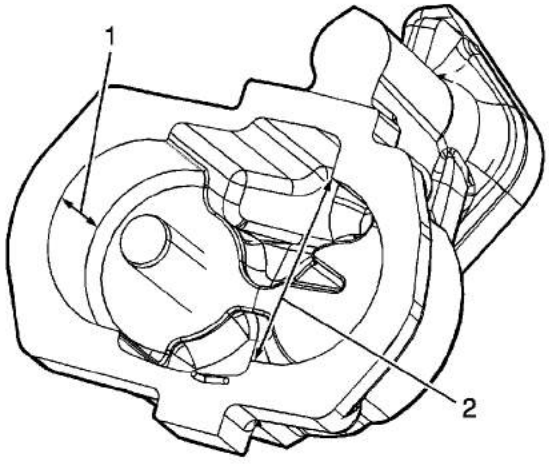

12. Measure the oil pump housing gear pocket (1, 2).

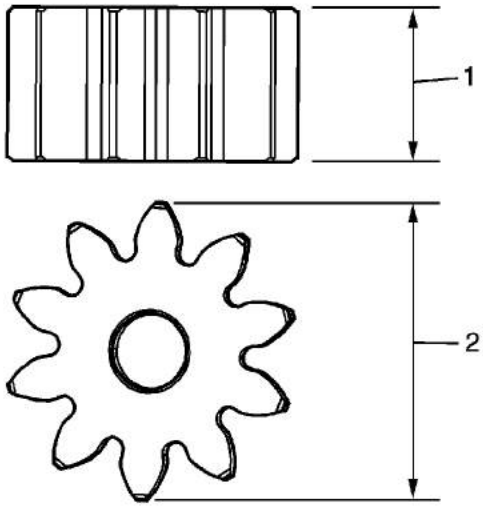

13. Measure the oil pump gears (1, 2).

cardiagn.com

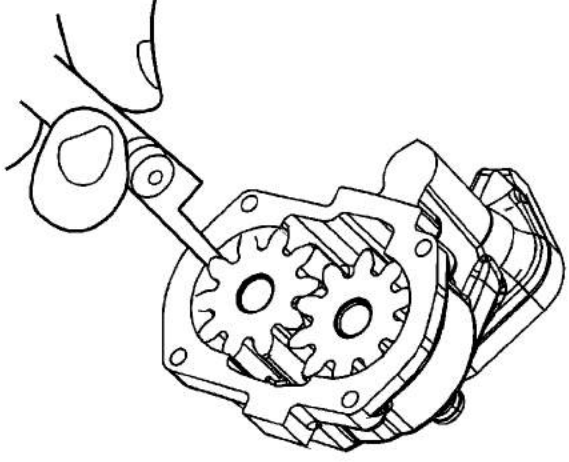

Note: When deciding pump serviceability based on end clearance, consider depth of the wear pattern in the pump cover.

14. Measure the oil pump gear side clearance.

cardiagn.com

Oil Pump Assemble

Special Tools

J-22144 Oil Suction Pipe Installer

1. Lubricate all the internal oil pump parts using engine oil during assembly.

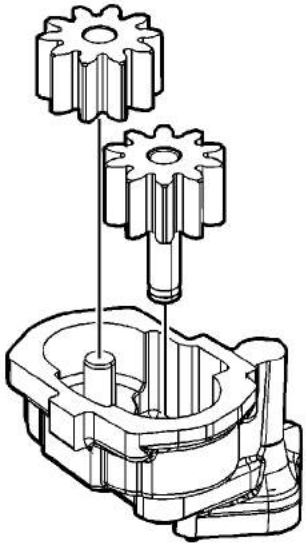

2. Install the oil pump gears.

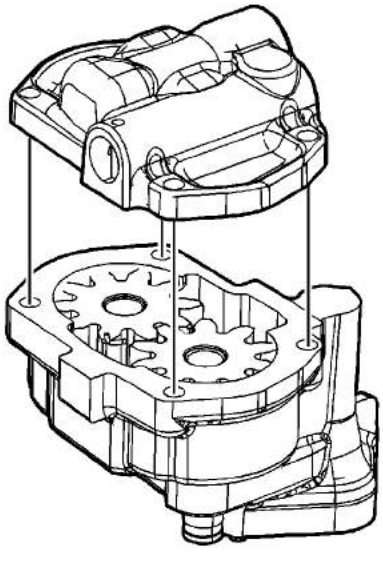

3. Install the oil pump cover.

cardiagn.com

4. Install the oil pump cover bolts and tighten to **10 N·m (89 lb in)**.

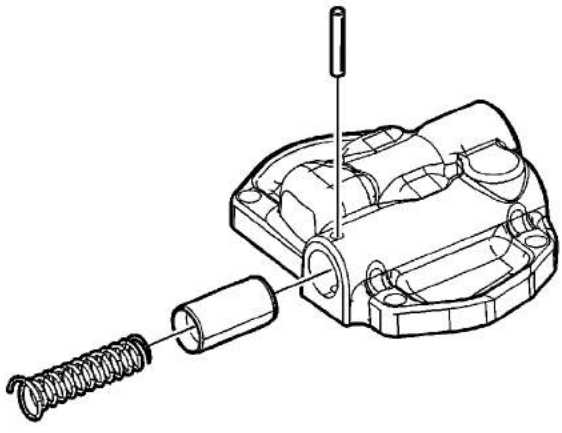

5. Install the pressure regulator valve.
6. Install the pressure regulator spring.
7. Install the cotter pin.

Note: Make sure the cotter pin is properly secured.

8. Apply sealer GM P/N 12346004, (Canadian P/N 10953480) or the equivalent to the new suction pipe.
9. Tap the new suction pipe into place using a plastic hammer and *J-22144* Oil Suction Pipe Installer .

cardiagn.com

Engine Front Cover Cleaning and Inspection

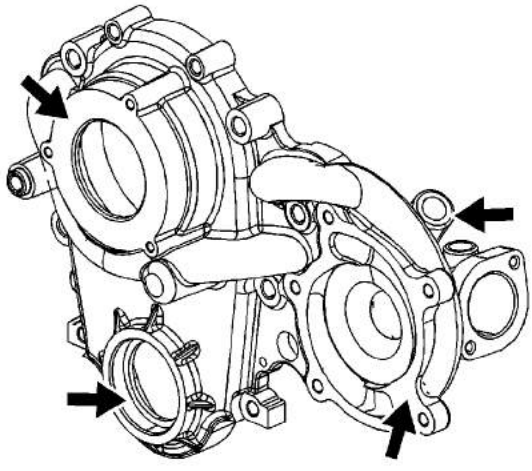

Warning: Bodily injury may occur if the cleaning solvent is inhaled or exposed to the skin.

1. Clean the engine front cover with solvent.
2. Dry the engine front cover with compressed air.
3. Inspect the engine front cover sealing surfaces for damage.
4. Inspect the engine front cover threaded holes.
5. Repair or replace the engine front cover as needed.

cardiagn.com

Valve Rocker Arm Cover Cleaning and Inspection

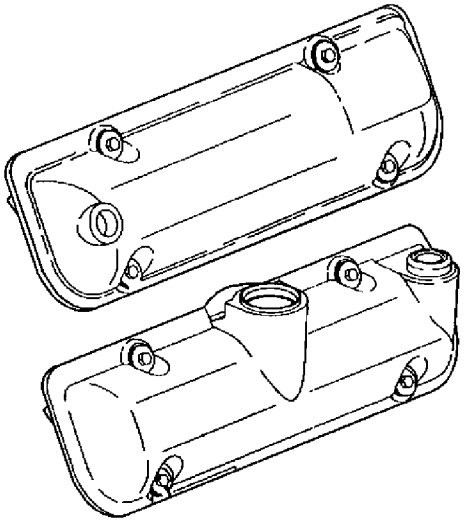

1. Remove all rubber grommets from the valve rocker arm covers.

   Warning: Bodily injury may occur if the cleaning solvent is inhaled or exposed to the skin.

2. Clean the valve rocker arm covers with solvent.
3. Dry the valve rocker arm covers with compressed air.
4. Inspect the valve rocker arm covers for damage and replace if necessary.

cardiagn.com

Positive Crankcase Ventilation (PCV) Valve Cleaning and Inspection

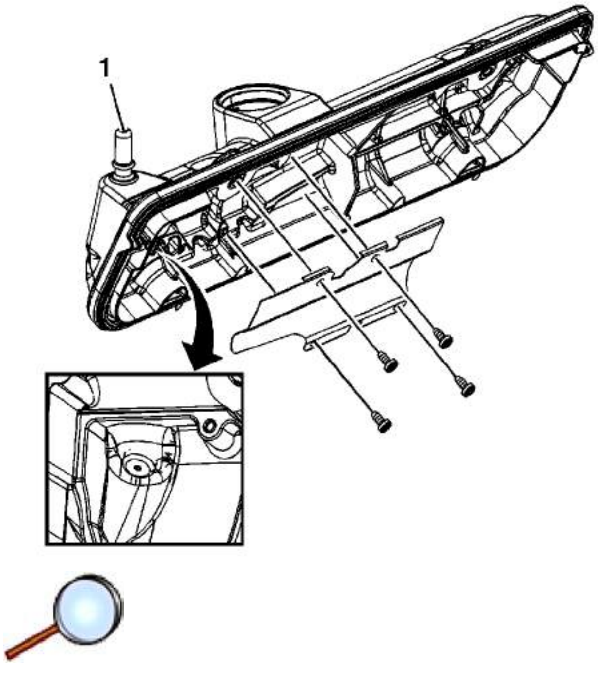

Caution: Do not attempt to remove the valve from the valve rocker arm cover, as damage may occur to the rocker arm valve cover. The positive crankcase ventilation (PCV) valve is a fixed orifice system.

1. Flush the carbon from the PCV valve orifices (1) using solvent.
2. Dry the PCV valve orifices using compressed air.

cardiagn.com

Oil Pan Cleaning and Inspection

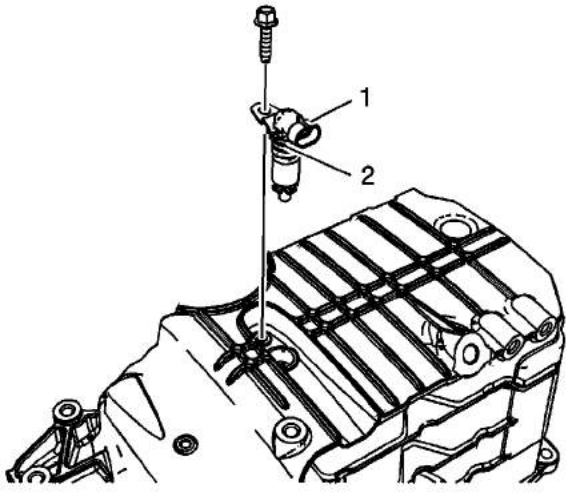

1. Remove the oil level sensor.
2. Inspect the O-ring seal (2) and the electrical connector (1) for wear or damage. Repair or replace as necessary.

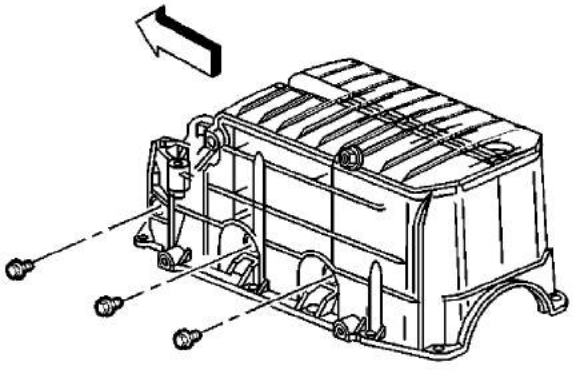

Warning: Bodily injury may occur if the cleaning solvent is inhaled or exposed to the skin.

3. Clean the oil pan with solvent. Remove all sludge and debris from the oil pan.

cardiagn.com

Caution: Refer to Fastener Caution in the Preface section.

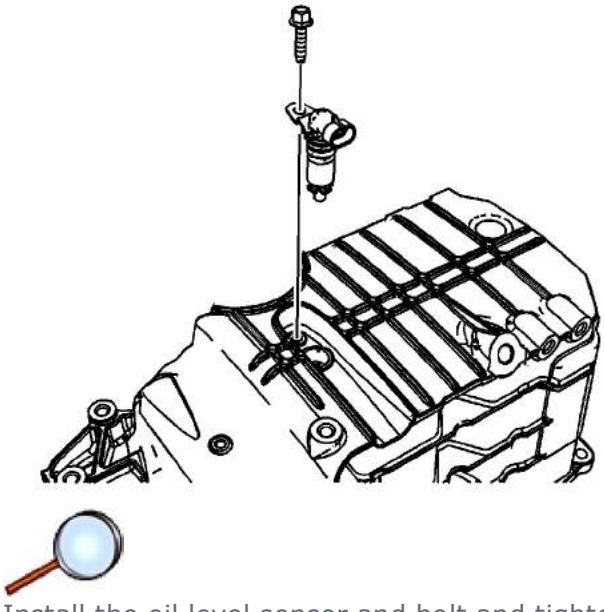

6. Install the oil level sensor and bolt and tighten to **10 N·m (89 lb in)**.

cardiagn.com

Lower Intake Manifold Cleaning and Inspection

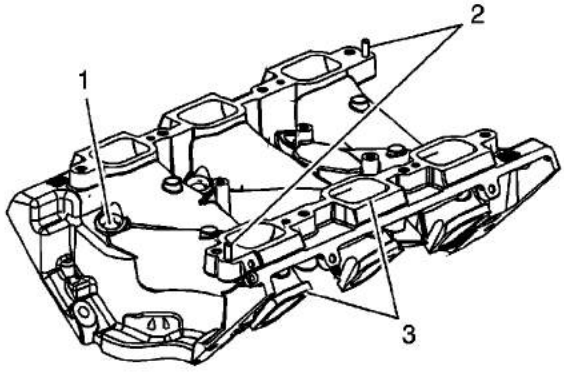

1. Clean the intake manifold gasket mating surfaces (3) using GM P/N 12346139 (Canadian P/N 10953463) or equivalent.
2. Clean the fuel injector bores (1).
3. Inspect the lower intake manifold locating pins (2) for damage. Replace as necessary.
4. Inspect the intake manifold for damage.

   Important: If replacing the lower intake manifold, make sure to transfer or replace the locating pins as necessary.

5. Repair or replace the intake manifold as necessary.

cardiagn.com

Upper Intake Manifold Cleaning and Inspection

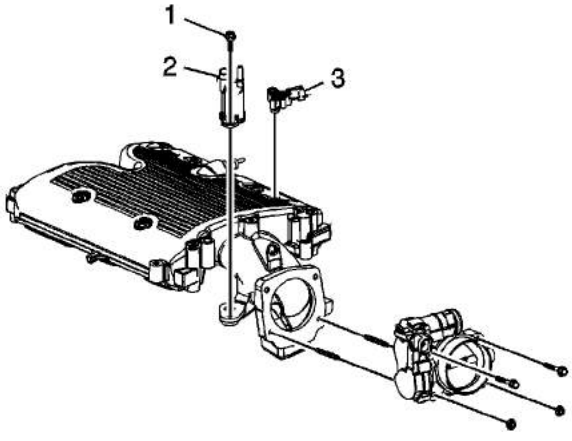

1. Remove the throttle body bolts and nuts.
2. Remove the throttle body.
3. Remove the throttle body studs, if required.
4. Remove the manifold absolute pressure (MAP) sensor (3).
5. Remove the evaporative emissions (EVAP) purge valve bolt (1).
6. Remove the EVAP purge valve (2).

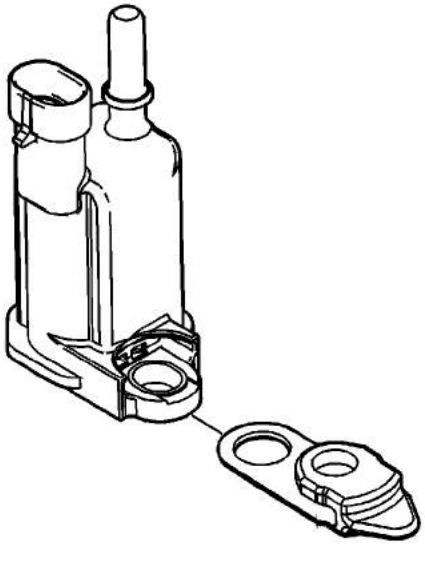

7. Remove the EVAP purge valve isolator, if equipped.

cardiagn.com

8. Clean the intake manifold with solvent.
9. Dry the intake manifold with compressed air.
10. Inspect all gasket mating surfaces for nicks or cracks and replace if necessary.
11. Inspect the EVAP purge valve seal for damage and replace if necessary.
12. Install the EVAP purge valve isolator, if equipped.

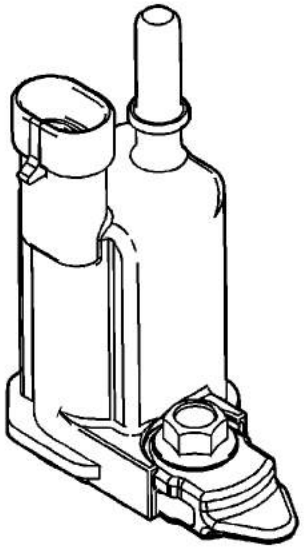

Note: Ensure that the EVAP purge valve isolator is installed properly as shown, with the isolator covering the top and bottom of the purge valve bolt hole flange. Failure to do so may cause improper EVAP purge valve operation.

13. Install the EVAP purge valve.

Caution: Refer to Fastener Caution in the Preface section.

cardiagn.com

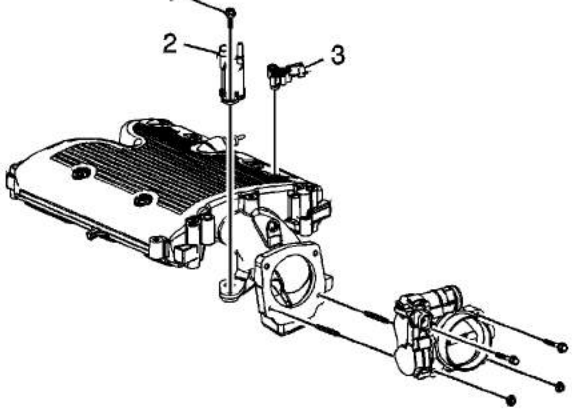

14. Install the EVAP purge valve bolt (1) and tighten to **16 N·m (12 lb ft)**.
15. Inspect the MAP sensor seal for damage and replace if necessary.
16. Install the MAP sensor (3).
17. Install the throttle body studs, if required. Tighten the throttle body studs to **6 N·m (53 lb in)**.
18. Inspect the throttle body seal for damage and replace if necessary.
19. Install the throttle body.
20. Apply threadlock GM P/N 12345382 (Canadian P/N 10953489) to the throttle body bolt and nut threads.
21. Install the throttle body bolts and nuts and tighten to **10 N·m (89 lb in)**.

cardiagn.com

Exhaust Manifold Cleaning and Inspection

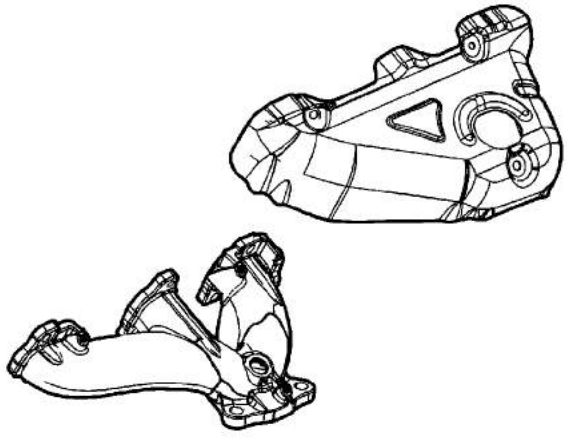

Warning: Bodily injury may occur if the cleaning solvent is inhaled or exposed to the skin.

1. Clean the exhaust manifold and heat shield in solvent.
2. Dry the exhaust manifold and heat shield with compressed air.
3. Inspect the exhaust manifold for cracks or damage.

cardiagn.com

Thread Repair

General purpose thread repair kits are available commercially.

Warning: Refer to Safety Glasses Warning in the Preface section.

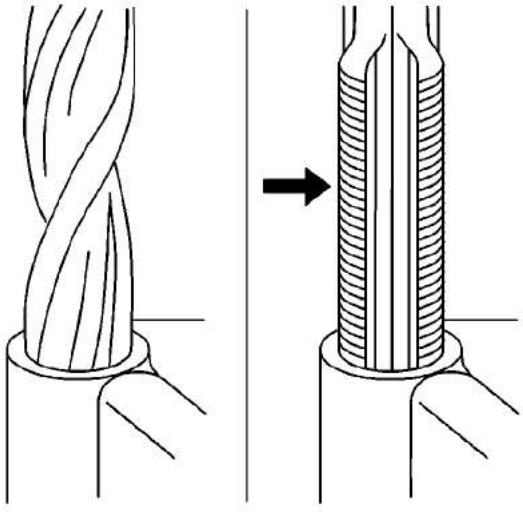

Note: Refer to the thread repair kit manufacturer's instructions regarding the size of the drill and which tap to use.

Always avoid any buildup of chips. Back out the tap every few turns and remove the chips.

1. Determine the size, the pitch, and the depth of the damaged thread.
2. Adjust the stop collars on the cutting tool as needed. Tap the stop collars to the required depth.
3. Drill out the damaged thread.
4. Remove the chips.
5. Apply clean engine oil to the top thread.
6. Use the tap in order to cut new thread.
7. Clean the thread.

cardiagn.com

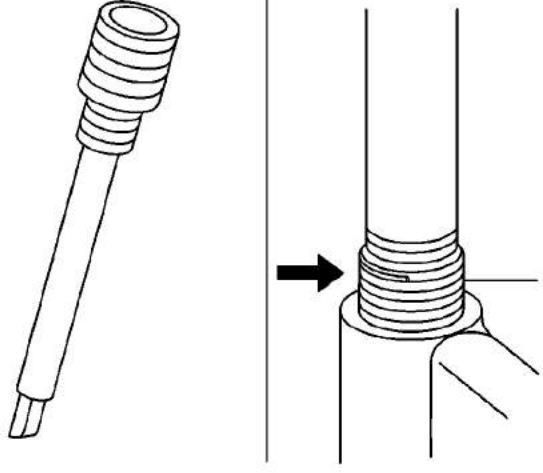

8. Screw the thread insert onto the mandrel of the thread insert installer. Engage the tang of the thread insert onto the end of the mandrel.

   Note: The thread insert should be flush to 1 turn below the surface.

9. Lubricate the thread insert with clean engine oil - except when installing in aluminum - and install the thread insert.
10. If the tang of the thread insert does not break off when backing out the thread insert installer, break off the tang using a drift punch.

cardiagn.com

Service Prior to Assembly

Dirt will cause premature wear of the rebuilt engine. Clean all of the components. Use the proper tools in order to measure components when inspecting for excessive wear. Repair or replace the components that are not within the manufacturers specification. When components are reinstalled into an engine, return the components to their original location, position, and direction. During assembly, lubricate all of the moving parts with clean engine oil or engine assembly lubricant unless otherwise specified. This will provide initial lubrication when the engine is first started.

cardiagn.com

Camshaft Bearing Installation

Special Tools

J-33049 Camshaft Bearing Service Set

For equivalent regional tools, refer to Special Tools

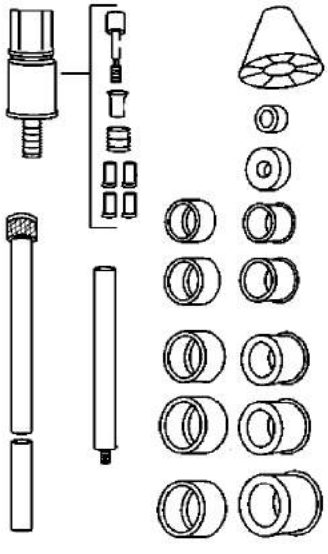

1. Assemble the *J-33049* Camshaft Bearing Service Set according to the manufacturer's instructions.

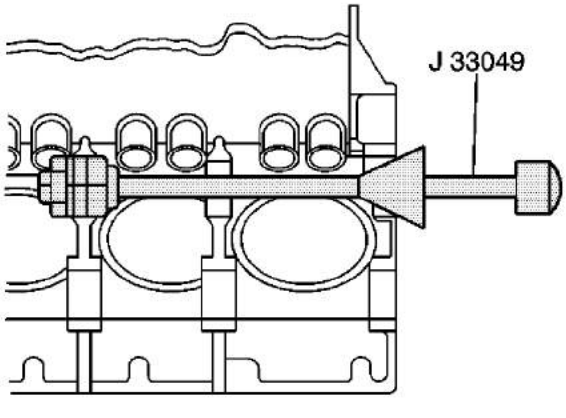

cardiagn.com

Caution: Severe engine damage may result if the oil holes are not correctly aligned.

2. Install the camshaft bearings in the following order:
   2.1. Index the camshaft bearing oil holes with the engine block oil passages.
   2.2. Place the bearing on the *J-33049* Service Set .
   2.3. Install the third camshaft bearing.
   2.4. Install the second camshaft bearing.
   2.5. Install the outer camshaft bearings.

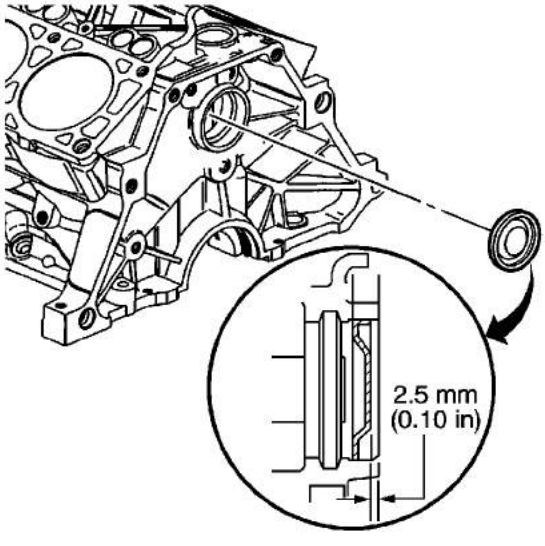

3. Apply sealer GM P/N 12377901 (Canadian P/N 10953504) or the equivalent to the camshaft rear bearing hole plug.
4. Install the camshaft rear bearing hole plug.

cardiagn.com

Piston Oil Nozzle Installation

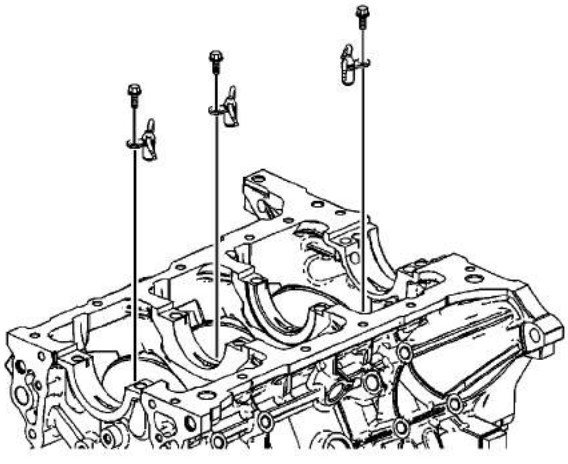

1. Position the piston oil nozzles in the engine block.

   Caution: Refer to Fastener Caution in the Preface section.

2. Install the bolts retaining the piston oil nozzles to the engine block, and tighten to **10 N·m (89 lb in)**.

cardiagn.com

Crankshaft and Bearing Installation

Special Tools

J-45059 Angle Meter

For equivalent regional tools, refer to Special Tools

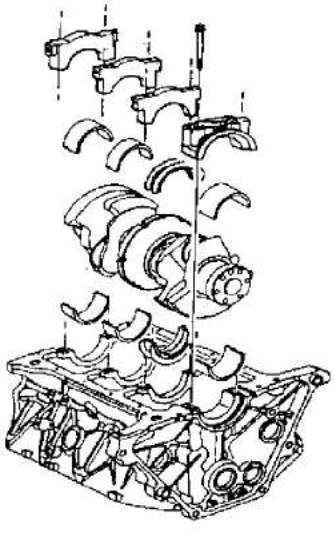

Note: Ensure that the crankshaft bearing cap bolt holes and the crankshaft bearing cap mating surfaces are clean and dry.

1. Dip the crankshaft bearing cap bolts in clean engine oil.

   Caution: Upper and lower inserts may be different. Do not obstruct any oil passages.

2. Place the crankshaft bearing inserts into the crankshaft bearing cap and into the engine block.

   Note: The crankshaft bearing inserts will project slightly when put into place. Ensure that the bearing inserts project an equal distance on both sides. Ensure that the insert tangs are engaged.

3. Lubricate the crankshaft main bearing surface with clean engine oil.
4. Install the crankshaft.

   Caution: In order to prevent the possibility of cylinder block or crankshaft bearing cap damage, the crankshaft bearing caps are tapped into the cylinder block cavity using a brass, lead, or a leather mallet before the attaching bolts are installed. Do not use attaching bolts to

cardiagn.com

(c) 2010 General Motors Company. All rights reserved.

5. Install the crankshaft main bearing caps. Apply a small amount of sealer GM P/N 1052942 (Canadian P/N 10953466) to the rear of the #4 crankshaft main bearing cap sealing surface.

   Caution: Refer to Fastener Caution in the Preface section.

6. Install the crankshaft main bearing cap bolts. Use the *J-45059* Angle Meter in order to tighten the crankshaft main bearing cap bolts to **50 N·m (37 lb ft) plus 77 degrees**.

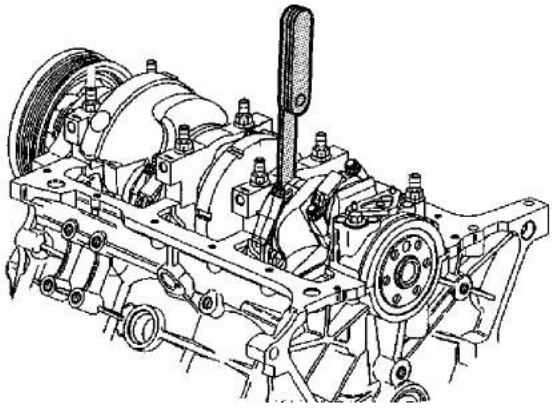

7. Measure the crankshaft end play.
   7.1. Thrust the crankshaft forward or rearward.
   7.2. Insert a feeler gage between the number 3 crankshaft bearing and the bearing surface of the crankshaft and measure the bearing clearance. The proper crankshaft end play clearance is 0.06-0.21 mm (0.002-0.008 in).
   7.3. If the bearing clearance is not within specifications, inspect the thrust surfaces for nicks, gouges or raised metal. Minor imperfections may be removed with a fine stone.

cardiagn.com

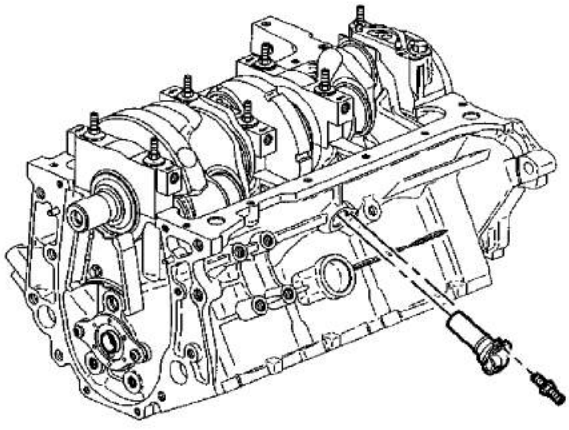

8. Install the crankshaft position sensor into the side of the engine block.
9. Apply threadlock GM P/N 12345382 (Canadian P/N 10953489) or the equivalent to the crankshaft position sensor stud threads.
10. Install the crankshaft position sensor stud and tighten to **11 N·m (98 lb in)**.
11. Install the crankshaft position sensor shield and nut and tighten to **11 N·m (98 lb in)**.

cardiagn.com

Crankshaft Rear Oil Seal Installation

Special Tools

EN-48108 Rear Main Oil Seal Installer

For equivalent regional tools, refer to Tools and Equipment.

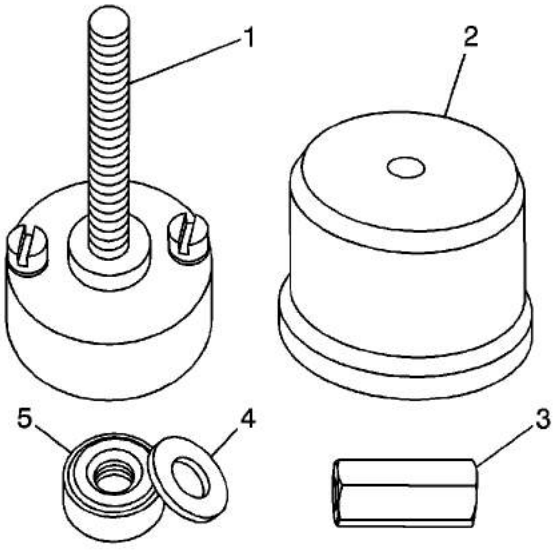

Caution: Do not remove protective nylon sleeve prior to installation. The rear main oil seal installation tool is designed to install the rear main seal with the protective sleeve in place. Never apply or use any oil, lubricants or sealing compounds on the crankshaft rear main oil seal.

Caution: Clean the crankshaft sealing surface with a clean, lint-free towel. Inspect lead-in edge of crankshaft for burrs/sharp edges that could damage the rear main oil seal. Remove burrs/sharp edges with crocus cloth before proceeding.

1. The *EN-48108* installer tool has a unique design to allow the technician to easily install the rear main seal squarely to the correct depth and direction. Before proceeding with installation, review the above illustration to become familiar with the following components:
   - Mandrel (1)
   - Drive Drum (2)
   - Drive Nut (3)
   - Washer (4)
   - Bearing (5)

cardiagn.com

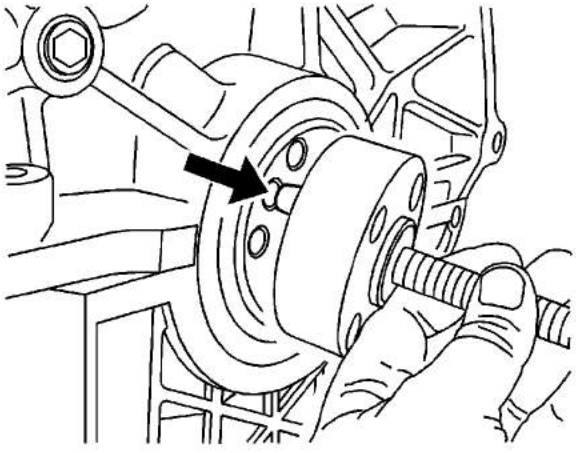

2. Align the mandrel dowel pin to the dowel pin hole in the crankshaft.

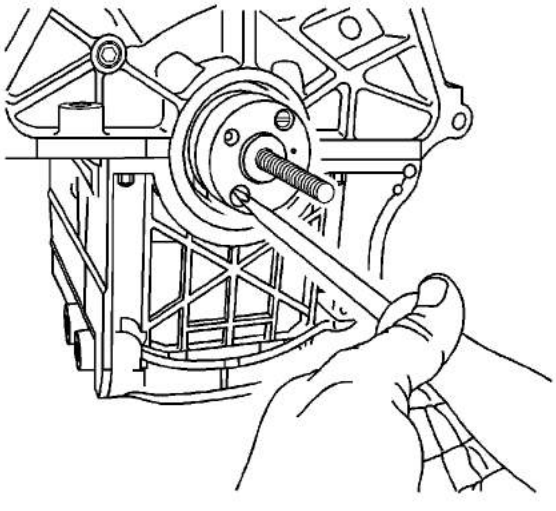

3. Using a large flat blade screwdriver, tighten the two mandrel screws to the crankshaft, ensuring the mandrel is snug to the crankshaft hub.

cardiagn.com

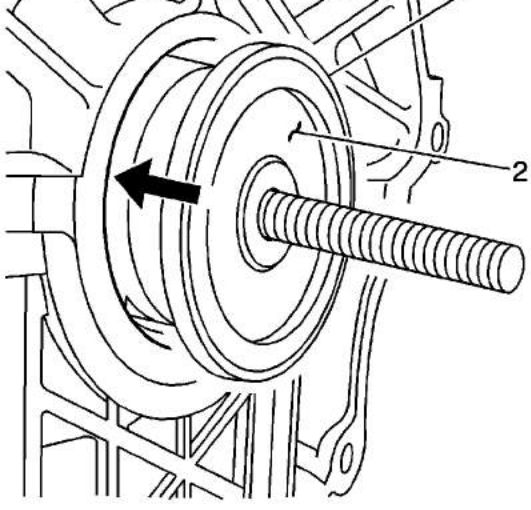

Note: The seal will only fit one way onto the mandrel, and if properly installed, will center on a step that protrudes from the center of the mandrel.

4. Install the rear main seal (1), with the protective nylon sleeve attached (2), onto the mandrel.

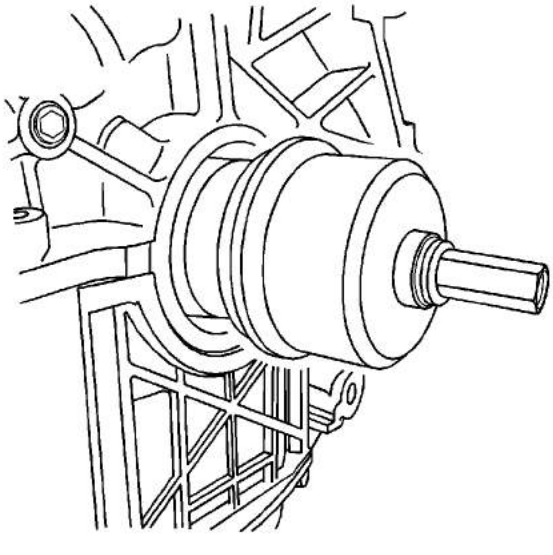

5. Install the outer drive drum onto the mandrel.
6. Install the bearing, washer, and the drive nut onto the threaded shaft.

cardiagn.com

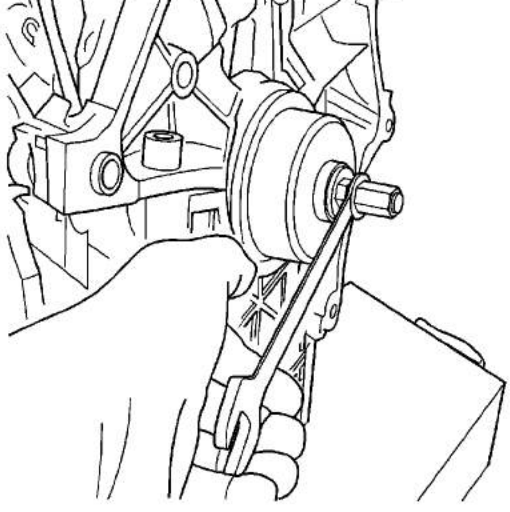

7. Using a wrench, turn the drive nut on the mandrel, which will push the seal into the engine block bore.
8. Turn the wrench until the drive drum is snug and flush against the engine block.
9. Loosen and remove the drive nut, washer, bearing and drive drum. Discard the nylon plastic seal protector.
10. Verify that the seal has seated properly.

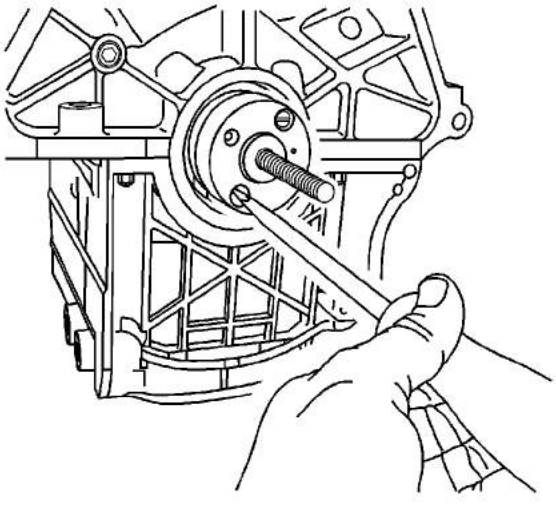

11. Use a flat blade screwdriver to remove the two attachment screws from the mandrel and remove the mandrel from the crankshaft hub.

cardiagn.com

Piston, Connecting Rod, and Bearing Installation

Special Tools

- *J 8037* Ring Compressor
- *J 41556* Connecting Rod Guide
- *J 43654* Piston Pin Clip Remover and Installer
- *J 43690* Rod Bearing Clearance Checking Tool
- *J 43690-100* Rod Bearing Clearance Checking Tool-Adapter Kit
- *J 45059* Angle Meter

For equivalent regional tools, refer to Tools and Equipment.

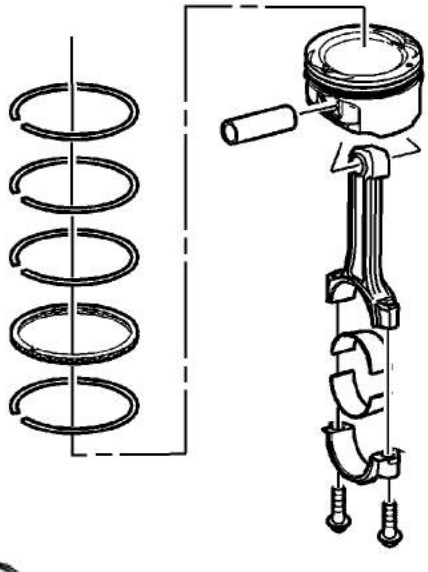

1. Lightly lubricate the following components with clean engine oil:
   - The piston
   - The piston pin
   - The piston rings
   - The cylinder bore
   - The bearing surfaces

cardiagn.com

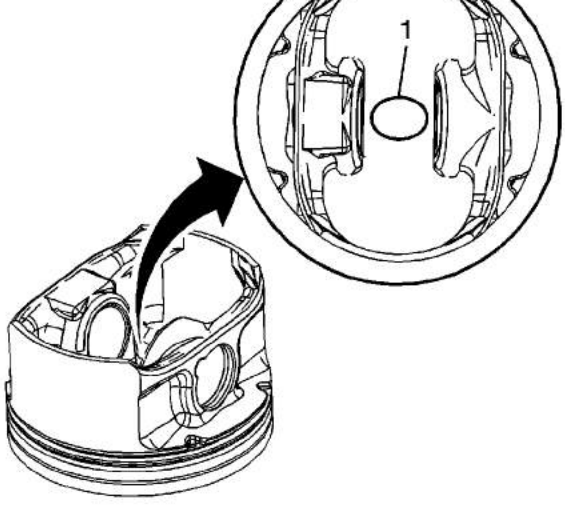

2. There are two styles of pistons in use in the LZ engine, and each piston must use the appropriate matching piston ring set. To identify which make you have, look on the bottom of the piston, in between the piston pin bores.
   - If there is an "FM" marking, it is a Federal Mogul piston and must use the Federal Mogul piston rings.
   - If there is no marking, it is a Mahle piston and must use Mahle piston rings. Failure to do so may result in engine damage.

   Note: The tops of the first and second piston rings are marked with light green stripes to insure proper orientation on the piston. The top ring has a light green stripe 180 degrees from the gap, and the second ring has a light green stripe 90 degrees from the gap. These stripes must be facing up and in this orientation prior to installing the pistons. This is necessary for proper operation.

3. Stagger the oil control ring end gaps a minimum of 90 degrees.
4. Stagger the compression ring end gaps a minimum of 25 mm (1 in).
5. Install the *J 8037* compressor onto the piston and compress the piston rings.

cardiagn.com

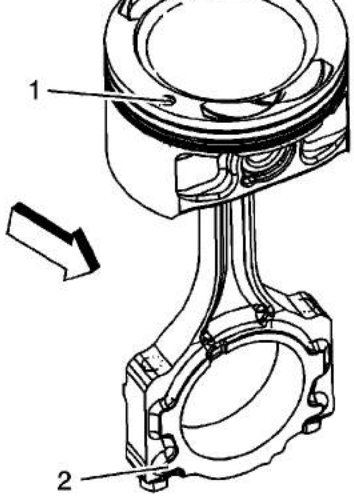

Note: When assembling the connecting rod to the piston, make sure the connecting rod reference mark (2) is facing towards front of engine, and is in proper correlation with the front of engine piston reference mark (1).

6. Align the piston pin bore with the connecting rod pin bore.

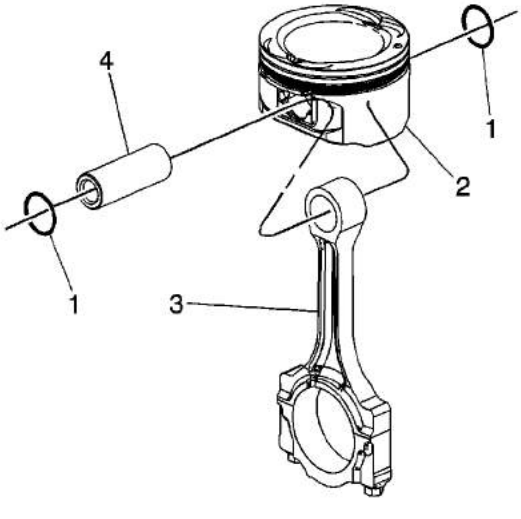

7. Slide the piston pin (4) into the piston and the connecting rod (3).

Note: NEW piston pin retainers must be used. Never reuse the piston pin retainers.

8. Install NEW piston pin retainers (1) using the *J 43654* installer .
9. Ensure that the piston pin retainers are fully seated in their grooves.
10. Repeat these procedures for the remaining pistons.

cardiagn.com

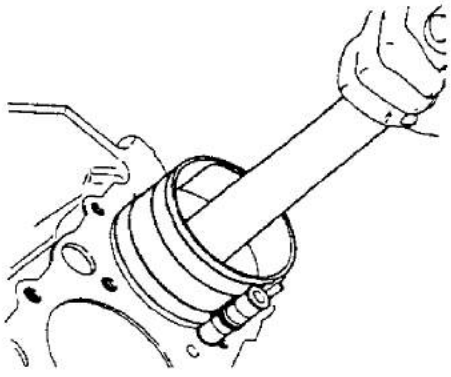

12. Install the piston and connecting rod assembly into the proper cylinder bore.
13. Hold the piston ring compressor firmly against the engine block. Using a wooden hammer handle, lightly tap the top of the piston until all of the piston rings enter the cylinder bore.

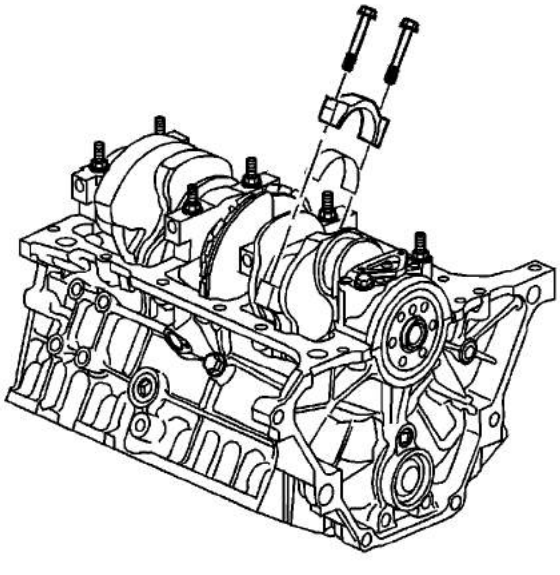

Note: When installing the pistons into the cylinder bore, make sure not to contact the piston oil nozzle with the connecting rod. Failure to do so may damage the piston oil nozzle, resulting in potential engine damage.

14. Using *J 41556* guide , guide the connecting rod end onto the crankshaft journal.

Caution: Refer to Fastener Caution in the Preface section.

cardiagn.com

- Tighten the connecting rod bearing cap bolts a final pass to **110 degrees** using the *J 45059* meter .

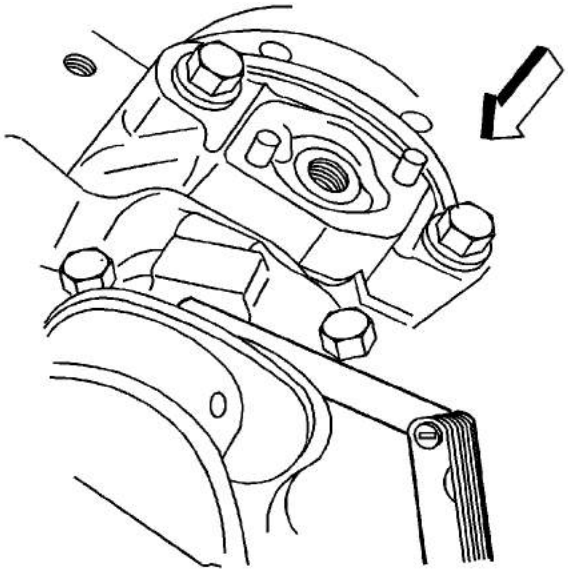

16. With the pistons and connecting rods installed, use a soft faced mallet and lightly tap each connecting rod assembly parallel to the crankpin to make sure that the rods have side clearance.
17. Measure the connecting rod side clearance using a feeler gage or dial indicator. Connecting rod side clearance should be within 0.18-0.44 mm (0.007-0.017 in).

Measuring Connecting Rod Bearing Clearance Using J 43690 and J 43690-100

J 43690 tool and *J 43690-100* kit have been developed as a more accurate method to measure connecting rod bearing clearances. The instructions below provide an overview of tool set and usage. For more detailed information, refer to the tool instruction sheets as supplied by the tool manufacturer.

cardiagn.com

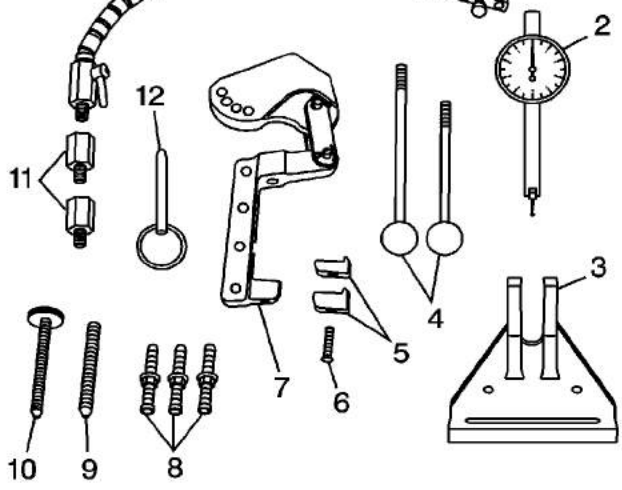

1. *J 43690* tool includes:
   - J 43690-20 Swivel Base (1)
   - J 43690-19 Dial Indicator (2)
   - J 43690-2 Base (3)
   - J 43690-5,-6 Handle (4)
   - J 43690-10,-11 Foot (5)
   - 280307 Screw (6)
   - J 43690-1 Pivot Arm Assembly (7)
   - J 43690-3,-7,-8 Screws (8)
   - 280319 Screw (9)
   - 280311 Screw (10)
   - J 43690-17,-18 Adapter (11)
   - 280310 Pin (12)

cardiagn.com

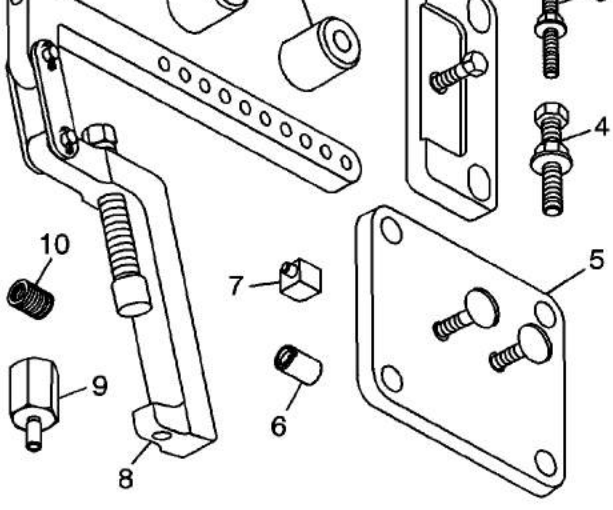

2. *J 43690-100* kit Rod Bearing Checking Tool - Adapter Kit includes:
   - J 43690-104 Spacer (1)
   - J 43690-105 Retainer Plate (2)
   - 505478 Bolt (3)
   - 511341 Bolt (4)
   - J 43690-106 Retainer Plate (5)
   - J 43690-107 Cap (6)
   - J 43690-102 Foot (7)
   - J 43690-101 Pivot Arm Assembly (8)
   - J 43690-103 Adapter (9)
   - 505439 Adapter (10)

   Note: The crankshaft must be secure with no movement or rotation in order to obtain an accurate reading.

3. Rotate the crankshaft until the journal/connecting rod to be measured is in the 12 o'clock position.
4. Remove the crankshaft main bearing cap bolts.
5. Remove the crankshaft main lower bearing cap.
6. Insert a piece of paper stock onto the crankshaft journal.

   Caution: In order to prevent the possibility of cylinder block or crankshaft bearing cap damage, the crankshaft bearing caps are tapped into the cylinder block cavity using a brass, lead, or a leather mallet before the attaching bolts are installed. Do not use attaching bolts to pull the crankshaft bearing caps into the seats. Failure to use this process may damage a cylinder block or a bearing cap.

   Caution: This bolt is designed to permanently stretch when tightened, and therefore MUST be replaced anytime it is removed. The correct part number fastener must be used to replace this type of fastener. Do not use a bolt that is stronger in this application. If the correct bolt

cardiagn.com

7. Install the crankshaft main bearing cap and bolts. Start the crankshaft main bearing cap bolts by hand. Ensure the bottom of the crankshaft main bearing cap is parallel to the bottom of the channel.
   - Tighten the crankshaft main bearing cap bolts in equal increments. Do not completely tighten one bolt at a time to prevent the cap from being cocked.
   - Tighten the bolts to **50 N·m (37 lb ft)** to fully seat the crankshaft main bearing caps. Loosen the bolts 360 degrees counterclockwise.
   - Tighten the bolts to **20 N·m (15 lb ft)**, then **50 N·m (37 lb ft)**.
   - Use *J 45059* meter to tighten the bolts to **77 degrees**.
8. Install the following:
   - J 43690-101 (8)
   - J 43690-5 (4)
   - J 43690-2 (3)
   - J 43690-7 (8)
   - 280310 (12)
   - J 43690-17 (11)

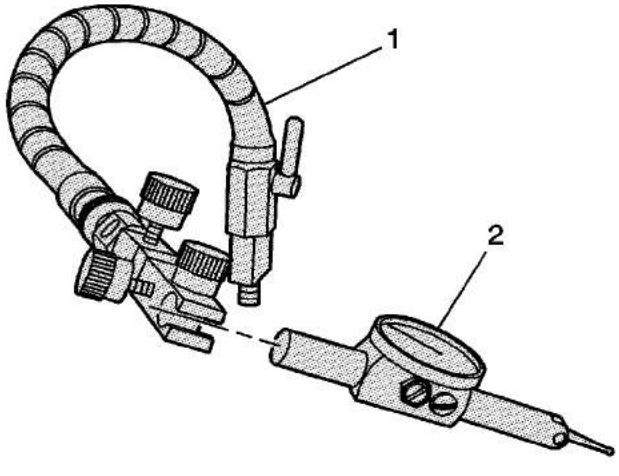

9. Install the swivel base (1) and dial indicator (2).
10. Adjust per the manufacturers instructions and measure the connecting rod bearing clearance. The connecting rod bearing clearance should be between 0.0127-0.0660 mm (0.0005-0.0026 in).

cardiagn.com

Camshaft Installation

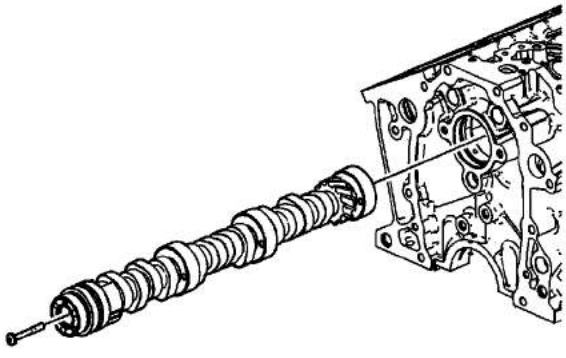

1. Coat the camshaft journals with clean engine oil.
2. Coat the camshaft lobes with prelube GM P/N 12345501 (Canadian P/N 992704) or the equivalent.
3. Install the camshaft using the following procedure:
   3.1. Install a camshaft sprocket bolt into the camshaft. Tighten finger tight only.
   3.2. Carefully rotate the camshaft while installing the camshaft into the camshaft bearings.

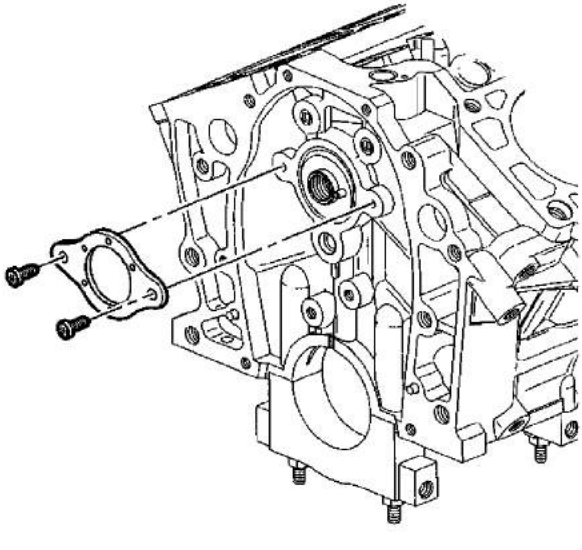

cardiagn.com

Caution: Refer to Fastener Caution in the Preface section.

5. Install the camshaft thrust plate screws and tighten to **10 N·m (89 lb in)**.

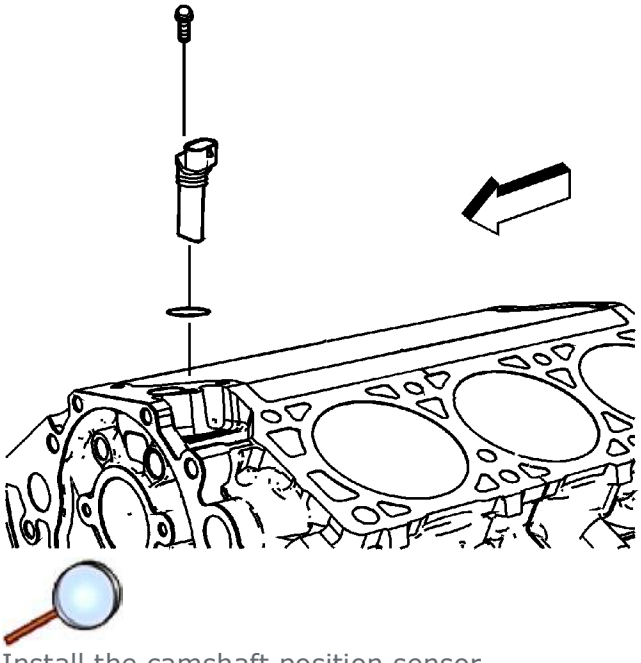

6. Install the camshaft position sensor.
7. Install the camshaft position sensor bolt and tighten to **10 N·m (89 lb in)**.

cardiagn.com

Timing Chain and Sprocket Installation

Special Tools

EN-47719 Tensioner Compressor

For equivalent regional tools, refer to Special Tools.

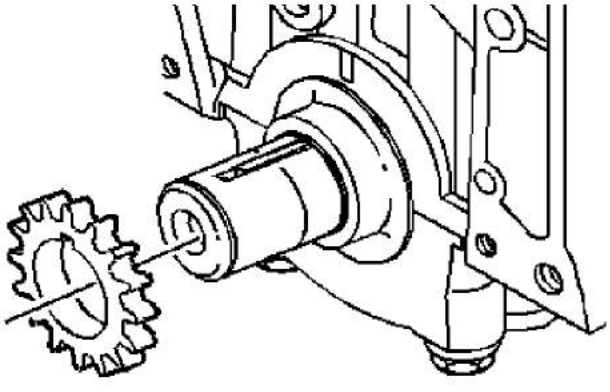

1. Install the crankshaft sprocket.
2. Apply prelube GM P/N 12345501 (Canadian P/N 992704) or the equivalent to the crankshaft sprocket thrust surface.

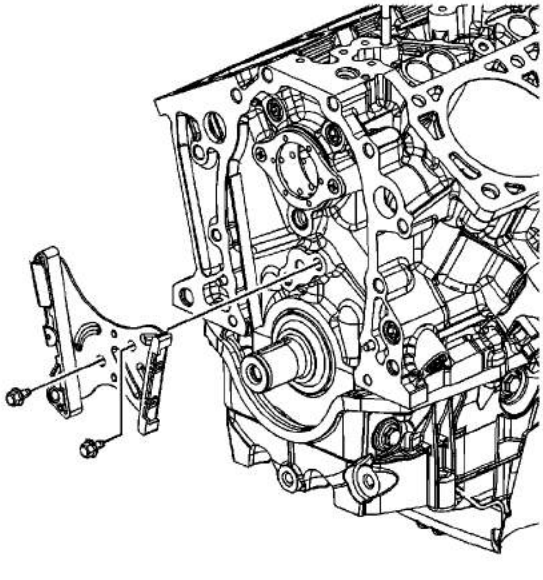

cardiagn.com

3. Install the timing chain tensioner.

   Caution: Refer to Fastener Caution in the Preface section.

4. Install the timing chain tensioner bolts and tighten to **21 N·m (15 lb ft)**.

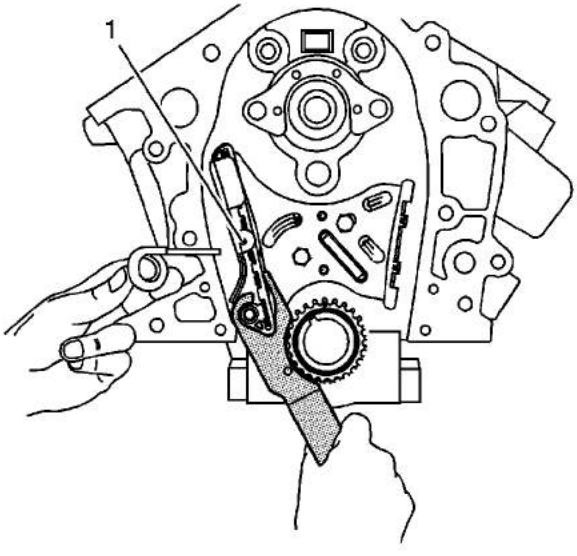

5. Using the *EN-47719* compressor , fully collapse the tensioner, and place the tensioner retaining pin into the retaining hole (1).

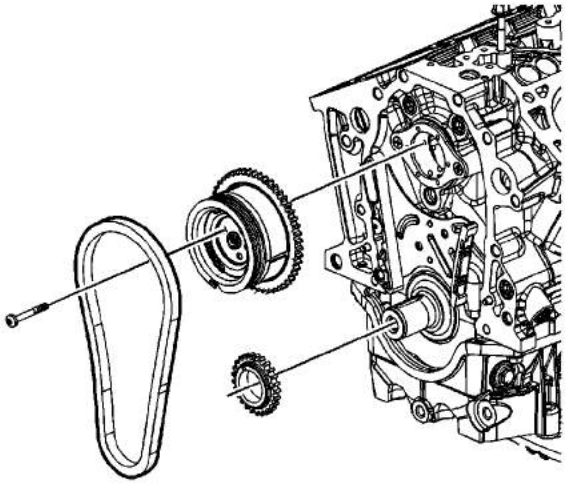

6. Align the dowel in the camshaft position actuator with the dowel hole in the camshaft.

cardiagn.com

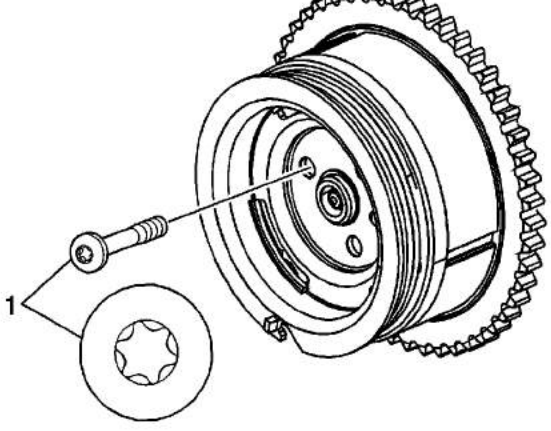

Caution: Use only a Torx Plus® Bit when removing or installing the camshaft position actuator fasteners (1). The Torx Plus® design differs from typical Torx® fastener. Use of a standard Torx® bit on Torx Plus® fasteners may result in a rounded out fastener head or incorrect faster torque.

Note: DO NOT use any type of threadlocking compound on the camshaft position actuator mounting bolts. Usage of a threadlocking compound on the threads could lead to contamination of the camshaft position actuator, possibly resulting in potential damage to the actuator.

7. Draw the camshaft sprocket onto the camshaft using the mounting bolts and tighten the bolts to **16 N·m (12 lb ft)**.
8. Remove the tensioner retaining pin.
9. Coat the crankshaft and camshaft sprocket with engine oil.

cardiagn.com

Engine Front Cover Installation

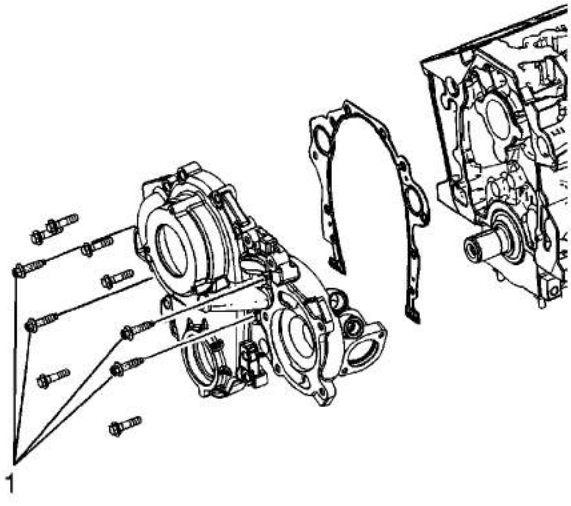

1. Install the front cover and the front cover gasket.

   Caution: Refer to Fastener Caution in the Preface section.

   Note: Apply sealer GM P/N 12346004 (Canadian P/N 10953480) or equivalent to the shaded bolts (1) in the graphic. Failure to do so may result in engine coolant leakage from the bolt holes passing through the water jacket.

2. Install the front cover bolts and tighten to **25 N·m (18 lb ft)**.

cardiagn.com

Crankshaft Front Oil Seal Installation

Special Tools

EN-48869 Front Crankshaft Oil Seal Installer

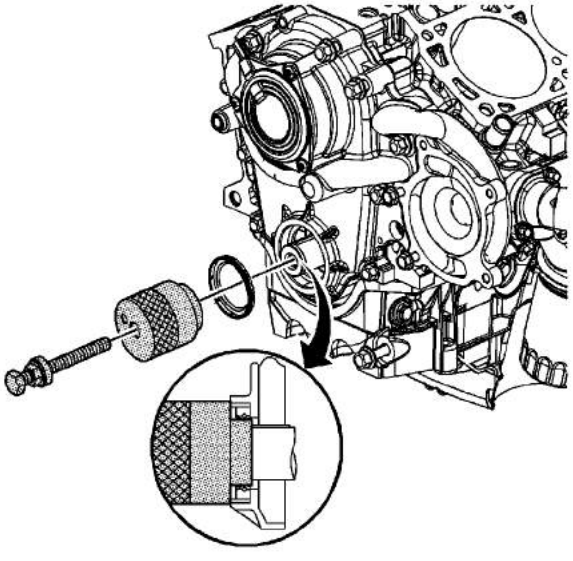

1. Place the crankshaft front oil seal on the EN-48869 with lip facing inward, aligning crankshaft keyway to the groove in the installer.
2. Thread the forcing bolt with bearing, washer and nut as shown.
3. Tighten the nut until seal bottoms, then remove the EN-48869 .

cardiagn.com

Oil Pump Drive Installation

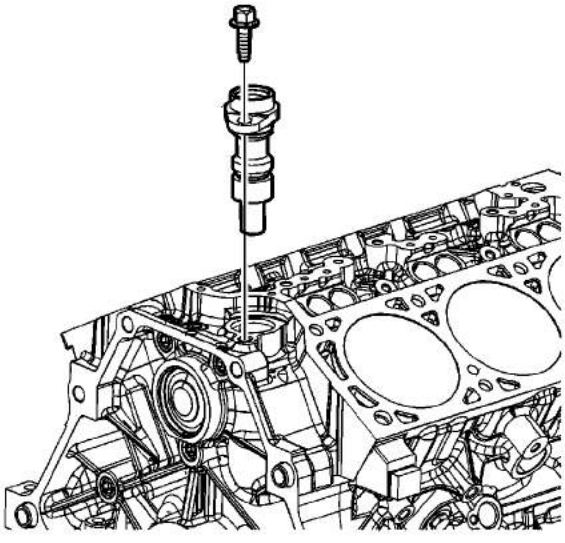

1. Apply prelube GM P/N 12345501 (Canadian P/N 992704) or the equivalent to the oil pump drive gear.
2. Apply engine oil to the oil pump drive gear assembly for ease of assembly.
3. Install the oil pump drive gear assembly.
4. Install the oil pump drive gear clamp.

   Caution: Refer to Fastener Caution in the Preface section.

5. Install the oil pump drive gear clamp bolt and tighten to **36 N·m (27 lb ft)**.

cardiagn.com

Camshaft Position Actuator Magnet Installation

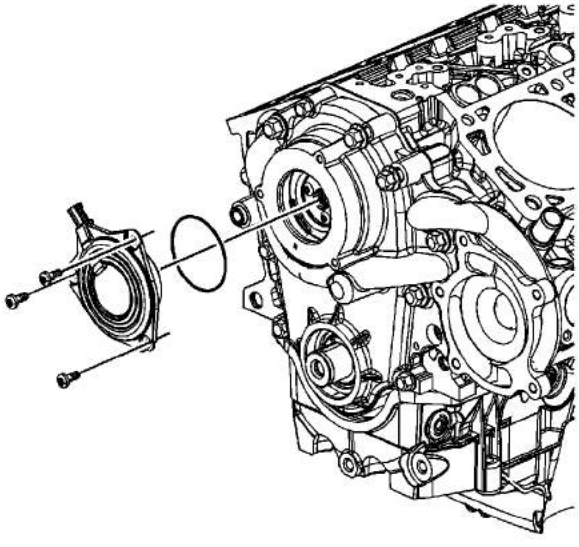

1. Install the camshaft position actuator magnet and O-ring seal into the front cover.

   Caution: Refer to Fastener Caution in the Preface section.

2. Install the camshaft position actuator magnet bolts.
   - Starting with the uppermost bolt, tighten the camshaft position actuator magnet bolts a first pass in a clockwise sequence to **10 N·m (89 lb in)**.
   - Starting with the uppermost bolt, tighten the camshaft position actuator magnet bolts a final pass in a clockwise sequence to **10 N·m (89 lb in)**.

cardiagn.com

Oil Pump Installation

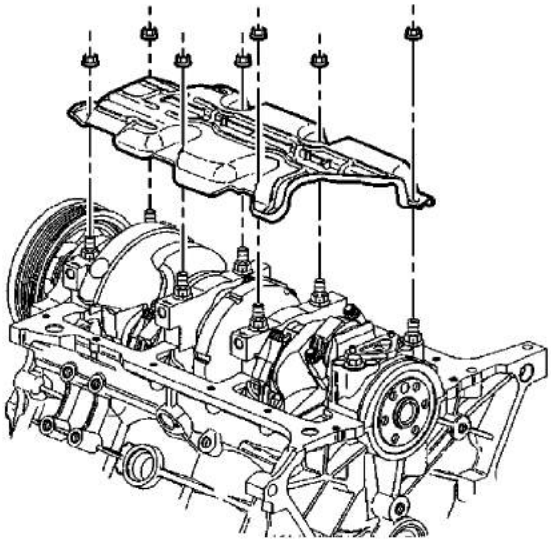

1. Install the crankshaft oil deflector.

   Caution: Refer to Fastener Caution in the Preface section.

2. Install the crankshaft oil deflector nuts and tighten to **25 N·m (18 lb ft)**.

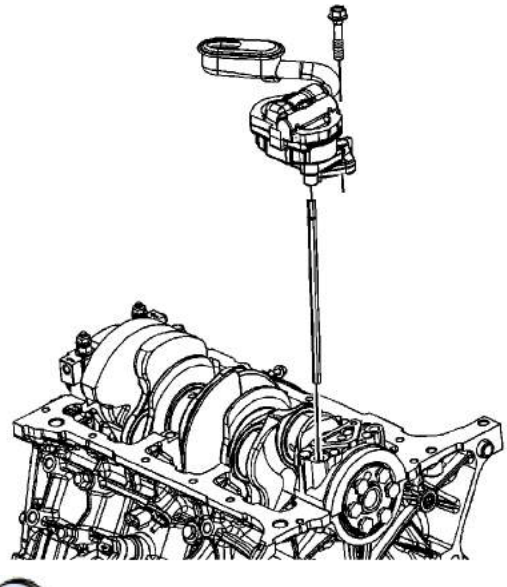

Note: Do not reuse the oil pump driveshaft retainer. During assembly, install a NEW oil

cardiagn.com

3. Install the oil pump.
4. Position the oil pump onto the pins.
5. Install the oil pump bolt attaching the oil pump to the rear crankshaft bearing cap, and tighten to **41 N·m (30 lb ft)**.

cardiagn.com

Oil Pan Installation

Special Tools

J 45059 Angle Meter

For equivalent regional tools, refer to Special Tools

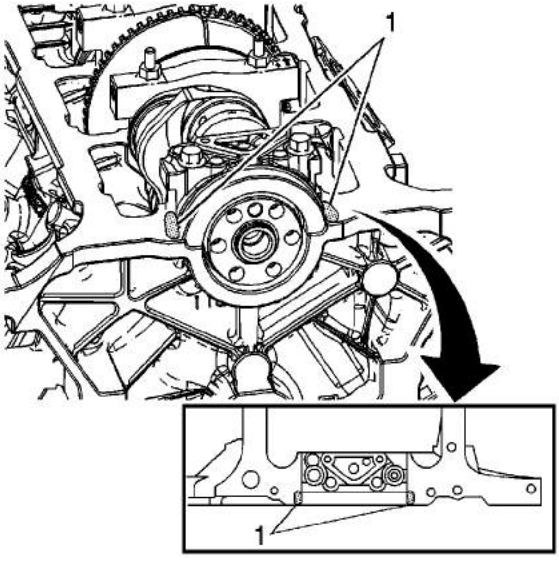

1. Apply sealer GM P/N 12378521, (Canadian P/N 88901148) or the equivalent to both sides of the crankshaft rear main bearing cap (1). Press sealer into gap using a putty knife.

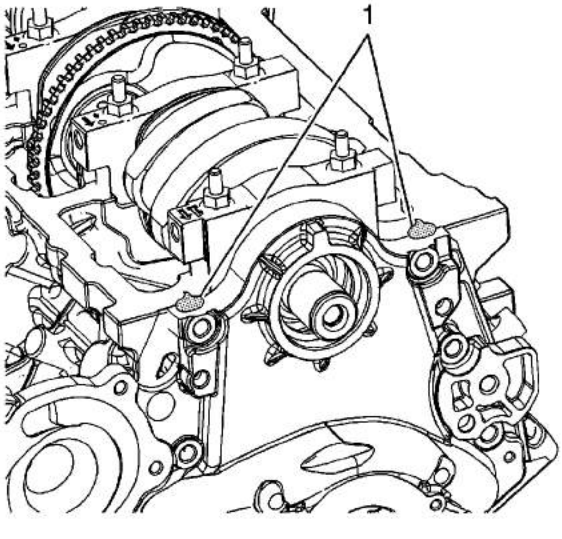

cardiagn.com

2. Apply sealer GM P/N 12378521 (Canadian P/N 88901148) or equivalent to both sides of the front cover/block mating area (1).

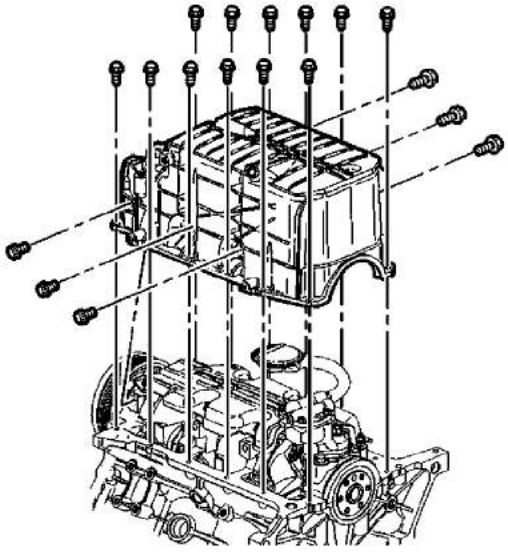

3. Install the oil pan gasket.
4. Install the oil pan.

Caution: Refer to Fastener Caution in the Preface section.

5. Install the oil pan bolts and tighten to **25 N·m (18 lb ft)**.
6. Apply sealer GM P/N 12346004 (Canadian P/N 10953480), or equivalent to the oil pan side bolt threads.
7. Install the oil pan side bolts.
8. Tighten the oil pan side bolts a first pass to **50 N·m (37 lb ft)**.
9. Tighten the oil pan side bolts a second pass to 50 degrees using the *J 45059* meter .

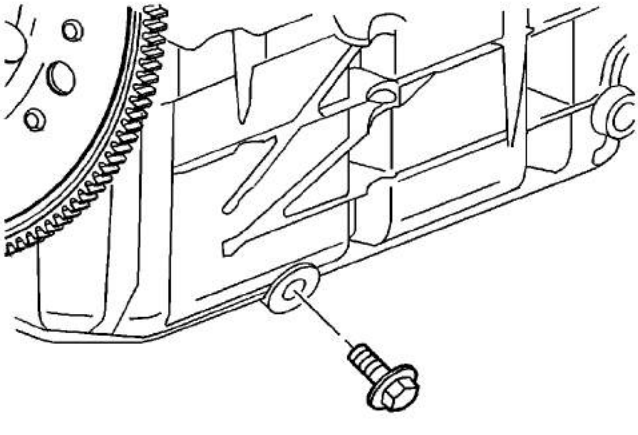

cardiagn.com

10. Install the oil pan drain plug and tighten to **25 N·m (18 lb ft)**.

cardiagn.com

Cylinder Head Installation - Left Side

Special Tools

J 45059 Angle Meter

For equivalent regional tools refer to Special Tools.

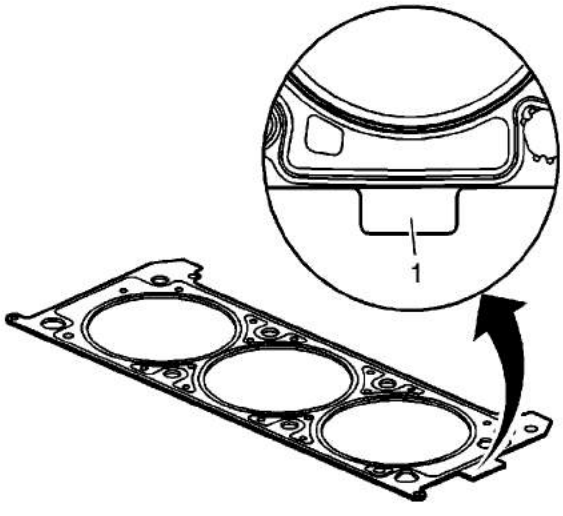

Caution: Head gaskets are specific for right hand and left hand applications, and also must be installed with the correct side facing up. Note the markings (1) on the head gaskets for proper installation. Failure to do so may lead to engine damage.

Caution: This component uses torque-to-yield bolts. When servicing this component do not reuse the bolts, New torque-to-yield bolts must be installed. Reusing used torque-to-yield bolts will not provide proper bolt torque and clamp load. Failure to install NEW torque-to-yield bolts may lead to engine damage.

1. Install the cylinder head locator dowel pins, if necessary.
2. Inspect the cylinder head locator dowel pins for proper installation.

cardiagn.com

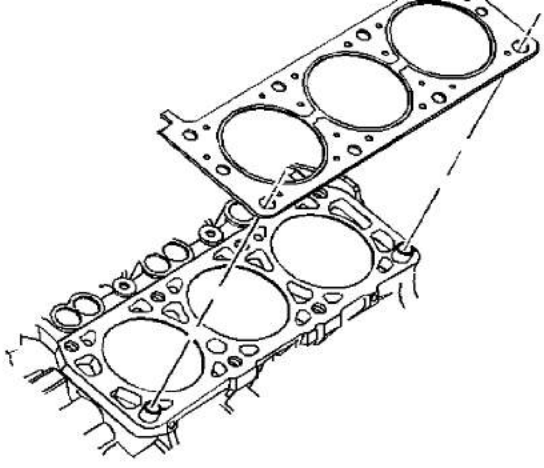

3. Install the cylinder head gasket.

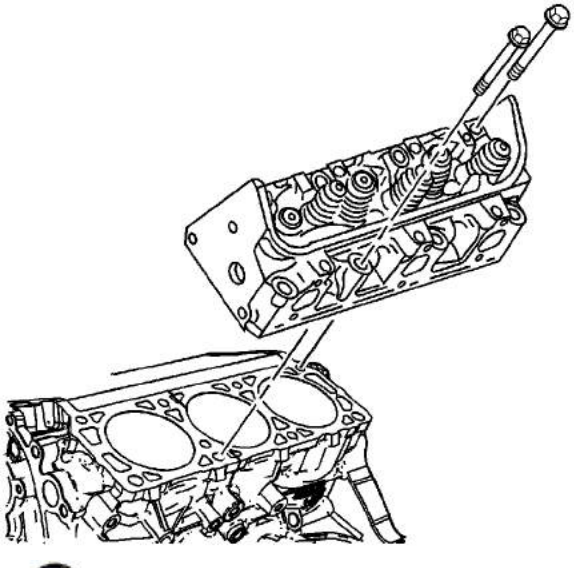

4. Install the cylinder head.

Caution: Refer to Fastener Caution in the Preface section.

cardiagn.com

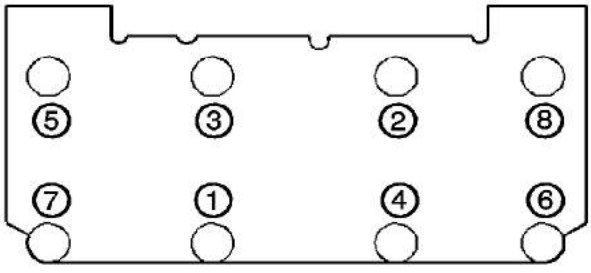

5. Install the new cylinder head bolts and tighten to:
   5.1. Tighten the cylinder head bolts a first pass in sequence to **60 N·m (44 lb ft)**.
   5.2. Tighten the cylinder head bolts a final pass in sequence to **95 degrees** using the *J 45059* meter .

cardiagn.com

Cylinder Head Installation - Right Side

Special Tools

J 45059 Angle Meter

For equivalent regional tools refer to Special Tools.

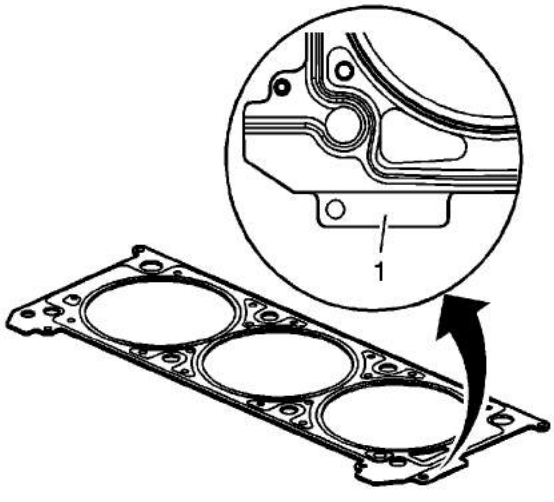

Caution: Head gaskets are specific for right hand and left hand applications, and also must be installed with the correct side facing up. Note the markings (1) on the head gaskets for proper installation. Failure to do so may lead to engine damage.

Caution: This component uses torque-to-yield bolts. When servicing this component do not reuse the bolts, New torque-to-yield bolts must be installed. Reusing used torque-to-yield bolts will not provide proper bolt torque and clamp load. Failure to install NEW torque-to-yield bolts may lead to engine damage.

1. Install the cylinder head locator dowel pins, if necessary.
2. Inspect the cylinder head locator dowel pins for proper installation.

cardiagn.com

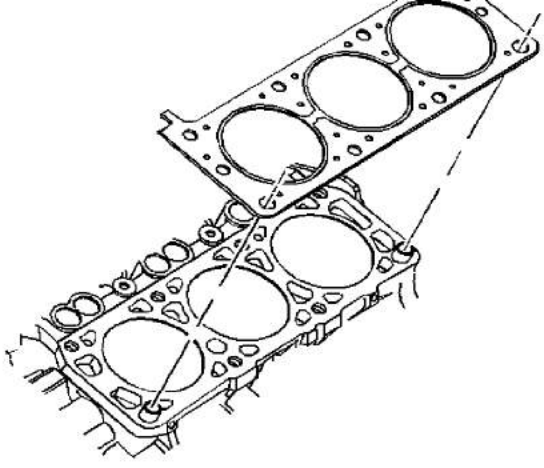

3. Install the cylinder head gasket.

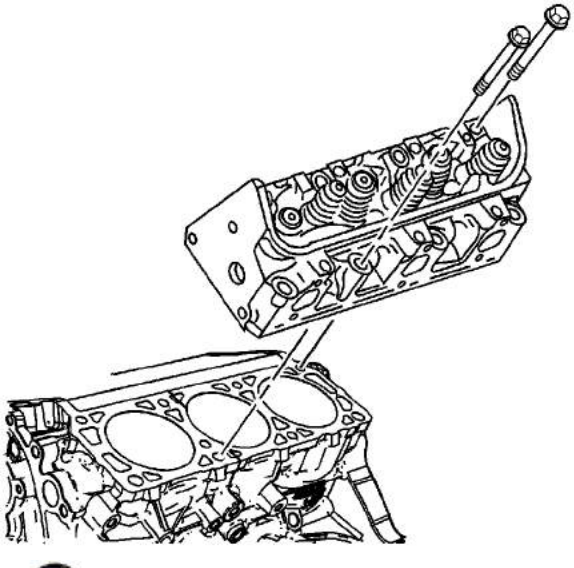

4. Install the cylinder head.

Caution: Refer to Fastener Caution in the Preface section.

cardiagn.com

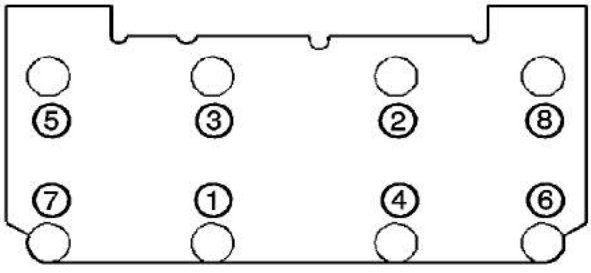

5. Install the new cylinder head bolts and tighten to:
   5.1. Tighten the cylinder head bolts a first pass in sequence to **60 N·m (44 lb ft)**.
   5.2. Tighten the cylinder head bolts a final pass in sequence to **95 degrees** using the *J 45059* meter .

cardiagn.com

Water Pump Installation

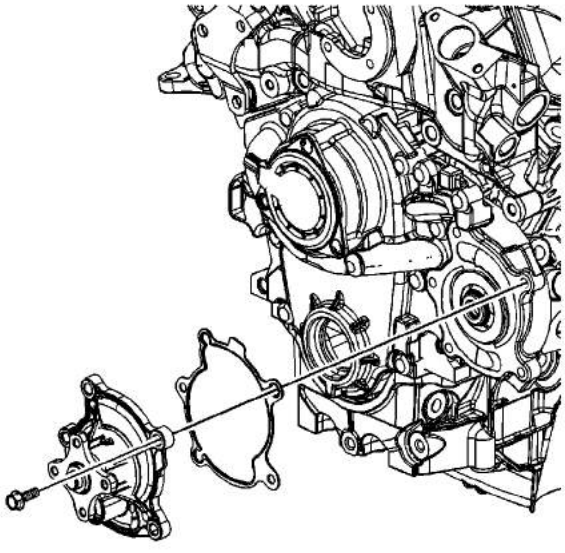

1. Install the water pump gasket.
2. Install the water pump.

   Caution: Refer to Fastener Caution in the Preface section.

3. Install the water pump bolts and tighten to **25 N·m (18 lb ft)**.

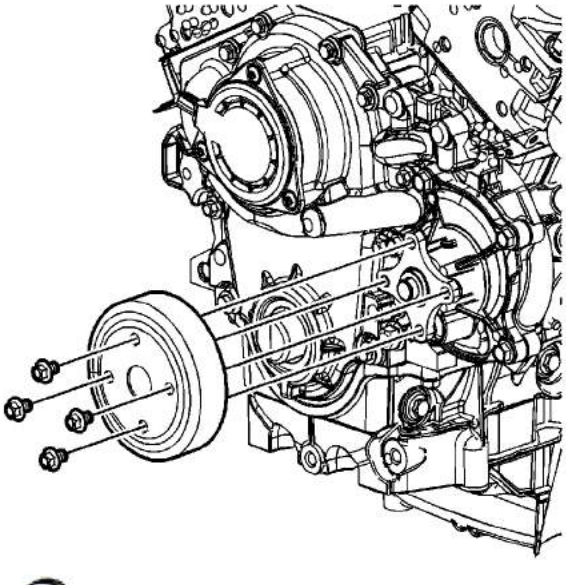

4. Install the water pump pulley.

cardiagn.com

cardiagn.com

Valve Lifter Installation

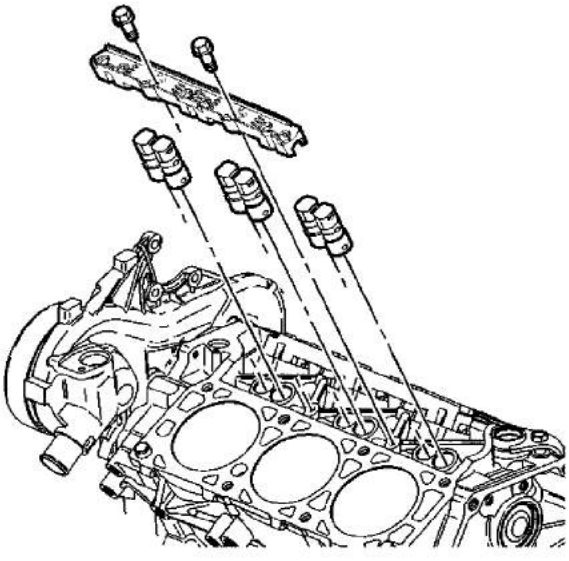

1. Coat the valve lifters using prelube GM P/N 12345501 (Canadian P/N 992704) or the equivalent.
2. Install the valve lifters in their original locations.
3. Apply threadlock GM P/N 12345382 (Canadian P/N 10953489) or the equivalent to the threads.

   Caution: Refer to Fastener Caution in the Preface section.

4. Install the valve lifter guides and guide bolts, and tighten to **10 N·m (89 lb in)**.

cardiagn.com

Valve Rocker Arm and Push Rod Installation

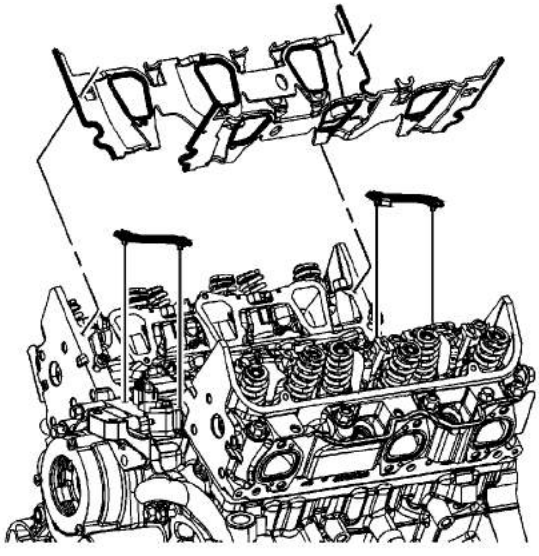

Note: All gasket mating surfaces must be free of oil and foreign material. Use GM P/N 12346139 (Canadian P/N 10953463) or equivalent to clean surfaces.

Note: Room temperature vulcanizing (RTV) sealer is not to be placed under the lower intake manifold gaskets.

1. Install the lower intake manifold gaskets.

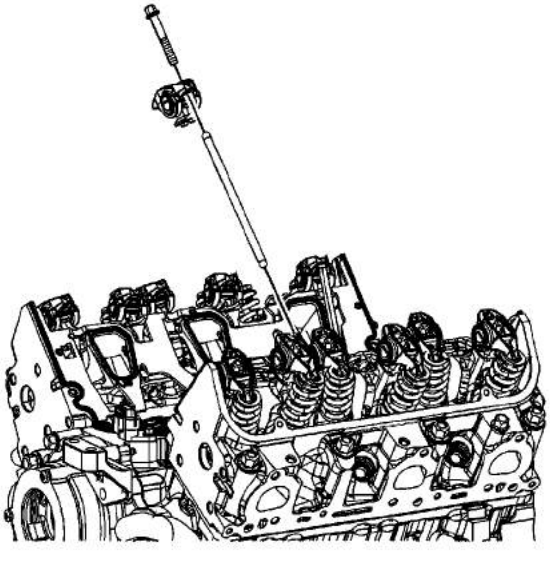

cardiagn.com

2. Coat the ends of the push rods using prelube GM P/N 12345501 (Canadian P/N 992704) or the equivalent.

   Note: The intake valve push rods measure 147.51 mm (5.81 in) and the exhaust valve push rods measure 154.87 mm (6.1 in) in length.

3. Install the push rods in their original location.
4. Coat the rocker arm friction surfaces using prelube GM P/N 12345501 (Canadian P/N 992704) or the equivalent.

   Note: Shims (P/N 88894006) may be required under the valve rocker arm pedestals if reconditioning has been performed on the cylinder head or its components.

5. Install the valve rocker arms in their original positions.

   Caution: Refer to Fastener Caution in the Preface section.

6. Install the valve rocker arm bolts and tighten to **34 N·m (25 lb ft)**.

cardiagn.com

Lower Intake Manifold Installation

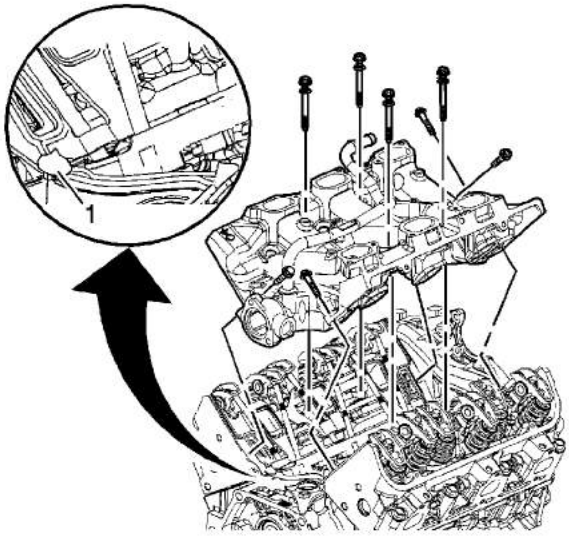

Note: All gasket-mating surfaces need to be free of oil and foreign material. Use GM P/N 12346139 (Canadian P/N 10953463) or equivalent to clean surfaces.

1. With gaskets and seals in place apply a small drop 8-10 mm (0.31-0.39 in) of room temperature vulcanizing (RTV) sealer GM P/N 12378521 (Canadian P/N 88901148) or equivalent to the 4 corners of the intake manifold to block joints (1).

   Note: To ensure proper lower intake manifold orientation during installation, make sure the intake port marked 1 faces the front of the engine.

2. Install the lower intake manifold.

cardiagn.com

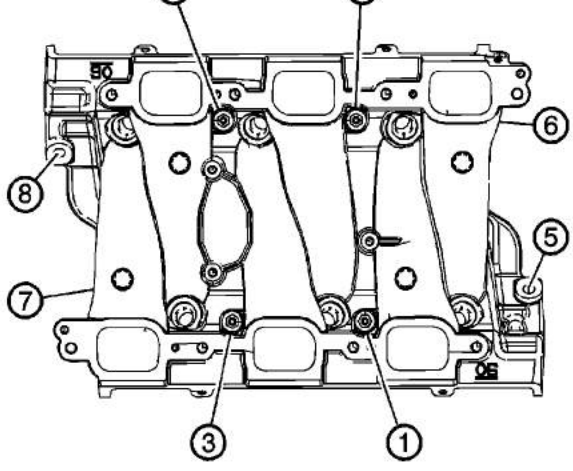

Caution: Maximum gasket performance is achieved when using new fasteners, which contain a thread-locking patch. If the fasteners are not replaced, a thread locking chemical must be applied to the fastener threads. Failure to replace the fasteners or apply a thread-locking chemical MAY reduce gasket sealing capability.

Caution: Failure to tighten vertical bolts before the diagonal bolts may cause an oil leak.

3. Apply sealer GM P/N 12345382 (Canadian P/N 10953489) or equivalent to the lower intake manifold bolt threads.

   Caution: Refer to Fastener Caution in the Preface section.

4. Install the new lower intake manifold bolts if applicable, in sequence.
   4.1. Tighten the lower intake manifold bolts in sequence to **7 N·m (62 lb in)** on the first pass.
   4.2. Tighten the lower intake manifold bolts (1, 2, 3, 4) in sequence to **13 N·m (115 lb in)** on the final pass.
   4.3. Tighten the lower intake manifold bolts (5, 6, 7, 8) in sequence to **25 N·m (18 lb ft)** on the final pass.

cardiagn.com

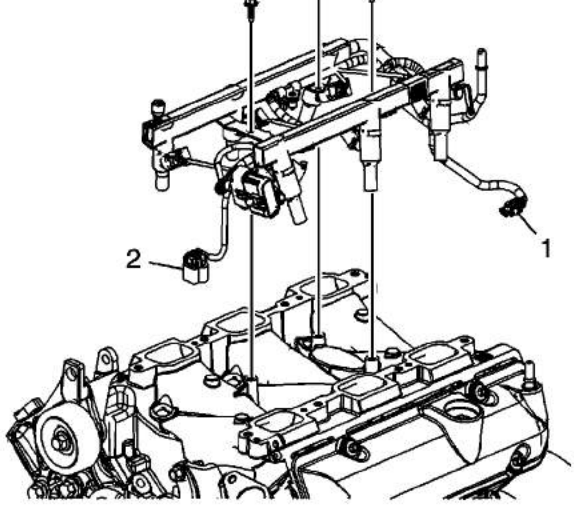

5. Inspect the fuel rail, and fuel injectors for damage and replace if necessary.
6. Install NEW lower fuel injector O-rings.
7. Lubricate the fuel injector O-rings using GM P/N 12345616 (Canadian P/N 993182) or equivalent.

   Note: To ensure proper fuel rail orientation during installation, make sure the fuel feed pipe faces the rear of the engine.

8. Install the injector nozzles into the lower intake manifold injector bores.
9. Press on the injector rail using the palms of both hands until the injectors are fully seated.
10. Install the fuel injector rail bolts and tighten to **10 N·m (89 lb in)**.
11. Connect the coolant temperature sensor (1).
12. Connect the camshaft position (CMP) sensor (2).

cardiagn.com

Upper Intake Manifold Installation

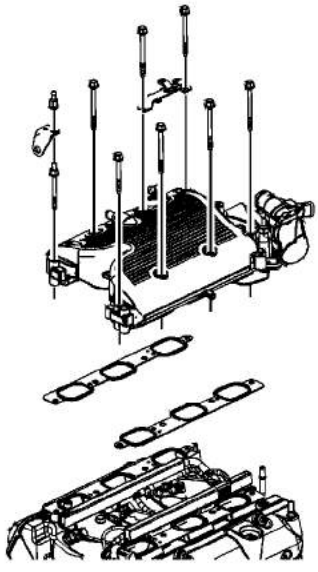

1. Install the upper intake manifold gaskets and manifold.
2. Apply threadlock GM P/N 12345382 (Canadian P/N 10953489) or equivalent to the upper intake manifold bolt threads.

   Caution: Refer to Fastener Caution in the Preface section.

3. Install the MAP sensor bracket, upper intake manifold bolts and the upper intake manifold stud. Tighten the upper intake manifold bolts and stud to **25 N·m (18 lb ft)**.

cardiagn.com

Valve Rocker Arm Cover Installation - Left Side

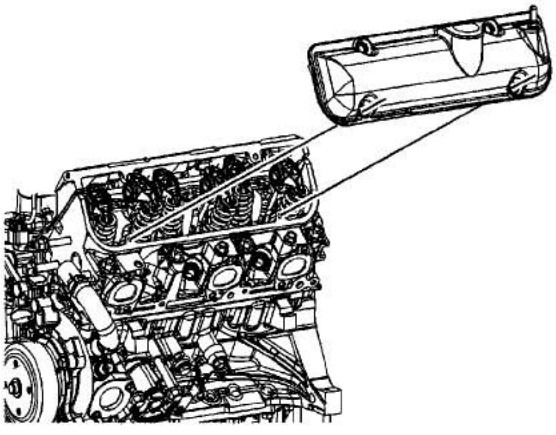

1. Install NEW valve rocker arm cover grommets and use NEW valve rocker arm cover bolts if they are serviced with the grommet.

   Note: All gasket-mating surfaces need to be free of oil and foreign material. Use GM P/N 12346139 (Canadian P/N 10953463) or equivalent to clean surfaces.

2. Install the valve rocker arm cover gasket into the valve rocker arm cover.

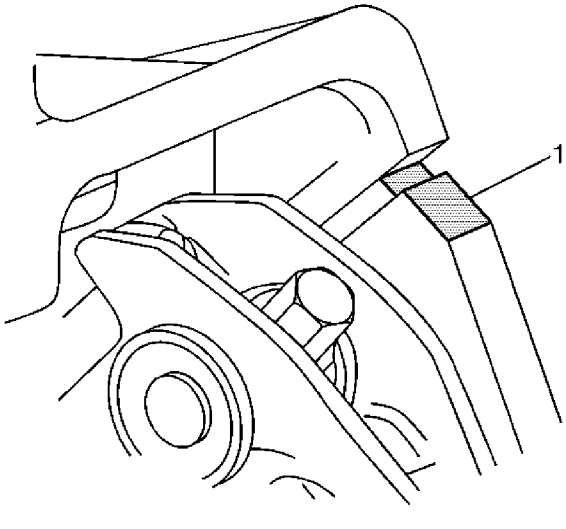

cardiagn.com

4. Install the valve rocker arm cover.

   Caution: Refer to Fastener Caution in the Preface section.

5. Install the valve rocker arm cover bolts, if necessary, and tighten to **10 N·m (89 lb in)**

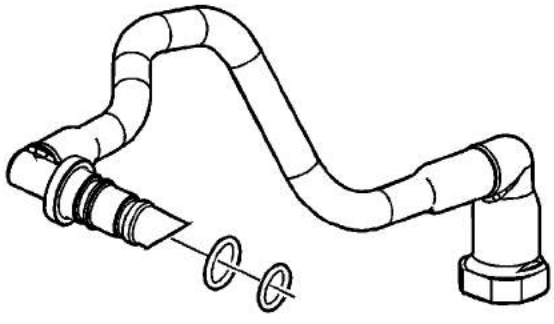

6. Install two NEW positive crankcase ventilation (PCV) tube O-rings.

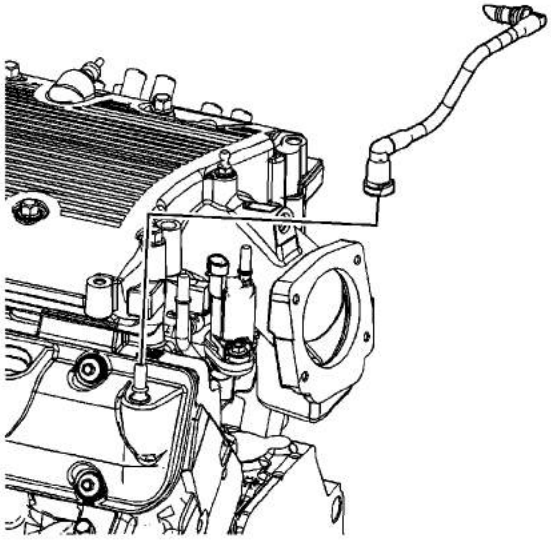

7. Install the fresh air tube.

cardiagn.com

Valve Rocker Arm Cover Installation - Right Side

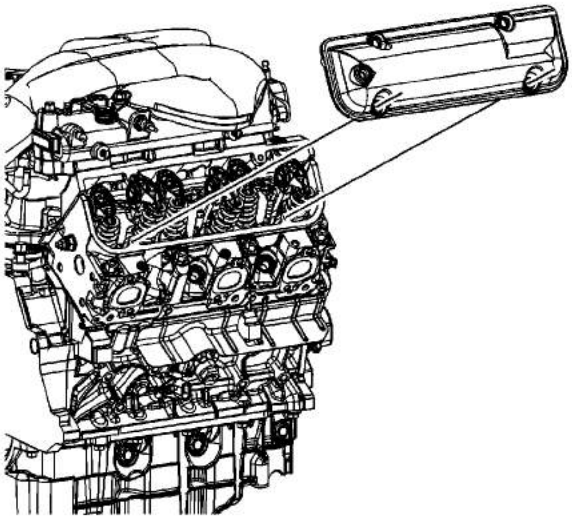

1. Install NEW valve rocker arm cover grommets and use NEW valve rocker arm cover bolts if they are serviced with the grommet.

   Note: All gasket-mating surfaces need to be free of oil and foreign material. Use GM P/N 12346139 (Canadian P/N 10953463) or equivalent to clean surfaces.

2. Install the valve rocker arm cover gasket into the valve rocker arm cover.

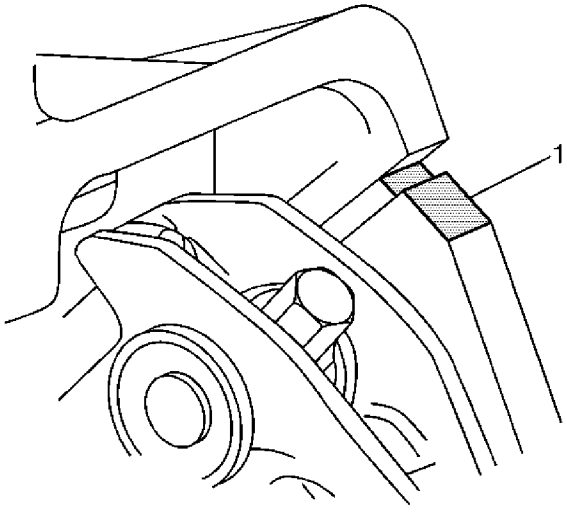

cardiagn.com

4. Install the valve rocker arm cover.

   Caution: Refer to Fastener Caution in the Preface section.

5. Install the valve rocker arm cover bolts, if necessary, and tighten to **10 N·m (89 lb in)**.

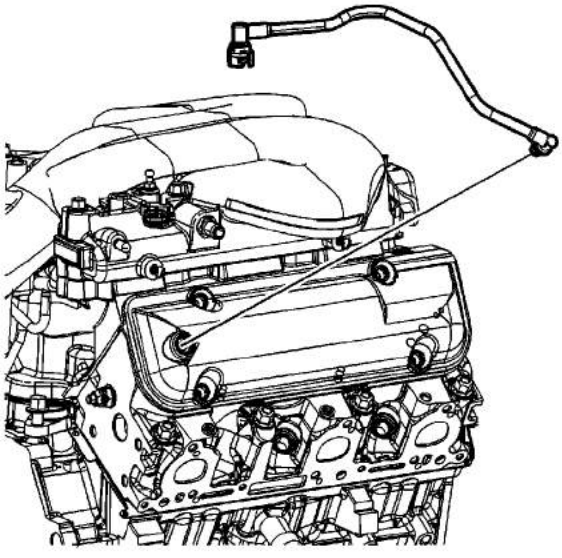

6. Install the fresh air tube into the valve rocker arm cover.

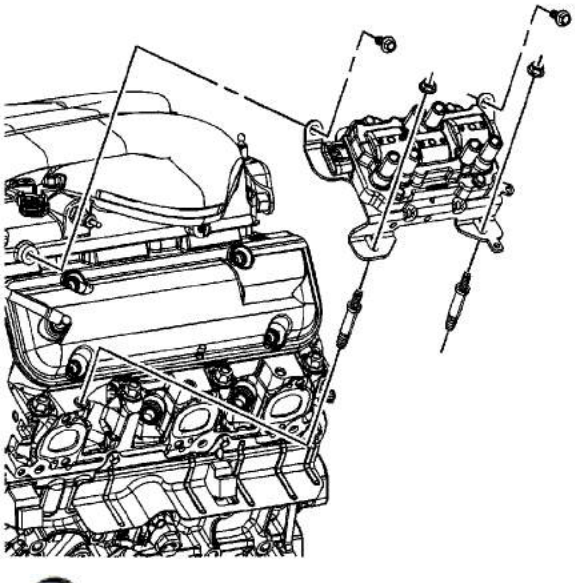

7. Install the ignition coil assembly studs, if necessary, and tighten to **25 N·m (18 lb ft)**.
8. Install the ignition coil assembly.
9. Install the ignition coil assembly bolts and nuts and tighten to **25 N·m (18 lb ft)**.

cardiagn.com

Water Inlet and Engine Coolant Thermostat Installation

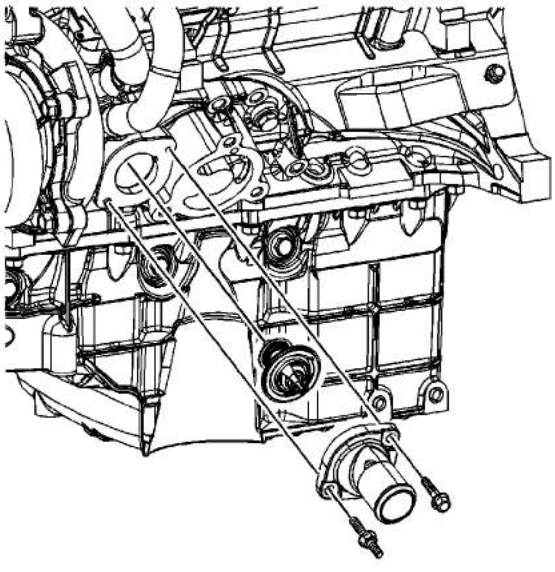

1. Install the thermostat.
2. Install the water inlet.

   Caution: Refer to Fastener Caution in the Preface section.

3. Install the water inlet bolts and tighten to **10 N·m (89 lb in)**.

cardiagn.com

Exhaust Manifold Installation - Left Side

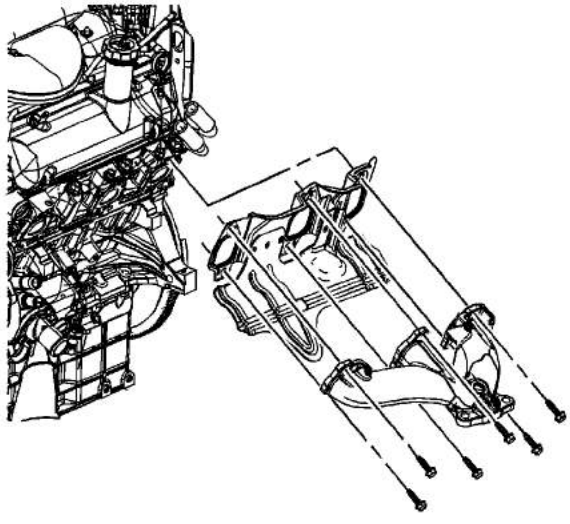

1. Install the exhaust manifold gasket.
2. Install the exhaust manifold.

   Caution: Refer to Fastener Caution in the Preface section.

3. Install the exhaust manifold bolts and tighten to **20 N·m (15 lb ft)**.

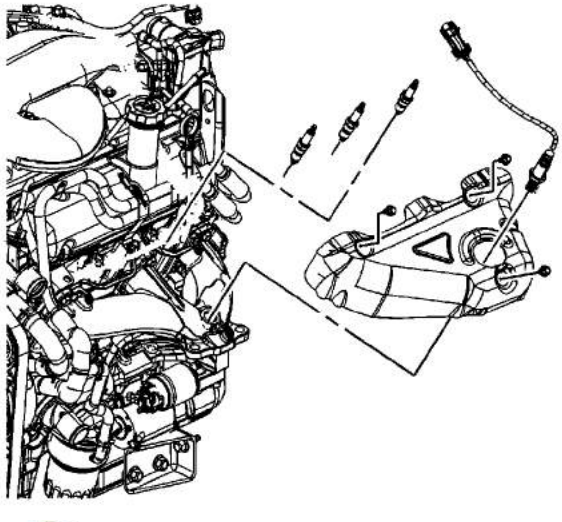

4. Install the exhaust manifold heat shield.

cardiagn.com

7. Install the spark plug wires.
8. Install the heated oxygen sensor and tighten to **42 N·m (31 lb ft)**.

cardiagn.com

Exhaust Manifold Installation - Right Side

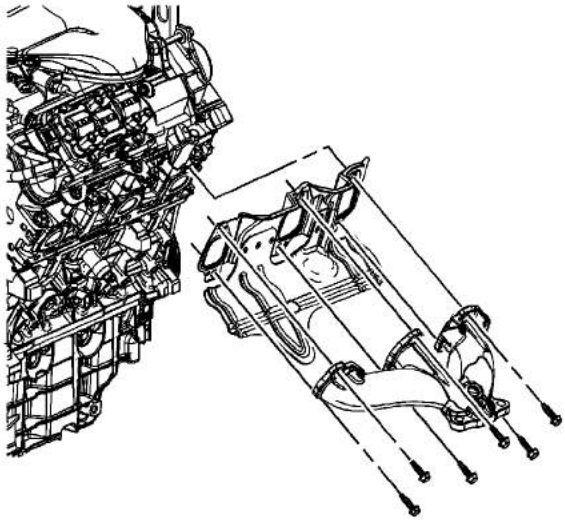

1. Install the exhaust manifold gasket.
2. Install the exhaust manifold.

   Caution: Refer to Fastener Caution in the Preface section.

3. Install the exhaust manifold bolts and tighten to **20 N·m (15 lb ft)**.

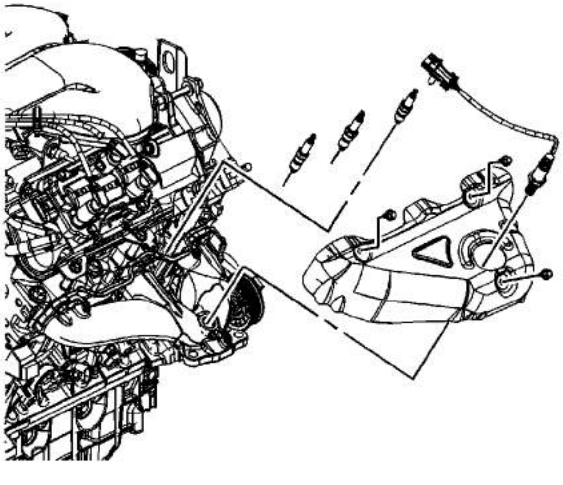

4. Install the exhaust manifold heat shield.

cardiagn.com

7. Install the spark plug wires.
8. Install the heated oxygen sensor and tighen to **42 N·m (31 lb ft)**.

cardiagn.com

Oil Filter Adapter Installation

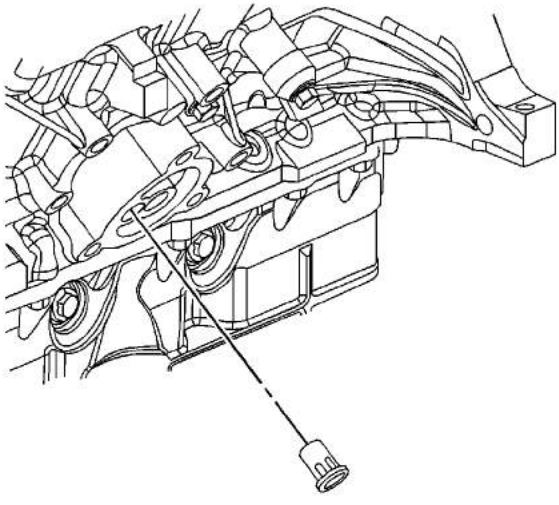

1. Install the NEW oil filter bypass valve. Seat the valve fully below the bypass valve hole chamfer.

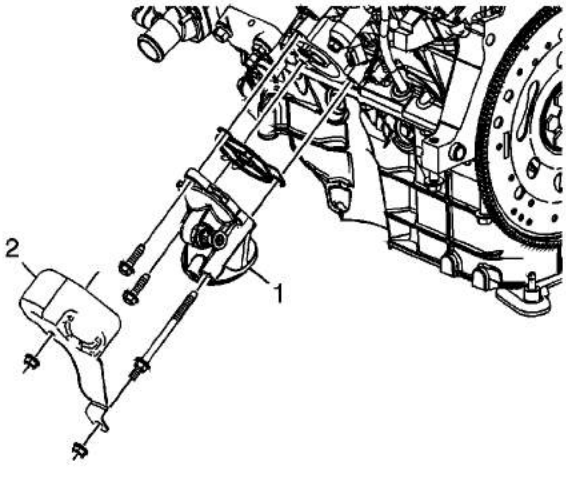

Caution: Maximum gasket performance is achieved when using new fasteners, which contain a thread-locking patch. If the fasteners are not replaced, a thread locking chemical must be applied to the fastener threads. Failure to replace the fasteners or apply a thread-locking chemical MAY reduce gasket sealing capability.

cardiagn.com

Caution: Refer to Fastener Caution in the Preface section.

4. Install the oil filter adapter bolts and tighten to **25 N·m (18 lb ft)**.
5. Install the oil filter adapter heat shield (2).
6. Install the oil filter adapter heat shield nuts and tighten to **25 N·m (18 lb ft)**.

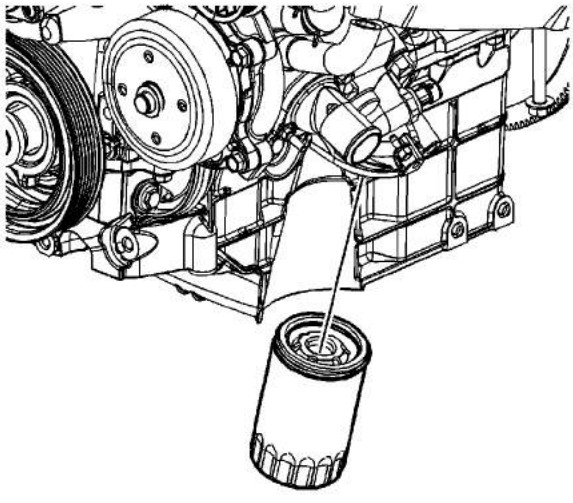

7. Install the oil filter and tighten to **30 N·m (22 lb ft)**.

cardiagn.com

Oil Level Indicator and Tube Installation

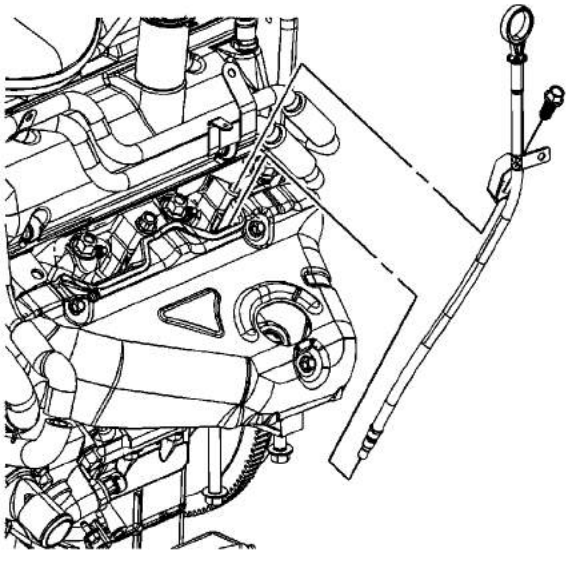

1. Install the oil level indicator tube and oil level indicator.

   Caution: Refer to Fastener Caution in the Preface section.

2. Install the oil level indicator tube bolt and tighten to **25 N·m (18 lb ft)**.

cardiagn.com

Engine Lift Rear Bracket Installation

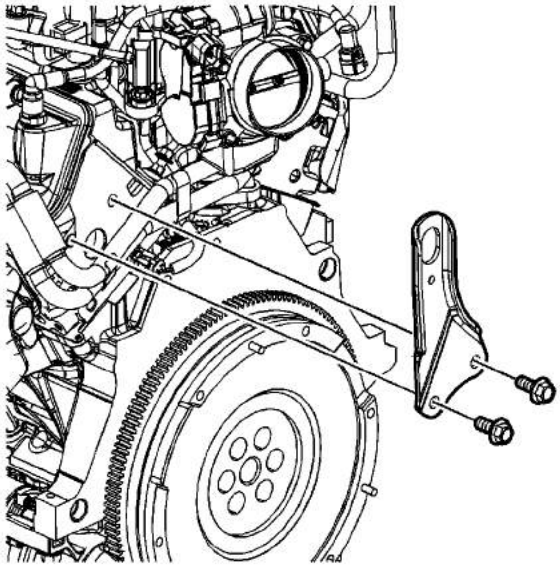

1. Install the rear engine lift bracket.

   Caution: Refer to Fastener Caution in the Preface section.

2. Install the rear engine lift bracket bolts and tighten to **50 N·m (37 lb ft)**.

cardiagn.com

Engine Coolant Crossover Pipe Installation

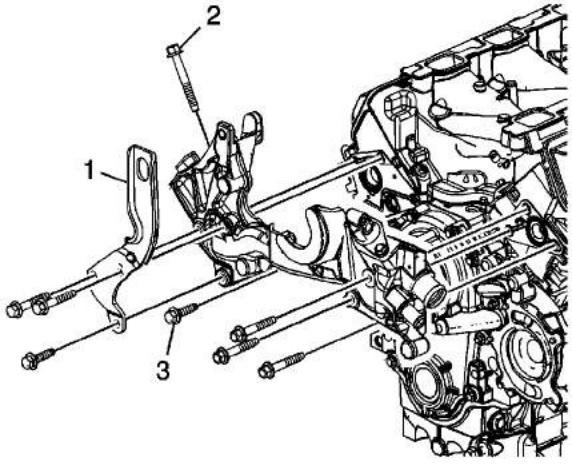

1. Install the coolant crossover pipe assembly onto the engine.

   Caution: Refer to Fastener Caution in the Preface section.

2. Install the engine lift bracket (1) and the front coolant crossover pipe bolts (3). Tighten the bolts to **50 N·m (37 lb ft)**.
3. Install the side coolant crossover pipe bolt (2) and tighten to **10 N·m (89 lb in)**.

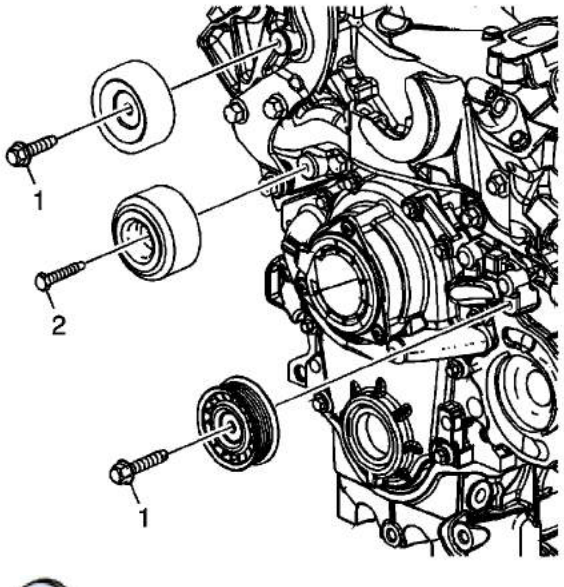

cardiagn.com

- Tighten the bolt (2) to **30 N·m (22 lb ft)**.

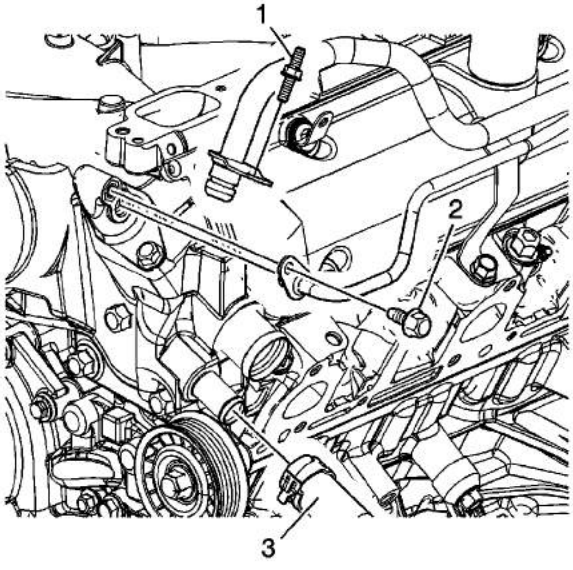

5. Install the coolant vent pipe and bolt (2) and tighten to **10 N·m (89 lb in)**.
6. Install the heater inlet/outlet pipe and bolt (1) and tighten to **10 N·m (89 lb in)**.
7. Install the thermal bypass hose and securely fasten the clamp (3).

cardiagn.com

Drive Belt Tensioner Installation

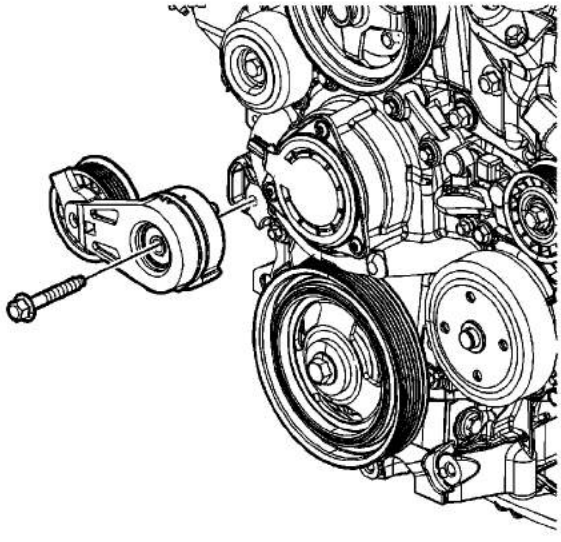

1. Install the drive belt tensioner.

   Caution: Refer to Fastener Caution in the Preface section.

2. Install the drive belt tensioner bolt and tighten to **50 N·m (37 lb ft)**.

cardiagn.com

Engine Flywheel Installation (Manual Transmission)

Special Tools

J 45059 Angle Meter

For equivalent regional tools, refer to Special Tools

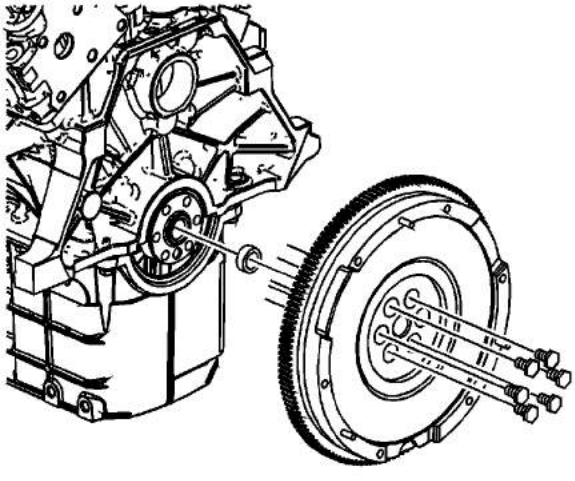

1. Install the clutch pilot bearing.
2. Install the flywheel/pressure plate.

   Caution: Refer to Fastener Caution in the Preface section.

3. Install the flywheel/pressure plate bolts and tighten to **50 N·m (37 lb ft) plus an additional 70 degrees** using the *J 45059* meter .

cardiagn.com

Engine Flywheel Installation (Automatic Transmission)

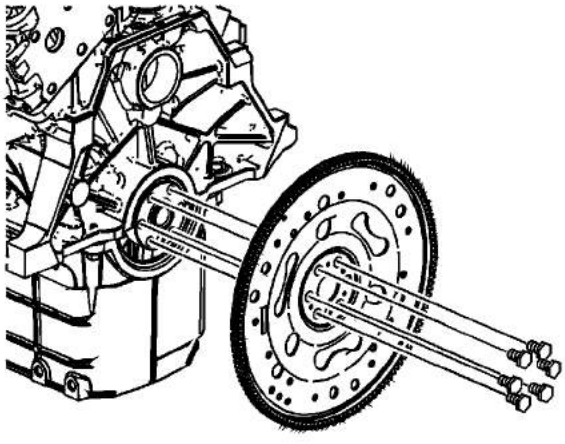

1. Install the flywheel.

   Caution: Refer to Fastener Caution in the Preface section.

2. Install the flywheel bolts and tighten to **70 N·m (52 lb ft)**.

cardiagn.com

Crankshaft Balancer Installation

Special Tools

- *J 29113* Balancer and Crank Sprocket Puller
- *J 45059* Angle Meter

For equivalent regional tools, refer to Special Tools

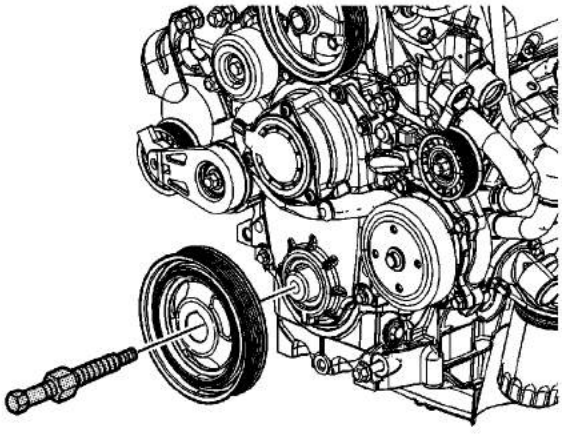

1. Place the crankshaft balancer into position over the key in the crankshaft.

   Caution: Do NOT use a power-assisted tool with the special tool in order to remove or install this component. You cannot properly control the alignment of this component using a power-assisted tool, and this can damage the component.

2. Install the *J 29113* puller onto the crankshaft.
3. Rotate the hex nut on the *J 29113* puller to install the crankshaft balancer onto the crankshaft.
4. Remove the *J 29113* puller from the crankshaft.

   Caution: Refer to Fastener Caution in the Preface section.

cardiagn.com

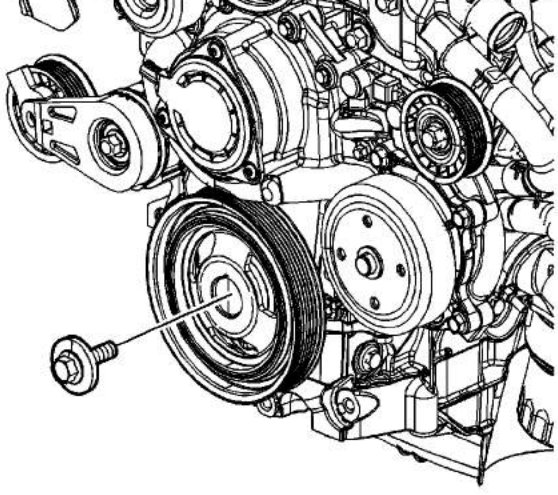

5. Install the used crankshaft balancer bolt and tighten to **125 N·m (92 lb ft)**.
6. Remove the used crankshaft balancer bolt.
7. Install the NEW crankshaft balancer bolt.
   7.1. Tighten the crankshaft balancer bolt a first pass to **125 N·m (92 lb ft)**.
   7.2. Tighten the crankshaft balancer bolt a final pass to **130 degrees** using the *J 45059* meter .

cardiagn.com

Engine Prelubing

Special Tools

- *J-21867-6* Oil Pressure Adapter Fitting
- *J 45299* Engine Preluber

For equivalent regional tools, refer to Special Tools

Caution: Refer to Fastener Caution in the Preface section.

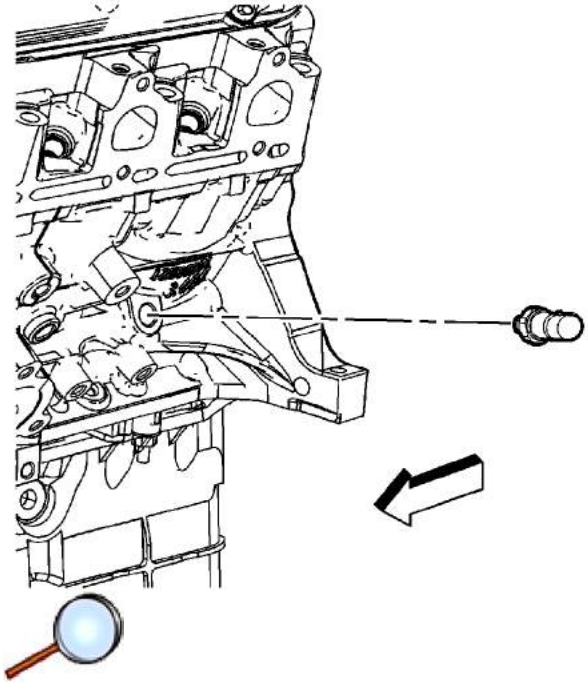

Note: A constant/continuous flow of clean engine oil is required in order to properly prime the engine. Be sure to use an approved engine oil as specified in the owners manual.

1. Remove the engine oil filter, fill with clean engine oil, and reinstall. Tighten the oil filter to **30 N·m (22 lb ft)**.
2. Locate the engine oil pressure indicator switch on the left side of the engine and remove.
3. Install the 1/4 inch adapter P/N 509373 and the *J-21867-6* fitting .

cardiagn.com

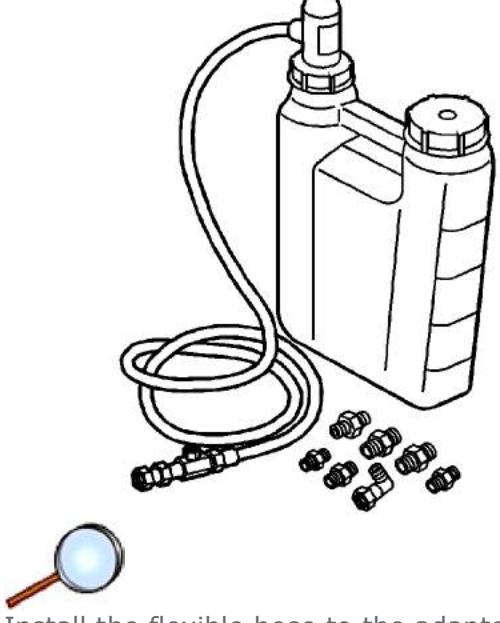

4. Install the flexible hose to the adapter and open the valve.
5. Pump the handle on *J-21867-6* fitting to flow a minimum of 1-2 quarts of engine oil. Observe the flow of engine oil through the flexible hose and into the engine assembly.
6. Close the valve and remove the flexible hose and adapter from the engine.
7. Install the engine oil pressure indictor switch and tighten to **16 N·m (12 lb ft)**.
8. Top off the engine oil to the proper level.

cardiagn.com