Workshop Manual

Audi A4 2008 ➤
Audi A5 Cabriolet 2009 ➤
Audi A5 Coupé 2008 ➤

Automatic gearbox 0B6, four-wheel drive

Edition 01.2014

Protected by copyright. Copying for private or commercial purposes, in part or in whole, is not permitted unless authorised by AUDI AG. AUDI AG does not guarantee or accept any liability with respect to the correctness of information in this document. Copyright by AUDI AG.

List of Workshop Manual Repair Groups

Protected by copyright. Copying for private or commercial purposes, in part or in whole, is not permitted unless authorised by AUDI AG. AUDI AG does not guarantee or accept any liability with respect to the correctness of information in this document. Copyright by AUDI AG.

Repair Group

00 - Technical data
32 - Torque converter
37 - Controls, housing
38 - Gears, control
39 - Final drive - front differential

Technical information should always be available to the foremen and mechanics, because their careful and constant adherence to the instructions is essential to ensure vehicle road-worthiness and safety. In addition, the normal basic safety precautions for working on motor vehicles must, as a matter of course, be observed.

All rights reserved.
No reproduction without prior agreement from publisher.

Copyright © 2015 Audi AG, Ingolstadt

A005A503520

Contents

00 - Technical data 1

1 Identification 1
1.1 Gearbox identification 1

2 Safety precautions 2
2.1 Safety precautions when working on vehicle 2
2.2 Safety precautions when using testers and measuring instruments during a road test 3
2.3 Notes on tow-starting and towing 3

3 Repair instructions 4
3.1 Rules for cleanliness 4
3.2 General notes 4
3.3 General repair instructions 5
3.4 Contact corrosion 7

4 Technical data 8
4.1 Allocation of gearbox to engine 8
4.2 Capacities 10

5 Transmission layout 11
5.1 Transmission layout - four-wheel drive 11

32 - Torque converter 12

1 Torque converter 12
1.1 Exploded view - torque converter 12
1.2 Identification of torque converter 13
1.3 Removing and installing torque converter 13
1.4 Draining torque converter 15
1.5 Checking torque converter 15
1.6 Removing and installing oil seal for torque converter 15

37 - Controls, housing 17

1 Selector mechanism 17
1.1 Exploded view - selector mechanism 17
1.2 Exploded view - selector lever handle 19
1.3 Exploded view - selector lever cable 20
1.4 Checking selector mechanism 20
1.5 Manual release from position P 22
1.6 Removing and installing selector mechanism 23
1.7 Dismantling and assembling selector mechanism 27
1.8 Removing and installing selector lever handle 30
1.9 Detaching selector lever boot from selector lever handle 33
1.10 Removing and installing selector lever position display Y26 34
1.11 Removing and installing selector lever cable 34
1.12 Checking and adjusting selector lever cable 39
1.13 Adjusting selector lever cable to basic setting 40
1.14 Renewing selector shaft oil seal 44

2 Removing and installing gearbox 47
2.1 Removing gearbox 47
2.2 Installing gearbox 86
2.3 Tightening torques for gearbox 110

3 Assembly mountings 115
3.1 Exploded view - assembly mountings 115
3.2 Removing and installing tunnel cross member 115
3.3 Removing and installing gearbox support with gearbox mounting 117
3.4 Removing and installing gearbox mounting 118

Protected by copyright. Copying for private or commercial purposes, in part or in whole, is not permitted unless authorised by AUDI AG. AUDI AG does not guarantee or accept any liability with respect to the correctness of information in this document. Copyright by AUDI AG.

4 Transporting gearbox . . . 119
5 Securing to engine and gearbox support . . . 121
6 ATF . . . 122
6.1 Checking ATF level . . . 122
6.2 Draining and filling ATF . . . 126
7 ATF circuit . . . 131
7.1 Exploded view - ATF circuit . . . 131
7.2 Cleaning ATF lines . . . 134

38 - Gears, control . . . 136
1 ATF system . . . 136
1.1 Exploded view - ATF system . . . 136
1.2 Removing and installing oil pan . . . 138
1.3 Removing and installing ATF strainer . . . 140
2 Mechatronic unit . . . 142
2.1 Removing and installing mechatronic unit . . . 142
2.2 Removing and installing wiring harness in gearbox . . . 146

39 - Final drive - front differential . . . 148
1 Final drive . . . 148
1.1 Exploded view - final drive . . . 148
1.2 Renewing O-ring on cover for front final drive . . . 149
2 Gear oil . . . 151
2.1 Checking gear oil level . . . 151
2.2 Draining and filling gear oil . . . 153
3 Oil seals . . . 157
3.1 Renewing oil seal (left-side) . . . 157
3.2 Renewing oil seal (right-side) . . . 160
4 Differential . . . 162
4.1 Removing and installing flange shaft (left-side) . . . 162
4.2 Removing and installing flange shaft (right-side) . . . 163
5 Centre differential . . . 166
5.1 Exploded view - centre differential . . . 166
5.2 Removing and installing centre differential . . . 168
5.3 Renewing oil seal for flange shaft (rear) . . . 172
5.4 Renewing ball bearing for flange shaft (rear) . . . 174
5.5 Renewing ball bearing for centre differential . . . 176
6 Gearbox control system . . . 179
6.1 Overview of fitting locations - gearbox control system . . . 179

Protected by copyright. Copying for private or commercial purposes, in part or in whole, is not permitted unless authorised by AUDI AG. AUDI AG does not guarantee or accept any liability with respect to the correctness of information in this document. Copyright by AUDI AG.

00 – Technical data

1 Identification

(ARL003673; Edition 01.2014)

⇒ “1.1 Gearbox identification”, page 1

1.1 Gearbox identification

Location of code letters on gearbox

- The gearbox code letters are located on the identification plate on the underside of the gearbox. Depending on the version, the identification plate is fitted at position -arrow 1- or -arrow 2-.
- Another identification plate (identical to the first one) can be found on the left side of the gearbox. This is not accessible when the gearbox is in its installed position.

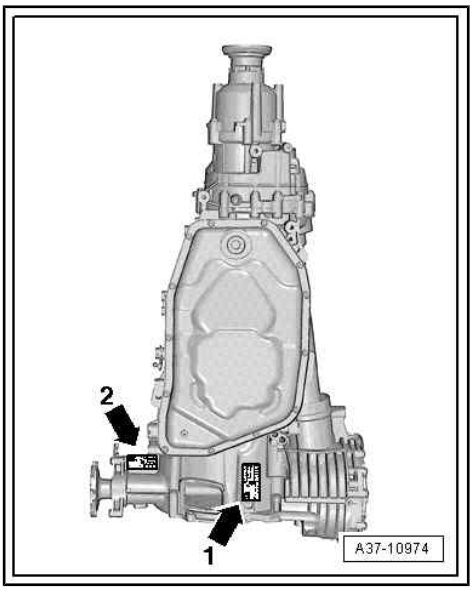

Code letters and gearbox serial number

Example:

Protected by copyright. Copying for private or commercial purposes, in part or in whole, is not permitted unless authorised by AUDI AG. AUDI AG does not guarantee or accept any liability with respect to the correctness of information in this document. Copyright by AUDI AG.

- -1- Serial number of gearbox
- -2- Model number
- -3- Manufacturer's gearbox identification: 6HP-28
- -4- Gearbox code, in this example: KRL

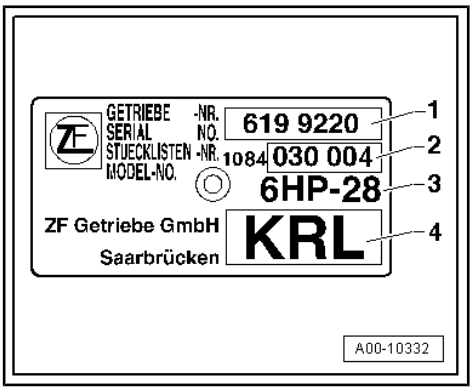

Note

The code letters for the gearbox are also given on the vehicle data stickers.

2 Safety precautions

⇒ “2.1 Safety precautions when working on vehicle”, page 2

⇒ “2.2 Safety precautions when using testers and measuring instruments during a road test”, page 3

⇒ “2.3 Notes on tow-starting and towing”, page 3

2.1 Safety precautions when working on vehicle

Observe the following precautions to avoid possible injury and/or damage to the vehicle:

Protected by copyright. Copying for private or commercial purposes, in part or in whole, is not permitted unless authorised by AUDI AG. AUDI AG does not guarantee or accept any liability with respect to the correctness of information in this document. Copyright by AUDI AG.

WARNING

Accidents and injury can be caused if a gear is inadvertently engaged while the engine is running.

- *Prior to performing work with engine running, move selector lever to position “P” and pull up parking brake button to apply the electromechanical parking brake.*

Observe the following precautions to avoid possible injury and/or irreparable damage to electrical and electronic components:

- Switch off ignition before disconnecting and connecting test equipment.

Caution

When disconnecting the battery there is a risk of serious damage to electronic components:

- *Observe the correct procedure for disconnecting the battery.*
- *Always switch off the ignition before disconnecting the battery.*

– Disconnect battery ⇒ Electrical system; Rep. gr. 27 ; Battery; Disconnecting and connecting battery .

2.2 Safety precautions when using testers and measuring instruments during a road test

Observe the following precautions if test equipment has to be used when road-testing the vehicle.

WARNING

Accidents can be caused if the driver is distracted by test equipment or if test equipment is not secured.

Injuries can be caused if the passenger's airbag is triggered in a collision.

- *The use of test equipment while driving causes distraction.*
- *There is an increased risk of injury if test equipment is not secured.*

◆ *Always secure test equipment to the rear seat with a strap and have it operated from there by a second person.*

2.3 Notes on tow-starting and towing

Caution

Risk of irreparable damage to gearbox.

◆ *When the vehicle is towed, the selector lever must be set to position "N" and the vehicle must not be towed for a distance of more than 50 km or at a speed in excess of 50 km/h.*

Note

It is not possible to start the engine by means of tow-starting, for instance in the case of insufficient battery charge or if the starter is not working.

Protected by copyright. Copying for private or commercial purposes, in part or in whole, is not permitted unless authorised by AUDI AG. AUDI AG does not guarantee or accept any liability with respect to the correctness of information in this document. Copyright by AUDI AG.

3 Repair instructions

⇒ “3.1 Rules for cleanliness”, page 4

⇒ “3.2 General notes”, page 4

⇒ “3.3 General repair instructions”, page 5

⇒ “3.4 Contact corrosion”, page 7

3.1 Rules for cleanliness

- Thoroughly clean all joints and connections and the surrounding areas before dismantling.
- Use cleaning fluid - D 009 401 04- to clean the gearbox and its components.
- Use lint-free cloths for cleaning; Audi recommends the “WYPALL X70 / WORKHORSE” cloth from Kimberly-Clark Professional.
- Seal off open lines and connections immediately with clean plugs or sealing caps from engine bung set - VAS 6122- immediately.
- Place removed parts on a clean surface and cover them over. Use sheeting or lint-free cloths.
- Carefully cover or seal open components if repairs cannot be carried out immediately.
- Only install clean components: do not remove replacement parts from packaging until just before installation.
- Protect unplugged electrical connectors against dirt and moisture and make sure connections are dry when attaching.

3.2 General notes

Gearbox

- The 6-speed automatic gearbox 0B6, four-wheel drive, has six hydraulically actuated forward gears. When the torque converter lock-up clutch closes, these forward gears act as mechanically driven gears since the slippage in the torque converter is prevented.
- A special feature of the 0B6 gearbox is the location of the front final drive (front axle differential with flange shafts) in front of the torque converter. This allows for a more even weight distribution between the front and rear axles on the vehicle.

Torque converter

The torque converter is equipped with a lock-up clutch allowing controlled slip. Due to the new construction in this gearbox the torque converter is located behind the front final drive.

Mechatronic unit

Protected by copyright. Copying for private or commercial purposes, in part or in whole, is not permitted unless authorised by AUDI AG. AUDI AG does not guarantee or accept any liability with respect to the correctness of information in this document. Copyright by AUDI AG.

The mechatronic unit incorporates the following components as a complete synchronised unit:

- Hydraulic control system, automatic gearbox control unit - J217-
- Multifunction switch - F125-
- Sensors and actuators

The mechatronic unit is installed in the gearbox within the oil pan.

Automatic gearbox control unit - J217-

The control unit is part of the mechatronic unit in the gearbox.

The gear change points are calculated automatically (depending on the driving situation and the resistance to motion).

Advantages:

- Gear change points controlled for enhanced fuel economy
- Maximum engine output is always available
- Gear-change points are adapted individually in all driving situations
- Gear-change points are infinitely variable

Protected by copyright. Copying for private or commercial purposes, in part or in whole, is not permitted unless authorised by AUDI AG. AUDI AG does not guarantee or accept any liability with respect to the correctness of information in this document. Copyright by AUDI AG.

Self-diagnosis

Before performing repairs to the automatic gearbox, determine the cause of the fault as precisely as possible using “Guided Fault Finding”.

To perform “Guided Fault Finding”, use ⇒ Vehicle diagnostic tester.

Variation of gear-change points for gradients

An additional gear change map automatically selects gear changes for gradients. The gear changes are selected according to accelerator pedal position and road speed.

- Gear change map for extreme uphill gradients is matched to engine output.
- Gear change map for extreme downhill gradients is matched to the braking effect of the engine.
- The driver can achieve an increased engine braking effect by directly selecting a specific gear via the tiptronic function, e.g. when towing a trailer on downhill gradients.

3.3 General repair instructions

Proper tools and the maximum possible care and cleanliness are essential for satisfactory repairs to the transmission units. The usual basic safety precautions also naturally apply when carrying out repair work.

To avoid repetition, a number of generally applicable instructions for the various repair procedures are summarised here. They apply to the work described in this Manual.

Guided Fault Finding, Vehicle self-diagnosis and Test Instruments

- Before servicing the gearbox, the exact cause of the failure must be determined using the functions “Guided Fault Finding”, “Vehicle Self-diagnosis” and “Test Instruments” ⇒ Vehicle diagnostic tester.

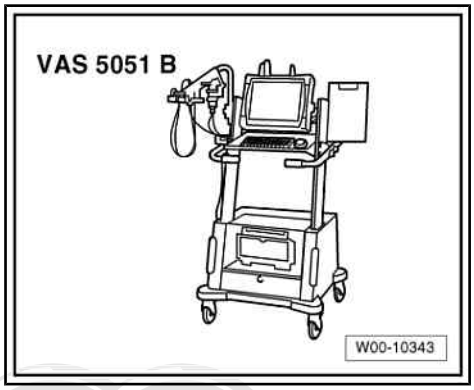

Environmental and waste disposal regulations for oil

- ATF, gear oil and any other type of oil must be handled with care.
- Dispose of drained oil properly.
- Always adhere to statutory environmental and waste disposal regulations.
- Observe the information shown on the packaging of the oil.

Special tools

For a complete list of special tools used in this Workshop Manual ⇒ "Special tools, Workshop equipment"

Gearbox

- Observe rules for cleanliness when working on gearbox ⇒ page 4 .
- The engine must not be run and the vehicle must not be towed if the centre differential housing has been removed or if there is no ATF in the gearbox.
- After installing, the following fluid levels must be checked and topped up if necessary: ATF in gearbox ⇒ page 122 and gear oil in gearbox ⇒ page 151 . Capacities and specifications ⇒ page 10

Protected by copyright. Copying for private or commercial purposes, in part or in whole, is not permitted unless authorised by AUDI AG. AUDI AG does not guarantee or accept any liability with respect to the correctness of information in this document. Copyright by AUDI AG.

O-rings, oil seals and gaskets

- Always renew O-rings, oil seals and gaskets.
- After removing gaskets and seals, always inspect the contact surface on the housing or shaft for burrs resulting from removal or for other signs of damage.
- Thoroughly clean housing joint surfaces before assembling.
- Lightly lubricate the outer circumference and sealing lip of oil seals with ATF before installing.
- Lightly lubricate O-rings with ATF before installation to prevent them from being crushed during assembly.
- Use only ATF for parts running in ATF. Other lubricants will cause malfunction of the gearbox hydraulics.
- The open side of the oil seal should face the side containing the fluid.
- When installing a new oil seal, position the seal such that the sealing lip does not contact the shaft in the same place as the old seal (make use of installation depth tolerances).
- After installing, the following fluid levels must be checked and topped up if necessary: ATF in gearbox ⇒ page 122 and gear oil in gearbox ⇒ page 151 . Capacities and specifications ⇒ page 10

Nuts, bolts

- Loosen bolts in reverse sequence to the specified tightening sequence.

- Bolts and nuts used to secure covers and housings must be tightened in steps according to the specified tightening sequence and method.
- Nuts and bolts which secure covers and housings should be loosened and tightened in diagonal sequence and in stages if no tightening sequence is specified.
- Renew self-locking nuts and bolts.
- Use a wire brush to clean the threads of bolts which are secured with locking fluid. Then apply locking fluid - AMV 185 101 A1- to bolt threads before installing.
- Threaded holes which take self-locking bolts or bolts coated with locking fluid must be cleaned (using a tap or similar). Otherwise there is a danger of the bolts shearing off the next time they are removed.
- The tightening torques stated apply to non-oiled nuts and bolts.

Locking elements

- Do not over-stretch circlips.
- Renew circlips which have been damaged or over-tensioned.
- Circlips must be properly seated in the base of the groove.

Bearings

- Install needle bearings so the lettering (side with thicker metal) faces towards the installing tool.
- Lubricate bearings with gear oil or ATF, depending on fitting location.
- Do not interchange inner or outer races of bearings of the same size.
- Always renew the tapered roller bearings on one shaft together and use new bearings from a single manufacturer.

Shims

- Use a micrometer to measure the shims at several points. Tolerance variations make it possible to obtain the exact shim thickness required.
- Check for burrs and damage. Install only shims which are in perfect condition.

3.4 Contact corrosion

Contact corrosion can occur if unsuitable fasteners are used on the vehicle (bolts, nuts, washers etc.).

For this reason, only fasteners with a special surface coating are fitted.

Rubber or plastic parts and adhesives also consist of non-conductive materials.

If you are not sure whether used parts can be re-installed, always fit new parts ⇒ Electronic parts catalogue ...

Protected by copyright. Copying for private or commercial purposes, in part or in whole, is not permitted unless authorised by AUDI AG. AUDI AG does not guarantee or accept any liability with respect to the correctness of information in this document. Copyright by AUDI AG.

Please note:

- We recommend only genuine spare parts: these have been fully tested.
- We recommend the use of accessories approved by Audi.
- Damage resulting from contact corrosion is not covered by the warranty.

4 Technical data

⇒ “4.1 Allocation of gearbox to engine”, page 8

⇒ “4.2 Capacities”, page 10

4.1 Allocation of gearbox to engine

Automatic gearbox		0B6 four-wheel drive		
Gearbox	Code letters	KWM	KWP	KWR
	Manufactured from to	11.2007 12.2007	04.2008 01.2009	05.2008 01.2009
Torque converter	Code letters	K113	K113	K114
Allocation	Model	Audi A5 Coupé 2008 ►	Audi A5 Coupé 2008 ► Audi A4 2008 ►	Audi A5 Coupé 2008 ►
	Engine	3.2 ltr. FSI - 195 kW	3.2 ltr. FSI - 195 kW	4.2 ltr. FSI - 254 kW
Primary drive		33 : 31 = 1.065	33 : 31 = 1.065	33 : 31 = 1.065
Spur gear drive to front axle		31 : 29 = 1.069	31 : 29 = 1.069	31 : 29 = 1.069
Front axle bevel gearing		34 : 11 = 3.091	34 : 11 = 3.091	34 : 11 = 3.091
Overall front drive ratio = Primary drive x spur gear drive x bevel gearing		3.517	3.517	3.517
Rear axle bevel gearing		43 : 13 = 3.308	43 : 13 = 3.308	43 : 13 = 3.308
Overall rear drive ratio = Rear axle bevel gearing x primary drive		3.521	3.521	3.521

Protected by copyright. Copying for private or commercial purposes, in part or in whole, is not permitted unless authorised by AUDI AG. AUDI AG does not guarantee or accept any liability with respect to the correctness of information in this document. Copyright by AUDI AG.

Automatic gearbox		0B6 four-wheel drive		
Gearbox	Code letters	KXS	KXT	LEH
	Manufactured from to	04.2008 01.2009	06.2008 01.2009	01.2008 06.2008
Torque converter	Code letters	N114	L114	K113
Allocation	Model	Audi A5 Coupé 2008 ► Audi A4 2008 ►	Audi A5 Coupé 2008 ►, USA/Canada Audi A4 2008 ►, USA/Canada	Audi A5 Coupé 2008 ► Audi A4 2008 ►
	Engine	3.0 ltr. TDI - 176 kW	2.0 ltr. TFSI - 155 kW	3.2 ltr. FSI - 195 kW
Primary drive		27 : 31 = 0.871	33 : 31 = 1.065	33 : 31 = 1.065
Spur gear drive to front axle		31 : 29 = 1.069	31 : 29 = 1.069	31 : 29 = 1.069
Front axle bevel gearing		34 : 11 = 3.091	34 : 11 = 3.091	34 : 11 = 3.091
Overall front drive ratio = Primary drive x spur gear drive x bevel gearing		2.878	3.517	3.517
Rear axle bevel gearing		43 : 13 = 3.308	43 : 13 = 3.308	43 : 13 = 3.308
Overall rear drive ratio = Rear axle bevel gearing x primary drive		2.881	3.521	3.521

Automatic gearbox		0B6 four-wheel drive		
Gearbox	Code letters	LEJ	LMH	LMJ
	Manufactured from to	02.2008 05.2008	01.2009	01.2009
Torque converter	Code letters	K113	K113	K114
Allocation	Model	Audi A5 Coupé 2008 ►	Audi A5 Coupé 2008 ► Audi A4 2008 ► Audi A5 Cabriolet 2009 ►	Audi A5 Coupé 2008 ►
	Engine	4.2 ltr. FSI - 254 kW	3.2 ltr. FSI - 195 kW	4.2 ltr. FSI - 254 kW
Primary drive		33 : 31 = 1.065	33 : 31 = 1.065	33 : 31 = 1.065
Spur gear drive to front axle		31 : 29 = 1.069	31 : 29 = 1.069	31 : 29 = 1.069
Front axle bevel gearing		34 : 11 = 3.091	34 : 11 = 3.091	34 : 11 = 3.091
Overall front drive ratio = Primary drive x spur gear drive x bevel gearing		3.517	3.517	3.517
Rear axle bevel gearing		43 : 13 = 3.308	43 : 13 = 3.308	43 : 13 = 3.308
Overall rear drive ratio = Rear axle bevel gearing x primary drive		3.521	3.521	3.521

Automatic gearbox		0B6 four-wheel drive		
Gearbox	Code letters	LMK	LML	
	Manufactured from to	01.2009	01.2009 for Audi A5 Cabriolet 2009 ► from 05.2009 onwards	
Torque converter	Code letters	N114	L114	
Allocation	Model	Audi A5 Coupé 2008 ► Audi A4 2008 ►	Audi A5 Coupé 2008 ►, USA/Canada Audi A4 2008 ►, USA/Canada Audi A5 Cabriolet 2009 ►, USA/Canada	
	Engine	3.0 ltr. TDI - 176 kW	2.0 ltr. TFSI - 155 kW	
Primary drive		27 : 31 = 0.871	33 : 31 = 1.065	
Spur gear drive to front axle		31 : 29 = 1.069	31 : 29 = 1.069	
Front axle bevel gearing		34 : 11 = 3.091	34 : 11 = 3.091	
Overall front drive ratio = Primary drive x spur gear drive x bevel gearing		2.878	3.517	
Rear axle bevel gearing		43 : 13 = 3.308	43 : 13 = 3.308	
Overall rear drive ratio = Rear axle bevel gearing x primary drive		2.881	3.521	

Protected by copyright. Copying for private or commercial purposes, in part or in whole, is not permitted unless authorised by AUDI AG. AUDI AG does not guarantee or accept any liability with respect to the correctness of information in this document. Copyright by AUDI AG.

4.2 Capacities

ATF section in gearbox

Capacities	Automatic gearbox 0B6
Initial filling by manufacturer	approx. 10.4 ltr.
Fluid change	◆ No change required ◆ Life filling; change only after repair, e.g. if ATF oil pan has been removed
Lubricant	For ATF specifications for automatic gearbox 0B6 refer to ⇒ Electronic parts catalogue

Caution

Risk of malfunction or gearbox failure.

- *Use only the ATF available as a replacement part for automatic gearbox 0B6 ⇒ Electronic parts catalogue .*

⇒ “6 ATF”, page 122

Front final drive

Capacities	Automatic gearbox 0B6
Initial filling	1.0 ltr.
Oil change	◆ No change required ◆ Lifetime filling; change only after repairs, e.g. if cover for front final drive has been removed
Lubricant	For gear oil specifications for automatic gearbox 0B6 refer to ⇒ Electronic parts catalogue

⇒ “2 Gear oil”, page 151

Transfer box

This document is copyright. Copying for private or commercial purposes, in part or in whole, is not permitted unless authorised by AUDI AG. AUDI AG does not guarantee or accept any liability with respect to the correctness of information in this document. Copyright by AUDI AG.

Capacities	Automatic gearbox 0B6
Initial filling	1.0 ltr.
Oil change	◆ No change required ◆ Lifetime filling; change only after repairs, e.g. if centre differential housing has been removed
Lubricant	For gear oil specifications for automatic gearbox 0B6 refer to ⇒ Electronic parts catalogue

⇒ “2 Gear oil”, page 151

5 Transmission layout

⇒ “5.1 Transmission layout - four-wheel drive”, page 11

5.1 Transmission layout - four-wheel drive

1 - Automatic gearbox 0B6, four-wheel drive

2 - Propshaft

3 - Rear final drive

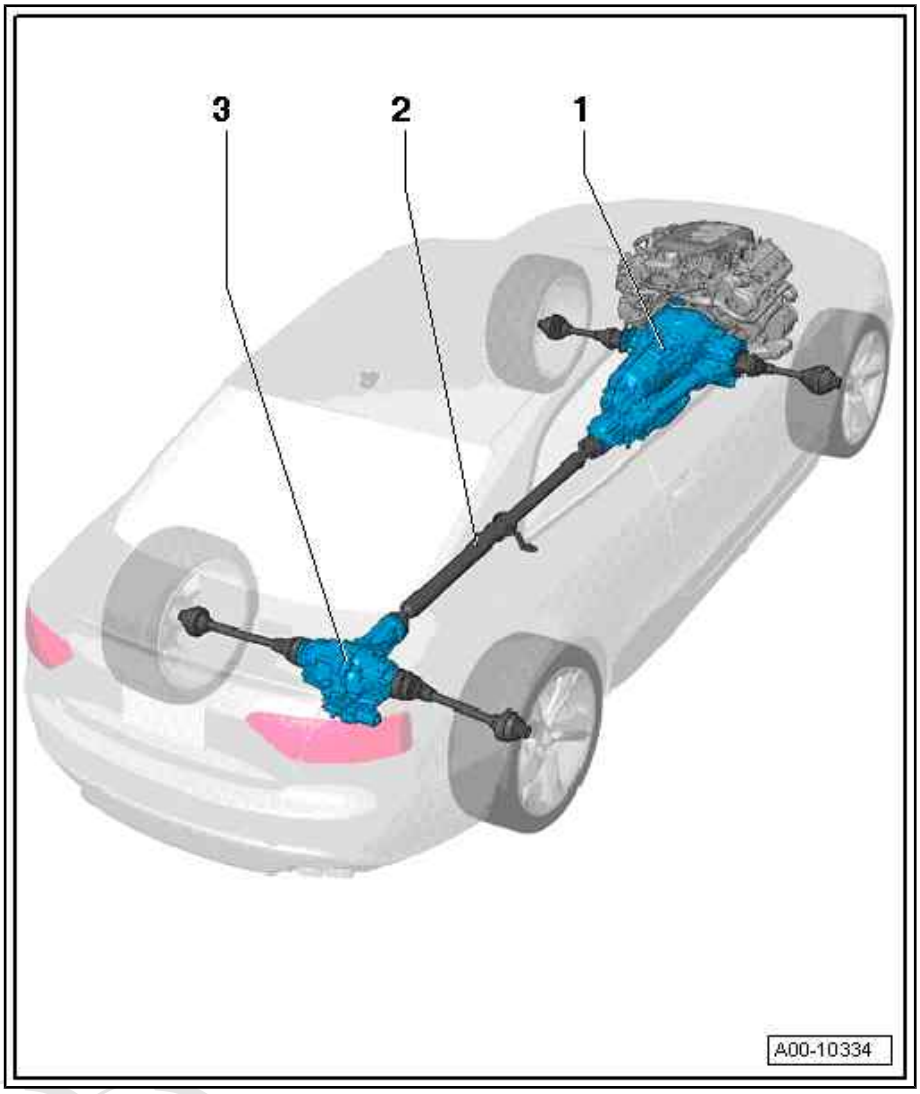

Protected by copyright. Copying for private or commercial purposes, in part or in whole, is not permitted unless authorised by AUDI AG. AUDI AG does not guarantee or accept any liability with respect to the correctness of information in this document. Copyright by AUDI AG.

32 – Torque converter

1 Torque converter

⇒ “1.1 Exploded view - torque converter”, page 12

⇒ “1.2 Identification of torque converter”, page 13

⇒ “1.3 Removing and installing torque converter”, page 13

⇒ “1.4 Draining torque converter”, page 15

⇒ “1.5 Checking torque converter”, page 15

⇒ “1.6 Removing and installing oil seal for torque converter”, page 15

1.1 Exploded view - torque converter

1 - Torque converter

- ❑ Removing and installing ⇒ page 13

2 - Gearbox housing

3 - Oil seal

- ❑ Oil seal for torque converter

Protected by copyrig
permitted unless aut
with respect to the

⇒ “1.6 Removing and installing oil seal for torque converter”, page 15

4 - Bolt

- ❑ Renew
- ❑ 4-cyl. engines: 3x
- ❑ 6-cyl. engines: 6x
- ❑ Tightening torque and sequence ⇒ page 47 , “Installing gearbox” for relevant engine

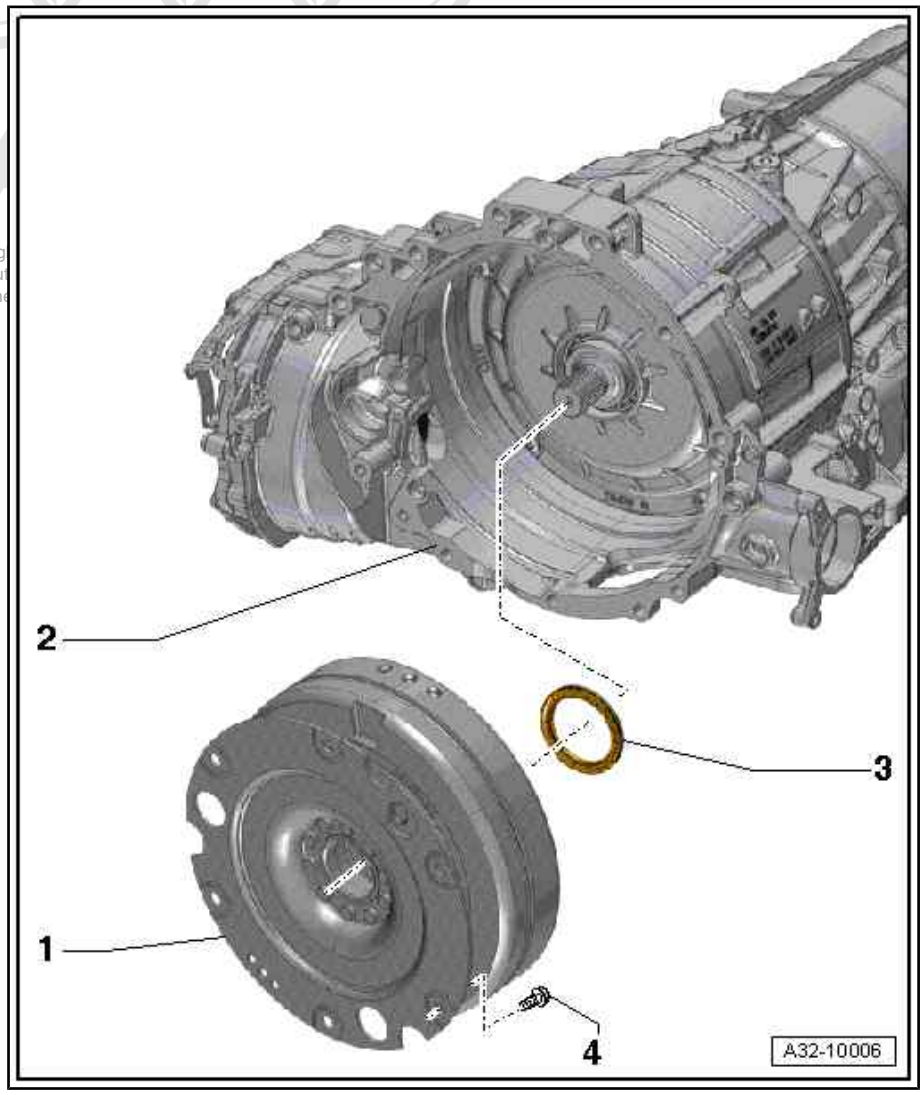

1.2 Identification of torque converter

- There are various types of torque converter. They are marked with code letters -arrow-.
- Torque converter/gearbox allocation ⇒ page 8 .

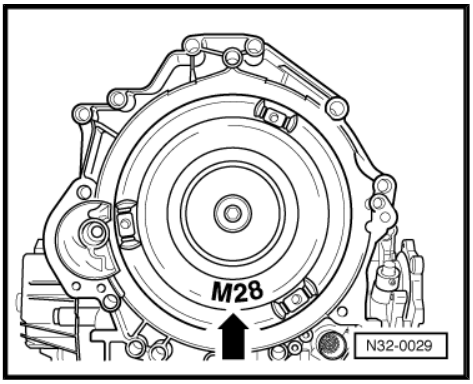

1.3 Removing and installing torque converter

Special tools and workshop equipment required

- Extractor - T40176-

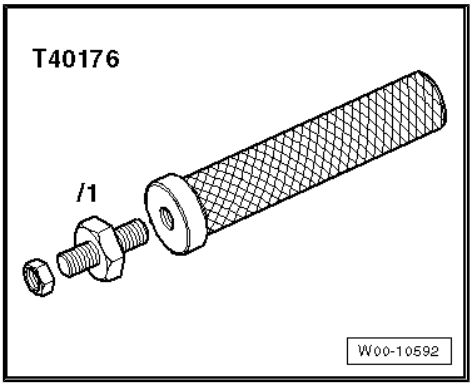

- Grease for clutch plate splines - G 000 100-

Removing

– Remove flange shaft (left-side) ⇒ page 162 .

– Attach extractor - T40176- to torque converter -A- using nut -B-.

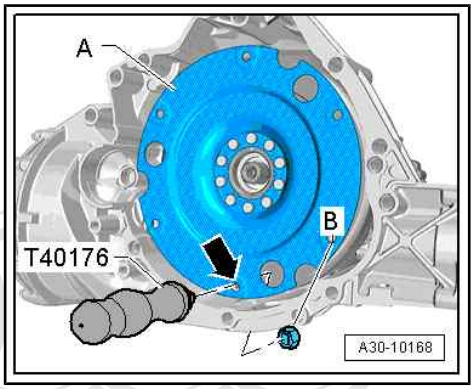

– Turn extractor - T40176- upwards.

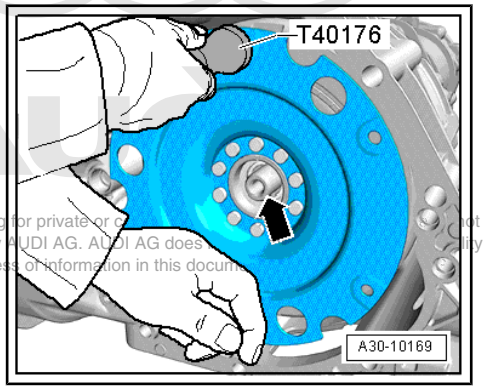

Note

- *Keep hold of the bottom of the torque converter, as shown in the illustration, to prevent it from tilting over.*
- *-Arrow- can be disregarded.*

Protected by copyright. Copying for private or c[illegible] not permitted unless authorised by AUDI AG. AUDI AG does [illegible] liability with respect to the correctness of information in this docum[illegible]

– Pull torque converter off input shaft -arrow- keeping torque converter straight.

– Put torque converter down carefully, e.g. on work bench.

Installing

Installation is carried out in reverse sequence; note the following:

– Thoroughly clean area of torque converter bellhousing leading to differential -arrow A-, and oil seal -arrow B-.

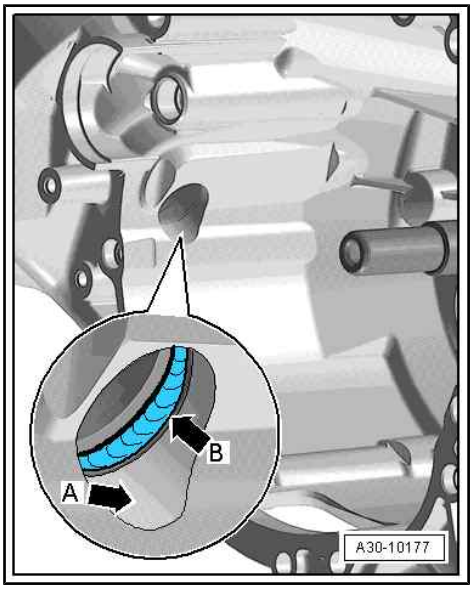

Note

If oil seal between differential and gearbox housing -arrow B- is damaged, it must be renewed ⇒ page 148 .

– Pack space between sealing lip and dust lip half-full with sealing grease - G 052 128 A1- .

– Clean splines on input shaft -2- and splines on torque converter. Remove corrosion and apply only a very thin coating of grease for clutch plate splines - G 000 100- to the splines. It is important to remove excess grease.

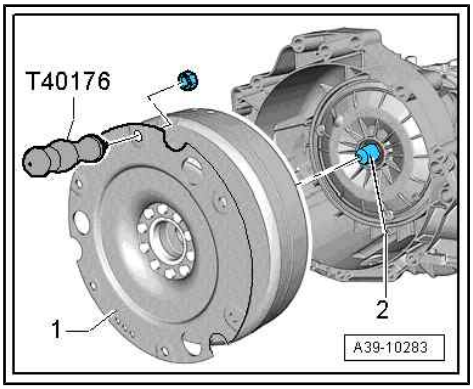

– Use extractor - T40176- to carefully slide torque converter onto input shaft -arrow-, taking care to keep torque converter straight.

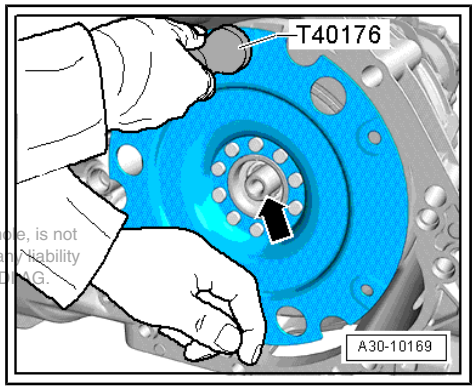

Protected by copyright. Copying for private or commercial purposes, in part or in whole, is not permitted unless authorised by AUDI AG. AUDI AG does not guarantee or accept any liability with respect to the correctness of information in this document. Copyright by AUDI AG.

– Detach extractor - T40176- from torque converter -A-.

– Remove nut -B-.

– Install flange shaft (left-side) ⇒ page 162 .

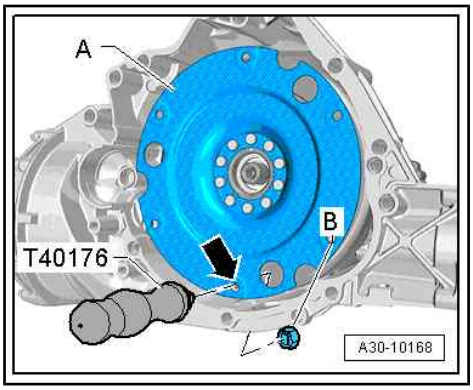

1.4 Draining torque converter

Special tools and workshop equipment required

- Used oil collection and extraction unit - V.A.G 1782-

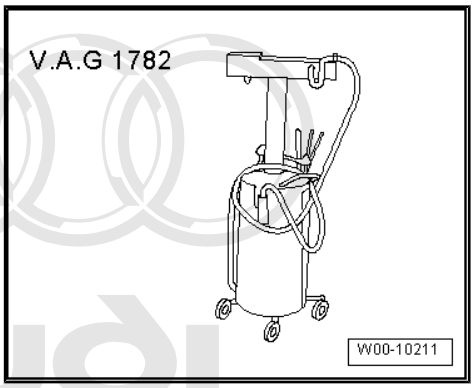

Procedure

Protected by copyright. Copying for private or commercial purposes, in part or in whole, is not permitted unless authorised by AUDI AG. AUDI AG does not guarantee or accept any liability with respect to the correctness of information in this document. Copyright by AUDI AG.

Drain the torque converter as follows if the ATF is very dirty due to component wear, or when performing a major gearbox overhaul:

– Extract ATF from torque converter with used oil collection and extraction unit - V.A.G 1782- .

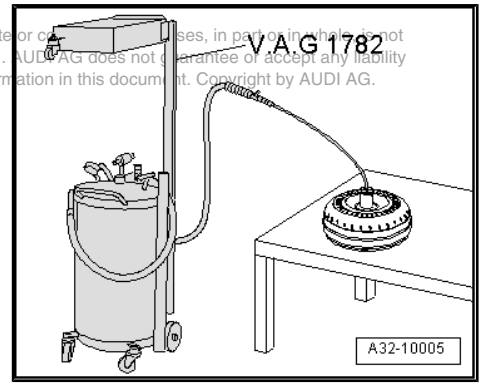

1.5 Checking torque converter

– Check hub -arrow- of torque converter for scoring.

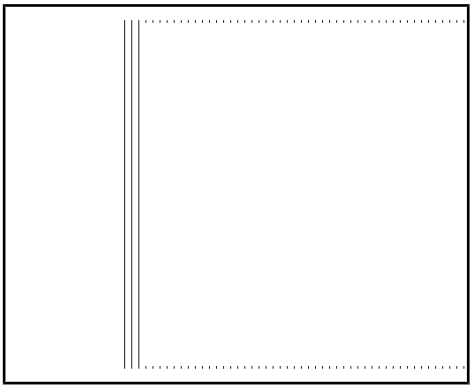

Note

The torque converter must be renewed as a complete unit if it is damaged or defective.

1.6 Removing and installing oil seal for torque converter

Special tools and workshop equipment required

♦ Oil seal extractor lever - VW 681- or extractor tool - T20143-

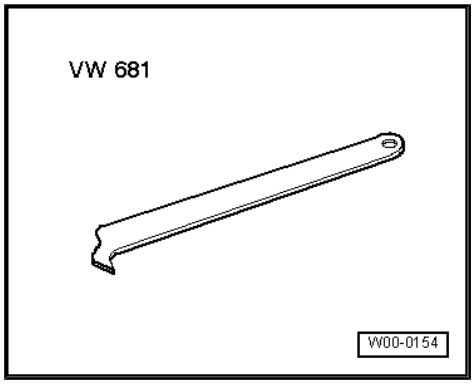

♦ Thrust piece - T10137-

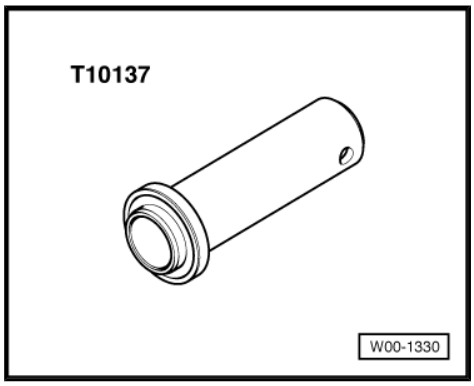

Procedure

– Remove torque converter ⇒ page 13 .

– Pry out oil seal using oil seal extractor lever - VW 681- .

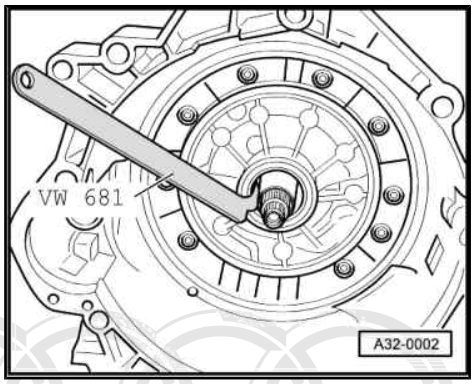

Note

The illustration shows a different gearbox version.

– Lubricate outer circumference and sealing lips of oil seal with ATF.

• Installation position: open side of oil seal points towards gearbox

– Drive in torque converter oil seal with thrust piece - T10137- until thrust piece reaches stop.

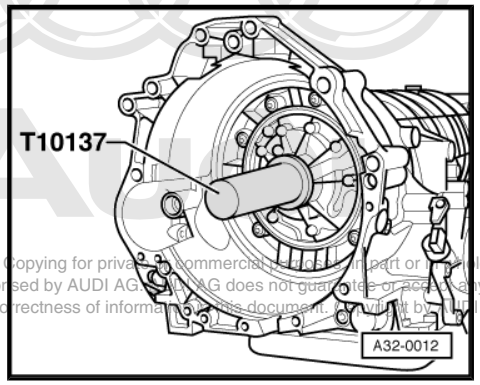

Protected by copyright. Copying for private or commercial purposes, in part or in whole, is not permitted unless authorised by AUDI AG. AUDI AG does not guarantee or accept any liability with respect to the correctness of information in this document. Copyright by AUDI AG.

37 – Controls, housing

1 Selector mechanism

⇒ "1.1 Exploded view - selector mechanism", page 17

⇒ "1.2 Exploded view - selector lever handle", page 19

⇒ "1.3 Exploded view - selector lever cable", page 20

⇒ "1.4 Checking selector mechanism", page 20

⇒ "1.5 Manual release from position P", page 22

⇒ "1.6 Removing and installing selector mechanism", page 23

⇒ "1.7 Dismantling and assembling selector mechanism", page 27

⇒ "1.8 Removing and installing selector lever handle", page 30

⇒ "1.9 Detaching selector lever boot from selector lever handle", page 33

⇒ "1.10 Removing and installing selector lever position display Y26 ", page 34

⇒ "1.11 Removing and installing selector lever cable", page 34

⇒ "1.12 Checking and adjusting selector lever cable", page 39

⇒ "1.13 Adjusting selector lever cable to basic setting", page 40

⇒ "1.14 Renewing selector shaft oil seal", page 44

1.1 Exploded view - selector mechanism

> ⚠ WARNING
>
> *Accidents and injury can be caused if a gear is inadvertently engaged while the engine is running.*
>
> - *Prior to performing work with engine running, move selector lever to position "P" and pull up parking brake button to apply the electromechanical parking brake.*

Check selector mechanism before dismantling ⇒ page 20.

Reproduction of this document or copying of its contents in any form or by any means, or its use for commercial purposes, in part or in whole, is not permitted unless authorised by AUDI AG. AUDI AG does not guarantee or accept any liability with respect to the correctness of information in this document. Copyright by AUDI AG.

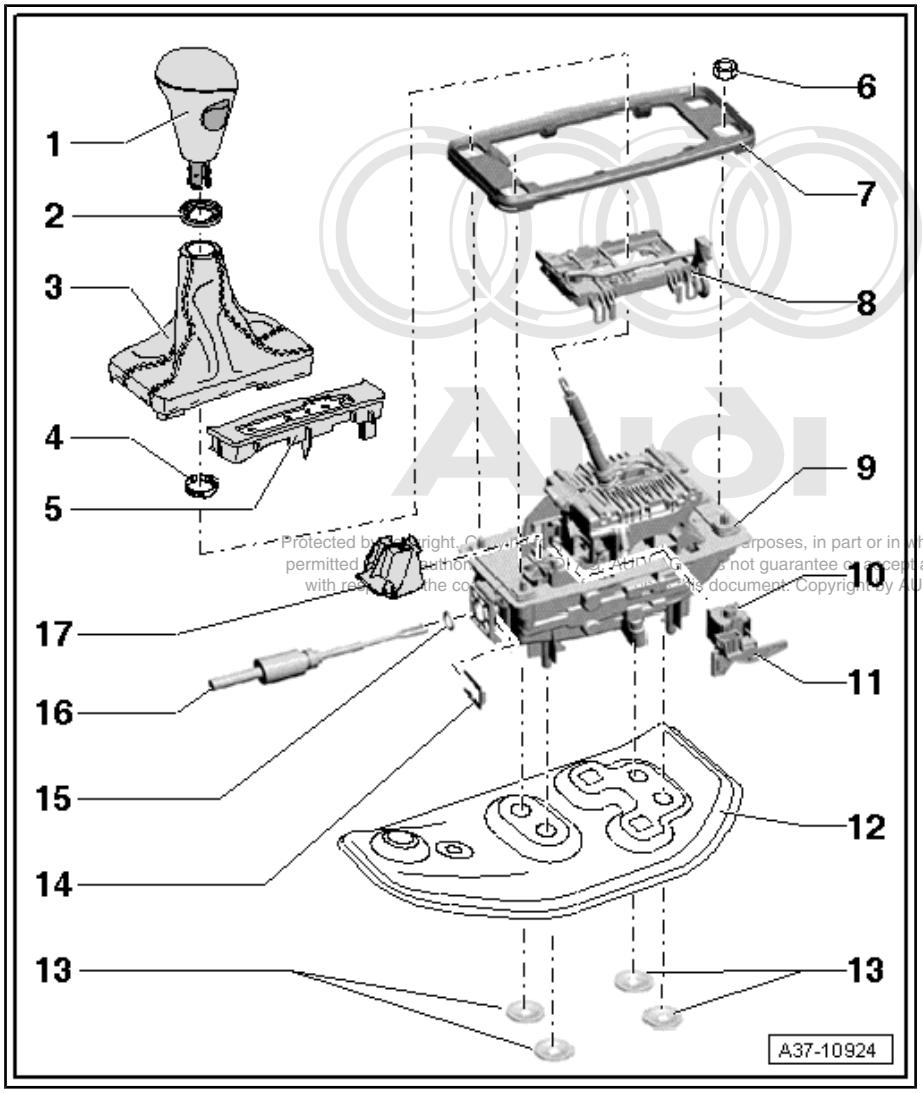

1 - Selector lever handle

- ⇒ “1.2 Exploded view - selector lever handle”, page 19

2 - Trim ring

- Removing and installing ⇒ page 19

3 - Selector lever boot

- Removing and installing ⇒ page 19

4 - Clip

- Secures selector lever handle to selector lever
- Removing and installing ⇒ page 19

5 - Selector lever position display - Y26-

- ⇒ “1.10 Removing and installing selector lever position display Y26 ”, page 34

6 - Nut

- 10 Nm
- 4x
- Secures selector mechanism to body

7 - Rubber seal

8 - Selector lever sensors control unit - J587- and tiptronic switch - F189-

- ⇒ “1.7.2 Removing and installing selector lever sensors control unit J587 and tiptronic switch F189 ”, page 29

9 - Shift unit

- Can only be renewed as a complete unit
- ⇒ “1.6 Removing and installing selector mechanism”, page 23

10 - Selector lever lock solenoid - N110-

- ⇒ “1.7.1 Removing and installing selector lever lock solenoid N110 ”, page 27

11 - Gear selector position P switch - F305-

- Consists of two reed contacts on printed circuit board in selector lever lock solenoid - N110-
- Can only be renewed together with selector lever lock solenoid - N110- , ⇒ “1.7.1 Removing and installing selector lever lock solenoid N110 ”, page 27

12 - Noise insulation

- Not fitted on all vehicles; allocation ⇒ Electronic parts catalogue

13 - Securing clips

- 4x
- Renew
- For securing noise insulation to shift unit

14 - Retaining clip

- Secures selector lever cable to shift unit

15 - O-ring

- ❑ Renew

16 - Selector lever cable

- ❑ Do not bend or kink
- ❑ Different versions (according to vehicle); for correct version refer to ⇒ Electronic parts catalogue
- ❑ ⇒ “1.3 Exploded view - selector lever cable”, page 20
- ❑ Before installing, lightly lubricate ball socket with polycarbamide grease - G 052 142 A2- .

17 - Sealing cap

- ❑ Above selector lever lock solenoid - N110-

1.2 Exploded view - selector lever handle

1 - Clip

- ❑ To secure selector lever handle to selector lever
- ❑ Removing and installing ⇒ page 30
- ❑ Renew

2 - Trim ring

- ❑ Removing and installing ⇒ page 33

3 - Selector lever handle

- ❑ ⇒ “1.8 Removing and installing selector lever handle”, page 30

4 - Selector lever boot

- ❑ ⇒ “1.9 Detaching selector lever boot from selector lever handle”, page 33

5 - Selector lever position display - Y26-

- ❑ ⇒ “1.10 Removing and installing selector lever position display Y26 ”, page 34

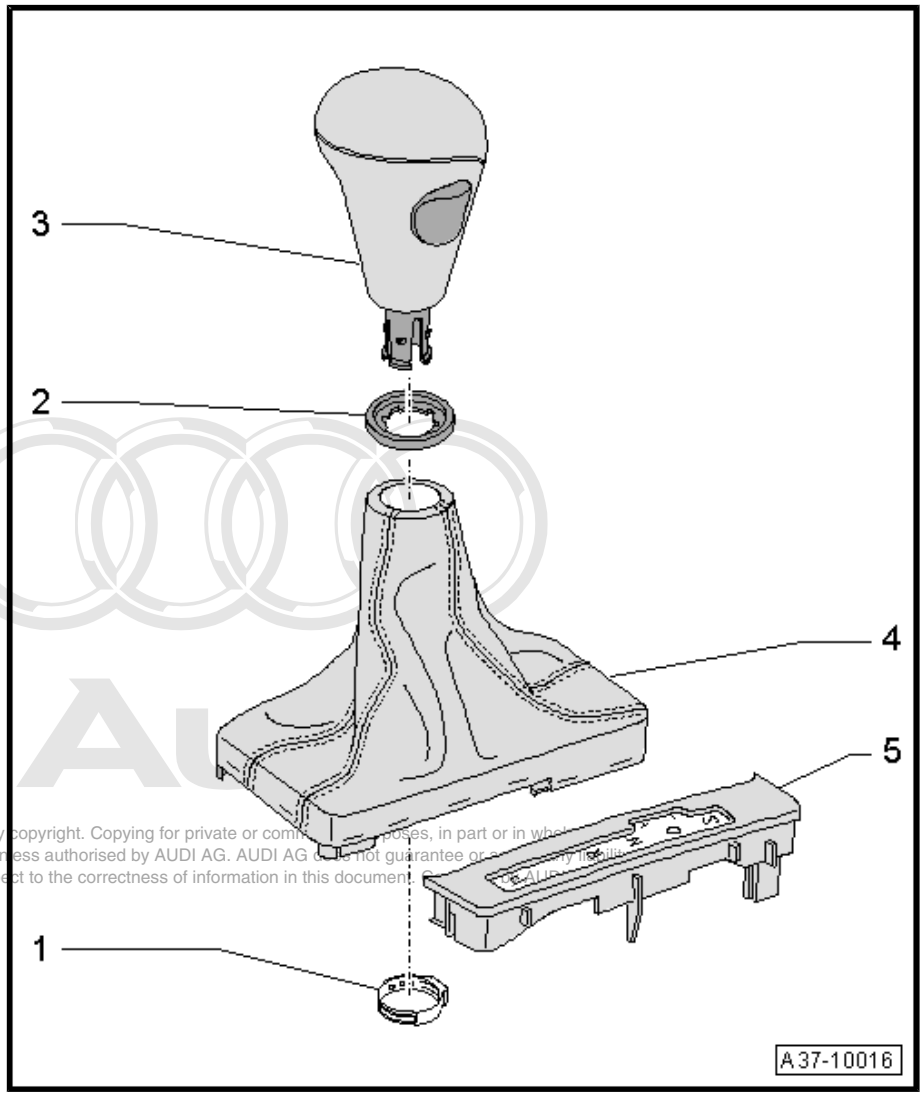

Protected by copyright. Copying for private or commercial purposes, in part or in whole, is not permitted unless authorised by AUDI AG. AUDI AG does not guarantee or assume any liability with respect to the correctness of information in this document. ©AUDI AG

1.3 Exploded view - selector lever cable

1 - Retaining clip
- ❑ For selector lever cable
- ❑ Renew

2 - Bolt
- ❑ 8 Nm
- ❑ 2x

3 - Selector lever cable
- ❑ Do not bend or kink
- ❑ ⇒ “1.11 Removing and installing selector lever cable”, page 34
- ❑ Selector lever cable must be renewed if rubber sleeve is damaged
- ❑ Before installing, lightly lubricate ball socket with polycarbamide grease - G 052 142 A2- .
- ❑ When installing, make sure that rubber sleeve on gearbox end is not twisted
- ❑ ⇒ “1.12 Checking and adjusting selector lever cable”, page 39

4 - Cable support bracket

5 - Bolt
- ❑ 13 Nm
- ❑ For adjusting selector lever cable
- ❑ Secured to shift unit

6 - O-ring
- ❑ Renew

7 - Selector shaft lever

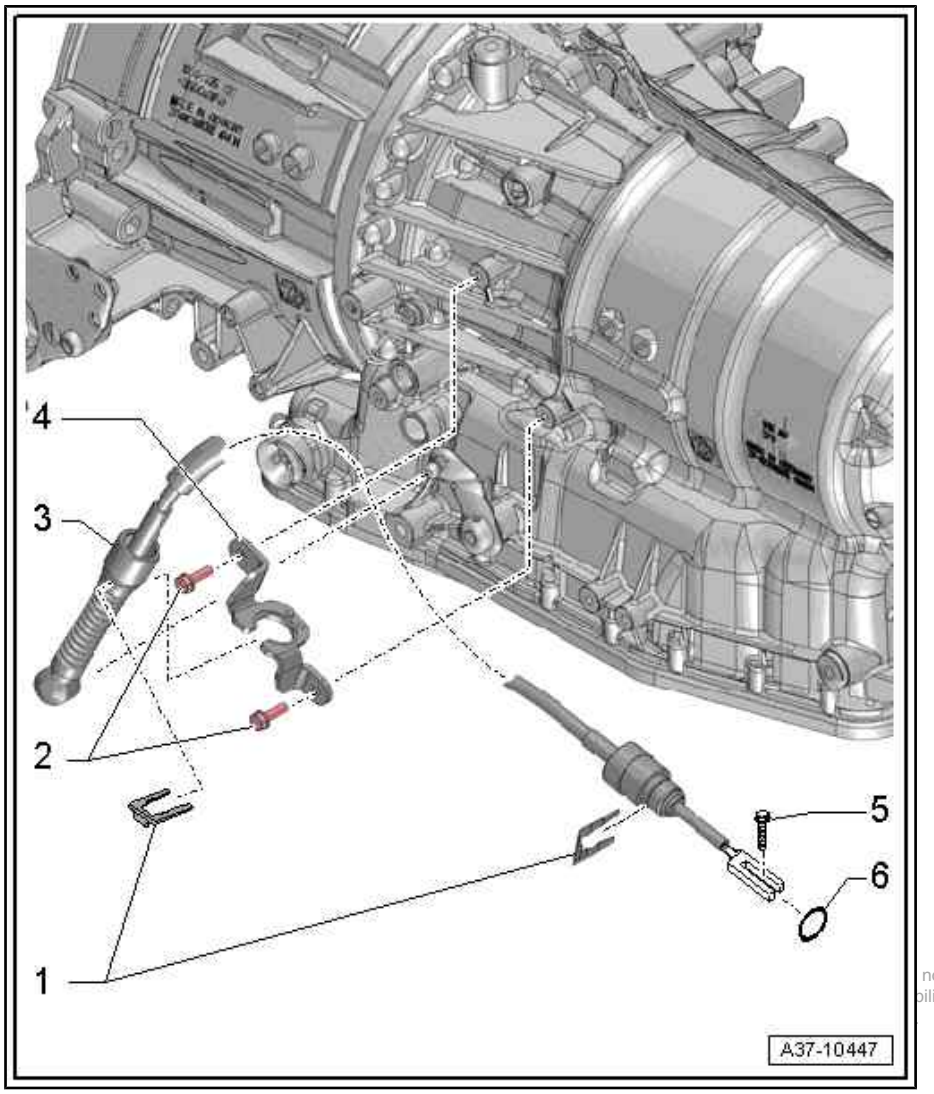

1.4 Checking selector mechanism

Overview:

- ♦ 1. Checking operation of selector mechanism ⇒ page 20
- ♦ 2. Checking ignition key removal lock ⇒ page 21
- ♦ 3. Checking interlock button on selector lever handle ⇒ page 22

1. Checking operation of selector mechanism

- It should not be possible to operate the starter while the selector lever is in position “S”, “D”, “R” or in the “tiptronic gate”.
- When travelling at speeds above 5 km/h and shifting into selector lever position “N”, the solenoid for the selector lever lock must not engage and block the selector lever. The selector lever can be shifted into a driving gear.

- When travelling at speeds below 2 km/h (almost stationary) and shifting into selector lever position “N”, the solenoid for the selector lever lock should only engage after about 1 second. Selector lever cannot be shifted out of “N” position until brake pedal is depressed.

Selector lever in position “P”:

– Pull up parking brake button to apply electromechanical parking brake.

– Briefly press ignition key in ignition lock to reach position “ignition on”.

– Do not depress brake pedal.

- The selector lever is locked and cannot be shifted out of “P” position, even when the interlock button on the handle is pressed in. Selector lever lock solenoid - N110- blocks selector lever.

– Press and hold brake pedal.

- Selector lever lock solenoid - N110- releases selector lever. It is possible to shift into a driving gear. With interlock button on selector lever handle pressed, shift selector lever slowly from “P” position through “R, N, D and S” and check whether the selector lever position display - Y6- in the instrument cluster shows the correct selector lever position in each case.

Protected by copyright. Copying for private or commercial purposes, in part or in whole, is not permitted unless authorised by AUDI AG. AUDI AG does not guarantee or accept any liability with respect to the correctness of information. Copyright by AUDI AG.

Selector lever in position “N” and ignition switched on:

– Do not depress brake pedal.

- After a short delay: Selector lever is locked and cannot be shifted out of “N” position even when pressing the interlock button on the selector lever handle. Selector lever lock solenoid - N110- blocks selector lever.

– Depress brake pedal.

- Selector lever lock solenoid - N110- releases selector lever. Shifting into position “D” is possible.

Selector lever in position “D”, ignition switched on:

– Shift selector lever into “tiptronic gate”.

- The illuminated “D” symbol in the selector lever position display - Y26- should go out and the “+” and “–” symbols should light up.

- The selector lever position display - Y6- in the instrument cluster should change from “D” to “M1” when the selector lever is moved into the “tiptronic gate”.

– If the specified results are not obtained, perform “Guided Fault Finding” ⇒ Vehicle diagnostic tester.

– Adjust selector lever cable ⇒ page 39 .

– Check interlock button on selector lever handle ⇒ page 22

– Check ignition key removal lock.

2. Checking ignition key removal lock

– Pull up parking brake button to apply electromechanical parking brake.

– Do not depress brake pedal.

– Briefly press ignition key in ignition lock to reach position “ignition on”.

– Press and hold brake pedal.

- When interlock button in selector lever handle is pressed, it should be possible to move selector lever out of position “P” without “catching”.

– Switch off ignition.

- It should not be possible to remove the ignition key when the selector lever is in any position other than “P”.

– Shift selector lever into position “P”.

– Pull out ignition key.

- It should only be possible to remove ignition key in selector lever position “P”.
- Selector lever can then not be shifted out of “P” position with interlock button pressed and brake pedal depressed.

If the ignition key removal lock does not function as described, perform “Guided Fault Finding” ⇒ Vehicle diagnostic tester.

3. Checking interlock button on selector lever handle

Check that interlock button moves freely:

- Interlock button should move easily when pressed without force.
- Interlock button should spring back fully on its own when released.

– If specified results are not obtained, check that selector lever handle is correctly installed ⇒ page 30 .

– Check whether selector rod or selector lever is bent.

Function test:

- Ignition switched on

Press the interlock button on the selector lever handle to move the handle into the positions listed below; it should not be possible to move the selector lever into these positions unless the interlock button is pressed.

♦ “P” to “R” (also depress brake pedal)

♦ “D” to “S”

♦ “N” to “R” (brake pedal also has to be depressed after a short delay when vehicle is stationary)

♦ “R” to “P”

– If specified results are not obtained, check that selector lever handle is correctly installed ⇒ page 30 .

– Perform “Guided Fault Finding” ⇒ Vehicle diagnostic tester and check selector lever lock solenoid - N110- .

– Adjust selector lever cable ⇒ page 39 .

1.5 Manual release from position P

Note

♦ *If the battery is disconnected or discharged, the selector lever cannot be shifted from position “P”. In this case, the vehicle cannot be pushed or towed.*

♦ *When you operate the manual release mechanism the selector lever lock solenoid - N110- will release the lock without current supply.*

Protected by copyright. Copying for private or commercial purposes, in part or in whole, is not permitted unless authorised by AUDI AG. AUDI AG does not guarantee or accept any liability with respect to the correctness of information in this document. Copyright by AUDI AG.

Procedure

– Remove front ashtray insert.

– Use screwdriver to pry off the cover cap in the ashtray housing -arrow-.

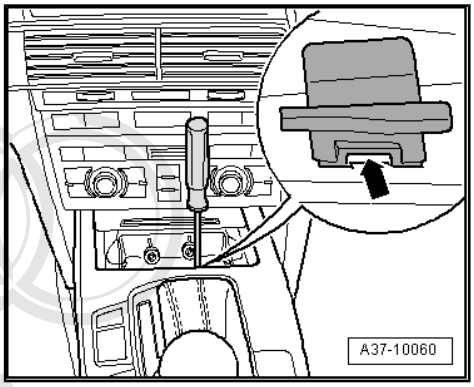

Note

The shape of the cover cap may differ from the illustration.

– Carefully insert tool (e.g. screwdriver) through centre opening in ashtray housing and into cylinder -arrow- on selector lever lock solenoid - N110- and at the same time press and hold interlock button and move selector lever out of position “P”.

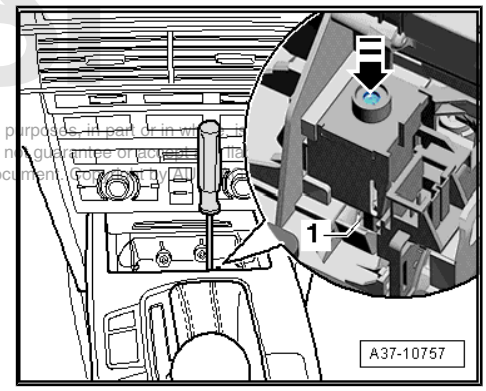

Protected by copyright. Copying for private or commercial purposes, in part or in whole, is not permitted unless authorised by AUDI AG. AUDI AG does not guarantee or accept any liability with respect to the correctness of information in this document copied from other media.

Note

- *This releases the selector lever lock in position “P” by way of the locking lever -1-.*
- *The cylinder -arrow- on selector lever lock solenoid - N110- may be partially concealed by noise insulation or wiring (move clear to one side).*

1.6 Removing and installing selector mechanism

Special tools and workshop equipment required

- Removal lever - 80 - 200-

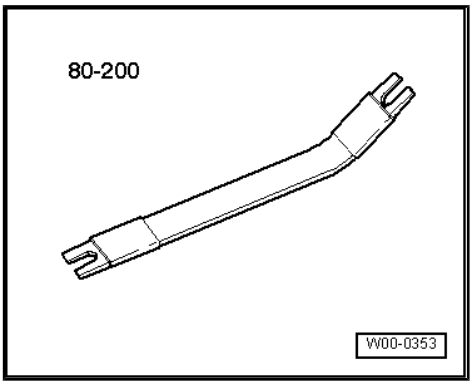

- Counterhold tool - T10172- with -T10172/5-

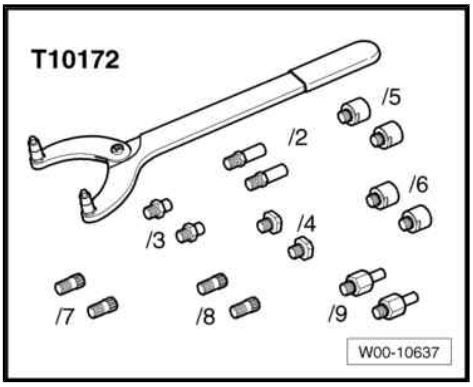

Removing

– Remove front silencer or front exhaust pipe ⇒ Rep. gr. 26 ; Exhaust pipes/silencers; Exploded view - silencers .

– Remove bolts -arrows- and detach heat shield -1- for propshaft.

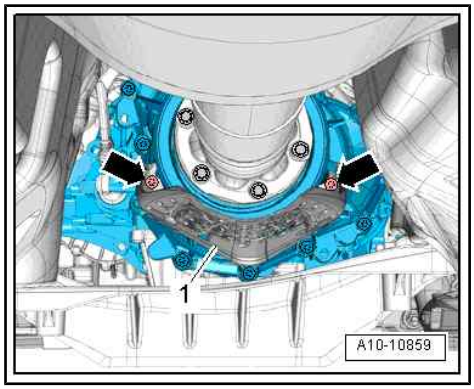

– Remove securing bolts from connection between propshaft and gearbox (counterhold using counterhold tool - T10172- and -T10172/5-).

– Slide propshaft together towards rear final drive. The constant velocity joints can be moved axially.

– Leave propshaft suspended.

Protected by copyright. Copying for private or commercial purposes, in part or in whole, is not permitted unless authorised by AUDI AG. AUDI AG does not guarantee or accept any liability with respect to the correctness of information in this document. Copyright by AUDI AG.

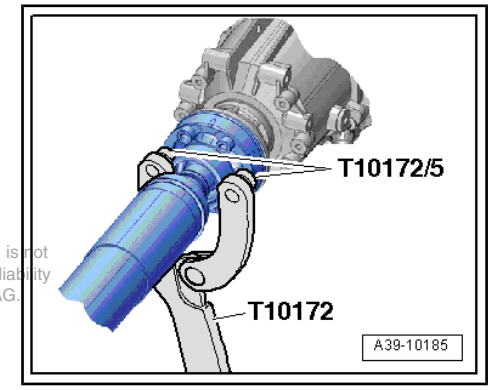

– Release fasteners -arrows- and remove heat shield -1-.

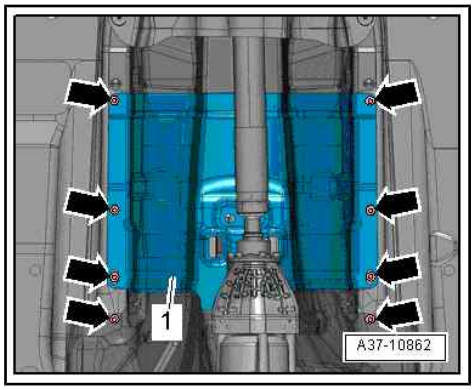

– Use removal lever - 80 - 200- to pry ball socket -1- on selector lever cable off selector shaft lever.

– Pry off retaining clip -2- and detach selector lever cable from gearbox.

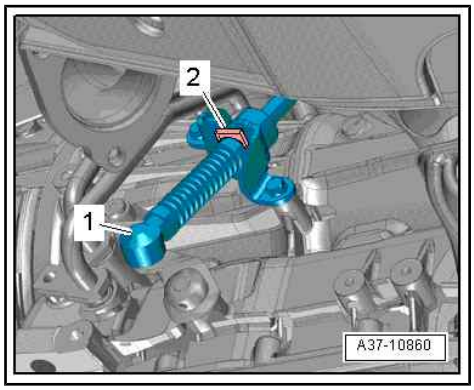

Note

Do not bend or kink the selector lever cable.

– Remove multimedia system operating unit - E380- ⇒ Communication; Rep. gr. 91 ; Infotainment system; Removing and installing multimedia system operating unit - E380- .

– Remove ashtray (front) ⇒ General body repairs, interior; Rep. gr. 68 ; Centre console; Removing and installing ashtray (front) .

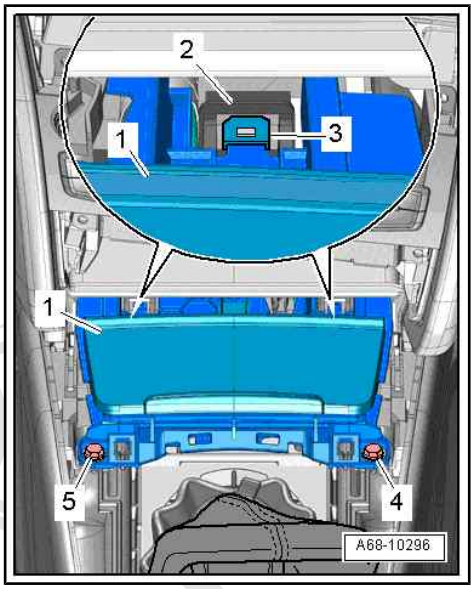

Protected by copyright. Copying for private or commercial purposes, in part or in whole, is not permitted unless authorised by AUDI AG. AUDI AG does not guarantee or accept any liability with respect to the correctness of information in this document. Copyright by AUDI AG.

– Unplug electrical connectors -2- and -4-.

– Remove insulating mat above selector mechanism.

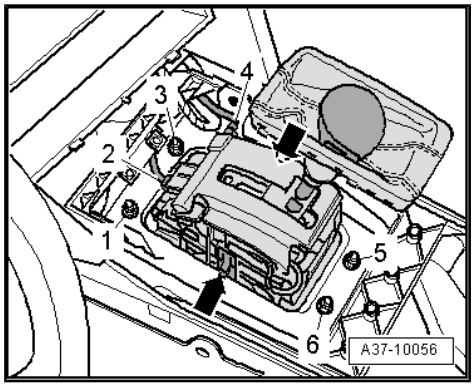

Note

- *Insulating mat is not shown in illustration.*
- *The assistance of a second mechanic is required to detach the selector mechanism from below.*

– Remove bolts -1, 3, 5, 6-.

Note

As the retaining clips -arrows- are no longer installed on some versions, the selector mechanism may drop as soon as the bolts are removed.

– Detach selector mechanism from below.

Installing

Installation is carried out in reverse sequence; note the following:

- Tightening torques ⇒ page 17

Note

- *Before installing, lightly lubricate ball socket on selector lever cable with polycarbamide grease - G 052 142 A2- .*
- *Do not bend or kink the selector lever cable.*

– Adjust selector lever cable ⇒ page 39 .

– Check selector mechanism ⇒ page 20 .

– Install propshaft ⇒ Rear final drive; Rep. gr. 39 ; Propshaft; Exploded view - propshaft .

Protected by copyright. Copying for private or commercial purposes, in part or in whole, is not permitted unless authorised by AUDI AG. AUDI AG does not guarantee or accept any liability with respect to the correctness of information in this document. Copyright by AUDI AG.

– Install front silencer or front exhaust pipe ⇒ Rep. gr. 26 ; Exhaust pipes/silencers; Exploded view - silencers .

– Install ashtray (front) ⇒ General body repairs, interior; Rep. gr. 68 ; Centre console; Removing and installing ashtray (front) .

– Install multimedia system operating unit - E380- ⇒ Communication; Rep. gr. 91 ; Infotainment system; Removing and installing multimedia system operating unit - E380- .

1.7 Dismantling and assembling selector mechanism

⇒ "1.7.1 Removing and installing selector lever lock solenoid N110 ", page 27

⇒ "1.7.2 Removing and installing selector lever sensors control unit J587 and tiptronic switch F189 ", page 29

⇒ "1.7.3 Removing and installing gear selector position P switch F305 ", page 30

1.7.1 Removing and installing selector lever lock solenoid - N110-

Removing

– Shift selector lever into position "P".

– Remove multimedia system operating unit - E380- ⇒ Communication; Rep. gr. 91 ; Infotainment system; Removing and installing multimedia system operating unit - E380- .

– Remove ashtray (front) ⇒ General body repairs, interior; Rep. gr. 68 ; Centre console; Removing and installing ashtray (front) .

Protected by copyright. Copying for private or commercial purposes, in part or in whole, is permitted unless authorised by AUDI AG. AUDI AG does not guarantee or accept any liab with respect to the correctness of information in this document. Copyright by AUDI AG.

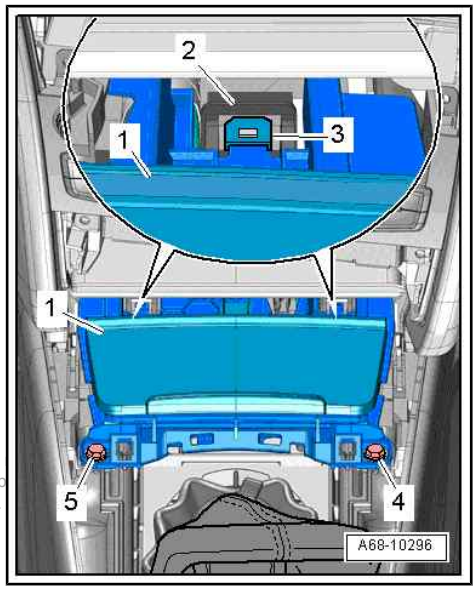

– Unscrew nuts -1, 3, 5, 6- a few turns, but do not remove completely.

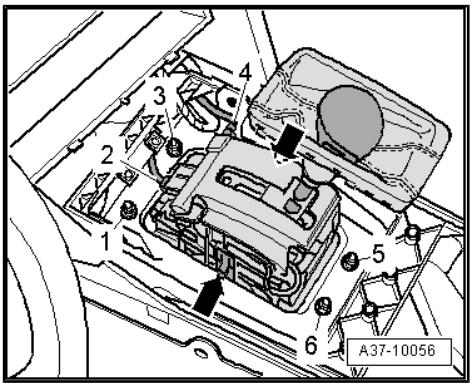

Note

This will lower the shift unit slightly and facilitate removal.

Caution

The selector mechanism can be damaged by broken retaining clips, retaining tabs or other objects.

- ***Make sure that no parts or objects drop into the selector mechanism. If this happens, the selector mechanism will have to be renewed!***

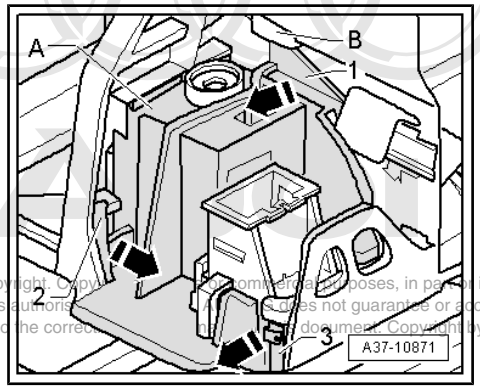

Protected by copyright. Copyright by AUDI AG. For commercial purposes, in part or in whole, is not permitted unless authorised by AUDI AG. AUDI AG does not guarantee or accept any liability with respect to the correctness of this document. Copyright by AUDI AG.

– Release retaining tabs -2- and -3- in direction of -arrow-, lift front of sealing cap -A- slightly and hold in that position.

Note

This prevents the retaining tabs from engaging again.

– Using a screwdriver, release top retaining tab -1- of sealing cap from retainer -B- in direction of -arrow- and lift out sealing cap -A-.

– Unplug electrical connector on selector lever lock solenoid - N110- .

– Press retaining hook -A- in direction of -arrow- and hold in this position.

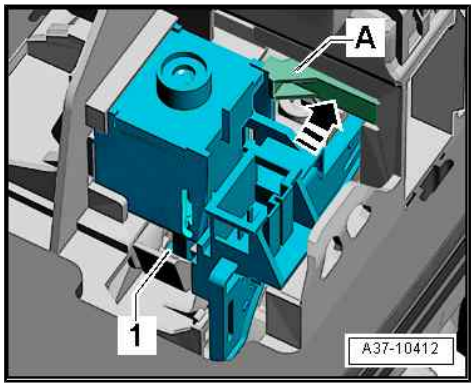

Note

The shift unit must be renewed if the retaining hook -A- breaks off.

– Tilt bottom part of selector lever lock solenoid - N110- out in direction of -arrow- so that ball head -1- disengages from operating lever on selector mechanism.

– Detach selector lever lock solenoid - N110- .

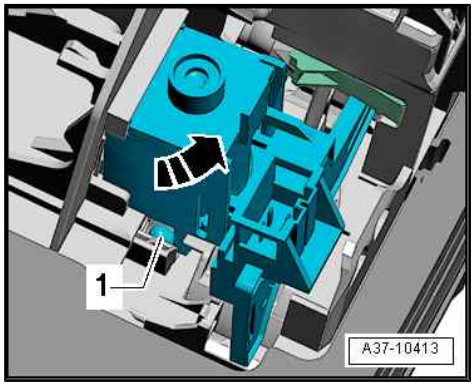

Installing

Installation is carried out in reverse sequence; note the following:

- Tightening torque ⇒ page 17

– Turn ball head -1- into correct position for installation.

– Guide selector lever lock solenoid - N110- into selector mechanism at an angle from above and tilt bottom part in opposite direction of -arrow-.

- Ball head -1- must engage fully in operating lever on selector mechanism; press home with a small screwdriver if necessary.

– Secure selector lever lock solenoid - N110- to retaining hook -A-.

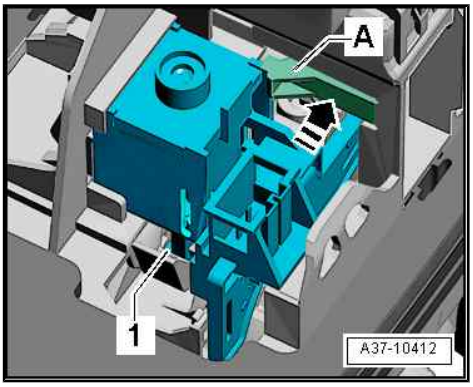

– Place cover -A- over selector lever lock solenoid - N110- and carefully engage -1 ... 3-.

– Attach electrical connectors.

– Check function of selector mechanism before continuing assembly ⇒ page 20 .

– Install ashtray (front) ⇒ General body repairs, interior; Rep. gr. 68 ; Centre console; Removing and installing ashtray (front) .

– Install multimedia system operating unit - E380- ⇒ Communication; Rep. gr. 91 ; Infotainment system; Removing and installing multimedia system operating unit - E380- .

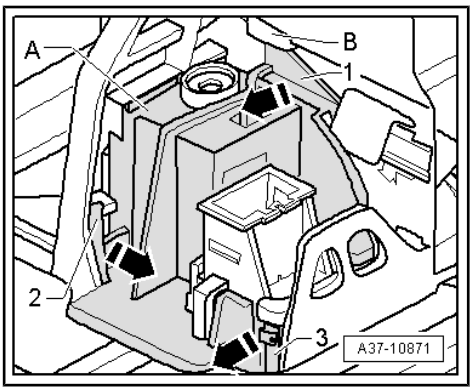

Protected by copyright. Copying for private or commercial purposes, in part or in whole, is not permitted unless authorised by AUDI AG. AUDI AG does not guarantee or accept any liability with respect to the correctness and completeness of this document.

1.7.2 Removing and installing selector lever sensors control unit - J587- and tiptronic switch - F189-

Note

Selector lever sensors control unit - J587- and tiptronic switch - F189- are integrated in one unit.

Removing

– Remove selector lever handle ⇒ page 30 .

– Remove multimedia system operating unit - E380- ⇒ Communication; Rep. gr. 91 ; Infotainment system; Removing and installing multimedia system operating unit - E380- .

– Remove ashtray (front) ⇒ General body repairs, interior; Rep. gr. 68 ; Centre console; Removing and installing ashtray (front) .

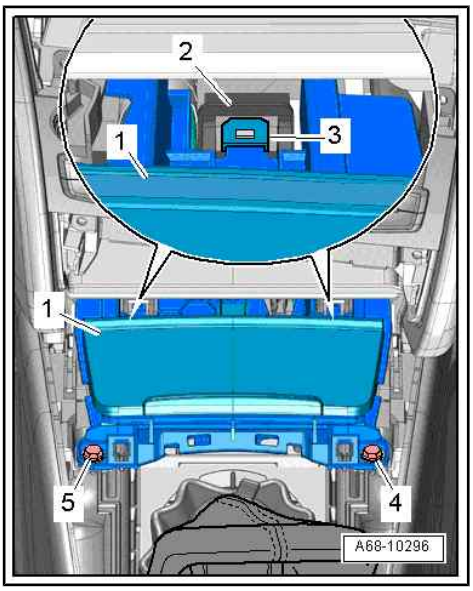

– Unplug electrical connector -1-.

– Release 4 retaining tabs -arrows- and lift out selector lever sensors control unit - J587- with tiptronic switch - F189- .

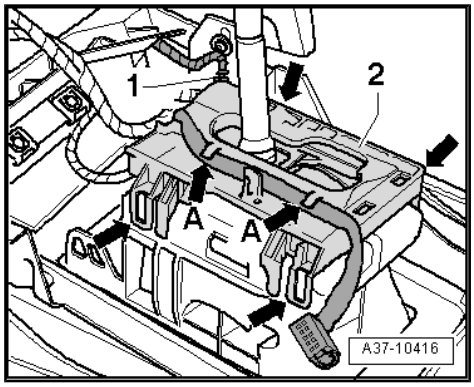

Note

-Arrows A- can be disregarded.

Installing

Installation is carried out in reverse sequence; note the following:

– Make sure selector lever sensors control unit - J587- with tiptronic switch - F189- clicks in place with 4 retaining tabs -arrows-.

– Secure wiring for selector lever position display - Y26- -arrows-.

– Install ashtray (front) ⇒ General body repairs, interior; Rep. gr. 68 ; Centre console; Removing and installing ashtray (front) .

– Install multimedia system operating unit - E380- ⇒ Communication; Rep. gr. 91 ; Infotainment system; Removing and installing multimedia system operating unit - E380- .

– Install selector lever handle ⇒ page 30 .

1.7.3 Removing and installing gear selector position P switch - F305-

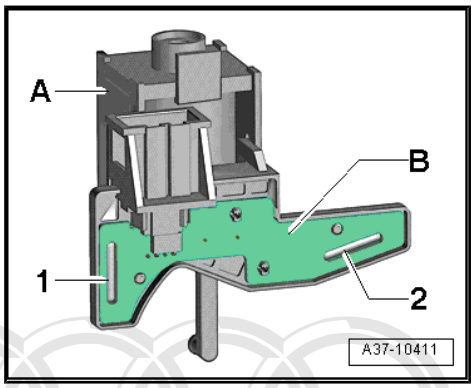

Gear selector position P switch - F305-

♦ Fitting location: Gear selector position P switch - F305- consists of two reed contacts (-1- and - 2-) and is installed on printed circuit board -B- in selector lever lock solenoid - N110- -A-.

Gear selector position P switch - F305- can only be renewed together with selector lever lock solenoid - N110- .

⇒ “1.7.1 Removing and installing selector lever lock solenoid N110 ”, page 27 .

1.8 Removing and installing selector lever handle

Special tools and workshop equipment required

♦ Removal wedge - 3409-

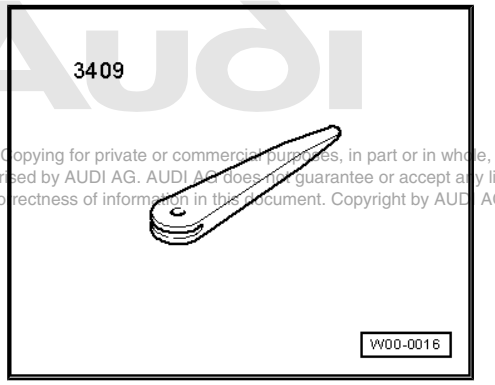

Protected by copyright. Copying for private or commercial purposes, in part or in whole, is not permitted unless authorised by AUDI AG. AUDI AG does not guarantee or accept any liability with respect to the correctness of information in this document. Copyright by AUDI AG.

♦ Hose clip pliers - V.A.G 1275-

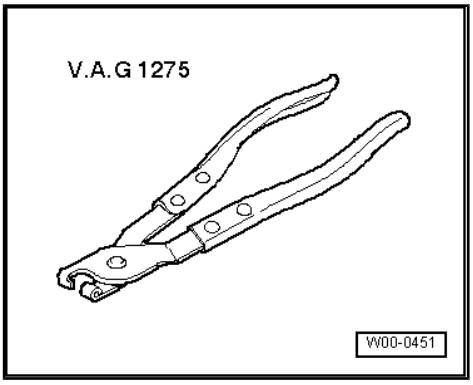

Removing

– Shift selector lever into position “N”.

Note

The selector lever handle is removed together with the selector lever boot.

– Carefully lever retainer frame for selector lever boot -1- out of centre console -arrows- using removal wedge - 3409- and turn selector lever boot inside out over selector lever handle.

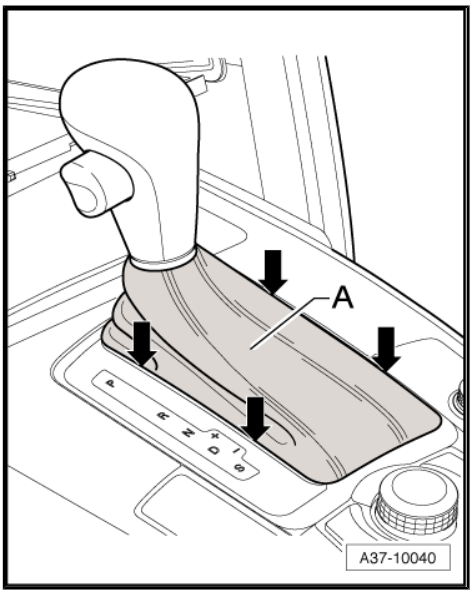

– Use a cable tie to secure the interlock button in pulled-out position -arrow-, as shown in the illustration.

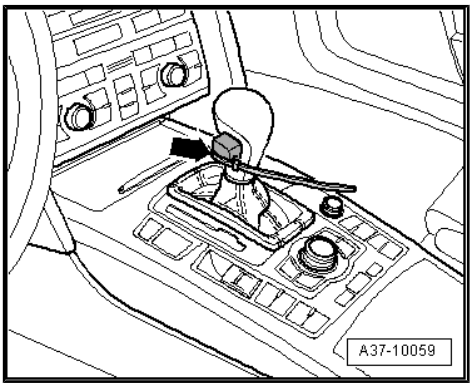

Protected by copyright. Copying for private or commercial purposes, in part or in whole, is not permitted unless authorised by AUDI AG. AUDI AG does not guarantee or accept any liability with respect to the correctness of information in this document. Copyright by AUDI AG.

– Turn selector lever boot -1- inside out over selector lever handle -2-.

– Release clamp -arrow- and detach selector lever handle together with selector lever boot. Avoid touching the interlock button.

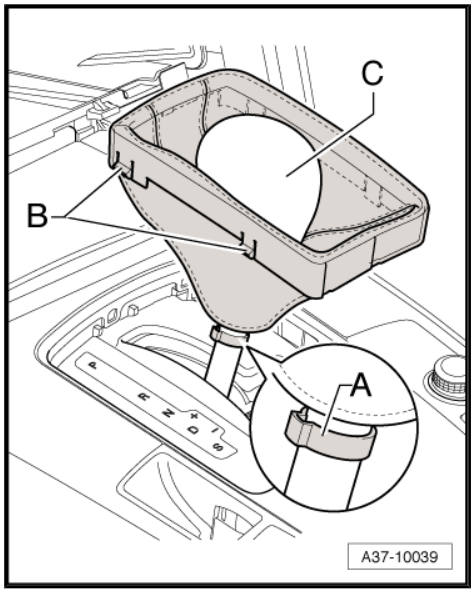

Installing

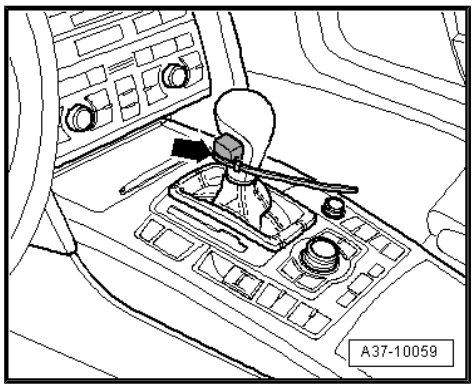

Note

- *To install the selector lever handle the interlock button has to be pulled out to the stop and must be secured with either a cable tie -arrow- or with the assembly aid supplied together with the new handle.*
- *If, by mistake, the interlock button has not been secured, it must not be pulled out of the selector lever handle by means of mechanical tools. Apply a compressed-air gun at the bottom of the handle and press the interlock button out with compressed air.*

– Attach new clamp -arrow- to selector lever handle.

– Place selector lever handle fully on selector lever - interlock button points towards the driver.

• The handle must engage in the annular groove on the selector lever.

– Remove cable tie or assembly aid, allowing interlock button mechanism to engage in vertical groove on selector lever. If necessary, press interlock button into selector lever handle.

– Move selector lever to positions “R” and “S” to check button mechanism.

• If the selector lever cannot be moved into the above positions, the handle must be removed again ⇒ page 30 .

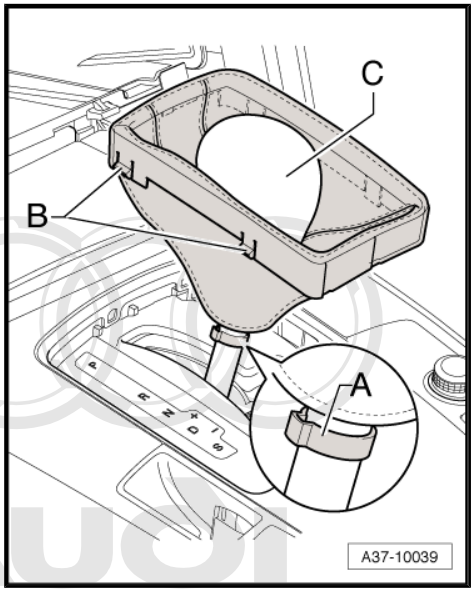

Protected by copyright. Copying for private or commercial purposes, in part or in whole, is not permitted unless authorised by AUDI AG. AUDI AG does not guarantee or accept any liability with respect to the correctness of information in this document. Copyright by AUDI AG.

– Secure selector lever handle -2- on selector lever by tightening clamp -arrow- using hose clip pliers - V.A.G 1275- .

– Clip retaining frame for selector lever boot -1- onto centre console.

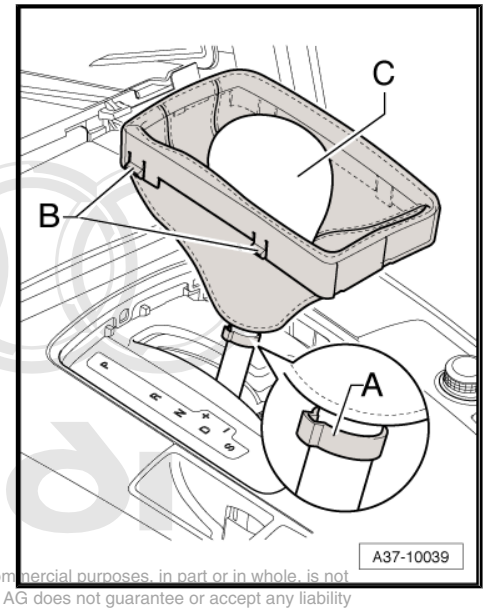

Protected by copyright. Copying for private or commercial purposes, in part or in whole, is not permitted unless authorised by AUDI AG. AUDI AG does not guarantee or accept any liability with respect to the correctness of information in this document. Copyright by AUDI AG.

1.9 Detaching selector lever boot from selector lever handle

Removing

– Remove selector lever handle ⇒ page 30 .

– Tie together spring tips -1- on selector lever handle using cable tie -3- as shown in illustration.

– Slide sleeve -2- of selector lever boot past retaining tabs on spring tips -arrow-.

– Remove cable tie and detach sleeve with selector lever boot from selector lever.

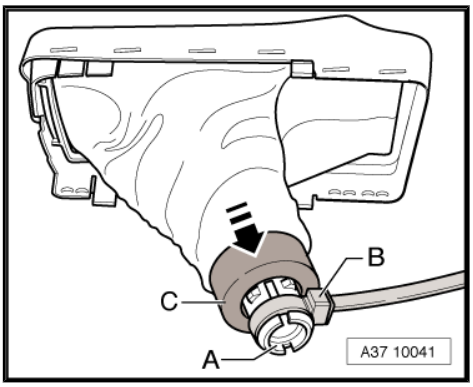

Installing

Installation is carried out in reverse sequence; note the following:

Fitting position of selector lever boot:

• The longer side of the retaining frame for the selector lever boot faces the driver's side.

– Install selector lever handle ⇒ page 30 .

1.10 Removing and installing selector lever position display - Y26-

Removing

– Shift selector lever into position “N”.

– Unclip retainer frame for selector lever boot -1- from centre console and lift off -arrows-.

– Turn selector lever boot inside out over selector lever handle.

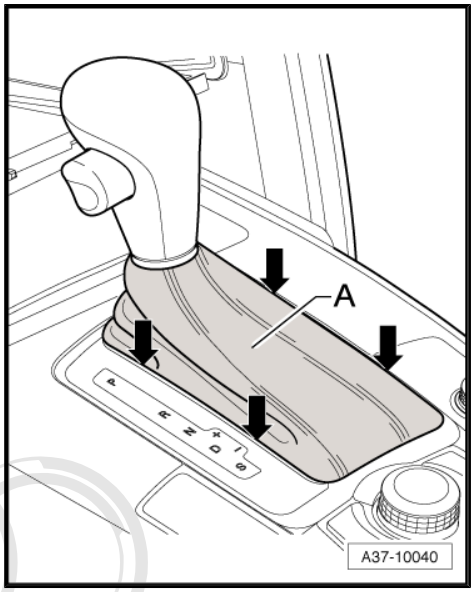

– Release retaining spring -2- and detach selector lever position display - Y26- -item 1- -arrow-.

– Unplug electrical connector.

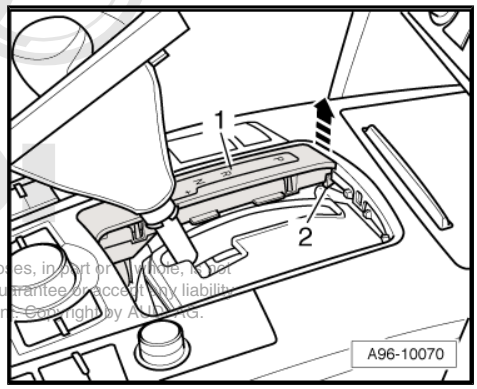

Installing

Perform installation in reverse sequence of removal.

Protected by copyright. Copying for private or commercial purposes, in part or in whole, is not permitted unless authorised by AUDI AG. AUDI AG does not guarantee or accept any liability with respect to the correctness of information in this document. Copyright by AUDI AG.

1.11 Removing and installing selector lever cable

Special tools and workshop equipment required

♦ Removal lever - 80 - 200-

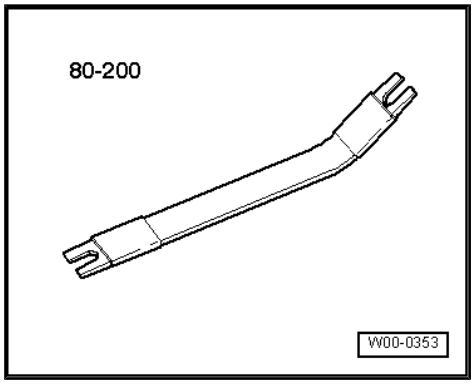

- Removal wedge - 3409-

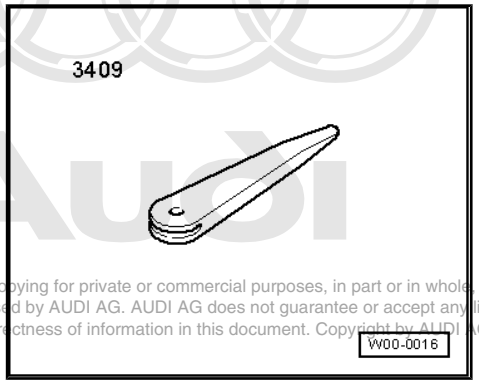

Protected by copyright. Copying for private or commercial purposes, in part or in whole, is not permitted unless authorised by AUDI AG. AUDI AG does not guarantee or accept any liability with respect to the correctness of information in this document. Copyright by AUDI AG.

- Socket and key - T40031-

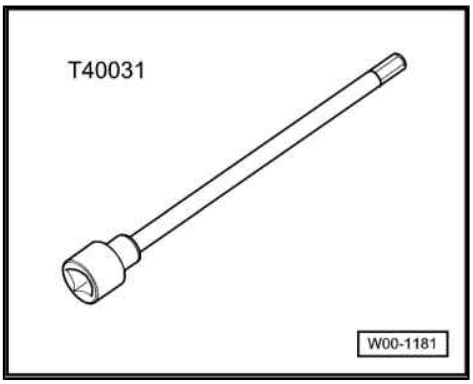

Removing

– Pull up parking brake button to apply electromechanical parking brake.

– Shift selector lever to position “D”.

– Carefully lever retainer frame for selector lever boot -1- out of centre console -arrows- using removal wedge - 3409- and turn selector lever boot inside out over selector lever handle.

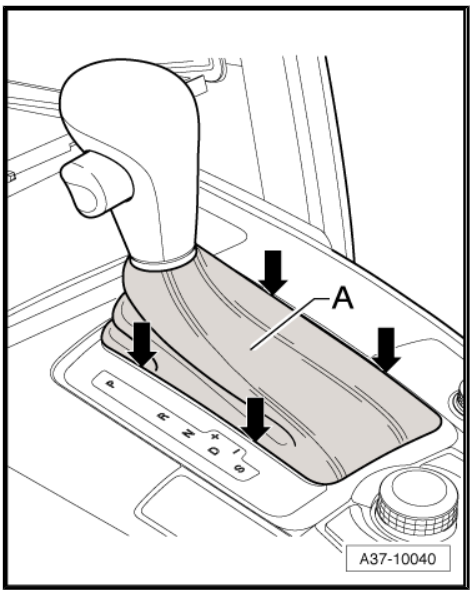

– Insert socket and key - T40031- through access hole -arrow- in selector mechanism and slacken bolt on selector lever cable approx. one turn.

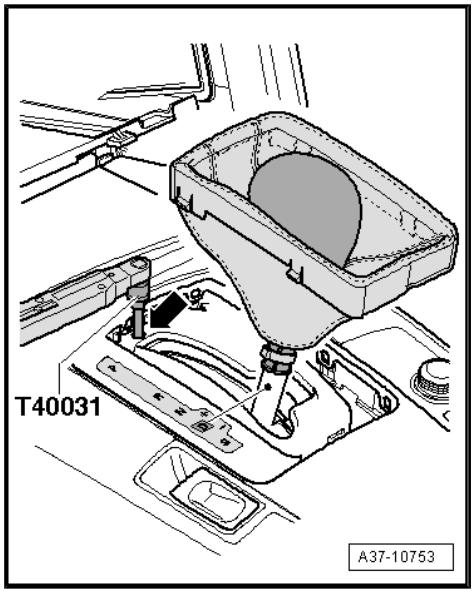

Note

- *Only loosen clamping bolt – do not remove.*
- *Clamping bolt can only be accessed with selector lever in position "D".*
- *With clamping bolt loosened, selector lever must remain in position "D".*

– Remove front silencer (left-side) ⇒ Rep. gr. 26 ; Exhaust pipes/silencers; Removing and installing front silencers .

– Remove bolts -arrows- and detach heat shield -1- for propshaft.

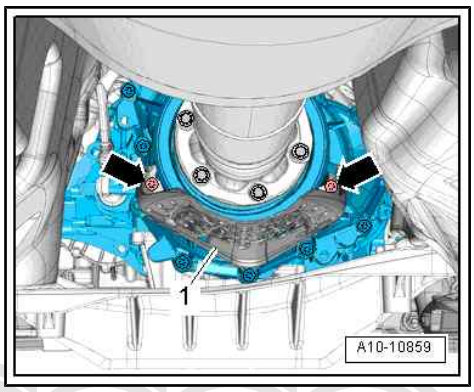

– Unscrew nuts -arrows- and remove heat shield -1-.

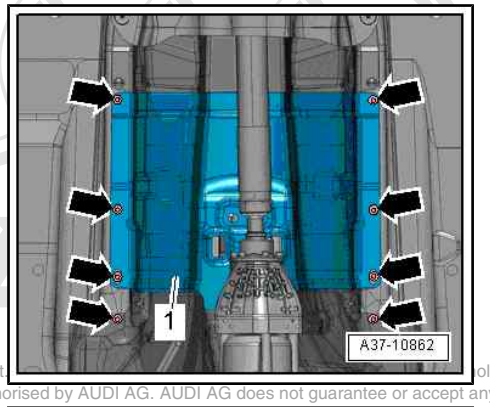

Protected by copyright ole, is not permitted unless authorised by AUDI AG. AUDI AG does not guarantee or accept any liability with respect to the c DI AG.

– Use removal lever - 80 - 200- to pry ball socket -1- on selector lever cable off selector shaft lever.

– Pry off retaining clip -2- and detach selector lever cable from gearbox.

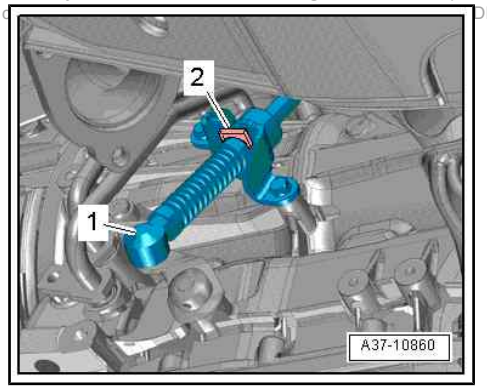

Note

Do not bend or kink the selector lever cable.

– Remove four retaining washers -1-.

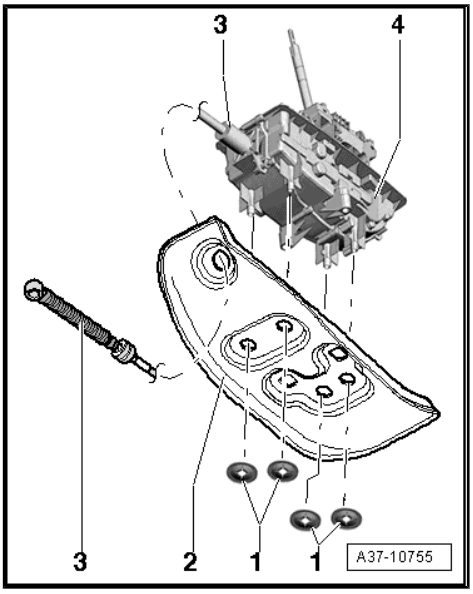

Note

Renew retaining washers.

– Pull off noise insulation -2- and slide forwards.

– Pull out retaining clip -1- for selector lever cable from the side.

– Pull selector lever cable -2- out of selector mechanism.

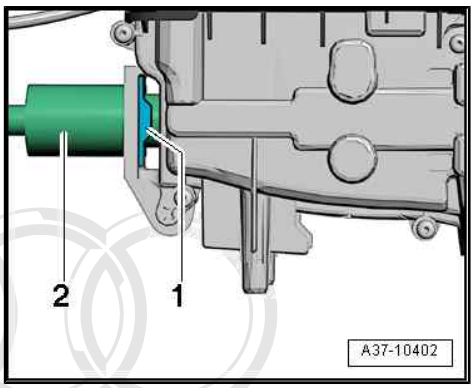

Installing

Installation is carried out in reverse sequence; note the following:

- Tightening torques ⇒ page 20

Note

- *Renew O-ring on selector lever cable.*
- *Before installing, lightly grease cable eye and ball socket on selector lever cable with polycarbamide grease - G 052 142 A2- .*

– Slide selector lever cable -3- through hole on noise insulation -2-.

Protected by copyright. Copying for private or commercial purposes, in part or in whole, is not permitted unless authorised by AUDI AG. AUDI AG does not guarantee or assume liability with respect to the correctness of information in this document. Copyright by AUDI AG.

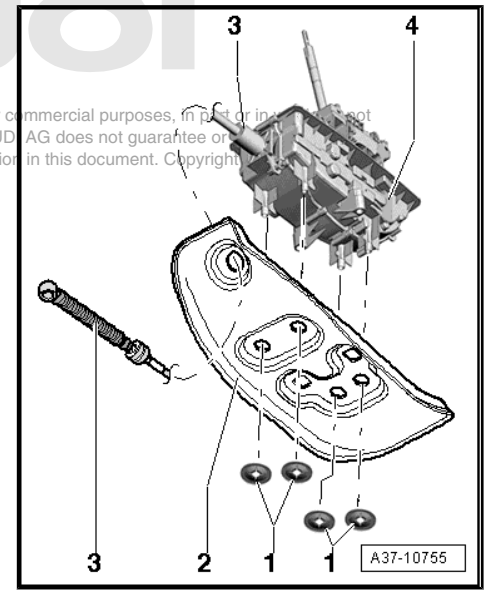

– Fit O-ring -1- on selector lever cable.
– Insert selector lever cable -2- into shift unit -arrow-.
– Secure selector lever cable -2- with retaining clip -3-.

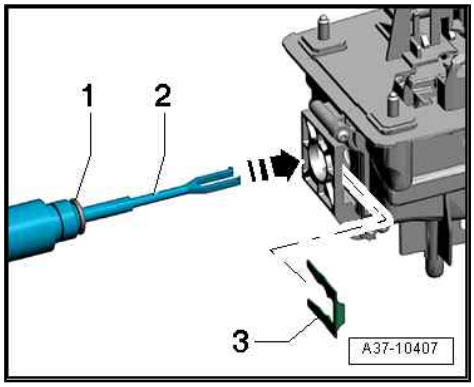

• Installation position: angled end of retaining clip -1- must point towards selector mechanism.

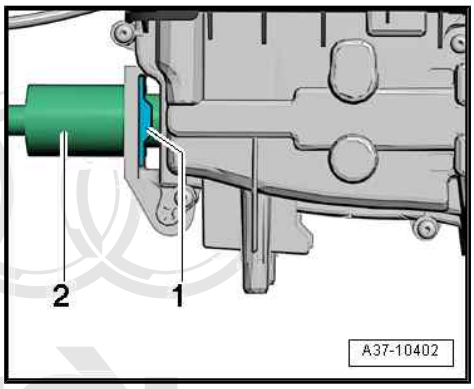

– Secure noise insulation -2- with four new retaining washers -1-.

Protected by copyright. Copying for private or commercial purposes, in part or in whole, is not permitted unless authorised by AUDI AG. AUDI AG does not guarantee or accept any liability with respect to the correctness of information in this document. Copyright

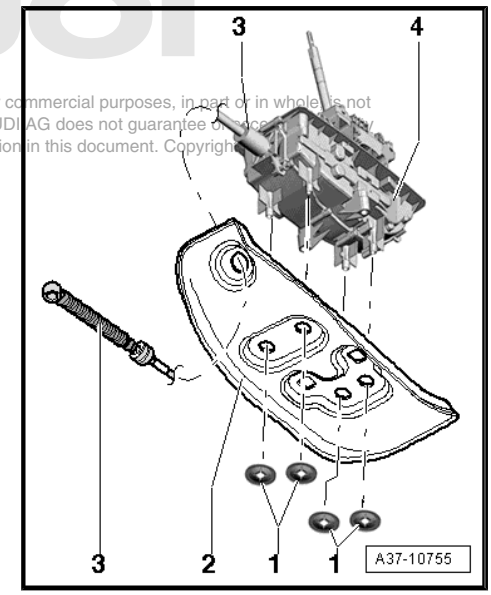

– Press selector shaft lever -1- on gearbox towards the rear as far as it will go -arrow- until parking lock engages.

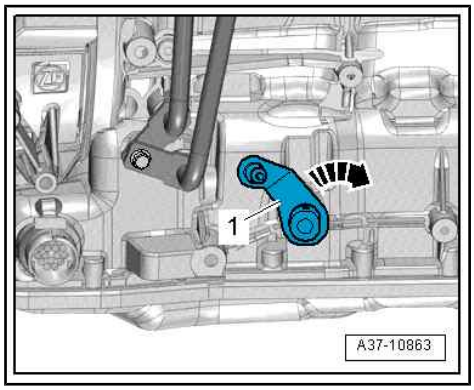

Note

When the parking lock has engaged it should no longer be possible to rotate both front wheels in one direction at the same time.

– Then push selector shaft lever forward 3 notches so that gearbox is in position “D”.
– Check that selector lever is also in position “D” inside the vehicle.

– Carefully press ball socket -1- of selector lever cable onto selector shaft lever in this position.

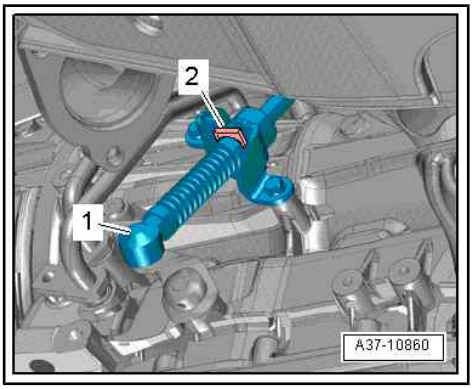

Note

Take care not to bend selector shaft lever when pressing on cable; support lever if necessary, as otherwise selector mechanism can no longer be adjusted accurately.

– Secure selector lever cable with retaining clip -2-.

Note

Do not bend or kink the selector lever cable.

– Check selector lever cable and adjust if necessary ⇒ page 39 .
– Check selector mechanism ⇒ page 20 .

1.12 Checking and adjusting selector lever cable

Special tools and workshop equipment required

♦ Removal wedge - 3409-

Protected by copyright. Copying for private or commercial purposes, in part or in whole, is not permitted unless authorised by AUDI AG. AUDI AG does not guarantee or accept any liability with respect to the correctness of information in this document. Copyright by AUDI AG.

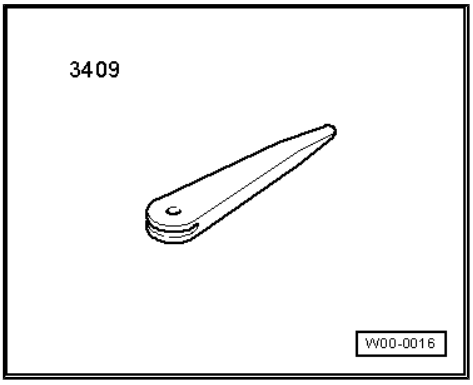

♦ Socket and key - T40031-

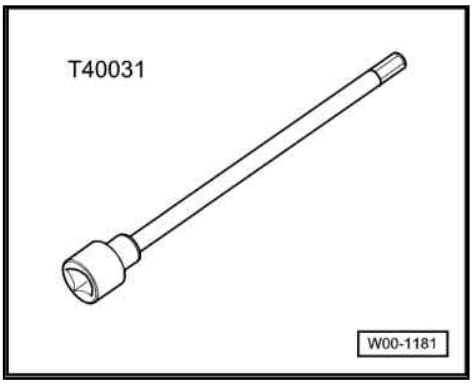

Procedure

- Tightening torque ⇒ page 20

– Carefully lever retainer frame for selector lever boot -1- out of centre console -arrows- using removal wedge - 3409- and turn selector lever boot inside out over selector lever handle.

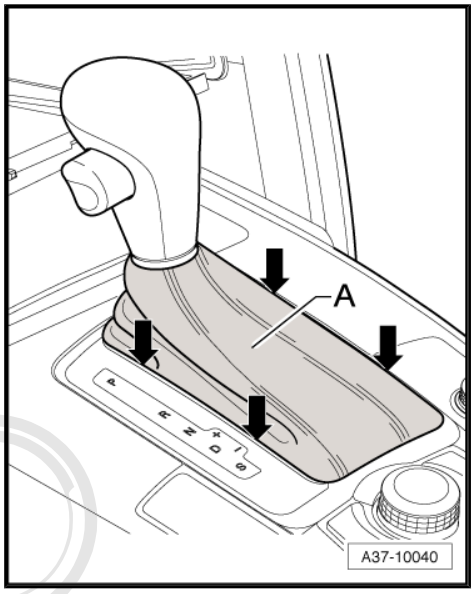

– Shift selector lever to position “D”.

– Insert socket and key - T40031- through access hole -arrow- in selector mechanism and slacken bolt on selector lever cable approx. one turn.

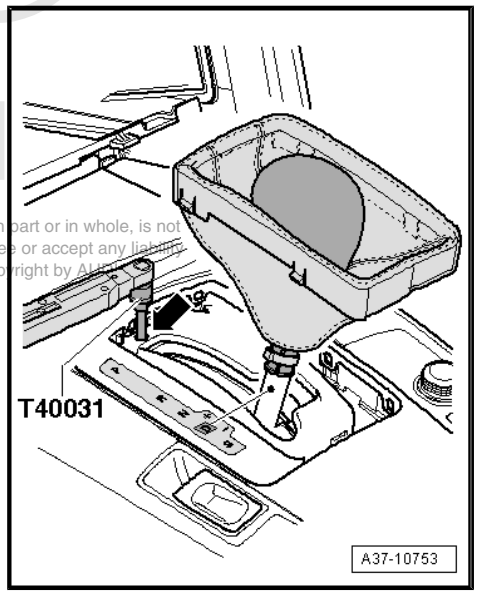

Note

Protected by copyright. Copying for private or commercial purposes, in part or in whole, is not permitted unless authorised by AUDI AG. AUDI AG does not guarantee or accept any liability with respect to the correctness of information in this document. Copyright by AUDI AG.

- *Only loosen clamping bolt approx. one turn - do not remove.*
- *Clamping bolt can only be accessed with selector lever in position “D”.*
- *With clamping bolt loosened, selector lever must remain in position “D”.*

– Carefully move selector lever slightly forwards and backwards, without shifting lever into a different selector lever position. The selector lever cable is thereby slackened.

– Shift selector lever into “tiptronic gate”.

Note

Do not touch selector lever again during adjustment process.

– Use socket and key - T40031- to tighten clamping bolt in this position, taking care not to touch selector lever.

– Check selector mechanism ⇒ page 20 .

If selector mechanism is not functioning correctly after adjusting selector lever cable, proceed as follows:

– Adjust selector lever cable to basic setting ⇒ page 40 .

1.13 Adjusting selector lever cable to basic setting

Special tools and workshop equipment required

- Removal lever - 80 - 200-

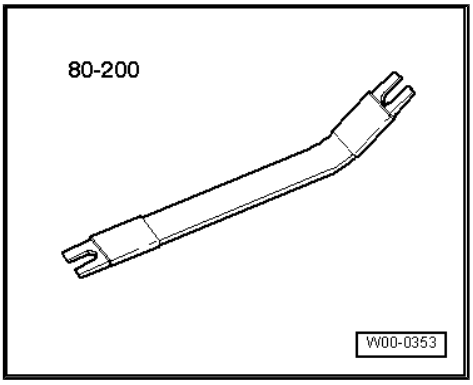

- Removal wedge - 3409-

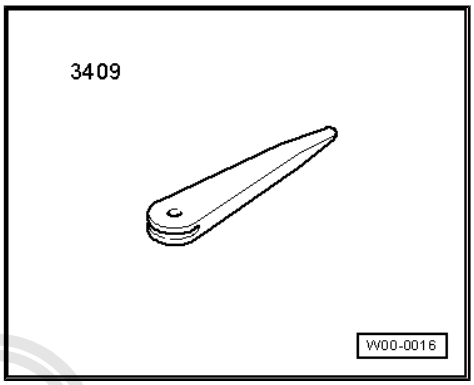

- Vehicle diagnostic, testing and information system - VAS 5051B-

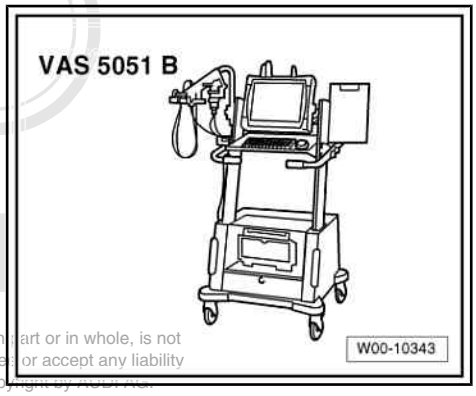

Protected by copyright. Copying for private or commercial purposes, in part or in whole, is not permitted unless authorised by AUDI AG. AUDI AG does not guarantee or accept any liability with respect to the correctness of information in this document. Copyright by AUDI AG.

- Socket and key - T40031-

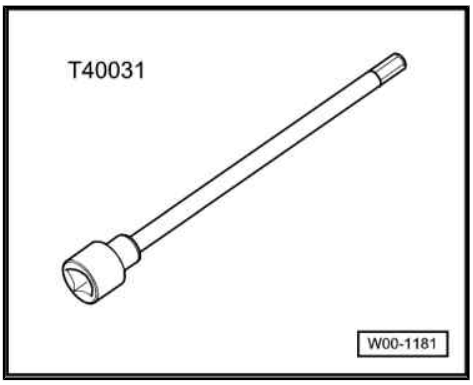

Procedure

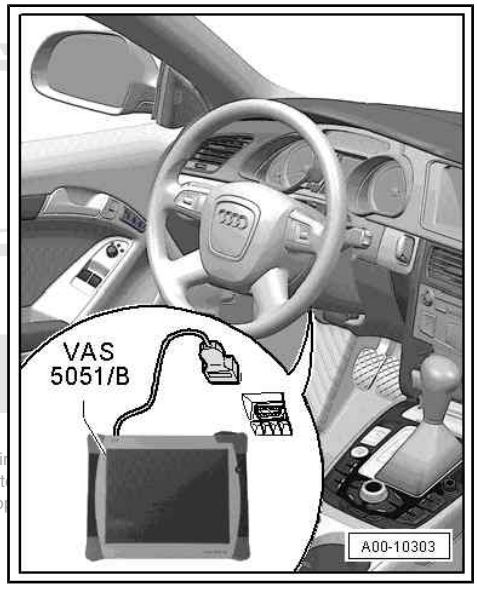

- "Guided Fault Finding" using vehicle diagnostic, testing and information system - VAS 5051B- has been completed and all faults have been eliminated.

– Using the vehicle diagnostic, testing and information system - VAS 5051B- in `Guided Fault Finding` mode, go to `Function/Component Selection` and select the following menu items:

♦ `Drive system`

♦ `0B6 gearbox`

♦ `01 - Self-diagnosis-compatible systems`

♦ `02 - Gearbox electronics`

Protected by copyright. Copying for private or commercial purposes, i
permitted unless authorised by AUDI AG. AUDI AG does not guarant
with respect to the correctness of information in this document. Co

♦ `02 - Gearbox electronics, Functions`

♦ `02 - Read measured values`

– Select measured value for "gear" from list on vehicle diagnostic, testing and information system - VAS 5051B- .

– Compare the following readings:

♦ Measured value for "gear" indicated on vehicle diagnostic, testing and information system - VAS 5051B-

♦ Selector lever position

♦ Gear indicated on selector lever position display - Y26- (on selector mechanism)

♦ Selector lever position display - Y6- in instrument cluster

Requirement:

- The displays should match

If the displays do not match:

– Adjust selector lever cable ⇒ page 39 .

If the displays cannot be matched by adjusting the selector lever cable:

Adjust selector lever cable to basic setting:

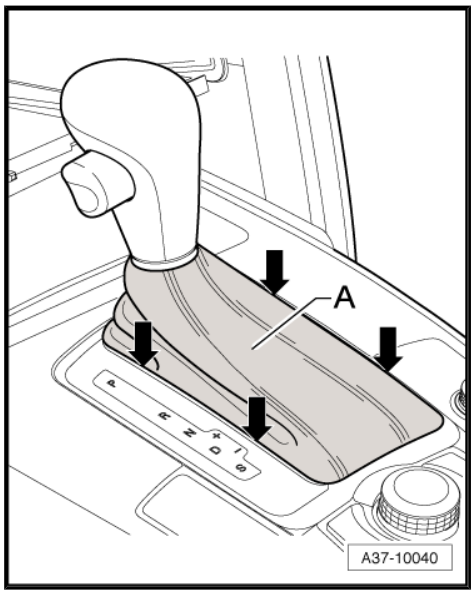

- Tightening torque ⇒ page 20

– Carefully lever retainer frame for selector lever boot -1- out of centre console -arrows- using removal wedge - 3409- and turn selector lever boot inside out over selector lever handle.

– Shift selector lever to position "D".

– Insert socket and key - T40031- through access hole -arrow- in selector mechanism and slacken bolt on selector lever cable approx. one turn.

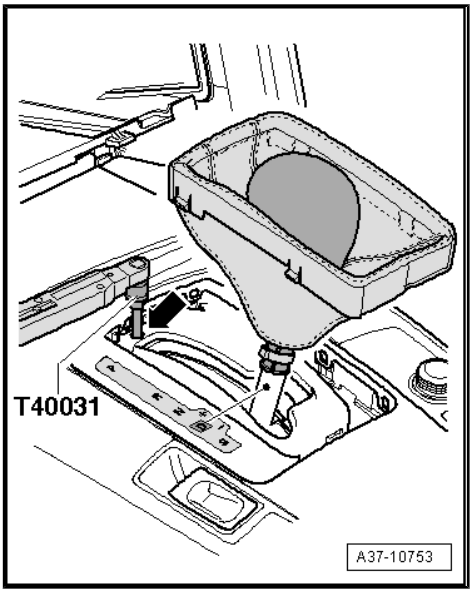

Note

- *Only loosen clamping bolt – do not remove.*
- *Clamping bolt can only be accessed with selector lever in position "D".*
- *With clamping bolt loosened, selector lever must remain in position "D".*

– Use removal lever - 80 - 200- to pry ball socket -1- on selector lever cable off selector shaft lever.

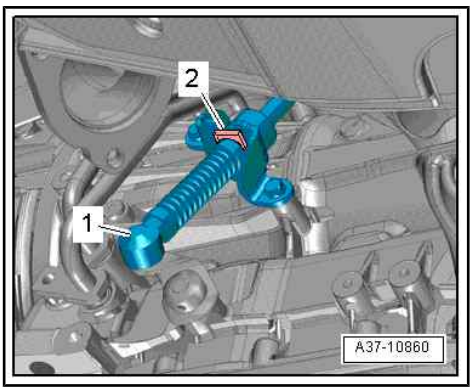

Note

- *Do not bend or kink the selector lever cable.*
- *Before installing, lightly grease cable eye and ball socket on selector lever cable with polycarbamide grease - G 052 142 A2- .*
- *-Item 2- can be disregarded.*

Protected by copyright. Copying for private or commercial purposes, in part or in whole, is not permitted unless authorised by AUDI AG. AUDI AG does not guarantee or accept any liability with respect to the correctness of information in this document. Copyright by AUDI AG.

– Press selector shaft lever -1- on gearbox towards the rear as far as it will go -arrow- until parking lock engages.

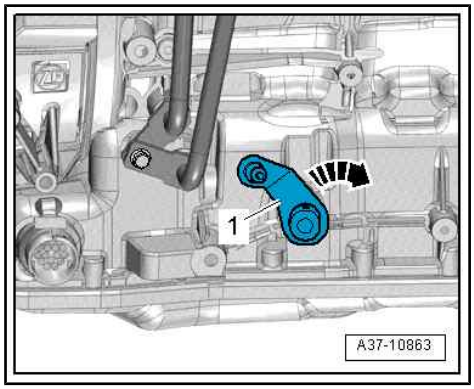

Note

When the parking lock has engaged it should no longer be possible to rotate both front wheels in one direction at the same time.

– Then push selector shaft lever forward 3 notches so that gearbox is in position “D”.

– Check that selector lever is also in position “D” inside the vehicle.

– With vehicle diagnostic, testing and information system - VAS 5051B- in `Guided Fault Finding mode`, select `02 - Gearbox electronics` and then the `Read measured values` function.

– Select “Measured value gear” on vehicle diagnostic, testing and information system - VAS 5051B- .

– Compare the following readings:

♦ Measured value for “gear” indicated on vehicle diagnostic, testing and information system - VAS 5051B-

♦ Selector lever position

♦ Gear indicated on selector lever position display - Y26- (on selector mechanism)

♦ Selector lever position display - Y6- in instrument cluster

Requirement:

• The displays should match

Protected by copyright. Copying for private or commercial purposes, in part or in whole, is not permitted unless authorised by AUDI AG. AUDI AG does not guarantee or accept any liability

– Carefully press ball socket -1- of selector lever cable onto selector shaft lever in this position.

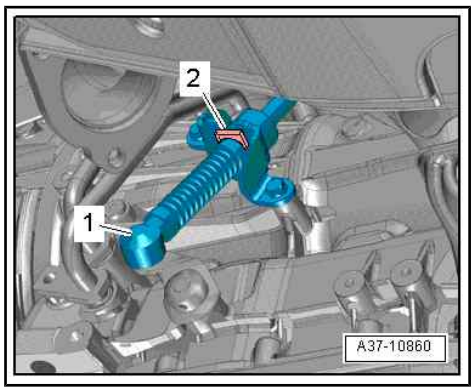

Note

♦ *Take care not to bend selector shaft lever when pressing on cable; support lever if necessary, as otherwise selector mechanism can no longer be adjusted accurately.*

♦ *-Item 2- can be disregarded.*

– Adjust selector lever cable ⇒ page 39 .

– Check selector mechanism ⇒ page 20 .

1.14 Renewing selector shaft oil seal

Special tools and workshop equipment required

♦ Removal lever - 80 - 200-

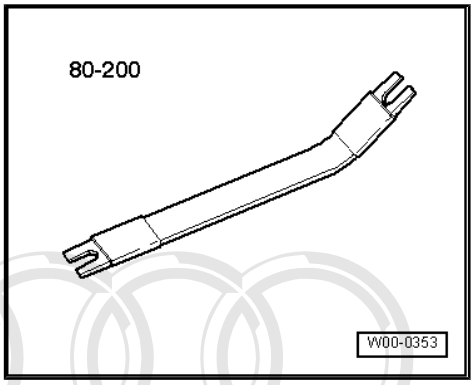

♦ Thrust piece - T10135-

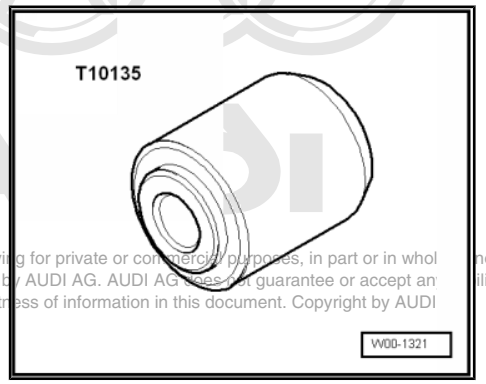

Protected by copyright. Copying for private or commercial purposes, in part or in whol not permitted unless authorised by AUDI AG. AUDI AG does not guarantee or accept an ility with respect to the correctness of information in this document. Copyright by AUDI

Removing

– Use removal lever - 80 - 200- to pry ball socket -1- on selector lever cable off selector shaft lever.

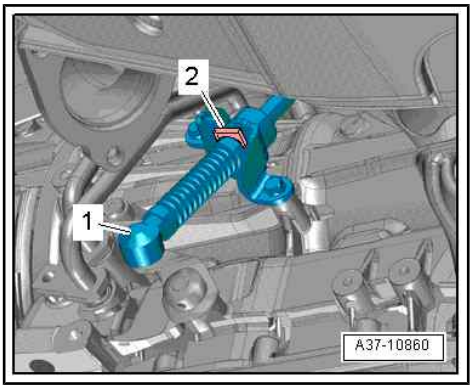

Note

Do not bend or kink the selector lever cable.

– Drive out roll pin -1- at selector shaft lever -2- -arrow- until it is possible to detach selector shaft lever from selector shaft.

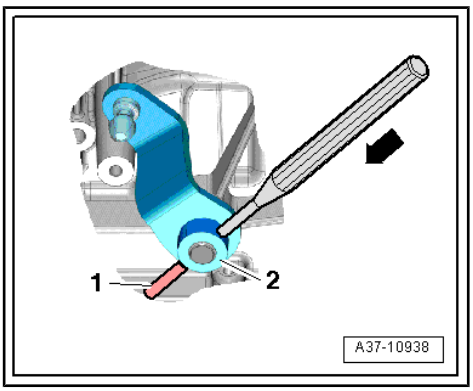

Caution

Risk of damage to running surface of selector shaft.

- *Apply screwdriver with care.*

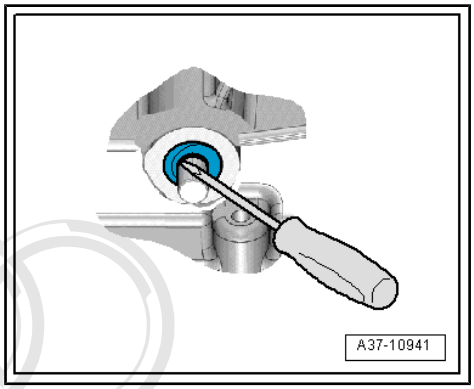

– Push a small screwdriver through the oil seal and pull it out.

Installing

Installation is carried out in reverse sequence; note the following:

– Lubricate outer circumference and space between sealing lips of new oil seal with ATF.

• Installation position: open side of oil seal points towards gearbox

– Fit oil seal onto selector shaft.

– Press on oil seal using thrust piece - T10135- and removal lever -A- as far as the stop; make sure that oil seal remains straight.

Protected by copyright. Copying for private or commercial purposes, in part or in whole, is not permitted unless authorised by AUDI AG. AUDI AG does not guarantee or accept any liability with respect to the correctness of information in this document. Copyright by AUDI AG.

– Before installing, drive the roll pin in the selector shaft lever back through the lever in the opposite direction.

– Push selector shaft lever onto selector shaft and drive in roll pin.

– Check ATF level ⇒ page 122 .

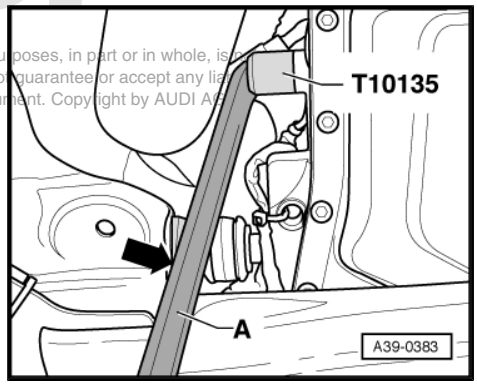

2 Removing and installing gearbox

⇒ “2.1 Removing gearbox”, page 47

⇒ “2.2 Installing gearbox”, page 86

⇒ “2.3 Tightening torques for gearbox”, page 110

2.1 Removing gearbox

⇒ “2.1.1 Removing gearbox, vehicles with 2.0 ltr. TFSI engine”, page 47

⇒ “2.1.2 Removing gearbox, vehicles with 3.2 ltr. FSI engine”, page 57

⇒ “2.1.3 Removing gearbox, vehicles with 4.2 ltr. FSI engine”, page 67

⇒ “2.1.4 Removing gearbox, vehicles with 3.0 ltr. TDI engine”, page 76

2.1.1 Removing gearbox, vehicles with 2.0 ltr. TFSI engine

Special tools and workshop equipment required

- Removal lever - 80 - 200-
- Engine and gearbox jack - V.A.G 1383 A-
- Stepladder - VAS 5085-
- Engine bung set - VAS 6122-
- Counterhold tool - T10172- with -T10172/5-
- Gearbox support - T40173-

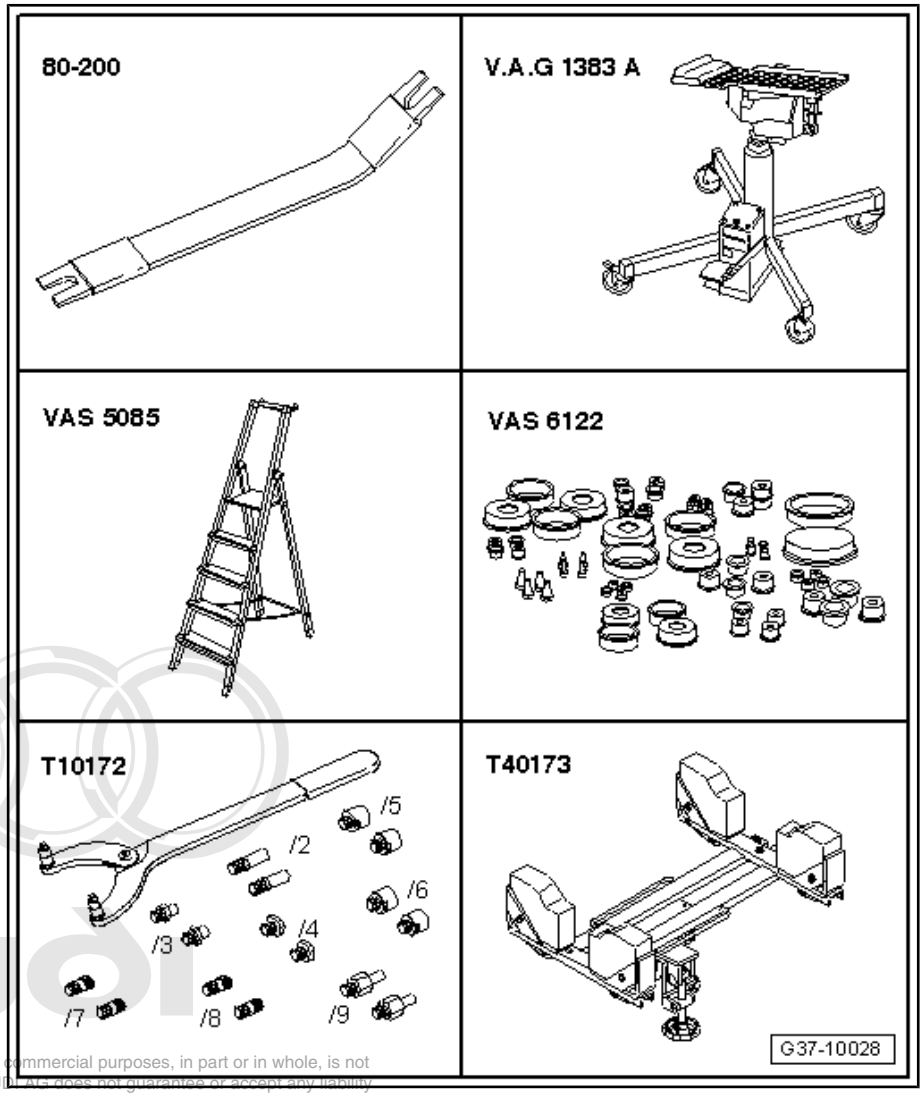

Protected by copyright. Copying for private or commercial purposes, in part or in whole, is not permitted unless authorised by AUDI AG. AUDI AG does not guarantee or accept any liability with respect to the correctness of information in this document. Copyright by AUDI AG.

- Support bracket - 10 - 222 A-

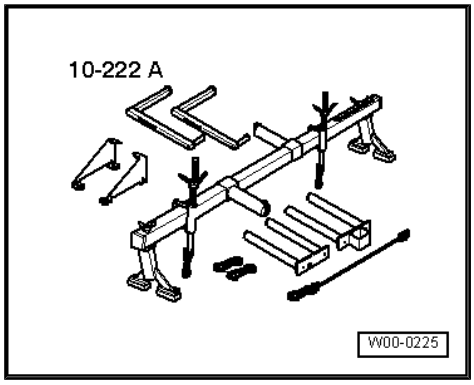

- Counterhold tool - T10355-

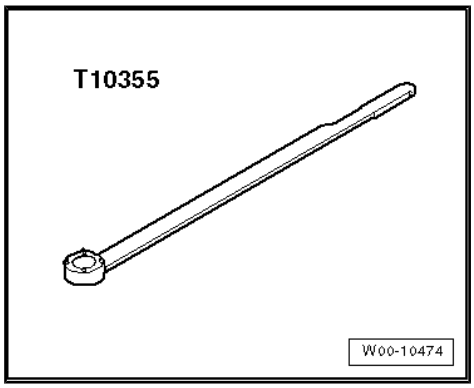

Removing

– Bring front wheels into straight-ahead position.
– Switch off ignition and take out ignition key.

> ⚠ **Caution**
>
> *When disconnecting the battery there is a risk of serious damage to electronic components:*
>
> - *Observe measures required when disconnecting battery ⇒ Electrical system; Rep. gr. 27 ; Battery; Disconnecting and connecting battery .*

– Disconnect battery ⇒ Electrical system; Rep. gr. 27 ; Battery; Disconnecting and connecting battery .
– Carefully detach engine cover panel from retaining studs in direction of -arrow-. Pull out engine cover panel evenly, without jerking.

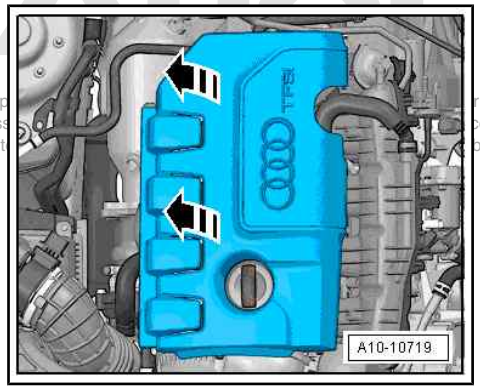

Protected by cop r in whole, is not permitted unless ccept any liability with respect t by AUDI AG.

– Remove cover -1- for drive shaft from wheel housing (both sides).

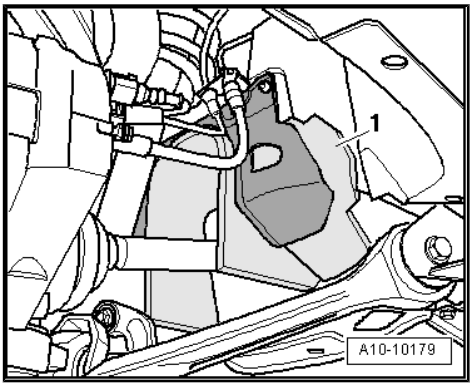

– Remove noise insulation ⇒ General body repairs, exterior; Rep. gr. 66 ; Noise insulation; Removing and installing noise insulation .

– Remove front silencer or front exhaust pipe ⇒ Rep. gr. 26 ; Exhaust pipes/silencers; Exploded view - silencers .

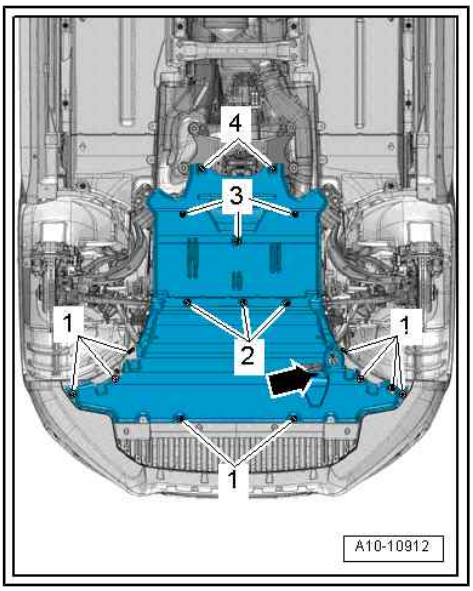

– Remove bolt -arrow- for ATF lines.

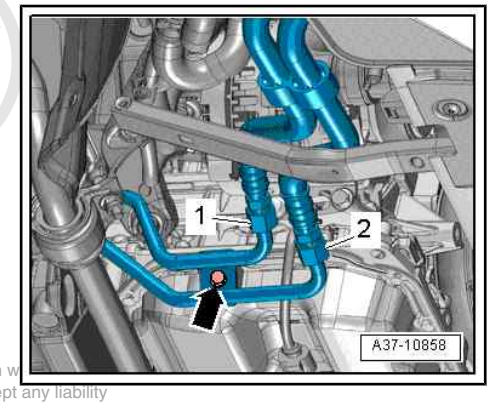

Protected by copyright. Copying for private or commercial purposes, in part or in w
permitted unless authorised by AUDI AG. AUDI AG does not guarantee or accept any liability
with respect to the correctness of information in this document. Copyright by AUDI AG.

Note

Place a cloth below the connection to catch escaping ATF.

– Remove bolts -1- and -2-, detach ATF lines from gearbox and tie up.

– Seal off open lines and connections with clean plugs from engine bung set - VAS 6122- .

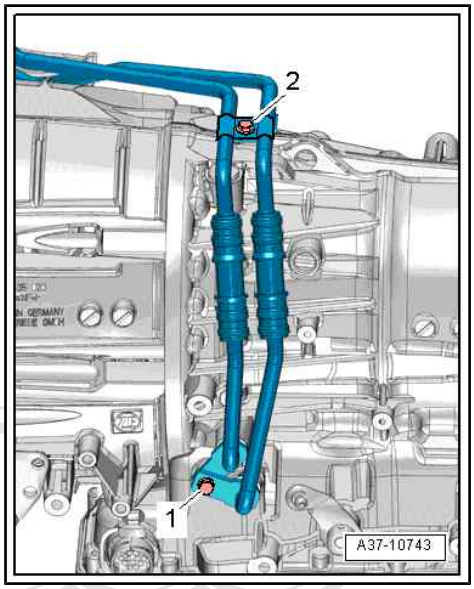

– Remove bolts -2 … 5- securing gearbox to engine (accessible from above).

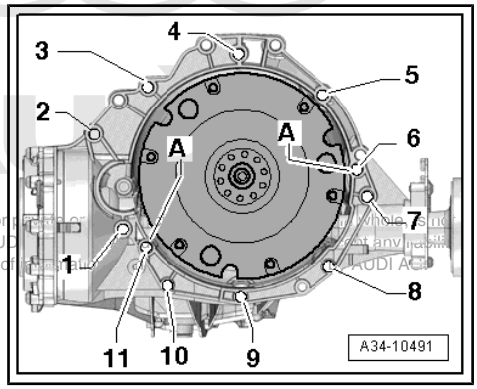

Protected by copyright. Copying for any purpose, in whole or in part, is not permitted unless authorised by AUDI AG. AUDI AG does not guarantee or accept any liability with respect to the correctness of information.

Note

- *Bolt -2- secures the starter to the gearbox and has an additional spacer sleeve -arrow-.*
- *Take off this sleeve when pulling out the top securing bolt for the starter.*

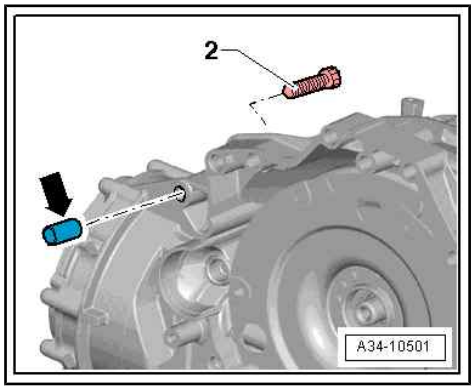

– Set up support bracket - 10 - 222 A- with adapter - 10 - 222 A /3- on suspension turrets (left and right), as shown in illustration.

– Hook spindle - 10 - 222 A /11- onto engine lifting eyes.

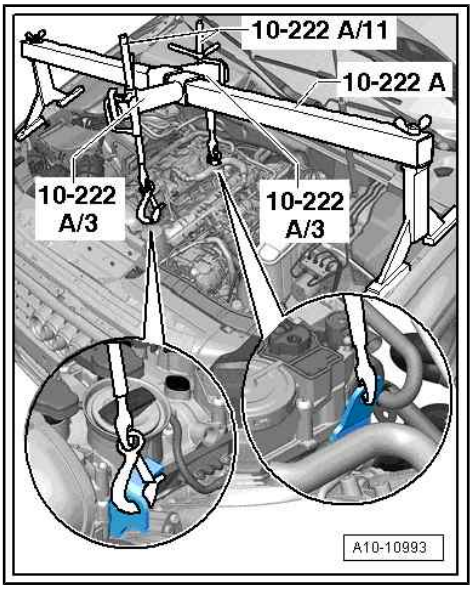

– Remove bolts -arrows- and detach heat shield for drive shaft (right-side).

– Unbolt drive shafts (left and right) from flange shafts on gearbox.

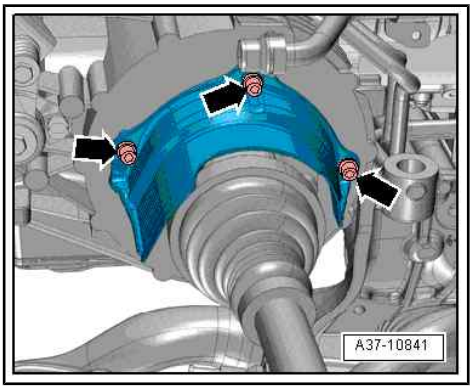

Caution

The gearbox control unit (mechatronic unit) can be damaged by electrostatic discharge.

- *Do not touch contact pins in gearbox connector with bare hands.*

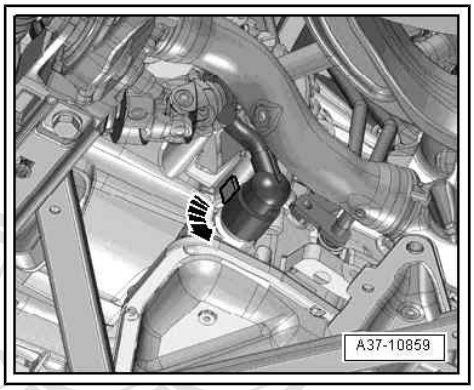

– Touch gearbox housing with your hand (without gloves) to discharge any static electricity.

– Turn fastener anti-clockwise -arrow- and unplug electrical connector on gearbox.

– Move wiring harness clear on gearbox.

Protected by copyright. Copying for private or commercial purposes, in part or in whole, is not permitted unless authorised by AUDI AG. AUDI AG does not guarantee or accept any liability with respect to the correctness of information in this document. Copyright by AUDI AG.

– If fitted, unplug electrical connector -2- for engine speed sender - G28- and move electrical wiring clear.

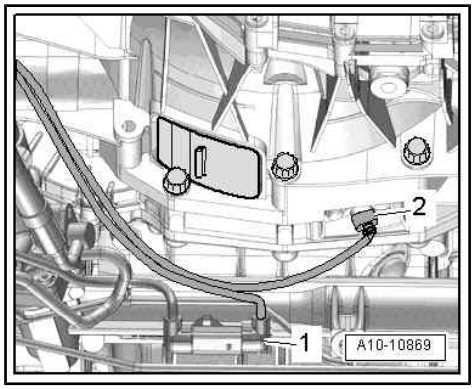

Note

-Item 1- can be disregarded.

– Use removal lever - 80 - 200- to pry ball socket -1- on selector lever cable off selector shaft lever.

– Pry off retaining clip -2- and detach selector lever cable from gearbox.

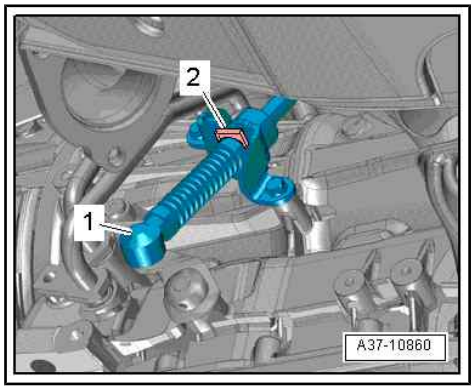

Note

Do not bend or kink the selector lever cable.

Caution

Risk of damage to parts of the running gear.

- ***Do not let the vehicle down on the wheels if the gearbox mounting, steering rack or subframe cross brace are not properly installed.***

A4 (all models), A5 Coupé:

– Remove nut -1- for hydraulic line for power steering.

– Remove bolts -arrows- and detach subframe cross brace.

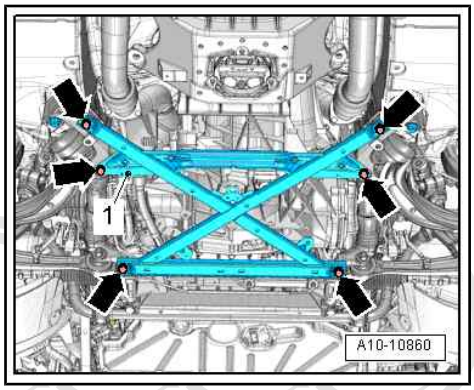

A5 Cabriolet:

– Remove bolt -2- (left and right).

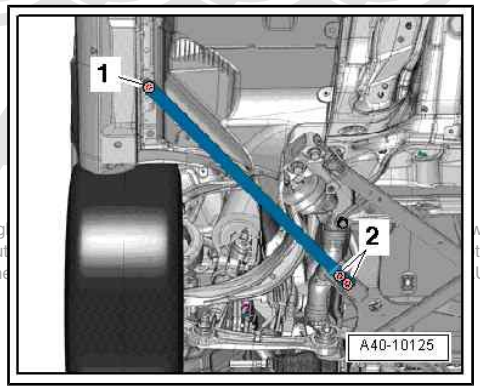

Note

-Item 1- can be disregarded.

Protected by copyrig
permitted unless aut
with respect to the
whole, is not
t any liability
UDI AG.

– Remove bolt -2- for hydraulic fluid line for power steering.

– Remove bolts -1- and -arrows- and detach subframe cross brace.

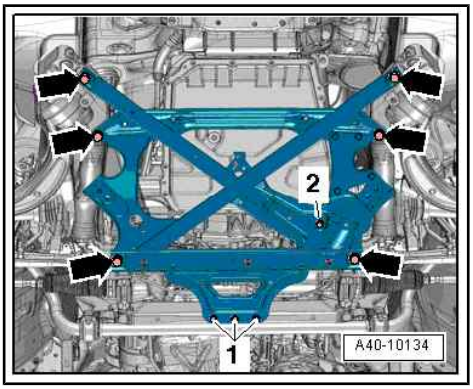

Continued for all vehicles:

> ⚠ Caution
>
> *Risk of damage to coil connector for airbag.*
>
> ♦ *Front wheels must be in straight-ahead position when steering column is detached from steering rack.*
>
> ♦ *Do not change position of steering wheel or steering rack after this step (if necessary, fix steering wheel in position with adhesive tape).*

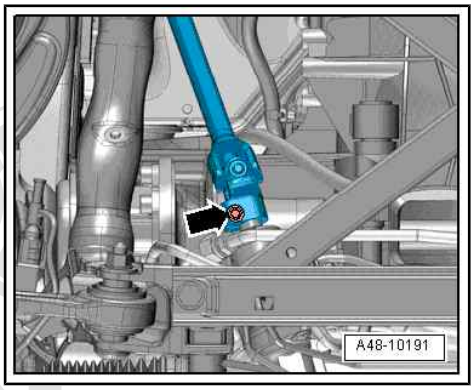

– Move steering wheel as far as possible downwards and to the rear, making use of the full range of the steering column adjuster.

– Turn steering wheel to centre position (wheels in straight-ahead position) and lock.

Protected by copyright. Copying for private or commercial purposes, in part or in whole, is not permitted unless authorised by AUDI AG. AUDI AG does not guarantee or accept any liability with respect to the correctness of information in this document. Copyright by AUDI AG.

– Remove bolt -arrow- for steering column ⇒ Running gear, axles, steering; Rep. gr. 48 ; Steering column; Exploded view - steering column .

– Press steering column -1- off steering rack -2- and push all the way up.

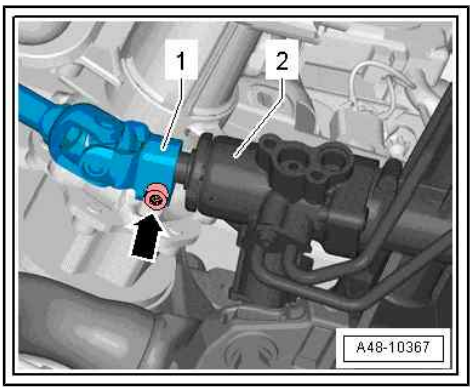

– Remove bolt -1-, press bracket for front exhaust pipe off gearbox and swivel towards rear -arrow-.

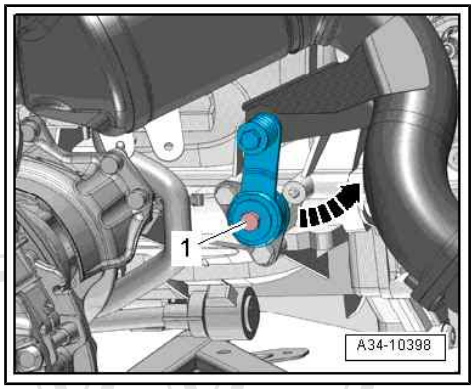

– Remove bolts -arrows- and detach heat shield for propshaft.

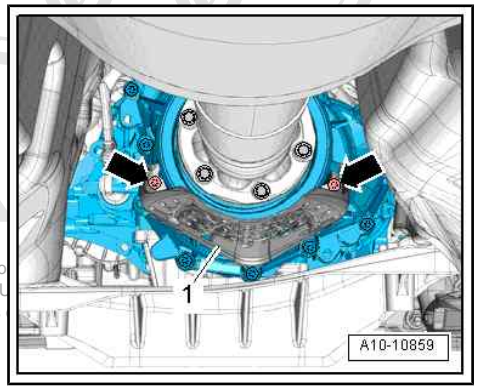

Protected by copyright. Copying fo
permitted unless authorised by AU
with respect to the correctness

– Remove securing bolts from connection between propshaft and gearbox (counterhold using counterhold tool - T10172- and -T10172/5-).
– Slide propshaft together towards rear final drive. The constant velocity joints can be moved axially.
– Tie propshaft up to one side.

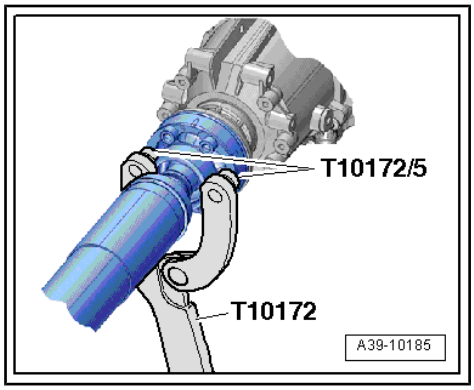

– Pull cover -1- off bottom of gearbox -arrow-.

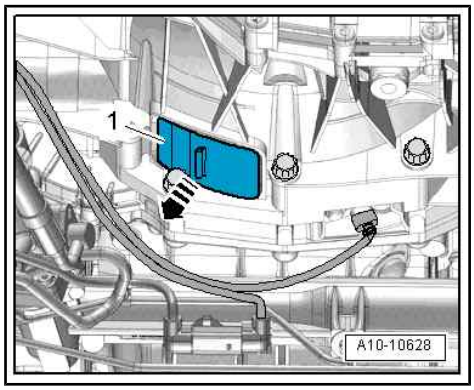

– Remove three bolts -arrow- for torque converter.

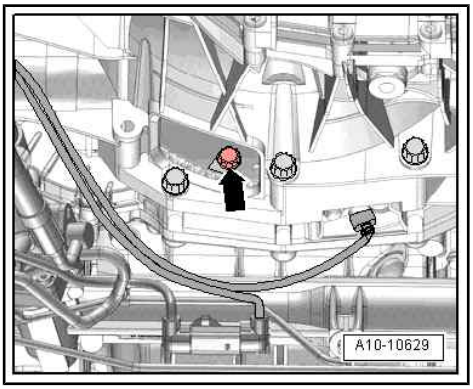

– To do so, turn crankshaft at vibration damper with counterhold tool - T10355- 120° in direction of engine rotation each time and counterhold crankshaft.

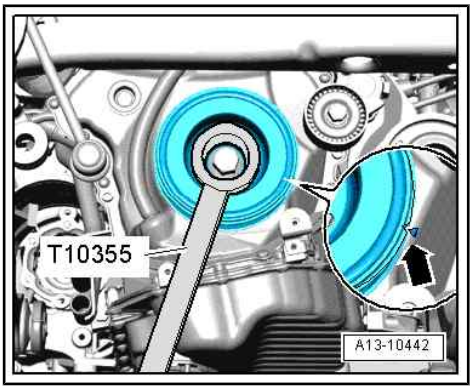

Note

-Arrow- can be disregarded.

– Remove bottom securing bolt -arrow 1- for starter from engine side.

– Detach starter -A- from gearbox.

– Remove engine/gearbox securing bolt -arrow 2-.

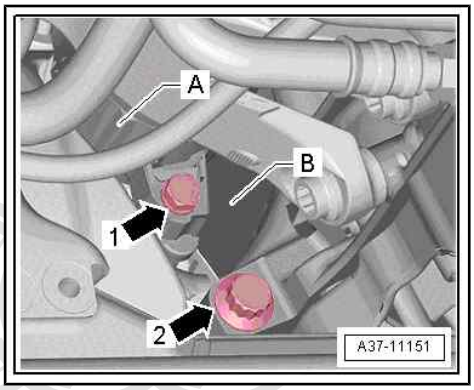

Note

End seal -B- can fall out after starter is detached.

– Remove remaining engine/gearbox securing bolts -6 … 10-.

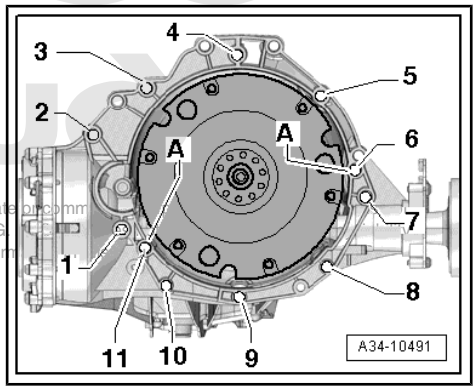

Protected by copyright. Copying for private or commercial purposes, in part or in whole, is not permitted unless authorised by AUDI AG. AUDI AG does not guarantee or assume any liability with respect to the correctness of information in this document.

– Position engine and gearbox jack - V.A.G 1383 A- with gearbox support - T40173- underneath gearbox and secure with tensioning strap -1- as shown in illustration.

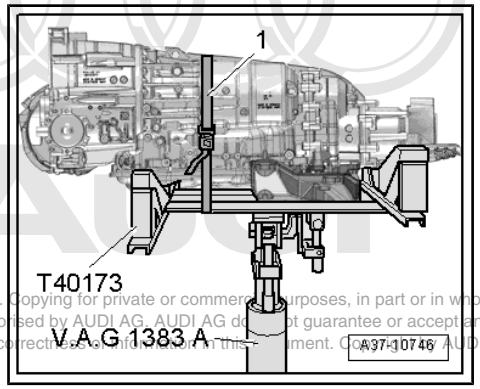

Protected by copyright. Copying for private or commercial purposes, in part or in whole, is not permitted unless authorised by AUDI AG. AUDI AG do not guarantee or accept any liability with respect to the correctness of information in this document. Copyright by AUDI AG.

Note

For illustration purposes, the gearbox support - T40173- is not shown.

– Remove bolts -arrows- for tunnel cross member.

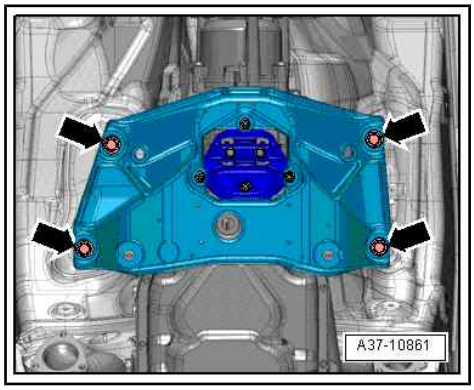

– Lower gearbox initially only by dimension -a- using engine and gearbox jack - V.A.G 1383 A- .

• Dimension -a- = 100 mm (maximum)

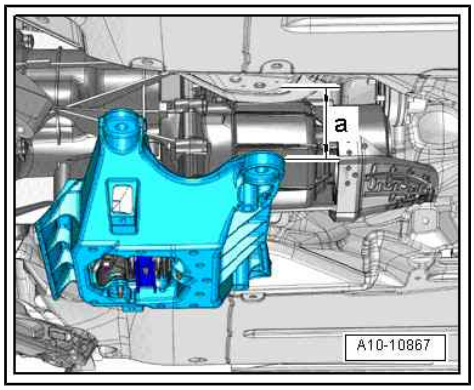

– Apply light tension to both spindles - 10 - 222 A /11- .

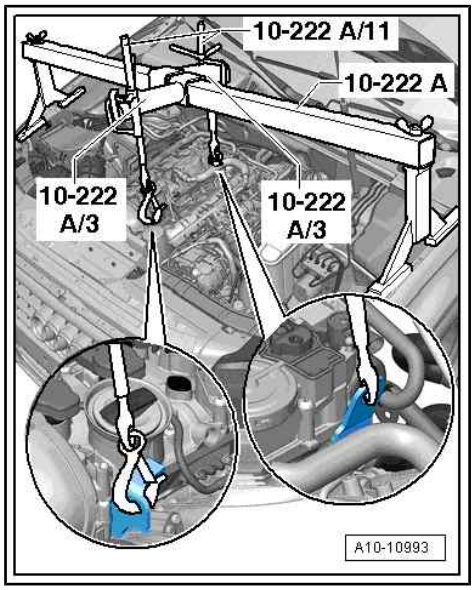

– Detach gearbox from engine and lower carefully using engine and gearbox jack - V.A.G 1383 A- .

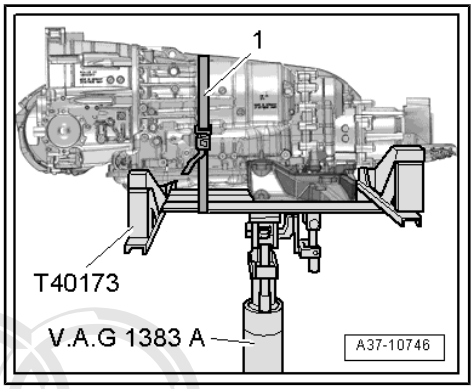

2.1.2 Removing gearbox, vehicles with 3.2 ltr. FSI engine

Special tools and workshop equipment required

- Support bracket - 10 - 222 A-
- Removal lever - 80 - 200-
- Engine and gearbox jack - V.A.G 1383 A-
- Stepladder - VAS 5085-
- Engine support bracket, basic set - T40091-
- Engine support bracket, supplementary set - T40093-

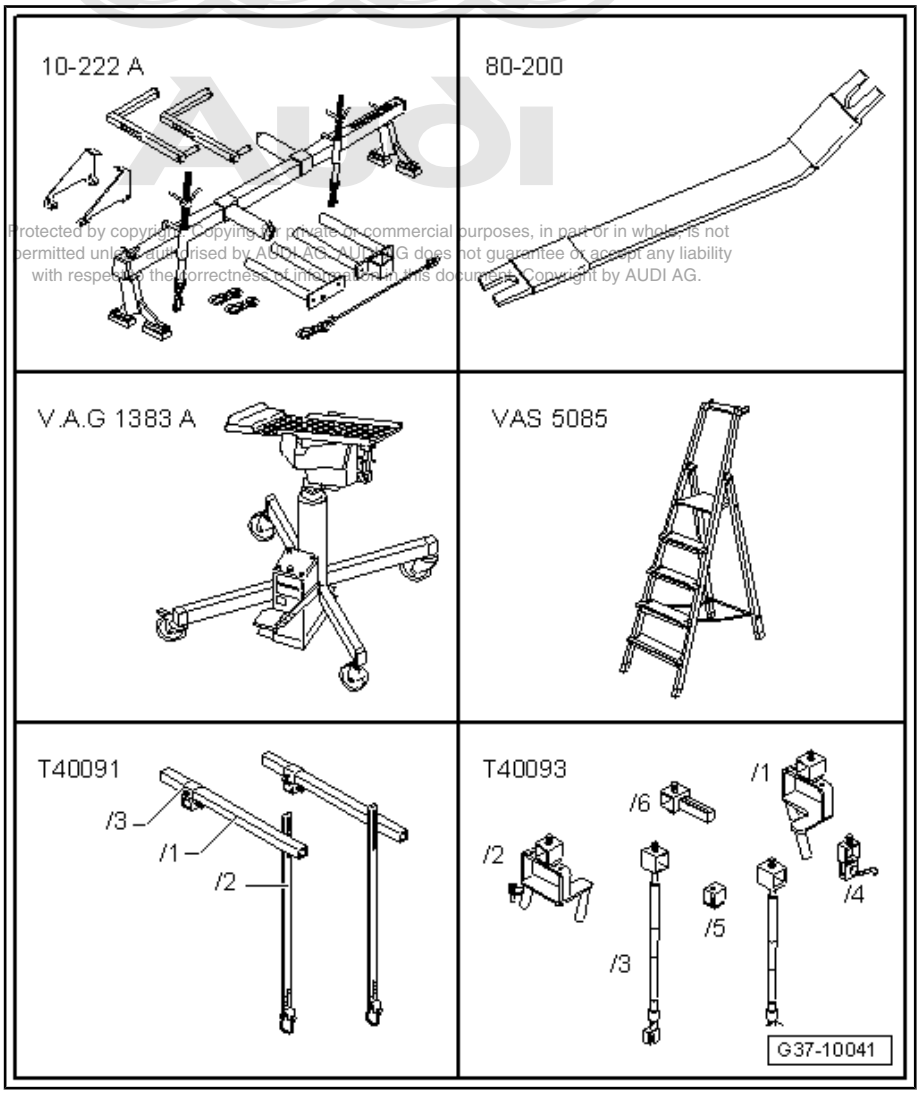

Protected by copyright. Copying for private or commercial purposes, in part or in whole, is not permitted unless authorised by AUDI AG. AUDI AG does not guarantee or accept any liability with respect to the correctness of information in this document. Copyright by AUDI AG.

- Used oil collection and extraction unit - V.A.G 1782-
- Engine bung set - VAS 6122-
- Counterhold tool - T10172- with -T10172/5-
- Adapter - T40058-
- Gearbox support - T40173-

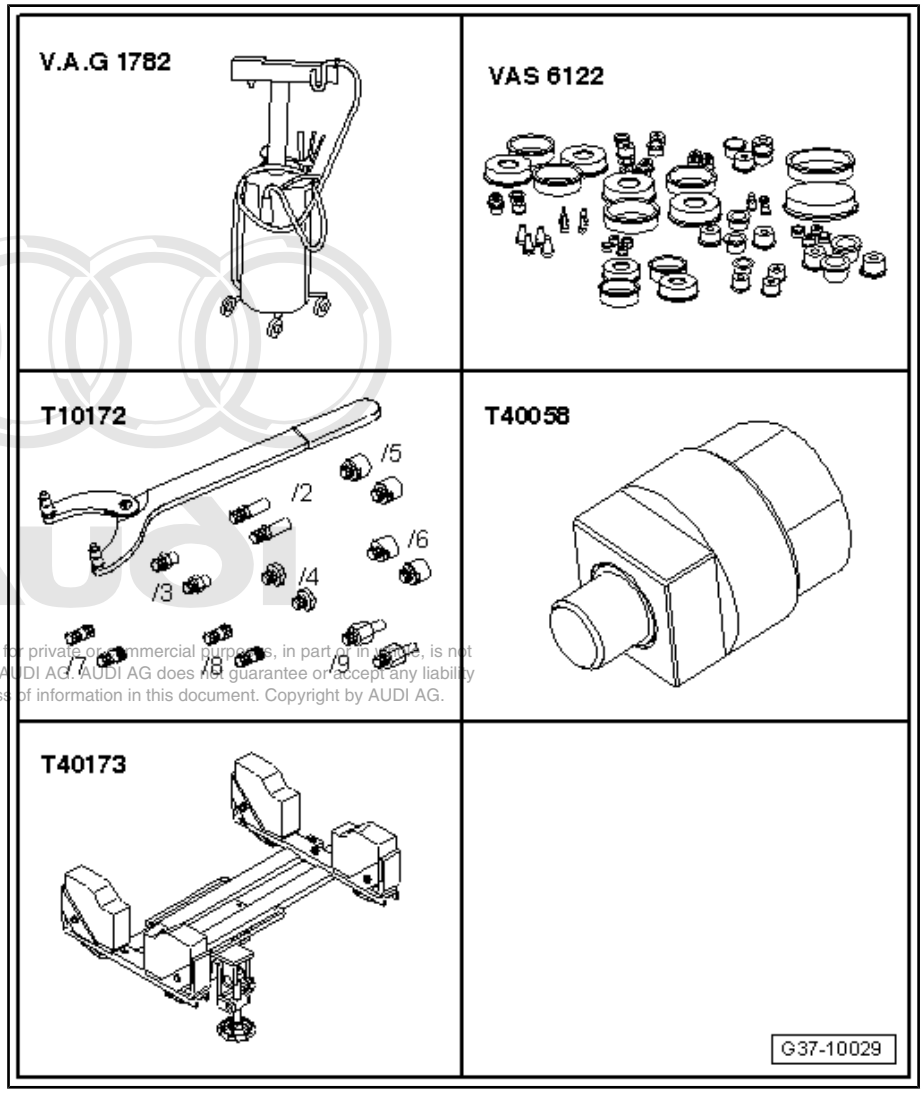

Protected by copyright. Copying for private or commercial purposes, in part or in whole, is not permitted unless authorised by AUDI AG. AUDI AG does not guarantee or accept any liability with respect to the correctness of information in this document. Copyright by AUDI AG.

Removing

– Bring front wheels into straight-ahead position.

– Switch off ignition and take out ignition key.

> ⚠ **Caution**
>
> *When disconnecting the battery there is a risk of serious damage to electronic components:*
>
> - *Observe the correct procedure for disconnecting the battery.*

– Disconnect battery ⇒ Electrical system; Rep. gr. 27 ; Battery; Disconnecting and connecting battery .

– Remove engine cover panel (rear) -arrows-.
– Remove both front wheels.

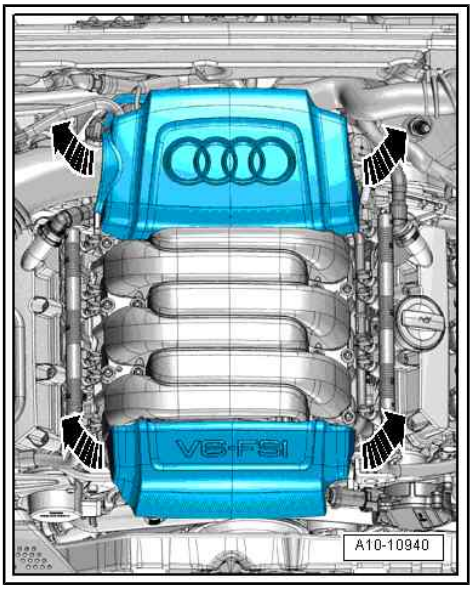

– Remove cover -1- for drive shaft from wheel housing (both sides).

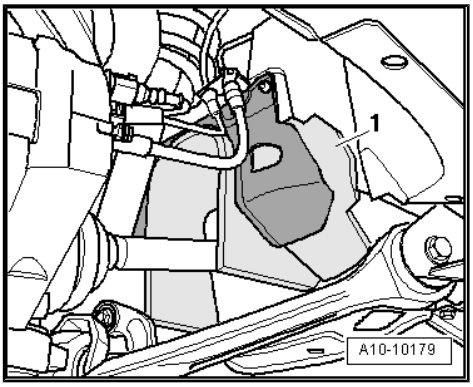

– Remove noise insulation ⇒ General body repairs, exterior; Rep. gr. 66 ; Noise insulation; Removing and installing noise insulation .
– Remove front silencer (left-side) ⇒ Rep. gr. 26 ; Exhaust pipes/silencers; Removing and installing front silencers .
– Remove catalytic converter (right-side) ⇒ Rep. gr. 26 ; Exhaust pipes/silencers; Exploded view - silencers .

Protected by copyright. Copying for private or commercial purposes, in part or in whole, is not permitted unless authorised by AUDI AG. AUDI AG does not guarantee or accept any liability with respect to the correctness of information in this document. Copyright by AUDI AG.

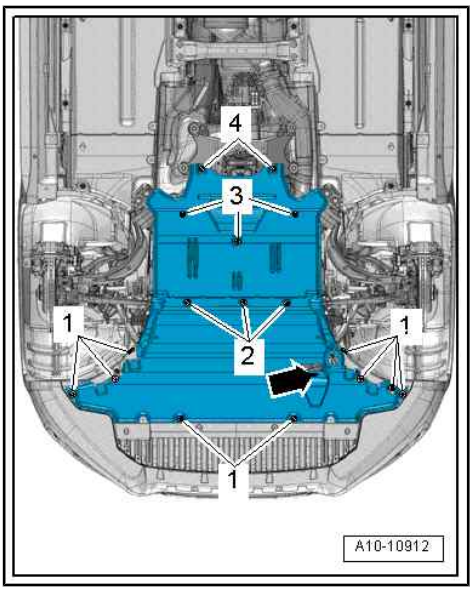

– Remove bolt -arrow- for ATF lines.

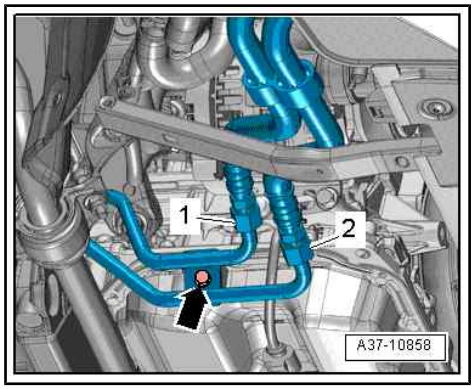

Note

Place a cloth below the connection to catch escaping ATF.

– Remove bolts -1- and -2-, detach ATF lines from gearbox and tie up.

– Seal off open lines and connections with clean plugs from engine bung set - VAS 6122- .

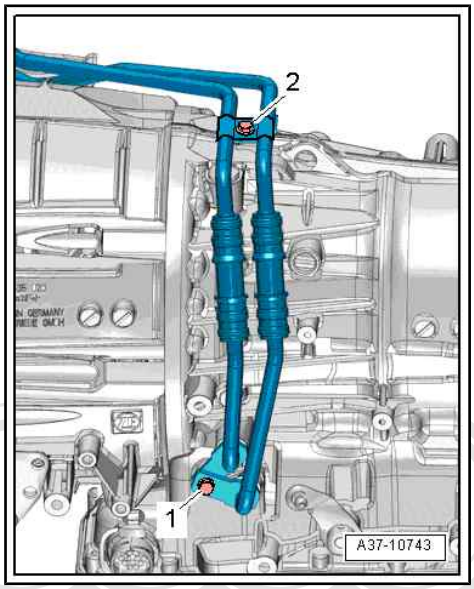

– Remove bolts -2 … 5- securing gearbox to engine (accessible from above).

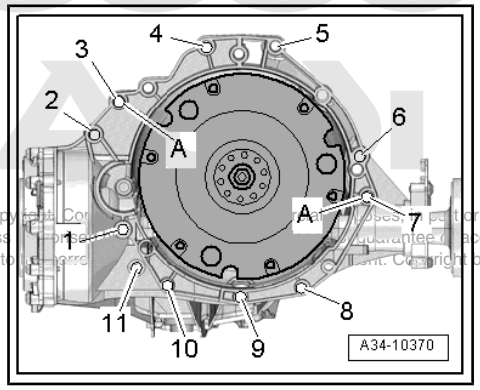

Protected by copyright. Copying for private or commercial purposes, in part or in whole, is not permitted unless authorised. AUDI AG does not guarantee or accept any liability with respect to the correctness of information in this document. Copyright by AUDI AG.

– Set up support bracket - 10 - 222 A- with connecting piece - T40091/3- on suspension turrets (left and right), as shown in illustration.

– Hook spindle - 10 - 222 A /11- onto engine lifting eye (right-side).

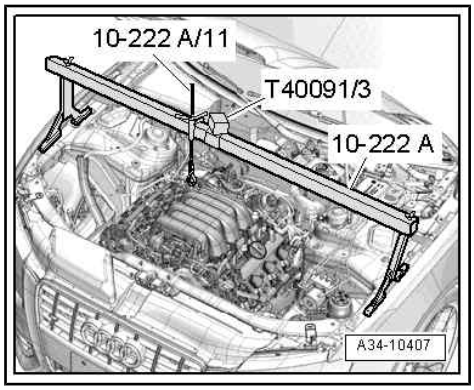

– Attach remaining parts of support bracket - 10 - 222 A- as shown in illustration. Set up support -T40093/3- on metal flange of longitudinal member.

– Hook spindle - 10 - 222 A /11- onto engine lifting eye (front left).

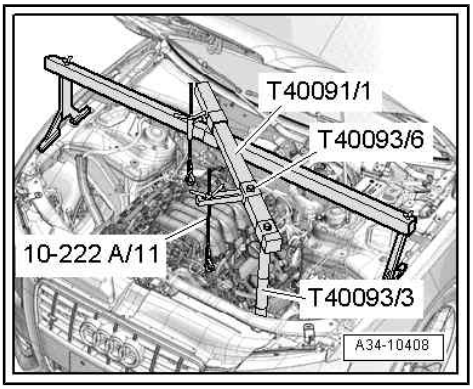

– Remove bolts -arrows- and detach heat shield for drive shaft (right-side).

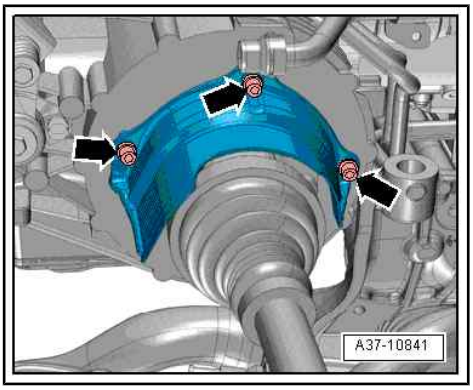

– Remove bolts -arrows- and detach heat shield for drive shaft (left-side).

– Unbolt drive shafts (left and right) from flange shafts on gearbox.

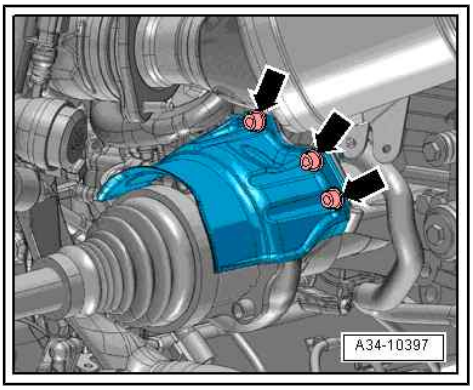

Caution

The gearbox control unit (mechatronic unit) can be damaged by electrostatic discharge.

- *Do not touch contact pins in gearbox connector with bare hands.*

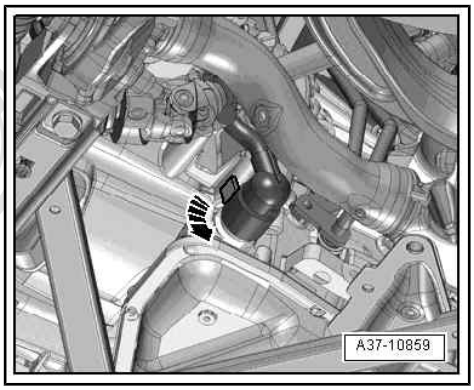

– Touch gearbox housing with your hand (without gloves) to discharge any static electricity.

– Turn fastener anti-clockwise -arrow- and unplug electrical connector on gearbox.

– Move wiring harness clear on gearbox.

Reproduction or duplication of this document for private or commercial purposes, in part or in whole, is not permitted unless authorised by AUDI AG. AUDI AG does not guarantee or accept any liability with respect to the correctness of information in this document. Copyright by AUDI AG.

– Disconnect electrical connector -2- for engine speed sender - G28- and move wiring clear.

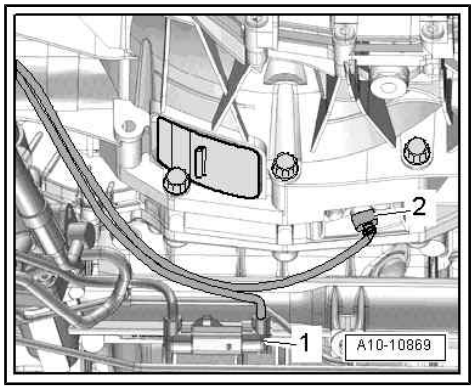

Note

-Item 1- can be disregarded.

– Use removal lever - 80 - 200- to pry ball socket -1- on selector lever cable off selector shaft lever.

– Pry off retaining clip -2- and detach selector lever cable from gearbox.

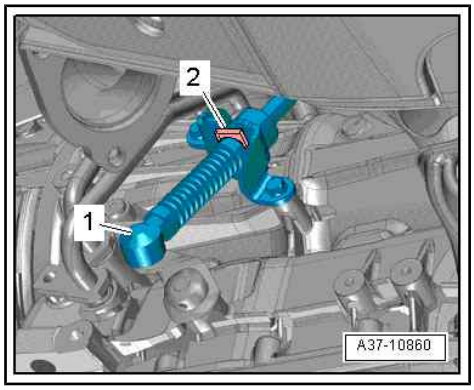

Note

Do not bend or kink the selector lever cable.

Caution

Risk of damage to parts of the running gear.

- ***Do not let the vehicle down on the wheels if the gearbox mounting, steering rack or subframe cross brace are not properly installed.***

A4 (all models), A5 Coupé:

– Remove nut -1- for hydraulic line for power steering.

– Remove bolts -arrows- and detach subframe cross brace.

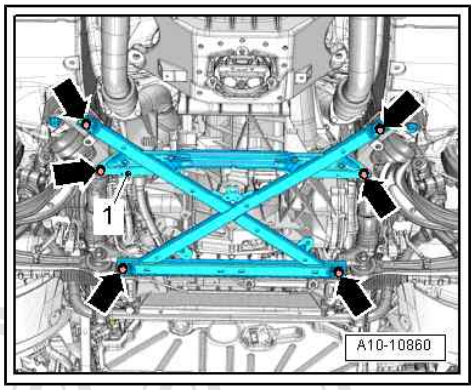

A5 Cabriolet:

– Remove bolt -2- (left and right).

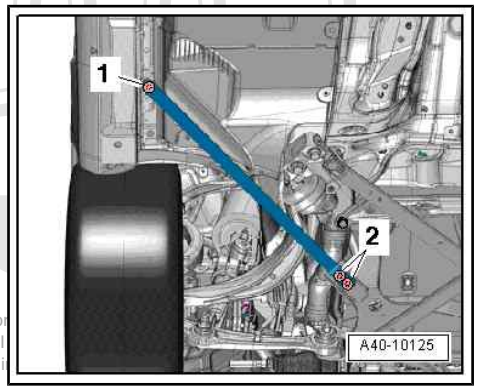

Note

-Item 1- can be disregarded.

Protected by copyright. Copying for pr
permitted unless authorised by AUDI
with respect to the correctness of i

– Remove bolt -2- for hydraulic fluid line for power steering.

– Remove bolts -1- and -arrows- and detach subframe cross brace.

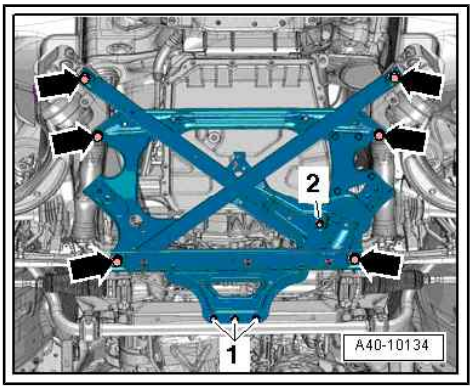

Continued for all vehicles:

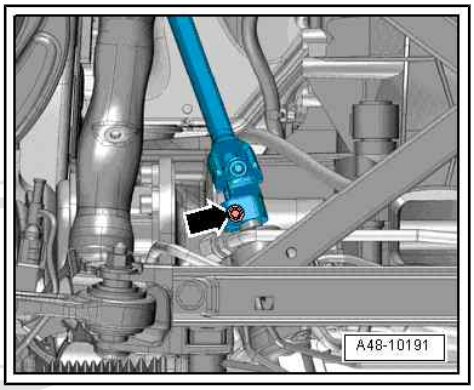

> ⚠ Caution
>
> *Risk of damage to coil connector for airbag.*
>
> - *Front wheels must be in straight-ahead position when steering column is detached from steering rack.*
> - *Do not change position of steering wheel or steering rack after this step (if necessary, fix steering wheel in position with adhesive tape).*

– Move steering wheel as far as possible downwards and to the rear, making use of the full range of the steering column adjuster.

– Turn steering wheel to centre position (wheels in straight-ahead position) and lock.

– Remove bolt -arrow- for steering column ⇒ Running gear, axles, steering; Rep. gr. 48 ; Steering column; Exploded view - steering column .

Protected by copyright. Copying for private or commercial purposes, in part or in whole, is not permitted unless authorised by AUDI AG. AUDI AG does not guarantee or accept any liability with respect to the correctness of information in this document. Copyright by AUDI AG.

– Press steering column -1- off steering rack -2- and push all the way up.

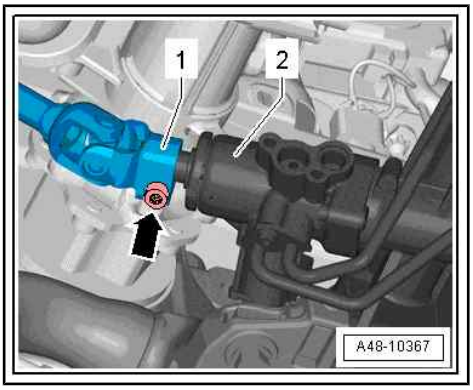

– Remove bolt -1-, press retainer off gearbox and swivel back towards rear -arrow-.

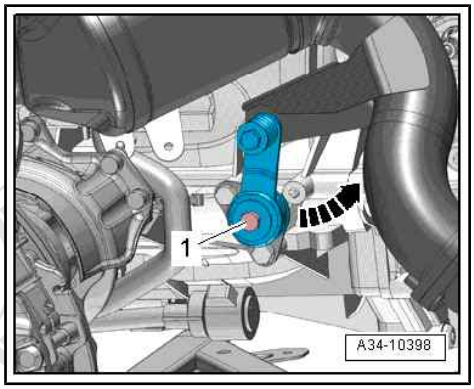

– Remove bolts -arrows- and detach heat shield for propshaft.

Protected by copyright. Copying for private o
permitted unless authorised by AUDI AG. AU
with respect to the correctness of informat

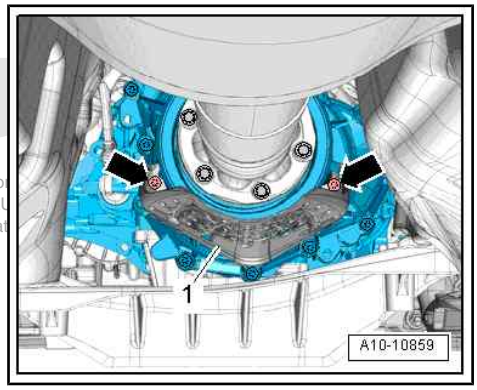

– Remove securing bolts from connection between propshaft and gearbox (counterhold using counterhold tool - T10172- with -T10172/5-).
– Slide propshaft together towards rear final drive. The constant velocity joints can be moved axially.
– Tie propshaft up to one side.

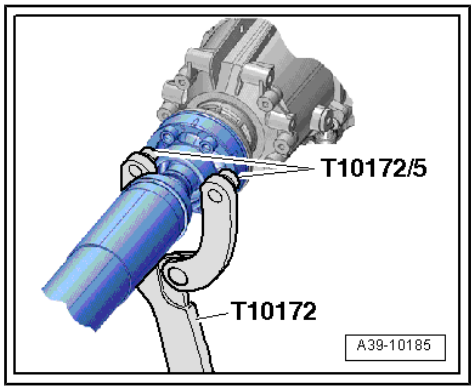

– Pull cover -1- off bottom of gearbox -arrow-.

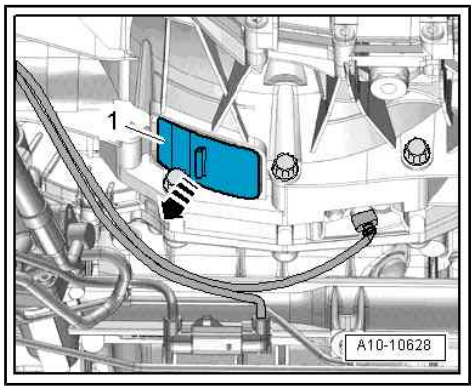

– Insert guide stud of adapter -T40058- as follows:
- The larger diameter -arrow 1- faces engine.
- The smaller diameter -arrow 2- faces adapter.

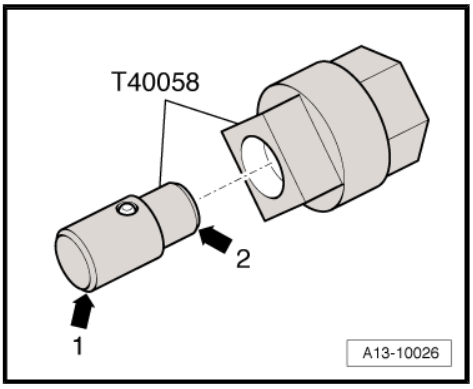

– To slacken bolts for torque converter, counterhold crankshaft with adapter - T40058- .

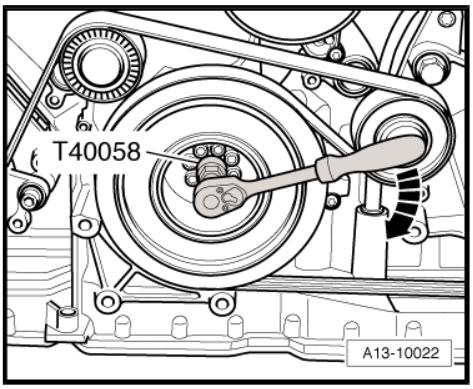

Note

When you then turn the crankshaft, only turn crankshaft in direction of engine rotation -arrow-.

– Remove 6 bolts -arrow- for torque converter (turn crankshaft 60° in direction of engine rotation each time).

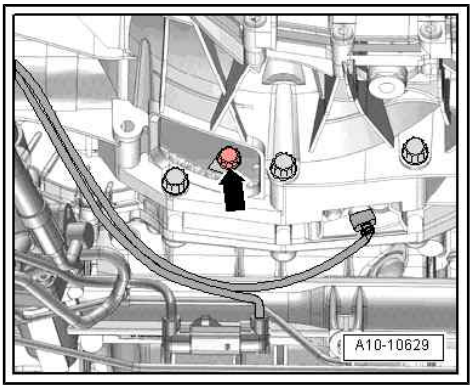

– Remove bottom securing bolt -arrow 1- for starter from engine side.
– Detach starter -A- from gearbox.
– Remove engine/gearbox securing bolt -arrow 2-.

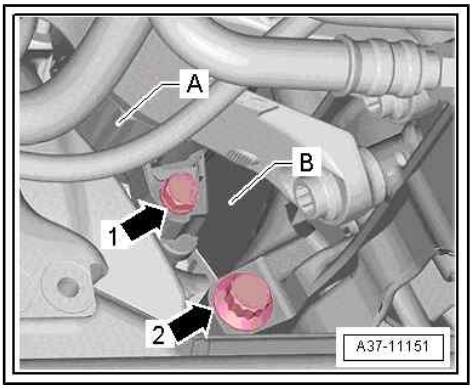

Note

End seal -B- can fall out after starter is detached.

Protected by copyright. Copying for private or commercial purposes, in part or in whole, is not permitted unless authorised by AUDI AG. AUDI AG does not guarantee or accept any liability with respect to the correctness of information in this document. Copyright by AUDI AG.

– Remove remaining engine/gearbox securing bolts -6 … 10-.

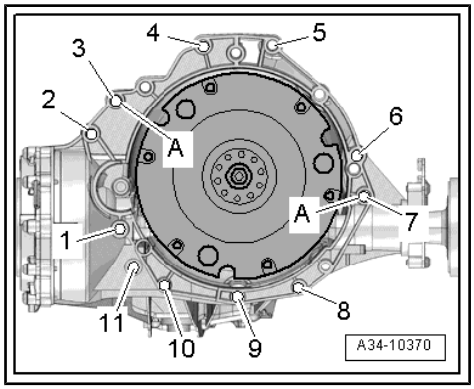

– Position engine and gearbox jack - V.A.G 1383 A- with gearbox support - T40173- underneath gearbox and secure with tensioning strap -1- as shown in illustration.

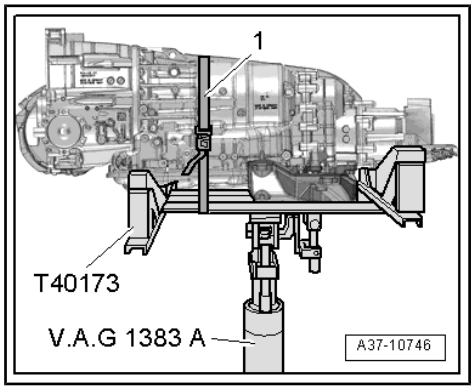

Note

For illustration purposes, the gearbox support - T40173- is not shown.

– Remove bolts -arrows- for tunnel cross member.

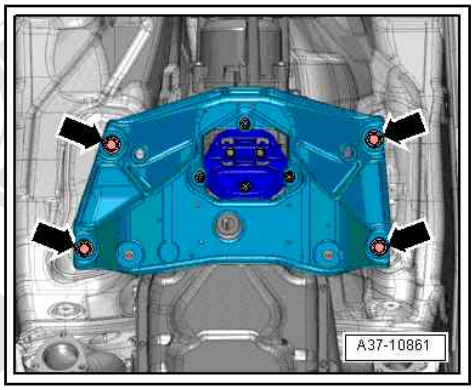

– Lower gearbox initially only by dimension -a- using engine and gearbox jack - V.A.G 1383 A- .

• Dimension -a- = 100 mm (maximum)

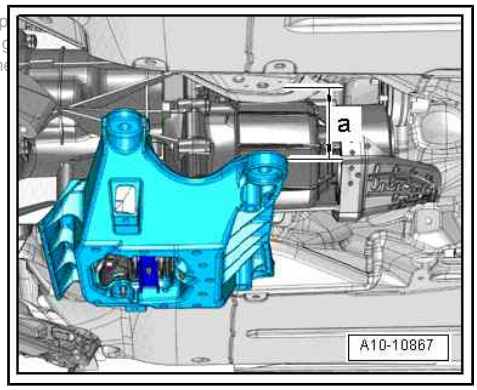

Copyright by Audi AG. Copyright for the use of commercial purp
Permitted unless authorised by AUDI AG. AUDI AG does not g
with respect to the correctness of information in this docume

– Apply light tension to both spindles - 10 - 222 A /11- .

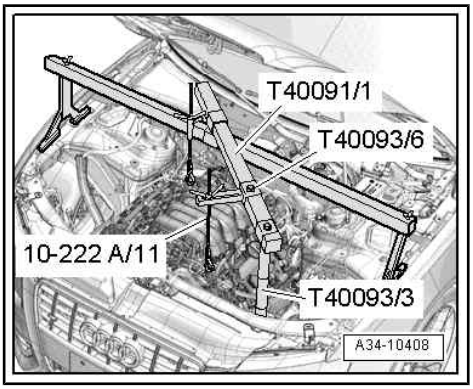

– Detach gearbox from engine and lower carefully using engine and gearbox jack - V.A.G 1383 A- .

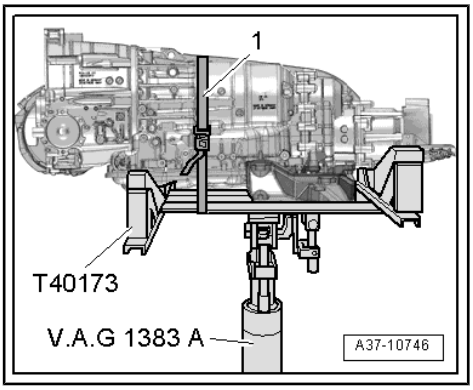

2.1.3 Removing gearbox, vehicles with 4.2 ltr. FSI engine

Protected by copyright. Copying for private or commercial purposes, in part or in whole, is not permitted unless authorised by AUDI AG. AUDI AG does not guarantee or accept any liability with respect to the correctness of information in this document. Copyright by AUDI AG.

Special tools and workshop equipment required

- Removal lever - 80 - 200-
- Engine and gearbox jack - V.A.G 1383 A-
- Stepladder - VAS 5085-
- Engine bung set - VAS 6122-
- Counter-hold tool - T10172- with -T10172/5- and - T10172/7-
- Gearbox support - T40173-

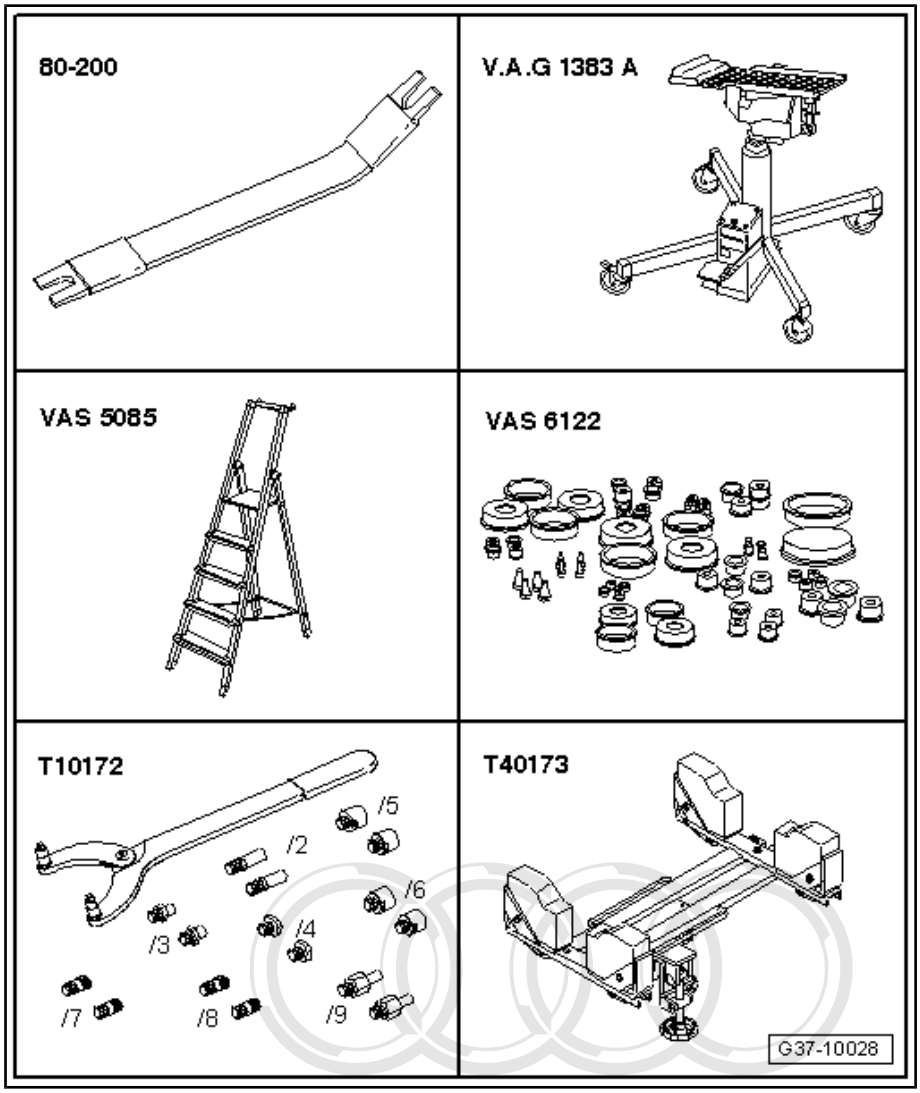

Removing

– Bring front wheels into straight-ahead position.

– Switch off ignition and take out ignition key.

Protected by copyright. Copying for private or commercial purposes, in part or in whole, is not permitted unless authorised by AUDI AG. AUDI AG does not guarantee or accept any liability with respect to the correctness of information in this document. Copyright by AUDI AG.

Caution

When disconnecting the battery there is a risk of serious damage to electronic components:

- *Observe the correct procedure for disconnecting the battery.*

– Disconnect battery ⇒ Electrical system; Rep. gr. 27 ; Battery; Disconnecting and connecting battery .

– Remove engine cover panel -arrows-.

– Remove plenum chamber partition panel ⇒ General body repairs, exterior; Rep. gr. 50 ; Bulkhead; Exploded view - plenum chamber partition panel .

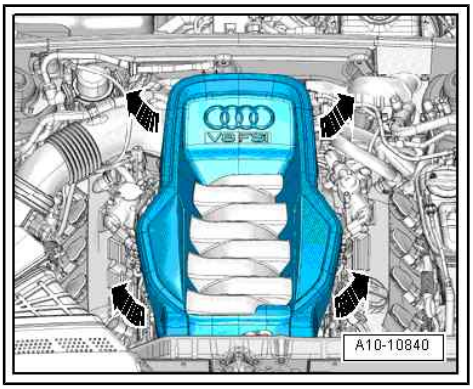

– Remove bolts -arrows-.

– Unplug electrical connector at coolant shortage indicator switch - F66- and move coolant expansion tank to one side with coolant hoses -1, 2, 3- attached.

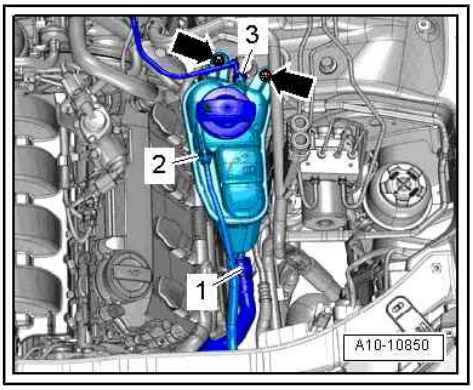

Protected by copyright. Copying for private or commercial purposes, in part or in whole, is permitted unless authorised by AUDI AG. AUDI AG does not guarantee or accept any liability with respect to the correctness of information in this document. Copyright by AUDI AG

Note

Place a cloth below to catch escaping ATF.

– Unscrew bolt -2- and nut -3-.

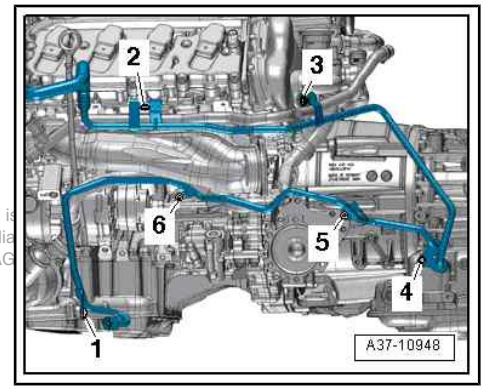

Note

-Items 1, 4, 5 and 6- can be disregarded.

– Remove bolts -2 … 5- securing gearbox to engine (accessible from above).

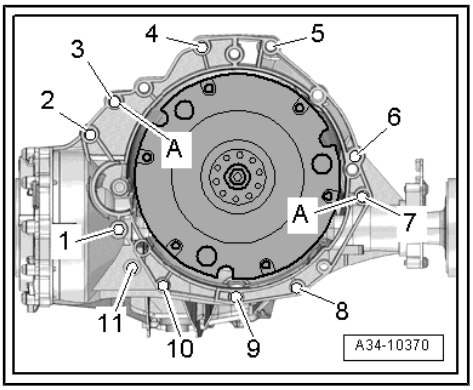

– Remove both front wheels.

– Remove cover -1- for drive shaft from wheel housing (both sides).

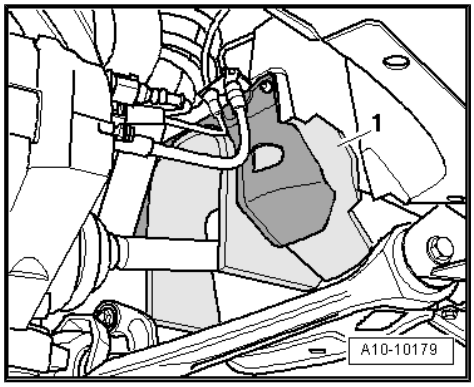

– Remove noise insulation ⇒ General body repairs, exterior; Rep. gr. 66 ; Noise insulation; Removing and installing noise insulation .

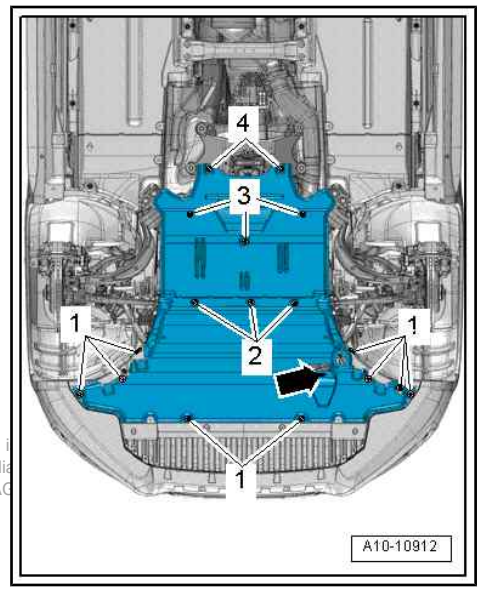

Protected by copyright. Copying for private or commercial purposes, in part or in whole, i
permitted unless authorised by AUDI AG. AUDI AG does not guarantee or accept any lia
with respect to the correctness of information in this document. Copyright by AUDI AG

– Remove bolts -arrows- and detach heat shield for drive shaft (right-side).

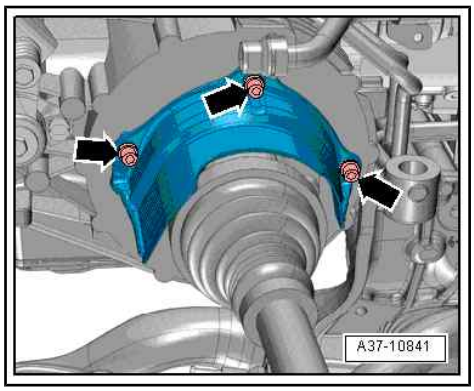

– Remove bolts -arrows- and detach heat shield for drive shaft (left-side).

– Unbolt drive shafts (left and right) from flange shafts on gearbox.

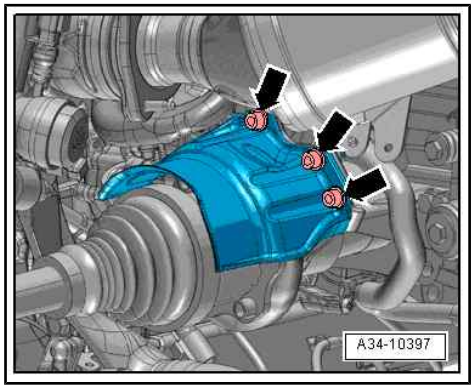

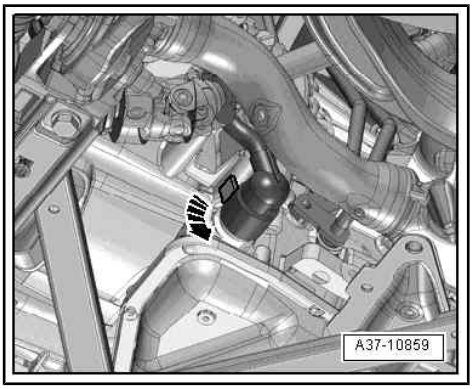

Caution

The gearbox control unit (mechatronic unit) can be damaged by electrostatic discharge.

- *Do not touch contact pins in gearbox connector with bare hands.*

– Touch gearbox housing with your hand (without gloves) to discharge any static electricity.
– Turn fastener anti-clockwise -arrow- and unplug electrical connector on gearbox.
– Move wiring harness clear on gearbox.

Caution

Risk of damage to parts of the running gear.

- *Do not let the vehicle down on the wheels if the gearbox mounting, steering rack or subframe cross brace are not properly installed.*

A4 (all models), A5 Coupé:

– Remove nut -1- for hydraulic line for power steering.
– Remove bolts -arrows- and detach subframe cross brace.

Protected by copyright. Copying for private or commercial purposes, in part or in whole, is not permitted unless authorised by AUDI AG. AUDI AG does not guarantee or accept any liability with respect to the correctness of information in this document. Copyright by AUDI AG.

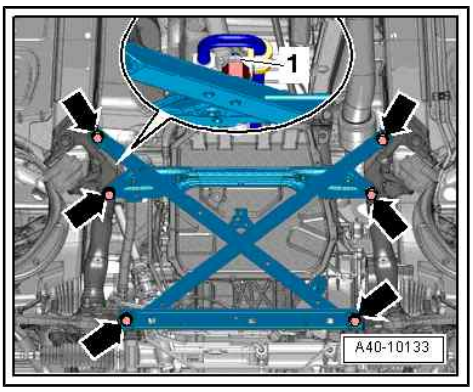

A5 Cabriolet:

– Remove bolt -2- (left and right).

Note

-Item 1- can be disregarded.

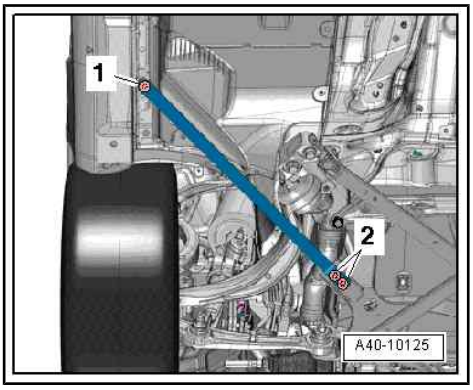

– Remove bolt -2- for hydraulic fluid line for power steering.

– Remove bolts -1- and -arrows- and detach subframe cross brace.

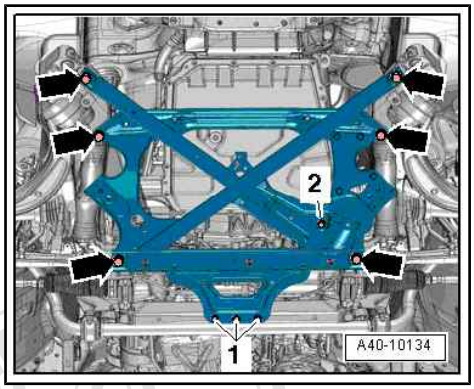

Continued for all vehicles:

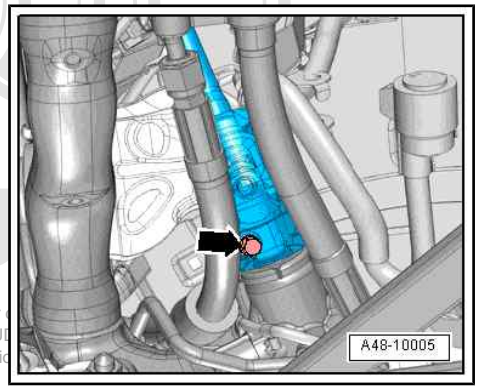

Caution

Risk of damage to coil connector for airbag.

- *Front wheels must be in straight-ahead position when steering column is detached from steering rack.*
- *Do not change position of steering wheel or steering rack after this step (if necessary, fix steering wheel in position with adhesive tape).*

Protected by copyright. Copying for private or
permitted unless authorised by AUDI AG. AU
with respect to the correctness of informatio

– Move steering wheel as far as possible downwards and to the rear, making use of the full range of the steering column adjuster.

– Turn steering wheel to centre position (wheels in straight-ahead position) and lock.

– Remove bolt -arrow- for steering column ⇒ Running gear, axles, steering; Rep. gr. 48 ; Steering column; Exploded view - steering column .

– Press steering column off steering rack and push all the way up.

– Unplug electrical connectors -1- on steering rack and -2- for engine speed sender - G28- and move electrical wiring clear.

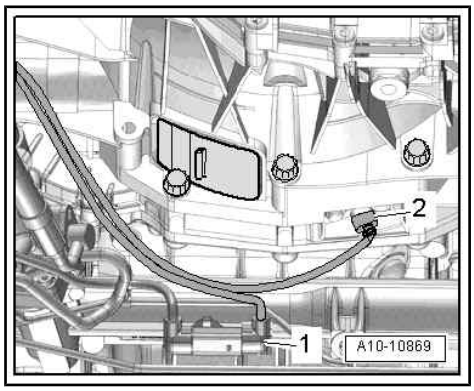

– Use removal lever - 80 - 200- to pry ball socket -1- on selector lever cable off selector shaft lever.
– Pry off retaining clip -2- and detach selector lever cable from gearbox.

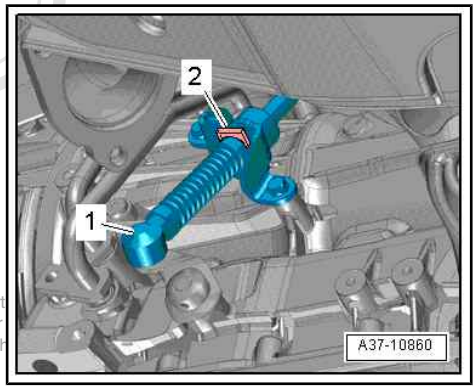

Note

Do not bend or kink the selector lever cable.

Protected by copyright. Copying for private or commercial purposes, in part
permitted unless authorised by AUDI AG. AUDI AG does not guarantee or
with respect to the correctness of information in this document. Copyrigh

– Remove bolt -2-.
– Push retaining bracket in direction of -arrow B- and pivot to the rear -arrow A-.

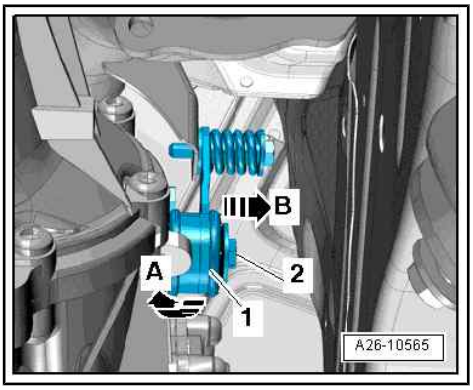

– Remove bolts -1- and -2- and detach retaining bracket with spring.
– Unscrew bolts -arrows- and detach bracket.

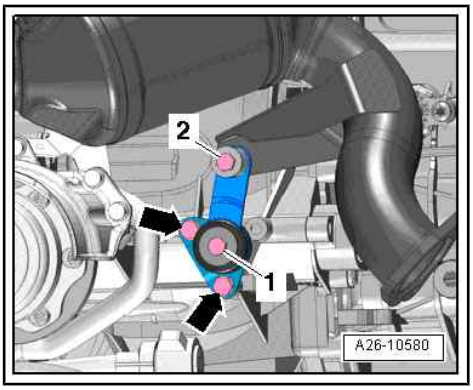

Caution

The flexible joints in the front silencer can be damaged.

- *The flexible joints in the front silencer must not be bent further than 10°.*

– Unfasten clamps -1- and -2-, slide towards rear and tie front silencers (left and right) to noise insulation panels (left and right) with cable ties.

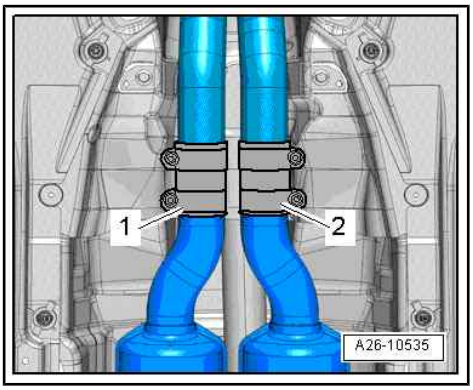

– Remove bolts -arrows- and detach heat shield for propshaft.

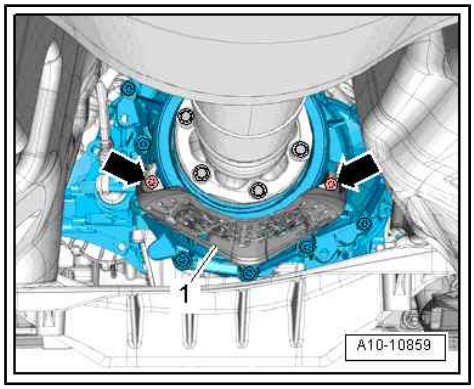

– Remove securing bolts from connection between propshaft and gearbox (counterhold using counterhold tool - T10172- with -T10172/5-).
– Slide propshaft together towards rear final drive. The constant velocity joints can be moved axially.
– Tie propshaft up to one side.

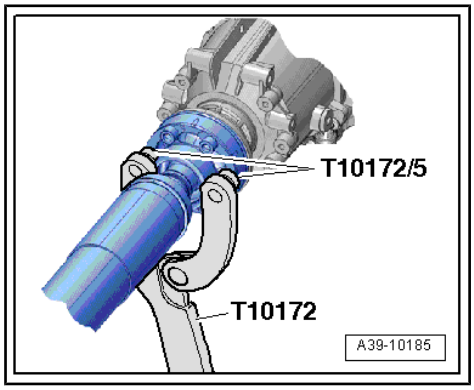

Note

Place a cloth below to catch escaping ATF.

Protected by copyright. Copying for private or commercial purposes, in part or in whole, is not permitted unless authorised by AUDI AG. AUDI AG does not guarantee or accept any liability with respect to the correctness of information in this document. Copyright by AUDI AG.

– Remove bolts -1, 4, 5, 6-.
– Press ATF line to one side.
– Seal off open lines and connections with clean plugs from engine bung set - VAS 6122- .

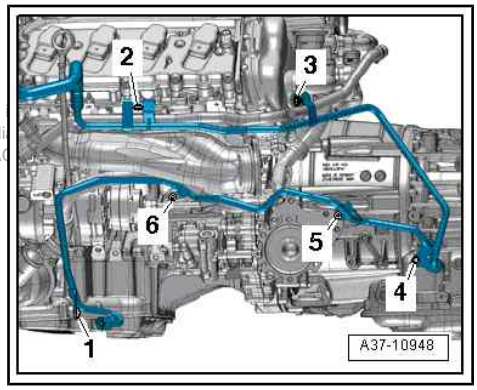

Note

Items -2- and -3- can be disregarded.

– Pull cover -1- off bottom of gearbox -arrow-.

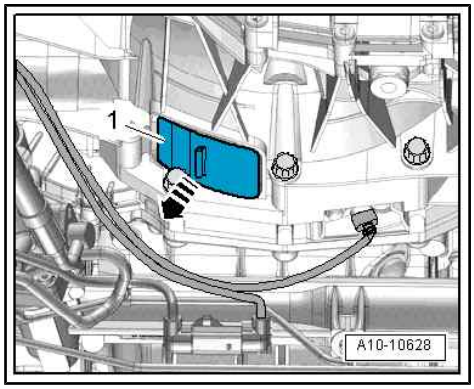

– To loosen bolts for torque converter, counterhold crankshaft with counter-hold tool - T10172- and -T10172/7- .

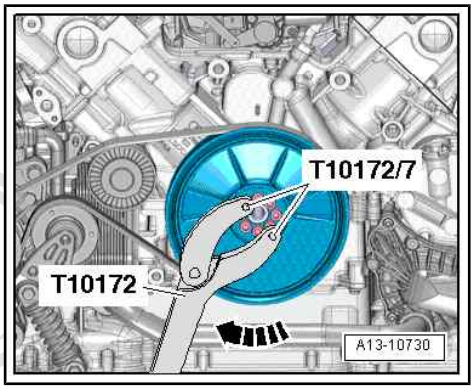

Note

When you then turn the crankshaft, only turn crankshaft in direction of engine rotation -arrow-.

– Remove 6 bolts -arrow- for torque converter (turn crankshaft 60° in direction of engine rotation each time).

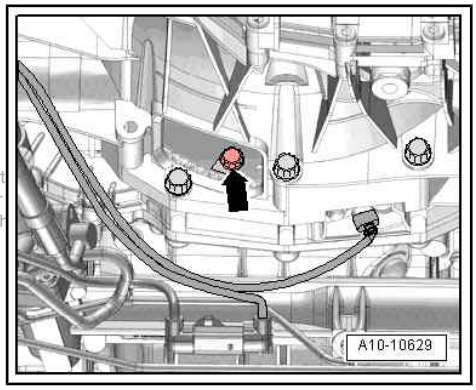

Protected by copyright. Copying for private or commercial purposes, in part
permitted unless authorised by AUDI AG. AUDI AG does not guarantee or
with respect to the correctness of information in this document. Copyrigh

– Remove bottom securing bolt -arrow 1- for starter from engine side.
– Detach starter -A- from gearbox.
– Remove engine/gearbox securing bolt -arrow 2-.

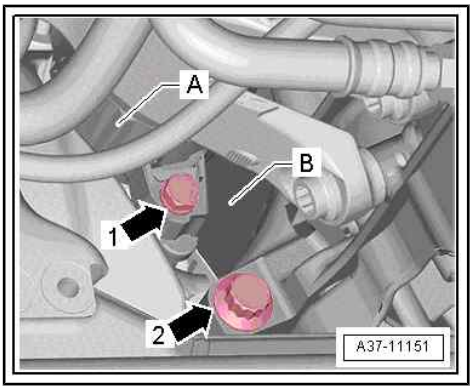

Note

End seal -B- can fall out after starter is detached.

– Remove remaining engine/gearbox securing bolts -6 … 10-.

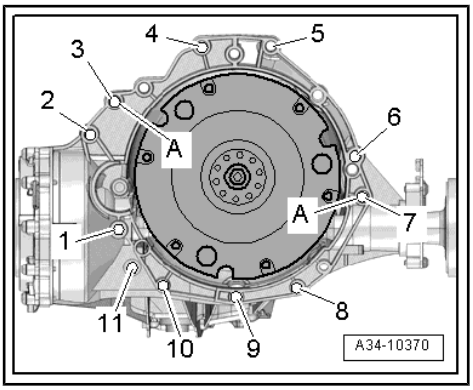

– Position engine and gearbox jack - V.A.G 1383 A- with gearbox support - T40173- underneath gearbox and secure with tensioning strap -1- as shown in illustration.

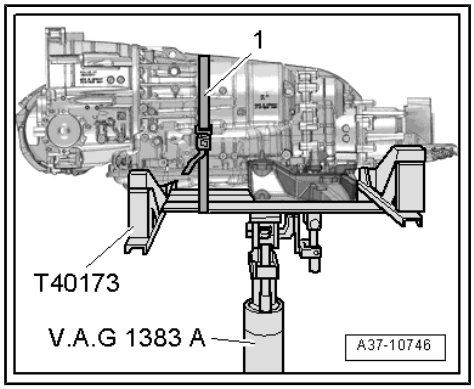

Note

For illustration purposes, the gearbox support - T40173- is not shown.

– Remove bolts -arrows- for tunnel cross member.

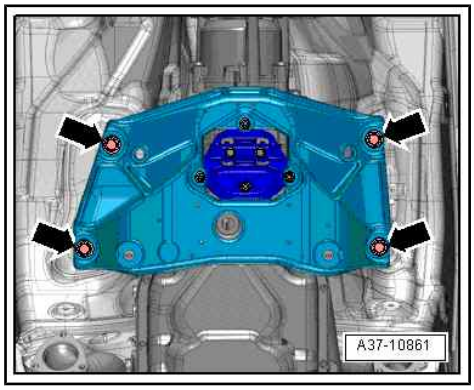

– Detach gearbox from engine and lower carefully using engine and gearbox jack - V.A.G 1383 A- .

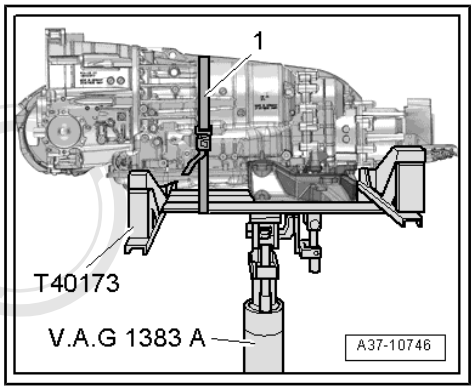

2.1.4 Removing gearbox, vehicles with 3.0 ltr. TDI engine

Protected by copyright. Copying for private or commercial purposes, in part or in whole, is not permitted unless authorised by AUDI AG. AUDI AG does not guarantee or accept any liability with respect to the correctness of information in this document. Copyright by AUDI AG.

Special tools and workshop equipment required

- Used oil collection and extraction unit - V.A.G 1782-
- Engine bung set - VAS 6122-
- Counterhold tool - T10172- with -T10172/5-
- Adapter - T40058-
- Gearbox support - T40173-

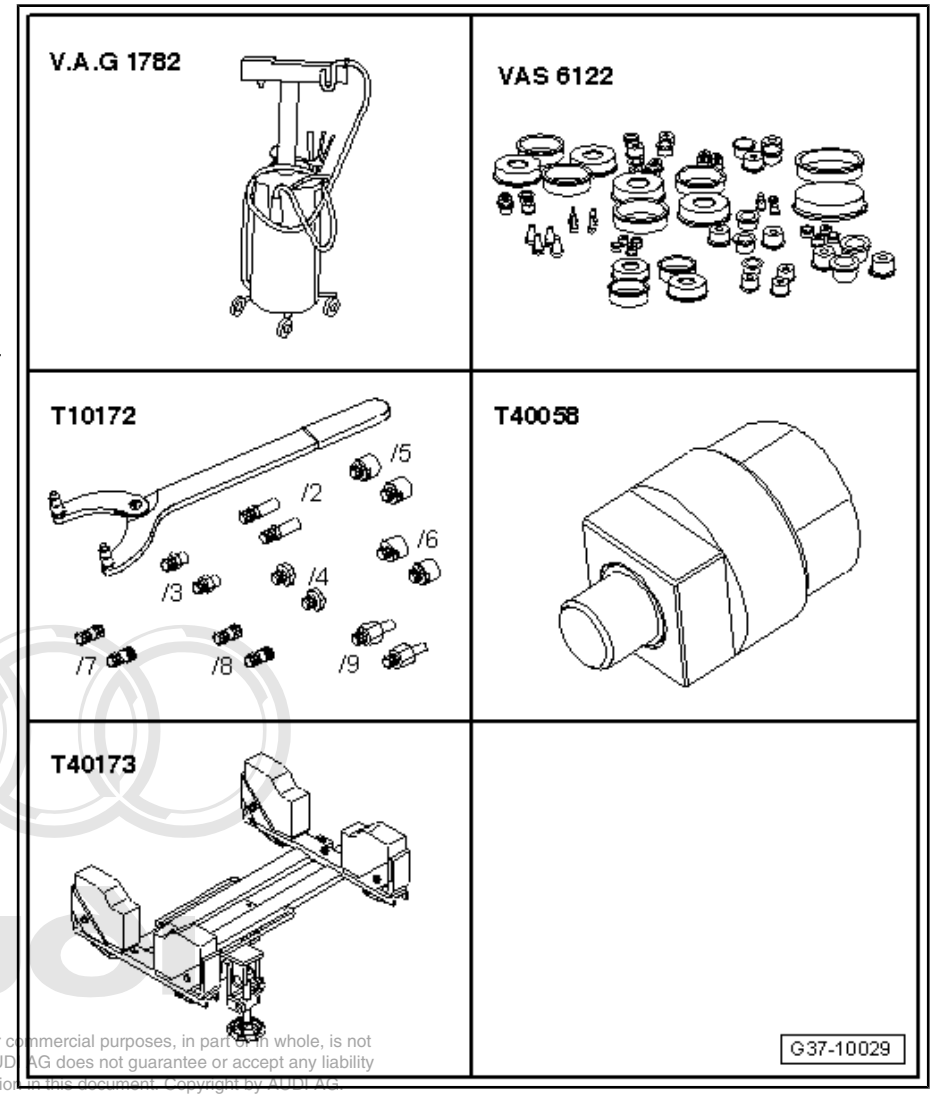

Protected by copyright. Copying for private or commercial purposes, in part or in whole, is not permitted unless authorised by AUDI AG. AUDI AG does not guarantee or accept any liability with respect to the correctness of information in this document. Copyright by AUDI AG.

- Support bracket - 10 - 222 A-

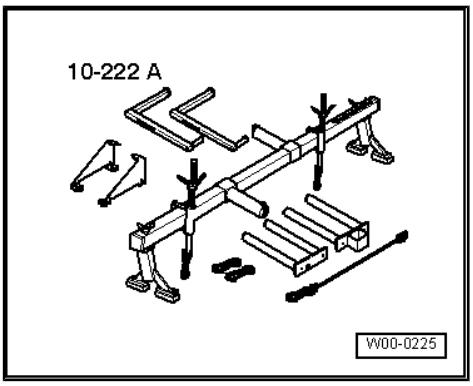

- Removal lever - 80 - 200-

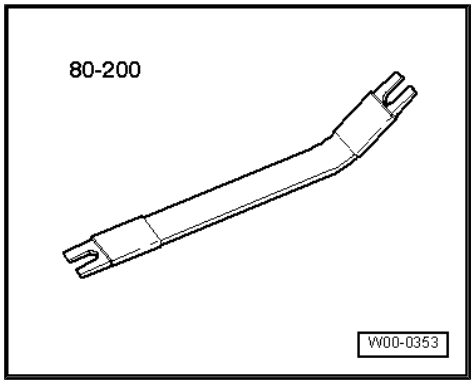

- Engine and gearbox jack - V.A.G 1383 A-

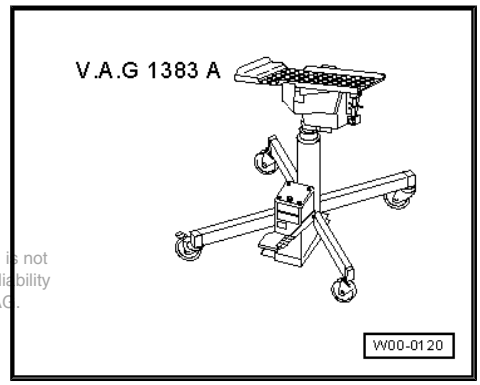

Protected by copyright. Copying for private or commercial purposes, in part or in whole, is not permitted unless authorised by AUDI AG. AUDI AG does not guarantee or accept any liability with respect to the correctness of information in this document. Copyright by AUDI AG.

- Stepladder - VAS 5085-

Removing

– Bring front wheels into straight-ahead position.

– Switch off ignition and take out ignition key.

> ⚠ **Caution**
>
> ***When disconnecting the battery there is a risk of serious damage to electronic components:***
>
> - ***Observe the correct procedure for disconnecting the battery.***

– Disconnect battery ⇒ Electrical system; Rep. gr. 27 ; Battery; Disconnecting and connecting battery .

– Remove particulate filter and front exhaust pipe ⇒ Rep. gr. 26 ; Exhaust pipes/silencers; Exploded view - silencers .

– Remove both front wheels.

– Remove cover -1- for drive shaft from wheel housing (both sides).

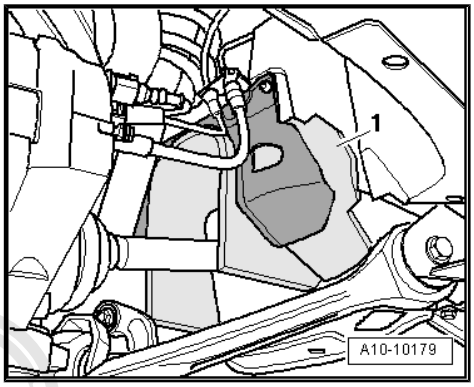

– Remove front noise insulation ⇒ General body repairs, exterior; Rep. gr. 66 ; Noise insulation; Removing and installing noise insulation .

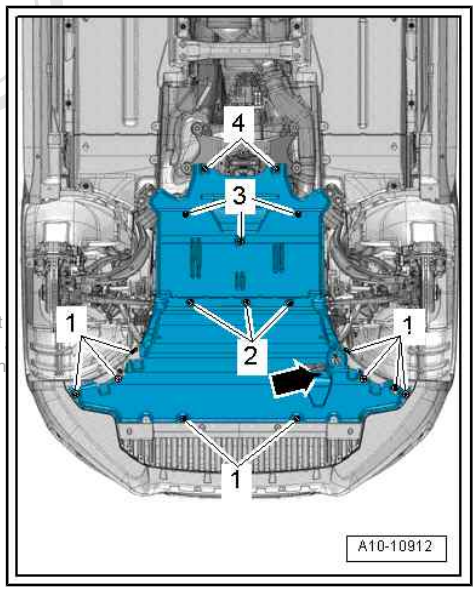

Protected by copyright. Copying for private or commercial purposes, in part permitted unless authorised by AUDI AG. AUDI AG does not guarantee or with respect to the correctness of information in this document. Copyrigh

– Remove bolt -arrow- for ATF lines -1- and -2-.

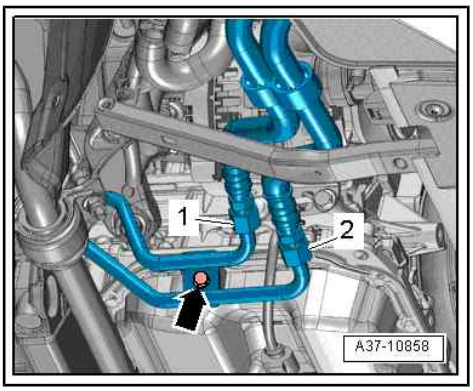

Note

Place a cloth below the connection to catch escaping ATF.

– Remove bolts -1- and -2-, detach ATF lines from gearbox and tie up.

– Seal off open lines and connections with clean plugs from engine bung set - VAS 6122- .

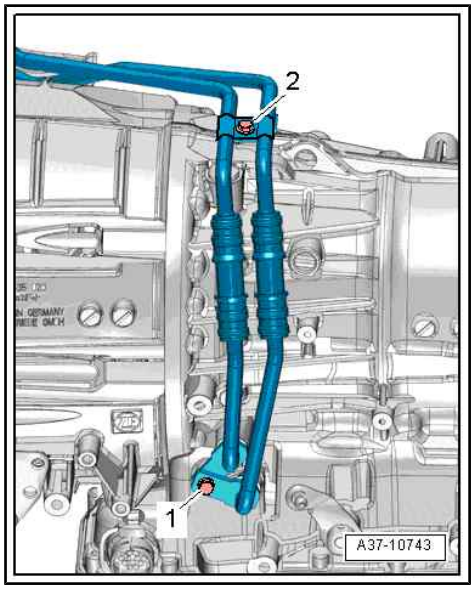

– Remove bolts -2 … 5- securing gearbox to engine (accessible from above).

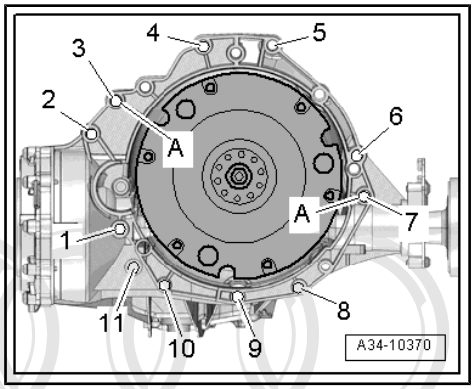

– Remove bolt -1- for engine lifting eye.

– Move electrical wiring harness clear -arrow- using removal lever - 80 - 200- .

Note

-Item 2- can be disregarded.

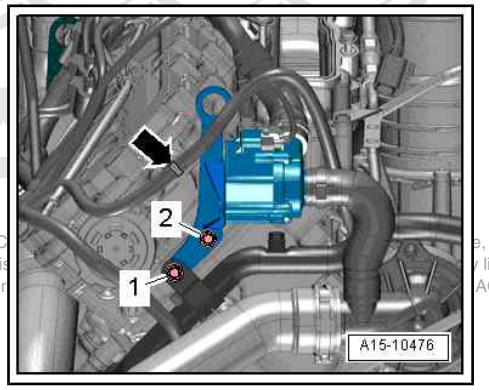

Protected by copyright. C
permitted unless authoris
with respect to the cor
e, is not
y liability
AG.

– Set up support bracket - 10 - 222 A- on suspension turrets (left and right), as shown in illustration.

– Hook spindle - 10 - 222 A /11- onto engine lifting eye (left-side).

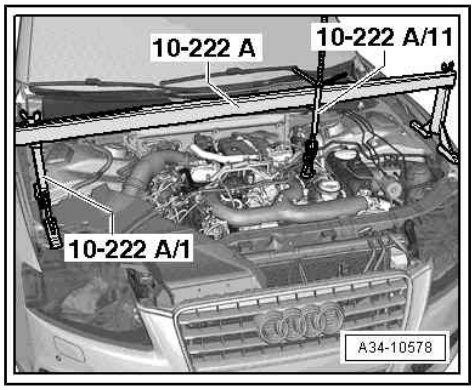

– Remove bolts -1, 2, 3- and detach heat shield -A- for drive shaft (right-side).

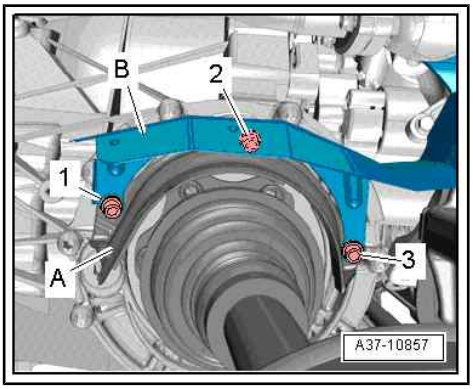

Note

-Item B- can be disregarded.

– Unbolt drive shafts (left and right) from flange shafts on gearbox.

Caution

The gearbox control unit (mechatronic unit) can be damaged by electrostatic discharge.

- ***Do not touch contact pins in gearbox connector with bare hands.***

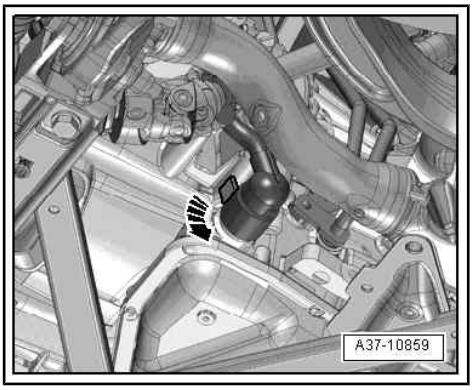

– Touch gearbox housing with your hand (without gloves) to discharge any static electricity.

– Turn fastener anti-clockwise -arrow- and unplug electrical connector on gearbox.

– Move wiring harness clear on gearbox.

– Remove nut -1- for hydraulic line for power steering.

Caution

Risk of damage to parts of the running gear.

- ***Do not let the vehicle down on the wheels if the gearbox mounting, steering rack or subframe cross brace are not properly installed.***

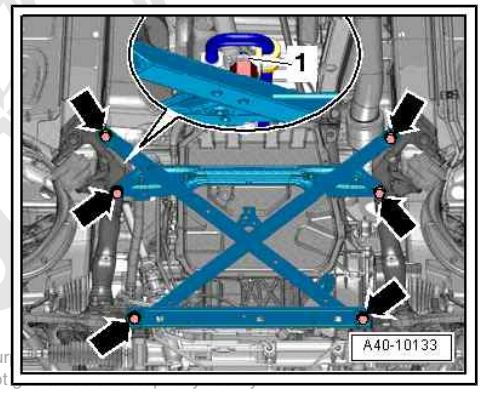

– Remove bolts -arrows- and detach subframe cross brace.

Protected by copyright. Copying for private or commercial pur
permitted unless authorised by AUDI AG. AUDI AG does not
with respect to the correctness of information in this document. Copyright by AUDI AG.

– Disconnect electrical connector -2- for engine speed sender -G28- and move wiring clear.

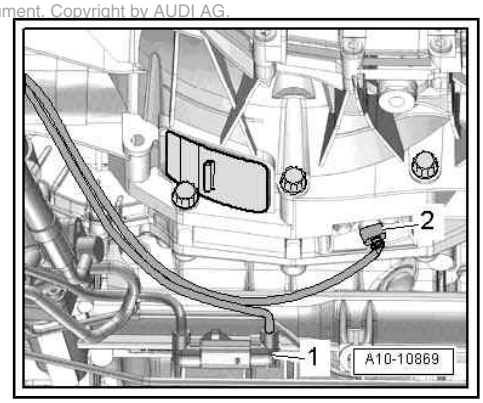

Note

-Item 1- can be disregarded.

– Use removal lever - 80 - 200- to pry ball socket -1- on selector lever cable off selector shaft lever.

– Pry off retaining clip -2- and detach selector lever cable from gearbox.

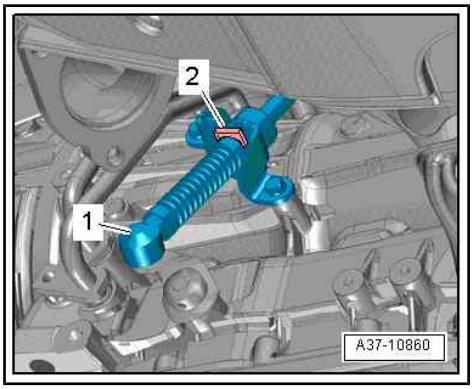

Note

Do not bend or kink the selector lever cable.

Caution

Risk of damage to coil connector for airbag.

- ***Front wheels must be in straight-ahead position when steering column is detached from steering rack.***
- ***Do not change position of steering wheel or steering rack after this step (if necessary, fix steering wheel in position with adhesive tape).***

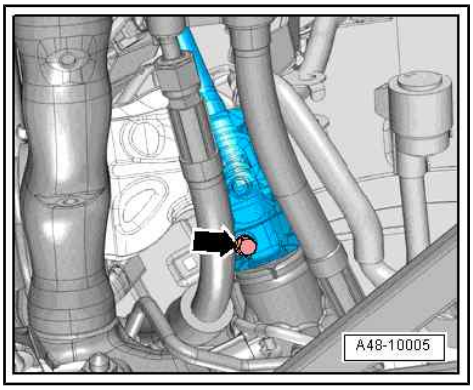

– Move steering wheel as far as possible downwards and to the rear, making use of the full range of the steering column adjuster.

– Turn steering wheel to centre position (wheels in straight-ahead position) and lock.

– Remove bolt -arrow- for steering column ⇒ Running gear, axles, steering; Rep. gr. 48 ; Steering column; Exploded view - steering column .

– Press steering column off steering rack and push all the way up.

– Remove bolts -arrows- and detach heat shield for propshaft.

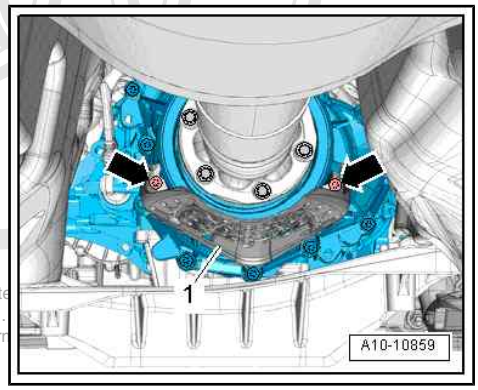

Protected by copyright. Copying for private
permitted unless authorised by AUDI AG.
with respect to the correctness of inform

– Remove securing bolts from connection between propshaft and gearbox (counterhold using counterhold tool - T10172- with -T10172/5-).
– Slide propshaft together towards rear final drive. The constant velocity joints can be moved axially.
– Tie propshaft up to one side.

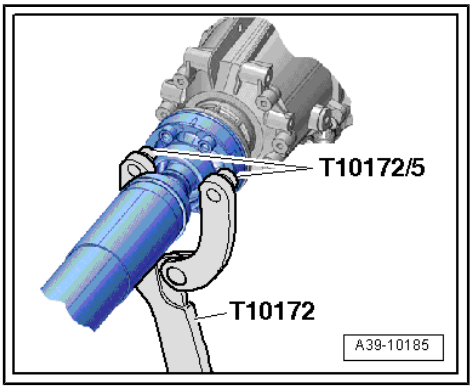

– Pull cover -1- off bottom of gearbox -arrow-.

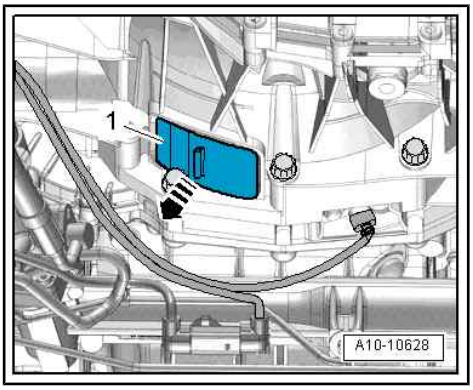

– Insert guide stud of adapter -T40058- as follows:
• The larger diameter -arrow 1- faces engine.
• The smaller diameter -arrow 2- faces adapter.

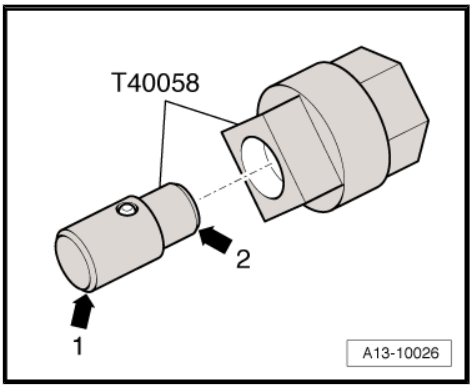

– To slacken bolts for torque converter, counterhold crankshaft with adapter - T40058- .

Note

When you then turn the crankshaft, only turn crankshaft in direction of engine rotation -arrow-.

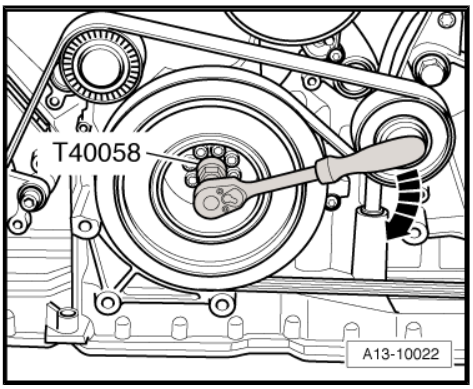

Protected by copyright. Copying for private or commercial purposes, in part or in whole, is not permitted unless authorised by AUDI AG. AUDI AG does not guarantee or accept any liability with respect to the correctness of information in this document. Copyright by AUDI AG.

– Remove 6 bolts -arrow- for torque converter (turn crankshaft 60° in direction of engine rotation each time).

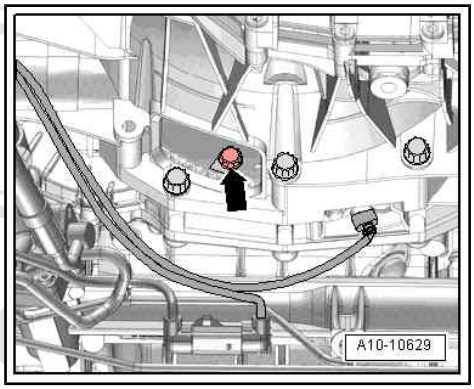

– Remove bottom securing bolt -arrow 1- for starter from engine side.

permitted unless authorised by AUDI AG. AUDI A
with respect to the correctness of information in

– Detach starter -A- from gearbox.

– Remove engine/gearbox securing bolt -arrow 2-.

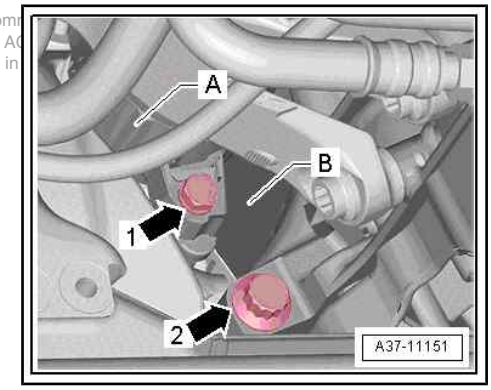

Note

End seal -B- can fall out after starter is detached.

– Remove remaining engine/gearbox securing bolts -6 … 11-.

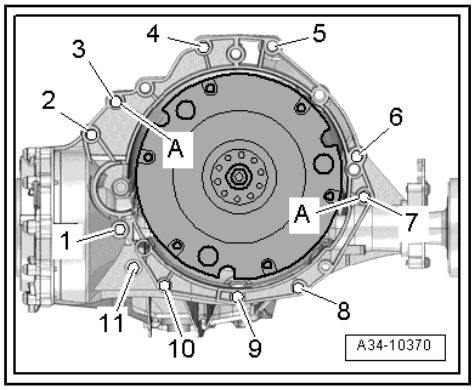

– Place used oil collection and extraction unit - V.A.G 1782- below connection.

– Remove bolts -arrows-, detach hydraulic line -1- from steering rack and place to one side.

– Seal off open lines and connections with clean plugs from engine bung set - VAS 6122- .

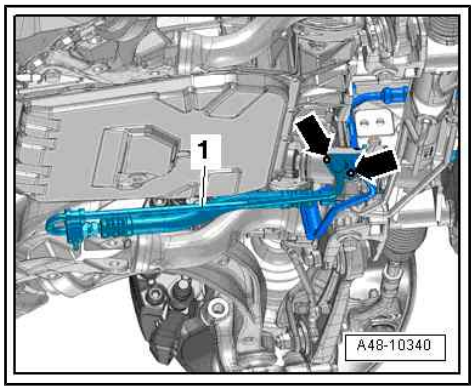

– Position engine and gearbox jack - V.A.G 1383 A- with gearbox support - T40173- underneath gearbox and secure with tensioning strap -1- as shown in illustration.

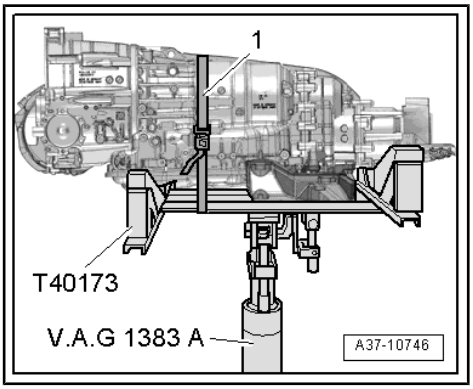

– Pre-tension spindle - 10 - 222 A /11- slightly.

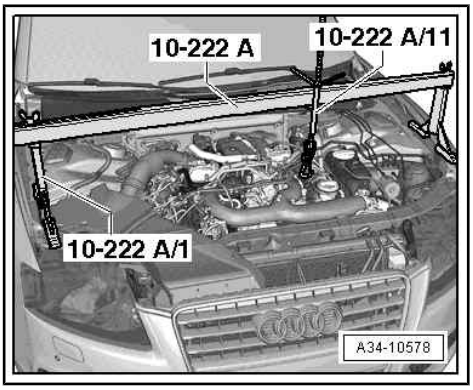

Note

For illustration purposes, the gearbox support - T40173- is not shown.

– Remove bolts -arrows- for tunnel cross member.

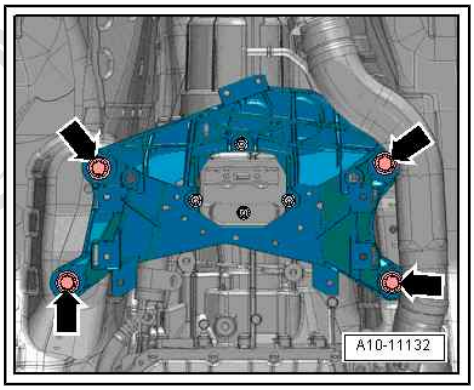

– Detach gearbox from engine and lower carefully using engine and gearbox jack - V.A.G 1383 A- .

Protected by copyright. Copying for private or commercial purposes, in part or in whole, is not permitted unless authorised by AUDI AG. AUDI AG does not guarantee or accept any liability with respect to the correctness of information in this document. Copyright by AUDI AG.

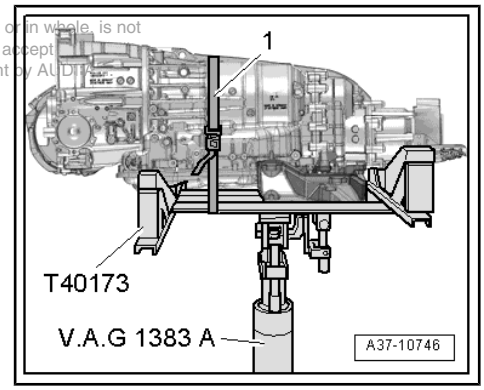

2.2 Installing gearbox

⇒ "2.2.1 Installing gearbox, vehicles with 2.0 ltr. TFSI engine", page 86

⇒ "2.2.2 Installing gearbox, vehicles with 3.2 ltr. FSI engine", page 92

⇒ "2.2.3 Installing gearbox, vehicles with 4.2 ltr. FSI engine", page 98

⇒ "2.2.4 Installing gearbox, vehicles with 3.0 ltr. TDI engine", page 104

2.2.1 Installing gearbox, vehicles with 2.0 ltr. TFSI engine

Special tools and workshop equipment required

- Ring spanner insert, 16 mm - V.A.G 1332/14-

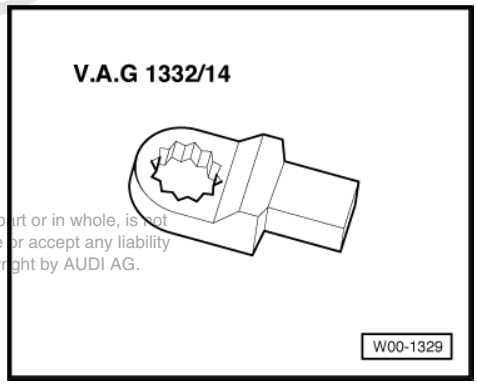

Protected by copyright. Copying for private or commercial purposes, in part or in whole, is not permitted unless authorised by AUDI AG. AUDI AG does not guarantee or accept any liability with respect to the correctness of information in this document. Copyright by AUDI AG.

- Transportation lock - T40170-

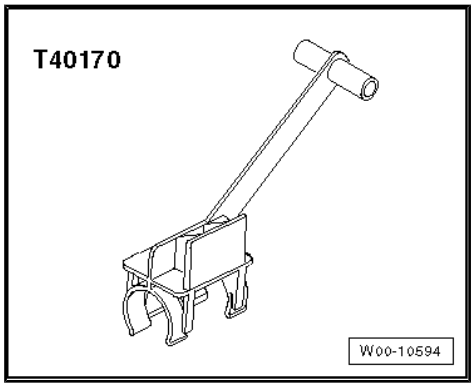

Procedure

Note

- *Renew bolts which are tightened by turning through a specified angle.*
- *Renew self-locking nuts and bolts, and seals, O-rings and gaskets.*
- *Secure all hose connections with the correct hose clips (as original equipment); refer to ⇒ Electronic parts catalogue .*
- *Re-attach all cable ties at the same locations when re-installing.*

Tightening torques for installing gearbox: ⇒ page 110

– Before fitting a replacement gearbox, always blow through the ATF cooler and ATF lines with compressed air (not more than 10 bar) ⇒ page 134 .

– Before installing, it is important to clean any residue from threads in cylinder block using a tap.

– When fitting a replacement gearbox: attach gearbox support, gearbox mounting and tunnel cross member to new gearbox ⇒ page 115 .

– Position gearbox on gearbox support - T40173- and secure with tensioning strap -1-, as shown in illustration.

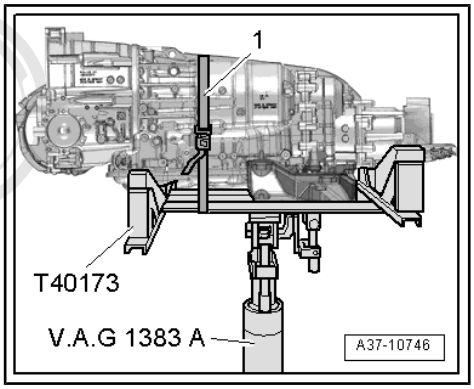

– The following preparations must be made before joining the engine and gearbox:

– Turn torque converter until hole is visible next to notch -arrow- in recess in bottom of gearbox housing, as shown in illustration.

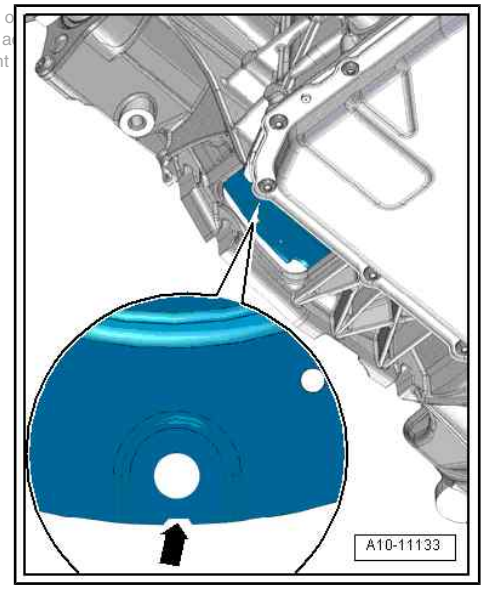

Protected copyright. Copying for private or commercial purposes, in part o
permitted unless authorised by AUDI AG. AUDI AG does not guarantee or a
with respect to the correctness of information in this document. Copyright

Note

There is only one notch at the periphery; turn the torque converter accordingly.

– Insert transportation lock - T40170- into gearbox housing from below and clamp onto flange shaft -1-.

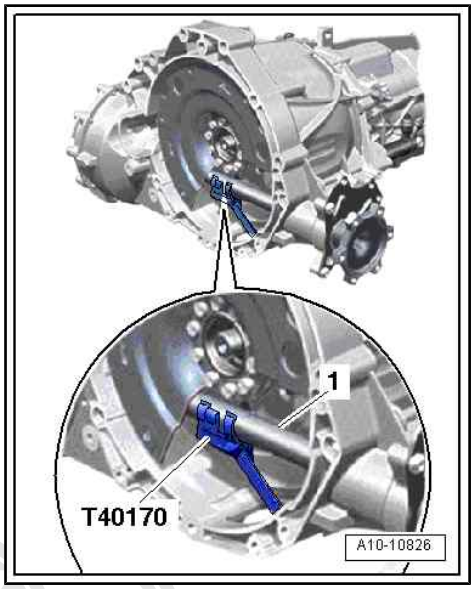

– Check that dowel sleeves -A- for centralising engine/gearbox are in the cylinder block; install any missing dowel sleeves.

– Check whether aluminium bolts for engine/gearbox connection can be reused and mark bolts if necessary ⇒ page 112 .

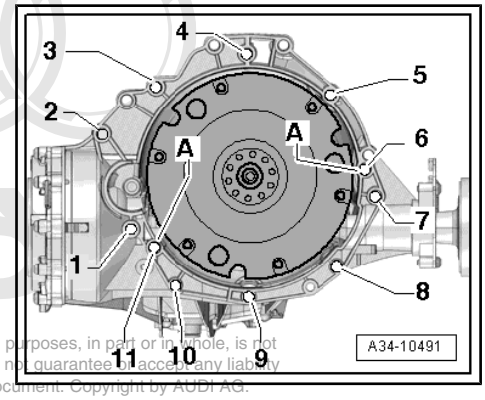

Protected by copyright. Copying for private or commercial purposes, in part or in whole, is not permitted unless authorised by AUDI AG. AUDI AG does not guarantee or accept any liability with respect to the correctness of information in this document. Copyright by AUDI AG.

– Coat end seal -1- with lubricant before fitting.

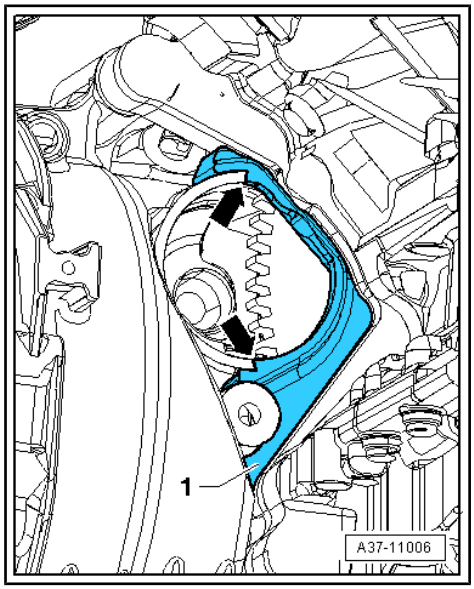

– Bring starter -2- and end seal -1- into installation position. To do so, use plastic/rubber wedge -4- to position starter in installation position while supporting starter on engine support -3-.

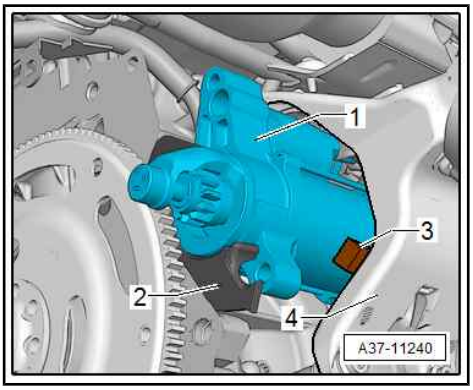

Note

It is important to ensure that the end seal is in the correct installation position relative to the starter, as otherwise the securing bolts for the starter would be difficult to fit and the sealing function of the end seal would not be assured.

Note

There are several different versions of this end seal (according to engine); for correct version refer to ⇒ Electronic parts catalogue

Vehicles with 4-cylinder engine:

– Insert top starter bolt -2- in gearbox.

– Fit spacer sleeve -arrow- onto bolt -2-.

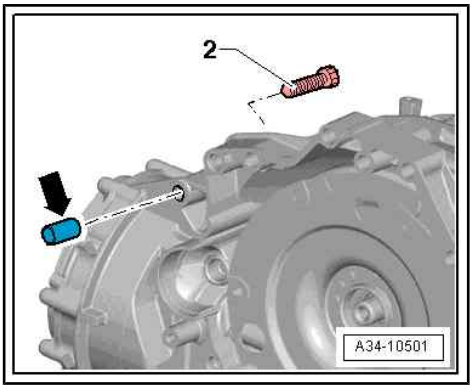

– Join gearbox with engine and tighten bolts -6 … 11-.

– Tighten starter using bolts -1- and -2-, making sure that end seal is in correct position.

– Remove transportation lock - T40170- .

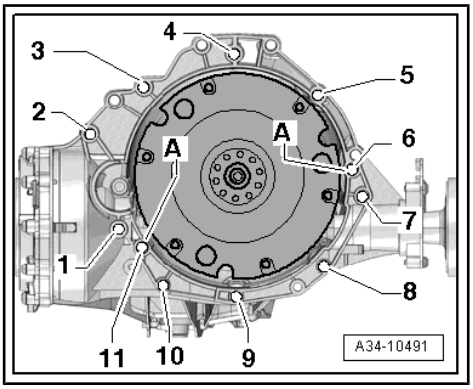

Protected by copyright. Copying for private or commercial purposes, in part or in whole, is not permitted unless authorised by AUDI AG. AUDI AG does not guarantee or accept any liability with respect to the correctness of information in this document. Copyright by AUDI AG.

– Disengage spindles - 10 - 222 A /11- .

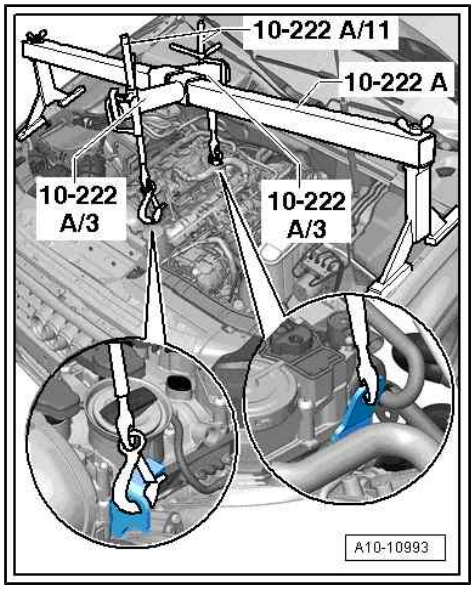

– Raise gearbox and tighten bolts -arrows- for tunnel cross member ⇒ page 115 .

– Slacken tensioning strap and move engine and gearbox jack - V.A.G 1383 A- with gearbox support - T40173- out from underneath gearbox.

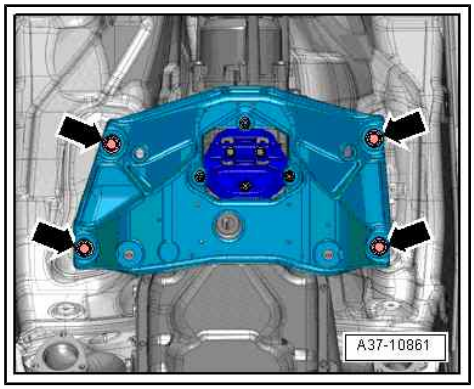

Note

The following step is necessary to ensure that the torque converter makes even and proper contact on the drive plate and does not cant.

– Press torque converter -2- slightly against drive plate -3- in direction of -arrow- using lever -1-.

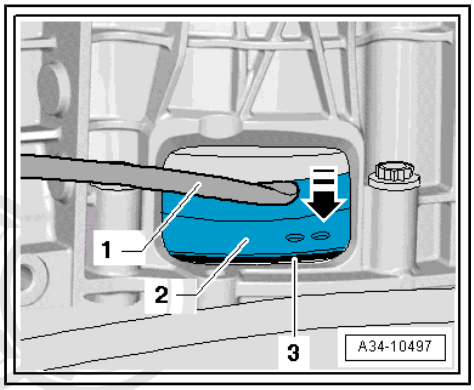

– Secure torque converter to drive plate as follows:

Note

Use ring spanner insert, 16 mm - V.A.G 1332/14- , to tighten bolts.

– Install first bolt -arrow- and tighten hand-tight (2 Nm).

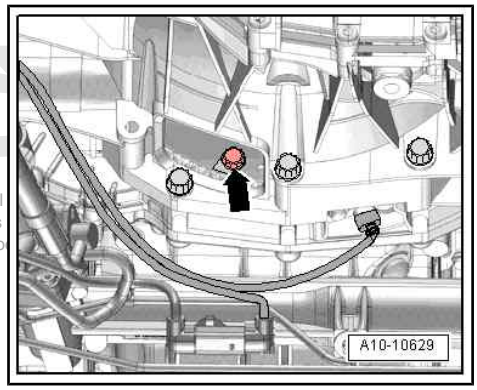

Protected by copyright. Copying for private or commercial purposes, in part, is not permitted unless authorised by AUDI AG. AUDI AG does not guarantee or assume any liability with respect to the correctness of information in this document.

– Turn crankshaft at vibration damper 240° in direction of engine rotation using counterhold tool - T10355- .

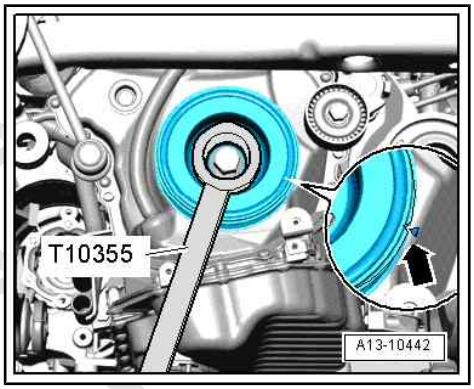

– Tighten bolt -arrow- accessible in this crankshaft position to 60 Nm.
– Turn crankshaft 120° further each time and tighten remaining two bolts to 60 Nm.

Protected by copyright. Copying for private o
permitted unless authorised by AUDI AG. A
with respect to the correctness of informa

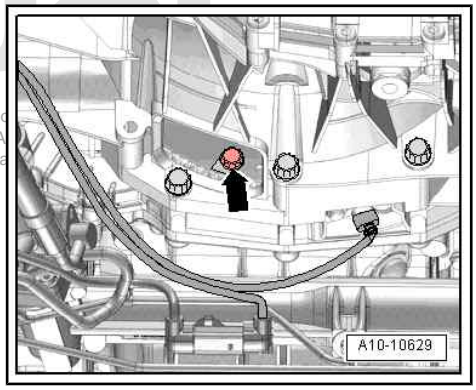

The remaining installation steps are carried out in reverse sequence; note the following:

– Tighten remaining engine/gearbox securing bolts -3 … 5-.
– Install ATF lines ⇒ page 131 .
– Install selector lever cable ⇒ page 34 .

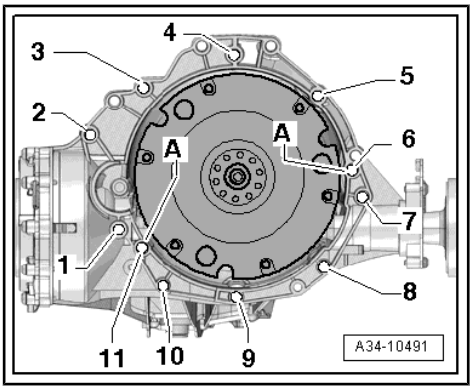

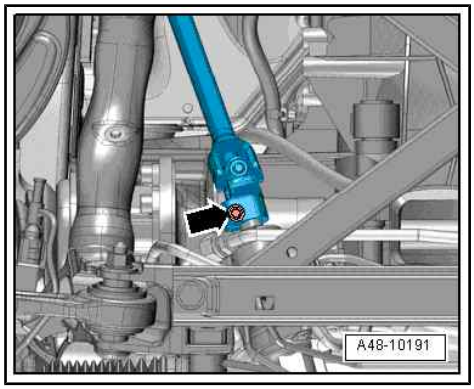

- Secure steering column to steering rack ⇒ Running gear, axles, steering; Rep. gr. 48 ; Steering column; Exploded view - steering column .
- Install subframe cross brace ⇒ Running gear, axles, steering; Rep. gr. 40 ; Subframe; Exploded view - subframe .
- Secure drive shafts (left and right) to flange shafts of gearbox ⇒ Running gear, axles, steering; Rep. gr. 40 ; Drive shaft; Exploded view - drive shaft .
- Install heat shield for drive shaft ⇒ page 111 .
- Install propshaft ⇒ Rear final drive; Rep. gr. 39 ; Propshaft; Exploded view - propshaft .
- Install exhaust system and perform stress-free alignment ⇒ Rep. gr. 26 ; Exhaust pipes/silencers; Exploded view - silencers .
- Install noise insulation ⇒ General body repairs, exterior; Rep. gr. 66 ; Noise insulation; Exploded view - noise insulation .
- Connect battery ⇒ Electrical system; Rep. gr. 27 ; Battery; Disconnecting and connecting battery .

Caution

Overvoltage can cause irreparable damage to control units.

- *Do not use charger for boost starting.*

Protected by copyright. Copying for private or commercial purposes, in part or in whole, is not permitted unless authorised by AUDI AG. AUDI AG does not guarantee or accept any liability with respect to the correctness of information in this document. Copyright by AUDI AG.

- Check selector lever cable and adjust if necessary ⇒ page 39 .
- Check ATF level and top up as required ⇒ page 122 .

2.2.2 Installing gearbox, vehicles with 3.2 ltr. FSI engine

Special tools and workshop equipment required

- Ring spanner insert, 16 mm - V.A.G 1332/14-

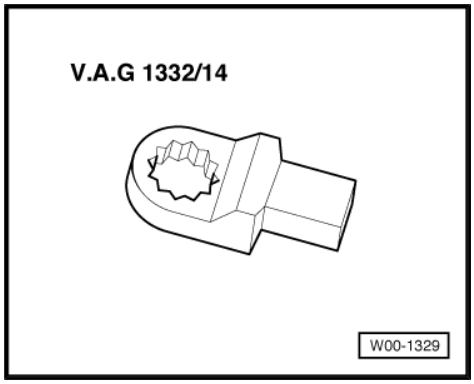

- Transportation lock - T40170-

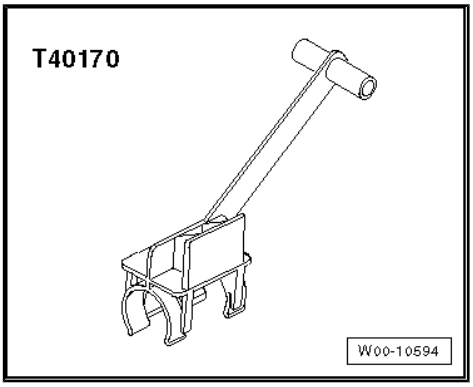

Procedure

Note

- *Renew bolts which are tightened by turning through a specified angle.*
- *Renew self-locking nuts and bolts, and seals, O-rings and gaskets.*
- *Secure all hose connections with the correct hose clips (as original equipment); refer to ⇒ Electronic parts catalogue .*
- *Re-attach all cable ties at the same locations when re-installing.*

Tightening torques for installing gearbox: ⇒ page 110

– Before fitting a replacement gearbox, always blow through the ATF cooler and ATF lines with compressed air (not more than 10 bar) ⇒ page 134 .

– Before installing, it is important to clean any residue from threads in cylinder block using a tap.

– When fitting a replacement gearbox: attach gearbox support, gearbox mounting and tunnel cross member to new gearbox ⇒ page 115 .

– Position gearbox on gearbox support - T40173- and secure with tensioning strap -1-, as shown in illustration.

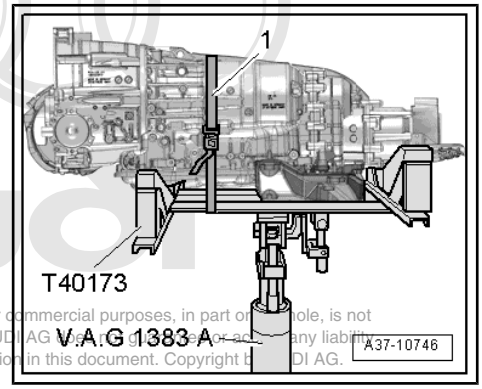

Protected by copyright. Copying for private or commercial purposes, in part or whole, is not permitted unless authorised by AUDI AG. AUDI AG does not guarantee or accept any liability with respect to the correctness of information in this document. Copyright by AUDI AG.

– The following preparations must be made before joining the engine and gearbox:

– Turn torque converter until hole is visible next to notch -arrow- in recess in bottom of gearbox housing, as shown in illustration.

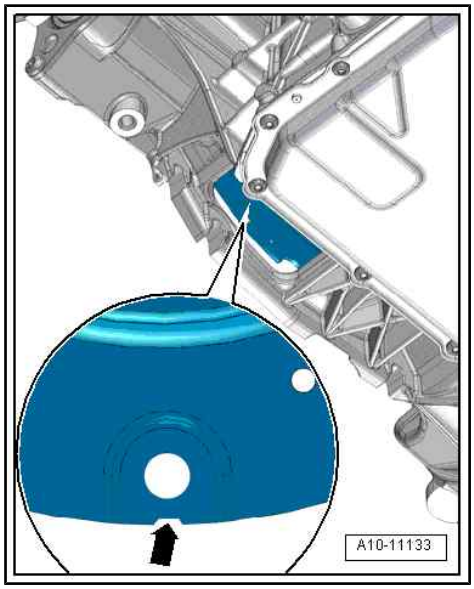

Note

There is only one notch at the periphery; turn the torque converter accordingly.

– Insert transportation lock - T40170- into gearbox housing from below and clamp onto flange shaft -1-.

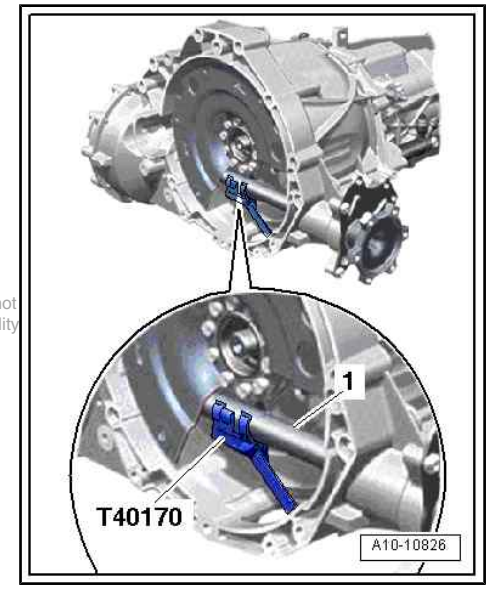

Protected by copyright. Copying for private or commercial purposes, in part or in whole, is not permitted unless authorised by AUDI AG. AUDI AG does not guarantee or accept any liability with respect to the correctness of information in this document. Copyright by AUDI AG.

– Check that dowel sleeves -A- for centralising engine/gearbox are in the cylinder block; install any missing dowel sleeves.

– Check whether aluminium bolts for engine/gearbox connection can be reused and mark bolts if necessary ⇒ page 112 .

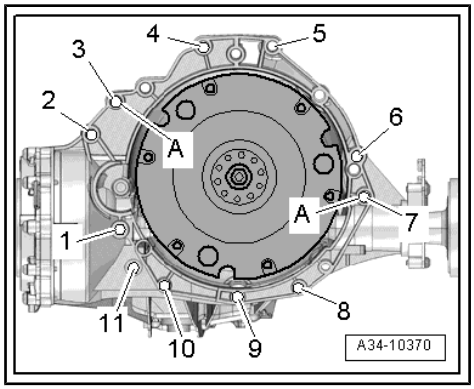

– Coat end seal -1- with lubricant before fitting.

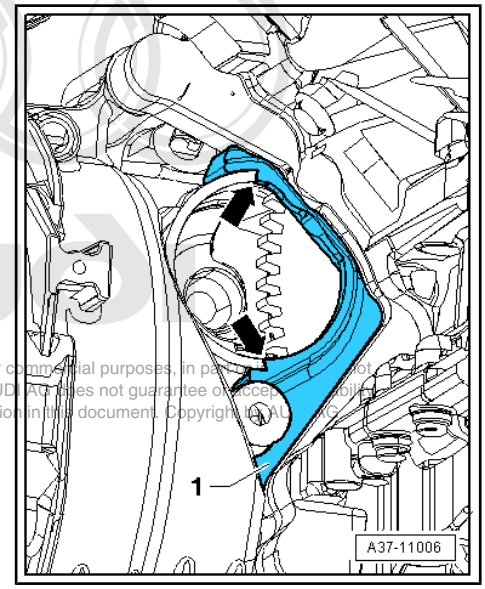

Protected by copyright. Copying for private or commercial purposes, in part or in whole, is not permitted unless authorised by AUDI AG. AUDI AG does not guarantee or accept any liability with respect to the correctness of information in this document. Copyright by AUDI AG.

– Bring starter -2- and end seal -1- into installation position. To do so, use plastic/rubber wedge -4- to position starter in installation position while supporting starter on engine support -3-.

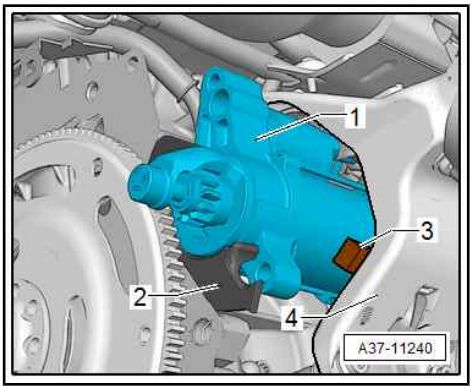

Note

It is important to ensure that the end seal is in the correct installation position relative to the starter, as otherwise the securing bolts for the starter would be difficult to fit and the sealing function of the end seal would not be assured.

Note

There are several different versions of this end seal (according to engine); for correct version refer to ⇒ Electronic parts catalogue

– Join gearbox with engine and tighten bolts -6 … 11-.
– Tighten starter using bolts -1- and -2-, making sure that end seal is in correct position.
– Remove transportation lock - T40170- .

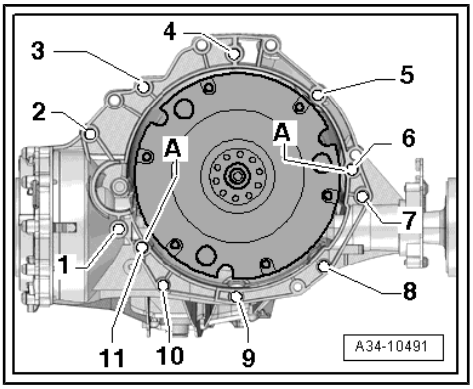

– Disengage spindles - 10 - 222 A /11- .

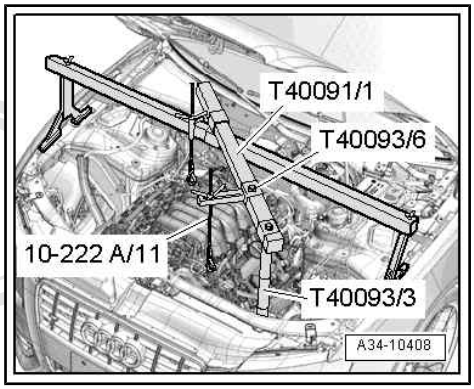

– Raise gearbox and tighten bolts -arrows- for tunnel cross member ⇒ page 115 .

– Slacken tensioning strap and move engine and gearbox jack - V.A.G 1383 A- with gearbox support - T40173- out from underneath gearbox.

Protected by copyright. Copying for private or commercial purposes, in pa
permitted unless authorised by AUDI AG. AUDI AG does not guarantee c
with respect to the correctness of information in this document. Copyri

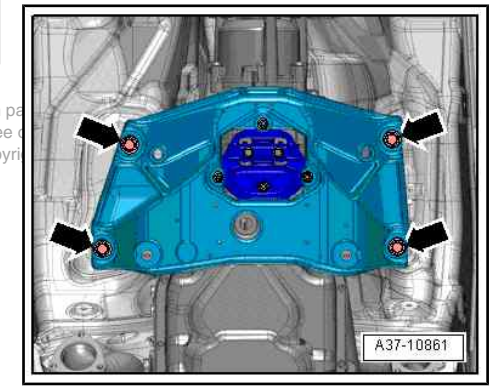

Note

The following step is necessary to ensure that the torque converter makes even and proper contact on the drive plate and does not cant.

– Press torque converter -2- slightly against drive plate -3- in direction of -arrow- using lever -1-.

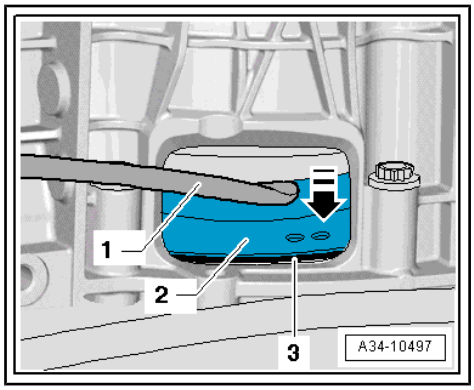

– Secure torque converter to drive plate as follows:

Note

Use ring spanner insert, 16 mm - V.A.G 1332/14- to tighten bolts.

– Install first bolt -arrow- and tighten hand-tight (2 Nm).

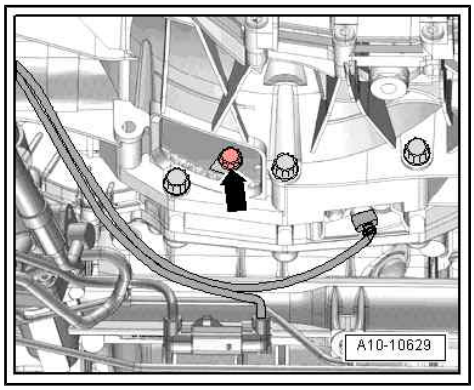

– Insert guide stud of adapter -T40058- as follows:

• The larger diameter -arrow 1- faces engine.

• The smaller diameter -arrow 2- faces adapter.

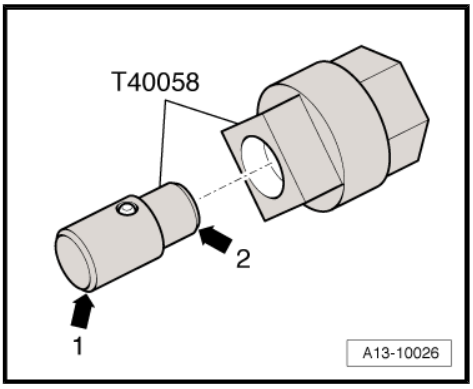

– Turn crankshaft 180° in direction of engine rotation -arrow- with adapter - T40058- .

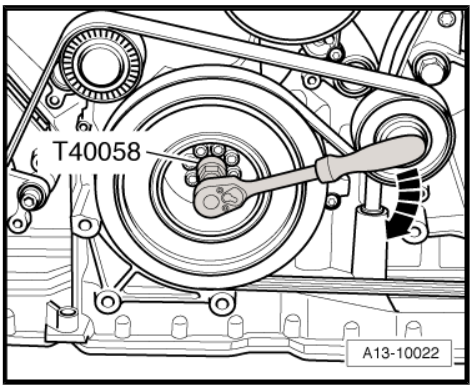

– Tighten bolt -arrow- accessible in this crankshaft position to 60 Nm.

– Turn crankshaft 60° further each time and tighten remaining five bolts to 60 Nm.

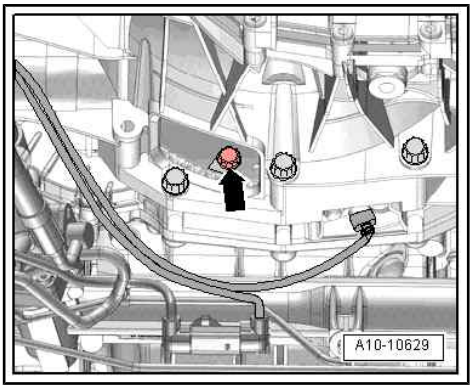

Protected by copyright. Copying for private or commercial purposes, in part or in whole, is not permitted unless authorised by AUDI AG. AUDI AG does not guarantee or accept any liability with respect to the correctness of information in this document. Copyright by AUDI AG.

– Tighten remaining bolts -3 ... 5- .

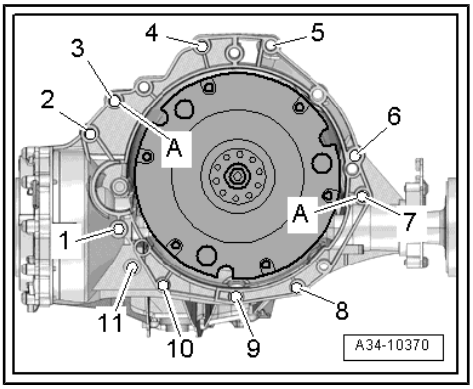

The remaining installation steps are carried out in reverse sequence; note the following:

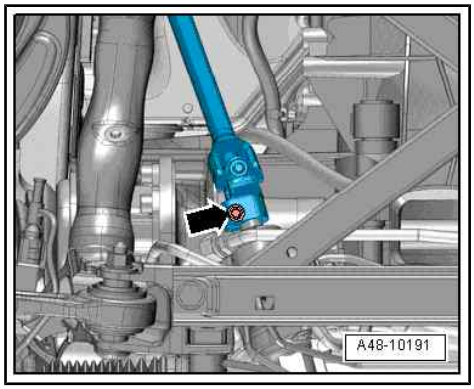

- Secure steering column to steering rack ⇒ Running gear, axles, steering; Rep. gr. 48 ; Steering column; Exploded view - steering column .
- Install subframe cross brace ⇒ Running gear, axles, steering; Rep. gr. 40 ; Subframe; Exploded view - subframe .
- Install selector lever cable ⇒ page 34 .
- Install ATF lines ⇒ page 131 .
- Secure drive shafts (left and right) to flange shafts of gearbox ⇒ Running gear, axles, steering; Rep. gr. 40 ; Drive shaft; Exploded view - drive shaft .
- Install heat shields for drive shaft ⇒ page 111 .
- Install propshaft ⇒ Rear final drive; Rep. gr. 39 ; Propshaft; Exploded view - propshaft .
- Install exhaust system and perform stress-free alignment ⇒ Rep. gr. 26 ; Exhaust pipes/silencers; Exploded view - silencers .
- Install noise insulation ⇒ General body repairs, exterior; Rep. gr. 66 ; Noise insulation; Exploded view - noise insulation .
- Connect battery ⇒ Electrical system; Rep. gr. 27 ; Battery; Disconnecting and connecting battery .

Caution

Overvoltage can cause irreparable damage to control units.

- *Do not use charger for boost starting.*

- Check selector lever cable and adjust if necessary ⇒ page 39 .
- Check ATF level and top up as required ⇒ page 122 .

2.2.3 Installing gearbox, vehicles with 4.2 ltr. FSI engine

Special tools and workshop equipment required

- Ring spanner insert, 16 mm - V.A.G 1332/14-

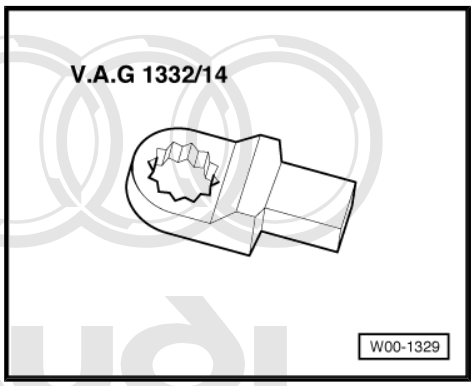

Protected by copyright. Copying for private or commercial purposes, in part or in whole, is not permitted unless authorised by AUDI AG. AUDI AG does not guarantee or accept any liability with respect to the correctness of information in this document. Copyright by AUDI AG.

- Transportation lock - T40170-

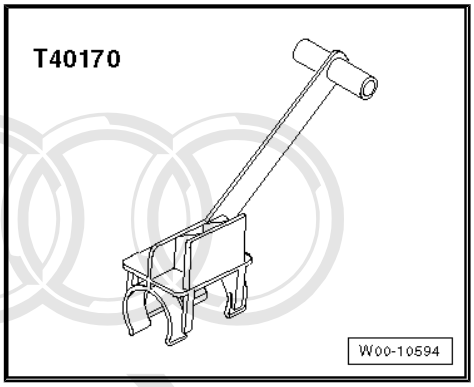

Protected by copyright. Copying for private or commercial purposes, in part or in whole, is not permitted unless authorised by AUDI AG. AUDI AG does not guarantee or accept any liability with respect to the correctness of information in this document. Copyright by AUDI AG.

Procedure

Note

- *Renew bolts which are tightened by turning through a specified angle.*
- *Renew self-locking nuts and bolts, and seals, O-rings and gaskets.*
- *Secure all hose connections with the correct hose clips (as original equipment); refer to ⇒ Electronic parts catalogue .*
- *Re-attach all cable ties at the same locations when re-installing.*

Tightening torques for installing gearbox ⇒ page 110

– Before fitting a replacement gearbox, always blow through the ATF cooler and ATF lines with compressed air (not more than 10 bar) ⇒ page 134 .

– Before installing, it is important to clean any residue from threads in cylinder block using a tap.

– When fitting a replacement gearbox: attach gearbox support, gearbox mounting and tunnel cross member to new gearbox ⇒ page 115 .

– Position gearbox on gearbox support - T40173- and secure with tensioning strap -1-, as shown in illustration.

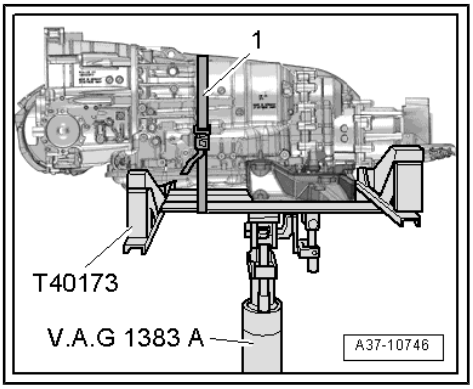

– The following preparations must be made before joining the engine and gearbox:

– Turn torque converter until hole is visible next to notch -arrow- in recess in bottom of gearbox housing, as shown in illustration.

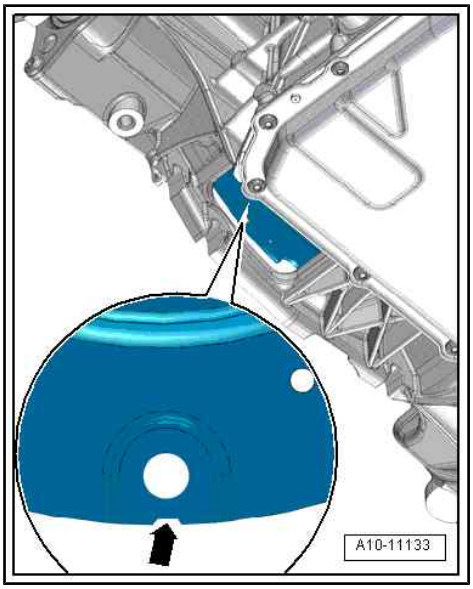

Note

There is only one notch at the periphery; turn the torque converter accordingly.

– Insert transportation lock - T40170- into gearbox housing from below and clamp onto flange shaft -1-.

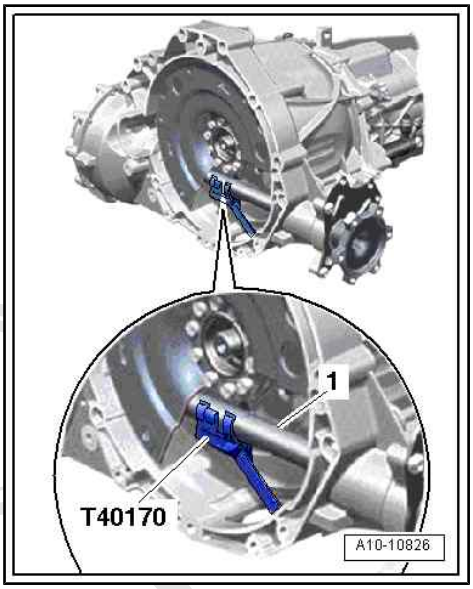

– Check that dowel sleeves -A- for centralising engine/gearbox are in the cylinder block; install any missing dowel sleeves.

– Check whether aluminium bolts for engine/gearbox connection can be reused and mark bolts if necessary ⇒ page 113.

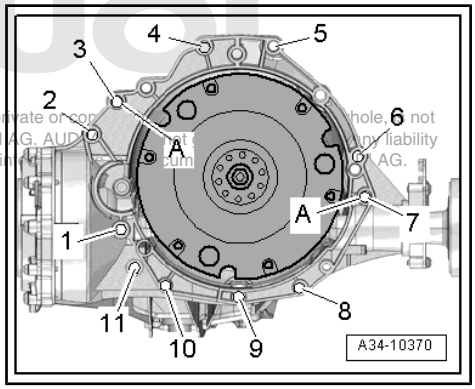

Copyright by AUDI AG. Copying for private or commercial purposes, in part or in whole, is not permitted unless authorised by AUDI AG. AUDI AG does not guarantee or assume any liability with respect to the correctness of information.

– Coat end seal -1- with lubricant before fitting.

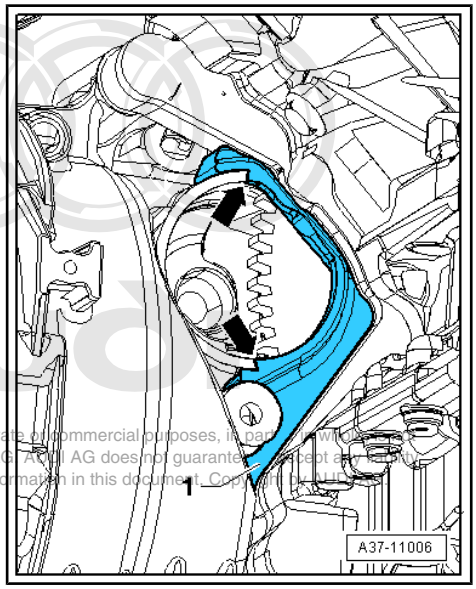

Protected by copyright. Copying for private or commercial purposes, in part or in whole, is not permitted unless authorised by AUDI AG. AUDI AG does not guarantee or accept any liability with respect to the correctness of information in this document. Copyright by AUDI AG.

– Bring starter -2- and end seal -1- into installation position. To do so, use plastic/rubber wedge -4- to position starter in installation position while supporting starter on engine support -3-.

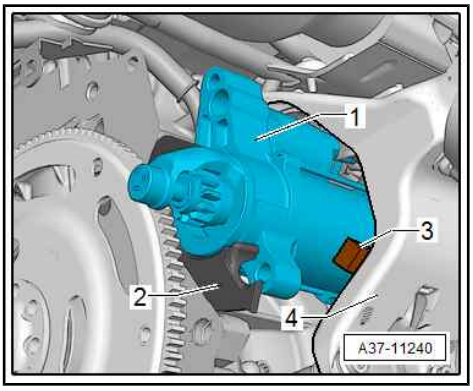

Note

It is important to ensure that the end seal is in the correct installation position relative to the starter, as otherwise the securing bolts for the starter would be difficult to fit and the sealing function of the end seal would not be assured.

Note

There are several different versions of this end seal (according to engine); for correct version refer to ⇒ Electronic parts catalogue

– Join gearbox with engine and tighten bolts -6 … 11-.
– Tighten starter using bolts -1- and -2-, making sure that end seal is in correct position.
– Remove transportation lock - T40170- .

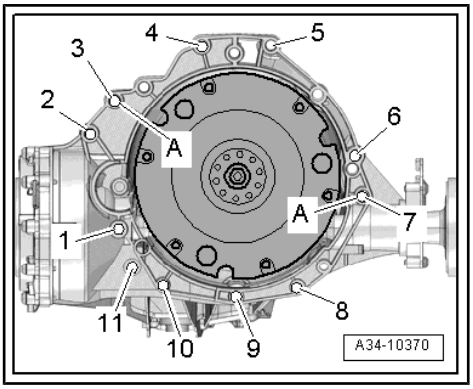

– Raise gearbox and tighten bolts -arrows- for tunnel cross member ⇒ page 115 .

– Slacken tensioning strap and move engine and gearbox jack - V.A.G 1383 A- with gearbox support - T40173- out from underneath gearbox.

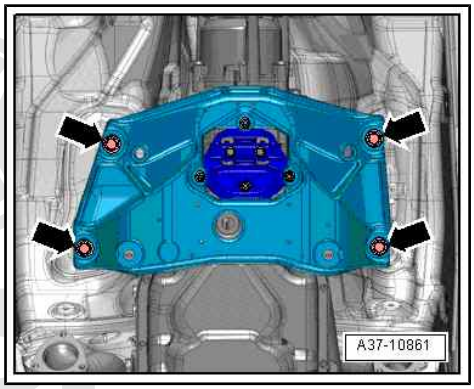

Note

Protected by copyright. Copying for private or commercial pu
permitted unless authorised by AUDI AG. AUDI AG does not
with respect to the correctness of information in this docu

The following step is necessary to ensure that the torque converter makes even and proper contact on the drive plate and does not cant.

– Press torque converter -2- slightly against drive plate -3- in direction of -arrow- using lever -1-.

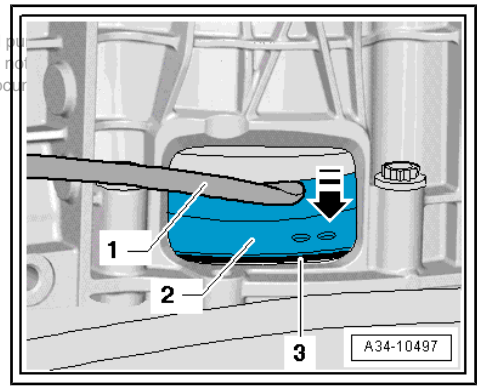

– Secure torque converter to drive plate as follows:

Note

Use ring spanner insert, 16 mm - V.A.G 1332/14- to tighten bolts.

– Install first bolt -arrow- and tighten hand-tight (2 Nm).

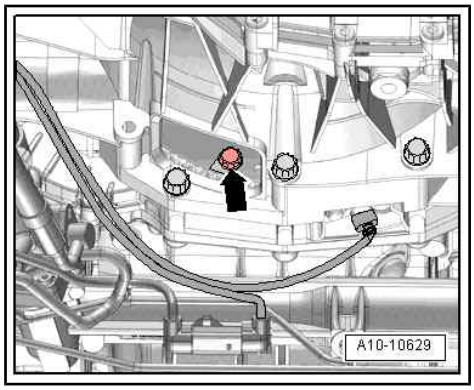

– Turn crankshaft 180° in direction of engine rotation -arrow- using counter-hold tool - T10172- and -T10172/7- .

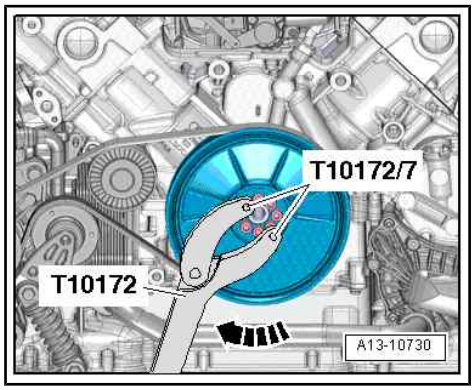

– Tighten bolt -arrow- accessible in this crankshaft position to 60 Nm.
– Turn crankshaft 60° further each time and tighten remaining five bolts to 60 Nm.

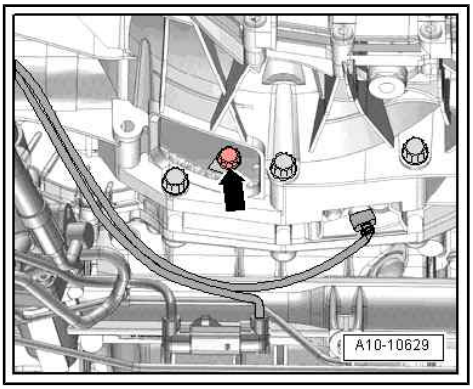

– Tighten remaining bolts -3 ... 5-.

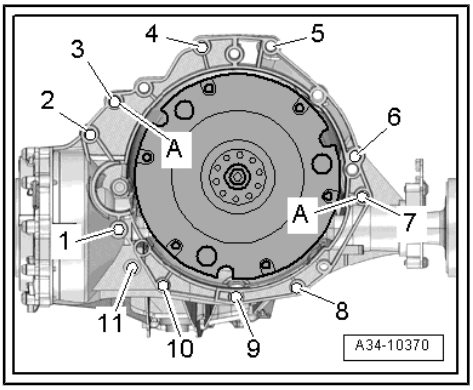

The remaining installation steps are carried out in reverse sequence; note the following:

– Secure steering column to steering rack ⇒ Running gear, axles, steering; Rep. gr. 48 ; Steering column; Exploded view - steering column .

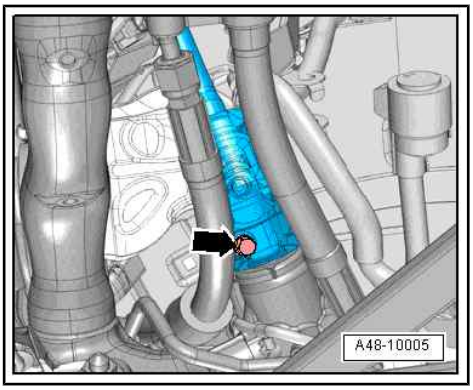

Protected by copyright. Copying for private or commercial purposes, in part or in whole, is not permitted unless authorised by AUDI AG. AUDI AG does not guarantee or accept any liability with respect to the correctness of information in this document. Copyright by AUDI AG.

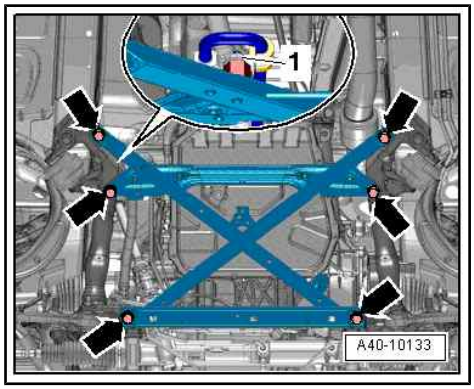

- Install subframe cross brace ⇒ Running gear, axles, steering; Rep. gr. 40 ; Subframe; Exploded view - subframe .
- Install selector lever cable ⇒ page 34 .
- Install ATF lines ⇒ page 131 .
- Secure drive shafts (left and right) to flange shafts of gearbox ⇒ Running gear, axles, steering; Rep. gr. 40 ; Drive shaft; Exploded view - drive shaft .
- Install heat shields for drive shaft ⇒ page 111 .
- Install propshaft ⇒ Rear final drive; Rep. gr. 39 ; Propshaft; Exploded view - propshaft .
- Install exhaust system and perform stress-free alignment ⇒ Rep. gr. 26 ; Exhaust pipes/silencers; Exploded view - silencers .
- Install noise insulation ⇒ General body repairs, exterior; Rep. gr. 66 ; Noise insulation; Exploded view - noise insulation .
- Install plenum chamber partition panel ⇒ General body repairs, exterior; Rep. gr. 50 ; Bulkhead; Exploded view - plenum chamber partition panel .
- Connect battery ⇒ Electrical system; Rep. gr. 27 ; Battery; Disconnecting and connecting battery .

Caution

Overvoltage can cause irreparable damage to control units.

- *Do not use charger for boost starting.*

- Check selector lever cable and adjust if necessary ⇒ page 39 .
- Check ATF level and top up as required ⇒ page 122 .

2.2.4 Installing gearbox, vehicles with 3.0 ltr. TDI engine

Special tools and workshop equipment required

- Ring spanner insert, 16 mm - V.A.G 1332/14-

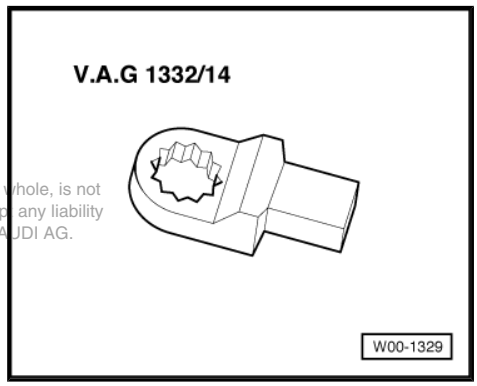

Protected by copyright. Copying for private or commercial purposes, in part or in whole, is not permitted unless authorised by AUDI AG. AUDI AG does not guarantee or accept any liability with respect to the correctness of information in this document. Copyright by AUDI AG.

- Transportation lock - T40170-

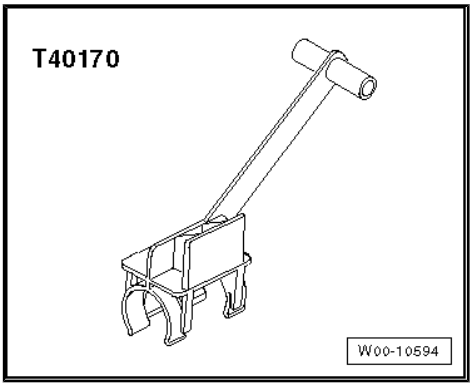

Procedure

Note

- *Renew bolts which are tightened by turning through a specified angle.*
- *Renew self-locking nuts and bolts, and seals, O-rings and gaskets.*
- *Secure all hose connections with the correct hose clips (as original equipment); refer to ⇒ Electronic parts catalogue .*
- *Re-attach all cable ties at the same locations when re-installing.*

Tightening torques for installing gearbox: ⇒ page 110

– Before fitting a replacement gearbox, always blow through the ATF cooler and ATF lines with compressed air (not more than 10 bar) ⇒ page 134 .

– Before installing, it is important to clean any residue from threads in cylinder block using a tap.

– When fitting a replacement gearbox: attach gearbox support, gearbox mounting and tunnel cross member to new gearbox ⇒ page 115 .

– Position gearbox on gearbox support - T40173- and secure with tensioning strap -1-, as shown in illustration.

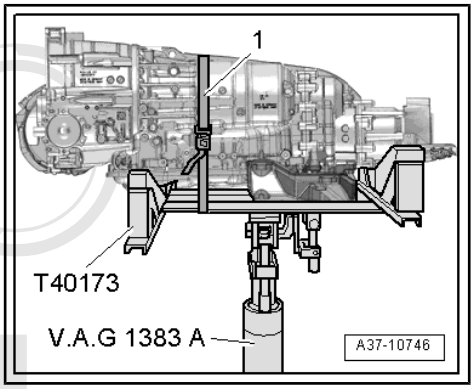

Protected by copyright. Copying for private or commercial purposes, in part or in whole, is not permitted unless authorised by AUDI AG. AUDI AG does not guarantee or accept any liability with respect to the correctness of information in this document. Copyright by AUDI AG.

– The following preparations must be made before joining the engine and gearbox:

– Turn torque converter until hole is visible next to notch -arrow- in recess in bottom of gearbox housing, as shown in illustration.

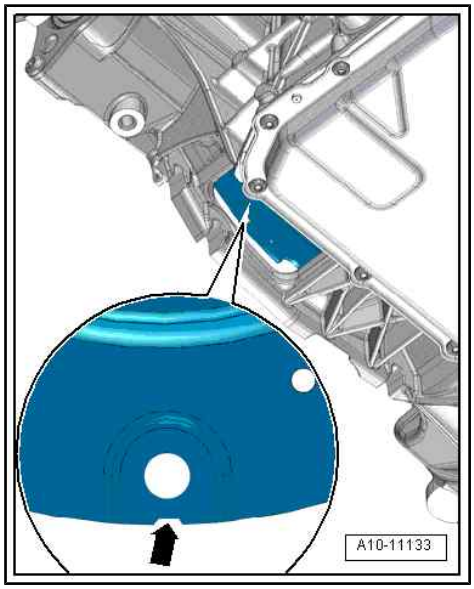

Note

There is only one notch at the periphery; turn the torque converter accordingly.

– Insert transportation lock - T40170- into gearbox housing from below and clamp onto flange shaft -1-.

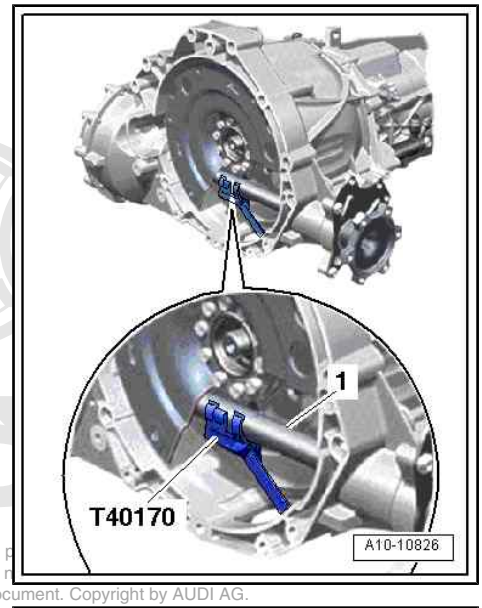

Protected by copyright. Copying for private or commercial p
permitted unless authorised by AUDI AG. AUDI AG does n
with respect to the correctness of information in this document. Copyright by AUDI AG.

– Check that dowel sleeves -A- for centralising engine/gearbox are in the cylinder block; install any missing dowel sleeves.

– Check whether aluminium bolts for engine/gearbox connection can be reused and mark bolts if necessary ⇒ page 114 .

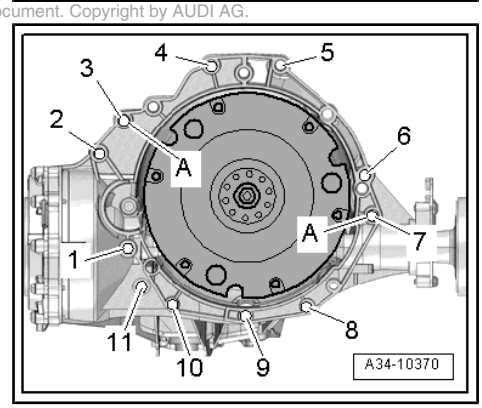

– Coat end seal -1- with lubricant before fitting.

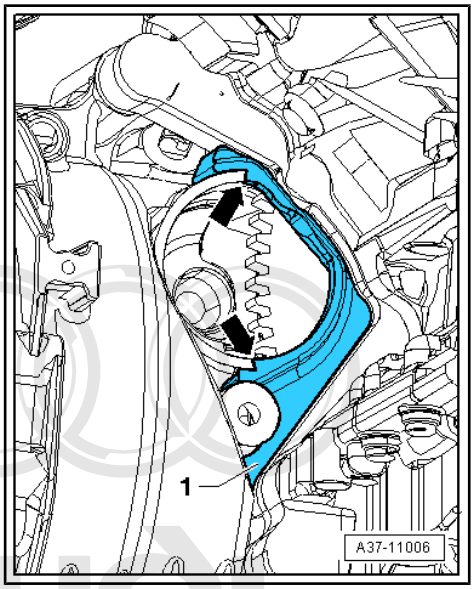

– Bring starter -2- and end seal -1- into installation position. To do so, use plastic/rubber wedge -4- to position starter in installation position while supporting starter on engine support -3-.

Protected by copyright. Copying for p
permitted unless authorised by AUD
with respect to the correctness of

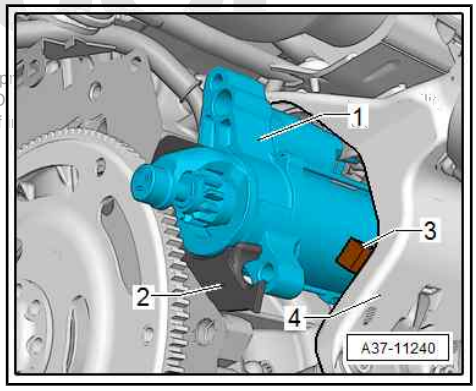

Note

It is important to ensure that the end seal is in the correct installation position relative to the starter, as otherwise the securing bolts for the starter would be difficult to fit and the sealing function of the end seal would not be assured.

Note

There are several different versions of this end seal (according to engine); for correct version refer to ⇒ Electronic parts catalogue

– Join gearbox with engine and tighten bolts -6 … 11-.

– Tighten starter using bolts -1- and -2-, making sure that end seal is in correct position.

– Remove transportation lock - T40170- .

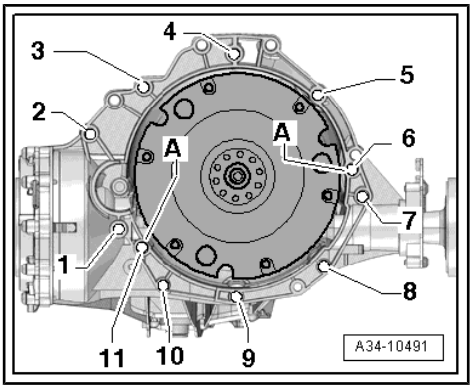

– Release spindle - 10 - 222 A /11- .

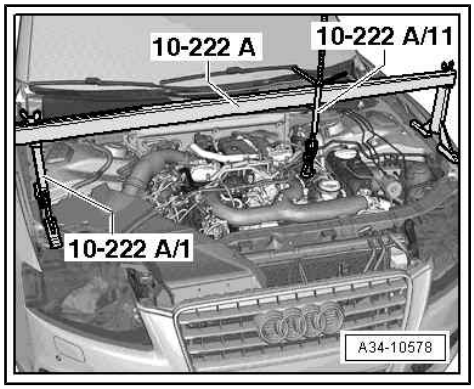

– Raise gearbox and tighten bolts -arrows- for tunnel cross member ⇒ page 115 .

– Slacken tensioning strap and move engine and gearbox jack - V.A.G 1383 A- with gearbox support - T40173- out from underneath gearbox.

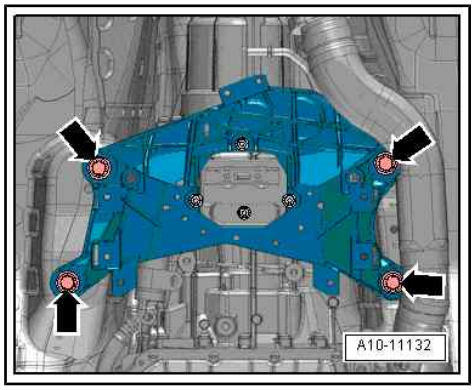

Note

The following step is necessary to ensure that the torque converter makes even and proper contact on the drive plate and does not cant.

– Press torque converter -2- slightly against drive plate -3- in direction of -arrow- using lever -1-.

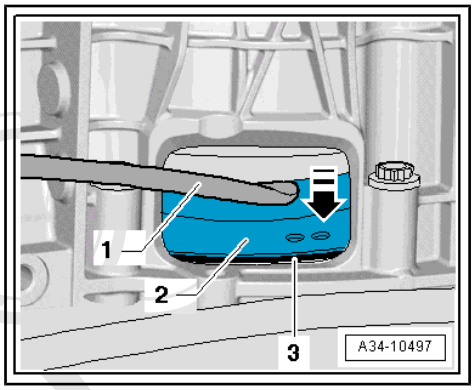

– Secure torque converter to drive plate as follows:

Note

Use ring spanner insert, 16 mm - V.A.G 1332/14- to tighten bolts.

– Install first bolt -arrow- and tighten hand-tight (2 Nm).

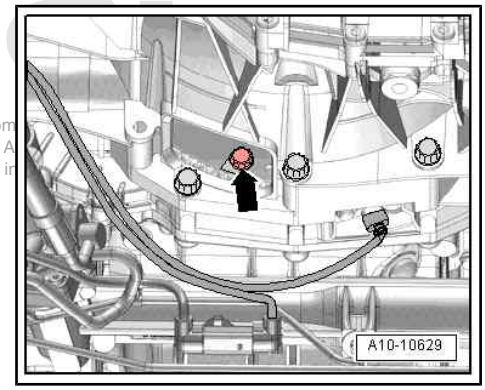

Protected by copyright. Copying for private or com
permitted unless authorised by AUDI AG. AUDI A
mation in

– Insert guide stud of adapter -T40058- as follows:

• The larger diameter -arrow 1- faces engine.

• The smaller diameter -arrow 2- faces adapter.

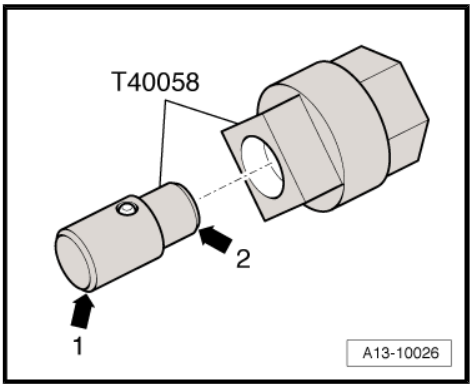

– Turn crankshaft 180° in direction of engine rotation -arrow- with adapter - T40058- .

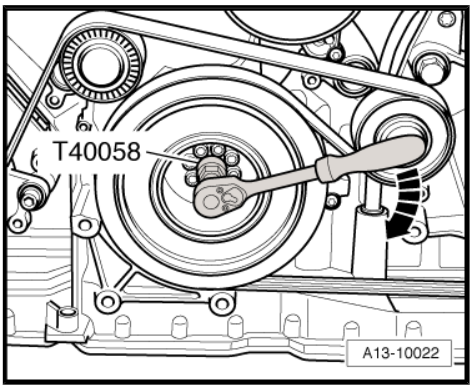

– Tighten bolt -arrow- accessible in this crankshaft position to 60 Nm.

– Turn crankshaft 60° further each time and tighten remaining five bolts to 60 Nm.

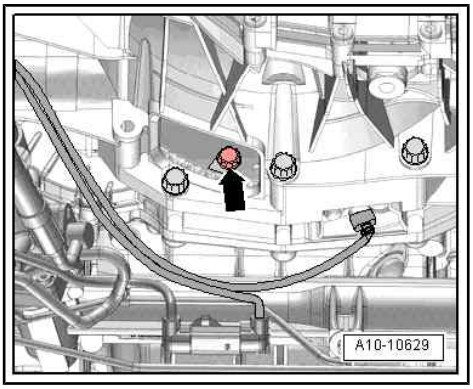

– Tighten remaining bolts -3 ... 5-.

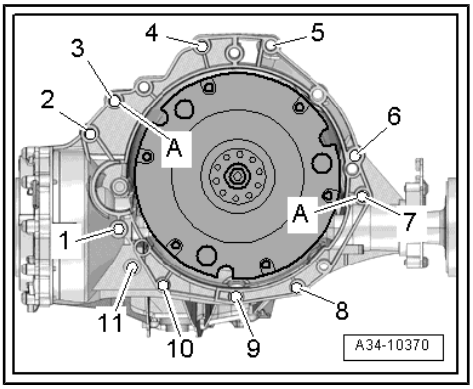

Protected by copyright. Copying for private or commercial purposes, in part or in whole, is not permitted unless authorised by AUDI AG. AUDI AG does not guarantee or accept any liability with respect to the correctness of information in this document. Copyright by AUDI AG.

The remaining installation steps are carried out in reverse sequence; note the following:

– Secure steering column to steering rack ⇒ Running gear, axles, steering; Rep. gr. 48 ; Steering column; Exploded view - steering column .

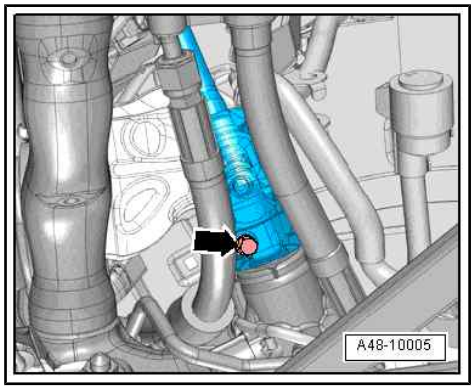

– Install subframe cross brace ⇒ Running gear, axles, steering; Rep. gr. 40 ; Subframe; Exploded view - subframe .

– Install selector lever cable ⇒ page 34 .

– Install ATF lines ⇒ page 131 .

– Secure drive shafts (left and right) to flange shafts of gearbox ⇒ Running gear, axles, steering; Rep. gr. 40 ; Drive shaft; Exploded view - drive shaft .

– Install heat shield for drive shaft ⇒ page 111 .

– Install propshaft ⇒ Rear final drive; Rep. gr. 39 ; Propshaft; Exploded view - propshaft .

– Install exhaust system and perform stress-free alignment ⇒ Rep. gr. 26 ; Exhaust pipes/silencers; Exploded view - silencers .

– Install noise insulation ⇒ General body repairs, exterior; Rep. gr. 66 ; Noise insulation; Exploded view - noise insulation .

– Connect battery ⇒ Electrical system; Rep. gr. 27 ; Battery; Disconnecting and connecting battery .

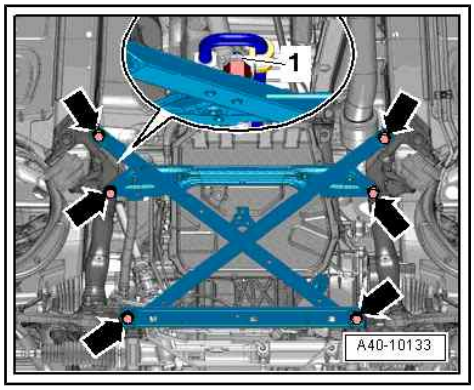

Caution

Overvoltage can cause irreparable damage to control units.

- *Do not use charger for boost starting.*

– Check selector lever cable and adjust if necessary ⇒ page 39 .

– Check ATF level and top up as required ⇒ page 122 .

2.3 Tightening torques for gearbox

Protected by copyright. Copying for private or commercial purposes, in part or in whole, is not permitted unless authorised by AUDI AG. AUDI AG does not guarantee or accept any liability with respect to the correctness of information in this document. Copyright by AUDI AG.

Note

- *Tightening torques apply only to lightly greased, oiled, phosphated or black-finished nuts and bolts.*
- *Additional lubricant such as engine or gear oil may be used, but do not use graphite lubricant.*
- *Do not use parts which have been degreased.*
- *Tolerance for tightening torques is ± 15 %.*

Other tightening torques:

Component		Nm
Bolts and nuts	M6	9
	M7	15
	M8	20
	M10	40
	M12	65

Heat shield for drive shaft - tightening torque

Protected by copyright. Copying for private or commer
AUDI AG do
with respect to the correctness of information in this

– Tighten bolts -arrows- for drive shaft heat shield to 23 Nm.

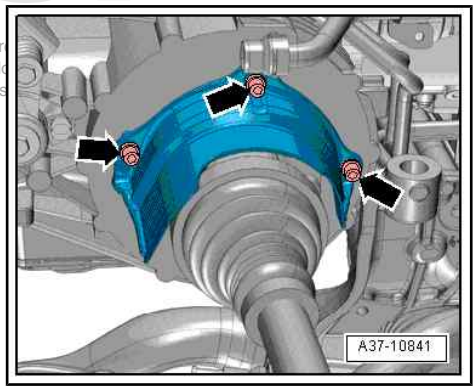

Engine/gearbox attachment (2.0 ltr. TFSI engine)

Item	Bolt	Nm
1 [1]	M10x50 [2]	65
2 [1], 7	M12x100 [3][4]	30 + 90°
3, 6	M12x75 [3][4]	30 + 90°
4, 5	M12x120 [3][4]	30 + 90°
8, 10	M10x75 [3][4]	15 + 90°
9	M10x60 [3][4]	15 + 90°
11 [5]	M12x50 [3][4]	30 + 90°
A	Dowel sleeves for centralising	

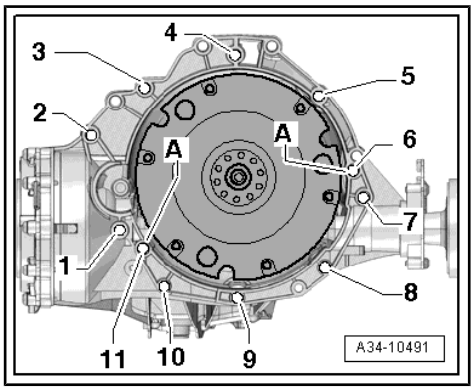

- [1] Also secures starter.
- [2] Property class 10.9. The steel bolt can be re-used any number of times.
- [3] Audi A4 up to vehicle identification no. 8K-9A-066499, Audi A5 up to vehicle identification no. 8T-9A-007999: renew aluminium bolts.
- [4] Audi A4 from vehicle identification no. 8K-9A-066500 onwards, Audi A5 from vehicle identification no. 8T-9A-008000 onwards: aluminium bolts can be used twice only ⇒ page 112 .
- [5] Engine/gearbox securing bolts.

- Audi A4 from vehicle identification no. 8K-9A-066500 onwards, Audi A5 from vehicle identification no. 8T-9A-008000 onwards: aluminium bolts -2 ... 11- can be used twice only. After they have been used once, an “X” -arrow- must therefore be chiselled onto the bolts.
- To prevent damage to the bolts, they must not be clamped in a vice when marking them. Clamp a 14 mm socket with 1/2" drive in the vice instead, and insert the bolt into the socket, as shown in illustration.
- Bolts marked with an “X” must not be used again.

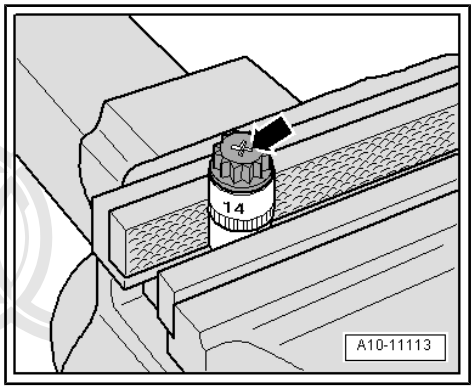

Engine/gearbox attachment (3.2 ltr. FSI engine)

Item	Bolt	Nm
1	M10x50 1)	65
2 … 6	M12x100 2)3)	30 + 90°
7	M12x125 2)3)	30 + 90°
8, 11	M10x60 2)3)	15 + 90°
9, 10	M10x95 2)3)	15 + 90°
A	Dowel sleeves for centralising	

- 1) Property class 10.9. The steel bolt can be re-used any number of times.
- 2) Audi A4 up to vehicle identification no. 8K-9A-066499, Audi A5 up to vehicle identification no. 8T-9A-007999: renew aluminium bolts.
- 3) Audi A4 from vehicle identification no. 8K-9A-066500 onwards, Audi A5 from vehicle identification no. 8T-9A-008000 onwards: aluminium bolts can be used twice only ⇒ page 112 .

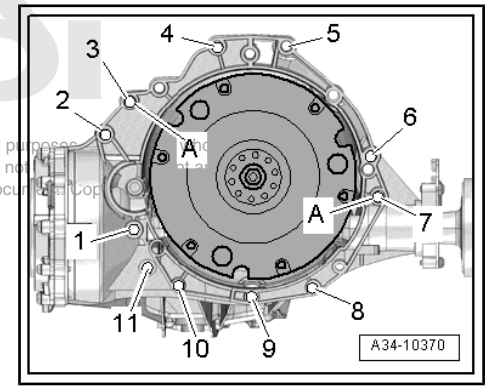

Protected by copyright. Copying for private or commercial purposes, and publishing is not permitted unless authorised by AUDI AG. AUDI AG does not guarantee or assume any liability with respect to the correctness of information in this document. Copyright by AUDI AG.

- Audi A4 from vehicle identification no. 8K-9A-066500 onwards, Audi A5 from vehicle identification no. 8T-9A-008000 onwards: aluminium bolts -2 ... 11- can be used twice only. After they have been used once, an “X” -arrow- must therefore be chiselled onto the bolts.
- To prevent damage to the bolts, they must not be clamped in a vice when marking them. Clamp a 14 mm socket with 1/2" drive in the vice instead, and insert the bolt into the socket, as shown in illustration.
- Bolts marked with an “X” must not be used again.

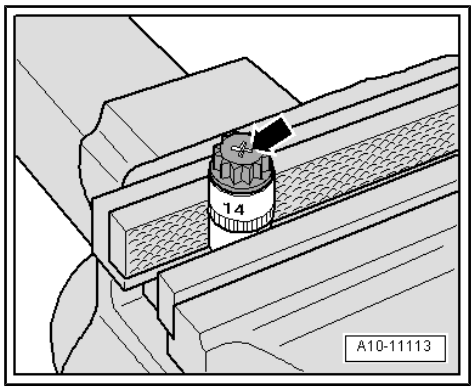

Engine/gearbox attachment (4.2 ltr. FSI engine)

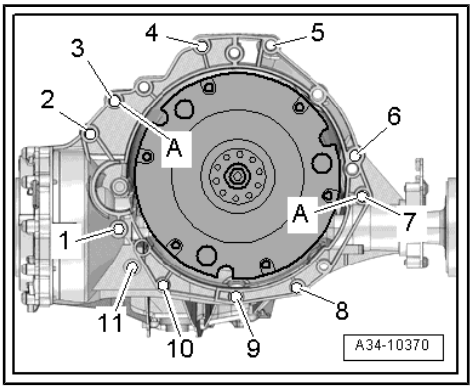

Item	Bolt	Nm
1	M10x50 1)	65
2 … 6	M12x100 2)3)	30 + 90°
7	M12x175 2)3)	30 + 90°
8, 11	M10x60 2)3)	15 + 90°
9	M10x75 2)3)	15 + 90°
10	M10x95 2)3)	15 + 90°
A	Dowel sleeves for centralising	

- 1) Property class 10.9. The steel bolt can be re-used any number of times.
- 2) Audi A4 up to vehicle identification no. 8K-9A-066499, Audi A5 up to vehicle identification no. 8T-9A-007999: renew aluminium bolts.
- 3) Audi A4 from vehicle identification no. 8K-9A-066500 onwards, Audi A5 from vehicle identification no. 8T-9A-008000 onwards: aluminium bolts can be used twice only ⇒ page 113 .

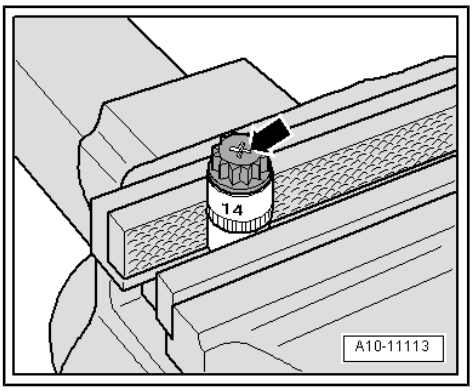

- ♦ Audi A4 from vehicle identification no. 8K-9A-066500 onwards, Audi A5 from vehicle identification no. 8T-9A-008000 onwards: aluminium bolts -2 ... 11- can be used twice only. After they have been used once, an “X” -arrow- must therefore be chiselled onto the bolts.
- ♦ To prevent damage to the bolts, they must not be clamped in a vice when marking them. Clamp a 14 mm socket with $^1/_2$" drive in the vice instead, and insert the bolt into the socket, as shown in illustration.
- ♦ Bolts marked with an “X” must not be used again.

Engine/gearbox attachment (3.0 ltr. TDI engine)

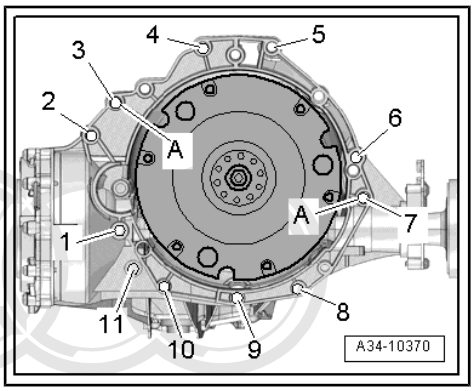

Item	Bolt	Nm
1	M10x50 1)	65
2 … 6	M12x100 2)3)	30 + 90°
7	M12x125 2)3)	30 + 90°
8, 11	M10x60 2)3)	15 + 90°
9, 10	M10x95 2)3)	15 + 90°
A	Dowel sleeves for centralising	

- 1) Property class 10.9. The steel bolt can be re-used any number of times.
- 2) Audi A4 up to vehicle identification no. 8K-9A-066499, Audi A5 up to vehicle identification no. 8T-9A-007999: renew aluminium bolts.
- 3) Audi A4 from vehicle identification no. 8K-9A-066500 onwards, Audi A5 from vehicle identification no. 8T-9A-008000 onwards: aluminium bolts can be used twice only ⇒ page 114 .

Reproduction of this document or parts thereof for private or commercial purposes, in part or in whole, is not permitted unless authorised by AUDI AG. AUDI AG does not guarantee or accept any liability with respect to the correctness of information in this document. Copyright by AUDI AG.

- Audi A4 from vehicle identification no. 8K-9A-066500 onwards, Audi A5 from vehicle identification no. 8T-9A-008000 onwards: aluminium bolts -2 ... 11- can be used twice only. After they have been used once, an “X” -arrow- must therefore be chiselled onto the bolts.
- To prevent damage to the bolts, they must not be clamped in a vice when marking them. Clamp a 14 mm socket with $^{1}/_{2}$" drive in the vice instead, and insert the bolt into the socket, as shown in illustration.
- Bolts marked with an “X” must not be used again.

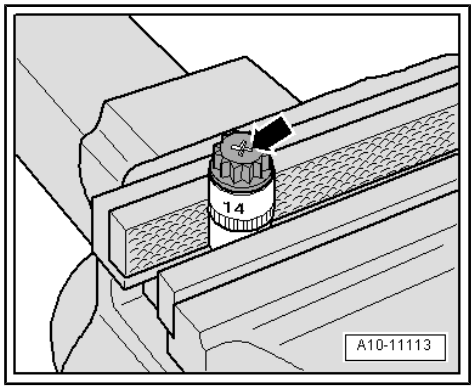

Protected by copyright. Copying for private or commercial purposes, in part or in whole, is not permitted unless authorised by AUDI AG. AUDI AG does not guarantee or accept any liability with respect to the correctness of information in this document. Copyright by AUDI AG.

3 Assembly mountings

⇒ “3.1 Exploded view - assembly mountings”, page 115

⇒ “3.2 Removing and installing tunnel cross member”, page 115

⇒ “3.3 Removing and installing gearbox support with gearbox mounting”, page 117

⇒ “3.4 Removing and installing gearbox mounting”, page 118

3.1 Exploded view - assembly mountings

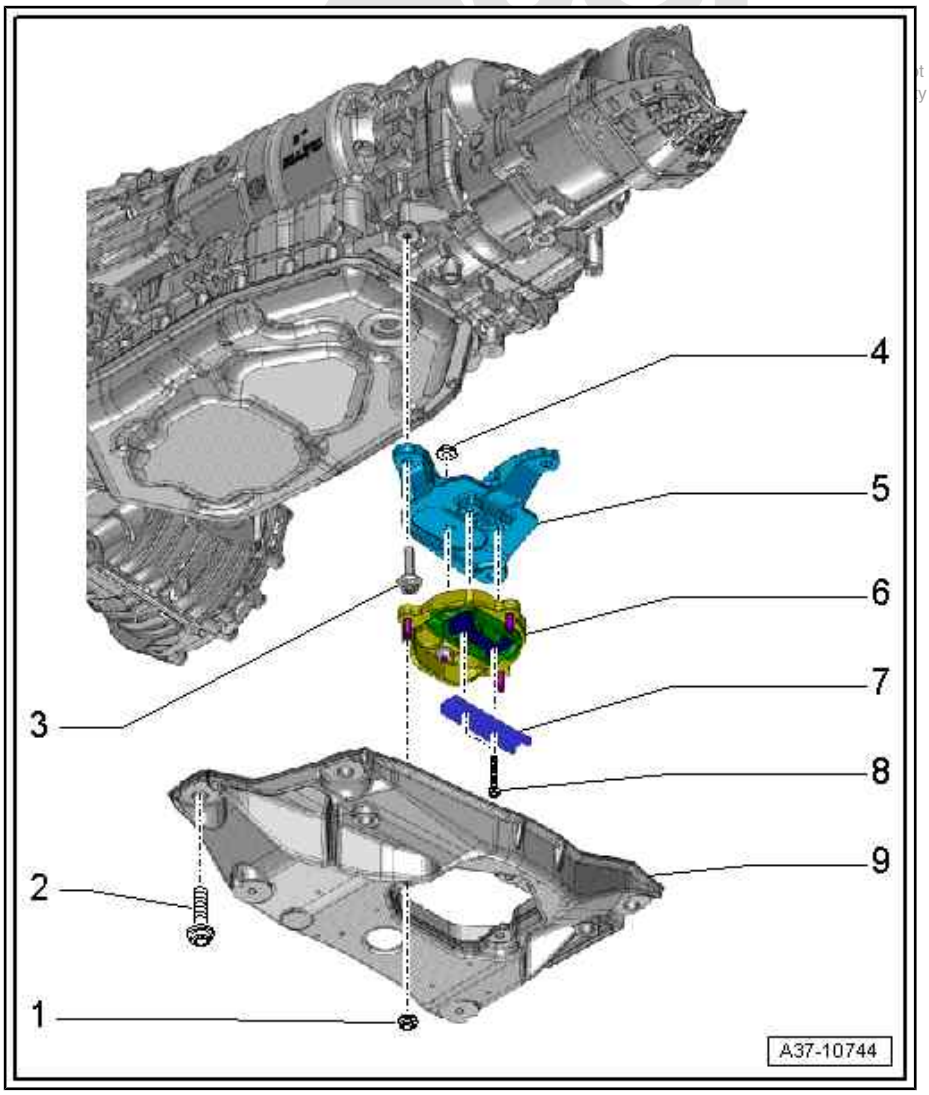

1 - Nut

- ❑ Only remove if gearbox mounting has to be detached from gearbox support
- ❑ 20 Nm

2 - Bolt

- ❑ 70 Nm

3 - Bolt

- ❑ 40 Nm

4 - Nut

- ❑ 20 Nm

5 - Gearbox support

- ❑ ⇒ “3.3 Removing and installing gearbox support with gearbox mounting”, page 117

6 - Gearbox mounting

- ❑ ⇒ “3.4 Removing and installing gearbox mounting”, page 118

7 - Stop (bottom)

- ❑ For gearbox mounting

8 - Bolt

- ❑ Only remove if gearbox mounting has to be detached from gearbox support
- ❑ Renew
- ❑ 20 Nm and then turn 90° further

9 - Tunnel cross member

- ❑ ⇒ “3.2 Removing and installing tunnel cross member”, page 115

3.2 Removing and installing tunnel cross member

Special tools and workshop equipment required

♦ Engine and gearbox jack - V.A.G 1383 A-

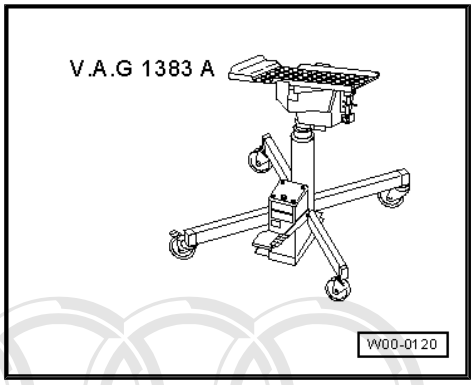

♦ Gearbox support - T10337-

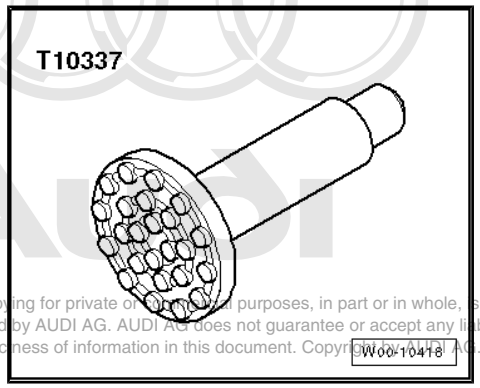

Protected by copyright. Copying for private or commercial purposes, in part or in whole, is not permitted unless authorised by AUDI AG. AUDI AG does not guarantee or accept any liability with respect to the correctness of information in this document. Copyright by AUDI AG.

Removing

– Remove rear noise insulation ⇒ General body repairs, exterior; Rep. gr. 66 ; Noise insulation; Removing and installing noise insulation .

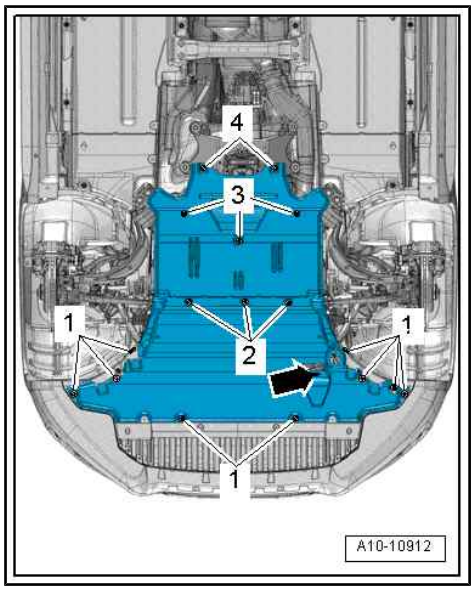

– Set up gearbox support - T10337- on engine and gearbox jack - V.A.G 1383 A- .

– Apply gearbox support - T10337- below gearbox.

– Slightly lift gearbox with engine and gearbox jack - V.A.G 1383 A- .

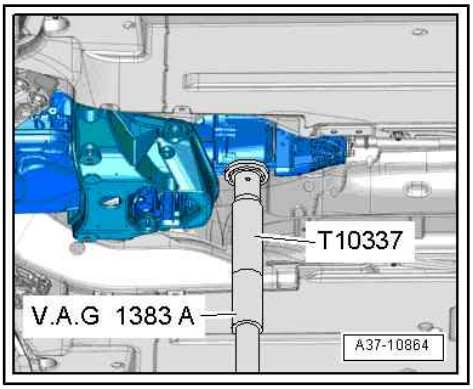

> ⚠ **WARNING**
>
> *Risk of accident.*
>
> ♦ *Engine and gearbox jack - V.A.G 1383 A- must remain in position when work is being carried out and must not be left unattended.*

– Remove bolts -arrows- for tunnel cross member.

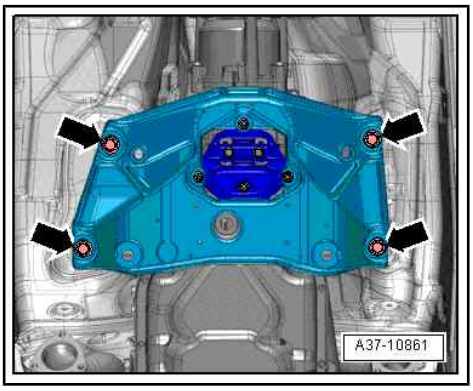

– Unscrew nuts -arrows- and remove tunnel cross member.

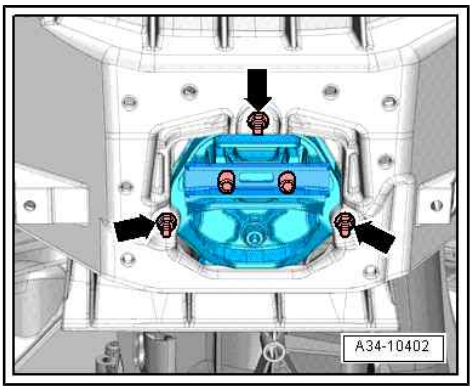

Installing

Installation is carried out in reverse sequence; note the following:

- Tightening torques ⇒ page 115

– Install rear noise insulation ⇒ General body repairs, exterior; Rep. gr. 66 ; Noise insulation; Exploded view - noise insulation .

3.3 Removing and installing gearbox support with gearbox mounting

Removing

– Remove tunnel cross member ⇒ page 115 .

– Remove bolts -arrows- and detach gearbox support from gearbox together with gearbox mounting.

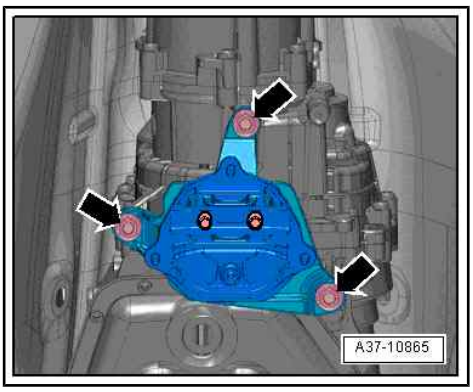

Installing

Installation is carried out in reverse sequence; note the following:

- Tightening torques ⇒ page 115

– Install tunnel cross member ⇒ page 115 .

Protected by copyright. Copying for private or commercial purposes, in part or in whole, is not permitted unless authorised by AUDI AG. AUDI AG does not guarantee or accept any liability with respect to the correctness of information in this document. Copyright by AUDI AG.

3.4 Removing and installing gearbox mounting

Removing

– Remove gearbox support together with gearbox mounting ⇒ page 117 .

– Remove bolts -1- and detach stop -2- (bottom) for gearbox mounting.

– Remove nut -4- and detach gearbox mounting -5- from gearbox support.

Installing

• Tightening torques ⇒ page 115

– Fit gearbox support -3- on gearbox mounting -5-.

– Hand-tighten nut -4-.

– Secure stop (bottom) -2- with bolts -1-.

– Tighten nut -4-.

– Install gearbox support with gearbox mounting ⇒ page 117 .

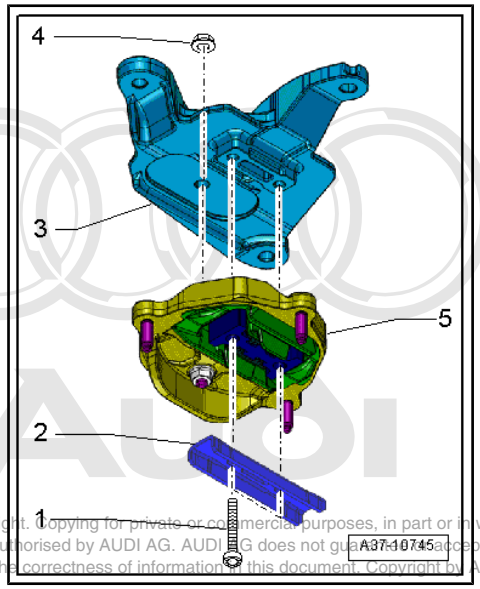

Protected by copyright. Copying for private or commercial purposes, in part or in whole, is not permitted unless authorised by AUDI AG. AUDI AG does not guarantee or accept any liability with respect to the correctness of information in this document. Copyright by AUDI AG.

4 Transporting gearbox

Special tools and workshop equipment required

- Hook and support tool - 3311- with bolt -3311/1-

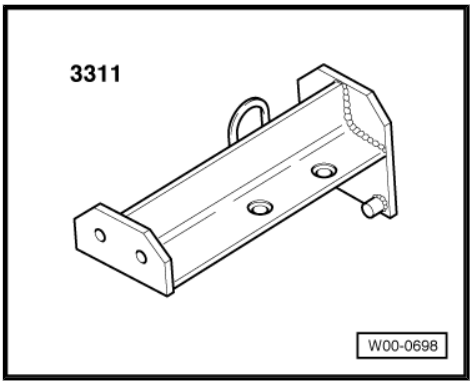

- Workshop hoist - VAS 6100-

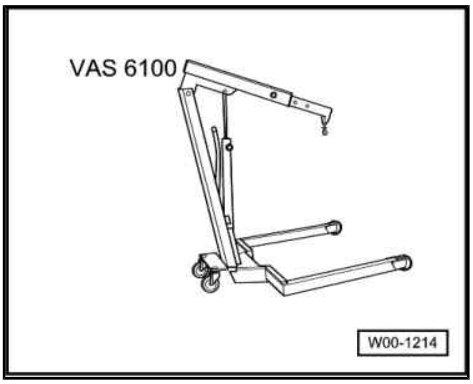

Procedure

- Gearbox removed

Caution

Risk of damage to gearbox components if gearbox is not supported correctly when removed.

- *Do not set down the gearbox on its ATF oil pan.*

Protected by copyright. Copying for private or commercial purposes, in part or in whole, is not permitted unless authorised by AUDI AG. AUDI AG does not guarantee or accept any liability with respect to the correctness of information in this document. Copyright by AUDI AG.

WARNING

Risk of accident if gearbox is not secured sufficiently.

- *Replace bolt of hook and support tool - 3311- with new, longer bolt -3311/1- .*
- *Otherwise the gearbox is not secured properly.*

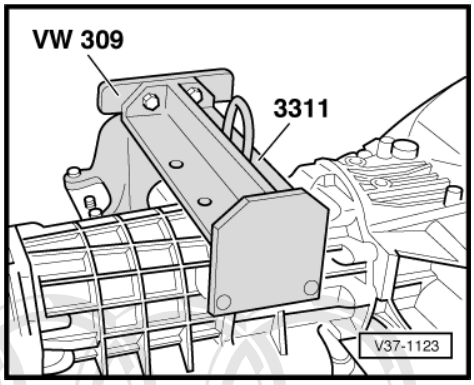

– Secure gearbox to hook and support tool - 3311- (using new, longer bolt -3311/1-).
– The workshop hoist - VAS 6100- can be used to lift and move the gearbox.

Note

Disregard -VW 309- .

Protected by copyright. Copying for private or commercial purposes, in part or in whole, is not permitted unless authorised by AUDI AG. AUDI AG does not guarantee or accept any liability with respect to the correctness of information in this document. Copyright by AUDI AG.

5 Securing to engine and gearbox support

Special tools and workshop equipment required

♦ Support plate - VW 309-

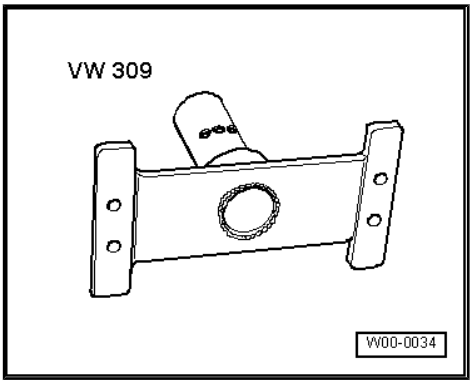

♦ Engine and gearbox support - VAS 6095-

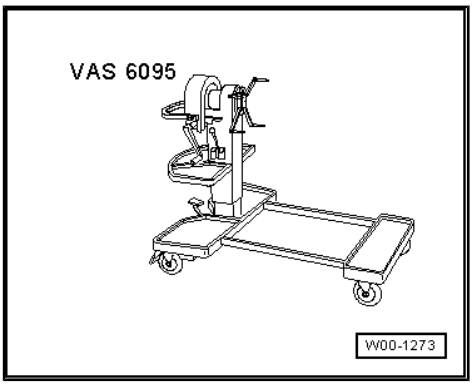

Procedure

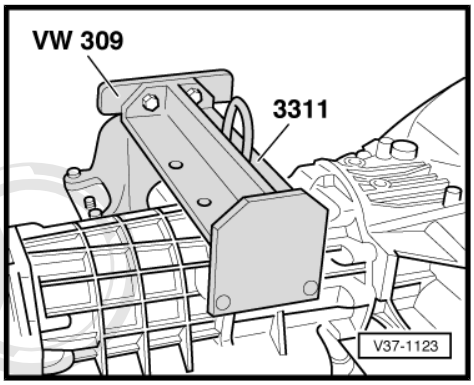

- Gearbox is on workshop hoist - VAS 6100- ⇒ page 119 .

– Secure support plate - VW 309- to hook and support tool - 3311- .

– Using workshop hoist - VAS 6100- , insert gearbox into engine and gearbox support - VAS 6095- .

Note

If the filled gearbox with oil pan is to be turned upside-down on the engine and gearbox support, the breathers for gearbox housing and final drive must be sealed.

Protected by copyright. Copying for private or commercial purposes, in part or in whole, is not permitted unless authorised by AUDI AG. AUDI AG does not guarantee or accept any liability with respect to the correctness of information in this document. Copyright by AUDI AG.

6 ATF

⇒ “6.1 Checking ATF level”, page 122

⇒ “6.2 Draining and filling ATF”, page 126

6.1 Checking ATF level

Special tools and workshop equipment required

- Vehicle diagnostic, testing and information system - VAS 5051B-
- Used oil collection and extraction unit - V.A.G 1782-
- ATF filling unit - V.A.G 1924-
- Safety goggles

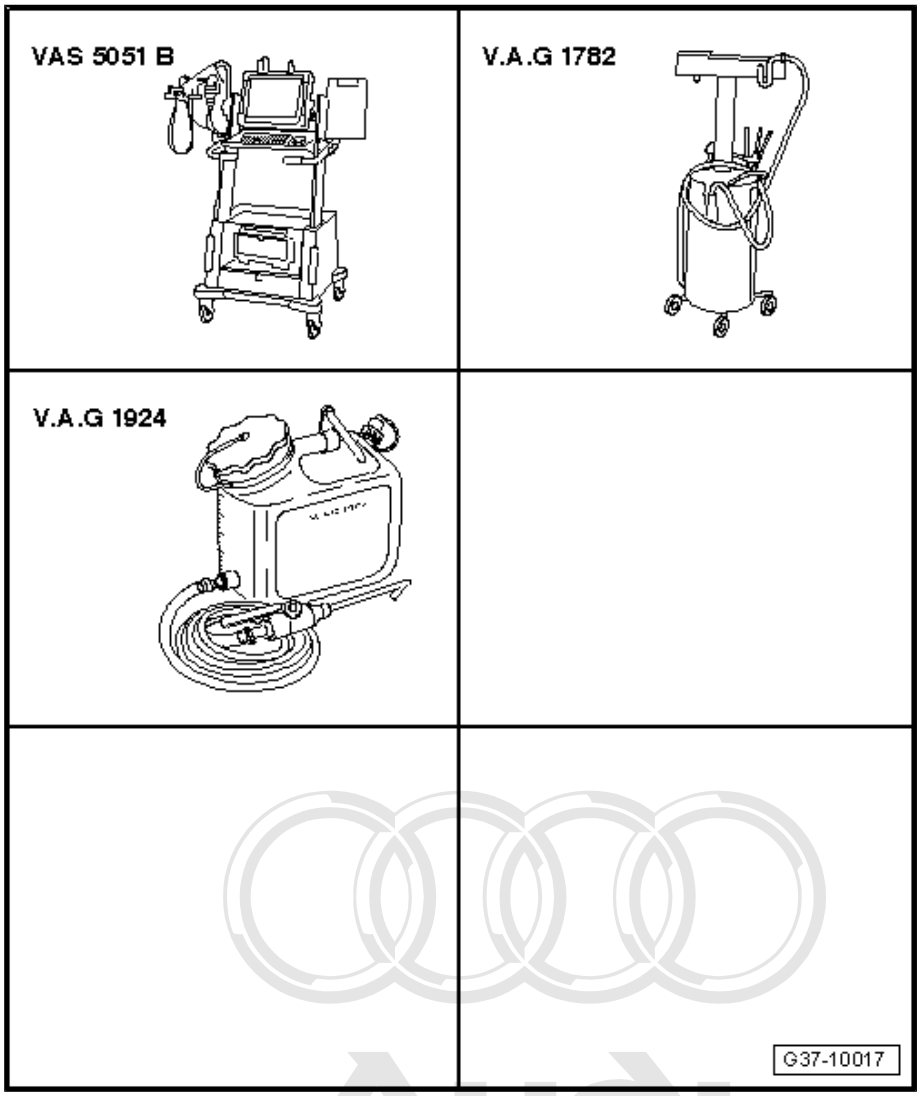

Test conditions

- Gearbox must not be in emergency running (backup) mode.
- Vehicle must be absolutely horizontal (drive it onto a four-pillar lifting platform or over an inspection pit).
- Selector lever at position “P”.
- Parking brake button must be pulled up to apply the electro-mechanical parking brake.
- Extractor hose(s) of an exhaust gas extractor (switched on) must be connected.
- Air conditioner and heating system switched off.
- Vehicle diagnostic, testing and information system - VAS 5051B- must be connected.

Copying for private or commercial purposes, in part or in whole, is not permitted unless authorised by AUDI AG. AUDI AG does not guarantee or accept any liability for the correctness of information in this document. Copyright by AUDI AG.

- The ATF temperature must not be higher than 30 °C at the beginning of the test. If the temperature is higher, allow the gearbox to cool down before proceeding.

Note

- *The ATF temperature is taken from the reading on the vehicle diagnostic, testing and information system - VAS 5051B- .*
- *The ATF level will vary according to the ATF temperature.*
- *If the ATF level is checked when the ATF temperature is too low, this will result in overfilling.*
- *If the ATF level is checked when the ATF temperature is too high, this will result in underfilling.*
- *Both overfilling and underfilling will impair the function of the gearbox.*

Procedure

– Using the vehicle diagnostic, testing and information system - VAS 5051B- in Guided Fault Finding mode, go to `Function/ Component Selection` and select the following menu items:

- `Drive system`
- `0B6 gearbox`
- `01 - Self-diagnosis-compatible systems`
- `02 - Gearbox electronics`
- `02 - Gearbox electronics, Functions`
- `02 - Read measured values`

– Select measured value for `gear oil temperature` from list on vehicle diagnostic, testing and information system - VAS 5051B- .

– Read off ATF temperature.

Checking and correcting ATF level

Note

- *The ATF level is checked at the ATF inspection plug.*
- *The ATF level is correct if a small amount of fluid comes out at the ATF inspection plug when ATF temperature is between 35°C and 45°C, or 50°C in hot climates (the fluid level rises due to expansion as it warms up).*

Protected by copyright. Copying for private or commercial purposes, in part or in whole, is not permitted unless authorised by AUDI AG. AUDI AG does not guarantee or accept any liability with respect to the correctness of information in this document. Copyright by AUDI AG.

Caution

Risk of damage to gearbox

- *Only the ATF available as a replacement part may be used for the automatic gearbox 0B6.*
- *Other types of oil cause malfunctions and/or failure of the gearbox.*
- *For the correct type, refer to ⇒ Electronic parts catalogue .*
- *The ATF filling unit must be clean and the ATF must not be mixed with other types of ATF!*

– Fill reservoir of ATF filling unit -V.A.G 1924- with ATF for automatic gearbox 0B6. For ATF specification refer to ⇒ Electronic parts catalogue .

– Secure reservoir for ATF filling unit -V.A.G 1924- as high as possible on vehicle.

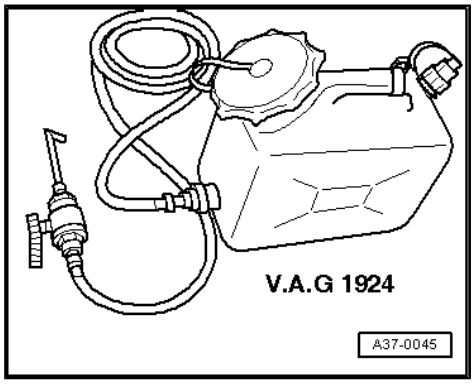

Caution

Risk of damage to gearbox

- *The engine must not be started if only a little or no ATF remains in gearbox after repair work or after excessive ATF leakage.*
- *In this case the gearbox must be filled with ATF before proceeding further* *⇒ page 126* .

– Remove rear noise insulation ⇒ General body repairs, exterior; Rep. gr. 66 ; Noise insulation; Removing and installing noise insulation .

– Start engine with selector lever in position “P”.

– With brake pedal still depressed, select all gear positions (“P”, “R”, “N”, “D”, “S”) one after the other at idling speed, maintaining each position for at least 10 seconds.

– Shift selector lever into position “N”.

– Increase engine speed to 2000 rpm for at least 60 seconds.

– Shift selector lever into position “P”.

– Allow engine to continue running at idling speed.

– Place used oil collection and extraction unit - V.A.G 1782- below gearbox.

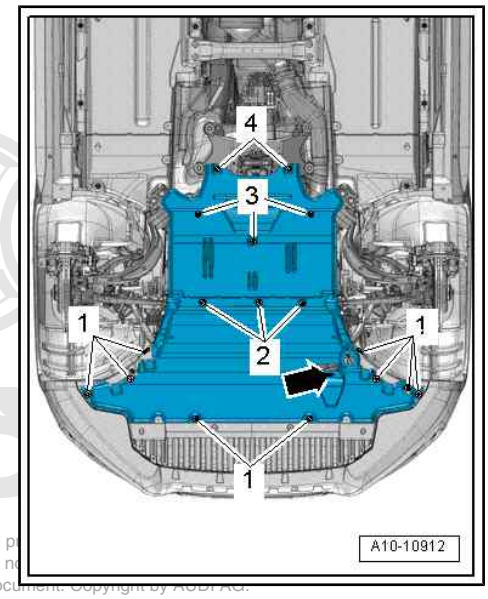

WARNING

Risk of eye injury.

- *Wear safety goggles.*

Protected by copyright. Copying for private or commercial p
permitted unless authorised by AUDI AG. AUDI AG does n
with respect to the correctness of information in this document. Copyright by AUDI AG.

– When an ATF temperature of 35 °C is reached, unscrew the ATF inspection plug -arrow B- and drain off any surplus ATF.

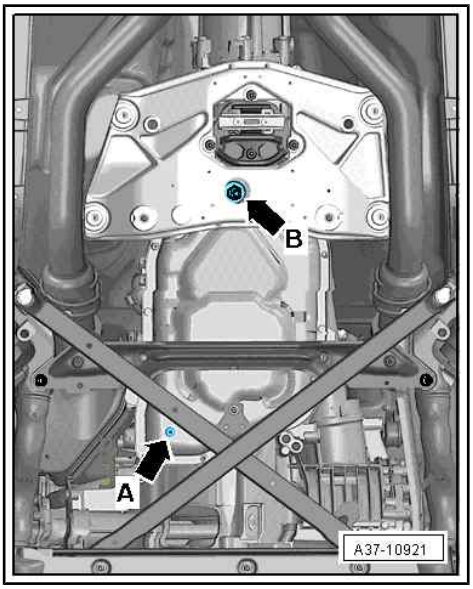

Note

The ATF inspection plug is accessible via the opening in the tunnel cross member.

Protected by copyright. Copying for private or commercial purposes, in part or in whole, is not permitted unless authorised by AUDI AG. AUDI AG does not guarantee or accept any liability with respect to the correctness of information in this document. Copyright by AUDI AG.

• If ATF comes out of the inspection hole before the ATF has reached 40°C, the ATF level -arrow- is OK.

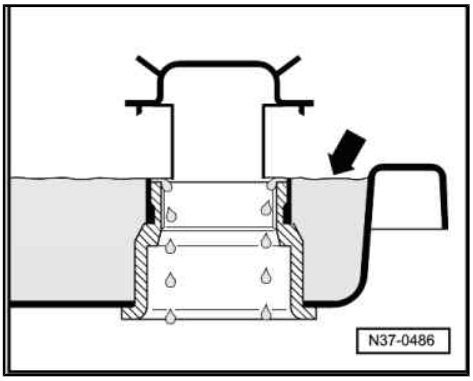

Note

The ATF inspection plug must be screwed in again at the latest when ATF reaches a temperature of 45 °C (countries with hot climates: 50 °C).

– Fit new seal -arrow- on ATF inspection plug and tighten to 8 Nm ± 10%. The ATF level check is now completed.

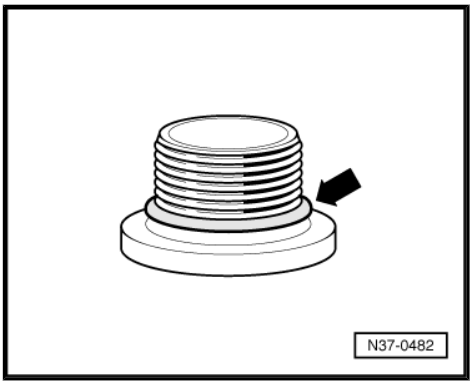

– Install noise insulation ⇒ General body repairs, exterior; Rep. gr. 66 ; Noise insulation; Exploded view - noise insulation .

• If no ATF emerges from ATF inspection hole when ATF has reached 40 °C:

Filling up ATF

Note

The ATF inspection plug must be screwed in again at the latest when ATF temperature reaches 45°C (or 50°C in hot climates). If necessary, switch off engine, allow gearbox to cool down and repeat the test.

– Guide filler nozzle of ATF filling unit -V.A.G 1924- in from below through an opening in the deflector cap -arrow-, taking care not to push the deflector cap upwards out of position.

– Fill with ATF using ATF filling unit - V.A.G 1924- until ATF comes out of inspection hole (approx 4.5 to 5 ltr.).

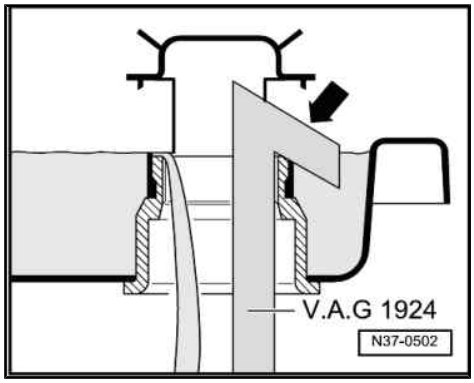

Note

The ATF level must not be too low or too high, otherwise this would impair the function of the gearbox.

– Fit new seal -arrow- on ATF inspection plug and tighten to 8 Nm ± 10%. The ATF level check is now completed.

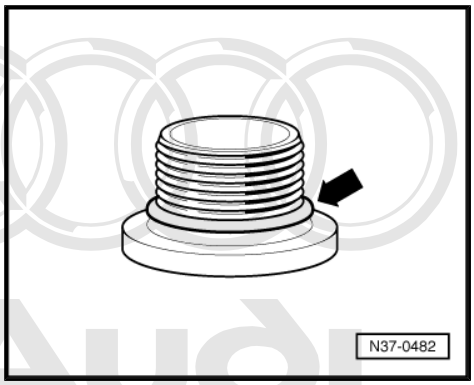

– Remove remaining ATF on tunnel cross member and clean tunnel cross member thoroughly.

Protected by copyright. ... le, is not permitted unless author... y liability with respect to the co... l AG.

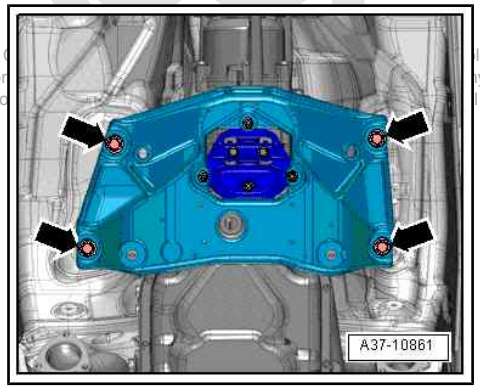

Note

- *There are several recesses in the top of the tunnel cross member in which ATF can collect.*
- *These must be cleaned thoroughly.*
- *-Arrows- can be disregarded.*

– Install rear noise insulation ⇒ General body repairs, exterior; Rep. gr. 66 ; Noise insulation; Exploded view - noise insulation .

6.2 Draining and filling ATF

Special tools and workshop equipment required

- Vehicle diagnostic, testing and information system - VAS 5051B-
- Used oil collection and extraction unit - V.A.G 1782-
- ATF filling unit - V.A.G 1924-
- Safety goggles

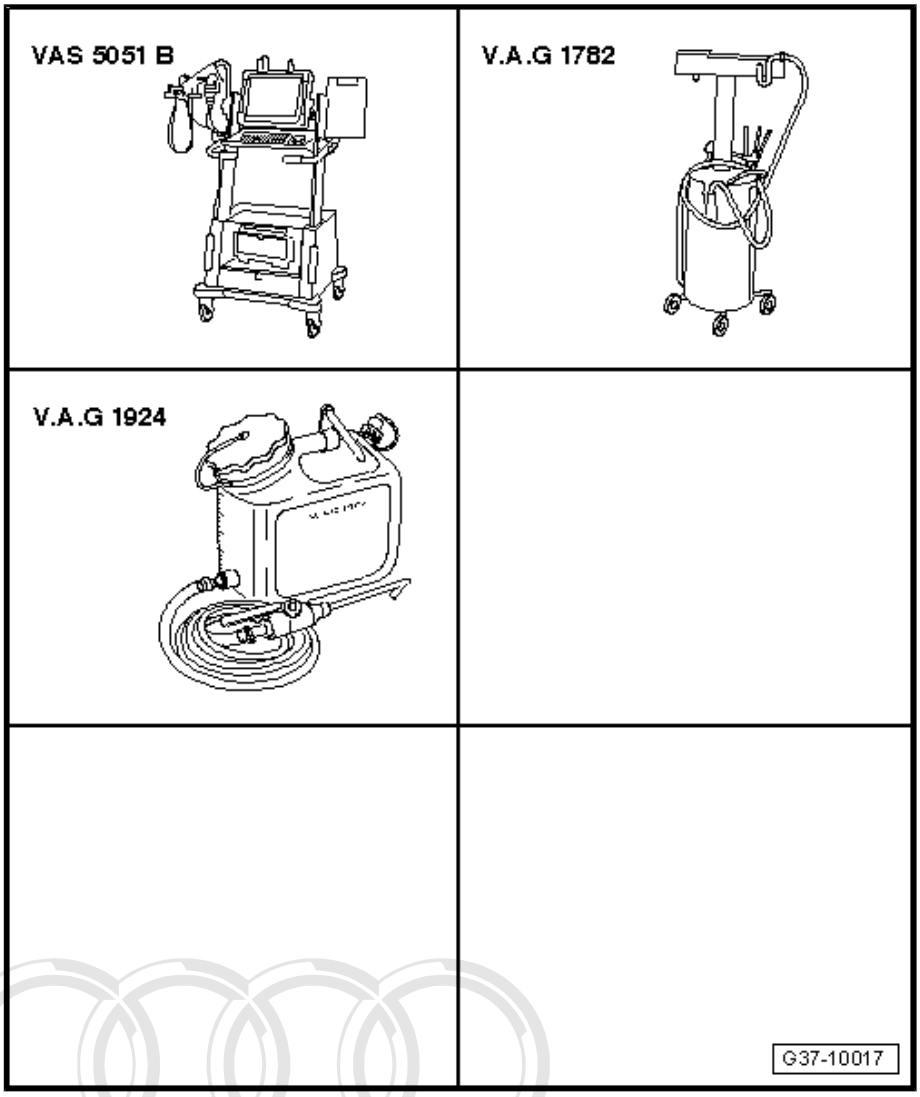

Procedure

- Engine not running.
- Vehicle must be absolutely horizontal (drive it onto a four-pillar lifting platform or over an inspection pit).
- Selector lever at position “P”.
- Parking brake button must be pulled up to apply the electro-mechanical parking brake.

Protected by copyright. Copying for private or commercial purposes, in part or in whole, is not permitted unless authorised by AUDI AG. AUDI AG does not guarantee or accept any liability with respect to the correctness of information in this document. Copyright by AUDI AG.

– Remove rear noise insulation ⇒ General body repairs, exterior; Rep. gr. 66 ; Noise insulation; Removing and installing noise insulation .

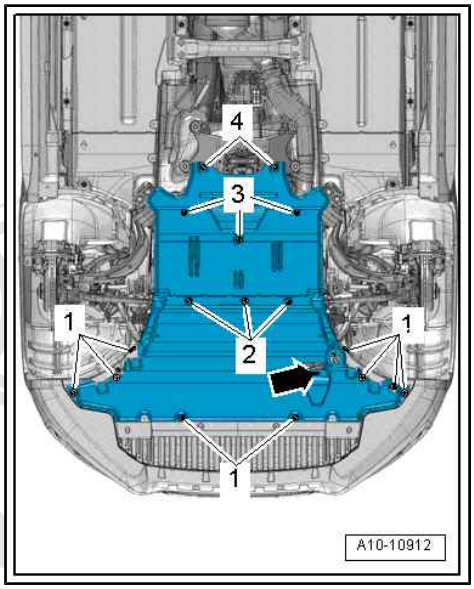

Protected by copyright. Copying for private or commercial purposes, in part or in whole, is not permitted unless authorised by AUDI AG. AUDI AG does not guarantee or accept any liability with respect to the correctness of information in this document. Copyright by AUDI AG.

– Place used oil collection and extraction unit - V.A.G 1782- below gearbox.

> ⚠ **WARNING**
>
> *Risk of eye injury.*
>
> ♦ *Wear safety goggles.*

– Remove ATF drain plug -arrow A- and allow ATF to drain off.

> ⚠ **Caution**
>
> *Risk of damage to gearbox*
>
> ♦ *The engine must not be started when there is no more ATF in the gearbox.*

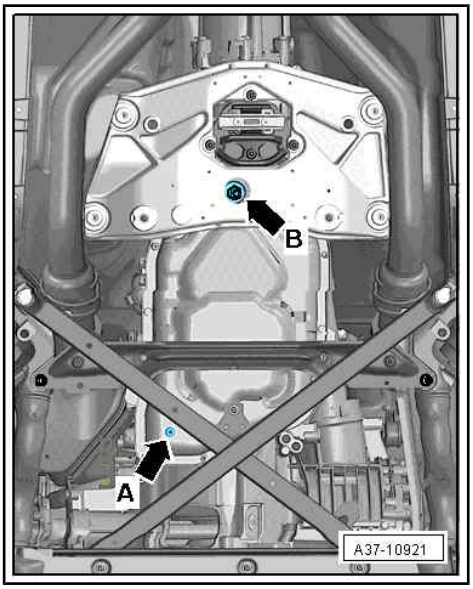

> ℹ **Note**
>
> ♦ *Always adhere to waste disposal regulations.*
>
> ♦ *Renew ATF drain plug with seal.*

– Tighten new drain plug -arrow A- to 12 Nm.

Filling gearbox with ATF

> ⚠ **Caution**
>
> *Risk of damage to gearbox*
>
> ♦ *Only the ATF available as a replacement part may be used for the automatic gearbox 0B6.*
>
> ♦ *Other types of oil cause malfunctions and/or failure of the gearbox.*
>
> ♦ *For the correct type, refer to ⇒ Electronic parts catalogue .*
>
> ♦ *The ATF filling unit must be clean and the ATF must not be mixed with other types of ATF!*

– Fill reservoir of ATF filling unit -V.A.G 1924- with ATF for automatic gearbox 0B6. For ATF specification refer to ⇒ Electronic parts catalogue .

– Secure reservoir for ATF filling unit -V.A.G 1924- as high as possible on vehicle.

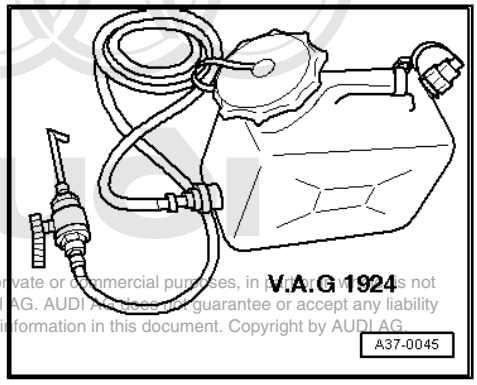

Protected by copyright. Copying for private or commercial purposes, in part or in whole, is not permitted unless authorised by AUDI AG. AUDI AG does not guarantee or accept any liability with respect to the correctness of information in this document. Copyright by AUDI AG.

– Remove ATF inspection plug -arrow B-.

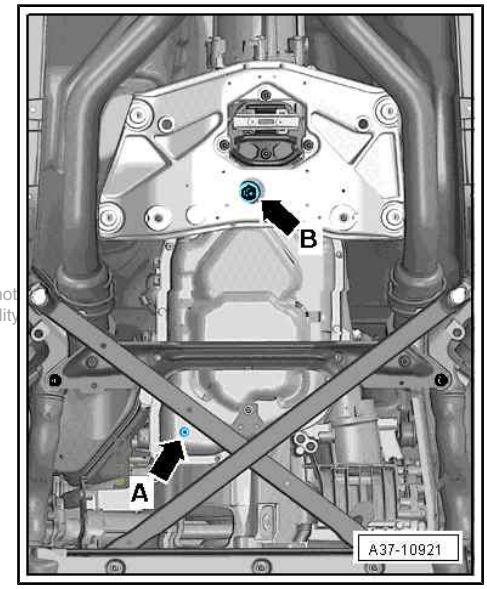

Protected by copyright. Copying for private or commercial purposes, in part or in whole, is not permitted unless authorised by AUDI AG. AUDI AG does not guarantee or accept any liability with respect to the correctness of information in this document. Copyright by AUDI AG.

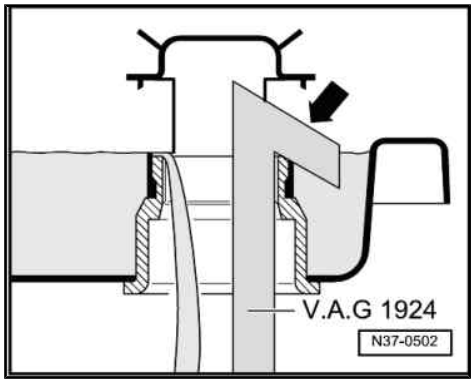

– Guide filler nozzle of ATF filling unit -V.A.G 1924- in from below through an opening in the deflector cap -arrow-, taking care not to push the deflector cap upwards out of position.
– Fill with ATF using ATF filling unit - V.A.G 1924- until ATF comes out of inspection hole.
– Shift selector lever into position “P”.
– Start engine and turn off after 20 seconds.
– Continue filling with ATF using ATF filling unit - V.A.G 1924- until ATF comes out of inspection hole.
– Start engine.
– Continue filling with ATF using ATF filling unit - V.A.G 1924- until ATF comes out of inspection hole again.
– Tighten ATF inspection plug.
– With brake pedal depressed, select all gear positions (“P”, “R”, “N”, “D”, “S”) one after the other at idling speed, maintaining each position for at least 10 seconds.
– Shift selector lever into position “N”.
– Increase engine speed to 2000 rpm for at least 60 seconds.
– Shift selector lever into position “P”.
– Check ATF level and top up as required ⇒ page 122 .

Note

Observe all notes and test requirements for “Checking ATF level”.

– Install rear noise insulation ⇒ General body repairs, exterior; Rep. gr. 66 ; Noise insulation; Exploded view - noise insulation .

7 ATF circuit

⇒ "7.1 Exploded view - ATF circuit", page 131

⇒ "7.2 Cleaning ATF lines", page 134

7.1 Exploded view - ATF circuit

⇒ "7.1.1 Exploded view - ATF circuit, 4-cyl. and 6-cyl. engines", page 131

⇒ "7.1.2 Exploded view - ATF circuit, 8-cyl. engines", page 133

7.1.1 Exploded view - ATF circuit, 4-cyl. and 6-cyl. engines

Note

- *Rules for cleanliness when working on the automatic gearbox ⇒ page 4*
- *General repair instructions ⇒ page 5 .*
- *Seal off open lines and connections with clean plugs from engine bung set - VAS 6122- .*
- *Check ATF level after renewing ATF lines ⇒ page 122 .*

Caution

Risk of damage to gearbox

Protected by copyright. Copying for private or commercial purposes, in part or in whole, is not permitted unless authorised by AUDI AG. AUDI AG does not guarantee or accept any liability with respect to the correctness of information in this document. Copyright by AUDI AG.

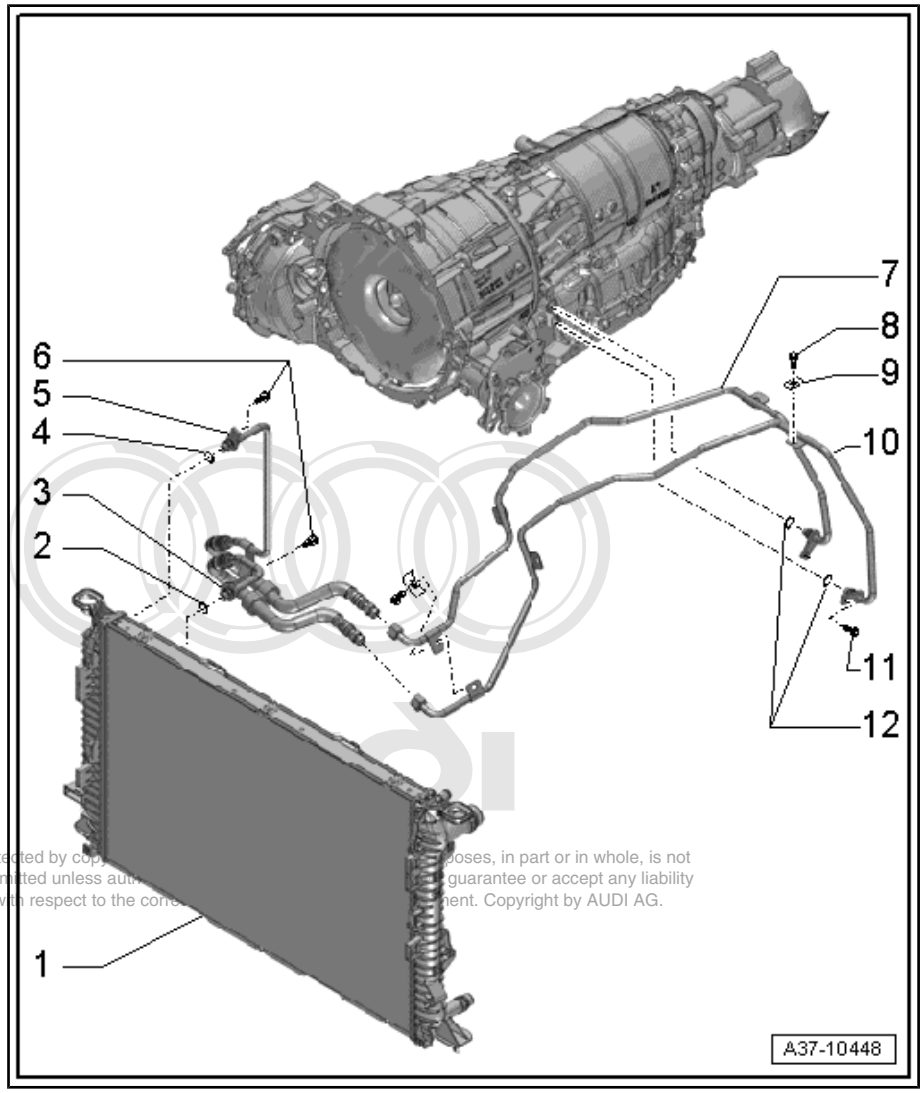

Protected by copyright. Copying for private or commercial purposes, in part or in whole, is not permitted unless authorised. AUDI AG does not guarantee or accept any liability with respect to the correctness of information in this document. Copyright by AUDI AG.

1 - ATF cooler

- ❑ Integrated in radiator for engine coolant
- ❑ Removing and installing ⇒ Rep. gr. 19 ; Radiator/radiator fans; Removing and installing radiator

2 - O-ring

- ❑ Renew
- ❑ Lightly lubricate with ATF before inserting

3 - ATF line (return)

- ❑ From ATF cooler to gearbox
- ❑ Mark relative position of ATF lines before removing to avoid interchanging

4 - O-ring

- ❑ Renew
- ❑ Lightly lubricate with ATF before inserting

5 - ATF line (supply)

- ❑ From gearbox to ATF cooler
- ❑ Mark relative position of ATF lines before removing to avoid interchanging

6 - Bolt

- ❑ 5 Nm
- ❑ First push in ATF lines with new O-rings by hand as far as stop

7 - ATF line (supply)

- ❑ From gearbox to ATF cooler
- ❑ Mark relative position of ATF lines before removing to avoid interchanging
- ❑ Nuts on pipes, 29 Nm
- ❑ ATF lines are locked together

8 - Bolt

- ❑ 8 Nm

9 - Bracket

10 - ATF line (return)

- ❑ From ATF cooler to gearbox
- ❑ Mark relative position of ATF lines before removing to avoid interchanging
- ❑ Nuts on pipes, 29 Nm
- ❑ ATF lines are locked together

11 - Bolt

- ❑ 20 Nm
- ❑ First push in ATF lines with new O-rings by hand as far as stop
- ❑ Retaining tab on bottom ATF line should rest on thread of gearbox
- ❑ Retaining tab on top ATF line should rest on retaining tab on bottom ATF line

12 - O-rings
- ❑ Renew
- ❑ Lightly lubricate with ATF before inserting

7.1.2 Exploded view - ATF circuit, 8-cyl. engines

Note

- *Rules for cleanliness when working on the automatic gearbox ⇒ page 4*
- *General repair instructions ⇒ page 5 .*
- *Seal off open lines and connections with clean plugs from engine bung set - VAS 6122- .*
- *Check ATF level after renewing ATF lines ⇒ page 122 .*

Caution

Risk of damage to gearbox

Protected by copyright. Copying for private or commercial purposes, in part or in whole, is not permitted unless authorised by AUDI AG. AUDI AG does not guarantee or accept any liability with respect to the correctness of information in this document. Copyright by AUDI AG.

1 - O-ring
- ❑ Renew
- ❑ Lightly lubricate with ATF before inserting

2 - ATF line (supply)
- ❑ Connecting piece on ATF cooler
- ❑ With plug-in connector ⇒ Item 14 (page 134)

3 - Bolt
- ❑ 5 Nm
- ❑ First push in ATF lines with new O-rings by hand as far as stop

4 - Bolt
- ❑ 9 Nm
- ❑ Secures ATF line to engine

5 - ATF line (return)
- ❑ From ATF cooler to gearbox
- ❑ With plug-in connector ⇒ Item 14 (page 134)

6 - ATF line (supply)
- ❑ From gearbox to ATF cooler

7 - Bolt
- ❑ 23 Nm
- ❑ Secures ATF line together with heat shield for drive shaft

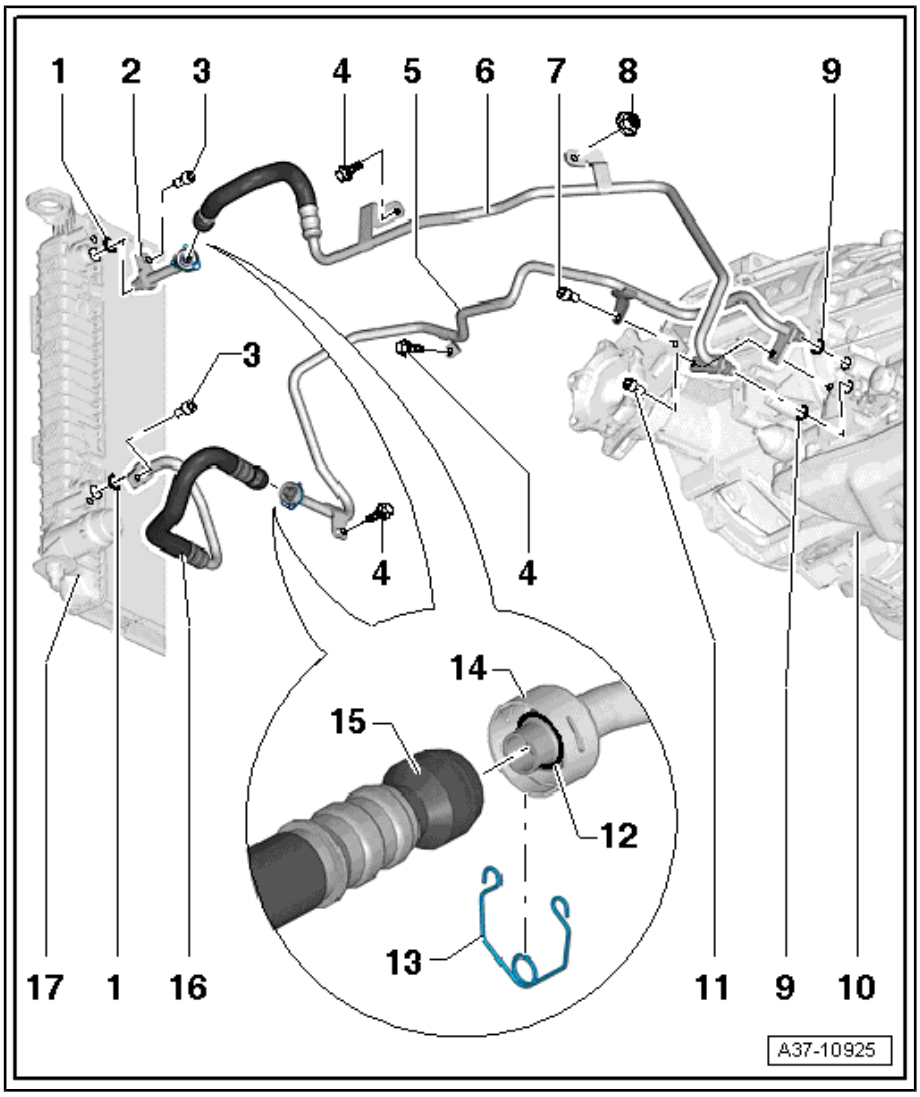

8 - Nut

- ❑ 8 Nm
- ❑ Secures ATF line to engine

9 - O-ring

- ❑ Renew
- ❑ Lightly lubricate with ATF before inserting

10 - Gearbox

11 - Bolt

- ❑ 20 Nm
- ❑ First push in ATF lines with new O-rings by hand as far as stop
- ❑ Retaining tab on bottom ATF line should rest on threaded hole in gearbox
- ❑ Retaining tab on top ATF line should rest on bottom line

12 - O-ring

- ❑ Renew
- ❑ Fitted inside plug-in connector ⇒ Item 14 (page 134)
- ❑ Lightly lubricate with ATF before inserting

Protected by copyright. Copying for private or commercial purposes, in part or in whole, is not permitted unless authorised by AUDI AG. AUDI AG does not guarantee or accept any liability with respect to the correctness of information in this document. Copyright by AUDI AG.

13 - Retaining clip

- ❑ To disconnect plug-in connector ⇒ Item 14 (page 134) , pull retaining clip off
- ❑ Before connecting ATF line at plug-in connector, first engage retaining clip in plug-in connector three times

14 - Plug-in connector

- ❑ To disconnect ATF lines, pull off retaining clip ⇒ Item 13 (page 134)
- ❑ To assemble ATF lines, attach retaining clip ⇒ Item 13 (page 134) and renew O-ring ⇒ Item 12 (page 134)
- ❑ Slide ATF lines together and engage

15 - Connecting piece

- ❑ For plug-in connector

16 - ATF line (return)

- ❑ Connecting piece on ATF cooler
- ❑ From ATF cooler to gearbox
- ❑ Attached to plug-in connector ⇒ Item 14 (page 134)

17 - ATF cooler

- ❑ Integrated in radiator for engine coolant
- ❑ Removing and installing ⇒ Rep. gr. 19 ; Radiator/radiator fans; Removing and installing radiator

7.2 Cleaning ATF lines

Special tools and workshop equipment required

- Used oil collection and extraction unit - V.A.G 1782-

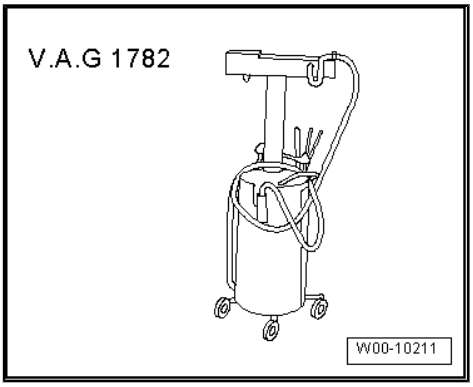

- Hose, approx. 18 mm dia.
- Compressed-air gun (commercially available)
- Safety goggles

Procedure

Note

Rules for cleanliness when working on the automatic gearbox
⇒ page 4

– Before fitting a replacement gearbox, always blow through the ATF cooler and ATF lines with compressed air (not more than 10 bar).

Note

If the ATF which emerges during cleaning is very dirty, the ATF cooler and ATF lines must additionally be flushed out with clean ATF.

Protected by copyright. Copying for private or commercial purposes, in part or in whole, is not permitted unless authorised by AUDI AG. AUDI AG does not guarantee or accept any liability with respect to the correctness of information in this document. Copyright by AUDI AG.

38 – Gears, control

1 ATF system

⇒ "1.1 Exploded view - ATF system", page 136

⇒ "1.2 Removing and installing oil pan", page 138

⇒ "1.3 Removing and installing ATF strainer", page 140

1.1 Exploded view - ATF system

Caution

Risk of damage to gearbox

- *The engine must not be started when there is no ATF in the gearbox or if the ATF oil pan has been removed.*

Note

- *Always renew mechatronic unit if contaminated or defective.*
- *Rules for cleanliness when working on the automatic gearbox* *⇒ page 4*
- *General repair instructions* *⇒ page 5* *.*
- *Coat O-rings and seals with ATF. Other types of lubricant will cause the gearbox hydraulics to malfunction.*

Reproduction of this document or private or commercial purposes, in part or in whole, is not permitted unless authorised by AUDI AG. AUDI AG does not guarantee or accept any liability with respect to the correctness of information in this document. Copyright by AUDI AG.

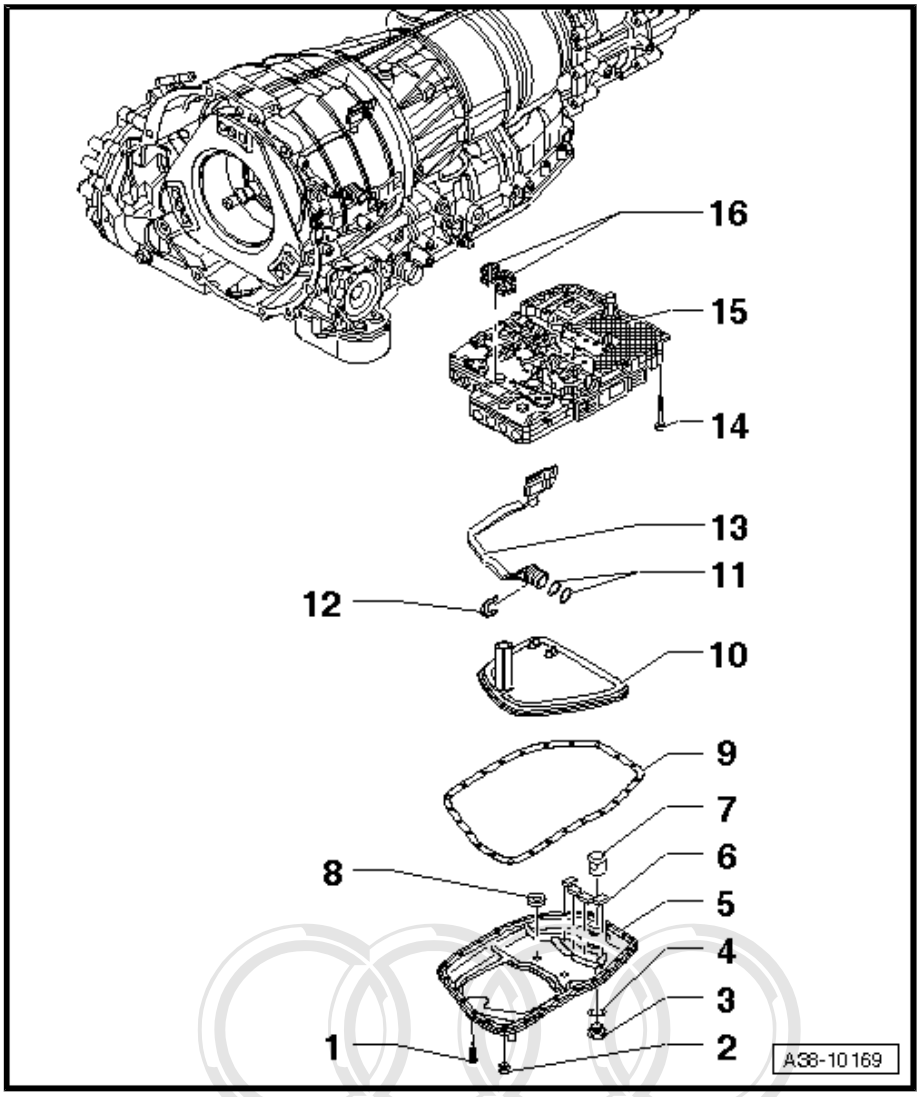

1 - Bolt
- ❑ 13x
- ❑ Renew
- ❑ 2.5 Nm + 90°
- ❑ Follow correct tightening sequence ⇒ "1.2 Removing and installing oil pan", page 138
- ❑ Oil pan to gearbox

2 - ATF drain plug
- ❑ 12 Nm
- ❑ Renew

3 - ATF inspection plug
- ❑ 8 Nm ± 10%

4 - O-ring
- ❑ Renew

5 - ATF oil pan
- ❑ ⇒ "1.2 Removing and installing oil pan", page 138

6 - Magnet
- ❑ 2x disc-shaped magnets, (not as illustrated)
- ❑ Ensure full contact
- ❑ Clean before installing

7 - Deflector cap
- ❑ Plugged into opening on oil pan

8 - Not fitted

9 - Oil pan gasket
- ❑ Renew

10 - ATF strainer
- ❑ ⇒ "1.3 Removing and installing ATF strainer", page 140

11 - O-ring
- ❑ Renew

Protected by copyright. Copying for private or commercial purposes, in part or in whole, is not permitted unless authorised by AUDI AG. AUDI AG does not guarantee or accept any liability with respect to the correctness of information in this document. Copyright by AUDI AG.

12 - Retaining clip for wiring harness connector

13 - Wiring harness in gearbox
- ❑ Some versions have retainer catches on connector
- ❑ ⇒ "2.2 Removing and installing wiring harness in gearbox", page 146

14 - Bolt
- ❑ 8 Nm
- ❑ Observe instructions for installation and removal ⇒ "2.1 Removing and installing mechatronic unit", page 142

15 - Mechatronic unit
- ❑ ⇒ "2.1 Removing and installing mechatronic unit", page 142

16 - Seal

1.2 Removing and installing oil pan

Special tools and workshop equipment required

- Guide pins (4x) -T40199-

Removing

Note

- *Rules for cleanliness when working on the automatic gearbox* *⇒ page 4*
- *General repair instructions* *⇒ page 5* *.*

– Remove tunnel cross member ⇒ page 115 .

– Remove subframe cross brace ⇒ Running gear, axles, steering; Rep. gr. 40 ; Subframe; Removing and installing subframe cross brace .

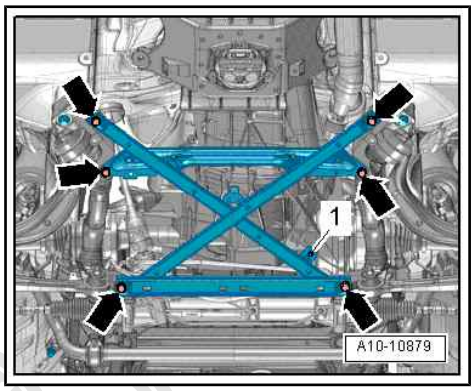

Protected by copyright. Copying for private or commercial purposes, in part or in whole, is not permitted unless authorised by AUDI AG. AUDI AG does not guarantee or accept any liability with respect to the correctness of information in this document. Copyright by AUDI AG.

– Drain ATF -arrow- ⇒ page 126 .

– Unscrew bolts for ATF oil pan in sequence -13 to 1- (opposite to tightening sequence).

– Remove ATF oil pan.

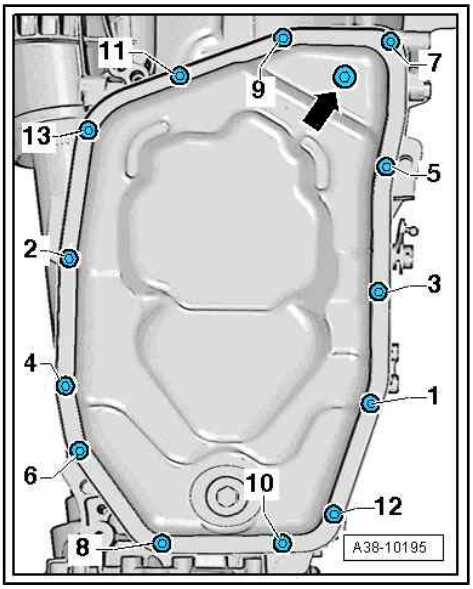

Installing

Installation is carried out in reverse sequence; note the following:

- Tightening torques ⇒ page 136

Note

- *Renew seals and gaskets.*
- *Bolts for ATF oil pan must be renewed.*
- *If the vehicle mileage is high, it is recommended to renew the ATF strainer when removing the ATF oil pan* *⇒ page 140*. *Otherwise the ATF strainer only has to be renewed if it has been damaged.*

Protected by copyright. Copying for private or commercial purposes, in part or in whole, is not permitted unless authorized by AUDI AG. AUDI AG does not guarantee or accept any liability with respect to the correctness and completeness of this document and its contents.

– Clean all magnets in recesses on ATF oil pan. Ensure that magnets make full contact with ATF oil pan.

– Clean sealing surface thoroughly; remaining material from the previous gasket must be removed completely.

– Screw four guide pins -T40199- into items -10, 11, 12 and 13- with ATF oil pan removed.

Note

The guide pins -T40199- hold the gasket and the ATF oil pan in position. Without them the ATF oil pan will not be properly sealed.

– Guide new gasket and ATF oil pan over guide pins -T40199- .

– Tighten new bolts for ATF oil pan in the sequence -1 to 9-.

– Remove the four guide pins -T40199- .

– Fit remaining bolts -10, 11, 12 and 13- one by one.

– Install subframe cross brace ⇒ Running gear, axles, steering; Rep. gr. 40 ; Subframe; Removing and installing subframe cross brace .

– Install tunnel cross member ⇒ page 115 .

– Fill up with ATF ⇒ page 126 .

1.3 Removing and installing ATF strainer

Removing

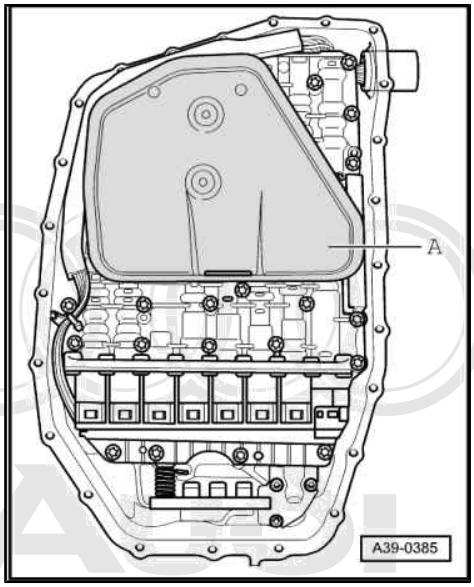

Note

- *Rules for cleanliness when working on the automatic gearbox* *⇒ page 4*
- *General repair instructions* *⇒ page 5* .

– Remove ATF oil pan ⇒ page 138 .

– Carefully pull ATF strainer -A- out of gearbox.

Protected by copyri whole, is not permitted unless au pt any liability with respect to th AUDI AG.

Installing

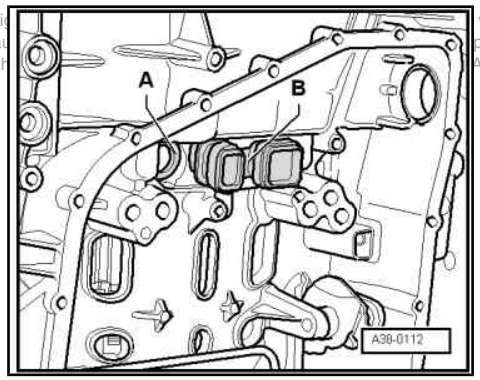

Note

- *In most cases, the ATF strainer seal -A- will remain in place in the gearbox when the ATF strainer is removed.*
- *This seal must be removed first if you want to renew the ATF strainer.*
- *The seal can be reused if the old ATF strainer is reinstalled.*

Note the following when replacing the ATF strainer with a new ATF strainer:

Note

- *The ATF strainer only has to be renewed if it has been damaged.*
- *If the vehicle mileage is high, it is recommended to renew the ATF strainer when removing the ATF oil pan.*

– Carefully remove seal for ATF strainer -A- from gearbox using a screwdriver or similar.

Note

- *Take care not to damage sealing surface.*
- *The illustration shows seal with mechatronic unit removed.*
- *The new ATF strainer is supplied with the seal fitted.*

Continuation for new and old ATF strainer:

– Press intake neck of new ATF strainer -A- carefully onto stop into mounting hole in gearbox.

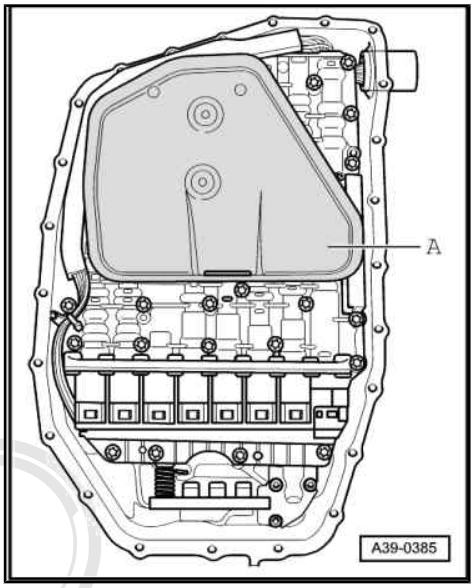

Note

When replacing ATF strainer with a new ATF strainer, press it in with the seal already attached.

– Install ATF oil pan ⇒ page 138 .

– Fill up with ATF ⇒ page 126 .

Protected by copyright. Copying for private or commercial purposes, in part or in whole, is not permitted unless authorised by AUDI AG. AUDI AG does not guarantee or accept any liability with respect to the correctness of information in this document. Copyright by AUDI AG.

2 Mechatronic unit

⇒ "2.1 Removing and installing mechatronic unit", page 142

⇒ "2.2 Removing and installing wiring harness in gearbox", page 146

2.1 Removing and installing mechatronic unit

Removing

Note

- *Rules for cleanliness when working on the automatic gearbox* *⇒ page 4*
- *General repair instructions* *⇒ page 5* .
- *Always renew mechatronic unit if contaminated or defective.*

This document is copyright protected and provided for personal use only. Any other use, in part or in whole, is not permitted unless authorised by AUDI AG. AUDI AG does not guarantee or accept any liability with respect to the correctness of information in this document. Copyright by AUDI AG.

– Disconnect battery ⇒ Electrical system; Rep. gr. 27 ; Battery; Disconnecting and connecting battery .

– Remove ATF oil pan ⇒ page 138 .

– Remove ATF strainer ⇒ page 140 .

Caution

The gearbox control unit (mechatronic unit) can be damaged by electrostatic discharge.

- ***Before touching or removing the mechatronic unit, always discharge any static electricity by touching an earthed object with your hand.***

– Touch an earthed object with your hand (without gloves) to discharge any static electricity.

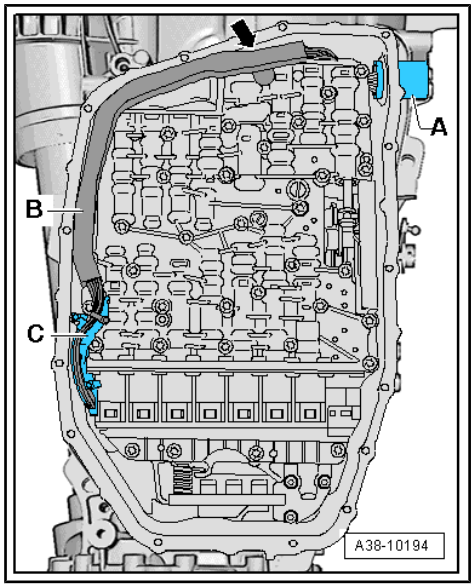

Note

- *Connector -C- and wiring harness -B- must be detached from the mechatronic unit before removing the mechatronic unit. The wiring harness connector -A- remains in the gearbox housing.*
- *If the tab -arrow- on the reverse side of the wiring harness breaks off, the wiring harness must be renewed.*
- *The following illustrations show the mechatronic unit removed from the gearbox. The wiring harness connector -A- remains in the gearbox housing.*
- *On some versions, connector -C- does not have retainer catches -1- and -2-.*

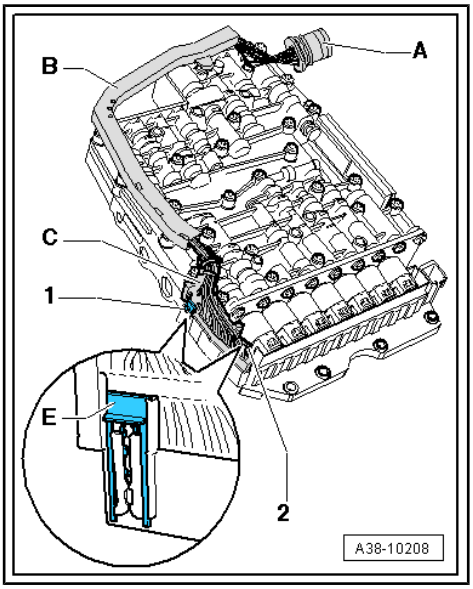

– If fitted, pull out both retainer catches -1- and -2- on connector -C-.

– Carefully detach connector -C- from socket -D- of mechatronic unit.

– Carefully detach wiring harness -A- from mechatronic unit -B-. At the same time, detach tab -arrow- on reverse side of wiring harness from mechatronic unit.

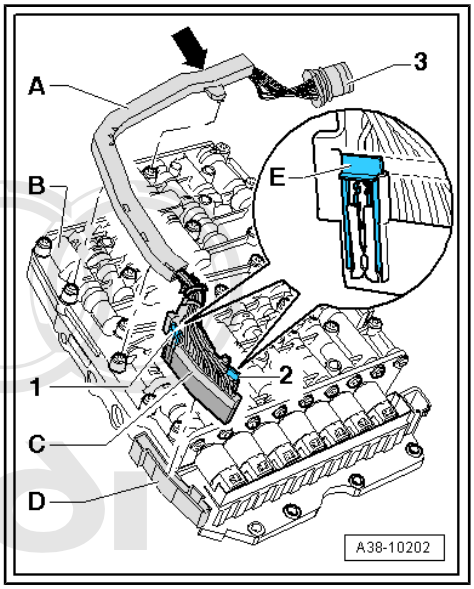

Note

If the tab -arrow- on the reverse side of the wiring harness breaks off, the wiring harness must be renewed.

– Carefully move wiring harness clear to one side.

Note

The wiring harness connector -3- remains in the gearbox housing, so the attached harness cannot be removed.

Reproduced by Audi Technical Information Center. Any use for commercial purposes, in part or in whole, is not permitted unless authorised by AUDI AG. AUDI AG does not guarantee or accept any liability with respect to the correctness of information in this document. Copyright by AUDI AG.

– Unscrew securing bolts for mechatronic unit in reverse order (i.e. first bolt -14-, then -13-, ... etc. until -1-).

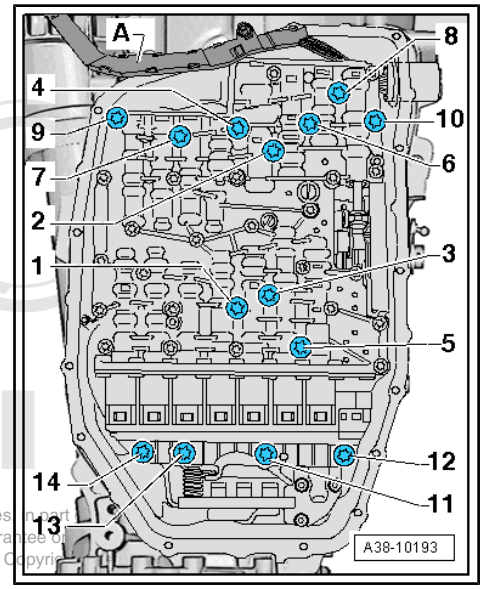

Note

- *Loosen only the securing bolts indicated in the illustration -14 ... 1-.*
- *If other bolts are loosened, this may affect the operation of the mechatronic unit or the mechatronic unit could come apart.*

– Detach mechatronic unit from gearbox.

Protected by copyright. Copying for private or commercial purposes, in part, is not permitted unless authorised by AUDI AG. AUDI AG does not guarantee or assume liability with respect to the correctness of information in this document. Copyright by AUDI AG.

Installing

- Tightening torques ⇒ page 136

– Make sure that seal -B- is properly inserted and secured.

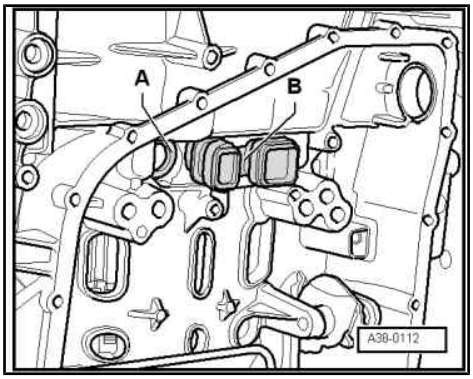

– Install mechatronic unit without using force, and at the same time fit pin on gearbox selector lever -arrow- into slot on selector slide -A- (move selector slide backwards and forwards if necessary).

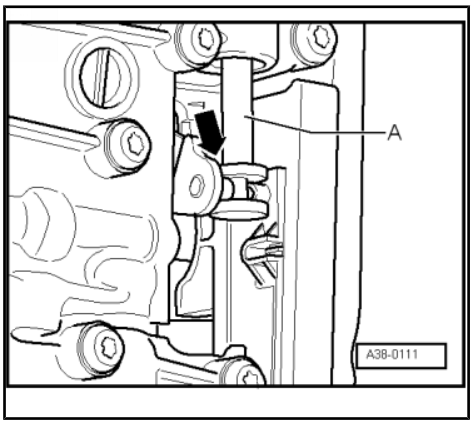

– Tighten securing bolts -1- and -2- for mechatronic unit to 2 Nm.

– Tighten securing bolts for mechatronic unit in specified order to specified torque (i.e. first bolt -1-, then -2-, ... etc. until -14-).

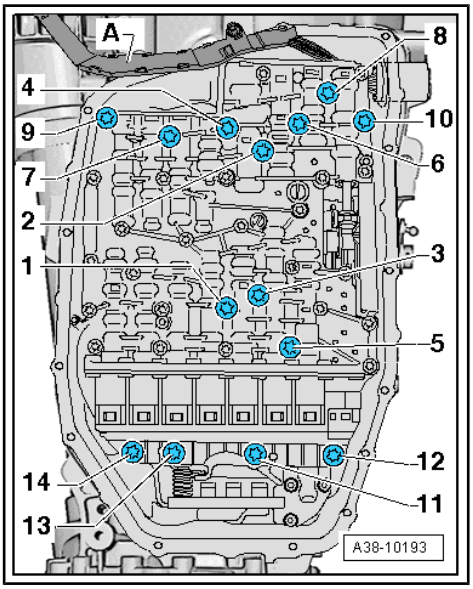

– Clip wiring harness -A- onto mechatronic unit. To do so, first attach tab -arrow- on reverse side of wiring harness to mechatronic unit.

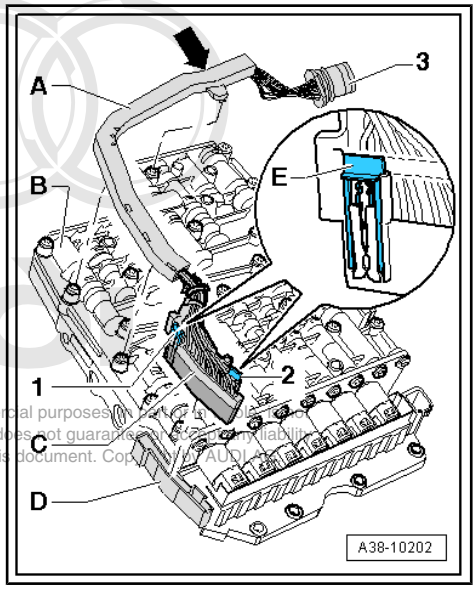

Note

If the tab on the reverse side of the wiring harness breaks off, the wiring harness must be renewed.

– If fitted, pull out both retainer catches -1- and -2- on connector -C-, as illustrated.

– Carefully insert connector -C- in connector socket on mechatronic unit.

Protected by copyright. Copying for private or commercial purposes, in part or in whole, is not permitted unless authorised by AUDI AG. AUDI AG does not guarantee or assume any liability with respect to the correctness of information in this document. Copyright by AUDI AG.

– If fitted, push in both retainer catches -1- and -2- to lock connector -C-.

The remaining installation steps are carried out in reverse sequence; note the following:

– Install ATF strainer ⇒ page 140 .

– Install ATF oil pan ⇒ page 138 .

– Fill up with ATF ⇒ page 126 .

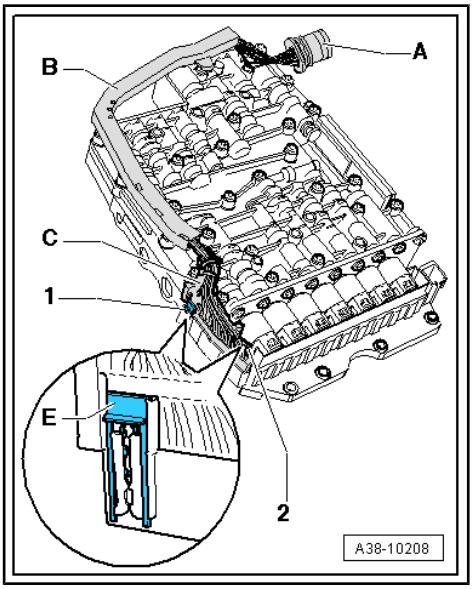

2.2 Removing and installing wiring harness in gearbox

Removing

Caution

The gearbox control unit (mechatronic unit) can be damaged by electrostatic discharge.

- *Before touching or removing the mechatronic unit, always discharge any static electricity by touching an earthed object with your hand.*
- *DO NOT touch contacts in 16-pin connector with your hands, as static discharge can seriously damage the control unit and mechatronic unit.*

Copying for private or commercial purposes, in part or in whole, is not permitted unless authorised by AUDI AG. AUDI AG does not guarantee or accept any liability with respect to the correctness of information in this document. Copyright by AUDI AG.

– Remove mechatronic unit ⇒ page 142 .

– Touch gearbox housing with your hand (without gloves) to discharge any static electricity.

– Turn fastener anti-clockwise -arrow- and unplug electrical connector on gearbox.

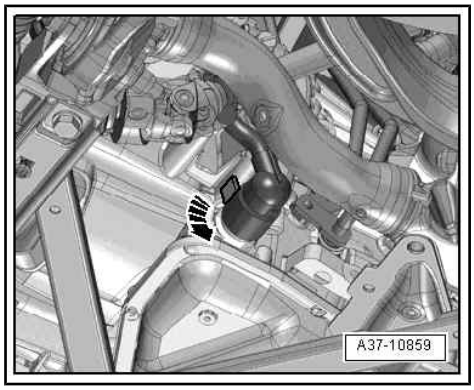

– Pull off retaining clip -A- for wiring harness connector.

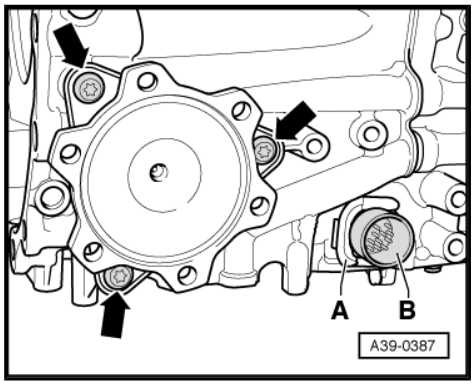

Note

-Arrows- can be disregarded.

– Push wiring harness connector -B- inwards into gearbox and detach wiring harness.

Installing

Installation is carried out in reverse sequence; note the following:

– Renew O-rings on connector for wiring harness and lightly lubricate with ATF.

– Install wiring harness connector in gearbox housing. Note correct position.

– Attach retaining clip -A- for wiring harness connector -B-.
– Install mechatronic unit ⇒ page 142 .

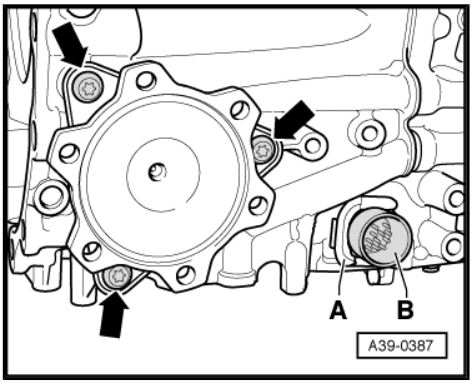

Protected by copyright. Copying for private or commercial purposes, in part or in whole, is not permitted unless authorised by AUDI AG. AUDI AG does not guarantee or accept any liability with respect to the correctness of information in this document. Copyright by AUDI AG.

39 – Final drive - front differential

1 Final drive

⇒ “1.1 Exploded view - final drive”, page 148

⇒ “1.2 Renewing O-ring on cover for front final drive”, page 149

1.1 Exploded view - final drive

Note

- *Rules for cleanliness when working on the automatic gearbox ⇒ page 4*
- *General repair instructions ⇒ page 5 .*

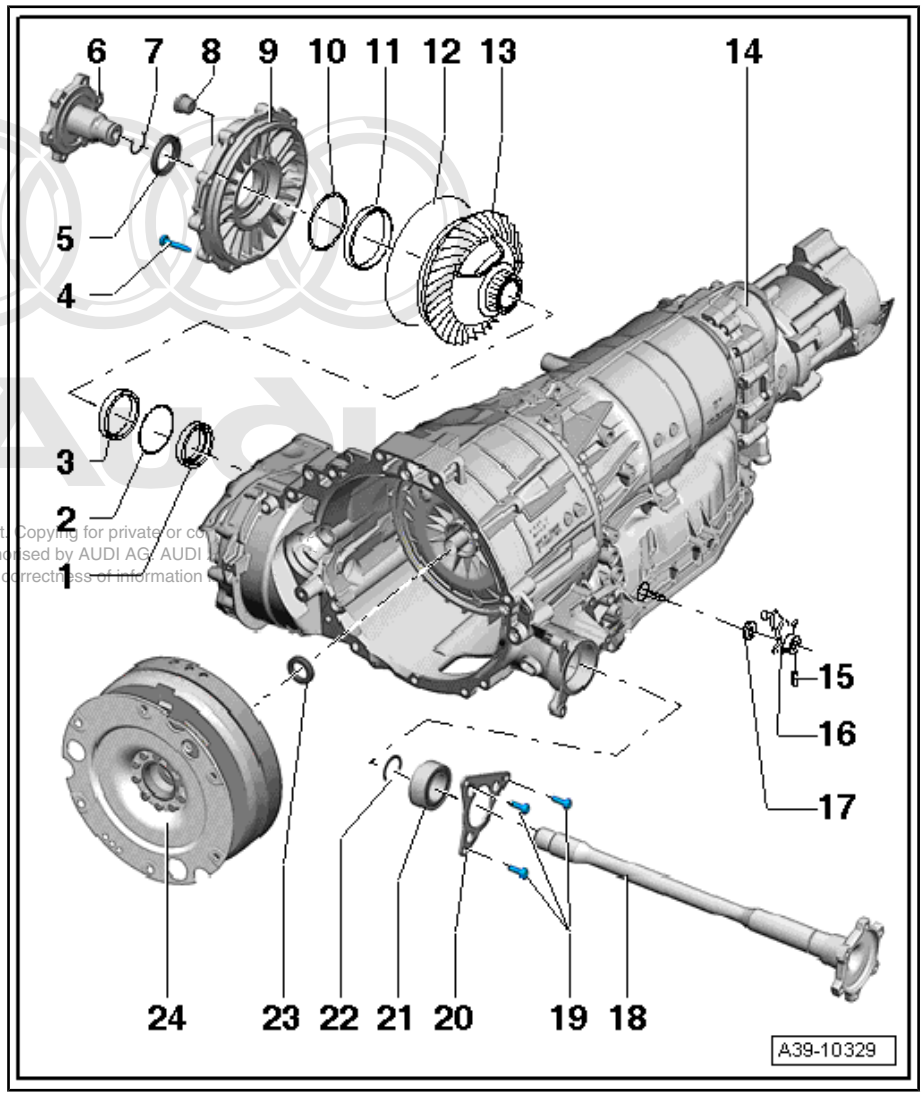

1 - Oil seal for flange shaft (left-side)

- ❑ Between final drive and gearbox housing
- ❑ ⇒ “3.1 Renewing oil seal (left-side)”, page 157

2 - Shim

- ❑ Behind tapered roller bearing outer race

3 - Tapered roller bearing outer race

4 - Bolt

- ❑ 11x
- ❑ Tightening torque and sequence ⇒ page 149

Protected by copyright. Copying for private or co
permitted unless authorised by AUDI AG. AUDI
with respect to the correctness of information

5 - Oil seal for flange shaft (right-side)

- ❑ ⇒ “3.2 Renewing oil seal (right-side)”, page 160

6 - Flange shaft (right-side)

- ❑ ⇒ “4.2 Removing and installing flange shaft (right-side)”, page 163

7 - Circlip

- ❑ Renew

8 - Screw plug

- ❑ For oil filler hole
- ❑ Renew
- ❑ 35 Nm

9 - Cover for front final drive

- ❑ Pay attention to dowel sleeves

10 - Shim

- ❑ Behind tapered roller bearing outer race

11 - Tapered roller bearing outer race

12 - O-ring

- ❑ On cover for front final drive
- ❑ ⇒ “1.2 Renewing O-ring on cover for front final drive”, page 149

13 - Differential

14 - Gearbox

15 - Roll pin

16 - Selector shaft lever

17 - Oil seal for selector shaft

- ❑ ⇒ “1.14 Renewing selector shaft oil seal”, page 44

18 - Flange shaft (left-side)

- ❑ ⇒ “4.1 Removing and installing flange shaft (left-side)”, page 162

19 - Bolt

- ❑ 10 Nm + 45°

20 - Bearing plate

- ❑ Secured to flange shaft together with bearing ⇒ Item 21 (page 149) via retaining clip ⇒ Item 22 (page 149)
- ❑ Together they are referred to as mounting bracket for flange shaft (left-side)

21 - Bearing

- ❑ For flange shaft (left-side)

22 - Retaining clip

- ❑ For bearing on flange shaft (left-side)

23 - Oil seal for torque converter

- ❑ ⇒ “1.6 Removing and installing oil seal for torque converter”, page 15

24 - Torque converter

- ❑ ⇒ “1.3 Removing and installing torque converter”, page 13

Cover for front final drive - tightening torque and sequence

1. Tighten bolts -1- and -2- initially to 3 Nm.
2. Tighten bolts to 23 Nm in sequence -1 ... 11-.

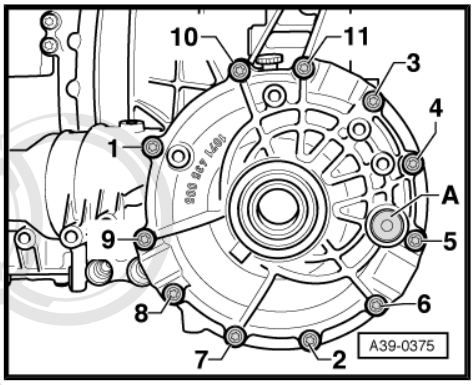

1.2 Renewing O-ring on cover for front final drive

Protected by copyright. Copying for private or commercial purposes, in part or in whole, is not permitted unless authorised by AUDI AG. AUDI AG does not guarantee or accept any liability with respect to the correctness of information in this document. Copyright by AUDI AG.

Note

- *Rules for cleanliness when working on the automatic gearbox* *⇒ page 4*
- *General repair instructions* *⇒ page 5* *.*

Special tools and workshop equipment required

- Used oil collection and extraction unit - V.A.G 1782-

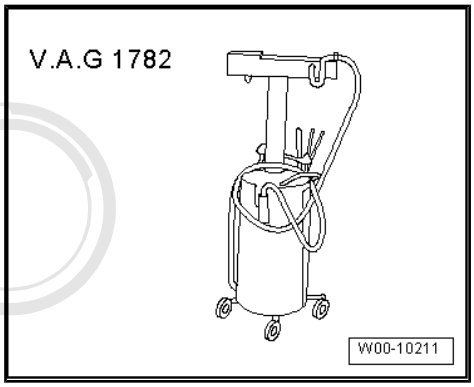

Procedure

- Place used oil collection and extraction unit - V.A.G 1782- below gearbox.
- Remove flange shaft (right-side) ⇒ page 163 .
- Unscrew bolts on cover for front final drive in the reverse sequence to the tightening sequence shown and remove cover together with outer race for tapered roller bearing and shim.

Protected by copyright. Copying for private or commercial purposes, in part or in whole, is not permitted unless authorised by AUDI AG. AUDI AG does not guarantee or accept any liability with respect to the correctness of information in this document. Copyright by AUDI AG.

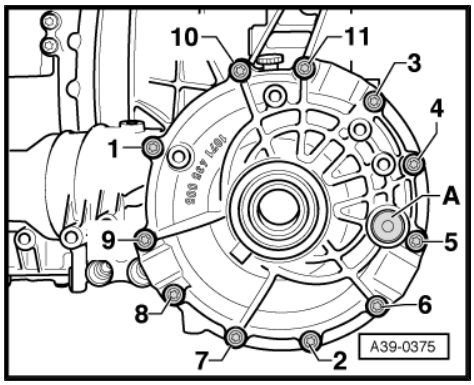

Note

The thickness of the shim has been measured to fit; the shim must not be replaced with another shim of different thickness.

- Renew O-ring -arrow-.
- Install differential in gearbox housing.

Note the following if the outer race for tapered roller bearing and the shim have dropped out of the front final drive cover:

- Lubricate shim and outer race for tapered roller bearing with gear oil and insert in cover for front final drive as far as stop.

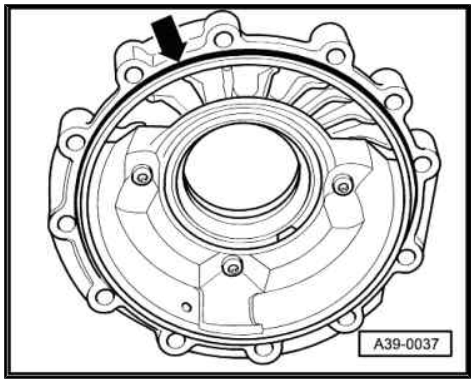

- Tighten bolts for front final drive cover ⇒ page 149 .
- Install flange shaft (right-side) ⇒ page 163 .
- Fill up gear oil in gearbox after repairs ⇒ page 153 .

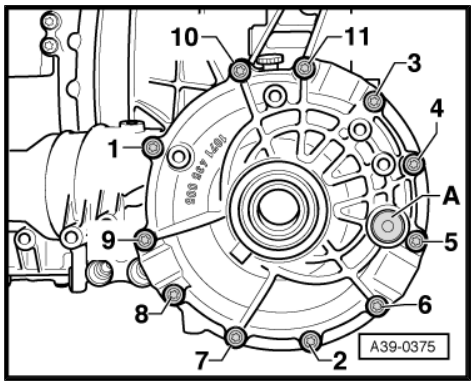

2 Gear oil

⇒ "2.1 Checking gear oil level", page 151
⇒ "2.2 Draining and filling gear oil", page 153

2.1 Checking gear oil level

⇒ "2.1.1 Checking gear oil level, front final drive", page 151
⇒ "2.1.2 Checking gear oil level, transfer box", page 152

2.1.1 Checking gear oil level, front final drive

Special tools and workshop equipment required

- Used oil collection and extraction unit - V.A.G 1782-

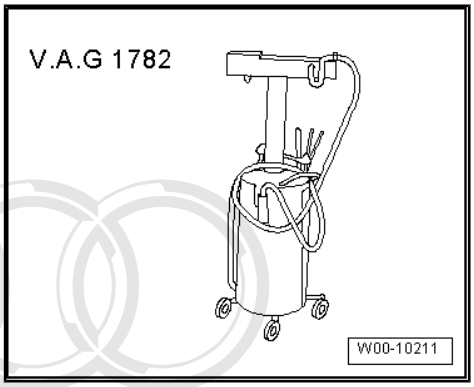

- Safety goggles

Procedure

- Gear oil about 20°C (room temperature)
- Vehicle must be absolutely horizontal (drive it onto a four-pillar lifting platform or over an inspection pit).
- Tightening torque ⇒ page 148

Protected by copyright. Copying for private or commercial purposes, in part or in whole, is not permitted unless authorised by AUDI AG. AUDI AG does not guarantee or accept any liability with respect to the correctness of information in this document. Copyright by AUDI AG.

Note

- *General repair instructions ⇒ page 5 .*
- *Rules for cleanliness when working on the automatic gearbox ⇒ page 4*
- *The prescribed oil level is to be adhered to exactly; the gearbox reacts very sensitively to over-filling.*
- *Observe relevant disposal regulations.*

– Place used oil collection and extraction unit - V.A.G 1782- below gearbox.

WARNING

Risk of eye injury.

- *Wear safety goggles.*

– Remove screw plug -arrow-.

• Specification: The oil level is correct when the front final drive is filled up to the bottom lip of the filler hole.

– If necessary, allow excess gear oil to drain off.

– If necessary, top up with gear oil until it comes out at filler hole.

• Gear oil specifications ⇒ Electronic parts catalogue

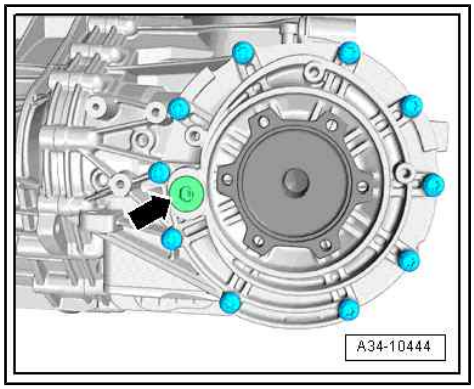

Note

The screw plug with seal must be renewed.

– Tighten new screw plug.

2.1.2 Checking gear oil level, transfer box

Special tools and workshop equipment required

♦ Used oil collection and extraction unit - V.A.G 1782-

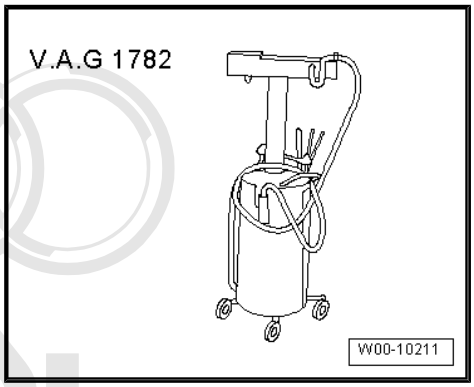

♦ Safety goggles

Protected by copyright. Copying for private or commercial purposes, in part or in whole, is not permitted unless authorised by AUDI AG. AUDI AG does not guarantee or accept any liability whatsoever for the correctness of information in this document. Copyright by AUDI AG.

Procedure

• Gear oil about 20°C (room temperature)

• Vehicle must be absolutely horizontal (drive it onto a four-pillar lifting platform or over an inspection pit).

• The vehicle must be stationary with the engine switched off for at least 15 minutes to allow the oil level to stabilise.

• Tightening torque ⇒ page 166

Note

♦ *General repair instructions* *⇒ page 5* .

♦ *Rules for cleanliness when working on the automatic gearbox* *⇒ page 4*

– Place used oil collection and extraction unit - V.A.G 1782- below gearbox.

WARNING

Risk of eye injury.

♦ *Wear safety goggles.*

– Unscrew plug -arrow- on side of centre differential housing.

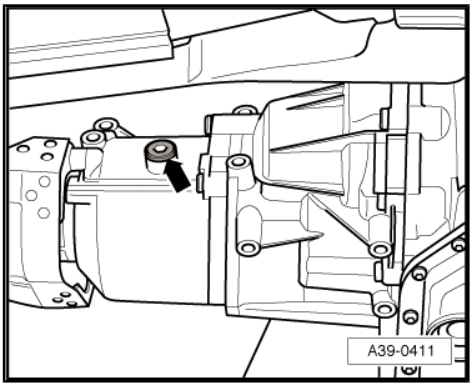

- Specification: Oil level is correct when oil in transfer box is up to lower edge of filler hole.

– If necessary, allow excess gear oil to drain off.

– If necessary, top up with gear oil until it comes out at filler hole.

- Gear oil specifications ⇒ Electronic parts catalogue

– Repeat the procedure, adding 50 ml of gear oil every 15 seconds until the transfer box will not take any more oil.

Note

♦ *The transfer box incorporates a number of internal oil chambers. This delay is necessary to ensure that the chambers are filled completely and uniformly.*

♦ *The screw plug with seal must be renewed.*

– Tighten new screw plug.

2.2 Draining and filling gear oil

⇒ "2.2.1 Draining and filling gear oil, front final drive", page 153

⇒ "2.2.2 Draining and filling gear oil, transfer box", page 154

2.2.1 Draining and filling gear oil, front final drive

Special tools and workshop equipment required

♦ Used oil collection and extraction unit - V.A.G 1782-

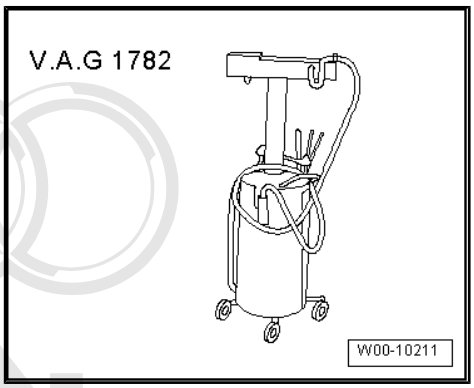

♦ Safety goggles

Filling

Protected by copyright. Copying for private or commercial purposes, in part or in whole, is not permitted unless authorised by AUDI AG. AUDI AG does not guarantee or accept any liability with respect to the correctness of information in this document. Copyright by AUDI AG.

- Cover for front final drive was removed, causing all the gear oil to drain off.
- Vehicle must be absolutely horizontal (drive it onto a four-pillar lifting platform or over an inspection pit).
- Gear oil about 20°C (room temperature)
- Tightening torque ⇒ page 148

Note

- *General repair instructions ⇒ page 5 .*
- *Rules for cleanliness when working on the automatic gearbox ⇒ page 4*

– Place used oil collection and extraction unit - V.A.G 1782- below gearbox.

WARNING

Risk of eye injury.

- ***Wear safety goggles.***

– Remove screw plug -arrow-.

– Fill front final drive slowly and evenly over a period of at least 5 minutes until gear oil comes out at bottom lip of oil filler hole.

• Gear oil specifications ⇒ Electronic parts catalogue

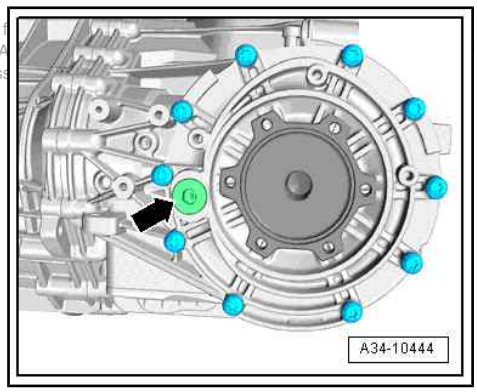

Note

- *The fill-up period of at least 5 minutes is necessary so that the internal oil level can be balanced out between the differential and the baffle chamber.*
- *The screw plug with seal must be renewed.*

– Tighten new screw plug.

Note

The level does not need to be re-checked after this step.

2.2.2 Draining and filling gear oil, transfer box

Special tools and workshop equipment required

- Used oil collection and extraction unit - V.A.G 1782-

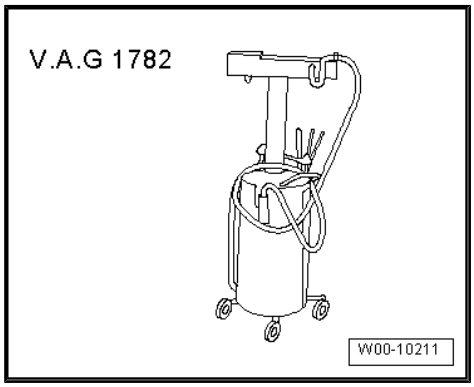

- Safety goggles

Procedure:

• The gear oil in the transfer box was drained off.

- Centre differential housing was removed, causing all the gear oil to drain off.
- Vehicle must be absolutely horizontal (drive it onto a four-pillar lifting platform or over an inspection pit).
- The vehicle must be stationary with the engine switched off for at least 15 minutes to allow the oil level to stabilise.
- Gear oil about 20°C (room temperature)
- Tightening torque ⇒ page 166

Note

- ♦ *General repair instructions* *⇒ page 5* *.*
- ♦ *Rules for cleanliness when working on the automatic gearbox* *⇒ page 4*

– Place used oil collection and extraction unit - V.A.G 1782- below gearbox.

WARNING

Risk of eye injury.

- ♦ *Wear safety goggles.*

Protected by copyright. Copying for private or commercial purposes, in part or in whole, is not permitted unless authorised by AUDI AG. AUDI AG does not guarantee or accept any liability with respect to the correctness of information in this document. Copyright by AUDI AG.

– Unscrew plug -arrow- on side of centre differential housing.

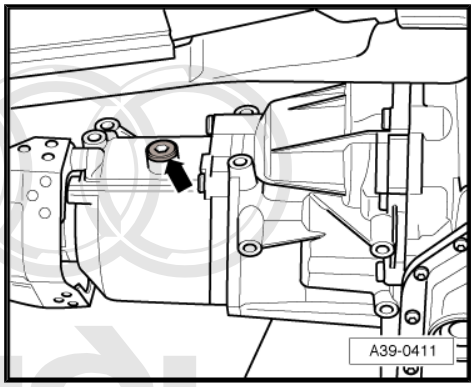

Note

The engine must not be started and vehicle must not be towed without gear oil in gearbox.

- Gear oil specifications ⇒ Electronic parts catalogue

– Fill transfer box slowly and evenly over a period of at least 5 minutes until gear oil emerges at bottom lip of oil filler hole.

Note

The top-up period of at least 5 minutes is necessary so that the internal oil level can be balanced out between centre differential and baffle chamber.

Protected by copyright. Copying for private or commercial purposes, in part or in whole, is not permitted unless authorised by AUDI AG. AUDI AG does not guarantee or accept any liability with respect to the correctness of information in this document. Copyright by AUDI AG.

– Repeat the filling procedure, adding 50 ml of gear oil every 15 seconds until the transfer box will not take any more oil.

Note

♦ *The transfer box incorporates a number of internal oil chambers. This delay is necessary to ensure that the chambers are filled completely and uniformly.*

♦ *The screw plug with seal must be renewed.*

- Specification: Oil level is correct when oil in transfer box is up to lower edge of filler hole.

– Tighten new screw plug.

Tightening torque ⇒ page 166

Note

The level does not need to be re-checked after this step.

3 Oil seals

⇒ "3.1 Renewing oil seal (left-side)", page 157

⇒ "3.2 Renewing oil seal (right-side)", page 160

3.1 Renewing oil seal (left-side)

Note

A defective oil seal allows gear oil to enter the torque converter bellhousing.

Special tools and workshop equipment required

- Used oil collection and extraction unit - V.A.G 1782-

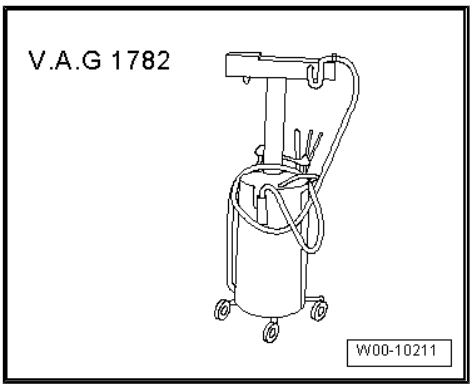

- Oil seal extractor lever - VW 681-

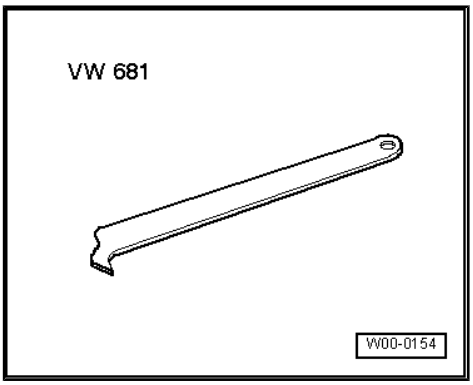

- Thrust piece - T10139-

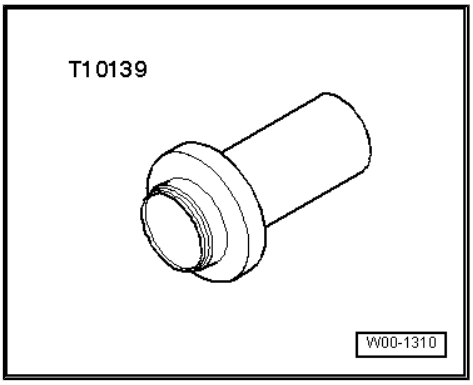

Protected by copyright. Copying for private or commercial purposes, in part or in whole, is not permitted unless authorised by AUDI AG. AUDI AG does not guarantee or accept any liability with respect to the correctness of information in this document. Copyright by AUDI AG.

Procedure

- Gearbox must be removed and secured to engine/gearbox support ⇒ page 121 .

Note

- *Rules for cleanliness when working on the automatic gearbox* ⇒ page 4
- *General repair instructions* ⇒ page 5 .

Caution

Risk of damage to gearbox

- *The gearbox must not be placed down on the ATF cooler or ATF oil pan.*

Protected by copyright. Copying for private or commercial purposes, in part or in whole, is not permitted unless authorised by AUDI AG. AUDI AG does not guarantee or accept any liability with respect to the correctness of information in this document. Copyright by AUDI AG.

– Place used oil collection and extraction unit - V.A.G 1782- below gearbox.

– Remove flange shaft (right-side) ⇒ page 163 .

– Unscrew bolts on cover for front final drive in the reverse sequence to the tightening sequence shown.

– Remove cover for front final drive together with outer race for tapered roller bearing and shim.

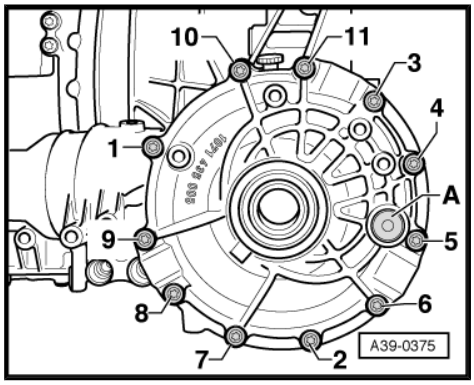

Note

The thickness of the shim has been measured to fit; the shim must not be replaced with another shim of different thickness.

– Remove differential.

– Remove tapered roller bearing outer race -1- for differential and shim -2- (behind outer race) from gearbox housing by hand.

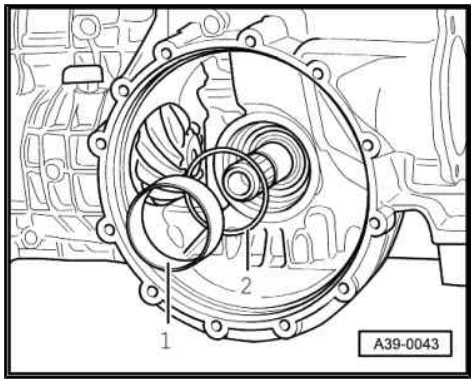

Note

The thickness of the shim has been measured to fit; the shim must not be replaced with another shim of different thickness.

– Remove flange shaft (left-side) ⇒ page 162 .

– Pull out oil seal.

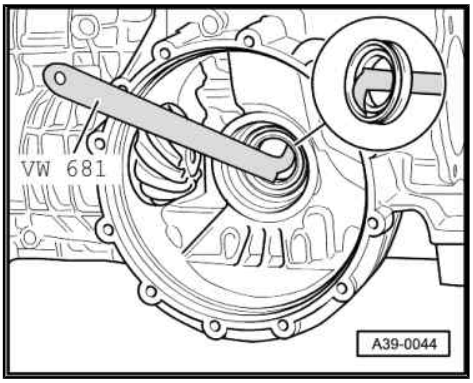

Note

The oil seal extractor lever must be applied behind the two sealing lips of the oil seal. Do not position at outer circumference of oil seal as the contact surface in the gearbox housing could be damaged. Guide the lever carefully when removing the seal.

– Examine oil seal seat in gearbox housing for damage; reface surface if necessary.

Copyright by AUDI AG. Copying for private or commercial purposes, in part or in whole, is not permitted unless authorised by AUDI AG. AUDI AG does not guarantee or accept any liability

– Lightly lubricate outer circumference and sealing lip of oil seal with gear oil.

Note

Push oil seal onto thrust piece with the protruding sealing lip on the oil seal facing towards the tool.

– Drive in new oil seal as far as stop.

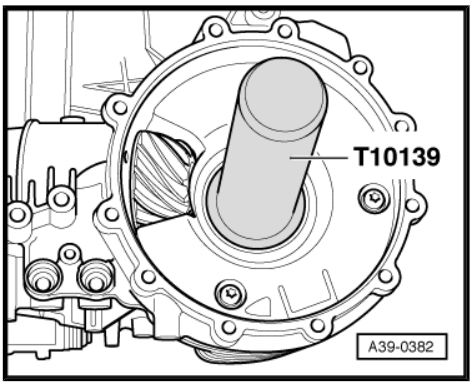

– Insert shim -2- and tapered roller bearing outer race -1- for differential onto stop in gearbox housing by hand.

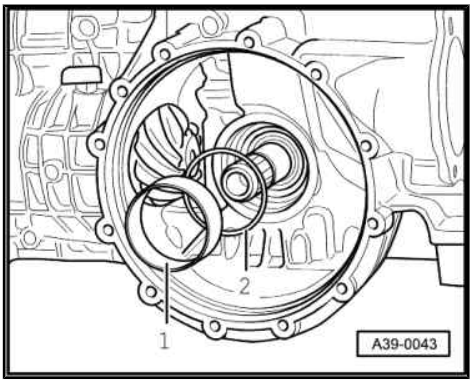

– Renew O-ring -arrow-.

– Install differential in gearbox housing.

Note the following if the outer race for tapered roller bearing and the shim have dropped out of the front final drive cover:

– Lubricate shim and outer race for tapered roller bearing with gear oil and insert in cover for front final drive as far as stop.

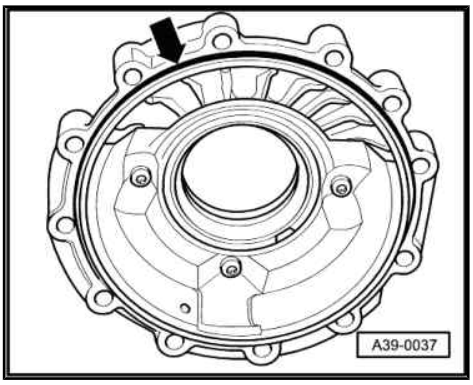

– Tighten bolts for front final drive cover ⇒ page 149 .
– Install flange shaft (left-side) ⇒ page 162 .
– Install flange shaft (right-side) ⇒ page 163 .
– Fill up gear oil in gearbox after repairs ⇒ page 153 .

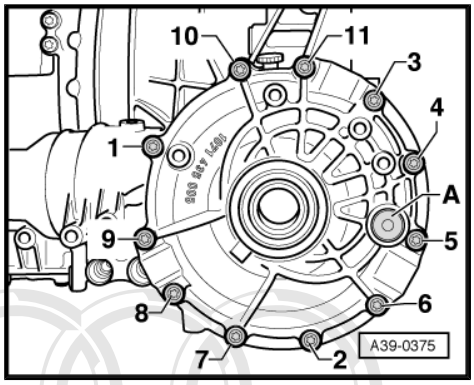

3.2 Renewing oil seal (right-side)

Special tools and workshop equipment required

♦ Used oil collection and extraction unit - V.A.G 1782-

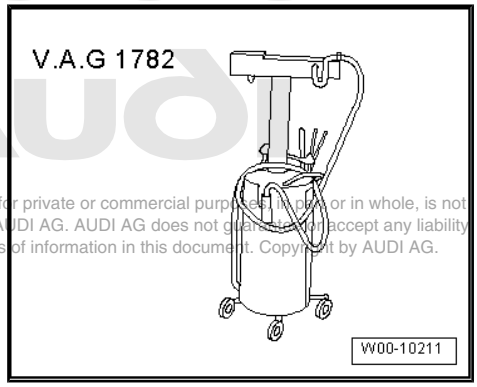

Protected by copyright. Copying for private or commercial purposes, in part or in whole, is not permitted unless authorised by AUDI AG. AUDI AG does not guarantee or accept any liability with respect to the correctness of information in this document. Copyright by AUDI AG.

♦ Oil seal extractor lever - VW 681-

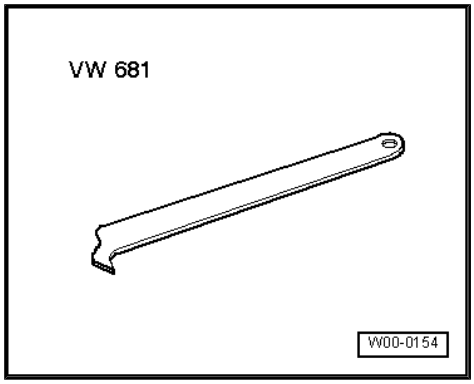

♦ Thrust piece - T40189-

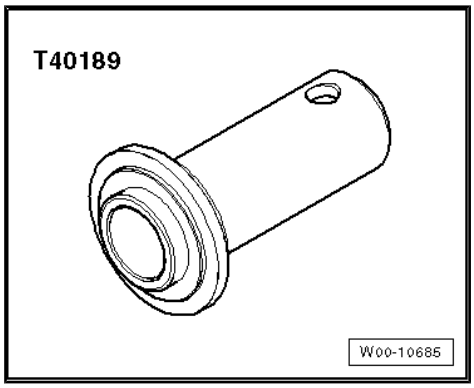

Procedure

Note

- *Rules for cleanliness when working on the automatic gearbox* *⇒ page 4*
- *General repair instructions* *⇒ page 5* *.*

– Place used oil collection and extraction unit - V.A.G 1782- below gearbox.

– Remove flange shaft (right-side) ⇒ page 163 .

– Pull out oil seal for flange shaft (right-side).

– Lubricate outer circumference of new oil seal with gear oil.

• Installation position: the open side of the oil seal should face the gearbox.

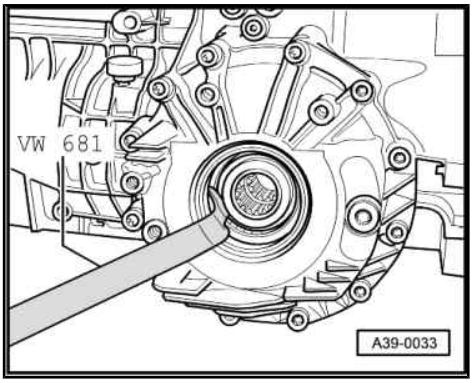

– Drive in new oil seal as far as stop. Make sure that oil seal remains straight when driving in.

– Install flange shaft (right-side) ⇒ page 163 .

– Fill up gear oil in gearbox after repairs ⇒ page 153 .

Protected by copyright. Copying for private or commercial purposes, in part or in whole, is not permitted unless authorised by AUDI AG. AUDI AG does not guarantee or accept any liability with respect to the correctness of information in this document. Copyright by AUDI AG.

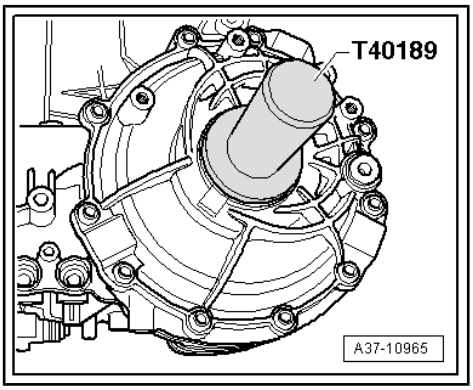

4 Differential

⇒ “4.1 Removing and installing flange shaft (left-side)”, page 162

⇒ “4.2 Removing and installing flange shaft (right-side)”, page 163

4.1 Removing and installing flange shaft (left-side)

Protected by copyright. Copying for private or commercial purposes, in part or in whole, is not permitted unless authorised by AUDI AG. AUDI AG does not guarantee or accept any liability with respect to the correctness of information in this document. Copyright by AUDI AG.

Removing

- Gearbox is secured to engine and gearbox support - VAS 6095- ⇒ page 121 .

– Tilt gearbox to rear on engine and gearbox support to prevent gear oil from escaping.

– Unscrew bolts -arrows- on mounting bracket for flange shaft.

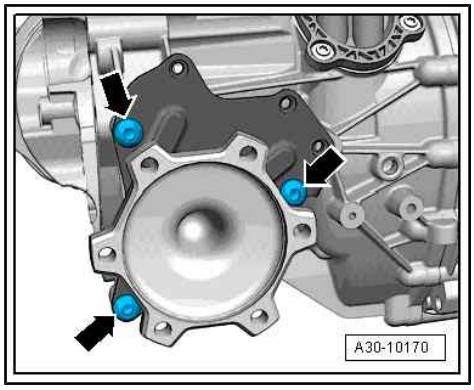

– Remove flange shaft (left-side) -2- from gearbox in direction of -arrow A-.

Note

-Item 1- and -arrows 3, B- can be disregarded.

– Remove torque converter ⇒ page 13 .

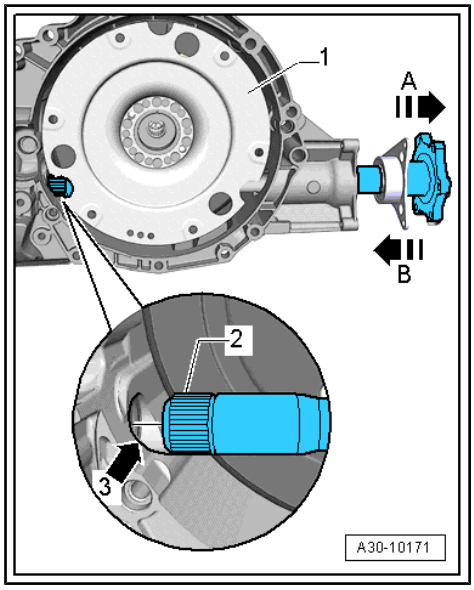

Installing

Installation is carried out in reverse sequence; note the following:

- Tightening torque ⇒ page 148

– Thoroughly clean flange shaft (left-side), area of torque converter bellhousing leading to differential -arrow A-, and oil seal -arrow B-.

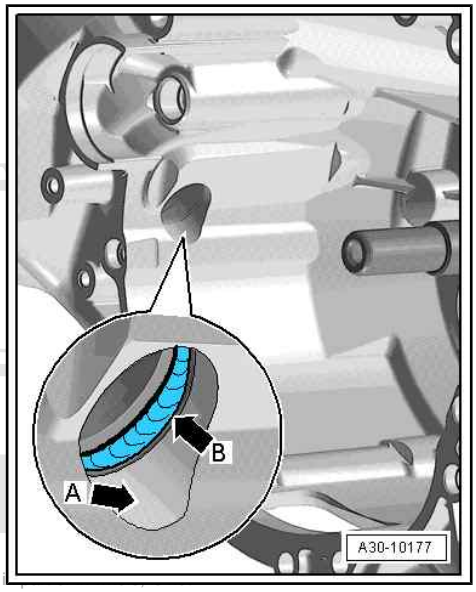

Note

If oil seal between differential and gearbox housing -arrow B- is damaged, it must be renewed *⇒ page 148* *.*

– Pack space between sealing lip and dust lip half-full with sealing grease - G 052 128 A1- .

– Install torque converter ⇒ page 13 .

Protected by copyright. Copying for private or commercial purposes, in part or in whole, is not permitted unless authorised by AUDI AG. AUDI AG does not guarantee or accept any liability with respect to the correctness of information in this document. Copyright by AUDI AG.

– Turn torque converter -1- so that you can see opening to differential -arrow 3-.

– Slide flange-shaft (left-side) -2- into gearbox in direction of -arrow B- (keep end of shaft centred while guiding it into oil seal on front final drive -arrow 3-).

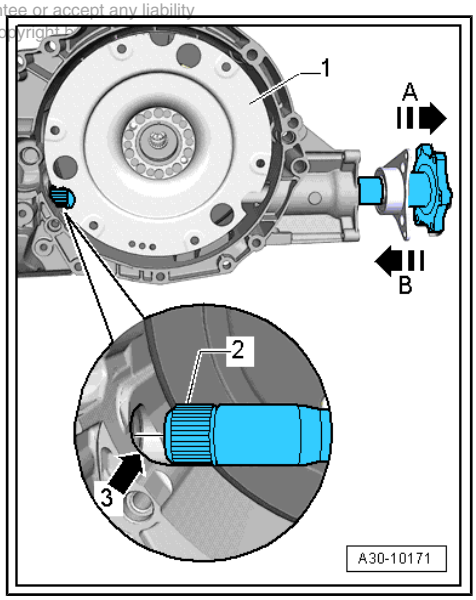

Note

- *The splines -2- on the flange shaft will damage the oil seal between the final drive and the gearbox housing if you do not keep the flange shaft centred.*
- *If the oil seal is damaged, it must be renewed.*
- *-Arrow A- can be disregarded.*

– Tighten flange shaft mounting bracket -arrows-.

– After installing gearbox refer to ⇒ “2.1.1 Checking gear oil level, front final drive”, page 151 .

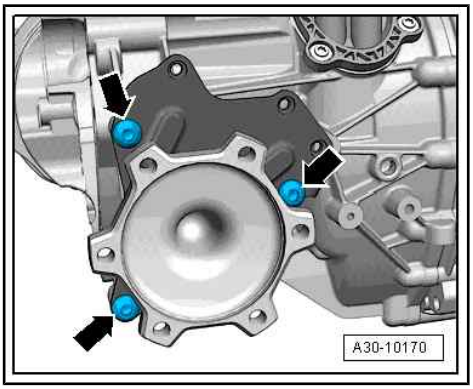

4.2 Removing and installing flange shaft (right-side)

Special tools and workshop equipment required

- Drift - VW 295-

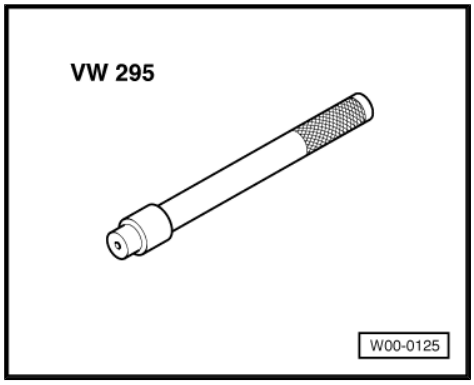

- Multi-purpose tool - VW 771-

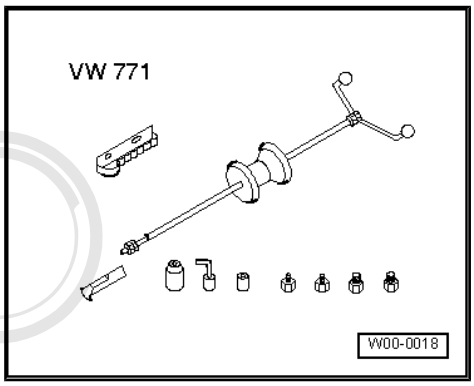

- Counterhold tool - 3419-

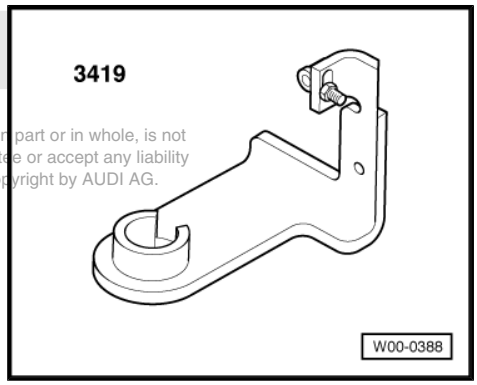

Protected by copyright. Copying for private or commercial purposes, in part or in whole, is not permitted unless authorised by AUDI AG. AUDI AG does not guarantee or accept any liability with respect to the correctness of information in this document. Copyright by AUDI AG.

- Used oil collection and extraction unit - V.A.G 1782-

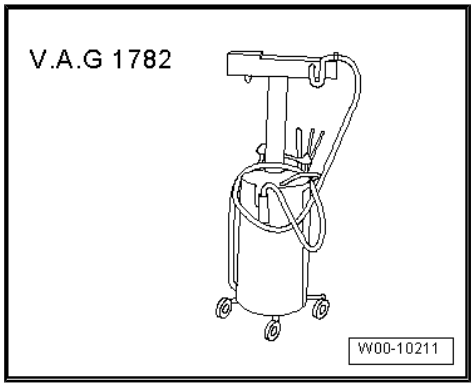

- Nut M10 (2x)

Removing

– Remove front right wheel.

– Remove cover -1- for drive shaft (right-side) from wheel housing.

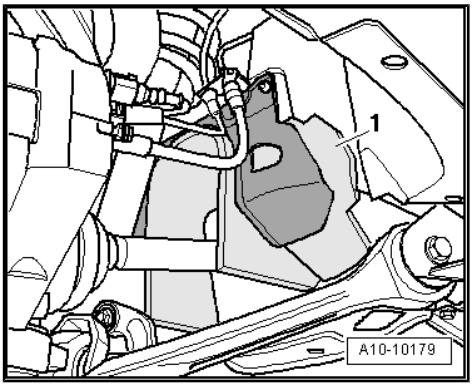

– Remove bolts -arrows- and detach heat shield for drive shaft (right-side).

– Unbolt drive shaft (right-side) from flange shaft on gearbox and move drive shaft to rear.

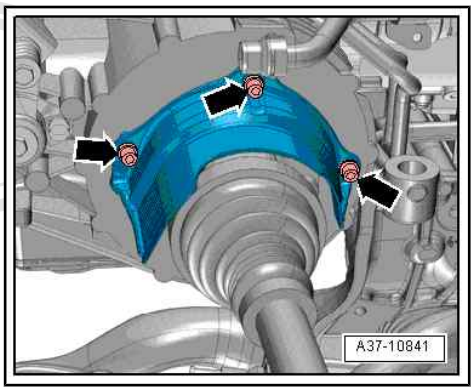

– Place used oil collection and extraction unit - V.A.G 1782- below gearbox.

– Screw eye bolt from counterhold tool - 3419- into one of the threaded holes on flange shaft (right-side) with 2 nuts M10 -item 1- attached.

– Attach multi-purpose tool - VW 771- with -VW 771/13- to eye bolt and pull flange shaft off gearbox.

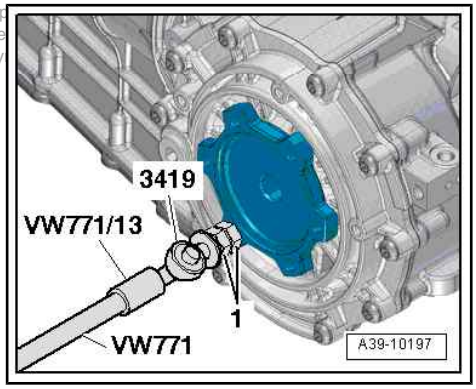

Protected by copyright. Copying for private or commercial purposes, in part or in whole, is not permitted unless authorised by AUDI AG. AUDI AG does not guarantee or assume liability with respect to the correctness of information in this document. Copyright by AUDI AG.

Installing

Installation is carried out in reverse sequence; note the following:

Note

Renew circlip for flange shaft (right-side).

– Clamp flange shaft in vice, using jaw protectors. Use new circlip -A- to press old circlip out of groove in flange shaft.

– Drive in flange shaft (right-side) with drift - VW 295- .

– Install drive shaft (right-side) ⇒ Running gear, axles, steering; Rep. gr. 40 ; Drive shaft; Exploded view - drive shaft .

– Install heat shield for drive shaft ⇒ page 111 .

– Check oil level in front final drive and top up as required ⇒ page 151 .

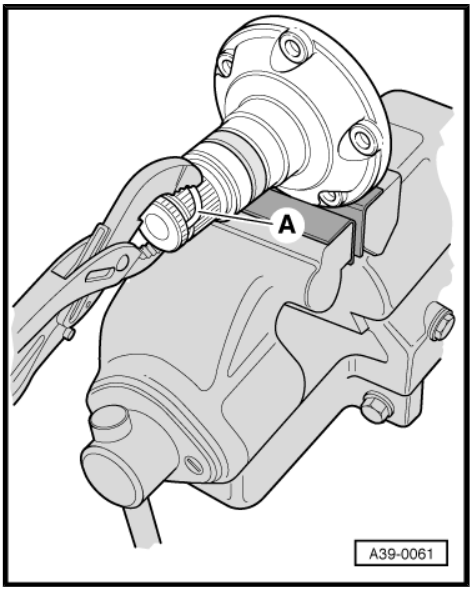

5 Centre differential

⇒ "5.1 Exploded view - centre differential", page 166

⇒ "5.2 Removing and installing centre differential", page 168

⇒ "5.3 Renewing oil seal for flange shaft (rear)", page 172

⇒ "5.4 Renewing ball bearing for flange shaft (rear)", page 174

⇒ "5.5 Renewing ball bearing for centre differential", page 176

5.1 Exploded view - centre differential

> **Caution**
>
> *Risk of damage to gearbox*
>
> ♦ *Do not run the engine or tow the vehicle if the centre differential has been removed or if the gear oil has been drained.*

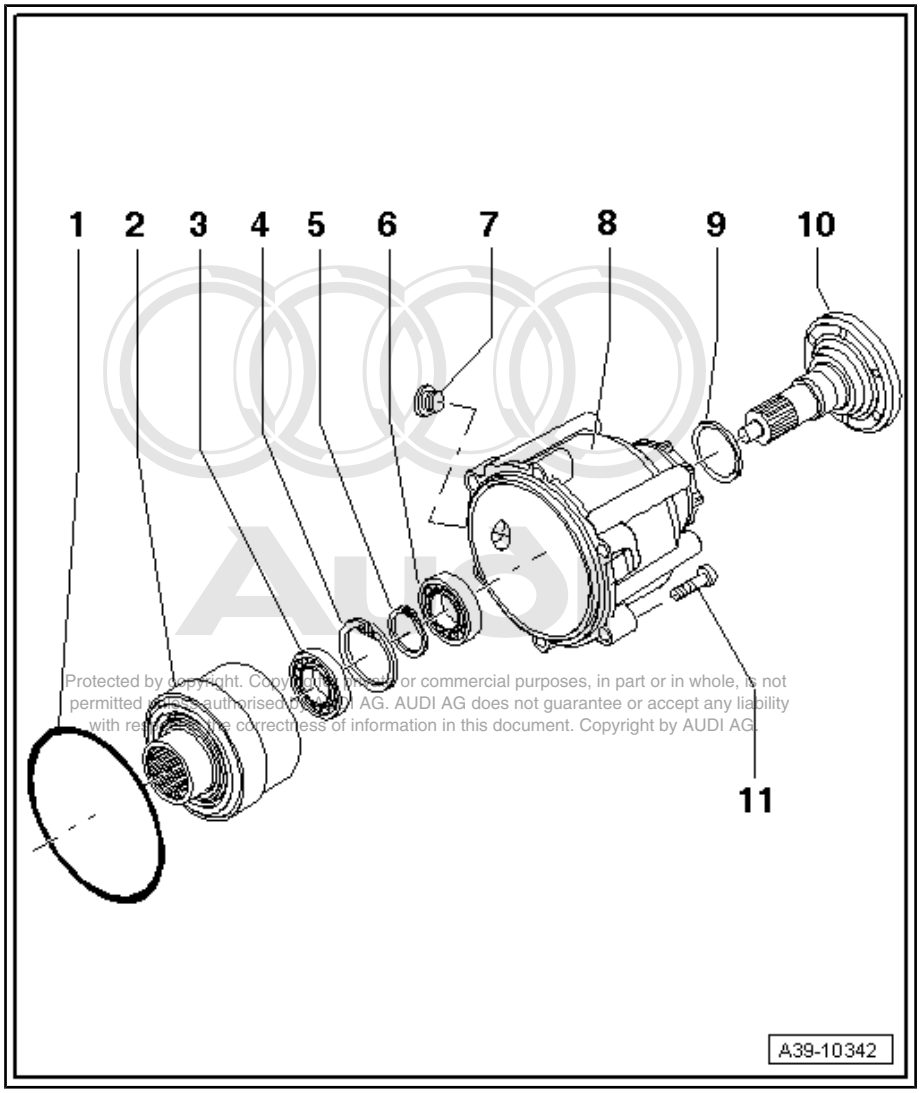

Protected by copyright. Copyright by AUDI AG. Use for commercial purposes, in part or in whole, is not permitted without authorised permission of AUDI AG. AUDI AG does not guarantee or accept any liability with respect to the correctness of information in this document. Copyright by AUDI AG.

1 - O-ring
- ❑ Renew
- ❑ Lubricate with gear oil

2 - Centre differential

3 - Ball bearing
- ❑ For centre differential
- ❑ ⇒ "5.5 Renewing ball bearing for centre differential", page 176

4 - Circlip
- ❑ For ball bearing for flange shaft

5 - Circlip
- ❑ For flange shaft

6 - Ball bearing
- ❑ For flange shaft (rear)
- ❑ ⇒ "5.4 Renewing ball bearing for flange shaft (rear)", page 174

7 - Screw plug
- ❑ For oil filler hole on centre differential housing
- ❑ 35 Nm
- ❑ Renew

8 - Centre differential housing
- ❑ ⇒ "5.2 Removing and installing centre differential", page 168

9 - Oil seal for flange shaft (rear)
- ❑ ⇒ "5.3 Renewing oil seal for flange shaft (rear)", page 172

10 - Flange shaft (rear)

- ❑ Removing and installing ⇒ "5.3 Renewing oil seal for flange shaft (rear)", page 172
- ❑ Renew oil seal when renewing flange shaft (rear)
- ❑ Select correct components from ⇒ Electronic parts catalogue

11 - Bolt

- ❑ Tightening torque and sequence ⇒ page 167
- ❑ Renew

Centre differential housing - tightening torque and sequence

– Tighten bolts for centre differential housing in three stages as follows:

1. Tighten bolts -1- and -2- initially to 3 Nm.
2. Tighten bolts to 8 Nm in sequence -1 ... 6-.
3. Tighten bolts 90° further in the sequence -1 ... 6-.

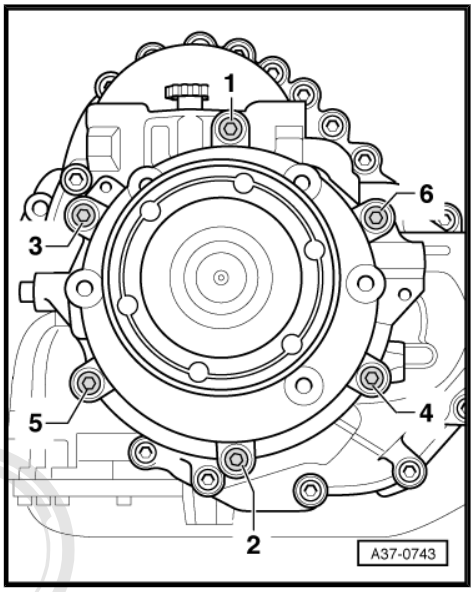

Protected by copyright. Copying for private or commercial purposes, in part or in whole, is not permitted unless authorised by AUDI AG. AUDI AG does not guarantee or accept any liability with respect to the correctness of information in this document. Copyright by AUDI AG.

5.2 Removing and installing centre differential

Special tools and workshop equipment required

- Engine and gearbox jack - V.A.G 1383 A-
- Gearbox support - T10337-
- Counterhold tool - T10172-
- Adapter - T10172/5-
- Used oil collection and extraction unit - V.A.G 1782-
- Torque wrench - V.A.G 1331-
- Safety goggles

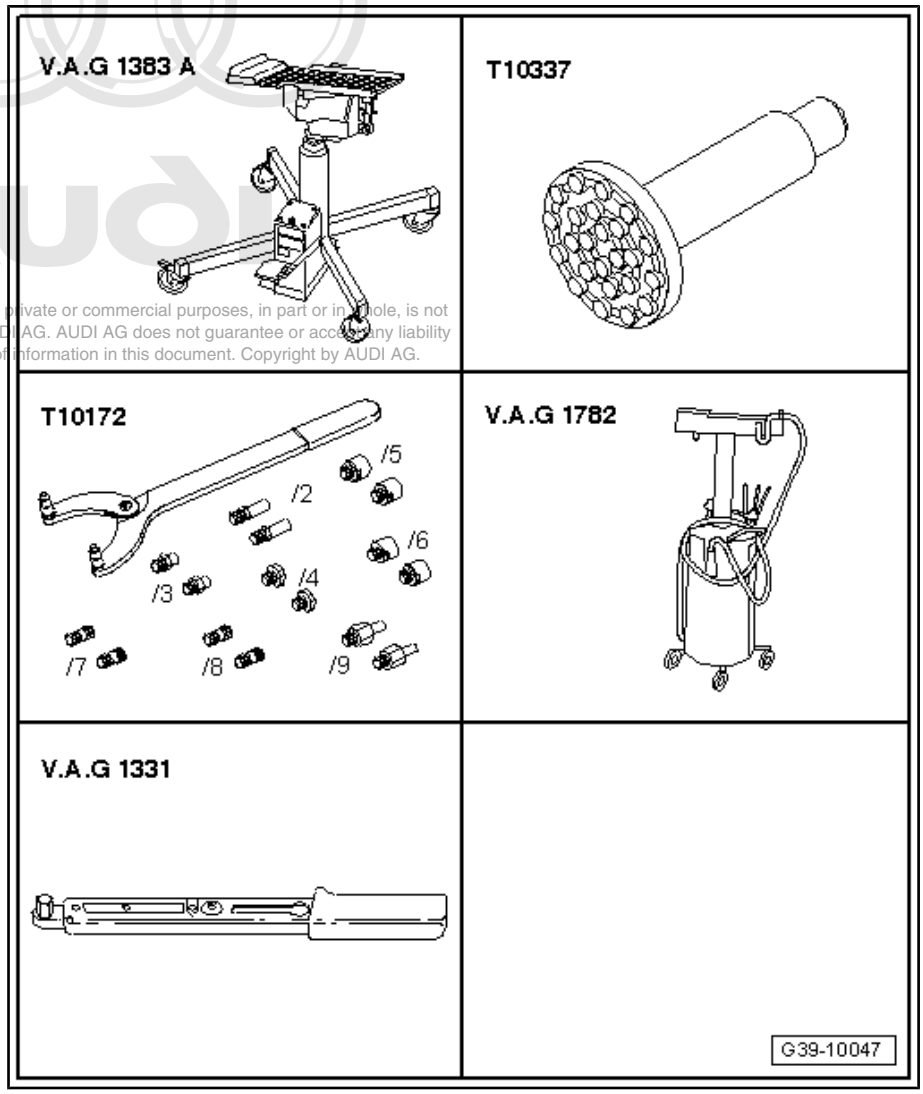

Protected by copyright. Copying for private or commercial purposes, in part or in whole, is not permitted unless authorised by AUDI AG. AUDI AG does not guarantee or accept any liability with respect to the correctness of information in this document. Copyright by AUDI AG.

Removing

- Gearbox in vehicle

Caution

Risk of damage to gearbox

- *The engine must not be run and the vehicle must not be towed without gear oil.*

Note

- *Refer to general repair instructions* *⇒ page 5* .
- *Note rules for cleanliness when working on automatic gearbox* *⇒ page 4* .

– Remove quick-release fasteners -2 ... 4- and remove rear noise insulation ⇒ General body repairs, exterior; Rep. gr. 66 ; Noise insulation; Removing and installing noise insulation .

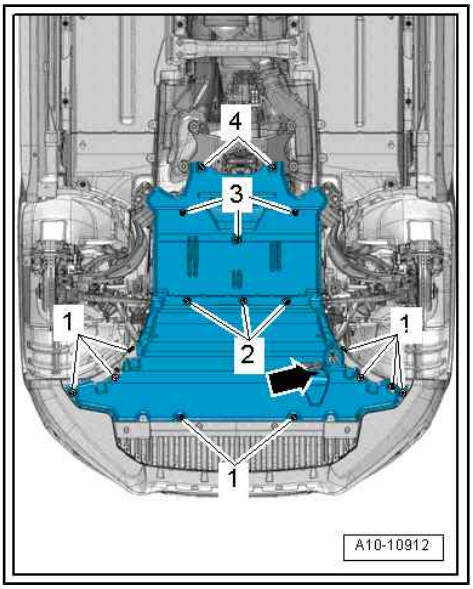

Note

-Arrow- can be disregarded.

Caution

Risk of damage to flexible joint in front exhaust pipe.

- ***The flexible joint in the front exhaust pipe must not be bent further than 10°.***

– Vehicles with one front exhaust pipe: Disconnect exhaust system at clamp -arrow-.

Protected by copyright. Copying for private or commercial purposes, in part or in whole, is not permitted unless authorised by AUDI AG. AUDI AG does not guarantee or accept any liability with respect to the correctness of information in this document. Copyright by AUDI AG.

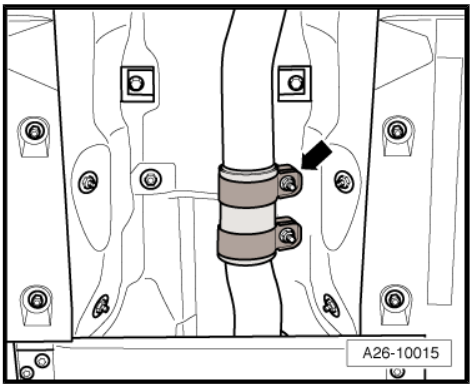

– Vehicles with two front exhaust pipes: Disconnect exhaust system at clamps -1- and -2-.

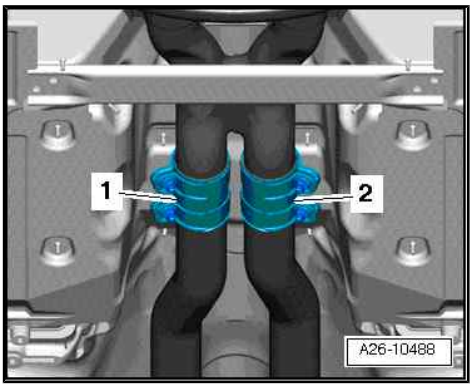

– Remove bolts -arrows- and detach heat shield for propshaft.

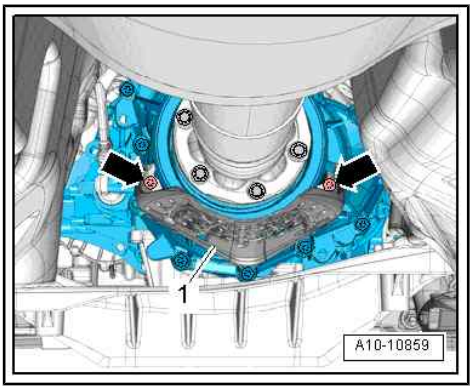

– Remove propshaft/gearbox connecting bolt. To do so, use counterhold tool - T10172- with -T10172/5- .

– Slide propshaft together towards rear final drive. The constant velocity joints can be moved axially.

– Tie propshaft to side.

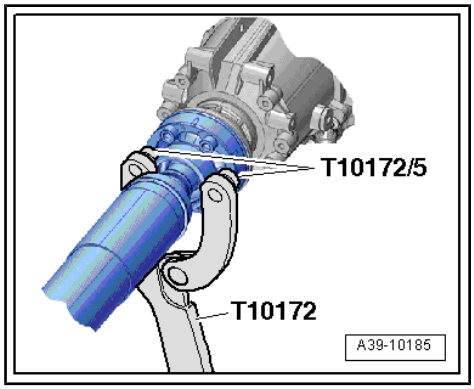

Caution

There is a risk of damage to the gearbox oil pan.

- *Do not place gearbox down on the gearbox oil pan.*

– Support gearbox at tunnel cross member using engine and gearbox jack - V.A.G 1383 A- with gearbox support - T10337- attached.

WARNING

Risk of accident.

- *Engine and gearbox jack - V.A.G 1383 A- must remain in position when work is being carried out and must not be left unattended.*

– Remove bolts -arrows- for tunnel cross member.

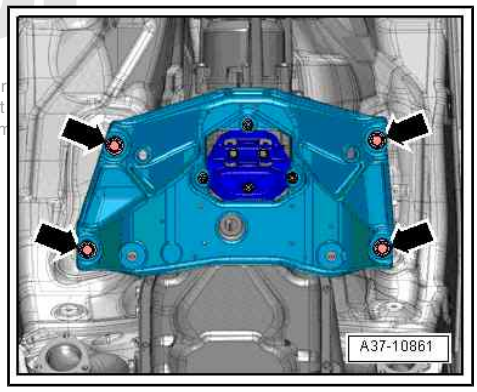

Note

Protected by copyright. Copying for private or commercial pur
permitted unless authorised by AUDI AG. AUDI AG does not
with respect to the correctness of information in this docum

The illustration does not show engine and gearbox jack - V.A.G 1383 A- .

– Lower gearbox by dimension -a- using engine and gearbox jack - V.A.G 1383 A- .

• Dimension -a- = 100 mm (maximum)

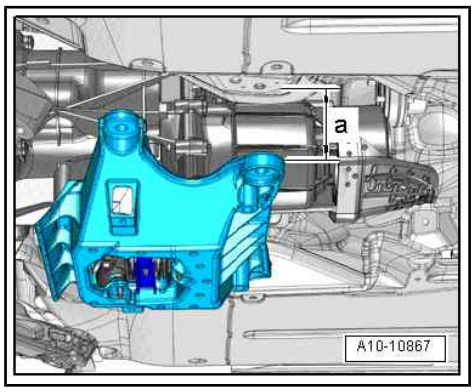

– Place used oil collection and extraction unit - V.A.G 1782- below gearbox.

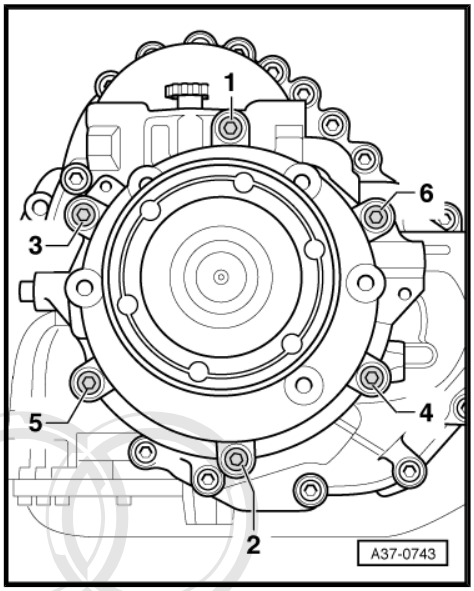

WARNING

Risk of eye injury.

- *Wear safety goggles.*

Note

The gearbox does not have an oil drain plug. The gear oil can only be drained by removing the housing.

– Place cloth on tunnel cross member to prevent escaping oil from getting into gaps in tunnel cross member.

– Loosen and remove securing bolts for centre differential housing in the sequence -6 ... 1-; allow gear oil to drain out.

Caution

Gearbox components must be handled with care, otherwise they will be damaged.

- *Detach centre differential housing from gearbox carefully towards the rear. Take care that centre differential does not drop out of gearbox.*

Any use for private or commercial purposes, in part or in whole, is not permitted unless authorised by AUDI AG. AUDI AG does not guarantee or accept any liability with respect to the correctness of information in this document. Copyright by AUDI AG.

– Secure centre differential -1- to prevent it from falling out, or pull it off output shaft towards rear.

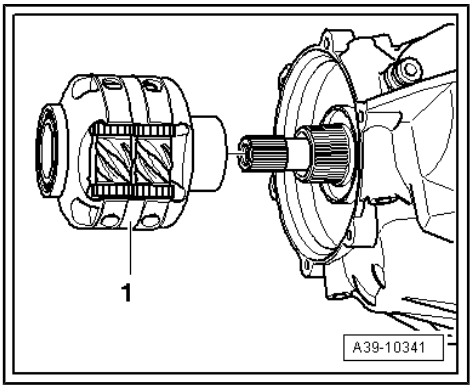

Note

Different versions of centre differential -1- depending on equipment version.

Installing

Installation is carried out in reverse sequence; note the following:

Note

Renew O-ring for centre differential housing.

If centre differential has been removed -1-:

– Fit centre differential onto splines of output shaft. At the same time turn centre differential slightly.

– Check whether centre differential can be turned by hand after being fitted.

– Fit housing onto centre differential with flange shaft installed. Turn housing slightly if necessary.

– Tighten bolts for centre differential housing ⇒ page 167 .
– Clean and install tunnel cross member ⇒ page 115 .
– Install propshaft ⇒ Rear final drive; Rep. gr. 39 ; Propshaft; Exploded view - propshaft .
– Install exhaust system and perform stress-free alignment ⇒ Rep. gr. 26 ; Exhaust pipes/silencers; Exploded view - silencers .
– Fill up gear oil in transfer box ⇒ page 154

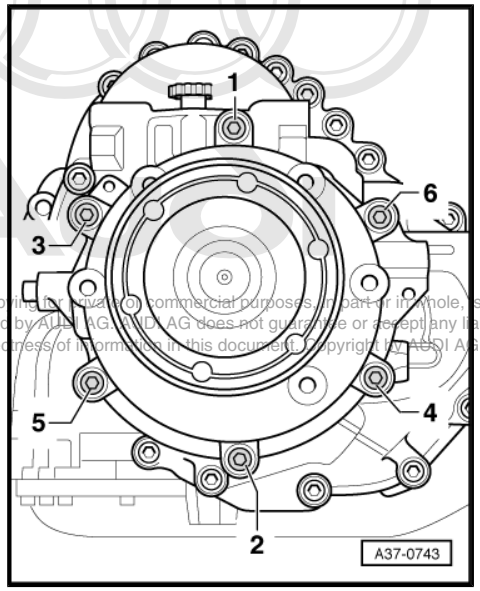

Protected by copyright. Copying for private or commercial purposes, in part or in whole, is not permitted unless authorised by AUDI AG. AUDI AG does not guarantee or accept any liability with respect to the correctness of information in this document. Copyright by AUDI AG.

5.3 Renewing oil seal for flange shaft (rear)

Special tools and workshop equipment required

- Thrust plate - VW 401-
- Thrust plate - VW 402-
- Press tool - VW 409-
- Press tool - VW 412-
- Base plate - VW 441-
- Thrust piece - T40190-

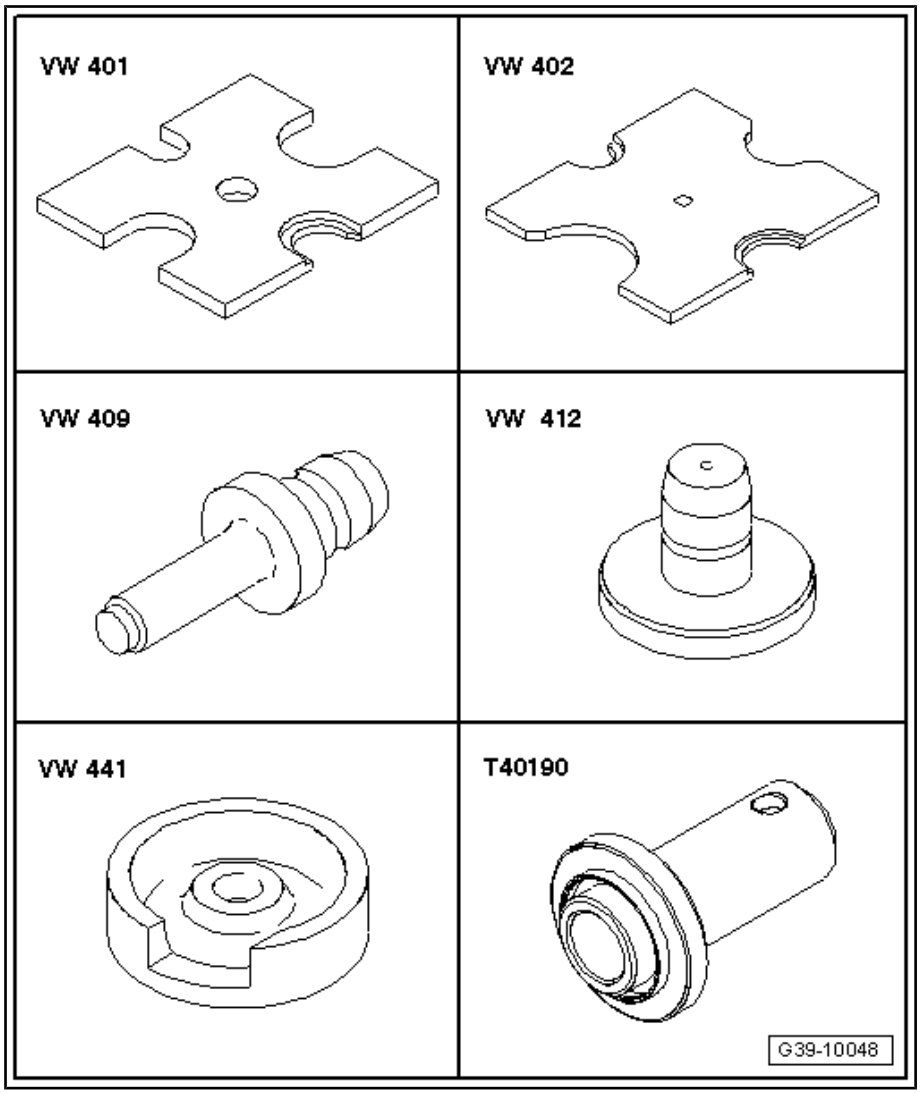

Procedure

– Remove centre differential housing ⇒ page 168 .

– Remove circlip -arrow- on inside of housing.

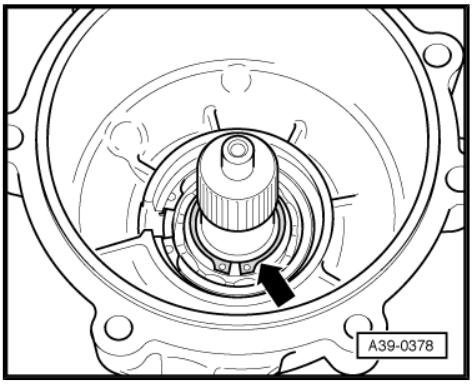

Note

The circlip locates the flange shaft on the bearing in the housing.

– Press flange shaft -A- out of centre differential housing using press tool - VW 409- . To do so, place housing onto thrust plate - VW 401- and thrust plate - VW 402- .

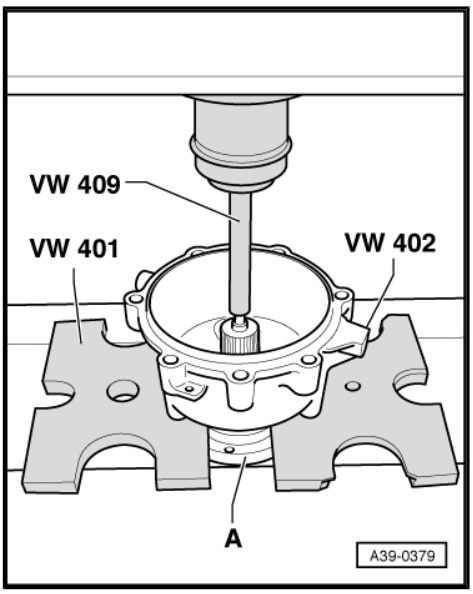

Note

Hold flange shaft -A- with one hand to prevent if falling.

Protected by copyright. Copying for private or commercial purposes, in part or in whole, is not permitted unless authorised by AUDI AG. AUDI AG does not guarantee or accept any liability with respect to the correctness of information in this document. Copyright by AUDI AG.

– Pry out oil seal.

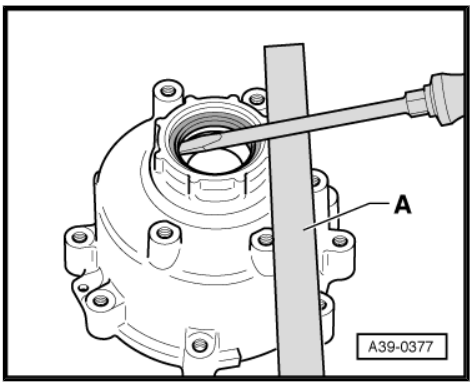

Note

To prevent damage to the housing, place something underneath (e.g. metal bar -A-) .

Installing

– Lubricate outer circumference of seal with gear oil.

• Installation position: open side of seal should face housing.

– Drive in new oil seal as far as stop using thrust piece - T40190- . Make sure oil seal remains straight.

– Pack space between sealing lip and dust lip half-full with sealing grease - G 052 128 A1- .

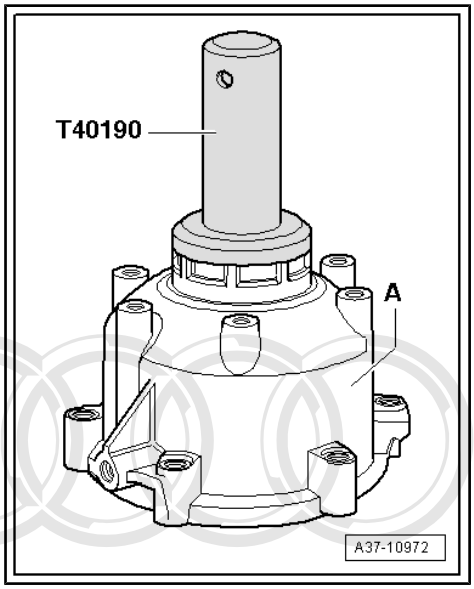

– Press flange shaft -A- into centre differential housing using base plate - VW 441- and press tool - VW 412- . To do so, place housing onto thrust plate - VW 401- and thrust plate - VW 402- .

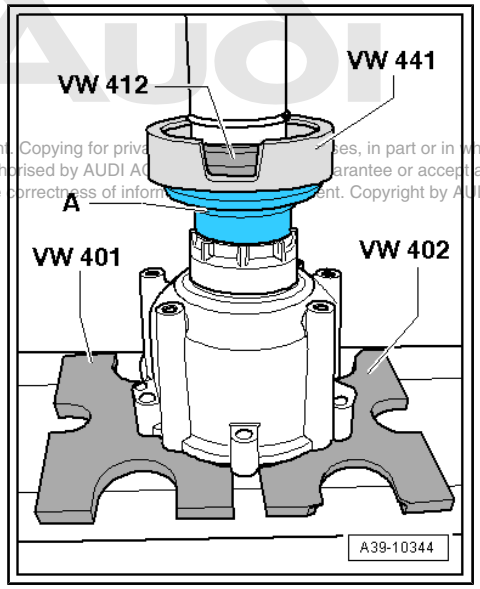

Protected by copyright. Copying for priva ses, in part or in whole, is not permitted unless authorised by AUDI A arantee or accept any liability with respect to the correctness of inform ent. Copyright by AUDI AG.

Note

Only insert flange shaft as far as necessary to install circlip.

– Fit circlip -arrow- into groove on flange shaft.

– Install centre differential housing ⇒ page 168 .

– Fill up gear oil in transfer box ⇒ page 154

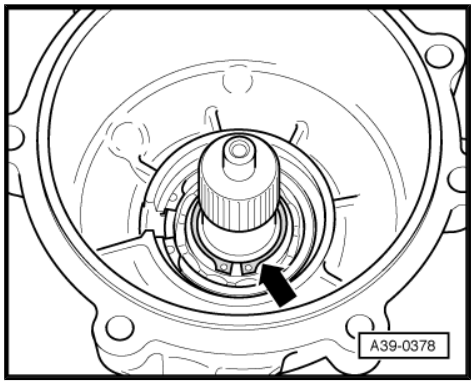

5.4 Renewing ball bearing for flange shaft (rear)

Special tools and workshop equipment required

- Thrust plate - VW 401-
- Thrust plate - VW 402-
- Press tool - VW 412-
- Tube - 2040-
- Tube - VW 415 A-

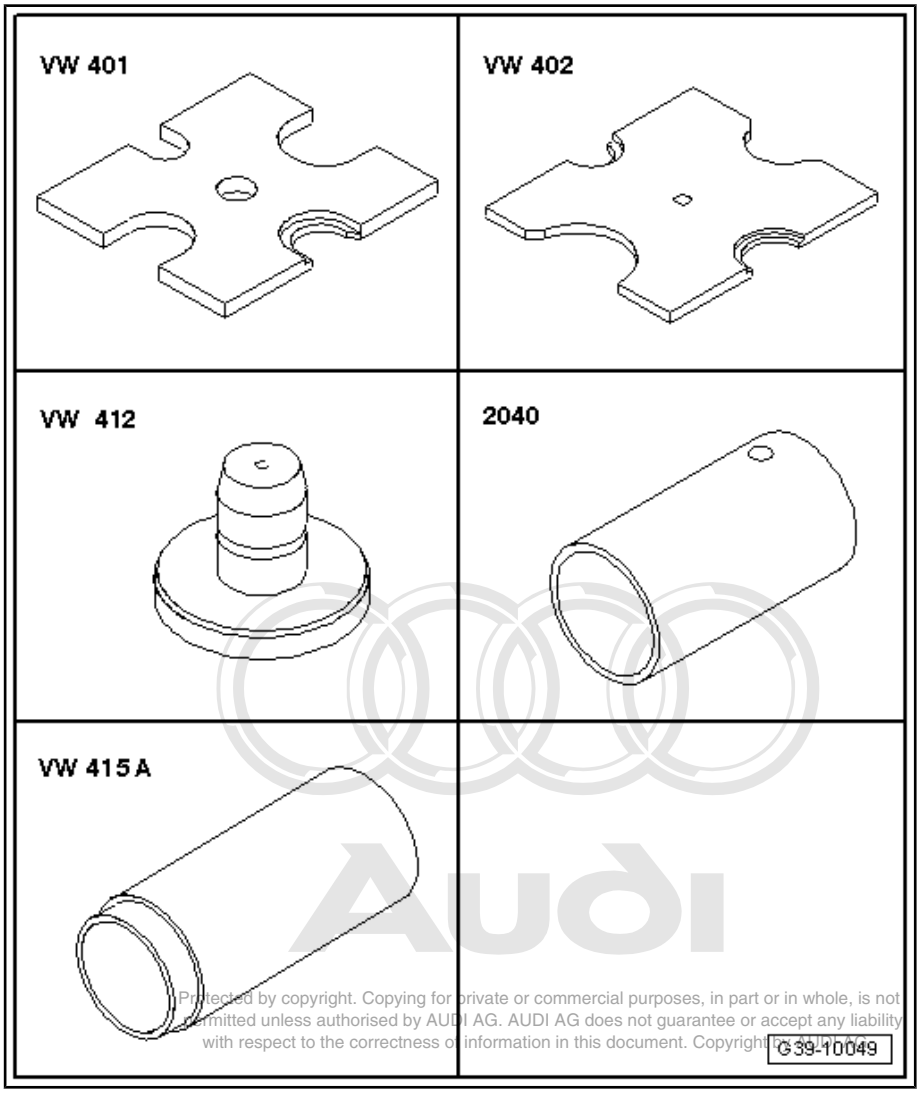

Protected by copyright. Copying for private or commercial purposes, in part or in whole, is not permitted unless authorised by AUDI AG. AUDI AG does not guarantee or accept any liability with respect to the correctness of information in this document. Copyright by AUDI AG.

Procedure

– Remove centre differential housing ⇒ page 168 .

– Remove circlip -A- for flange shaft (rear), flange shaft (rear) and oil seal for flange shaft (rear) ⇒ page 172 .

– Remove circlip -B- for ball bearing.

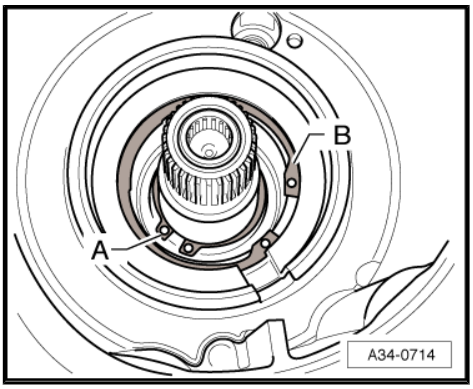

Note

Shown in illustration with flange shaft (rear) and circlip for flange shaft (rear) -A- still installed.

Pressing out ball bearing for flange shaft

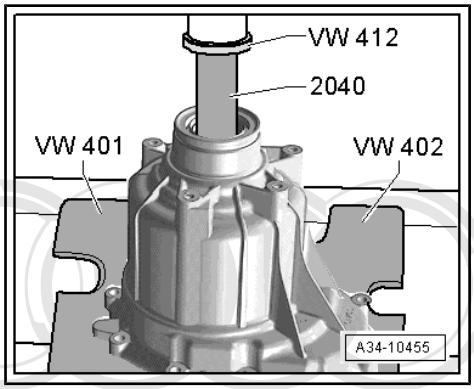

Pressing in ball bearing for flange shaft

- Collar of tube - VW 415 A- -arrow- faces press tool - VW 412- .

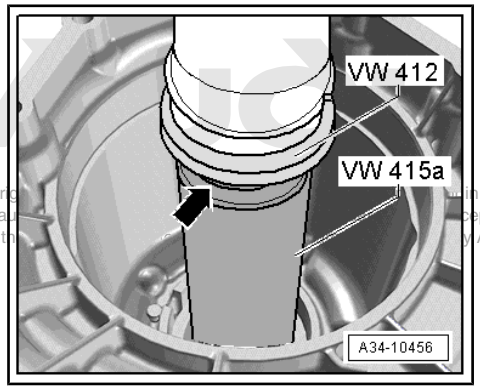

Protected by copyrig... in whole, is not permitted unless a... cept any liability with respect to th... y AUDI AG.

5.5 Renewing ball bearing for centre differential

Special tools and workshop equipment required

- Thrust plate - VW 401-
- Thrust plate - VW 402-
- Press tool - VW 412-
- Thrust piece - VW 432-
- Assembly tool - 3350-
- Splitter 22 ... 115 mm - Kukko 17/2-

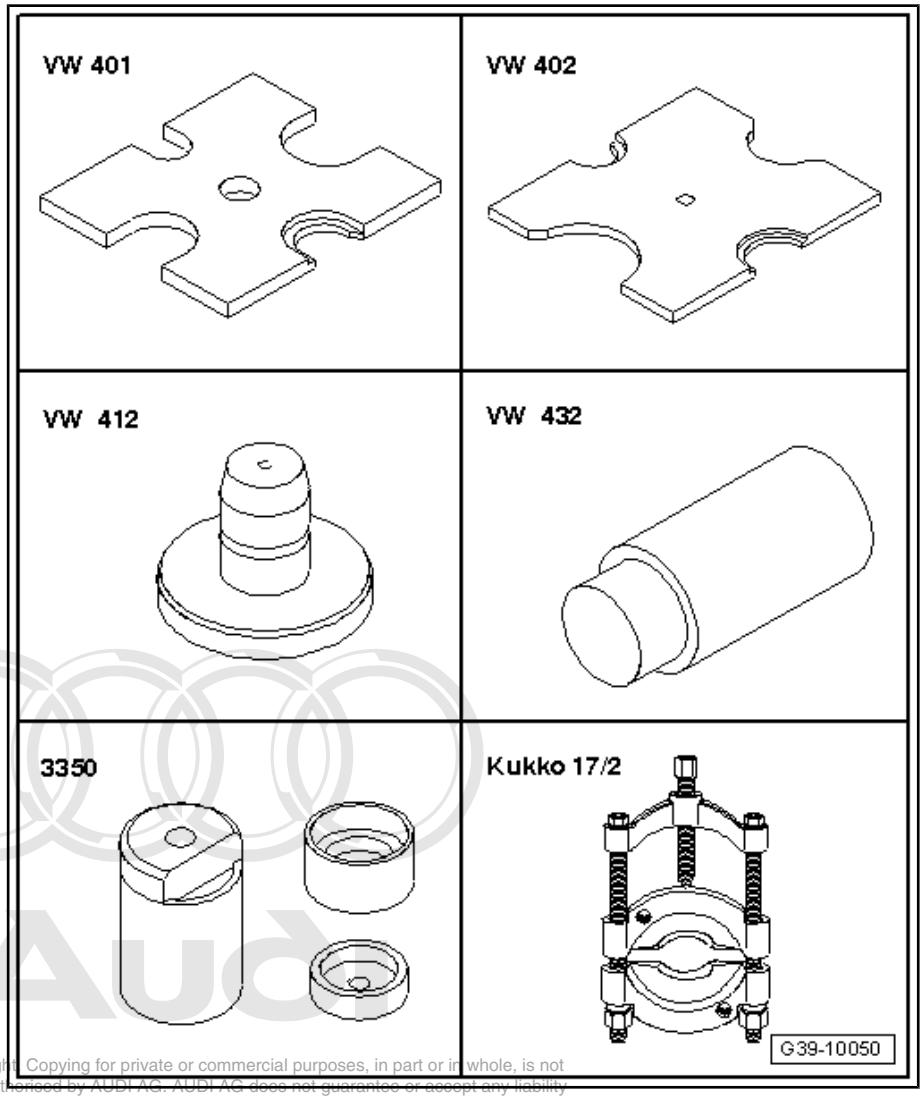

Protected by copyright. Copying for private or commercial purposes, in part or in whole, is not permitted unless authorised by AUDI AG. AUDI AG does not guarantee or accept any liability with respect to the correctness of information in this document. Copyright by AUDI AG.

Procedure

– Remove centre differential housing ⇒ page 168 .

– Pull centre differential -1- off output shaft towards the rear.

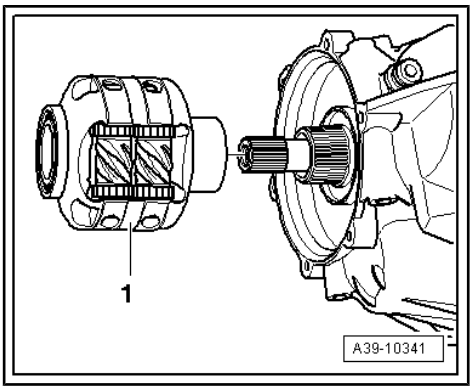

Note

Different versions of centre differential -1- depending on equipment version.

Pressing ball bearing off centre differential

A - Splitter 22 ... 115 mm - Kukko 17/2-

The collar of press tool - VW 432- points towards ball bearing.

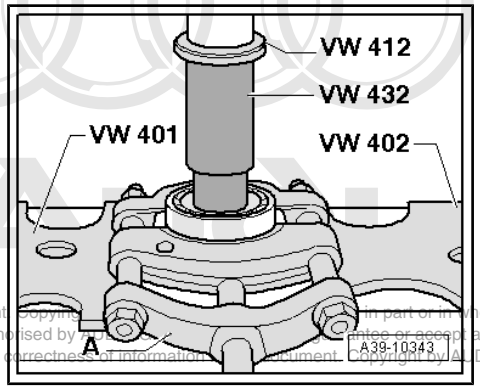

Protected by copyright. Copying, in part or in whole, is not permitted unless authorised by AUDI AG, unless or accept any liability with respect to the correctness of information in this document. Copyright by AUDI AG.

Pressing ball bearing onto centre differential

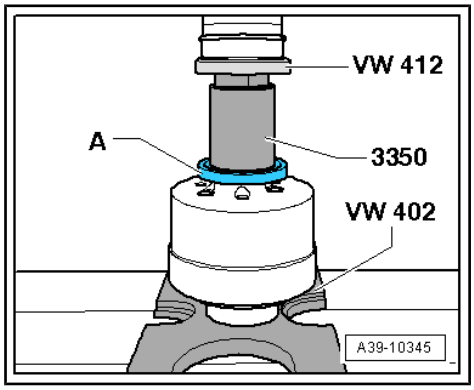

6 Gearbox control system

⇒ “6.1 Overview of fitting locations - gearbox control system”, page 179

6.1 Overview of fitting locations - gearbox control system

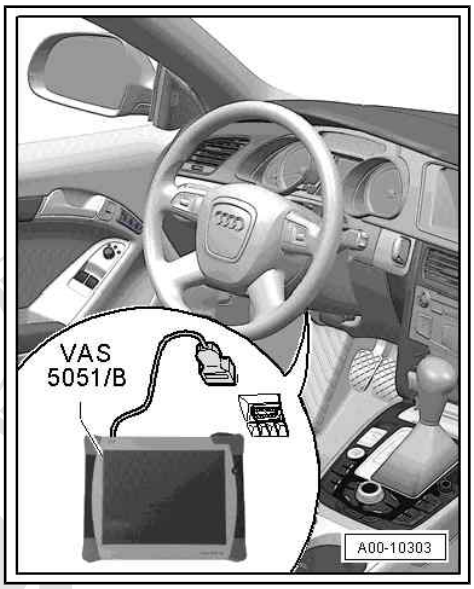

Diagnostic connection

- Fitting location: the diagnostic connection for the vehicle diagnostic, testing and information system - VAS 5051B- is located in the driver's footwell.

Mechatronic unit, automatic gearbox control unit - J217- , multifunction switch - F125- , gearbox input speed sender - G182- and gearbox output speed sender - G195-

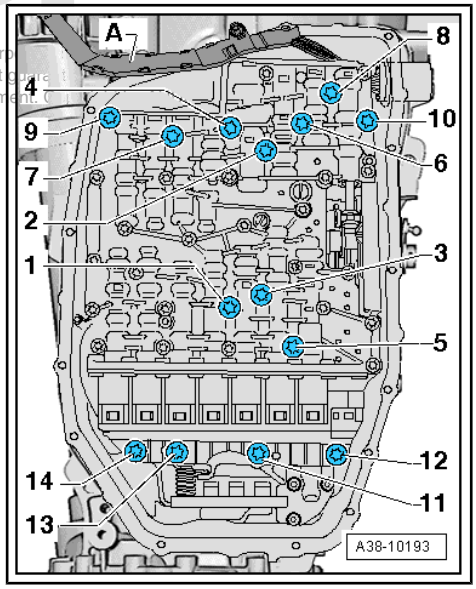

Audi AG. Copyright. Copying for private or commercial purposes, in part or in whole, is not permitted unless authorised by AUDI AG. AUDI AG does not guarantee or assume any liability with respect to the correctness of information in this document.

- Fitting location: the mechatronic unit is bolted to the underside of the gearbox housing and covered by the gearbox oil pan.

The mechatronic unit incorporates the hydraulic control system, the electronic control unit and the sensors and actuators as a complete synchronised unit. This includes:

- Automatic gearbox control unit - J217-
- Multifunction switch - F125-
- Gearbox input speed sender - G182-
- Gearbox output speed sender - G195-

The mechatronic unit can only be replaced as a complete unit.

Note

All components mentioned are tested via self-diagnosis.

⇒ “2.1 Removing and installing mechatronic unit”, page 142 .

Wiring harness in gearbox

- Fitting location: the wiring harness -A- with connector -C- is attached to the mechatronic unit -B-.

⇒ “2.2 Removing and installing wiring harness in gearbox”, page 146 .

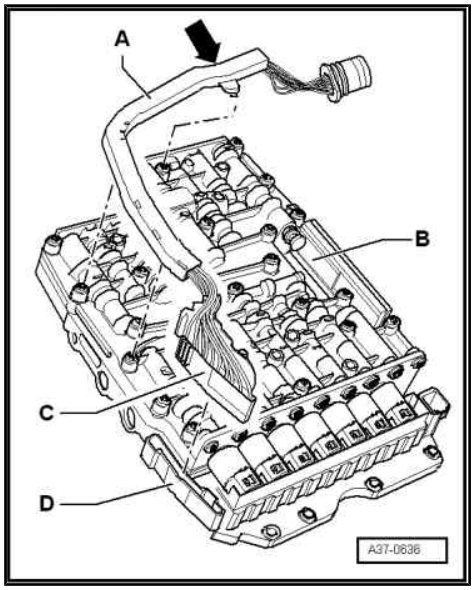

Selector lever position display - Y6-

- Fitting location: The selector lever position display - Y6- is integrated in the instrument cluster.

Note

If the selector lever position display is defective, the instrument cluster must be renewed ⇒ Electrical system; Rep. gr. 90 ; Dash panel insert; Removing and installing dash panel insert - KX2- .

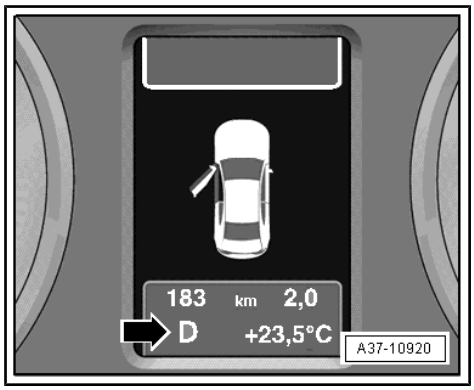

Selector lever sensors control unit - J587- and tiptronic switch - F189-

Protected by copyright. Copying for private or commercial purposes, in part or in whole, is not permitted unless authorised by AUDI AG. AUDI AG does not guarantee or accept any liability with respect to the correctness of information in this document. Copyright by AUDI AG.

- Fitting location: the selector lever sensors control unit - J587- and the tiptronic switch - F189- are combined in a single component -2- which is clipped onto the shift unit -arrows-.

Note

-Arrows A- can be disregarded.

⇒ “1.7.2 Removing and installing selector lever sensors control unit J587 and tiptronic switch F189 ”, page 29 .

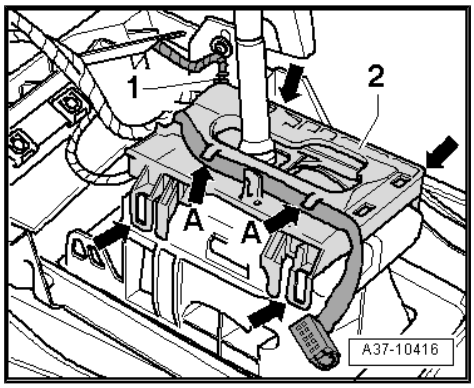

Selector lever lock solenoid - N110-

- Fitting location: the selector lever lock solenoid - N110- -item 1- is clipped onto the selector mechanism.

⇒ “1.7.1 Removing and installing selector lever lock solenoid N110 ”, page 27 .

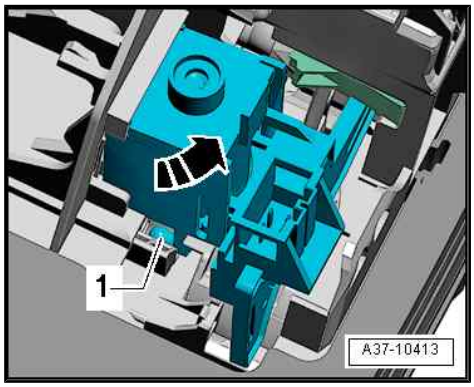

Gear selector position P switch - F305-

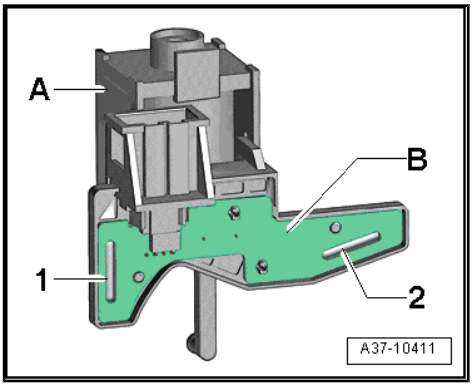

- Fitting location: Gear selector position P switch - F305- consists of two reed contacts (-1- and - 2-) and is installed on printed circuit board -B- in selector lever lock solenoid - N110- -A-.

Note

Gear selector position P switch - F305- can only be renewed together with selector lever lock solenoid - N110- .

⇒ "1.7.1 Removing and installing selector lever lock solenoid N110 ", page 27 .

Kickdown switch - F8-

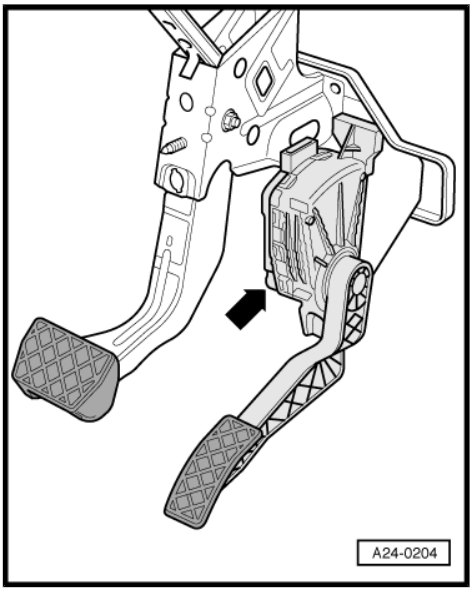

Note

A specific value for the accelerator position sender - G79- and accelerator position sender 2 - G185- is stored in the engine control unit.

- Fitting location: the accelerator position senders are integrated in the accelerator pedal module -arrow-.

Note

The accelerator pedal module must be renewed if one of the accelerator position senders is defective ⇒ Fuel supply system; Rep. gr. 20 ; Accelerator mechanism; Removing and installing accelerator pedal module with accelerator position sender -G79- / -G185- .

Selector lever position display - Y26-

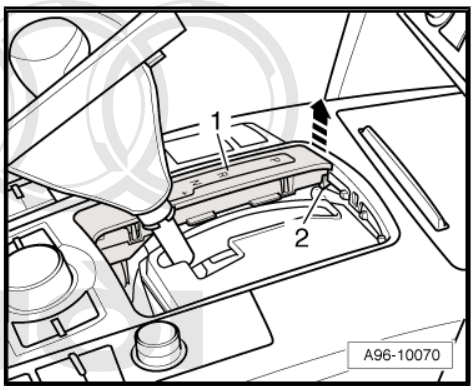

- Fitting location: the display unit for selector lever position - Y26- -item 1- is clipped into the centre console.

⇒ "1.10 Removing and installing selector lever position display Y26 ", page 34 .

Protected by copyright. Copying for private or commercial purposes, in part or in whole, is not permitted unless authorised by AUDI AG. AUDI AG does not guarantee or accept any liability with respect to the correctness of information in this document. Copyright by AUDI AG.