Steering Wheel And Column - Corvette

SPECIFICATIONS

FASTENER TIGHTENING SPECIFICATIONS

Fastener Tightening Specifications

Application	Specification	
	Metric	English
Actuator Retaining Screws	9 N.m	80 lb in
Column Support Bracket Nuts Lower (Tighten in Sequence)	24 N.m	18 lb ft
Column Support Bracket Nuts Upper (Tighten in Sequence)	24 N.m	18 lb ft
Intermediate Shaft to the Steering Column Pinch Bolt	48 N.m	35 lb ft
Intermediate Shaft to the Steering Gear Pinch Bolt	34 N.m	25 lb ft
Intermediate Shaft to the Steering Gear Pinch Bolt Shield Screw	3.5 N.m	31 lb in
Steering Column Support Screws	17 N.m	13 lb ft
Steering Column Trim Cover Screws Lower	4 N.m	35 lb in
Steering Column Trim Cover Screws Upper	1.5 N.m	13 lb in
Steering Wheel Nut	41 N.m	30 lb ft
Telescope Drive Bolt	7 N.m	62 lb in
Telescope Drive Bracket Screw	7 N.m	62 lb in
Turn Signal Multifunction Switch Screws	7 N.m	62 lb in

SCHEMATIC AND ROUTING DIAGRAMS

COLUMN/IGNITION LOCK SCHEMATICS

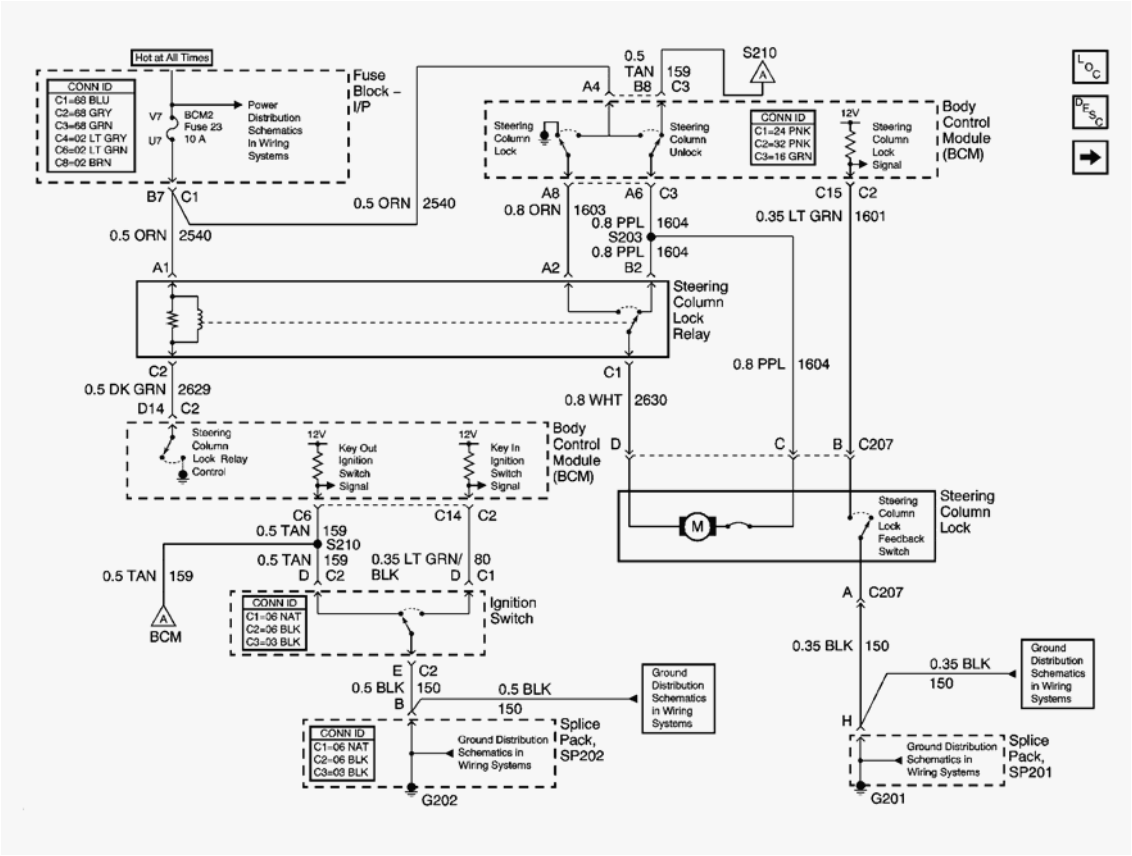

Fig. 1: Domestic Manual Transmission And All Export Schematics
Courtesy of GENERAL MOTORS CORP.

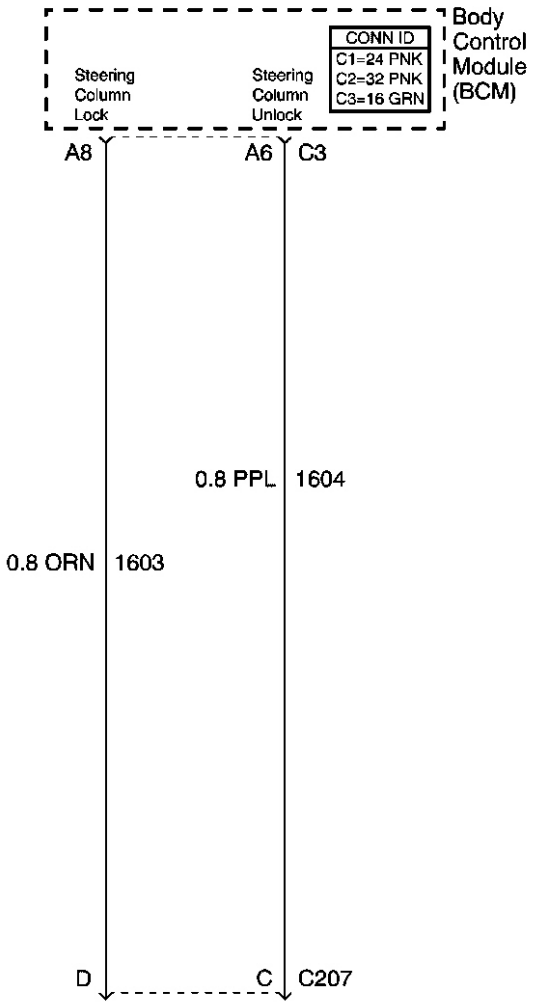

<u>Fig. 2: Domestic Automatic Transmission Schematics</u>
Courtesy of GENERAL MOTORS CORP.

TILT/TELESCOPING STEERING COLUMN SCHEMATICS

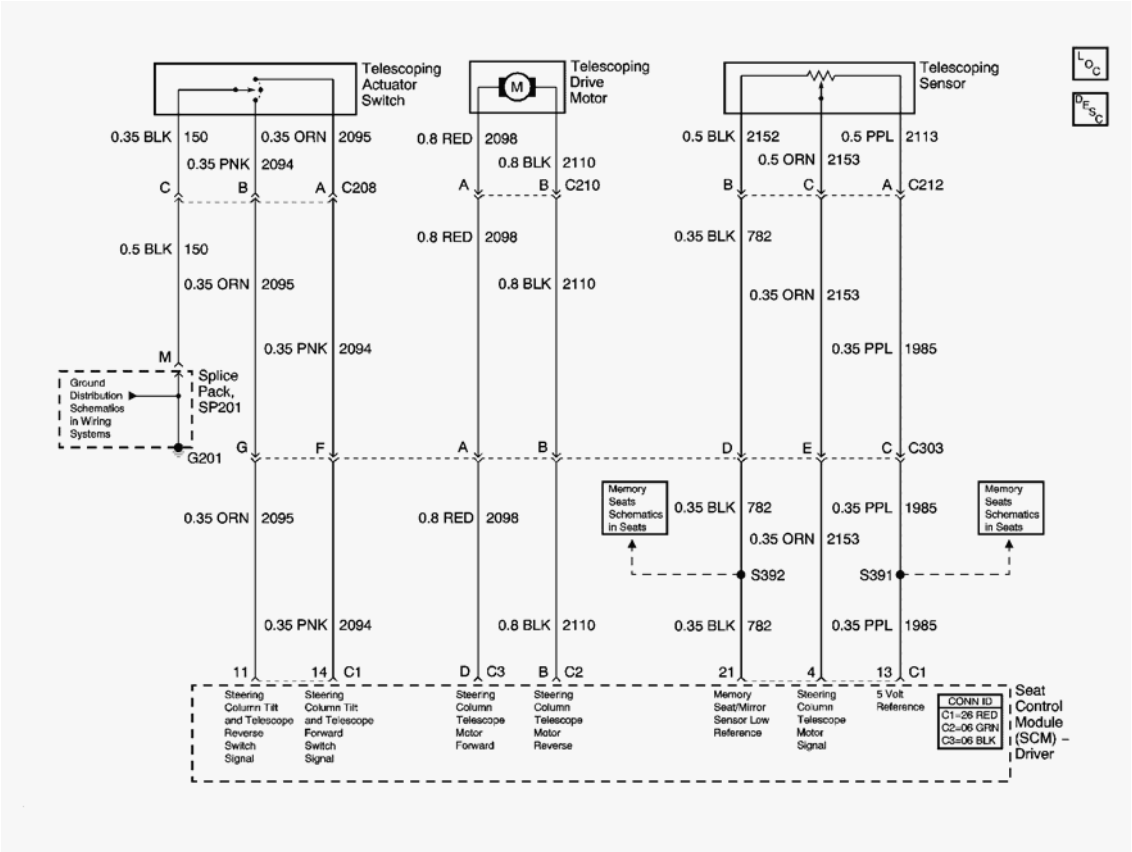

Fig. 3: Tilt/Telescoping Steering Column Schematics
Courtesy of GENERAL MOTORS CORP.

COMPONENT LOCATOR

STEERING COLUMN DISASSEMBLED VIEW (TELESCOPING)

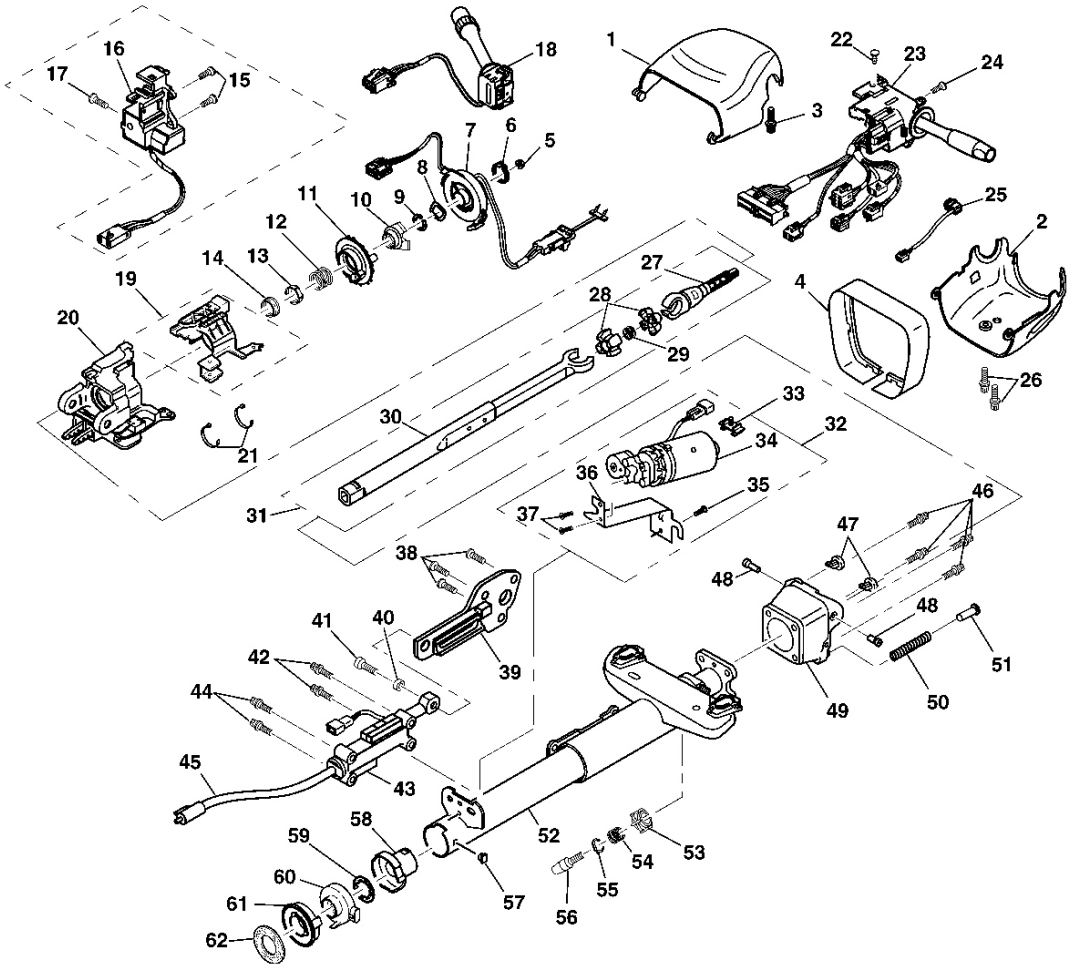

Fig. 4: Y-Car Telescoping Component View
Courtesy of GENERAL MOTORS CORP.

Callouts For Fig. 4

Callout	Component Name
1	Upper Trim Cover
2	Lower Trim Cover
3	TORX(R) Head Screw
4	Steering Column Close Out Trim Cover
5	Flanged Prevailing Torque Nut
6	Retaining Ring
7	SIR Coil
8	Wave Washer
9	Bearing Retainer

10	Cam Orientation Plate
11	Turn Signal Cancel Cam Assembly
12	Upper Bearing Spring
13	Upper Bearing Inner Race Seat
14	Inner Race
15	Pan Head Tapping Screws
16	Steering Wheel Theft Deterrent Lock
17	Pan Head Tapping Screw
18	Windshield Wiper and Washer Switch Assembly
19	Wiper/Washer Switch Bracket
20	Steering Column Tilt Head Housing
21	Wire Harness Straps
22	Pan Head Tapping Screw
23	Turn Signal and Multifunction Switch Assembly
24	Pan Head Tapping Screw
25	Telescoping Switch Assembly
26	Pan Head Tapping Screws
27	Race and Upper Shaft Assembly
28	Centering Sphere
29	Joint Preload Spring
30	Lower Steering Shaft
31	Steering Shaft Assembly
32	Telescope Motor and Bracket Assembly
33	Connector Clip
34	Telescope Drive Motor Assembly
35	Pan Head Tapping Screw
36	Telescope Drive Bracket
37	Pan Head Tapping Screws
38	Flat Head 6-Lobed Soc Tap Screws
39	Telescope Adapter Assembly
40	Telescope Drive Ball
41	Telescope Drive Bolt
42	TORX(R)Head Screws
43	Telescope Motor Assembly
44	TORX(R) Head Screws
45	Cable Assembly
46	Support Screws
47	Tilt Bumpers
48	Pivot Pins
49	Steering Column Support Assembly
50	Tilt Spring

51	Spring Guide
52	Jacket Assembly
53	Housing Support Guide
54	Compression Spring
55	Retaining Ring
56	Shoulder Bolt
57	Jacket Hole Plug
58	Adapter and Bearing Assembly
59	Lower Spring Retainer
60	Steering Wheel Position Sensor Assembly
61	Sensor Retainer
62	Steering Shaft Seal

STEERING COLUMN DISASSEMBLED VIEW (MANUAL)

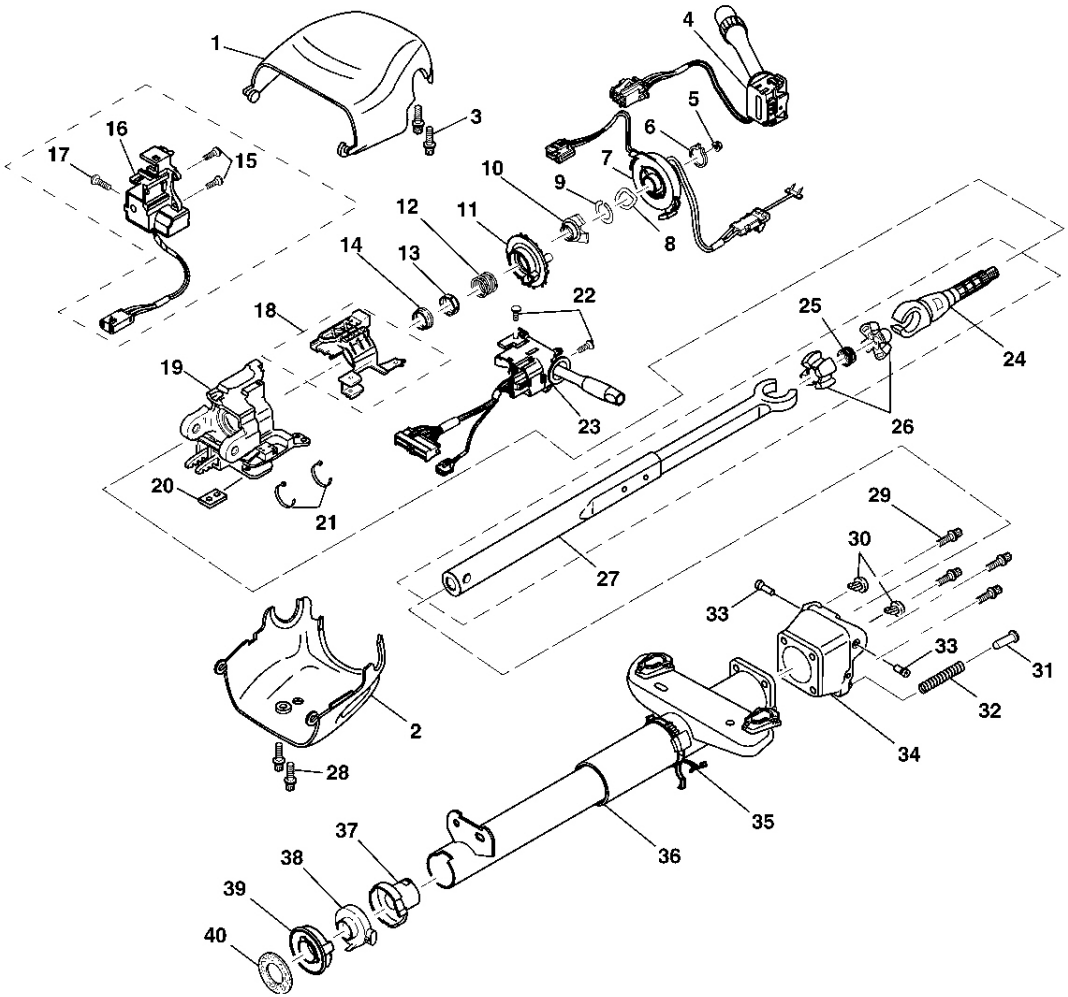

Fig. 5: Tilt Steering Column Component View
Courtesy of GENERAL MOTORS CORP.

Callouts For Fig. 5

Callout	Component Name
1	Upper Trim Cover
2	Lower Trim Cover
3	TORX(R) Head Screws
4	Windshield Wiper and Washer Switch Assembly
5	Flanged Prevailing Torque Nut
6	Retaining Ring
7	SIR Coil
8	Wave Washer
9	Bearing Retainer

10	Cam Orientation Plate
11	Turn Signal Cancel Cam Assembly
12	Upper Bearing Spring
13	Upper Bearing Inner Race Seat
14	Inner Race
15	Pan Head Tapping Screws
16	Steering Wheel Theft Deterrent Lock
17	Pan Head Tapping Screw
18	Wiper/Washer Switch Bracket
19	Steering Column Tilt Head Housing
20	Wire Harness Spacer
21	Wire Harness Straps
22	Pan Head Tapping Screws
23	Turn Signal and Multifunction Switch Assembly
24	Race and Upper Shaft Assembly
25	Joint Preload Spring
26	Centering Sphere
27	Lower Steering Shaft Assembly
28	TORX(R) Head Screws
29	TORX(R) Head Screws
30	Tilt Bumpers
31	Spring Guide
32	Tilt Spring
33	Pivot Pins
34	Steering Column Support Assembly
35	Wire Harness Strap
36	Steering Column Jacket Assembly
37	Adapter and Bearing Assembly
38	Steering Wheel Position Sensor Assembly
39	Sensor Retainer
40	Steering Shaft Seal

STEERING WHEEL AND COLUMN COMPONENT VIEWS

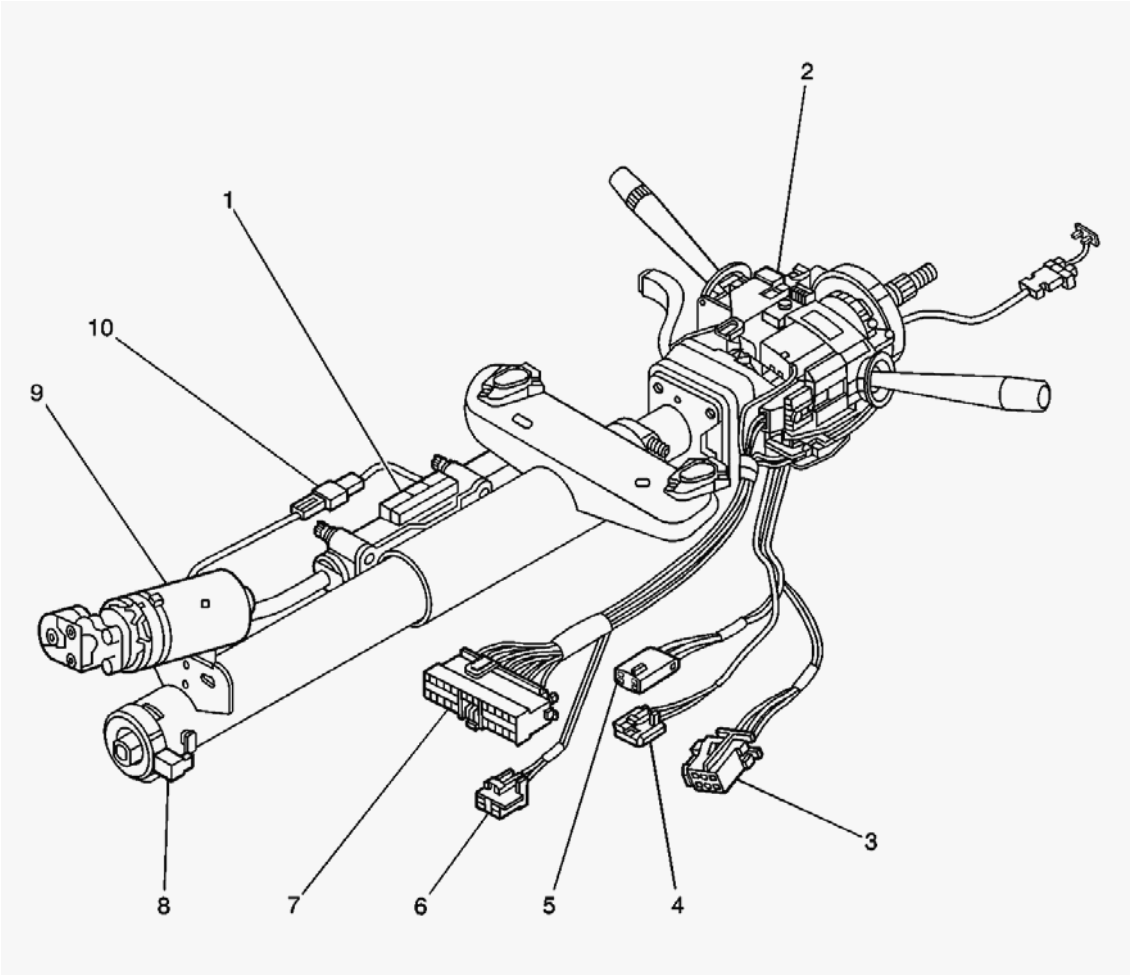

Fig. 6: Steering Column Component View
Courtesy of GENERAL MOTORS CORP.

Callouts For Fig. 6

Callout	Component Name
1	Telescoping Sensor
2	Steering Column Lock
3	C219
4	C207
5	C211
6	C217
7	C209
8	Steering Wheel Position Sensor
9	Telescoping Drive Motor
10	C210

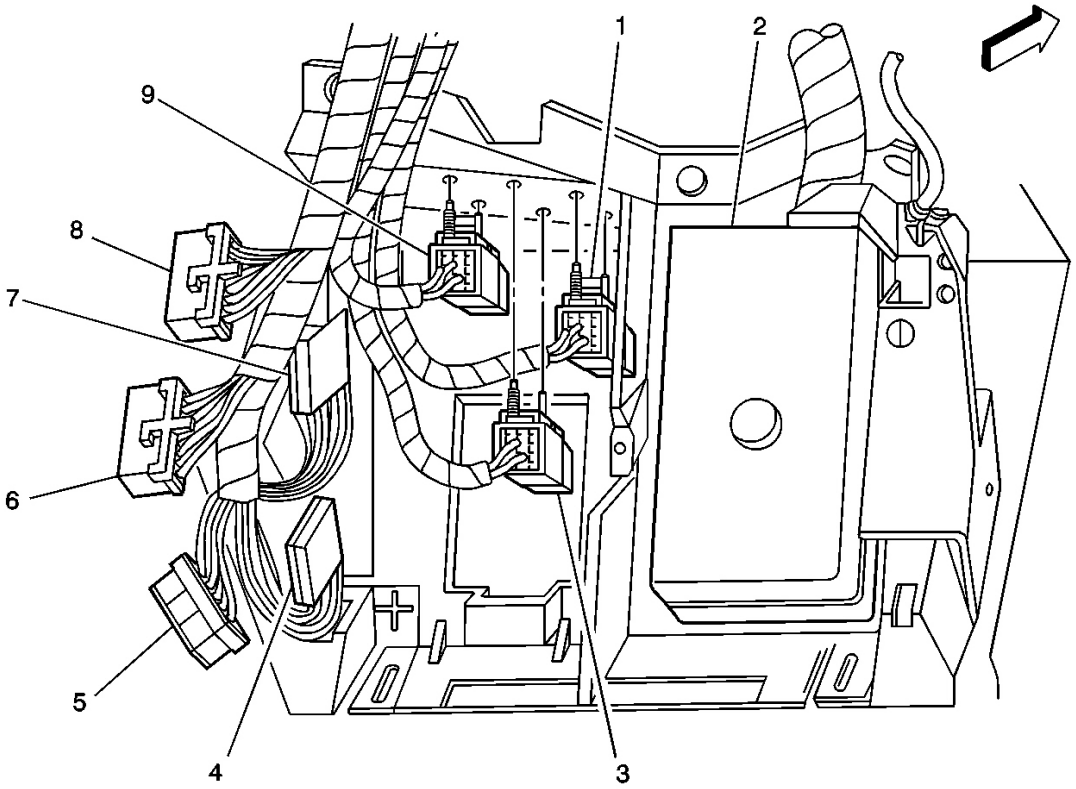

Fig. 7: Under RH Side Of Dash Component View
Courtesy of GENERAL MOTORS CORP.

Callouts For Fig. 7

Callout	Component Name
1	Theft Deterrent Relay
2	Fuse Block-IP
3	Blower Motor Relay
4	Star Connector #2
5	Body Control Module (BCM) C3
6	Body Control Module (BCM) C1
7	Star Connector #1
8	Body Control Module (BCM) C2
9	Steering Column Lock Relay

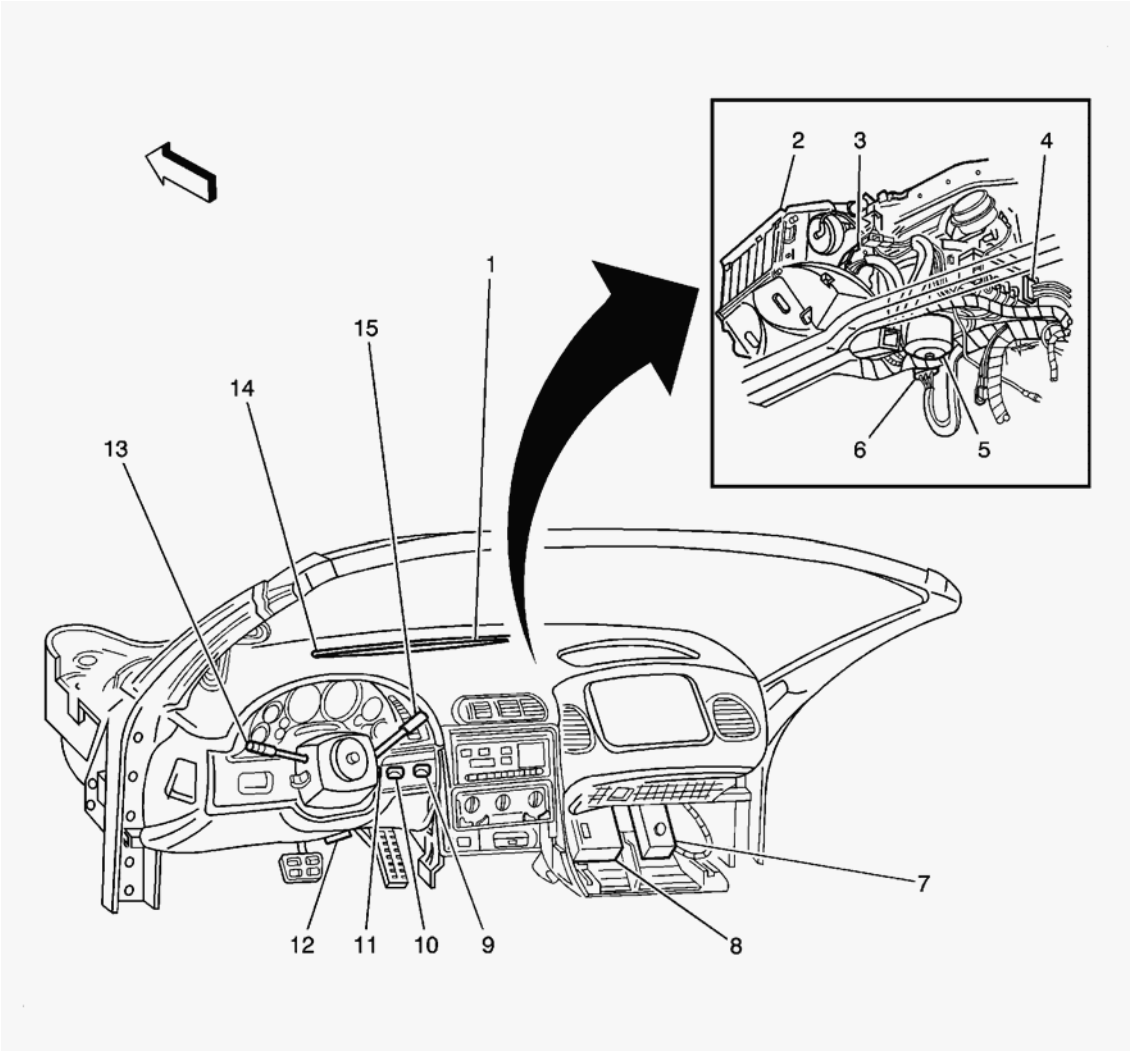

Fig. 8: Instrument Panel Component View
Courtesy of GENERAL MOTORS CORP.

Callouts For Fig. 8

Callout	Component Name
1	Sunload Sensor
2	HVAC Module Assembly
3	Air Temperature Actuator (C60)
4	Vacuum Control Assembly (CJ2)
5	Blower Motor
6	Blower Motor Control Processor
7	Fuse Block-IP
8	Body Control Module (BCM)
9	Ignition Switch
10	Air Temperature Sensor - Inside
11	Telescoping Actuator Switch

12	Data Link Connector (DLC)
13	Multifunction Turn Signal Lever
14	Ambient Light Sensor
15	Windshield Wiper/Washer Switch

STEERING WHEEL AND COLUMN CONNECTOR END VIEWS

Steering Column Lock Relay Terminal Identification

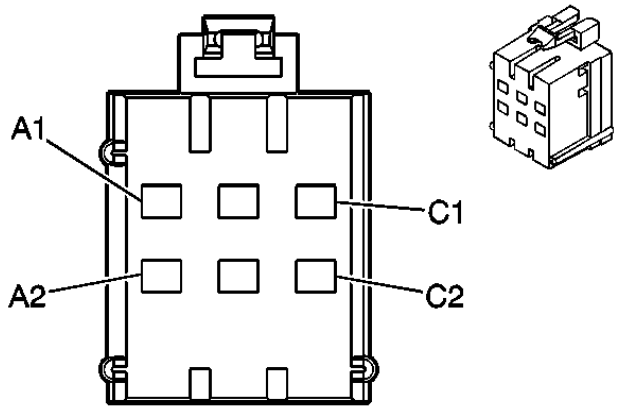

Connector Part Information		• 12110541 • 6 Way F Metri-Pack 280 Series (BLK)	
Pin	**Wire Color**	**Circuit No.**	**Function**
A1	ORN	2540	Battery Positive Voltage
A2	ORN	1603	Steering Column Lock
B1	-	-	Not Used
B2	PPL	1604	Steering Column Unlock
C1	WHT	2630	Steering Column Lock
C2	DK GRN	2629	Steering Column Lock Relay Control

DIAGNOSTIC INFORMATION AND PROCEDURES

DIAGNOSTIC STARTING POINT - STEERING COLUMN

Begin the system diagnosis with **Diagnostic System Check - Steering Wheel and Column** . The Diagnostic System Check will provide the following information:

- The identification of the control modules which command the system
- The ability of the control modules to communicate through the serial data circuit
- The identification of any stored diagnostic trouble codes (DTCs) and their status

The use of the Diagnostic System Check will identify the correct procedure for diagnosing the system and where the procedure is located.

DIAGNOSTIC SYSTEM CHECK - STEERING WHEEL AND COLUMN

Test Description

The numbers below refer to the step numbers on the diagnostic table.

2: Lack of communication may be due to a partial malfunction of the class 2 serial data circuit or due to a total malfunction of the class 2 serial data circuit. The specified procedure will determine the particular condition.

3: Determine if any Seat Control Module, Body Control Module, or Powertrain Control Module DTCs are present.

4: The presence of DTCs which begin with "U" indicate some other module is not communicating. The specified procedure will compile all the available information before tests are performed.

Diagnostic System Check - Steering Wheel and Column

Step	Action	Yes	No
1	Install a scan tool. Does the scan tool power up?	Go to **Step 2**	Go to **Scan Tool Does Not Power Up** in Data Link Communications
2	1. Turn ON the ignition, with the engine OFF. 2. Attempt to establish communication with the following systems: • The seat control module • The body control module • The powertrain control module Does the scan tool communicate with these systems?	Go to **Step 3**	Go to **Scan Tool Does Not Communicate with Class 2 Device** in Data Link Communications
3	1. Select the seat control module display DTCs function on the scan tool. 2. Select the body control module display DTCs function on the scan tool. 3. Select the powertrain control module display		

	DTCs function on the scan tool. Does the scan tool display any DTCs?	Go to **Step 4**	Go to **Symptoms - Steering Wheel and Column**
4	Does the scan tool display any DTCs which begin with a "U"?	Go to **Scan Tool Does Not Communicate with Class 2 Device** in Data Link Communications	Go to **Step 5**
5	Does the scan tool display DTC B0605?	Go to **DTC B0605** in Body Control Systems	Go to **Step 6**
6	Does the scan tool display DTC P0562 or P0563?	Go to **Diagnostic System Check - Automatic Transmission** in Automatic Transmission	Go to **Diagnostic Trouble Code (DTC) List**

SCAN TOOL OUTPUT CONTROLS

Scan Tool Output Controls

Scan Tool Output Control	Additional Menu Selection(s)	Description
Steering Column	Telescope In/Out Test	The SCM can be commanded by using the scan tool to run the Telescoping Drive Motor in or out. The SCM commands the Telescoping Drive Motor for 1 second.

SCAN TOOL DATA LIST

BCM Scan Tool Data List

Scan Tool Parameter	Data List	Units Displayed	Typical Data Value
Column Feedback	Input Data 2	Active/Inactive	Active
Column Lock State	Input Data 2	Current State	Ignition On Unlocked
Column Lock/Unlock A	Input Data 2	Active/Inactive	Inactive
Column Lock/Unlock B	Input Data 2	Active/Inactive	Inactive
Current Power Mode	Input Data 1	Power Mode	Run
Driver Door Ajar Switch	Input Data 2	Open/Closed	Closed
Ignition 1	Input Data 1	On/Off	On
Ignition 2	Input Data 1	On/Off	On
Ignition 3	Input Data 1	On/Off	On
Key In Ignition	Input Data 1	Active/Inactive	Active
Key Out of Ignition	Input Data 1	Active/Inactive	Inactive
Passenger Door Ajar Switch	Input Data 2	Open/Closed	Closed

SCM Scan Tool Data List

Scan Tool Parameter	Data List	Units Displayed	Typical Data Value
Column Aft Motor Stop	Column Info	Volts	0-5 Volts
Column Fore Mtr Stop	Column Info	Volts	0-5 Volts
Column Fore/Aft Motor	Column Info	In/Out/Idle	Idle
Column Fore/Aft Switch	Column Info	In/Out/Idle	Idle
Column Position Fdbk	Column Info	Volts	0-5 Volts
Memory 1 Stored Position	Column Info	Volts	0-5 Volts
Memory 2 Stored Position	Column Info	Volts	0-5 Volts
Memory 3 Stored Position	Column Info	Volts	0-5 Volts

SCAN TOOL DATA DEFINITIONS

BCM Scan Tool Data Definitions

The BCM Scan Tool Data Definitions contains a brief description of all steering column related BCM parameters available on the scan tool.

Column Feedback

The scan tool displays Active or Inactive. When the steering column lock motor is LOCKED, the scan tool will display Inactive. When the steering column lock motor is UNLOCKED, the scan tool displays Active.

Column Lock State

The scan tool displays the current column lock state. This data represents what column lock functional mode the BCM is in. The BCM enters different column lock states based upon information received from various inputs associated with the column lock system.

Column Lock/Unlock A

The scan tool displays Active or Inactive. When the BCM LOCKS the steering column, the scan tool will display Active. When the BCM UNLOCKS the steering column, the scan tool displays Inactive.

Column Lock/Unlock B

The scan tool displays Active or Inactive. When the BCM UNLOCKS the steering column, the scan tool will display Active. When the BCM LOCKS the steering column, the scan tool displays Inactive.

Current Power Mode

The scan tool displays the current power mode. The BCM determines ignition switch position from it's ignition inputs. This ignition switch information is sent on the serial data line to systems that relay on this information to preform certain functions (RAP, wake-up, etc.).

Driver Door Ajar Switch

The scan tool displays Open or Closed. When the driver door is open, the scan tool will display Open. When the driver door is closed, the scan tool displays Closed.

Ignition 1

The scan tool displays ON or OFF. When the BCM detects ignition 1 is present, the scan tool will display Yes. When the BCM does not detect ignition 1, the scan tool will display OFF. This ignition switch information is sent on the serial data line to systems that relay on this information to preform certain functions like RAP, wake-up, etc.

Ignition 2

The scan tool displays ON or OFF. When the BCM detects ignition 2 is present, the scan tool will display Yes. When the BCM does not detect ignition 2, the scan tool will display OFF. This ignition switch information is sent on the serial data line to systems that relay on this information to preform certain functions like RAP, wake-up, etc.

Ignition 3

The scan tool displays ON or OFF. When the BCM detects ignition 3 is present, the scan tool will display Yes. When the BCM does not detect ignition 3, the scan tool will display OFF. This ignition switch information is sent on the serial data line to systems that relay on this information to preform certain functions like RAP, wake-up, etc.

Key In Ignition

The scan tool displays Active or Inactive. When the BCM detects the key is IN the ignition switch, the scan tool will display Active. When the key is removed from the ignition switch, the scan tool will display Inactive.

Key Out of Ignition

The scan tool displays Active or Inactive. When the BCM detects the key is OUT of the ignition switch, the scan tool will display Active. When the key is IN the ignition switch, the scan tool will display Inactive.

Passenger Door Ajar Switch

The scan tool displays Open or Closed. When the passenger door is open, the scan tool will display Open. When the passenger door is closed, the scan tool displays Closed.

SCM Scan Tool Data Definitions

The SCM Scan Tool Data Definitions contains a brief description of all steering column related SCM parameters available on the scan tool.

Column Aft Motor Stop

The scan tool displays 0-5 volts. The value displayed is the position sensor signal voltage where the steering column outward movement will stop. This function may be used to determine if the adjustment range of the steering column has been limited due to an obstruction or binding condition. The stop can be recalibrated by pressing switch 6-8 times in one direction.

Column Fore Motor Stop

The scan tool displays 0-5 volts. The value displayed is the position sensor signal voltage where the steering column inward movement will stop. This function may be used to determine if the adjustment range of the steering column has been limited due to an obstruction or binding condition. The stop can be recalibrated by pressing switch 6-8 times in one direction.

Column Fore/Aft Motor

The scan tool displays In, Out, or Idle. When the SCM supplies voltage to operate the steering column motor In the scan tool displays In and when the SCM supplies voltage to operate the steering column motor out the scan tool displays Out. This may occur with switch operation or memory operation. When SCM is not supplying voltage to the motor the scan tool displays Idle.

Column Fore/Aft Switch

The scan tool displays In, Out, or Idle. When the Column Fore/Aft Switch is pressed toward the I/P the scan tool displays Out. When the switch is pressed toward the driver the scan tool displays In. When the switch is released the scan tool displays Idle.

Column Position Fdbk

The scan tool displays 0-5 volts. The value displayed is the telescoping column position sensor signal voltage. This voltage varies when the steering column is moved In and Out and is used by the SCM to determine the steering column position when memory settings are stored and recalled.

Memory 1 Stored Position

The scan tool displays 0-5 volts. The value displayed is the position sensor signal voltage stored by the SCM and used to recall the memory 1 position.

Memory 2 Stored Position

The scan tool displays 0-5 volts. The value displayed is the position sensor signal voltage stored by the SCM and used to recall the memory 2 position.

Memory 3 Stored Position

The scan tool displays 0-5 volts. The value displayed is the position sensor signal voltage stored by the SCM and used to recall the memory 3 position.

DIAGNOSTIC TROUBLE CODE (DTC) LIST

Diagnostic Trouble Code (DTC) List

DTC	Diagnostic Procedure	Module(s)
B2587	**DTC B2587**	BCM
B2588	**DTC B2588**	BCM
B2592	**DTC B2592**	BCM
B2593	**DTC B2593**	BCM
B2852	**DTC B2852**	SCM
B2857	**DTC B2857**	SCM
B2860	**DTC B2860**	SCM

DTC B2587

Circuit Description

The body control module (BCM) provides the steering column control function which allows the column to be electronically locked or unlocked. The BCM provides three outputs, steering column lock, steering column unlock, and a steering column lock relay control. The BCM can apply a ground or battery output on the steering column lock or steering column unlock depending on the desired steering column lock motor position. The BCM uses the feedback switch in order to monitor the motor position and determine if the commanded position was accomplished.

The BCM controls the position of the steering column lock motor based on the following input information:

- Ignition position
- Key in ignition status
- Key out of ignition status
- Steering column lock feedback switch
- PASS-Key(R) system
- powertrain control module (PCM) password information
- System voltage

The BCM also monitors its circuitry for the steering column lock circuit. If the BCM detects a malfunction, a DTC will set.

Conditions for Setting the DTC

- The BCM detects an internal malfunction, an open or a short to ground, in the steering column lock circuit.
- There is an open in the BCM battery positive voltage circuit from BCM2 fuse.
- The condition must be present for 100 ms.

Action Taken When the DTC Sets

- The PCM may disable fuel if vehicle speed is detected over 2.4 km/h (1.5 mph).
- The BCM sends a message to the instrument panel cluster (IPC) to display the SERVICE COLUMN LOCK message.

Conditions for Clearing the DTC

- The BCM no longer detects an internal malfunction, an open or a short to ground, in the steering column lock circuit.
- Supply voltage is available on the battery positive voltage circuit from BCM2 fuse.
- A history DTC will clear after 50 consecutive ignition cycles if the condition for the malfunction is no longer present.

Diagnostic Aids

- The following conditions may cause an intermittent malfunction:
  - An intermittent short in the steering column lock relay.
  - An intermittent open in BCM battery positive voltage circuit from BCM2 fuse.
  - Steering column lock and unlock circuits shorted together or to ground.
- A short to ground in the BCM battery positive voltage circuit will cause the BCM2 fuse to open. The BCM receives supply voltage for the steering column lock motor through the BCM battery positive voltage circuit. If the BCM is unable to supply voltage to the steering column lock motor through the BCM battery positive voltage circuit, the BCM will set a DTC B2587.
- An internally shorted steering column lock relay may set this DTC.
- Disconnecting or opening the steering column lock feedback circuit with the ignition in the ON position will cause the BCM to enter a Fail Enable Standby mode. The steering column will remain inoperative until the Fail Enable Standby mode is cleared. To clear this mode, disconnect the BCM1 & IPC fuse in the I/P fuse block for 15 seconds.
- The BCM1 fuse will become open if the steering column lock motor or the steering column lock or unlock circuits are shorted together or to ground.
- If the DTC is a history DTC, the problem may be intermittent. Perform the tests shown while moving related wiring and connectors. This can often cause the malfunction to occur.

Test Description

The numbers below refer to the step numbers on the diagnostic table.

2: Tests for an open in the BCM2 fuse. BCM2 fuse supplies power to the BCM to operate the steering column lock motor.

3: Tests for an open in the BCM battery positive voltage circuit at the BCM.

4: Tests for an open or short to ground in the BCM battery positive voltage circuit between the steering column lock relay and the I/P fuse block.

5: Tests for an open or short to ground in the steering column lock or unlock circuit. If steering column lock or unlock circuit is shorted to ground the BCM2 fuse will open.

9: When the BCM is replaced, use a scan tool to perform the BCM RPO Reprogramming procedure.

DTC B2587

Step	Action	Yes	No
Schematic Reference: Column/Ignition Lock Schematics **Connector End View Reference: Steering Wheel and Column Connector End Views**			
1	Did you perform the Diagnostic System Check?	Go to **Step 2**	Go to **Diagnostic System Check - Steering Wheel and Column**
2	Inspect the BCM2 fuse for an open. Is the BCM2 fuse open?	Go to **Step 4**	Go to **Step 3**
3	1. Turn OFF the ignition. 2. Disconnect the BCM connectors. 3. Turn ON the ignition, with the engine OFF. 4. Probe the BCM battery positive voltage circuit at the BCM connector with a test lamp that is connected to a good ground. Does the test lamp illuminate?	Go to **Step 6**	Go to **Step 4**
4	Test the BCM battery positive voltage circuit for an open or short to ground. Refer to **Circuit Testing** and **Wiring Repairs** in Wiring Systems. Did you find and correct the condition?	Go to **Step 10**	Go to **Step 5**
5	Test the steering column lock and unlock circuits for a short to ground. Refer to **Circuit Testing** and **Wiring Repairs** in Wiring Systems. Did you find and correct the condition?	Go to **Step 10**	Go to **Step 7**
6	Inspect for poor connections at the harness connector of the BCM. Refer to **Testing for Intermittent Conditions and Poor Connections** and **Connector Repairs** in Wiring Systems. Did you find and correct the condition?	Go to **Step 10**	Go to **Step 9**
7	Inspect for poor connections at the harness connector of the steering column lock. Refer to **Testing for Intermittent Conditions and Poor Connections** and **Connector Repairs** in Wiring Systems. Did you find and correct the condition?	Go to **Step 10**	Go to **Step 8**
8	Replace the steering column lock motor. Refer to **Steering Wheel Theft Deterrent Lock Replacement (Telescoping)** or **Steering Wheel Theft Deterrent Lock Replacement (Manual)** in Steering Wheel and Column. Did you complete the replacement?	Go to **Step 10**	-
	IMPORTANT: **Perform the BCM RPO Reprogram procedure. Refer to Body**		

9	**Control Module (BCM) Programming/RPO Configuration in Body Control System.** Replace the BCM. Refer to **Body Control Module Replacement** in Body Control System.Did you complete the replacement?	Go to **Step 10**	-
10	1. Use the scan tool in order to clear the DTCs. 2. Clear the BCM steering column lock fail enable mode by disconnecting BCM1 & IPC fuse for 15 seconds. 3. Operate the vehicle within the Conditions for Setting the DTC as specified in the supporting text. Does the DTC reset?	Go to **Step 2**	System OK

DTC B2588

Circuit Description

The BCM provides the steering column control function which allows the column to be electronically locked or unlocked. The BCM provides three outputs, steering column lock, steering column unlock, and a steering column lock relay control. The BCM can apply a ground or battery output on the steering column lock or steering column unlock depending on the desired steering column lock motor position. The BCM uses the feedback switch in order to monitor the motor position and determine if the commanded position was accomplished.

The BCM controls the position of the steering column lock motor based on the following input information:

- Ignition position
- Key IN ignition status
- Key OUT of ignition status
- Steering column lock feedback switch
- PASS-Key(R) system
- PCM password information
- System voltage

The BCM also monitors its circuitry for the steering column lock circuit. If the BCM detects a malfunction present a DTC will set.

Conditions for Setting the DTC

- The BCM detects an internal malfunction, an open or a short to voltage, in the steering column lock circuit.
- The condition must be present for 100 ms.

Action Taken When the DTC Sets

- Stores a DTC B2588 in the BCM memory.
- The PCM may disable fuel if vehicle speed is detected over 2.4 km/h (1.5 mph).
- Sends a message to the IPC to display the SERVICE COLUMN LOCK message.

Conditions for Clearing the DTC

- The BCM no longer detects an internal malfunction, a short to voltage, in the steering column lock circuit.
- A history DTC will clear after 50 consecutive ignition cycles if the condition for the malfunction is no longer present.
- Use a scan tool.

Diagnostic Aids

- Disconnecting the steering column lock connector with the ignition in the ON position will cause the BCM to enter a Fail Enable Standby mode. The steering column will remain inoperative until the Fail Enable Standby mode is cleared. To clear this mode, disconnect the BCM1 & IPC fuse in the I/P fuse block for 15 seconds.
- If the DTC is a history DTC, the problem may be intermittent. Perform the tests shown while moving related wiring and connectors. This can often cause the malfunction to occur.

Test Description

The number below refers to the step number on the diagnostic table.

4: When the BCM is replaced, use a scan tool to perform the BCM RPO Reprogram procedure.

DTC B2588

Step	Action	Yes	No
Schematic Reference: Column/Ignition Lock Schematics **Connector End View Reference: Steering Wheel and Column Connector End Views**			
1	Did you perform the Steering Wheel and Column Diagnostic System Check?	Go to **Step 2**	Go to **Diagnostic System Check - Steering Wheel and Column**
2	Test the steering column lock and steering column unlock circuits for a short to voltage. Refer to **Circuit Testing** and **Wiring Repairs** in Wiring Systems. Did you find and correct the condition?	Go to **Step 5**	Go to **Step 3**
3	Inspect for poor connections at the harness connector of the BCM. Refer to **Testing for Intermittent Conditions and Poor Connections** and **Connector Repairs** in Wiring Systems. Did you find and correct the condition?	Go to **Step 5**	Go to **Step 4**
	IMPORTANT: **Perform the BCM RPO Reprogram procedure. Refer to Body**		

4	**Control Module (BCM) Programming/RPO Configuration in Body Control System.** Replace the BCM. Refer to **Body Control Module Replacement** in Body Control System.Did you complete the replacement?	Go to **Step 5**	-
5	1. Use the scan tool in order to clear the DTCs. 2. Clear the BCM steering column lock fail enable mode by disconnecting BCM1 & IPC fuse for 15 seconds. 3. Operate the vehicle within the Conditions for Setting the DTC as specified in the supporting text. Does the DTC reset?	Go to **Step 2**	System OK

DTC B2592

Circuit Description

The body control module (BCM) provides the steering column control function which allows the column to be electronically locked or unlocked. The BCM provides three outputs, steering column lock, steering column unlock, and a steering column lock relay control. The BCM can apply a ground or battery output on the steering column lock or steering column unlock depending on the desired steering column lock motor position. The BCM uses the feedback switch in order to monitor the motor position and determine if the commanded position was accomplished.

The BCM controls the position of the steering column lock motor based on the following input information:

- Ignition position
- Key in ignition status
- Key out of ignition status
- Steering column lock feedback switch
- PASS-Key(R) system
- powertrain control module (PCM) password information
- System voltage

The BCM also monitors its circuitry for the steering column unlock circuit. If the BCM detects a malfunction, a DTC will set.

Conditions for Setting the DTC

- The BCM detects an internal malfunction, an open or a short to ground, in the steering column unlock circuit.
- There is an open in the BCM battery positive voltage circuit from BCM2 fuse.

- The condition must be present for 100 ms.

Action Taken When the DTC Sets

- The PCM may disable fuel if vehicle speed is detected over 2.4 km/h (1.5 mph).
- The BCM sends a message to the instrument panel cluster (IPC) to display the SERVICE COLUMN LOCK message.

Conditions for Clearing the DTC

- The BCM no longer detects an internal malfunction, an open or a short to ground, in the column unlock circuit.
- Supply voltage is available on the battery positive voltage circuit from BCM2 fuse.
- A history DTC will clear after 50 consecutive ignition cycles if the condition for the malfunction is no longer present.

Diagnostic Aids

- The following conditions may cause an intermittent malfunction:
  - An intermittent short in the steering column lock relay.
  - An intermittent open in BCM battery positive voltage circuit from BCM2 fuse.
  - Steering column lock and unlock circuits shorted together or to ground.
- A short to ground in the BCM battery positive voltage circuit will cause the BCM2 fuse to open. The BCM receives supply voltage for the steering column lock motor through the BCM battery positive voltage circuit. If the BCM is unable to supply voltage to the steering column lock motor through the BCM battery positive voltage circuit, the BCM will set a DTC B2592.
- An internally shorted steering column lock relay may set this DTC.
- Disconnecting or opening the steering column lock feedback circuit with the ignition in the ON position will cause the BCM to enter a Fail Enable Standby mode. The steering column will remain inoperative until the Fail Enable Standby mode is cleared. To clear this mode, disconnect the BCM1 & IPC fuse in the I/P fuse block for 15 seconds.
- The BCM2 fuse will become open if the steering column lock motor or the steering column lock or unlock circuits are shorted together or to ground.
- If the DTC is a history DTC, the problem may be intermittent. Perform the tests shown while moving related wiring and connectors. This can often cause the malfunction to occur.

Test Description

The numbers below refer to the step numbers on the diagnostic table.

2: Tests for an open in the BCM2 fuse. BCM2 fuse supplies power to the BCM to operate the steering column lock motor.

3: Tests for an open in the BCM battery positive voltage circuit at the BCM.

4: Tests for an open or short to ground in the BCM battery positive voltage circuit at the steering column

lock relay.

5: Tests for an open or short to ground in the steering column lock or unlock circuit. If steering column lock or unlock circuit is shorted to ground the BCM2 fuse will open.

9: When the BCM is replaced, use a scan tool to perform the BCM RPO Reprogramming procedure.

DTC B2592

Step	Action	Yes	No
Schematic Reference: Column/Ignition Lock Schematics **Connector End View Reference: Steering Wheel and Column Connector End Views**			
1	Did you perform the Diagnostic System Check?	Go to **Step 2**	Go to **Diagnostic System Check - Steering Wheel and Column**
2	Inspect the BCM2 fuse for an open. Is the BCM2 fuse open?	Go to **Step 4**	Go to **Step 3**
3	1. Turn OFF the ignition. 2. Disconnect the BCM connectors. 3. Turn ON the ignition, with the engine OFF. 4. Probe the BCM battery positive voltage circuit at the BCM connector with a test lamp that is connected to a good ground. Does the test lamp illuminate?	Go to **Step 6**	Go to **Step 4**
4	Test the BCM battery positive voltage circuit for an open or short to ground. Refer to **Circuit Testing** and **Wiring Repairs** in Wiring Systems. Did you find and correct the condition?	Go to **Step 10**	Go to **Step 5**
5	Test the steering column lock and unlock circuits for a short to ground. Refer to **Circuit Testing** and **Wiring Repairs** in Wiring Systems. Did you find and correct the condition?	Go to **Step 10**	Go to **Step 7**
6	Inspect for poor connections at the harness connector of the BCM. Refer to **Testing for Intermittent Conditions and Poor Connections** and **Connector Repairs** in Wiring Systems. Did you find and correct the condition?	Go to **Step 10**	Go to **Step 9**
7	Inspect for poor connections at the harness connector of the steering column lock. Refer to **Testing for Intermittent Conditions and Poor Connections** and **Connector Repairs** in Wiring Systems. Did you find and correct the condition?	Go to **Step 10**	Go to **Step 8**
8	Replace the steering column lock motor. Refer to **Steering Wheel Theft Deterrent Lock Replacement (Telescoping)** or **Steering Wheel Theft Deterrent Lock Replacement (Manual)** .	Go to **Step**	-

	Did you complete the replacement?	**10**	
9	**IMPORTANT:** **Perform the BCM RPO Reprogram procedure. Refer to Body Control Module (BCM) Programming/RPO Configuration in Body Control System.** Replace the BCM. Refer to **Body Control Module Replacement** in Body Control System.Did you complete the replacement?	Go to **Step 10**	-
10	1. Use the scan tool in order to clear the DTCs. 2. Clear the BCM steering column lock fail enable mode by disconnecting BCM1 & IPC fuse for 15 seconds. 3. Operate the vehicle within the Conditions for Setting the DTC as specified in the supporting text. Does the DTC reset?	Go to **Step 2**	System OK

DTC B2593

Circuit Description

The BCM provides the steering column control function which allows the column to be electronically locked or unlocked. The BCM provides three outputs, steering column lock, steering column unlock, and a steering column lock relay control. The BCM can apply a ground or battery output on the steering column lock or steering column unlock depending on the desired steering column lock motor position. The BCM uses the feedback switch in order to monitor the motor position and determine if the commanded position was accomplished.

The BCM controls the position of the steering column lock motor based on the following input information:

- Ignition position
- Key IN ignition status
- Key OUT of ignition status
- Steering column lock feedback switch
- PASS-Key(R) system
- PCM password information
- System voltage

The BCM also monitors its circuitry for the steering column unlock circuit. If the BCM detects a malfunction present, a DTC will set.

Conditions for Setting the DTC

- The BCM detects an internal malfunction, an open or a short to voltage, in the steering column unlock circuit.

- The condition must be present for 100 ms.

Action Taken When the DTC Sets

- Stores a DTC B2593 in the BCM memory.
- The PCM may disable fuel if vehicle speed is detected over 2.4 km/h (1.5 mph).
- Sends a message to the IPC to display the SERVICE COLUMN LOCK message.

Conditions for Clearing the DTC

- The BCM no longer detects an internal malfunction, an open or a short to voltage, in the steering column unlock circuit.
- A history DTC will clear after 50 consecutive ignition cycles if the condition for the malfunction is no longer present.
- Use a scan tool.

Diagnostic Aids

- The BCM grounds the steering column lock motor through the ignition switch ground. If the BCM is unable to ground steering column lock motor through the ignition switch ground, the BCM will set a DTC B2593.
- Disconnecting the steering column lock connector with the ignition in the ON position will cause the BCM to enter a Fail Enable Standby mode. The steering column will remain inoperative until the Fail Enable Standby mode is cleared. To clear this mode, disconnect the BCM1 & IPC fuse for 15 seconds.
- If the DTC is a history DTC, the problem may be intermittent. Perform the tests shown while moving related wiring and connectors. This can often cause the malfunction to occur.

Test Description

The number below refers to the step number on the diagnostic table.

4: When the BCM is replaced, use a scan tool to perform the BCM RPO Reprogram procedure.

DTC B2593

Step	Action	Yes	No
Schematic Reference: Column/Ignition Lock Schematics **Connector End View Reference: Steering Wheel and Column Connector End Views**			
1	Did you perform the Steering Wheel and Column Diagnostic System Check?	Go to **Step 2**	Go to **Diagnostic System Check - Steering Wheel and Column**
2	Test the steering column lock and steering column unlock circuits for a short to voltage. Refer to **Circuit Testing** and **Wiring Repairs** in Wiring Systems. Did you find and correct the condition?	Go to **Step 5**	Go to **Step 3**

3	Inspect for poor connections at the harness connector of the BCM. Refer to **Testing for Intermittent Conditions and Poor Connections** and **Connector Repairs** in Wiring Systems. Did you find and correct the condition?	Go to **Step 5**	Go to **Step 4**
4	**IMPORTANT:** **Perform the BCM RPO Reprogram procedure. Refer to Body Control Module (BCM) Programming/RPO Configuration in Body Control System.** Replace the BCM. Refer to **Body Control Module Replacement** in Body Control System.Did you complete the replacement?	Go to **Step 5**	-
5	1. Use the scan tool in order to clear the DTCs. 2. Clear the BCM steering column lock fail enable mode by disconnecting BCM1 & IPC fuse for 15 seconds. 3. Operate the vehicle within the Conditions for Setting the DTC as specified in the supporting text. Does the DTC reset?	Go to **Step 2**	System OK

DTC B2852

Circuit Description

The telescoping steering column switch circuit provides an input to the LH Seat Control Module (SCM) when the switch is held closed in the in, button pressed toward driver, or out, button pressed toward I/P, position. The SCM monitors a 12 volt signal applied to the steering column switch circuit. When the steering column switch is closed in the position, the column in 12 volt signal is grounded and pulled low within the SCM, indicating a column out request.

Conditions for Setting the DTC

The steering column switch input, to the SCM, is active for more than 20 seconds.

Action Taken When the DTC Sets

- Stores a history DTC B2852 in the SCM memory.
- This DTC can only be set as a history code even if the malfunction is current.
- No driver warning message will be displayed for this DTC.
- The operation/function of the steering column switch is disabled.

Conditions for Clearing the DTC

- The steering column switch input, to the SCM, is inactive for more than 20 seconds.
- Using a scan tool.

Diagnostic Aids

- The following conditions may cause an intermittent malfunction.
  - There is an intermittent short to ground in the steering column telescope reverse switch signal circuit.
  - The steering column switch is shorted to ground internally or is sticking.
  - The steering column switch was closed for longer than 20 seconds.
- If the steering column telescope reverse switch signal circuit is shorted to ground or the steering column switch is stuck closed, the steering column will remain in the full out position at all times.
- Using a scan tool, select scan tool inputs and monitor steering column switch status. If the scan tool displays Out, disconnect the steering column switch. If the display changes to Idle, replace the switch. If the scan tool still displays Out, check steering column telescope reverse switch signal circuit for a short to ground.
- If the DTC does not reset after the code is cleared, then the problem may be intermittent. Perform the tests shown while moving related wiring and connectors. This can often cause the malfunction to occur. Refer to **Testing for Intermittent Conditions and Poor Connections** in Wiring Systems.
- Activate the steering column switch numerous times while monitoring the status on the scan tool to see if it sticks intermittently.

Test Description

The numbers below refer to the step numbers on the diagnostic table:

2: This test determines the status of the column in switch using a scan tool. The scan tool will display the column switch status as Out, button pressed toward I/P, and Idle, button released.

3: This test checks if the column in switch is shorted to ground or stuck. If the column in switch status changes from Out to Idle when the column in switch is disconnected, then the switch assembly must be replaced.

DTC B2852

Step	Action	Yes	No
Schematic Reference: Tilt/Telescoping Steering Column Schematics **Connector End View Reference: Steering Wheel and Column Connector End Views**			
1	Did you perform the Steering Column Diagnostic System Check?	Go to **Step 2**	Go to **Diagnostic System Check - Steering Wheel and Column**
2	Using a scan tool, select SCM input display and monitor the column in switch status. Does the scan tool display column in switch status as Out?	Go to **Step 3**	Go to Diagnostic Aids
3	1. Disconnect the column switch connector. 2. Using a scan tool, select SCM input display and monitor the column switch status. Does the scan tool display column in switch status as Out?	Go to **Step 4**	Go to **Step 5**

4	Check for a short to ground in the Steering Column Tilt and Telescope Reverse Switch Signal circuit. Refer to **Circuit Testing** and **Wiring Repairs** in Wiring Systems. Did you find and correct the condition?	Go to **Step 7**	Go to **Step 6**
5	Replace the telescoping column switch assembly. Refer to **Telescope Actuator Switch Replacement** . Did you complete the replacement?	Go to **Step 7**	-
6	**IMPORTANT:** **Perform the set up procedure for the Seat Control Module.** Replace the Seat Control Module. Refer to **Memory Seat Control Module Replacement** .Did you complete the replacement?	Go to **Step 7**	-
7	1. Use a scan tool in order to clear the DTCs. 2. Operate the vehicle within the Conditions for Running the DTC as Specified in the supporting text. Does the DTC reset?	Go to **Step 2**	System OK

DTC B2857

Circuit Description

The telescoping steering column switch circuit provides an input to the LH Seat Control Module (SCM) when the switch is held closed in the in, button pressed toward the driver, or out, button pressed toward I/P, position. The SCM monitors a 12 volt signal applied to the steering column telescope forward switch signal circuit. When the steering column switch is closed in the In position, the column in 12 volt signal is grounded and pulled low within the SCM, indicating a column In request.

Conditions for Setting the DTC

The steering column switch input, to the SCM, is active for more than 20 seconds.

Action Taken When the DTC Sets

- Stores a history DTC B2857 in the SCM memory.
- This DTC can only be set as a history code even if the malfunction is current.
- No driver warning message will be displayed for this DTC.
- The operation/function of the steering column switch is disabled.

Conditions for Clearing the DTC

- The steering column switch input, to the SCM, is inactive for more than 20 seconds.
- Using a scan tool.

Diagnostic Aids

- The following conditions may cause an intermittent malfunction.
  - There is an intermittent short to ground in the steering column telescope forward switch signal circuit.
  - The steering column switch is shorted to ground internally or is sticking.
  - The steering column switch was closed for longer than 20 seconds.
- If steering column telescope forward switch signal circuit is shorted to ground or the steering column switch is stuck closed, the steering column will remain in the full In position at all times.
- Using a scan tool, select scan tool inputs and monitor steering column switch status. If the scan tool displays In, disconnect the steering column switch. If the display changes to Idle, replace the switch. If the display remains In check steering column telescope forward switch signal circuit for a short to ground.
- If the DTC does not reset after the code is cleared, then the problem may be intermittent. Perform the tests shown while moving related wiring and connectors. This can often cause the malfunction to occur. Refer to **Testing for Intermittent Conditions and Poor Connections** in Wiring Systems.
- Activate the steering column switch numerous times while monitoring the status on the scan tool to see if it sticks intermittently.
- Can be caused by holding switch down for more than 20 seconds.

Test Description

The numbers below refer to the step numbers on the diagnostic table:

2: This test determines the status of the column switch using a scan tool. The scan tool will display the column switch status as In, button pressed toward driver, and Idle, button released.

3: This test checks if the column switch is shorted to ground or stuck. If the column switch status changes from In to Idle when the column switch is disconnected, then the switch assembly must be replaced.

DTC B2857

Step	Action	Yes	No
Schematic Reference: Tilt/Telescoping Steering Column Schematics **Connector End View Reference: Steering Wheel and Column Connector End Views**			
1	Did you perform the Steering Column Diagnostic System Check?	Go to **Step 2**	Go to **Diagnostic System Check - Steering Wheel and Column**
2	Using a scan tool, select SCM input display and monitor the column switch status. Does the scan tool display column switch status as In?	Go to **Step 3**	Go to Diagnostic Aids
3	1. Disconnect the column switch connector. 2. Using a scan tool, select SCM input display and monitor the column switch status.	Go to	

	Does the scan tool display column switch status as In?	**Step 4**	Go to **Step 5**
4	Check for a short to ground in steering column telescope forward switch signal circuit. Refer to **Circuit Testing** and **Wiring Repairs** in Wiring Systems. Did you find and correct the condition?	Go to **Step 7**	Go to **Step 6**
5	Replace the telescoping column switch assembly. Refer to **Telescope Actuator Switch Replacement** . Did you complete the replacement?	Go to **Step 7**	-
6	**IMPORTANT:** **Perform the set up procedure for the Seat Control Module** Replace the seat control module. Refer to **Memory Seat Control Module Replacement** .Did you complete the replacement?	Go to **Step 7**	-
7	1. Use scan tool in order to clear the DTCs. 2. Operate the vehicle within the Conditions for Running the DTC as specified in the supporting text. Does the DTC reset?	Go to **Step 2**	System OK

DTC B2860

Circuit Description

The memory seat and telescoping steering column position settings are stored in the LH Seat Control Module (SCM). The SCM measures and stores the steering column position by using a position sensor, which is an internal part of the telescoping actuator. The SCM provides the position sensor with a 5 volt power supply, and ground. The SCM monitors the position sensor signal voltage, which ranges from 0.1-4.78 volts depending on the steering column position. The steering column position sensor becomes active only when the SCM detects a steering column switch input.

Conditions for Setting the DTC

The steering column position sensor signal, to the SCM, is less than 0.1 volt or greater than 4.78 volts for 2 seconds or more.

Action Taken When the DTC Sets

- A history DTC B2860 is stored in the SCM memory.
- This DTC can only be set as a history code even if the malfunction is current.
- No driver warning message will be displayed for this DTC.
- The memory operation/function of the faulted position sensor is disabled.

Conditions for Clearing the DTC

- The steering column position sensor input, to the SCM, is within 0.1 volt to 4.78 volts for 2 seconds or more.
- Using a scan tool.

Diagnostic Aids

- If the DTC does not reset after the code is cleared the problem may be intermittent. Perform the tests shown while moving related wiring and connectors. This can often cause the malfunction to occur. Refer to **Testing for Intermittent Conditions and Poor Connections** in Wiring Systems.
- The following conditions may also cause an intermittent malfunction:
  - There is an intermittent open, short to ground, or short to voltage in steering column telescope motor signal circuit.
  - The steering column position sensor is open or shorted internally.
- If the SCM is unable to determine the correct steering column position, limited manual operation of the telescoping steering column will be functional, but the SCM will be unable to recall the correct memory settings.
- Using a scan tool, select SCM data display and monitor the Column Position Feedback data. Operate the steering column in both directions while monitoring the position sensor data. The voltage should range from 0.1 volt to 4.78 volts depending on the steering column position.

Test Description

The number(s) below refer to the step number(s) on the diagnostic table.

3: Tests for the proper operation of the circuit in the high voltage range.

4: Tests for the proper operation of the circuit in the low voltage range. If the fuse in the jumper opens when you perform this test, the signal circuit is shorted to voltage.

5: Tests for a short to ground in the 5 volt reference circuit.

DTC B2860

Step	Action	Value (s)	Yes	No
Schematic Reference: Tilt/Telescoping Steering Column Schematics **Connector End View Reference: Steering Wheel and Column Connector End Views**				
1	Did you perform the Steering Wheel and Column Diagnostic System Check?	-	Go to **Step 2**	Go to **Diagnostic System Check - Steering Wheel and Column**
2	1. Install a scan tool. 2. Turn ON the ignition, with the engine OFF. 3. With a scan tool, observe the Column Position Feedback data parameter in the Seat Control Module Column Info list.	0.1-4.78 V		

	Does the scan tool indicate that the Column Position Feedback data parameter is within the specified range?		Go to Diagnostic Aids	Go to **Step 3**
3	1. Turn OFF the ignition. 2. Disconnect the telescoping sensor. 3. Turn ON the ignition, with the engine OFF. 4. With a scan tool, observe the Column Position Feedback data parameter. Does the scan tool indicate that the Column Position Feedback data parameter is greater than the specified value?	4.78 V	Go to **Step 4**	Go to **Step 8**
4	1. Turn OFF the ignition 2. Connect a 3 amp fused jumper wire between the signal circuit of the telescoping sensor and the low reference circuit of the telescoping sensor. 3. Turn ON the ignition, with the engine OFF. 4. With a scan tool, observe the Column Position Feedback data parameter. Does the scan tool indicate that the Column Position Feedback data parameter is less than the specified value?	0.1 V	Go to **Step 5**	Go to **Step 9**
5	1. Turn OFF the ignition 2. Disconnect the fused jumper wire. 3. Connect a 3 amp fused jumper wire between the 5 volt reference circuit of the Telescoping Sensor and the signal circuit of the Telescoping Sensor. 4. Turn ON the ignition, with the engine OFF. 5. With a scan tool, observe the Column Position Feedback data parameter. Does the scan tool indicate that the Column Position Feedback data parameter is greater than the specified value?	4.78 V	Go to **Step 7**	Go to **Step 6**
6	Test the 5 volt reference circuit of the Telescoping Sensor for a short to ground. Refer to **Circuit Testing** and **Wiring Repairs** in Wiring Systems. Did you find and correct the condition?	-	Go to **Step 15**	Go to **Step 12**
7	Test the 5 volt reference circuit of the Telescoping Sensor for a short to voltage, a high resistance, or an open. Refer to **Circuit Testing** and **Wiring Repairs** in	-		

	Wiring Systems. Did you find and correct the condition?		Go to **Step 15**	Go to **Step 11**
8	Test the signal circuit of the Telescoping Sensor for a short to ground. Refer to **Circuit Testing** and **Wiring Repairs** in Wiring Systems. Did you find and correct the condition?	-	Go to **Step 15**	Go to **Step 12**
9	Test the signal circuit of the Telescoping Sensor for a short to voltage, a high resistance, or an open. Refer to **Circuit Testing** and **Wiring Repairs** in Wiring Systems. Did you find and correct the condition?	-	Go to **Step 15**	Go to **Step 10**
10	Test the low reference circuit of the Telescoping Sensor for a high resistance or an open. Refer to **Circuit Testing** and **Wiring Repairs** in Wiring Systems. Did you find and correct the condition?	-	Go to **Step 15**	Go to **Step 12**
11	Inspect for poor connections at the harness connector of the Telescoping Sensor. Refer to **Testing for Intermittent Conditions and Poor Connections** and **Connector Repairs** in Wiring Systems. Did you find and correct the condition?	-	Go to **Step 15**	Go to **Step 13**
12	Inspect for poor connections at the harness connector of the Seat Control Module. Refer to **Testing for Intermittent Conditions and Poor Connections** and **Connector Repairs** in Wiring Systems. Did you find and correct the condition?	-	Go to **Step 15**	Go to **Step 14**
13	Replace the telescoping sensor. Refer to **Telescope Actuator Assembly Replacement** . Did you complete the replacement?	-	Go to **Step 15**	-
14	**IMPORTANT:** **Perform the set up procedure for the Seat Control Module.** Replace the Seat Control Module. Refer to **Memory Seat Control Module Replacement** .Did you complete the replacement?	-	Go to **Step 15**	-
15	1. Use the scan tool in order to clear the DTCs. 2. Operate the vehicle within the Conditions for Running the DTC as specified in the supporting text. Does the DTC reset?	-	Go to **Step 2**	System OK

SYMPTOMS - STEERING WHEEL AND COLUMN

IMPORTANT: The following steps must be completed before using the symptom tables:

- Refer to **Diagnostic Starting Point - Steering Column**
  - There are no DTCs set.
  - The control module(s) can communicate via the serial data link.
- Review the system operation in order to familiarize yourself with the system functions. Refer to **Steering Wheel and Column Description and Operation** .

Visual/Physical Inspection

- Inspect for aftermarket devices which could affect the operation of the tilt/telescoping steering column. Refer to **Checking Aftermarket Accessories** in Wiring Systems.
- Inspect the easily accessible or visible system components for obvious damage or conditions which could cause the symptom.

Intermittent

Faulty electrical connections or wiring may be the cause of intermittent conditions. Refer to **Testing for Intermittent Conditions and Poor Connections** in Wiring Systems.

Symptom List

Refer to a symptom diagnostic procedure from the following list in order to diagnose the symptom:

- **Noise in Steering Column**
- **Looseness in Steering Column**
- **Steering Column Tilt Function Inoperative**
- **Steering Column Does Not Telescope In/Out**
- **Electronic Column Lock Does Not Unlock**
- **Electronic Column Lock Does Not Lock**
- **Service Column Lock Indicator Always On**
- **Service Column Lock Indicator Inoperative**

STEERING COLUMN DOES NOT TELESCOPE IN/OUT

Steering Column Does Not Telescope In/Out

Step	Action	Yes	No
Schematic Reference: Tilt/Telescoping Steering Column Schematics **Connector End View Reference: Steering Wheel and Column Connector End Views** DEFINITION: This table is for a telescoping steering column system in which the telescope functions are inoperative.			
1	Did you perform the Steering Wheel and Column Diagnostic System Check?		Go to **Diagnostic System Check -**

		Go to **Step 2**	**Steering Wheel and Column**
2	Verify that the telescoping function is inoperative. Does the telescoping function operate normally?	Go to **Testing for Intermittent Conditions and Poor Connections** in Wiring Systems	Go to **Step 3**
3	1. Install a scan tool. 2. Observe the column fore/aft switch parameter in the seat control module data display list while activating the column fore/aft switch to the In and Out positions. Did the parameter change states as expected?	Go to **Step 4**	Go to **Step 5**
4	With the scan tool, observe the column feedback parameter in the seat control module data display list while activating the column fore/aft switch to the In and Out positions. Did the parameter change states?	Go to **Step 7**	Go to **Step 6**
5	Test both of the column fore/aft switch In and Out signal and ground circuits for an open or short to voltage. Refer to **Circuit Testing** and **Wiring Repairs** in Wiring Systems. Did you find and correct the condition?	Go to **Step 14**	Go to **Step 8**
6	Test the steering column telescope actuator control circuits for an open. Refer to **Circuit Testing** and **Wiring Repairs** in Wiring Systems. Did you find and correct the condition?	Go to **Step 14**	Go to **Step 9**
7	Test the 5 volt reference and memory seat/mirror sensor low reference circuits for an open and the steering column telescope motor signal circuit for a short to voltage. Refer to **Circuit Testing** and **Wiring Repairs** in Wiring Systems. Did you find and correct the condition?	Go to **Step 14**	Go to **Step 10**
8	Inspect for poor connections at the harness connector of the column fore/aft switch. Refer to **Testing for Intermittent Conditions and Poor Connections** and **Connector Repairs** in Wiring Systems. Did you find and correct the condition?	Go to **Step 14**	Go to **Step 11**
9	Inspect for poor connections at the harness connector of the telescope actuator. Refer to **Testing for Intermittent Conditions and Poor Connections** and **Connector Repairs** in Wiring Systems. Did you find and correct the condition?	Go to **Step 14**	Go to **Step 12**

10	Inspect for poor connections at the harness connector of the seat control module. Refer to **Testing for Intermittent Conditions and Poor Connections** and **Connector Repairs** in Wiring Systems. Did you find and correct the condition?	Go to **Step 14**	Go to **Step 13**
11	Replace the column fore/aft switch. Refer to **Telescope Actuator Switch Replacement** . Did you complete the replacement?	Go to **Step 14**	-
12	Replace the telescope actuator. Refer to **Telescope Actuator Assembly Replacement** . Did you complete the replacement?	Go to **Step 14**	-
13	**IMPORTANT:** **Perform the set up procedure for the seat control module.** Replace the seat control module. Refer to **Memory Seat Control Module Replacement** in Seats.Did you complete the replacement?	Go to **Step 14**	-
14	Perform the steering column control module programming. Refer to **Telescoping Steering Column Calibration** . Did you complete the action?	Go to **Step 15**	-
15	Operate the system in order to verify the repair. Did you correct the condition?	System OK	Go to **Step 2**

STEERING COLUMN TILT FUNCTION INOPERATIVE

Steering Column Tilt Function Inoperative

Step	Action	Yes	No
1	Did you review the Steering Wheel and Column Description and Operation and perform the necessary inspections?	Go to **Step 2**	Go to **Steering Wheel and Column Description and Operation**
2	Verify that the steering column tilt function is inoperative. Does the steering column tilt function operate normally?	System OK	Go to **Step 3**
3	Verify that the shoe is not seized on the pivot pin. Is the shoe seized on the pivot pin?	Go to **Step 9**	Go to **Step 4**
4	Inspect the shoe grooves for dirt, burrs, or rust. Are the shoe grooves free of dirt, burrs, and rust?	Go to **Step 9**	Go to **Step 5**
5	Inspect weak or broken shoe lock spring. Is the shoe lock spring weak or broken?	Go to **Step 9**	Go to **Step 6**
6	Inspect the pivot pins for binding. Are the pivot pins binding?	Go to **Step 10**	Go to **Step 7**
7	Inspect for a weak or broken wheel tilt spring. Is the wheel tilt spring weak or broken?	Go to **Step 11**	Go to **Step 8**

8	Inspect the steering column wiring harness for tightness. Is the steering column wiring harness too tight?	Go to **Step 12**	Go to **Step 3**
9	Replace the tilt head. Refer to **Steering Shaft, Lower Bearing, and Jacket Replacement (Telescoping)** or **Steering Shaft, Lower Bearing, and Jacket Replacement (Manual)** . Is the repair complete?	Go to **Step 13**	-
10	Replace the pivot pins. Refer to **Steering Shaft, Lower Bearing, and Jacket Replacement (Telescoping)** or **Steering Shaft, Lower Bearing, and Jacket Replacement (Manual)** . Is the repair complete?	Go to **Step 13**	-
11	Replace the tilt spring. Refer to **Tilt Spring Replacement (Telescoping)** or **Tilt Spring Replacement (Manual)** . Is the repair complete?	Go to **Step 13**	-
12	Reroute the steering column wiring harness to the correct location. Is the steering column wiring harness routed properly?	Go to **Step 13**	-
13	Operate the steering column tilt function in order to verify the repair. Did you correct the condition?	System OK	Go to **Step 3**

ELECTRONIC COLUMN LOCK DOES NOT UNLOCK

Diagnostic Aids

- An internally open or shorted steering column lock relay may cause the column to not unlock.
- An open on the key in ignition switch signal circuit will intermittently cause the column to not unlock.
- Disconnecting or opening the steering column lock feedback circuit will cause the body control module (BCM) to enter Fail Enable Standby mode. The steering column will remain inoperative until the Fail Enable Standby mode is cleared. To clear this mode, disconnect the BCM1 & instrument panel cluster (IPC) fuse in the instrument panel (I/P) fuse block for 15 seconds.

Methods to free a stuck electric column lock:

- Run the engine at a high idle if the battery is low. Use the scan tool output controls to try to unlock the column.
- Torque the steering wheel back and forth against the column lock bolt.
- Turn the air conditioner vents toward the steering column to cool the lock motor.
- Connect a battery charger directly to the lock motor leads and use the highest voltage setting.
- Connect a battery in series with a battery charger directly to the lock motor leads. Start at the lowest voltage setting. Do not exceed 28 volts for 1 second maximum.

Test Description

5: In 2001-2004 cars the Column Lock State will be System Disabled if the BCM is calibrated for a domestic automatic transmission, and the steering column lock system will not operate.

8: The column lock motor should operate for less than one second when the ignition is turned ON, and after a one second delay when the key is removed from the ignition.

18: The external steering column lock relay is located above the BCM, in the passenger footwell area, behind the front kick-up panel. The external steering column lock relay can be identified by 2 orange wires connected to it. There may be either 2 or 3 relays in this area, and they may not always be in the same position.

19: Turn the ignition ON and then OFF and move the ignition key out only enough to enter pre-lock mode. Move the ignition key until the scan tool displays both the Key in Ignition and Key Out of Ignition switches are Inactive, and the Column Lock State is Detect Key Out. This will energize both of the BCMs internal relays, and should apply 12 volts to the lock and unlock circuits.

43: Test the key out ignition switch signal circuit between the two BCM connectors when testing this circuit for an open.

Electronic Column Lock Does Not Unlock

Step	Action	Yes	No
Schematic Reference:Column/Ignition Lock Schematics **Connector End View Reference:Steering Wheel and Column Connector End Views**			
1	Did you perform the Steering Wheel and Column Diagnostic System Check?	Go to **Step 2**	Go to **Diagnostic System Check - Steering Wheel and Column**
2	Turn the ignition ON. Does the steering column unlock?	Go to Diagnostic Aids	Go to **Step 3**
3	Observe the Column Lock State in the body control module (BCM) Input Data 2 List with a scan tool. Does the scan tool display Enable Standby?	Go to **Step 50**	Go to **Step 4**
4	Does the scan tool display powertrain control module (PCM) F.E. Stdby?	Go to **Scan Tool Does Not Communicate with Class 2 Device** in Data Link Communications	Go to **Step 5**
5	Does the scan tool display System Disabled?	Go to **Step 49**	Go to **Step 6**
6	1. Observe Key in Ignition with the scan tool. 2. Insert the key into the ignition. 3. Remove the key from the ignition. Does the scan tool display Key in Ignition Active when the key is in the ignition, and Inactive when the key is removed from the ignition?	Go to **Step 7**	Go to **Step 39**
	1. Observe Key Out of Ign with the scan tool. 2. Insert the key into the ignition.		

7	3. Remove the key from the ignition. Does the scan tool display Key Out of Ign Inactive when the key is in the ignition, and Active when the key is removed from the ignition?	Go to **Step 8**	Go to **Step 41**
8	1. Cycle the ignition ON and OFF, and remove the key from the ignition. 2. Listen to the column lock motor. Does the column lock motor operate when the ignition is turned ON and one second after the key is removed?	Go to **Step 9**	Go to **Step 13**
9	1. Cycle the ignition ON and OFF, and remove the key from the ignition. 2. Observe the Column Feedback with the scan tool. Does the scan tool always display Active?	Go to **Step 10**	Go to **Step 11**
10	1. Remove the knee bolster. Refer to **Trim Panel Replacement - Knee Bolster** in Instrument Panel, Gages, and Console. 2. Disconnect the steering column lock connector. 3. Observe the Column Feedback with the scan tool. Does the scan tool display Inactive?	Go to **Step 58**	Go to **Step 38**
11	1. Remove the knee bolster. Refer to **Trim Panel Replacement - Knee Bolster** in Instrument Panel, Gages, and Console. 2. Disconnect the steering column lock connector. 3. Test the steering column lock feedback switch ground circuit for an open. Did you find and correct the condition?	Go to **Step 60**	Go to **Step 12**
12	1. Jumper the steering column lock signal circuit to a good ground. 2. Observe the Column Feedback with the scan tool.		

	Does the scan tool display Active?	Go to **Step 58**	Go to **Step 34**
13	1. Remove the knee bolster. Refer to **Trim Panel Replacement - Knee Bolster** in Instrument Panel, Gages, and Console. 2. Disconnect the steering column lock connector. 3. Measure the resistance between the steering column lock motor and a good ground. Is the resistance greater than 10K ohms?	Go to **Step 14**	Go to **Step 58**
14	1. Connect a test lamp between the steering column lock and unlock circuits. 2. Cycle the ignition ON and OFF, and remove the key from the ignition. Does the test lamp illuminate momentarily when the ignition is turned ON and again one second after the key is removed?	Go to **Step 47**	Go to **Step 15**
15	1. Probe the steering column unlock circuit with a test lamp connected to a good ground. 2. Cycle the ignition ON and OFF, and remove the key from the ignition. Does the test lamp illuminate momentarily when the ignition is turned ON?	Go to **Step 16**	Go to **Step 25**
16	1. Remove the key from the ignition. 2. Probe the steering column unlock circuit with a test lamp connected to B+. Does the test lamp illuminate?	Go to **Step 17**	Go to **Step 43**
17	Probe the steering column lock circuit with a test lamp connected to B+. Does the test lamp illuminate?	Go to **Step 18**	Go to **Step 30**
18	1. Remove the front kick-up panel on the passenger side. 2. Probe the BCM2 voltage supply circuit at the back of the external steering column lock relay with a test lamp connected to a good ground. Does the test lamp illuminate?	Go to **Step 19**	Go to **Step 55**

19	1. Turn the ignition ON and then OFF. 2. Pull the ignition key out only far enough to enter Detect Key Out pre-lock mode. 3. Probe the steering column lock circuit to the BCM at the back of the relay with a test lamp connected to a good ground. Does the test lamp illuminate?	Go to **Step 20**	Go to **Step 32**
20	Probe the steering column unlock circuit at the back of the relay with a test lamp connected to a good ground. Does the test lamp illuminate?	Go to **Step 21**	Go to **Step 33**
21	Probe the external steering column lock relay control at the back of the relay with a test lamp connected to a good ground. Does the relay click?	Go to **Step 22**	Go to **Step 24**
22	1. Probe the external steering column lock relay control circuit at the back of the relay with a test lamp connected to B+. 2. Cycle the ignition ON and OFF and remove the ignition key. Does the test lamp illuminate momentarily?	Go to **Step 23**	Go to **Step 35**
23	1. Remove the ignition key. 2. Probe the steering column lock circuit to the BCM at the back of the relay with a test lamp connected to B+. Does the test lamp illuminate?	Go to **Step 45**	Go to **Step 36**
24	Probe the external steering column lock relay control at the back of the relay with a test lamp connected to B+. Does the test lamp illuminate?	Go to **Step 37**	Go to **Step 45**
25	Test the steering column unlock circuit for an open between the BCM and the lock motor. Refer to **Circuit Testing** and **Wiring Repairs** in Wiring Systems. Did your find and correct the condition?	Go to **Step 60**	Go to **Step 26**
26	Inspect the BCM2 fuse. Was the fuse open?	Go to **Step 27**	Go to **Step 36**
	1. Remove the key from the ignition. 2. Disconnect the BCM C3 connector. 3. Measure resistance between the column		

27	unlock circuit at the BCM and a good ground. Is the resistance greater than 10K ohms?	Go to **Step 28**	Go to **Step 51**
28	Measure resistance between the column lock circuit at the BCM and a good ground. Is the resistance greater than 10K ohms?	Go to **Step 29**	Go to **Step 52**
29	Measure resistance between the BCM2 voltage supply circuit at the BCM and a good ground. Is the resistance greater than 10K ohms?	Go to **Step 59**	Go to **Step 53**
30	Test the steering column lock circuit for an open between the external relay and the lock motor. Refer to **Circuit Testing** and **Wiring Repairs** in Wiring Systems. Did your find and correct the condition?	Go to **Step 60**	Go to **Step 31**
31	Test the steering column unlock circuit for an open between the BCM and the external relay. Refer to **Circuit Testing** and **Wiring Repairs** in Wiring Systems. Did your find and correct the condition?	Go to **Step 60**	Go to **Step 45**
32	Test the steering column lock circuit for an open between the BCM and the external relay. Refer to **Circuit Testing** and **Wiring Repairs** in Wiring Repairs. Did your find and correct the condition?	Go to **Step 60**	Go to **Step 48**
33	Test the steering column unlock circuit for an open between the BCM and the external relay. Refer to **Circuit Testing** and **Wiring Repairs** in Wiring Systems. Did your find and correct the condition?	Go to **Step 60**	Go to **Step 48**
34	Test the steering column lock signal circuit for an open. Refer to **Circuit Testing** and **Wiring Repairs** in Wiring Systems. Did your find and correct the condition?	Go to **Step 60**	Go to **Step 48**
35	Test the steering column lock relay control circuit for an open. Refer to **Circuit Testing** and **Wiring Repairs** in Wiring Systems. Did your find and correct the condition?	Go to **Step 60**	Go to **Step 36**
36	Test the BCM2 voltage supply circuit and the BCM power ground circuit for an open. Refer to **Circuit Testing** and **Wiring Repairs** in Wiring Systems. Did you find and correct the condition?	Go to **Step 60**	Go to **Step 48**
37	Test the steering column lock relay control circuit for a short. Refer to **Circuit Testing** and **Wiring Repairs** in Wiring Systems.		

	Did your find and correct the condition?	Go to **Step 60**	Go to **Step 59**
38	Test the steering column lock signal circuit for a short to ground. Refer to **Circuit Testing** and **Wiring Repairs** in Wiring Systems. Did your find and correct the condition?	Go to **Step 60**	Go to **Step 59**
39	1. Disconnect the ignition switch connector. 2. Momentarily jumper the key in ignition switch signal circuit to a good ground. 3. Observe Key in Ignition with the scan tool. Does the scan tool indicate Key in Ignition Active when jumpered and Inactive when not jumpered?	Go to **Step 42**	Go to **Step 40**
40	Test the key in ignition switch signal circuits for the following: • An open • A short to ground • A short to voltage Refer to **Circuit Testing** and **Wiring Repairs** in Wiring Systems. Did your find and correct the condition?	Go to **Step 60**	Go to **Step 48**
41	1. Disconnect the ignition switch connector. 2. Momentarily jumper the key out ignition switch signal circuit to a good ground. 3. Observe Key Out of Ign with the scan tool. Does the scan tool indicate Key Out of Ign Active when jumpered and Inactive when not jumpered?	Go to **Step 42**	Go to **Step 43**
42	Test the ignition switch ground circuit for an open. Refer to **Circuit Testing** and **Wiring Repairs** in Wiring Systems. Did your find and correct the condition?	Go to **Step 60**	Go to **Step 46**
43	Test the key out ignition switch signal circuits for the following: • An open • A short to ground • A short to voltage Refer to **Circuit Testing** and **Wiring Repairs** in		

	Wiring Systems. Did your find and correct the condition?	Go to **Step 60**	Go to **Step 44**
44	Test the following for a short to ground: • The steering column lock circuit • The steering column unlock circuit • The steering column lock motor Refer to **Circuit Testing** and **Wiring Repairs** in Wiring Systems. Did your find and correct the condition?	Go to **Step 60**	Go to **Step 48**
45	Inspect the steering column lock relay connector for poor connections. Refer to **Testing for Intermittent Conditions and Poor Connections** and **Connector Repairs** in Wiring Systems. Did you find and correct the condition?	Go to **Step 60**	Go to **Step 56**
46	Inspect the ignition switch connector for poor connections. Refer to **Testing for Intermittent Conditions and Poor Connections** and **Connector Repairs** in Wiring Systems. Did you find and correct the condition?	Go to **Step 60**	Go to **Step 57**
47	Inspect the steering column lock connector for poor connections. Refer to **Testing for Intermittent Conditions and Poor Connections** and **Connector Repairs** in Wiring Systems. Did you find and correct the condition?	Go to **Step 60**	Go to **Step 58**
48	Inspect the BCM connector for poor connections. Refer to **Testing for Intermittent Conditions and Poor Connections** and **Connector Repairs** in Wiring Systems. Did you find and correct the condition?	Go to **Step 60**	Go to **Step 59**
49	Inspect the BCM for correct Transmission and Export calibrations with the scan tool.	Go to **Step 60**	-
50	1. Disconnect the BCM1 & instrument panel cluster (IPC) fuse in the instrument panel (I/P) fuse block for 15 seconds. 2. Reconnect the BCM1 & IPC fuse. Did you complete the action?	Go to **Step 60**	-
51	Repair the short in the steering column unlock circuit or in steering column lock circuit between external steering column lock relay and steering column lock motor connector. Refer to **Wiring Repairs** in Wiring Systems.		

	Did you complete the repair?	Go to **Step 54**	-
52	Repair the short in the steering column lock circuit. Refer to **Wiring Repairs** in Wiring Systems. Did you complete the repair?	Go to **Step 54**	-
53	Repair the short in the BCM2 voltage supply circuit. Refer to **Wiring Repairs** in Wiring Systems. Did you complete the repair?	Go to **Step 54**	-
54	1. Reconnect the BCM C3 connector. 2. Replace the BCM2 fuse. Did BCM2 fuse open again?	Go to **Step 59**	Go to **Step 60**
55	Repair the open in the steering column lock relay voltage supply circuit. Refer to **Wiring Repairs** in Wiring Systems. Did you complete the repair?	Go to **Step 60**	-
56	Replace the steering column lock relay. Did you complete the replacement?	Go to **Step 60**	-
57	Replace the ignition switch. Refer to **Ignition Switch Replacement** in Instrument Panel, Gages, and Console. Did you complete the replacement?	Go to **Step 60**	-
58	1. Inspect the BCM2 fuse and replace if open. 2. Replace the steering column lock. Refer to **Steering Wheel Theft Deterrent Lock Replacement (Telescoping)** or **Steering Wheel Theft Deterrent Lock Replacement (Manual)** . Did you complete the replacement?	Go to **Step 60**	-
59	Replace the BCM. Refer to **Body Control Module Replacement** in Body Control System. Did you complete the replacement?	Go to **Step 60**	-
60	1. Replace the BCM2 fuse if removed or open. 2. Reconnect the Steering Column Lock connector if disconnected. 3. Operate the system in order to verify the repair. Did you correct the condition?	System OK	Go to **Step 2**

ELECTRONIC COLUMN LOCK DOES NOT LOCK

Diagnostic Aids

- An internally open or shorted steering column lock relay may cause the column to not lock.
- An open on the key in ignition switch signal circuit will intermittently cause the column to not lock.
- Disconnecting or opening the steering column lock feedback circuit will cause the body control module (BCM) to enter a Fail Enable Standby mode. The steering column will remain inoperative until the Fail Enable Standby mode is cleared. To clear this mode, disconnect the BCM1 & instrument panel cluster (IPC) fuse in the instrument panel (I/P) fuse block for 15 seconds.
- Insure that a steering wheel theft deterrent lock shorting harness kit, or an aftermarket column lock bypass kit has not been installed.

Test Description

5: In 2001-2004 cars the Column Lock State will be System Disabled if the BCM is calibrated for a domestic automatic transmission, and the steering column lock system will not operate.

8: The column lock motor should operate for less than one second when the ignition is turned ON, and after a one second delay when the key is removed from the ignition.

18: The external steering column lock relay is located above the BCM, in the passenger footwell area, behind the front kick-up panel. The external steering column lock relay can be identified by 2 orange wires connected to it. There may be either 2 or 3 relays in this area, and they may not always be in the same position.

19: Turn the ignition ON and then OFF and move the ignition key out only enough to enter pre-lock mode. Move the ignition key until the scan tool displays both the Key in Ignition and Key Out of Ignition switches are Inactive, and the Column Lock State is Detect Key Out. This will energize both of the BCMs internal relays, and should apply 12 volts to the lock and unlock circuits.

43: Test the key out ignition switch signal circuit between the two BCM connectors when testing this circuit for an open.

Electronic Column Lock Does Not Lock

Step	Action	Yes	No
Schematic Reference:Column/Ignition Lock Schematics **Connector End View Reference:Steering Wheel and Column Connector End Views**			
1	Did you perform the Steering Wheel and Column Diagnostic System Check?	Go to **Step 2**	Go to **Diagnostic System Check - Steering Wheel and Column**
2	Turn the ignition ON, then OFF and remove the key. Does the steering column lock?	Go to Diagnostic Aids	Go to **Step 3**
3	Observe the Column Lock State in the body control module (BCM) Input Data 2 List with a scan tool. Does the scan tool display Enable Standby?	Go to **Step 50**	Go to **Step 4**
	Does the scan tool display powertrain control	Go to **Scan Tool Does Not**	

4	module (PCM) F.E. Stdby?	**Communicate with Class 2 Device** in Data Link Communications	Go to **Step 5**
5	Does the scan tool display System Disabled?	Go to **Step 49**	Go to **Step 6**
6	1. Observe Key in Ignition with the scan tool. 2. Insert the key into the ignition. 3. Remove the key from the ignition. Does the scan tool display Key in Ignition Active when the key is in the ignition, and Inactive when the key is removed from the ignition?	Go to **Step 7**	Go to **Step 39**
7	1. Observe Key Out of Ign with the scan tool. 2. Insert the key into the ignition. 3. Remove the key from the ignition. Does the scan tool display Key Out of Ign Inactive when the key is in the ignition, and Active when the key is removed from the ignition?	Go to **Step 8**	Go to **Step 41**
8	1. Cycle the ignition ON and OFF, and remove the key from the ignition. 2. Listen to the column lock motor. Does the column lock motor operate when the ignition is turned ON and one second after the key is removed?	Go to **Step 9**	Go to **Step 13**
9	1. Cycle the ignition ON and OFF, and remove the key from the ignition. 2. Observe the Column Feedback with the scan tool. Does the scan tool always display Active?	Go to **Step 10**	Go to **Step 11**
10	1. Remove the knee bolster. Refer to **Trim Panel Replacement - Knee Bolster** in Instrument Panel, Gages, and Console. 2. Disconnect the steering column lock connector. 3. Observe the Column Feedback with the scan tool. Does the scan tool display Inactive?	Go to **Step 58**	Go to **Step 38**
	1. Remove the knee bolster. Refer to **Trim**		

11	**Panel Replacement - Knee Bolster** in Instrument Panel, Gages, and Console. 2. Disconnect the steering column lock connector. 3. Test the steering column lock feedback switch ground circuit for an open. Did you find and correct the condition?	Go to **Step 60**	Go to **Step 12**
12	1. Jumper the steering column lock signal circuit to a good ground. 2. Observe the Column Feedback with the scan tool. Does the scan tool display Active?	Go to **Step 58**	Go to **Step 34**
13	1. Remove the knee bolster. Refer to **Trim Panel Replacement - Knee Bolster** in Instrument Panel, Gages, and Console. 2. Disconnect the steering column lock connector. 3. Measure the resistance between the steering column lock motor and a good ground. Is the resistance greater than 10K ohms?	Go to **Step 14**	Go to **Step 58**
14	1. Connect a test lamp between the steering column lock and unlock circuits. 2. Cycle the ignition ON and OFF, and remove the key from the ignition. Does the test lamp illuminate momentarily when the ignition is turned ON and again one second after the key is removed?	Go to **Step 47**	Go to **Step 15**
15	1. Probe the steering column unlock circuit with a test lamp connected to a good ground. 2. Cycle the ignition ON and OFF, and remove the key from the ignition. Does the test lamp illuminate momentarily when the ignition is turned ON?	Go to **Step 16**	Go to **Step 25**
16	1. Remove the key from the ignition. 2. Probe the steering column unlock circuit with a test lamp connected to B+.		

	Does the test lamp illuminate?	Go to **Step 17**	Go to **Step 43**
17	Probe the steering column lock circuit with a test lamp connected to B+. Does the test lamp illuminate?	Go to **Step 18**	Go to **Step 30**
18	1. Remove the front kick-up panel on the passenger side. 2. Probe the BCM2 voltage supply circuit at the back of the external steering column lock relay with a test lamp connected to a good ground. Does the test lamp illuminate?	Go to **Step 19**	Go to **Step 55**
19	1. Turn the ignition ON and then OFF. 2. Pull the ignition key out only far enough to enter Detect Key Out pre-lock mode. 3. Probe the steering column lock circuit to the BCM at the back of the relay with a test lamp connected to a good ground. Does the test lamp illuminate?	Go to **Step 20**	Go to **Step 32**
20	Probe the steering column unlock circuit at the back of the relay with a test lamp connected to a good ground. Does the test lamp illuminate?	Go to **Step 21**	Go to **Step 33**
21	Probe the external steering column lock relay control at the back of the relay with a test lamp connected to a good ground. Does the relay click?	Go to **Step 22**	Go to **Step 24**
22	1. Probe the external steering column lock relay control circuit at the back of the relay with a test lamp connected to B+. 2. Cycle the ignition ON and OFF and remove the ignition key. Does the test lamp illuminate momentarily?	Go to **Step 23**	Go to **Step 35**
23	1. Remove the ignition key. 2. Probe the steering column lock circuit to the BCM at the back of the relay with a test lamp connected to B+. Does the test lamp illuminate?	Go to **Step 45**	Go to **Step 36**
24	Probe the external steering column lock relay control at the back of the relay with a test lamp		

	connected to B+. Does the test lamp illuminate?	Go to **Step 37**	Go to **Step 45**
25	Test the steering column unlock circuit for an open between the BCM and the lock motor. Refer to **Circuit Testing** and **Wiring Repairs** in Wiring Systems. Did your find and correct the condition?	Go to **Step 60**	Go to **Step 26**
26	Inspect the BCM2 fuse. Was the fuse open?	Go to **Step 27**	Go to **Step 36**
27	1. Remove the key from the ignition. 2. Disconnect the BCM C3 connector. 3. Measure resistance between the column unlock circuit at the BCM and a good ground. Is the resistance greater than 10K ohms?	Go to **Step 28**	Go to **Step 51**
28	Measure resistance between the column lock circuit at the BCM and a good ground. Is the resistance greater than 10K ohms?	Go to **Step 29**	Go to **Step 52**
29	Measure resistance between the BCM2 voltage supply circuit at the BCM and a good ground. Is the resistance greater than 10K ohms?	Go to **Step 59**	Go to **Step 53**
30	Test the steering column lock circuit for an open between the external relay and the lock motor. Refer to **Circuit Testing** and **Wiring Repairs** in Wiring Systems. Did your find and correct the condition?	Go to **Step 60**	Go to **Step 31**
31	Test the steering column unlock circuit for an open between the BCM and the external relay. Refer to **Circuit Testing** and **Wiring Repairs** in Wiring Systems. Did your find and correct the condition?	Go to **Step 60**	Go to **Step 45**
32	Test the steering column lock circuit for an open between the BCM and the external relay. Refer to **Circuit Testing** and **Wiring Repairs** in Wiring Repairs. Did your find and correct the condition?	Go to **Step 60**	Go to **Step 48**
33	Test the steering column unlock circuit for an open between the BCM and the external relay. Refer to **Circuit Testing** and **Wiring Repairs** in Wiring Systems. Did your find and correct the condition?	Go to **Step 60**	Go to **Step 48**
34	Test the steering column lock signal circuit for an open. Refer to **Circuit Testing** and **Wiring Repairs** in Wiring Systems.		

	Did your find and correct the condition?	Go to **Step 60**	Go to **Step 48**
35	Test the steering column lock relay control circuit for an open. Refer to **Circuit Testing** and **Wiring Repairs** in Wiring Systems. Did your find and correct the condition?	Go to **Step 60**	Go to **Step 36**
36	Test the BCM2 voltage supply circuit and the BCM power ground circuit for an open. Refer to **Circuit Testing** and **Wiring Repairs** in Wiring Systems. Did you find and correct the condition?	Go to **Step 60**	Go to **Step 48**
37	Test the steering column lock relay control circuit for a short. Refer to **Circuit Testing** and **Wiring Repairs** in Wiring Systems. Did your find and correct the condition?	Go to **Step 60**	Go to **Step 59**
38	Test the steering column lock signal circuit for a short to ground. Refer to **Circuit Testing** and **Wiring Repairs** in Wiring Systems. Did your find and correct the condition?	Go to **Step 60**	Go to **Step 59**
39	1. Disconnect the ignition switch connector. 2. Momentarily jumper the key in ignition switch signal circuit to a good ground. 3. Observe Key in Ignition with the scan tool. Does the scan tool indicate Key in Ignition Active when jumpered and Inactive when not jumpered?	Go to **Step 42**	Go to **Step 40**
40	Test the key in ignition switch signal circuits for the following: • An open • A short to ground • A short to voltage Refer to **Circuit Testing** and **Wiring Repairs** in Wiring Systems. Did your find and correct the condition?	Go to **Step 60**	Go to **Step 48**
41	1. Disconnect the ignition switch connector. 2. Momentarily jumper the key out ignition switch signal circuit to a good ground. 3. Observe Key Out of Ign with the scan tool. Does the scan tool indicate Key Out of Ign Active when jumpered and Inactive when not jumpered?	Go to **Step 42**	Go to **Step 43**

42	Test the ignition switch ground circuit for an open. Refer to **Circuit Testing** and **Wiring Repairs** in Wiring Systems. Did your find and correct the condition?	Go to **Step 60**	Go to **Step 46**
43	Test the key out ignition switch signal circuits for the following: • An open • A short to ground • A short to voltage Refer to **Circuit Testing** and **Wiring Repairs** in Wiring Systems. Did your find and correct the condition?	Go to **Step 60**	Go to **Step 44**
44	Test the following for a short to ground: • The steering column lock circuit • The steering column unlock circuit • The steering column lock motor Refer to **Circuit Testing** and **Wiring Repairs** in Wiring Systems. Did your find and correct the condition?	Go to **Step 60**	Go to **Step 48**
45	Inspect the steering column lock relay connector for poor connections. Refer to **Testing for Intermittent Conditions and Poor Connections** and **Connector Repairs** in Wiring Systems. Did you find and correct the condition?	Go to **Step 60**	Go to **Step 56**
46	Inspect the ignition switch connector for poor connections. Refer to **Testing for Intermittent Conditions and Poor Connections** and **Connector Repairs** in Wiring Systems. Did you find and correct the condition?	Go to **Step 60**	Go to **Step 57**
47	Inspect the steering column lock connector for poor connections. Refer to **Testing for Intermittent Conditions and Poor Connections** and **Connector Repairs** in Wiring Systems. Did you find and correct the condition?	Go to **Step 60**	Go to **Step 58**
48	Inspect the BCM connector for poor connections. Refer to **Testing for Intermittent Conditions and Poor Connections** and **Connector Repairs** in Wiring Systems. Did you find and correct the condition?	Go to **Step 60**	Go to **Step 59**

49	Inspect the BCM for correct Transmission and Export calibrations with the scan tool.	Go to **Step 60**	-
50	1. Disconnect the BCM1 & instrument panel cluster (IPC) fuse in the instrument panel (I/P) fuse block for 15 seconds. 2. Reconnect the BCM1 & IPC fuse. Did you complete the action?	Go to **Step 60**	-
51	Repair the short in the steering column unlock circuit or in steering column lock circuit between external steering column lock relay and steering column lock motor connector. Refer to **Wiring Repairs** in Wiring Systems. Did you complete the repair?	Go to **Step 54**	-
52	Repair the short in the steering column lock circuit. Refer to **Wiring Repairs** in Wiring Systems. Did you complete the repair?	Go to **Step 54**	-
53	Repair the short in the BCM2 voltage supply circuit. Refer to **Wiring Repairs** in Wiring Systems. Did you complete the repair?	Go to **Step 54**	-
54	1. Reconnect the BCM C3 connector. 2. Replace the BCM2 fuse. Did BCM2 fuse open again?	Go to **Step 59**	Go to **Step 60**
55	Repair the open in the steering column lock relay voltage supply circuit. Refer to **Wiring Repairs** in Wiring Systems. Did you complete the repair?	Go to **Step 60**	-
56	Replace the steering column lock relay. Did you complete the replacement?	Go to **Step 60**	-
57	Replace the ignition switch. Refer to **Ignition Switch Replacement** in Instrument Panel, Gages, and Console. Did you complete the replacement?	Go to **Step 60**	-
58	1. Inspect the BCM2 fuse and replace if open. 2. Replace the steering column lock. Refer to **Steering Wheel Theft Deterrent Lock Replacement (Telescoping)** or **Steering Wheel Theft Deterrent Lock Replacement (Manual)** . Did you complete the replacement?	Go to **Step 60**	-

59	Replace the BCM. Refer to **Body Control Module Replacement** in Body Control System. Did you complete the replacement?	Go to **Step 60**	-
60	1. Replace the BCM2 fuse if removed or open. 2. Reconnect the Steering Column Lock connector if disconnected. 3. Operate the system in order to verify the repair. Did you correct the condition?	System OK	Go to **Step 2**

SERVICE COLUMN LOCK INDICATOR ALWAYS ON

Diagnostic Aids

- An open on the key in ignition switch signal circuit will intermittently cause the column not to unlock.
- Disconnecting or opening the steering column lock feedback circuit will cause the BCM to enter a Fail Enable Standby mode. The steering column will remain inoperative until the Fail Enable Standby mode is cleared. To clear this mode, disconnect the BCM1 & IPC fuse in the I/P fuse block for 15 seconds.

Service Column Lock Indicator Always On

Step	Action	Yes	No
Schematic Reference: Column/Ignition Lock Schematics **Connector End View Reference: Steering Wheel and Column Connector End Views**			
1	Did you perform the Steering Wheel and Column Diagnostic System Check?	Go to **Step 2**	Go to **Diagnostic System Check - Steering Wheel and Column**
2	Verify the fault is present. Does the system operate normally?	Go to Diagnostic Aids	Go to **Step 3**
3	1. Disconnect the BCM1 & IPC fuse in the I/P fuse block for 15 seconds. 2. Reconnect the BCM1 & IPC fuse. Does the steering column lock unlock and lock normally?	Go to **Step 11**	Go to **Step 4**
4	Verify that the column will lock or unlock by cycling the ignition on and removing the ignition key. Does the steering column lock unlock and lock normally?	Go to **Step 5**	Go to **Electronic Column Lock Does Not Unlock** or **Electronic Column Lock Does Not Lock** .
5	With a DMM, back probe between steering column lock signal circuit on the BCM and a good ground. Is battery voltage present?	Go to **Step 6**	Go to **Step 8**

6	Test the signal and ground circuits of the steering column lock feedback switch for an open or short to ground. Refer to **Circuit Testing** and **Wiring Repairs** in Wiring Systems. Did you find and correct the condition?	Go to **Step 11**	Go to **Step 7**
7	Inspect for poor connections at the harness connector of the steering column lock. Refer to **Testing for Intermittent Conditions and Poor Connections** and **Connector Repairs** in Wiring Systems. Did you find and correct the condition?	Go to **Step 11**	Go to **Step 9**
8	Inspect for poor connections at the harness connector of the BCM. Refer to **Testing for Intermittent Conditions and Poor Connections** and **Connector Repairs** in Wiring Systems. Did you find and correct the condition?	Go to **Step 11**	Go to **Step 10**
9	Replace the steering column lock. Refer to **Steering Wheel Theft Deterrent Lock Replacement (Telescoping)** or **Steering Wheel Theft Deterrent Lock Replacement (Manual)** in Steering Wheel and Column. Did you complete the replacement?	Go to **Step 11**	-
10	**IMPORTANT:** **Perform the BCM RPO Reprogram procedure. Refer to Body Control Module (BCM) Programming/RPO Configuration in Body Control System.** Replace the BCM. Refer to **Body Control Module Replacement** in Body Control System.Did you complete the replacement?	Go to **Step 11**	-
11	Operate the system in order to verify the repair. Did you correct the condition?	System OK	Go to **Step 3**

SERVICE COLUMN LOCK INDICATOR INOPERATIVE

Service Column Lock Indicator Inoperative

Step	Action	Yes	No
1	Did you perform the Steering Wheel and Column Diagnostic System Check?	Go to **Step 2**	Go to **Diagnostic System Check - Steering Wheel and Column**
2	1. Turn OFF the ignition. 2. Remove BCM2 fuse. 3. Turn ON the Ignition Is the Service Column Lock message displayed?	System OK	Go to **Step 3**

3	Replace the instrument panel cluster. Refer to **Instrument Panel Cluster (IPC) Replacement** in Instrument Panel, Gages and Console. Did you complete the replacement?	System OK	-

NOISE IN STEERING COLUMN

Noise in Steering Column

Step	Action	Yes	No
1	Did you review the Steering Wheel and Column Description and perform the necessary inspections?	Go to **Step 2**	Go to **Steering Wheel and Column Description and Operation**
2	Verify that noise is present in the steering column during operation. Is noise present in the steering column during operation?	Go to **Step 3**	System OK
3	Inspect the steering column components for looseness. Is the steering column components loose?	Go to **Step 10**	Go to **Step 4**
4	Inspect the SIR/SRS coil for noise. Is the SIR/SRS coil noisy?	Go to **Step 11**	Go to **Step 5**
5	Inspect the horn contact ring for lubrication. Is the horn contact ring lubricated?	Go to **Step 12**	Go to **Step 6**
6	Inspect the lock plate retaining ring for the correct installation. Is the lock plate retaining ring installed properly?	Go to **Step 13**	Go to **Step 7**
7	Inspect the shaft bearing for the following conditions: • Damage • Lubrication • Wear • Proper seating Are the bearings in need of repair or replacement?	Go to **Step 14**	Go to **Step 8**
8	Inspect the spherical joint for lubrication. Is the spherical joint lubricated?	Go to **Step 15**	Go to **Step 9**
9	Inspect the steering column coupling for looseness. Is the steering column coupling loose?	Go to **Step 16**	Go to **Step 3**
10	Tighten the steering column components to specifications. Refer to **Fastener Tightening Specifications** . Did you complete the repair?	Go to **Step 17**	-
11	Replace the SIR coil. Refer to **Inflatable Restraint Steering Wheel Module Coil Replacement** in SIR. Did you complete the repair?	Go to **Step 17**	-
	Lubricate the horn contact ring.	Go to	

12	Did you complete the repair?	**Step 17**	-
13	Install the lock plate retaining ring properly. Did you complete the repair?	Go to **Step 17**	-
14	Repair the shaft bearings as necessary. Refer to **Steering Shaft, Lower Bearing, and Jacket Replacement (Telescoping)** or **Steering Shaft, Lower Bearing, and Jacket Replacement (Manual)** . Did you complete the repair?	Go to **Step 17**	-
15	Lubricate the spherical joints. Did you complete the repair?	Go to **Step 17**	-
16	Tighten the steering column coupling to specifications. Refer to **Fastener Tightening Specifications** . Did you complete the repair?	Go to **Step 17**	-
17	Operate the system in order to verify the repair. Did you correct the condition?	System OK	Go to **Step 3**

LOOSENESS IN STEERING COLUMN

Looseness in Steering Column

Step	Action	Yes	No
1	Did you review the Steering Wheel and Column Description and Operation and perform the necessary inspections?	Go to **Step 2**	Go to **Steering Wheel and Column Description and Operation**
2	Verify that the steering column is loose. Is the steering column loose?	Go to **Step 3**	System OK
3	Inspect the steering column mounting brackets for looseness. Are the steering column mounting brackets loose?	Go to **Step 8**	Go to **Step 4**
4	Verify that the steering column bracket capsule is not sheared. Is the steering column bracket capsule sheared?	Go to **Step 9**	Go to **Step 5**
5	Inspect the support screws for looseness. Are the support screws loose?	Go to **Step 10**	Go to **Step 6**
6	Inspect the intermediate shaft for worn joints or looseness. Is the intermediate joint worn or loose?	Go to **Step 11**	Go to **Step 7**
7	Inspect the tilt head, support and pivot pins for looseness. Are there any loose components?	Go to **Step 12**	Go to **Step 2**
8	**NOTE:** **Refer to Fastener Notice in Cautions and Notices.** Tighten the brackets to specifications. Refer to **Fastener Tightening Specifications** .Did you complete the repair?	Go to **Step 13**	-
9	Replace the jacket assembly. Refer to **Steering Shaft, Lower Bearing, and Jacket Replacement (Telescoping)** or **Steering Shaft, Lower Bearing, and Jacket Replacement (Manual)** .	Go to	

	Did you complete the replacement?	**Step 13**	-
10	Tighten the support screws to specifications. Refer to **Fastener Tightening Specifications** . Did you complete the repair?	Go to **Step 13**	-
11	Tighten or replace the intermediate shaft as needed. Refer to **Intermediate Steering Shaft Replacement** . Did you complete the repair?	Go to **Step 13**	-
12	Repair or replace the tilt head, support and pivot pins as necessary. Refer to **Steering Shaft, Lower Bearing, and Jacket Replacement (Telescoping)** or **Steering Shaft, Lower Bearing, and Jacket Replacement (Manual)** . Did you complete the replacement?	Go to **Step 13**	-
13	Operate the system in order to verify the repair. Did you correct the condition?	System OK	Go to **Step 3**

REPAIR INSTRUCTIONS

INTERMEDIATE STEERING SHAFT REPLACEMENT

Tools Required

J 42640 Steering Column Lock Pin. See **Special Tools and Equipment** .

Removal Procedure

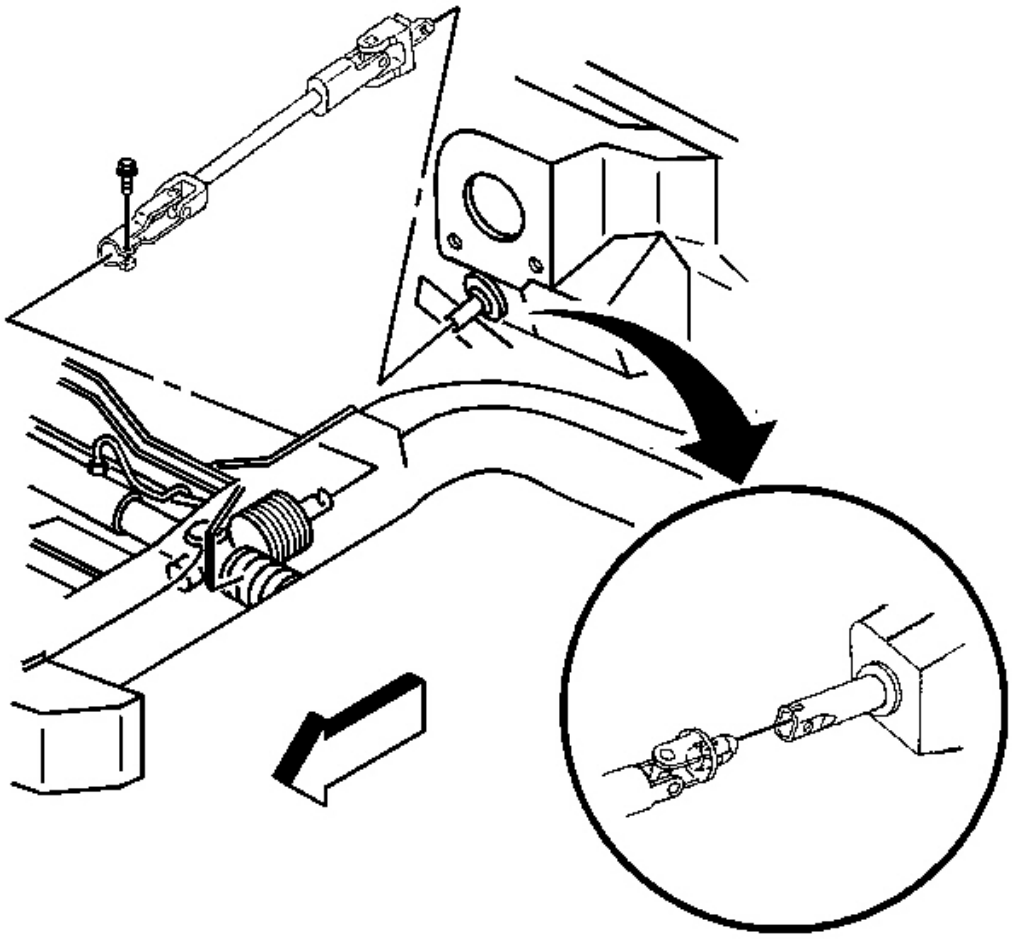

Fig. 9: Steering Column, Upper Coupling & Bolt
Courtesy of GENERAL MOTORS CORP.

1. Turn the steering wheel far enough to the left to gain access to the upper coupling bolt.
2. Remove the upper coupling bolt.

NOTE: **The wheels of the vehicle must be straight ahead and the steering column in the LOCK position before disconnecting the steering column or intermediate shaft from the steering gear. Failure to do so will cause the SIR coil assembly to become uncentered, which may cause damage to the coil assembly.**

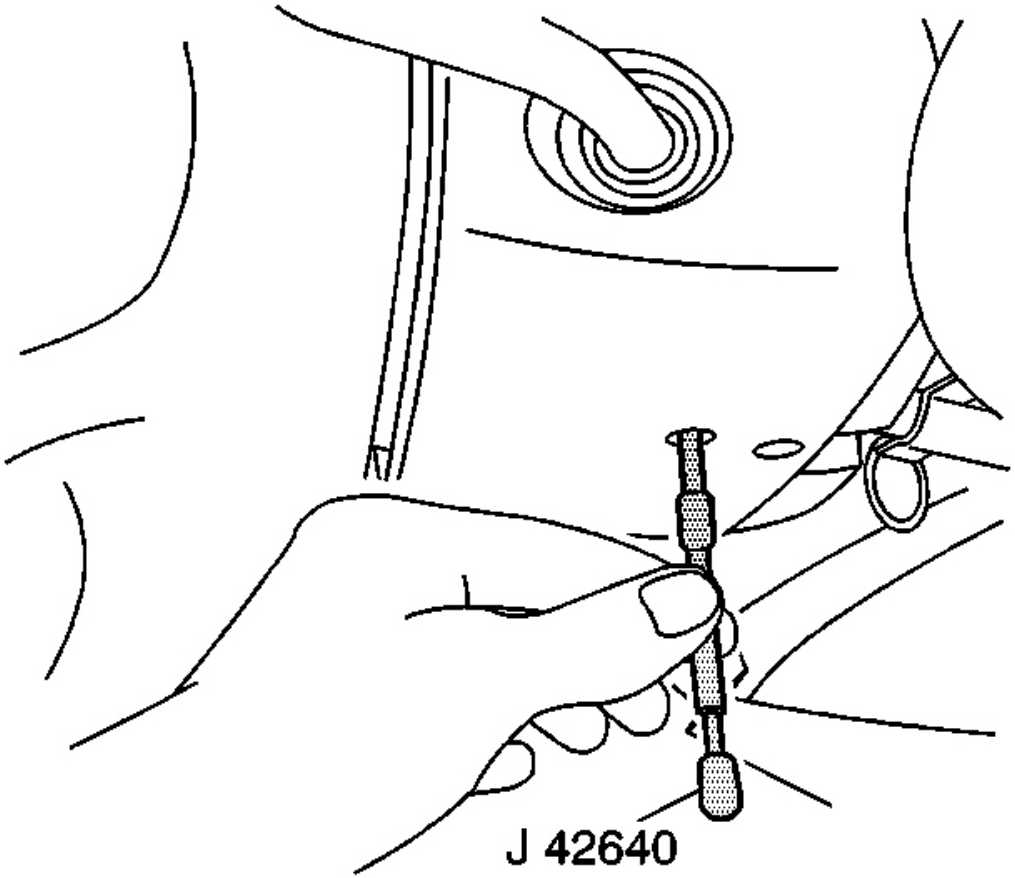

Fig. 10: Inserting J 42640 To Lock The Steering Column
Courtesy of GENERAL MOTORS CORP.

3. Insert **J 42640** into the steering column access hole in order to lock the steering column. See **Special Tools and Equipment** . This will maintain the correct orientation.

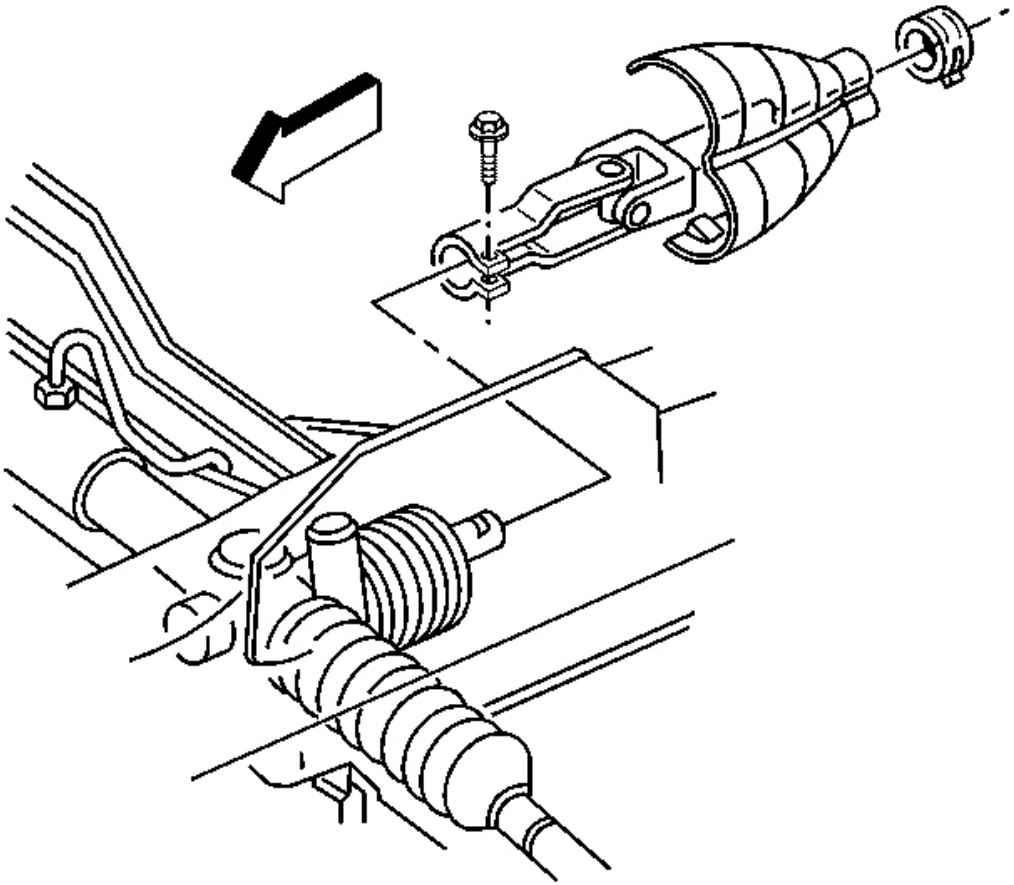

Fig. 11: Lower Coupling Shield, Lower Coupling & Retaining Bolt
Courtesy of GENERAL MOTORS CORP.

4. Remove the lower coupling shield.
5. Remove the lower coupling retaining bolt.
6. Install **J 42640** to the steering column. See **Special Tools and Equipment** .
7. Remove the lower coupling from the steering gear.
8. Slide the upper coupling from the steering column shaft.
9. Remove the intermediate shaft from the vehicle.

Installation Procedure

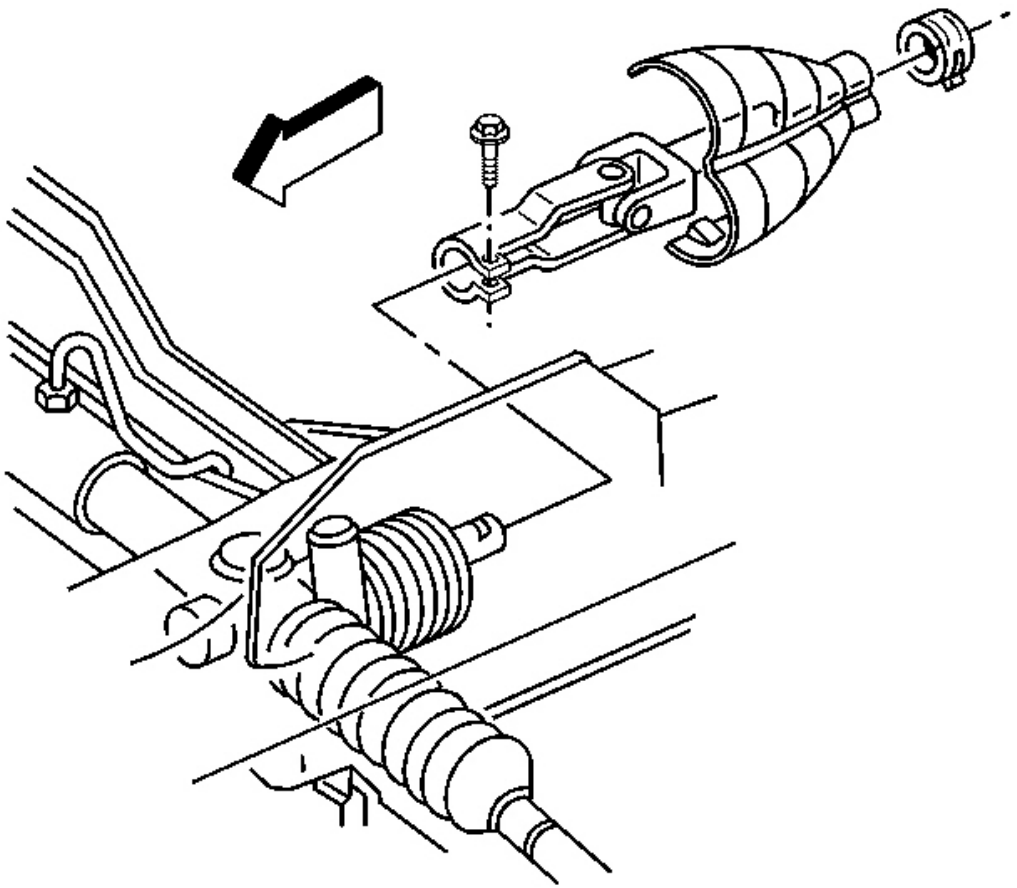

Fig. 12: Lower Coupling Shield, Lower Coupling & Retaining Bolt
Courtesy of GENERAL MOTORS CORP.

1. Place the intermediate shaft into vehicle.
2. Slide the upper coupling into the steering column shaft.
3. Connect the lower coupling onto the steering gear.

NOTE: Refer to Fastener Notice in Cautions and Notices.

4. Install the lower coupling retaining bolt into the lower coupling.

   Tighten: Tighten the lower coupling retaining bolt to 34 N.m (25 lb ft).

5. Remove **J 42640** from the steering column. See **Special Tools and Equipment** .

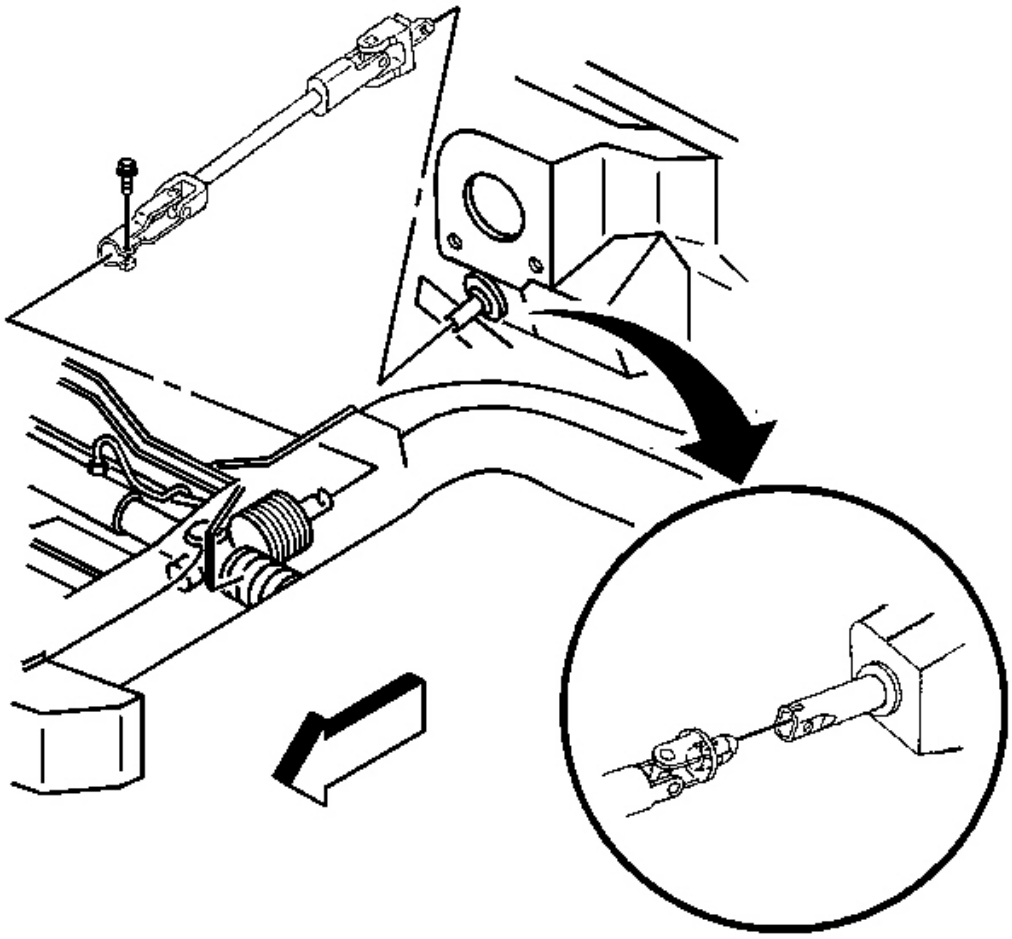

Fig. 13: Steering Column, Upper Coupling & Bolt
Courtesy of GENERAL MOTORS CORP.

6. Unlock the steering column.
7. Turn the steering wheel far enough to the left to gain access to the upper coupling bolt hole.
8. Install the upper coupling bolt into the upper coupling.

   Tighten: Tighten the upper coupling bolt to 48 N.m (35 lb ft).

9. Turn the steering wheel back to the right until the wheels are in a straight ahead position, then lock the steering column.
10. Install the lower steering coupling shield.

Tighten: Tighten the lower steering coupling shield screw to 3.5 N.m (31 lb in).

STEERING COLUMN ACCIDENT DAMAGE INSPECTION (TELESCOPING)

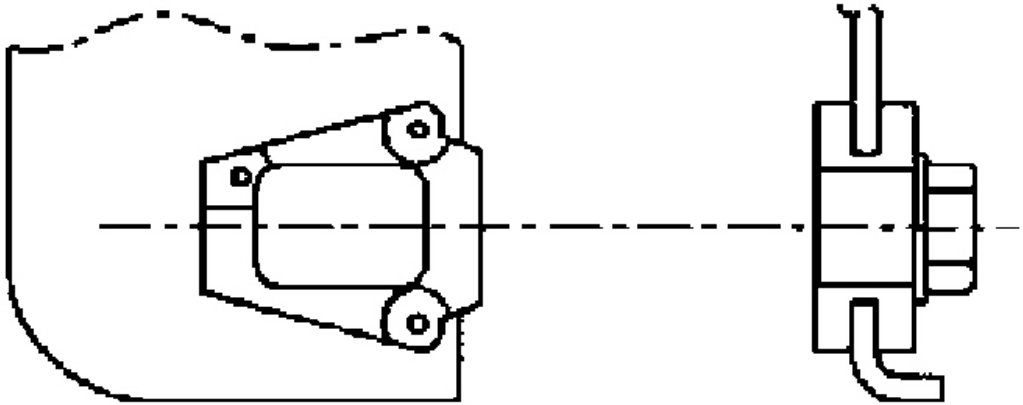

Fig. 14: Inspecting Capsule On Steering Column Bracket Assembly
Courtesy of GENERAL MOTORS CORP.

NOTE: **Vehicles involved in accidents that result in any of the following kinds of damage or situations, may also have a damaged or misaligned steering column:**

- **Frame damage**
- **Major body damage**
- **Sheet metal damage**
- **If the steering column has been impacted**
- **If the supplemental inflatable restraints system was deployed**

- Inspect the capsules on the steering column bracket assembly. All capsules must be securely seated in the bracket slots and inspected for any loose conditions when pushed or pulled by hand.
- Observe how the bracket is attached to the jacket assembly.
  - If the capsules are not securely seated and the bracket is bolted to the jacket assembly, replace only the bracket.
  - If the capsules are not securely seated and the bracket is welded to the jacket assembly, replace only the jacket assembly.

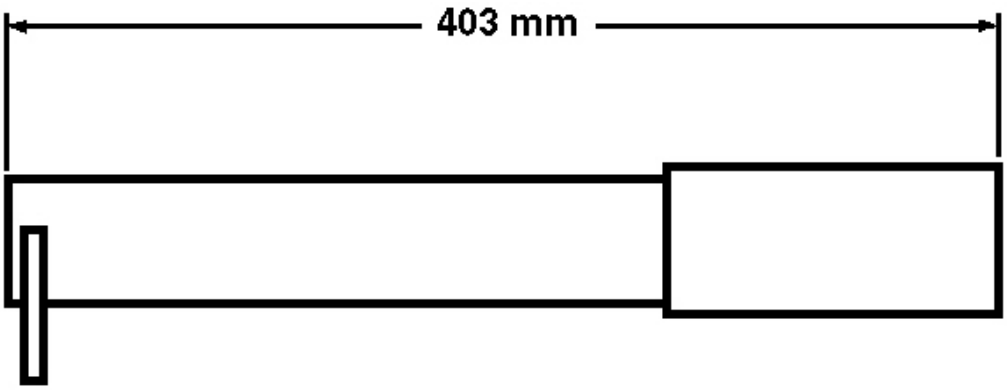

Fig. 15: Measuring The Distance From Lower Edge Of Upper Jacket (Telescoping)
Courtesy of GENERAL MOTORS CORP.

- Inspect for jacket assembly collapse by measuring the distance from the lower edge of the upper jacket to a defined point on the lower jacket. Replace the jacket assembly if the measured dimensions are not within specifications.

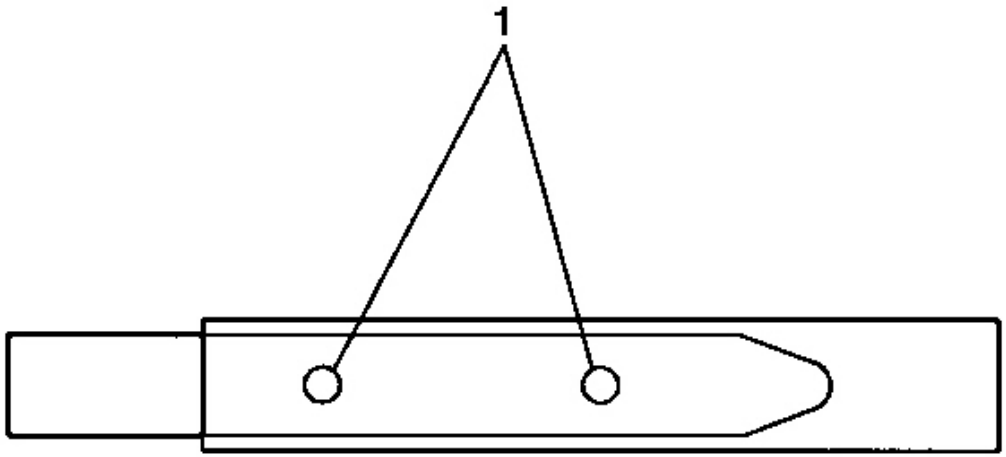

Fig. 16: Inspecting Steering Shaft For Sheared Injected Plastic
Courtesy of GENERAL MOTORS CORP.

- Visually inspect the steering shaft for sheared injected plastic (1). If the steering shaft shows sheared plastic, replace the steering shaft.
- Any frame damage that could cause a bent steering shaft must have the steering shaft runout checked. Using a dial indicator at the lower end of the steering shaft, rotate the steering wheel. The runout must not exceed 1.60 mm (0.06 in).

STEERING COLUMN ACCIDENT DAMAGE INSPECTION (MANUAL)

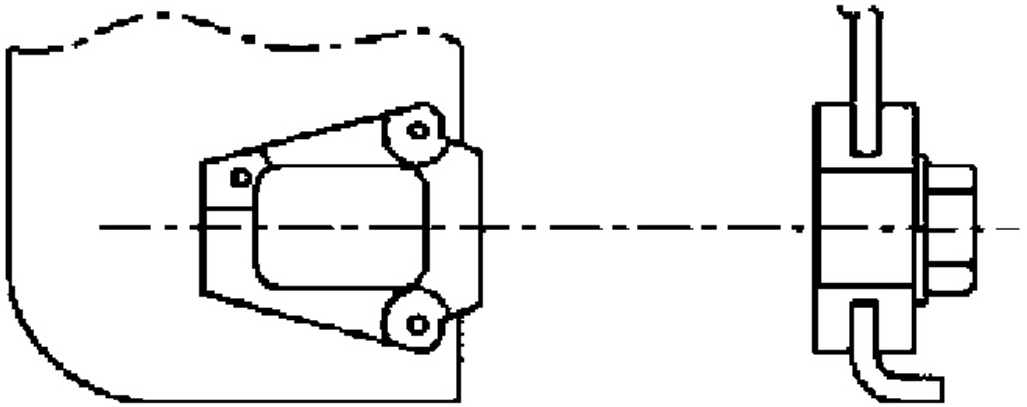

Fig. 17: Inspecting Capsule On Steering Column Bracket Assembly
Courtesy of GENERAL MOTORS CORP.

NOTE: **Vehicles involved in accidents that result in any of the following kinds of damage or situations, may also have a damaged or misaligned steering column:**

- **Frame damage**
- **Major body damage**
- **Sheet metal damage**
- **If the steering column has been impacted**
- **If the supplemental inflatable restraints system was deployed**

- Inspect the capsules on the steering column bracket assembly. All capsules must be securely seated in the bracket slots and inspected for any loose conditions when pushed or pulled by hand.
- Observe how the bracket is attached to the jacket assembly.
  - If the capsules are not securely seated and the bracket is bolted to the jacket assembly, replace only the bracket.

- If the capsules are not securely seated and the bracket is welded to the jacket assembly, replace only the jacket assembly.

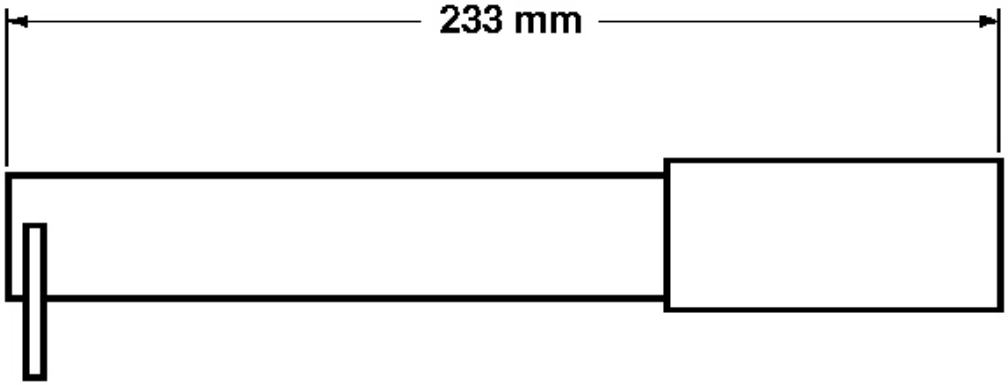

Fig. 18: Measuring The Distance From Lower Edge Of Upper Jacket (Manual)
Courtesy of GENERAL MOTORS CORP.

- Inspect for jacket assembly collapse by measuring the distance from the lower edge of the upper jacket to a defined point on the lower jacket. Replace the jacket assembly if the measured dimensions are not within specifications.

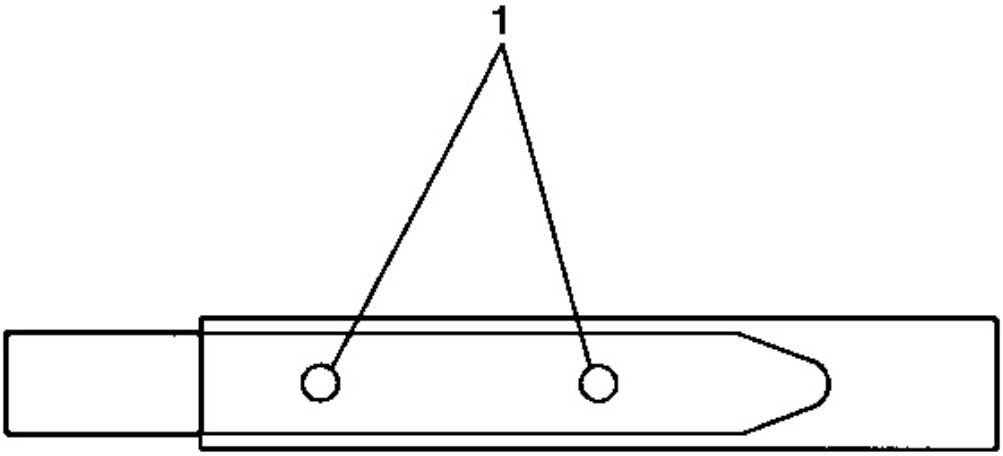

Fig. 19: Inspecting Steering Shaft For Sheared Injected Plastic
Courtesy of GENERAL MOTORS CORP.

- Visually inspect the steering shaft for sheared injected plastic (1). If the steering shaft shows sheared plastic, replace the steering shaft.
- Any frame damage that could cause a bent steering shaft must have the steering shaft runout checked. Using a dial indicator at the lower end of the steering shaft, rotate the steering wheel. The runout must not exceed 1.60 mm (0.06 in).

STEERING COLUMN TRIM COVERS REPLACEMENT (TELESCOPING)

Removal Procedure

1. Disable the SIR system. Refer to **SIR Disabling and Enabling Zone 3** in SIR.
2. Remove the steering wheel from the steering column. Refer to **Steering Wheel Replacement** .
3. Remove the tilt lever from the steering column. Refer to **Tilt Lever Replacement** .

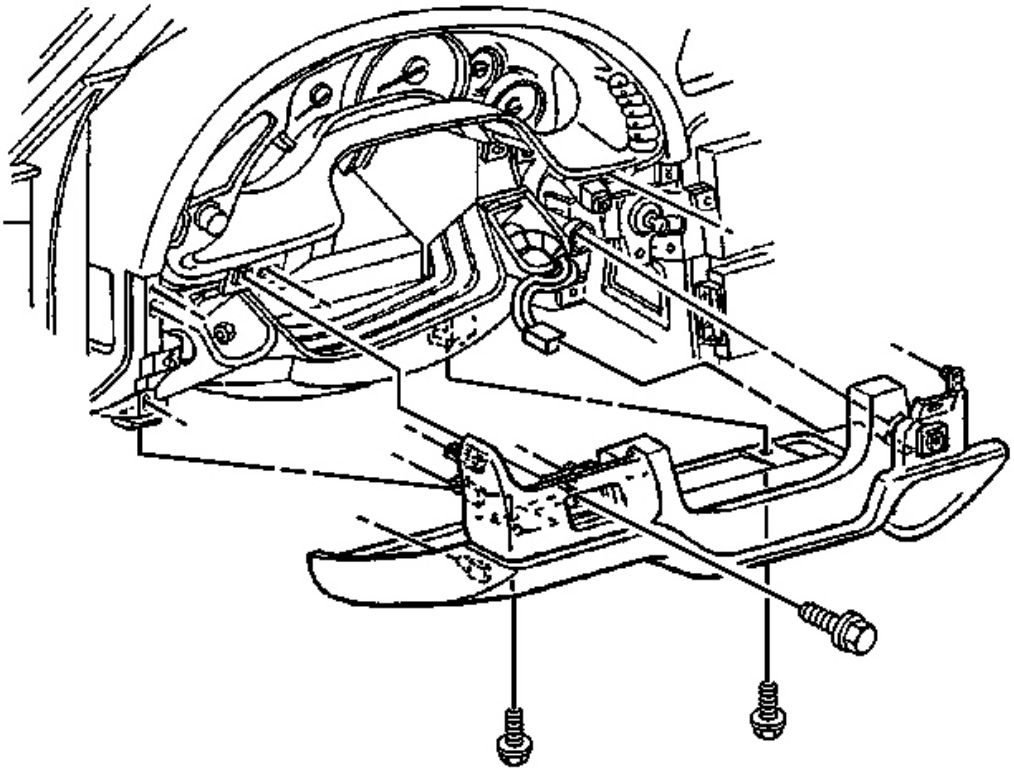

Fig. 20: TORX(R) Head Screws, Lower Trim Cover & Driver Knee Bolster Trim Panel
Courtesy of GENERAL MOTORS CORP.

4. Remove the driver knee bolster trim panel. Refer to **Trim Panel Replacement - Knee Bolster** in Instrument Panel, Gages and Console.
5. Remove the 2 TORX(R) head screws from the lower trim cover.

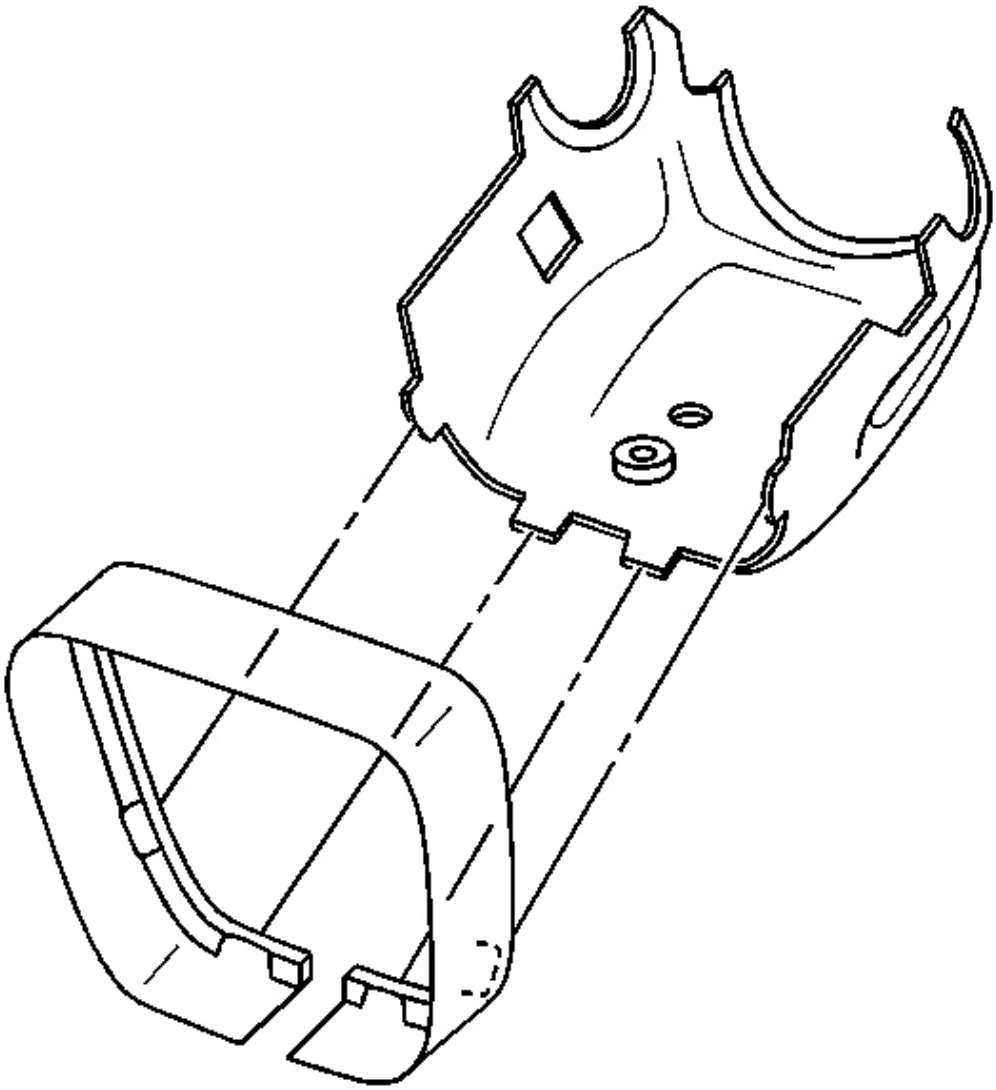

Fig. 21: Lower Trim Cover Tabs & Steering Column Close Out Trim Cover
Courtesy of GENERAL MOTORS CORP.

6. Separate the lower trim cover tabs from the slots in the steering column close out trim cover.
7. Remove the switch wires from the telescope motor assembly, which are routed in clips along the bottom of the lower trim cover.
8. From the inside of the lower trim cover, push out the telescope motor assembly switch.
9. Disconnect the assembly switch connector from the instrument panel wiring harness.

10. Remove the telescope motor assembly switch and wires from the trim cover.
11. Remove the lower trim cover.

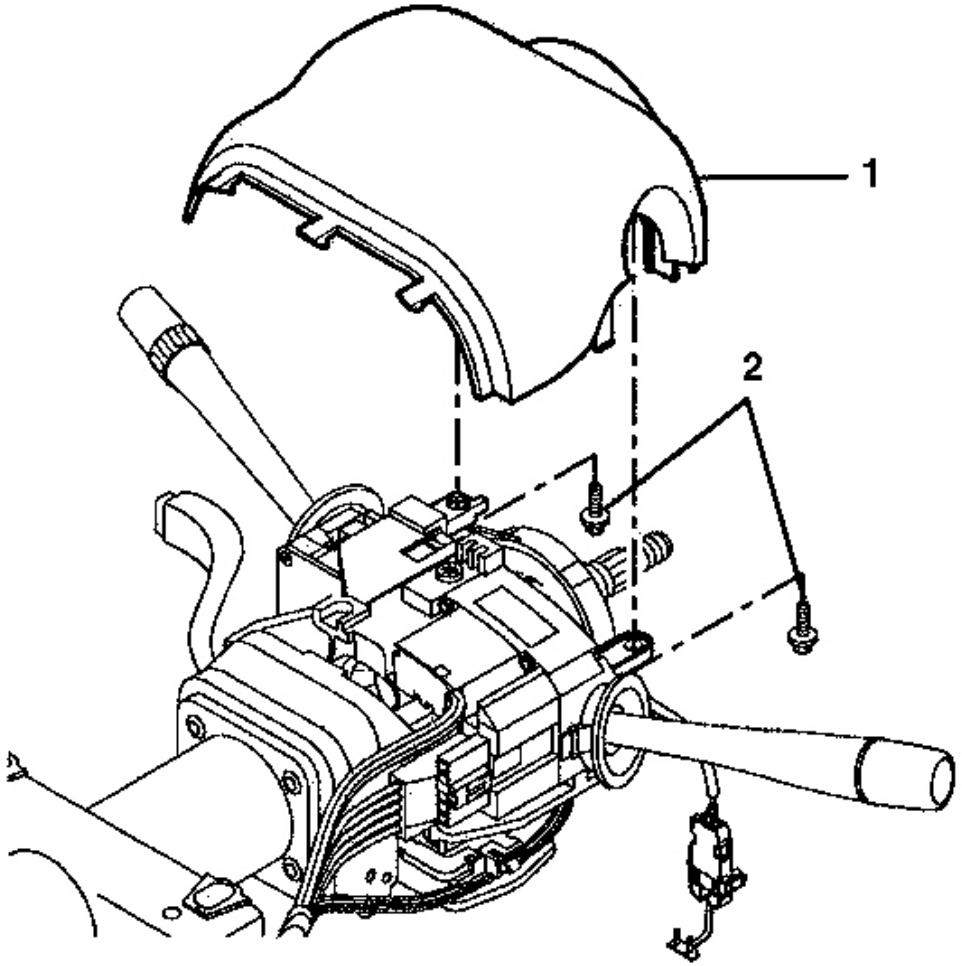

Fig. 22: TORX(R) Head Screws & Upper Trim Cover
Courtesy of GENERAL MOTORS CORP.

12. Remove the 2 TORX(R) head screws (2) from the upper trim cover (1).
13. Separate the upper trim cover tabs from the slots in the steering column close out trim cover.
14. Remove the upper trim cover (1).

Installation Procedure

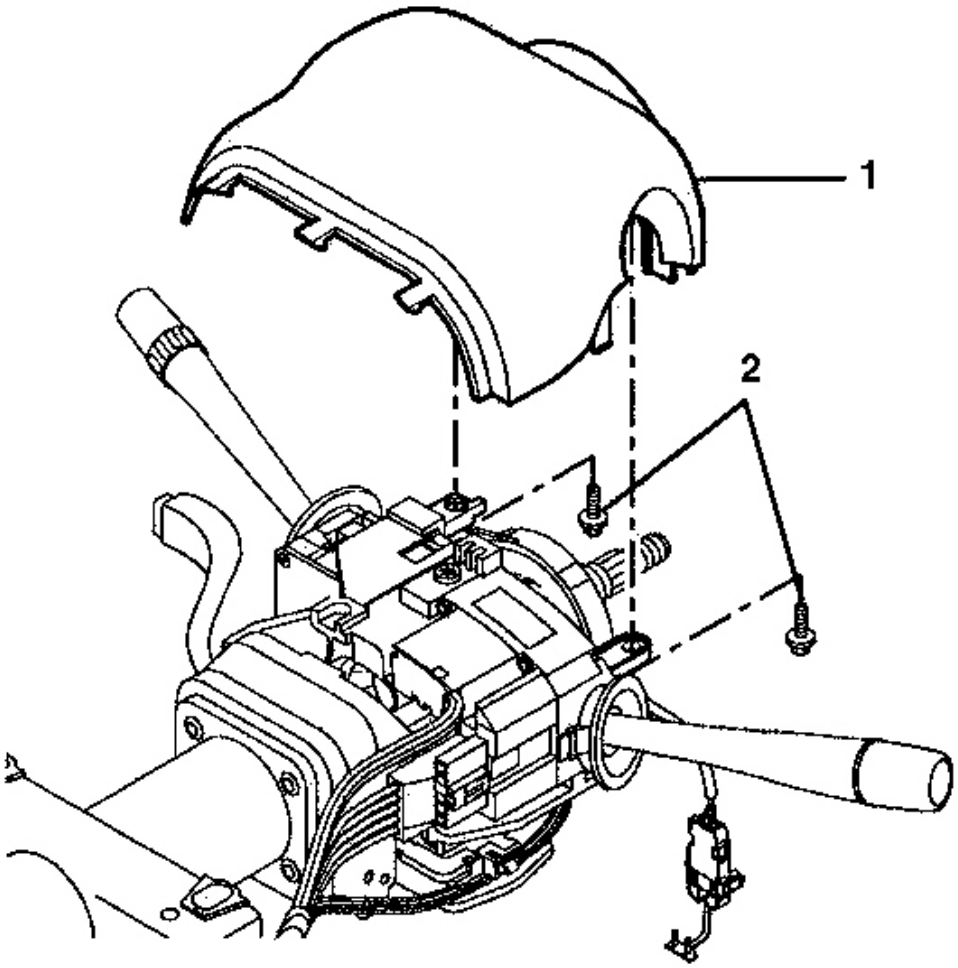

Fig. 23: TORX(R) Head Screws & Upper Trim Cover
Courtesy of GENERAL MOTORS CORP.

1. Install the upper trim cover to the steering column close out trim cover.
2. Verify that the tabs on the upper trim cover are fully engaged with the slots in the steering column close out trim cover.

NOTE: **Refer to Fastener Notice in Cautions and Notices.**

3. Secure the upper trim cover (1) with 2 TORX(R) head screws (2).

Tighten: Tighten the screws to 1.5 N.m (13 lb in).

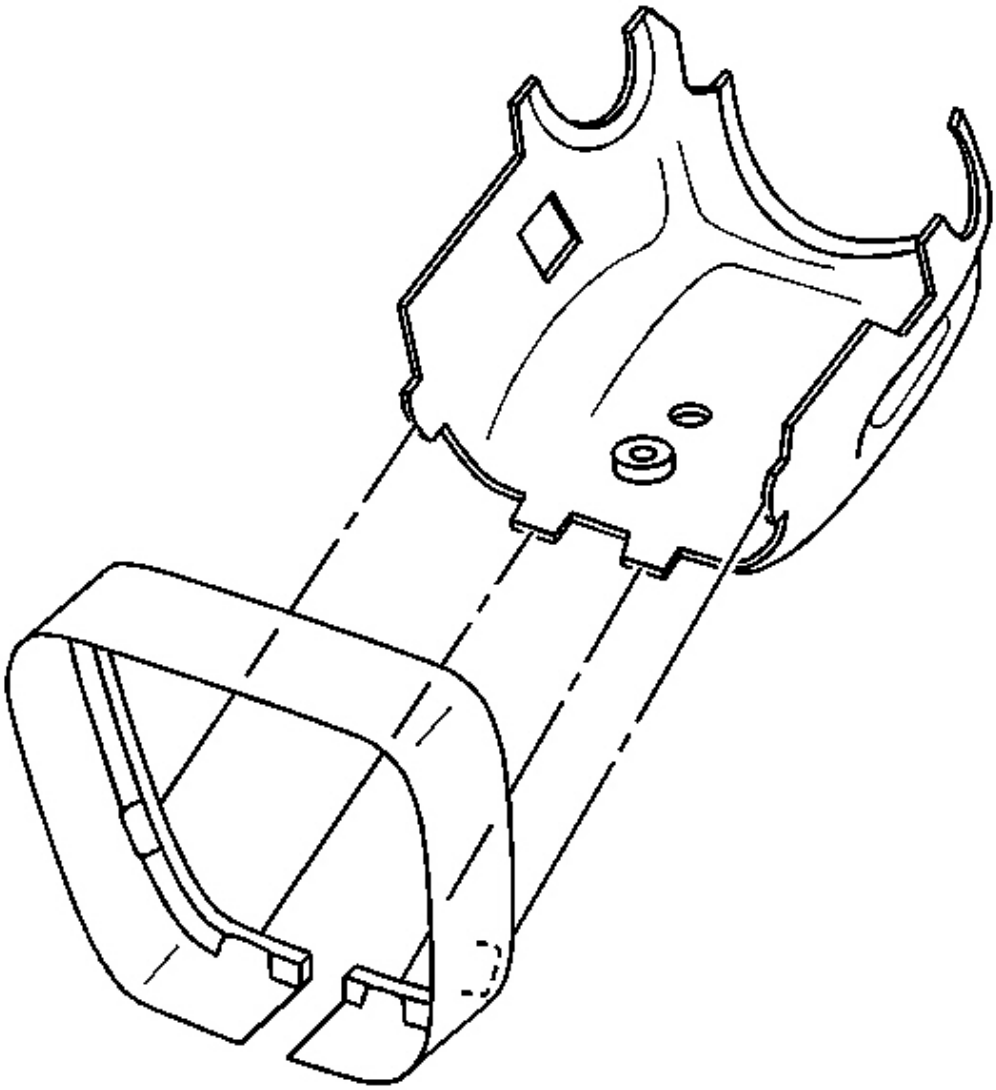

Fig. 24: Lower Trim Cover Tabs & Steering Column Close Out Trim Cover
Courtesy of GENERAL MOTORS CORP.

4. Install the telescope motor assembly switch and wires thorough the opening in the lower trim cover.
5. Snap the wiring to the retaining clips in the lower trim cover.
6. Route the switch wires to the telescope motor assembly along the column. Strap the wires.
7. Connect the assembly switch connector to the instrument panel wiring harness.
8. Install the lower trim cover tabs into the steering column close out trim cover.

9. Verify that the tabs on the lower trim cover are fully engaged with the slots in the steering column close out trim cover.

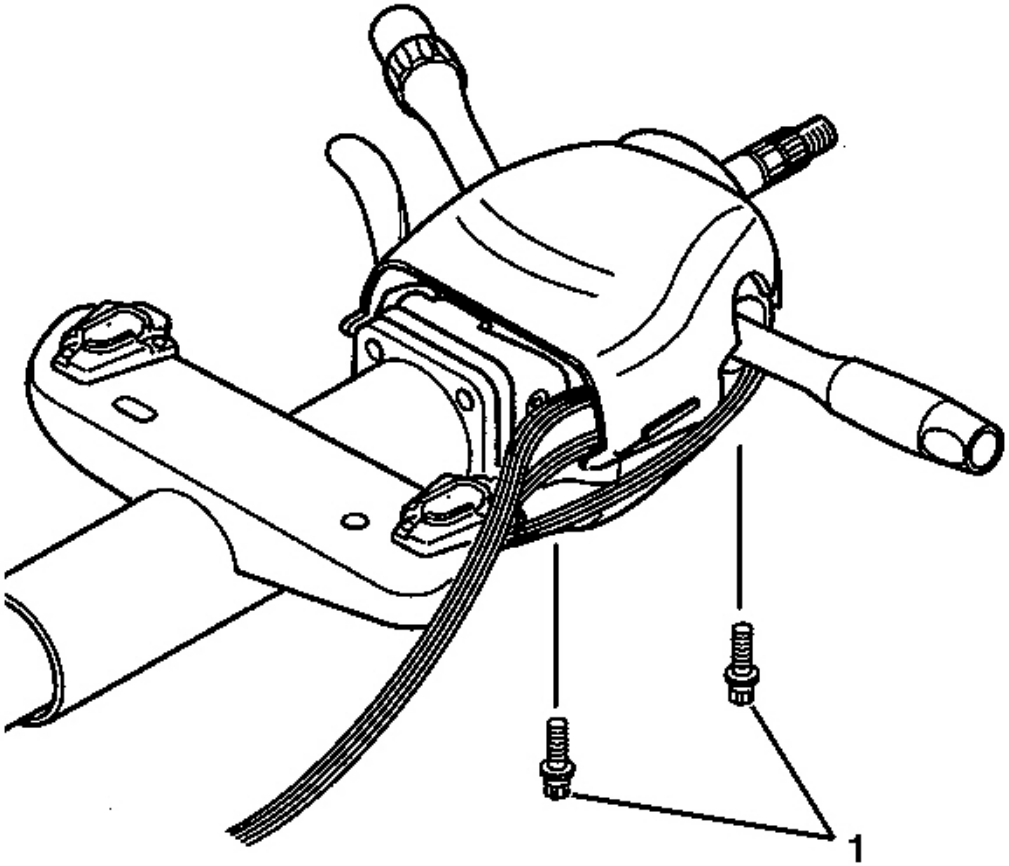

Fig. 25: TORX(R) Head Screws & Lower Trim Cover
Courtesy of GENERAL MOTORS CORP.

10. Install the 2 TORX(R) head screws (1) to the lower trim cover.

    Tighten: Tighten the screws to 4 N.m (35 lb in).

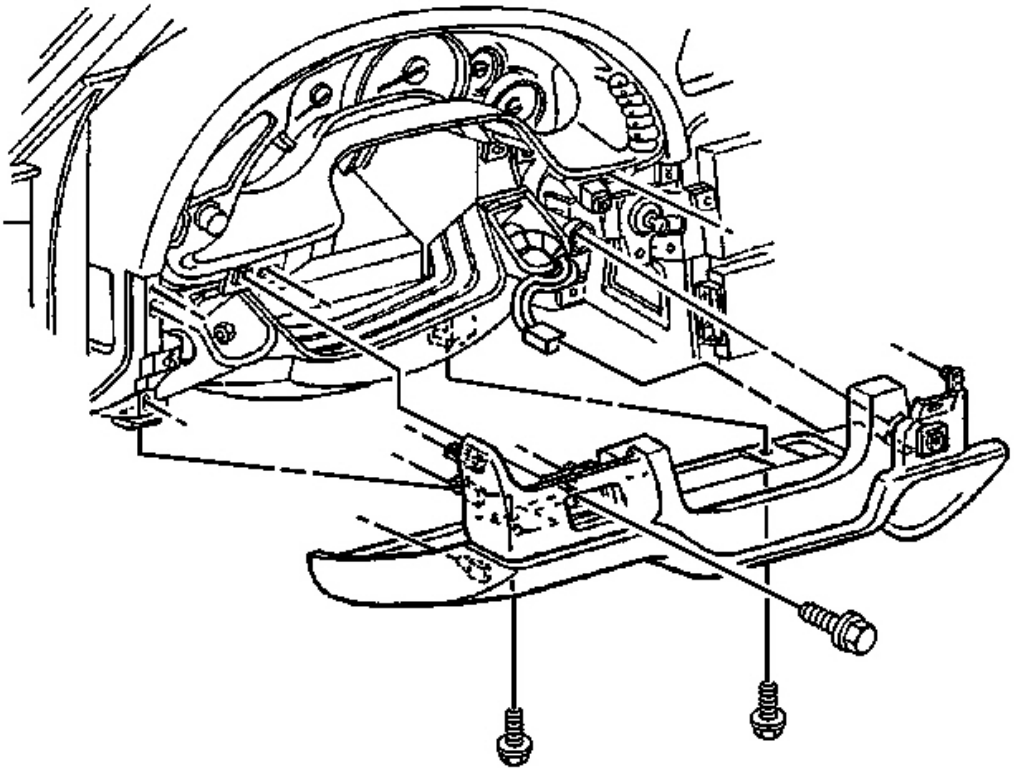

Fig. 26: TORX(R) Head Screws, Lower Trim Cover & Driver Knee Bolster Trim Panel
Courtesy of GENERAL MOTORS CORP.

11. Install the driver knee bolster trim panel. Refer to **Trim Panel Replacement - Knee Bolster** in Instrument Panel, Gages and Console.
12. Install the tilt lever. Refer to **Tilt Lever Replacement** .
13. Install the steering wheel. Refer to **Steering Wheel Replacement** .
14. Enable the SIR system. Refer to **SIR Disabling and Enabling Zone 3** in SIR.

STEERING COLUMN TRIM COVERS REPLACEMENT (MANUAL)

Removal Procedure

1. Disable the SIR system. Refer to **SIR Disabling and Enabling Zone 3** in SIR.
2. Remove the steering wheel from the steering column. Refer to **Steering Wheel Replacement** .
3. Remove the tilt lever from the steering column. Refer to **Tilt Lever Replacement** .

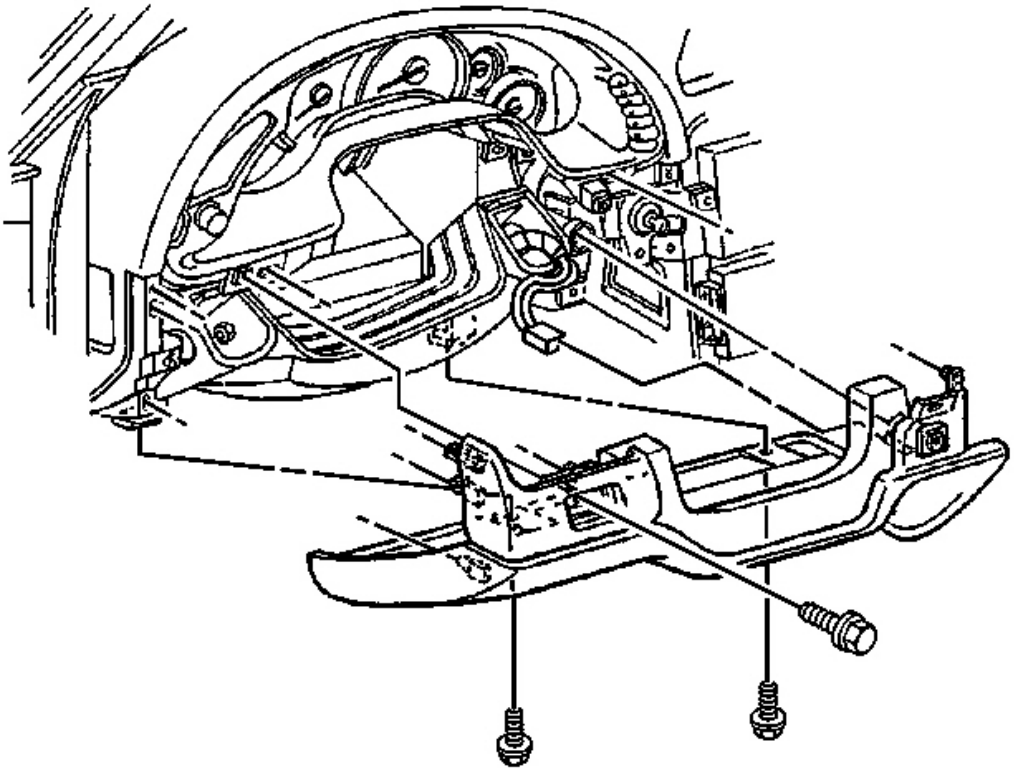

Fig. 27: TORX(R) Head Screws, Lower Trim Cover & Driver Knee Bolster Trim Panel
Courtesy of GENERAL MOTORS CORP.

4. Remove the driver knee bolster trim panel. Refer to **Trim Panel Replacement - Knee Bolster** in Instrument Panel, Gages and Console.
5. Remove the 2 TORX(R) head screws from the lower trim cover.

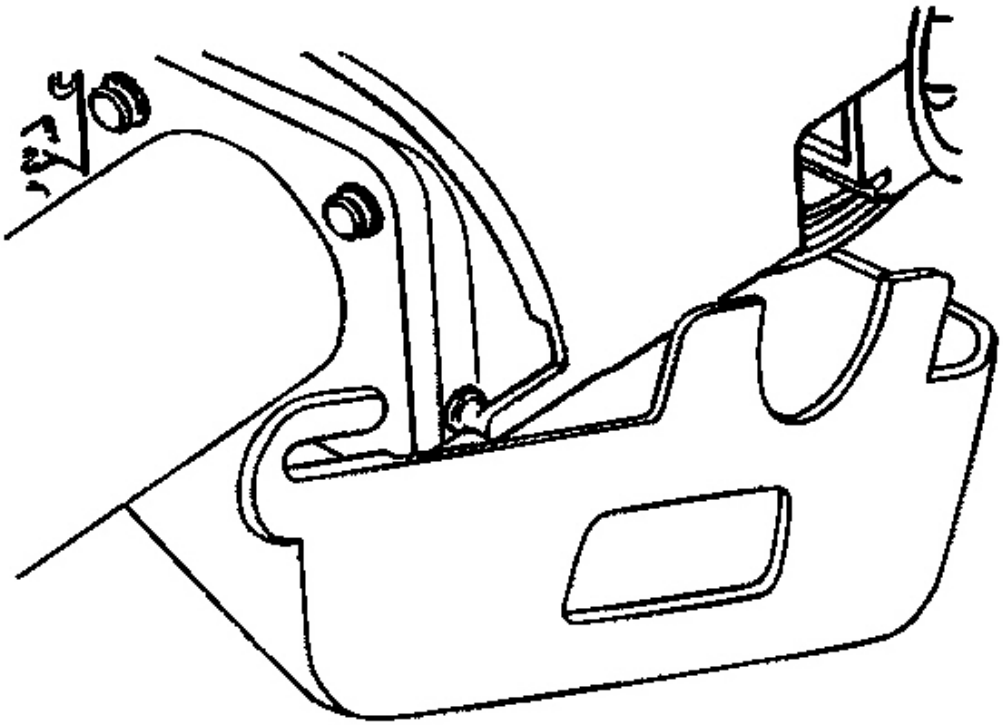

Fig. 28: Disengaging Upper Trim Cover
Courtesy of GENERAL MOTORS CORP.

6. Perform the following steps to remove the lower trim cover:
    1. Tilt the trim cover down.
    2. Slide the lower trim cover back to disengage from the upper trim cover.

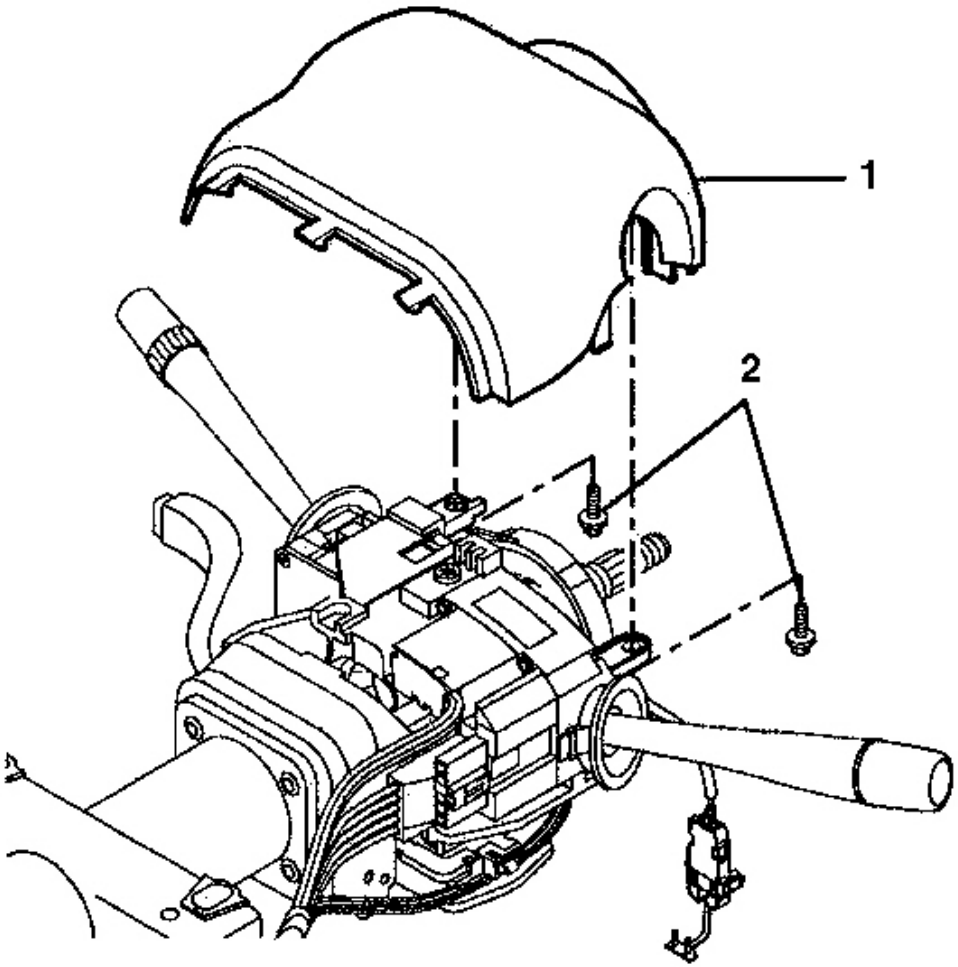

Fig. 29: TORX(R) Head Screws & Upper Trim Cover
Courtesy of GENERAL MOTORS CORP.

7. Remove the 2 TORX(R) head screws (2) from the upper trim cover (1).
8. Remove the upper trim cover (1).

Installation Procedure

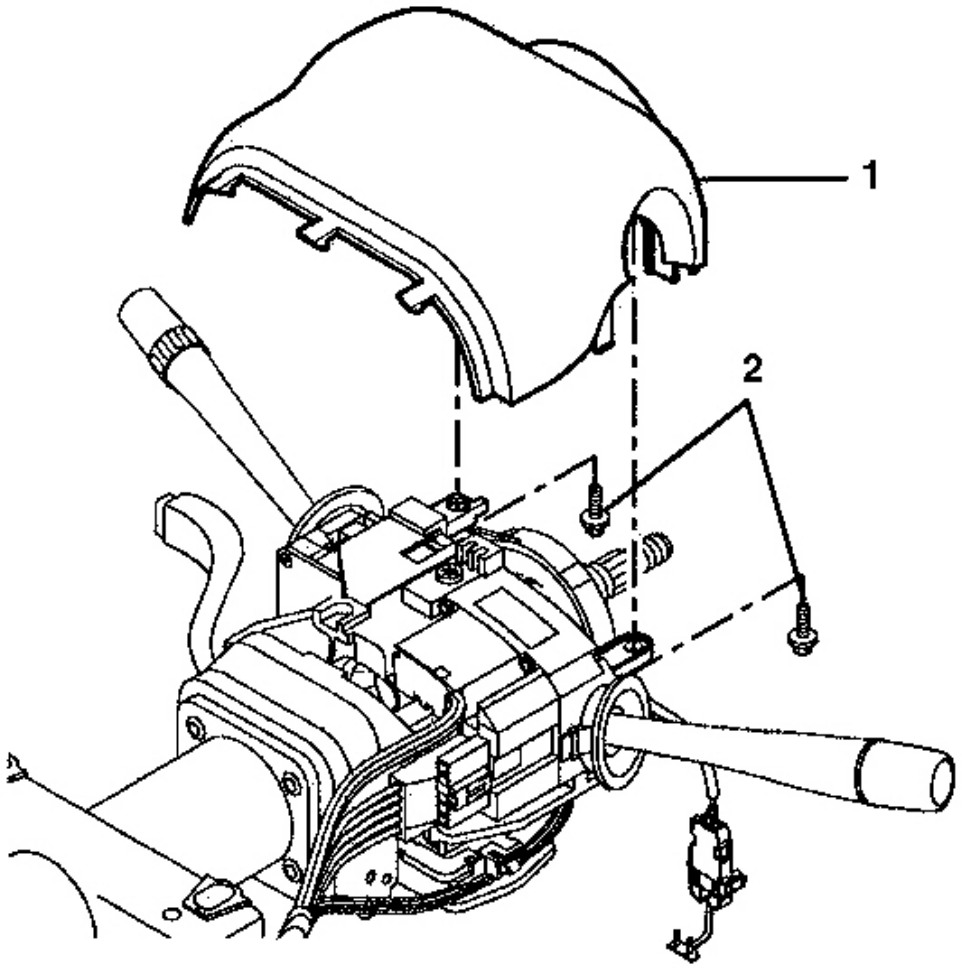

Fig. 30: TORX(R) Head Screws & Upper Trim Cover
Courtesy of GENERAL MOTORS CORP.

1. Install the upper trim cover.

NOTE: **Refer to Fastener Notice in Cautions and Notices.**

2. Secure the upper trim cover (1) with 2 TORX(R) head screws (2).

Tighten: Tighten the screws to 1.4 N.m (12 lb in).

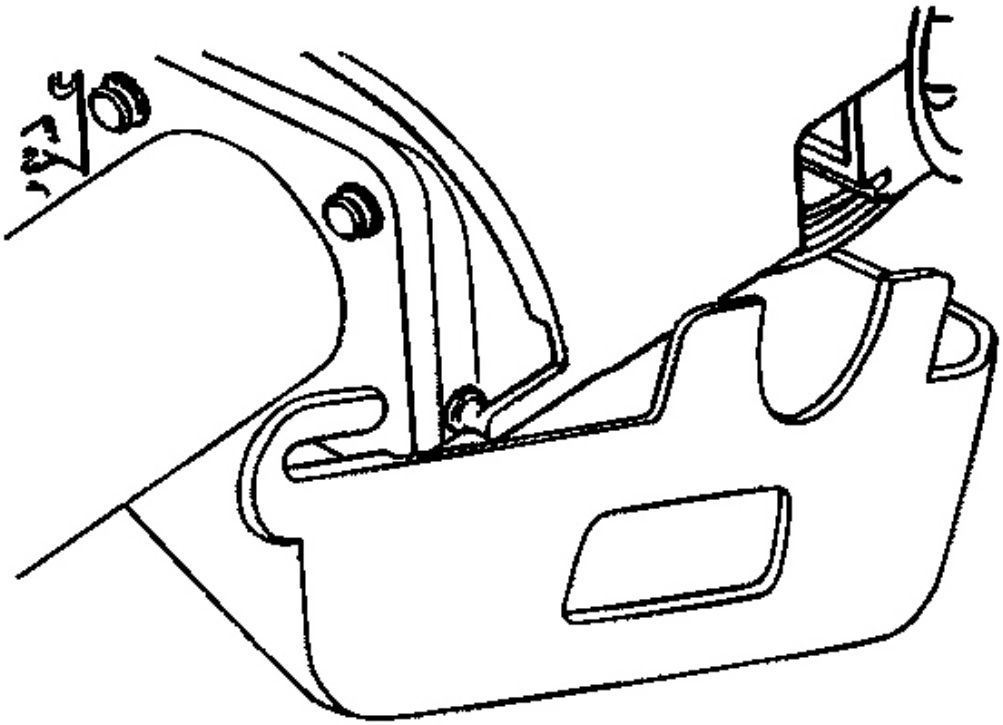

Fig. 31: Disengaging Upper Trim Cover
Courtesy of GENERAL MOTORS CORP.

3. Perform the following steps to install the lower trim cover:
    1. Verify that the slots on the lower trim cover engage with the tabs on the upper trim cover.
    2. Tilt the lower trim cover up and snap the trim covers together.

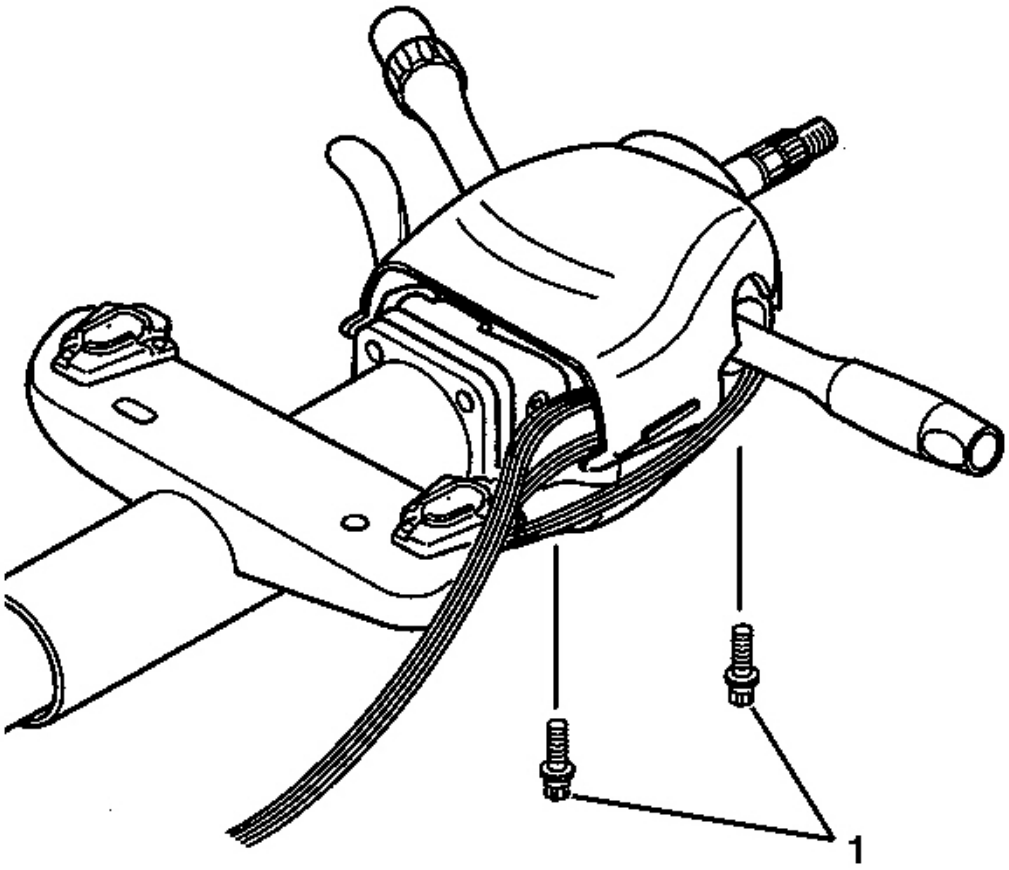

Fig. 32: TORX(R) Head Screws & Lower Trim Cover
Courtesy of GENERAL MOTORS CORP.

4. Install the 2 TORX(R) head screw (1) to the lower trim cover.

   Tighten: Tighten the screws to 4 N.m (35 lb in).

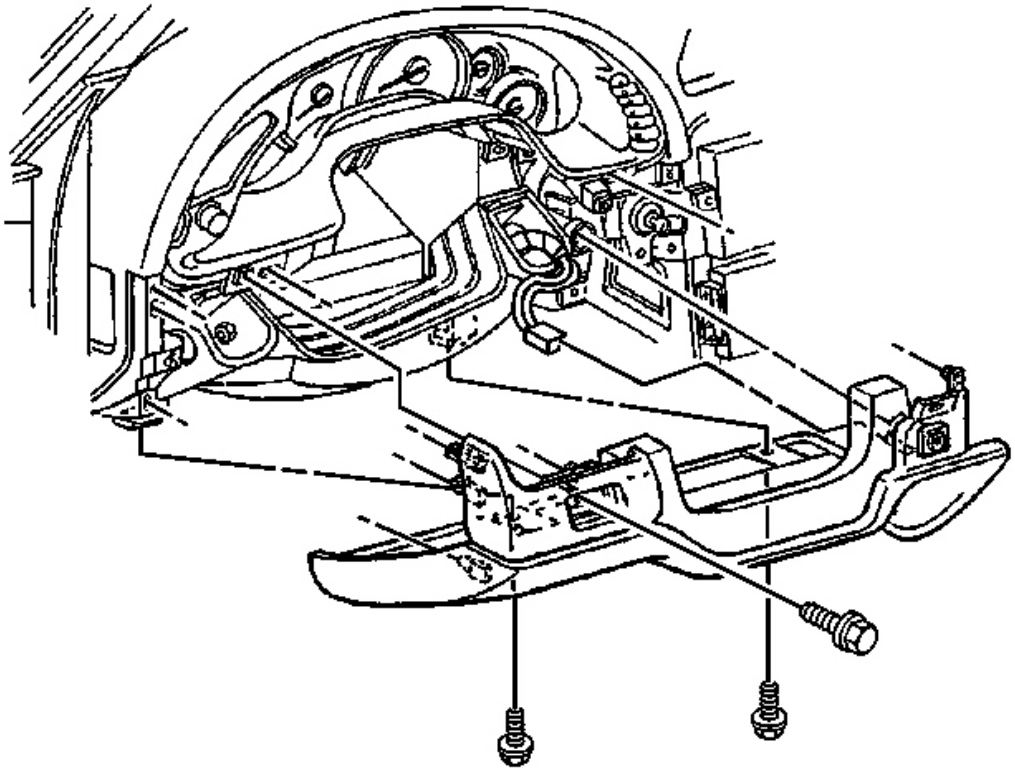

Fig. 33: TORX(R) Head Screws, Lower Trim Cover & Driver Knee Bolster Trim Panel
Courtesy of GENERAL MOTORS CORP.

5. Install the driver knee bolster trim panel. Refer to **Trim Panel Replacement - Knee Bolster** in Instrument Panel, Gages and Console.
6. Install the tilt lever. Refer to **Tilt Lever Replacement** .
7. Install the steering wheel. Refer to **Steering Wheel Replacement** .
8. Enable the SIR system. Refer to **SIR Disabling and Enabling Zone 3** in SIR.

TELESCOPING STEERING COLUMN CALIBRATION

Telescoping Soft Stops

After replacement of the seat control module, it is necessary to program the telescoping soft stops. Each soft stop is a programmable end of travel that is set approximately 1.3 cm (0.5 inch) from the mechanical end of travel. The steering column has a soft stop set at each end of the telescoping in/out movement. The system uses soft stops to prevent wear on the system by ensuring that the steering column movement stops before it reaches its mechanical end of travel in any direction. The soft stops are initially programmed at the factory. The stop

positions may be reprogrammed, which is necessary any time the seat control module is replaced, as described in the following procedure.

Telescoping Soft Stop Programming Procedure

1. Turn ignition to ON, leaving the engine off.
2. To set the telescoping in soft stop, press the telescoping COLUMN IN switch at least eight times or until the column moves.
3. Press the telescoping COLUMN IN switch and hold the switch until the column travels all the way in, and continue to hold the switch about a second after motion stops at the mechanical end of travel. The soft stop for the column in position is now set. The seat control module automatically goes back to the normal mode of operation.
4. Repeat steps 2 and 3, using the COLUMN OUT switch, to set the column out position soft stop.

TURN SIGNAL CANCEL CAM AND STEERING SHAFT UPPER BEARING SPRING REPLACEMENT (TELESCOPING)

Tools Required

- J 23653-SIR Steering Column Lock Plate Compressor
- **J 42137** Steering Column Lock Plate Compressor Adapter. See **Special Tools and Equipment** .

Removal Procedure

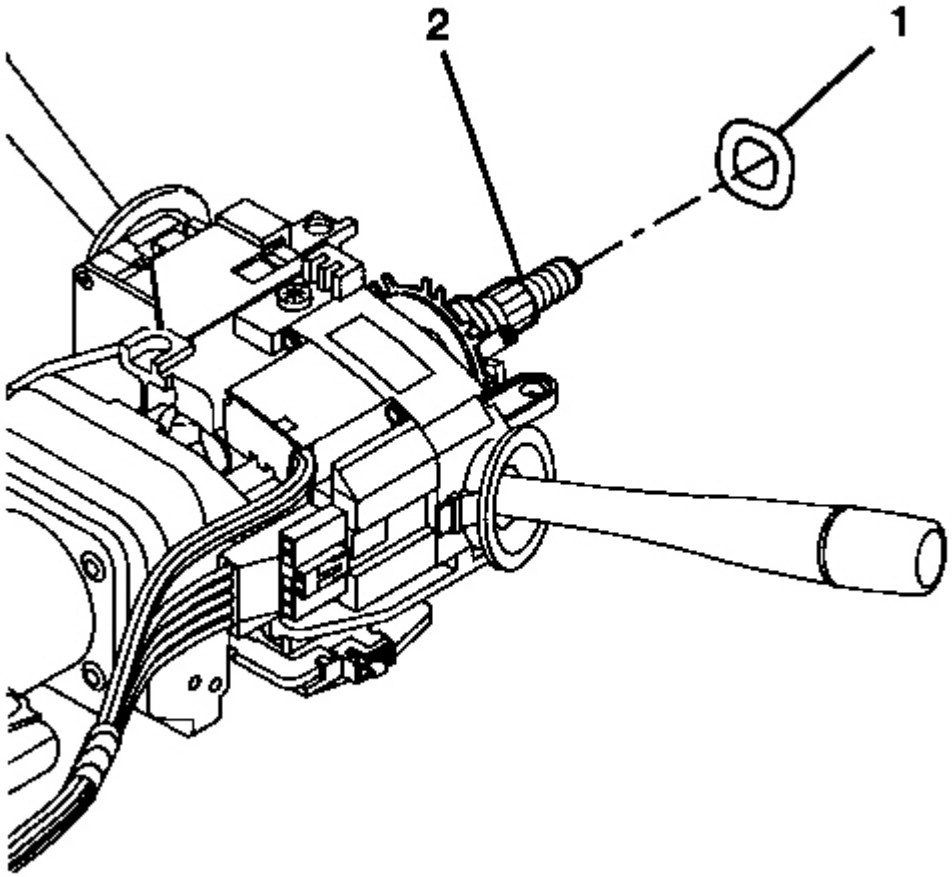

Fig. 34: Wave Washer & Steering Shaft
Courtesy of GENERAL MOTORS CORP.

CAUTION: Refer to SIR Caution in Cautions and Notices.

1. Disable the SIR system. Refer to **SIR Disabling and Enabling Zone 3** in SIR.

IMPORTANT: Let the SIR coil hang freely after removal.

2. Remove the SIR coil from the steering column. Refer to **Inflatable Restraint Steering Wheel Module Coil Replacement** in SIR.
3. Remove the wave washer (1) from the steering shaft assembly (2).

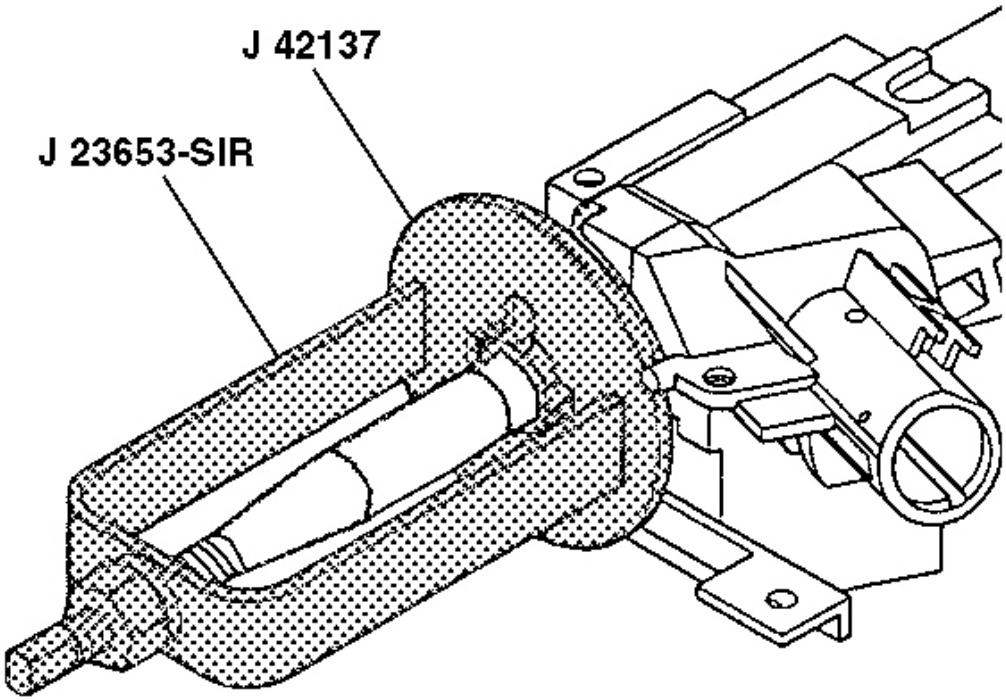

Fig. 35: Cam Orientation Plate, J 23653-SIR & J 42137
Courtesy of GENERAL MOTORS CORP.

4. Compress the cam orientation plate using J 23653-SIR and **J 42137** . See **Special Tools and Equipment** .
5. Remove the bearing retainer from the steering shaft assembly.
6. Remove J 23653-SIR and **J 42137** . See **Special Tools and Equipment** .
7. Dispose of the bearing retainer.

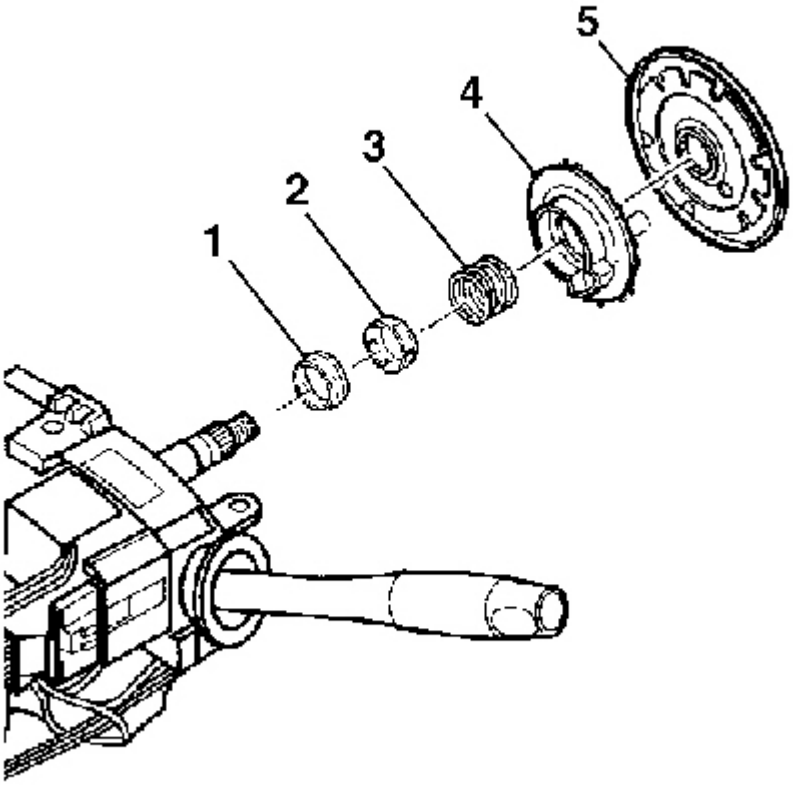

Fig. 36: Removing Steering Shaft & Components
Courtesy of GENERAL MOTORS CORP.

8. Remove the following from the steering shaft:
    1. Shaft lock shield (5)
    2. Turn signal cancel cam assembly (4)
    3. Upper bearing spring (3)
    4. Upper bearing inner race seat (2)
    5. Inner race (1)

Installation Procedure

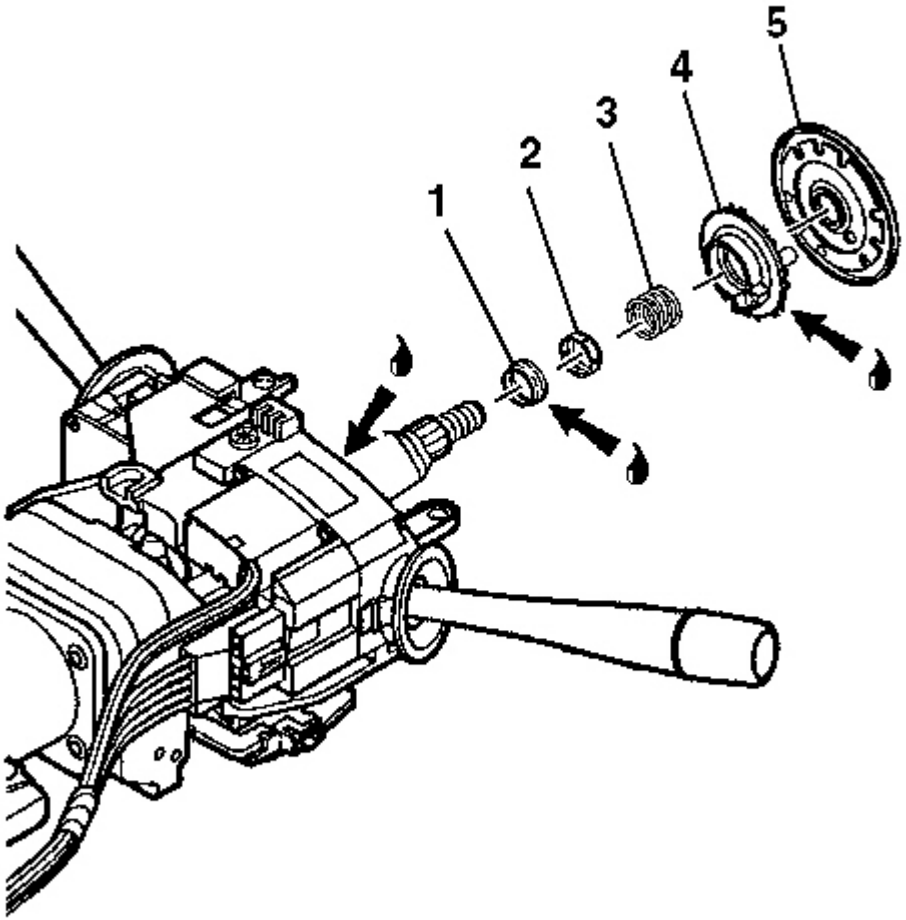

Fig. 37: Installing Steering Shaft & Components
Courtesy of GENERAL MOTORS CORP.

1. Install the following to the steering shaft:
    1. Inner race (1)
    2. Upper bearing inner race seat (2)
    3. Upper bearing spring (3)
    4. Turn signal cancel cam assembly (4)
    5. Shaft lock shield (5)

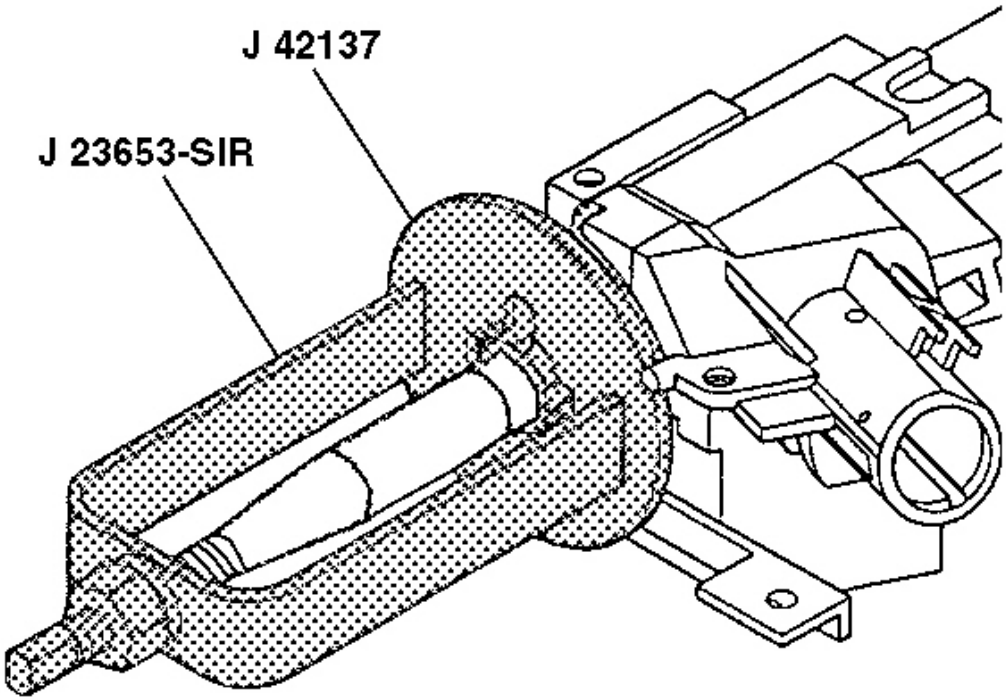

Fig. 38: Cam Orientation Plate, J 23653-SIR & J 42137
Courtesy of GENERAL MOTORS CORP.

IMPORTANT: The bearing retainer must be properly seated into the groove on the steering shaft.

2. Install a new bearing retainer onto the steering shaft assembly.
3. Compress the cam orientation plate using J 23653-SIR and **J 42137** to install the bearing retainer. See **Special Tools and Equipment** .
4. Remove J 23653-SIR and **J 42137** from the steering shaft assembly. See **Special Tools and Equipment** .

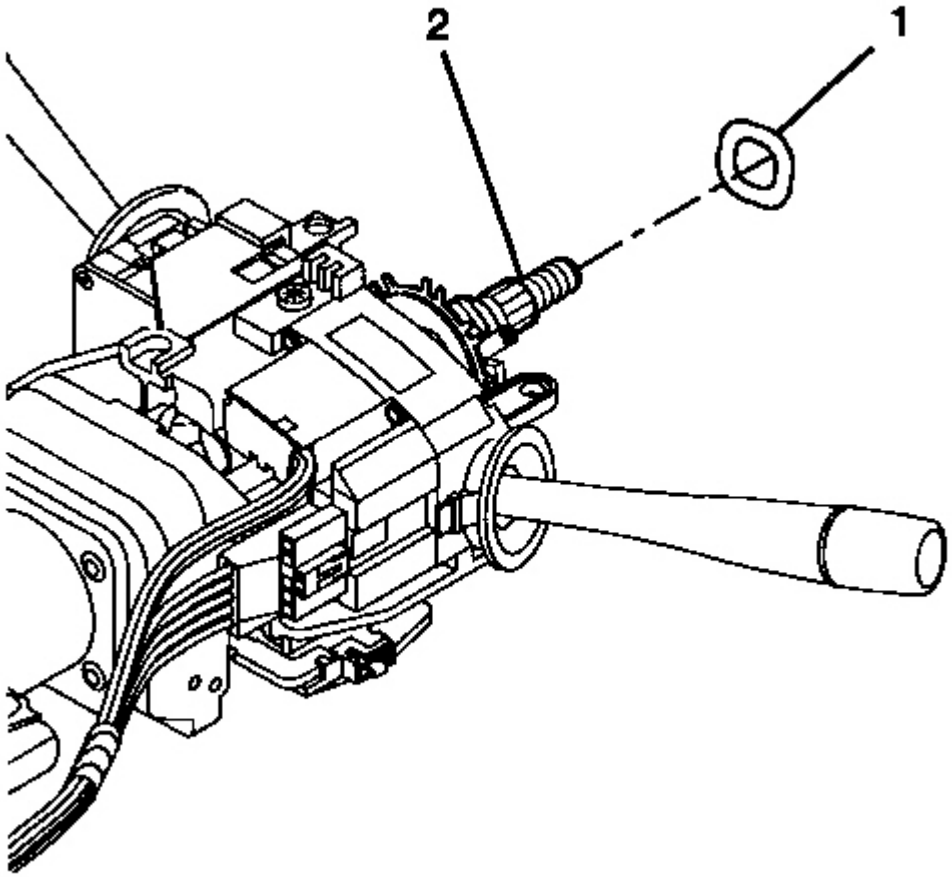

Fig. 39: Wave Washer & Steering Shaft
Courtesy of GENERAL MOTORS CORP.

5. Install the wave washer (1) onto the steering shaft assembly (2).
6. Install the SIR coil. Refer to **Inflatable Restraint Steering Wheel Module Coil Replacement** in SIR.
7. Enable the SIR system. Refer to **SIR Disabling and Enabling Zone 3** in SIR.

TURN SIGNAL CANCEL CAM AND STEERING SHAFT UPPER BEARING SPRING REPLACEMENT (MANUAL)

Tools Required

- J 23653-SIR Steering Column Lock Plate Compressor
- **J 42137** Steering Column Lock Plate Compressor Adapter. See **Special Tools and Equipment** .

Removal Procedure

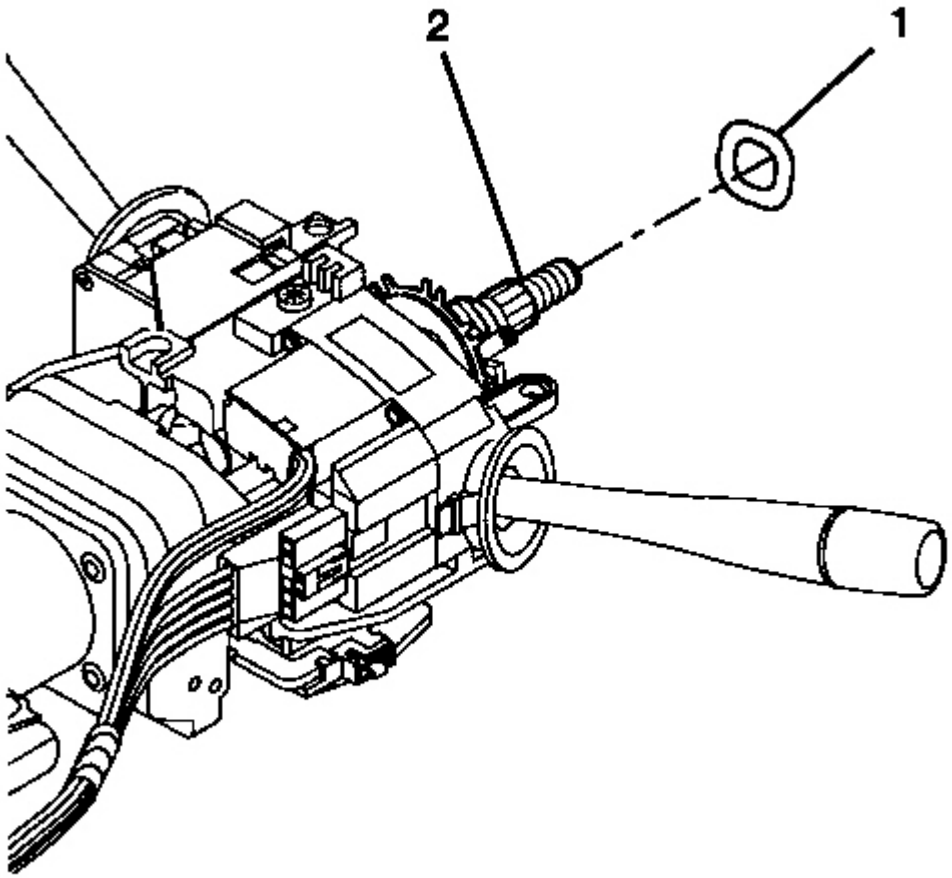

Fig. 40: Wave Washer & Steering Shaft
Courtesy of GENERAL MOTORS CORP.

CAUTION: Refer to SIR Caution in Cautions and Notices.

1. Disable the SIR system. Refer to **SIR Disabling and Enabling Zone 3** in SIR.

IMPORTANT: Let the SIR coil hang freely after removal.

2. Remove the SIR coil from the steering column. Refer to **Inflatable Restraint Steering Wheel Module**

Coil Replacement in SIR.

3. Remove the wave washer (1) from the steering shaft assembly (2).

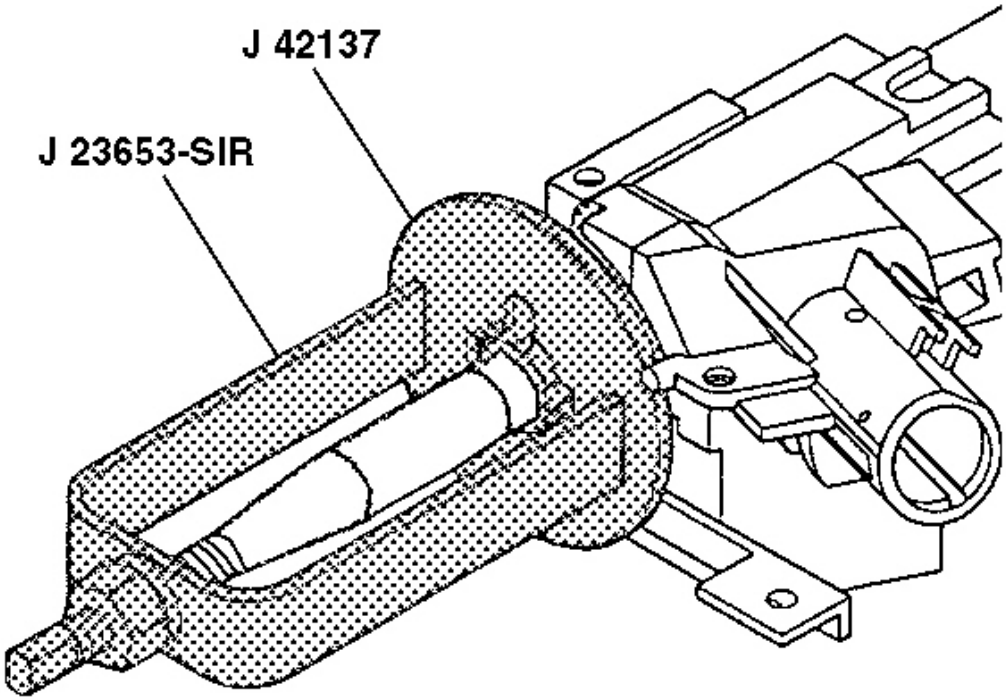

Fig. 41: Cam Orientation Plate, J 23653-SIR & J 42137
Courtesy of GENERAL MOTORS CORP.

4. Compress the cam orientation plate using J 23653-SIR and **J 42137** . See **Special Tools and Equipment** .
5. Remove the bearing retainer from the steering shaft assembly.
6. Remove J 23653-SIR and **J 42137** . See **Special Tools and Equipment** .
7. Dispose of the bearing retainer.

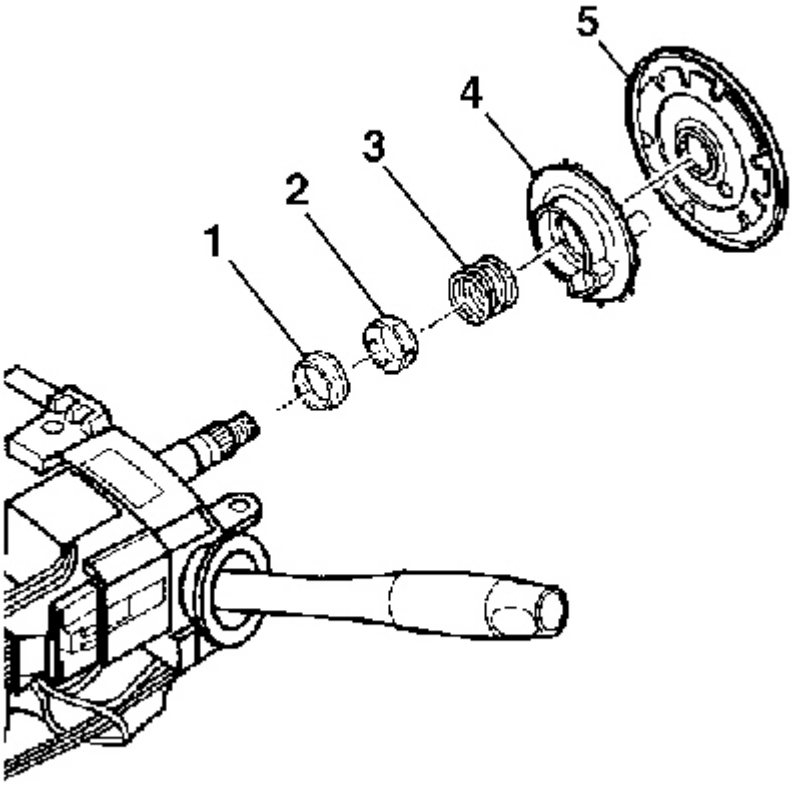

Fig. 42: Removing Steering Shaft & Components
Courtesy of GENERAL MOTORS CORP.

8. Remove the following from the steering shaft:
    1. Shaft lock shield (5)
    2. Turn signal cancel cam assembly (4)
    3. Upper bearing spring (3)
    4. Upper bearing inner race seat (2)
    5. Inner race (1)

Installation Procedure

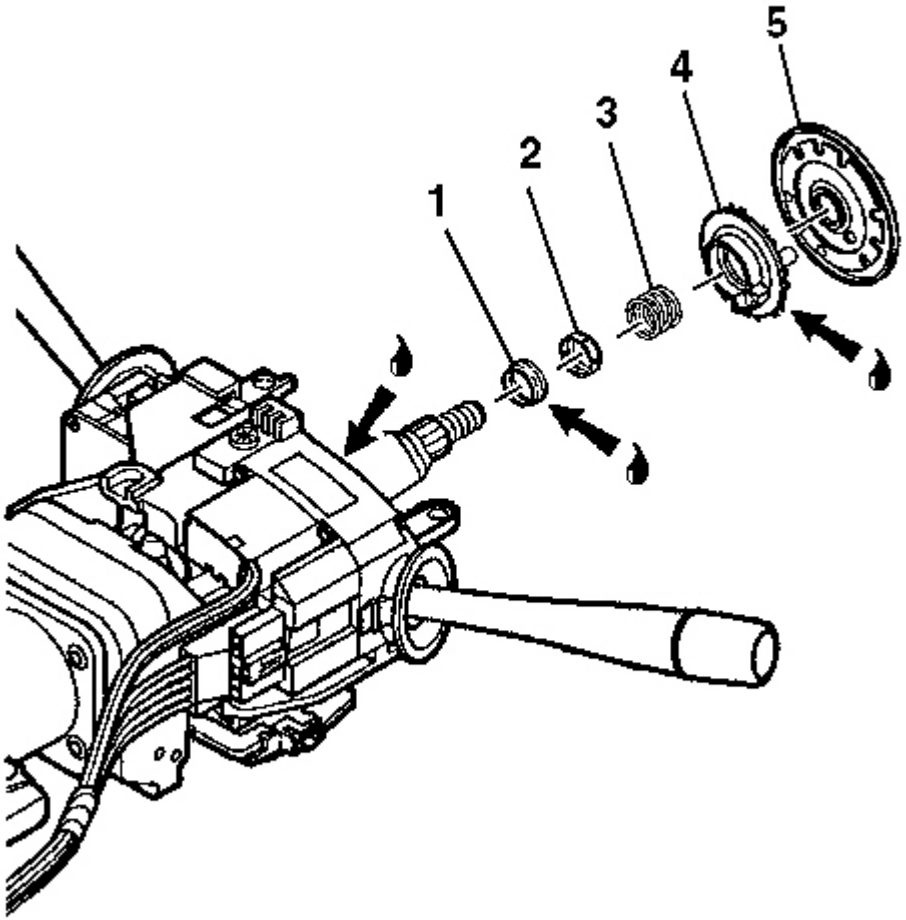

Fig. 43: Installing Steering Shaft & Components
Courtesy of GENERAL MOTORS CORP.

1. Install the following to the steering shaft:
    1. Inner race (1)
    2. Upper bearing inner race seat (2)
    3. Upper bearing spring (3)
    4. Turn signal cancel cam assembly (4)
    5. Shaft lock shield (5)

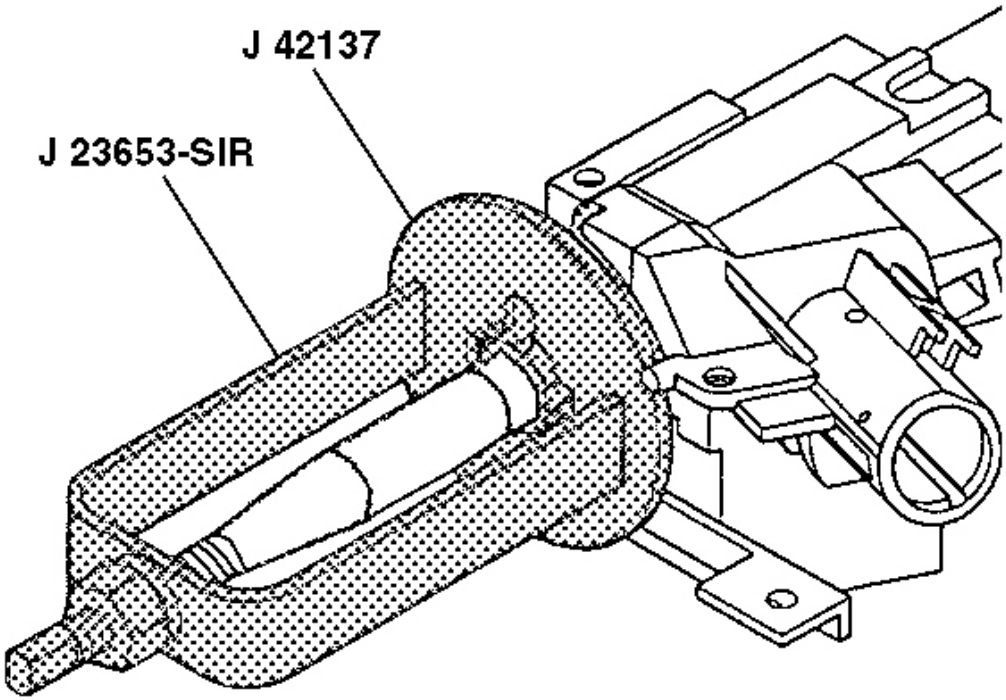

Fig. 44: Cam Orientation Plate, J 23653-SIR & J 42137
Courtesy of GENERAL MOTORS CORP.

IMPORTANT: The bearing retainer must be properly seated into the groove on the steering shaft.

2. Install a new bearing retainer onto the steering shaft assembly.
3. Compress the cam orientation plate using J 23653-SIR and **J 42137** to install the bearing retainer. See **Special Tools and Equipment** .
4. Remove J 23653-SIR and **J 42137** from the steering shaft assembly. See **Special Tools and Equipment** .

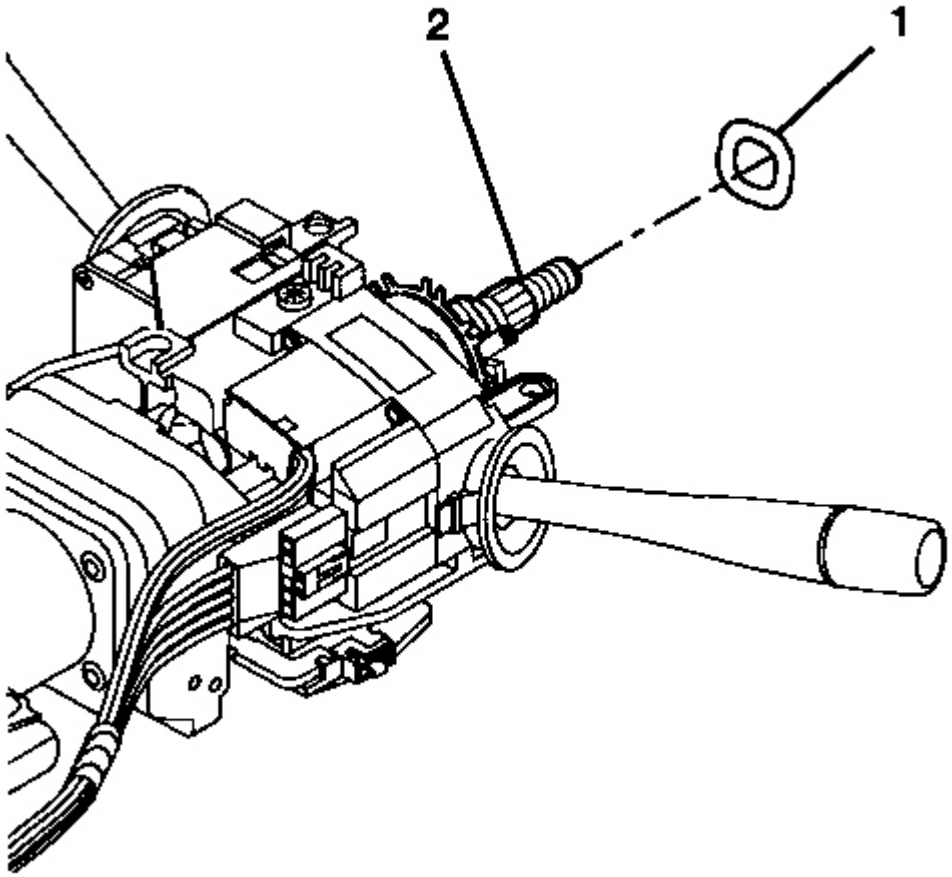

Fig. 45: Wave Washer & Steering Shaft
Courtesy of GENERAL MOTORS CORP.

5. Install the wave washer (1) onto the steering shaft assembly (2).
6. Install the SIR coil. Refer to **Inflatable Restraint Steering Wheel Module Coil Replacement** in SIR.
7. Enable the SIR system. Refer to **SIR Disabling and Enabling Zone 3** in SIR.

MULTIFUNCTION, TURN SIGNAL SWITCH REPLACEMENT

Removal Procedure

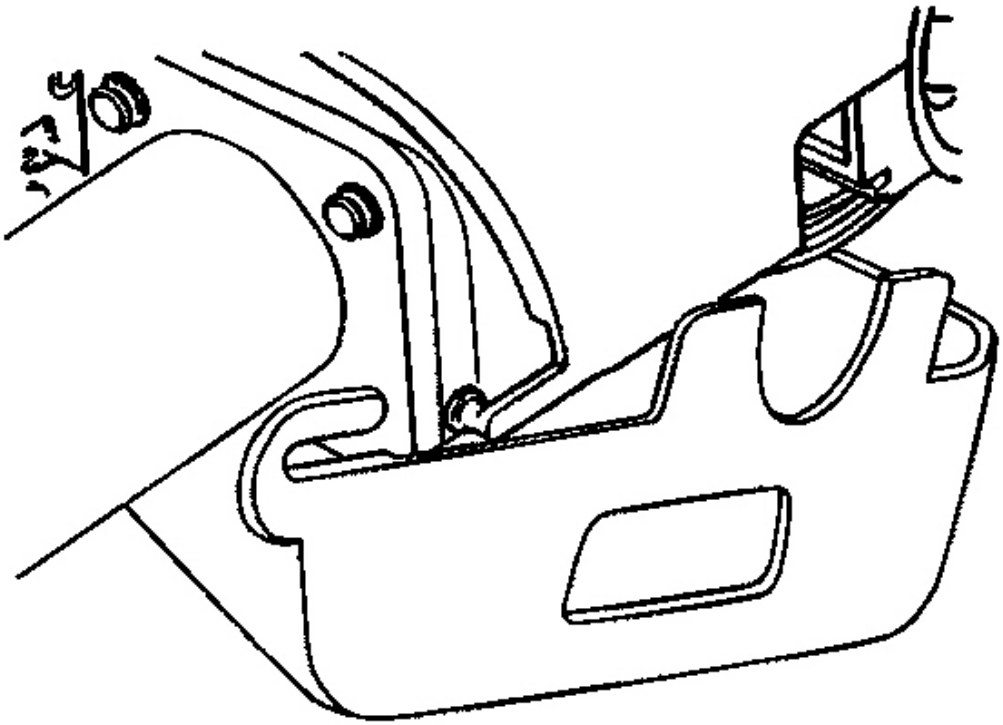

Fig. 46: Disengaging Upper Trim Cover
Courtesy of GENERAL MOTORS CORP.

1. Remove the upper and lower steering column trim covers. Refer to **Steering Column Trim Covers Replacement (Telescoping)** or **Steering Column Trim Covers Replacement (Manual)** .

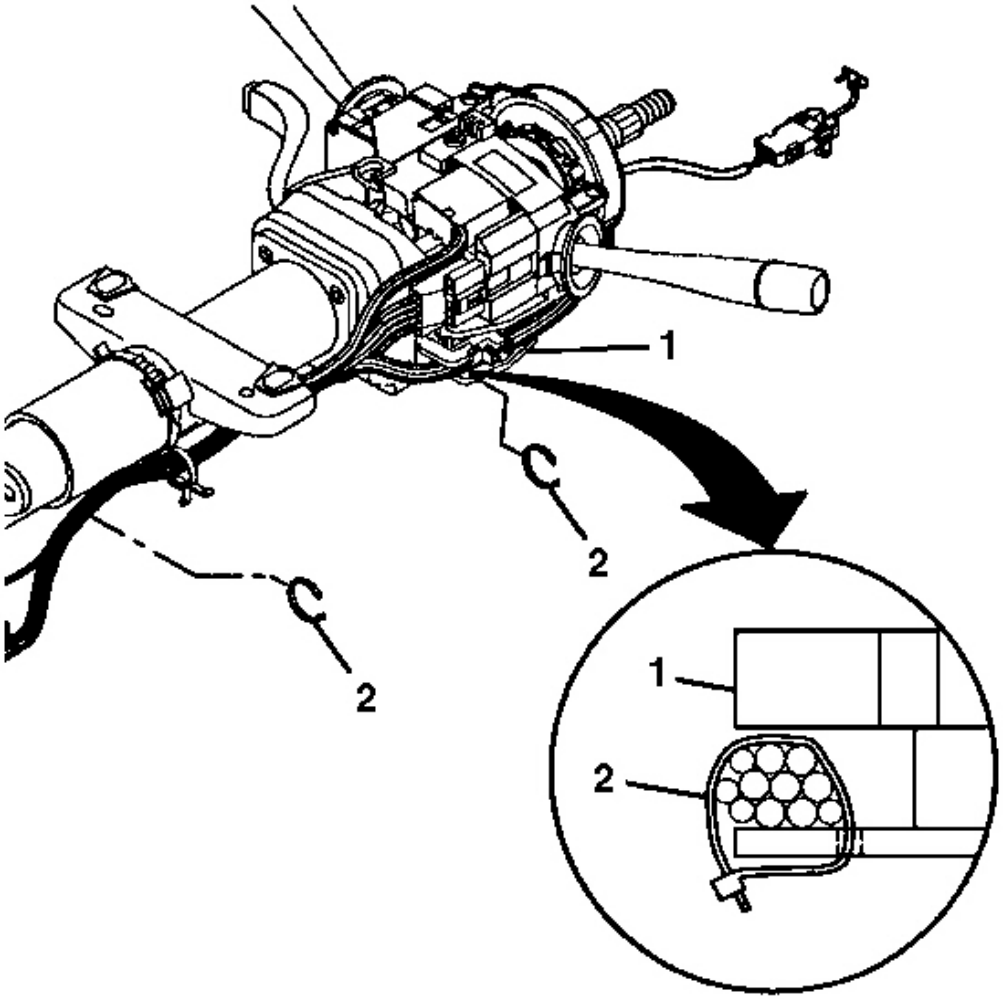

Fig. 47: Wire Harness Straps & Steering Column Tilt Head Assembly
Courtesy of GENERAL MOTORS CORP.

2. Remove the wire harness straps (2) from the steering column tilt head assembly (1) and the column.

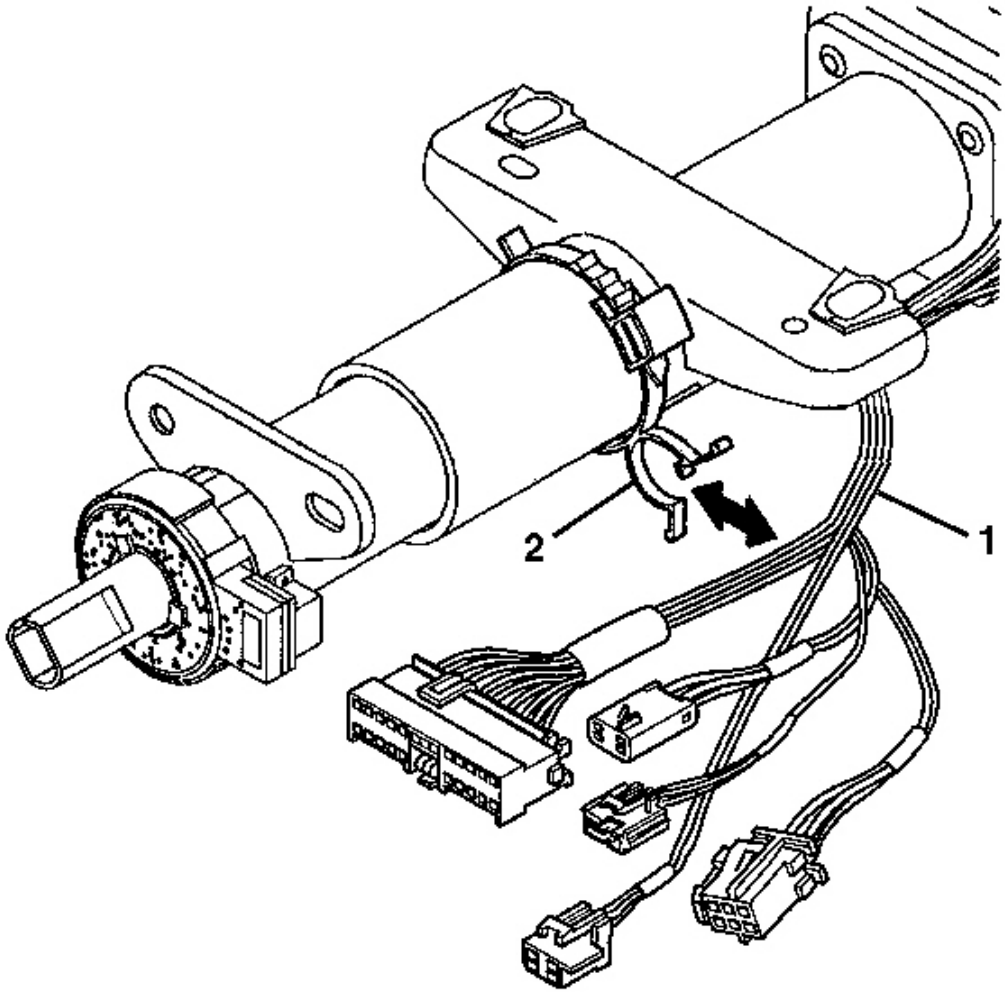

Fig. 48: Wire Harness Assembly & Wire Harness Strap
Courtesy of GENERAL MOTORS CORP.

3. Remove the wire harness assembly (1) from the wire harness strap (2).

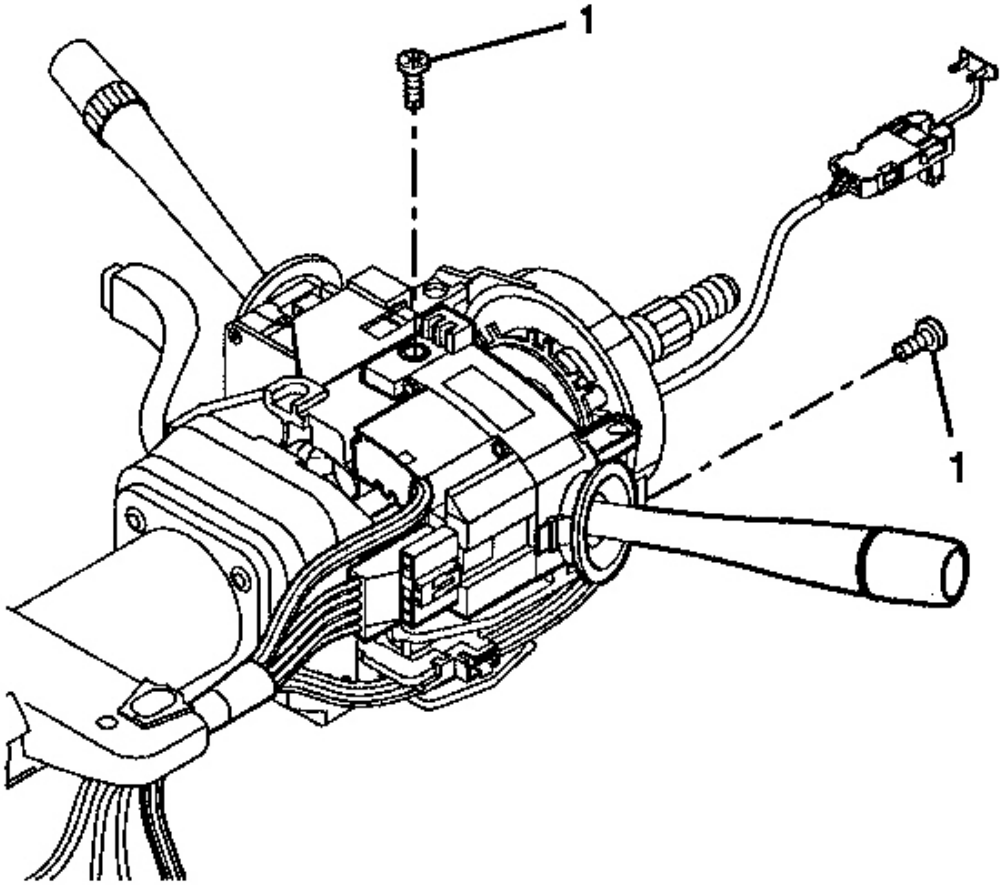

Fig. 49: 2 Pan Head Tapping Screws
Courtesy of GENERAL MOTORS CORP.

4. Remove the 2 pan head tapping screws (1).

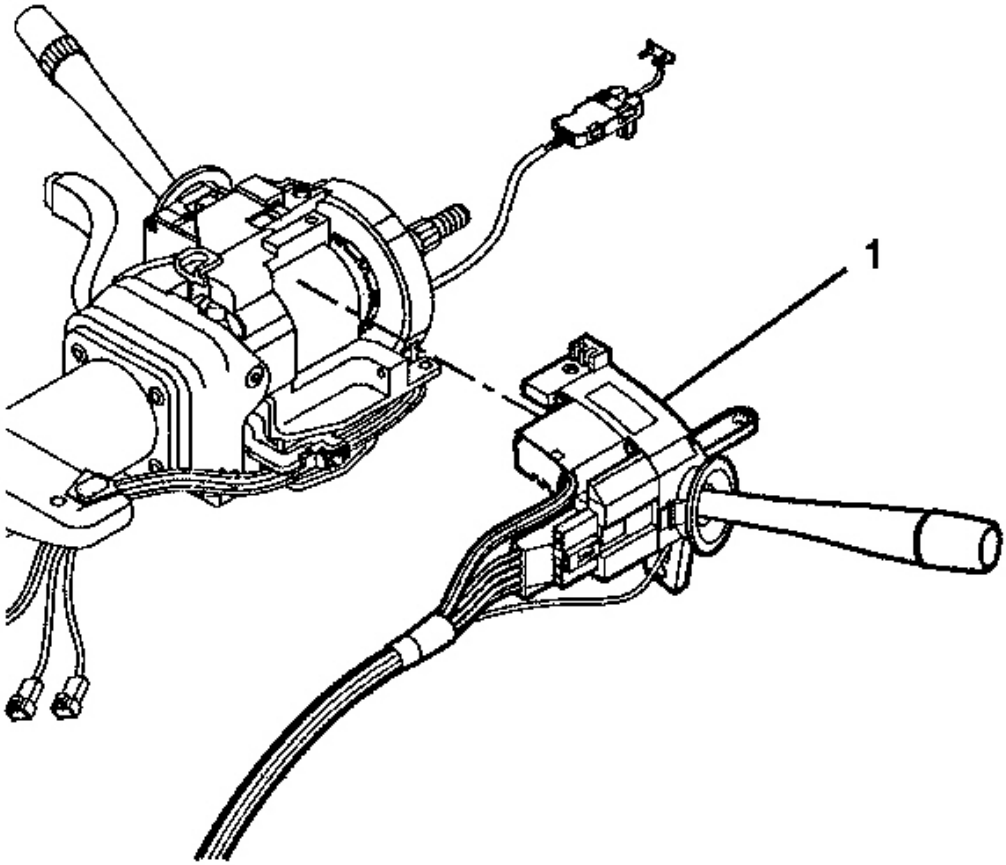

Fig. 50: Multifunction Turn Signal Switch Assembly
Courtesy of GENERAL MOTORS CORP.

5. Remove the multifunction turn signal switch assembly (1).

Installation Procedure

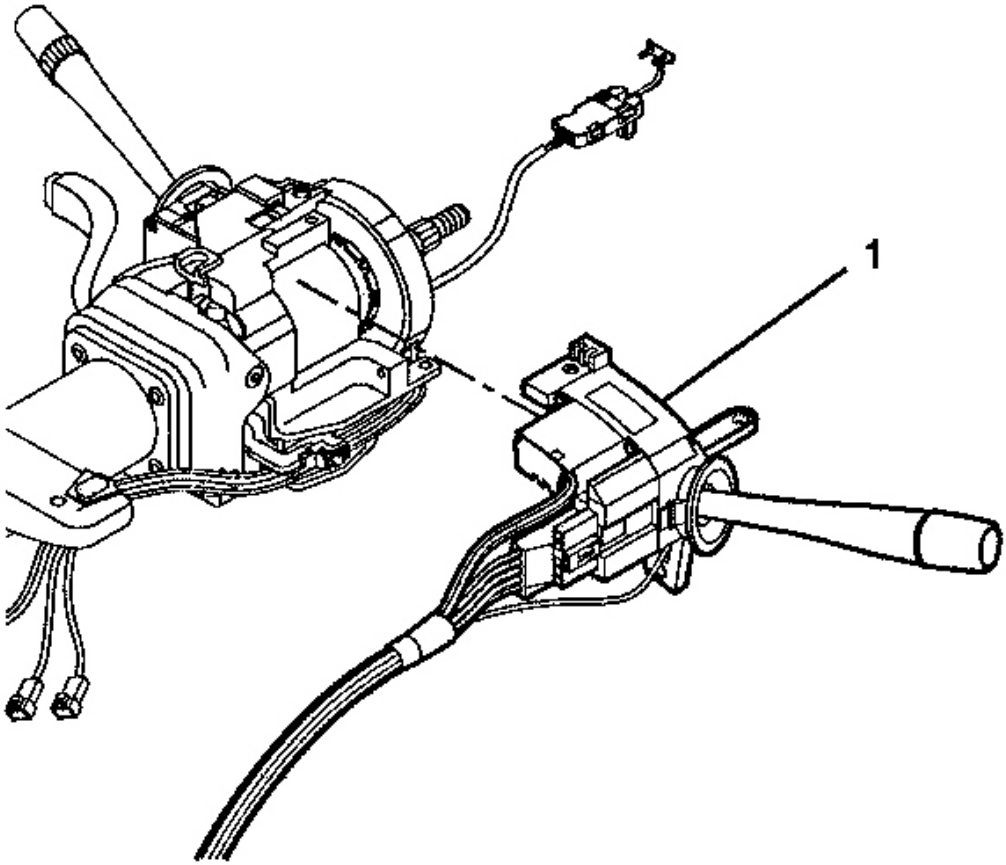

Fig. 51: Multifunction Turn Signal Switch Assembly
Courtesy of GENERAL MOTORS CORP.

IMPORTANT: The electrical contact must rest on the turn signal cancel cam assembly.

1. Install the multifunction turn signal switch assembly (1) to the steering column assembly.

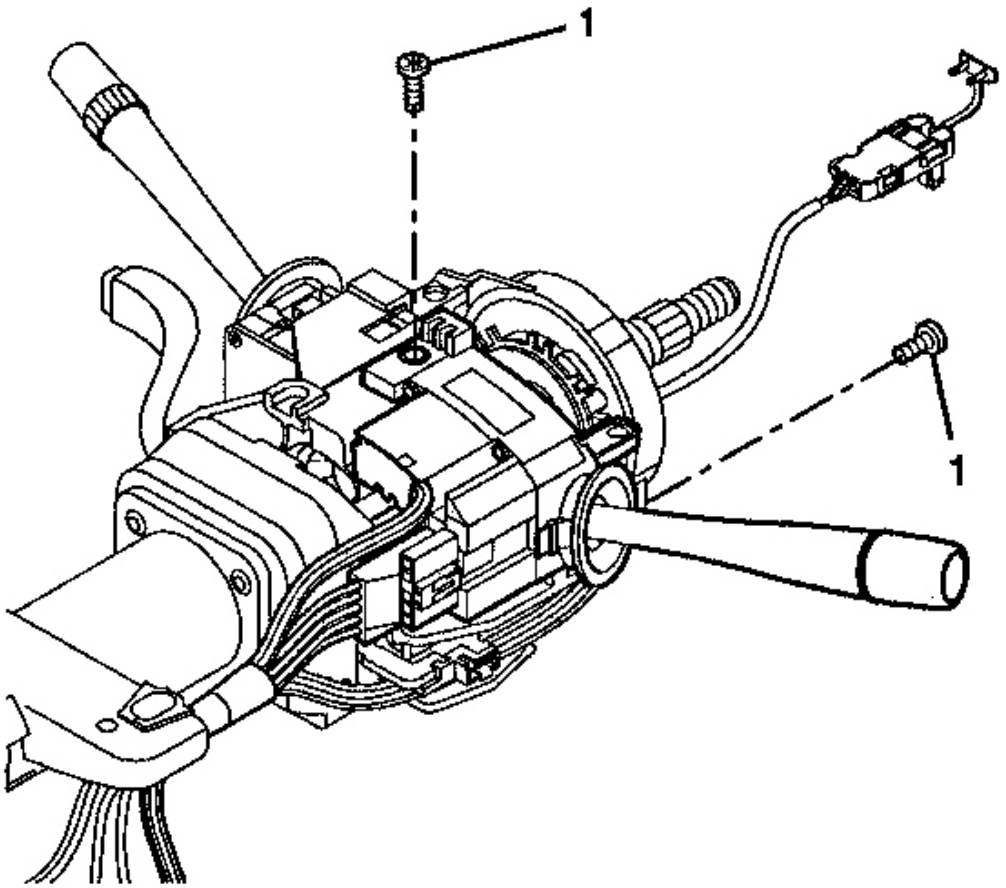

Fig. 52: 2 Pan Head Tapping Screws
Courtesy of GENERAL MOTORS CORP.

NOTE: Refer to Fastener Notice in Cautions and Notices.

2. Install the 2 pan head tapping screws (1).

   Tighten: Tighten the screws to 7 N.m (62 lb in).

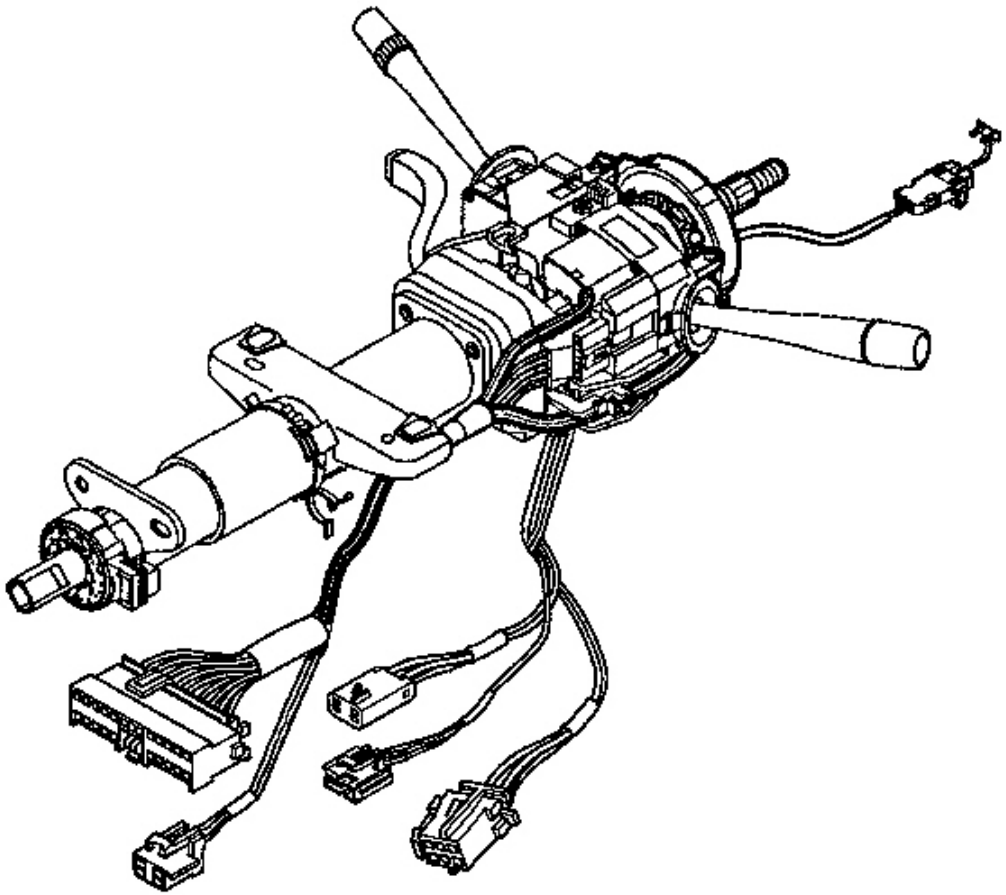

Fig. 53: Wire Harness Assembly & Steering Column Jacket Assembly
Courtesy of GENERAL MOTORS CORP.

3. Route the wire harness assembly along the steering column jacket assembly.

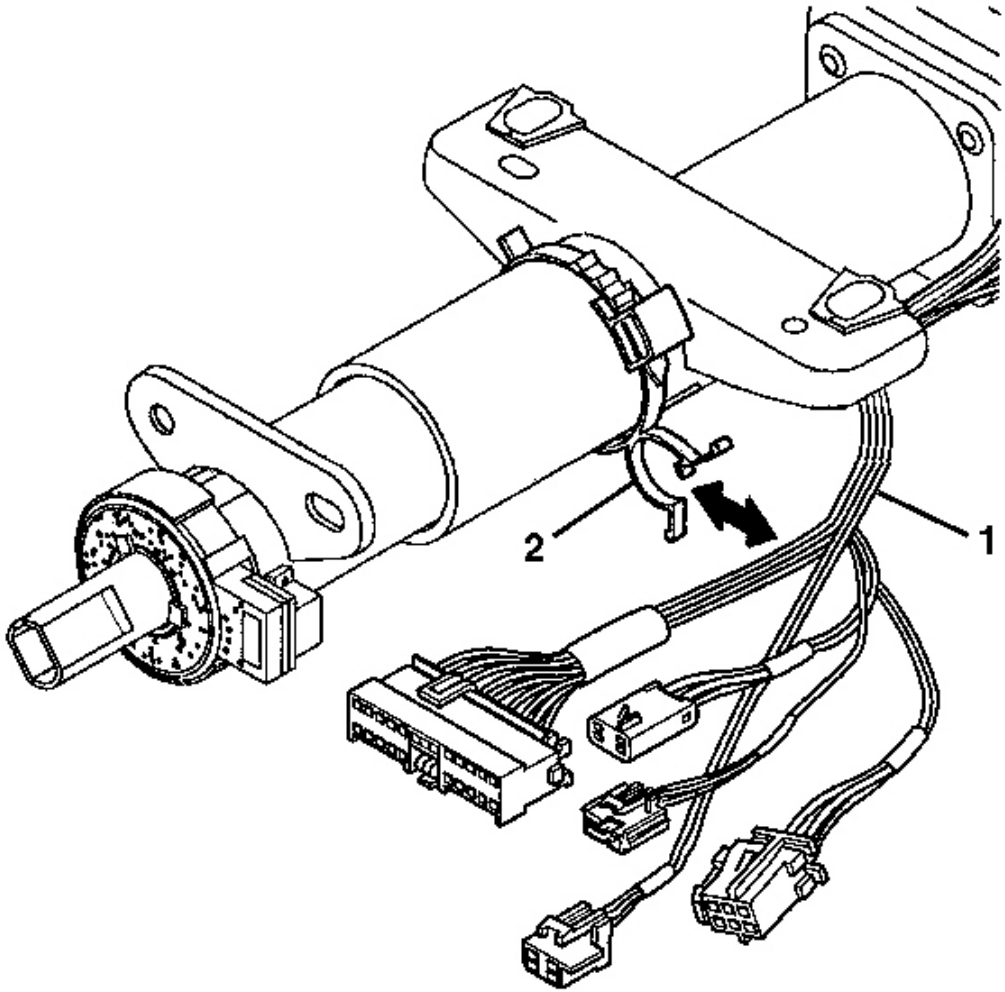

Fig. 54: Wire Harness Assembly & Wire Harness Strap
Courtesy of GENERAL MOTORS CORP.

4. Install the wire harness assembly (1) into the wire harness strap (2).

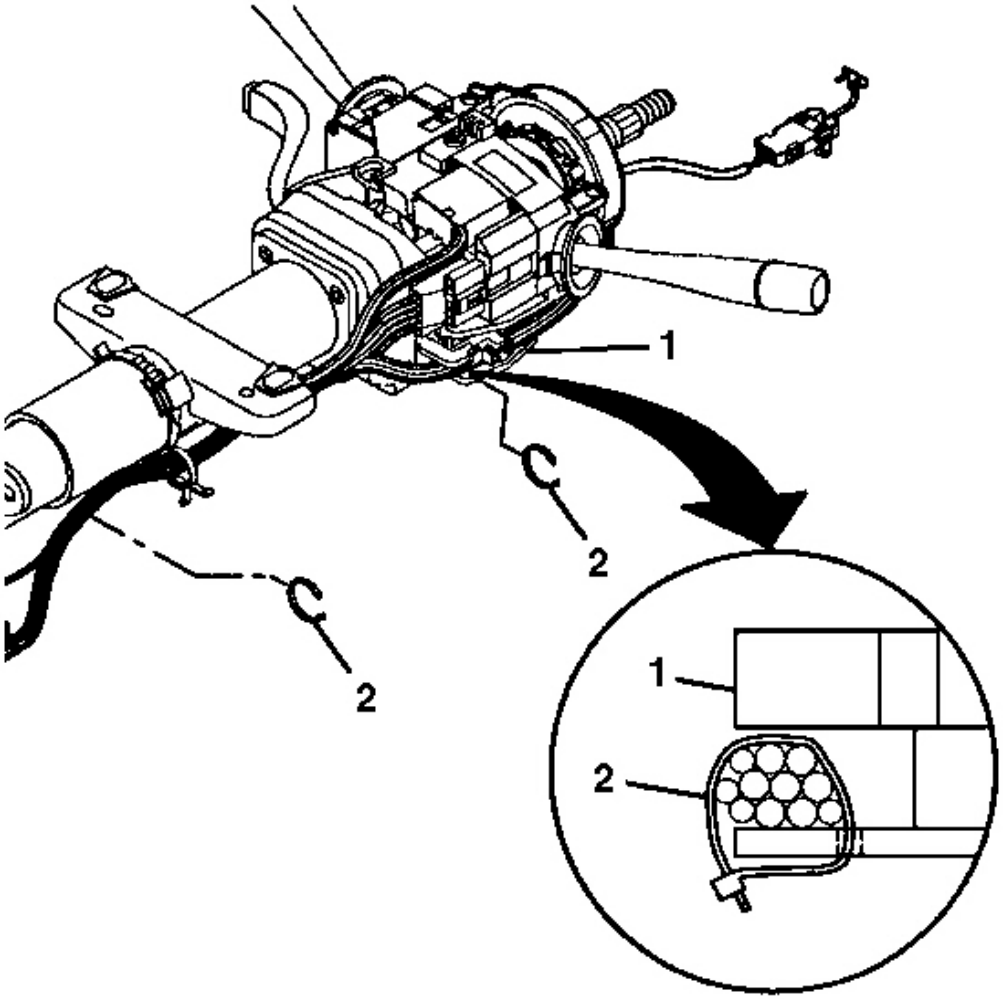

Fig. 55: Wire Harness Straps & Steering Column Tilt Head Assembly
Courtesy of GENERAL MOTORS CORP.

5. Install new wire harness straps (2) to the steering column assembly (1) and the column.

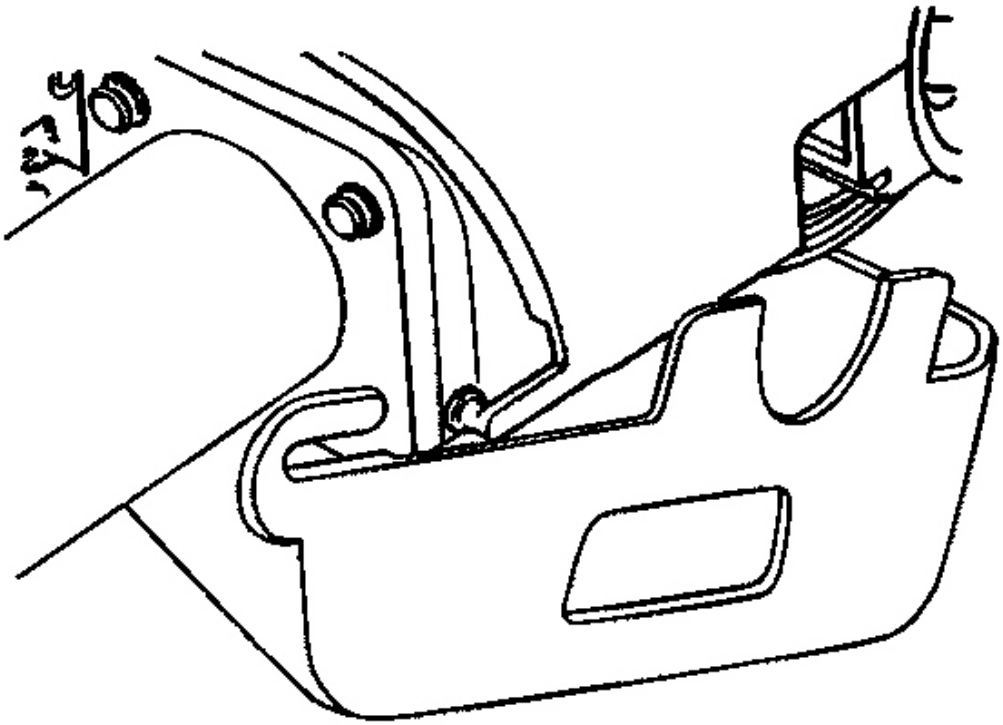

Fig. 56: Disengaging Upper Trim Cover
Courtesy of GENERAL MOTORS CORP.

6. Install the upper and lower steering column trim covers. Refer to **Steering Column Trim Covers Replacement (Telescoping)** or **Steering Column Trim Covers Replacement (Manual)** .

TILT LEVER REPLACEMENT

Removal Procedure

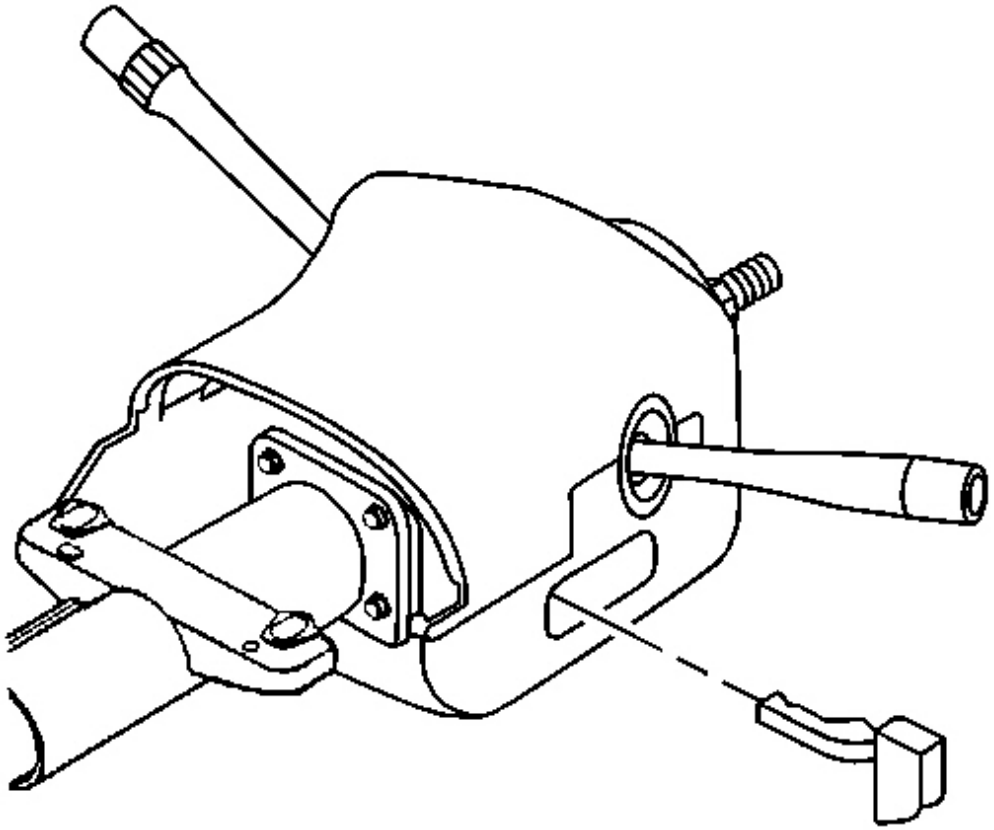

Fig. 57: Locking Tab & Tilt Lever Handle
Courtesy of GENERAL MOTORS CORP.

1. Using a small screw driver, release the locking tab from the tilt lever handle.
2. Slide the tilt lever handle straight out from the steering column.

Installation Procedure

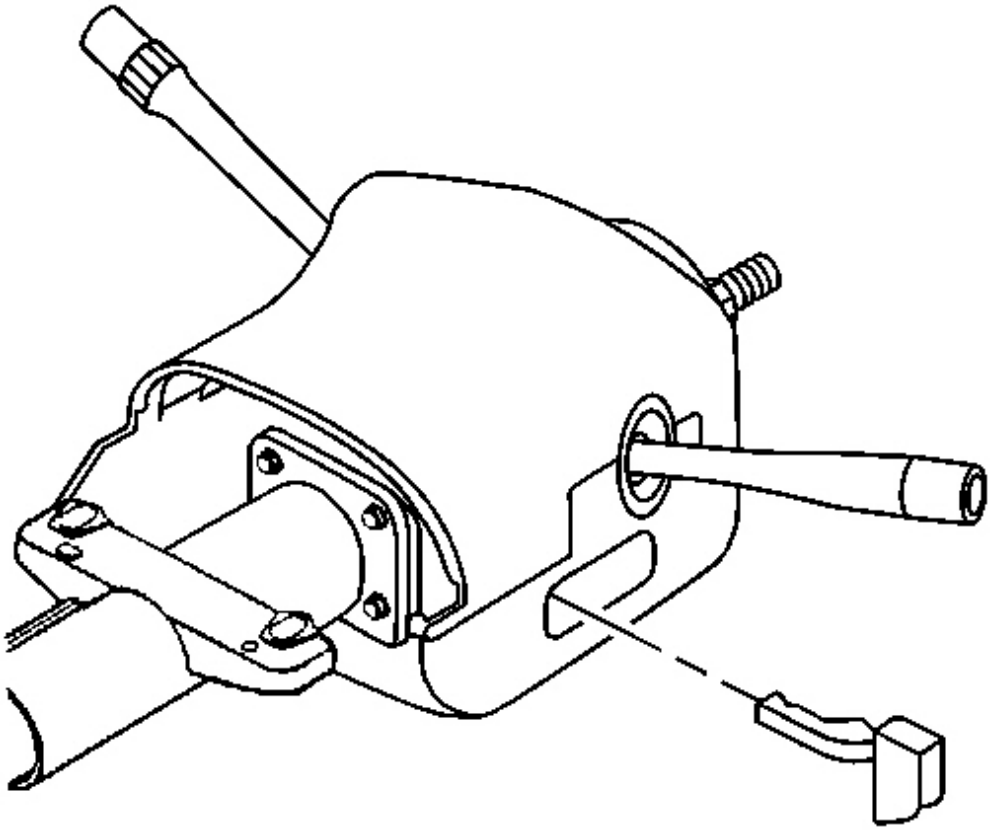

Fig. 58: Locking Tab & Tilt Lever Handle
Courtesy of GENERAL MOTORS CORP.

Slide the tilt lever handle into the steering column until the locking tab clicks into place.

HORN SWITCH REPLACEMENT

The horn switch is an internal component of the steering wheel inflator module and is not serviceable. If the horn switch fails and needs replacement. Refer to **Inflatable Restraint Steering Wheel Module Replacement** in SIR.

STEERING WHEEL REPLACEMENT

Tools Required

- **J 36541-A** Steering Wheel Puller Legs. See **Special Tools and Equipment** .

- **J 1859-A** Steering Wheel Puller. See **Special Tools and Equipment** .
- **J 42640** Steering Column Lock Pin. See **Special Tools and Equipment** .

Removal Procedure

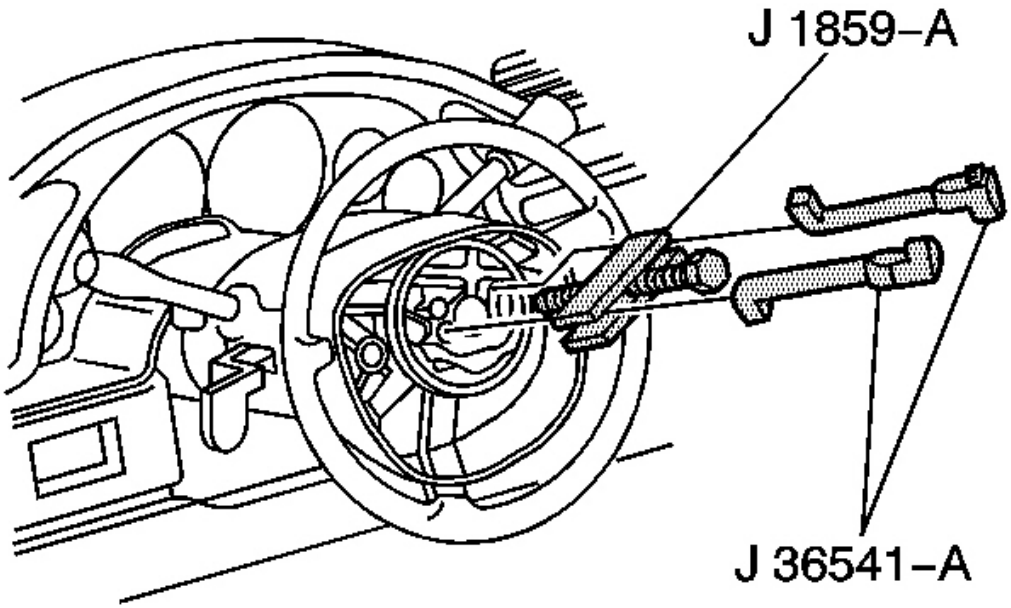

Fig. 59: J 42640 & J 36541-A
Courtesy of GENERAL MOTORS CORP.

1. Remove the steering wheel inflator module. Refer to **Inflatable Restraint Steering Wheel Module Replacement** in SIR.
2. Remove the horn electrical connector.
3. Install **J 42640** to the steering column. See **Special Tools and Equipment** .
4. Remove the steering wheel set nut.
5. Discard the steering wheel set nut.
6. Install **J 36541-A** and**J 1859-A** to the steering wheel. See **Special Tools and Equipment** .
7. Tighten the puller center screw against steering column shaft until the steering wheel slides off the steering column shaft.
8. Remove **J 36541-A** and**J 1859-A** from the steering wheel. See **Special Tools and Equipment** .

Installation Procedure

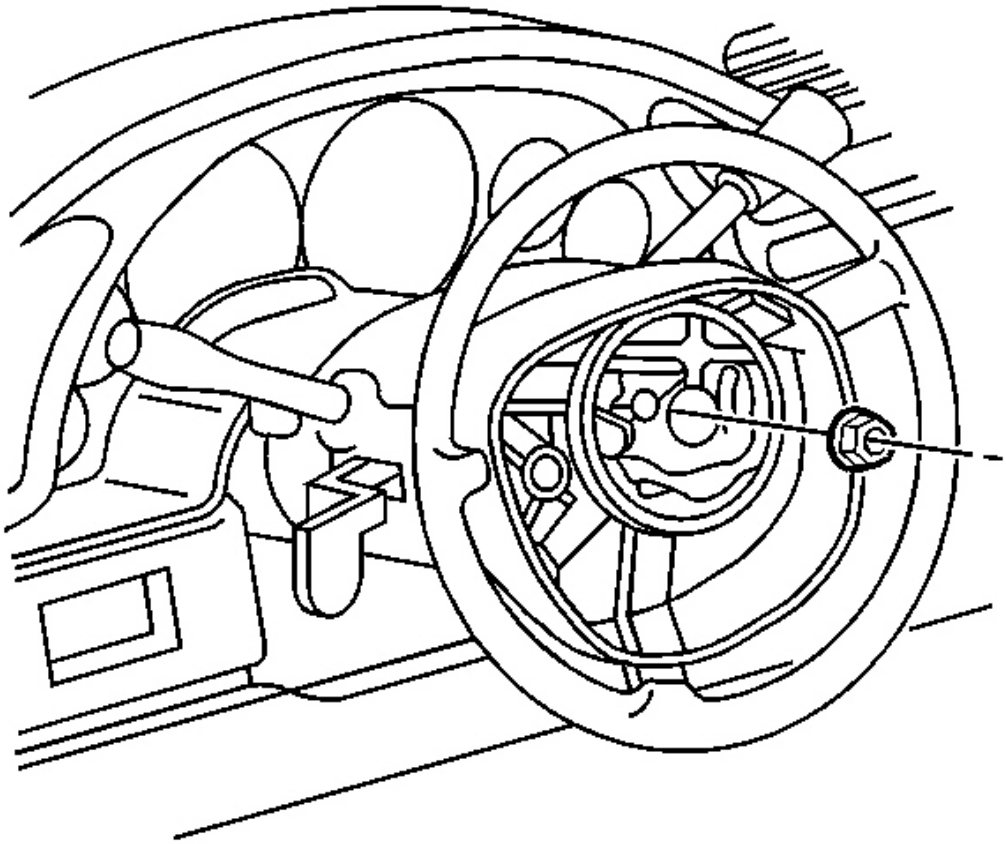

Fig. 60: Steering Wheel Set Nut
Courtesy of GENERAL MOTORS CORP.

1. Install the steering wheel to the steering column, observing the alignment marks.

NOTE: **Refer to Fastener Notice in Cautions and Notices.**

2. Install a new steering wheel set nut.

   Tighten: Tighten the nut to 41 N.m (30 lb ft).

3. Remove **J 42640** from the steering column. See **Special Tools and Equipment** .
4. Connect the horn electrical connector.
5. Install the steering wheel inflator module. Refer to **Inflatable Restraint Steering Wheel Module Replacement** in SIR.

TELESCOPE ACTUATOR SWITCH REPLACEMENT

Removal Procedure

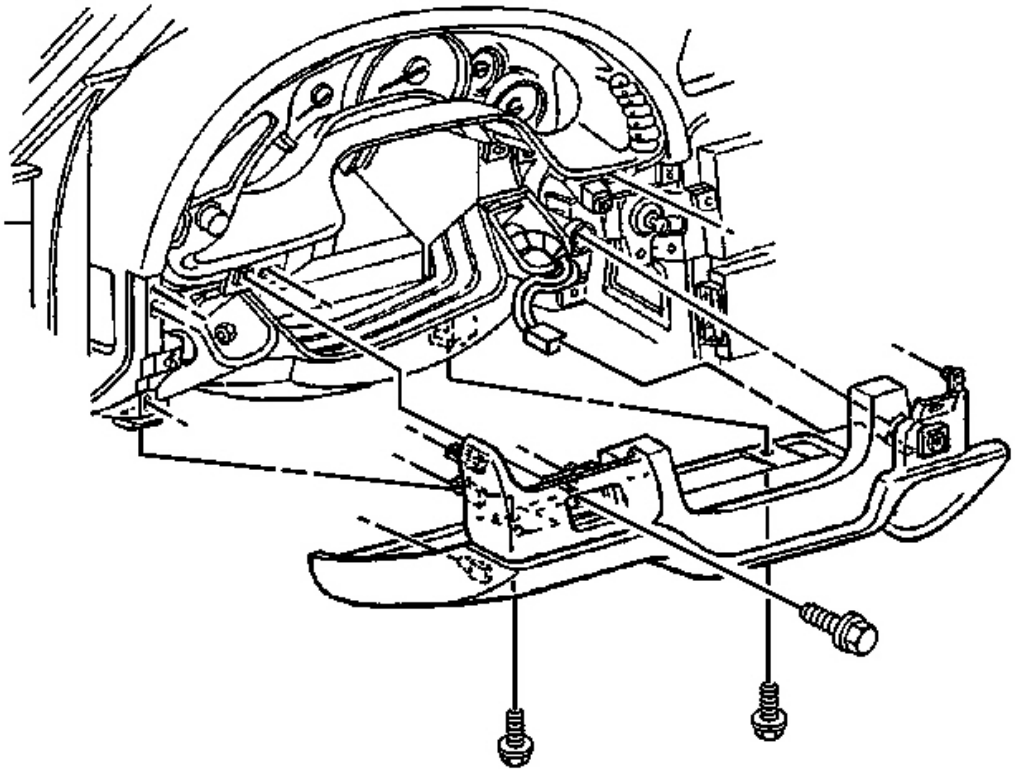

Fig. 61: TORX(R) Head Screws, Lower Trim Cover & Driver Knee Bolster Trim Panel
Courtesy of GENERAL MOTORS CORP.

CAUTION: Refer to SIR Caution in Cautions and Notices.

1. Disable the SIR system. Refer to **SIR Disabling and Enabling Zone 3** in SIR.
2. With the column fully extended remove the key from the ignition.
3. Remove the tilt lever from the steering column. Refer to **Tilt Lever Replacement** .
4. Remove the driver knee bolster trim panel. Refer to **Trim Panel Replacement - Knee Bolster** in Instrument Panel, Gages and Console.
5. Remove the 2 TORX(R) head screws from the lower trim cover.

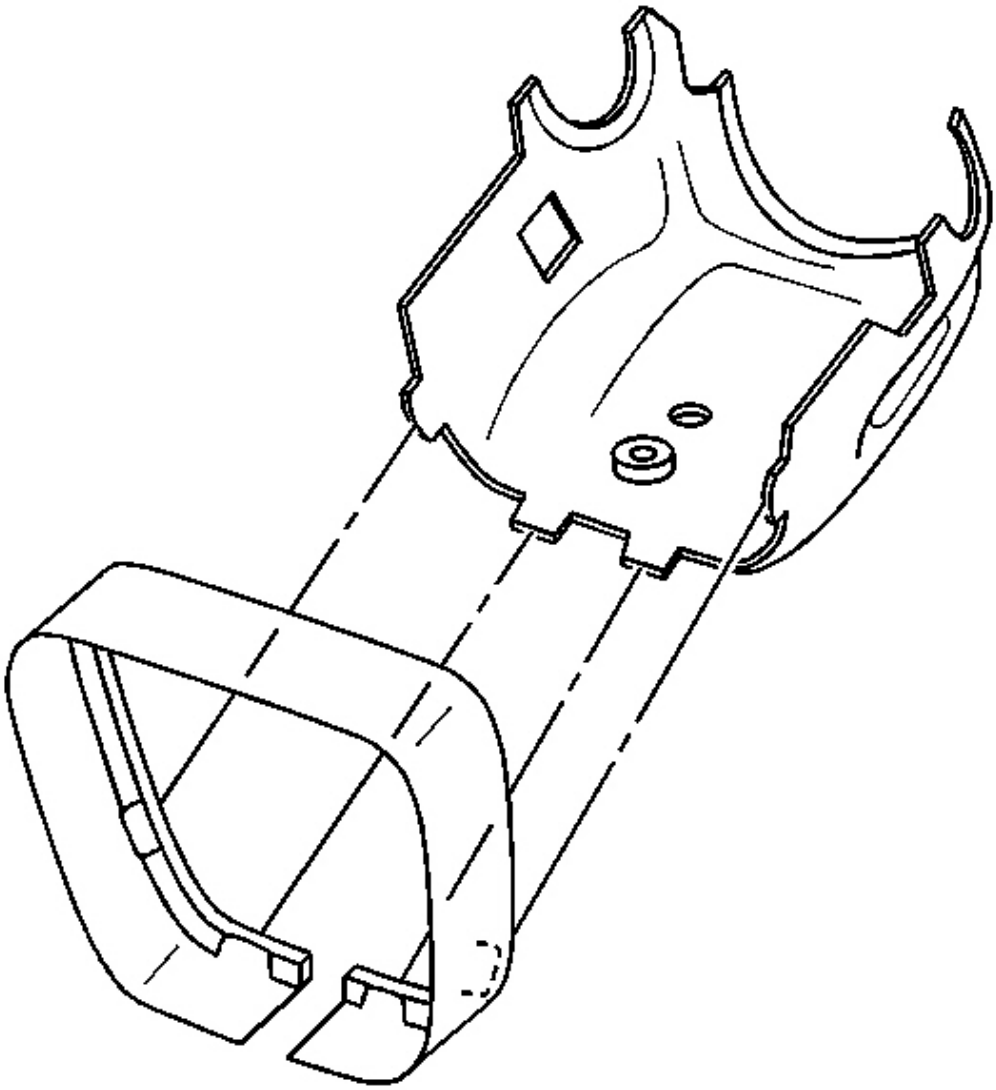

Fig. 62: Lower Trim Cover Tabs & Steering Column Close Out Trim Cover
Courtesy of GENERAL MOTORS CORP.

6. Separate the retaining tabs on the lower trim cover from the steering column close out trim cover.
7. Remove the switch wires from the telescope motor assembly, which is routed in clips along the bottom of the lower trim cover.
8. From the inside of the lower trim cover, push out the telescope actuator assembly switch.
9. Disconnect the assembly switch connector from the instrument panel wiring harness.

10. Remove the telescope motor assembly switch and wires from the trim cover.

Installation Procedure

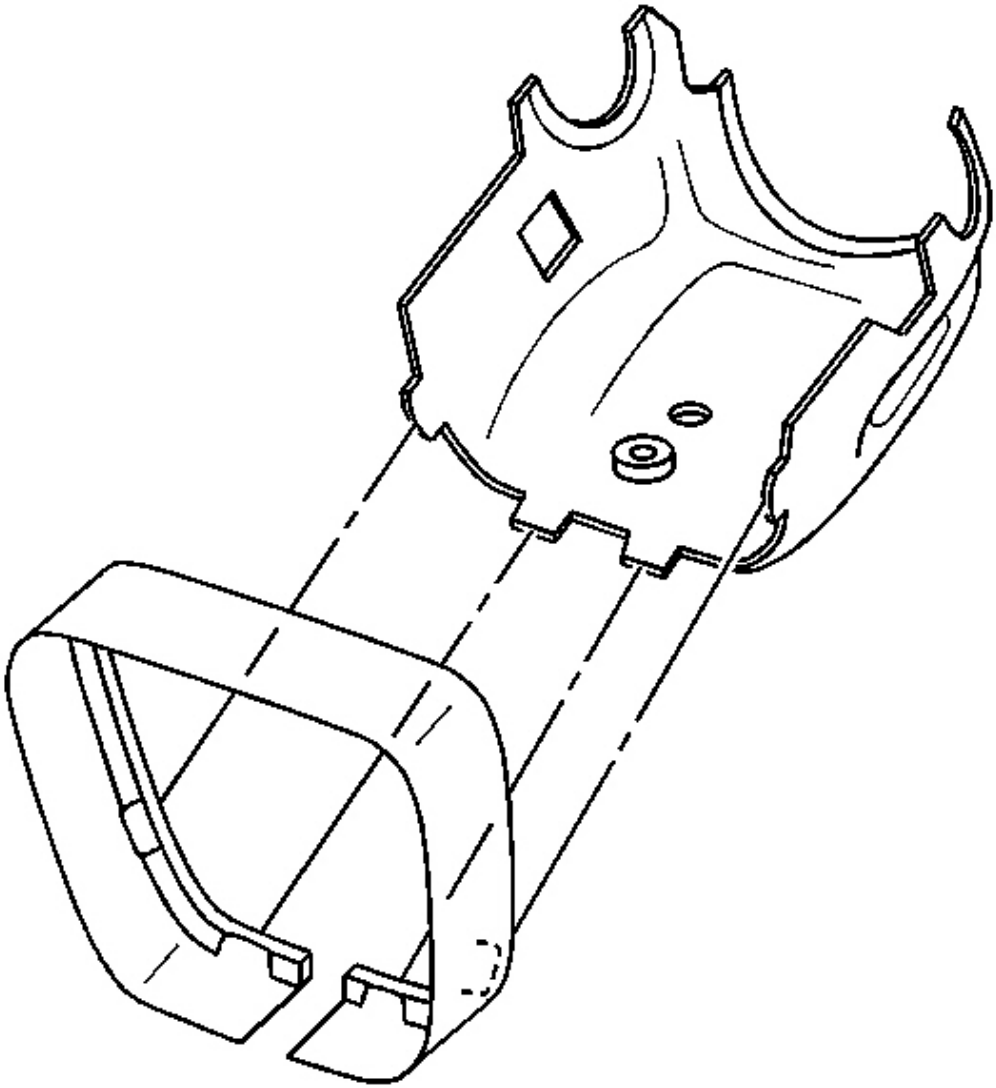

Fig. 63: Lower Trim Cover Tabs & Steering Column Close Out Trim Cover
Courtesy of GENERAL MOTORS CORP.

1. Install the telescope motor assembly switch and wires through the opening in the lower trim cover.

2. Snap the wiring to the retaining clips in the lower trim cover.
3. Route the switch wires to the telescope motor assembly along the column. Strap the wires in place.
4. Connect the telescope motor assembly switch connector to the instrument panel wiring harness.
5. Install the lower trim cover tabs into the steering column close out trim cover.
6. Verify that the tabs on the lower trim cover are fully engaged with the slots in the steering column close out trim cover.

NOTE: Refer to Fastener Notice in Cautions and Notices.

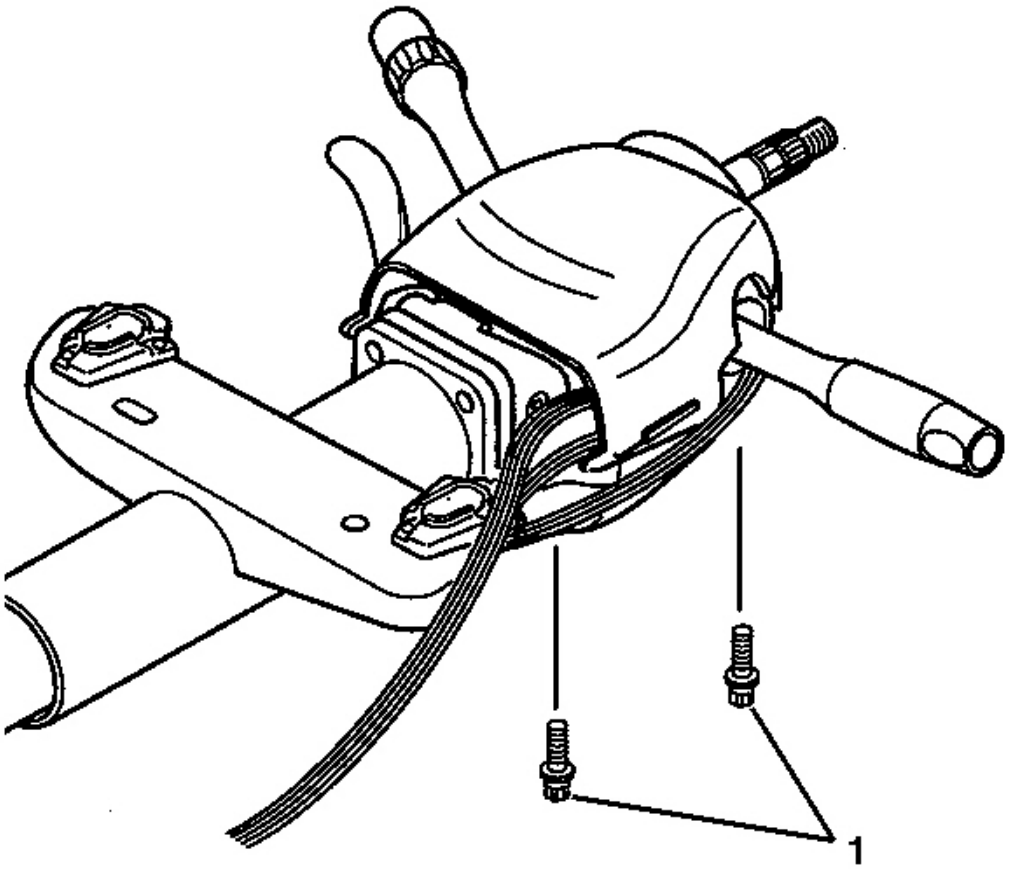

Fig. 64: TORX(R) Head Screws & Lower Trim Cover
Courtesy of GENERAL MOTORS CORP.

7. Install the 2 TORX(R) head screws (1) to the lower trim cover.

   Tighten: Tighten the screws to 4 N.m (35 lb in).

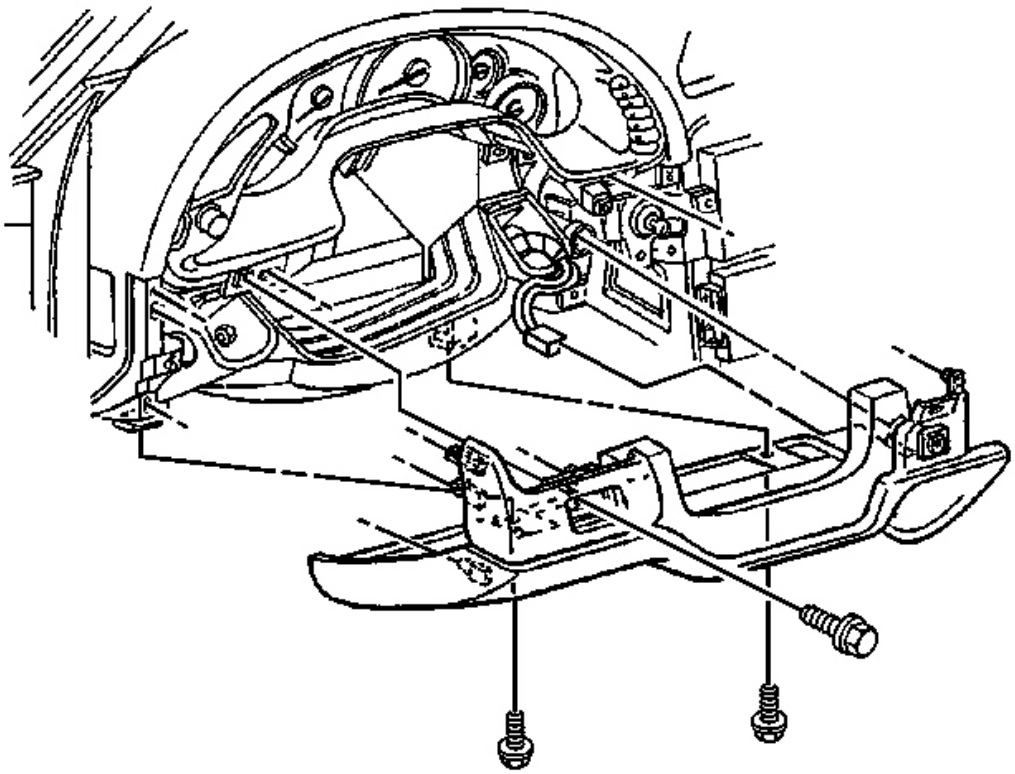

Fig. 65: TORX(R) Head Screws, Lower Trim Cover & Driver Knee Bolster Trim Panel
Courtesy of GENERAL MOTORS CORP.

8. Install the driver knee bolster trim panel. Refer to **Trim Panel Replacement - Knee Bolster** in Instrument Panel, Gages and Console.
9. Install the tilt lever. Refer to **Tilt Lever Replacement** .
10. Enable the SIR system. Refer to **SIR Disabling and Enabling Zone 3** in SIR.

TELESCOPE ACTUATOR ASSEMBLY REPLACEMENT

Tools Required

J 42640 Steering Column Anti Rotation Pin

Removal Procedure

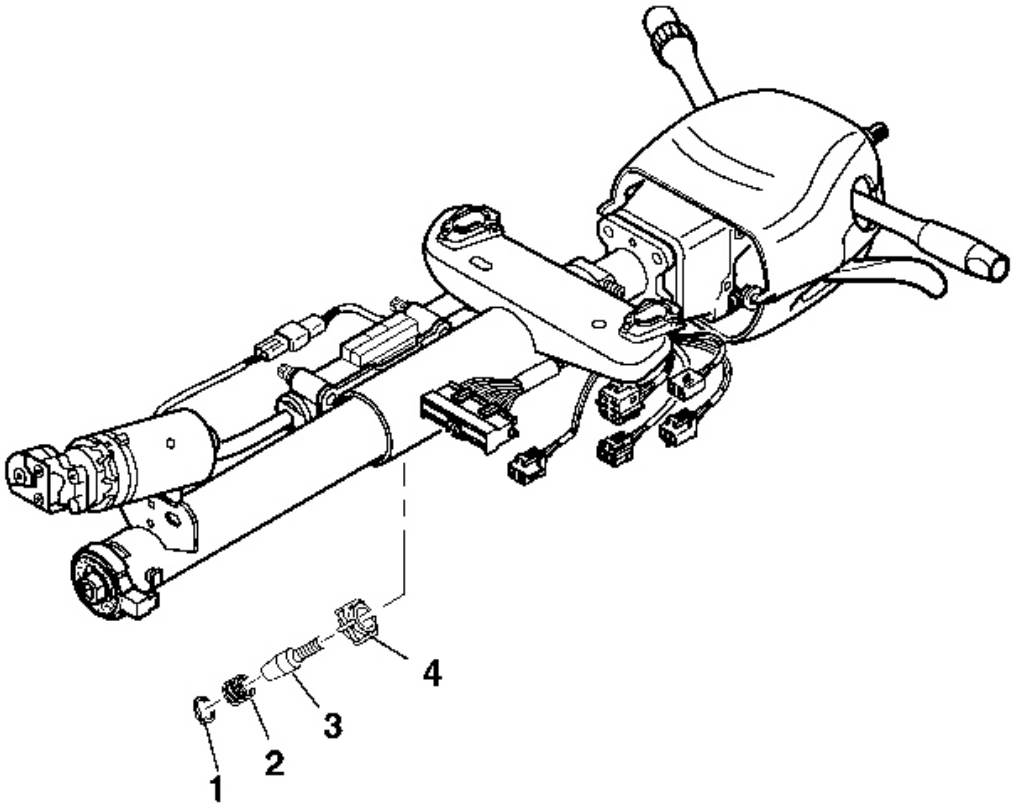

Fig. 66: Jacket Assembly & Components
Courtesy of GENERAL MOTORS CORP.

CAUTION: Refer to SIR Caution in Cautions and Notices.

1. Disable the SIR system. Refer to **SIR Disabling and Enabling Zone 3** in SIR.
2. Insert J 42640 into the bottom of the lower trim cover.
3. Remove the driver side knee bolster trim panel. Refer to **Trim Panel Replacement - Knee Bolster** in Instrument Panel, Gages and Console.
4. Remove the following items from the jacket assembly:
    1. Retaining ring (1)
    2. Compression spring (2)

3. Shoulder bolt (3)
4. Housing support guide (4)

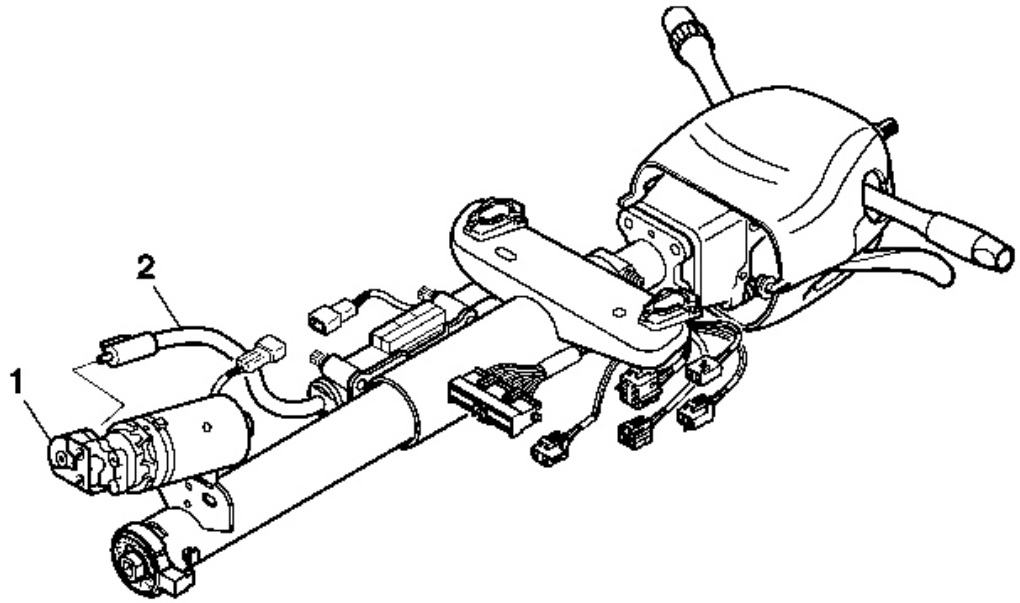

Fig. 67: Cable Assembly & Telescope Drive Motor Assembly
Courtesy of GENERAL MOTORS CORP.

5. Disconnect the cable assembly (2) from the telescope drive motor assembly (1).

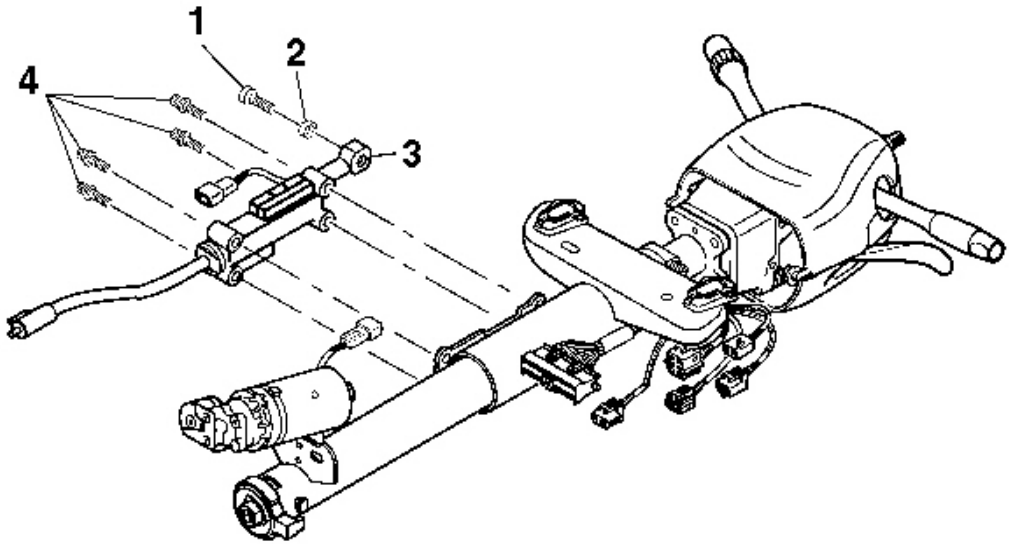

Fig. 68: Telescope Actuator Assembly, Ball & Telescope Drive Bolt
Courtesy of GENERAL MOTORS CORP.

6. Remove the retaining screws from the telescope actuator assembly (3).
7. Remove the telescope drive bolt (1) and ball (2) from the actuator assembly.

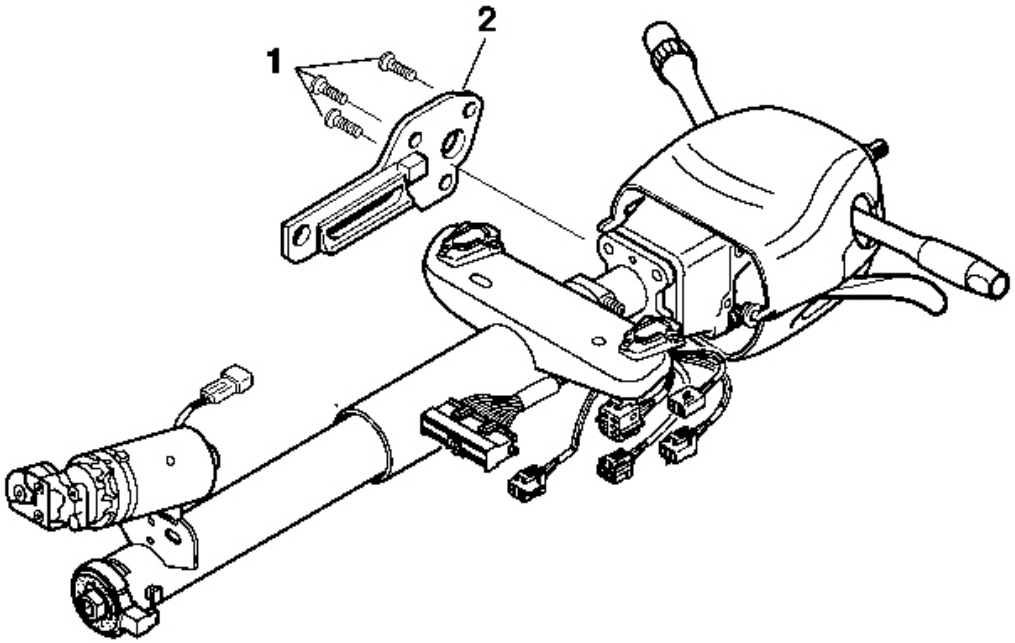

Fig. 69: Telescope Adapter Assembly & Screws
Courtesy of GENERAL MOTORS CORP.

8. Remove the retaining screws (1) from the telescope adapter assembly (2).
9. Remove the telescope adapter assembly (2).

Installation Procedure

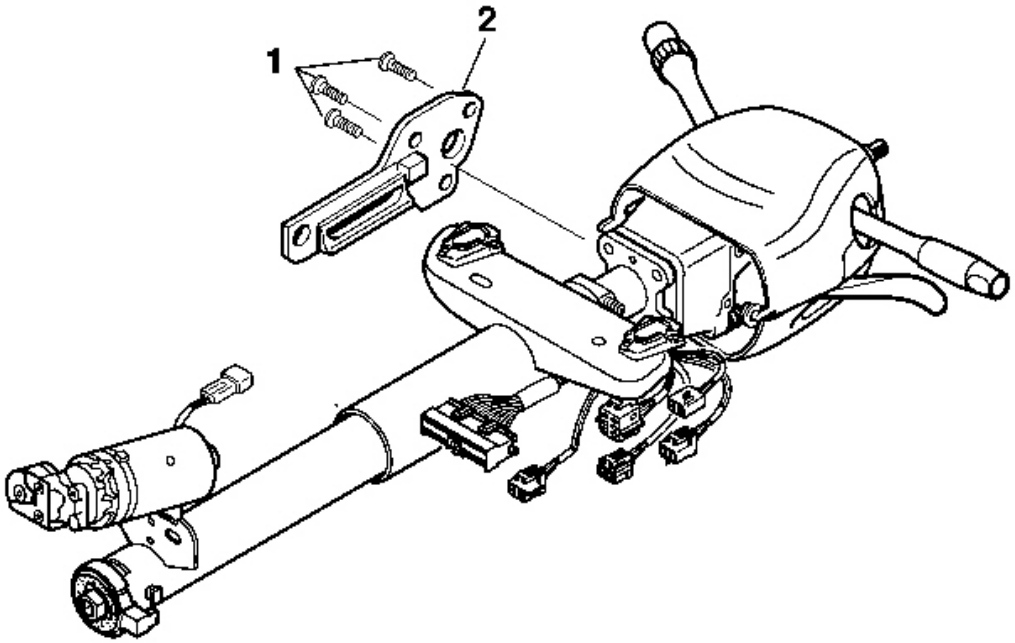

Fig. 70: Telescope Adapter Assembly & Screws
Courtesy of GENERAL MOTORS CORP.

1. Install the telescope adapter assembly (2) to the jacket assembly.

NOTE: **Refer to Fastener Notice in Cautions and Notices.**

2. Install the actuator retaining screws (1).

Tighten: Tighten the retaining screws to 9 N.m (80 lb in).

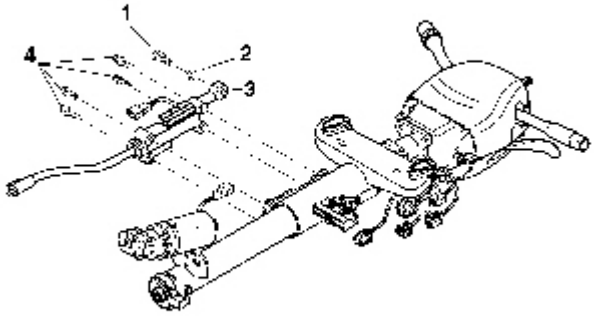

Fig. 71: Telescope Actuator Assembly, Screws, Ball & Bolt
Courtesy of GENERAL MOTORS CORP.

3. Install the telescope actuator assembly (3) to the jacket assembly.
4. Install the actuator retaining screws (4).

Tighten: Tighten the retaining screws to 9 N.m (80 lb in).

1. Install the telescope drive ball (2).
2. Install the telescope drive bolt (1).

Tighten: Tighten the bolt to 7 N.m (62 lb in).

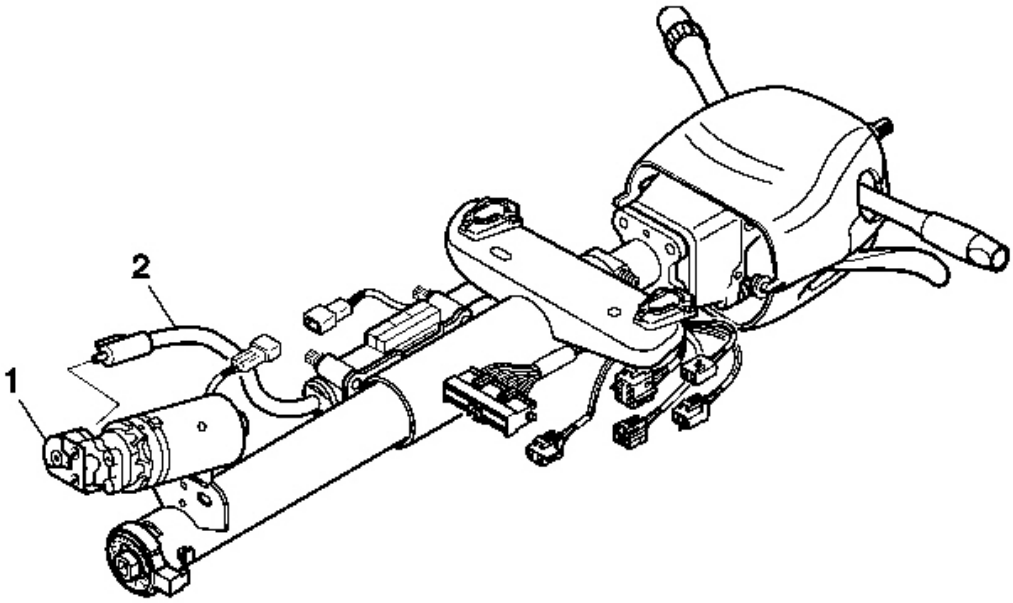

Fig. 72: Cable Assembly & Telescope Drive Motor Assembly
Courtesy of GENERAL MOTORS CORP.

5. Connect the cable assembly (2) to the telescope drive motor assembly (1).

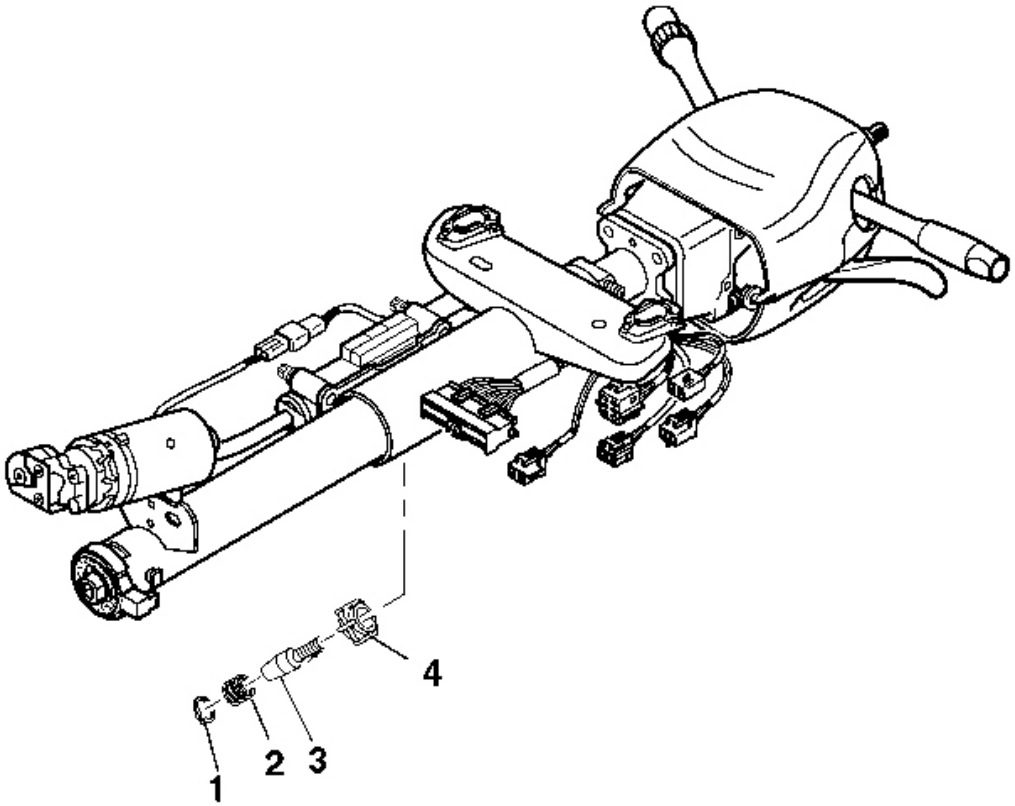

Fig. 73: Housing Support Guide, Shoulder Bolt, Compression Spring & Retaining Ring
Courtesy of GENERAL MOTORS CORP.

6. Install the following items onto the jacket assembly:
    1. Housing support guide (4)
    2. Shoulder bolt (3)
    3. Compression spring (2)
    4. Retaining ring (1)

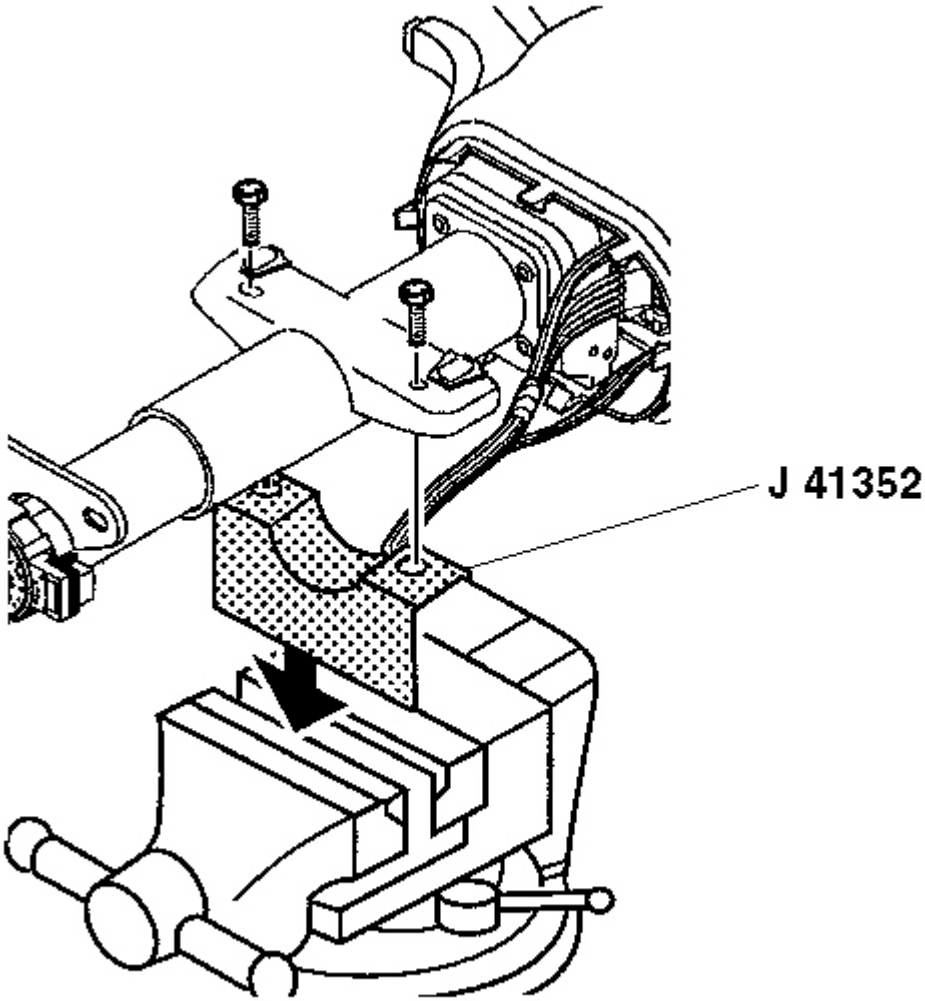

Fig. 74: Installing Steering Column Onto J 41352
Courtesy of GENERAL MOTORS CORP.

7. Install the driver side knee bolster trim panel. Refer to **Trim Panel Replacement - Knee Bolster** in Instrument Panel, Gages and Console.
8. Remove J 42640 from the lower steering column trim cover.
9. Enable the SIR system. Refer to **SIR Disabling and Enabling Zone 3** in SIR.

STEERING WHEEL THEFT DETERRENT LOCK REPLACEMENT (TELESCOPING)

Tools Required

J 42640 Steering Column Lock Pin. See **Special Tools and Equipment** .

Removal Procedure

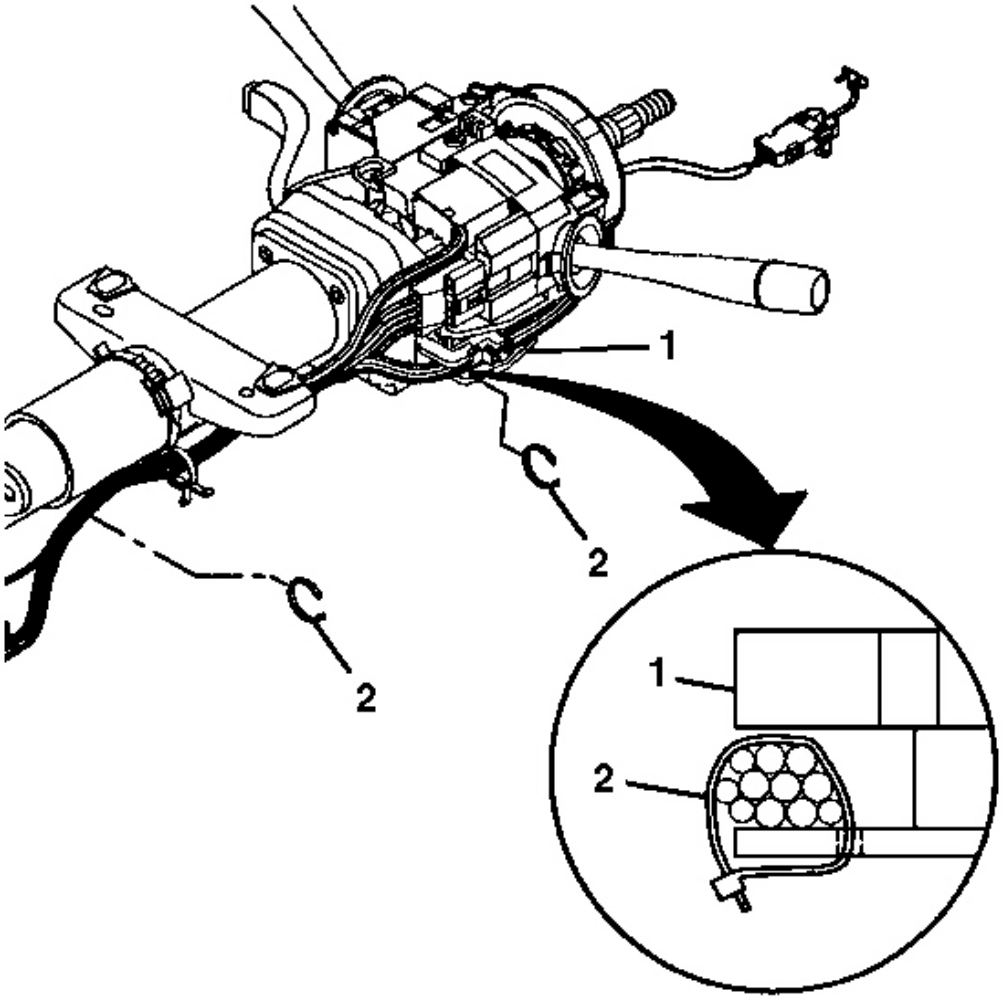

Fig. 75: Wire Harness Straps & Steering Column Tilt Head Assembly
Courtesy of GENERAL MOTORS CORP.

CAUTION: Refer to SIR Caution in Cautions and Notices

1. Disable the SIR system. Refer to **SIR Disabling and Enabling Zone 3** in SIR.

IMPORTANT: If the steering column connectors are disconnected with the ignition in the ON position, the BCM will enter a fail enable mode and prevent steering column lock operation. The PCM will also inhibit vehicle motion by disabling fuel. To clear the BCM fail enable mode, disconnect the BCM fuse #25 for 15 seconds.

2. Remove the upper and lower steering column trim covers. Refer to **Steering Column Trim Covers Replacement (Telescoping)** or **Steering Column Trim Covers Replacement (Manual)** .
3. Remove the wire harness straps (2) from the tilt head assembly (1) and the column.
4. Install **J 42640** to the steering column. See **Special Tools and Equipment** .
5. Remove the tilt head assembly. Refer to **Steering Column Tilt Head Housing Replacement (Telescoping)** or **Steering Column Tilt Head Housing Replacement (Manual)** .
6. Remove the steering wheel theft deterrent.

Installation Procedure

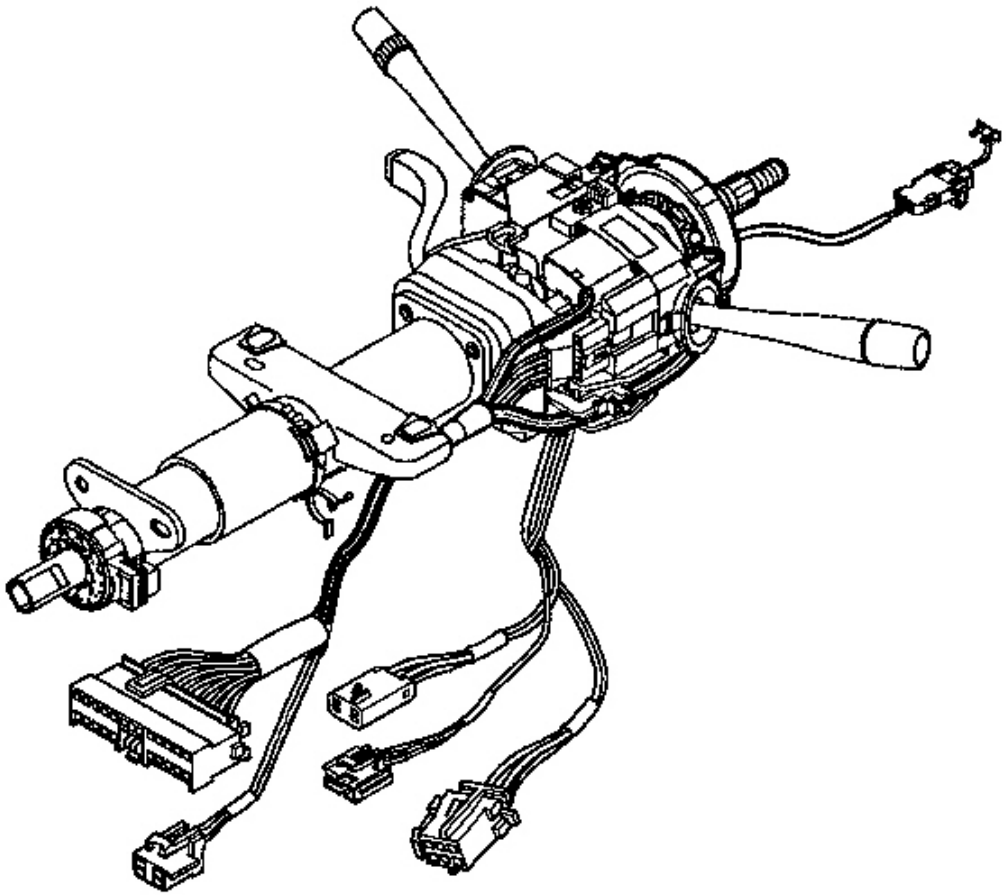

Fig. 76: Wire Harness Assembly & Steering Column Jacket Assembly
Courtesy of GENERAL MOTORS CORP.

1. Install the steering wheel theft deterrent.
2. Route the wire harness assembly along the steering column jacket assembly.

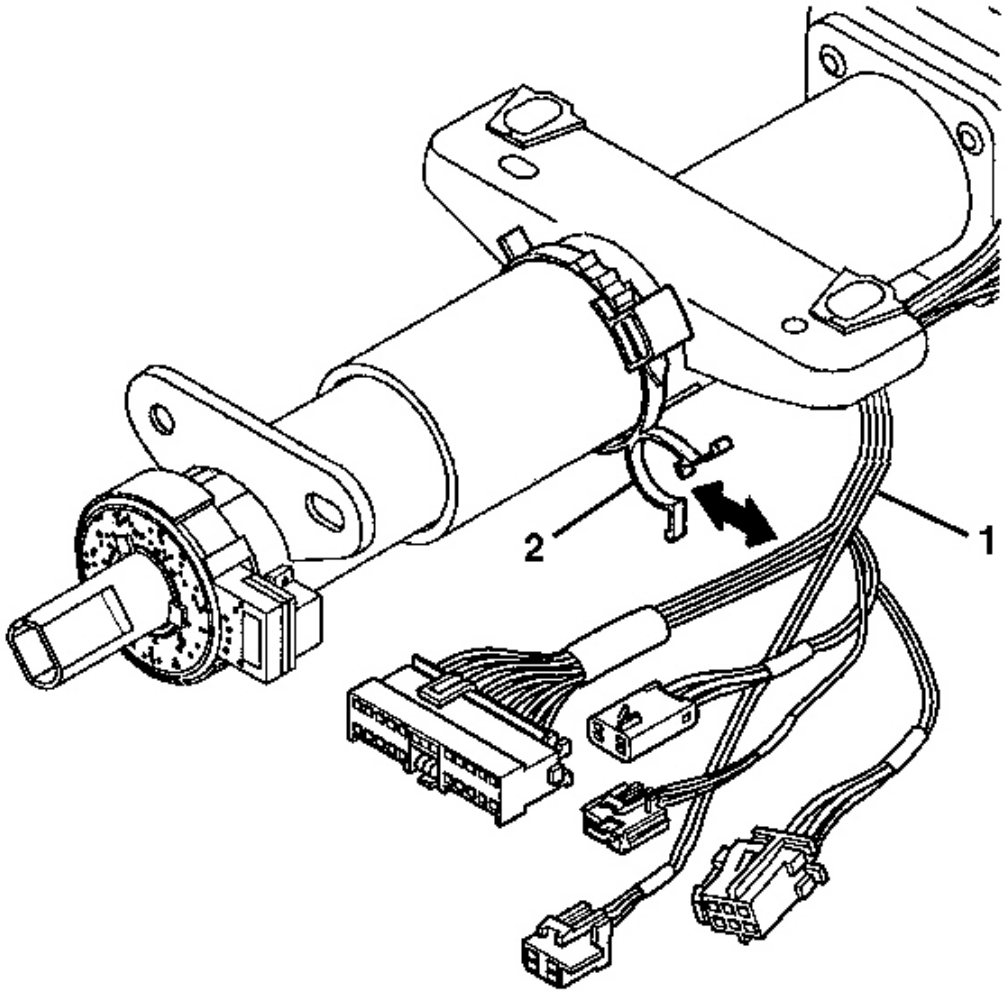

Fig. 77: Wire Harness Assembly & Wire Harness Strap
Courtesy of GENERAL MOTORS CORP.

3. Install the wire harness assembly (1) into the wire harness strap (2).
4. Install the tilt head assembly. Refer to **Steering Column Tilt Head Housing Replacement (Telescoping)** or **Steering Column Tilt Head Housing Replacement (Manual)** .
5. Remove **J 42640** from the steering column. See **Special Tools and Equipment** .
6. Install the upper and lower trim covers. Refer to **Steering Column Trim Covers Replacement (Telescoping)** or **Steering Column Trim Covers Replacement (Manual)** .
7. Enable the SIR system. Refer to **SIR Disabling and Enabling Zone 3** in SIR

STEERING WHEEL THEFT DETERRENT LOCK REPLACEMENT (MANUAL)

Tools Required

J 42640 Steering Column Lock Pin. See **Special Tools and Equipment** .

Removal Procedure

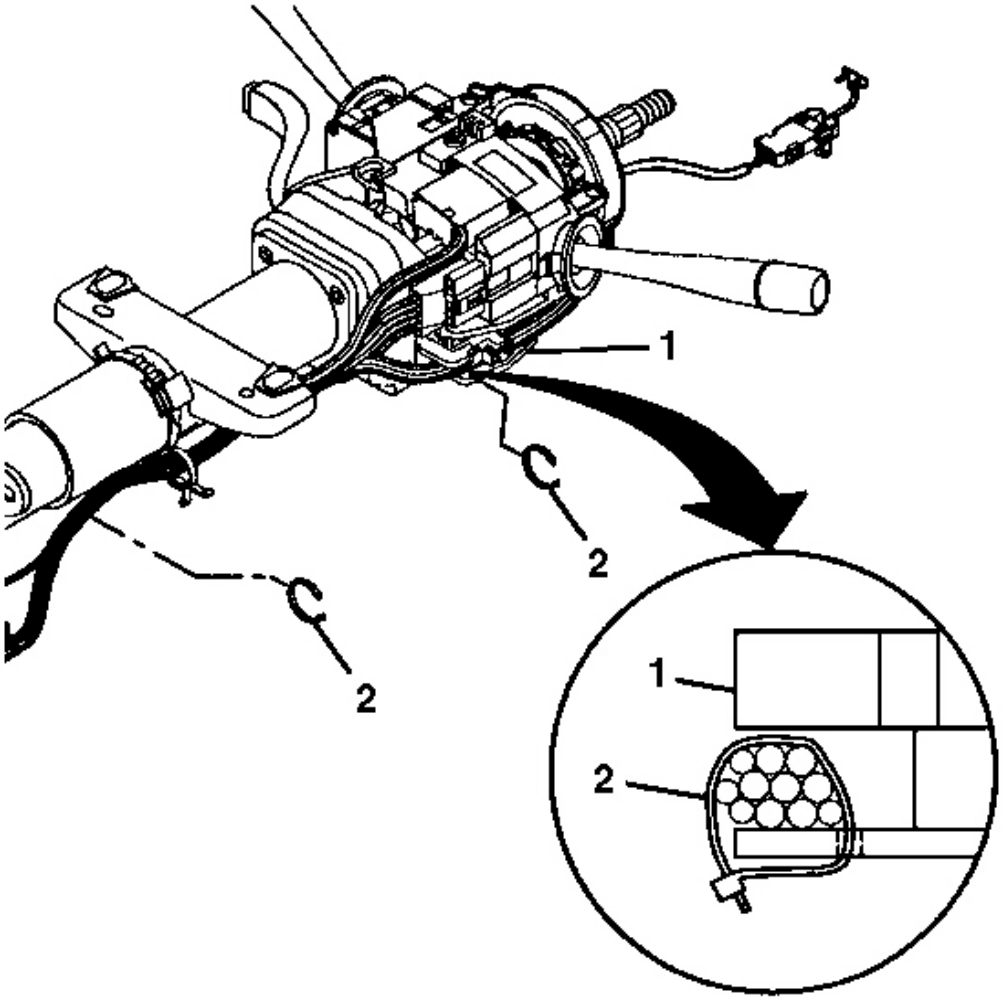

Fig. 78: Wire Harness Straps & Steering Column Tilt Head Assembly
Courtesy of GENERAL MOTORS CORP.

CAUTION: Refer to SIR Caution in Cautions and Notices

1. Disable the SIR system. Refer to **SIR Disabling and Enabling Zone 3** in SIR

IMPORTANT: If the steering column connectors are disconnected with the ignition in the ON position, the BCM will enter a fail enable mode and prevent steering column lock operation. The PCM will also inhibit vehicle motion by disabling fuel. To clear the BCM fail enable mode, disconnect the BCM fuse #25 for 15 seconds.

2. Remove the trim covers from the upper and lower steering column. Refer to **Steering Column Trim Covers Replacement (Telescoping)** or **Steering Column Trim Covers Replacement (Manual)** .
3. Remove the wire harness straps (2) from the steering column tilt head assembly (1) and the column.
4. Install **J 42640** to the steering column. See **Special Tools and Equipment** .
5. Remove the steering column tilt head assembly. Refer to **Steering Column Tilt Head Housing Replacement (Telescoping)** or **Steering Column Tilt Head Housing Replacement (Manual)** .
6. Remove the steering wheel theft deterrent lock.

Installation Procedure

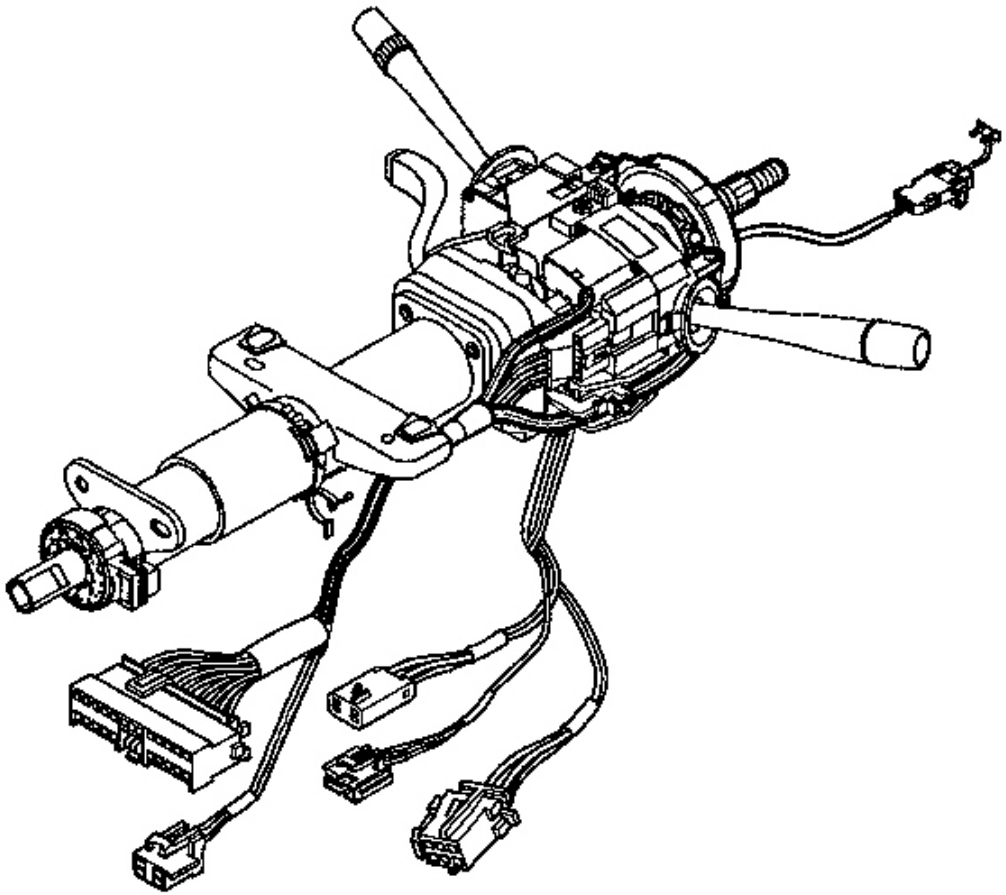

Fig. 79: Wire Harness Assembly & Steering Column Jacket Assembly
Courtesy of GENERAL MOTORS CORP.

1. Install the steering wheel theft deterrent lock.
2. Route the wire harness assembly along the steering column jacket assembly.
3. Remove **J 42640** from the steering column. See **Special Tools and Equipment** .

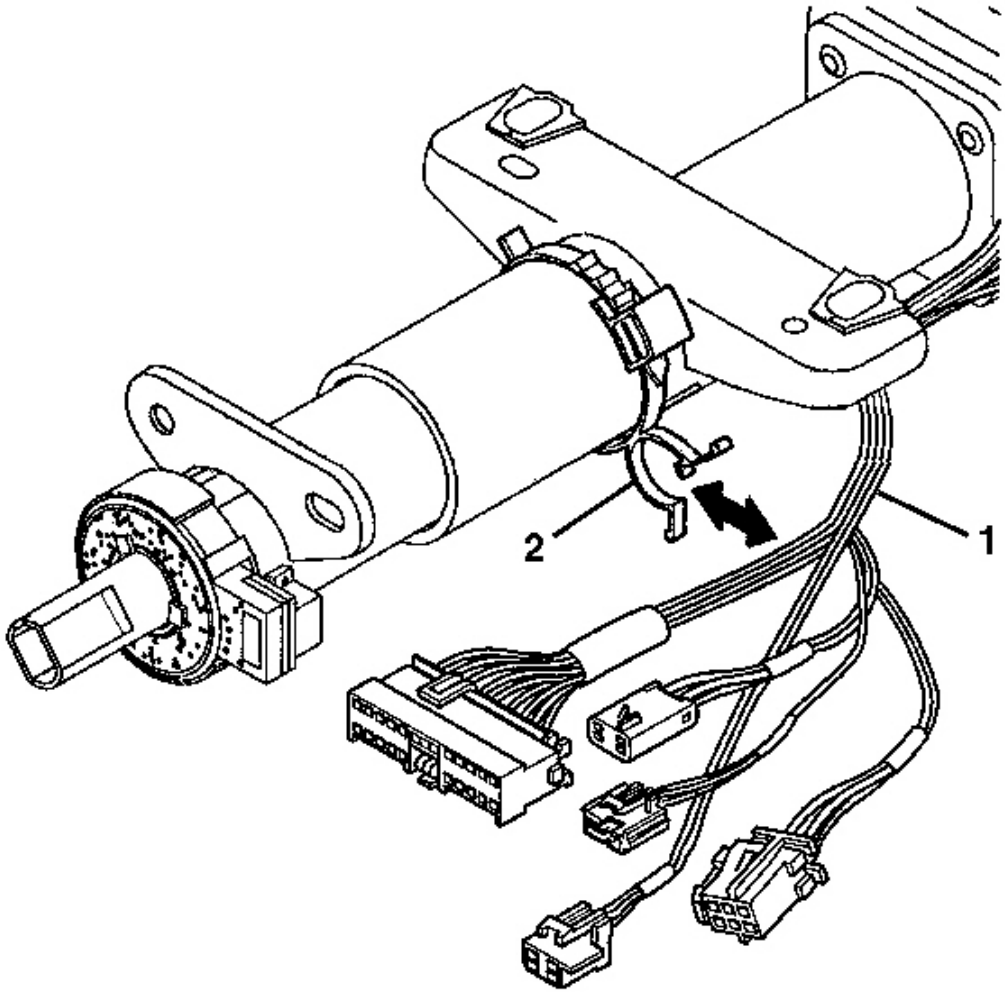

Fig. 80: Wire Harness Assembly & Wire Harness Strap
Courtesy of GENERAL MOTORS CORP.

4. Install the wire harness assembly (1) into the wire harness strap (2).

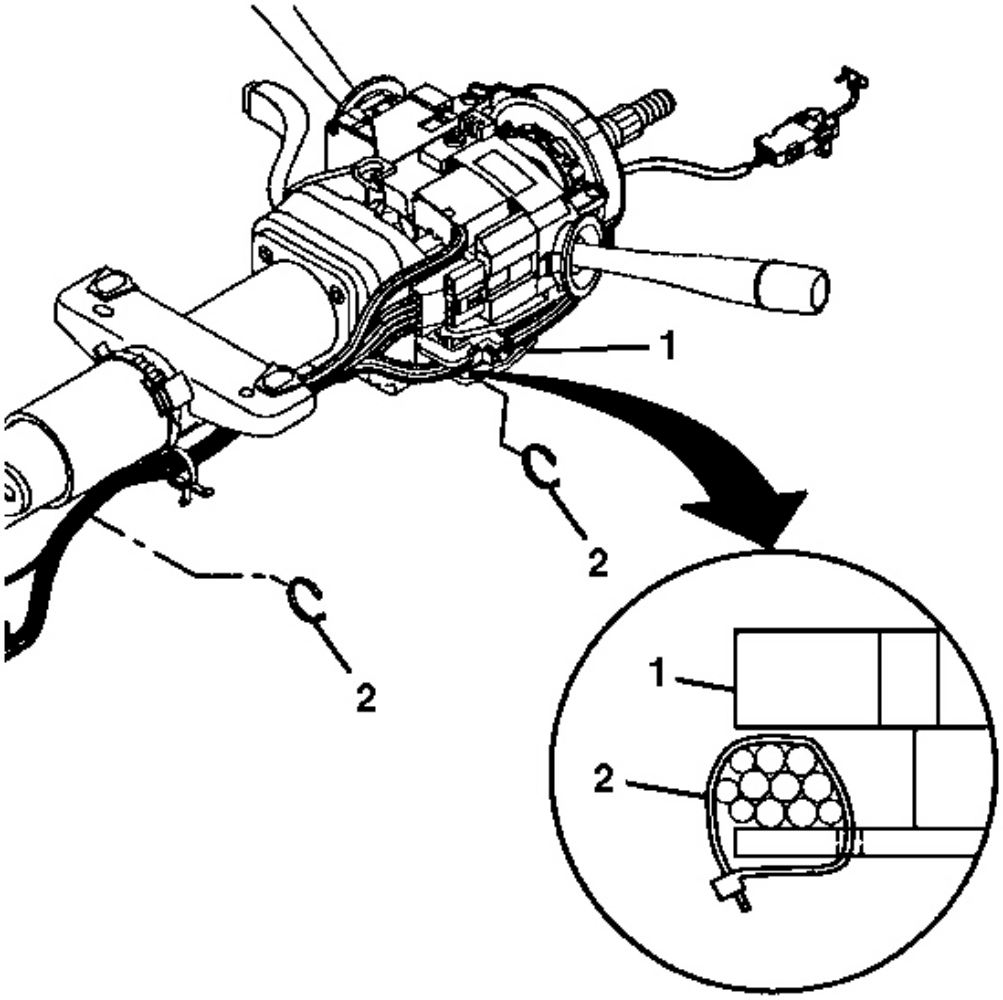

Fig. 81: Wire Harness Straps & Steering Column Tilt Head Assembly
Courtesy of GENERAL MOTORS CORP.

5. Install new wire harness straps (2) to the steering column assembly (1) and the column.
6. Install the steering column tilt head assembly. Refer to **Steering Column Tilt Head Housing Replacement (Telescoping)** or **Steering Column Tilt Head Housing Replacement (Manual)** .
7. Install the trim covers to the upper and lower steering column. Refer to **Steering Column Trim Covers Replacement (Telescoping)** or **Steering Column Trim Covers Replacement (Manual)** .
8. Enable the SIR system. Refer to **SIR Disabling and Enabling Zone 3** in SIR.

TILT SPRING REPLACEMENT (TELESCOPING)

Removal Procedure

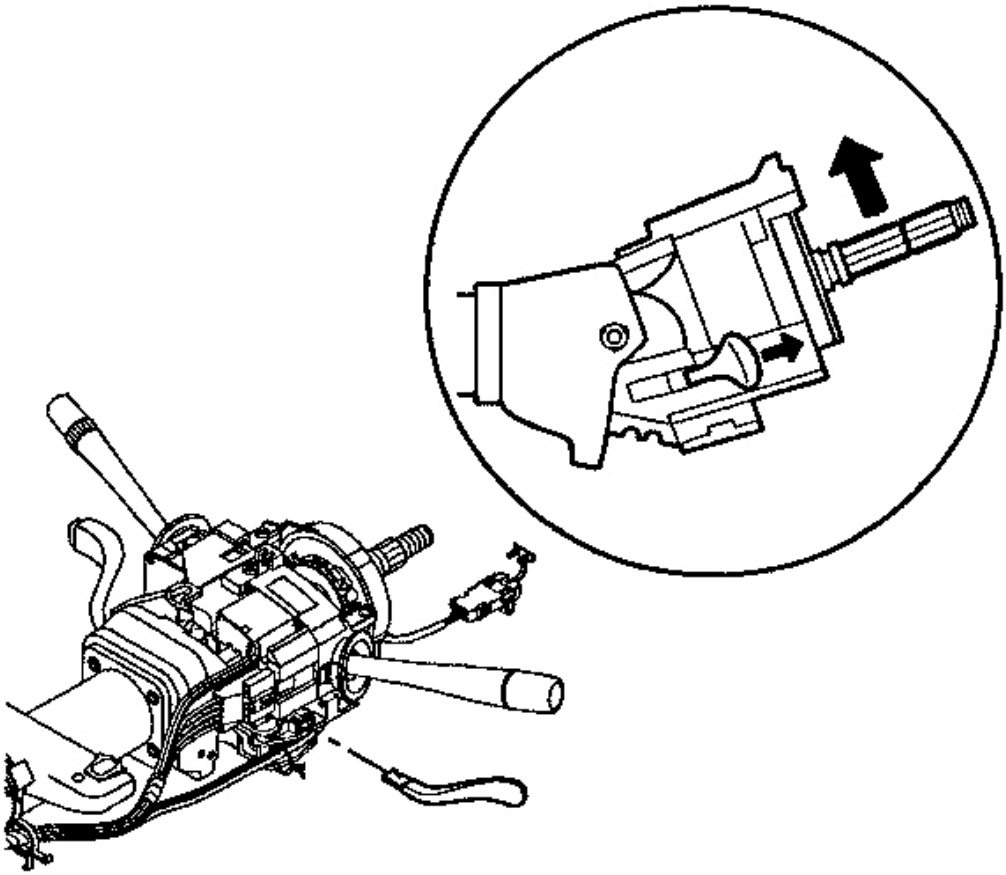

Fig. 82: SIR System, Upper & Lower Trim Covers
Courtesy of GENERAL MOTORS CORP.

CAUTION: Refer to SIR Caution in Cautions and Notices.

1. Disable the SIR system. Refer to **SIR Disabling and Enabling Zone 3** in SIR.
2. Remove the upper and lower trim covers. Refer to **Steering Column Trim Covers Replacement (Telescoping)** or **Steering Column Trim Covers Replacement (Manual)** .
3. Tilt the column in the UP position.

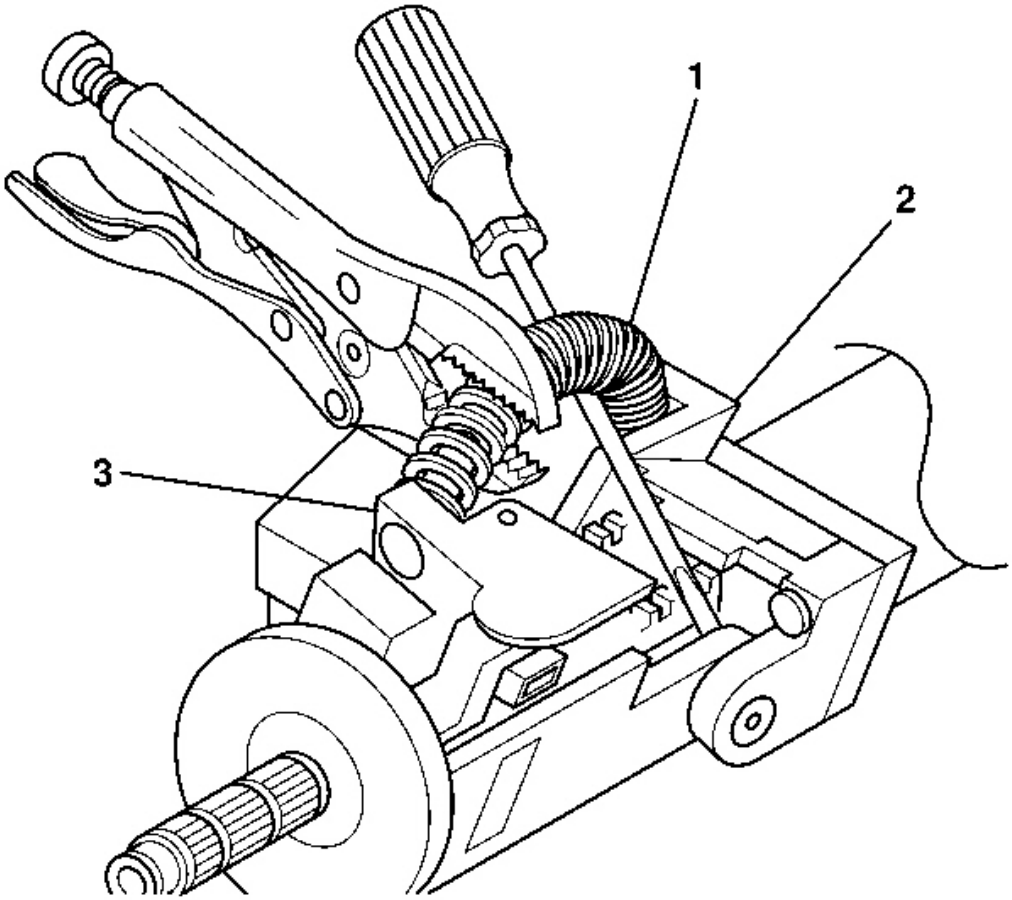

Fig. 83: Identifying Tilt Spring At The Steering Column Support Assembly
Courtesy of GENERAL MOTORS CORP.

CAUTION: The tilt spring and the spring guide are under pressure. The tilt spring and the spring guide may become a projectile. Secure the spring with locking pliers during removal. Secure the spring with locking pliers during installation. Bodily injury may result during removal and installation of the tilt spring and the spring guide. Always use caution during removal and installation of the tilt spring and the spring guide.

4. Perform the following steps to remove the tilt spring (1):
    1. Pry the tilt spring (1) up with a screwdriver until a bulge occurs. The spring tension is mostly removed.

2. Secure the tilt spring (1) with locking pliers.
3. Continue to pry until the tilt spring (1) disengages from the post on the steering column support (2) and the steering column tilt head assembly (3).

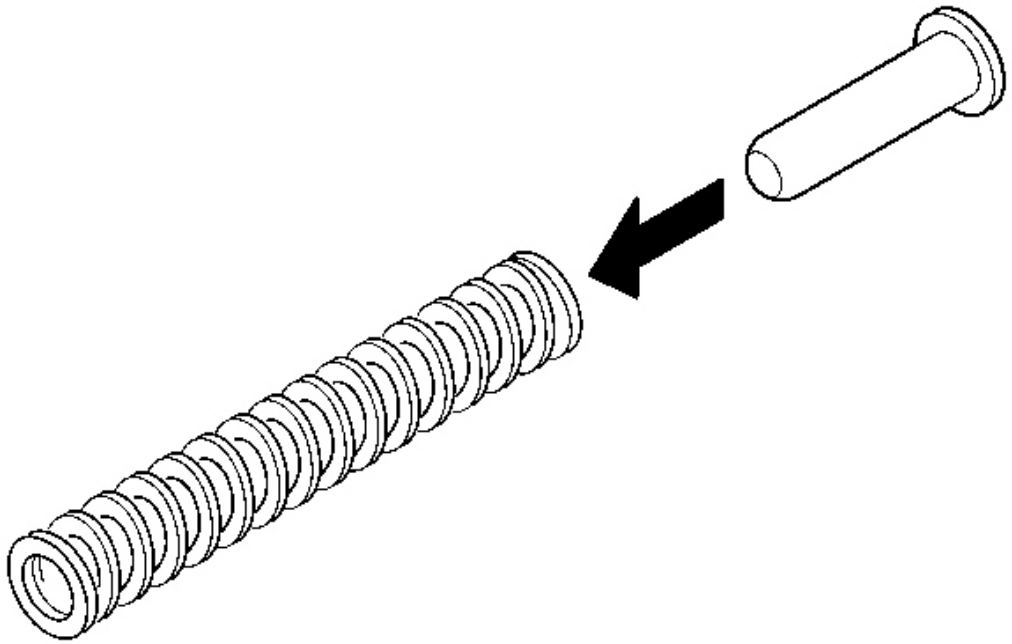

Fig. 84: Installing Spring Guide To Tilt Spring
Courtesy of GENERAL MOTORS CORP.

5. Remove the spring guide from the tilt spring.

Installation Procedure

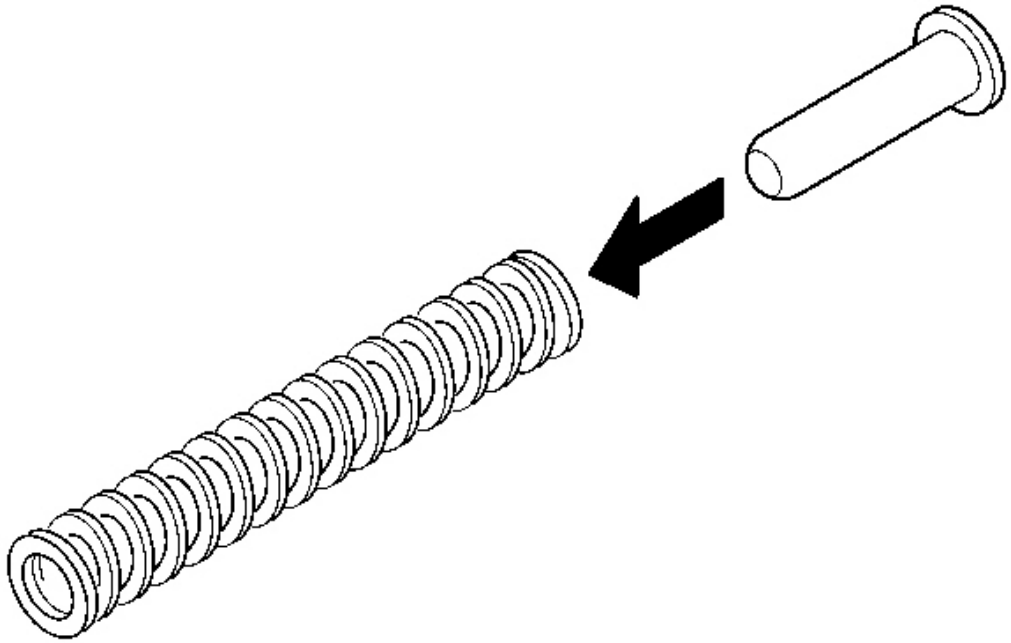

Fig. 85: Installing Spring Guide To Tilt Spring
Courtesy of GENERAL MOTORS CORP.

1. Install the spring guide into the tilt spring.

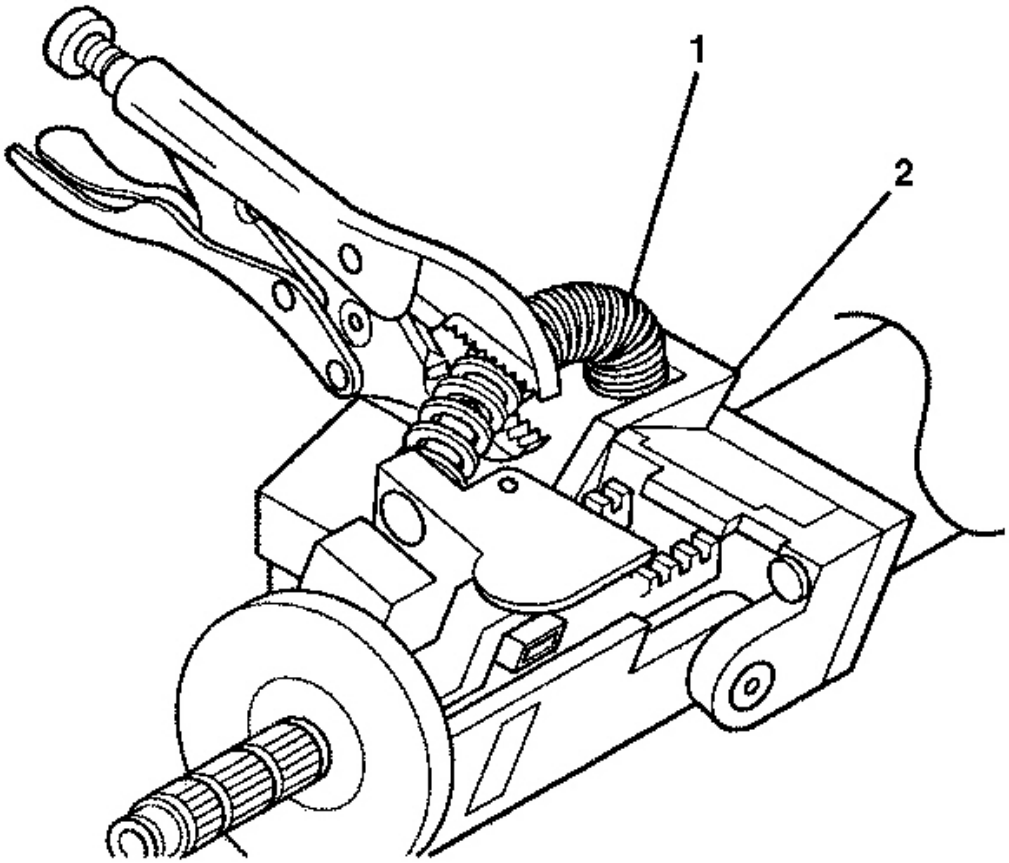

Fig. 86: Installing Tilt Spring
Courtesy of GENERAL MOTORS CORP.

2. Perform the following steps to install the tilt spring (1):
    1. Install the tilt spring (1) to the post on the steering column support assembly (2).
    2. Secure the tilt spring (1) with locking pliers.
    3. Push the guide end of the tilt spring (1) onto the post on the steering column tilt head assembly.
    4. Push the tilt spring (1) into position.
3. Install the upper and lower trim covers. Refer to **Steering Column Trim Covers Replacement (Telescoping)** or **Steering Column Trim Covers Replacement (Manual)** .
4. Enable the SIR system. Refer to **SIR Disabling and Enabling Zone 3** in SIR.

TILT SPRING REPLACEMENT (MANUAL)

Removal Procedure

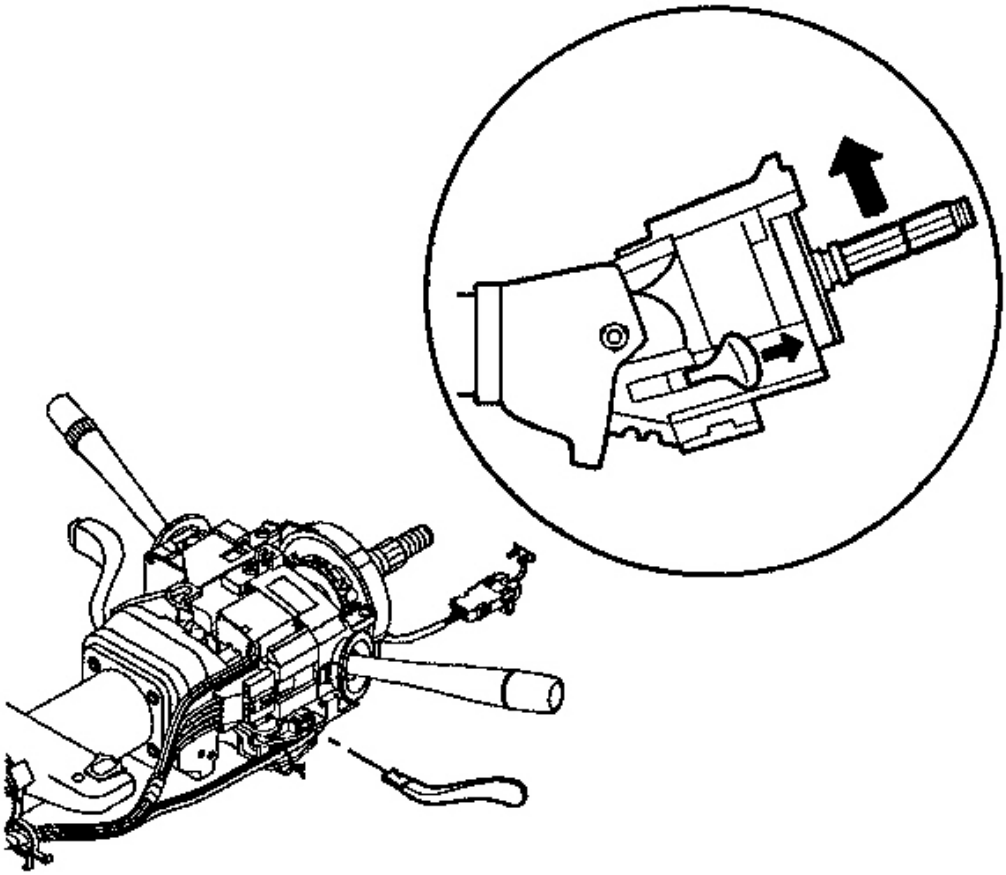

Fig. 87: SIR System, Upper & Lower Trim Covers
Courtesy of GENERAL MOTORS CORP.

CAUTION: Refer to SIR Caution in Cautions and Notices.

1. Disable the SIR system. Refer to **SIR Disabling and Enabling Zone 3** in SIR.
2. Remove the upper and lower trim covers. Refer to **Steering Column Trim Covers Replacement (Telescoping)** or **Steering Column Trim Covers Replacement (Manual)** .
3. Use the tilt lever to tilt the column in the UP position.

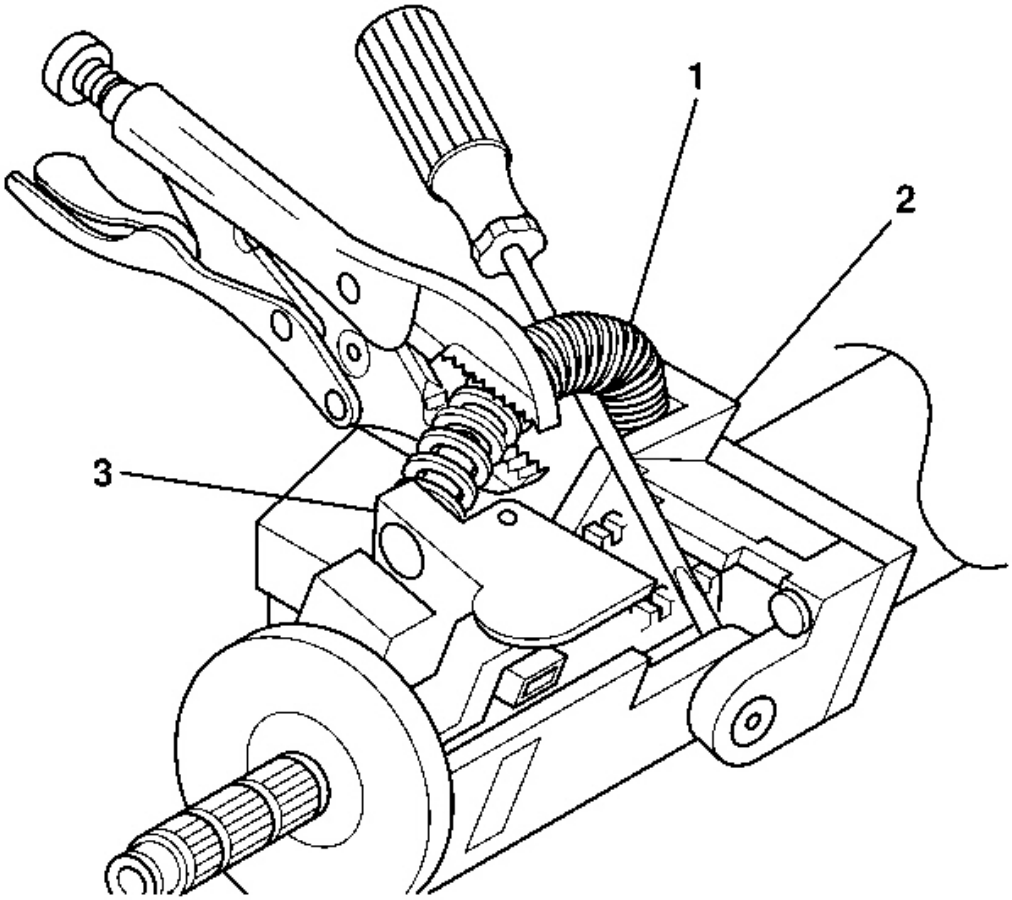

Fig. 88: Identifying Tilt Spring At The Steering Column Support Assembly
Courtesy of GENERAL MOTORS CORP.

CAUTION: The tilt spring and the spring guide are under pressure. The tilt spring and the spring guide may become a projectile. Secure the spring with locking pliers during removal. Secure the spring with locking pliers during installation. Bodily injury may result during removal and installation of the tilt spring and the spring guide. Always use caution during removal and installation of the tilt spring and the spring guide.

4. Perform the following steps to remove the tilt spring (1):
    1. Pry the tilt spring (1) up with a screwdriver until a bulge occurs. The spring tension is mostly removed.

2. Secure the tilt spring (1) with locking pliers.
3. Continue to pry until the tilt spring (1) disengages from the post on the steering column support (2) and the steering column tilt head assembly (3).

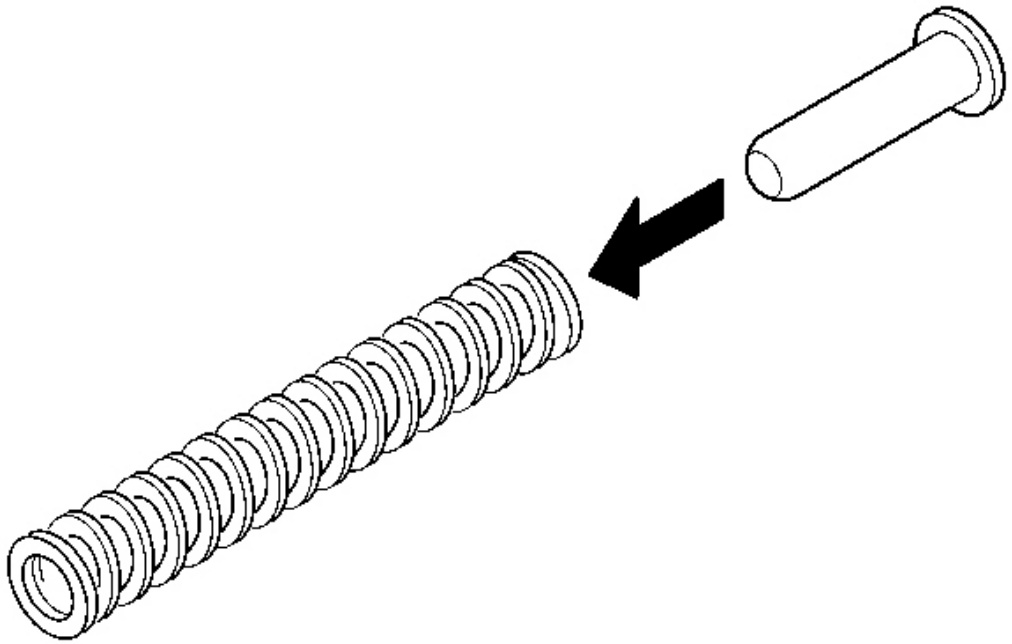

Fig. 89: Installing Spring Guide To Tilt Spring
Courtesy of GENERAL MOTORS CORP.

5. Remove the spring guide from the tilt spring.

Installation Procedure

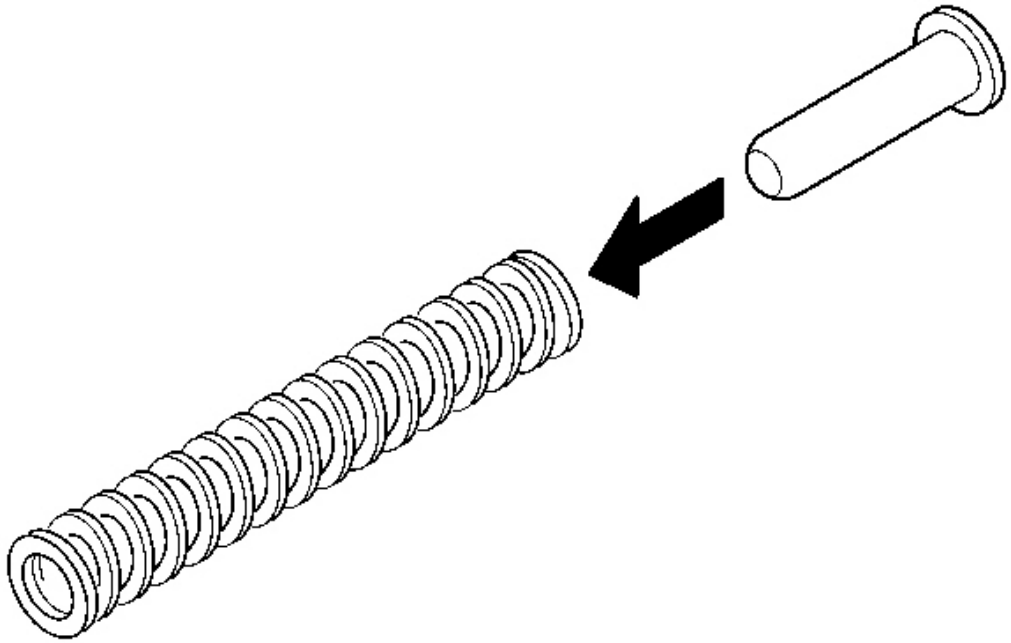

Fig. 90: Installing Spring Guide To Tilt Spring
Courtesy of GENERAL MOTORS CORP.

1. Install the spring guide into the tilt spring.

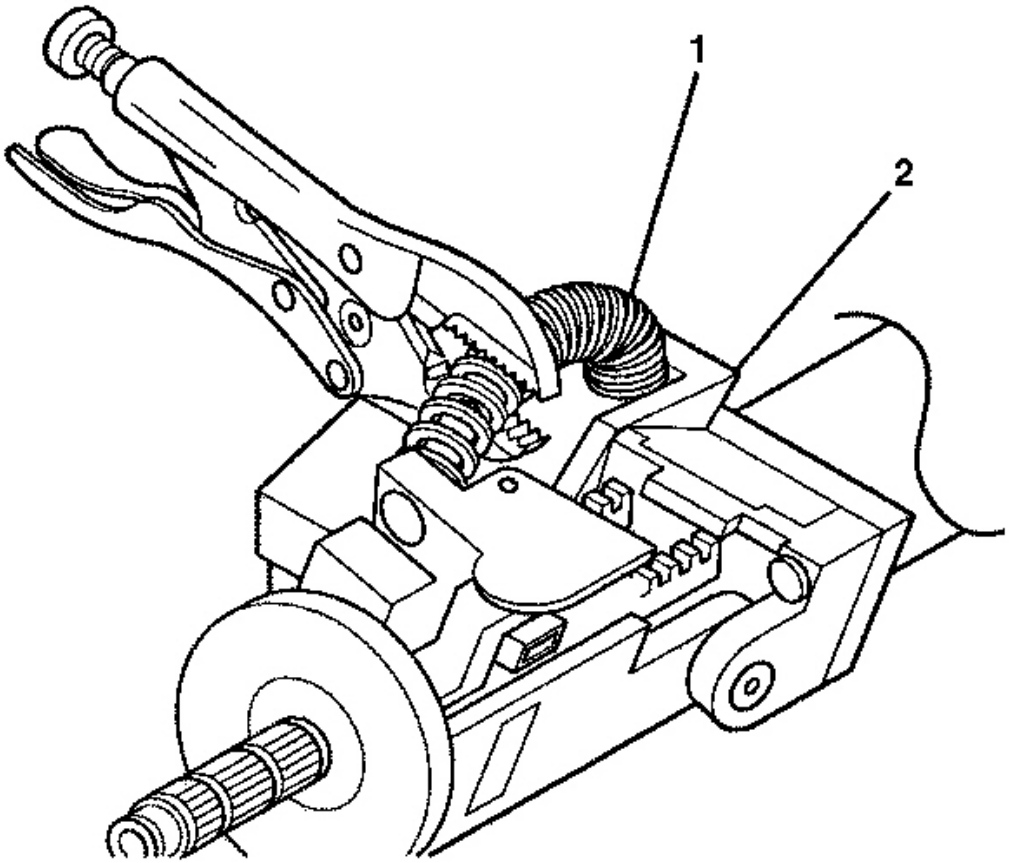

Fig. 91: Installing Tilt Spring
Courtesy of GENERAL MOTORS CORP.

2. Perform the following steps to install the tilt spring (1):
    1. Install the tilt spring (1) to the post on the steering column support assembly (2).
    2. Secure the tilt spring (1) with locking pliers.
    3. Push the guide end of the tilt spring (1) onto the post on the steering column tilt head assembly.
    4. Push the tilt spring (1) into position.
3. Install the upper and lower trim covers. Refer to **Steering Column Trim Covers Replacement (Telescoping)** or **Steering Column Trim Covers Replacement (Manual)** .
4. Enable the SIR system. Refer to **SIR Disabling and Enabling Zone 3** in SIR.

STEERING COLUMN TILT HEAD HOUSING REPLACEMENT (TELESCOPING)

Tools Required

- J 23653-SIR Steering Column Lock Plate Compressor
- **J 42137** Steering Column Lock Plate Compressor Adapter. See **Special Tools and Equipment** .

Removal Procedure

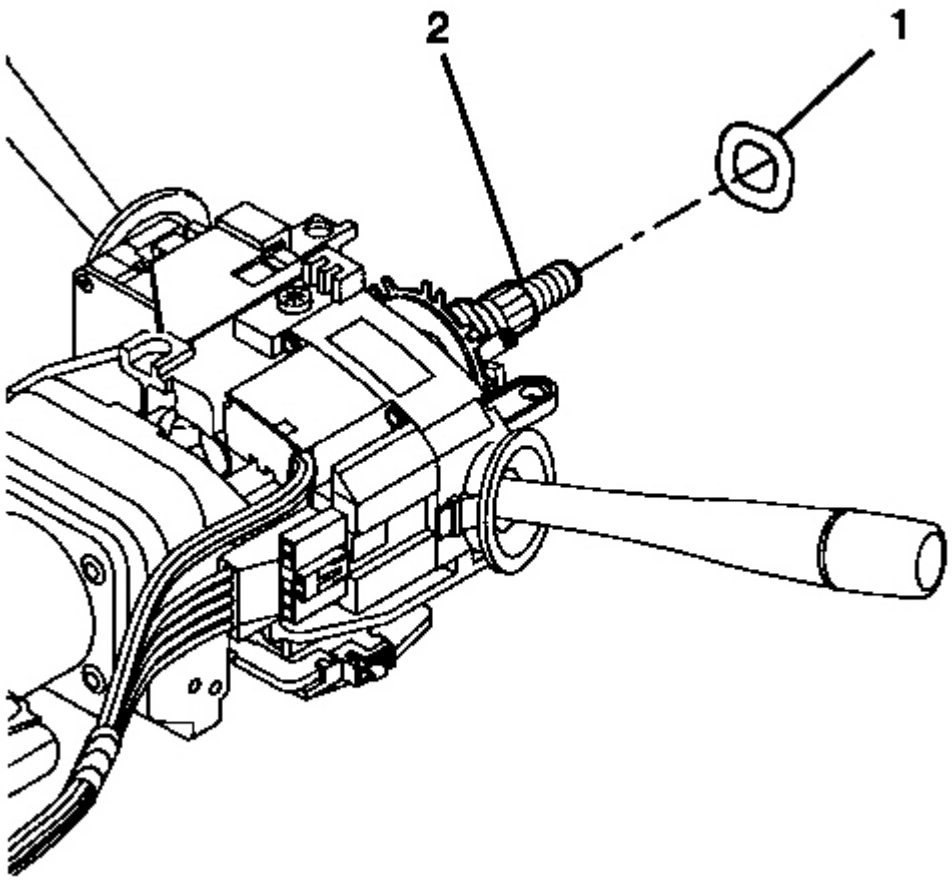

Fig. 92: Wave Washer & Steering Shaft
Courtesy of GENERAL MOTORS CORP.

CAUTION: Refer to SIR Caution in Cautions and Notices.

1. Disable the SIR system. Refer to **SIR Disabling and Enabling Zone 3** in SIR.

IMPORTANT: Let the SIR coil hang freely after removal.

2. Remove the SIR coil. Refer to **Inflatable Restraint Steering Wheel Module Coil Replacement** in SIR.
3. Remove the wave washer (1) from the steering shaft assembly (2).

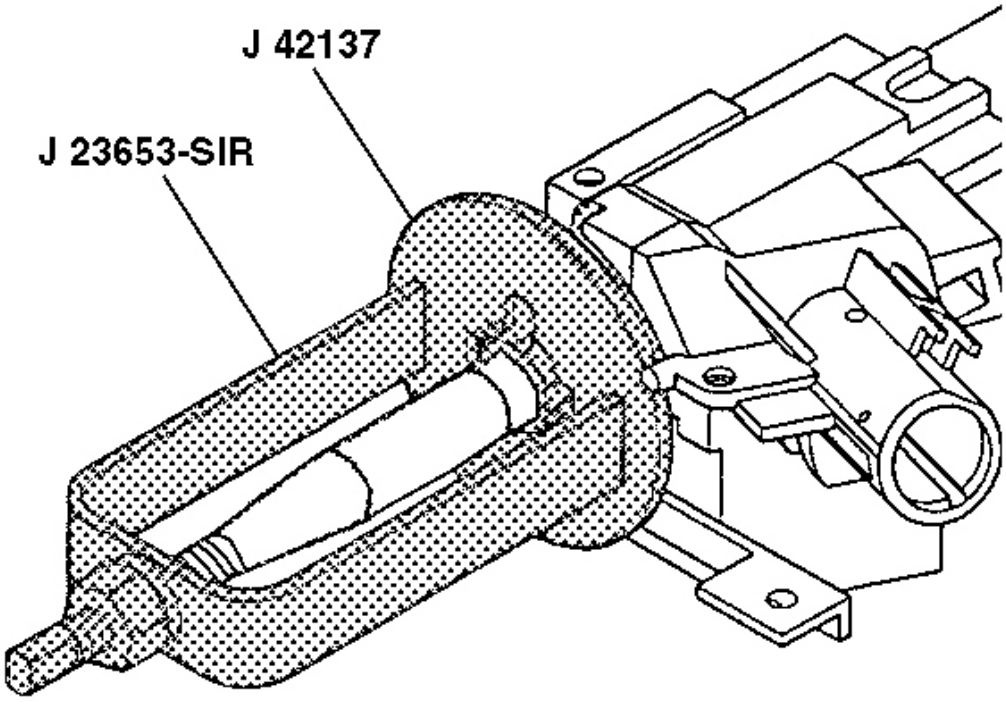

Fig. 93: Cam Orientation Plate, J 23653-SIR & J 42137
Courtesy of GENERAL MOTORS CORP.

4. Compress the cam orientation plate using J 23653-SIR and **J 42137** . See **Special Tools and Equipment** .
5. Remove the bearing retainer from the steering shaft assembly.
6. Remove J 23653-SIR and **J 42137** . See **Special Tools and Equipment** .

7. Dispose of the bearing retainer.

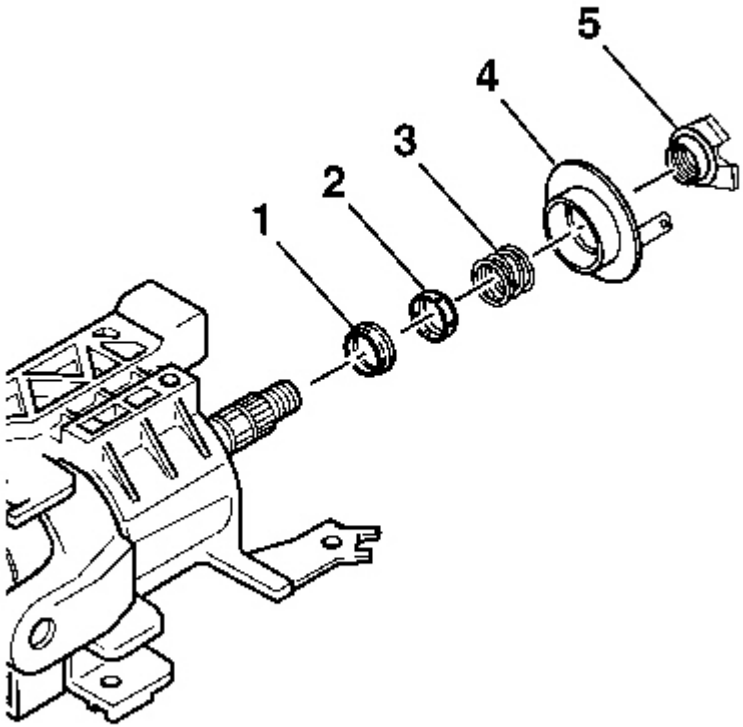

Fig. 94: Removing Cam Orientation Plate, Turn Signal Cancel Cam, Upper Bearing Spring, Upper Bearing Inner Race Seat & Inner Race
Courtesy of GENERAL MOTORS CORP.

8. Remove the cam orientation plate (5) from the steering shaft assembly.
9. Remove the turn signal cancel cam assembly (4) from the steering shaft assembly.
10. Remove the upper bearing spring (3) from the steering shaft assembly.
11. Remove the upper bearing inner race seat (2) from the steering shaft assembly.
12. Remove the inner race (1) from the steering shaft assembly.

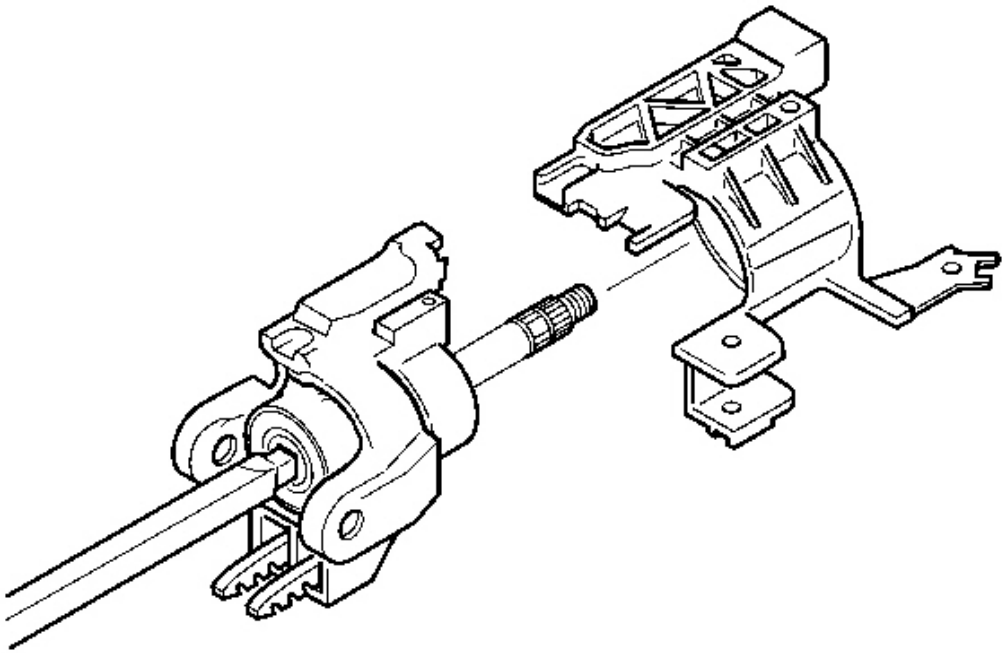

Fig. 95: Upper Column Components
Courtesy of GENERAL MOTORS CORP.

13. Remove the windshield wiper and washer switch assembly only. Refer to **Wipers/Washer Switch Replacement** in Wipers/Washers.
14. Remove the turn signal and multifunction switch assembly only. Refer to **Multifunction, Turn Signal Switch Replacement** .
15. Slide the signal switch bracket off of the steering column shaft assembly.
16. Remove the steering shaft and tilt head housing as an assembly. Refer to **Steering Shaft, Lower Bearing, and Jacket Replacement (Telescoping)** or **Steering Shaft, Lower Bearing, and Jacket Replacement (Manual)** .
17. Remove the tilt head housing from the steering shaft.

Installation Procedure

1. Install the tilt head housing onto the steering shaft.
2. Install the steering shaft and tilt head housing as an assembly. Refer to **Steering Shaft, Lower Bearing, and Jacket Replacement (Telescoping)** or **Steering Shaft, Lower Bearing, and Jacket Replacement (Manual)** .

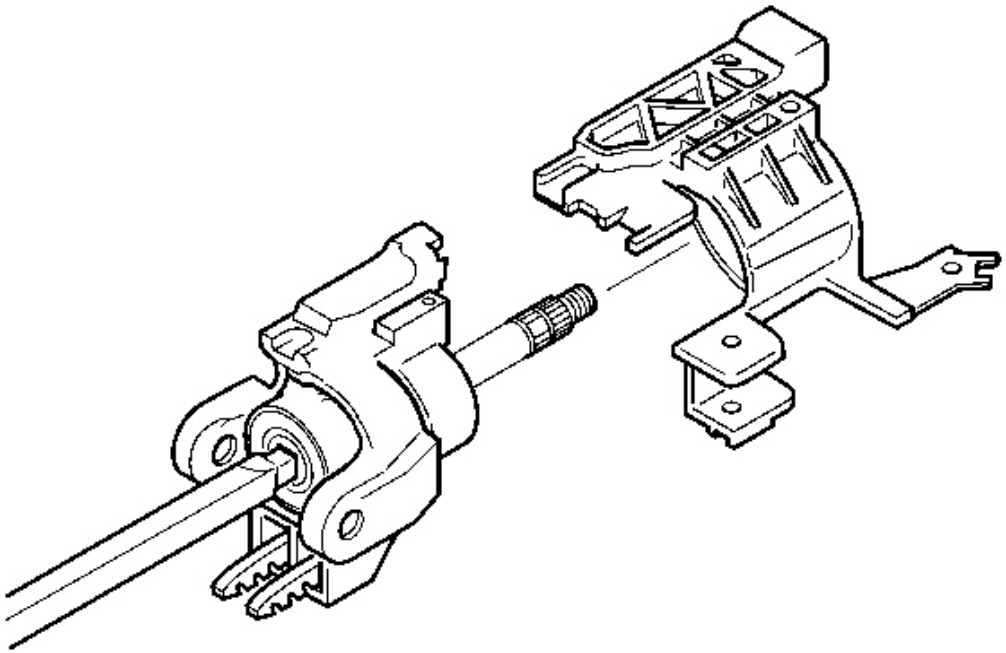

Fig. 96: Upper Column Components
Courtesy of GENERAL MOTORS CORP.

IMPORTANT: The switch mounting bracket must be pressed firmly against the steering column tilt head in order for the screws from the turn signal and multifunction switch assembly screws to line up.

3. Slide the turn signal switch bracket onto the steering column.

CAUTION: Refer to SIR Inflator Module Coil Caution in Cautions and Notices.

4. Slide the windshield wiper and washer switch assembly into the signal switch housing. Refer to **Wipers/Washer Switch Replacement** in Wipers/Washers.
5. Install the turn signal and multifunction switch assembly only. Refer to **Multifunction, Turn Signal Switch Replacement** .

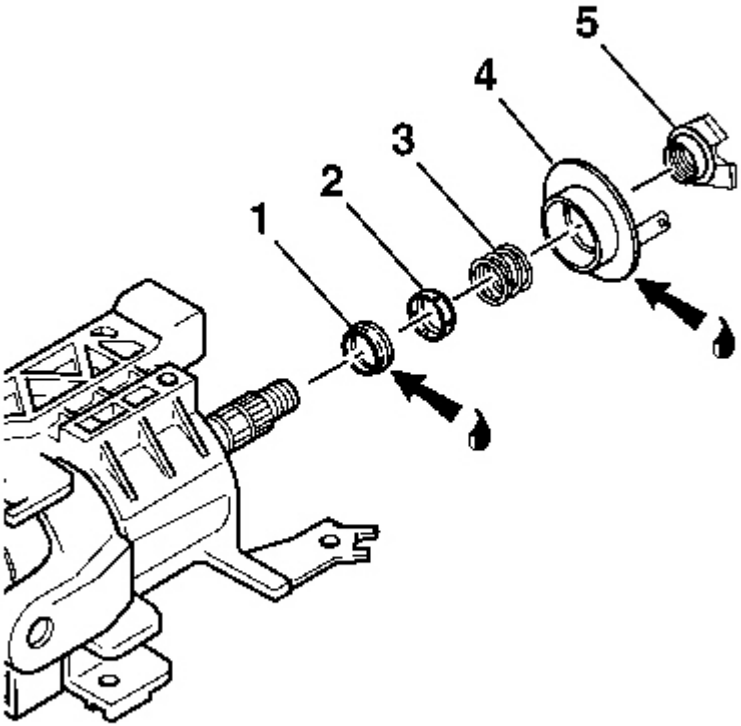

Fig. 97: Installing Cam Orientation Plate, Turn Signal Cancel Cam, Upper Bearing Spring, Upper Bearing Inner Race Seat & Inner Race
Courtesy of GENERAL MOTORS CORP.

6. Lubricate the inner race (1) with GM P/M 12345819 (Canadian P/N 10953516).
7. Install the inner race (1) onto the steering shaft assembly.
8. Install the upper bearing inner race seat (2) onto the steering shaft assembly.
9. Install the upper bearing spring (3) onto the steering shaft assembly.
10. Lubricate the lower brass surface of the turn signal cancel cam assembly (4) with GM P/N 12377900 (Canadian P/N 10953529).
11. Install the turn signal cancel cam assembly (4) onto the steering shaft assembly.
12. Install the cam orientation plate (5) onto the steering shaft assembly.

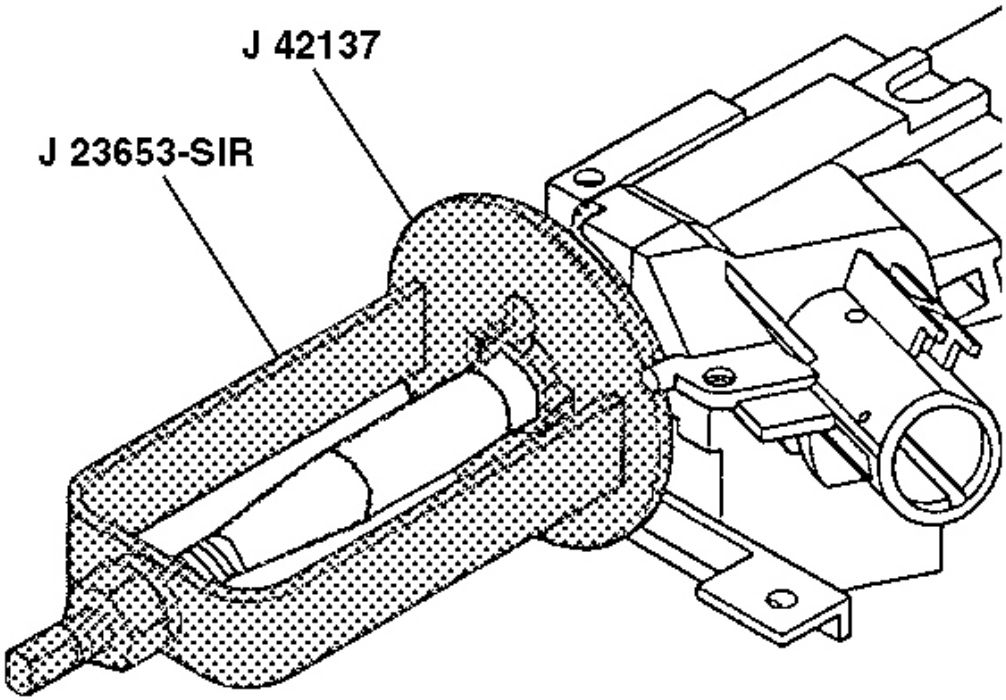

Fig. 98: Cam Orientation Plate, J 23653-SIR & J 42137
Courtesy of GENERAL MOTORS CORP.

13. Compress the cam orientation plate using J 23653-SIR and **J 42137** . See **Special Tools and Equipment** .
14. Firmly seat the new bearing retainer into the groove on the steering shaft assembly.
15. Remove J 23653-SIR and **J 42137** . See **Special Tools and Equipment** .

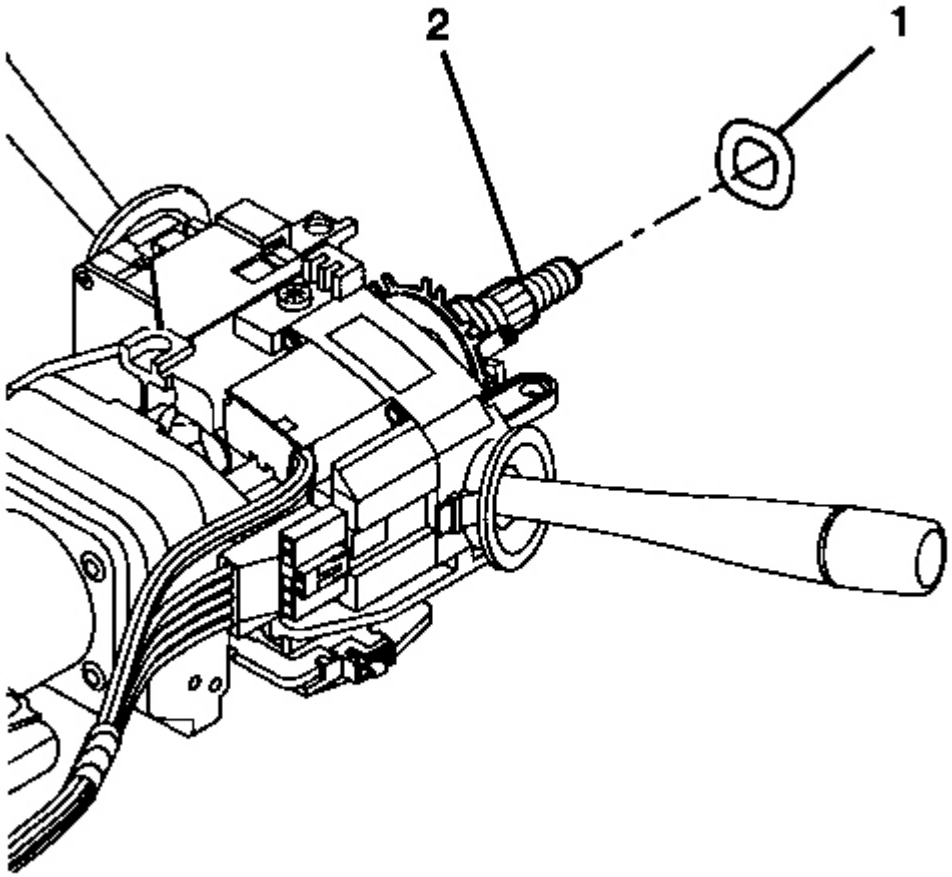

Fig. 99: Wave Washer & Steering Shaft
Courtesy of GENERAL MOTORS CORP.

16. Install the wave washer (1) to the steering shaft assembly (2).
17. Install the SIR coil. Refer to **Inflatable Restraint Steering Wheel Module Coil Replacement** in SIR.
18. Enable the SIR system. Refer to **SIR Disabling and Enabling Zone 3** in SIR.

STEERING COLUMN TILT HEAD HOUSING REPLACEMENT (MANUAL)

Tools Required

- J 23653-SIR Steering Column Lock Plate Compressor
- **J 42137** Steering Column Lock Plate Compressor Adapter. See **Special Tools and Equipment** .

Removal Procedure

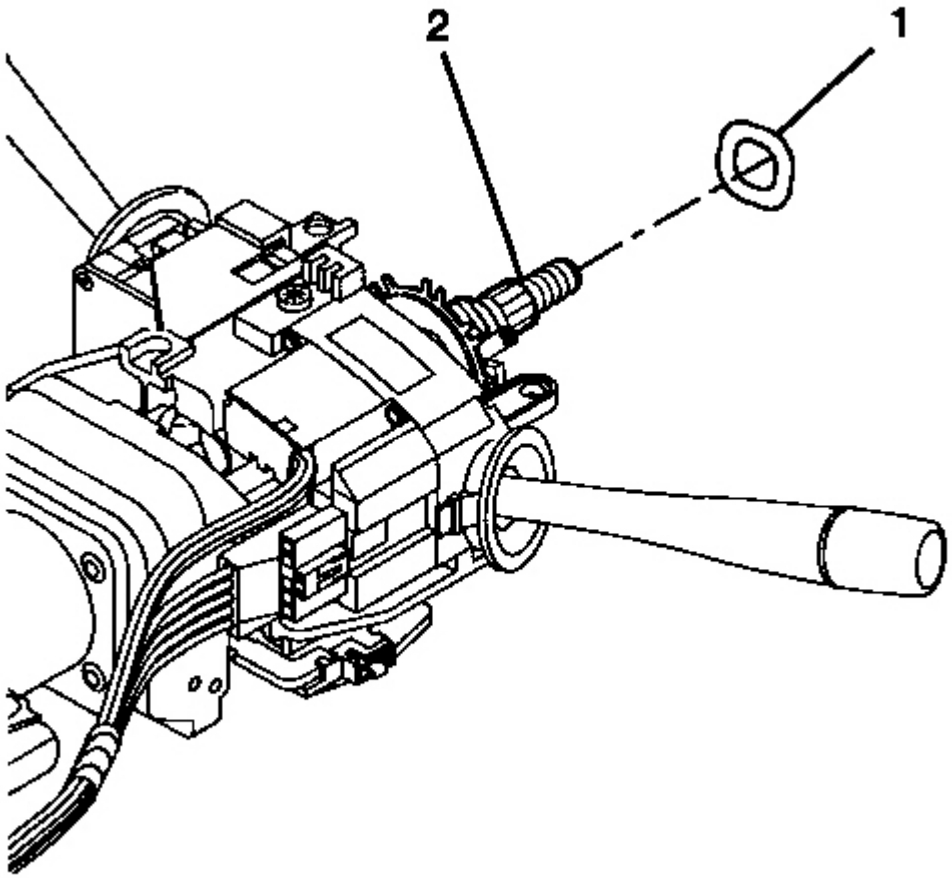

Fig. 100: Wave Washer & Steering Shaft
Courtesy of GENERAL MOTORS CORP.

CAUTION: Refer to SIR Caution in Cautions and Notices.

1. Disable the SIR system. Refer to **SIR Disabling and Enabling Zone 3** in SIR.

IMPORTANT: Let the SIR coil hang freely after removal.

2. Remove the SIR coil. Refer to **Inflatable Restraint Steering Wheel Module Coil Replacement** in SIR.

3. Remove the wave washer (1) from the steering shaft assembly (2).

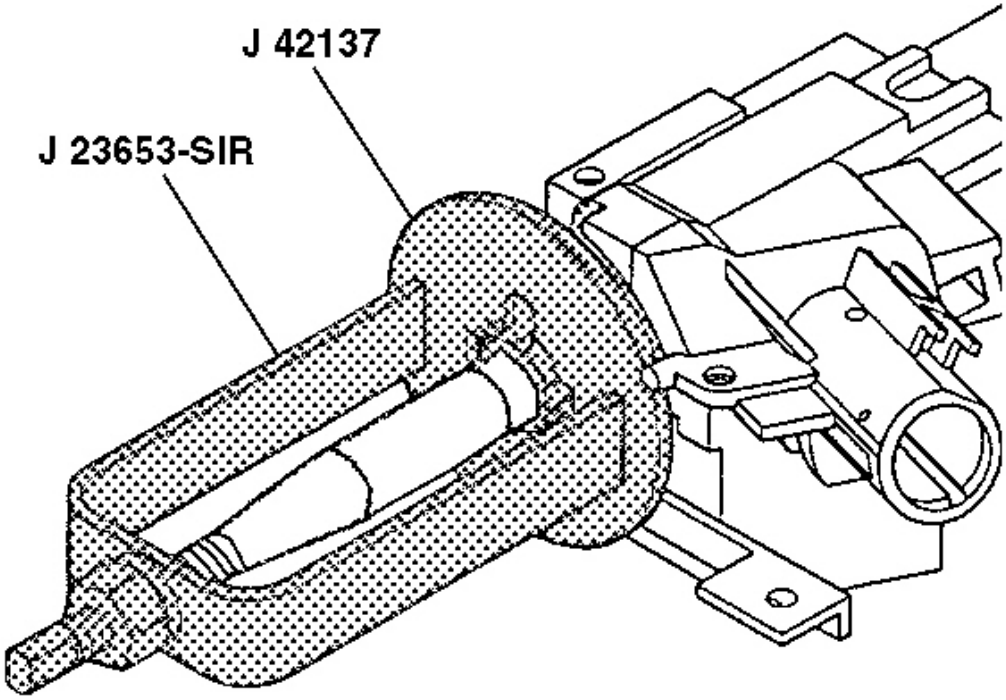

Fig. 101: Cam Orientation Plate, J 23653-SIR & J 42137
Courtesy of GENERAL MOTORS CORP.

4. Compress the cam orientation plate using J 23653-SIR and **J 42137** . See **Special Tools and Equipment** .
5. Remove the bearing retainer from the steering shaft assembly.
6. Remove J 23653-SIR and **J 42137** . See **Special Tools and Equipment** .
7. Dispose of the bearing retainer.

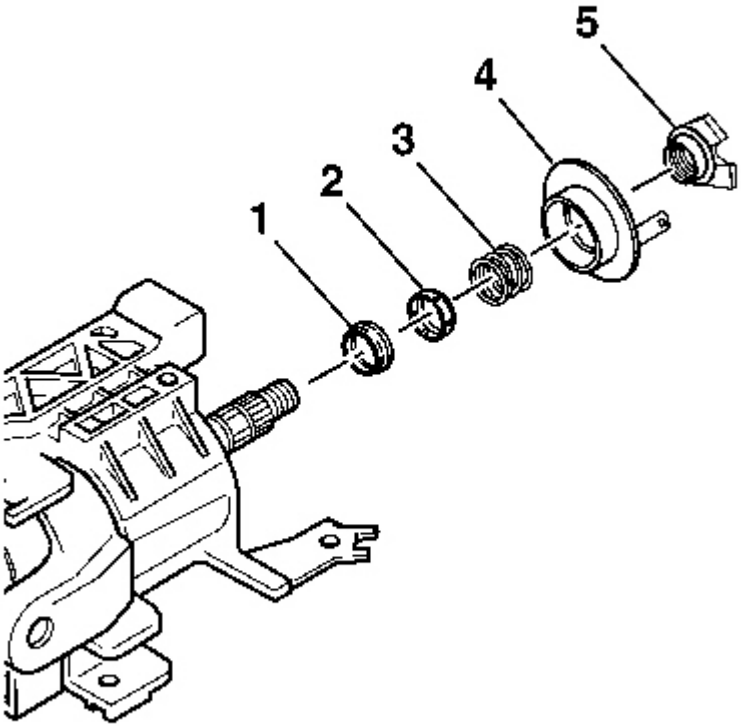

Fig. 102: Removing Cam Orientation Plate, Turn Signal Cancel Cam, Upper Bearing Spring, Upper Bearing Inner Race Seat & Inner Race
Courtesy of GENERAL MOTORS CORP.

8. Remove the cam orientation plate (5) from the steering shaft assembly.
9. Remove the turn signal cancel cam assembly (4) from the steering shaft assembly.
10. Remove the upper bearing spring (3) from the steering shaft assembly.
11. Remove the upper bearing inner race seat (2) from the steering shaft assembly.
12. Remove the inner race (1) from the steering shaft assembly.

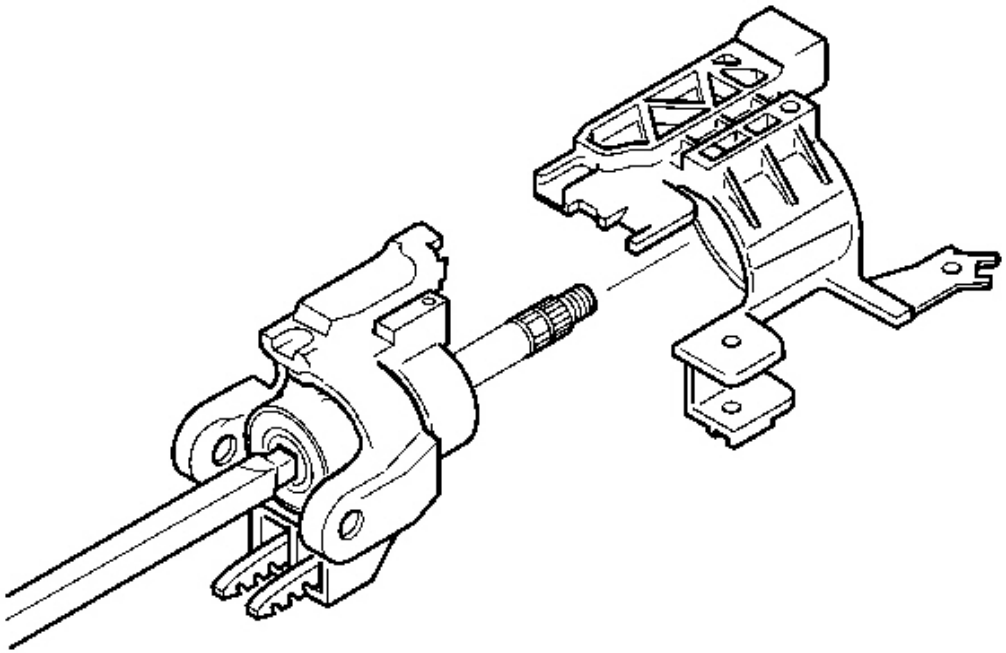

Fig. 103: Upper Column Components
Courtesy of GENERAL MOTORS CORP.

13. Remove the windshield wiper and washer switch assembly only. Refer to **Wipers/Washer Switch Replacement** in Wiper/Washers.
14. Remove the turn signal and multifunction switch assembly only. Refer to **Multifunction, Turn Signal Switch Replacement** .
15. Slide the signal switch bracket off of the steering column shaft assembly.
16. Remove the steering shaft and tilt head housing as an assembly. Refer to **Steering Shaft, Lower Bearing, and Jacket Replacement (Telescoping)** or **Steering Shaft, Lower Bearing, and Jacket Replacement (Manual)** .
17. Remove the tilt head housing from the steering shaft.

Installation Procedure

1. Install the tilt head housing onto the steering shaft.
2. Install the steering shaft and tilt head housing as an assembly. Refer to **Steering Shaft, Lower Bearing, and Jacket Replacement (Telescoping)** or **Steering Shaft, Lower Bearing, and Jacket Replacement (Manual)** .

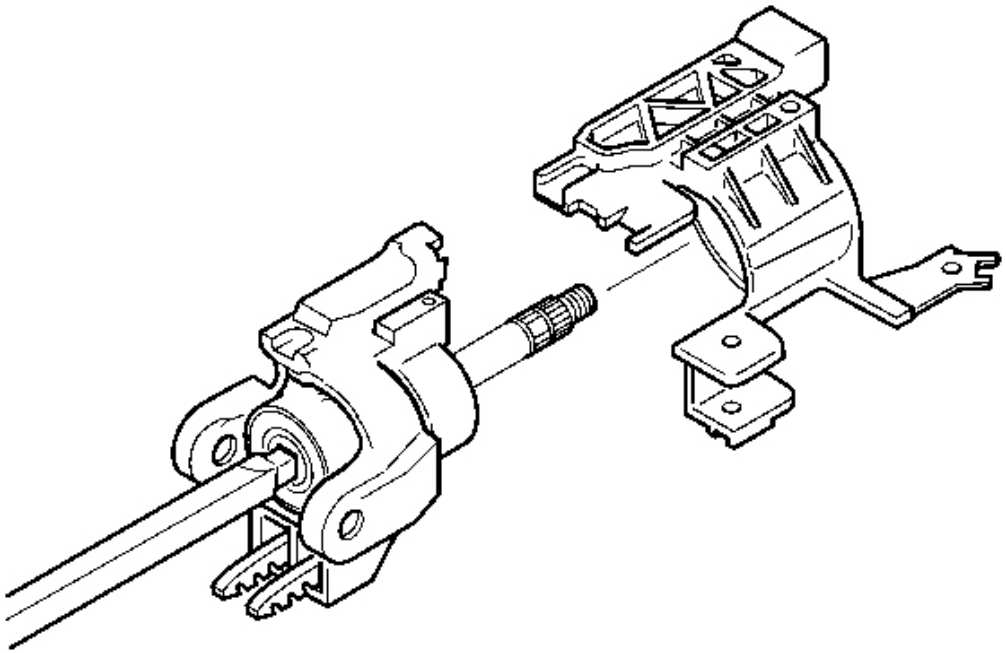

Fig. 104: Upper Column Components
Courtesy of GENERAL MOTORS CORP.

IMPORTANT: The switch mounting bracket must be pressed firmly against the steering column tilt head in order for the screws from the turn signal and multifunction switch assembly screws to line up.

3. Slide the turn signal switch bracket onto the steering column.

CAUTION: Refer to SIR Inflator Module Coil Caution in Cautions and Notices.

4. Slide the windshield wiper and washer switch assembly into the signal switch housing. Refer to **Wipers/Washer Switch Replacement** in Wipers/Washers.
5. Install the turn signal and multifunction switch assembly only. Refer to **Multifunction, Turn Signal Switch Replacement** .

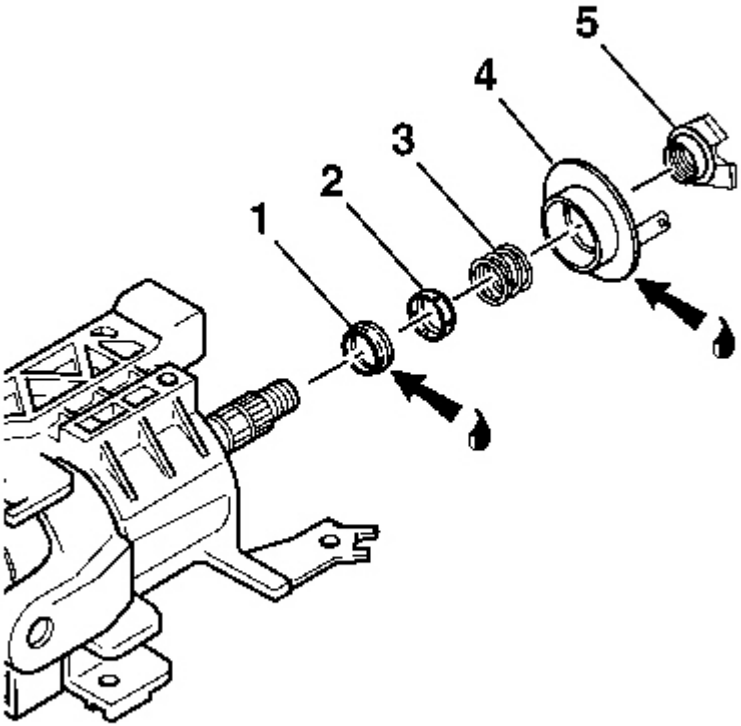

Fig. 105: Installing Cam Orientation Plate, Turn Signal Cancel Cam, Upper Bearing Spring, Upper Bearing Inner Race Seat & Inner Race
Courtesy of GENERAL MOTORS CORP.

6. Lubricate the inner race (1) with GM P/N 12345718 (Canadian P/N 10953516).
7. Install the inner race (1) onto the steering shaft assembly.
8. Install the upper bearing inner race seat (2) onto the steering shaft assembly.
9. Install the upper bearing spring (3) onto the steering shaft assembly.
10. Lubricate the lower brass surface of the turn signal cancel cam assembly (4) with GM P/N 12377900 (Canadian P/N 10953529).
11. Install the turn signal cancel cam assembly (4) onto the steering shaft assembly.
12. Install the cam orientation plate (5) onto the steering shaft assembly.
13. Install the new bearing retainer onto the steering shaft assembly.

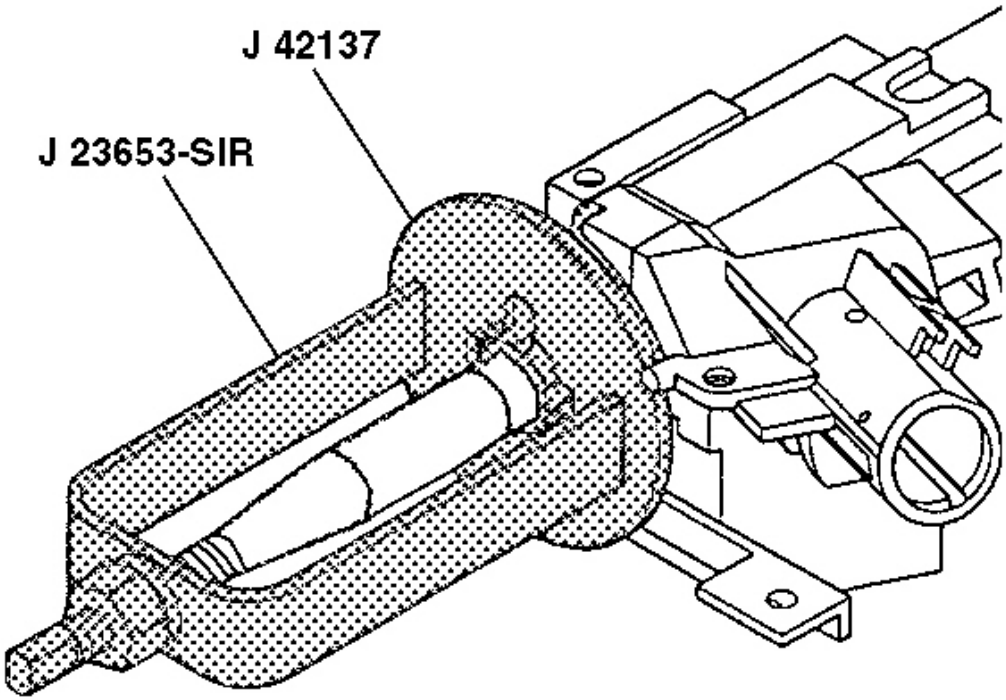

Fig. 106: Cam Orientation Plate, J 23653-SIR & J 42137
Courtesy of GENERAL MOTORS CORP.

14. Compress the cam orientation plate using J 23653-SIR and **J 42137** . See **Special Tools and Equipment** .
15. Firmly seat the bearing retainer into the groove on the steering shaft assembly.
16. Remove J 23653-SIR and **J 42137** . See **Special Tools and Equipment** .

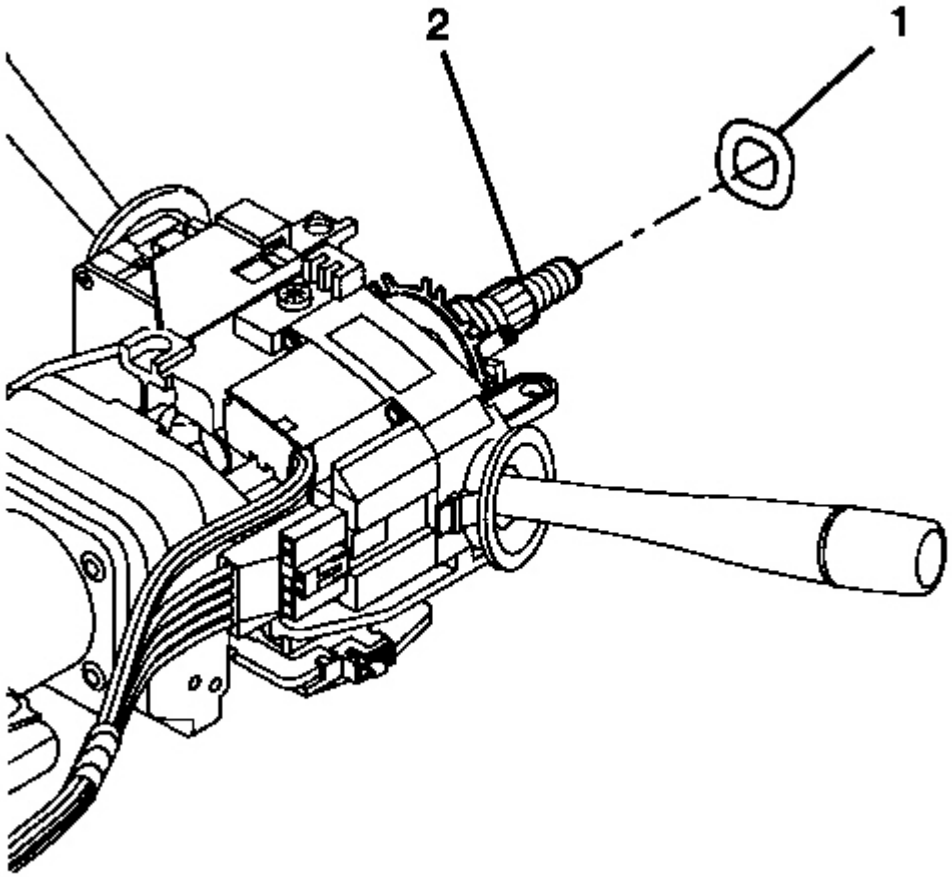

Fig. 107: Wave Washer & Steering Shaft
Courtesy of GENERAL MOTORS CORP.

17. Install the wave washer (1) to the steering shaft assembly (2).
18. Install the SIR coil. Refer to **Inflatable Restraint Steering Wheel Module Coil Replacement** in SIR.
19. Enable the SIR system. Refer to **SIR Disabling and Enabling Zone 3** in SIR.

STEERING COLUMN REPLACEMENT

Tools Required

- **J 42640** Steering Column Lock Pin. See **Special Tools and Equipment** .
- **J 41352** Modular Column Holding Fixture. See **Special Tools and Equipment** .

Removal Procedure

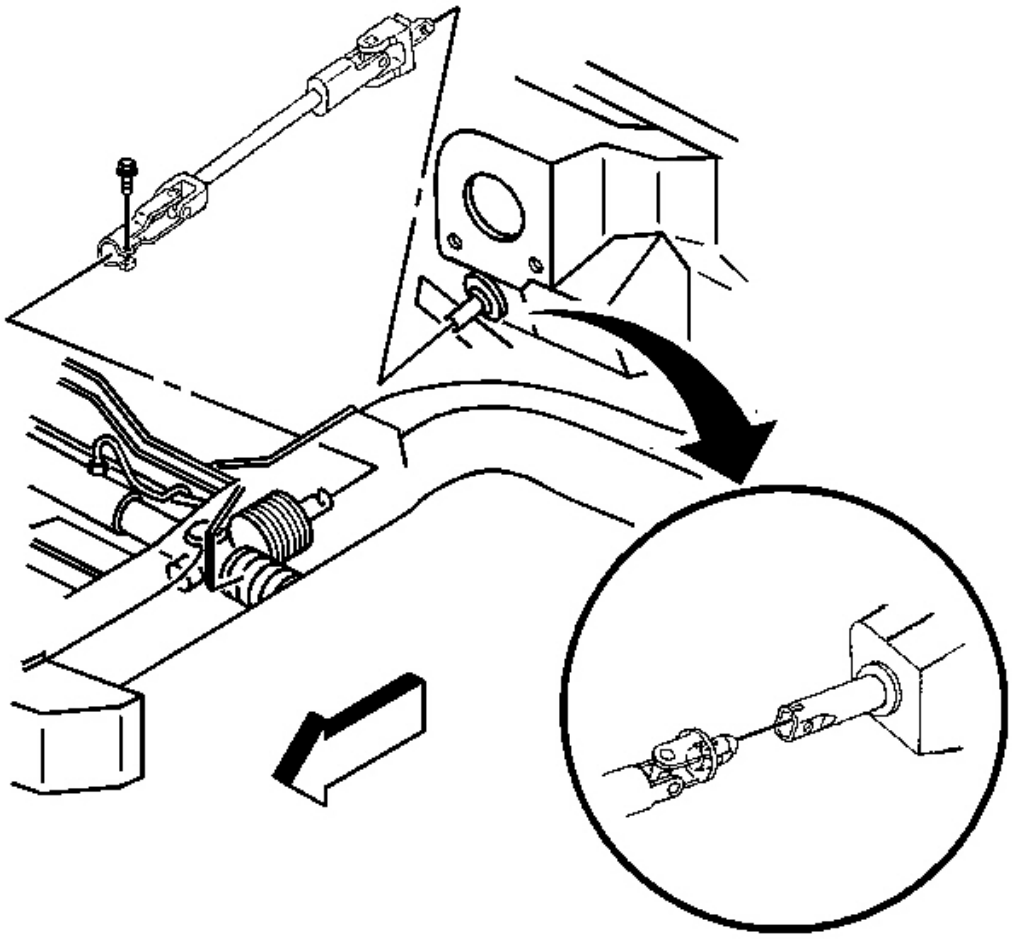

Fig. 108: Steering Column, Upper Coupling & Bolt
Courtesy of GENERAL MOTORS CORP.

IMPORTANT: If the steering column connectors are disconnected with the ignition in the ON position, the BCM will enter a fail enable mode and prevent steering column lock operation. The PCM will also inhibit vehicle motion by disabling fuel. To clear the BCM fail enable mode, disconnect the BCM fuse #25 for 15 seconds.

1. Disable the SIR system. Refer to **SIR Disabling and Enabling Zone 3** in SIR.
2. Turn the steering wheel far enough to the left to gain access to the upper coupling bolt.

3. Remove the upper coupling bolt.
4. Turn the steering wheel back to the right until the wheels are in a straight ahead position. Lock the steering column.

NOTE: **The wheels of the vehicle must be straight ahead and the steering column in the LOCK position before disconnecting the steering column or intermediate shaft from the steering gear. Failure to do so will cause the SIR coil assembly to become uncentered, which may cause damage to the coil assembly.**

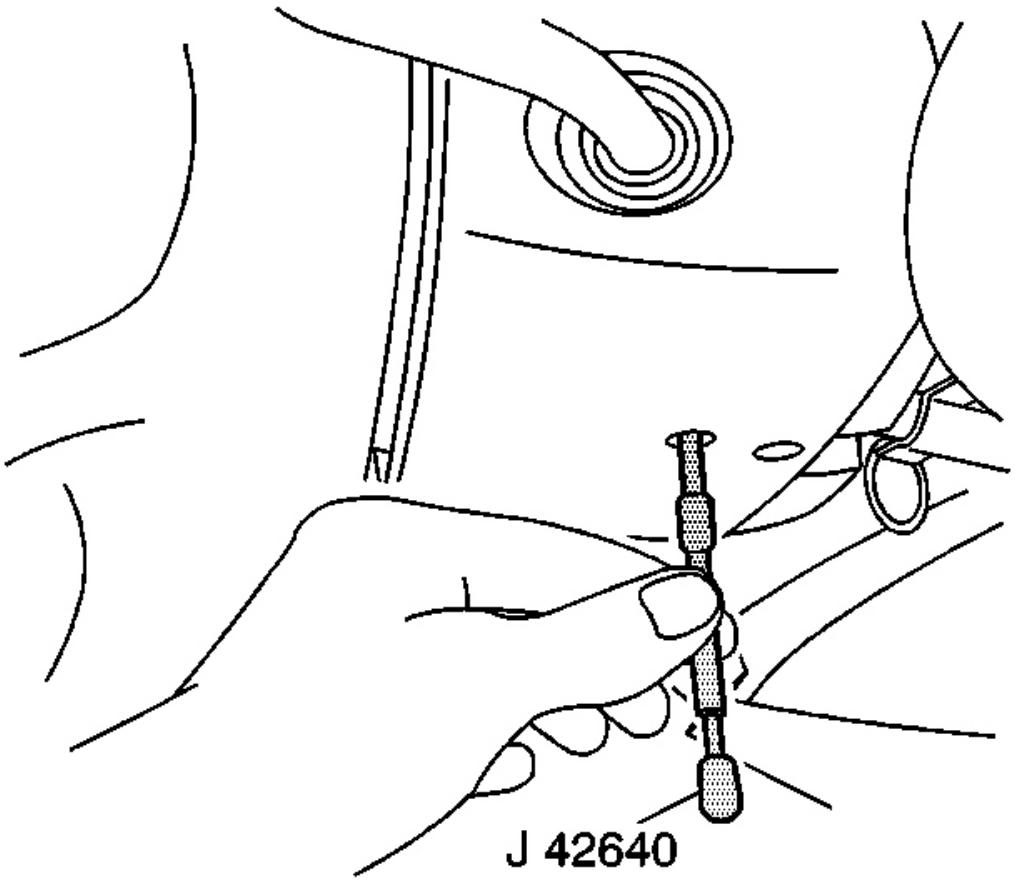

Fig. 109: Inserting J 42640 To Lock The Steering Column
Courtesy of GENERAL MOTORS CORP.

5. Insert **J 42640** into the steering column access hole in order to lock the steering column. See **Special Tools and Equipment** . This will maintain the correct orientation.

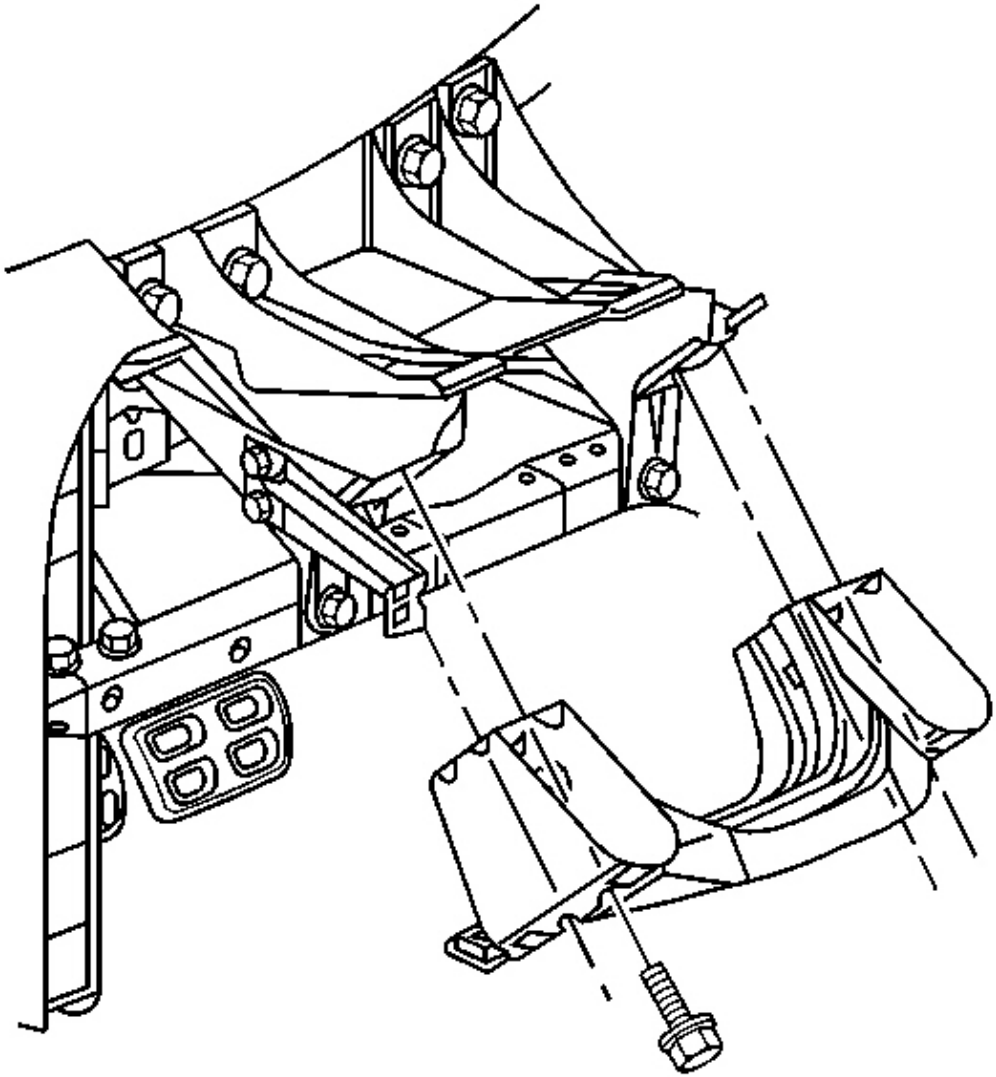

Fig. 110: Electrical Connectors & I/P Wiring Harness
Courtesy of GENERAL MOTORS CORP.

6. Remove the trim panel from the driver knee bolster. Refer to **Trim Panel Replacement - Knee Bolster** in Instrument Panel, Gages and Console.
7. Remove the driver knee bolster bracket. Refer to **Trim Panel Replacement - Knee Bolster** in Instrument Panel, Gages and Console.
8. Disconnect the electrical connectors from the instrument panel (I/P) wiring harness.

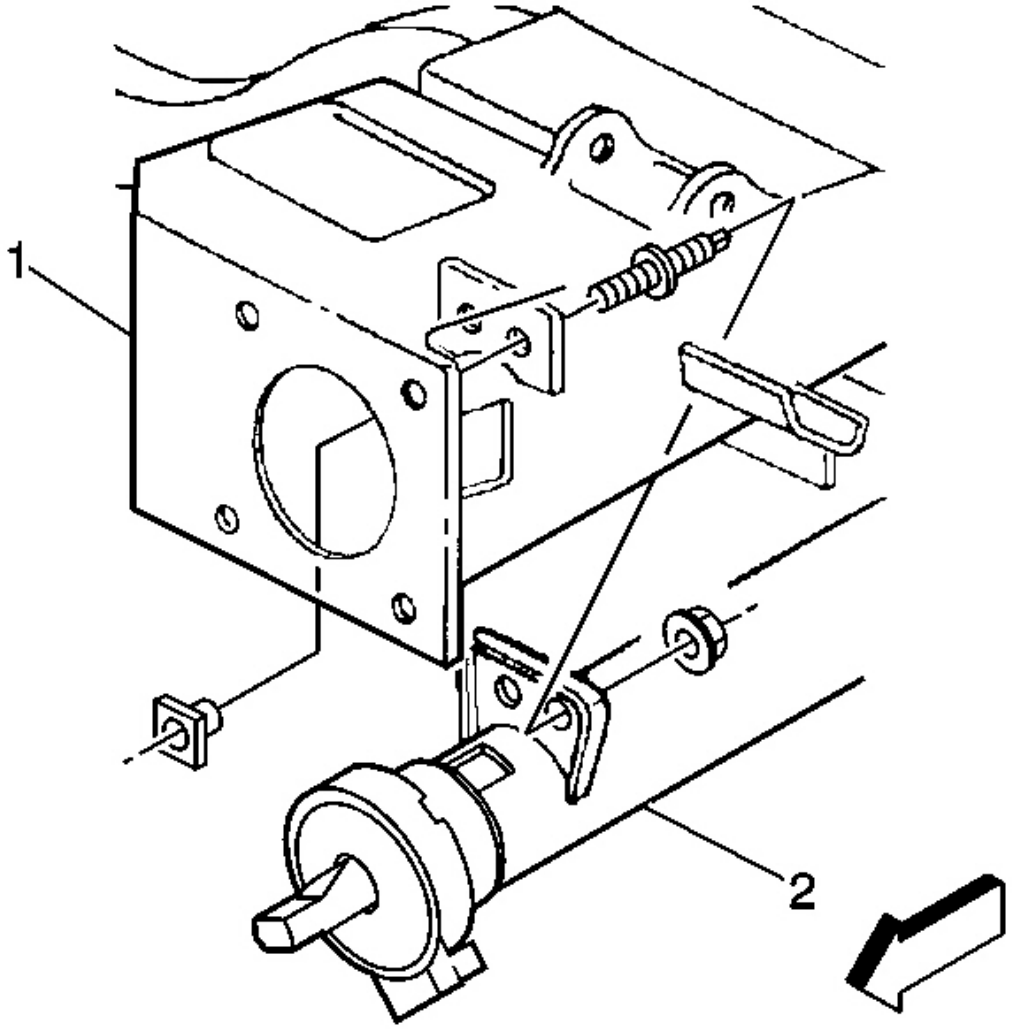

Fig. 111: Lower Steering Column Support Plate & Nuts
Courtesy of GENERAL MOTORS CORP.

9. Remove the nuts from lower steering column support plate (1).

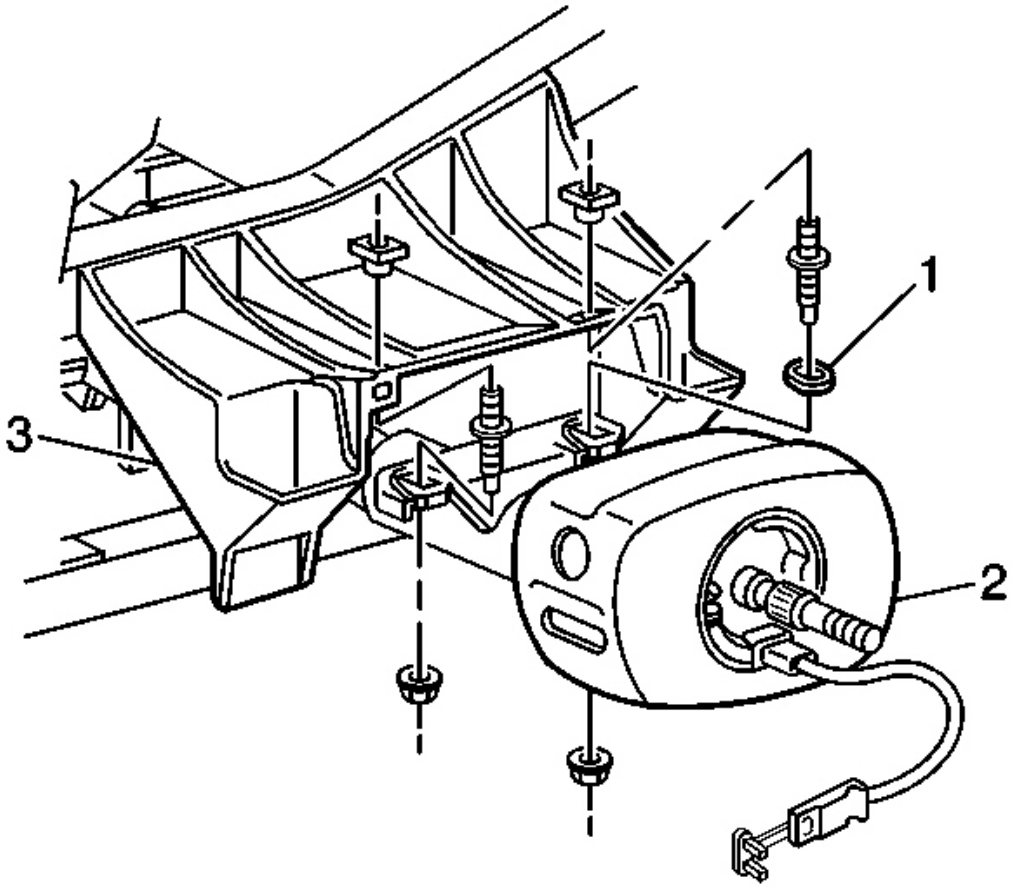

Fig. 112: Steering Column, Bracket & Nuts
Courtesy of GENERAL MOTORS CORP.

10. Remove the upper steering column bracket nuts from the upper reinforcement assembly (3).
11. Slide the steering column (2) off of the intermediate shaft.

NOTE: **Once the steering column is removed from the vehicle, the column is extremely susceptible to damage. Dropping the column assembly on the end could collapse the steering shaft or loosen the plastic injections, which maintain column rigidity. Leaning on the column assembly could cause the jacket to bend or deform. Any of the above damage could impair the columns collapsible design. Do NOT hammer on the end of the shaft, because hammering could loosen the plastic injections, which maintain column rigidity. If you need to remove the steering wheel, refer to the**

Steering Wheel Replacement procedure in this section.

12. Remove the steering column (2) from the vehicle.

    Rotate the steering column clockwise as the bottom of the steering column reaches the reinforcement assembly. This will allow the telescoping steering column motor and the steering wheel position sensor room to clear the I/P brace.

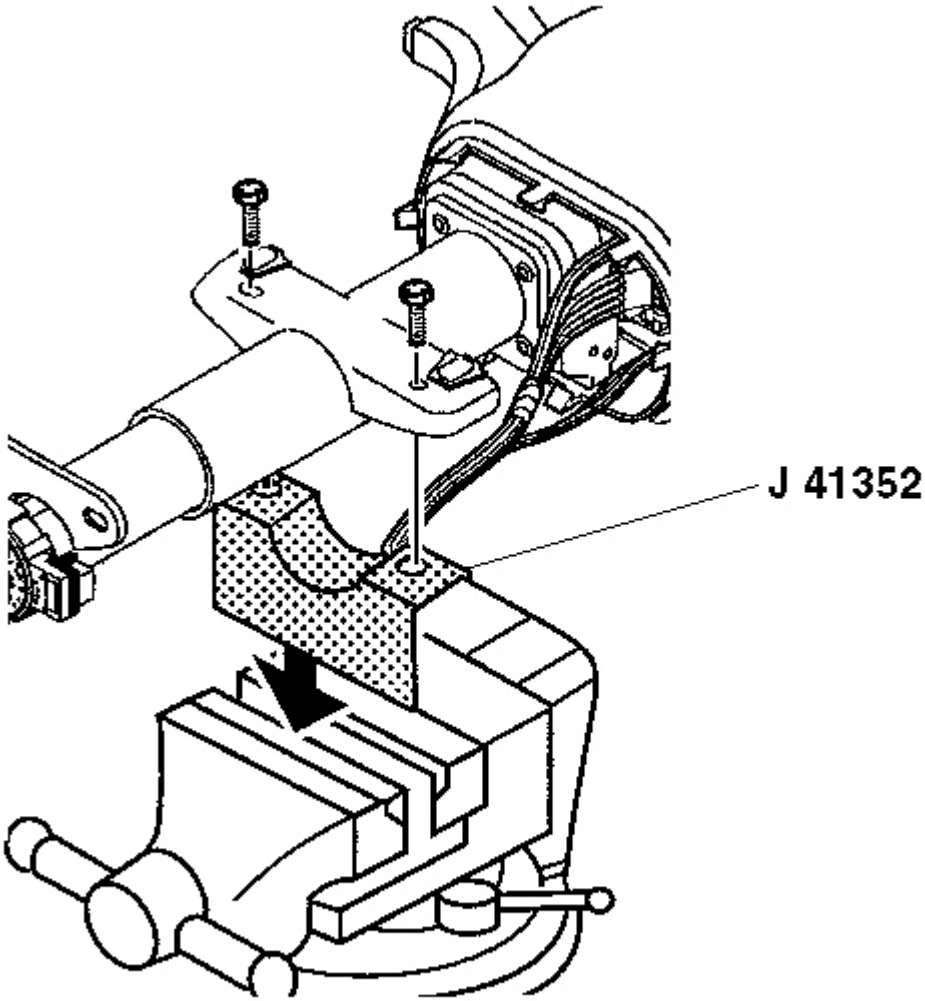

Fig. 113: Installing Steering Column Onto J 41352
Courtesy of GENERAL MOTORS CORP.

13. Install the steering column onto **J 41352** . See **Special Tools and Equipment** .

Installation Procedure

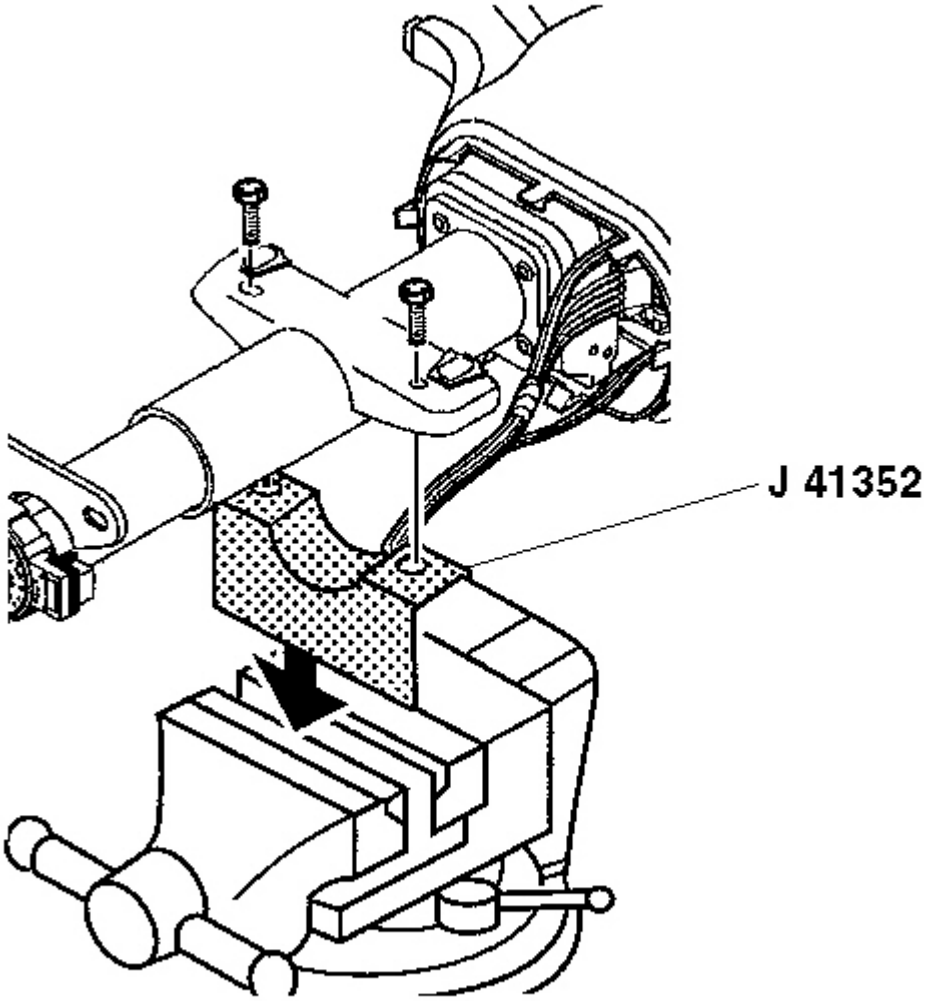

Fig. 114: Installing Steering Column Onto J 41352
Courtesy of GENERAL MOTORS CORP.

1. Remove the steering column from **J 41352** . See **Special Tools and Equipment** .

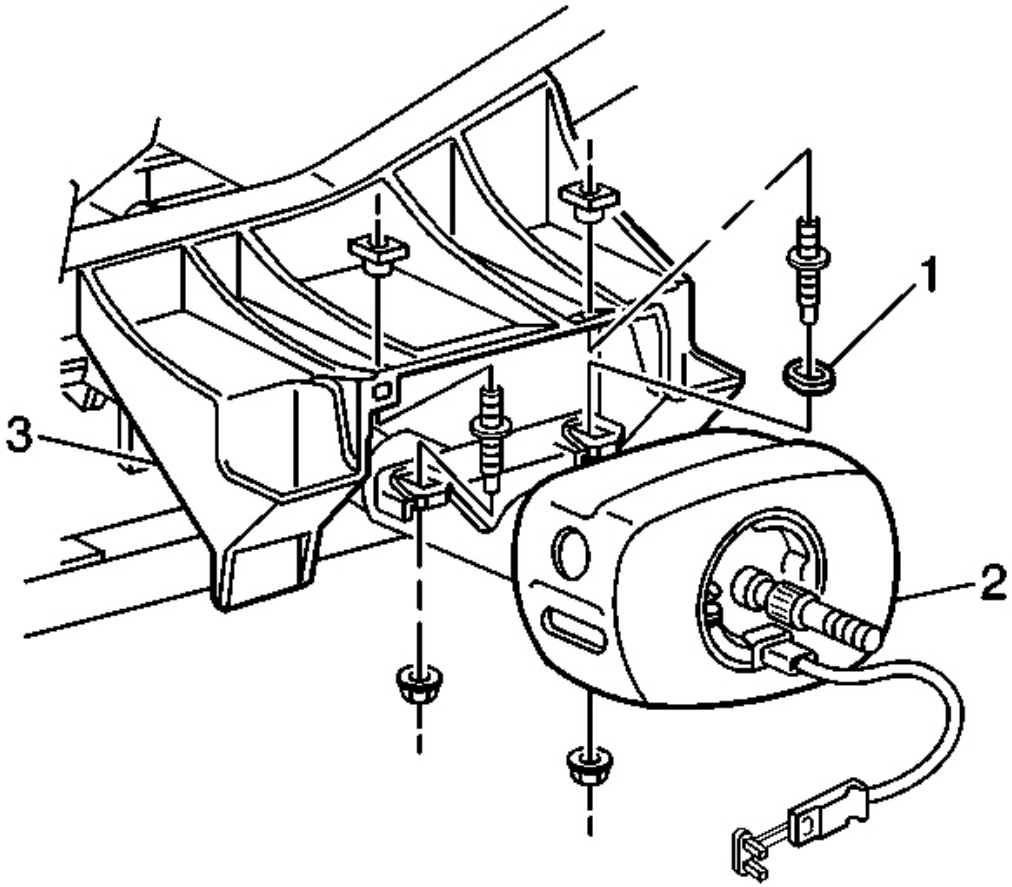

Fig. 115: Steering Column, Bracket & Nuts
Courtesy of GENERAL MOTORS CORP.

2. Position the steering column assembly (2) into the vehicle and insert the lower steering shaft assembly into the upper coupling of the intermediate shaft.
3. Install the cross car locating bushing (1) on the right hand mounting stud.

NOTE: **Refer to Fastener Notice in Cautions and Notices.**

4. Install the upper steering column bracket nuts to the upper reinforcement assembly (3).

   Tighten: Tighten the nuts to 24 N.m (17 lb ft).

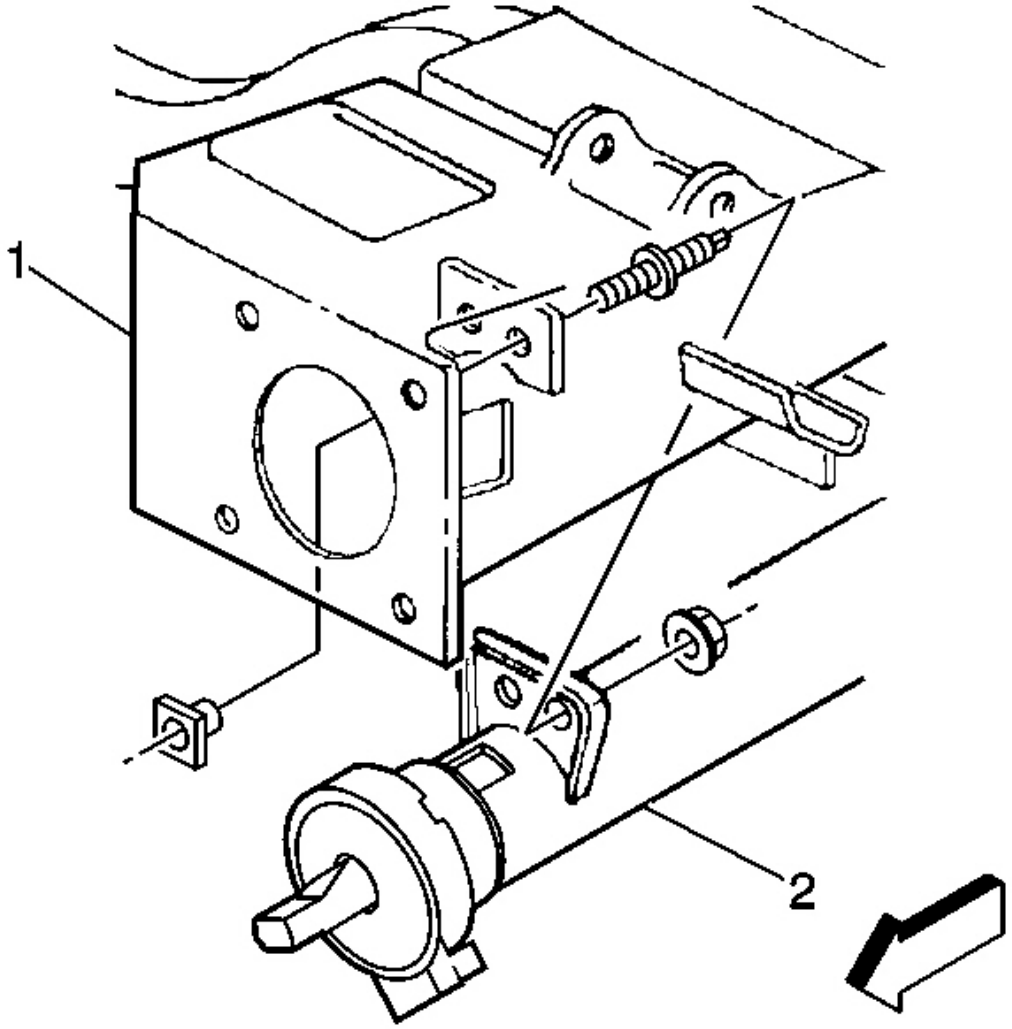

Fig. 116: Lower Steering Column Support Plate & Nuts
Courtesy of GENERAL MOTORS CORP.

5. Install the nuts to the lower steering column support plate (1).

   Tighten: Tighten the nuts to 24 N.m (17 lb ft).

6. Turn the steering wheel far enough to the left to gain access to the upper coupling of the intermediate shaft.

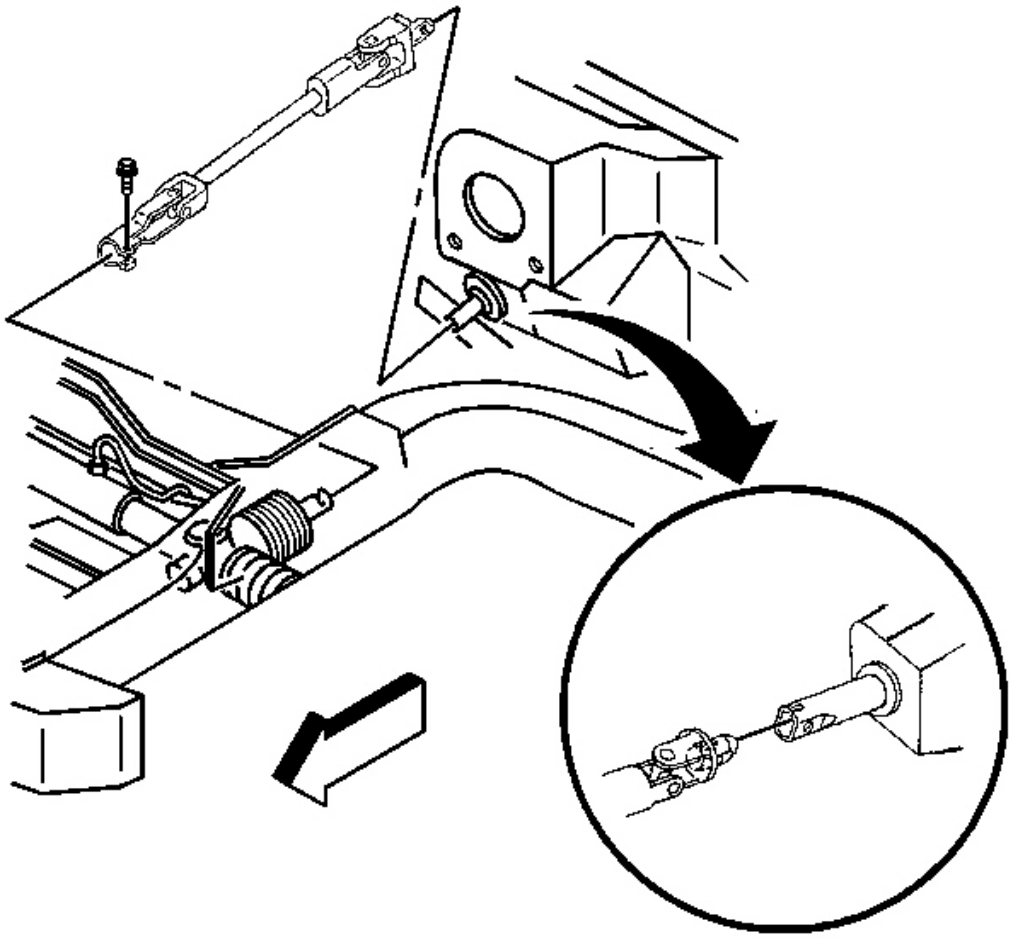

Fig. 117: Steering Column, Upper Coupling & Bolt
Courtesy of GENERAL MOTORS CORP.

7. Install the upper coupling bolt.

   Tighten: Tighten the bolt to 48 N.m (35 lb ft).

8. Connect all the electrical connectors to the I/P wiring harness.
9. Remove **J 42640** from the steering column. See **Special Tools and Equipment** .

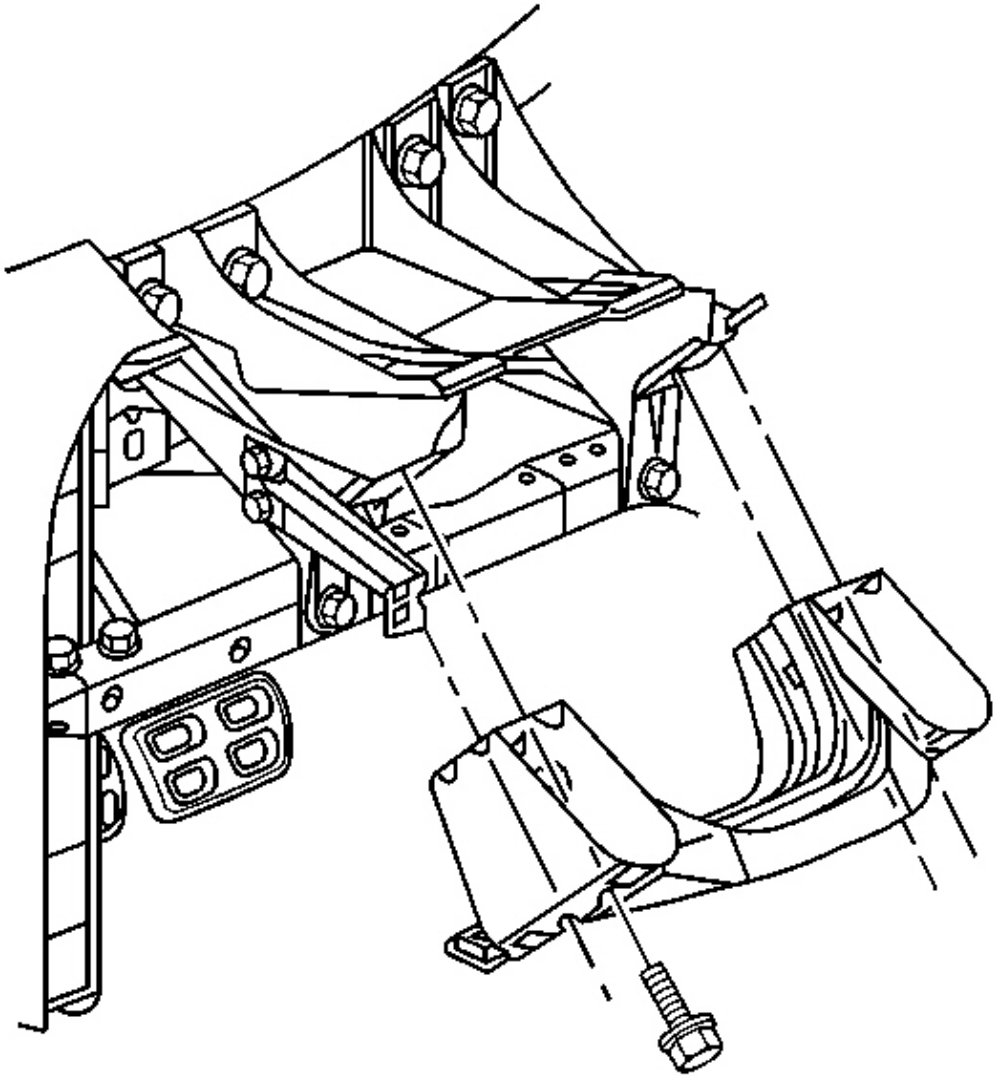

Fig. 118: Electrical Connectors & I/P Wiring Harness
Courtesy of GENERAL MOTORS CORP.

10. Install the driver knee bolster bracket (1). Refer to **Trim Panel Replacement - Knee Bolster** in Instrument Panel, Gages and Console.
11. Install the driver knee bolster trim panel. Refer to **Trim Panel Replacement - Knee Bolster** in Instrument Panel, Gages and Console.
12. Enable the SIR system. Refer to **SIR Disabling and Enabling Zone 3** in SIR.

STEERING WHEEL POSITION SENSOR OR STEERING SHAFT LOWER BEARING REPLACEMENT

Removal Procedure

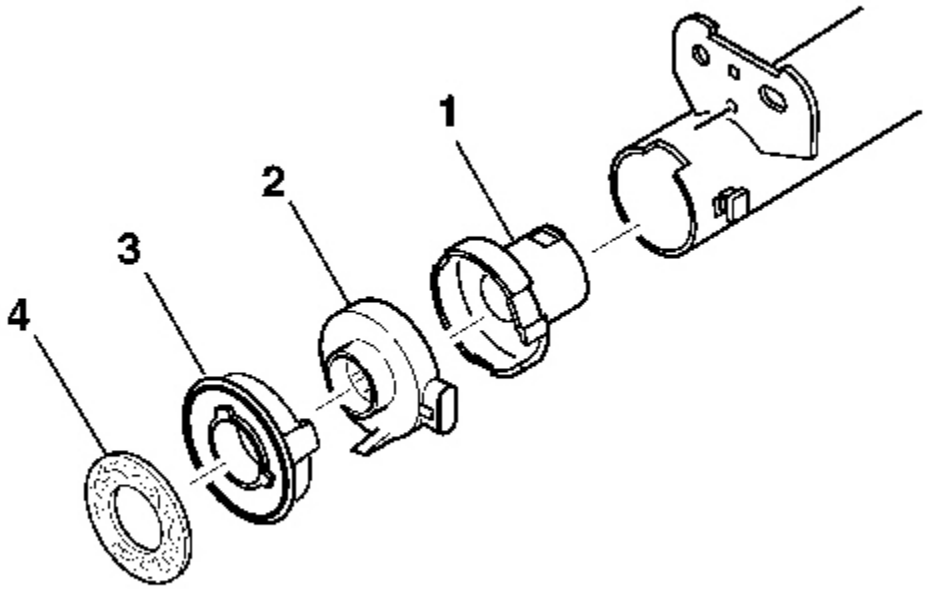

Fig. 119: Steering Shaft Seal, Sensor Retainer, Sensor Assembly, Adapter & Bearing Assembly
Courtesy of GENERAL MOTORS CORP.

CAUTION: Refer to SIR Caution in Cautions and Notices.

1. Disable the SIR system. Refer to **SIR Disabling and Enabling Zone 3** in SIR.
2. Remove the steering column. See **Steering Column Replacement** .
3. Remove the following from the steering shaft:
    1. Steering shaft seal (4)
    2. Sensor retainer (3)
    3. Sensor assembly (2), refer to **Steering Wheel Position Sensor Centering** .
    4. Adapter and bearing assembly (1)

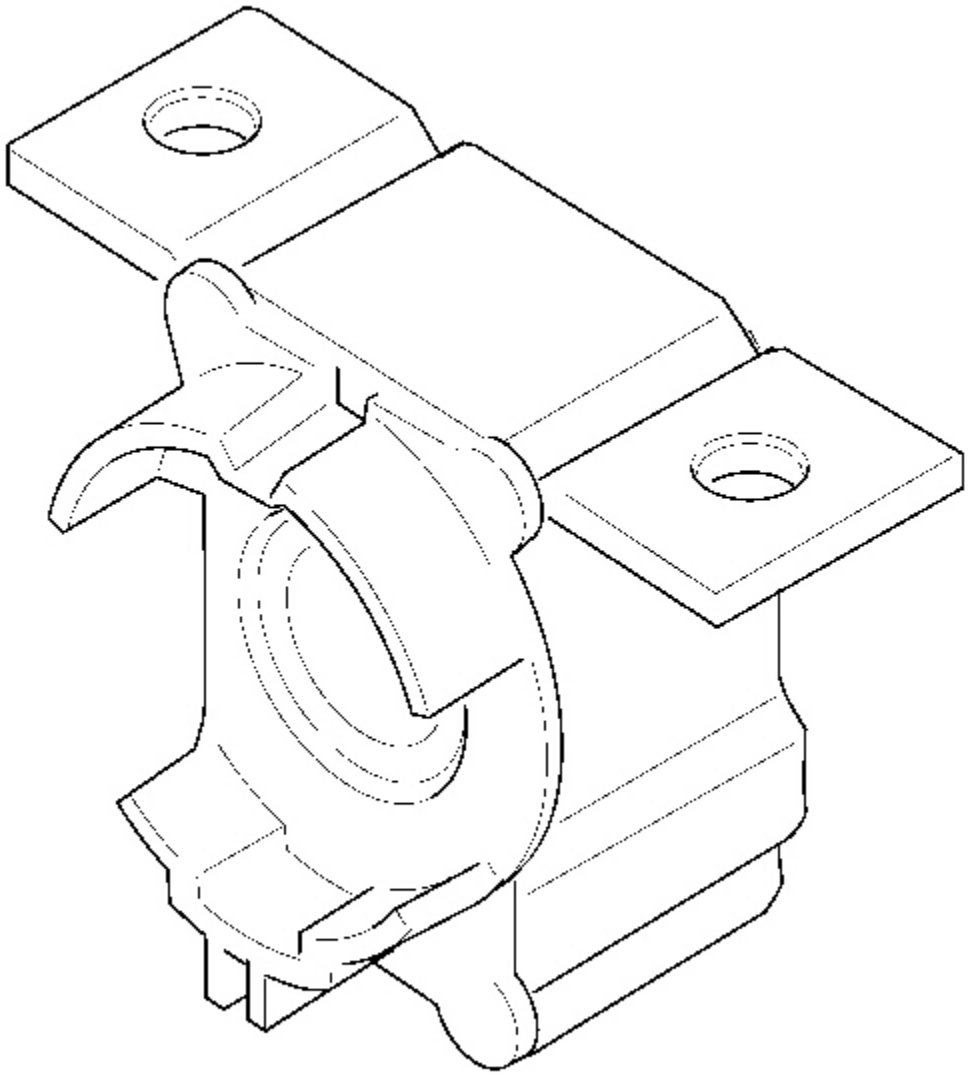

Fig. 120: Adapter And Bearing Assembly & Steering Jacket Assembly
Courtesy of GENERAL MOTORS CORP.

4. Remove the adapter and bearing assembly from the steering jacket assembly.

Installation Procedure

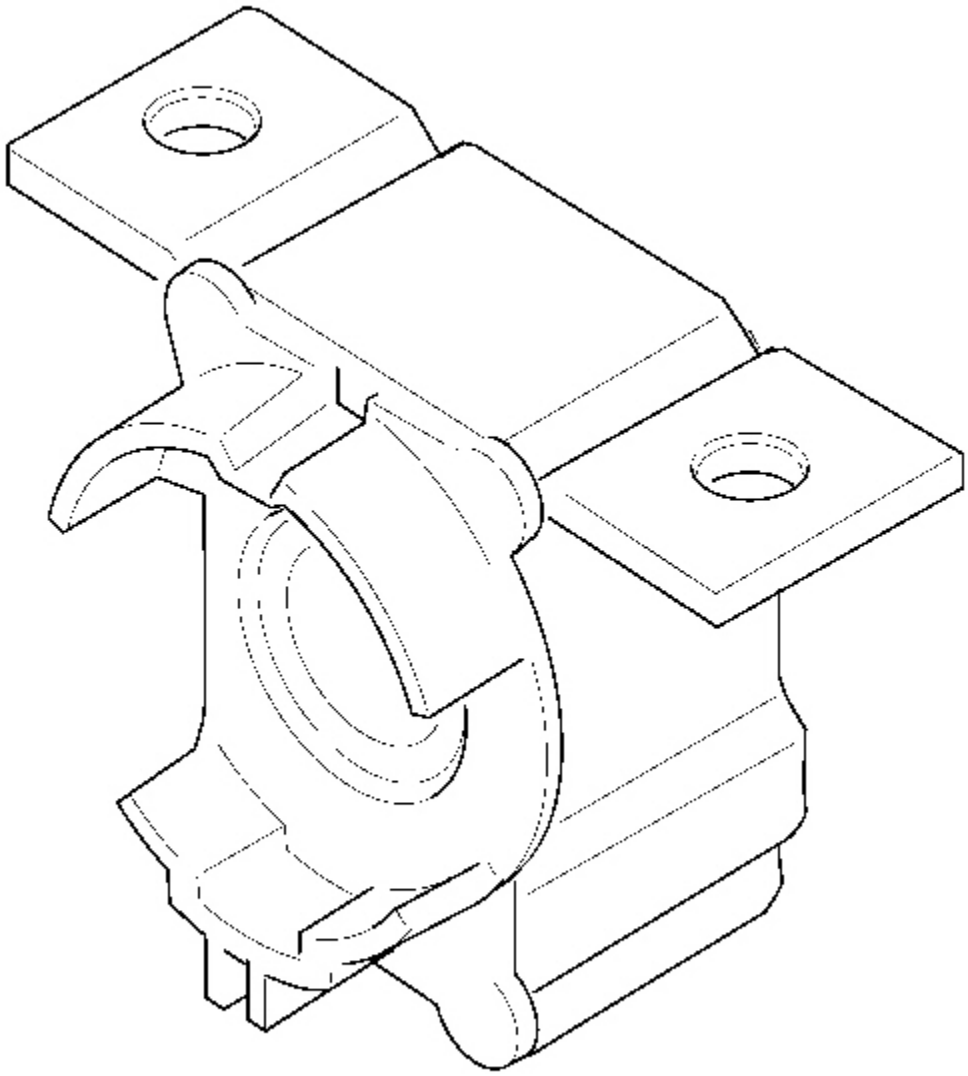

Fig. 121: Adapter And Bearing Assembly & Steering Jacket Assembly
Courtesy of GENERAL MOTORS CORP.

1. Install the adapter and bearing assembly to the steering jacket assembly.

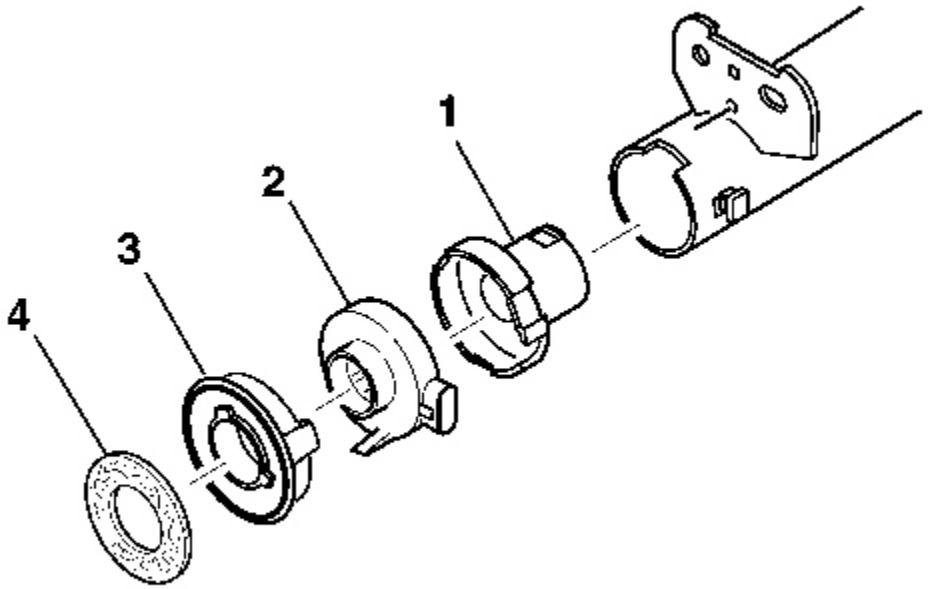

Fig. 122: Steering Shaft Seal, Sensor Retainer, Sensor Assembly, Adapter & Bearing Assembly
Courtesy of GENERAL MOTORS CORP.

2. Install the following to the steering shaft:
   1. Adapter and bearing assembly (1)

      IMPORTANT: The steering shaft assembly must be rotated to the 12 o'clock position.

   2. Sensor assembly (2), refer to **Steering Wheel Position Sensor Centering** .
   3. Sensor retainer (3)
   4. Steering shaft seal (4)
3. Enable the SIR system. Refer to **SIR Disabling and Enabling Zone 3** in SIR.

STEERING WHEEL POSITION SENSOR CENTERING

Removal Procedure

IMPORTANT: Identify the type of steering wheel position sensor from the illustrations shown BEFORE removing the sensor from the steering column. Once you have identified the steering wheel position sensor, follow the instructions

listed in the removal procedure.

1. Verify the type of steering wheel position sensor.

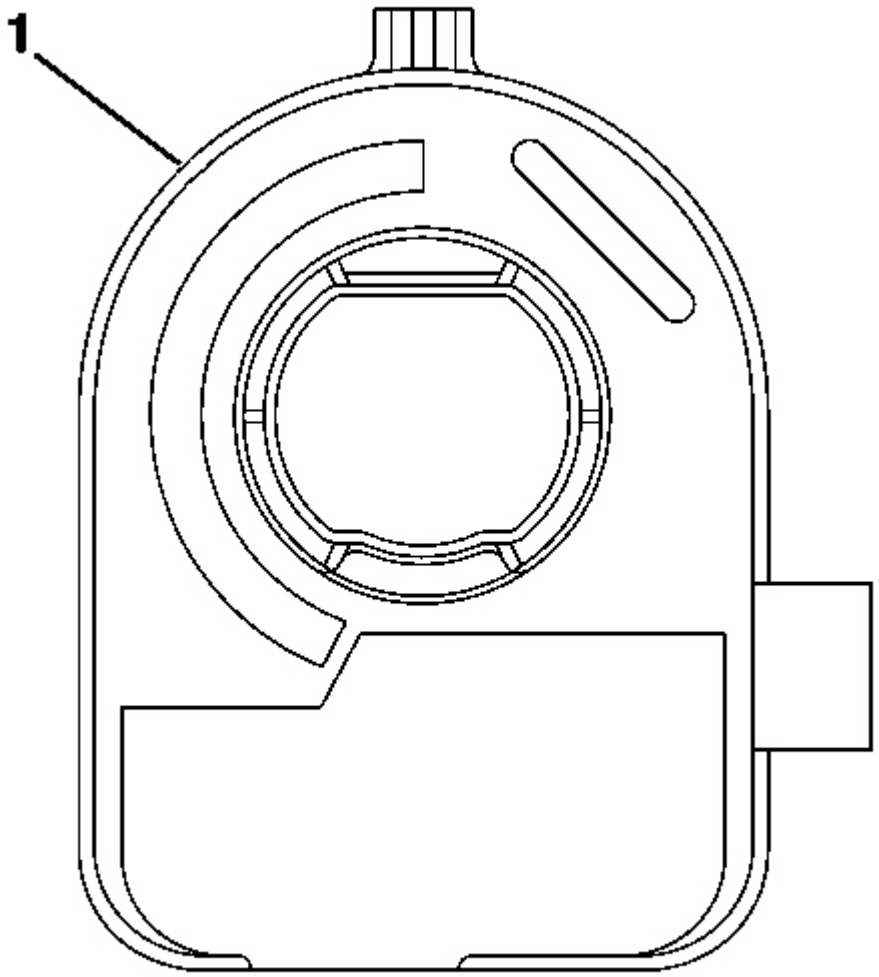

Fig. 123: FRONT Of Sensor Connector On Right
Courtesy of GENERAL MOTORS CORP.

2. From the technicians point of view, the FRONT of the sensor (1) connector will be on the right.

IMPORTANT: If reusing the existing sensor, you do not have to align the sensor before removal. Centering is not required when it is time to reinstall.

3. Remove the connector from the sensor.
4. Remove the sensor (1) from the adapter and bearing assembly.
5. To install the sensor, proceed to step 1 in the installation section.

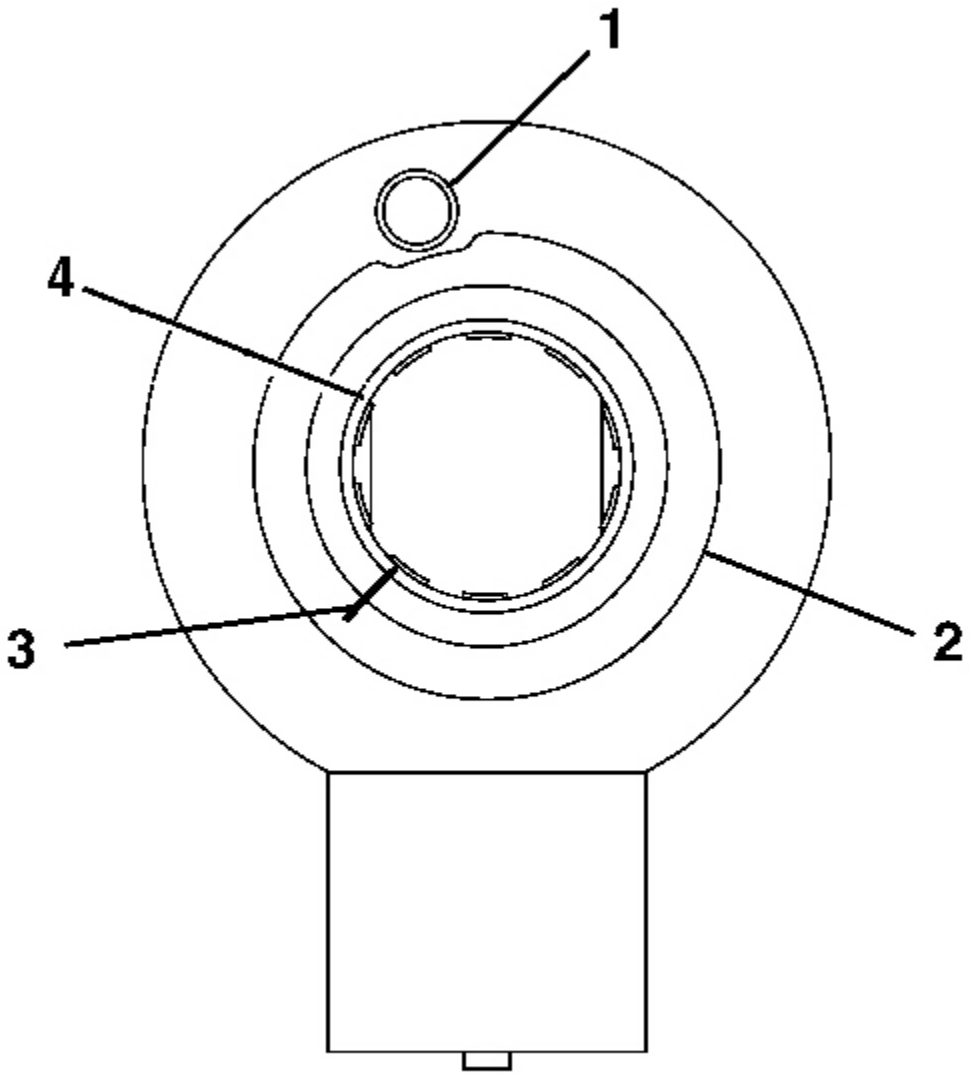

Fig. 124: Steering Wheel Position Sensor Foam Ring, Pin Hole & Rotor Flange Cuff
Courtesy of GENERAL MOTORS CORP.

6. From the technicians point of view, the FRONT of the sensor will have:

- A foam ring (2)
- A pin hole (1) for centering the pin. Note the location of the pin hole.
- A flush rotor flange cuff (4)

IMPORTANT: If reusing the existing sensor, you must make an alignment mark on the rotor flange cuff (3) before removing the sensor. Failure to do so will cause misalignment when installing the sensor. A new sensor will be required if misaligned.

7. Make an alignment mark on the flush rotor flange cuff (3).
8. Remove the connector from the sensor.
9. Remove the sensor from the adapter and bearing assembly.
10. To install the sensor, proceed to step 5 in the installation procedure.

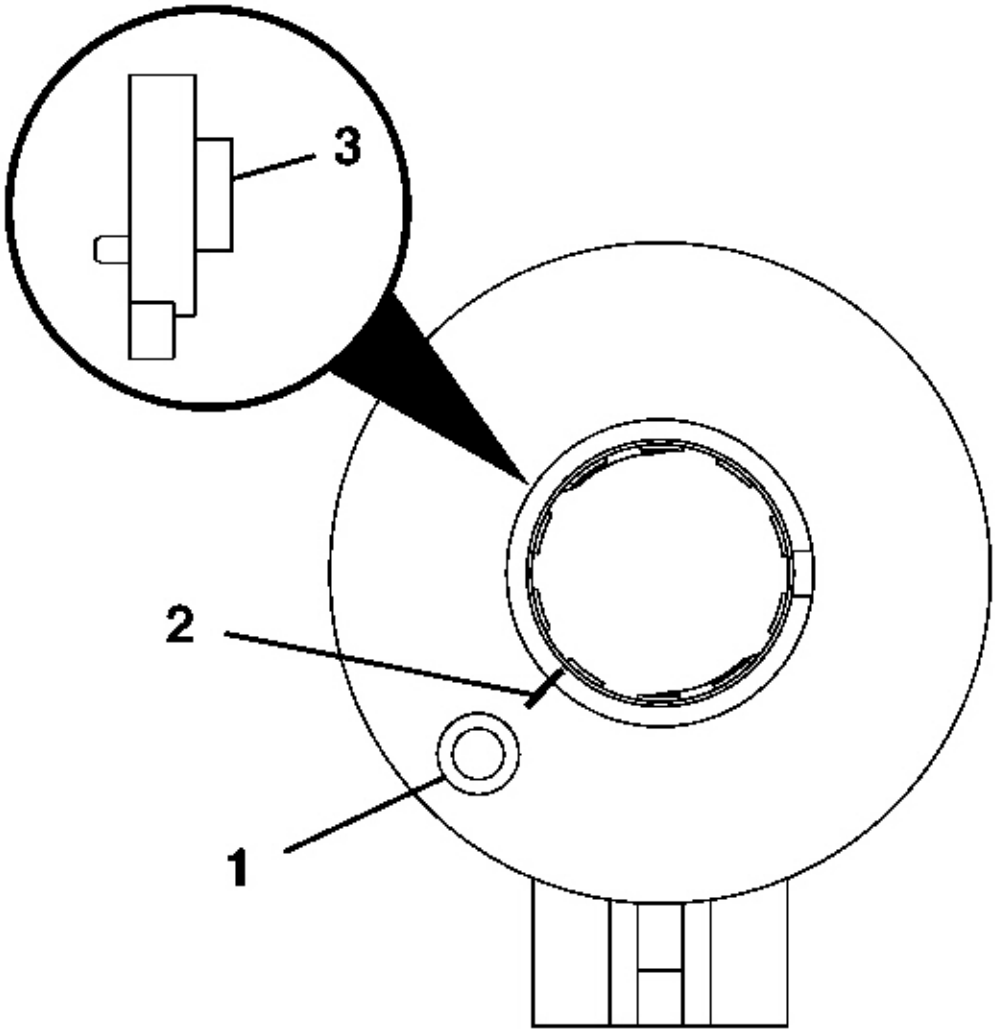

Fig. 125: Steering Wheel Position Sensor Alignment Mark & Proceed To Step 9
Courtesy of GENERAL MOTORS CORP.

11. From the technicians point of view, the FRONT of the sensor will have:
    - A raised rotor flange cuff (3)
    - An alignment mark (2) on the rotor flange cuff (3) for installation
    - A pin hole (1) for the centering pin. Note the location of the pin hole.
12. Remove the connector from the sensor.
13. Remove the sensor from the adapter and bearing assembly.

14. To install the sensor, proceed to step 9 in the installation procedure.

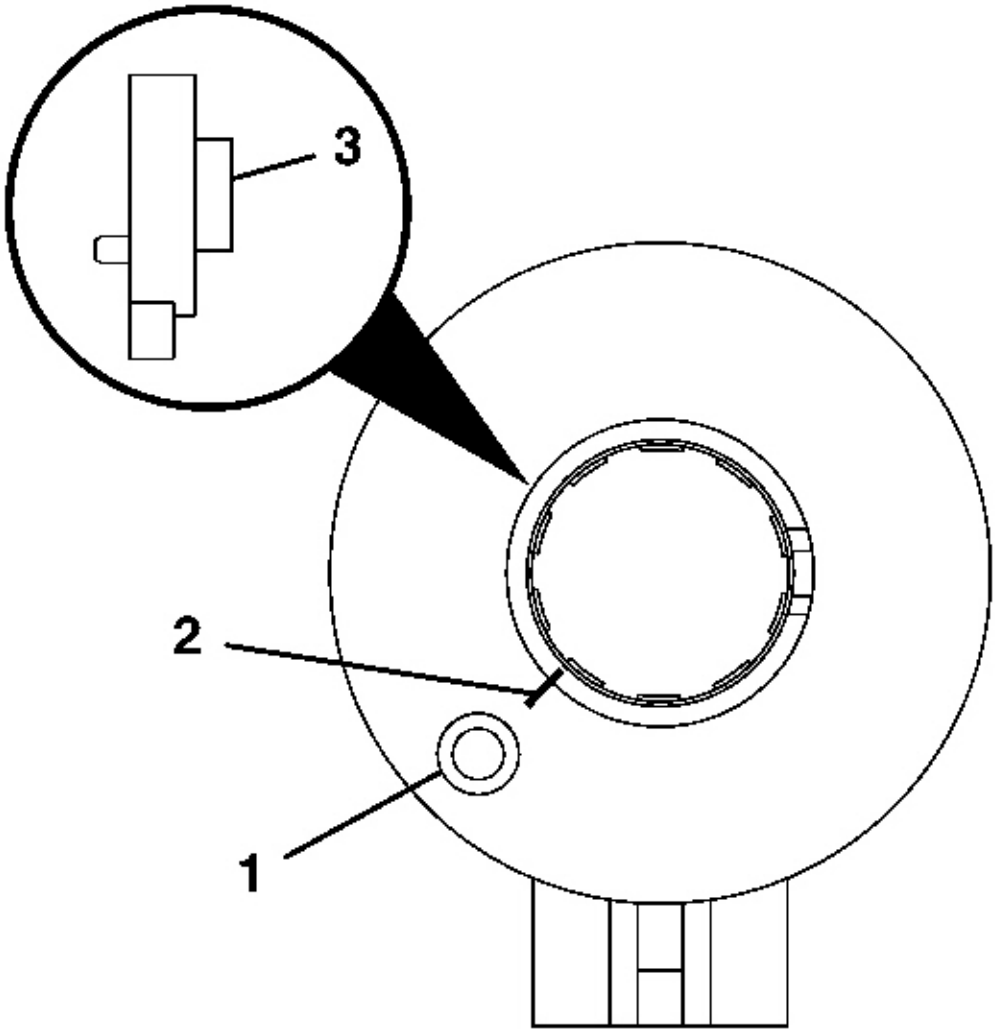

Fig. 126: Steering Wheel Position Sensor Alignment Mark & Proceed To Step 13
Courtesy of GENERAL MOTORS CORP.

15. From the technicians point of view, the FRONT of the sensor will have:
    - A raised rotor flange cuff (3)
    - An alignment mark (2) on the rotor flange cuff (3) for installation
    - A pin hole (1) for the centering pin. Note location of the pin hole.

- A sensor clip in FRONT of the sensor

16. Remove the connector from the sensor.
17. Remove the sensor clip from the sensor.
18. Remove the sensor from the adapter and bearing assembly.
19. To install the sensor, proceed to step 13 in the installation procedure.

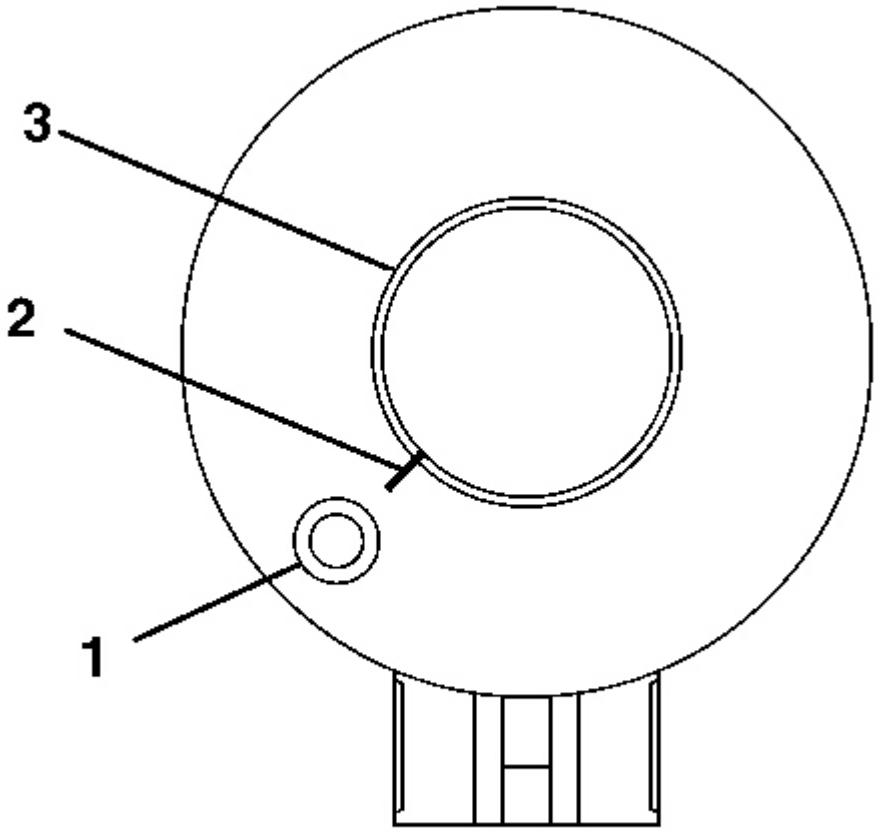

Fig. 127: Steering Wheel Position Sensor Rotor Flange Cuff, Centering Pin Hole And Alignment Mark & Proceed To Step 17
Courtesy of GENERAL MOTORS CORP.

20. From the technicians point of view, the FRONT of the sensor will have:
    - A flush rotor flange cuff (3)
    - A pin hole (1) for the centering pin. Note the location of the pin hole.

- An alignment mark (2) on the flush rotor flange cuff (3) for installation

21. Remove the connector from the sensor.
22. Remove the sensor from the adapter and bearing assembly.
23. To install the sensor, proceed to step 17 in the installation procedure.

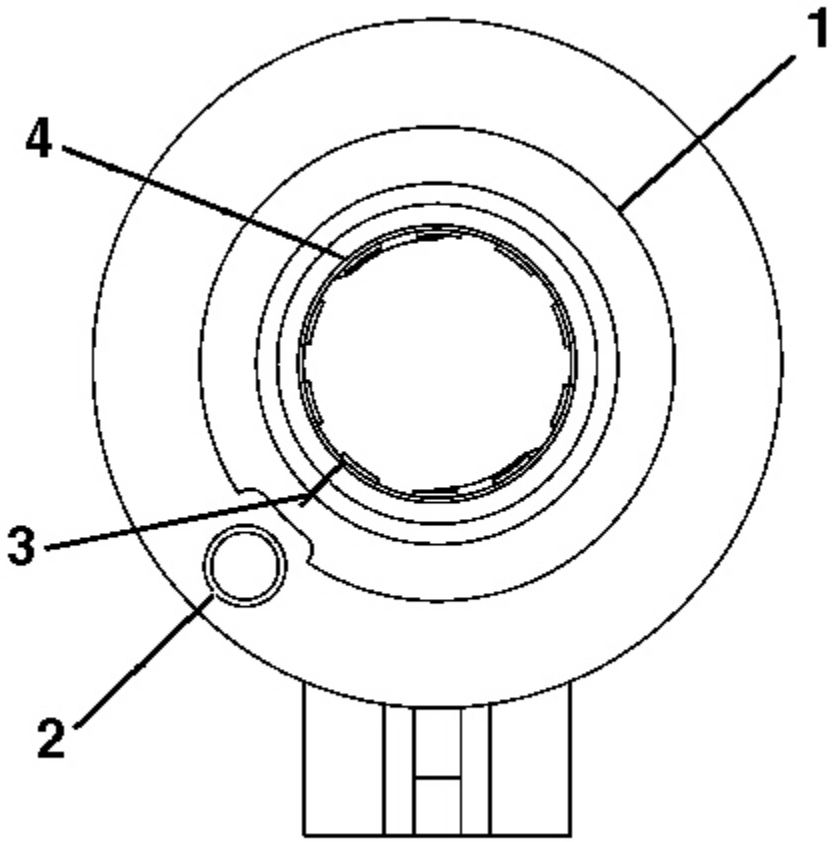

Fig. 128: Steering Wheel Position Sensor Rotor Flange Cuff, Centering Pin Hole, Alignment Mark & Foam Ring & Proceed To Step 21
Courtesy of GENERAL MOTORS CORP.

24. From the technicians point of view, the FRONT of the sensor will have:
    - A flush rotor flange cuff (4)
    - A pin hole (2) for the centering pin- Note the location of the pin hole.
    - An alignment mark (3) on the flush rotor flange cuff (4) for installation

- A foam ring (1)

25. Remove the connector from the sensor.
26. Remove the sensor from the adapter and bearing assembly.
27. To install the sensor, proceed to step 21 in the installation procedure.

Installation Procedure

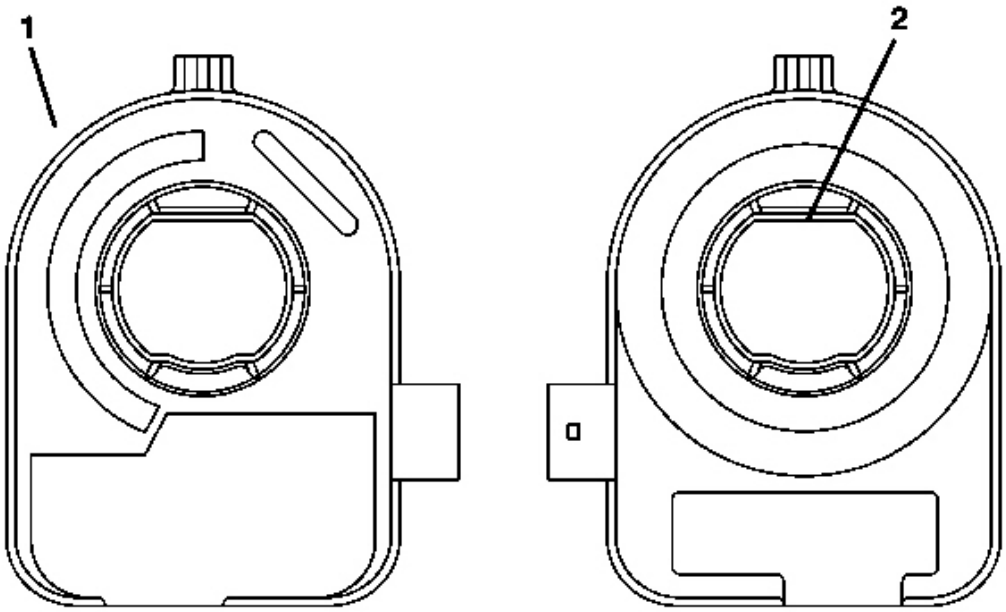

Fig. 129: Front And Back Views Of Steering Wheel Position Sensor
Courtesy of GENERAL MOTORS CORP.

IMPORTANT: If reusing the existing sensor, no centering of the sensor is required.

1. If installing a new sensor, it will come with a pin installed in the sensor. Do not remove the pin until the sensor is seated.
2. From the technicians point of view, the FRONT of the sensor (1) connector will be on your right.

   From the technicians point of view, the BACK of the sensor (2) connector will be on your left.

3. Looking at the FRONT of the sensor, align the sensor with the steering shaft and install into the adapter and bearing assembly.
4. Install the connector to the sensor.

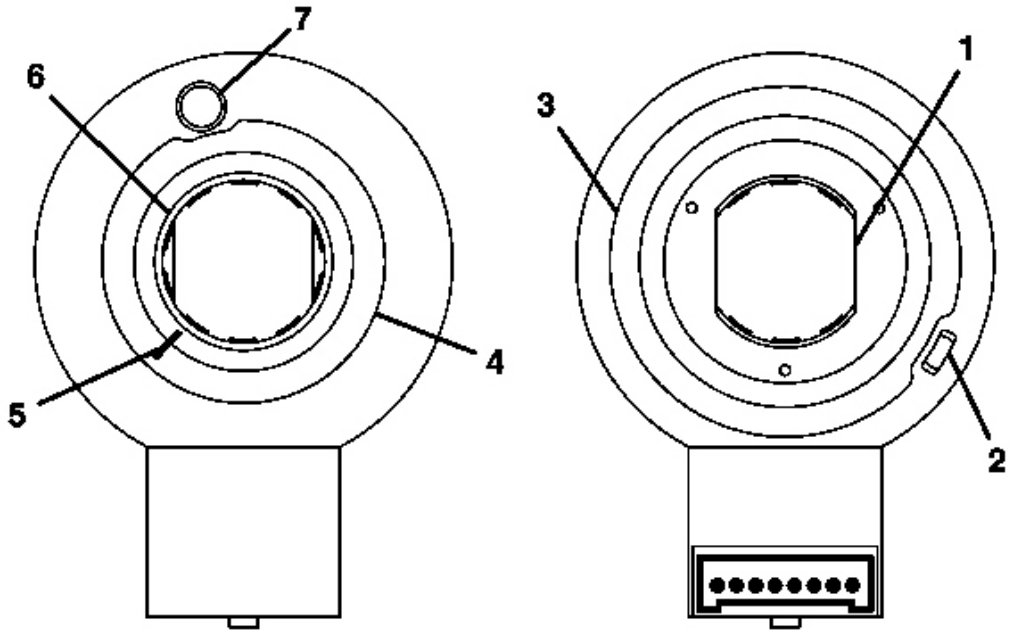

Fig. 130: Steering Wheel Position Sensor Identification Points
Courtesy of GENERAL MOTORS CORP.

5. From the technicians point of view, the FRONT of the sensor will have:
    - A foam ring (4)
    - A pin hole (7) for the centering pin- Note the location of the pin hole.
    - A flushed rotor flange cuff (6)
    - An alignment mark (5) for installation
6. From the technicians point of view, the BACK of the sensor will have:
    - Double D flats (1)
    - A foam ring (3)
    - An alignment tab (2) for installing into the adapter and bearing assembly
    - A view of the inside of the connector

IMPORTANT: If reusing the existing sensor, you must align the marks on the flush rotor flange cuff before installation. The alignment mark must stay aligned until the sensor is seated into the adapter and bearing assembly.
If installing a new sensor, it will come with a pin installed in the sensor. Do not remove the pin until the sensor is seated. If the new sensor did not

come with a pin installed, you must reorder a new sensor.

7. Looking at the FRONT of the sensor, align the sensor with the steering shaft and install into the adapter and bearing assembly.
8. Install the connector to the sensor.

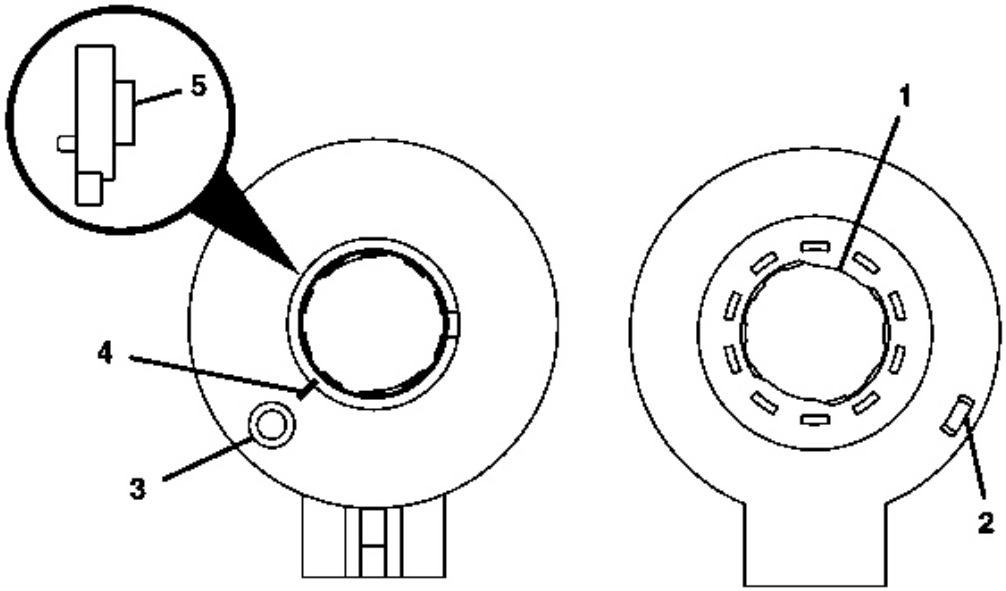

Fig. 131: Steering Wheel Position Sensor Front View
Courtesy of GENERAL MOTORS CORP.

9. From the technicians point of view, the FRONT of the sensor will have:
   - A pin hole (3) for the centering pin- Note location of the pin hole.
   - A raised rotor flange cuff (5)
   - An alignment mark (4) for installation
10. From the technicians point of view, the BACK of the sensor will have:
   - Double D flats (1)
   - An alignment tab (2) for installing into the adapter and bearing assembly

IMPORTANT: If reusing the existing sensor, you must align the marks on the raised rotor flange cuff before installation. The alignment mark must stay aligned until the sensor is seated into the adapter and bearing assembly.
If installing a new sensor, it will come with a pin installed in the sensor.

Do not remove the pin until the sensor is seated. If the new sensor did not come with a pin installed, you must reorder a new sensor.

11. Looking at the FRONT of the sensor, align the sensor with the steering shaft and install into the adapter and bearing assembly.
12. Install the connector to the sensor.

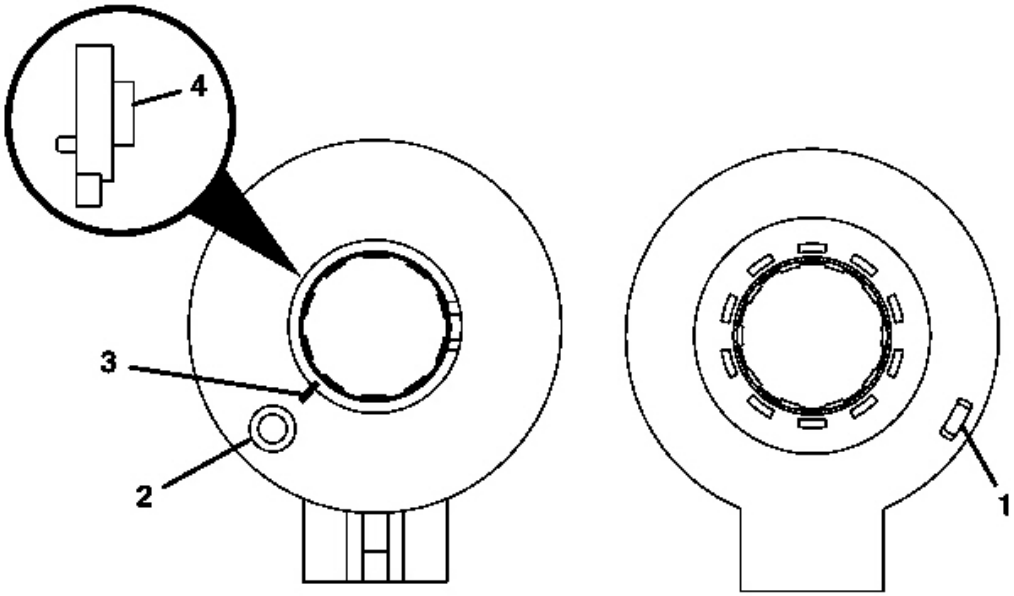

Fig. 132: Pin Hole, Rotor Flange Cuff And Alignment Mark
Courtesy of GENERAL MOTORS CORP.

13. From the technicians point of view, the FRONT of the sensor will have:
    - A pin hole (2) for the centering pin- Note the location of the pin hole.
    - A raised rotor flange cuff (4)
    - An alignment mark (3) for installation
14. From the technicians point of view, the BACK of the sensor will have an alignment tab (1) for installation. This sensor does not have double D flats.

IMPORTANT: If reusing the existing sensor, you must align the marks on the raised rotor flange cuff before installation. The alignment mark must stay aligned until the sensor is seated into the adapter and bearing assembly.
If installing a new sensor, it will come with a pin installed in the sensor.

Do not remove the pin until the sensor is seated. If the new sensor did not come with a pin installed, you must reorder a new sensor.

15. Looking at the FRONT of the sensor, align the sensor with the steering shaft and install into the adapter and bearing assembly.
16. Install the connector to the sensor.

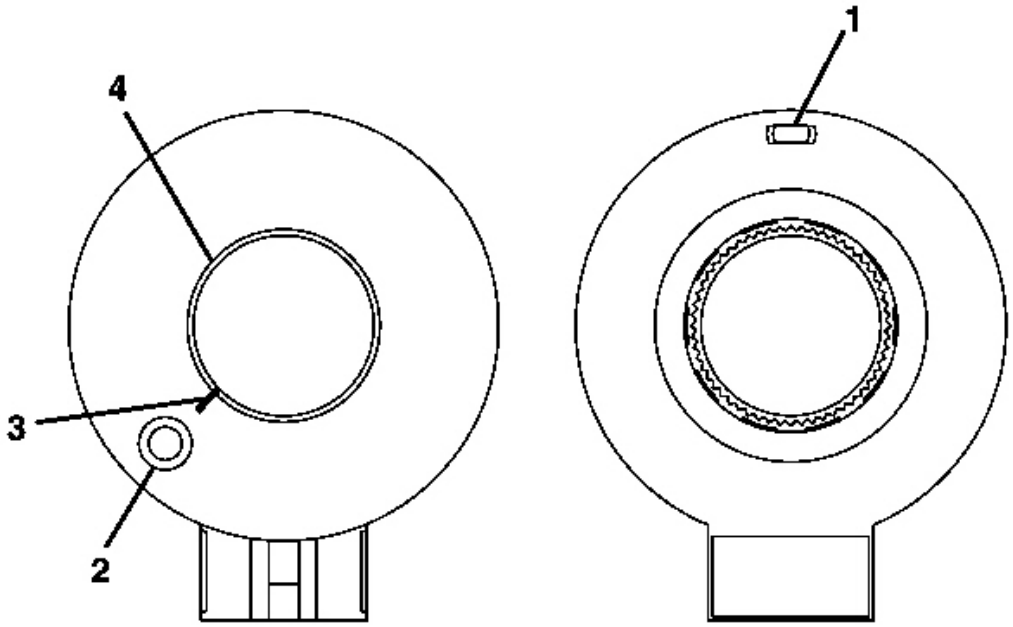

Fig. 133: Steering Wheel Position Sensor Center Pin, Rotor Flange Cuff And Installation Alignment Mark
Courtesy of GENERAL MOTORS CORP.

17. From the technicians point of view, the FRONT of the sensor will have:
    - A pin hole (2) for the centering pin- Note the location of the pin hole.
    - A flush rotor flange cuff (4)
    - An alignment mark (3) for installation
18. From the technicians point of view, the BACK of the sensor will have an alignment tab (1) for installation. This sensor does not have double D flats.

IMPORTANT: If reusing the existing sensor, you must align the marks on the flush rotor flange cuff before installation. The alignment mark must stay aligned until

the sensor is seated into the adapter and bearing assembly.
If installing a new sensor, it will come with a pin installed in the sensor.
Do not remove the pin until the sensor is seated. If the new sensor did not come with a pin installed, you must reorder a new sensor.

19. Looking at the FRONT of the sensor, align the sensor with the steering shaft and install into the adapter and bearing assembly.
20. Install the connector to the sensor.

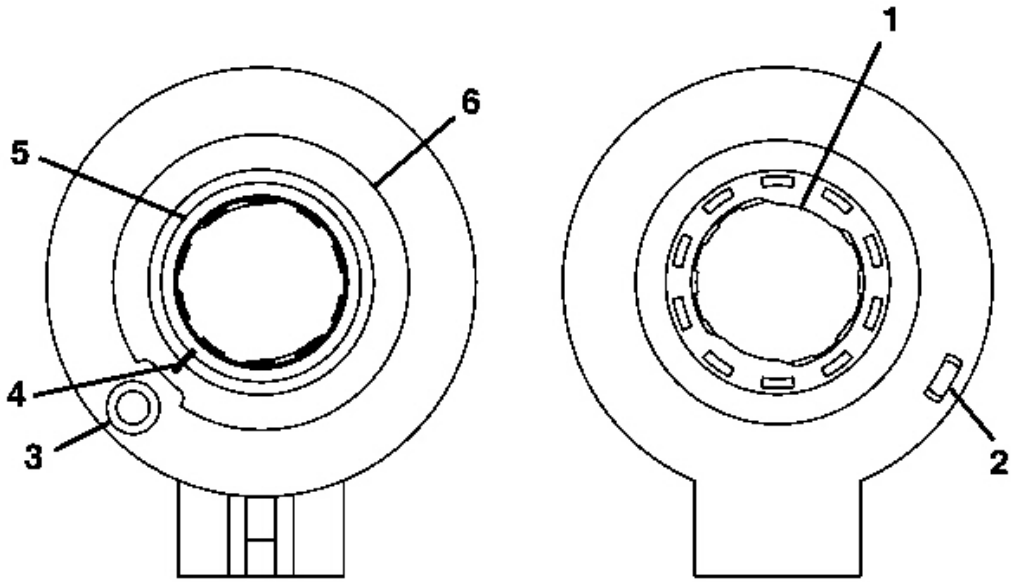

Fig. 134: Steering Wheel Position Sensor Double D Flats
Courtesy of GENERAL MOTORS CORP.

21. From the technicians point of view, the FRONT of the sensor will have:
    - A pin hole (3) for the centering pin- Note location of the pin hole.
    - A flush rotor flange cuff (5)
    - An alignment mark (4) for installation
    - A foam ring (6)
22. From the technicians point of view, the BACK of the sensor will have:
    - Double D flats (1)
    - An alignment tab (2) for installing into the adapter and bearing assembly

IMPORTANT: If reusing the existing sensor, you must align the marks on the flush rotor flange cuff before installation. The alignment mark must stay aligned until the sensor is seated into the adapter and bearing assembly.
If installing a new sensor, it will come with a pin installed in the sensor. Do not remove the pin until the sensor is seated. If the new sensor did not come with a pin installed, you must reorder a new sensor.

23. Looking at the FRONT of the sensor, align the sensor with the steering shaft and install into the adapter and bearing assembly.
24. Install the connector to the sensor.

TELESCOPE MOTOR ASSEMBLY REPLACEMENT

Tools Required

- J 41352 Steering Column Holding Fixture
- J 42640 Steering Column Anti Rotation Pin

Removal Procedure

CAUTION: Refer to SIR Caution in Cautions and Notices.

1. Disable the SIR system. Refer to **SIR Disabling and Enabling Zone 3** in SIR.
2. Remove the steering column. Refer to **Steering Column Replacement** .
3. Secure the steering column to J 41352 .
4. Insert J 42640 into the bottom of the lower trim cover.

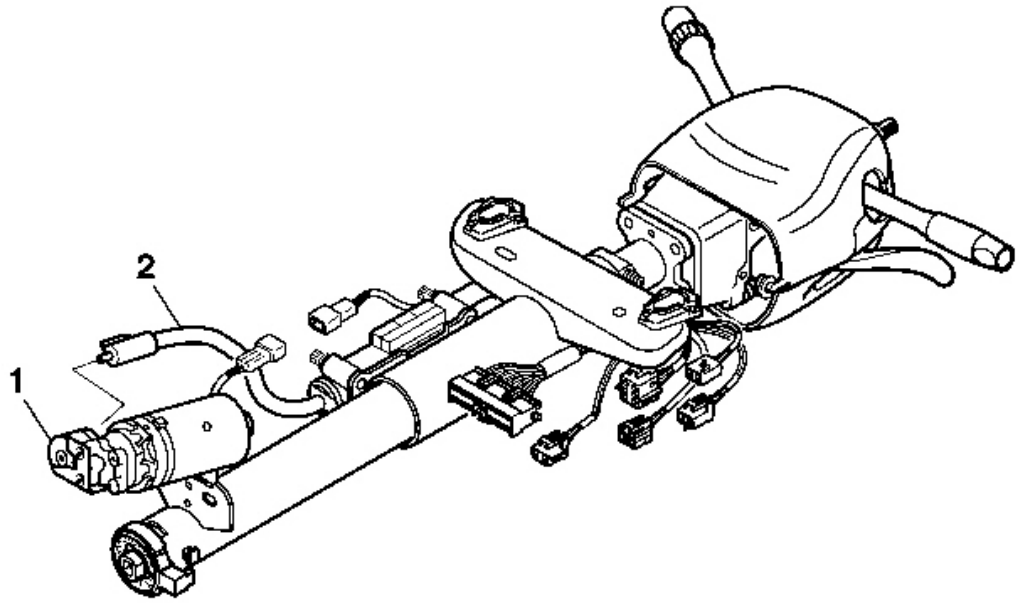

Fig. 135: Cable Assembly & Telescope Drive Motor Assembly
Courtesy of GENERAL MOTORS CORP.

5. Disconnect the cable assembly (2) from the telescope drive motor assembly (1).

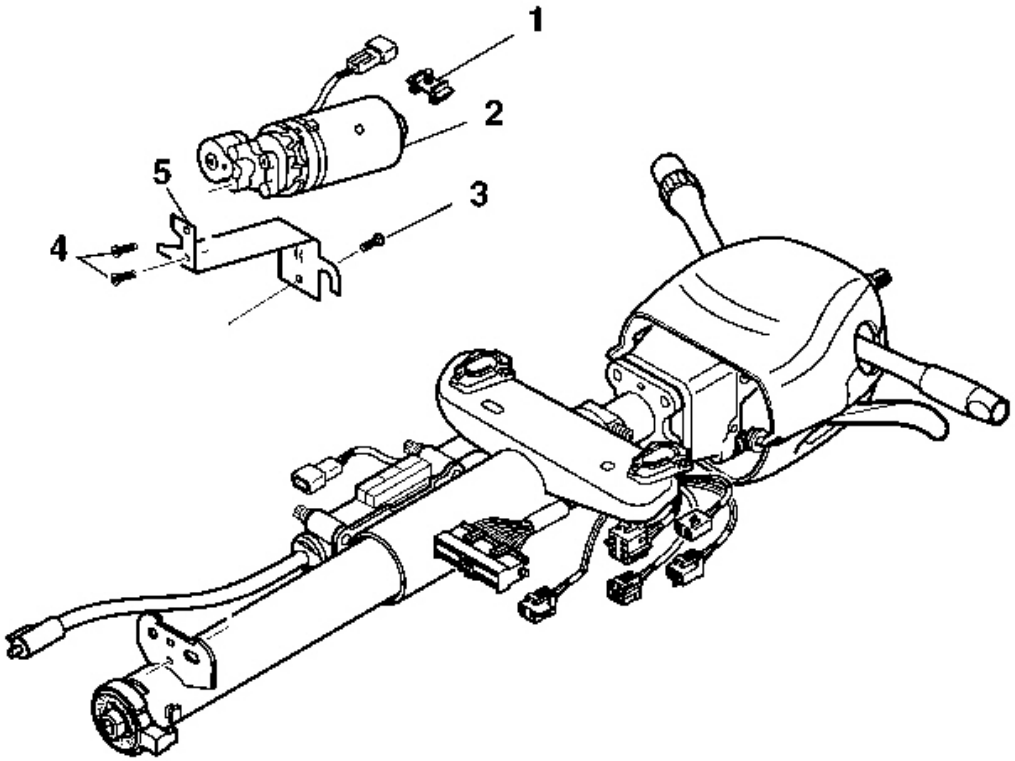

Fig. 136: Connector Clip, Telescope Drive Motor Assembly Connector, 2 Pan Head Tapping Screws & Telescope Drive Bracket
Courtesy of GENERAL MOTORS CORP.

6. Remove the connector clip (1) from the telescope drive motor assembly connector (2).
7. Remove the 2 pan head tapping screws (4) from the telescope drive bracket (5).
8. Remove the telescope drive motor assembly (2) from the telescope drive bracket (5).
9. Remove the pan head tapping screw (3) from the telescope drive bracket (5).
10. Remove the telescope drive bracket (5) from the jacket assembly.

Installation Procedure

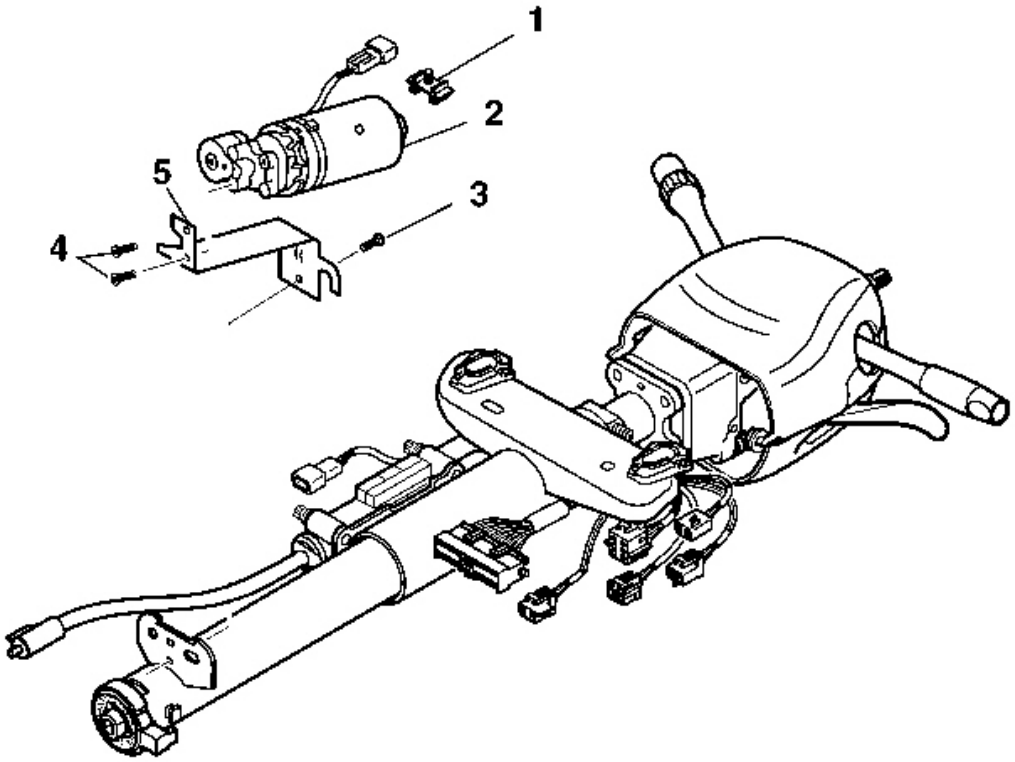

Fig. 137: Connector Clip, Telescope Drive Motor Assembly Connector, 2 Pan Head Tapping Screws & Telescope Drive Bracket
Courtesy of GENERAL MOTORS CORP.

1. Install the telescope drive bracket (5) to the jacket assembly.
2. Install the pan head tapping screw (3) to the telescope drive bracket (5).

NOTE: Refer to Fastener Notice in Cautions and Notices.

Install the guide retainer bolts.

Tighten: Tighten the screw to 7 N.m (62 lb in).

3. Install the telescope drive motor assembly (2) to the telescope drive bracket (5).
4. Install the 2 pan head tapping screws (4) to the telescope drive bracket (5).

Tighten: Tighten the screws to 7 N.m (62 lb in).

5. Install the connector clip (1) to the telescope drive motor assembly connector (2).

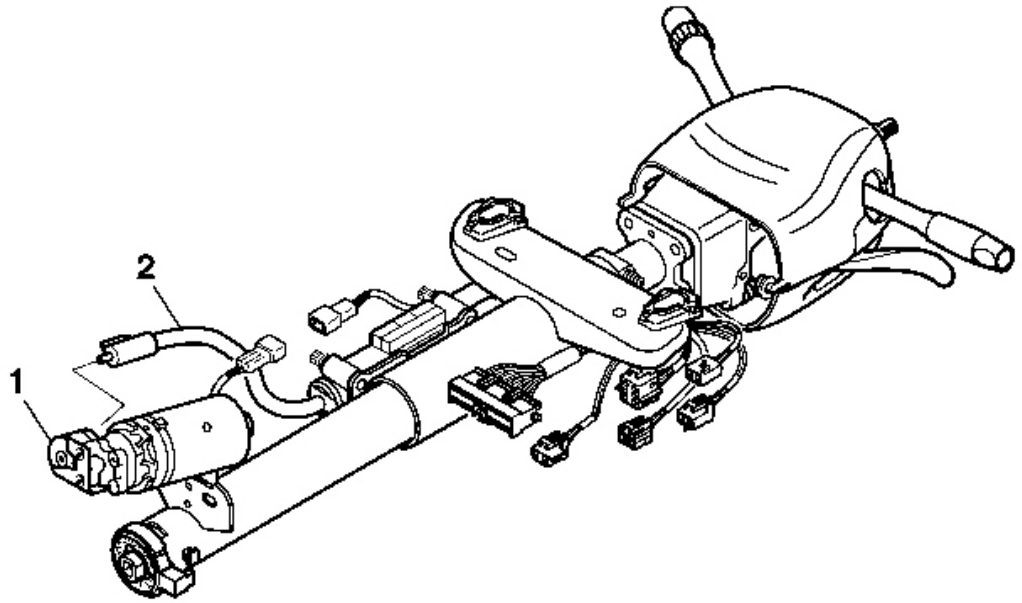

Fig. 138: Cable Assembly & Telescope Drive Motor Assembly
Courtesy of GENERAL MOTORS CORP.

CAUTION: Refer to SIR Inflator Module Coil Caution in Cautions and Notices.

6. Connect the cable assembly (2) to the telescope drive motor assembly connector (1).
7. Remove the steering column from J 41352 .
8. Install the steering column. Refer to **Steering Column Replacement** .
9. Enable the SIR system. Refer to **SIR Disabling and Enabling Zone 3** in SIR.

STEERING SHAFT, LOWER BEARING, AND JACKET REPLACEMENT (TELESCOPING)

Tools Required

J 21854-01 Pivot Pin Remover

Removal Procedure

CAUTION: Refer to SIR Caution in Cautions and Notices.

1. Disable the SIR system. Refer to **SIR Disabling and Enabling Zone 3** in SIR.
2. Remove the signal switch housing. Refer to **Steering Column Tilt Head Housing Replacement (Telescoping)** or **Steering Column Tilt Head Housing Replacement (Manual)** .
3. Remove the tilt spring only. Refer to **Tilt Spring Replacement (Telescoping)** or **Tilt Spring Replacement (Manual)** .
4. Remove the telescoping actuator assembly. Refer to **Telescope Actuator Assembly Replacement** .
5. Remove the telescoping motor assembly. Refer to **Telescope Motor Assembly Replacement** .

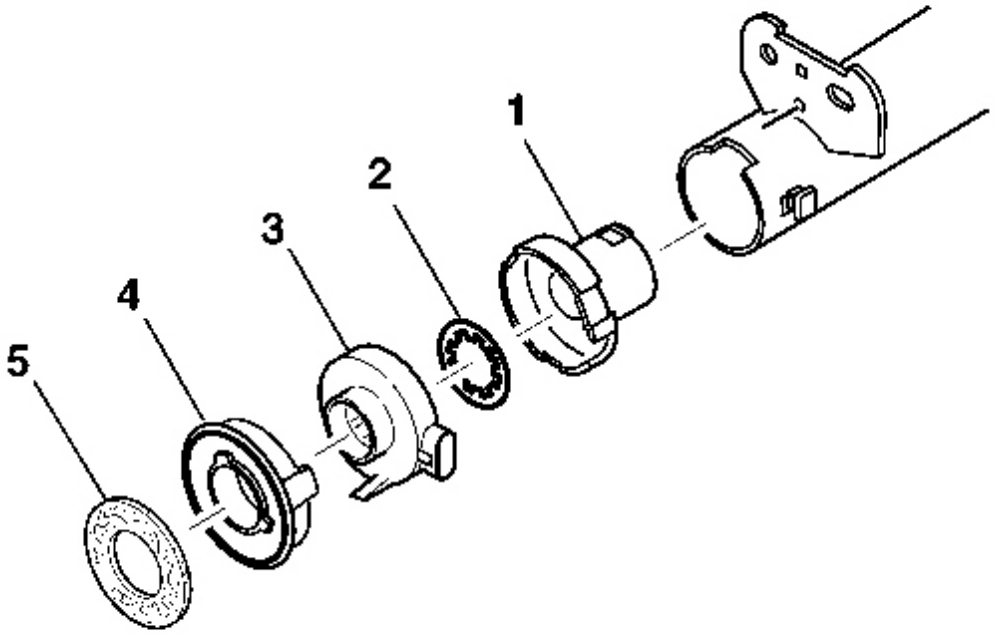

Fig. 139: Steering Shaft Seal, Sensor Retainer, Sensor Assembly, Lower Spring Retainer, Adapter & Bearing Assembly (Telescoping)
Courtesy of GENERAL MOTORS CORP.

6. Remove the steering shaft seal (5).
7. Remove the sensor retainer (4).
8. Remove the sensor assembly (3).
9. Remove the lower spring retainer (2).

10. Remove the adapter and bearing assembly (1).

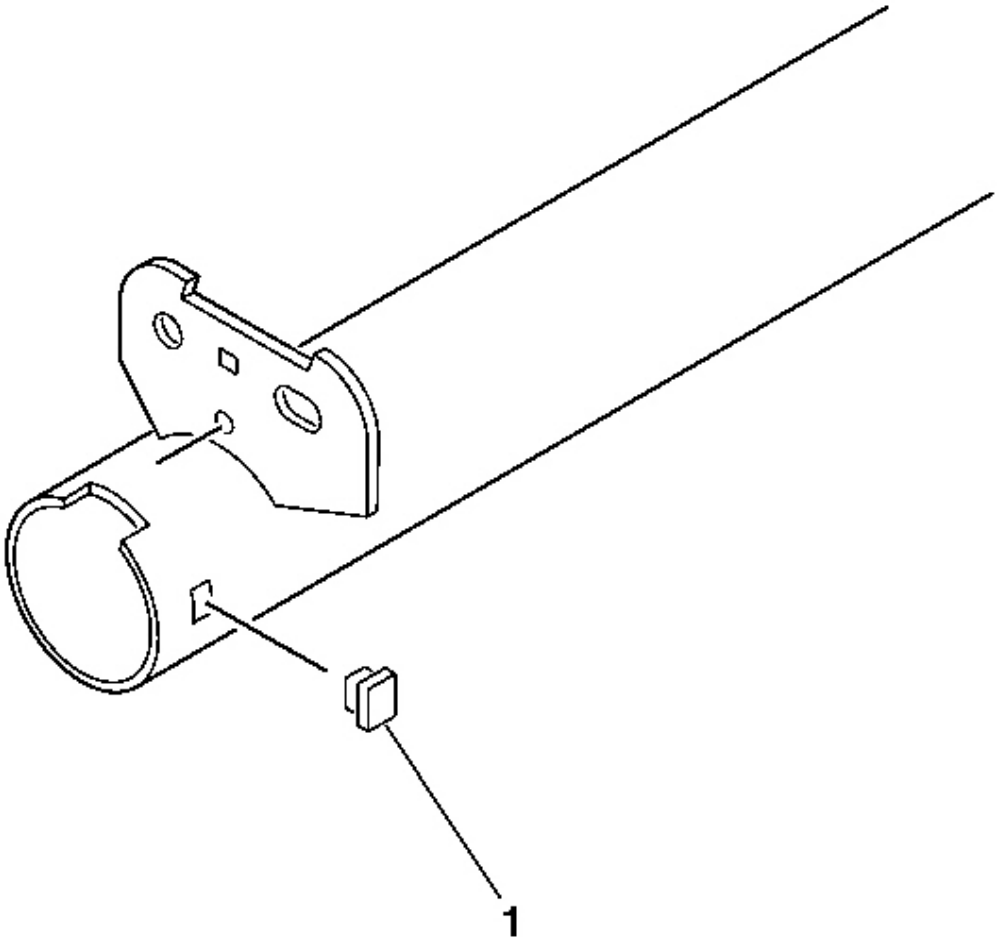

Fig. 140: Jacket Hole Plug
Courtesy of GENERAL MOTORS CORP.

11. Remove the jacket hole plug (1).

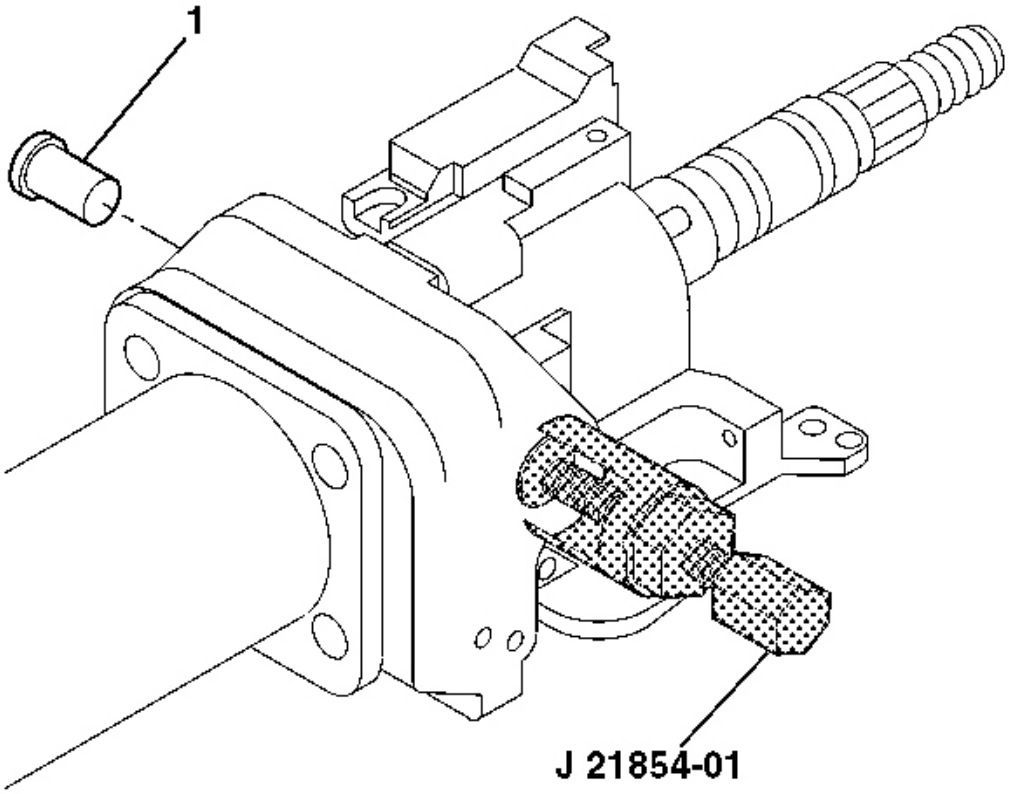

Fig. 141: 2 Pivot Pins & J 21854-01
Courtesy of GENERAL MOTORS CORP.

12. Remove the 2 pivot pins (1) from the steering column support assembly using J 21854-01 .

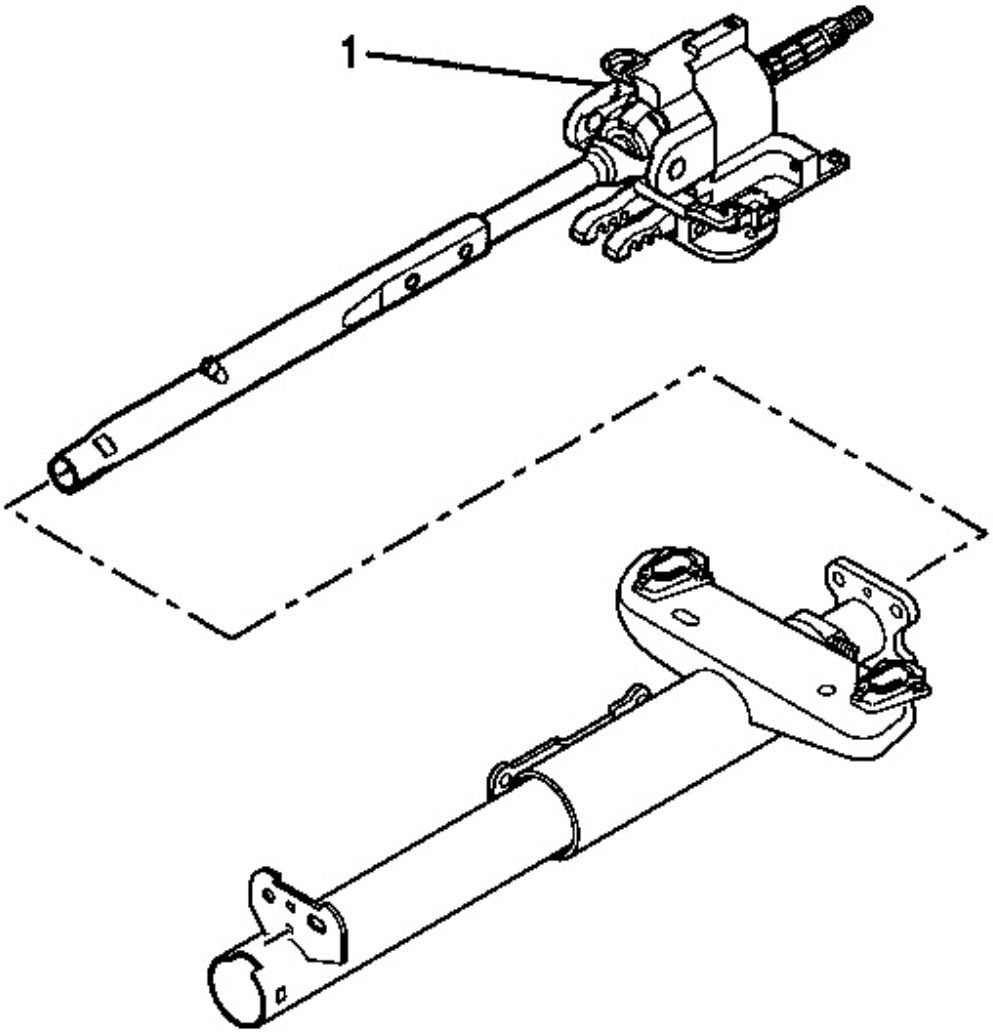

Fig. 142: Steering Column Tilt Head Housing Assembly
Courtesy of GENERAL MOTORS CORP.

13. Disengage the steering column lock shoes from the dowel pins in the steering column tilt head housing assembly (1).
14. Remove the steering column tilt head housing assembly (1) with the steering shaft assembly from the jacket assembly.

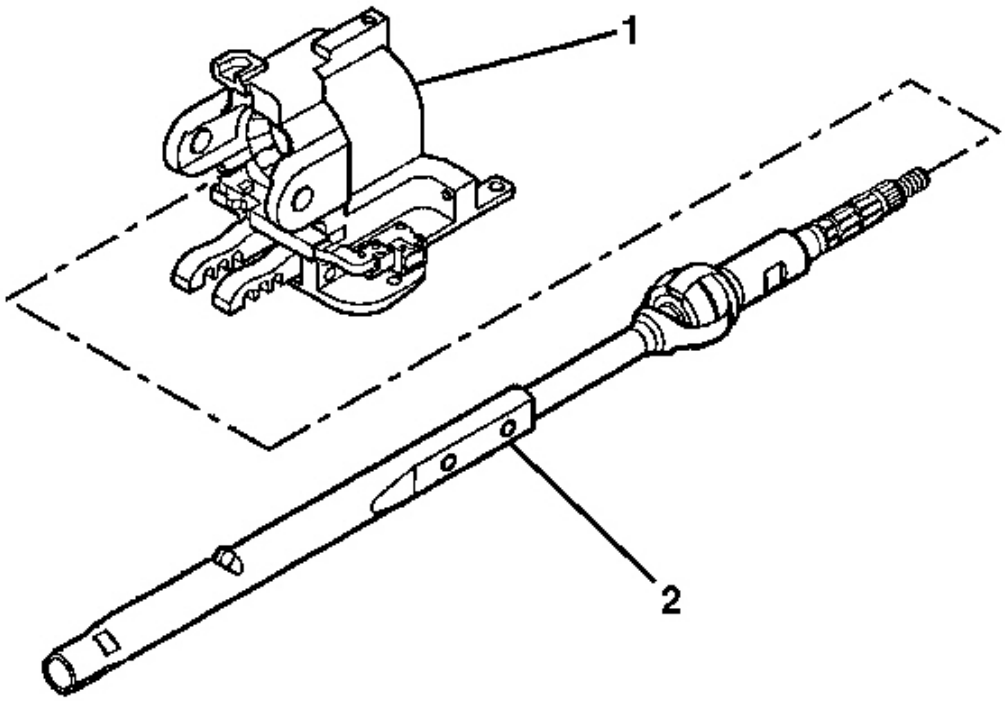

Fig. 143: Steering Shaft Assembly & Steering Column Tilt Head Housing Assembly
Courtesy of GENERAL MOTORS CORP.

15. Remove the steering shaft assembly (2) from the steering column tilt head housing assembly (1).

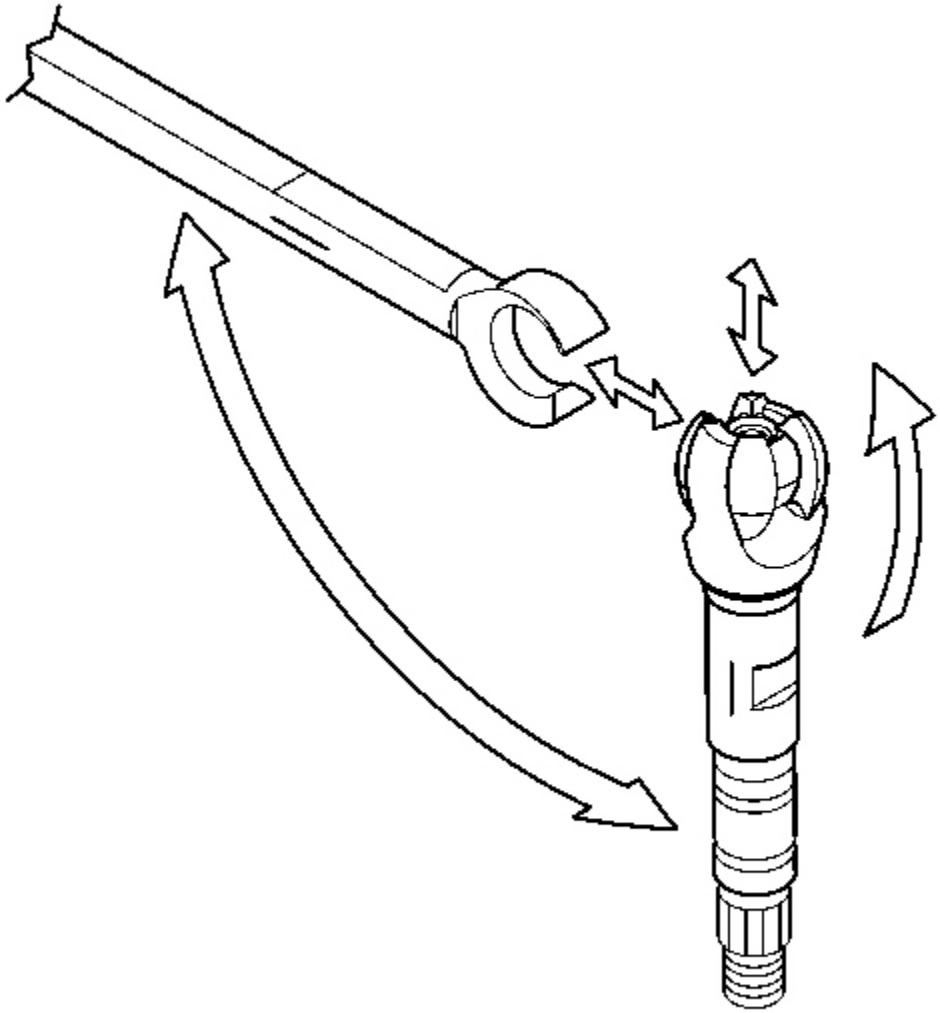

Fig. 144: Disengaging Race & Upper Shaft Assembly
Courtesy of GENERAL MOTORS CORP.

IMPORTANT: Carefully mark the parts to ensure proper assembly. Failure to assemble properly will cause the steering wheel to be turned 180 degrees.

16. Mark the race and upper shaft assembly.
17. Mark the lower steering shaft assembly.
18. Tilt the race and upper shaft assembly 90 degrees to the lower steering shaft assembly to disengage.

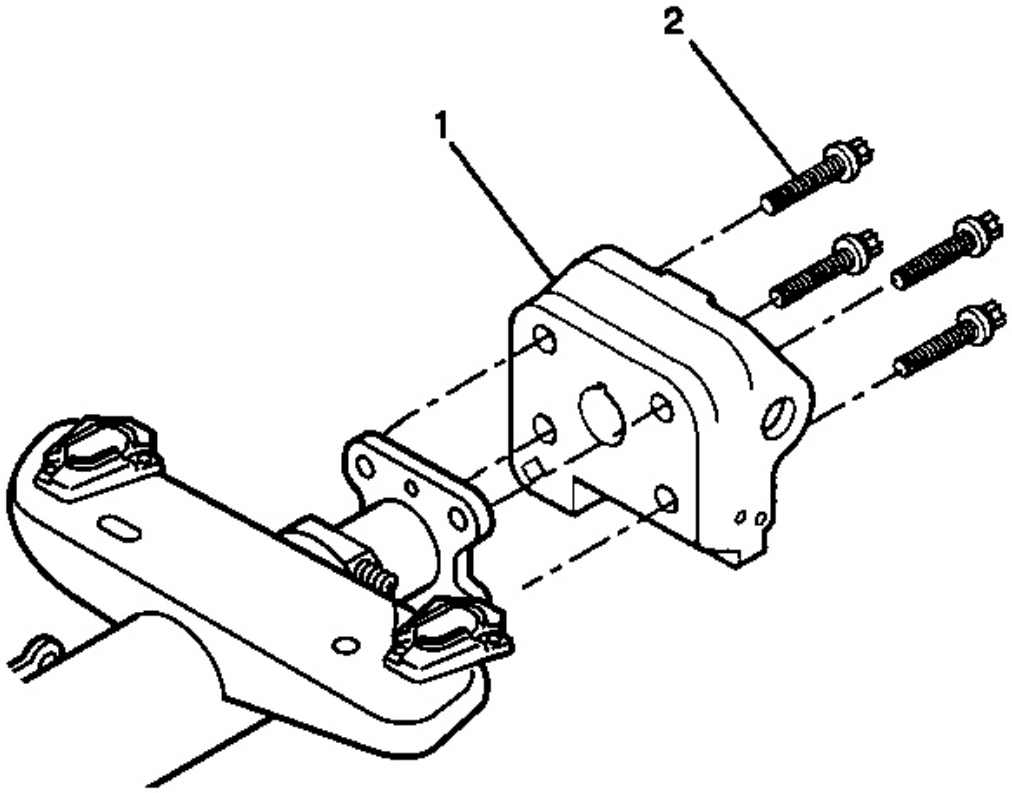

Fig. 145: 4 TORX(R) Head Screws & Steering Column Support Assembly
Courtesy of GENERAL MOTORS CORP.

19. Remove the 4 TORX(R) head screws (2).
20. Remove the steering column support assembly (1) from the jacket assembly.

Installation Procedure

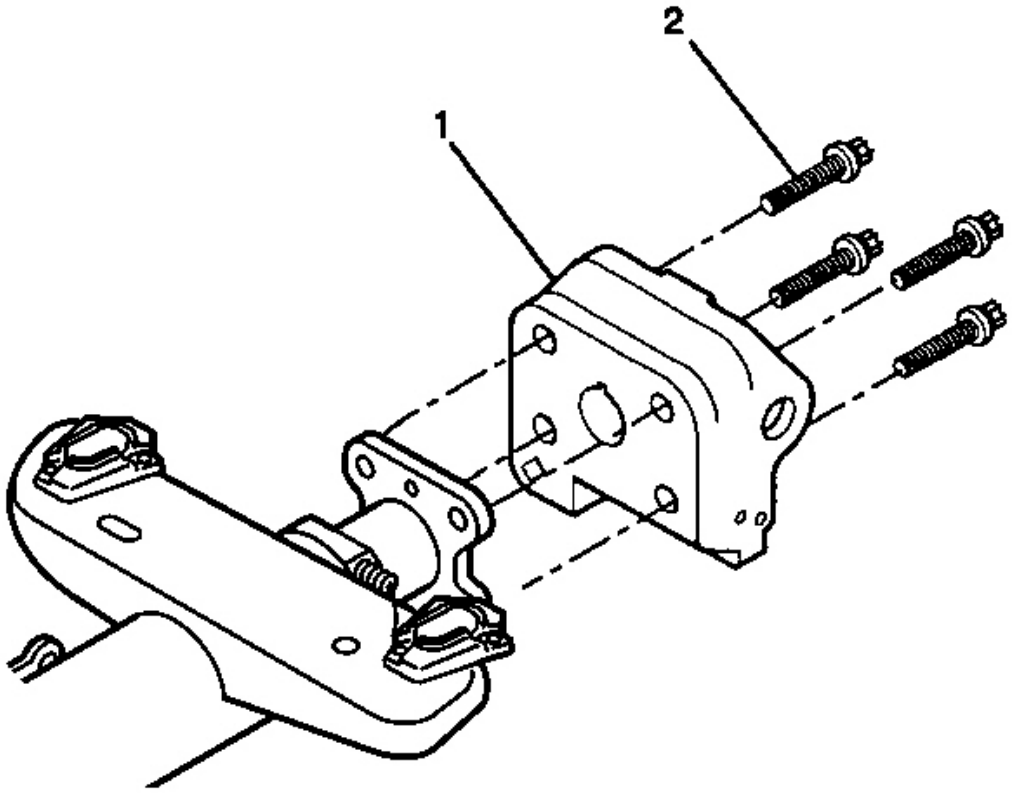

Fig. 146: 4 TORX(R) Head Screws & Steering Column Support Assembly
Courtesy of GENERAL MOTORS CORP.

IMPORTANT: Replace the steering column support assembly if the steering column support assembly has been staked 3 times.

1. Install the steering column support assembly (1) to the jacket assembly.

NOTE: Refer to Fastener Notice in Cautions and Notices.

2. Install the 4 TORX(R) screws (2).

Tighten: Tighten the screws to 17 N.m (13 lb ft).

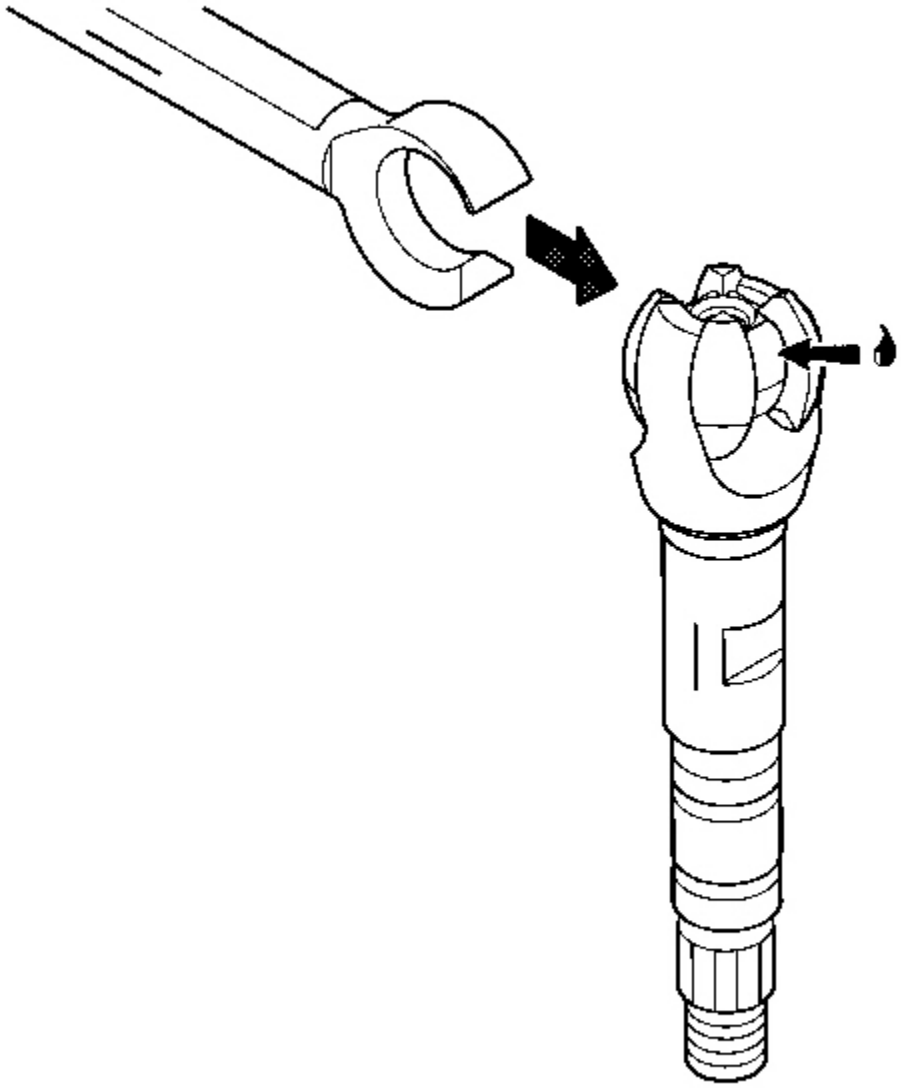

Fig. 147: Installing Race & Upper Shaft Assembly
Courtesy of GENERAL MOTORS CORP.

3. Apply GM P/N 12345718 (Canadian P/N 10953516) to the exposed shaft engagement areas on the centering sphere.
4. Install the lower steering shaft assembly to the race and upper shaft assembly to engage.

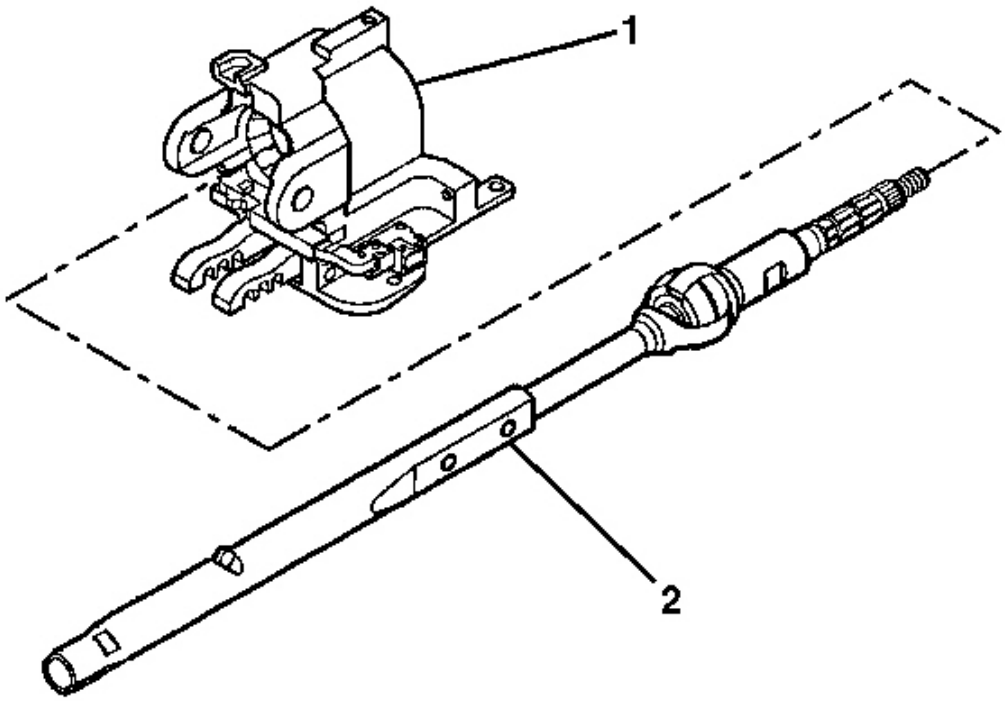

Fig. 148: Steering Shaft Assembly & Steering Column Tilt Head Housing Assembly
Courtesy of GENERAL MOTORS CORP.

5. Install the steering shaft assembly (2) into the steering column tilt head housing assembly (1).

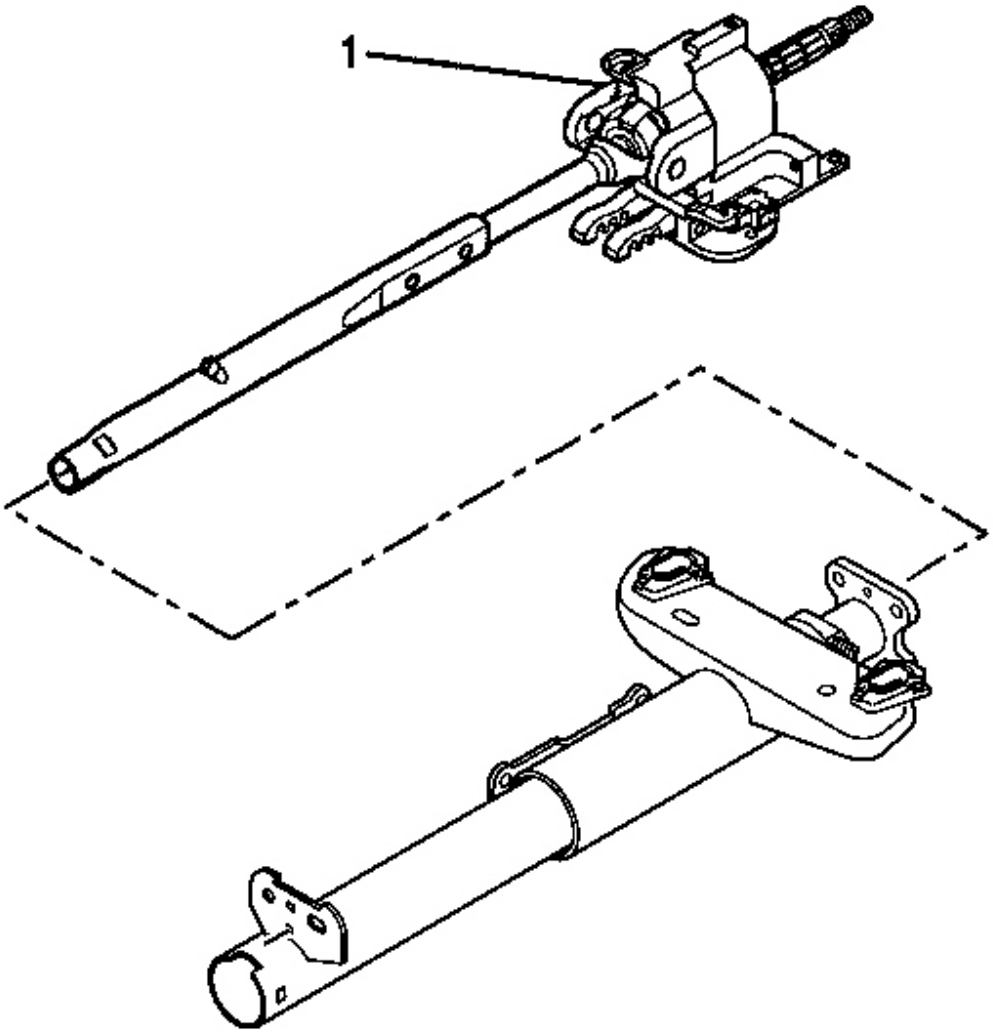

Fig. 149: Steering Column Tilt Head Housing Assembly
Courtesy of GENERAL MOTORS CORP.

6. Install the steering column tilt head housing assembly (1) and the steering shaft assembly to the jacket assembly.

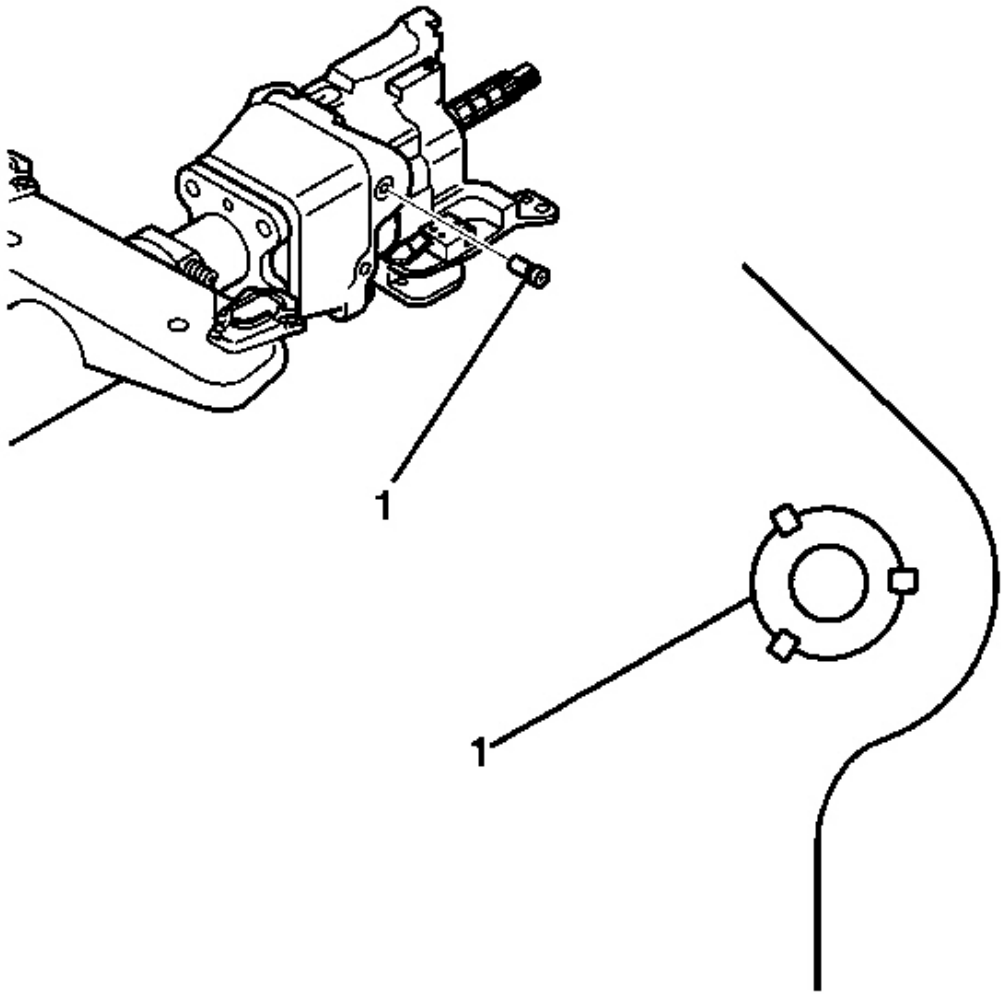

Fig. 150: 2 Pivot Pins & Steering Column Support Assembly
Courtesy of GENERAL MOTORS CORP.

IMPORTANT: Replace the steering column support assembly if the steering column support assembly has been staked 3 times.

7. Install the 2 pivot pins (1) to the steering column support assembly.
8. Stake the pivot pins locations (1).

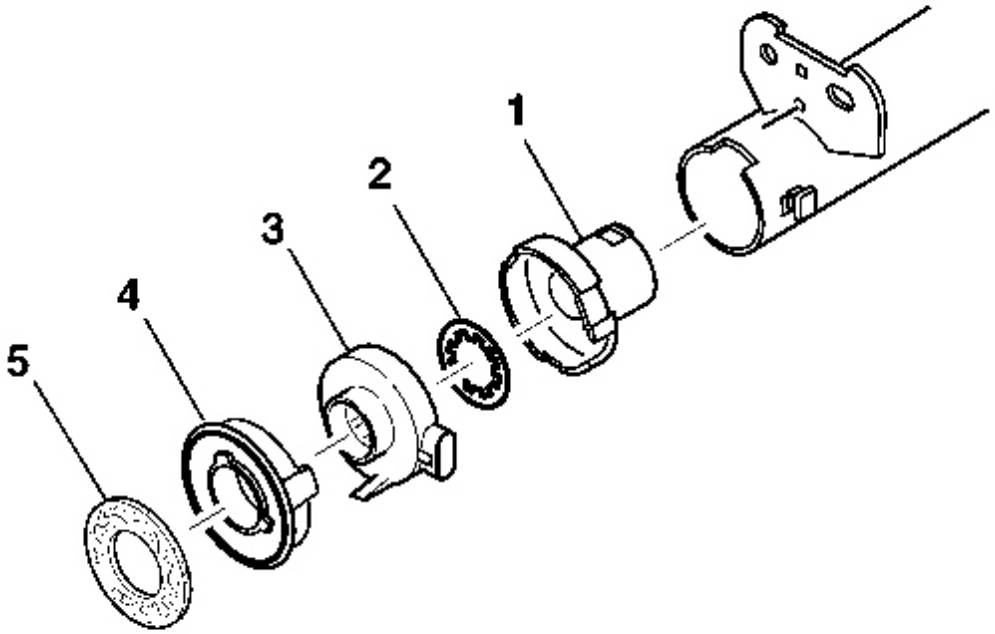

Fig. 151: Steering Shaft Seal, Sensor Retainer, Sensor Assembly, Lower Spring Retainer, Adapter & Bearing Assembly (Telescoping)
Courtesy of GENERAL MOTORS CORP.

9. Install the adapter and bearing assembly (1) to the steering shaft assembly.
10. Install the lower spring retainer (2) to the adapter and bearing assembly (1).

IMPORTANT: Rotate the steering shaft assembly to the 12 o'clock position.

11. Install the sensor assembly (3) onto the steering shaft assembly.

    Install the sensor retainer (4) and seal (5) onto the steering shaft assembly.

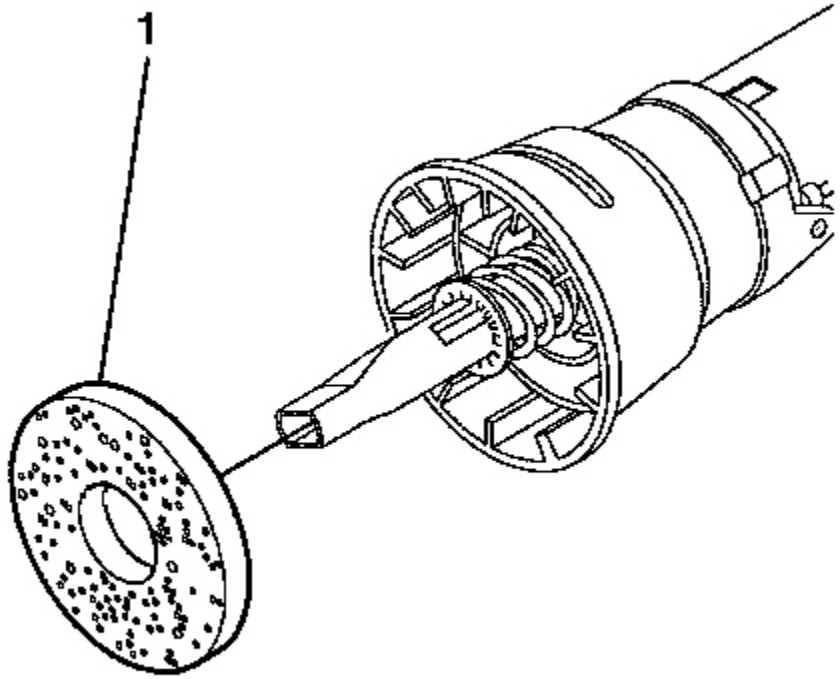

Fig. 152: Telescope Motor Assembly & Steering Shaft Seal
Courtesy of GENERAL MOTORS CORP.

12. Install the steering shaft seal (1).

CAUTION: Refer to SIR Inflator Module Coil Caution in Cautions and Notices.

13. Install the telescope motor assembly. Refer to **Telescope Actuator Assembly Replacement** .
14. Install the telescope motor assembly. Refer to **Telescope Motor Assembly Replacement** .
15. Install the tilt spring only. Refer to **Tilt Spring Replacement (Telescoping)** or **Tilt Spring Replacement (Manual)** .
16. Install the signal switch housing. Refer to **Steering Column Tilt Head Housing Replacement (Telescoping)** or **Steering Column Tilt Head Housing Replacement (Manual)** .
17. Enable the SIR system. Refer to **SIR Disabling and Enabling Zone 3** in SIR.

STEERING SHAFT, LOWER BEARING, AND JACKET REPLACEMENT (MANUAL)

Tools Required

J 21854-01 Pivot Pin Remover

Removal Procedure

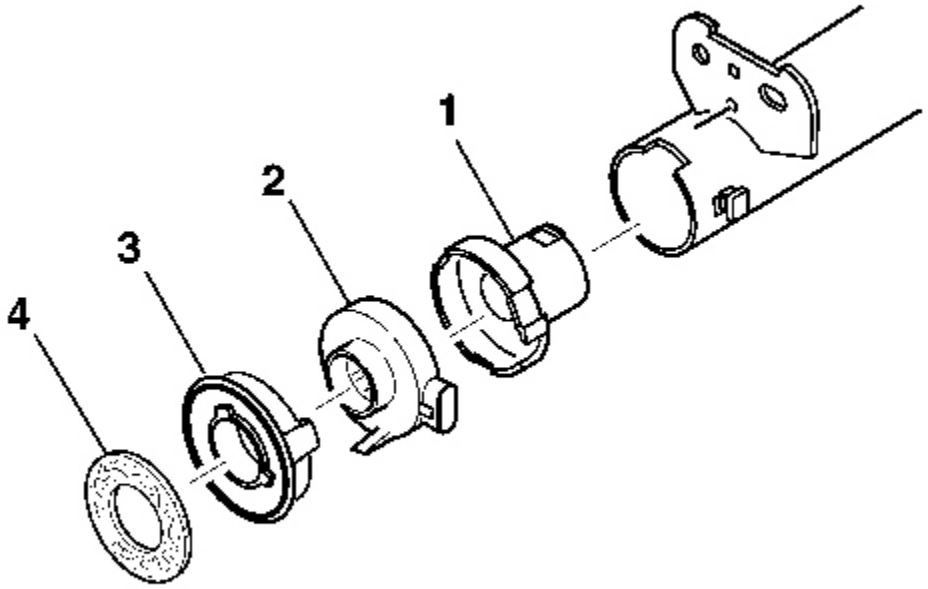

Fig. 153: Steering Shaft Seal, Sensor Retainer, Sensor Assembly, Adapter & Bearing Assembly
Courtesy of GENERAL MOTORS CORP.

CAUTION: Refer to SIR Caution in Cautions and Notices.

1. Disable the SIR system. Refer to **SIR Disabling and Enabling Zone 3** in SIR.
2. Remove the wiper/washer switch bracket. Refer to **Steering Column Tilt Head Housing Replacement (Telescoping)** or **Steering Column Tilt Head Housing Replacement (Manual)** .
3. Remove the tilt spring. Refer to **Tilt Spring Replacement (Telescoping)** or **Tilt Spring Replacement (Manual)** .
4. Remove the steering shaft seal (4).
5. Remove the sensor retainer (3).
6. Remove the sensor assembly (2).

7. Remove the adapter and bearing assembly (1).

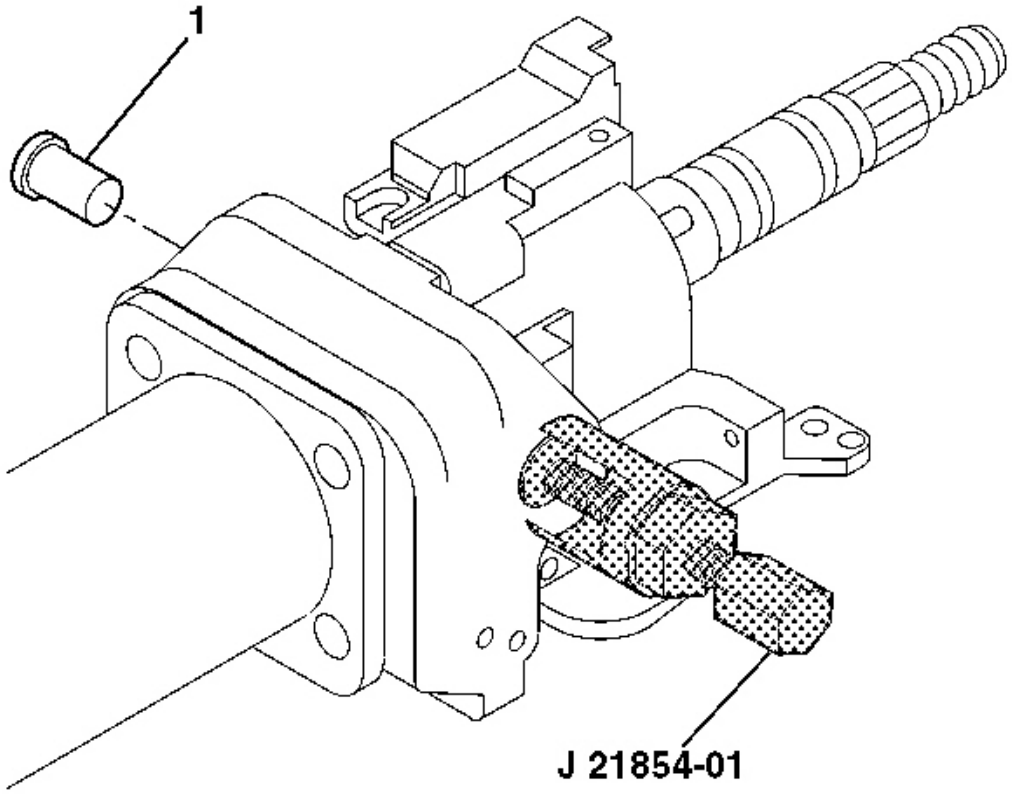

Fig. 154: 2 Pivot Pins & J 21854-01
Courtesy of GENERAL MOTORS CORP.

8. Remove the 2 pivot pins (1) from the steering column support assembly using J 21854-01 .

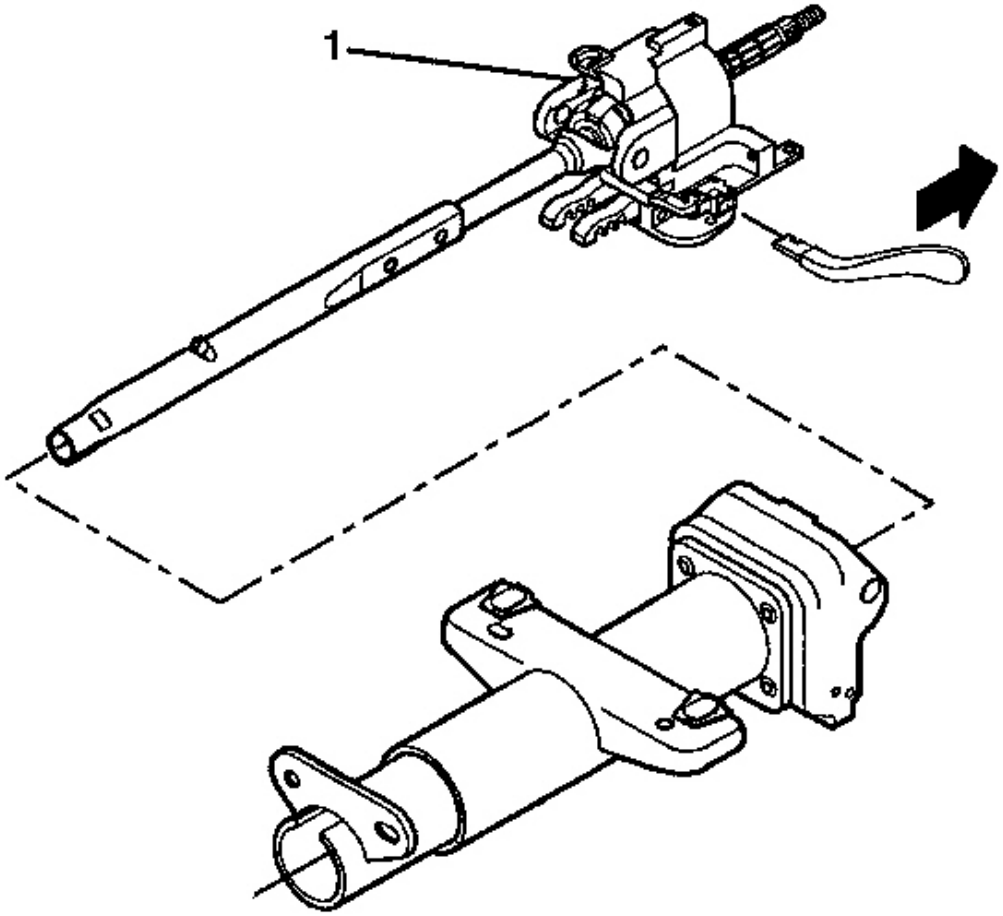

Fig. 155: Steering Column Tilt Head Housing Assembly & Steering Column Lock Shoes
Courtesy of GENERAL MOTORS CORP.

9. Install the tilt lever.
10. Pull the tilt lever to disengage the steering column lock shoes from the dowel pins in the steering column tilt head housing assembly.
11. Remove the steering column tilt head housing assembly (1) with the steering shaft assembly from the steering column jacket assembly.

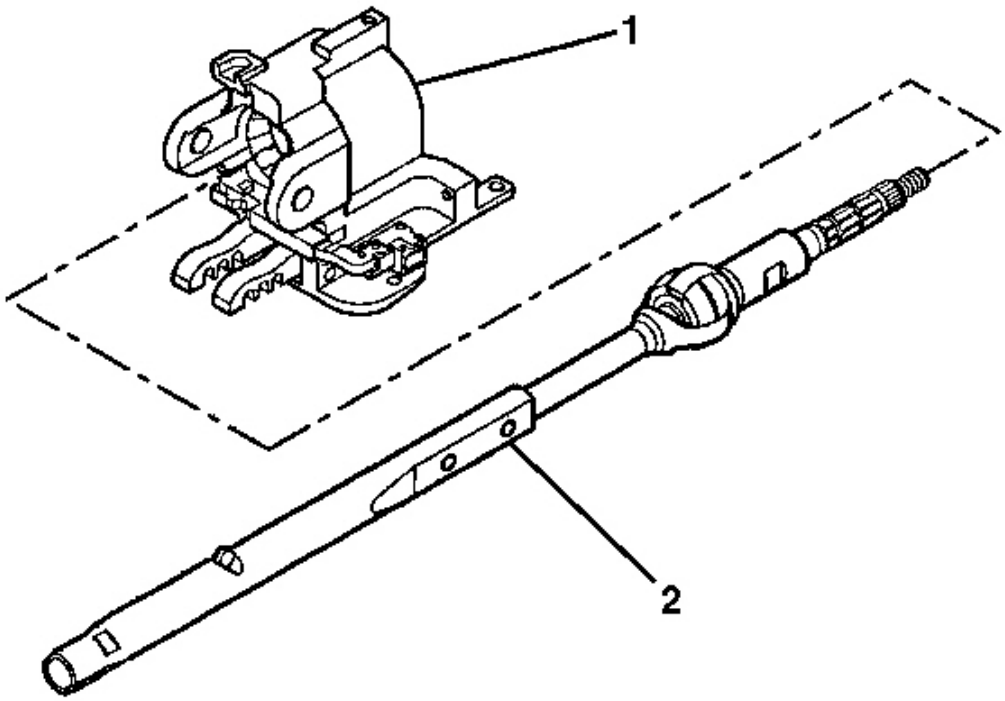

Fig. 156: Steering Shaft Assembly & Steering Column Tilt Head Housing Assembly
Courtesy of GENERAL MOTORS CORP.

12. Remove the steering shaft assembly (2) from the steering column tilt head housing assembly (1).

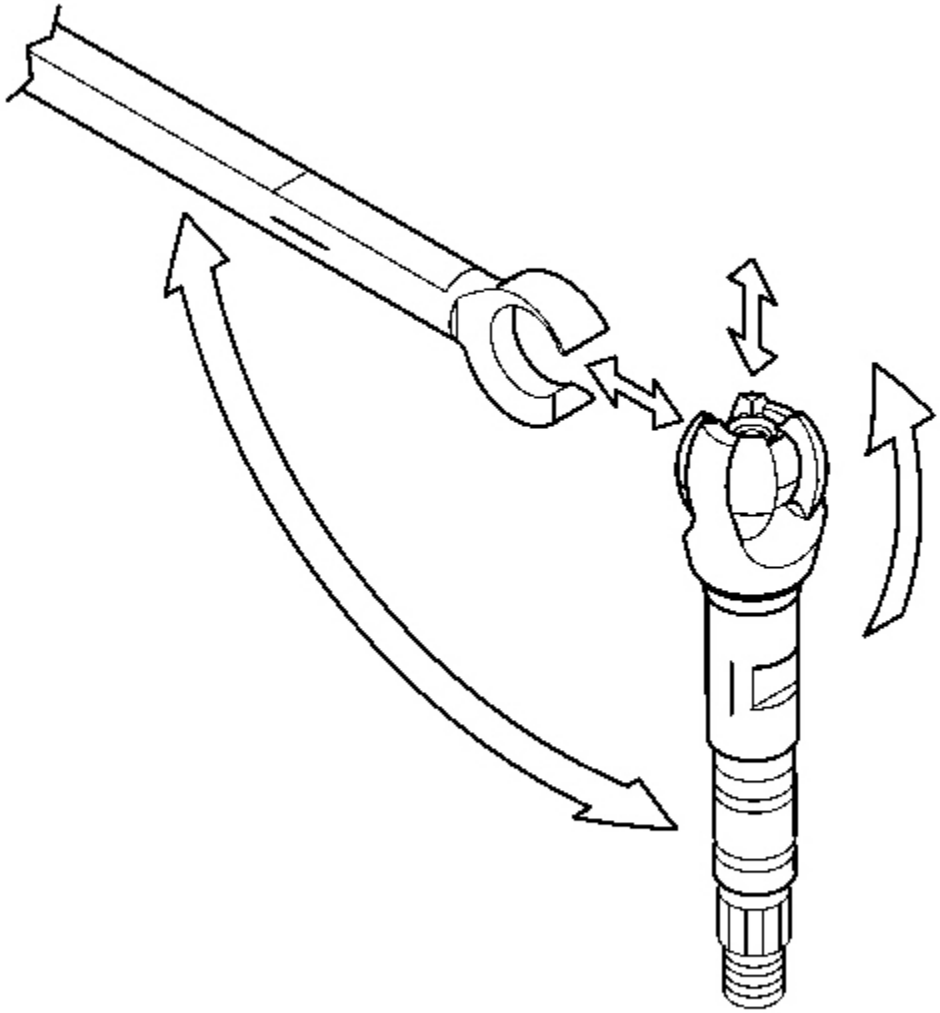

Fig. 157: Disengaging Race & Upper Shaft Assembly
Courtesy of GENERAL MOTORS CORP.

IMPORTANT: Carefully mark the parts to ensure proper assembly. Failure to assemble properly will cause the steering wheel to be turned 180 degrees.

13. Mark the race and upper shaft assembly.
14. Mark the lower steering shaft assembly.
15. Tilt the race and upper shaft assembly 90 degrees to the lower steering shaft assembly to disengage.

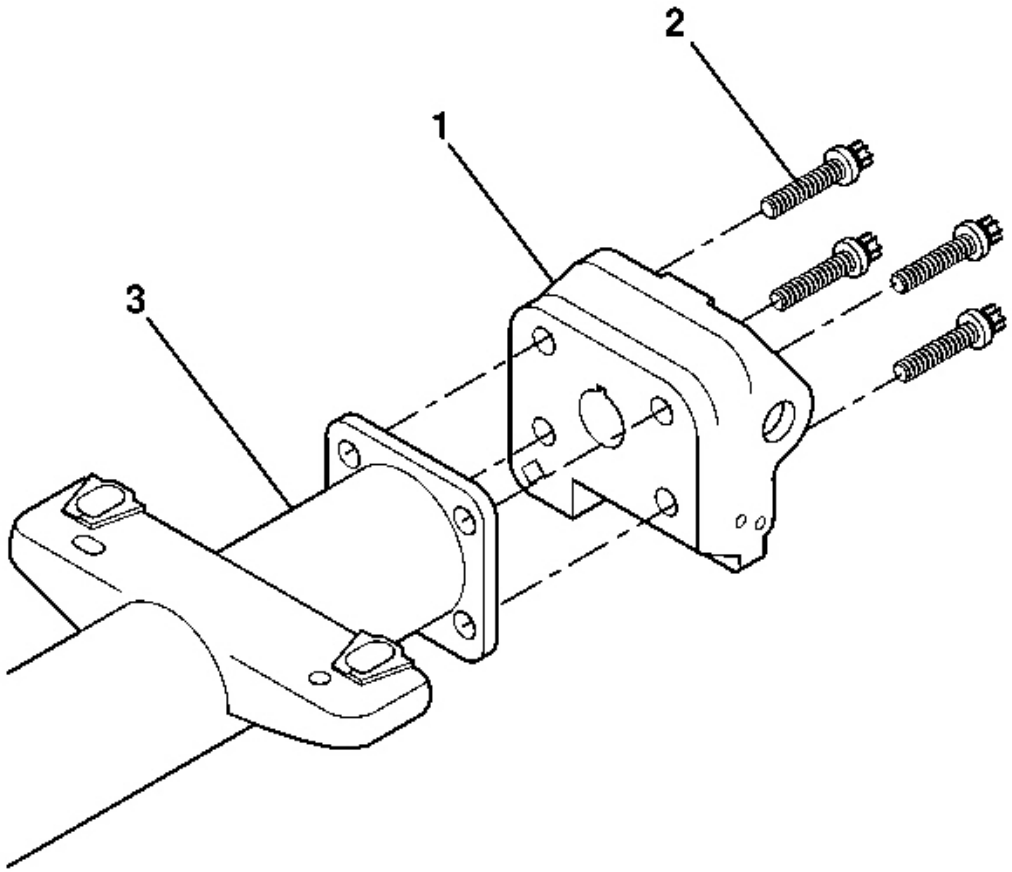

Fig. 158: Attaching Steering Column Support Assembly To The Steering Column Jacket Assembly With 4 TORX(R) Head Screws (Column Shift Lean Shaft)
Courtesy of GENERAL MOTORS CORP.

16. Remove the 4 TORX(R) head screws (2).
17. Remove the steering column support assembly (1) from the steering column jacket assembly (3).

Installation Procedure

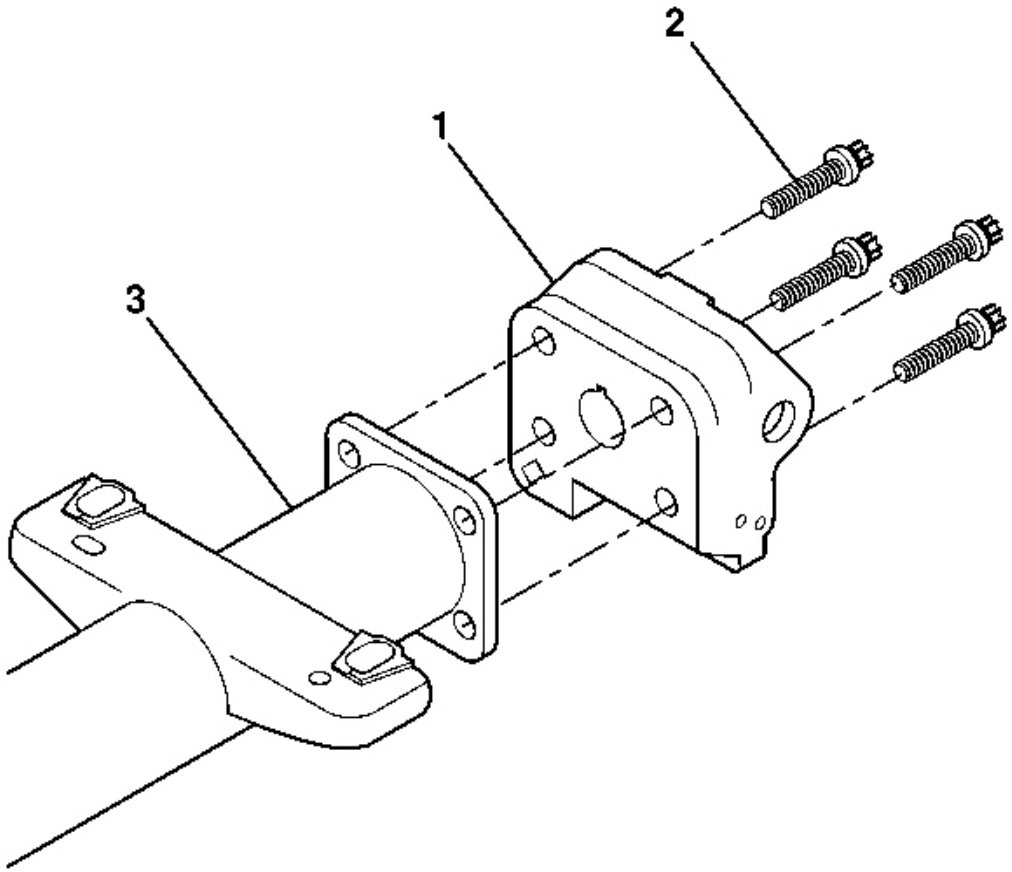

Fig. 159: Attaching Steering Column Support Assembly To The Steering Column Jacket Assembly With 4 TORX(R) Head Screws (Column Shift Lean Shaft)
Courtesy of GENERAL MOTORS CORP.

IMPORTANT: Replace the steering column support assembly if the steering column support assembly has been staked 3 times.

1. Install the steering column support assembly (1) to the steering column jacket assembly (3).

NOTE: Refer to Fastener Notice in Cautions and Notices.

2. Install the 4 TORX(R) head screws (2).

Tighten: Tighten the screws to 17 N.m (13 lb ft).

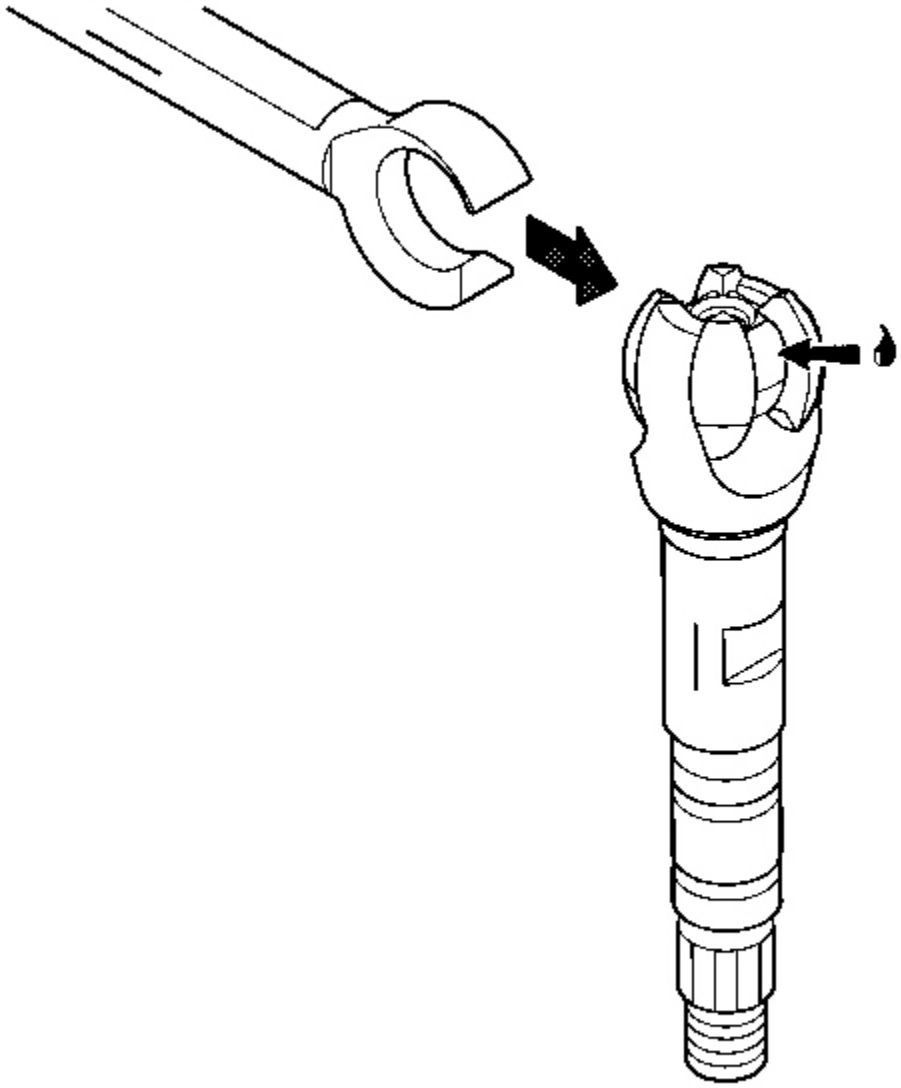

Fig. 160: Installing Race & Upper Shaft Assembly
Courtesy of GENERAL MOTORS CORP.

3. Apply GM P/N 12345718 (Canadian P/N 10953516) to the exposed shaft engagement areas on the centering sphere.
4. Install the lower steering shaft assembly to the race and upper shaft assembly to engage.

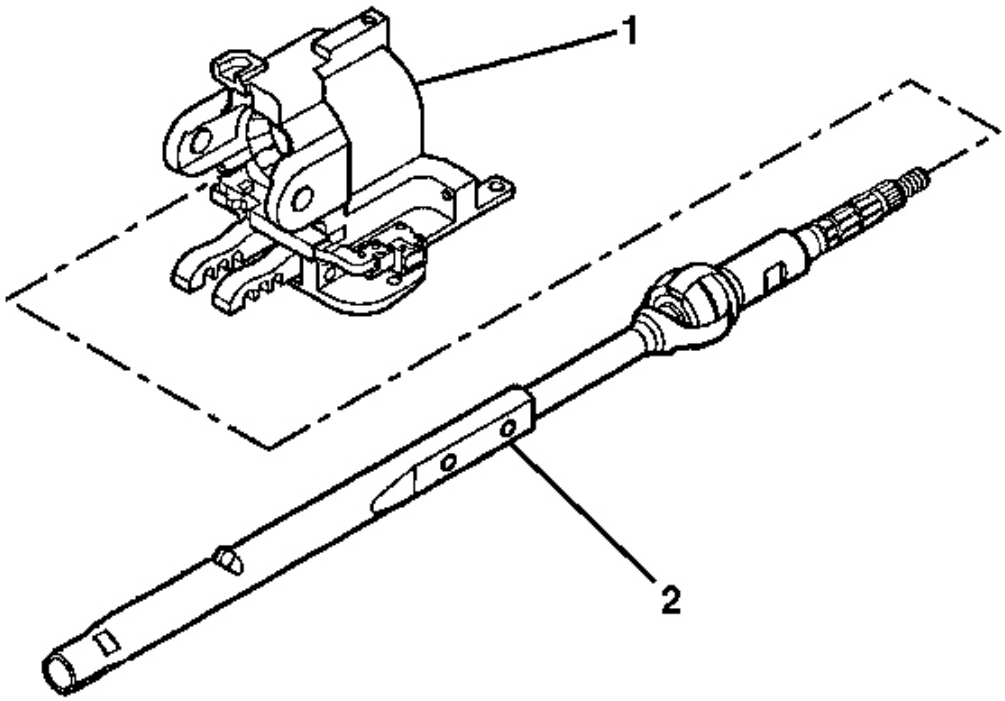

Fig. 161: Steering Shaft Assembly & Steering Column Tilt Head Housing Assembly
Courtesy of GENERAL MOTORS CORP.

5. Install the steering shaft assembly (2) into the steering column tilt head housing assembly (1).

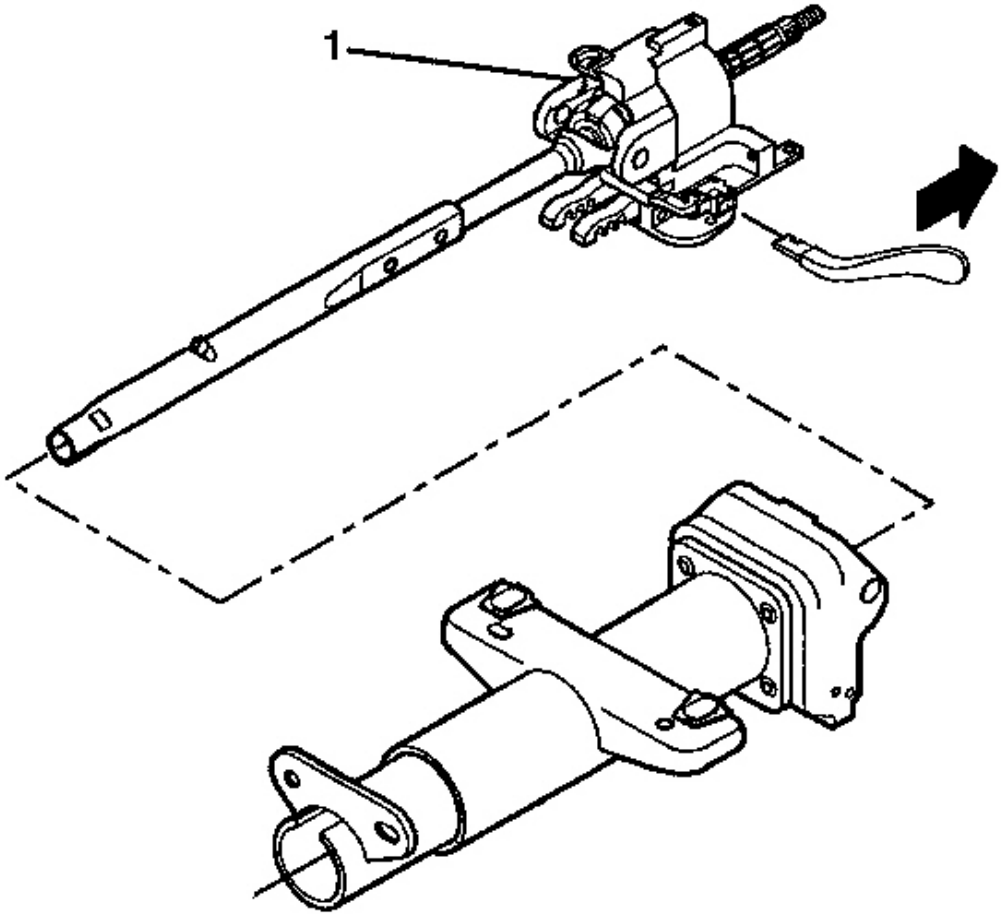

Fig. 162: Steering Column Tilt Head Housing Assembly & Steering Column Lock Shoes
Courtesy of GENERAL MOTORS CORP.

6. Install the steering column tilt head housing assembly (1) and the steering shaft assembly to the steering column jacket assembly.

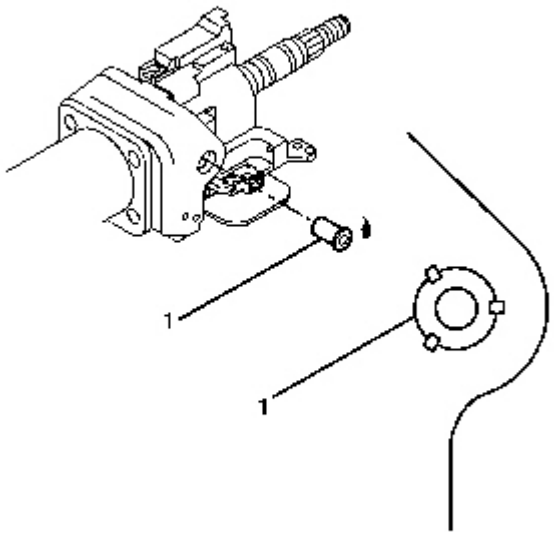

Fig. 163: Seating Pivot Pins Into The Steering Column Tilt Head Assembly (Column Shift Lean Shaft)
Courtesy of GENERAL MOTORS CORP.

IMPORTANT: Replace the steering column support assembly if the steering column support assembly has been staked 3 times.

7. Install the 2 pivot pins (1) to the steering column support assembly.
8. Stake the pivot pins locations (1).

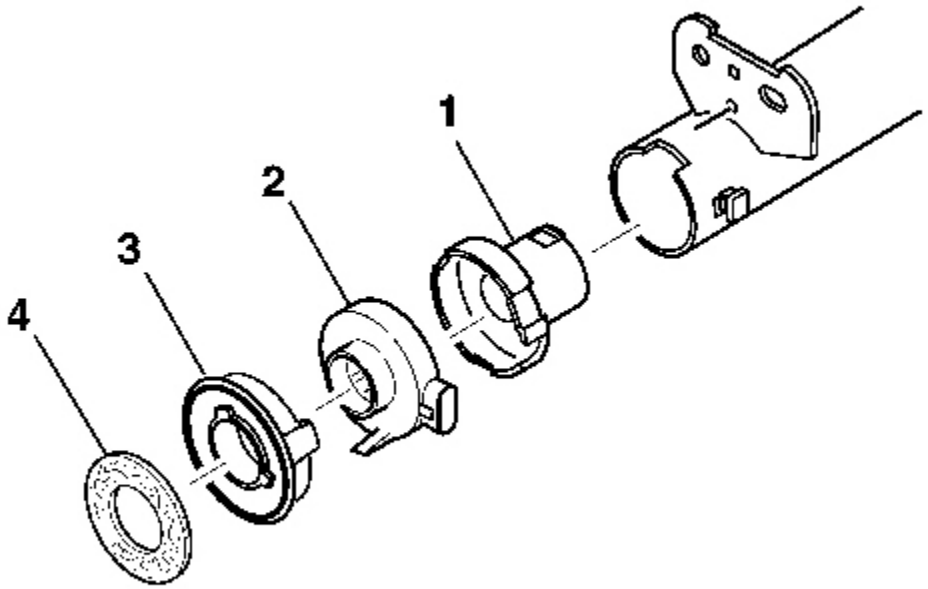

Fig. 164: Steering Shaft Seal, Sensor Retainer, Sensor Assembly, Adapter & Bearing Assembly
Courtesy of GENERAL MOTORS CORP.

9. Install the adapter and bearing assembly (1) to the steering shaft assembly.

IMPORTANT: The steering shaft assembly must be rotated to the 12 o'clock position.

10. Install the sensor assembly (2) onto the steering shaft assembly.
11. Install the sensor retainer (3) onto the steering shaft assembly.
12. Install the steering shaft seal (4).
13. Install the wiper/washer switch bracket. Refer to **Steering Column Tilt Head Housing Replacement (Telescoping)** or **Steering Column Tilt Head Housing Replacement (Manual)** .
14. Install the tilt spring. Refer to **Tilt Spring Replacement (Telescoping)** or **Tilt Spring Replacement (Manual)** .
15. Enable the SIR system. Refer to **SIR Disabling and Enabling Zone 3** in SIR.

INFLATABLE RESTRAINT STEERING WHEEL MODULE COIL CENTERING

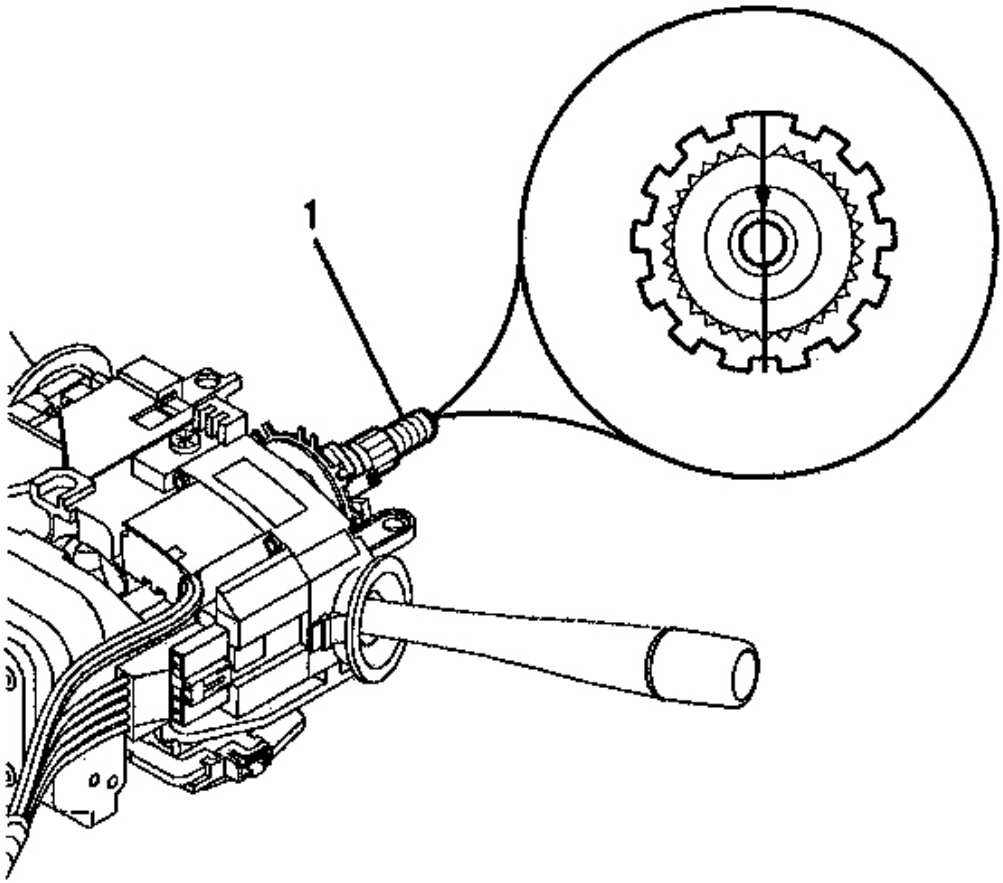

Fig. 165: Block Tooth Of The Steering Shaft Assembly In The 12 O'clock Position
Courtesy of GENERAL MOTORS CORP.

NOTE: **The new SIR coil assembly will be centered. Improper alignment of the SIR coil assembly may damage the unit, causing an inflatable restraint malfunction.**

1. Verify the following conditions before centering the SIR coil:
   - The wheels on the vehicle are straight ahead.
   - The block tooth (1) of the steering shaft assembly is in the 12 o'clock position.
   - The ignition switch assembly is in the LOCK position.

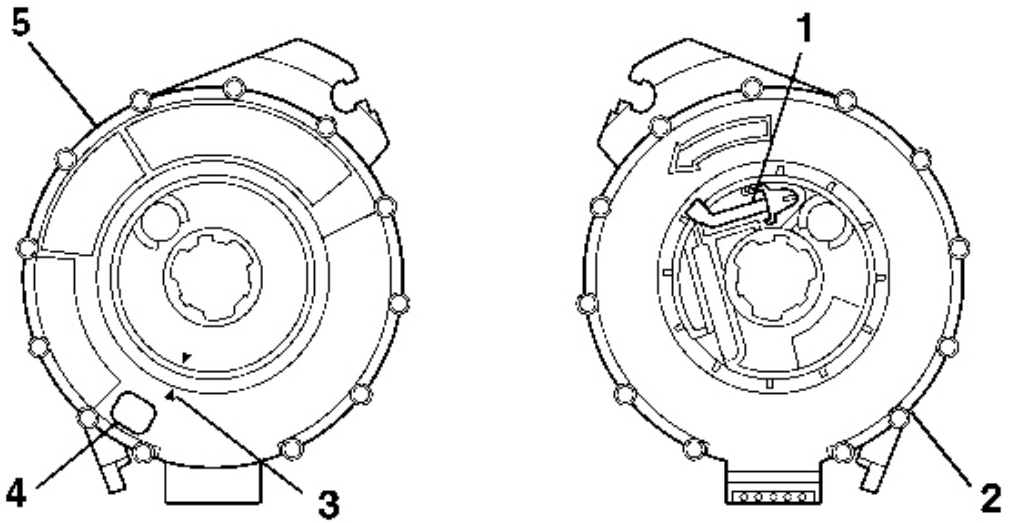

Fig. 166: SIR Coil & Centering Window, Spring Service Lock
Courtesy of GENERAL MOTORS CORP.

2. If the front (5) of the SIR coil has a centering window (4), and the back side (2) has a spring service lock (1), perform the following steps:
    1. Hold the coil with the face up.
    2. While depressing the spring service lock, rotate the coil hub clockwise until the coil ribbon stops.
    3. Rotate the coil hub slowly, counterclockwise, until the centering window appears yellow and both arrows (3) line up.
    4. Release the spring service lock between the locking tab. The SIR coil is now centered.
    5. Align the centered SIR coil with the horn tower and slide onto the steering shaft assembly.

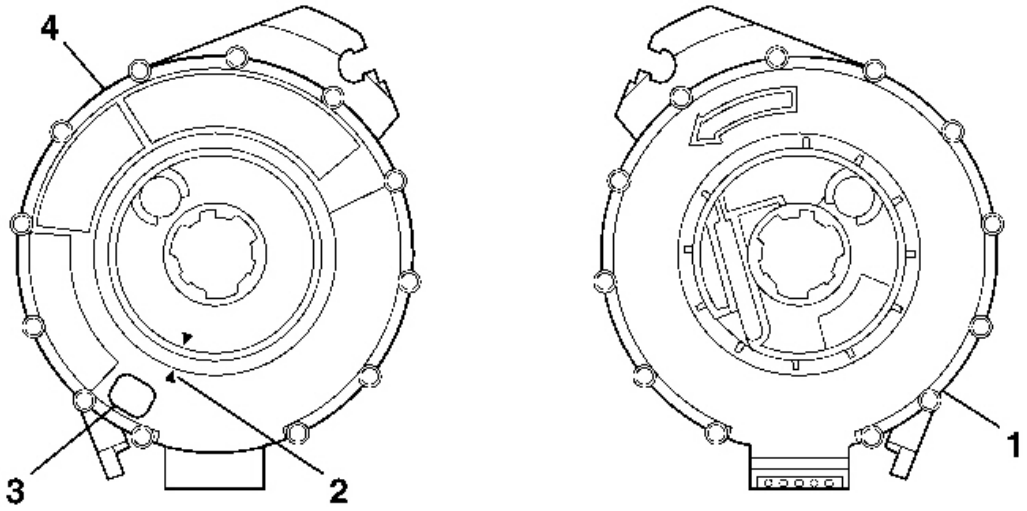

Fig. 167: Centering SIR Coil (Without Spring Service Lock)
Courtesy of GENERAL MOTORS CORP.

3. If the front (4) of the SIR coil has a centering window (3) and the back side (1) has NO spring service lock, perform the following steps:
    1. Hold the coil with the face up.
    2. Rotate the coil hub clockwise until the coil ribbon stops.
    3. Rotate the coil hub slowly, counterclockwise until the centering window appears yellow and both arrows (2) line up. This is the CENTER position.
    4. While holding the coil hub in the CENTER position, align the coil with the horn tower and slide the coil onto the steering shaft assembly.

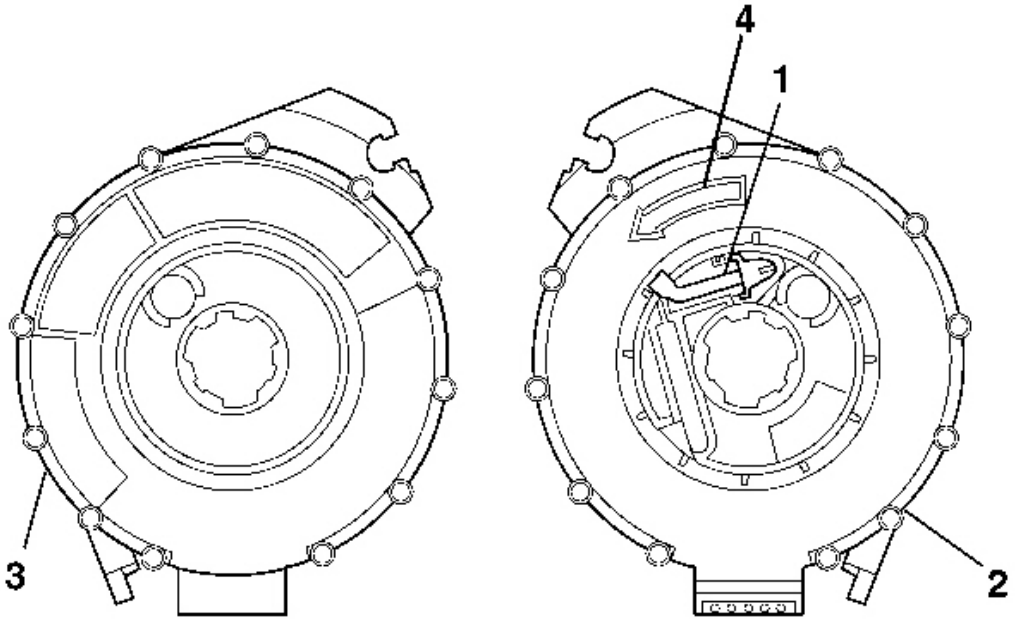

Fig. 168: SIR Coil & No Centering Window, Spring Service Lock
Courtesy of GENERAL MOTORS CORP.

4. If no centering window is present on the front side (3) of the SIR coil, but a spring service lock (1) is on the back side (2), perform the following steps:
    1. Hold the coil with the back side up.
    2. While depressing the spring service lock, rotate the coil hub in the direction of the arrow (4) until the coil ribbon stops.
    3. Still pressing the spring service lock, rotate the coil hub in the opposite direction 21/2 revolutions.
    4. Release the spring service lock between the locking tabs. The SIR coil is now centered.
    5. Align the centered coil with the horn tower and slide the coil onto the steering shaft assembly.

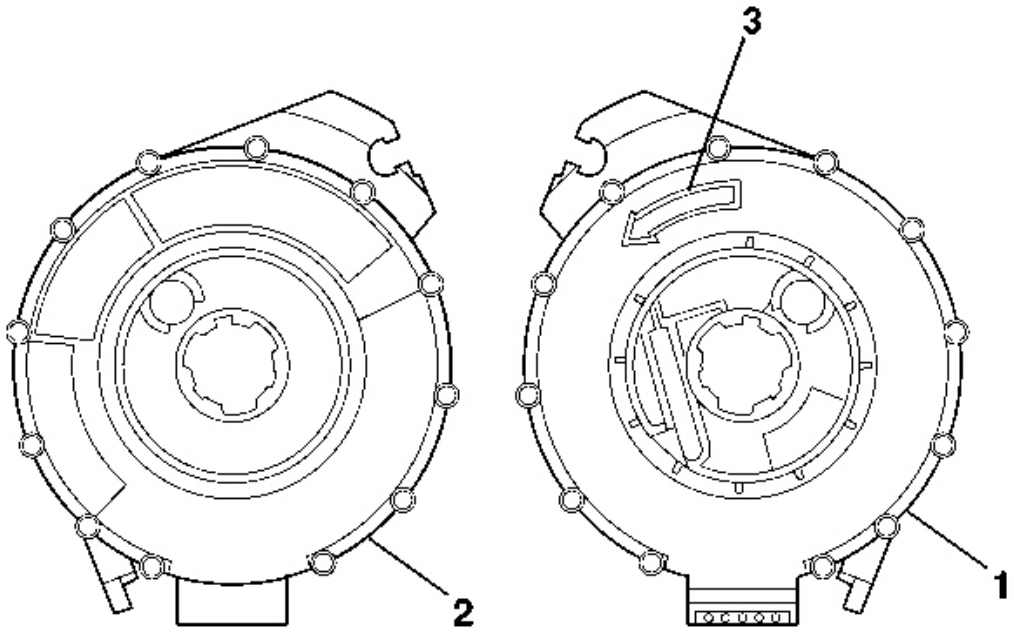

Fig. 169: SIR Coil & No Centering Window, No Spring Service Lock
Courtesy of GENERAL MOTORS CORP.

5. If no centering window appears on the front side (2) of the SIR coil and no spring service lock exists on the back side (1), perform the following steps:
    1. Hold the coil with the face up.
    2. Rotate the coil hub in the direction of the arrow until the coil ribbon stops.
    3. Rotate the coil hub, slowly, counterclockwise, for 21/2 revolutions. This is the CENTER position.
    4. While maintaining the coil hub in the CENTER position, align the centered coil with the horn tower and slide the coil onto the steering shaft assembly.

DESCRIPTION AND OPERATION

STEERING WHEEL AND COLUMN DESCRIPTION AND OPERATION

Tilt\Telescoping Description

The tilt/telescoping steering column uses the same tilt lever as the non-telescoping column and functions in the same manner. The telescoping function of this column consists of the telescoping drive motor, the telescoping actuator assembly and the telescoping actuator switch. The telescoping actuator assembly is cable driven by the telescoping drive motor. The telescoping actuator switch operates the inward or outward movement of the

steering wheel.

The energy absorbing and locking steering column includes three important features in addition to the steering function.

1. The steering column is energy absorbing and is designed to compress in a front-end collision which will lessen the chance of injury to the driver.
2. The steering column has a telescoping control system that consists of an electronic control module capable of Class 2 serial data communication, a steering column power assembly with positioning motor and sensor, and a steering column control switch.
3. The multi-function lever provides for the control of the headlamp high beams, and the windshield washer and wiper.

The steering column may be removed, disassembled and reassembled with relative ease. It is important to use only the specified screws, bolts and nuts and to tighten them to the specified torque in order to ensure the proper energy absorbing functions. When the steering column assembly is removed from the vehicle, special care must be taken in handling it. Avoid the use of a steering wheel puller other than the special one recommended in this manual. Sharply striking the end of the steering shaft, leaning on the assembly or dropping the assembly could shear off or loosen the plastic fasteners which maintain the steering column rigidity.

Tilt\Telescoping Operation

The telescoping steering column in/out switch is an input to the seat control module. The telescoping drive motor is an output function of the seat control module. The telescoping actuator assembly is cable driven by the telescoping drive motor.

Steering column memory settings are stored in the seat control module. The steering column position sensor is an internal part of the telescoping actuator assembly, and is an input to the seat control module. The seat control module uses the position sensor input when storing and recalling memory settings.

Memory steering column, and the easy enter/exit operations are performed by the seat control module. However the left door control module assumes control when memory settings are stored and recalled, by use of the serial data link. The body control module assumes control when the easy enter/exit operation occurs, by use of the serial data link.

The body control module stores the RPO code configuration which signals to the seat control module whether or not the telescoping steering column option is active. This RPO code configuration must be correct, and received by the seat control module, or power seat, and telescoping steering column operation will be inoperative or incorrect.

Steering Column Lock Description

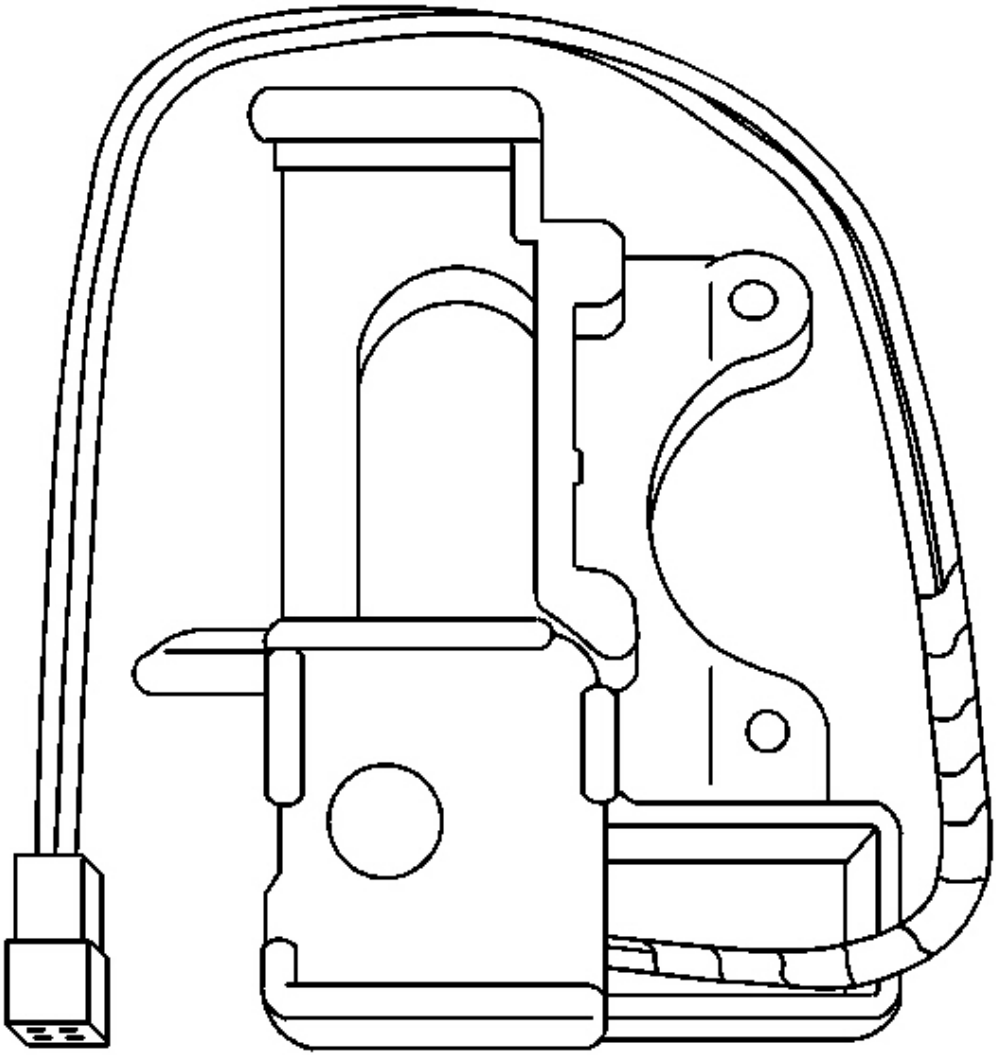

Fig. 170: Steering Column Lock
Courtesy of GENERAL MOTORS CORP.

The BCM provides the steering column control function which allows the column to be electronically locked or unlocked. The BCM provides three outputs, steering column lock, steering column unlock, and the external steering column lock relay. The BCM can apply a ground or battery output on the steering column lock circuit or steering column unlock circuit depending on the desired steering column lock motor position. The BCM accomplishes steering column lock motor operation based on the following output commands:

Steering Wheel and Column Description and Operation

Steering Column Unlock	Steering Column Lock	Steering Column Lock Motor Operation
GROUND	GROUND	NONE
GROUND	BATTERY	UNLOCK
BATTERY	GROUND	LOCK
BATTERY	BATTERY	NONE

The BCM controls the position of the steering column lock motor based on the following input information:

- Ignition position
- Key in Ignition status
- Key Out of Ignition status
- Steering column lock feedback switch
- PASS-Key(R) system
- PCM password information
- System voltage

The external steering column lock relay is located above the BCM, in the passenger footwell area. The external steering column lock relay can be identified by 2 orange wires connected to it. There may be either 2 or 3 relays in this area, and they may not always be in the same position.

Steering Column Lock Operation

The BCM supplies the ground to the steering column unlock circuit through the key out of ignition switch which is integrated within the ignition switch. This prevents the BCM from locking the steering column with the key in the ignition. The BCM supplies battery voltage to the steering column lock motor through BCM2 fuse. The BCM also controls the external steering column lock relay. The relay prevents the motor from operating unless the relay is energized. The BCM uses a feedback switch which is integrated within the steering column lock motor in order to monitor the motor position. The feedback switch allows the BCM to determine if the commanded position was actually accomplished. If the BCM is unable to determine the steering column lock state, due to a steering column lock system malfunction or by disconnecting the steering column motor with the ignition in the ON position, the BCM will enter a fail enable mode and prevent steering column lock operation. The PCM will also inhibit vehicle motion by disabling fuel. To clear the BCM fail enable mode, disconnect the BCM & IPC fuse in the I/P fuse block for 15 seconds. The BCM also monitors its circuitry for the column lock circuit. If the BCM detects a malfunction present the Driver Information Center (DIC) will display PULL KEY-WAIT 10 SEC. When the key is pulled out of the ignition for 10 seconds and then key is turned to the ON position the DIC will display SERVICE COLUMN LOCK and a DTC will set in the BCM memory. Always perform the BCM Diagnostic System Check before attempting any diagnosis on the steering column lock system.

SPECIAL TOOLS AND EQUIPMENT

SPECIAL TOOLS

Special Tools

Illustration	Tool Number/ Description
	J 1859-A Steering Wheel Puller
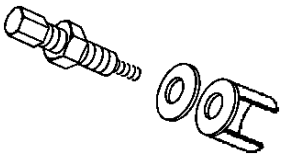	J 21854-01 Pivot Pin Remover
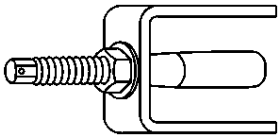	J 23653-SIR Lock Plate Compressor
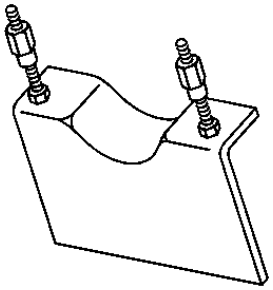	J 41352 Modular Column Holding Fixture
	J 42120

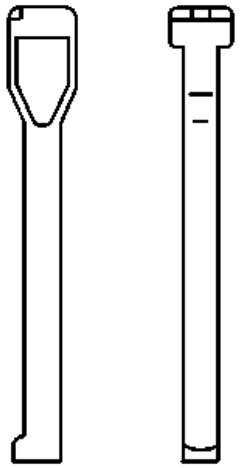	Steering Wheel Puller Legs
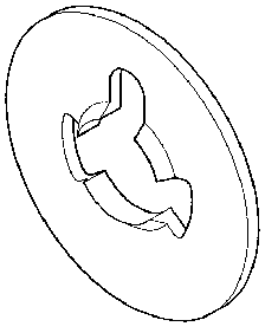	J 42137 Steering Column Lock Plate Compressor Adapter
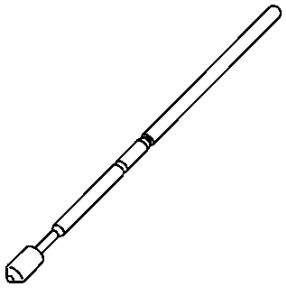	J 42640 Steering Column Lock Pin