SPECIFICATIONS

FASTENER TIGHTENING SPECIFICATIONS

Fastener Tightening Specifications

Application	Specification	
	Metric	English
Adjuster Mounting Nuts	50 N.m	37 lb ft
Hinge Bolt Nuts	24 N.m	18 lb ft
Seat to Adjuster Bolts	24 N.m	18 lb ft
Seat to Adjuster Nuts	24 N.m	18 lb ft
Seat Belt Buckle Side Mounting Nut	50 N.m	37 lb ft

SCHEMATIC AND ROUTING DIAGRAMS

POWER SEATS SCHEMATICS

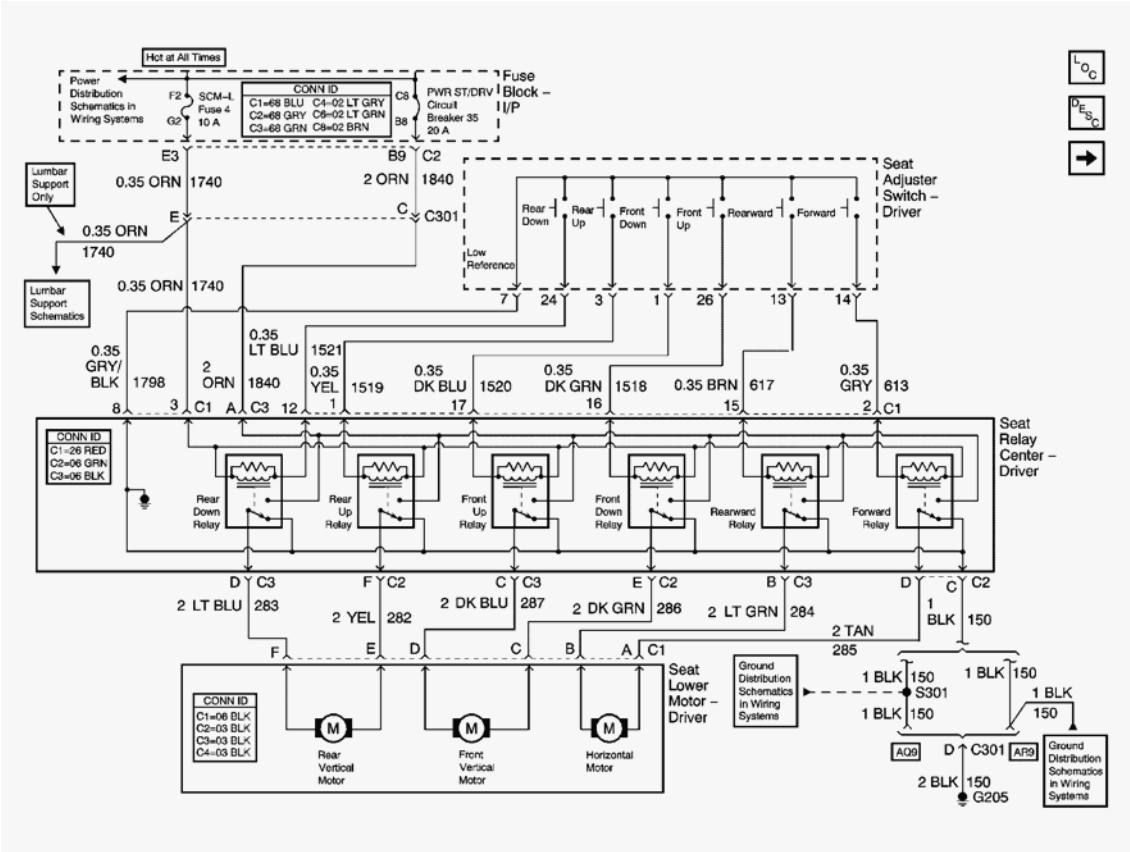

Fig. 1: Power, Ground, And Seat Controls Schematics - Driver
Courtesy of GENERAL MOTORS CORP.

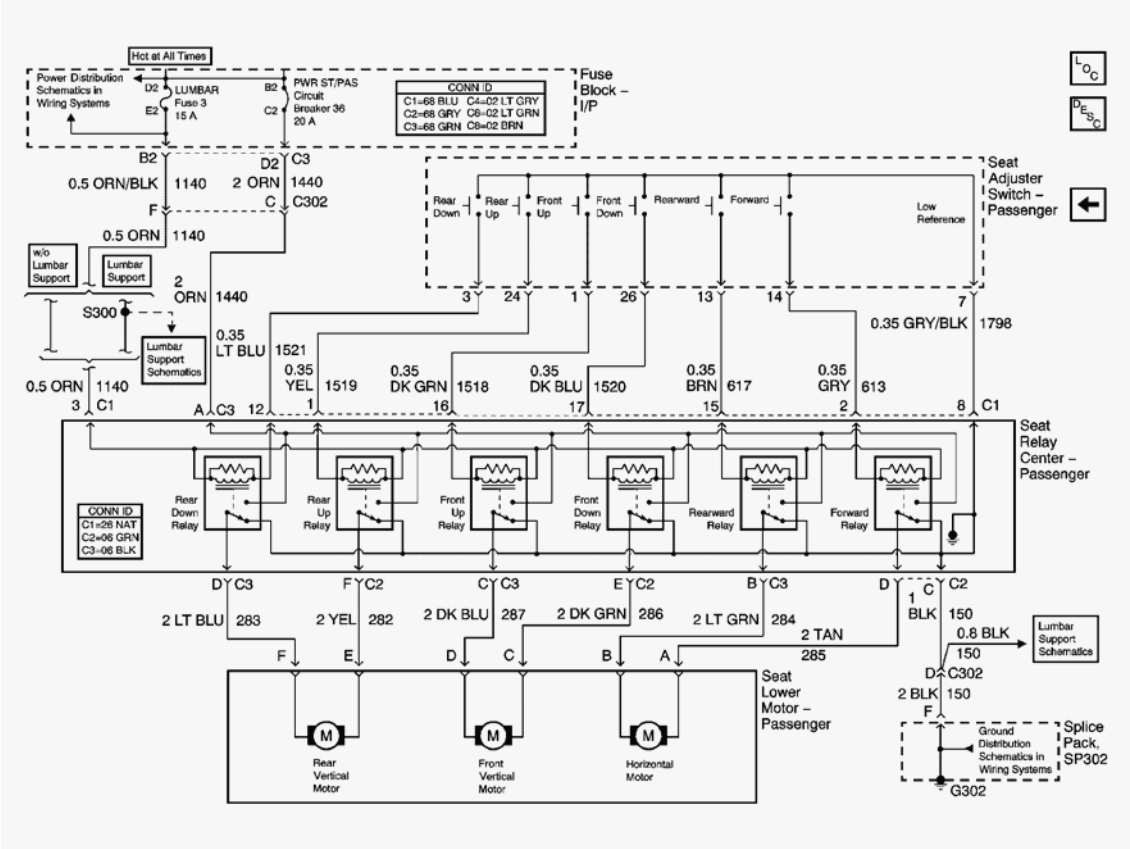

Fig. 2: Power, Ground And Seat Controls Schematics - Passenger
Courtesy of GENERAL MOTORS CORP.

LUMBAR SUPPORT SCHEMATICS

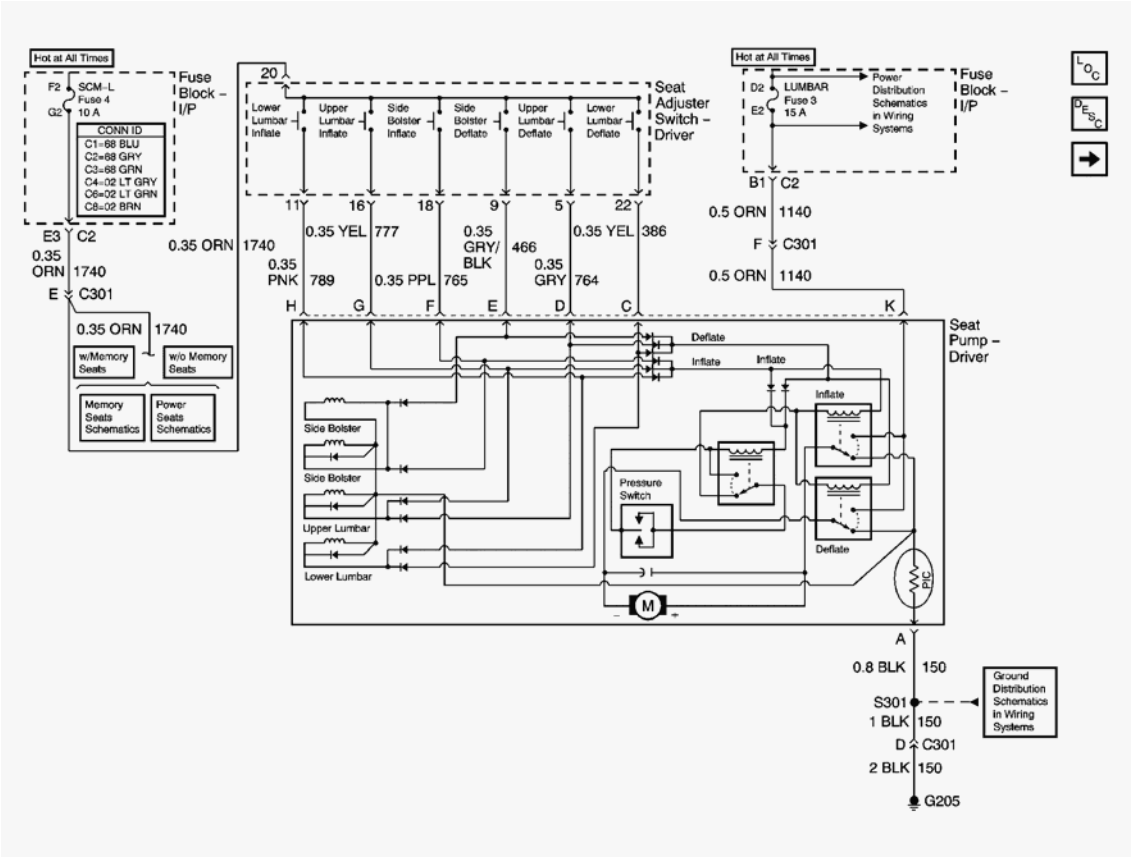

Fig. 3: Power, Ground And Seat Pump Schematics - Driver
Courtesy of GENERAL MOTORS CORP.

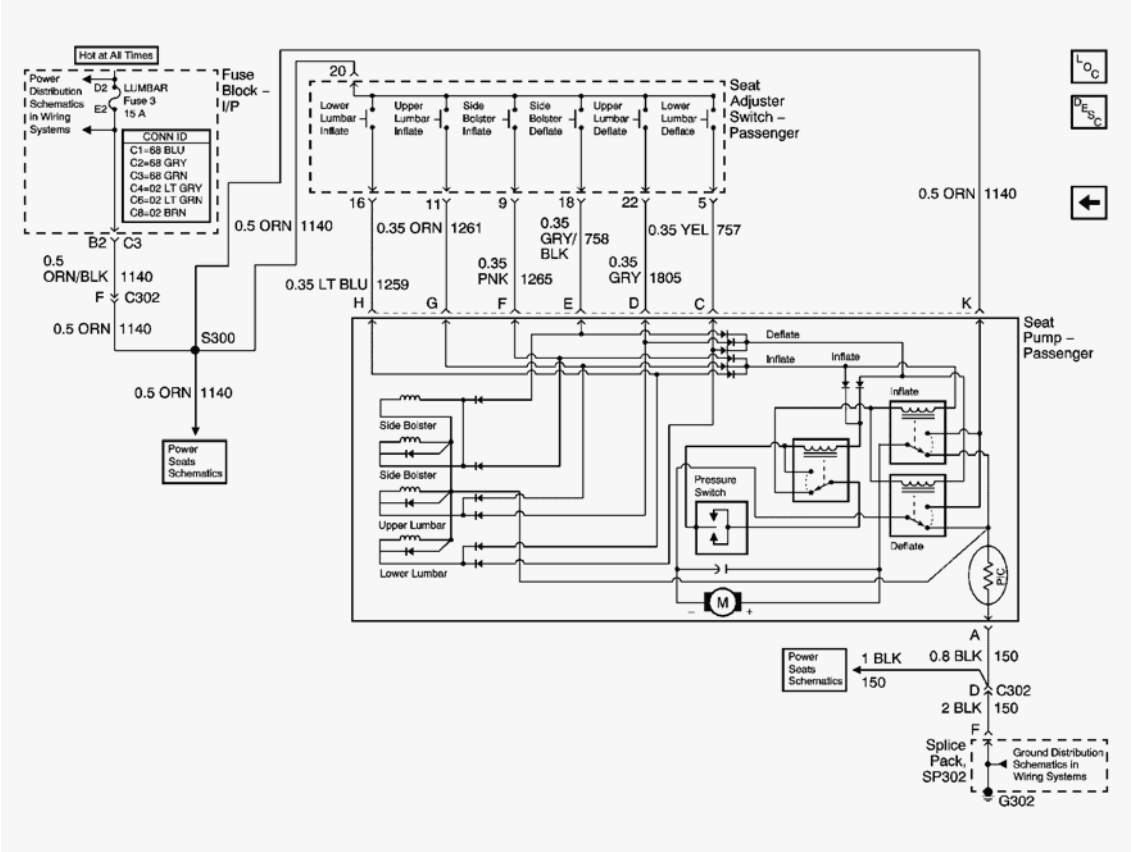

Fig. 4: Power, Ground And Seat Pump Schematics - Passenger
Courtesy of GENERAL MOTORS CORP.

MEMORY SEATS SCHEMATICS

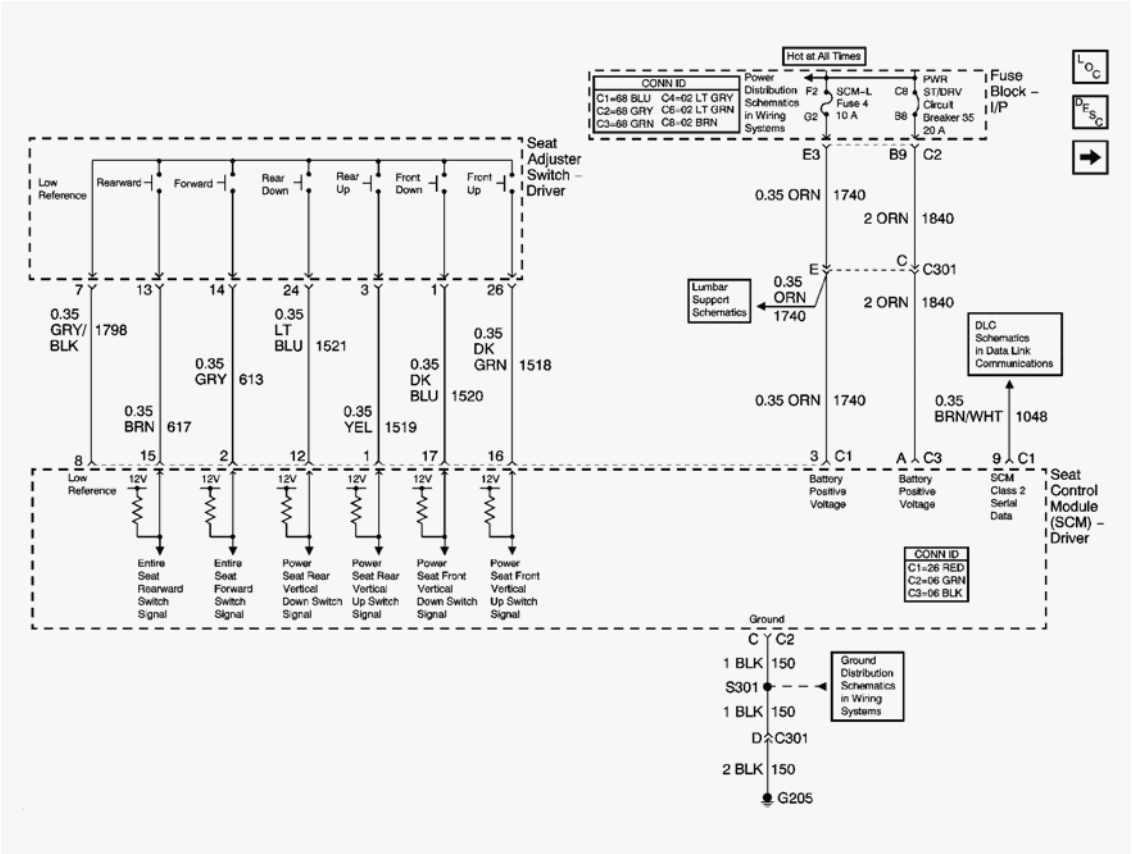

Fig. 5: Power, Ground, DLC, And Seat Adjuster Switch Schematics - Driver
Courtesy of GENERAL MOTORS CORP.

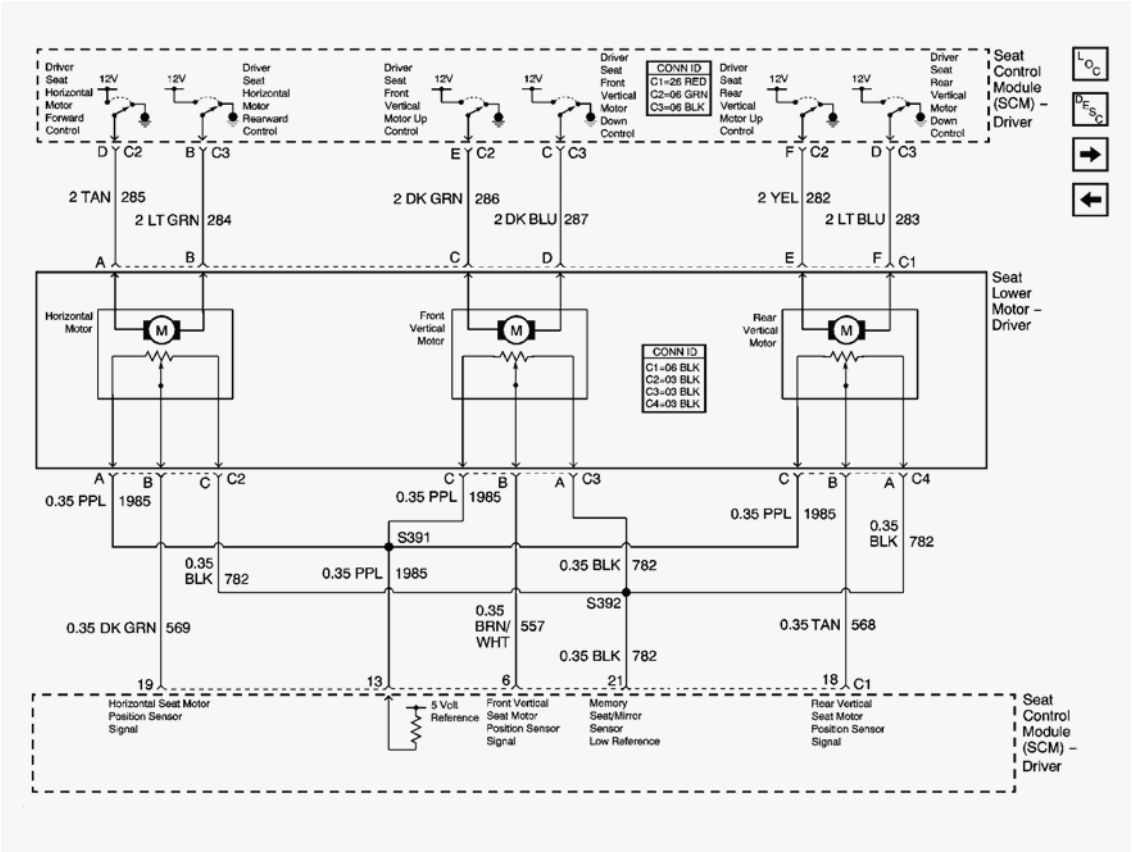

Fig. 6: Seat Control Module Schematics - Driver W/O Telescoping Steering Column
Courtesy of GENERAL MOTORS CORP.

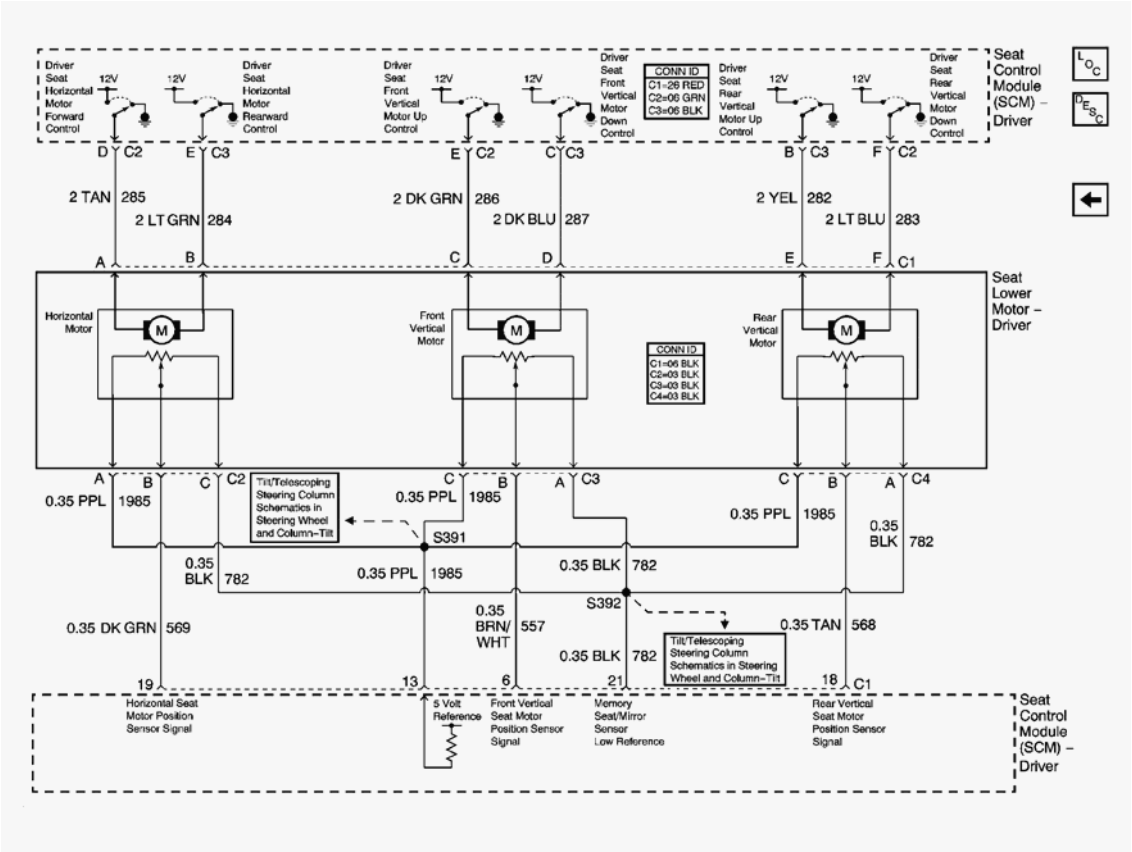

Fig. 7: Seat Control Schematics - Driver Module W/Telescoping Steering Column
Courtesy of GENERAL MOTORS CORP.

COMPONENT LOCATOR

POWER SEAT SYSTEMS COMPONENT VIEWS

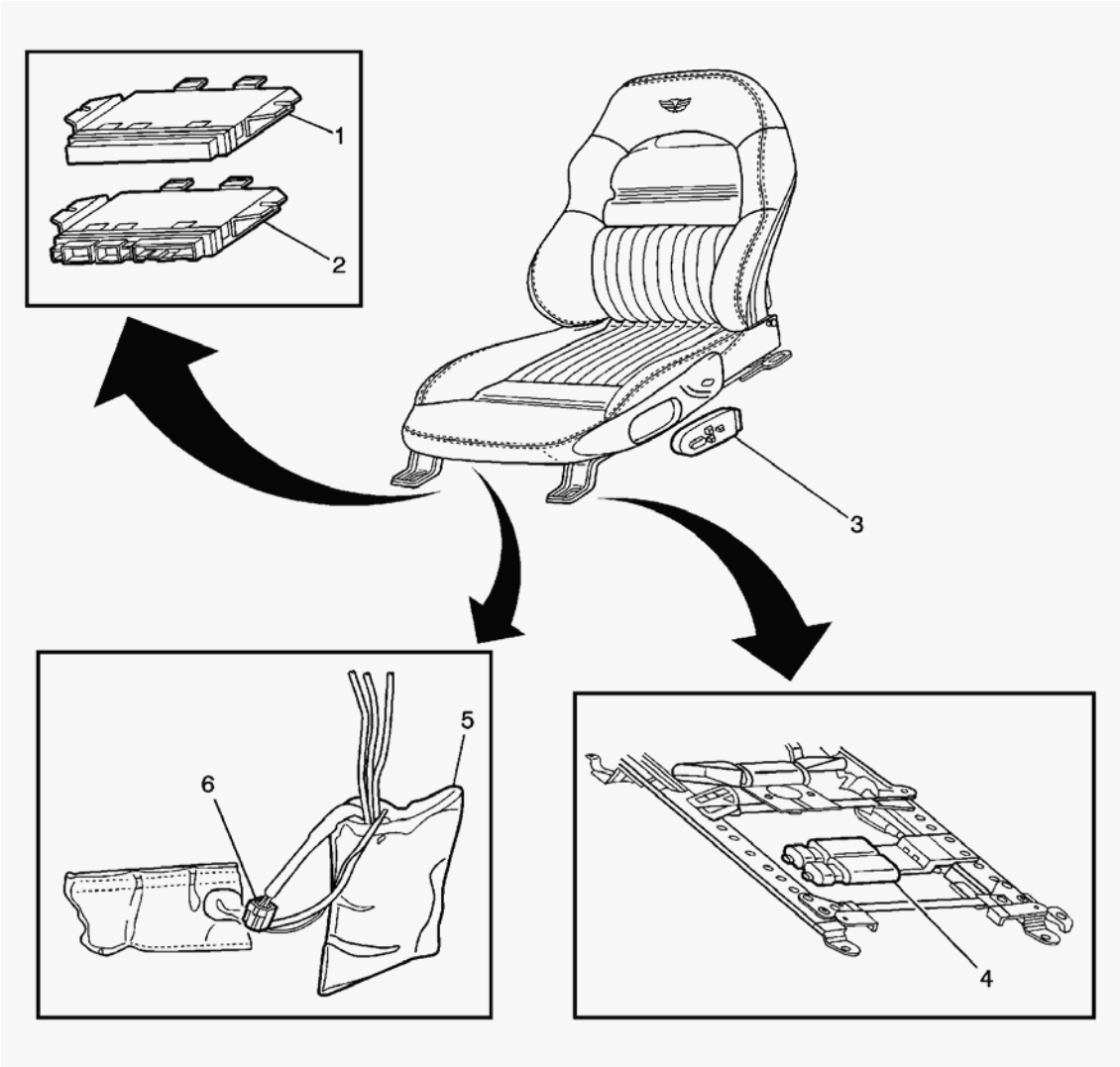

Fig. 8: Drivers Seat Components View (Passenger Seat Similar)
Courtesy of GENERAL MOTORS CORP.

Callouts For Fig. 8

Callout	Component Name
1	Seat Relay Center - Driver
2	Seat Control Module (SCM) - Driver
3	Seat Adjuster Switch - Driver
4	Seat Lower Motor - Driver
5	Seat Pump - Driver
6	Seat Pump Connector - Driver

POWER SEAT SYSTEMS CONNECTOR END VIEWS

Seat Adjuster Switch Terminal Identification - Driver

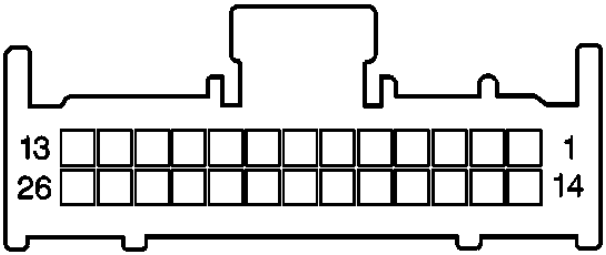

Connector Part Information		• 12160773 • 26-Way F (NAT)	
Pin	**Wire Color**	**Circuit No.**	**Function**
1	DK BLU	1520	Power Seat Front Vertical Down Switch Signal
2	-	-	Not Used
3	YEL	1519	Power Seat Rear Vertical Up Switch Signal
4	-	-	Not Used
5	GRY	764	Driver Seat Deflate Relay Control
6	-	-	Not Used
7	GRY/BLK	1798	Low Reference
8	-	-	Not Used
9	GRY/BLK	466	Driver Seat Lumbar Rearward Relay Control
10	-	-	Not Used
11	PNK	789	Driver Seat Pneumatic Lower Lumbar Solenoid Control
12	-	-	Not Used
13	BRN	617	Entire Seat Rearward Switch Signal
14	GRY	613	Entire Seat Forward Switch Signal
15	-	-	Not Used
16	YEL	777	Driver Seat Pneumatic Upper Lumbar Solenoid Control
17	-	-	Not Used
18	PPL	765	Driver Seat Pneumatic Lateral Solenoid Control
19	-	-	Not Used
20	ORN	1740	Battery Positive Voltage
21	-	-	Not Used
22	YEL	386	Driver Seat Lumbar Down Relay Control
23	-	-	Not Used
24	LT BLU	1521	Power Seat Rear Vertical Down Switch Signal
25	-	-	Not Used
26	DK GRN	1518	Power Seat Front Vertical Up Switch Signal

Seat Adjuster Switch Terminal Identification - Front Passenger

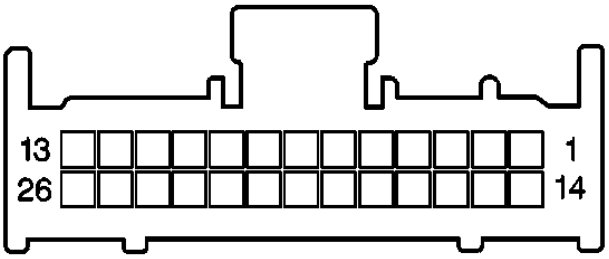

Connector Part Information		• 12160773 • 26-Way F (NAT)	
Pin	**Wire Color**	**Circuit No.**	**Function**
1	DK GRN	1518	Power Seat Front Vertical Up Switch Signal
2	-	-	Not Used
3	LT BLU	1521	Power Seat Rear Vertical Down Switch Signal
4	-	-	Not Used
5	YEL	757	Passenger Seat Lumbar Down Relay Control
6	-	-	Not Used
7	GRY/BLK	1798	Ground
8	-	-	Not Used
9	PNK	1265	Passenger Seat Lateral Pneumatic Solenoid Control
10	-	-	Not Used
11	ORN	1261	Passenger Seat Upper Lumbar Pneumatic Solenoid Control
12	-	-	Not Used
13	BRN	617	Entire Seat Rearward Switch Signal
14	GRY	613	Entire Seat Forward Switch Signal
15	-	-	Not Used
16	LT BLU	1259	Passenger Seat Lower Lumbar Pneumatic Solenoid Control
17	-	-	Not Used
18	GRY/BLK	758	Passenger Seat Lumbar Rearward Relay Control
19	-	-	Not Used
20	ORN	1140	Battery Positive Voltage
21	-	-	Not Used
22	GRY	1805	Passenger Pneumatic Seat Deflate Relay Control
23	-	-	Not Used
24	YEL	1519	Power Seat Rear Vertical Up Switch Signal
25	-	-	Not Used
26	DK BLU	1520	Power Seat Front Vertical Down Switch Signal

Seat Control Module (SCM) Terminal Identification - Driver C1 (Telescopic and Memory)

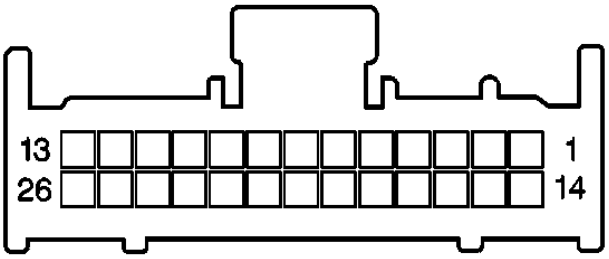

Connector Part Information		• 12160773 • 26-Way F (NAT) • TPA (RED)	
Pin	**Wire Color**	**Circuit No.**	**Function**
1	YEL	1519	Power Seat Front Vertical Up Switch Signal
2	GRY	613	Entire Seat Forward Switch Signal
3	ORN	1740	Battery Positive Voltage
4	ORN	2153	Steering Column Telescope Motor Signal
5	-	-	Not Used
6	BRN/WHT	557	Front Vertical Seat Motor Position Sensor Signal
7	-	-	Not Used
8	GRY/BLK	1798	Low Reference
9	BRN/WHT	1048	SCM (Seat) Class 2 Serial Data
10	-	-	Not Used
11	ORN	2095	Steering Column Tilt and Telescope Reverse Switch Signal
12	LT BLU	1521	Power Seat Rear Vertical Down Switch Signal
13	PPL	1985	5 Volt Reference
14	PNK	2094	Steering Column Tilt and Telescope Forward Switch Signal
15	BRN	617	Entire Seat Rearward Switch Signal
16	DK GRN	1518	Power Seat Front Vertical Up Switch Signal
17	DK BLU	1520	Power Seat Front Vertical Down Switch Signal
18	TAN	568	Vertical Seat Motor Position Sensor Signal
19	DK GRN	569	Horizontal Seat Motor Position Sensor Signal
20	-	-	Not Used
21	BLK	782	Memory Seat/Mirror Sensor Low Reference
22-26	-	-	Not Used

Seat Control Module (SCM) Terminal Identification - Driver C2 (Telescopic and Memory)

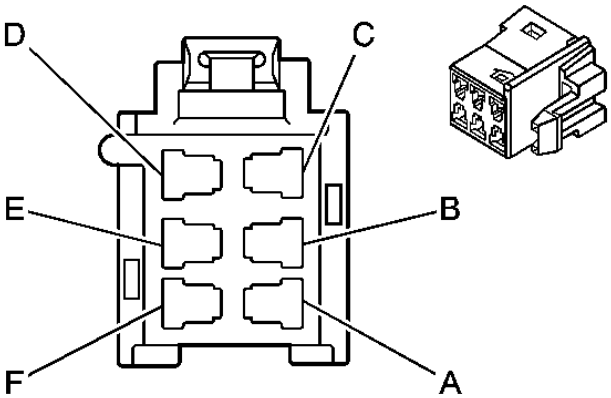

Connector Part Information		• 12089527 • 6-Way F Metri-Pack 280 Series (GRN)	
Pin	**Wire Color**	**Circuit No.**	**Function**
A	-	-	Not Used
B	BLK	2110	Steering Column Telescope Motor Reverse
C	BLK	150	Ground
D	TAN	285	Driver Seat Horizontal Motor Forward Control
E	DK GRN	286	Driver Seat Front Vertical Motor Up Control
F	YEL	282	Driver Seat Rear Vertical Motor Up Control
F	LT BLU	283	Driver Seat Rear Vertical Motor Down Control (W/ Telescopic)

Seat Control Module (SCM) Terminal Identification - Driver C3 (Telescopic and Memory)

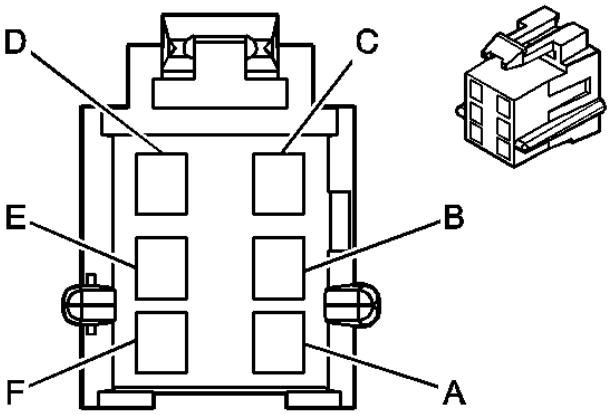

Connector Part Information		• 12064752 • 6-Way F Metri-Pack 280 Series (BLK)	
Pin	**Wire Color**	**Circuit No.**	**Function**
A	ORN	1840	Battery Positive Voltage
B	LT GRN	284	Driver Seat Horizontal Motor Rearward Control
B	YEL	282	Driver Seat Rear Vertical Motor Up Control (W/ Telescopic)
C	DK BLU	287	Driver Seat Front Vertical Motor Down Control
D	LT BLU	283	Driver Seat Rear Vertical Motor Down Control
D	RED	2098	Steering Column Telescope Motor Forward (W/ Telescopic)
E	LT GRN	284	Driver Seat Horizontal Motor Rearward Control
F	-	-	Not Used

Seat Lower Motor Terminal Identification - Driver C1

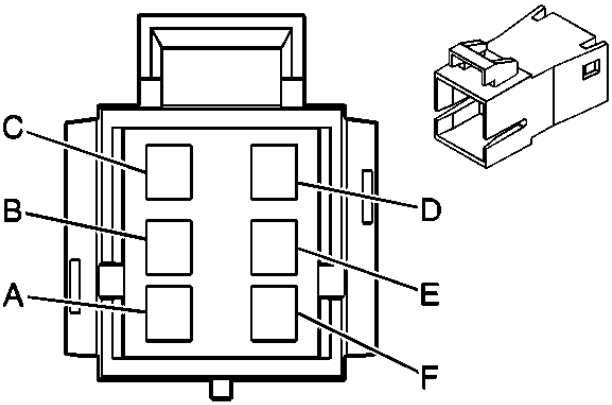

Connector Part Information		• 12064754 • 6-Way M Metri-Pack 280 Series (BLK)	
Pin	**Wire Color**	**Circuit No.**	**Function**
A	TAN	285	Driver Seat Horizontal Motor Forward Control
B	LT GRN	284	Driver Seat Horizontal Motor Rearward Control
C	DK GRN	286	Driver Seat Front Vertical Motor Up Control
D	DK BLU	287	Driver Seat Front Vertical Motor Down Control
E	YEL	282	Driver Seat Rear Vertical Motor Up Control
F	LT BLU	283	Driver Seat Rear Vertical Motor Down Control

Seat Lower Motor Terminal Identification - Driver C2 (Memory and Telescopic)

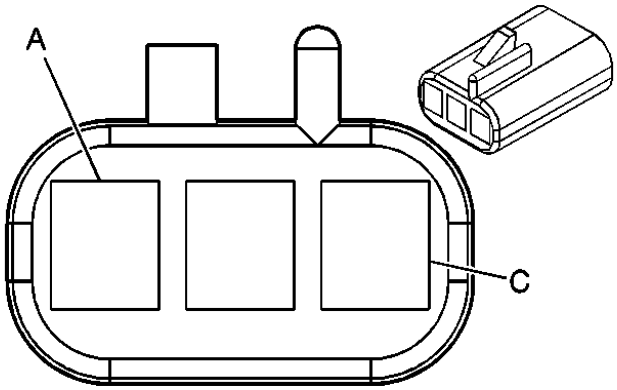

Connector Part Information		• 12047781 • 3-Way F Metri-Pack 150 (BLK)	
Pin	**Wire Color**	**Circuit No.**	**Function**
A	PPL	1985	5 Volt Reference
B	DK GRN	569	Horizontal Seat Motor Position Sensor Signal
C	BLK	782	Memory Seat/Mirror Sensor Low Reference

Seat Lower Motor Terminal Identification - Driver C3 (Memory and Telescopic)

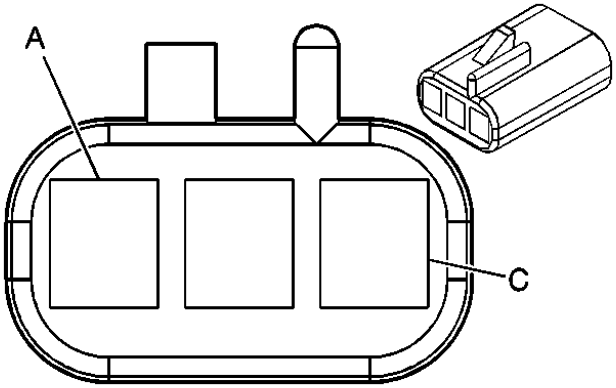

Connector Part Information		• 12047781 • 3-Way F Metri-Pack 150 (BLK)	
Pin	**Wire Color**	**Circuit No.**	**Function**
A	BLK	782	Memory Seat/Mirror Sensor Low Reference
B	BRN/WHT	557	Front Vertical Seat Motor Position Sensor Signal
C	PPL	1985	5 Volt Reference

Seat Lower Motor Terminal Identification - Driver C4 (Memory and Telescopic)

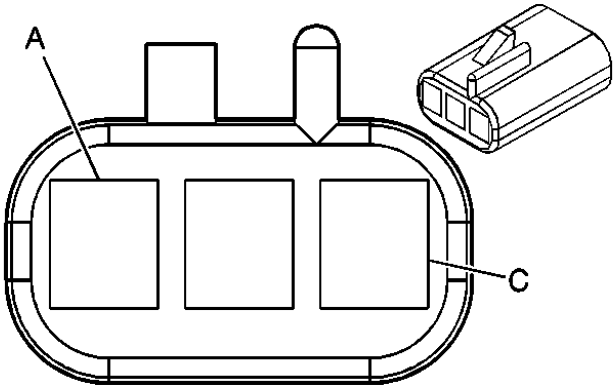

Connector Part Information		• 12047781 • 3-Way F Metri-Pack 150 (BLK)	
Pin	**Wire Color**	**Circuit No.**	**Function**
A	BLK	782	Memory Seat/Mirror Sensor Low Reference
B	TAN	568	Rear Vertical Seat Motor Position Sensor Signal
C	PPL	1985	5 Volt Reference

Seat Lower Motor Terminal Identification - Front Passenger

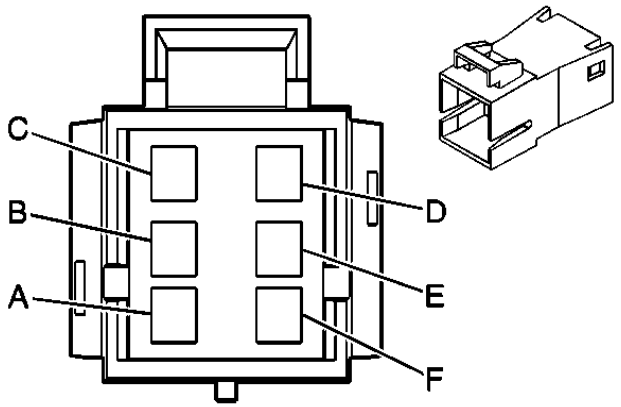

Connector Part Information		• 12064754 • 6-Way M Metri-Pack 280 Series (BLK)	
Pin	**Wire Color**	**Circuit No.**	**Function**
A	TAN	285	Driver Seat Horizontal Motor Forward Control
B	LT GRN	284	Driver Seat Horizontal Motor Rearward Control
C	DK GRN	286	Driver Seat Front Vertical Motor Up Control
D	DK BLU	287	Driver Seat Front Vertical Motor Down Control
E	YEL	282	Driver Seat Rear Vertical Motor Up Control
F	LT BLU	283	Driver Seat Rear Vertical Motor Down Control

Seat Pump Terminal Identification - Driver

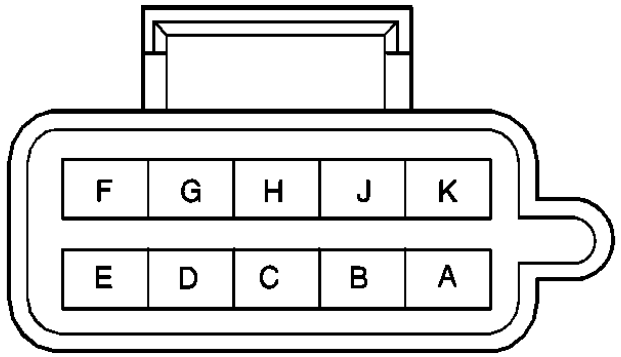

Connector Part Information		• 12064770 • 10-Way M Metri-Pack 150 Series (NAT)	

Pin	Wire Color	Circuit No.	Function
A	BLK	150	Ground
B	-	-	Not Used
C	YEL	386	Driver Seat Lumbar Down Relay Control
D	GRY	764	Driver Seat Deflate Relay Control
E	GRY/BLK	466	Driver Seat Inflate Relay Control
F	PPL	765	Driver Seat Pneumatic Lateral Solenoid Control
G	YEL	777	Driver Seat Pneumatic Upper Lumbar Solenoid Control
H	PNK	789	Driver Seat Pneumatic Lower Lumbar Solenoid Control
J	-	-	Not Used
K	ORN	1140	Battery Positive Voltage

Seat Pump Terminal Identification - Front Passenger

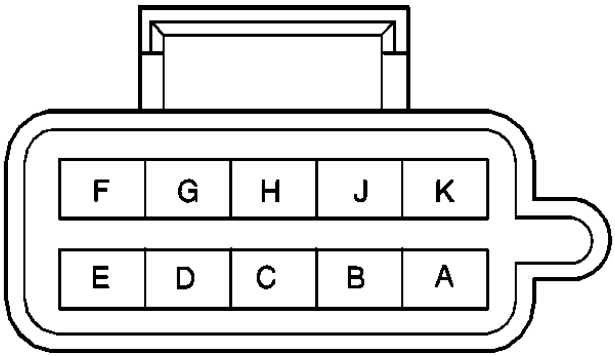

Connector Part Information		• **12064770** • **10-Way M Metri-Pack 150 Series (NAT)**	
Pin	**Wire Color**	**Circuit No.**	**Function**
A	BLK	150	Ground
B	-	-	Not Used
C	YEL	757	Passenger Seat Lumbar Down Relay Control
D	GRY	1805	Passenger Pneumatic Seat Deflate Relay Control
E	GRY/BLK	758	Passenger Seat Lumbar Rearward Relay Control
F	PNK	1265	Passenger Seat Lateral Pneumatic Solenoid Control
G	ORN	1261	Passenger Seat Upper Lumbar Pneumatic Solenoid Control
H	LT BLU	1259	Passenger Seat Lower Lumbar Pneumatic Solenoid Control
J	-	-	Not Used
K	ORN	1140	Battery Positive Voltage

Seat Relay Center Terminal Identification - Driver C1

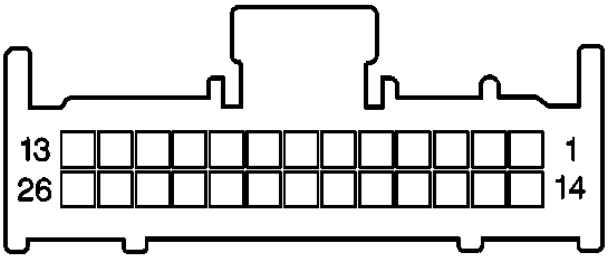

Connector Part Information		• 12160773 • 26-Way F (RED)	
Pin	**Wire Color**	**Circuit No.**	**Function**
1	YEL	1519	Power Seat Front Vertical Up Switch Signal
2	GRY	613	Entire Seat Forward Switch Signal
3	ORN	1740	Battery Positive Voltage
4-7	-	-	Not Used
8	GRY/BLK	1798	Low Reference
9-11	-	-	Not Used
12	LT BLU	1521	Power Seat Rear Vertical Down Switch Signal
13-14	-	-	Not Used
15	BRN	617	Entire Seat Rearward Switch Signal
16	DK GRN	1518	Power Seat Front Vertical Up Switch Signal
17	DK BLU	1520	Power Seat Front Vertical Down Switch Signal
18-26	-	-	Not Used

Seat Relay Center Terminal Identification - Driver C2

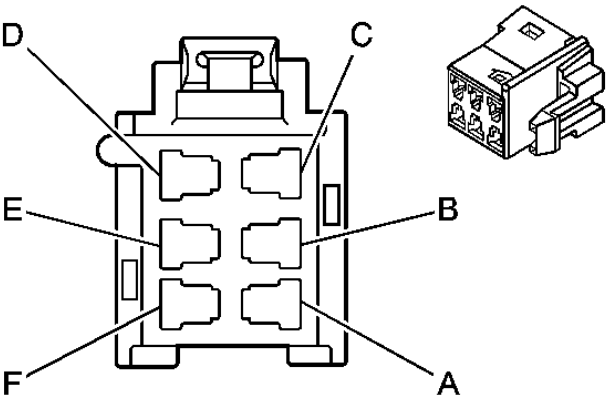

Connector Part Information		• 12089527 • 6-Way F Metri-Pack 280 Series (GRN)	
Pin	**Wire Color**	**Circuit No.**	**Function**
A-B	-	-	Not Used
C	BLK	150	Ground
D	TAN	285	Driver Seat Horizontal Motor Forward Control
E	DK GRN	286	Driver Seat Front Vertical Motor Up Control
F	YEL	282	Driver Seat Rear Vertical Motor Up Control

Seat Relay Center Terminal Identification - Driver C3

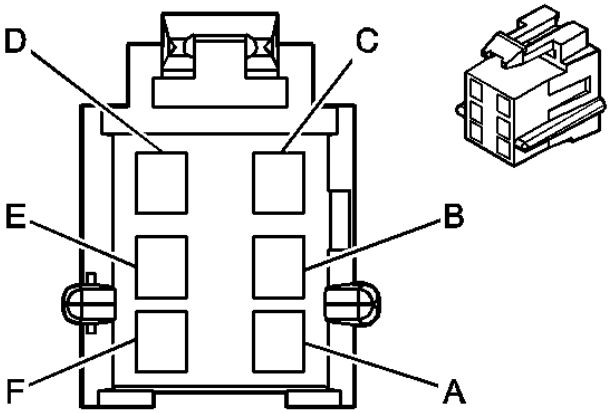

Connector Part Information		• 12064752 • 6-Way F Metri-Pack 280 Series (BLK)	
Pin	**Wire Color**	**Circuit No.**	**Function**
A	ORN	1840	Battery Positive Voltage
B	LT GRN	284	Driver Seat Horizontal Motor Rearward Control
C	DK BLU	287	Driver Seat Front Vertical Motor Down Control
D	LT BLU	283	Driver Seat Rear Vertical Motor Down Control
E-F	-	-	Not Used

Seat Relay Center Terminal Identification - Front Passenger C1

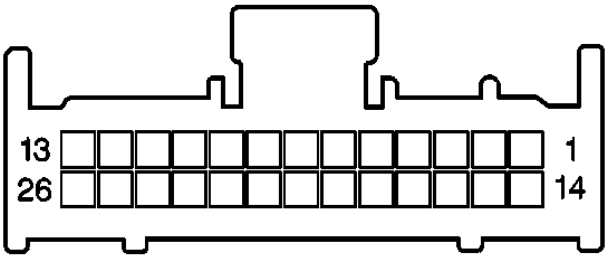

Connector Part Information		• 12160773 • 26-Way F (RED)	
Pin	**Wire Color**	**Circuit No.**	**Function**
1	YEL	1519	Power Seat Front Vertical Up Switch Signal
2	GRY	613	Entire Seat Forward Switch Signal
3	ORN	1140	Battery Positive Voltage
4-7	-	-	Not Used
8	GRY/BLK	1798	Low Reference
9-11	-	-	Not Used
12	LT BLU	1521	Power Seat Rear Vertical Down Switch Signal
13-14	-	-	Not Used
15	BRN	617	Entire Seat Rearward Switch Signal
16	DK GRN	1518	Power Seat Front Vertical Up Switch Signal
17	DK BLU	1520	Power Seat Front Vertical Down Switch Signal
18-26	-	-	Not Used

Seat Relay Center Terminal Identification - Front Passenger C2

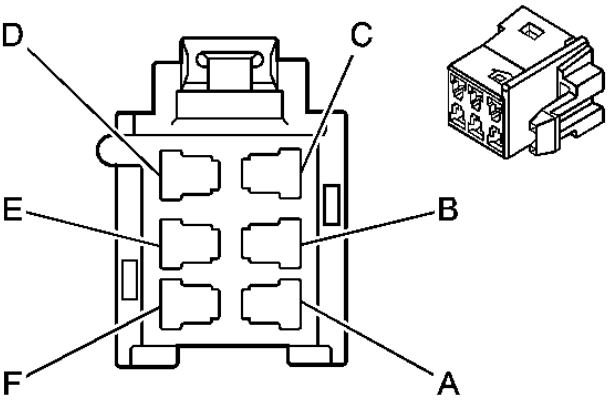

Connector Part Information		• 12089527 • 6-Way F Metri-Pack 280 Series (LT GRN)	
Pin	**Wire Color**	**Circuit No.**	**Function**
A-B	-	-	Not Used
C	BLK	150	Ground
D	TAN	285	Driver Seat Horizontal Motor Forward Control
E	DK GRN	286	Driver Seat Front Vertical Motor Up Control
F	YEL	282	Driver Seat Rear Vertical Motor Up Control

Seat Relay Center Terminal Identification - Front Passenger C3

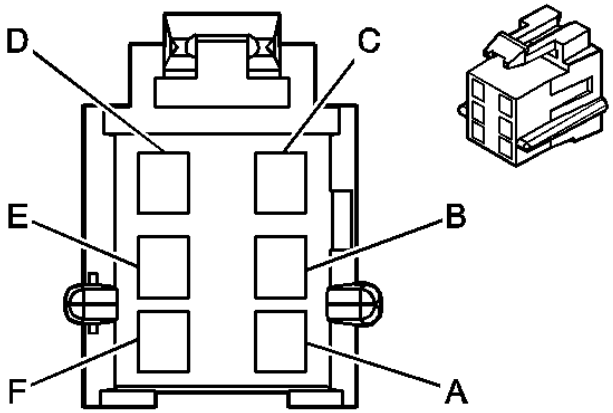

Connector Part Information		• 12064752 • 6-Way F Metri-Pack 280 Series (BLK)	
Pin	**Wire Color**	**Circuit No.**	**Function**
A	ORN	1440	Battery Positive Voltage
B	LT GRN	284	Driver Seat Horizontal Motor Rearward Control
C	DK BLU	287	Driver Seat Front Vertical Motor Down Control
D	LT BLU	283	Driver Seat Rear Vertical Motor Down Control
E-F	-	-	Not Used

DIAGNOSTIC INFORMATION AND PROCEDURES

DIAGNOSTIC STARTING POINT - SEATS

Begin all memory seat system diagnosis with the **Diagnostic System Check - Power Seat Systems** . The Diagnostic System Check will provide the following information:

- The identification of the control module(s) which command the system

- The ability of the control module(s) to communicate through the serial data circuit
- The identification of any stored diagnostic trouble codes (DTCs) and their status

The use of the Diagnostic System Check will identify the correct procedure for diagnosing the system and where the procedure is located.

Begin power seat system and power lumbar support system diagnosis by reviewing the system Description and Operation. Reviewing the Description and Operation information will help you determine the correct symptom diagnostic procedure when a malfunction exists. Reviewing the Description and Operation information will also help you determine if the condition described by the customer is normal operation. Refer to **Symptoms - Seats** in order to identify the correct procedure for diagnosing the system and where the procedure is located.

DIAGNOSTIC SYSTEM CHECK - POWER SEAT SYSTEMS

Test Description

The number(s) below refer to the step number(s) on the diagnostic table.

2: Lack of communication may be due to a partial malfunction of the class 2 serial data circuit or due to a total malfunction of the class 2 serial data circuit. The specified procedure will determine the particular condition.

3: Determine if any DTCs are present which may be the cause of the condition.

4: The presence of DTCs which begin with "U" indicate some other module is not communicating. The specified procedure will compile all the available information before tests are performed.

5: Determine if a BCM internal memory malfunction exists.

6: Determine if a charging system malfunction exists.

Diagnostic System Check - Power Seat Systems

Step	Action	Yes	No
1	Install a scan tool. Does the scan tool power up?	Go to **Step 2**	Go to **Scan Tool Does Not Power Up** in Data Link Communications
2	1. Turn ON the ignition, with the engine OFF. 2. Attempt to establish communication with the following systems: • The seat control module • The LH door control module • The body control module		

	• The powertrain control module Does the scan tool communicate with these systems?	Go to **Step 3**	Go to **Scan Tool Does Not Communicate with Class 2 Device** in Data Link Communications
3	Select the display DTCs function for the following control modules: • The seat control module • The LH door control module • The body control module • The powertrain control module Does the scan tool display any DTCs?	Go to **Step 4**	Go to **Symptoms - Seats**
4	Does the scan tool display any DTCs which begin with a "U"?	Go to **Scan Tool Does Not Communicate with Class 2 Device** in Data Link Communications	Go to **Step 5**
5	Does the scan tool display DTC B0605?	Go to **Diagnostic Trouble Code (DTC) List** in Body Control System	Go to **Step 6**
6	Does the scan tool display DTC P0562 or P0563?	Go to **Diagnostic Trouble Code (DTC) List** in Engine Electrical	Go to **Diagnostic Trouble Code (DTC) List**

SCAN TOOL OUTPUT CONTROLS

Scan Tool Output Controls

Scan Tool Output Control	Additional Menu Selection(s)	Description
Front Down	Output Cotrols	The SCM moves the front of the seat down.
Front Up	Output Cotrols	The SCM moves the front of the seat up.
Rear Down	Output Cotrols	The SCM moves the rear of the seat down.
Rear Up	Output Cotrols	The SCM moves the rear of the seat up.
Seat Forward	Output Cotrols	The SCM moves the seat forward.
Seat Reverse	Output Cotrols	The SCM moves the seat back.

SCAN TOOL DATA LIST

BCM Data List

Scan Tool Parameter	Data List	Units Displayed	Typical Data Value
Ignition On and Engine Off / Doors, Hatch or Trunk, and Hood Closed / No Switches On / Vehicle in Park or Neutral			
Current Power Mode	Input Data 1	Power Mode	Run
Driver Door Ajar Switch	Input Data 2	Open/Closed	Closed
Ignition 1	Input Data 1	On/Off	On
Ignition 2	Input Data 1	On/Off	On
Ignition 3	Input Data 1	On/Off	On
Key In Ignition	Input Data 1	Active/Inactive	Active
Key Out of Ignition	Input Data 1	Active/Inactive	Inactive

LDCM Data List

Scan Tool Parameter	Data List	Units Displayed	Typical Data Value
Ignition On and Engine Off / Doors, Hatch or Trunk, and Hood Closed / No Switches On / Vehicle in Park or Neutral			
Door Ajar	Inputs	Closed/Ajar	Closed
Memory 1 Select Switch	Inputs	Active/Inactive	Inactive
Memory 2 Select Switch	Inputs	Active/Inactive	Inactive

SCM Data List

Scan Tool Parameter	Data List	Units Displayed	Typical Data Value
Ignition On and Engine Off / Doors, Hatch or Trunk, and Hood Closed / No Switches On / Vehicle in Park or Neutral			
Battery 1	Data 1	0-26 Volts	Varies
Battery 2	Data 1	0-26 Volts	Varies
Calibration ID	Module Info	Calibration Number	Varies
Forward Position Motor Stop	Data 2	Volts	0-5 Volts
Front Down Position Motor Stop	Data 2	Volts	0-5 Volts
Front Up Position Motor Stop	Data 2	Volts	0-5 Volts
Front Vertical Position	Data 2	Counts	0-255
Horizontal Position	Data 2	Counts	0-255
Memory 1 Fore/Aft Motor Position	Data 2	Volts	0-5 Volts
Memory 1 Front Vertical Motor Position	Data 2	Volts	0-5 Volts
Memory 1 Rear Vertical Motor Position	Data 2	Volts	0-5 Volts
Memory 2 Fore/Aft Motor Position	Data 2	Volts	0-5 Volts
Memory 2 Front Vertical Motor Position	Data 2	Volts	0-5 Volts
Memory 2 Rear Vertical Motor Position	Data 2	Volts	0-5 Volts
Memory 3 Fore/Aft Motor Position	Data 2	Volts	0-5 Volts
Memory 3 Front Vertical Motor Position	Data 2	Volts	0-5 Volts
Memory 3 Rear Vertical Motor Position	Data 2	Volts	0-5 Volts
Position Sensor Reference	Data 1	0-26 Volts	Varies

Rear Down Position Motor Stop	Data 2	Volts	0-5 Volts
Rear Up Position Motor Stop	Data 2	Volts	0-5 Volts
Rear Vertical Position	Data 2	Counts	0-255
Reverse Position Motor Stop	Data 2	Volts	0-5 Volts
ROM ID	Module Info	ID Number	Varies
Seat Forward Switch	Inputs	Active/Inactive	Inactive
Seat Front Down Switch	Inputs	Active/Inactive	Inactive
Seat Front Up Switch	Inputs	Active/Inactive	Inactive
Seat Motor Current	Data 1	0-52.7 Amps	Varies
Seat Rear Down Switch	Inputs	Active/Inactive	Inactive
Seat Rear Up Switch	Inputs	Active/Inactive	Inactive
Seat Reverse Switch	Inputs	Active/Inactive	Inactive

SCAN TOOL DATA DEFINITIONS

BCM Scan Tool Data Definitions

The BCM Scan Tool Data Definitions contains a brief description of all memory seat related BCM parameters available on the scan tool.

Current Power Mode

The scan tool displays the current power mode. The BCM determines ignition switch position from it's ignition inputs. This ignition switch information is sent on the serial data line to systems that rely on this information to preform certain functions (RAP, wake-up, etc.).

Driver Door Ajar Switch

The scan tool displays Open or Closed. When the driver door is open, the scan tool will display Open. When the driver door is closed, the scan tool displays Closed.

Ignition 1

The scan tool displays ON or OFF. When the BCM detects ignition 1 is present, the scan tool will display Yes. When the BCM does not detect ignition 1, the scan tool will display OFF. This ignition switch information is sent on the serial data line to systems that rely on this information to preform certain functions (RAP, wake-up, etc.).

Ignition 2

The scan tool displays ON or OFF. When the BCM detects ignition 2 is present, the scan tool will display Yes. When the BCM does not detect ignition 2, the scan tool will display OFF. This ignition switch information is sent on the serial data line to systems that rely on this information to preform certain functions (RAP, wake-up, etc.).

Ignition 3

The scan tool displays ON or OFF. When the BCM detects ignition 3 is present, the scan tool will display Yes. When the BCM does not detect ignition 3, the scan tool will display OFF. This ignition switch information is sent on the serial data line to systems that rely on this information to preform certain functions (RAP, wake-up, etc.).

Key In Ignition

The scan tool displays Active or Inactive. When the BCM detects the key is IN the ignition switch, the scan tool will display Active. When the key is removed from the ignition switch, the scan tool will display Inactive.

Key Out Ignition

The scan tool displays Active or Inactive. When the BCM detects the key is OUT of the ignition switch, the scan tool will display Active. When the key is IN the ignition switch, the scan tool will display Inactive.

LDCM Scan Tool Data Definitions

The LDCM Scan Tool Data Definitions contains a brief description of all memory seat related LDCM parameters available on the scan tool.

Door Ajar

The scan tool displays Closed or Ajar. When the driver door is open the scan tool will display Ajar. When the driver door is closed the scan tool will display closed.

Memory 1 Select Switch

The scan tool displays Active or Inactive. When the memory 1 switch is pressed the scan tool will display Active. When the switch is released the scan tool will display Inactive.

Memory 2 Select Switch

The scan tool displays Active or Inactive. When the memory 2 switch is pressed the scan tool will display Active. When the switch is released the scan tool will display Inactive.

SCM Scan Tool Data Definitions

The SCM Scan Tool Data Definitions contains a brief description of all memory seat related SCM parameters available on the scan tool.

Battery 1

The scan tool displays 0-26 volts. The value displayed is the voltage available at the SCM battery 1 input.

Battery 2

The scan tool displays 0-26 volts. The value displayed is the voltage available at the SCM battery 2 input.

Calibration ID

The scan tool displays the calibration number for service identification.

Forward Position Motor Stop

The scan tool displays 0-5 volts. The value displayed is the fore/aft position sensor signal voltage where the seat forward movement will stop. This function may be used to determine if the adjustment range of the fore/aft motor has been limited due to an obstruction or binding condition.

Front Down Position Motor Stop

The scan tool displays 0-5 volts. The value displayed is the front vertical position sensor signal voltage where the seat front down movement will stop. This function may be used to determine if the adjustment range of the front vertical motor has been limited due to an obstruction or binding condition.

Front Up Position Motor Stop

The scan tool displays 0-5 volts. The value displayed is the front vertical position sensor signal voltage where the seat front up movement will stop. This function may be used to determine if the adjustment range of the front vertical motor has been limited due to an obstruction or binding condition.

Front Vertical Position

The scan tool displays 0-255 counts. The counts displayed represent the seat front vertical position sensor signal voltage. The counts will vary as the seat front is moved up or down.

Horizontal Position

The scan tool displays 0-255 counts. The counts displayed represent the seat fore/aft position sensor signal voltage. The counts will vary as the seat is moved forward or backward.

Memory 1 Fore/Aft Motor Position

The scan tool displays 0-5 volts. The value displayed is the fore/aft position sensor signal voltage stored by the SCM and used to recall the memory 1 position.

Memory 1 Front Vertical Motor Position

The scan tool displays 0-5 volts. The value displayed is the front vertical position sensor signal voltage stored by the SCM and used to recall the memory 1 position.

Memory 1 Rear Vertical Motor Position

The scan tool displays 0-5 volts. The value displayed is the rear vertical position sensor signal voltage stored by the SCM and used to recall the memory 1 position.

Memory 2 Fore/Aft Motor Position

The scan tool displays 0-5 volts. The value displayed is the fore/aft position sensor signal voltage stored by the SCM and used to recall the memory 2 position.

Memory 2 Front Vertical Motor Position

The scan tool displays 0-5 volts. The value displayed is the front vertical position sensor signal voltage stored by the SCM and used to recall the memory 2 position.

Memory 2 Rear Vertical Motor Position

The scan tool displays 0-5 volts. The value displayed is the rear vertical position sensor signal voltage stored by the SCM and used to recall the memory 2 position.

Memory 3 Fore/Aft Motor Position

The scan tool displays 0-5 volts. The value displayed is the fore/aft position sensor signal voltage stored by the SCM and used to recall the memory 3 position.

Memory 3 Front Vertical Motor Position

The scan tool displays 0-5 volts. The value displayed is the front vertical position sensor signal voltage stored by the SCM and used to recall the memory 3 position.

Memory 3 Rear Vertical Motor Position

The scan tool displays 0-5 volts. The value displayed is the rear vertical position sensor signal voltage stored by the SCM and used to recall the memory 3 position.

Position Sensor Reference

The scan tool displays 0-5 volts. The value displayed is the supply voltage to the seat and steering column position sensors.

Rear Down Position Motor Stop

The scan tool displays 0-5 volts. The value displayed is the rear vertical position sensor signal voltage where the seat rear down movement will stop. This function may be used to determine if the adjustment range of the rear vertical motor has been limited due to an obstruction or binding condition.

Rear Up Position Motor Stop

The scan tool displays 0-5 volts. The value displayed is the rear vertical position sensor signal voltage where the seat rear up movement will stop. This function may be used to determine if the adjustment range of the rear vertical motor has been limited due to an obstruction or binding condition.

Rear Vertical Position

The scan tool displays 0-255 counts. The counts displayed represent the rear vertical position sensor signal voltage. The counts will vary as the seat rear is moved up or down.

Reverse Position Motor Stop

The scan tool displays 0-5 volts. The value displayed is the fore/aft position sensor signal voltage where the seat rearward movement will stop. This function may be used to determine if the adjustment range of the fore/aft motor has been limited due to an obstruction or binding condition.

ROM ID

The scan tool displays the ROM ID number for service identification.

Seat Forward Switch

The scan tool displays Active or Inactive. When the seat fore/aft switch is pressed in the Forward direction the scan tool displays Active. When the switch is released the scan tool displays Inactive.

Seat Front Down Switch

The scan tool displays Active or Inactive. When the seat front vertical switch is pressed in the Down direction the scan tool displays Active. When the switch is released the scan tool displays Inactive.

Seat Front Up Switch

The scan tool displays Active or Inactive. When the seat front vertical switch is pressed in the Up direction the scan tool displays Active. When the switch is released the scan tool displays Inactive.

Seat Motor Current

The scan tool displays 0-52.7 Amps. The value displayed is the amount of current drawn by the seat adjuster motor assembly when operated.

Seat Rear Down Switch

The scan tool displays Active or Inactive. When the seat rear vertical switch is pressed in the Down direction the scan tool displays Active. When the switch is released the scan tool displays Inactive.

Seat Rear Up Switch

The scan tool displays Active or Inactive. When the seat rear vertical switch is pressed in the Up direction the scan tool displays Active. When the switch is released the scan tool displays Inactive.

Seat Reverse Switch

The scan tool displays Active or Inactive. When the seat fore/aft switch is pressed in the Rearward direction the scan tool displays Active. When the switch is released the scan tool displays Inactive.

DIAGNOSTIC TROUBLE CODE (DTC) LIST

Diagnostic Trouble Code (DTC) List

DTC	Diagnostic Procedure	Module(s)
B0846	**DTC B0846**	SCM
B0851	**DTC B0851**	SCM
B0856	**DTC B0856**	SCM
B2172	**DTC B2172, B2177, B2182, B2187, B2192, or B2197**	SCM
B2177	**DTC B2172, B2177, B2182, B2187, B2192, or B2197**	SCM
B2182	**DTC B2172, B2177, B2182, B2187, B2192, or B2197**	SCM
B2187	**DTC B2172, B2177, B2182, B2187, B2192, or B2197**	SCM
B2192	**DTC B2172, B2177, B2182, B2187, B2192, or B2197**	SCM
B2197	**DTC B2172, B2177, B2182, B2187, B2192, or B2197**	SCM
B2600	**DTC B2600**	SCM
B2605	**DTC B2605-B2607**	SCM
B2606	**DTC B2605-B2607**	SCM
B2607	**DTC B2605-B2607**	SCM
B2242	**DTC B2242-B2244** in Doors	LDCM
B2244	**DTC B2242-B2244** in Doors	LDCM

DTC B0846

Circuit Description

The telescoping steering column actuator and seat adjuster motors are equipped with position sensors. The position sensors are supplied with a common 5-volt reference circuit and low reference circuit from the memory seat module. The memory seat module receives a signal voltage from each position sensor whenever a memory seat module output function is active.

Conditions for Running the DTC

The memory seat module detects a switch signal active or a memory function request.

Conditions for Setting the DTC

- The memory seat module detects the position sensor 5-volt reference circuit under 4.0 volts or over 5.2 volts.
- The condition must be present for 2 seconds.

Action Taken When the DTC Sets

- A history DTC is stored in the memory seat module.
- Memory seat module DTCs can only be set as history codes even if the malfunction is current.
- Memory functions will be disabled as long as the fault is current.

Conditions for Clearing the DTC

Memory seat module DTCs may be cleared only by using a scan tool or the IPC clearing DTCs feature.

Diagnostic Aids

- Monitor the position sensor reference parameter in the SCM data list, if the fault is current. Disconnecting position sensor connectors or the inline connector to the steering column may help to determine where the fault is occurring.
- If the fault is not current and all the adjuster motors operate through the full range of adjustment, the problem may be intermittent. Refer to **Testing for Intermittent Conditions and Poor Connections** in Wiring Systems.

Test Description

The number below refers to the step number on the diagnostic table.

3: This step determines if the fault is in the position sensor 5-volt reference circuit.

DTC B0846

Step	Action	Values	Yes	No
Schematic Reference:Memory Seats Schematics **Connector End View Reference:Power Seat Systems Connector End Views**				
1	Did you perform the Power Seat Diagnostic System Check?	-	Go to **Step 2**	Go to **Diagnostic System Check - Power Seat Systems**
2	1. Install a scan tool. 2. Observe the Position Sensor Reference parameter in the SCM Data 1 list. 3. Operate all the seat and steering column adjuster motors through their full range of adjustment. Does the position sensor reference voltage remain	4.0-5.2 V	Go to Diagnostic	

	within the specified values?		Aids	Go to **Step 3**
3	1. Disconnect all of the position sensors. 2. With the scan tool, observe the position sensor reference parameter while activating an input to the SCM. Is the position sensor reference voltage within the specified values?	4.0-5.2 V	Go to **Step 5**	Go to **Step 4**
4	Test the position sensor 5-volt reference circuit for a short to ground or short to voltage. Refer to **Circuit Testing** and to **Wiring Repairs** in Wiring Systems. Did you find and correct the condition?	-	Go to **Step 8**	Go to **Step 7**
5	Test the position sensor low reference circuit for a short to voltage. Refer to **Circuit Testing** and to **Wiring Repairs** in Wiring Systems. Did you find and correct the condition?	-	Go to **Step 8**	Go to **Step 6**
6	Test the position sensor signal circuits for a short to voltage. Refer to **Circuit Testing** and to **Wiring Repairs** in Wiring Systems. Did You find and correct the condition?	-	Go to **Step 8**	Go to **Step 7**
7	Replace the memory seat module. Refer to **Memory Seat Control Module Replacement** . Is the repair complete?	-	Go to **Step 8**	-
8	1. Use the scan tool in order to clear the DTCs. 2. Operate the system within the Conditions for Running the DTC as specified in the supporting text. Does the DTC reset?	-	Go to **Step 2**	System OK

DTC B0851

Circuit Description

The memory seat module has two battery voltage supply circuits. The battery 1 voltage supply circuit is used to provide power for the memory seat module logic and internal driver operation. The battery 2 voltage supply circuit is used to provide a high current supply for the memory seat module output devices.

Conditions for Running the DTC

The battery 1 circuit voltage to the memory seat module is within 6.5-26.5 volts.

Conditions for Setting the DTC

- The memory seat module detects battery 1 voltage under 8.5 volts or over 16.3 volts.

- The condition must be present for 2 seconds.

Action Taken When the DTC Sets

- A history DTC is stored in the memory seat module.
- Memory seat module DTCs can only be set as a history code, even if the fault is current.
- No driver warning message will be displayed for these DTCs.

Conditions for Clearing the DTC

Memory seat module DTCs may be cleared only by using a scan tool or the IPC clearing DTCs feature.

Diagnostic Aids

- Inspect the battery and charging system for proper operation.
- If the fault is not current the problem may be intermittent. Refer to **Testing for Intermittent Conditions and Poor Connections** in Wiring Systems.

Test Description

The number below refers to the step number on the diagnostic table.

3: This step determines if the battery voltage and ground circuits are capable of proper operation during high current demand.

DTC B0851

Step	Action	Values	Yes	No
Schematic Reference:Memory Seats Schematics **Connector End View Reference:Power Seat Systems Connector End Views**				
1	Did you perform the Power Seat Diagnostic System Check?	-	Go to **Step 2**	Go to **Diagnostic System Check - Power Seat Systems**
2	1. Install a scan tool. 2. Observe the Battery 1 parameter in the SCM Data 1 list. Is the voltage within the specified values?	8.5-16.3 V	Go to **Step 3**	Go to **Step 4**
3	Operate the seat adjuster motors and telescoping steering column in both directions. Does the battery 1 voltage remain within the specified values?	8.5-16.3 V	Go to Diagnostic Aids	Go to **Step 4**
4	Test the battery 1 supply circuit for high resistance. Refer to **Circuit Testing** and to **Wiring Repairs** in Wiring Systems. Did you find and correct the condition?	-	Go to **Step 7**	Go to **Step 5**

5	Test the memory seat module ground circuit for high resistance. Refer to **Circuit Testing** and to **Wiring Repairs** in Wiring Systems. Did you find and correct the condition?	-	Go to **Step 7**	Go to **Step 6**
6	Replace the memory seat module. Refer to **Memory Seat Control Module Replacement** . Is the repair complete?	-	Go to **Step 7**	-
7	1. Use the scan tool in order to clear the DTCs. 2. Operate the system within the Conditions for Running the DTC as specified in the supporting text. Does the DTC reset?	-	Go to **Step 2**	System OK

DTC B0856

Circuit Description

The memory seat module has two battery voltage supply circuits. The battery 1 voltage supply circuit is used to provide power for the memory seat module logic and internal driver operation. The battery 2 voltage supply circuit is used to provide a high current supply for the memory seat module output devices.

Conditions for Running the DTC

The battery 1 circuit voltage to the memory seat module is within 6.5-26.5 volts.

Conditions for Setting the DTC

- The memory seat module detects battery 2 voltage under 8.5 volts or over 16.3 volts.
- The condition must be present for 2 seconds.

Action Taken When the DTC Sets

- A history DTC is stored in the memory seat module.
- Memory seat module DTCs can only be set as a history code even if the fault is current.
- No driver warning message will be displayed for these DTCs.

Conditions for Clearing the DTC

Memory seat module DTCs may be cleared only by using a scan tool or the IPC clearing DTCs feature.

Diagnostic Aids

- A DTC B0846 can be the result of a short to ground in an adjuster motor or control circuit, first diagnose a DTC B2002, B2007, or B2012, if present.

- Inspect the battery and charging system for proper operation.
- If the fault is not current, the problem may be intermittent. Refer to **Testing for Intermittent Conditions and Poor Connections** in Wiring Systems.

Test Description

The number below refers to the step number on the diagnostic table.

3: This step determines if the battery voltage and ground circuits are capable of proper operation during high current demand.

DTC B0856

Step	Action	Values	Yes	No
Schematic Reference:Memory Seats Schematics **Connector End View Reference:Power Seat Systems Connector End Views**				
1	Did you perform the Power Seat Diagnostic System Check?	-	Go to **Step 2**	Go to **Diagnostic System Check - Power Seat Systems**
2	1. Install a scan tool. 2. Observe the Battery 2 parameter in the SCM Data 1 list. Is the voltage within the specified values?	8.5-16.3 V	Go to **Step 3**	Go to **Step 4**
3	Operate the seat adjuster motors and telescoping steering column in both directions. Does the battery 2 voltage remain within the specified values?	8.5-16.3 V	Go to Diagnostic Aids	Go to **Step 4**
4	Test the battery 2 supply circuit for high resistance. Refer to **Circuit Testing** and to **Wiring Repairs** in Wiring Systems. Did you find and correct the condition?	-	Go to **Step 7**	Go to **Step 5**
5	Test the memory seat module ground circuit for high resistance. Refer to **Circuit Testing** and to **Wiring Repairs** in Wiring Systems. Did you find and correct the condition?	-	Go to **Step 7**	Go to **Step 6**
6	Replace the memory seat module. Refer to **Memory Seat Control Module Replacement** . Is the repair complete?	-	Go to **Step 7**	-
7	1. Use the scan tool in order to clear the DTCs. 2. Operate the system within the Conditions for Running the DTC as specified in the supporting text. Does the DTC reset?	-	Go to **Step 2**	System OK

DTC B2172, B2177, B2182, B2187, B2192, OR B2197

Circuit Description

The seat adjuster switch signal circuits are supplied 12 volts through resistors within the memory seat module. When a seat adjuster switch is pressed the signal circuit is grounded. Closing the signal circuit to ground pulls the signal circuit voltage low indicating to the memory seat module the switch status is active.

Conditions for Setting the DTC

A seat adjuster switch input to the memory seat module is active for more than 20 seconds.

Action Taken When the DTC Sets

- A history DTC will be stored in the memory seat module.
- Memory seat module DTCs can only be set as history codes even if the fault is current.
- No driver warning message will be displayed for these DTCs.
- The seat adjuster function for which the DTC has set will be disabled for as long as the condition is current.

Conditions for Clearing the DTC

Memory seat module DTCs can only be cleared by using a scan tool or the IPC clearing DTCs feature.

Diagnostic Aids

- If the switch status on the scan tool goes from active when connected to inactive when disconnected, the switch contacts may be stuck.
- If the fault is not current the problem may be intermittent. Refer to **Testing for Intermittent Conditions and Poor Connections** in Wiring Systems.

DTC B2172, B2177, B2182, B2187, B2192, or B2197

Step	Action	Yes	No
Schematic Reference: Memory Seats Schematics			
1	Did you perform the Power Seats Systems Diagnostic System Check?	Go to **Step 2**	Go to **Diagnostic System Check - Power Seat Systems**
2	1. Install a scan tool. 2. Observe the seat adjuster switch parameter for which the DTC has set in the SCM data list. Does the scan tool display inactive?	Go to Diagnostic Aids	Go to **Step 3**
	1. Disconnect the seat adjuster switch connector. 2. Observe the seat adjuster switch parameter in the		

3	SCM data list. Does the scan tool display inactive?	Go to **Step 5**	Go to **Step 4**
4	Test and repair the seat switch signal circuit for which the DTC has set for a short to ground. Refer to **Circuit Testing** and **Wiring Repairs** in Wiring Systems. Did you find and correct the condition?	Go to **Step 7**	Go to **Step 6**
5	Replace the seat adjuster switch. Refer to **Seat Switch Replacement - Power** . Is the repair complete?	Go to **Step 7**	-
6	Replace the memory seat module. Refer to **Memory Seat Control Module Replacement** . Is the repair complete?	Go to **Step 7**	-
7	1. Use the scan tool in order to clear the DTCs. 2. Operate the system in order to verify the repair. Does the DTC reset?	Go to **Step 2**	System OK

DTC B2600

Circuit Description

The seat adjuster motors are controlled by the memory seat module through the adjuster motor control circuits. In an inactive state the adjuster motor control circuits are grounded through switch contacts within the memory seat module. Adjuster motor operation occurs when the memory seat module switches one of the adjuster motor control circuits to battery voltage. The direction of the adjuster motor rotation is determined by which of the control circuits is switched to battery positive and which remains grounded.

Conditions for Setting the DTC

- The memory seat module detects voltage on an adjuster motor control circuit while no output function is active.
- The condition must be present for 2 seconds.

Action Taken When the DTC Sets

- A history DTC will be stored in the memory seat module.
- Memory seat module DTCs can only be set as history codes even if the fault is current.
- No driver warning message will be displayed for this DTC.
- The seat adjuster motor for which the DTC has set will be disabled for as long as the fault is current.

Conditions for Clearing the DTC

Memory seat module DTCs can only be cleared by using a scan tool or the IPC clearing DTCs feature.

Diagnostic Aids

If the fault is not current and the telescoping steering column motor and all the seat adjuster motors operate properly the fault may be intermittent. Refer to **Testing for Intermittent Conditions and Poor Connections** in Wiring Systems.

Test Description

The number(s) below refer to the step number(s) on the diagnostic table.

3: This step determines if a control circuit is shorted to voltage or the fault is in the memory seat module.

DTC B2600

Step	Action	Yes	No
Schematic Reference: Memory Seats Schematics			
1	Did you perform the Power Seat Systems Diagnostic System Check?	Go to **Step 2**	Go to **Diagnostic System Check - Power Seat Systems**
2	Attempt to operate the telescoping steering column and all of the seat adjuster motors through the full range of adjustment. Do all of the memory seat module functions operate properly?	Go to Diagnostic Aids	Go to **Step 3**
3	1. Disconnect the memory seat module connectors containing the inoperative adjuster motor control circuits. 2. Test and repair the inoperative adjuster motor control circuits for a short to voltage. Refer to **Circuit Testing** and **Wiring Repairs** in Wiring Systems. Did you find and correct the condition?	Go to **Step 5**	Go to **Step 4**
4	Replace the memory seat module. Refer to **Memory Seat Control Module Replacement** . Is the repair complete?	Go to **Step 5**	-
5	1. Use the scan tool in order to clear the DTCs. 2. Operate the system in order to verify the repair. Does the DTC reset?	Go to **Step 2**	System OK

DTC B2605-B2607

Circuit Description

The seat adjuster motors are equipped with position sensors. The position sensors are supplied with a common 5

volt reference circuit and low reference circuit from the memory seat module. The memory seat module receives a signal voltage from each position sensor whenever a memory seat module output function is active.

Conditions for Running the DTC

The memory seat module detects a switch signal active or a memory function request.

Conditions for Setting the DTC

- The memory seat module detects the position sensor signal circuit under 0.1 volt or over 4.78 volts.
- The condition must be present for 2 seconds.

Action Taken When the DTC Sets

- A history DTC is stored in the memory seat module.
- Memory seat module DTCs can only be set as history codes even if the malfunction is current.
- The memory functions of the adjuster motor for which the DTC has set will be disabled for as long as the fault is current.

Conditions for Clearing the DTC

Memory seat module DTCs may be cleared only by using a scan tool or the IPC clearing DTCs feature.

Diagnostic Aids

Operate the adjuster motor through the full range of adjustment while monitoring the position sensor parameter on the scan tool. If the problem is intermittent refer to **Testing for Intermittent Conditions and Poor Connections** in Wiring Systems.

Test Description

The number(s) below refer to the step number(s) on the diagnostic table.

3: Tests for the proper operation of the signal circuit in the high voltage range.

4: Tests for the proper operation of the signal circuit in the low voltage range. If the fuse in the jumper opens when you perform this test, the signal circuit is shorted to voltage.

5: Tests for a short to ground in the 5 volt reference circuit.

DTC B2605-B2607

Step -	Action	Value (s)	Yes	No
Schematic Reference: Memory Seats Schematics				
1	Did you perform the Power Seats Systems Diagnostic System Check?	-		Go to **Diagnostic System Check - Power Seat**

			Go to **Step 2**	**Systems**
2	1. Install a scan tool. 2. Observe the position sensor parameter for which the DTC has set in the SCM data list. Does the scan tool indicate that the position sensor parameter is within the specified range?	0.1-4.78 V	Go to Diagnostic Aids	Go to **Step 3**
3	1. Disconnect the position sensor for which the DTC has set. 2. With a scan tool, observe the position sensor parameter. Does the scan tool indicate that the position sensor parameter is greater than the specified value?	4.5 V	Go to **Step 4**	Go to **Step 8**
4	1. Connect a 3 amp fused jumper wire between the signal circuit and the low reference circuit of the position sensor. 2. With a scan tool, observe the position sensor parameter. Does the scan tool indicate that the position sensor parameter is less than the specified value?	0.5 V	Go to **Step 5**	Go to **Step 9**
5	1. Disconnect the fused jumper wire. 2. Connect a 3 amp fused jumper wire between the 5 volt reference circuit and the signal circuit of the position sensor. 3. With a scan tool, observe the position sensor parameter. Does the scan tool indicate that the position sensor parameter is greater than the specified value?	4.5 V	Go to **Step 7**	Go to **Step 6**
6	Test the 5 volt reference circuit for a short to ground. Refer to **Circuit Testing** and **Wiring Repairs** in Wiring Systems. Did you find and correct the condition?	-	Go to **Step 15**	Go to **Step 12**
7	Test the 5 volt reference circuit for a short to voltage, a high resistance, or an open. Refer to **Circuit Testing** and **Wiring Repairs** in Wiring Systems. Did you find and correct the condition?	-	Go to **Step 15**	Go to **Step 11**
8	Test the signal circuit for a short to ground. Refer to **Circuit Testing** and **Wiring Repairs** in Wiring Systems. Did you find and correct the condition?	-	Go to **Step 15**	Go to **Step 12**

9	Test the signal circuit of the for a short to voltage, a high resistance, or an open. Refer to **Circuit Testing** and **Wiring Repairs** in Wiring Systems. Did you find and correct the condition?	-	Go to **Step 15**	Go to **Step 10**
10	Test the low reference circuit for a high resistance or an open. Refer to **Circuit Testing** and **Wiring Repairs** in Wiring Systems. Did you find and correct the condition?	-	Go to **Step 15**	Go to **Step 12**
11	Inspect for poor connections at the harness connector of the position sensor. Refer to **Testing for Intermittent Conditions and Poor Connections** and **Connector Repairs** in Wiring Systems. Did you find and correct the condition?	-	Go to **Step 15**	Go to **Step 13**
12	Inspect for poor connections at the harness connector of the memory seat module. Refer to **Testing for Intermittent Conditions and Poor Connections** and **Connector Repairs** in Wiring Systems. Did you find and correct the condition?	-	Go to **Step 15**	Go to **Step 14**
13	Replace the position sensor for which the DTC has set. Refer to **Seat Adjuster Motor Replacement - Front** . Did you complete the replacement?	-	Go to **Step 15**	-
14	Replace the memory seat module. Refer to **Memory Seat Control Module Replacement** . Did you complete the replacement?	-	Go to **Step 15**	-
15	1. Use the scan tool in order to clear the DTCs. 2. Operate the system within the Conditions for Running the DTC as specified in the supporting text. Does the DTC reset?	-	Go to **Step 2**	System OK

SYMPTOMS - SEATS

IMPORTANT: The following steps must be completed before using the symptom tables.

1. When diagnosing a memory seat system condition perform the **Diagnostic System Check - Power Seat Systems** before using the symptom tables in order to verify that all of the following are true:
   - There are no DTCs set.
   - The control module(s) can communicate via the serial data link.
2. Refer to the system description and operation from the following list in order to familiarize yourself with the system functions:
   - **Power Seats System Description and Operation**
   - **Lumbar Support Description and Operation**

- **Memory Seats Description and Operation**

Visual/Physical Inspection

- Inspect for aftermarket devices which could affect the operation of the power seat systems. Refer to **Checking Aftermarket Accessories** in Wiring Systems.
- Inspect the easily accessible or visible system components for obvious damage or conditions which could cause the symptom.
- Inspect the seat adjuster track for conditions which may cause binding or objects within the seat adjustment range which may obstruct movement or interfere with wiring.

Faulty electrical connections or wiring may be the cause of intermittent conditions. Refer to **Testing for Intermittent Conditions and Poor Connections** in Wiring Systems.

Symptom List

Refer to a symptom diagnostic procedure from the following list in order to diagnose the symptom:

- **Power Seat Inoperative (Without Memory)** or **Power Seat Inoperative (with Memory)**
- **Memory Seat Feature Inoperative**
- **Lumbar Support Inoperative**

POWER SEAT INOPERATIVE (WITHOUT MEMORY)

Power Seat Inoperative (Without Memory)

Step	Action	Yes	No
Schematic Reference:Power Seats Schematics DEFINITION: One or more of the driver or passenger power seat functions are inoperative.			
1	Did you review the Power Seat System Description and Operation and perform the necessary inspections?	Go to **Step 2**	Go to **Symptoms - Seats**
2	Attempt to operate all of the power seat adjustments through their full range. Do all of the power seat functions operate properly?	Go to **Testing for Intermittent Conditions and Poor Connections** in Wiring Systems	Go to **Step 3**
3	Are all the power seat inoperative in all direction?	Go to **Step 4**	Go to **Step 10**
4	1. Disconnect the seat relay center. 2. Connect a test lamp between the battery positive voltage supply circuit at the harness connector pin C1-3 and a good ground. Does the test lamp illuminate when the battery positive supply circuit contacted to a good ground?	Go to **Step 5**	Go to **Step 19**

5	Connect a test lamp between the battery positive voltage supply circuit at the harness connector pin C3-A and a good ground. Does the test lamp illuminate when the battery positive supply circuit contacted to a good ground?	Go to **Step 6**	Go to **Step 20**
6	Connect the test lamp between the battery positive voltage and the ground circuit of the seat relay center. Does the test lamp illuminate?	Go to **Step 7**	Go to **Step 21**
7	1. Connect the seat relay center harness connector 2. Connect a test lamp to a battery positive voltage terminal, and back probe the ground circuit at the seat adjuster switch harness connector. Does the test lamp illuminate?	Go to **Step 8**	Go to **Step 12**
8	1. Disconnect the seat adjuster switch harness connector. 2. The test lamp connected to a good ground, back probe each seat adjuster switch signal circuit at the harness connector of the seat relay center. Does the test lamp illuminate for the appropriate seat adjuster switch signal circuit probed?	Go to **Step 17**	Go to **Step 16**
9	1. Disconnect the seat adjuster switch harness connector. 2. Connect a test lamp to a good ground, and probe both the inoperative power seat adjuster switch signal circuit one a time. 3. Observe the test lamp. Does the test lamp illuminate for the appropriate power seat switch signal circuit probed?	Go to **Step 10**	Go to **Step 13**
10	Connect a fused jumper wire from the inoperative power seat switch signal circuit to a good ground. Does the seat adjuster motor operate when the switch signal circuit contacted to a good ground?	Go to **Step 14**	Go to **Step 11**
11	1. Connect the seat adjuster switch harness connector. 2. Disconnect the inoperative seat adjuster motor harness connector. 3. Connect a test lamp across the inoperative adjuster motor control circuit terminals. 4. Press the inoperative seat adjuster switch in both directions.		

	Does the test lamp illuminate when the switch is pressed in both directions?	Go to **Step 18**	Go to **Step 15**
12	Test the ground circuit of the seat adjuster switch for an open or high resistance. Refer to **Circuit Testing** and **Wiring Repairs** or **Connector Repairs** in Wiring Systems. Did you find and correct the condition?	Go to **Step 25**	Go to **Step 16**
13	Test the inoperative power seat switch signal circuit between the seat relay center harness connector and the seat relay center for open or high resistance, or short to ground. Refer to **Circuit Testing** and **Wiring Repairs** or **Connector Repairs** in Wiring Systems. Did you find and correct the condition?	Go to **Step 25**	Go to **Step 16**
14	Test the inoperative power seat adjuster switch signal circuit for an open or high resistance or short to ground. Refer to **Circuit Testing** and **Wiring Repairs** or **Connector Repairs** in Wiring Systems. Did you find and correct the condition?	Go to **Step 25**	Go to **Step 17**
15	Test the seat motor control circuit for open or high resistance. Refer to **Circuit Testing** and **Wiring Repairs** or **Connector Repairs** in Wiring Systems. Did you find and correct the condition?	Go to **Step 25**	Go to **Step 16**
16	Inspect for poor connection at the harness connector of the seat relay center. Refer to **Testing for Intermittent Conditions and Poor Connections** in Wiring Systems. Did you find and correct the condition?	Go to **Step 25**	Go to **Step 24**
17	Inspect for poor connection at the harness connector of the seat adjuster switch. Refer to **Testing for Intermittent Conditions and Poor Connections** in Wiring Systems. Did you find and correct the condition?	Go to **Step 25**	Go to **Step 22**
18	Inspect for poor connection at the harness connector of the seat adjuster motor. Refer to **Testing for Intermittent Conditions and Poor Connections** in Wiring Systems. Did you find and correct the condition?	Go to **Step 25**	Go to **Step 23**
19	Repair the battery positive voltage supply circuit at the harness connector pin C1-3 for open or high resistance, or short to ground. Refer to **Circuit Testing** and **Wiring Repairs** or **Connector Repairs** in Wiring Systems. Did you find and correct the condition?	Go to **Step 25**	-
20	Repair the battery positive voltage supply circuit at the harness connector pin C3-A for open or high resistance, or short to ground. Refer to **Circuit Testing** and **Wiring Repairs** or **Connector Repairs** in Wiring Systems. Did you find and correct the condition?	Go to **Step 25**	-

21	Repair the ground circuit of the seat relay center for open or high resistance. Refer to **Circuit Testing** and **Wiring Repairs** or **Connector Repairs** in Wiring Systems. Did you find and correct the condition?	Go to **Step 25**	-
22	Replace the seat adjuster switch. Refer to **Seat Switch Replacement - Power** . Is the repair complete?	Go to **Step 25**	-
23	Replace the inoperative seat adjuster motor. Refer to **Seat Adjuster Motor Replacement - Front** . Is the repair complete?	Go to **Step 25**	-
24	Replace the seat relay center. Is the repair complete?	Go to **Step 25**	-
25	Operate the system in order to verify the repair. Did you correct the condition?	System OK	Go to **Step 3**

POWER SEAT INOPERATIVE (WITH MEMORY)

Power Seat Inoperative (with Memory)

Step	Action	Yes	No
Schematic Reference: Memory Seats Schematics DEFINITION: One or more of the memory seat adjustments are inoperative and no DTCs are set.			
1	Did you perform the Power Seat Systems Diagnostic System Check?	Go to **Step 2**	Go to **Diagnostic System Check - Power Seat Systems**
2	Attempt to operate all of the memory seat adjustments through the full range. Do all of the memory seat functions operate normal?	Go to **Testing for Intermittent Conditions and Poor Connections** in Wiring Systems	Go to **Step 3**
3	1. Install a scan tool. 2. Observe the status of the inoperative seat adjuster switch. 3. Press the inoperative seat adjuster switch. Does the scan tool indicate the switch status is active?	Go to **Step 6**	Go to **Step 4**
4	1. Disconnect the seat adjuster switch connector. 2. Connect a fused jumper wire from the adjuster switch low reference circuit terminal to the inoperative switch signal circuit terminal in the harness connector. Does the scan tool indicate the switch status is		

	active?	Go to **Step 8**	Go to **Step 5**
5	Test and repair the adjuster switch low reference circuit and the inoperative switch signal circuit for an open or high resistance. Refer to **Circuit Testing** and **Wiring Repairs** or **Connector Repairs** in Wiring Systems. Did you find and correct the condition?	Go to **Step 11**	Go to **Step 10**
6	1. Disconnect the seat adjuster motor assembly connector. 2. Connect a test lamp across the inoperative adjuster motor control circuit terminals in the harness connector. 3. Press the inoperative seat adjuster switch. Does the test lamp illuminate?	Go to **Step 9**	Go to **Step 7**
7	Test and repair the inoperative seat adjuster motor control circuits for an open, high resistance, or short to ground. Refer to **Circuit Testing** and **Wiring Repairs** or **Connector Repairs** in Wiring Systems. Did you find and correct the condition?	Go to **Step 11**	Go to **Step 10**
8	Replace the seat adjuster switch. Refer to **Seat Switch Replacement - Power** . Is the repair complete?	Go to **Step 11**	-
9	Replace the inoperative seat adjuster motor. Refer to **Seat Adjuster Motor Replacement - Front** . Is the repair complete?	Go to **Step 11**	-
10	Replace the memory seat module. Refer to **Memory Seat Control Module Replacement** . Is the repair complete?	Go to **Step 11**	-
11	Operate the system in order to verify the repair. Did you correct the condition?	System OK	Go to **Step 3**

MEMORY SEAT SWITCH INDICATOR MALFUNCTION

Memory Seat Switch Indicator Malfunction

Step	Action	Yes	No
Schematic Reference: Door Control Module Schematics DEFINITION: The memory 1 or 2 select indicators are inoperative or always on.			
1	Did you perform the Power Seat Systems Diagnostic System Check?	Go to **Step 2**	Go to **Diagnostic System Check - Power Seat Systems**
2	Verify the fault is present. Does the system operate normally?	Go to **Testing for Intermittent Conditions**	

		and Poor Connections in Wiring Systems	Go to **Step 3**
3	Is the malfunctioning indicator always on?	Go to **Step 4**	Go to **Step 5**
4	Test the appropriate memory select indicator control circuit for a short to ground. Refer to **Circuit Testing** and **Wiring Repairs** in Wiring Systems. Did you find and correct the condition?	Go to **Step 11**	Go to **Step 9**
5	1. Disconnect the LH door switch. 2. Connect a test lamp from the battery positive voltage circuit terminal to the appropriate memory select indicator control circuit terminal in the door switch harness connector 3. Install a scan tool. 4. Display the LDCM special functions mirror test. 5. Command the appropriate memory indicator ON. Does the test lamp illuminate?	Go to **Step 7**	Go to **Step 6**
6	Test the appropriate memory select indicator control circuit for an open or high resistance. Refer to **Circuit Testing** and **Wiring Repairs** in Wiring Systems. Did you find and correct the condition?	Go to **Step 11**	Go to **Step 9**
7	Inspect for poor connections at the LH door switch. Refer to **Testing for Intermittent Conditions and Poor Connections** and **Connector Repairs** in Wiring Systems. Did you find and correct the condition?	Go to **Step 11**	Go to **Step 8**
8	Replace the LH door switch. Refer to **Front Door Switch Replacement** in Doors. Is the repair complete?	Go to **Step 11**	-
9	Inspect for poor connections at the LH door control module. Refer to **Testing for Intermittent Conditions and Poor Connections** and **Connector Repairs** in Wiring Systems. Did you find and correct the condition?	Go to **Step 11**	Go to **Step 10**
10	Replace the LH door control module. Refer to **Door Control Module Replacement** in Doors. Is the repair complete?	Go to **Step 11**	-
11	Operate the system in order to verify the repair. Did you correct the condition?	System OK	Go to **Step 3**

MEMORY SEAT FEATURE INOPERATIVE

Memory Seat Feature Inoperative

Step	Action	Yes	No
Schematic Reference: Memory Seats Schematics DEFINITION: When the memory 1 or 2 select switches are pressed the seat does not return to the stored position settings.			
1	Did you perform the Power Seat Systems Diagnostic System Check?	Go to **Step 2**	Go to **Diagnostic System Check - Power Seat Systems**
2	Attempt to operate the memory seat recall functions. Do the memory seat recall functions operate properly?	Go to **Testing for Intermittent Conditions and Poor Connections** in Wiring Systems	Go to **Step 3**
3	1. Install a scan tool. 2. Display the LDCM inputs data list. 3. Press the appropriate memory select switch. Does the scan tool indicate the switch status is active?	Go to **Step 6**	Go to **Step 4**
4	1. Disconnect the LH door switch. 2. Connect a fused jumper from the appropriate memory select switch signal circuit terminal to the ground circuit terminal in the door switch harness connector. Does the scan tool indicate the switch status is active?	Go to **Step 8**	Go to **Step 5**
5	Test the memory select switch signal circuit for an open or high resistance. Refer to **Circuit Testing** and **Wiring Repairs** in Wiring Systems. Did you find and correct the condition?	Go to **Step 14**	Go to **Step 10**
6	Test the position sensor 5 volt reference circuit for an open or high resistance. Refer to **Circuit Testing** and **Wiring Repairs** in Wiring Systems. Did you find and correct the condition?	Go to **Step 14**	Go to **Step 7**
7	Test the position sensor low reference circuit for an open or high resistance. Refer to **Circuit Testing** and **Wiring Repairs** in Wiring Systems. Did you find and correct the condition?	Go to **Step 14**	Go to **Step 12**
	Inspect for poor connections at the LH door		

8	switch. Refer to **Testing for Intermittent Conditions and Poor Connections** and **Connector Repairs** in Wiring Systems. Did you find and correct the condition?	Go to **Step 14**	Go to **Step 9**
9	Replace the LH door switch. Refer to **Front Door Switch Replacement** in Doors. Is the repair complete?	Go to **Step 14**	-
10	Inspect for poor connections at the LH door control module. Refer to **Testing for Intermittent Conditions and Poor Connections** and **Connector Repairs** in Wiring Systems. Did you find and correct the condition?	Go to **Step 14**	Go to **Step 11**
11	Replace the LH door control module. Refer to **Door Control Module Replacement** in Doors. Is the repair complete?	Go to **Step 14**	-
12	Inspect for poor connections at the memory seat module. Refer to **Testing for Intermittent Conditions and Poor Connections** and **Connector Repairs** in Wiring Systems. Did you find and correct the condition?	Go to **Step 14**	Go to **Step 13**
13	Replace the memory seat module. Refer to **Memory Seat Control Module Replacement** . Is the repair complete?	Go to **Step 14**	-
14	Operate the system in order to verify the repair. Did you correct the condition?	System OK	Go to **Step 3**

LUMBAR SUPPORT INOPERATIVE

Lumbar Support Inoperative

Step	Action	Yes	No
Schematic Reference: Lumbar Support Schematics			
1	Did you review the lumbar Support Description and Operation and perform the necessary inspections?	Go to **Step 2**	Go to **Symptoms - Seats**
2	Attempt to inflate and deflate all of the lumbar support and side bladders. Do all of the lumbar support and side bladders operate properly?	Go to **Testing for Intermittent Conditions and Poor Connections** in Wiring Systems	Go to **Step 3**
3	Are all of the driver or passenger lumbar support functions inoperative?	Go to **Step 4**	Go to **Step 6**
	Test and repair the positive voltage supply circuits to the seat adjuster switch and the lumbar pump for the following conditions: • An open or high resistance		

4	• A short to ground Refer to **Circuit Testing** and **Wiring Repairs** or **Connector Repairs** in Wiring Systems. Did you find and correct the condition?	Go to **Step 11**	Go to **Step 5**
5	Test and repair the ground circuit to the lumbar pump assembly for an open or high resistance. Refer to **Circuit Testing** and **Wiring Repairs** or **Connector Repairs** in Wiring Systems. Did you find and correct the condition?	Go to **Step 11**	Go to **Step 6**
6	1. Disconnect the seat adjuster switch. 2. Connect a fused jumper wire from battery positive voltage to the inoperative lumbar relay control circuit. Does the inoperative lumbar support function operate properly?	Go to **Step 8**	Go to **Step 7**
7	Test and repair the inoperative lumbar relay control circuit for an open or high resistance. Refer to **Circuit Testing** and **Wiring Repairs** or **Connector Repairs** in Wiring Systems. Did you find and correct the condition?	Go to **Step 11**	Go to **Step 9**
8	Replace the seat adjuster switch. Refer to **Seat Switch Replacement - Power** . is the repair complete?	Go to **Step 11**	-
9	Inspect and repair or replace the air lines or bladders for any leaking or restrictions. Refer to **Lumbar Bladder Replacement** . Did you find and correct the condition?	Go to **Step 11**	Go to **Step 10**
10	Replace the lumbar pump. Refer to **Lumbar Pump Replacement** . Is the repair complete?	Go to **Step 11**	-
11	Operate the system in order to verify the repair. Did you correct the condition?	System OK	Go to **Step 3**

REPAIR INSTRUCTIONS

SEAT REPLACEMENT (POWER)

Removal Procedure

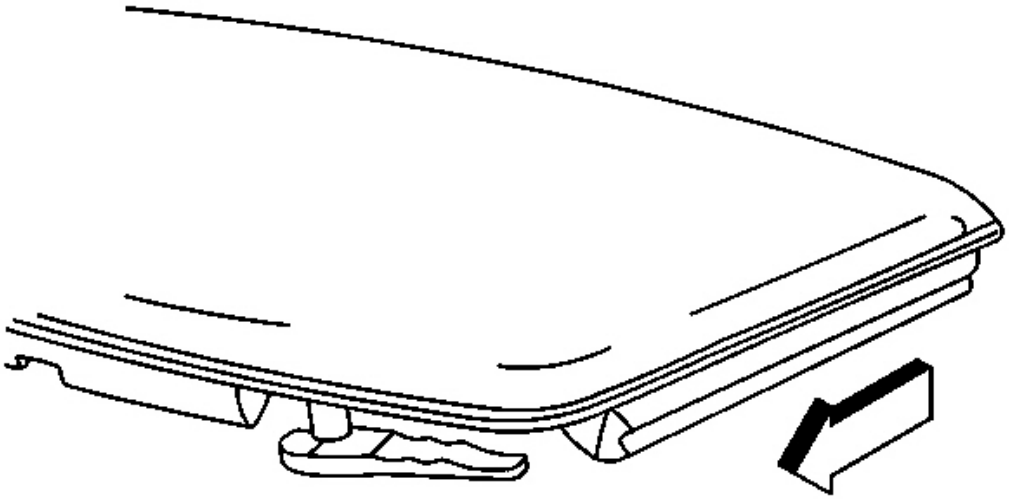

Fig. 9: Sunroof Component View
Courtesy of GENERAL MOTORS CORP.

1. Place a protective cover over the sill plate and door trim panel and/or remove the roof lift off panel (coupe), or lower the folding top (convertible), to provide additional space for seat removal.
2. Tilt the steering wheel full up.

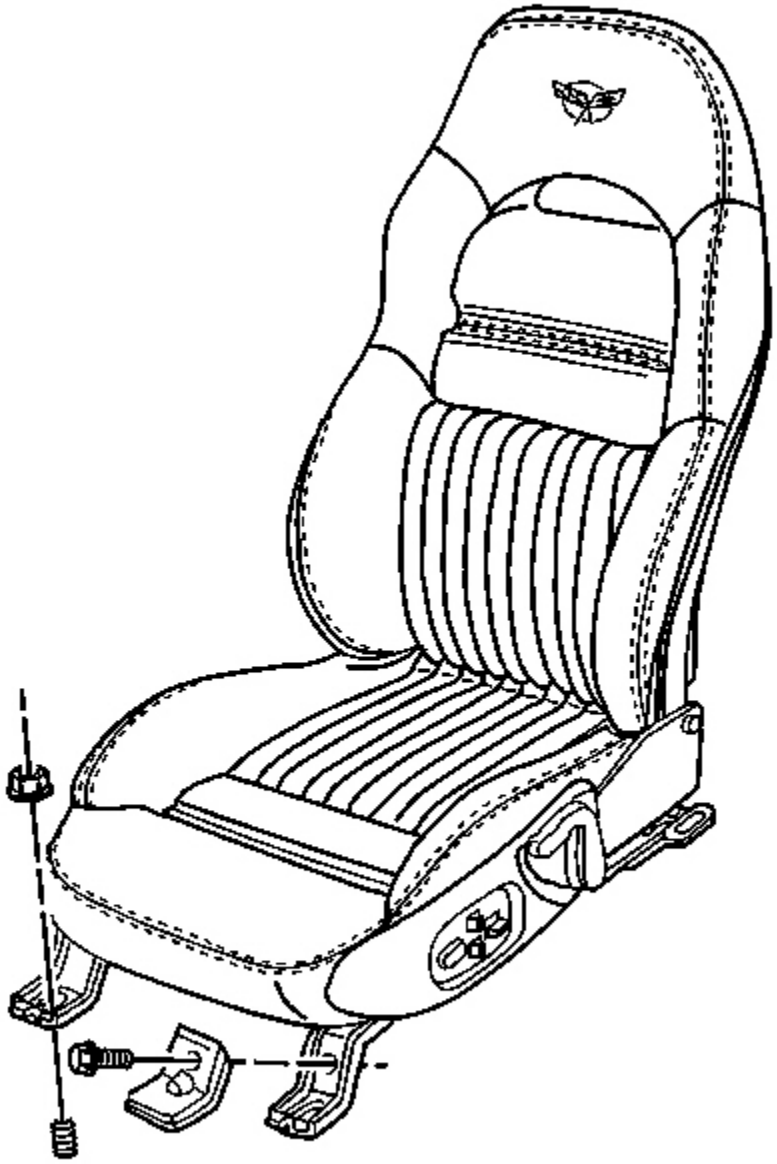

Fig. 10: Seat Mounting Component View
Courtesy of GENERAL MOTORS CORP.

3. Position the seat rearward.
4. Remove the push pins and covers from the front of the adjuster legs.
5. Remove the nuts from the front of the adjuster legs.

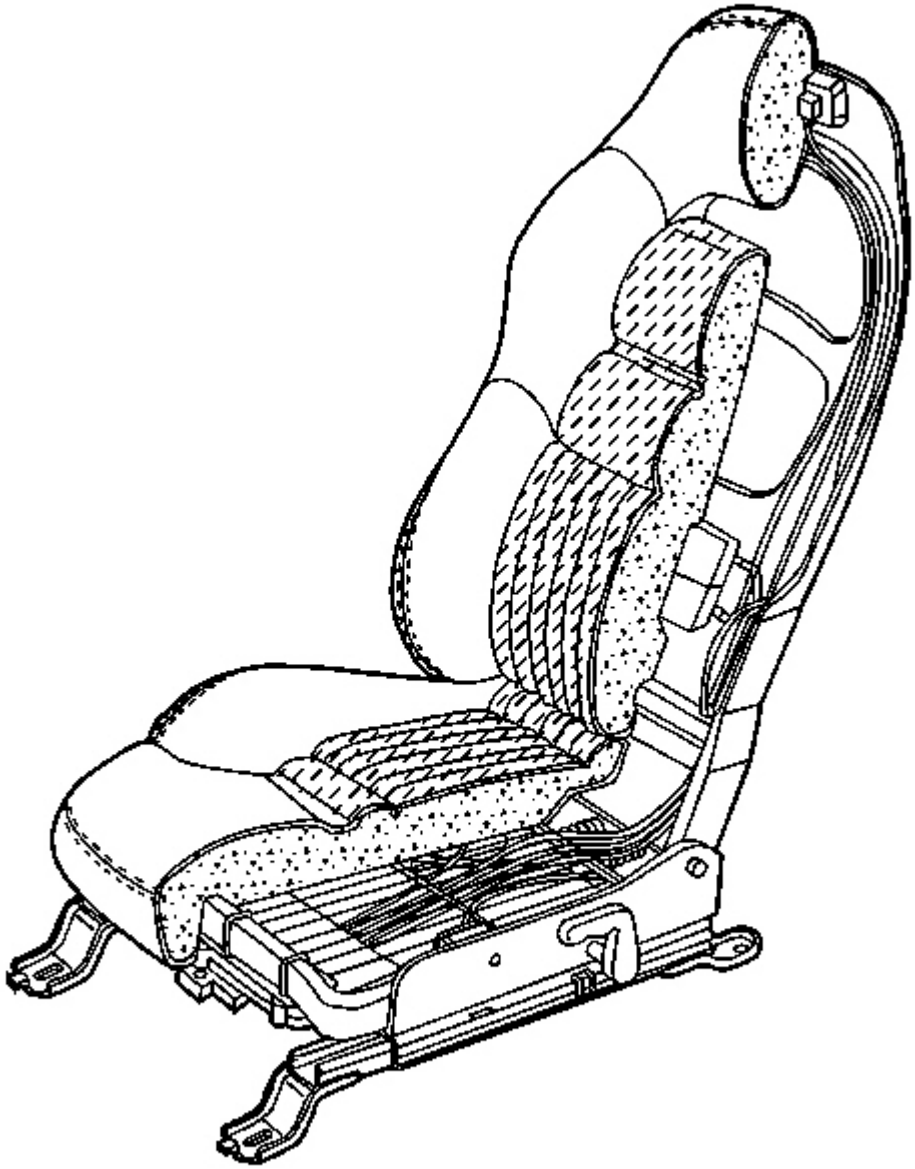

Fig. 11: Seat Electrical Connector
Courtesy of GENERAL MOTORS CORP.

6. Position the seat forward. If the rear adjuster nuts are accessible skip to step 9. If the seat will not move and the rear adjuster nuts are not accessible determine if the motor or the adjuster is the cause and perform step 7 or 8.

7. If the power seat motor is inoperative and the rear adjuster nuts are not accessible perform the following steps.
    1. Power up and raise the front of the power seat to gain access to the forward motor bracket.
    2. Reach under the seat and cut the tie strap attaching the front motor bracket to the torque tube.
    3. Bend the bracket ends inward and slide the bracket off the adjuster transmissions.
    4. Pull the forward motor cables from the adjusters.
    5. Insert one end of a removed cable into a low speed drill and insert the other end into the adjuster.
    6. With the low speed drill move the adjuster forward, alternating sides, until the rear adjuster nuts are exposed.

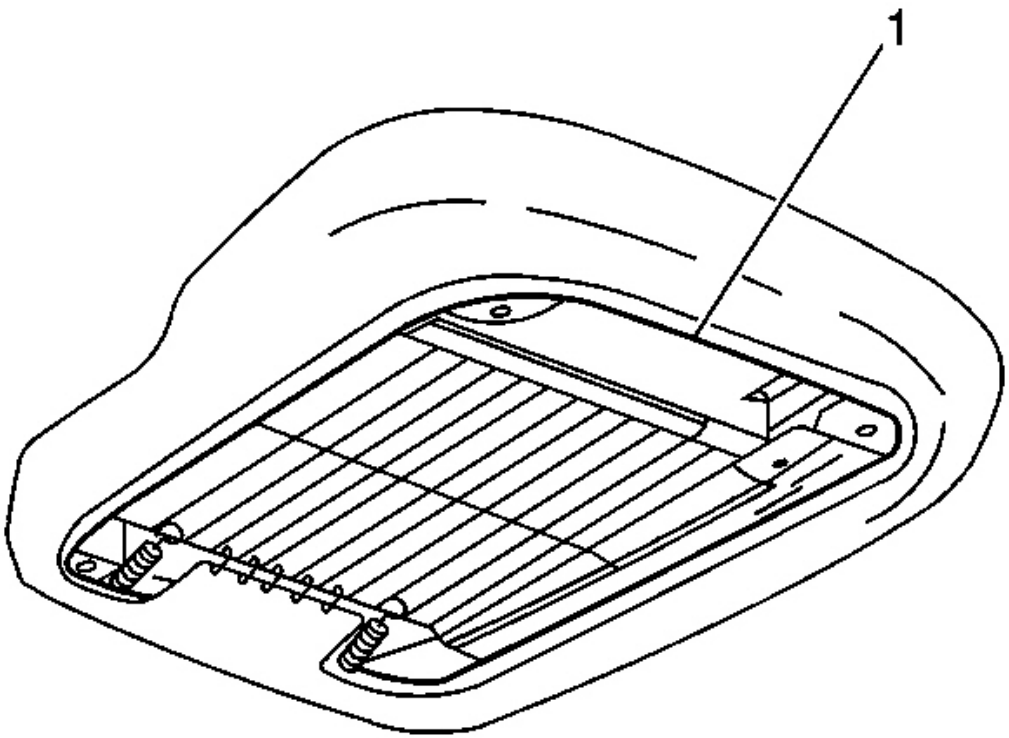

Fig. 12: Seat Belt Harness Rosebud Clip & Electrical Connectors
Courtesy of GENERAL MOTORS CORP.

8. If the seat adjuster is inoperative and the rear adjuster nuts are not accessible perform the following steps:
    1. Remove the recliner handle. Refer to **Seat Back Recliner Handle Replacement - Front** .
    2. Remove the seat side trim panel. Refer to **Trim Panel Replacement - Front Seat** .
    3. Reach under the seat cushion and cut the seat cover tie string (1) at the front center of the seat

cushion.

4. Lift the seat cushion cover and foam to access the 4 seat cushion to frame attaching bolts.
5. Remove the seat cushion to frame attaching bolts.
6. Cut the tie straps mounting the lumbar pump pouch and reposition the pump and pouch up through the seat support wires.
7. Remove the memory seat control module from the seat.
8. Disconnect the seat belt harness rosebud clip (drivers seat).
9. Disconnect the electrical connectors.
10. Remove the seat.

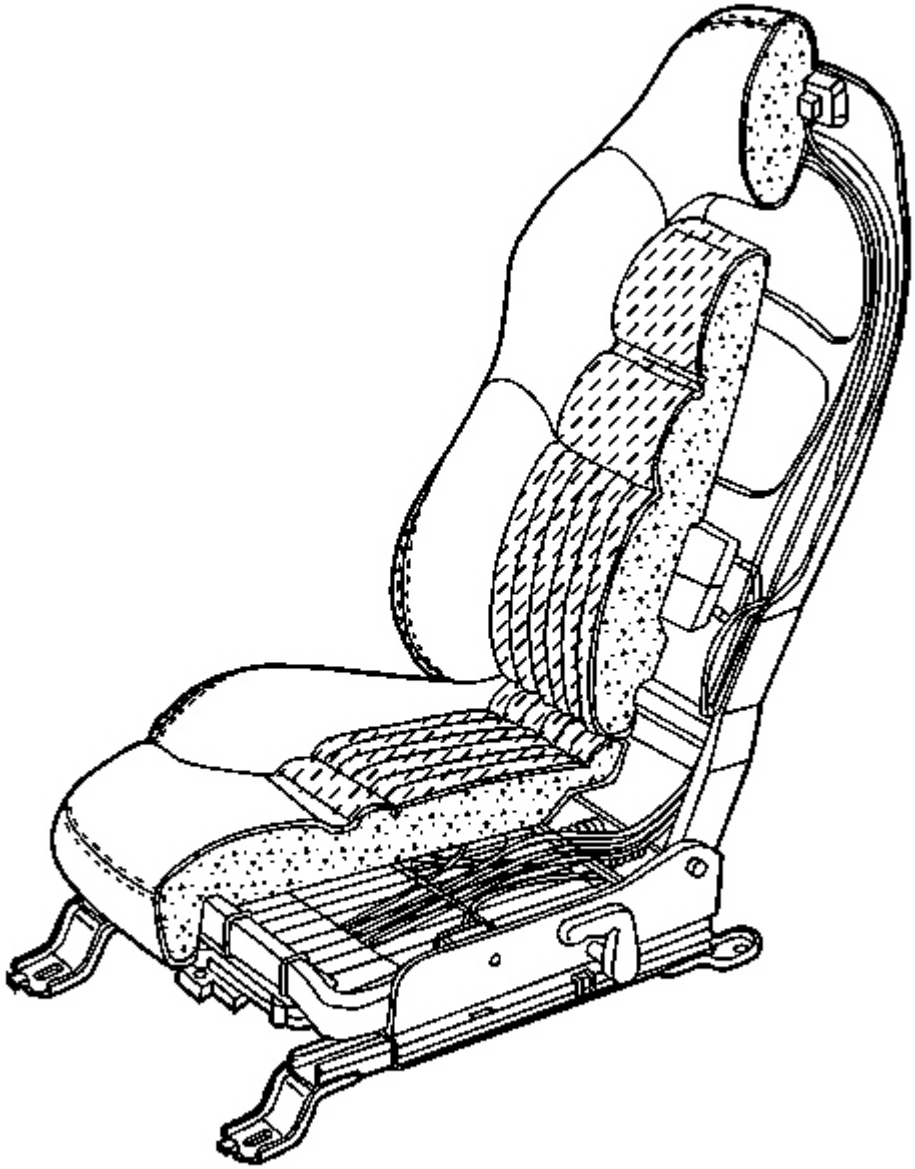

Fig. 13: Seat Electrical Connector
Courtesy of GENERAL MOTORS CORP.

9. Remove the nuts attaching the rear adjuster legs.
10. Disconnect the seat electrical connector.
11. Remove the seat and/or the adjuster.

12. Transfer parts as necessary.

Installation Procedure

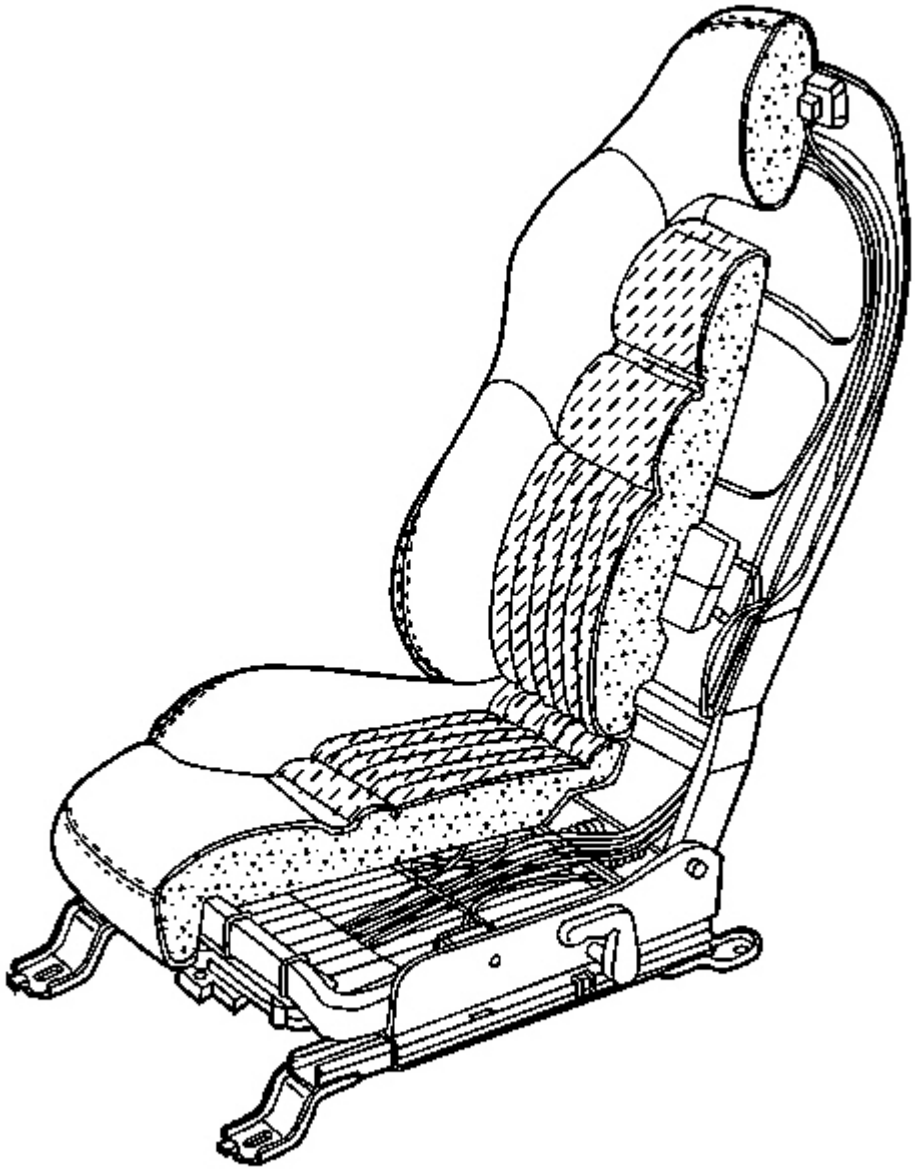

Fig. 14: Seat Electrical Connector
Courtesy of GENERAL MOTORS CORP.

1. Install the adjuster(s) to the seat if removed. Refer to **Seat Adjuster Replacement - Front** .
2. Install the seat cushion cover, if removed, Refer to **Seat Cushion Trim Cover and Pad Replacement** .

NOTE: Refer to Fastener Notice in Cautions and Notices.

3. Install the buckle side of the seat belt, if removed.

   Tighten: Tighten the seat belt buckle side mounting nut to 50 N.m (37 lb ft).

4. Install the front motor bracket, if removed.
5. Install the lumbar pump, if removed.
6. Position the seat forward on the adjuster(s).
7. Position the seat with the adjuster on the rear studs.
8. Lift the front of the seat and connect the electrical connector.
9. Install the nut to the rear inboard stud (net locating stud).
10. Install the nut to the rear outboard stud.

    Tighten: Tighten the adjuster mounting nuts to 50 N.m (37 lb ft).

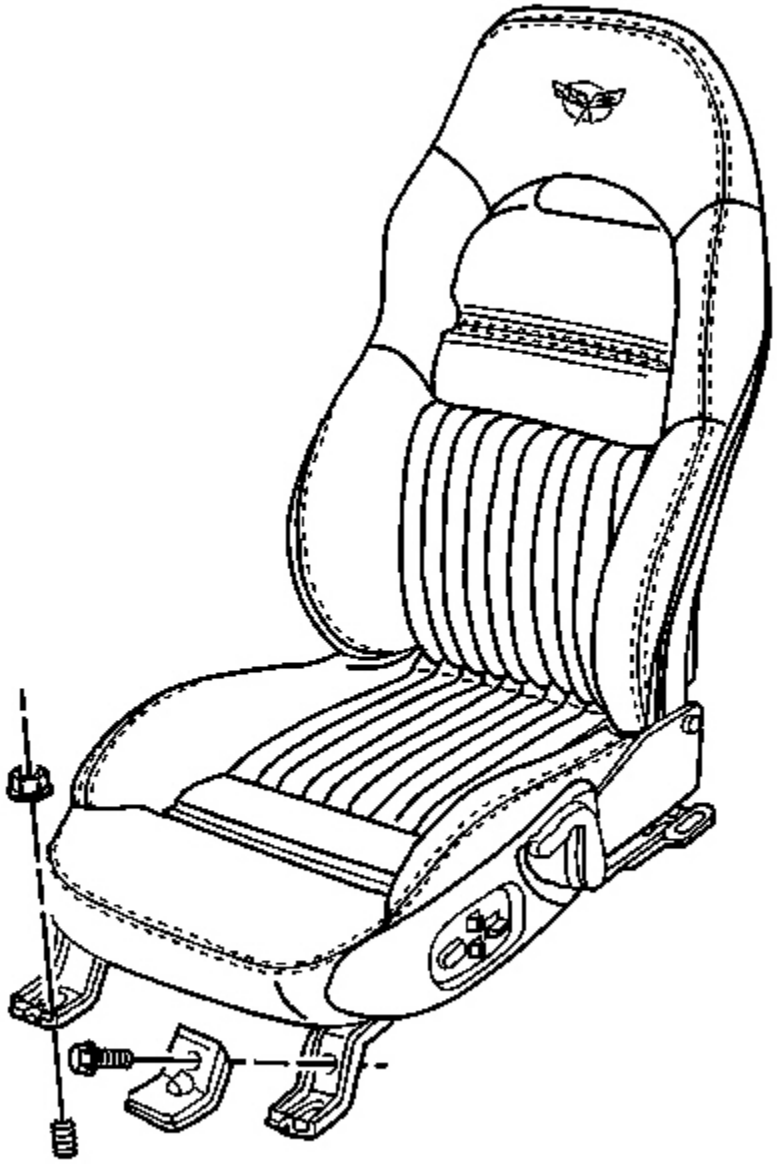

Fig. 15: Seat Mounting Component View
Courtesy of GENERAL MOTORS CORP.

11. Move the seat rearward.
12. Install the nuts to the front adjuster legs.

Tighten: Tighten the adjuster mounting nuts to 50 N.m (37 lb ft).

13. Install the adjuster leg covers.
14. Secure the covers with push pins.

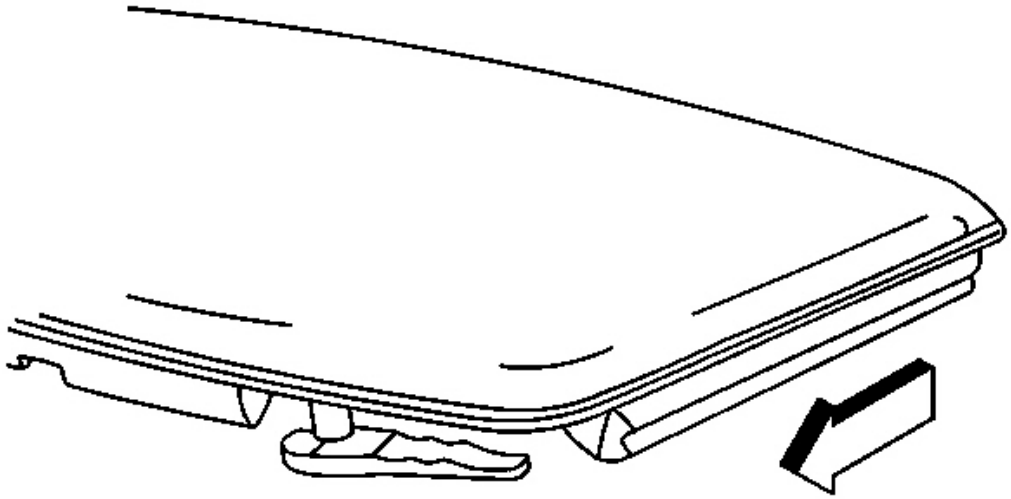

Fig. 16: Sunroof Component View
Courtesy of GENERAL MOTORS CORP.

15. Remove the protective cover and/or install the roof lift off panel, or raise the convertible top.

SEAT REPLACEMENT (MANUAL)

Removal Procedure

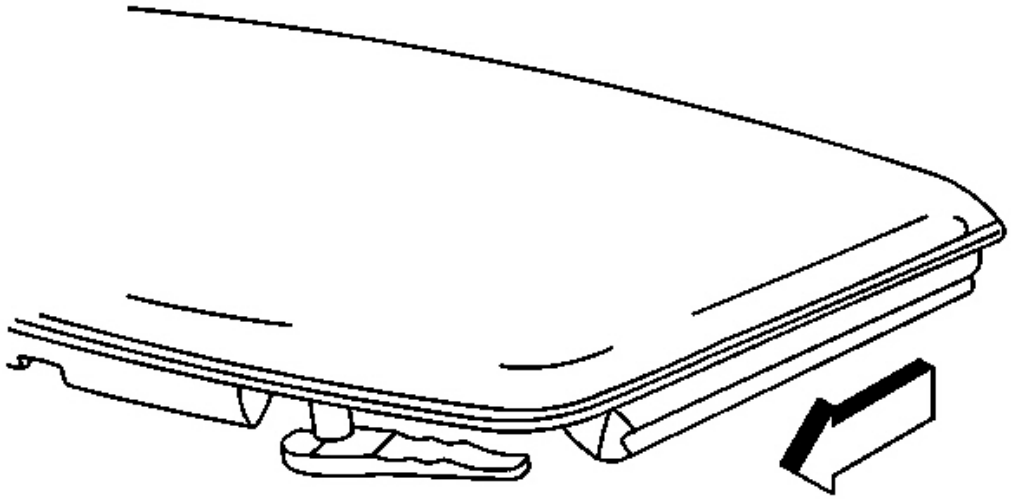

Fig. 17: Sunroof Component View
Courtesy of GENERAL MOTORS CORP.

1. Protect the interior and/or provide access for seat removal as follows:
   - Tilt the steering wheel full up.
   - Remove the coupe's roof lift off panel to provide additional space for seat removal and/or place a protective cover over the sill plate and door trim panel.
   - Lower the convertible's folding top to provide additional space for seat removal and/or place a protective cover over the sill plate and door trim panel.
   - Place a protective cover over the hardtop's sill plate and door trim panel.

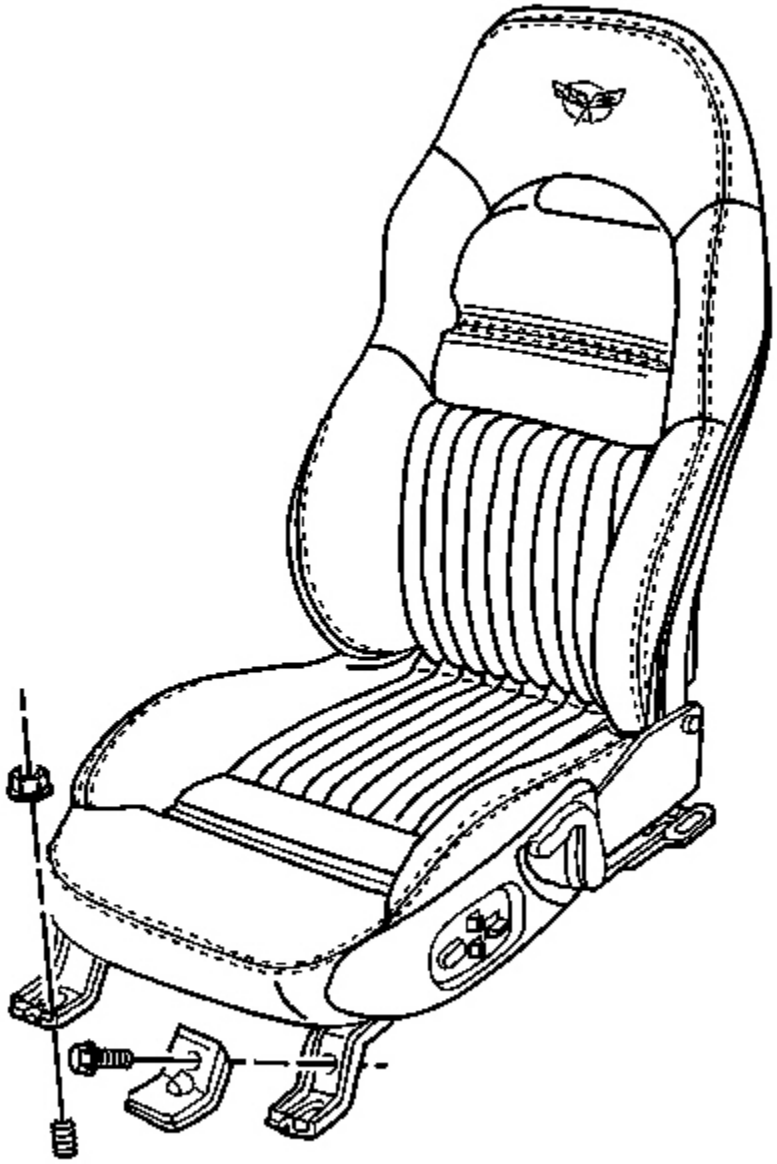

Fig. 18: Seat Mounting Component View
Courtesy of GENERAL MOTORS CORP.

2. Position the seat rearward.
3. Remove the push pins and covers from the front of the adjuster legs.
4. Remove the nuts from the front of the adjuster legs.

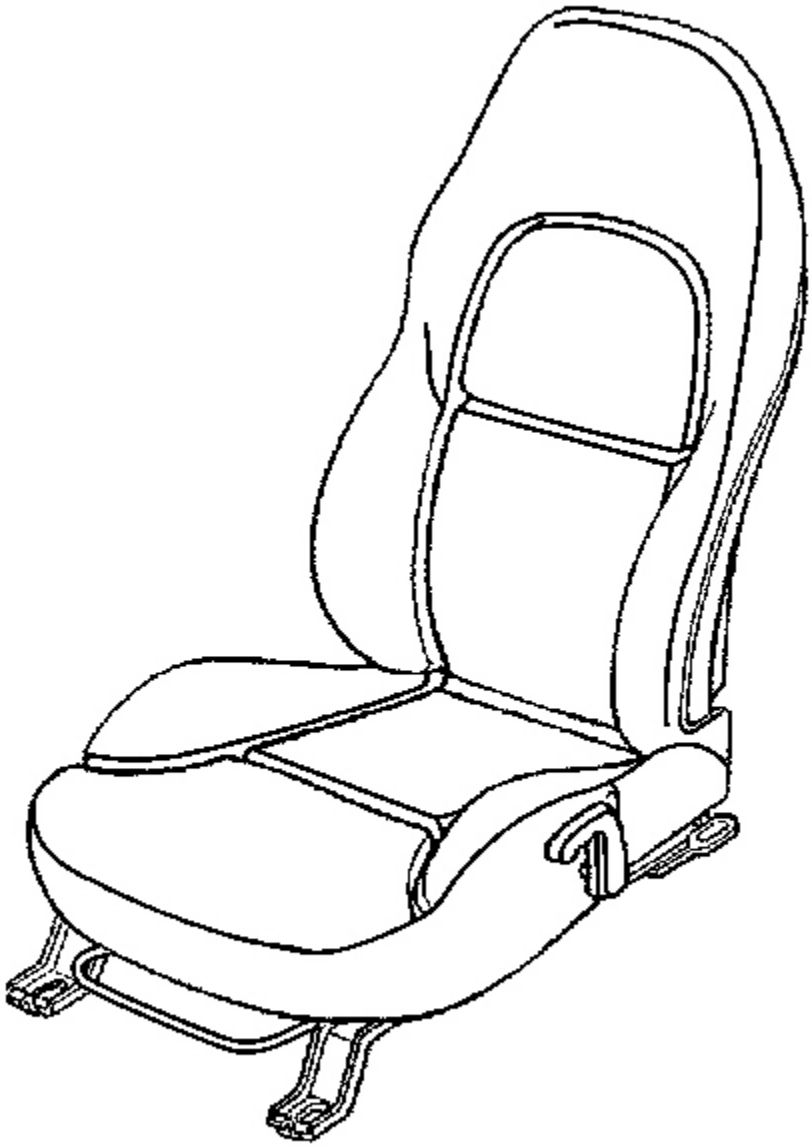

Fig. 19: Seat Cushion Frame To Adjuster Bolts
Courtesy of GENERAL MOTORS CORP.

5. Position the seat forward and proceed to step 7. If the seat wont move because the adjuster is inoperative and the rear mounting nuts are not accessible perform the following steps.
    1. Remove the recliner handle. Refer to **Seat Back Recliner Handle Replacement - Front** .

2. Reach under the front of the seat cushion and cut the seat cushion cover draw string at the front center of the seat.
3. Reposition the seat cushion cover and foam to access the 4 seat cushion frame to adjuster attaching bolts.
4. Remove the seat cushion frame to adjuster bolts.
5. Remove the seat belt harness rosebud clip (drivers seat).
6. Remove the seat.

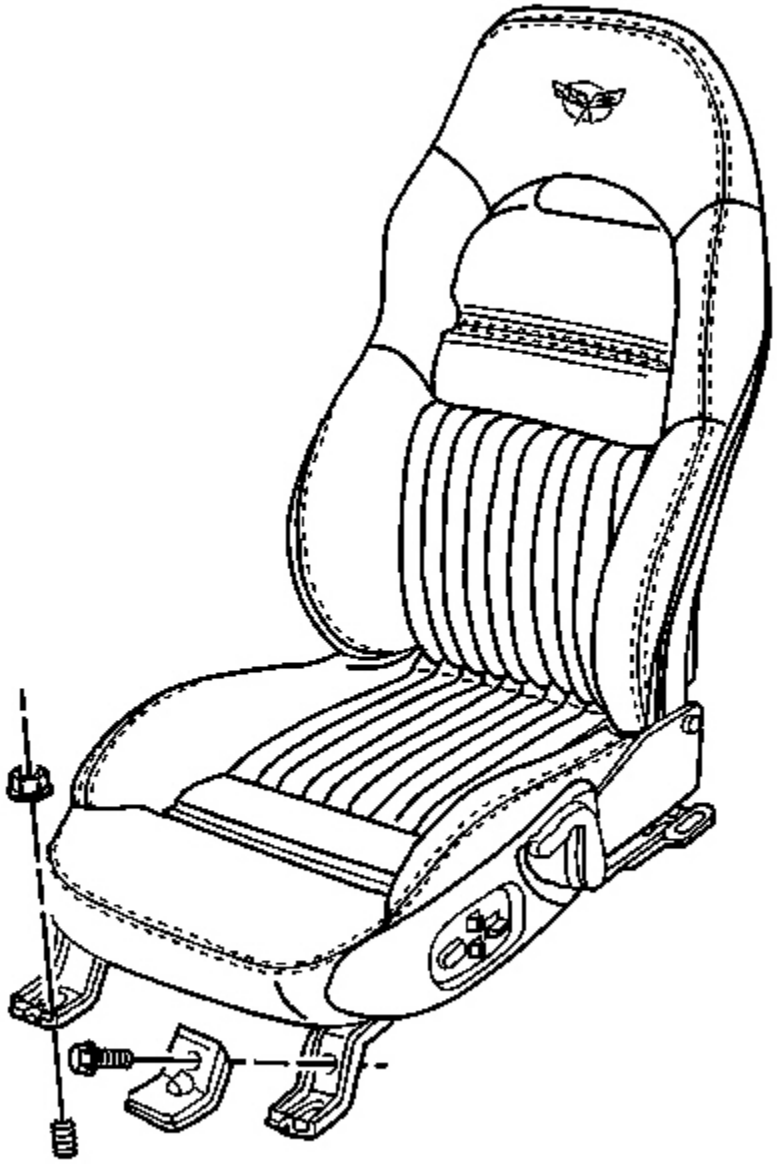

Fig. 20: Seat Mounting Component View
Courtesy of GENERAL MOTORS CORP.

6. Remove the nuts attaching the rear adjuster legs.
7. Remove the seat and/or the adjuster(s).
8. Transfer parts as necessary.

Installation Procedure

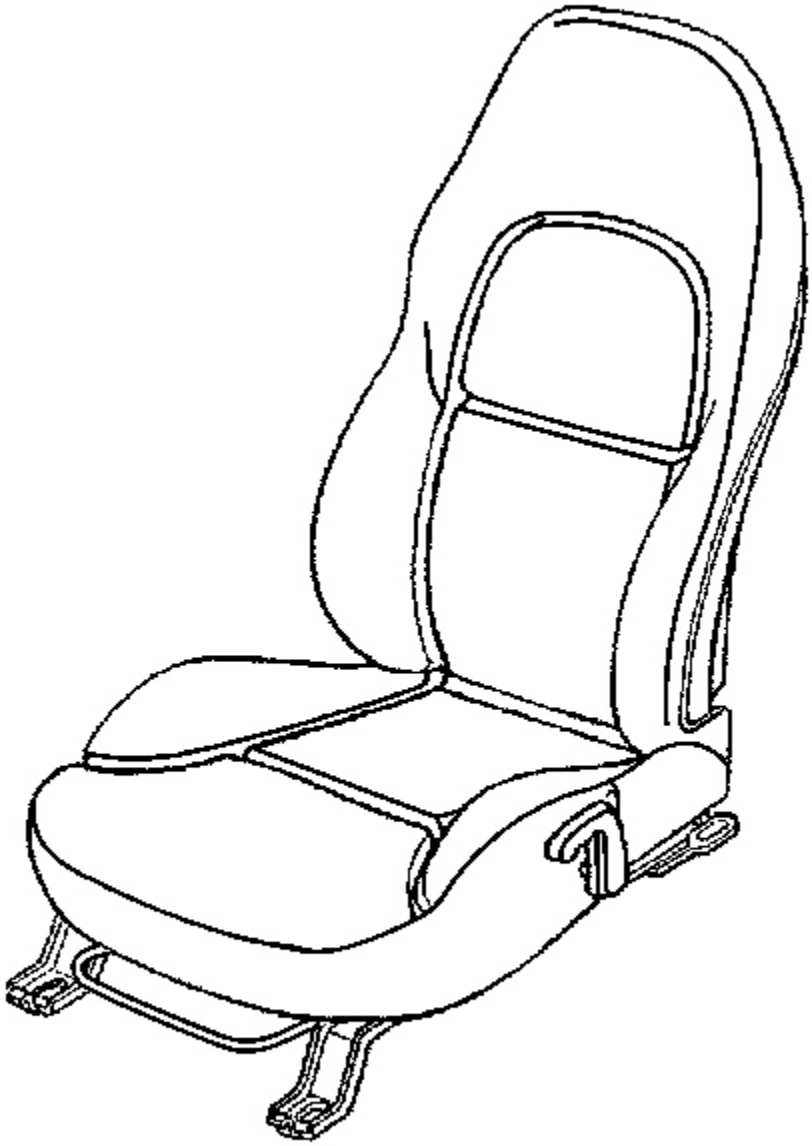

Fig. 21: Seat Cushion Frame To Adjuster Bolts
Courtesy of GENERAL MOTORS CORP.

1. Install the adjuster(s) if removed. Refer to **Seat Adjuster Replacement - Front** .
2. Install the seat cushion cover if removed. Refer to **Seat Cushion Trim Cover and Pad Replacement** .

NOTE: Refer to Fastener Notice in Cautions and Notices.

3. Install the buckle side of the seat belt to the adjuster, if removed.

   Tighten: Tighten the seat belt buckle side mounting nut to 50 N.m (37 lb ft).

4. Align the adjusters with their locking pawls engaged in the same slots side to side.
5. Install the seat adjuster adjustment bar.
6. Position the seat forward on the seat adjusters.
7. Check that the locking pawls are completely engaged in the slots.
8. Position the seat adjusters on the rear floor studs.
9. Connect the electrical connector (drivers side).
10. Install the nut to the rear inboard stud (net locating stud).
11. Install the nut to the rear outboard stud.

    Tighten: Tighten the adjuster mounting nuts to 50 N.m (37 lb ft).

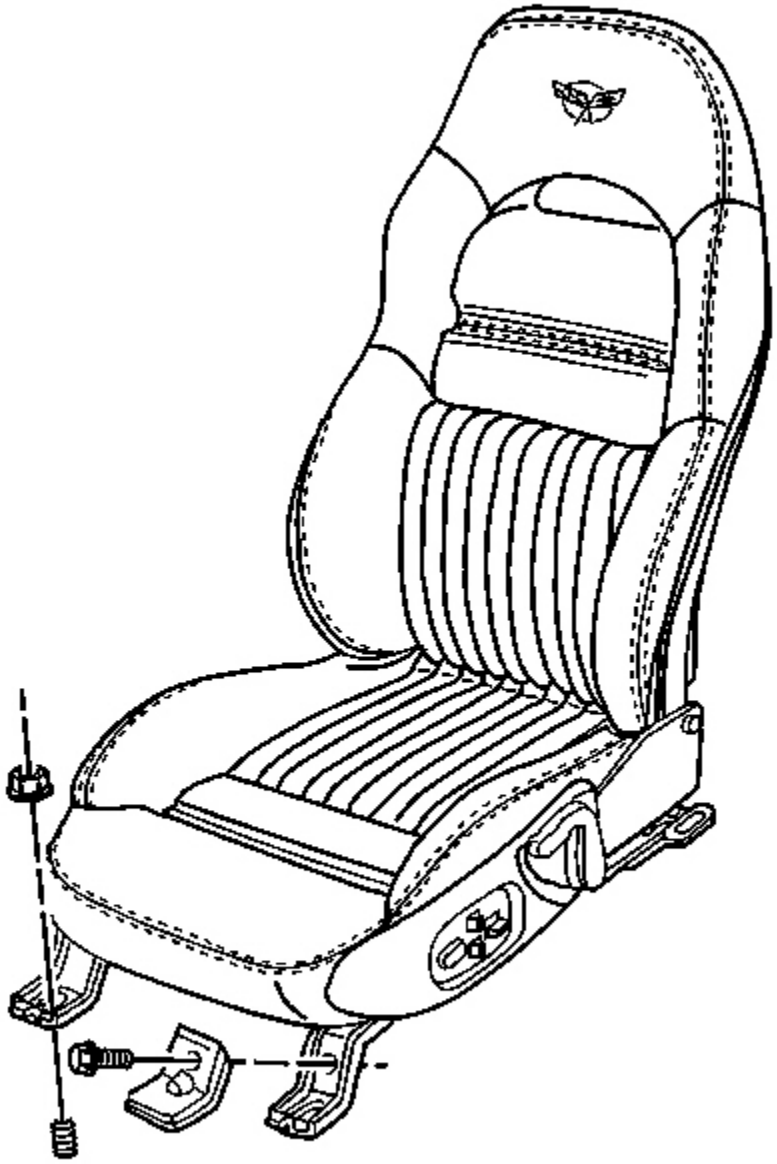

Fig. 22: Seat Mounting Component View
Courtesy of GENERAL MOTORS CORP.

12. Move the seat rearward.
13. Install the nuts to the front adjuster legs.

Tighten: Tighten the adjuster mounting nuts to 50 N.m (37 lb ft).

14. Install the adjuster leg covers.
15. Secure the covers with push pins.

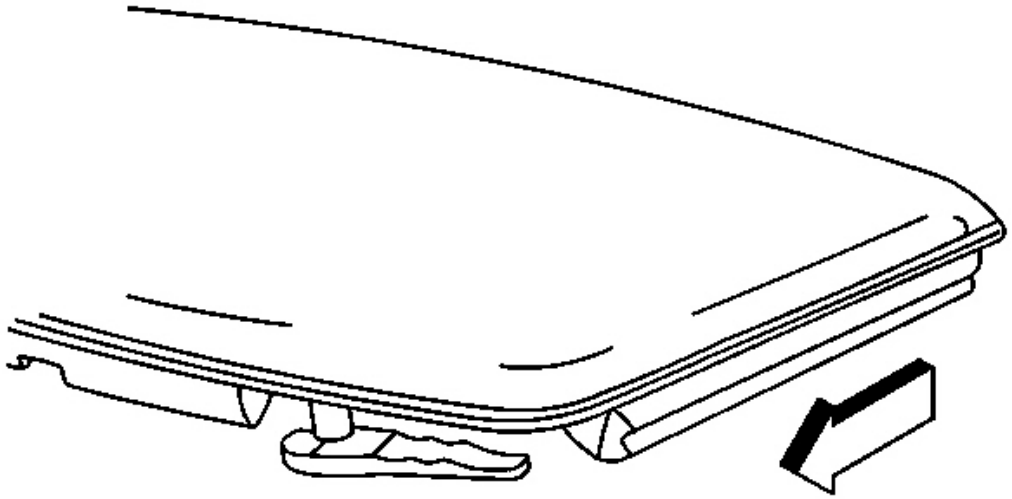

Fig. 23: Sunroof Component View
Courtesy of GENERAL MOTORS CORP.

16. Install the roof lift off panel if removed, or raise the convertible top if lowered.
17. Remove any protective covering.

SEAT CUSHION FRAME REPLACEMENT

Removal Procedure

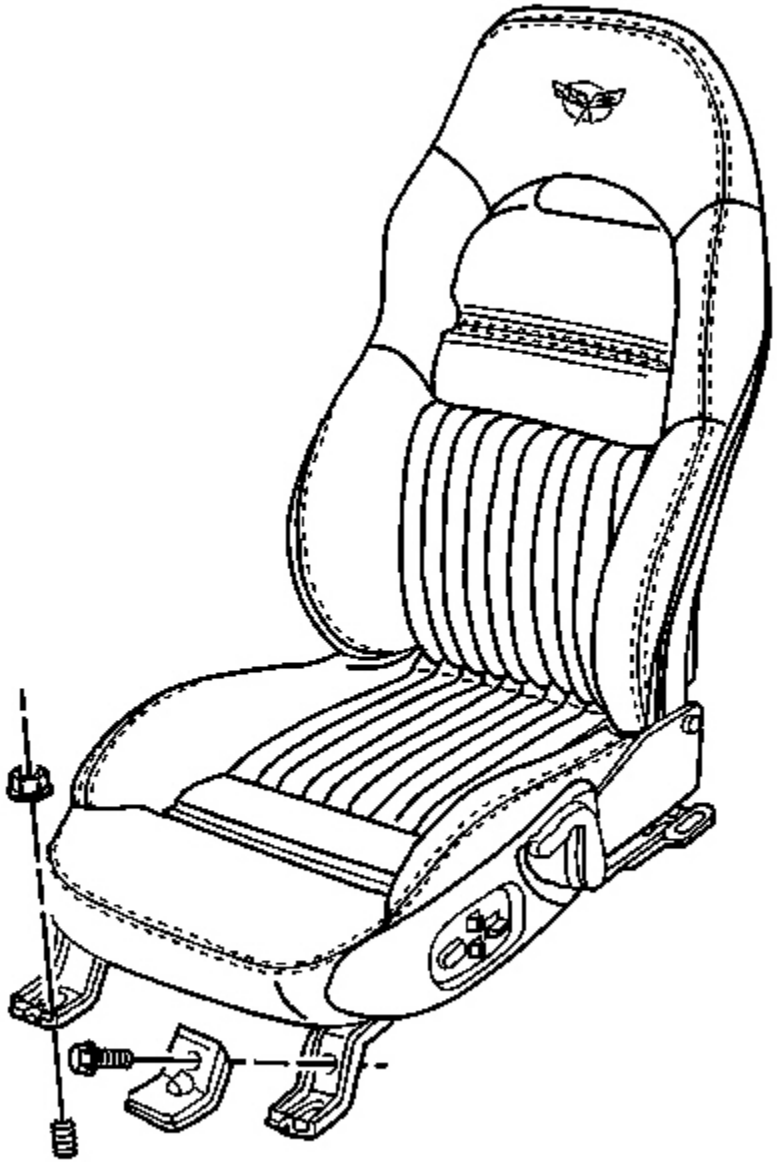

Fig. 24: Seat Mounting Component View
Courtesy of GENERAL MOTORS CORP.

1. Remove the seat. Refer to **Seat Replacement (Power)** or **Seat Replacement (Manual)** .
2. Remove the buckle side of the seat belt from the seat frame.

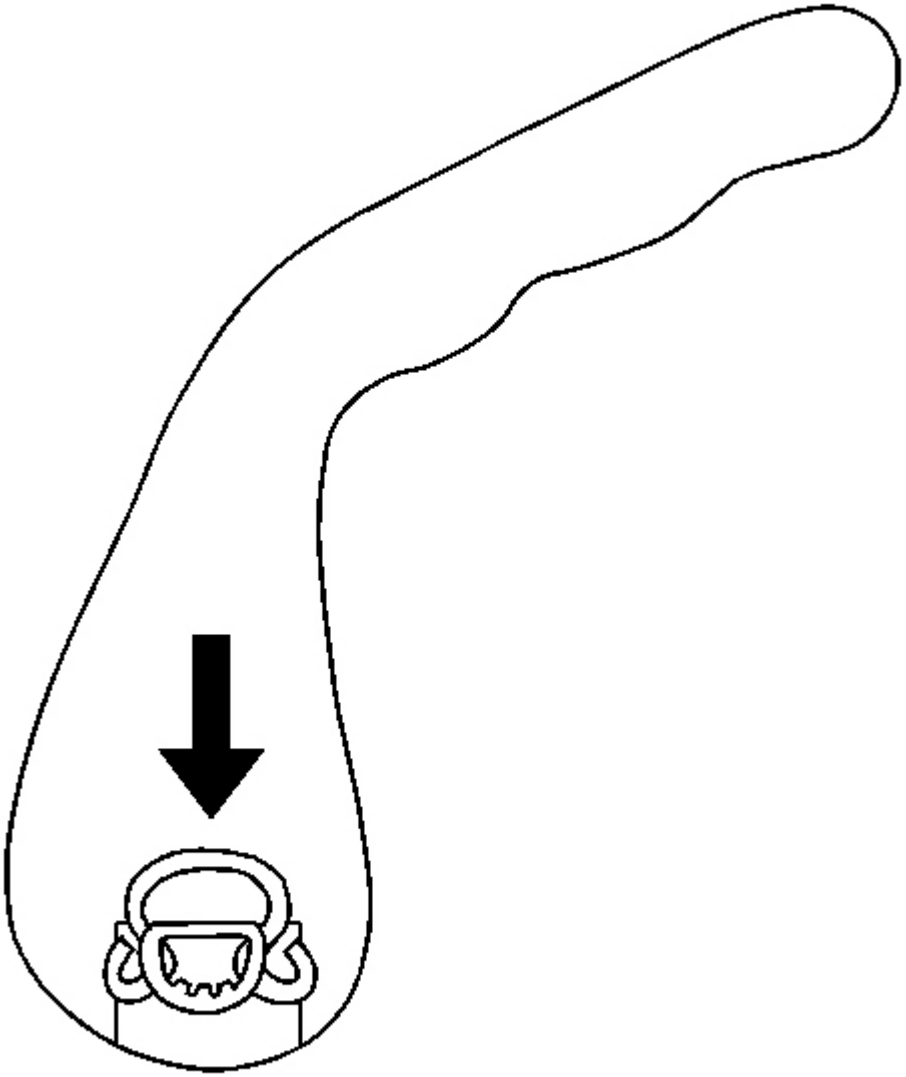

Fig. 25: Seat Back Recliner Handle
Courtesy of GENERAL MOTORS CORP.

3. Remove the recliner handle.
    1. With a suitable blunt ended tool inserted between the seat cushion and the handle push the handle retaining spring clip down.
    2. Pull the handle from the shaft.

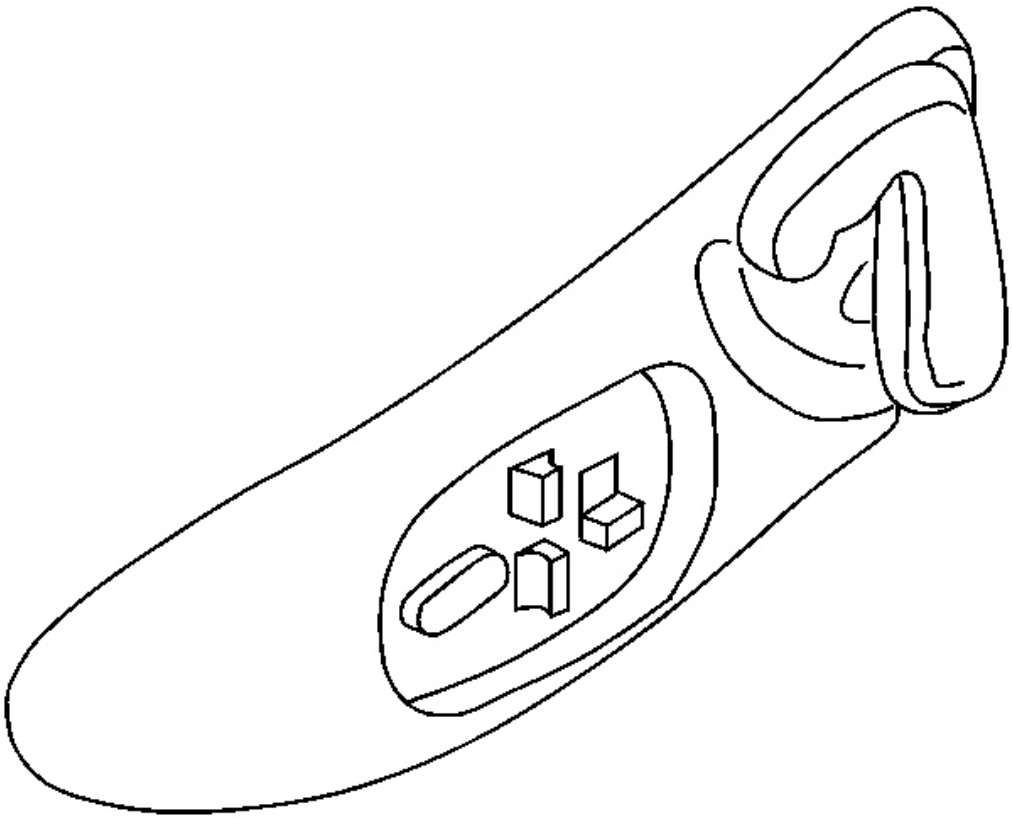

Fig. 26: Side Trim Panel & Switch Harness
Courtesy of GENERAL MOTORS CORP.

4. Remove the side trim panel (Power Seat). Refer to **Trim Panel Replacement - Front Seat** .

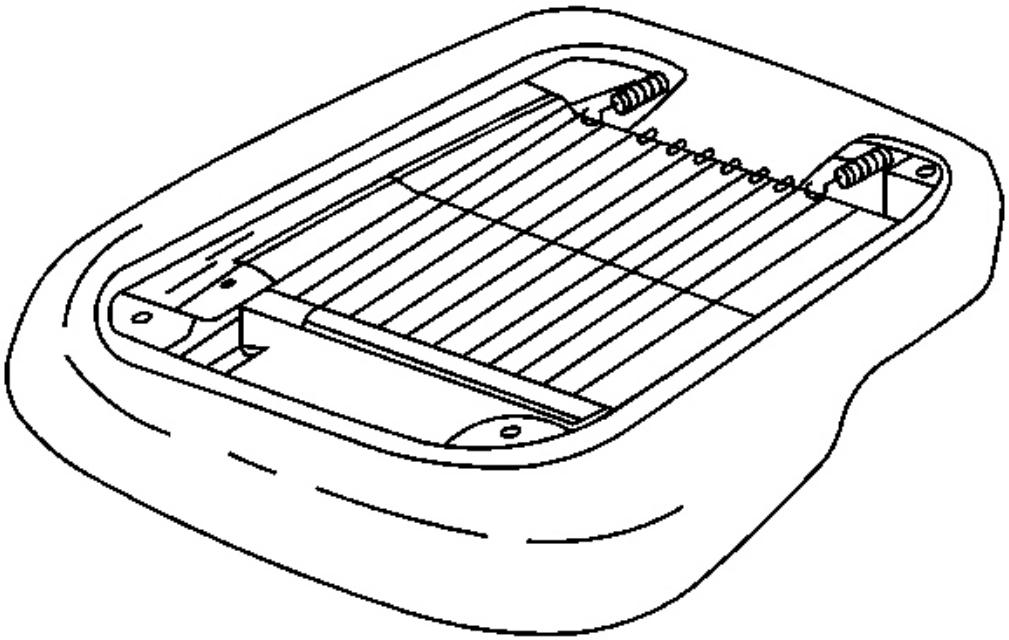

Fig. 27: Rear Flap To Seat Cushion Cover
Courtesy of GENERAL MOTORS CORP.

5. Remove the hog rings from the rear flap of the seat cushion cover.

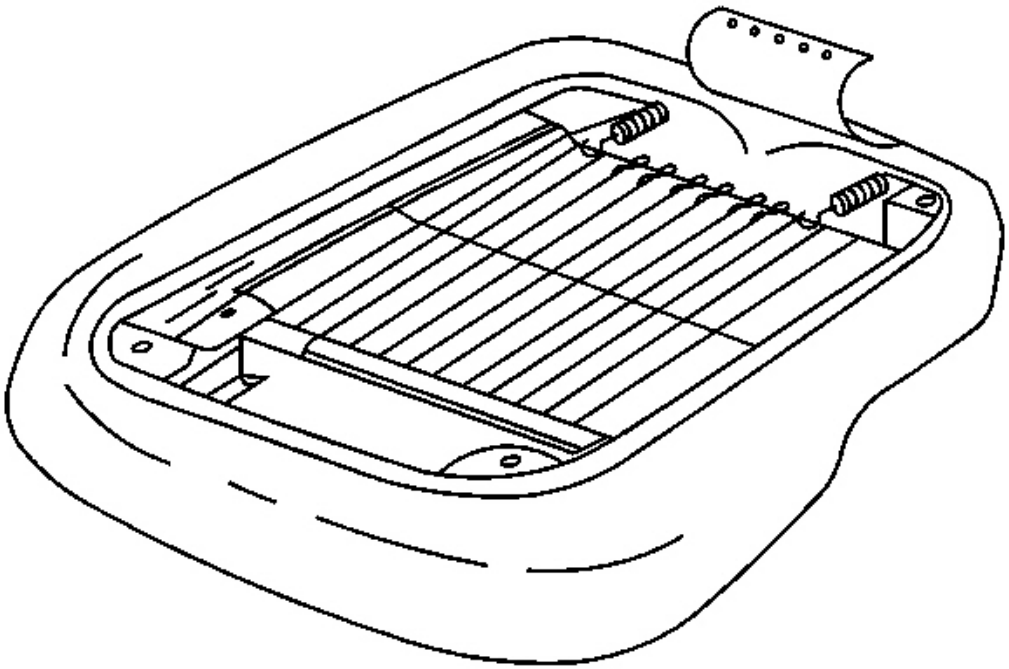

Fig. 28: Rear Corners At Seat Cushion Cover
Courtesy of GENERAL MOTORS CORP.

6. Raise the flap.
7. Unfasten the draw string.
8. Remove the hogrings attaching the rear corners of the seat cushion cover.
9. Remove the cover and foam pad.
10. Remove the seat module from the seat wires (Base Power Seat).

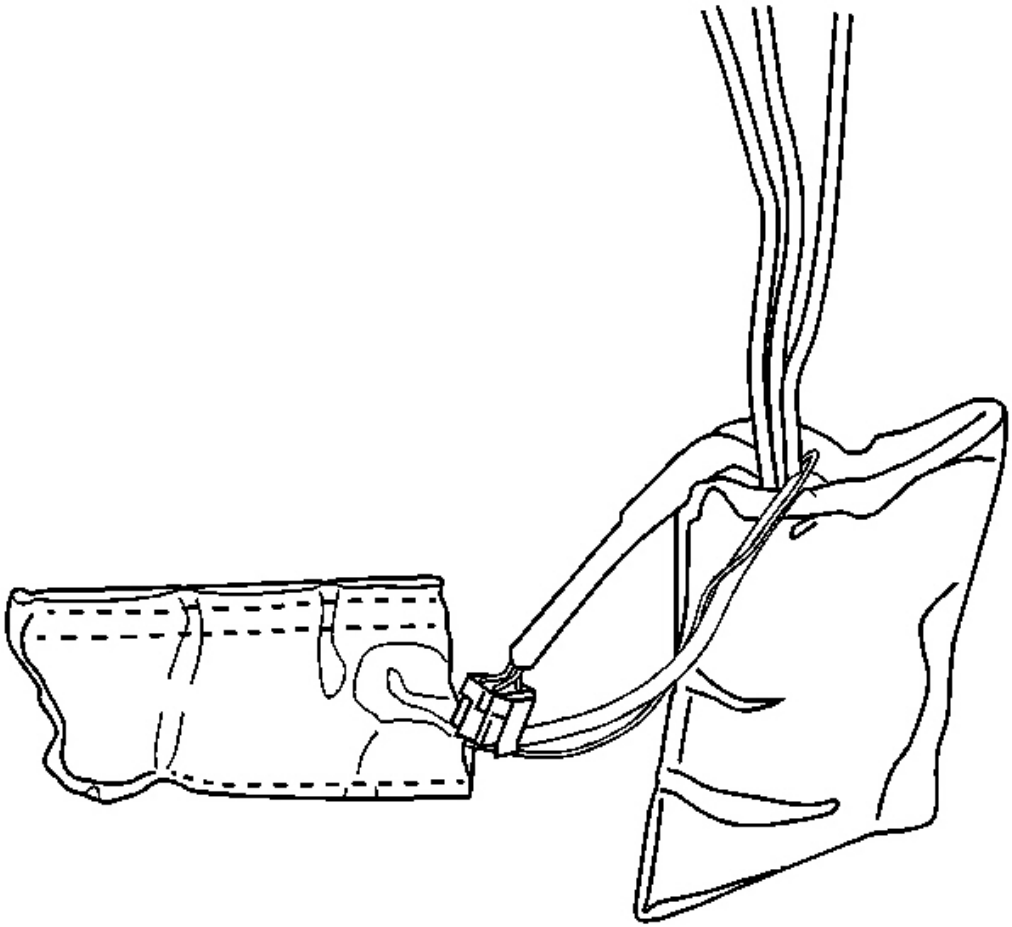

Fig. 29: Lumbar Pump & Module To Seat Frame & Seat Back
Courtesy of GENERAL MOTORS CORP.

11. Remove the lumbar pump and module and pull them up through the seat frame and lay them aside still attached to the seat back (Sport Seat).
12. Remove the memory module from the seat wires (Optional Sport Seat).
13. Mark the seat back actuators to identify the right side from the left side.
14. Note the routing of the recliner mechanism cables.
15. Position the seat back full up to remove the tension from the actuator springs.
16. Remove the forward pins from the seat back actuators.

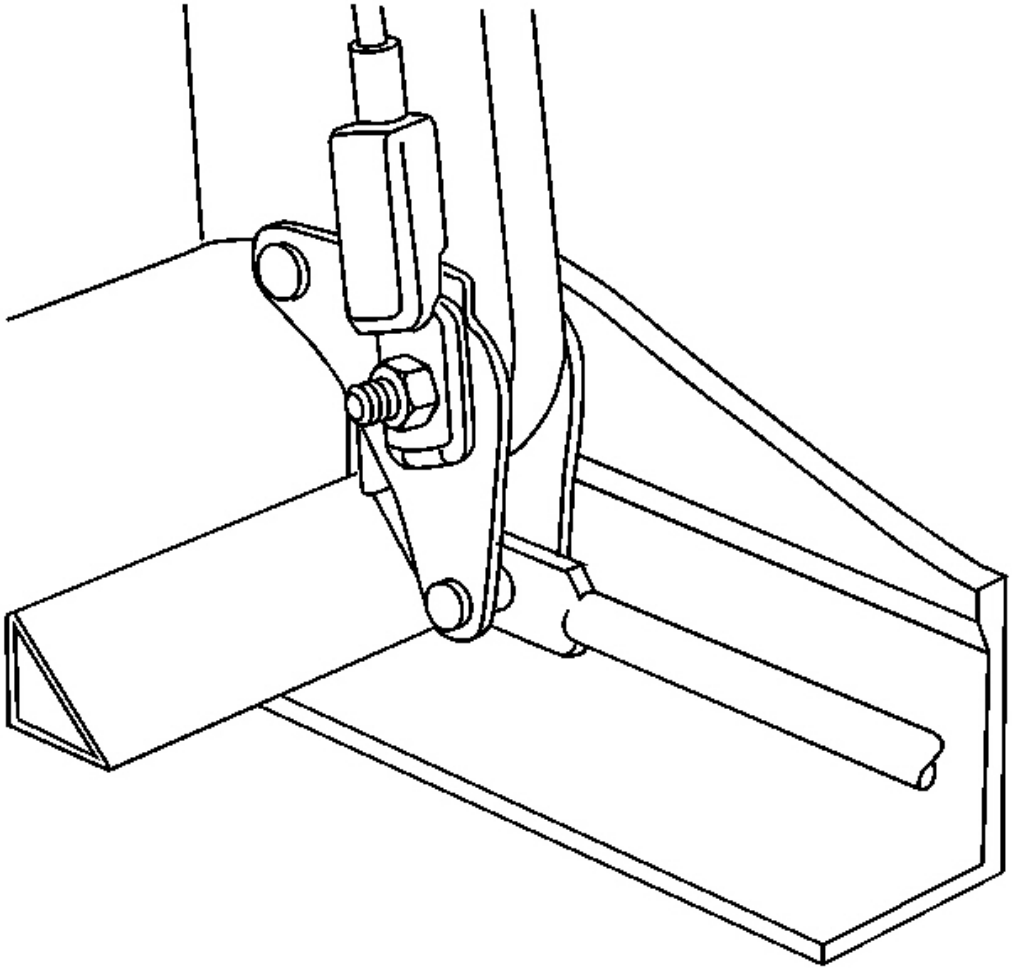

Fig. 30: Actuators Underneath Seat Frame Springs
Courtesy of GENERAL MOTORS CORP.

17. Remove the hinge bolts.
18. Remove the seat back.
19. Reposition the actuators underneath the seat frame springs.

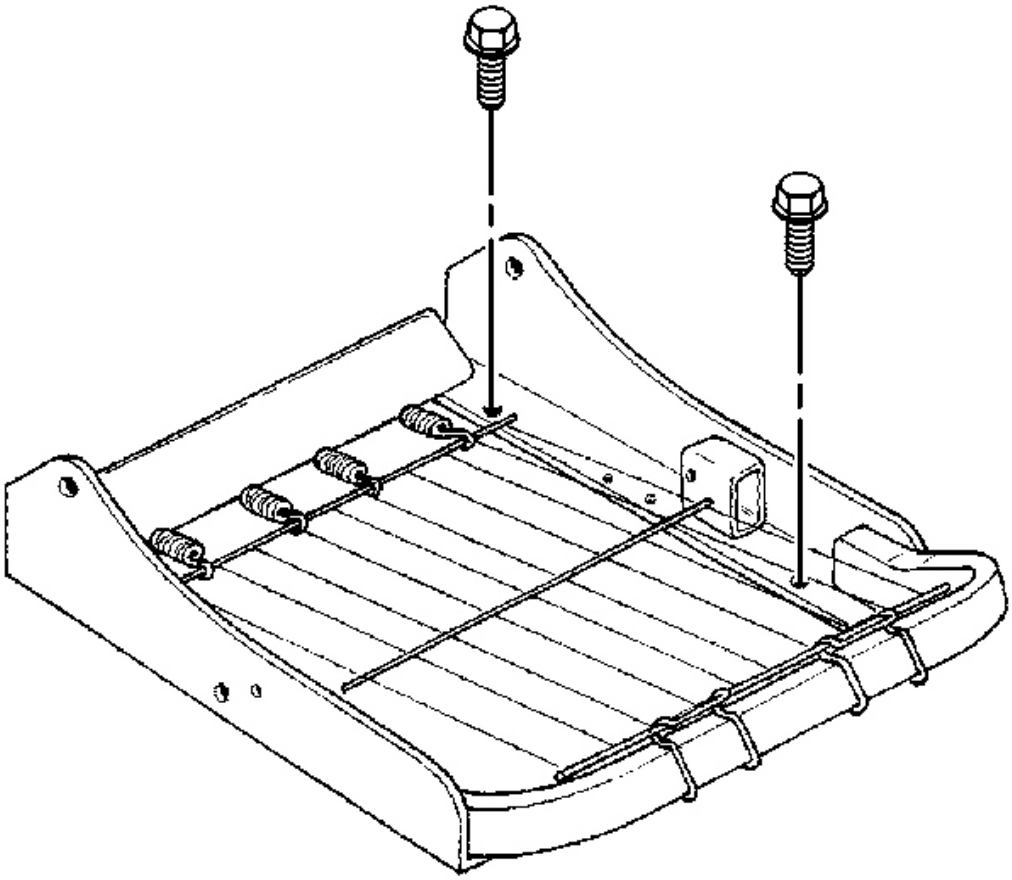

Fig. 31: Recliner Mechanism To Seat Cushion Frame
Courtesy of GENERAL MOTORS CORP.

20. Remove the seat cushion frame from the seat adjuster.
21. Remove the recliner mechanism from the seat cushion frame.

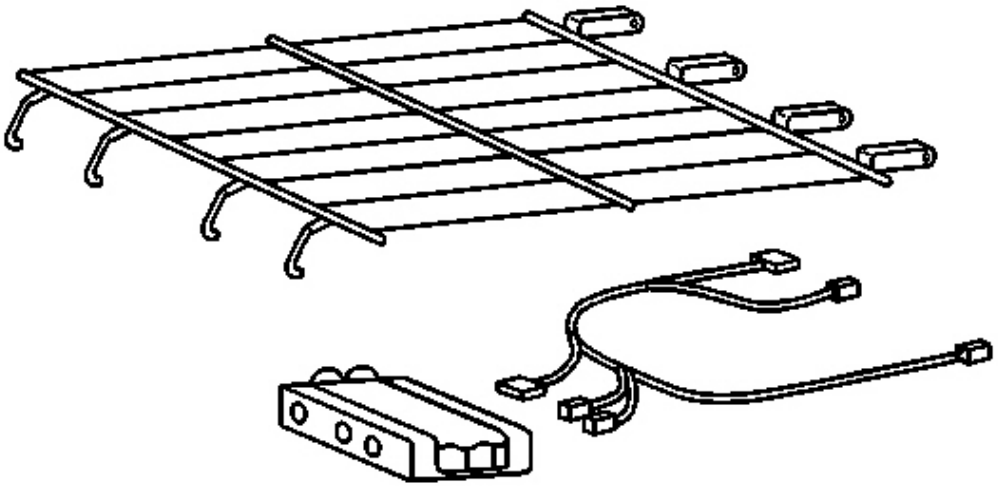

Fig. 32: Wire Assembly To Seat Cushion Frame
Courtesy of GENERAL MOTORS CORP.

22. Remove the wire assembly from the seat cushion frame (if replacing or transferring the wire assembly).
    1. Insert a screwdriver between the tension spring coils and pull toward the wires unhook the tension spring from the wire assembly.
    2. Unhook the wire assembly from the front of the seat cushion frame.

Installation Procedure

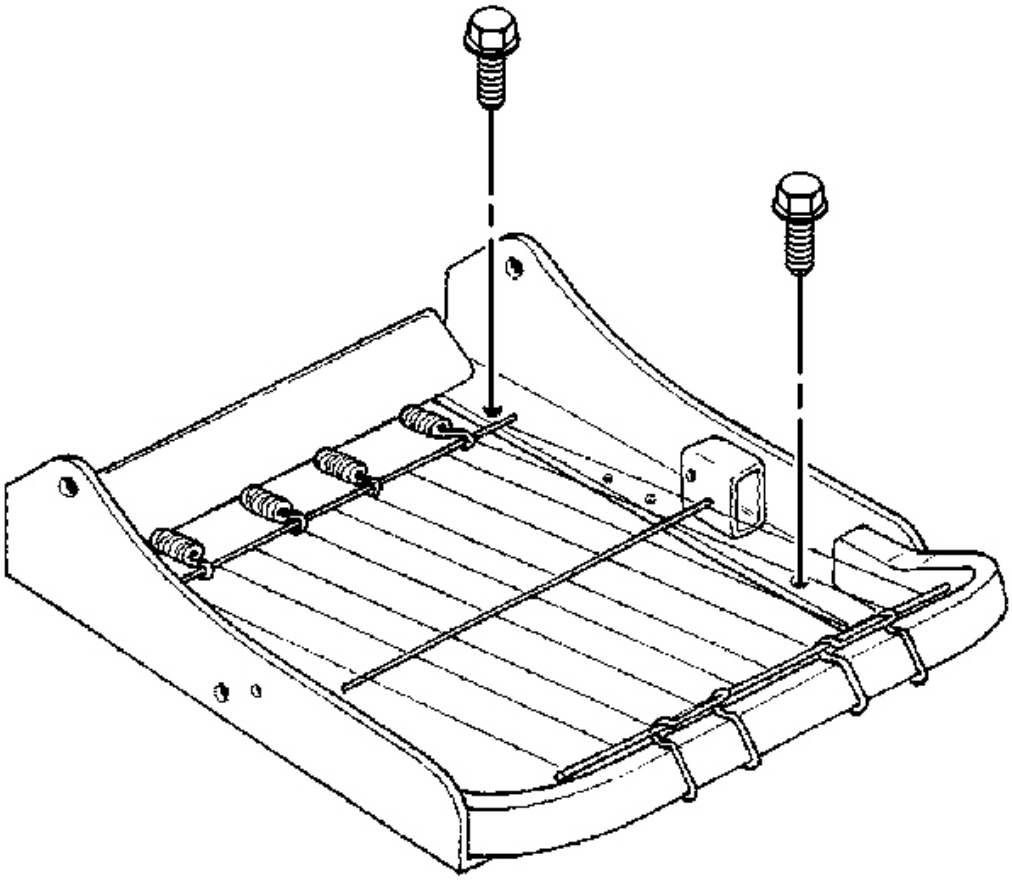

Fig. 33: Recliner Mechanism To Seat Cushion Frame
Courtesy of GENERAL MOTORS CORP.

1. Install the springs and wires to the seat cushion frame.
    1. Center the wire assembly to the front of the seat cushion frame.
    2. Hook the tension springs into the rear of the seat frame.
    3. Insert a screwdriver between the tension spring coils, stretch the spring to hook the spring to the wire assembly.

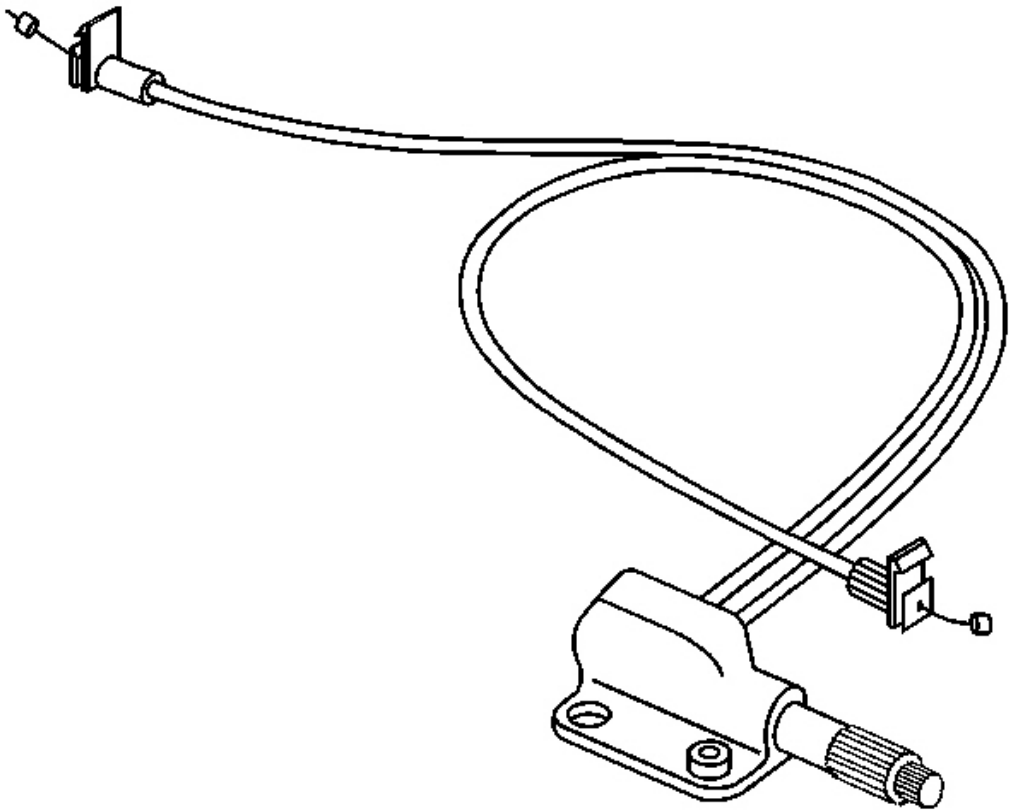

Fig. 34: Recliner Mechanism To Seat Frame
Courtesy of GENERAL MOTORS CORP.

2. Install the recliner mechanism to the seat frame.

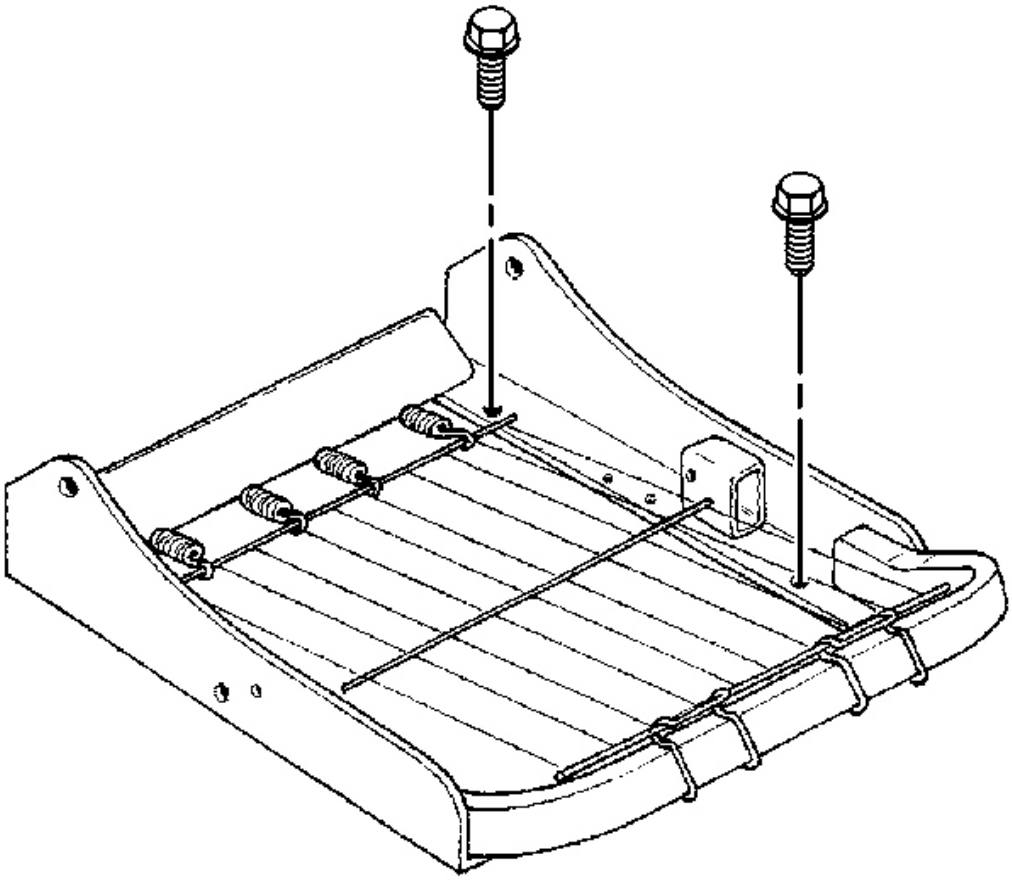

Fig. 35: Recliner Mechanism To Seat Cushion Frame
Courtesy of GENERAL MOTORS CORP.

3. Install the seat adjuster to the seat cushion frame.
4. Loop and route the reclining mechanism cables under the seat cushion frame springs.

   Position the actuators with the arrow on the hinge end of the actuator pointing forward and with the release cable clip opening pointed downward.

5. Insert the forward ends of the actuators into the actuator brackets.

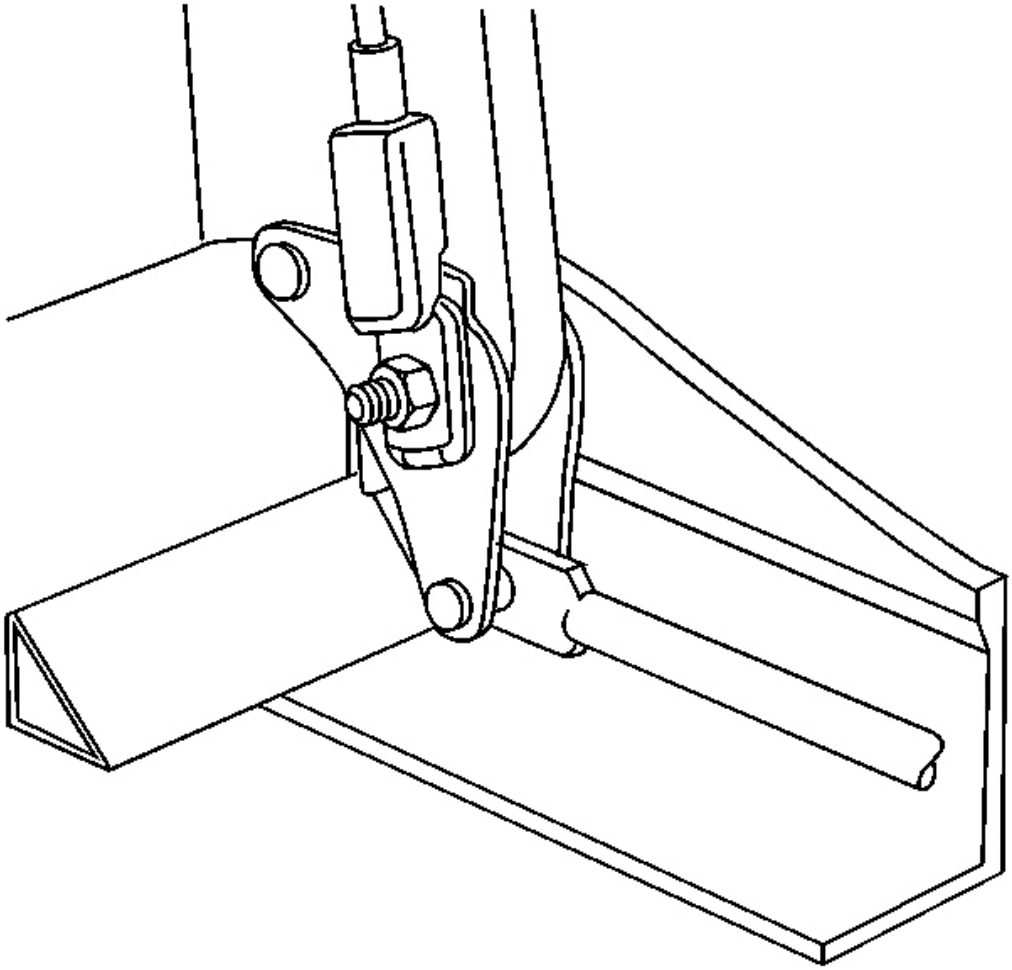

Fig. 36: Actuators Underneath Seat Frame Springs
Courtesy of GENERAL MOTORS CORP.

6. Install the seat back and the actuator to the seat cushion frame with the hinge bolts.
7. Apply Loctite(tm) 271 to the hinge bolt threads.

NOTE: Refer to Fastener Notice in Cautions and Notices.

8. Install the hinge bolt nuts.

Tighten: Tighten the hinge bolt nuts to 24 N.m (18 lb ft).

9. Install the pins to the forward ends of the actuators.

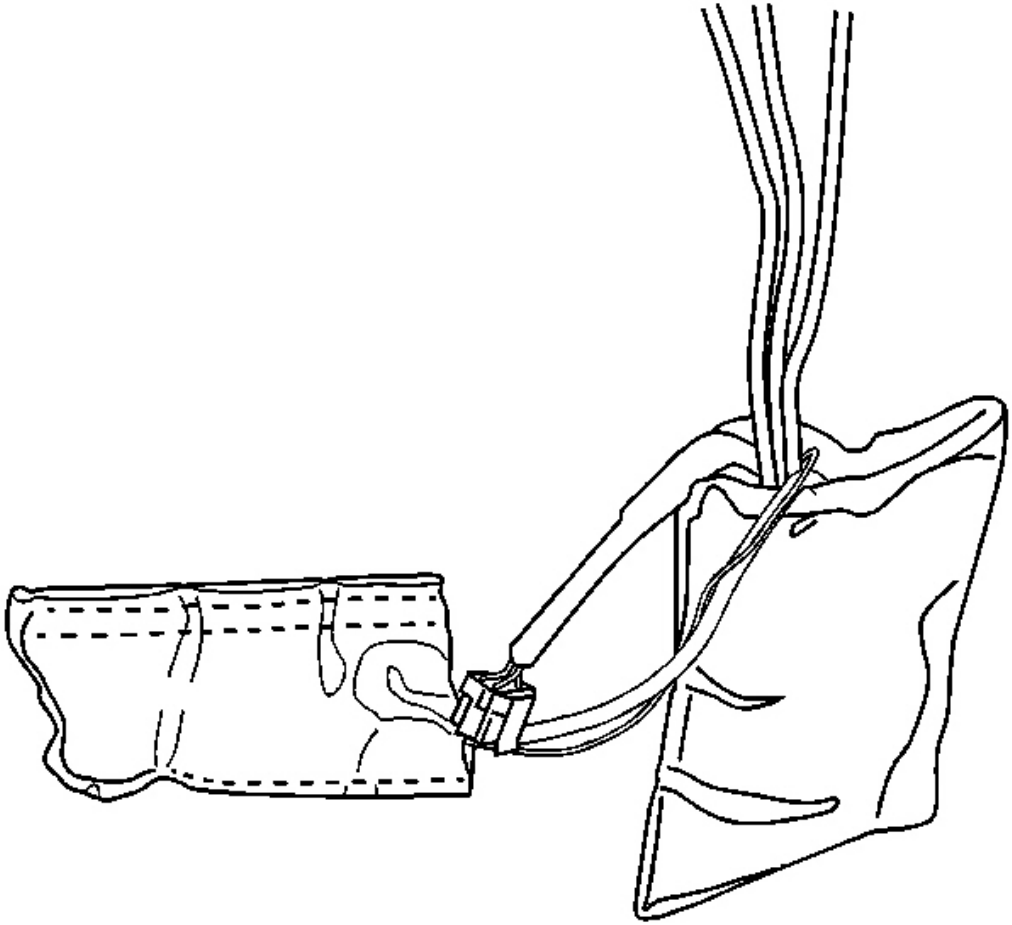

Fig. 37: Lumbar Pump & Module To Seat Frame & Seat Back
Courtesy of GENERAL MOTORS CORP.

10. Install the seat module (Base Power Seat).
11. Install the lumbar pump and module (Sport Seat).
12. Install the memory module (Optional Sport Seat).

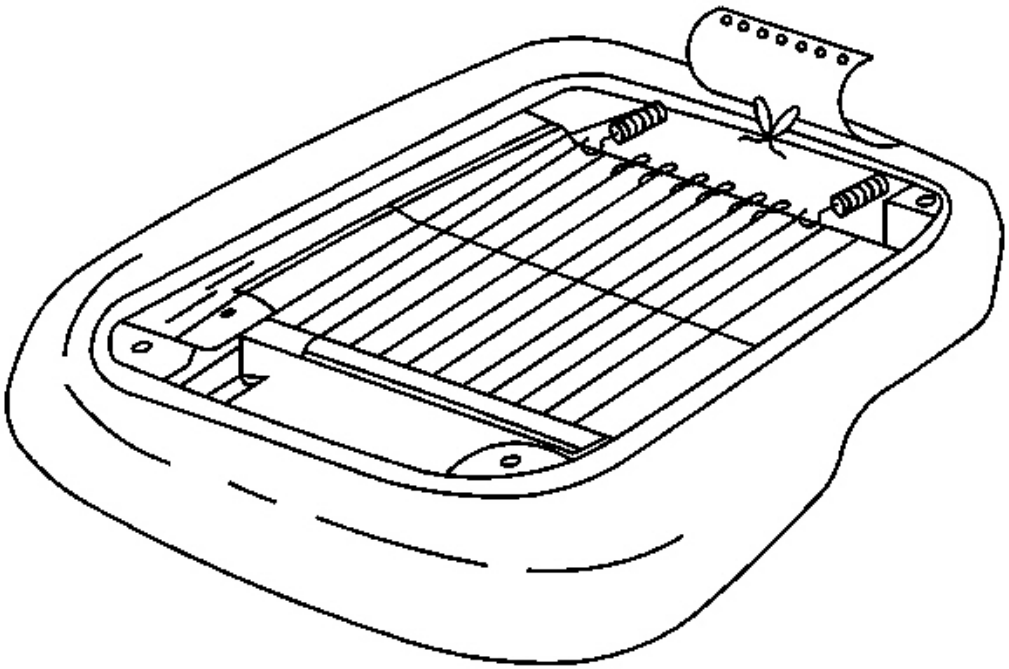

Fig. 38: Trim Cover To Seat Cushion Foam Pad
Courtesy of GENERAL MOTORS CORP.

13. Position the trim cover over the seat cushion foam pad.
14. Install the cover and foam pad to the seat cushion frame.
15. Tighten the draw string at the rear of the seat cushion and securely tie the draw string.
16. Install the hogrings attaching the rear side corners of the seat cushion trim cover.

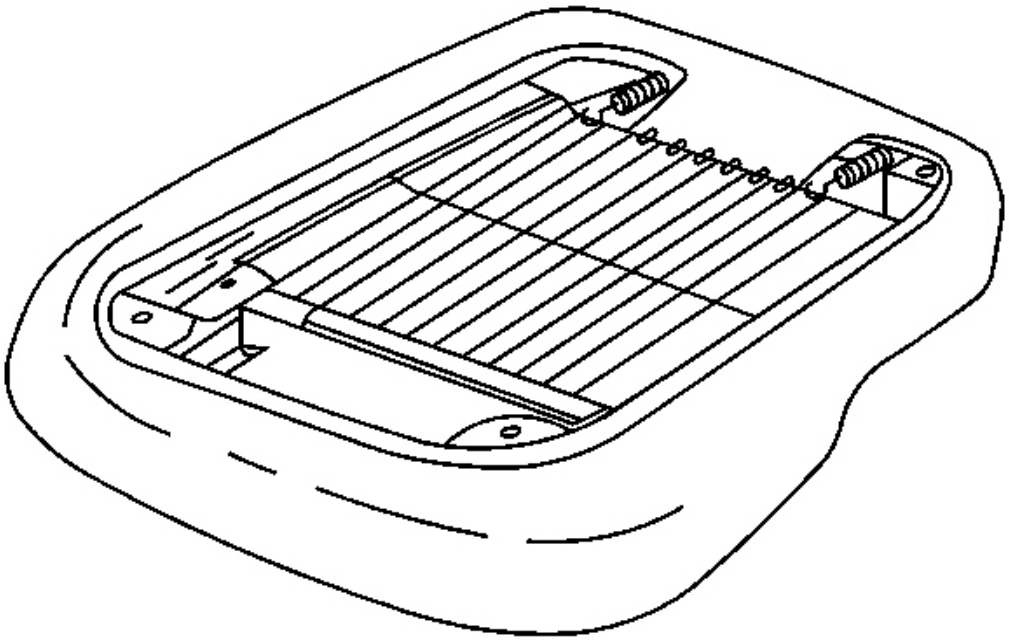

Fig. 39: Rear Flap To Seat Cushion Cover
Courtesy of GENERAL MOTORS CORP.

17. Install the hogrings attaching the rear center flap.

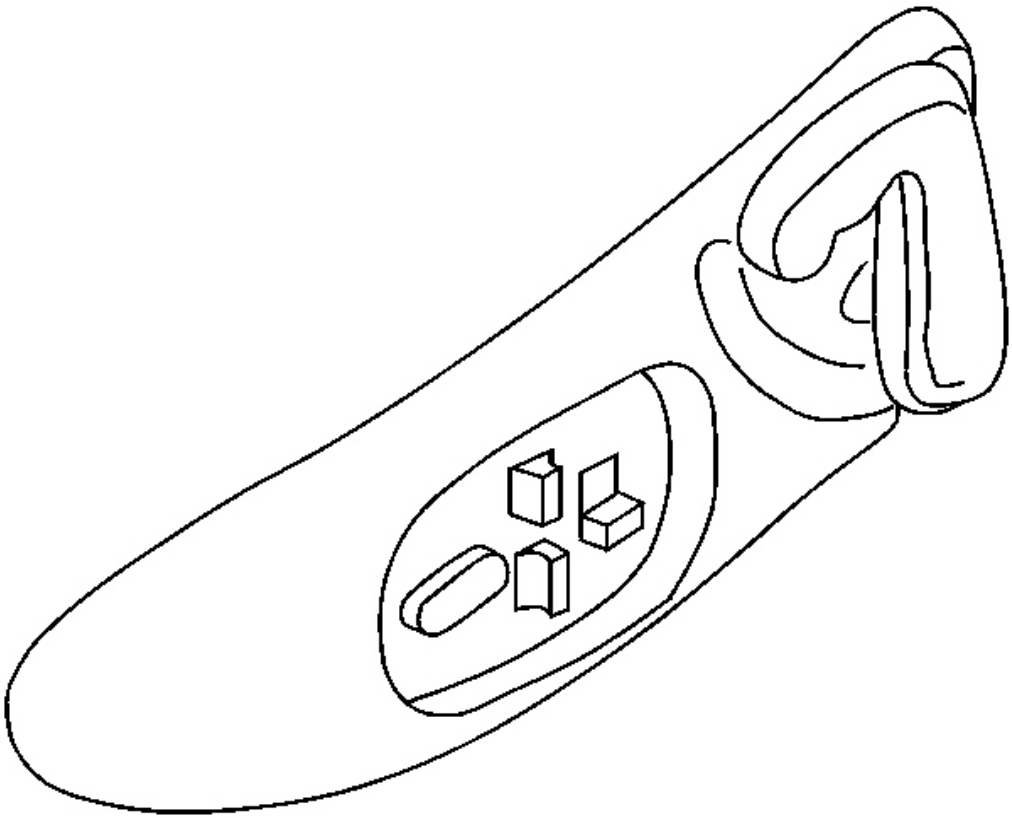

Fig. 40: Side Trim Panel & Switch Harness
Courtesy of GENERAL MOTORS CORP.

18. Install the side trim panel (Power Seat). Refer to **Trim Panel Replacement - Front Seat** .

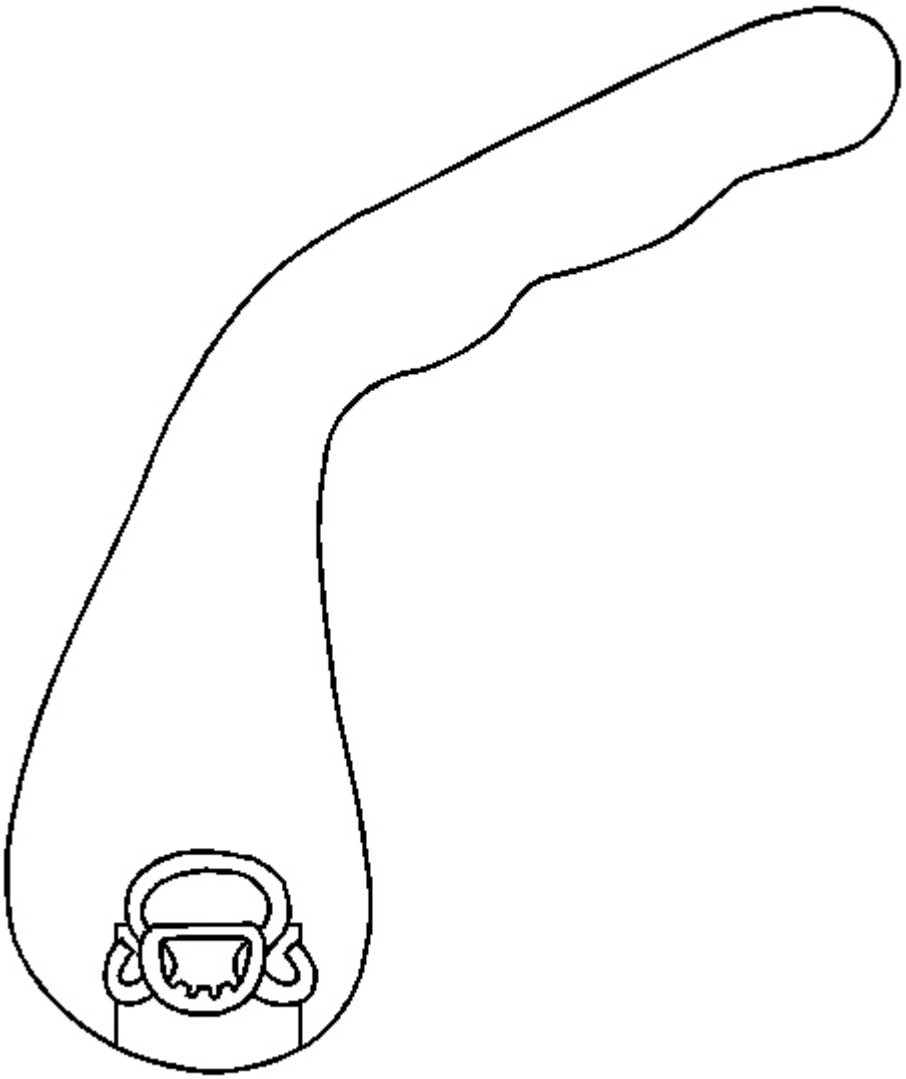

Fig. 41: Recliner Handle To Reclining Mechanism Shaft
Courtesy of GENERAL MOTORS CORP.

19. Install the recliner handle.
    1. Position the handle retaining spring clip into the lock position.
    2. Snap the handle onto the reclining mechanism shaft.

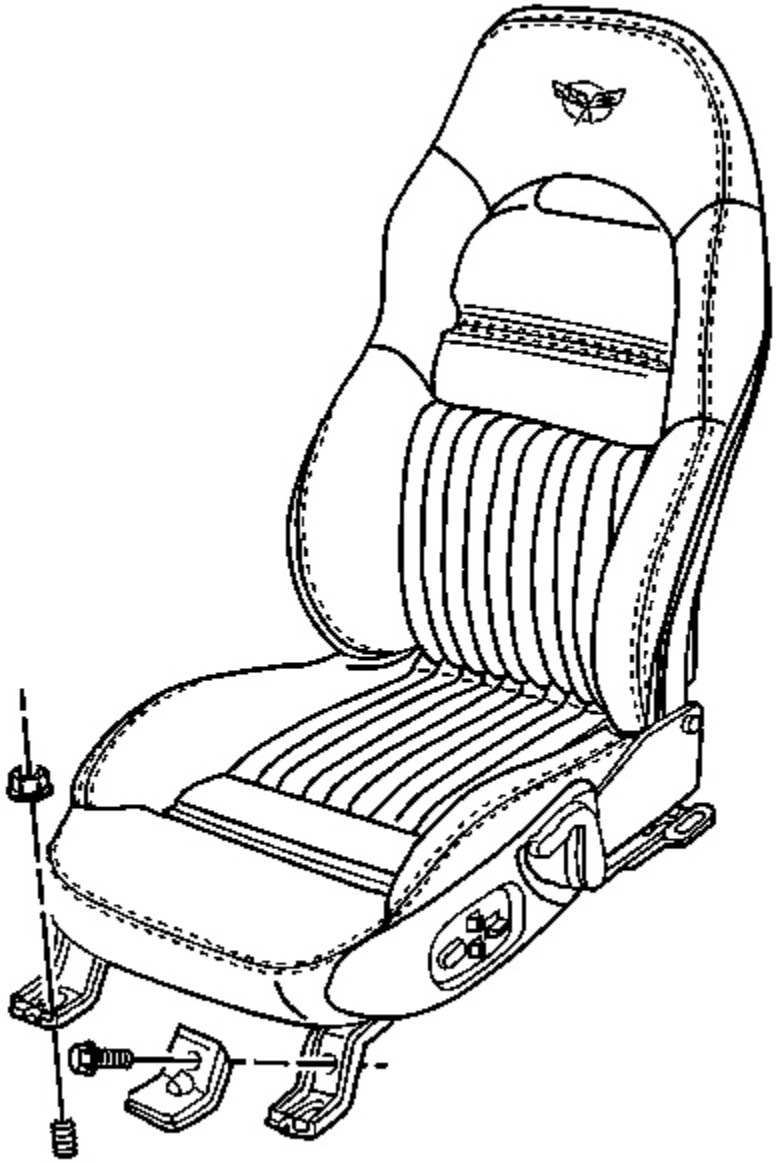

Fig. 42: Seat Mounting View
Courtesy of GENERAL MOTORS CORP.

20. Install the buckle side of the seat belt to the seat frame.

    Tighten: Tighten the seat belt buckle side mounting nut to 50 N.m (37 lb ft).

21. Install the seat. Refer to **Seat Replacement (Power)** or **Seat Replacement (Manual)** .

SEAT CUSHION TRIM COVER AND PAD REPLACEMENT

Removal Procedure

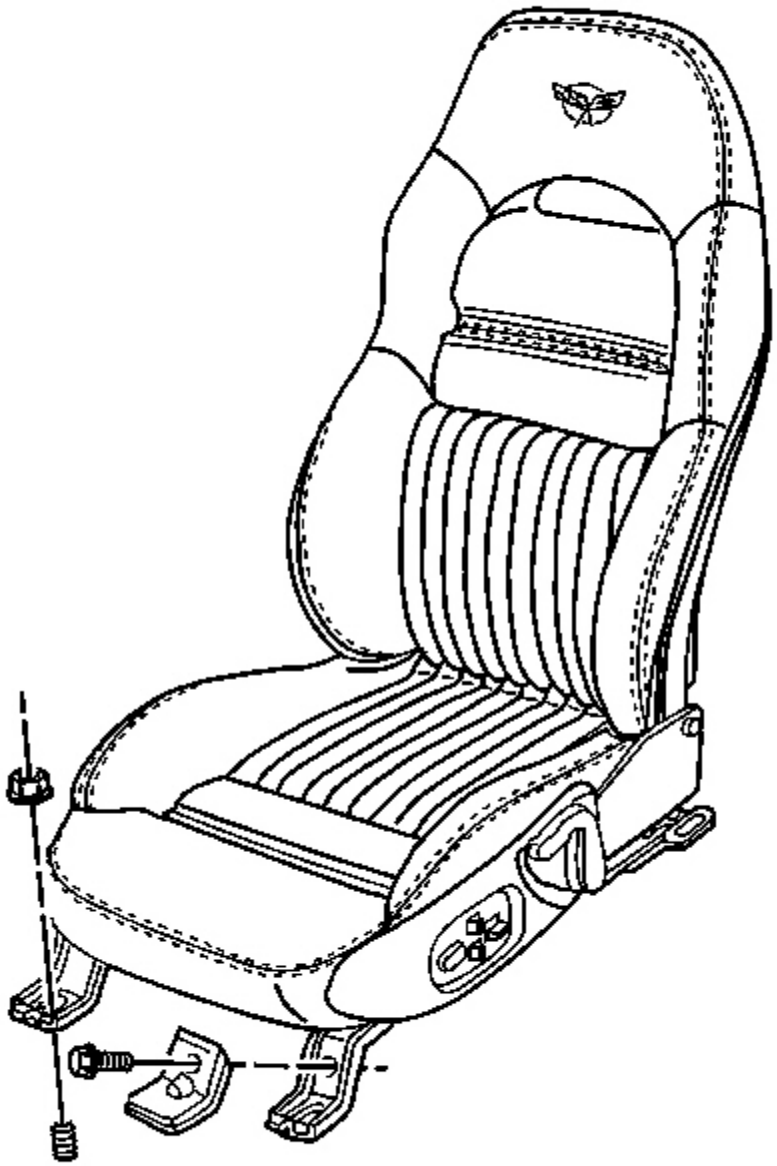

Fig. 43: Seat Mounting Component View
Courtesy of GENERAL MOTORS CORP.

1. Remove the seat. Refer to **Seat Replacement (Power)** or **Seat Replacement (Manual)** .
2. Remove the seat belt buckle from the seat frame.

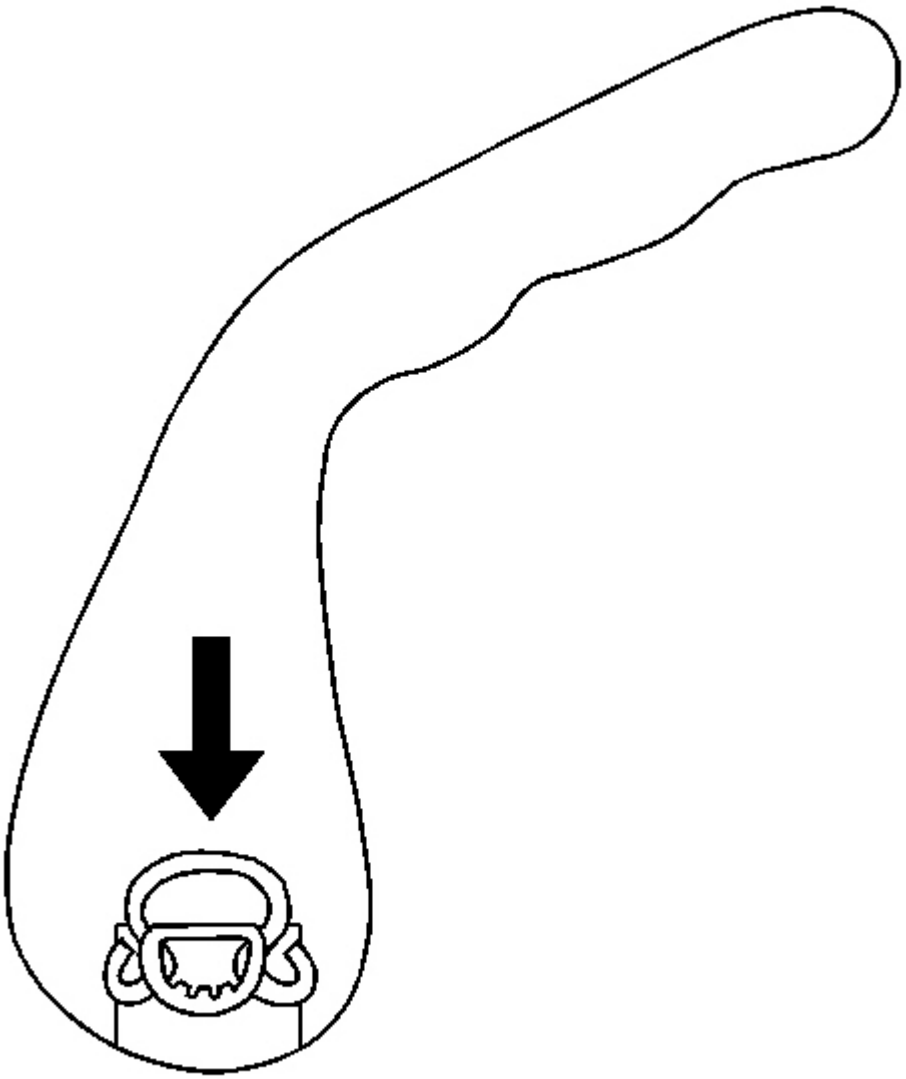

Fig. 44: Seat Back Recliner Handle
Courtesy of GENERAL MOTORS CORP.

3. Remove the recliner handle.
    1. With a suitable blunt ended tool inserted between the cushion and the handle push the handle retaining spring clip down.
    2. Pull the handle from the shaft.

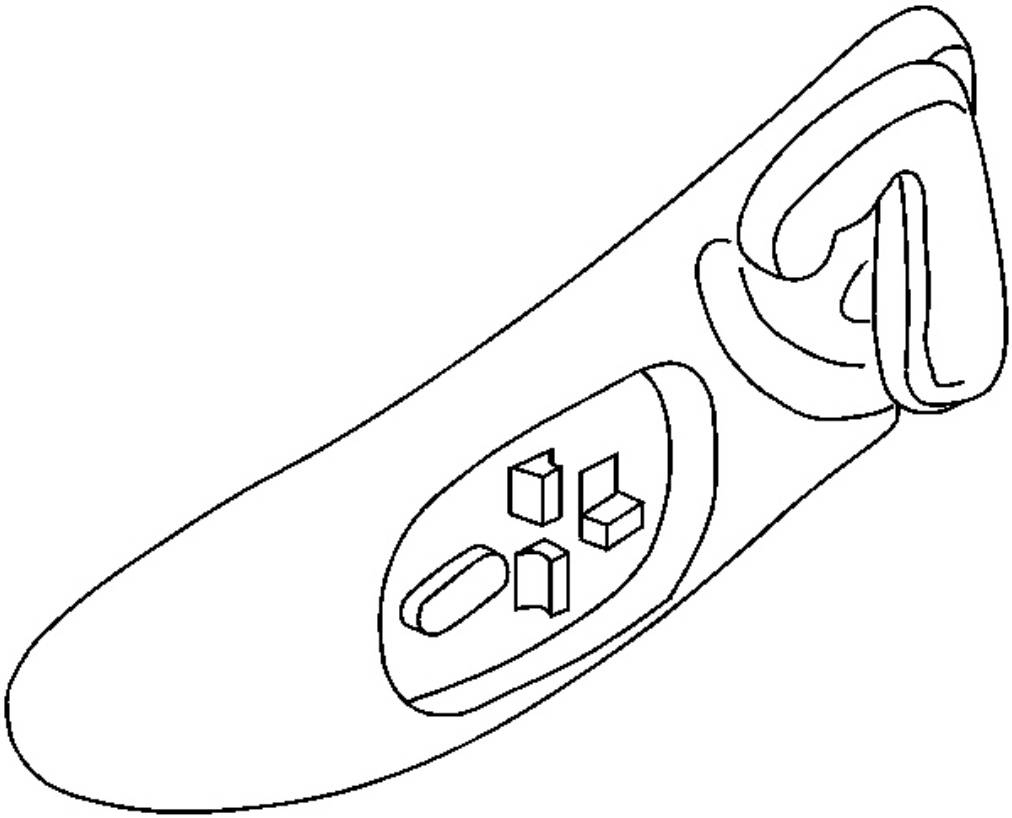

Fig. 45: Side Trim Panel & Switch Harness
Courtesy of GENERAL MOTORS CORP.

4. Remove the side trim panel (power seat). Refer to **Trim Panel Replacement - Front Seat** .

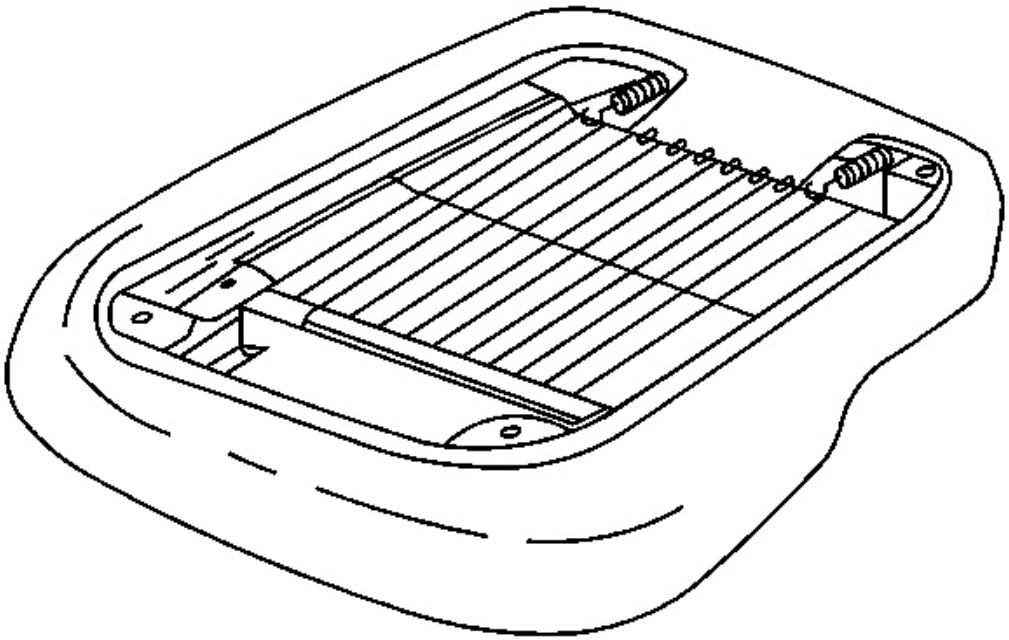

Fig. 46: Rear Flap To Seat Cushion Cover
Courtesy of GENERAL MOTORS CORP.

5. Remove the hog-rings from the rear flap.

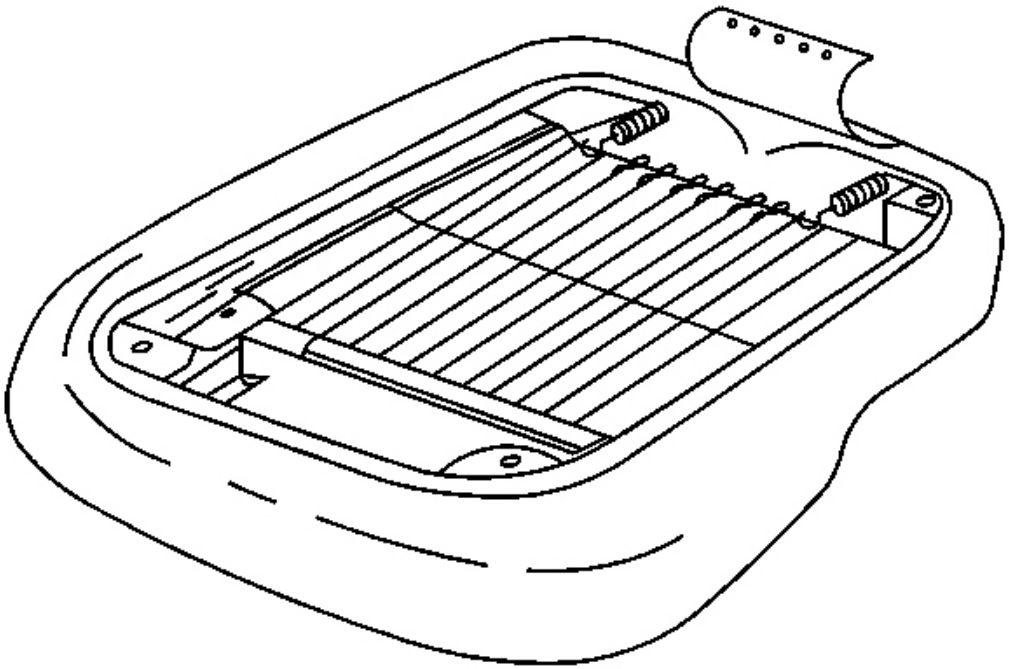

Fig. 47: Rear Corners At Seat Cushion Cover
Courtesy of GENERAL MOTORS CORP.

6. Raise the flap.
7. Unfasten the draw string.
8. Remove the hog-rings attaching the rear corners of the seat cushion trim cover.
9. Remove the cover and foam pad.
10. Remove the cover from the foam pad.

Installation Procedure

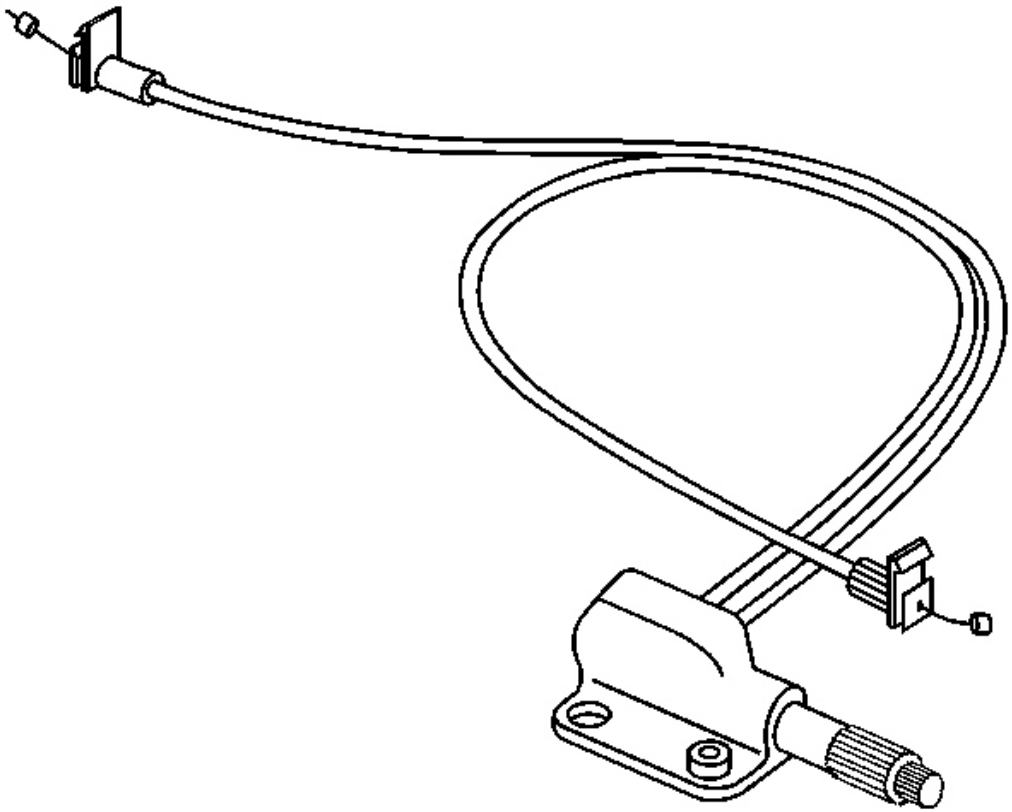

Fig. 48: Recliner Mechanism To Seat Frame
Courtesy of GENERAL MOTORS CORP.

1. Ensure that the recliner mechanism cable retention clips are securely snapped into the actuators.

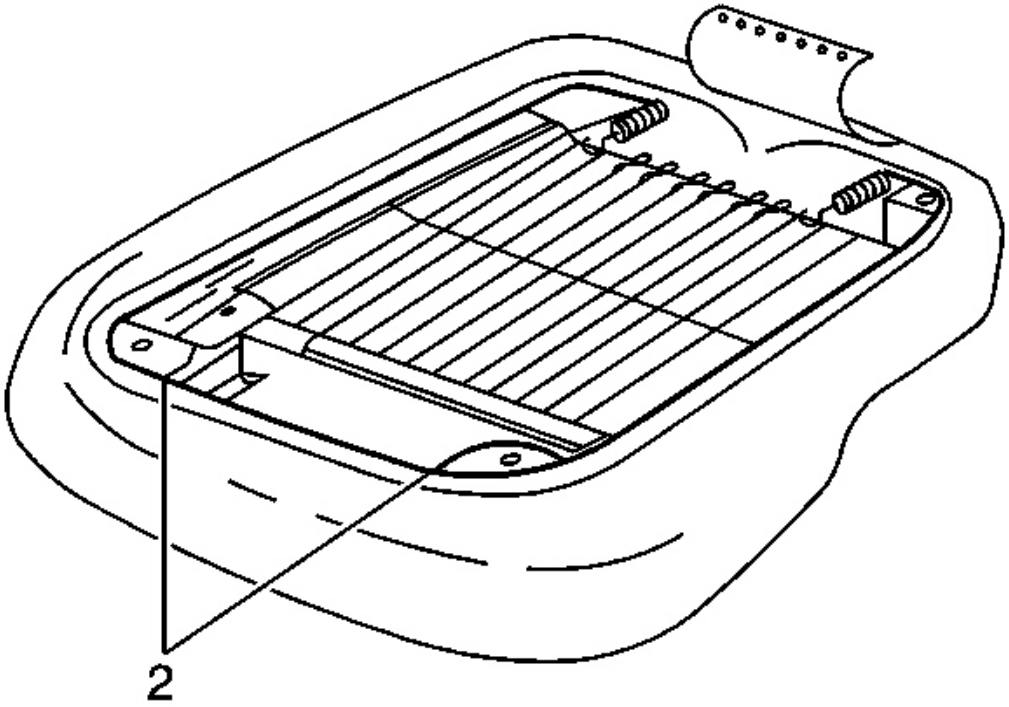

Fig. 49: Center Of Cushion Cover To Draw String Receded
Courtesy of GENERAL MOTORS CORP.

2. If the draw string was cut to assist in removing a non-movable seat, perform the following steps:
    1. Remove the hog-rings attaching the seat cushion cover rear flap.
    2. Untie the draw string.
    3. Make a very small cut 100 mm (2 in) on each side of the center of the cushion cover just in front of where the cut draw string receded (2).
    4. Pull the draw string out of the cover far enough to tie the ends together.
    5. Securely tie the draw string ends together using a square knot. The ends of the draw string should extend a minimum of one inch beyond the knot.

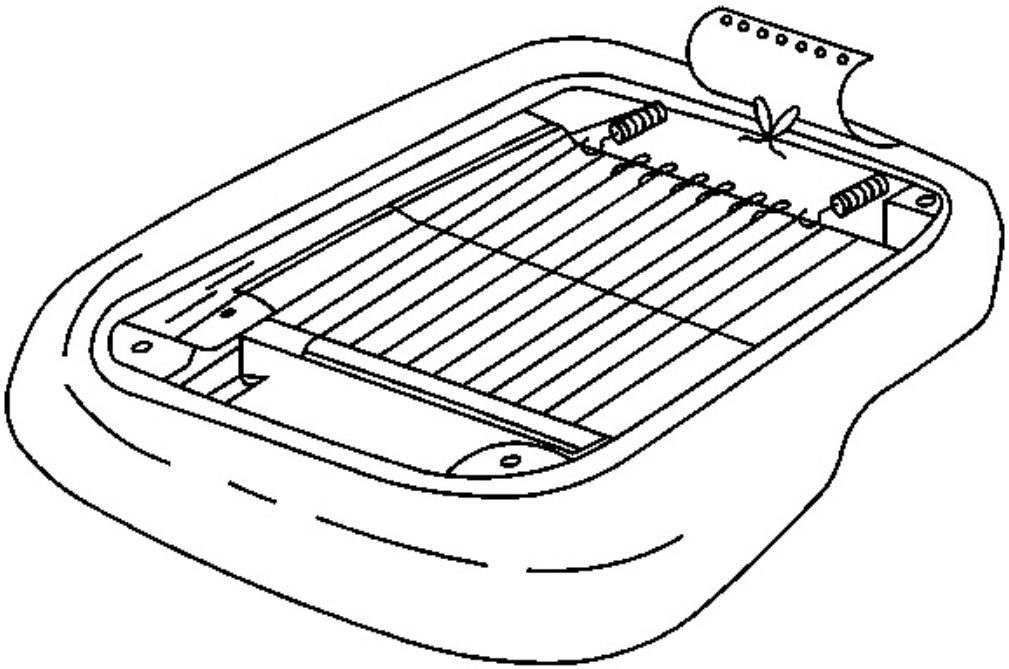

Fig. 50: Trim Cover To Seat Cushion Foam Pad
Courtesy of GENERAL MOTORS CORP.

3. Position the trim cover over the seat cushion foam.
4. Install the cover and foam to the seat frame.
5. Tighten the draw string at the rear of the seat and securely tie.
6. Install the hog-rings attaching the rear side corners of the seat cushion trim cover.

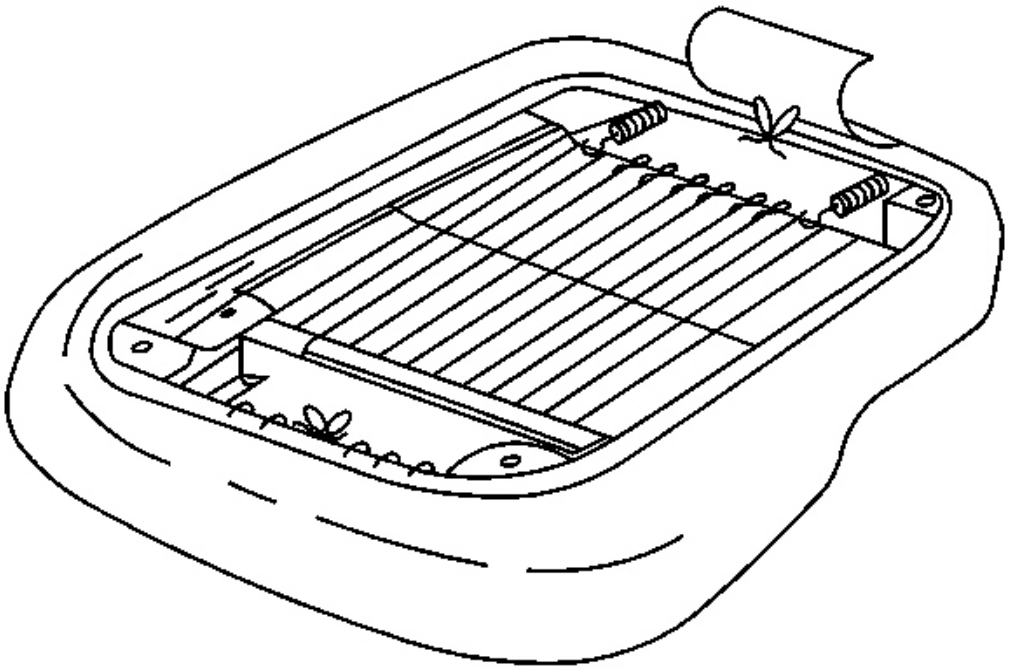

Fig. 51: Front Seat To Draw String & Hog-Ring
Courtesy of GENERAL MOTORS CORP.

7. If step 2 was preformed wrap the front seat material around the draw string and hog-ring the material to the string. Make sure no sharp points of the hog-rings are pointed down.

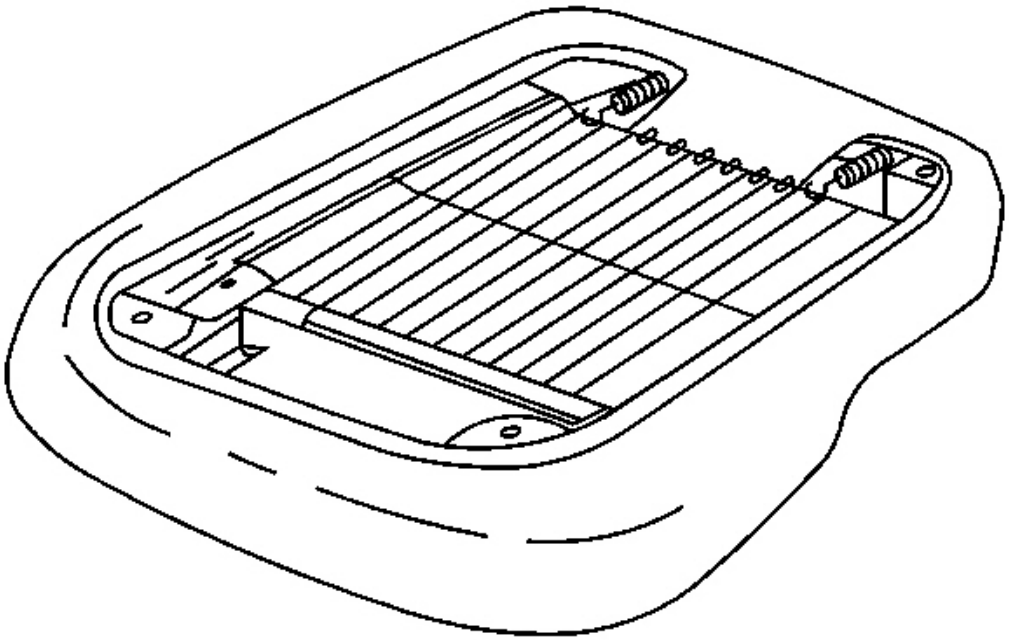

Fig. 52: Rear Flap To Seat Cushion Cover
Courtesy of GENERAL MOTORS CORP.

8. Install the hog-rings attaching the rear center flap.

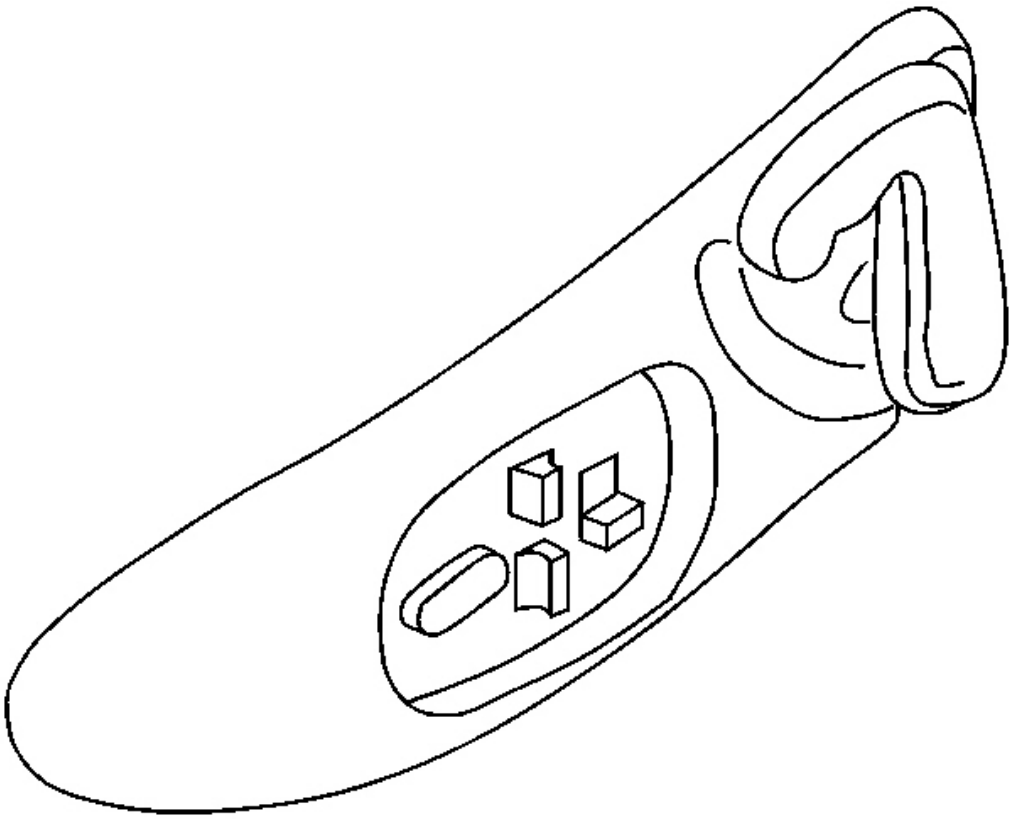

Fig. 53: Side Trim Panel & Switch Harness
Courtesy of GENERAL MOTORS CORP.

9. Install the side trim panel (power seat). Refer to **Trim Panel Replacement - Front Seat** .

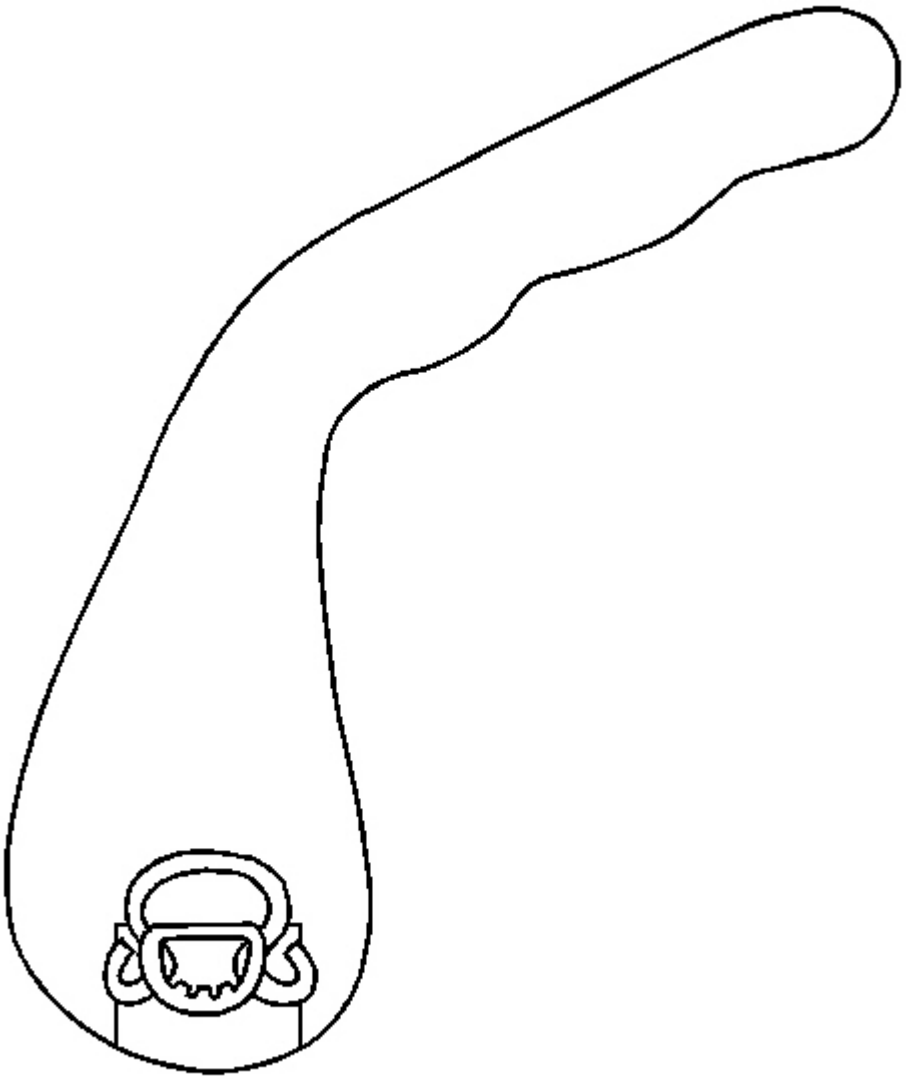

Fig. 54: Recliner Handle To Reclining Mechanism Shaft
Courtesy of GENERAL MOTORS CORP.

10. Install the recliner handle.
    1. Position the handle retaining spring clip into the lock position.
    2. Snap the handle onto the reclining mechanism shaft.

NOTE: Refer to Fastener Notice in Cautions and Notices.

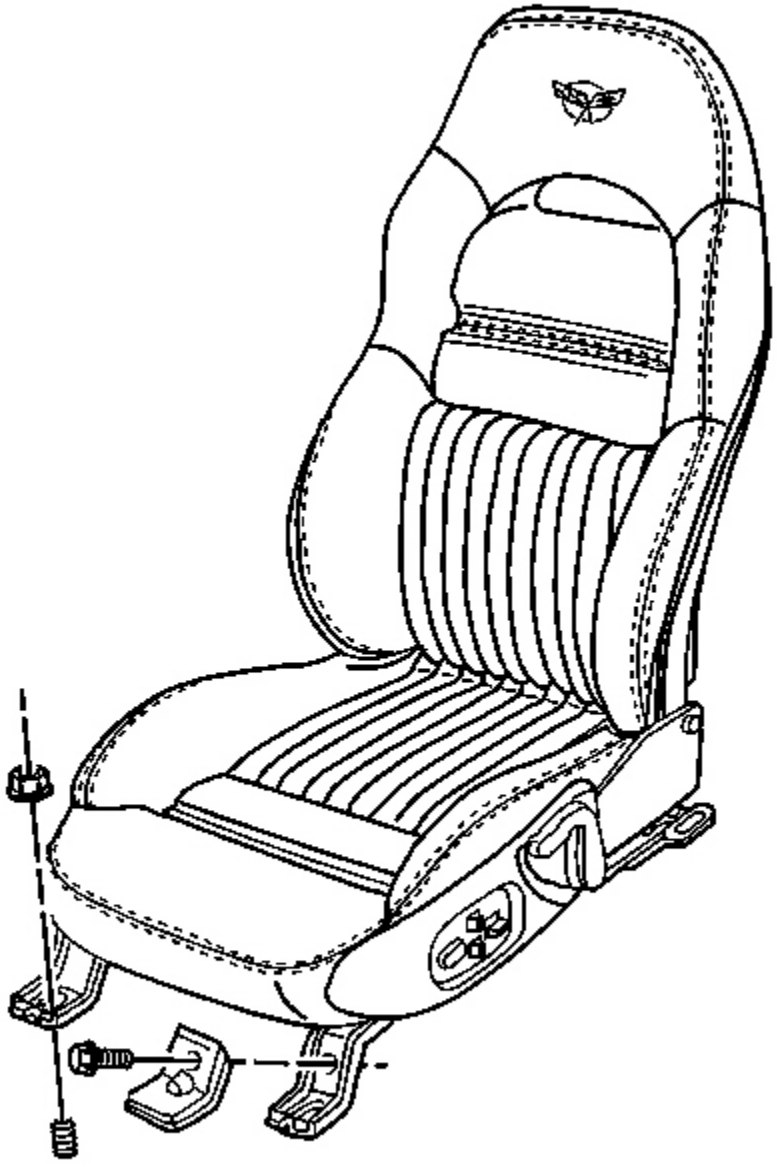

Fig. 55: Seat Mounting Component View
Courtesy of GENERAL MOTORS CORP.

11. Install the seat belt buckle to the seat frame.

    Tighten: Tighten the seat belt buckle side mounting nut to 50 N.m (37 lb ft).

12. Install the seat. Refer to **Seat Replacement (Power)** or **Seat Replacement (Manual)** .

SEAT BACK COVER AND PAD REPLACEMENT - FRONT (RPO AR9 BASE SEAT)

Removal Procedure

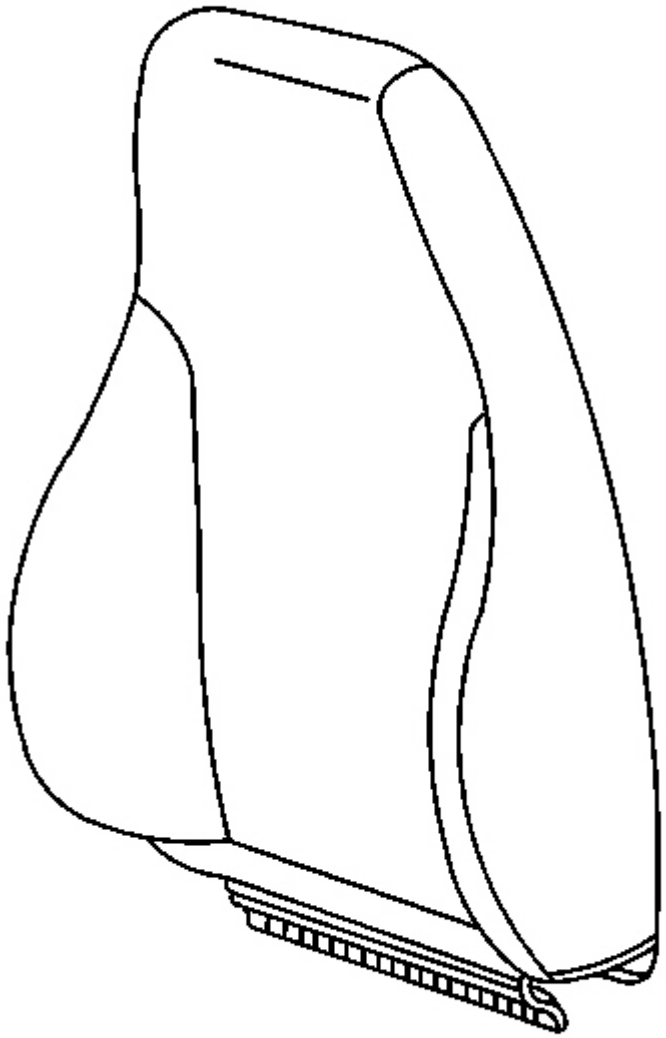

Fig. 56: Seat Back Cover & Seat Back Release Lever Bezel
Courtesy of GENERAL MOTORS CORP.

1. Position the seat forward.

2. Tilt the seat back forward.
3. Unzip the seat back cover.
4. Unhook the seat back cover lower J strips by sliding the cover sideways.
5. Carefully slide and pull the cover material out from under the seat back release lever bezel.
6. Remove the cover unhooking the hook and loop fasteners from the foam pad.
7. Remove the upper fasteners attaching the foam pad (if removing the pad).
8. Remove the foam pad (if necessary).

Installation Procedure

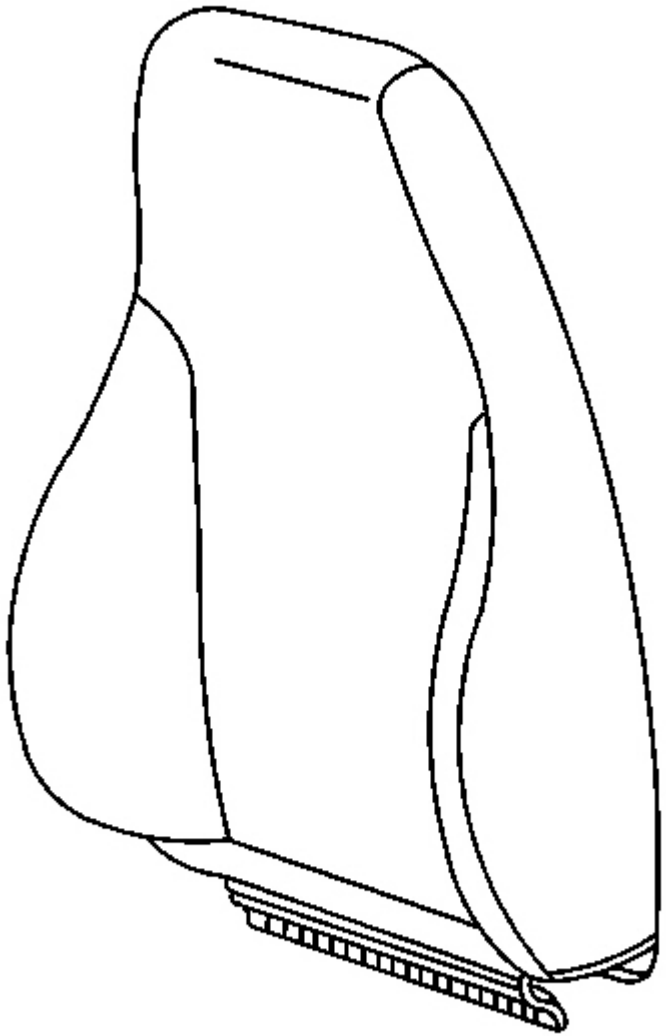

Fig. 57: Seat Back Cover & Seat Back Release Lever Bezel
Courtesy of GENERAL MOTORS CORP.

1. Install the foam pad over the seat back frame (if removed).
2. Attach the foam pad top straps with fir tree fasteners (if removed).
3. Position the cover over the foam.
4. Carefully tuck the seat back material behind the release lever bezel.
5. Zip the cover closed.
6. Firmly pull the seat back cover down over the seat frame.

7. Hook the seat back lower trim cover J strip.

SEAT BACK RECLINER MECHANISM REPLACEMENT - FRONT

Removal Procedure

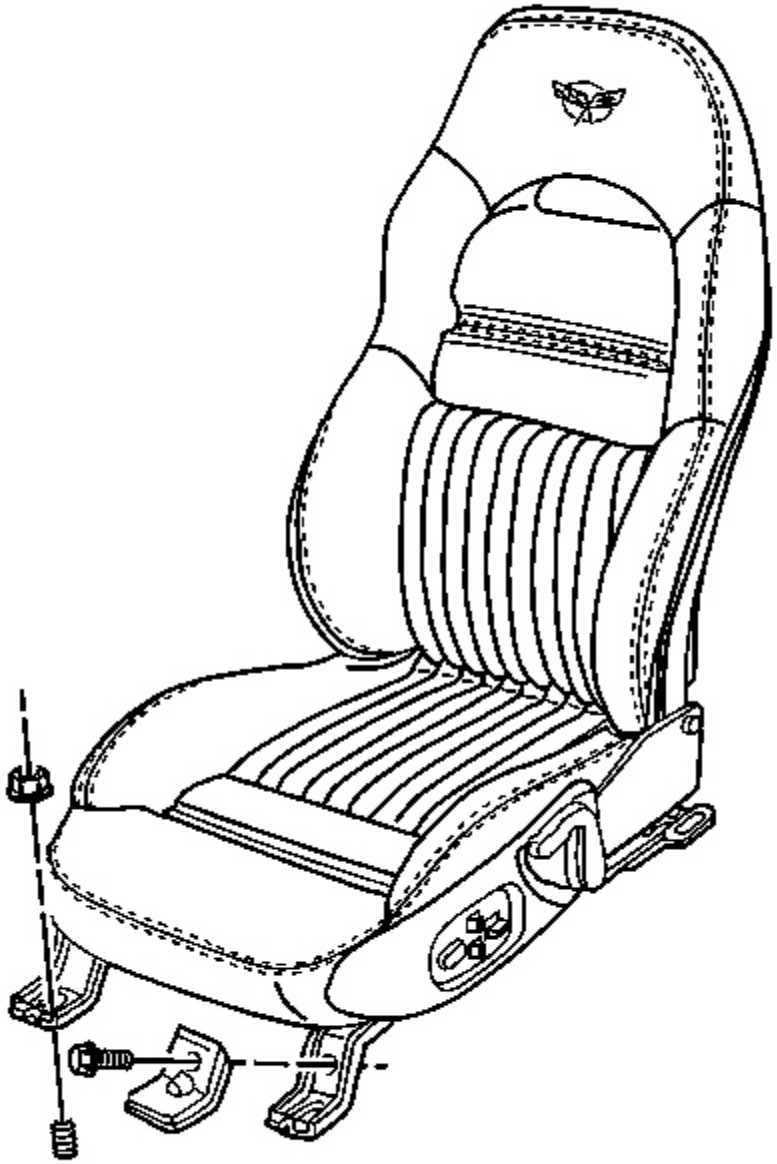

Fig. 58: Seat Mounting Component View
Courtesy of GENERAL MOTORS CORP.

1. Raise the seat to the full up position (power seat).
2. Remove the seat. Refer to **Seat Replacement (Power)** or **Seat Replacement (Manual)** .

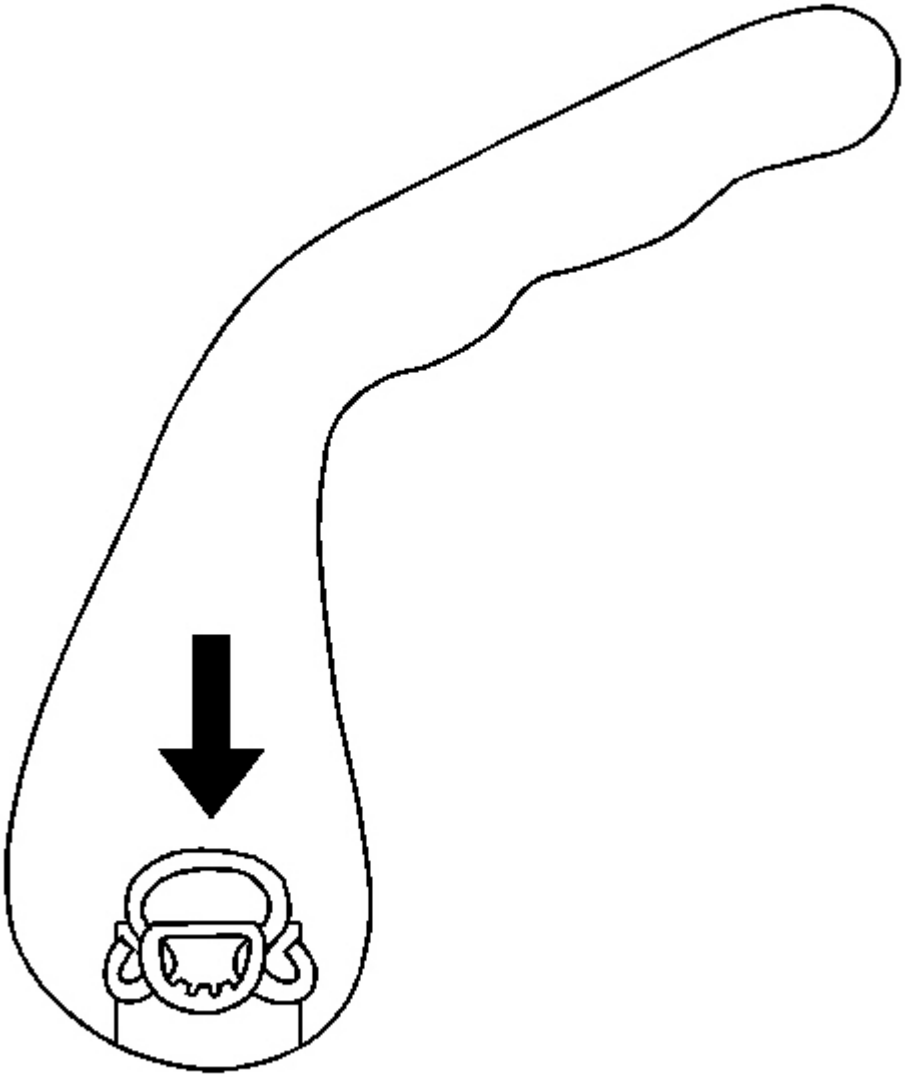

Fig. 59: Seat Back Recliner Handle
Courtesy of GENERAL MOTORS CORP.

3. Remove the recliner handle.
    1. With a suitable blunt ended tool inserted between the cushion and the handle push the handle retaining spring clip down.
    2. Pull the handle from the shaft.

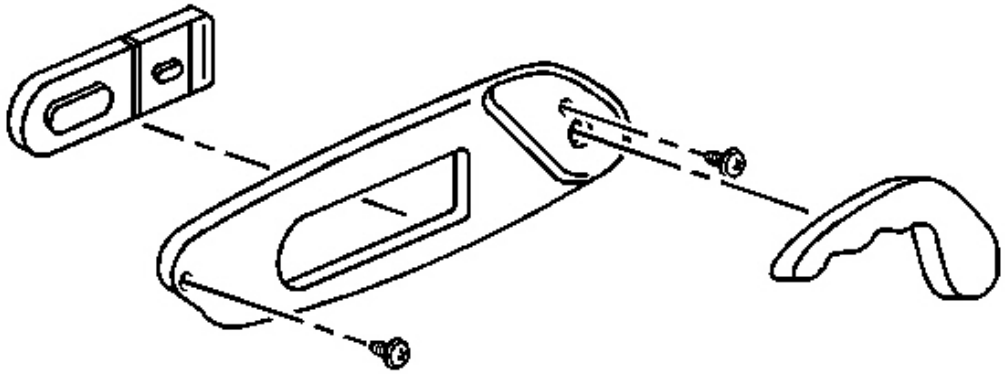

Fig. 60: Switch To Side Trim Panel & Screws
Courtesy of GENERAL MOTORS CORP.

4. Remove the side trim panel. Refer to **Trim Panel Replacement - Front Seat** .

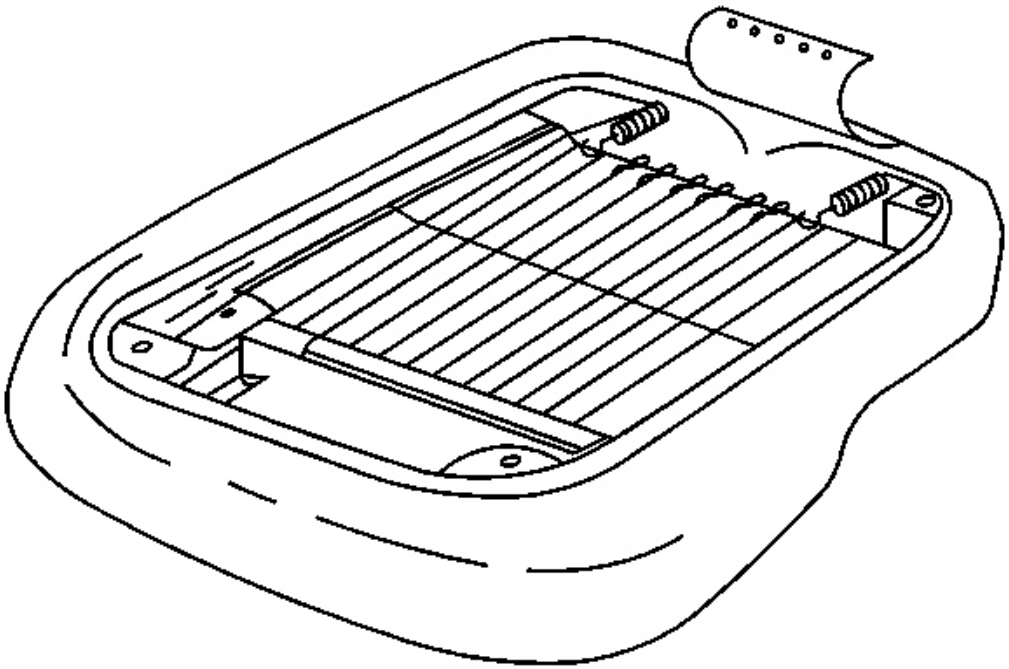

Fig. 61: Rear Corners At Seat Cushion Cover
Courtesy of GENERAL MOTORS CORP.

5. Remove the seat cushion cover. Refer to **Seat Cushion Trim Cover and Pad Replacement** .

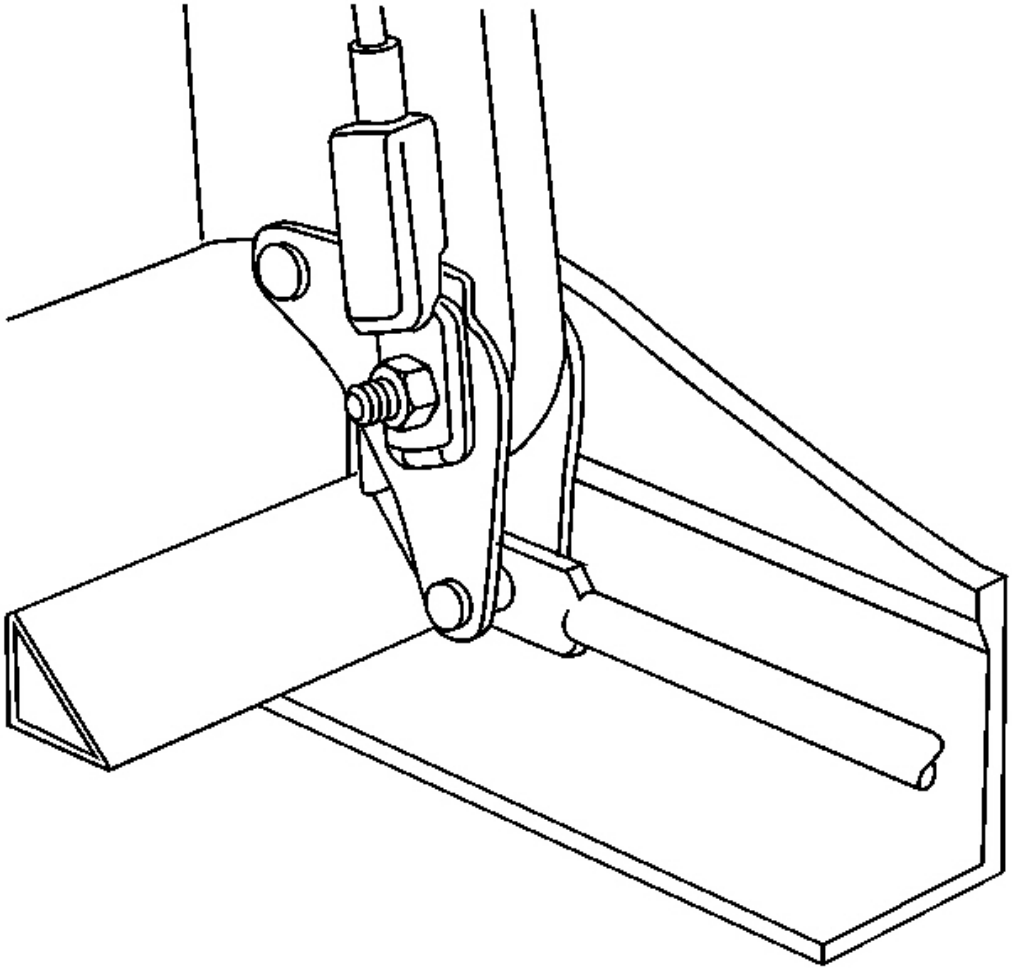

Fig. 62: Actuators Underneath Seat Frame Springs
Courtesy of GENERAL MOTORS CORP.

6. Remove the hinge pin nuts and the hinge pins.
7. Lay the seatback down
8. Remove the cables from the actuators.

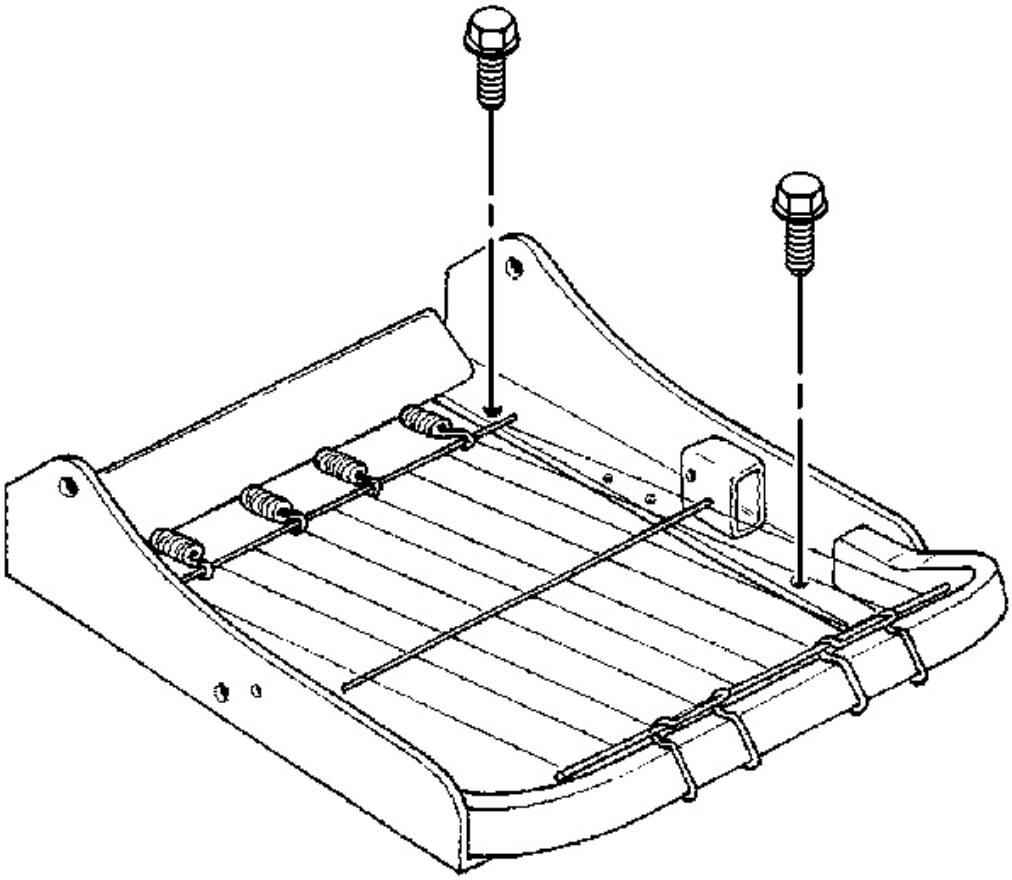

Fig. 63: Recliner Mechanism To Seat Cushion Frame
Courtesy of GENERAL MOTORS CORP.

9. Remove the seat from the adjuster to access the recliner mechanism attaching screws (Base Seat only).

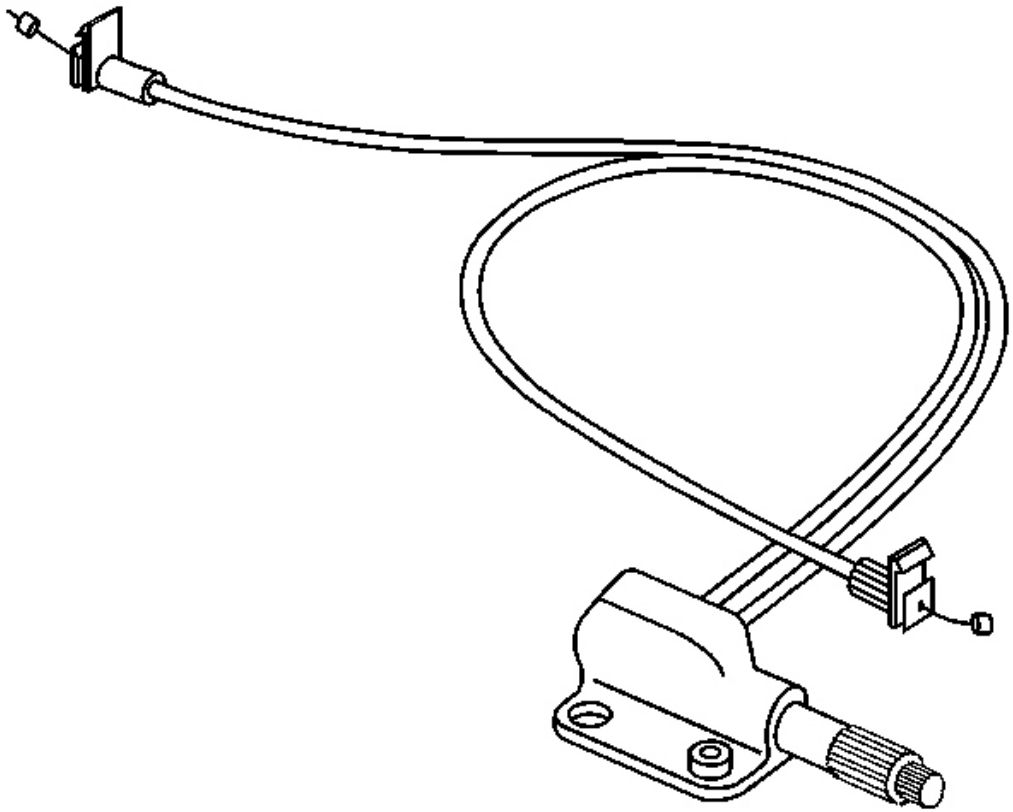

Fig. 64: Recliner Mechanism To Seat Frame
Courtesy of GENERAL MOTORS CORP.

10. Remove the screws attaching the recliner mechanism.
11. Remove the recliner mechanism.

Installation Procedure

IMPORTANT: Do not lubricate the seatback recliner mechanism.

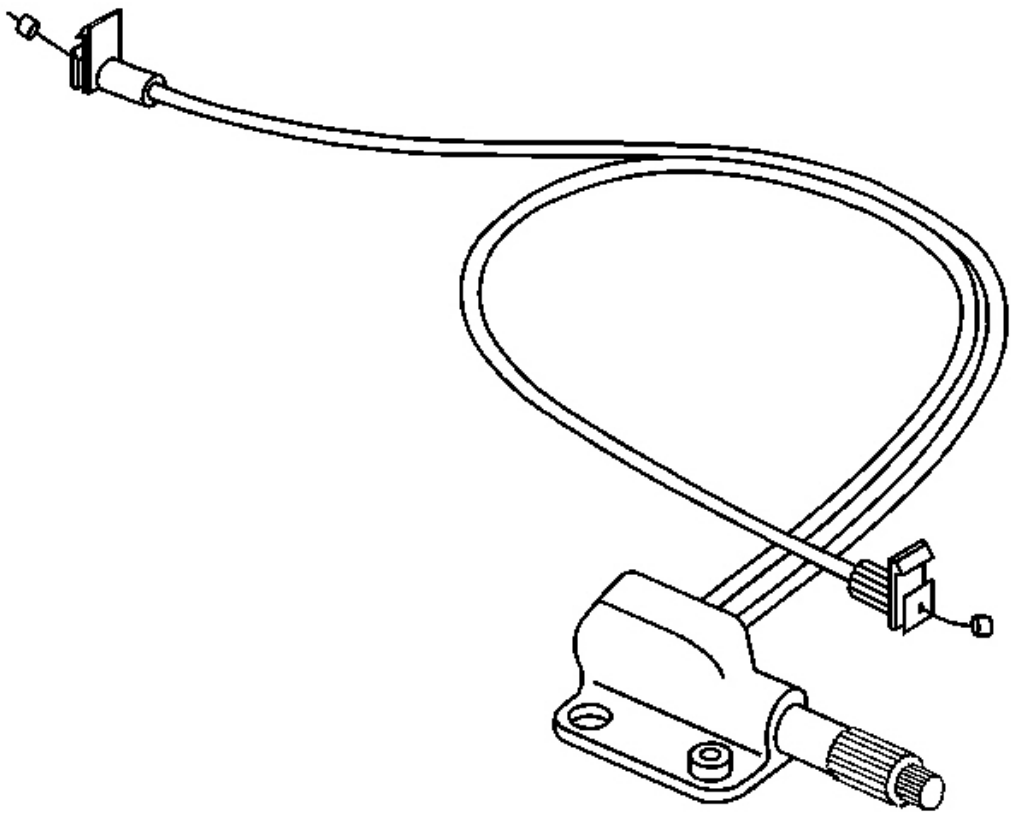

Fig. 65: Recliner Mechanism To Seat Frame
Courtesy of GENERAL MOTORS CORP.

1. Install the recliner mechanism to the seat frame.
2. Install the cables to the actuators.
3. Securely snap the cable retaining clips to the actuators with the tabs up.

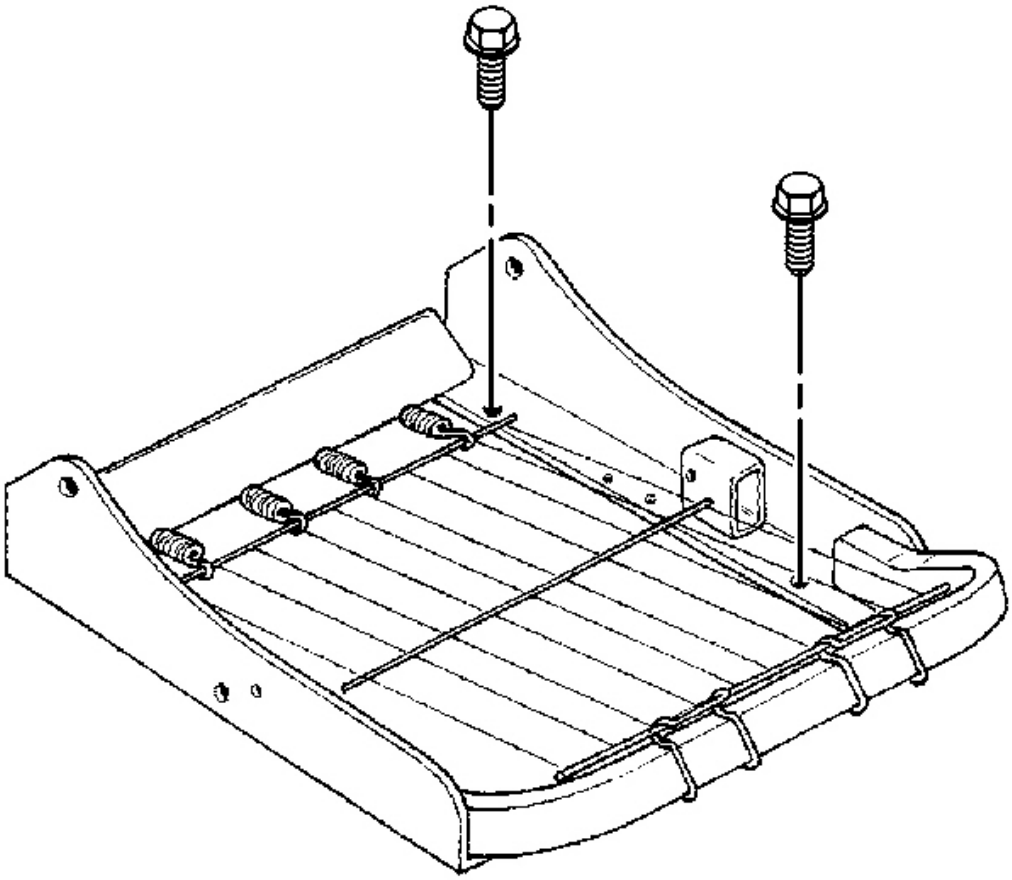

Fig. 66: Recliner Mechanism To Seat Cushion Frame
Courtesy of GENERAL MOTORS CORP.

4. Install the seat adjusters to the seat if removed.

NOTE: **Refer to Fastener Notice in Cautions and Notices.**

5. Apply Loctite(tm) 271 to the bolts and secure the adjuster to the seat.

Tighten: Tighten the bolts to 24 N.m (18 lb in).

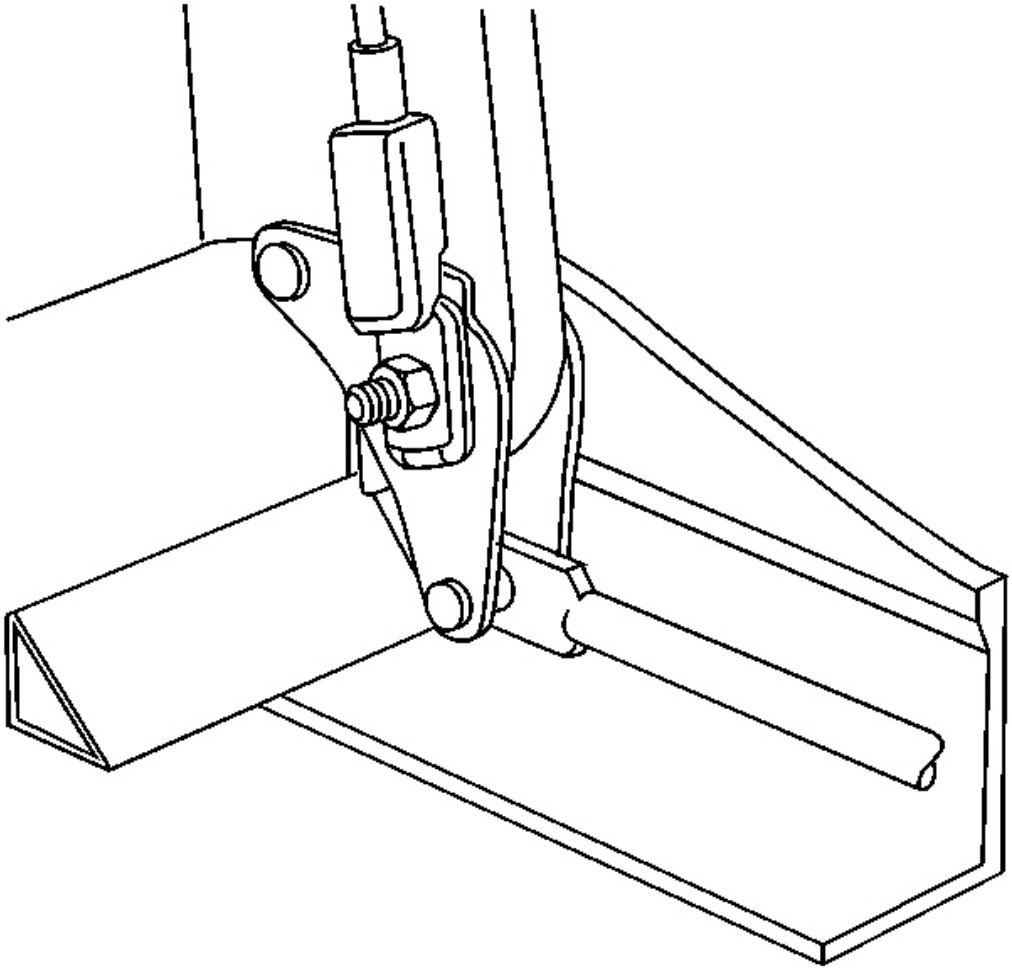

Fig. 67: Actuators Underneath Seat Frame Springs
Courtesy of GENERAL MOTORS CORP.

IMPORTANT: Use a tread locking compound on the hinge bolts.

6. Install the hinge bolts, seatback release cables, and nuts.

   Tighten: Tighten the hinge bolt nuts to 24 N.m (18 lb ft).

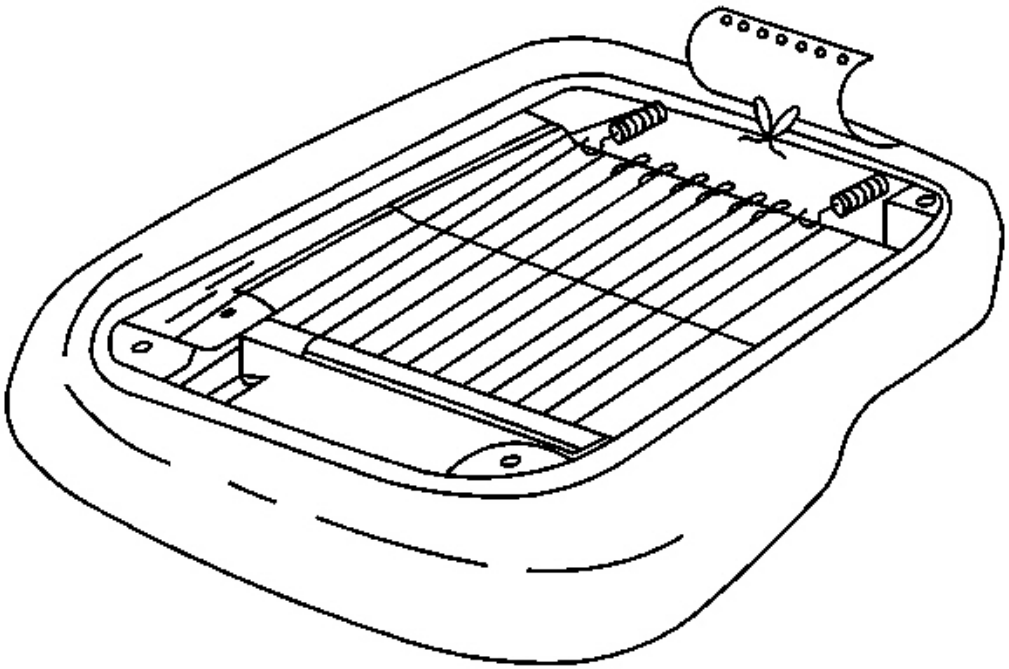

Fig. 68: Trim Cover To Seat Cushion Foam Pad
Courtesy of GENERAL MOTORS CORP.

7. Install the seat cushion trim cover. Refer to **Seat Cushion Trim Cover and Pad Replacement** .

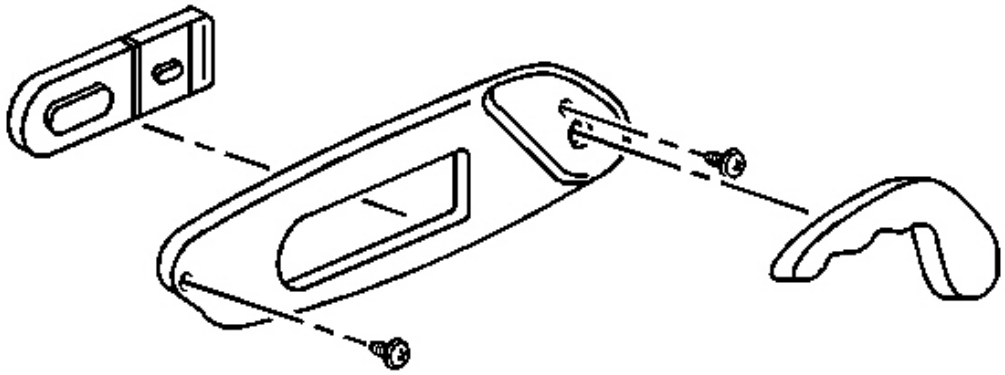

Fig. 69: Switch To Side Trim Panel & Screws
Courtesy of GENERAL MOTORS CORP.

8. Install the side trim panel. Refer to **Trim Panel Replacement - Front Seat** .

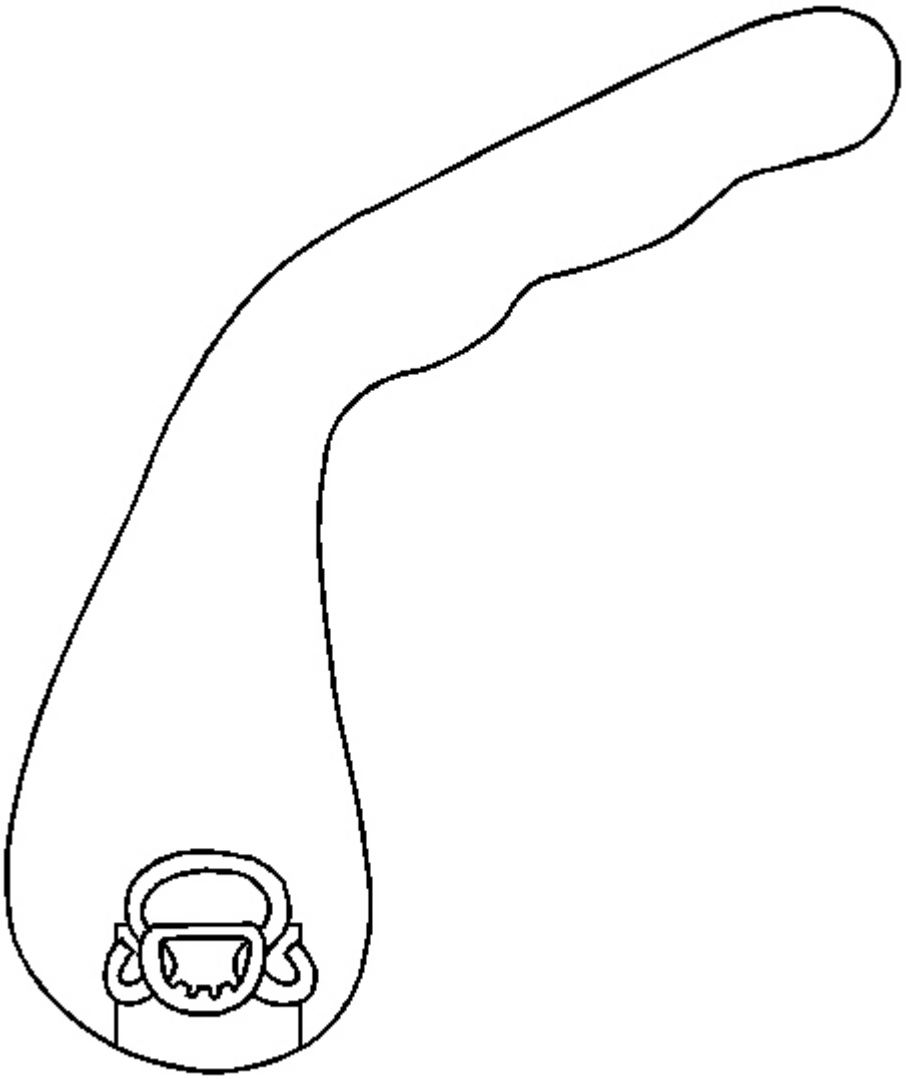

Fig. 70: Recliner Handle To Reclining Mechanism Shaft
Courtesy of GENERAL MOTORS CORP.

9. Install the recliner handle.
    1. Position the handle retaining spring clip into the lock position.
    2. Snap the handle onto the reclining mechanism shaft.

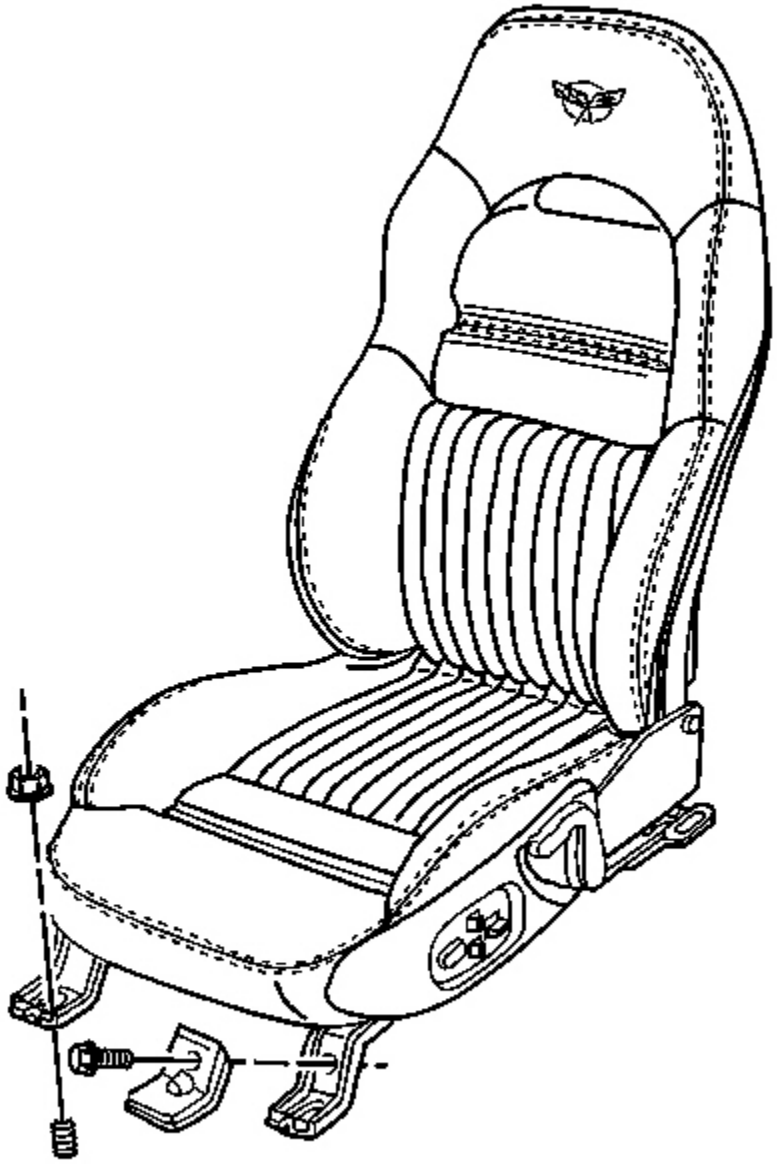

Fig. 71: Seat Mounting Component View
Courtesy of GENERAL MOTORS CORP.

10. Install the seat. Refer to **Seat Replacement (Power)** or **Seat Replacement (Manual)** .

SEAT BACK RECLINER HANDLE REPLACEMENT - FRONT

Removal Procedure

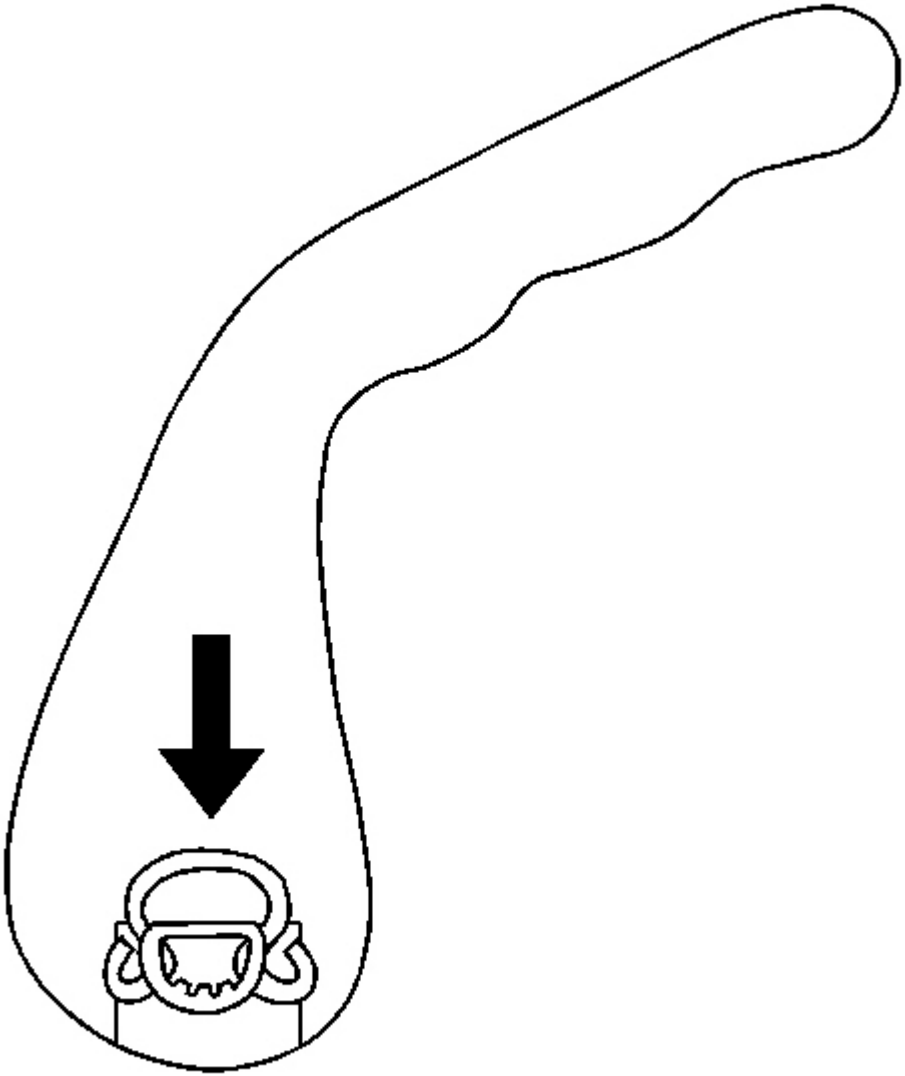

Fig. 72: Seat Back Recliner Handle
Courtesy of GENERAL MOTORS CORP.

1. With a suitable blunt ended tool inserted between the cushion and the handle push the handle retaining spring clip down.
2. Pull the handle from the shaft.

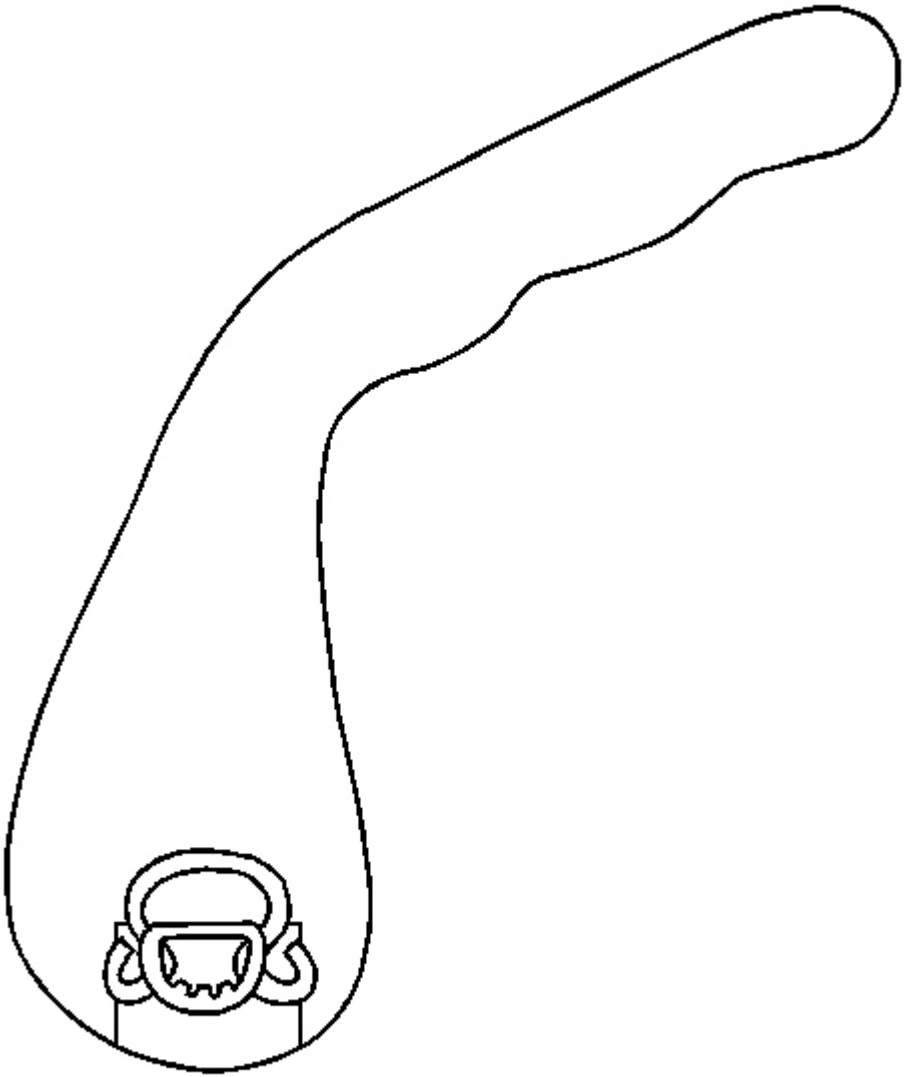

Fig. 73: Recliner Handle To Reclining Mechanism Shaft
Courtesy of GENERAL MOTORS CORP.

1. Position the handle retaining spring clip into the lock position.
2. Snap the handle onto the reclining mechanism shaft.

SEAT BACK RELEASE CABLE REPLACEMENT - FRONT

Removal Procedure

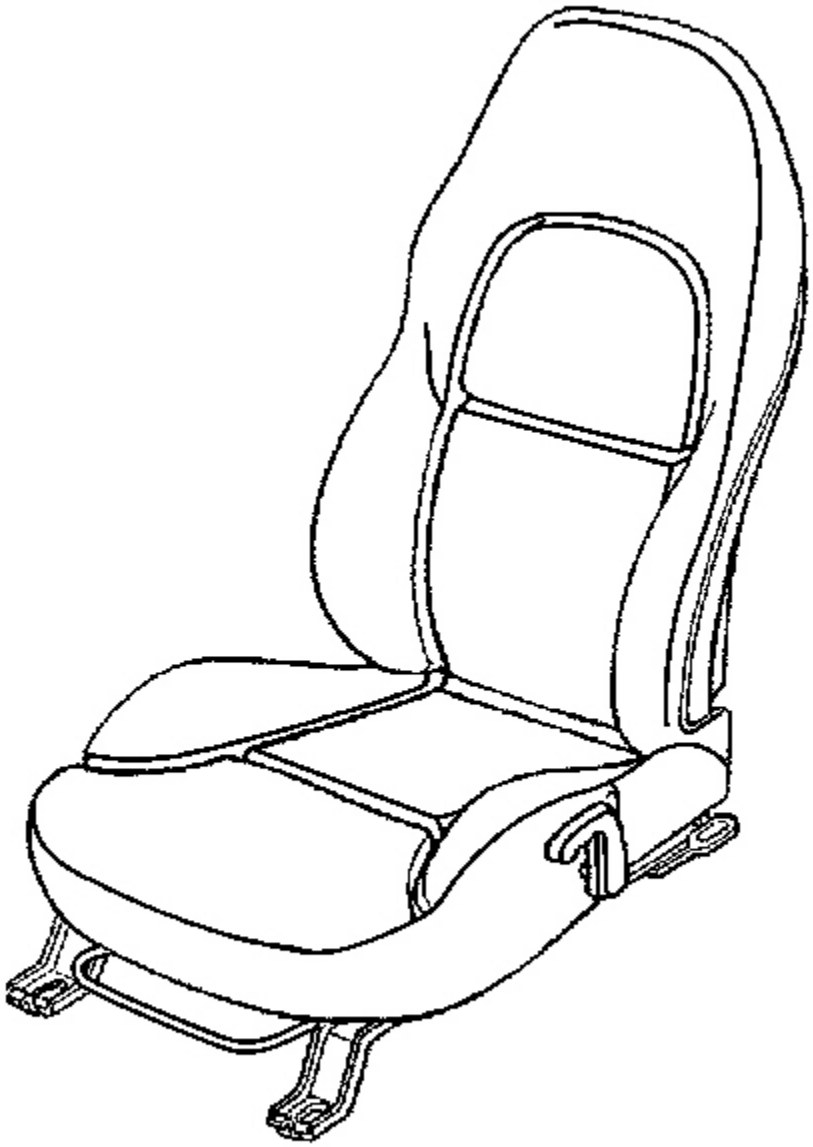

Fig. 74: Seat Cushion Frame To Adjuster Bolts
Courtesy of GENERAL MOTORS CORP.

1. Remove the seat back trim cover. Refer to **Seat Back Cover and Pad Replacement - Front (RPO AR9 Base Seat)** .
2. Remove the seat back free play retention cable from the rear of the seat back (passenger seat only).

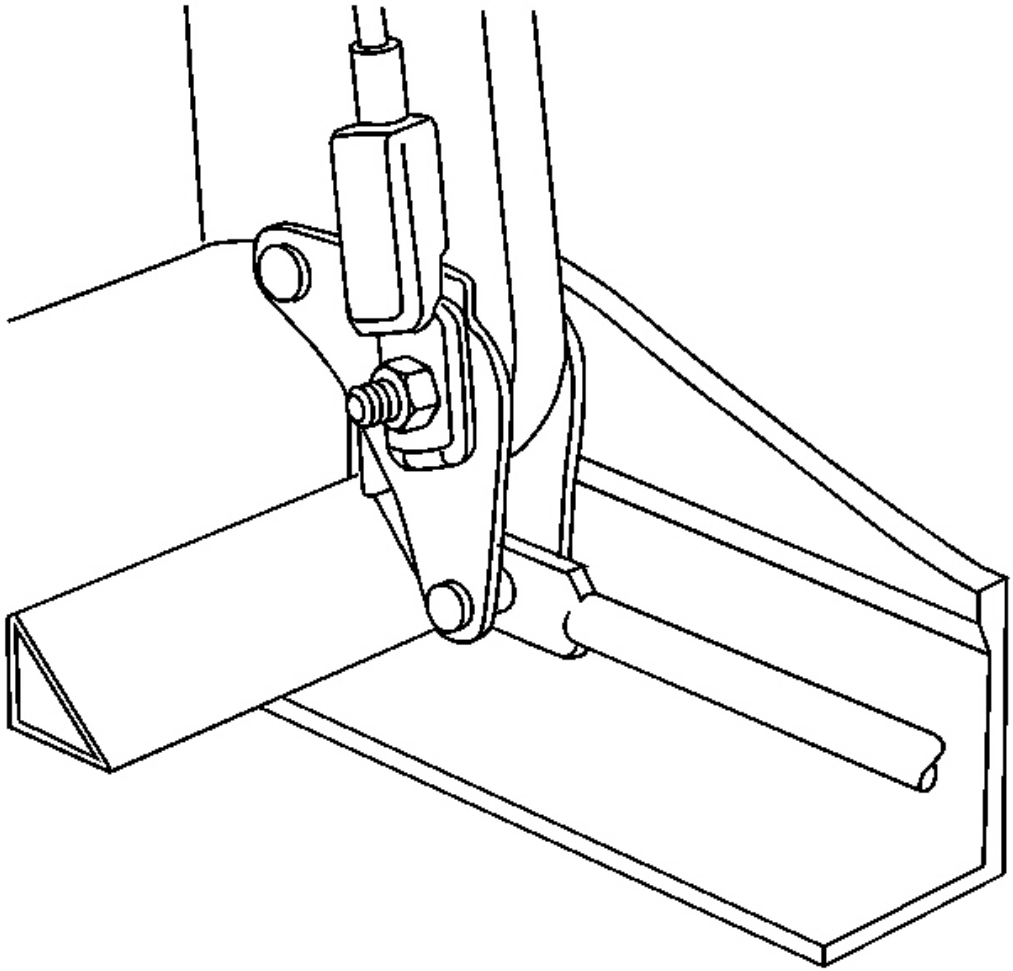

Fig. 75: Actuators Underneath Seat Frame Springs
Courtesy of GENERAL MOTORS CORP.

3. Push down on the seat cushion to expose the hinge bolt nuts.
4. Remove the right and left hinge bolt nuts.
5. Remove the release cables from the hinge bolts.

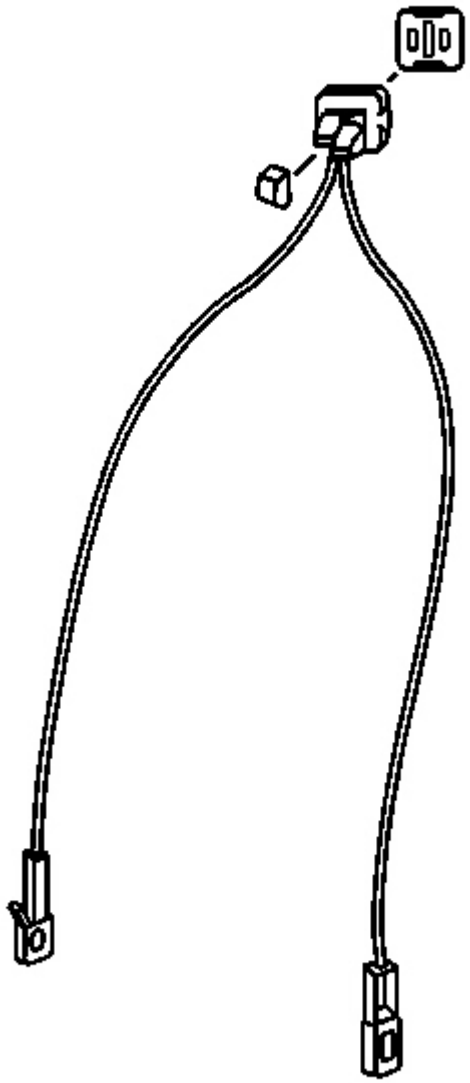

Fig. 76: Bezel At Release Lever To Bezel Locking Tabs
Courtesy of GENERAL MOTORS CORP.

6. Remove the release cable mechanism from the upper seat back by depressing the taps and pushing the release lever out of the seat back frame.
7. Remove the bezel from the release lever by spreading the bezel locking tabs.

Installation Procedure

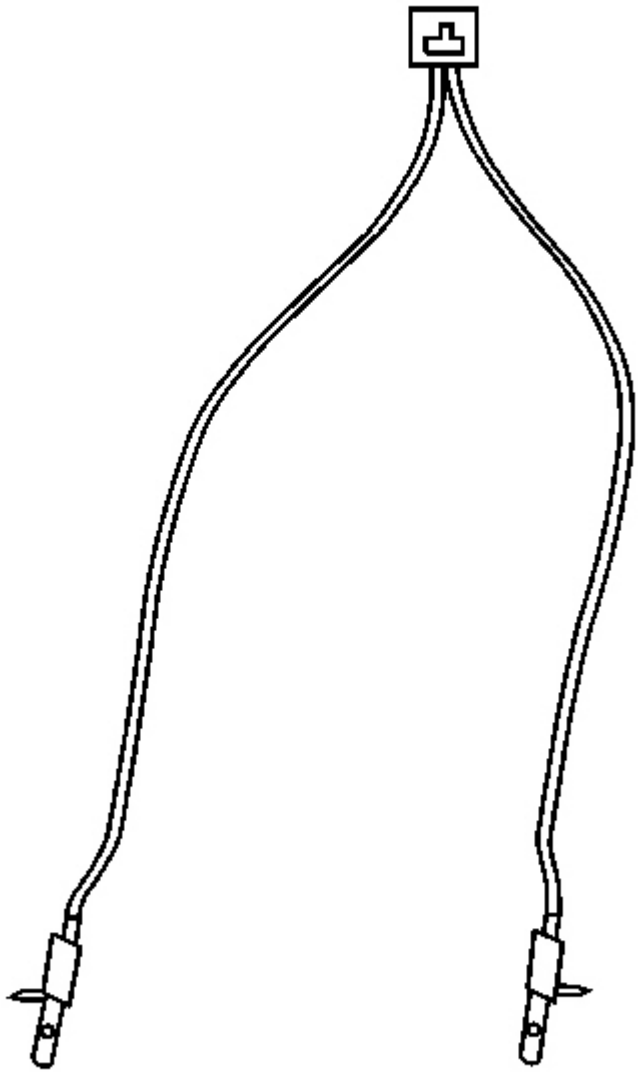

Fig. 77: Release Cables At Upper Seat Back Frame
Courtesy of GENERAL MOTORS CORP.

1. Insert the release cables through the opening in the upper seat back frame.
2. Snap the release lever mechanism to the seat back frame.
3. Route the cables.

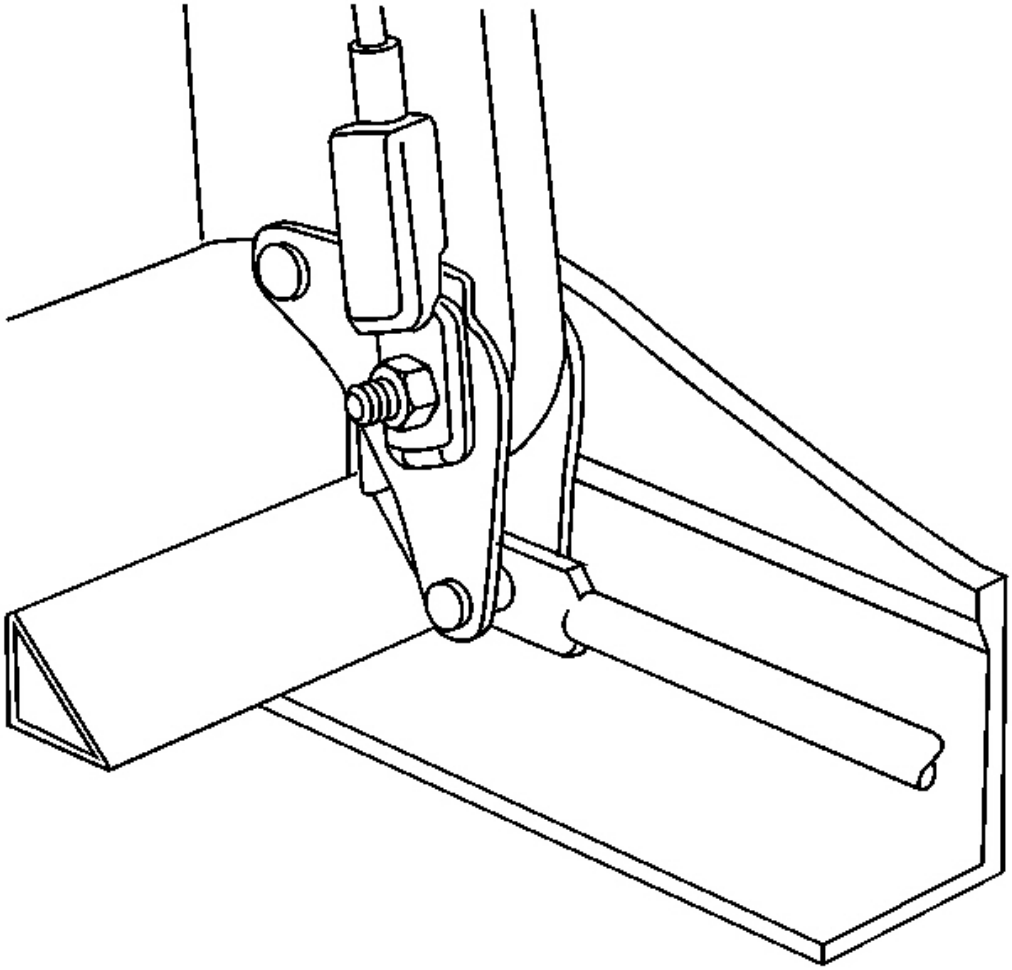

Fig. 78: Actuators Underneath Seat Frame Springs
Courtesy of GENERAL MOTORS CORP.

4. Install the release cables to the right and left hinges inserting the locking pins in the notches.
5. Apply Loctite(tm) 271 to the hinge bolts.

NOTE: Refer to Fastener Notice in Cautions and Notices.

6. Install the nuts to the right and left hinge bolts.

Tighten: Tighten the hinge bolt nuts to 24 N.m (18 lb ft).

7. Install the seat back free play retention cable (passenger seat only).

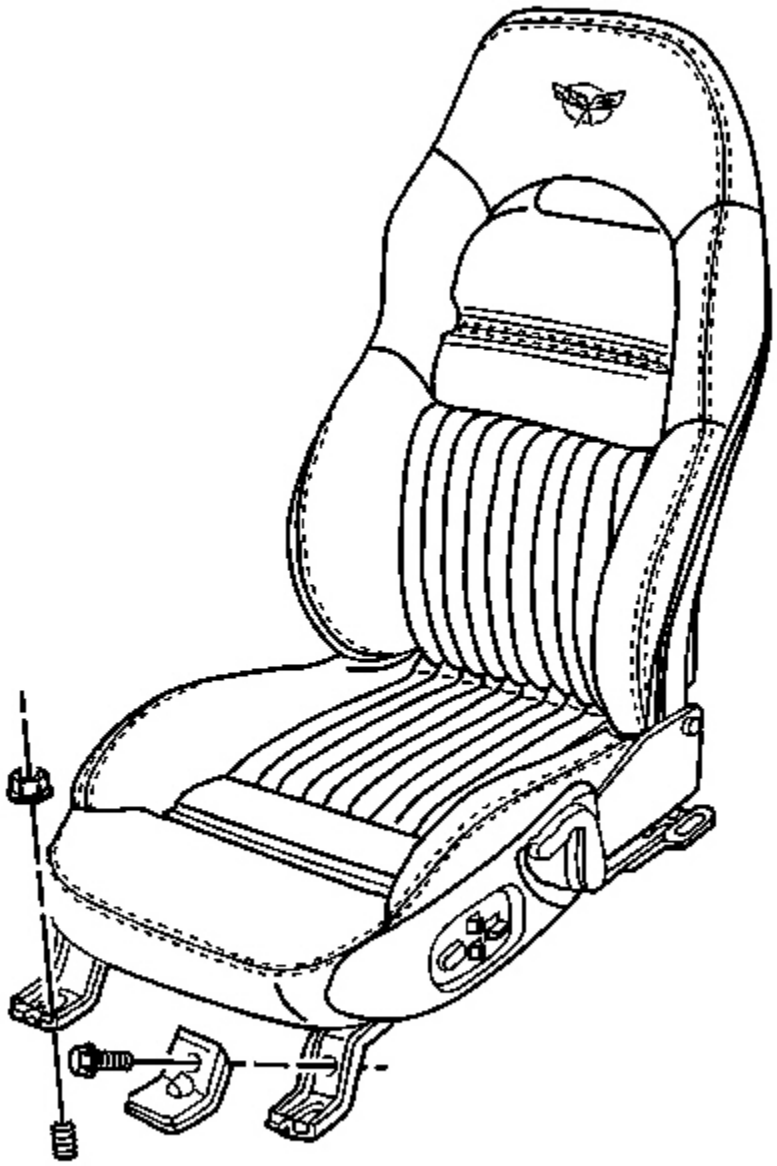

Fig. 79: Seat Mounting Component View
Courtesy of GENERAL MOTORS CORP.

8. Install the seat back trim cover. Refer to **Seat Back Cover and Pad Replacement - Front (RPO AR9**

Base Seat) .

9. Install the release lever bezel.

SEAT BACK TRIM REPLACEMENT - FRONT

Removal Procedure

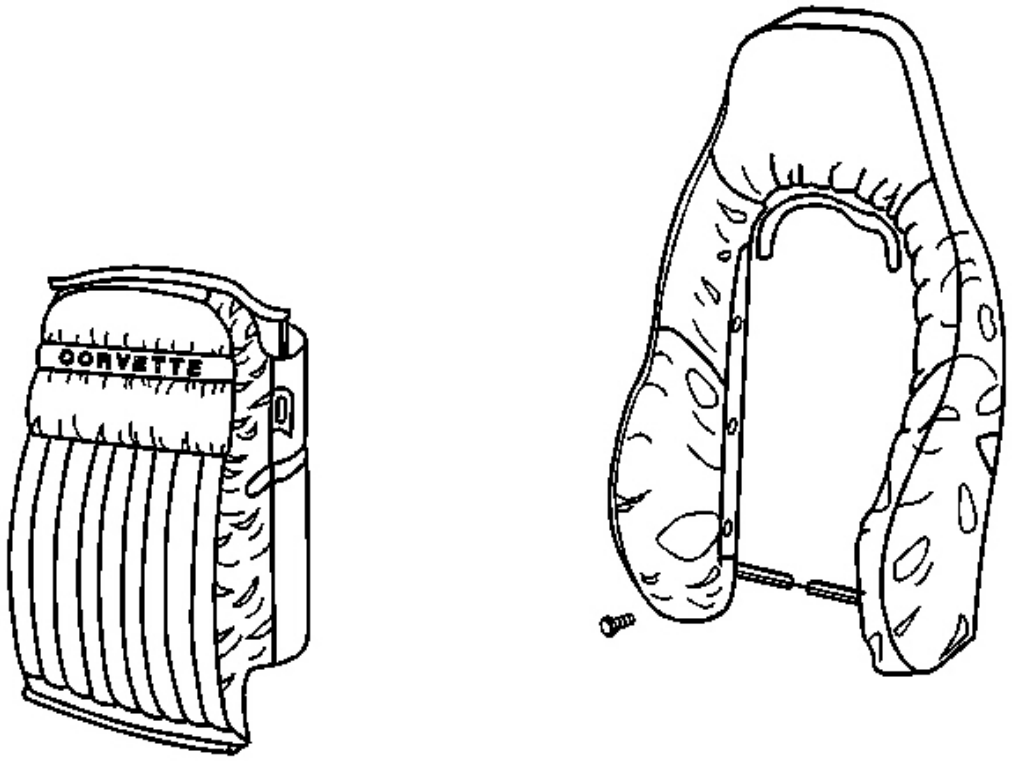

Fig. 80: Pillow To Seat Frame
Courtesy of GENERAL MOTORS CORP.

1. Position the seat forward.
2. Unzip the zipper at the top of the insert pillow.
3. Tilt the seat back forward.
4. Undo the J strip at the bottom of the insert pillow.
5. Tip the insert pillow upward to expose the 2 upper fir tree fasteners that attach the insert pillow to the seat frame.

IMPORTANT: There are 2 size fir tree fasteners used. If the head of the fastener is 19 mm (0.75 in) it is possible to remove the insert pillow by slightly raising the fir tree fastener and then sliding the seat back cover tab and the insert pillow tab over the head of the fastener. If the head of the fir tree fastener is 25 mm (1 in) it is necessary to remove the fastener.

6. Determine the size of the fir tree fastener heads.
7. Raise or remove the upper fir tree fasteners and detach the seat back cover and the insert pillow from the seat frame.
8. Remove the insert pillow.
9. Remove the cover from the pad (if replacing).

Installation Procedure

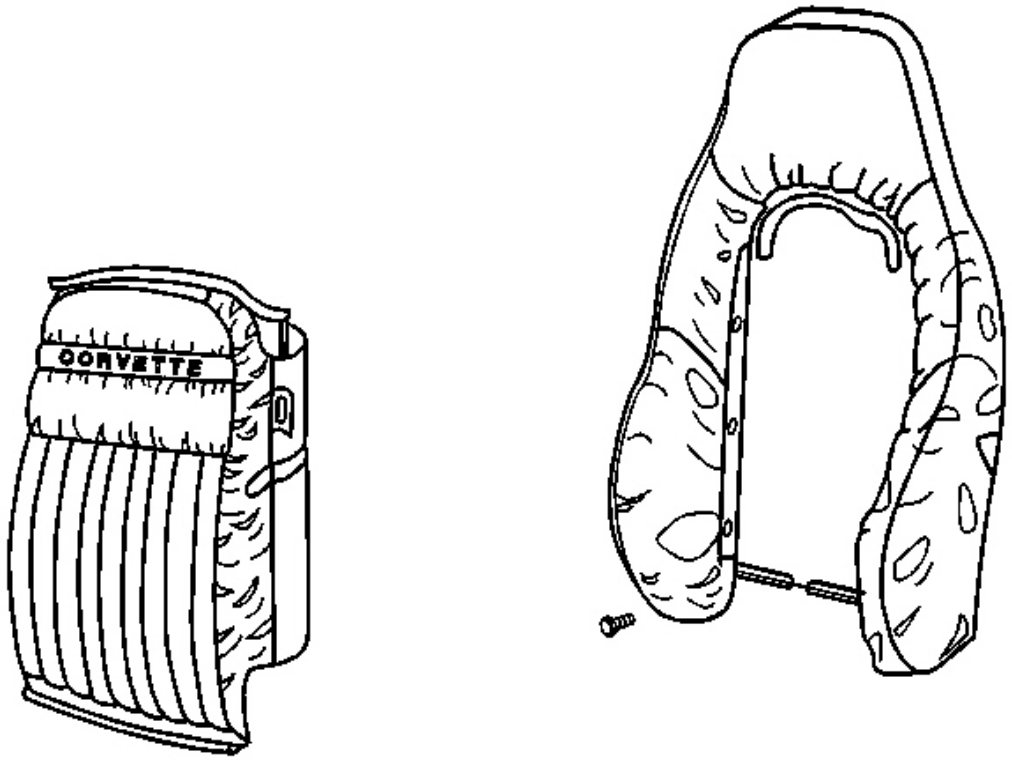

Fig. 81: Pillow To Seat Frame
Courtesy of GENERAL MOTORS CORP.

1. Install the cover if removed.
2. Position the insert pillow to the seat back.
3. Zip the insert pillow upper zipper closed.

IMPORTANT: To achieve the best appearance install the insert pillow tabs under the seat back cover tabs.

4. Attach the insert pillow and seat back cover with fir tree fasteners.
   - Slide the insert pillow tabs and the upper seat back cover tabs over the upper fir tree fastener heads and push the fasteners in to secure (design 1).
   - Install the fir tree fasteners through the seat back cover tabs and the insert pillow tabs and push the fasteners into the seat back frame (design 2).
5. Tuck the zipper ends out of sight into the seat trim.
6. Fasten the lower J strips.
7. From the back of the seat, ensure the seat back cover is pulled down enough for the J strip at the bottom to rest entirely on the forward side of the seat frame.

LUMBAR PUMP REPLACEMENT

Removal Procedure

The lumbar pump and control module are separate units that are attached to each other by a wire harness and a hose. They are supplied and replaced as an assembly. The lumbar pump is contained in a vinyl pouch under the seat and is tie strapped to the seat adjuster torque tube. The attached control module is contained in a vinyl pouch and is secured with J strips to the bottom of the seat support springs. The service part is supplied with connector fittings and the air hoses are labeled #3, #4, and #5 to aid in assembly.

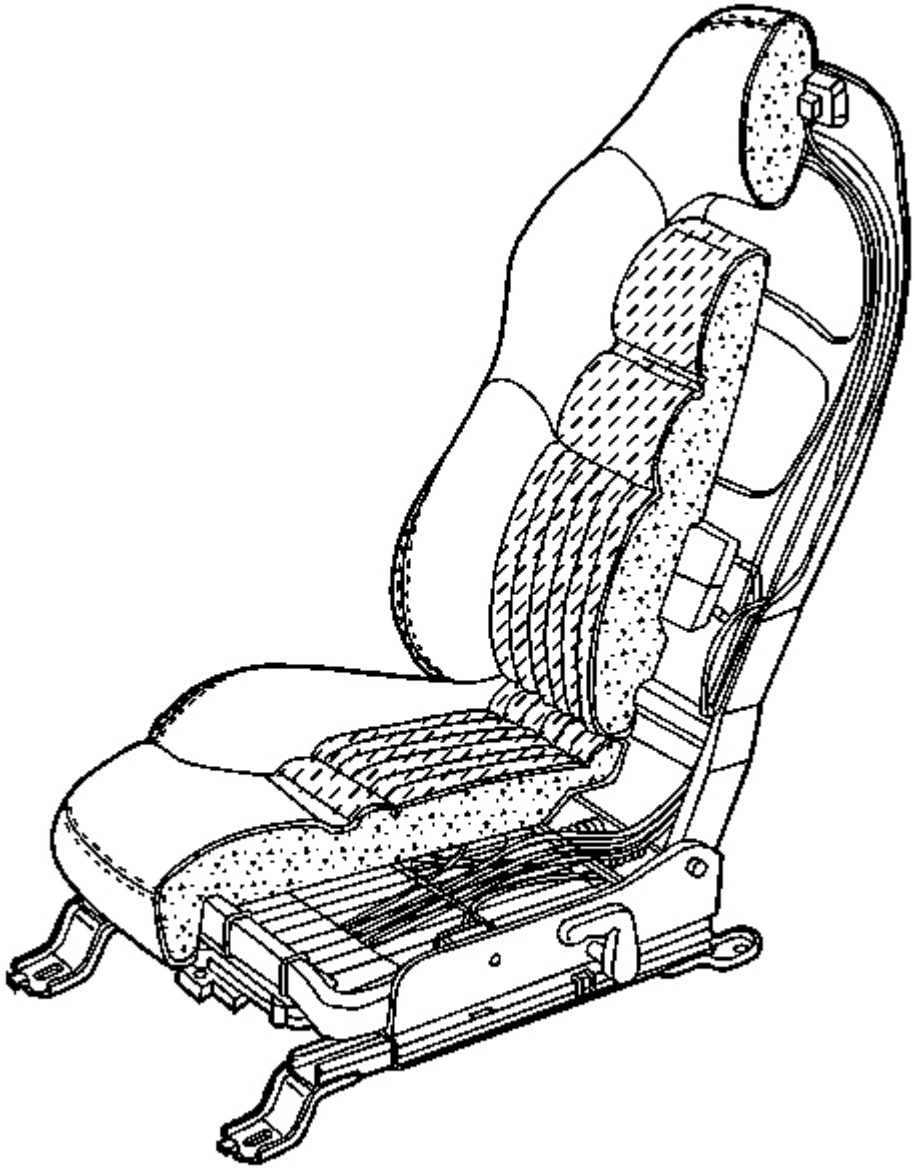

Fig. 82: Seat Electrical Connector
Courtesy of GENERAL MOTORS CORP.

1. Raise the seat to the full up position.
2. Remove the seat. Refer to **Seat Replacement (Power)** or **Seat Replacement (Manual)** .
3. Remove the seat cushion cover. Refer to **Seat Cushion Trim Cover and Pad Replacement** .

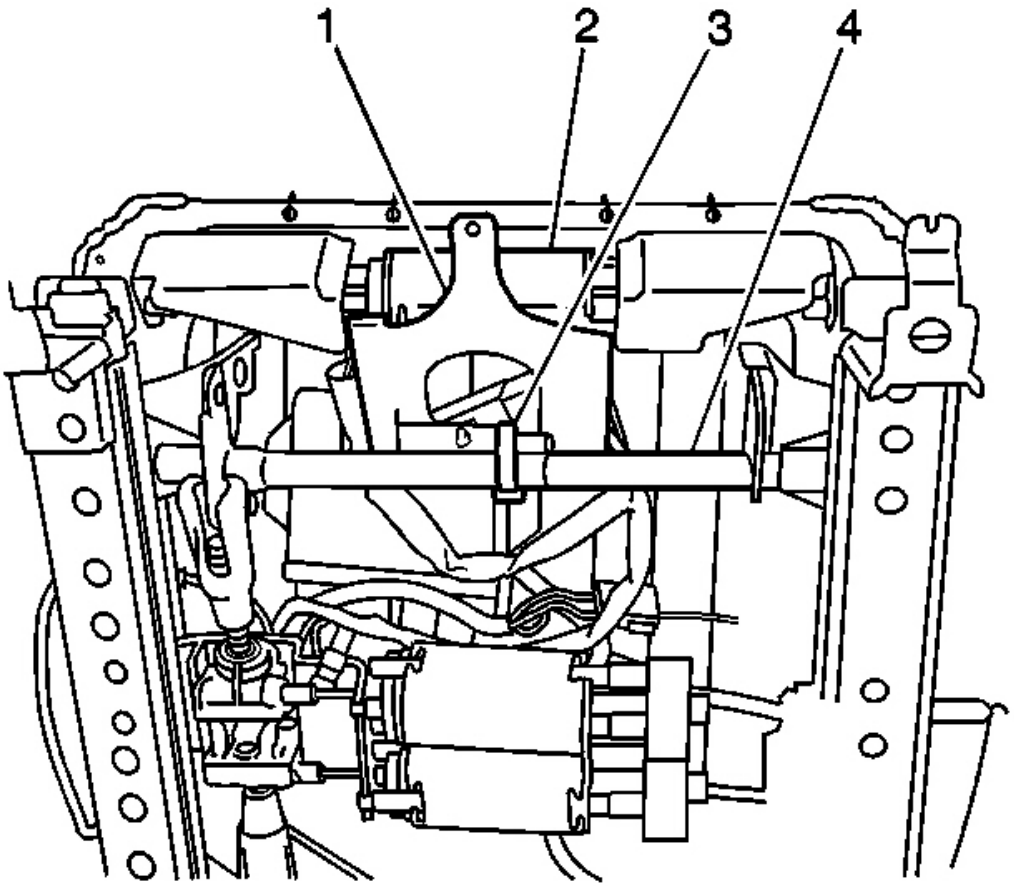

Fig. 83: Control Module To Seat Cushion Support Wires
Courtesy of GENERAL MOTORS CORP.

4. Remove the tie straps attaching the pump to the torque tube (4) under the seat.
5. Remove the control module by unhooking the J strips from the seat cushion support wires.

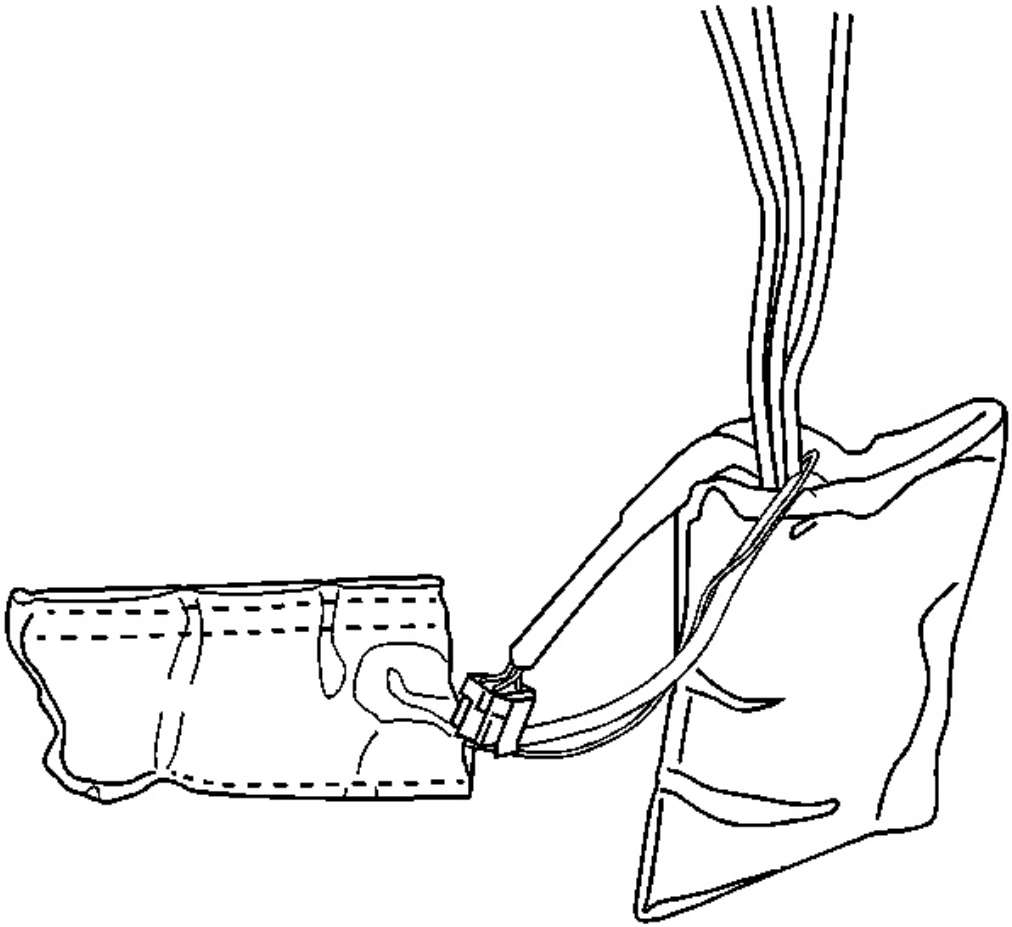

Fig. 84: Lumbar Pump & Module To Seat Frame & Seat Back
Courtesy of GENERAL MOTORS CORP.

6. Disconnect the electrical connector.
7. Reposition the pump and the lumbar control module from under the seat support wires to on top of the seat support wires.

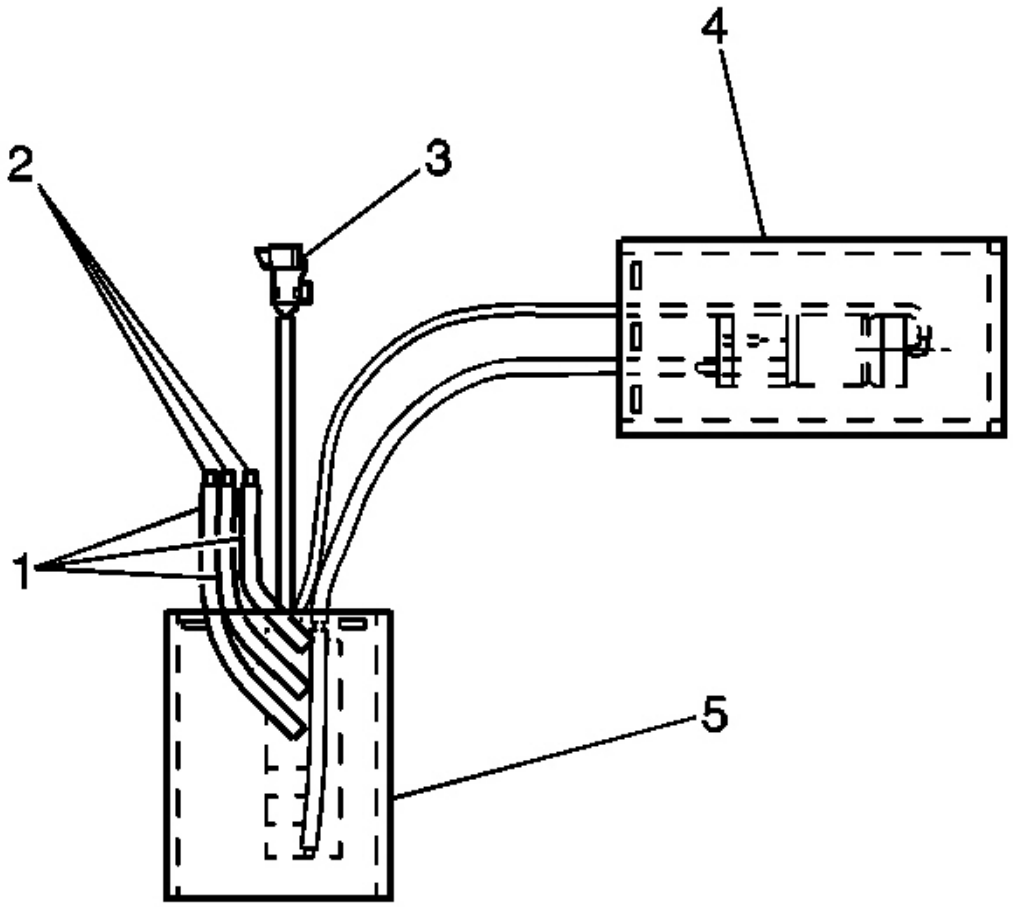

Fig. 85: Control Module To Bladder Air Hoses
Courtesy of GENERAL MOTORS CORP.

8. Cut the control module to bladder air hoses (1) 75 mm (3 in) from the control module (5).
9. Remove the pump (4) and the control module (5) as an assembly.

Installation Procedure

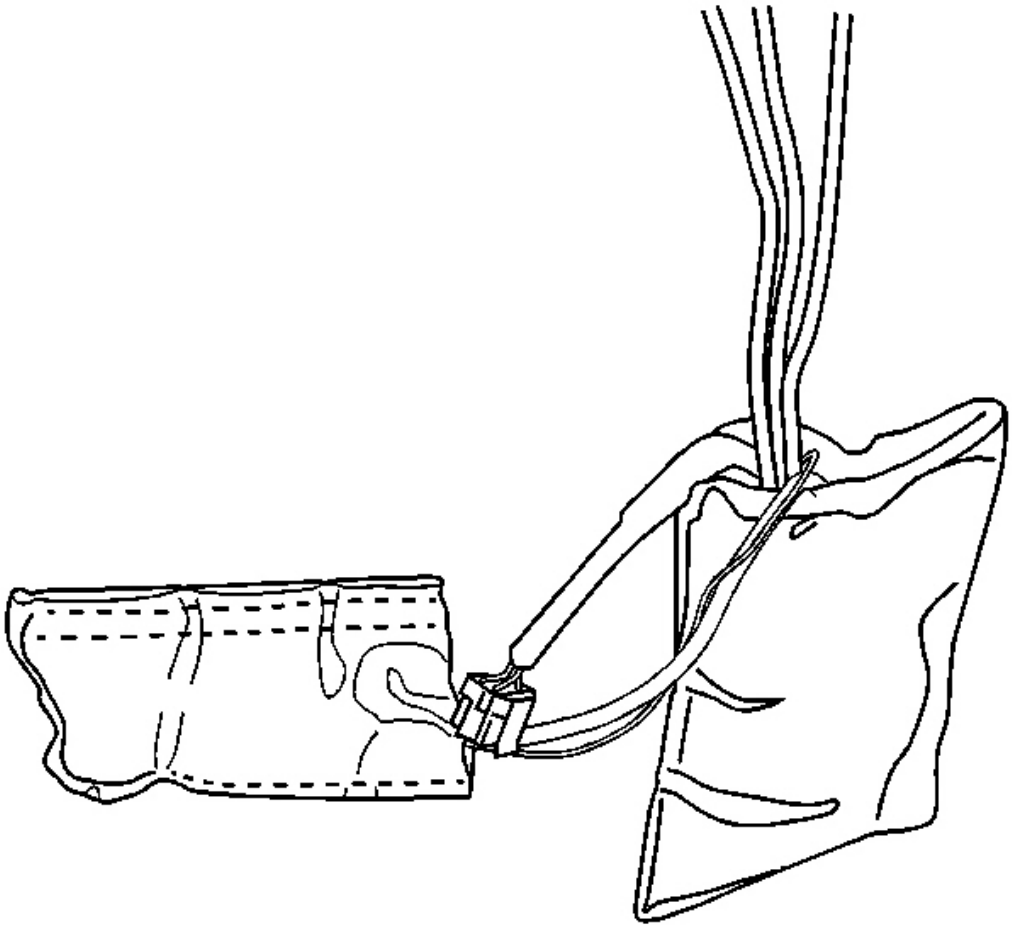

Fig. 86: Lumbar Pump & Module To Seat Frame & Seat Back
Courtesy of GENERAL MOTORS CORP.

1. Lay the new pump and control module assembly on top of the seat spring assembly.
2. Apply a very small amount of air (blow into the hose) to each of the three lumbar bladder hoses that were cut in step 8.
    - If the upper lumbar inflates, use the procedure in step three to connect that hose to the hose labeled #3 on the new pump.
    - If the lower lumbar inflates, use the procedure in step three to connect that hose to the hose labeled #4 on the new pump.
    - If the bolsters inflate, use the procedure in step three to connect that hose to the hose labeled #5 on the new pump.

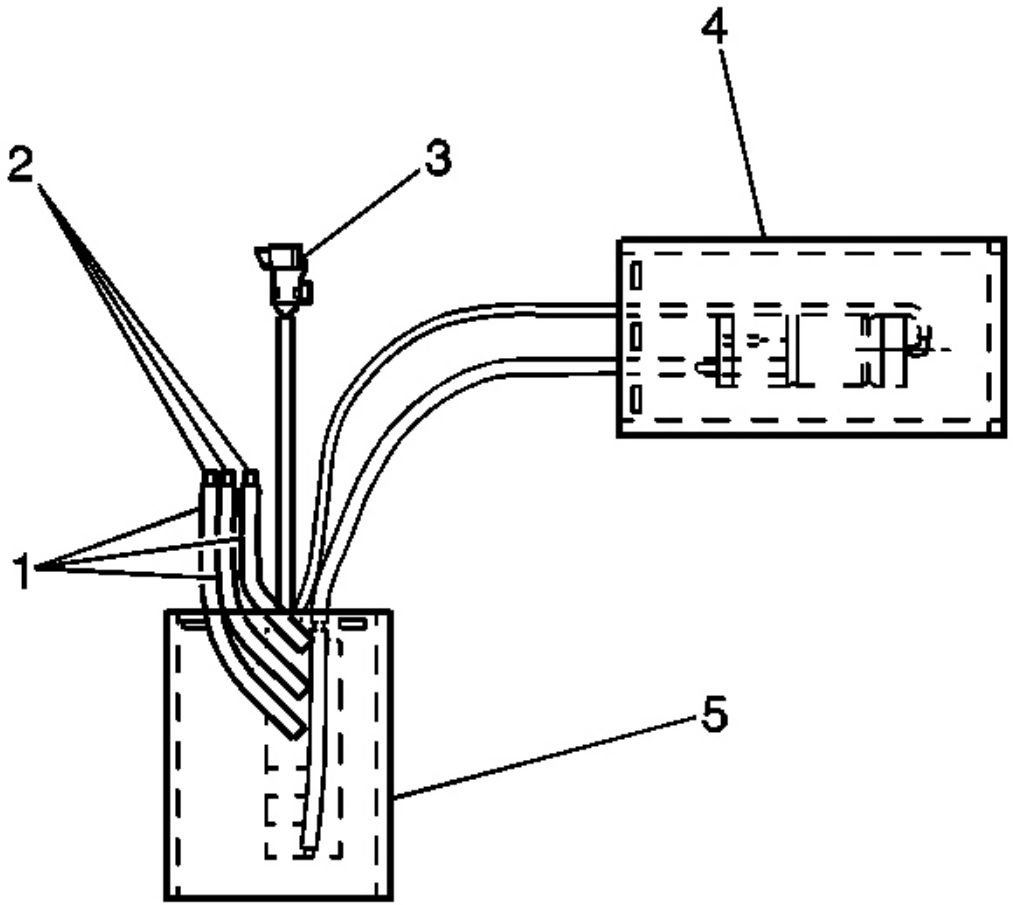

Fig. 87: Control Module To Bladder Air Hoses
Courtesy of GENERAL MOTORS CORP.

3. Using Loctite(tm) 406, or equivalent, glue each hose to the fitting (2) in the module hose.
    1. Position the hose so it is just over the edge of the barb on the attaching fitting.
    2. Apply the adhesive completely around the fitting.
    3. Quickly push the hose the rest of the way onto the fitting.

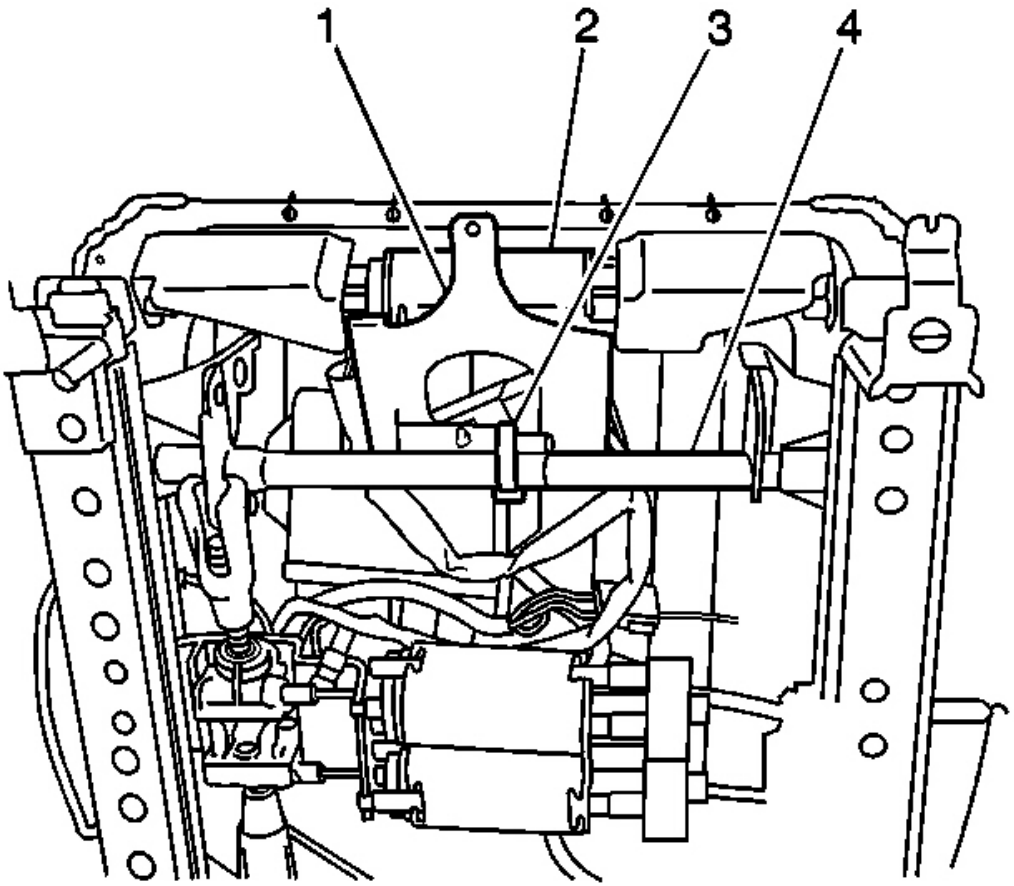

Fig. 88: Control Module To Seat Cushion Support Wires
Courtesy of GENERAL MOTORS CORP.

4. Insert the pump and the control module down under the seat support wires.
5. Attach the control module with the J strips facing outward to the underside of the seat cushion support wires.
6. Connect the electrical connector to the control module.
7. Tie strap the pump to the torque tube (4) under the front of the seat.

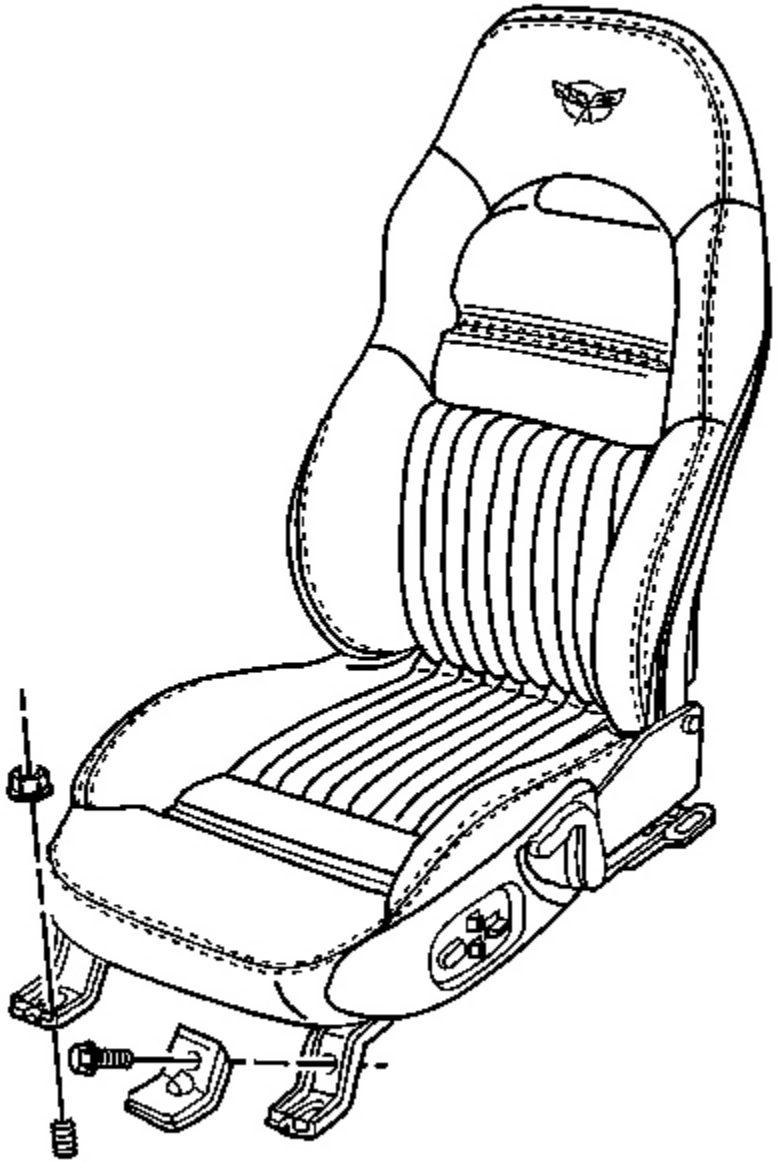

Fig. 89: Seat Mounting Component View
Courtesy of GENERAL MOTORS CORP.

8. Install the seat cushion trim cover. Refer to **Seat Cushion Trim Cover and Pad Replacement** .
9. Install the seat. Refer to **Seat Replacement (Power)** or **Seat Replacement (Manual)** .

LUMBAR BLADDER REPLACEMENT

Removal Procedure

The lumbar bladders and bolster bladders are serviced as 1 lumbar/lateral bladder system. The bladder system is serviced separate from the module assembly. The bladder service part is supplied with the necessary connector fittings. The bladder to module hoses are labeled #3, #4, and #5 to aid in assembly.

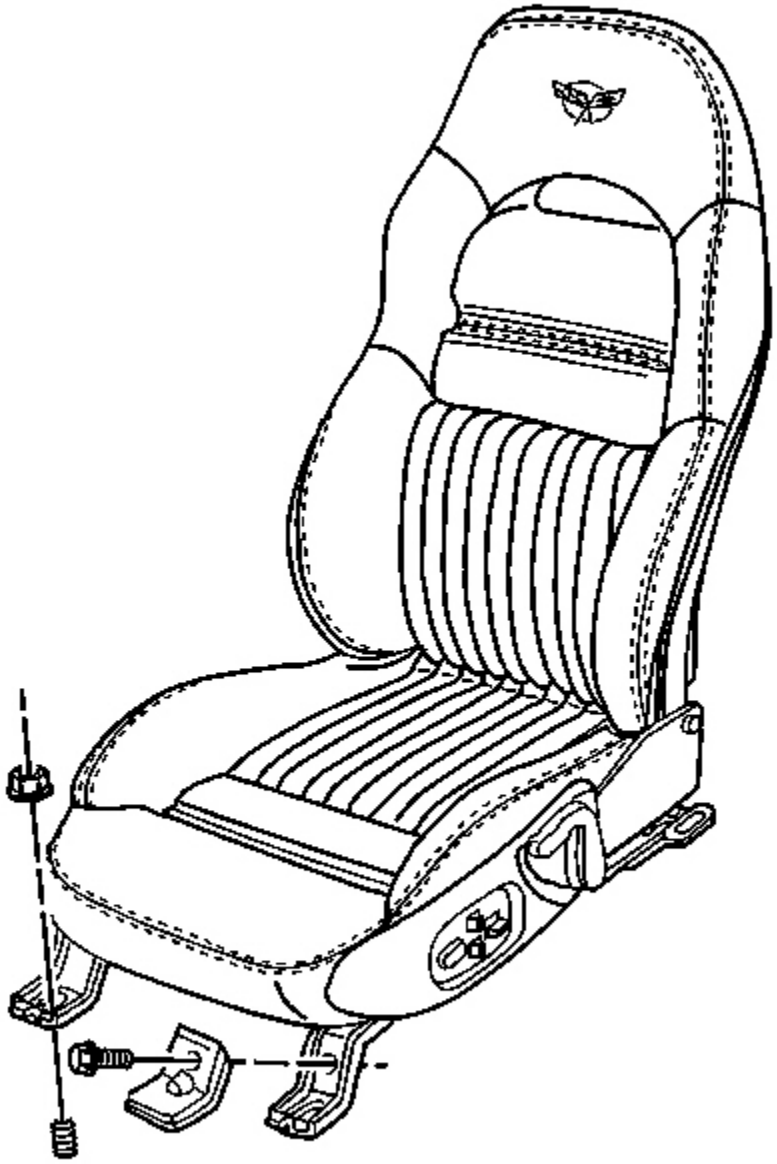

Fig. 90: Seat Mounting Component View
Courtesy of GENERAL MOTORS CORP.

1. Raise the seat to the full up position.
2. Remove the seat. Refer to **Seat Replacement (Power)** or **Seat Replacement (Manual)** .
3. Remove the seat cushion cover and pad. Refer to **Seat Cushion Trim Cover and Pad Replacement** .

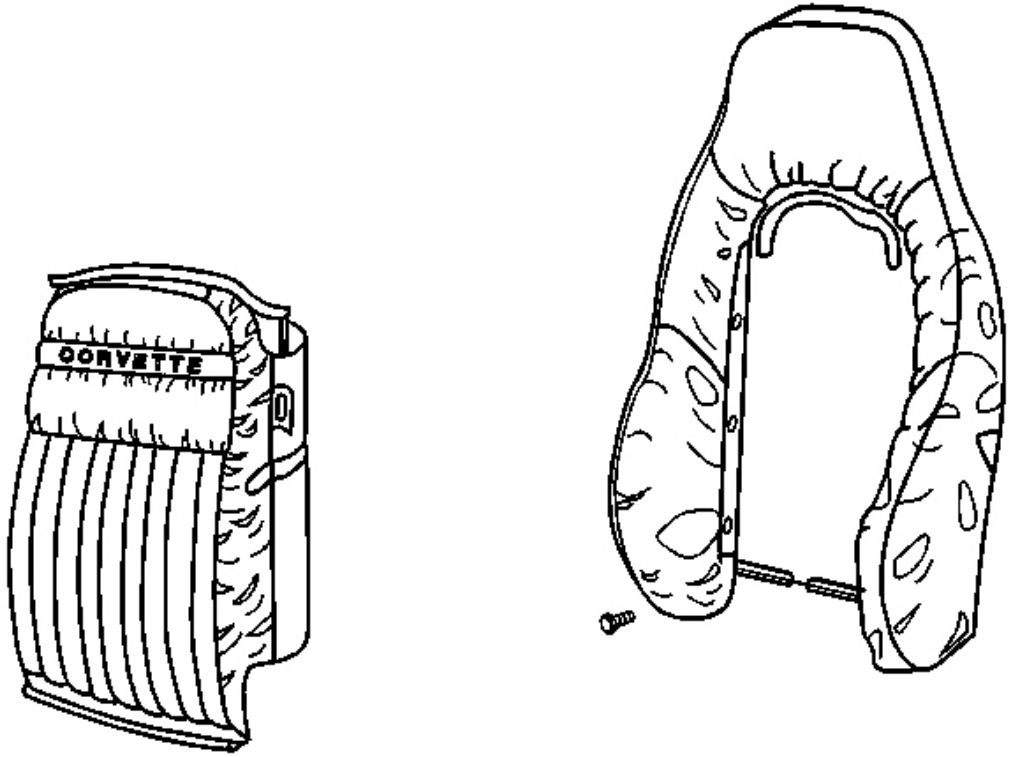

Fig. 91: Pillow To Seat Frame
Courtesy of GENERAL MOTORS CORP.

4. Unhook the J strip attaching the bottom of the seat back insert pillow.
5. Remove the 2 fir tree fasteners attaching the upper sides of the insert pillow.
6. Unzip the upper insert pillow zipper.
7. Remove the seat back insert pillow.
8. Remove the 4 lower fir tree fasteners attaching the seat back cover.
9. Peel the trim cover from the bolsters and reposition the trim up over the top of the seat back. (trim will be inside out).
10. Peel the foam pad from the bolsters and reposition to expose the lumbar system.

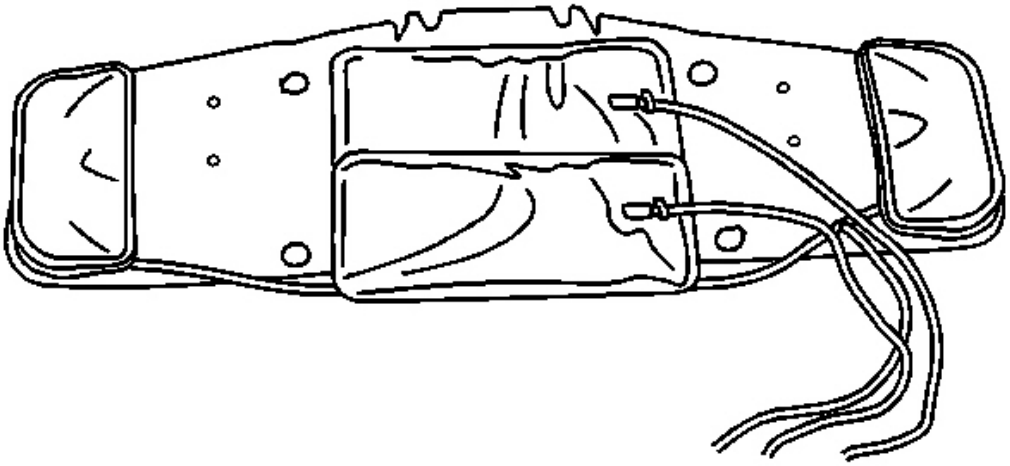

Fig. 92: Lumbar/Lateral Bladder System To Seat Back
Courtesy of GENERAL MOTORS CORP.

11. Remove the lumbar/lateral bladder system from the seat back.

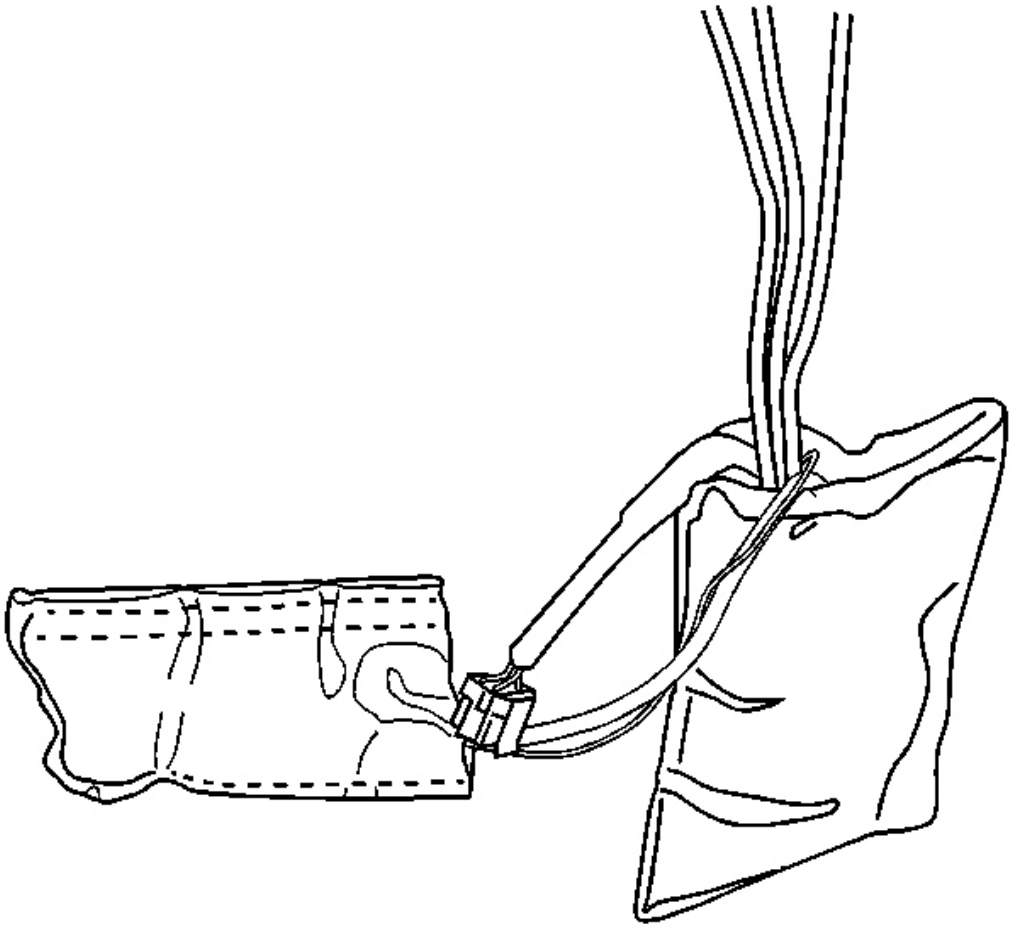

Fig. 93: Lumbar Pump & Module To Seat Frame & Seat Back
Courtesy of GENERAL MOTORS CORP.

12. Remove the control module J strips from the seat support wires.
13. Reposition the control module to the top of the seat support wires. (It is not necessary to remove the lumbar pump).

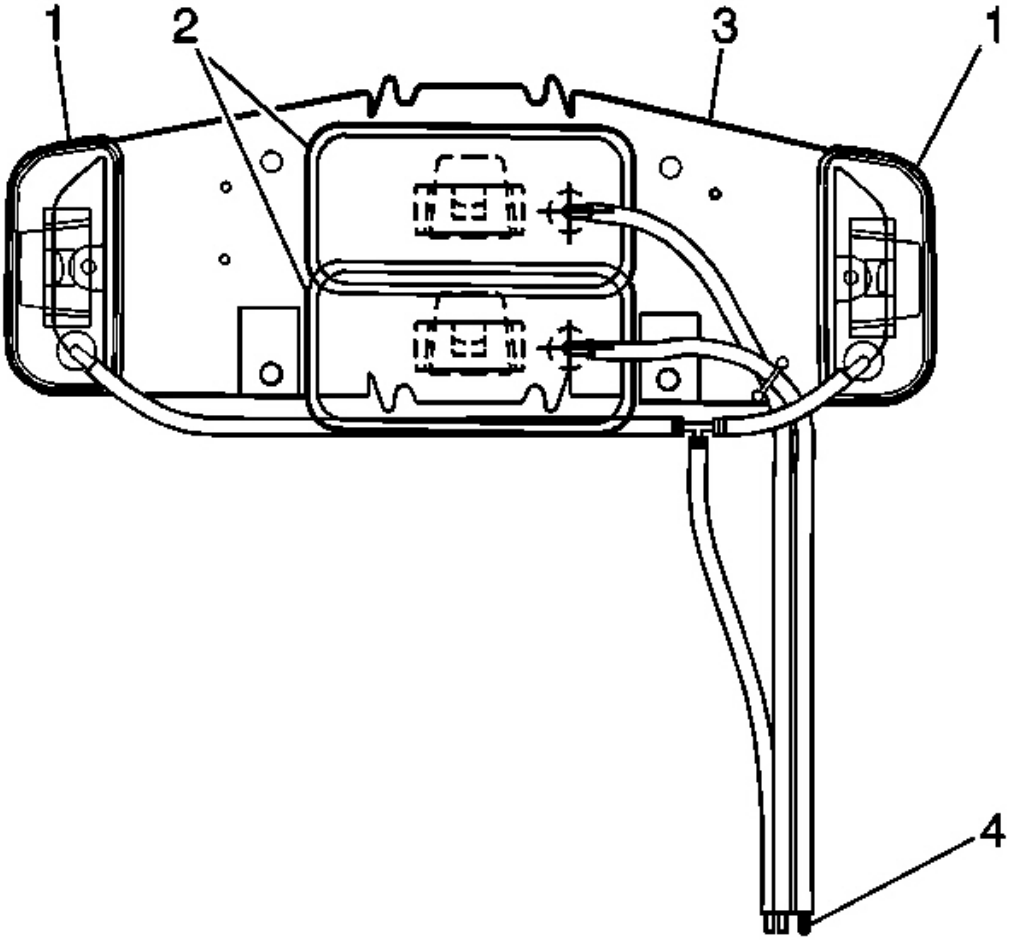

Fig. 94: Control Module To Lumbar/Lateral Bladders
Courtesy of GENERAL MOTORS CORP.

14. Cut the three hoses (4) connecting the control module to the lumbar/lateral bladders 75 mm (3 in) from the control module.

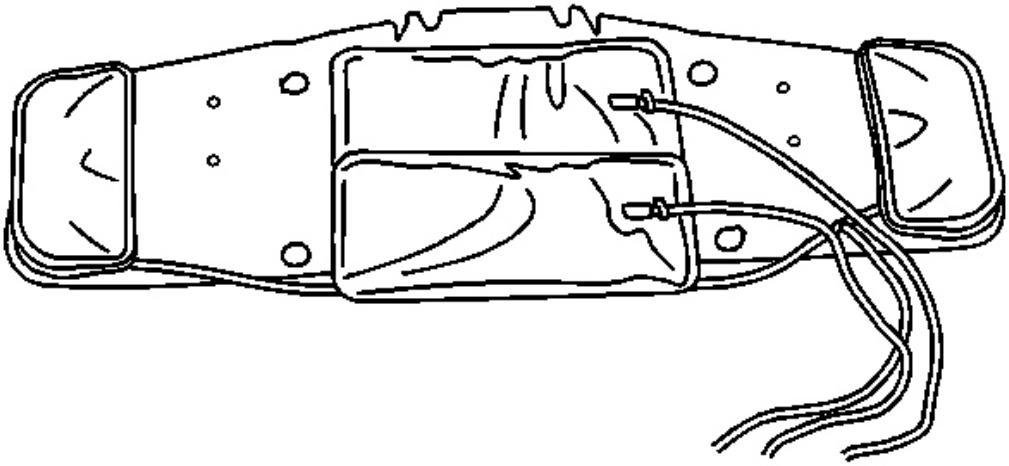

Fig. 95: Lumbar/Lateral Bladder System To Seat Back
Courtesy of GENERAL MOTORS CORP.

15. Remove the tie strap attaching the hoses to the seat frame.
16. Remove the lumbar/lateral bladder assembly.

Installation Procedure

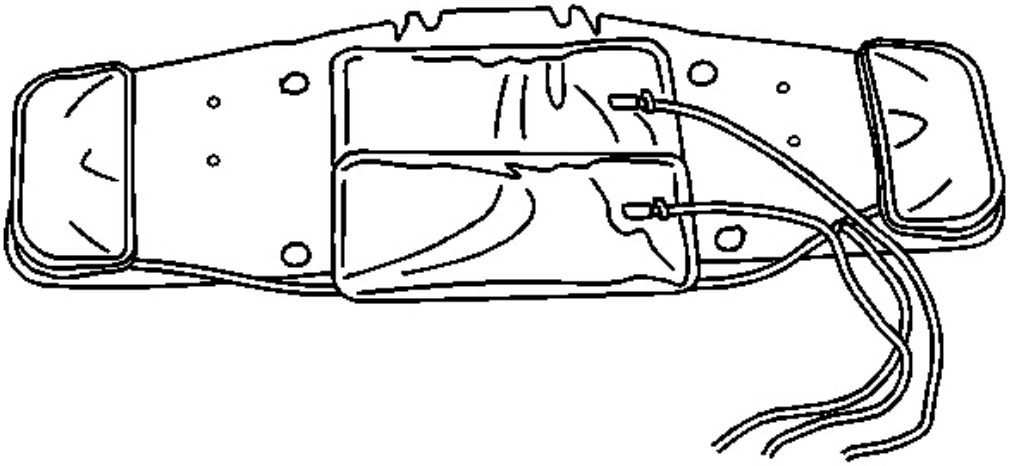

Fig. 96: Lumbar/Lateral Bladder System To Seat Back
Courtesy of GENERAL MOTORS CORP.

1. Position the lumbar/lateral support bladders to the seat back inserting the tabs into the seat back.
2. Route the hoses through the pivot area and tie strap them to the seat frame under the seat back adjuster.
3. Connect the seat switch to the harness.
4. Connect power to the seat.

   It may be necessary to position the seat in the vehicle.

5. Operate the upper lumbar control and use the procedure in step eight to connect the hose that pressurized to the bladder hose labeled #3.
6. Operate the lower lumbar control and use the procedure in step eight to connect the hose that pressurized to the bladder hose labeled #4.
7. Operate the bolster control and use the procedure in step eight to connect the hose that pressurized to the bladder hose labeled #5.

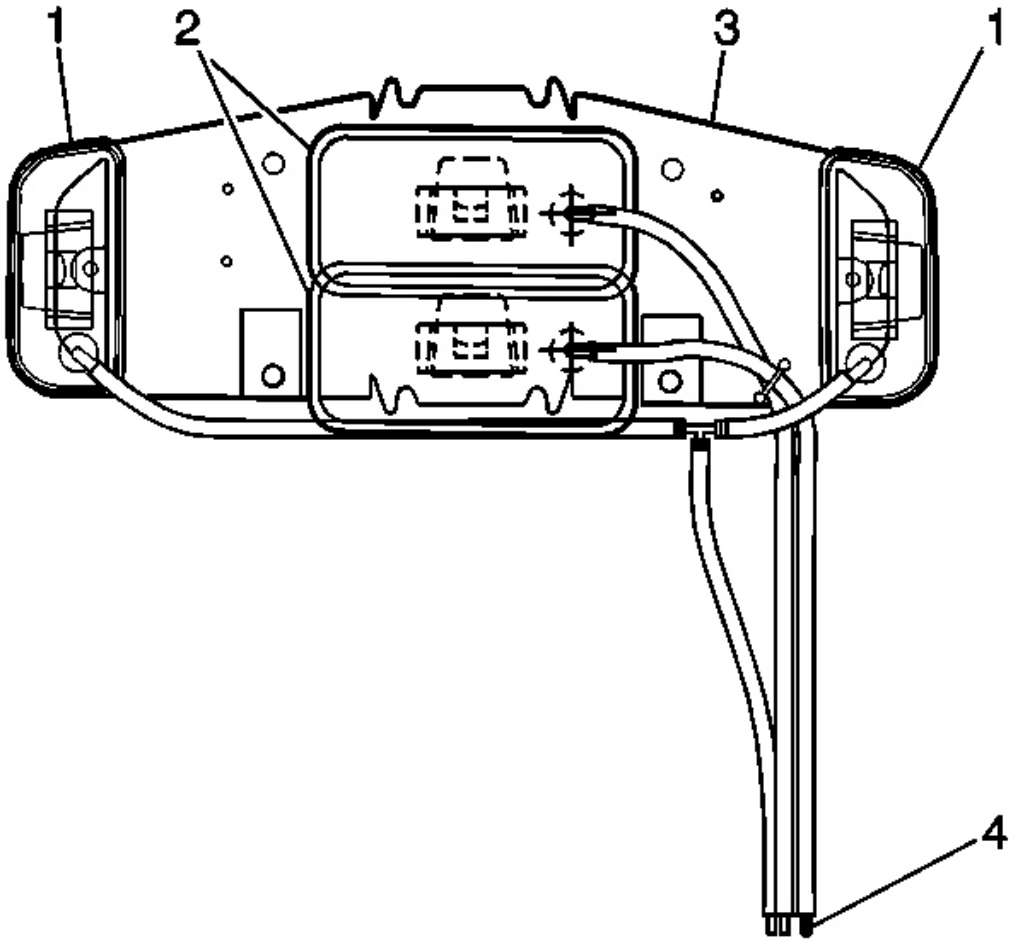

Fig. 97: Control Module To Lumbar/Lateral Bladders
Courtesy of GENERAL MOTORS CORP.

8. Using Loctite(tm) 406, or equivalent, glue the module hoses to the fittings on the bladder hoses (4).
    1. Position the hose so it is just over the edge of the barb on the attaching fitting.
    2. Apply the adhesive completely around the fitting.
    3. Quickly push the hose the rest of the way onto the fitting.
9. Install the control module to the seat support wires with the J strips.
10. Disconnect the seat electrical connector and remove the seat from the vehicle (if reposition inside the vehicle in step 4.
11. Install the seat cushion cover. Refer to **Seat Cushion Trim Cover and Pad Replacement** .

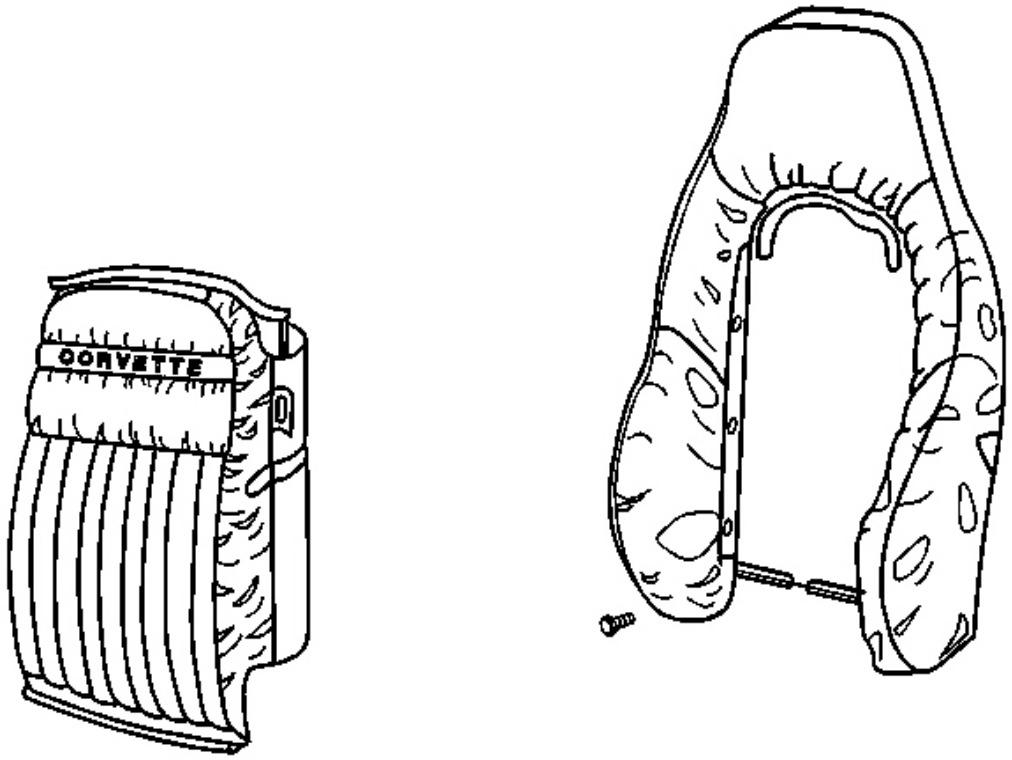

Fig. 98: Pillow To Seat Frame
Courtesy of GENERAL MOTORS CORP.

12. Install the seat back foam pad over the bolsters.
13. Install the seat back cover over the bolsters.
14. Attach the cover and the bladder assembly with the four lower fir tree fasteners.
15. Zip the upper seat back zipper closed.
16. Tuck the cover over the corners of the hinges.
17. Install the insert pillow. Refer to **Seat Back Trim Replacement - Front** .

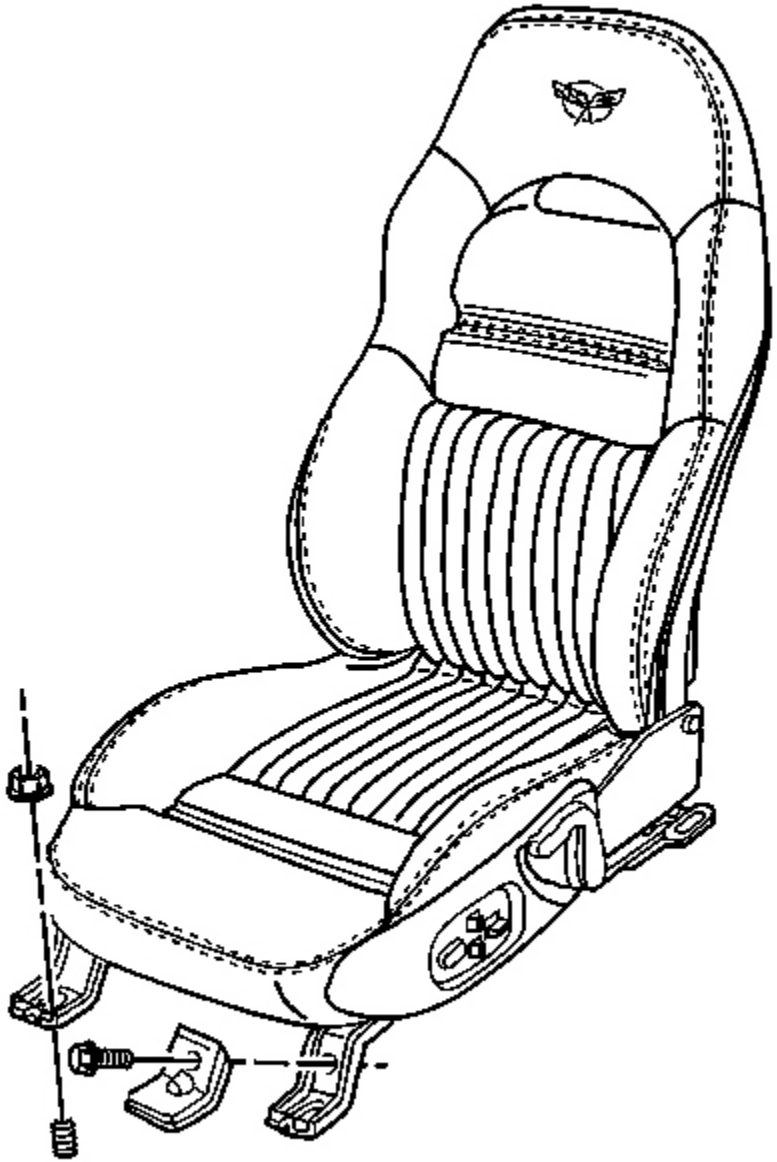

Fig. 99: Seat Mounting Component View
Courtesy of GENERAL MOTORS CORP.

18. Install the seat. Refer to **Seat Replacement (Power)** or **Seat Replacement (Manual)** .

SEAT SIDE BOLSTER BLADDER REPLACEMENT - FRONT

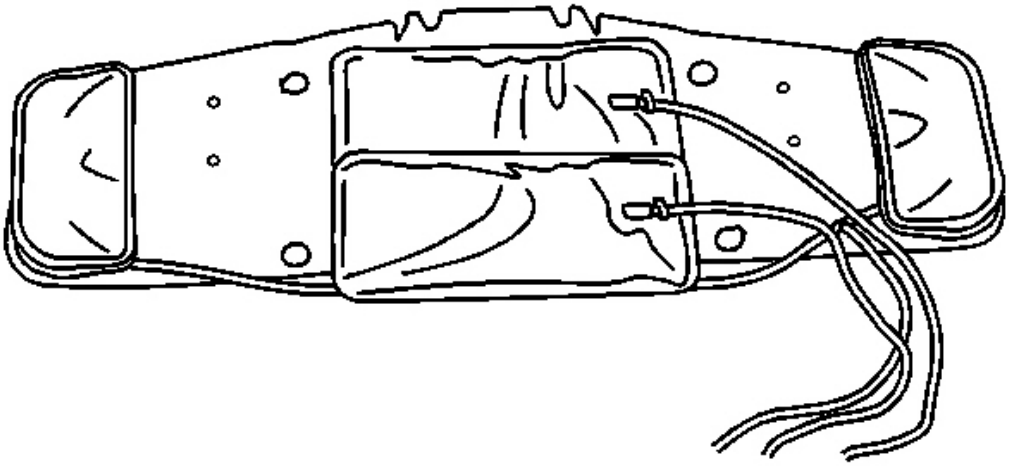

Fig. 100: Lumbar/Lateral Bladder System To Seat Back
Courtesy of GENERAL MOTORS CORP.

The side bolster bladders are part of the lumbar/lateral support bladder system. The removal and installation procedures are the same as the removal and installation procedures for the second design lumbar bladders. Refer to **Lumbar Bladder Replacement** .

SEAT ADJUSTER REPLACEMENT - FRONT

Removal Procedure

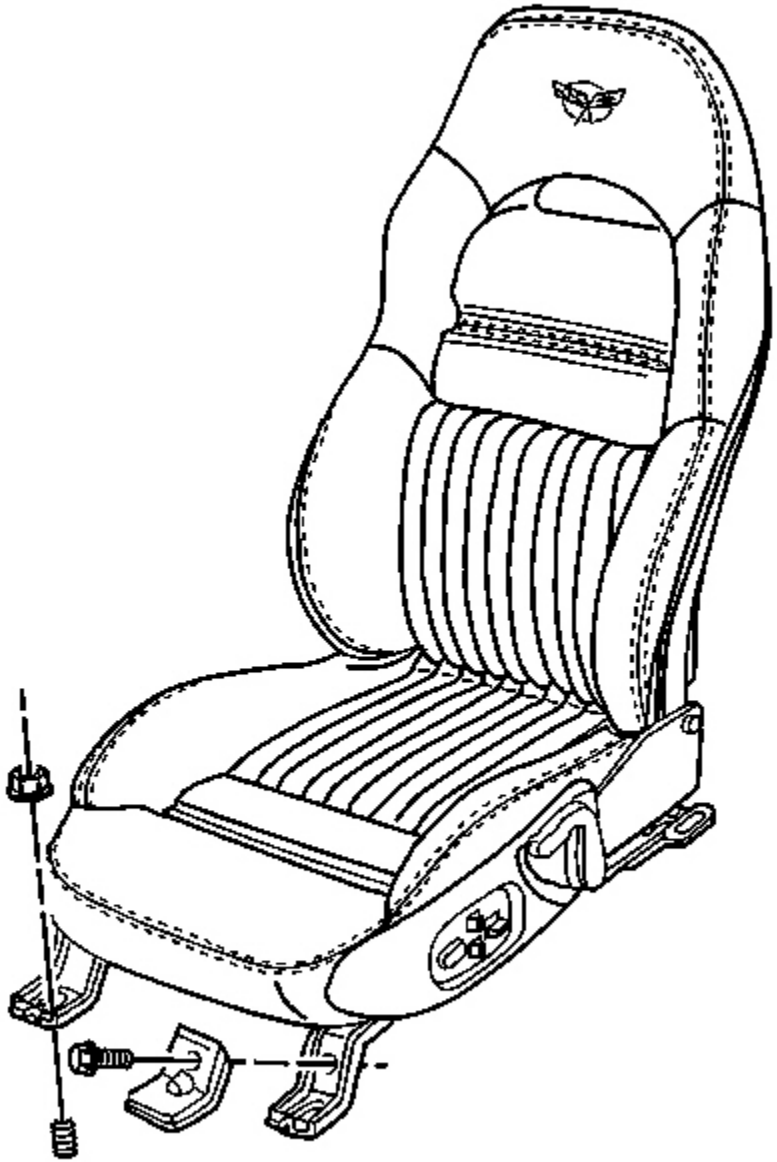

Fig. 101: Seat Mounting Component View
Courtesy of GENERAL MOTORS CORP.

1. Remove the seat. Refer to **Seat Replacement (Power)** or **Seat Replacement (Manual)** .

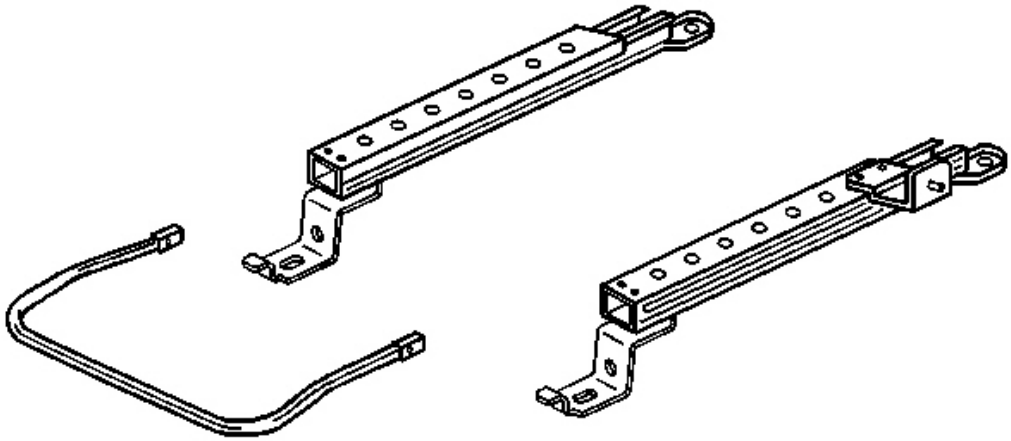

Fig. 102: Seat Adjuster Adjustment Bar
Courtesy of GENERAL MOTORS CORP.

2. For non-power seats, remove the adjuster adjustment bar.

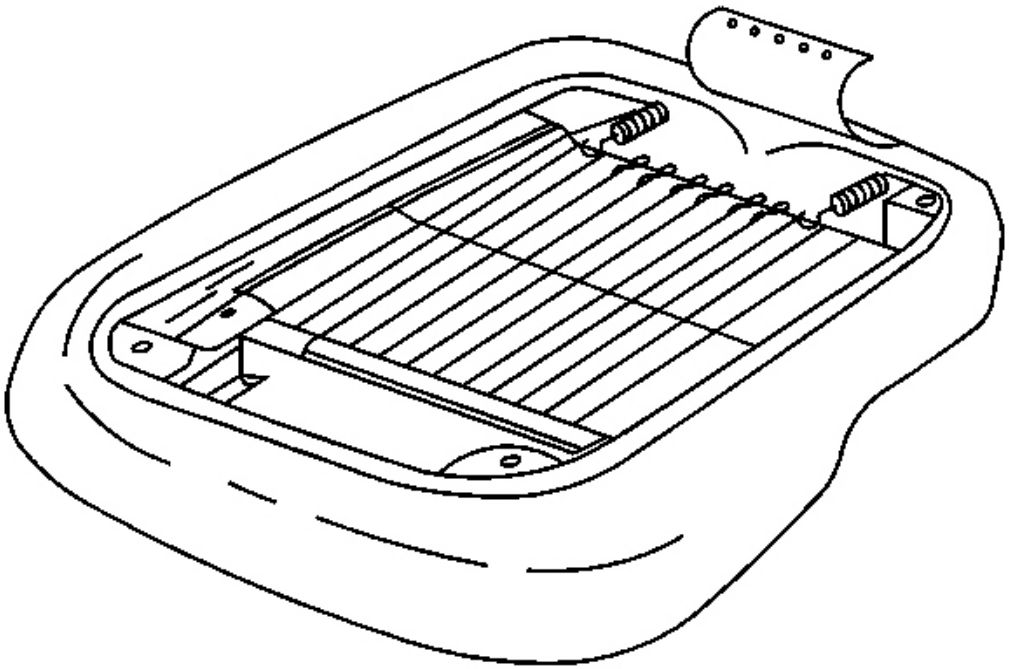

Fig. 103: Rear Corners At Seat Cushion Cover
Courtesy of GENERAL MOTORS CORP.

3. Remove the seat cushion cover. Refer to **Seat Cushion Trim Cover and Pad Replacement** .
4. Remove the seat cushion foam.

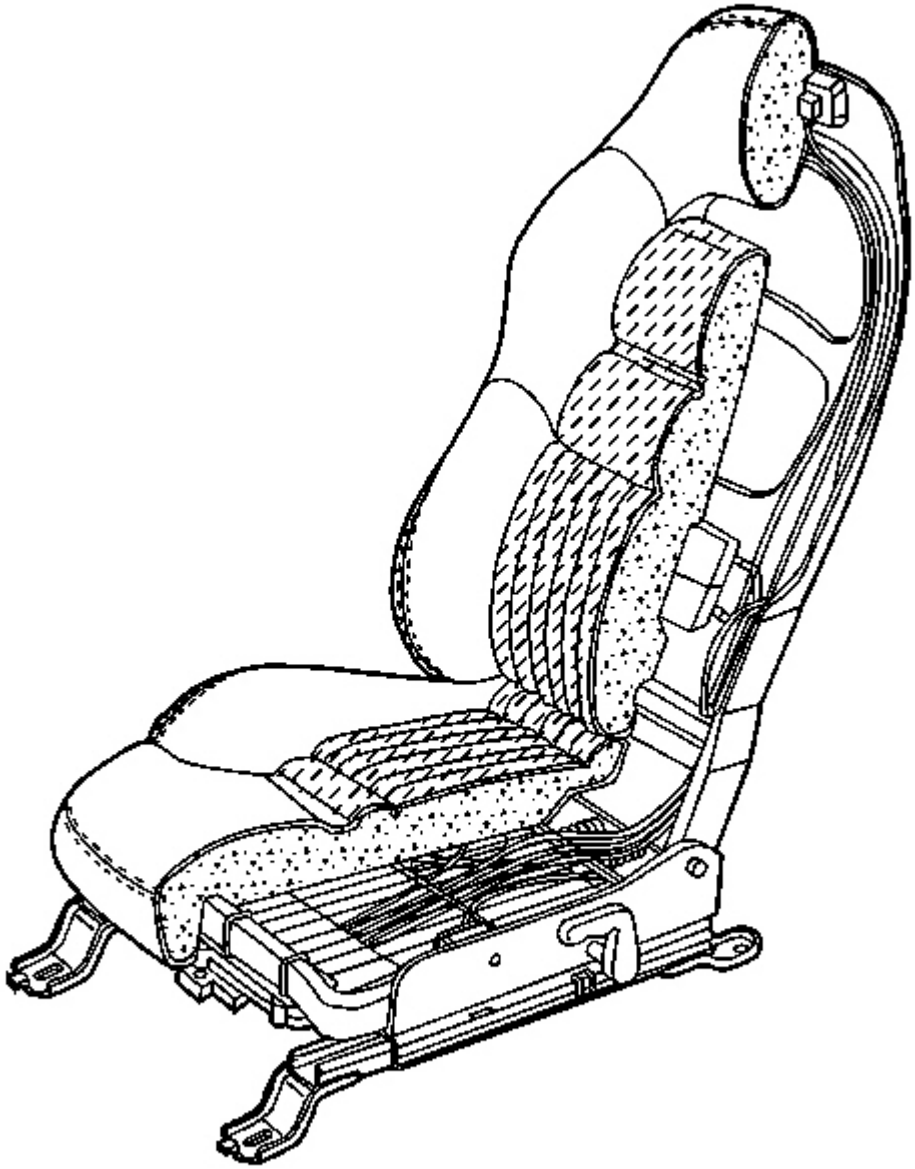

Fig. 104: Seat Electrical Connector
Courtesy of GENERAL MOTORS CORP.

5. Reposition the lumbar pump, if equipped.
6. Remove the tie straps and reposition the pump and pouch up through the seat support wires.
7. Remove the seat belt harness from the left seat frame.

8. Remove the memory seat control module, if equipped.

Fig. 105: Buckle Side At Seat Belt
Courtesy of GENERAL MOTORS CORP.

9. Remove the buckle side of the seat belt.

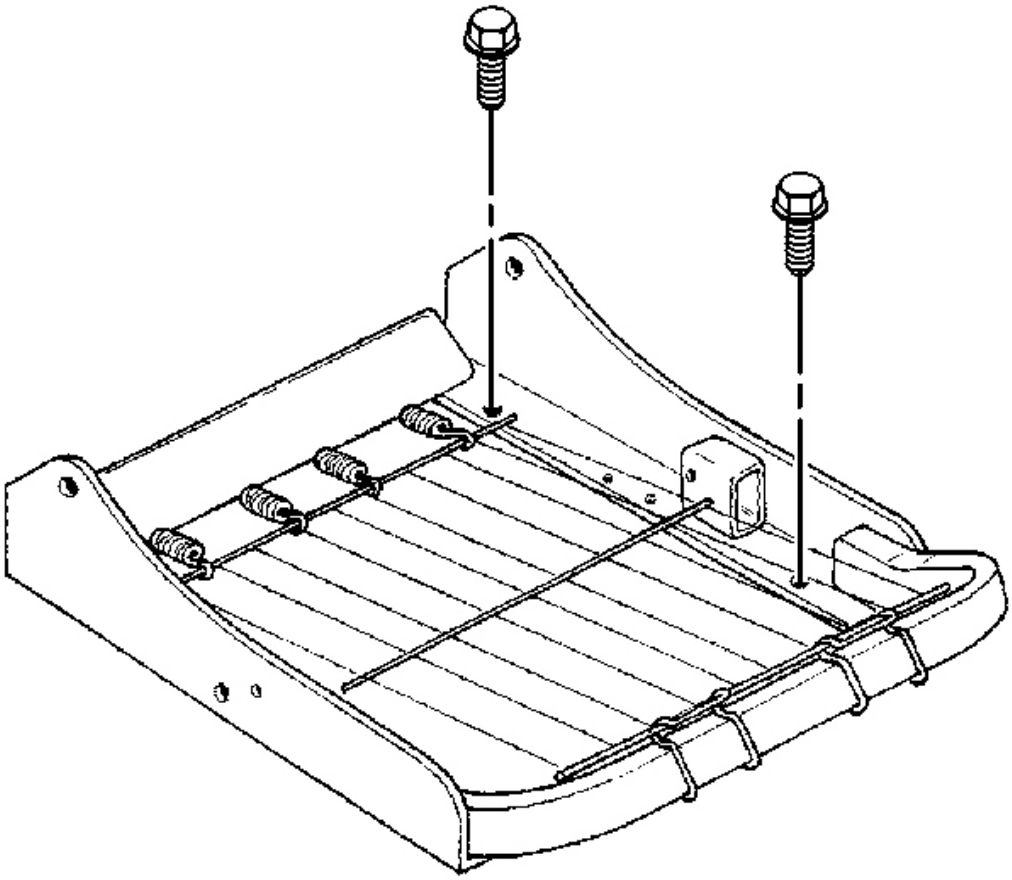

Fig. 106: Recliner Mechanism To Seat Cushion Frame
Courtesy of GENERAL MOTORS CORP.

10. Remove the hardware mounting the seat to the adjuster:
    - For a design 1 vehicle, remove the bolts.
    - For a design 2 vehicle, remove the nuts.
11. Remove the adjuster.
12. Transfer the parts as necessary.

Installation Procedure

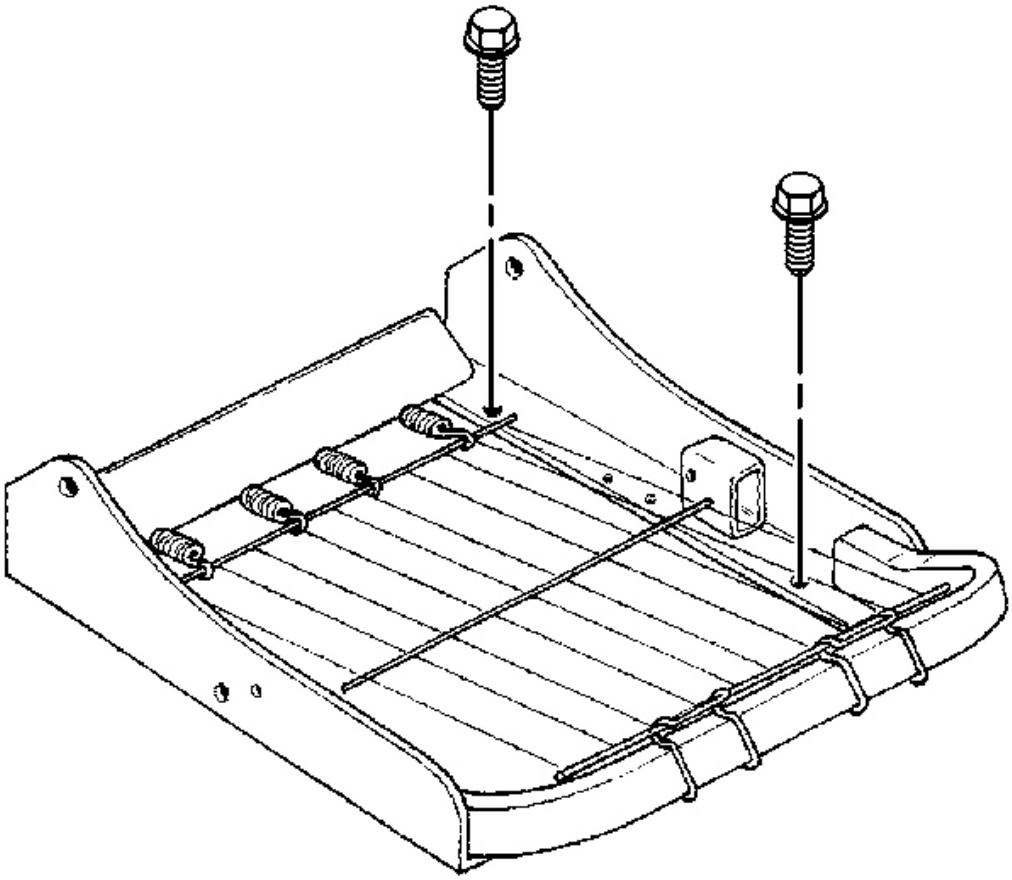

Fig. 107: Recliner Mechanism To Seat Cushion Frame
Courtesy of GENERAL MOTORS CORP.

NOTE: Refer to Fastener Notice in Cautions and Notices.

1. Install the adjuster to the seat. Tighten the hardware to the seat:

Tighten:

- For a design 1 vehicle, tighten the adjuster bolts to 24 N.m (18 lb ft).
- For a design 2 vehicle, tighten the adjuster nuts to 24 N.m (18 lb ft).

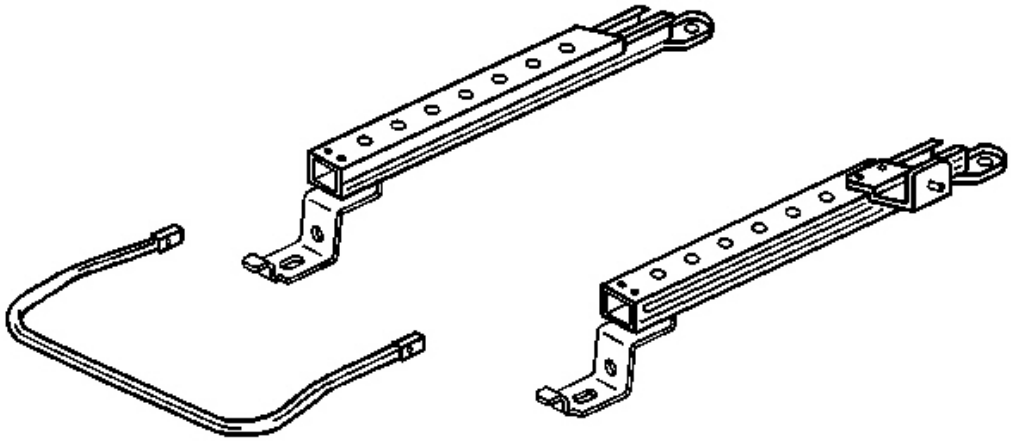

Fig. 108: Seat Adjuster Adjustment Bar
Courtesy of GENERAL MOTORS CORP.

2. For non-power seats, align the adjusters with their locking pawls engaged in the same slots side to side.
3. Install the seat adjuster adjustment bar.

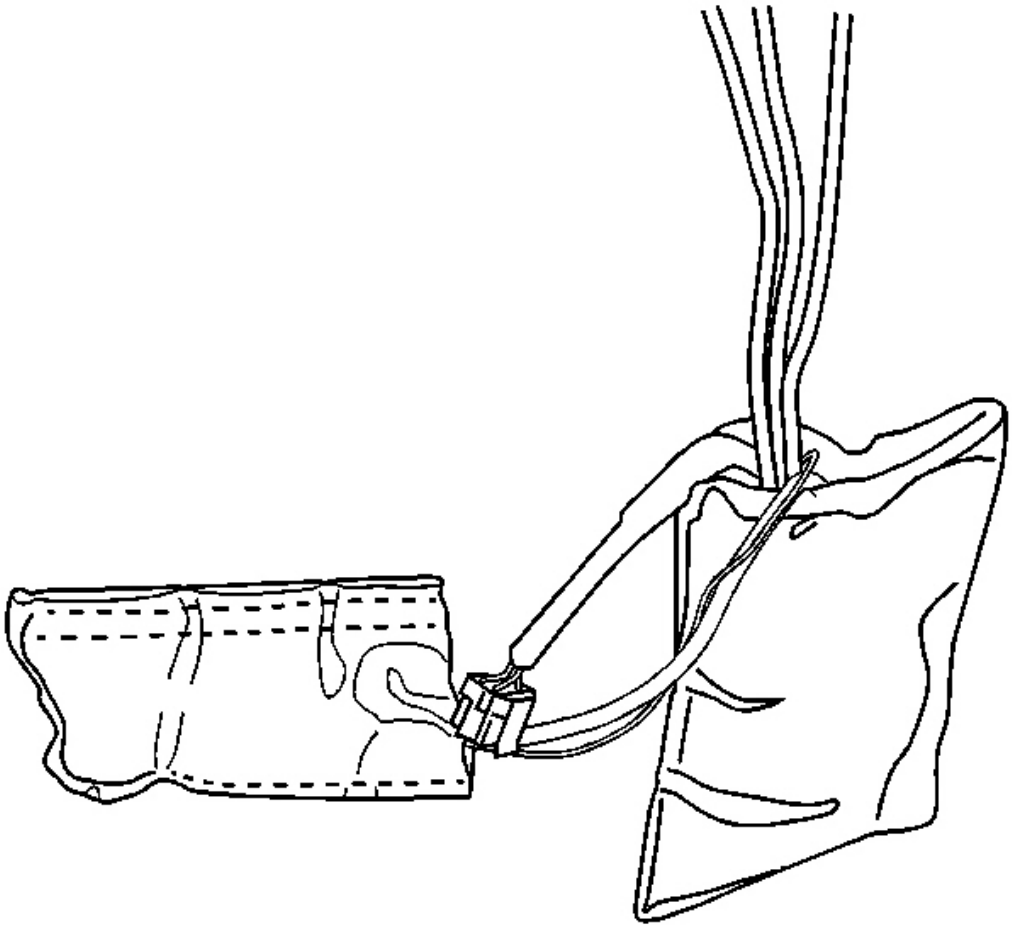

Fig. 109: Lumbar Pump & Module To Seat Frame & Seat Back
Courtesy of GENERAL MOTORS CORP.

4. Install the lumbar pump, if equipped.

   Tie strap the pump to the torque tube.

5. Connect the seat belt harness to the left seat.

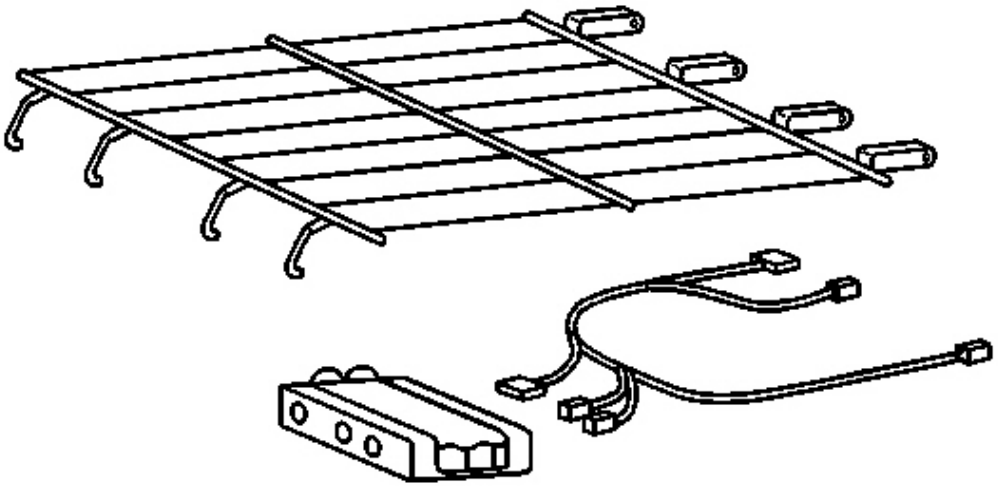

Fig. 110: Wire Assembly To Seat Cushion Frame
Courtesy of GENERAL MOTORS CORP.

6. Install the memory seat control module to the seat spring wire, if equipped.

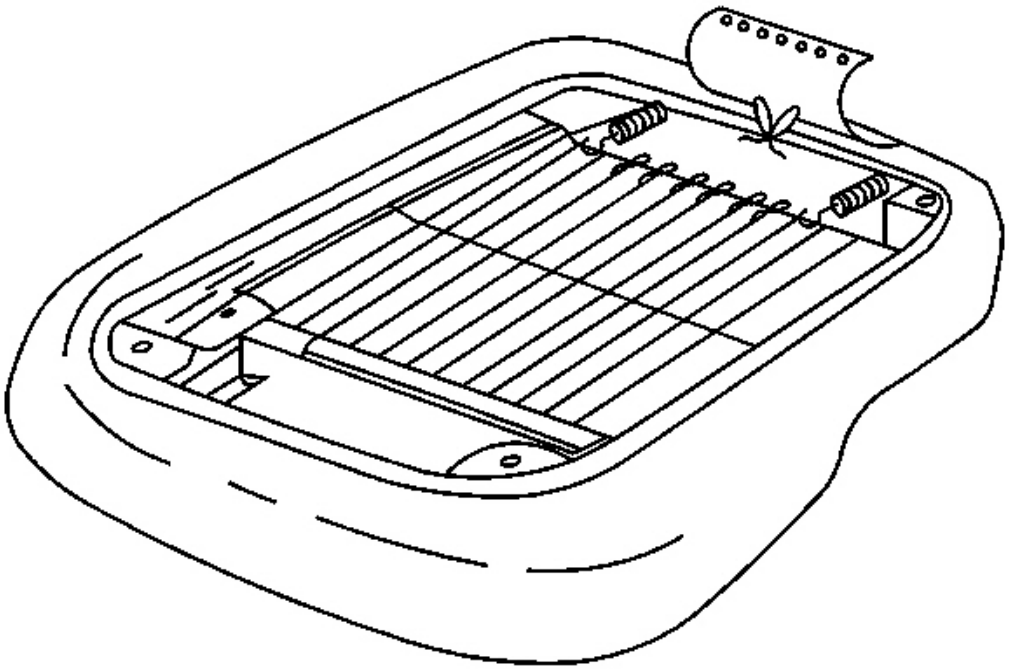

Fig. 111: Trim Cover To Seat Cushion Foam Pad
Courtesy of GENERAL MOTORS CORP.

7. Install the foam to the seat frame.
8. Install the seat cushion cover. Refer to **Seat Cushion Trim Cover and Pad Replacement** .

Fig. 112: Buckle Side At Seat Belt
Courtesy of GENERAL MOTORS CORP.

9. Install the buckle side of the seat belt.

   Tighten: Tighten the mounting nut to 50 N.m (37 lb ft).

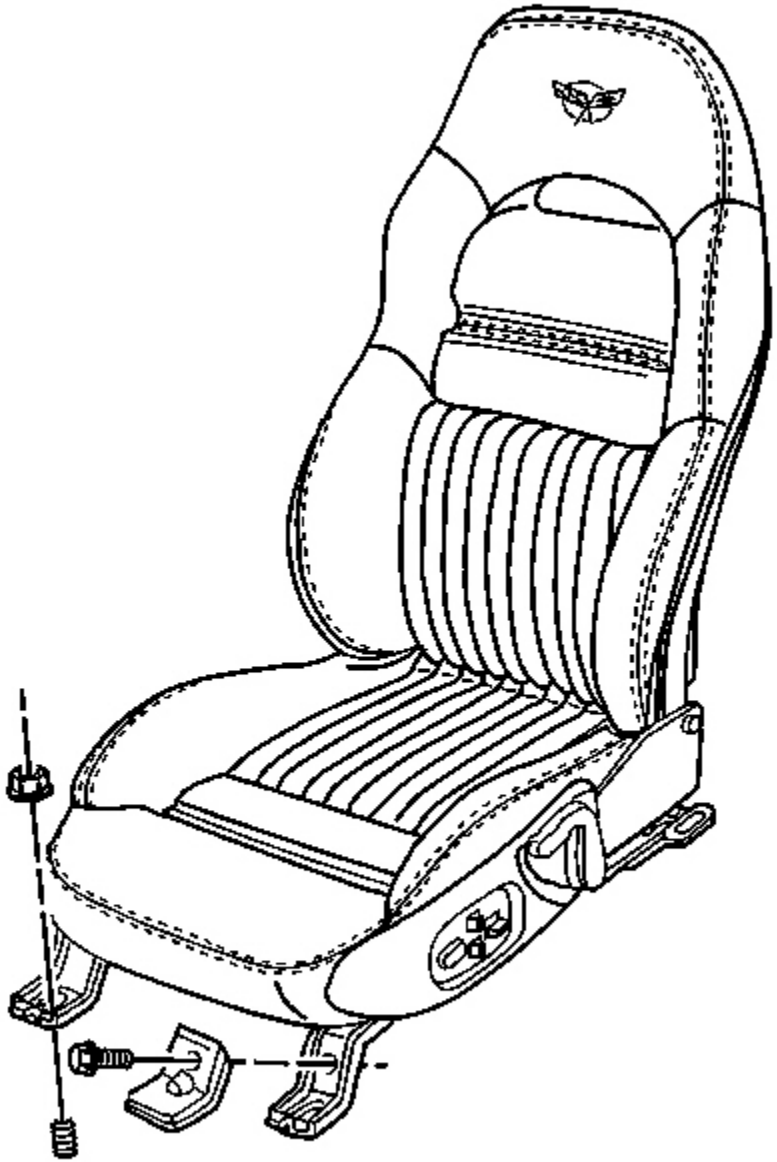

Fig. 113: Seat Mounting Component View
Courtesy of GENERAL MOTORS CORP.

10. Install the seat. Refer to **Seat Replacement (Power)** or **Seat Replacement (Manual)** .
11. If the vehicle is equipped with memory seats, calibrate the seat. Refer to **Memory Seat Calibration Procedure** .

SEAT ADJUSTER MOTOR REPLACEMENT - FRONT

Removal Procedure

The power seat motors are only available as an assembly with the adjusters. To replace the assembly follow the procedure to replace the adjuster. Refer to **Seat Adjuster Replacement - Front** .

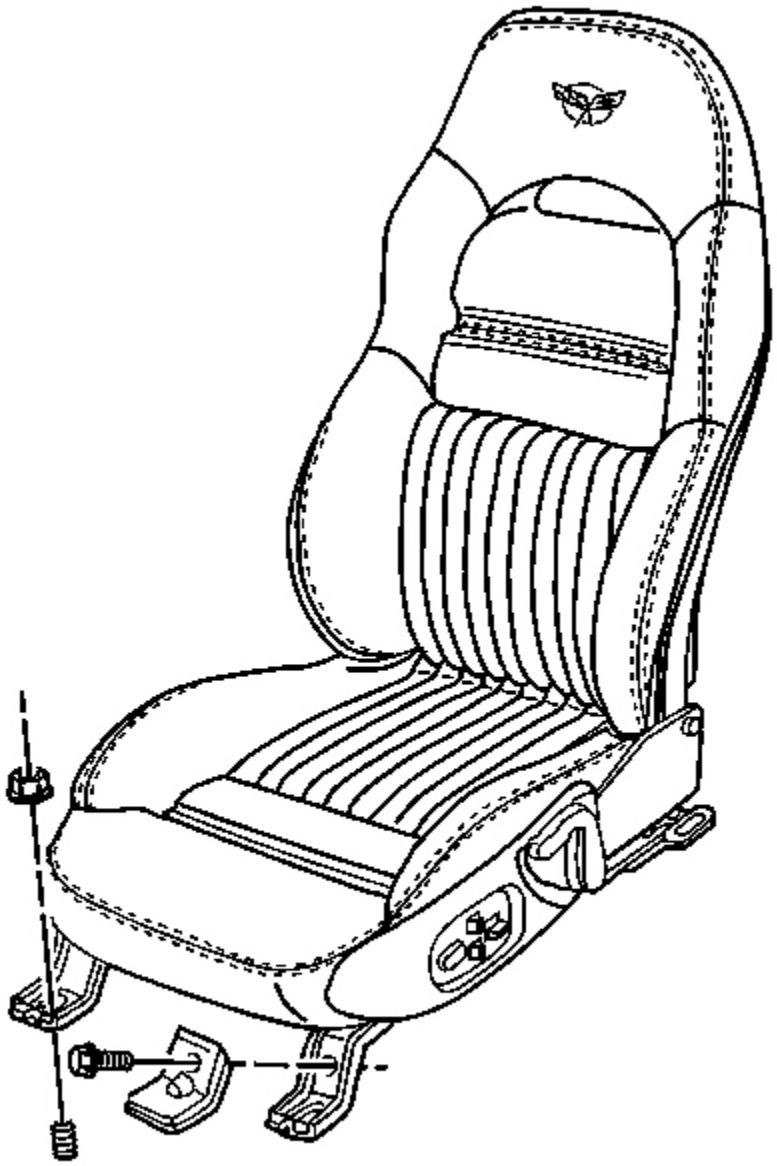

Fig. 114: Seat Mounting Component View
Courtesy of GENERAL MOTORS CORP.

1. Remove the seat. Refer to **Seat Replacement (Power)** or **Seat Replacement (Manual)** .

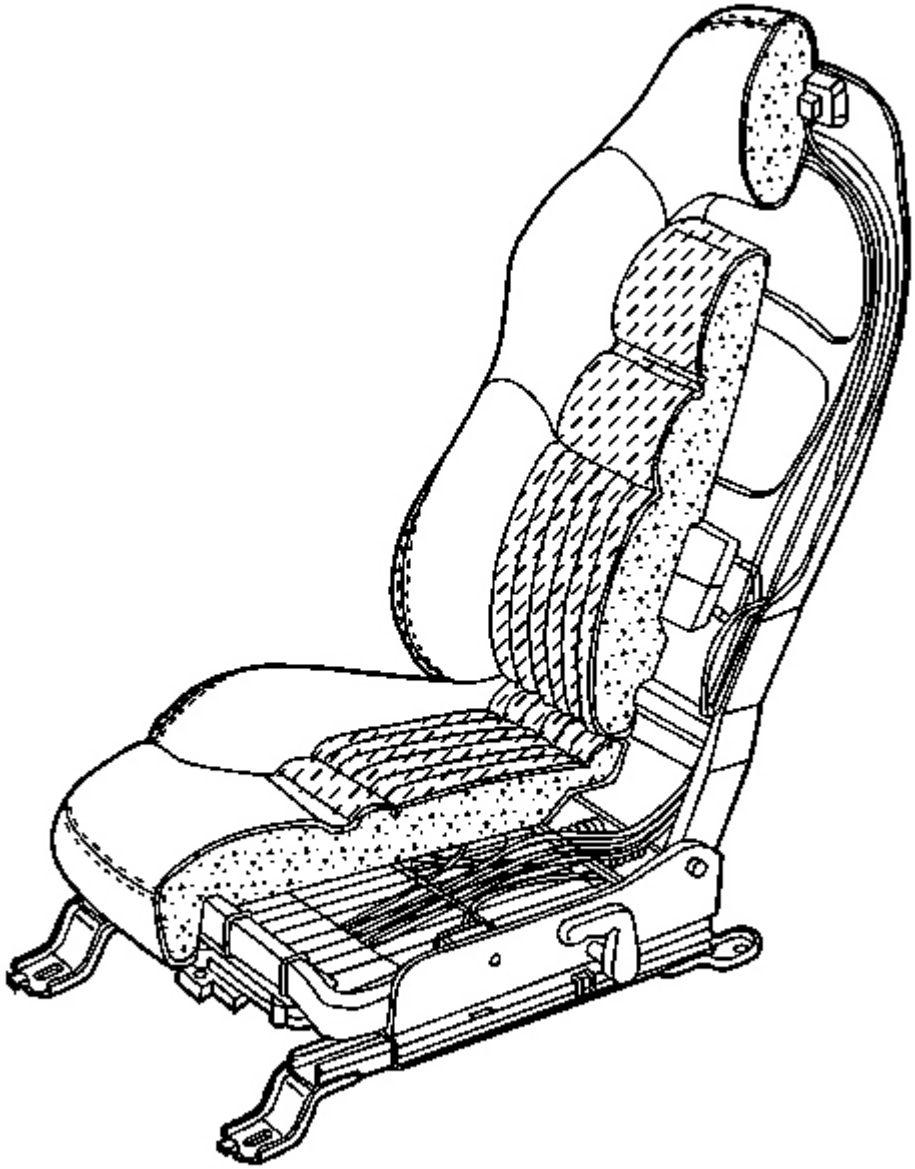

Fig. 115: Seat Electrical Connector

Courtesy of GENERAL MOTORS CORP.

2. Remove or reposition the lumbar pump, if equipped.

   Remove the tie straps attaching the pump to the torque tube and reposition the pump.

3. Slide the front motor bracket to one side.
4. Remove that drive cable.
5. Slide the bracket off that adjuster transmission.
6. Slide the bracket in the opposite direction and remove the drive cable and the bracket from that adjuster transmission.
7. Position the bracket outward.
8. Disconnect the motor electrical harness connector.
9. Remove the front motor.
10. Mark the location and position of the rear motors to aid in installation.
11. Remove the motors with harness.

Installation Procedure

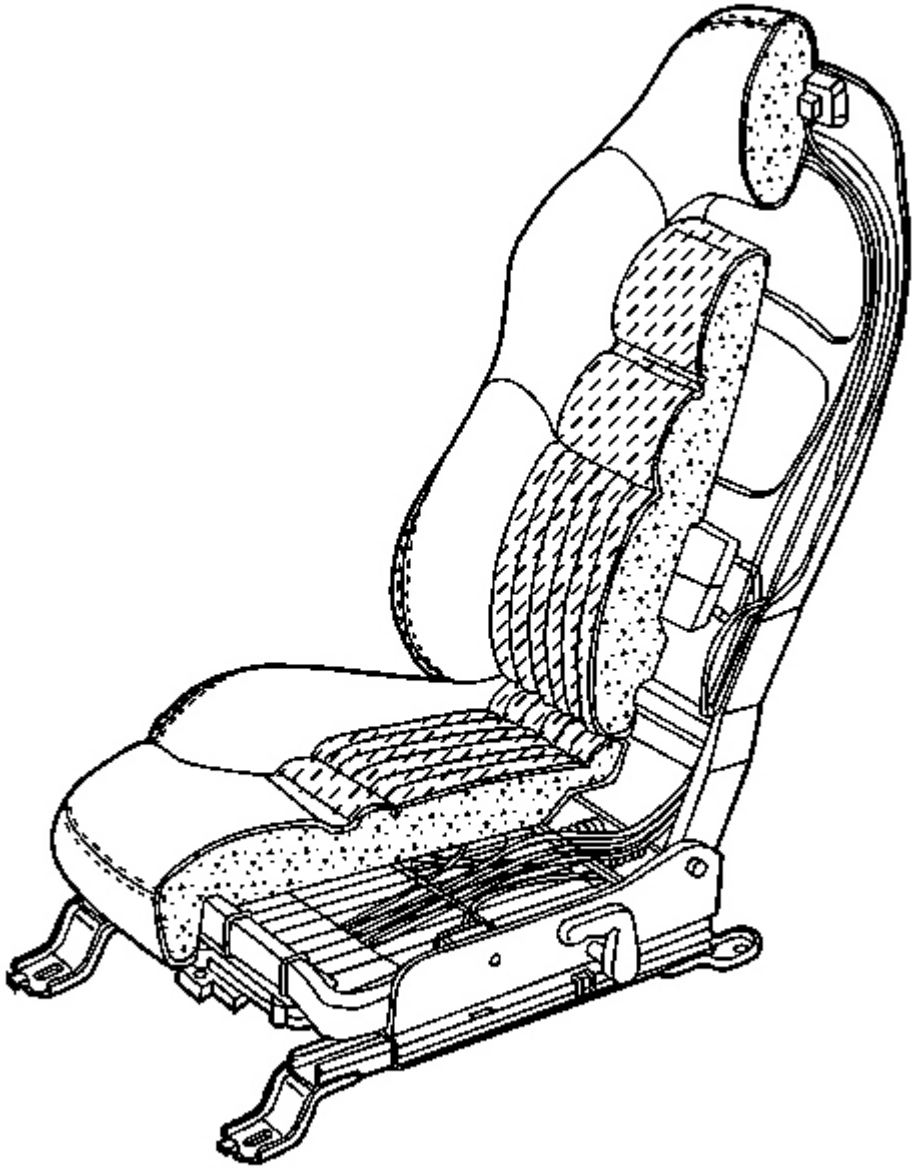

Fig. 116: Seat Electrical Connector
Courtesy of GENERAL MOTORS CORP.

1. Position the motors and harness to the seat frame.
2. Install the cables to the two rear motors and to the adjuster.
3. Install the screws mounting the rear motors.

4. Install the front motor (forward and back motor) to the bracket.
5. Connect the harness electrical connector.
6. Position the bracket onto one adjuster transmission.
7. Insert the drive cable into the motor and then into the transmission. It may be necessary to turn the cable to get the cable to slide into the transmission.
8. Repeat the 2 previous steps on the opposite side.
9. Bend the bracket ends outward enough to prevent the bracket from sliding off the transmissions.

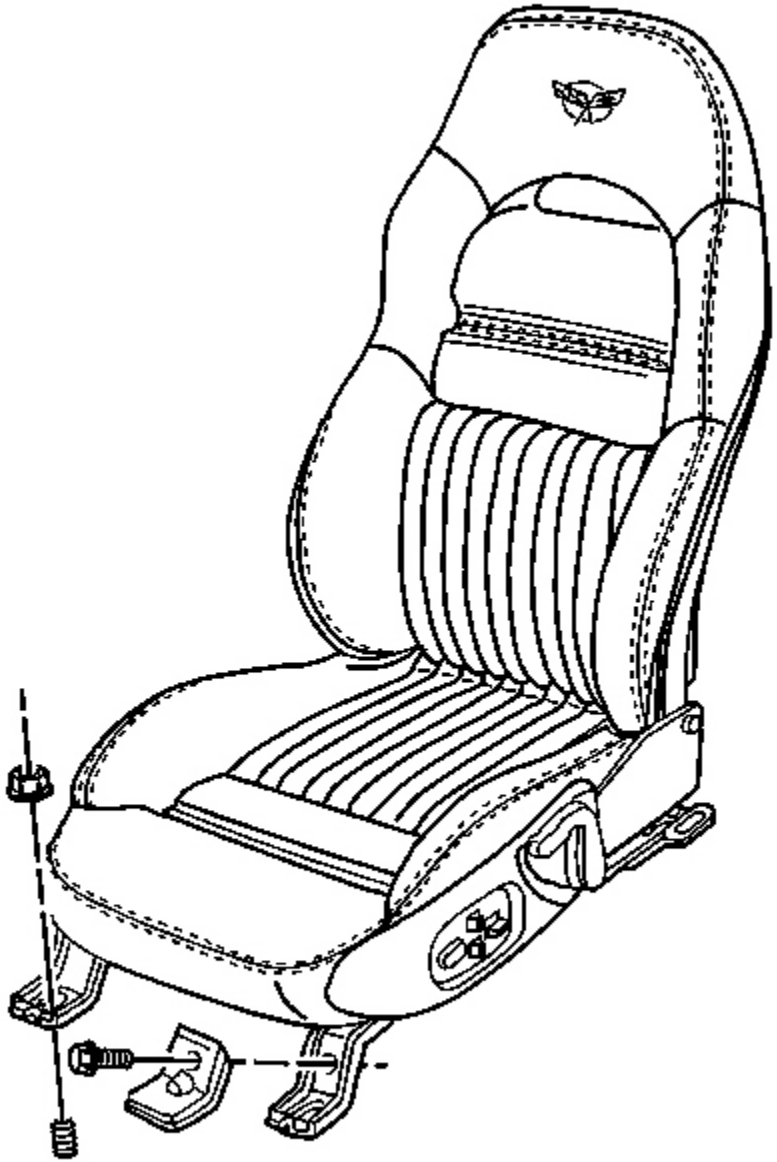

Fig. 117: Seat Mounting Component View
Courtesy of GENERAL MOTORS CORP.

10. Tie strap the lumbar pump to the torque tube, if equipped.
11. Install the seat. Refer to **Seat Replacement (Power)** or **Seat Replacement (Manual)** .
12. If the vehicle is equipped with memory seats, calibrate the seat. Refer to **Memory Seat Calibration**

Procedure .

SEAT SWITCH REPLACEMENT - POWER

Removal Procedure

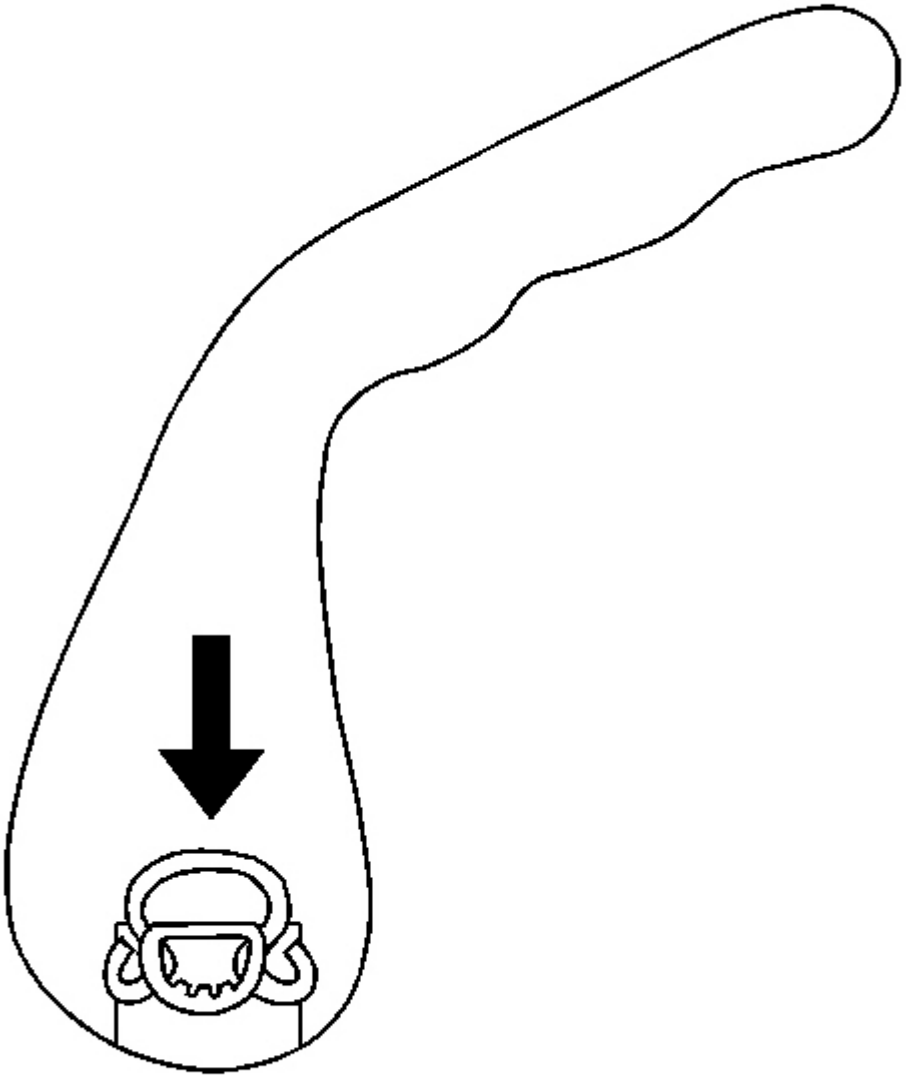

Fig. 118: Seat Back Recliner Handle
Courtesy of GENERAL MOTORS CORP.

1. Remove the seat back recliner handle.
    1. With a suitable blunt ended tool inserted between the cushion and the handle push the handle retaining spring clip down.
    2. Pull the handle from the shaft.

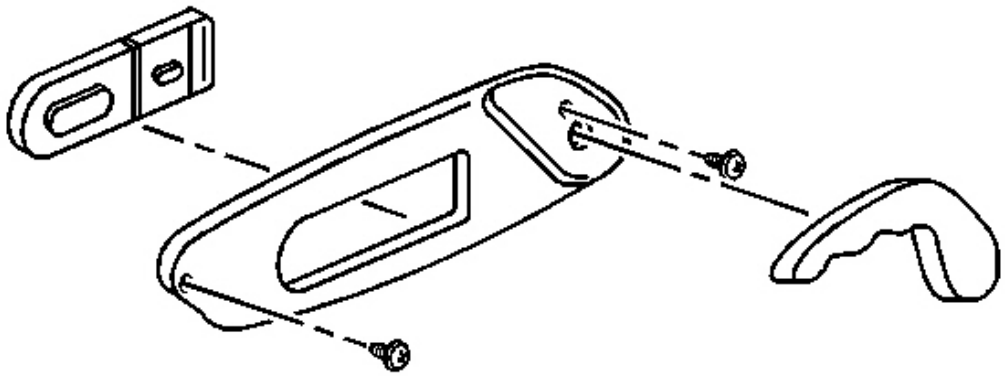

Fig. 119: Switch To Side Trim Panel & Screws
Courtesy of GENERAL MOTORS CORP.

2. Remove the screws attaching the seat side trim panel.

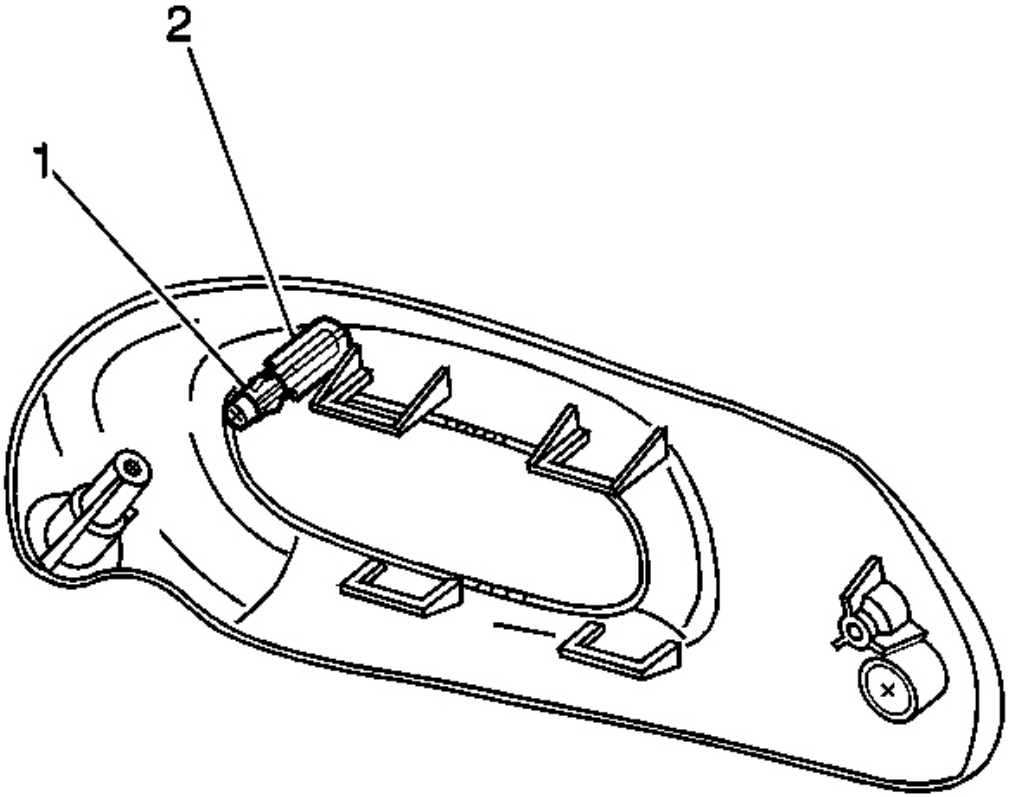

Fig. 120: Panel Side To Seat Frame
Courtesy of GENERAL MOTORS CORP.

3. Rock the panel side to side working the barrel post clip (1) out of the seat frame.
4. Reposition panel away from the seat.

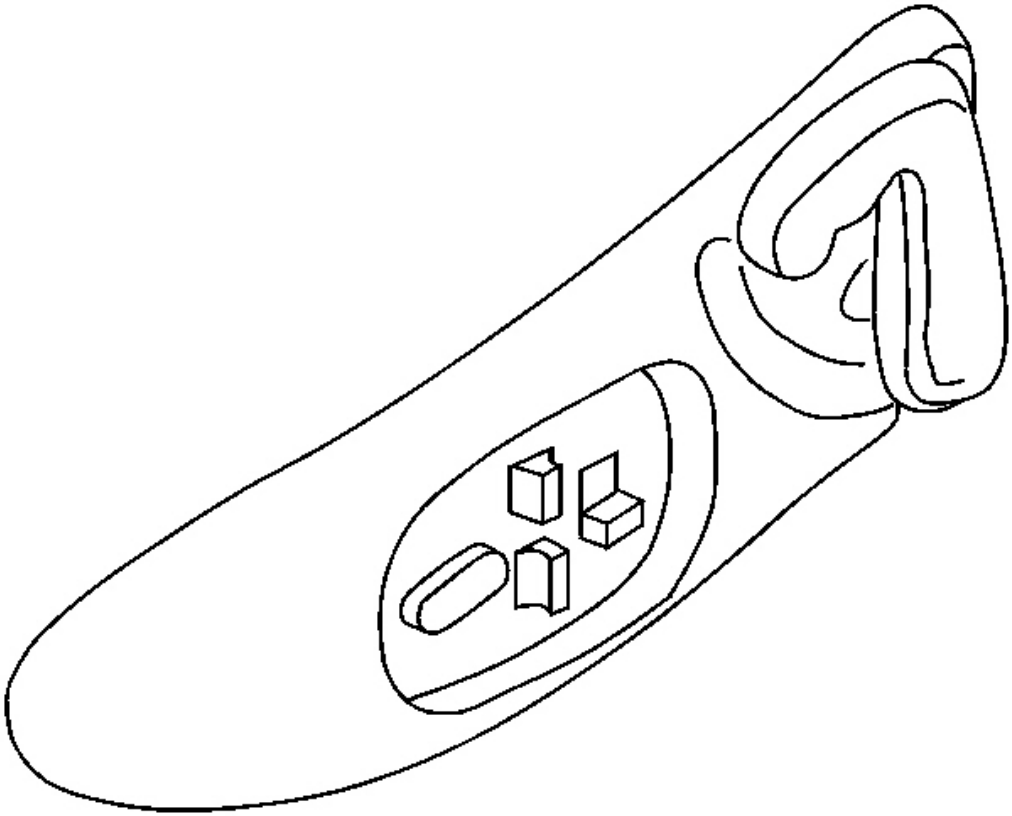

Fig. 121: Side Trim Panel & Switch Harness
Courtesy of GENERAL MOTORS CORP.

5. Disconnect the switch harness.
6. Remove the switch.

Installation Procedure

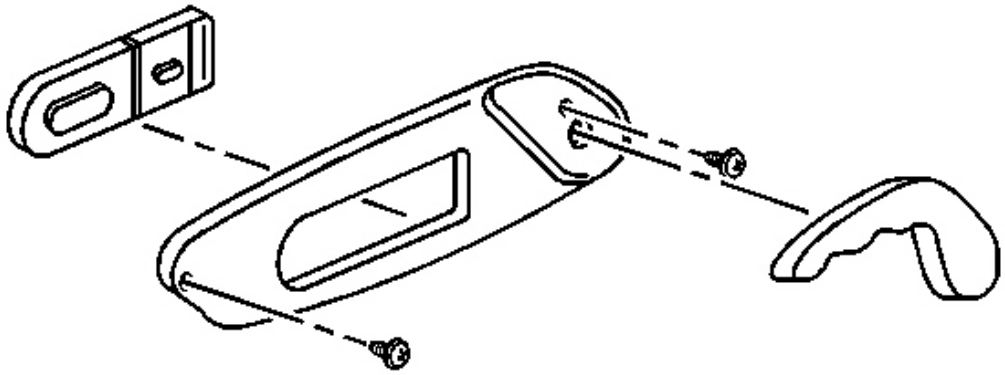

Fig. 122: Switch To Side Trim Panel & Screws
Courtesy of GENERAL MOTORS CORP.

1. Install the switch to the side trim panel.

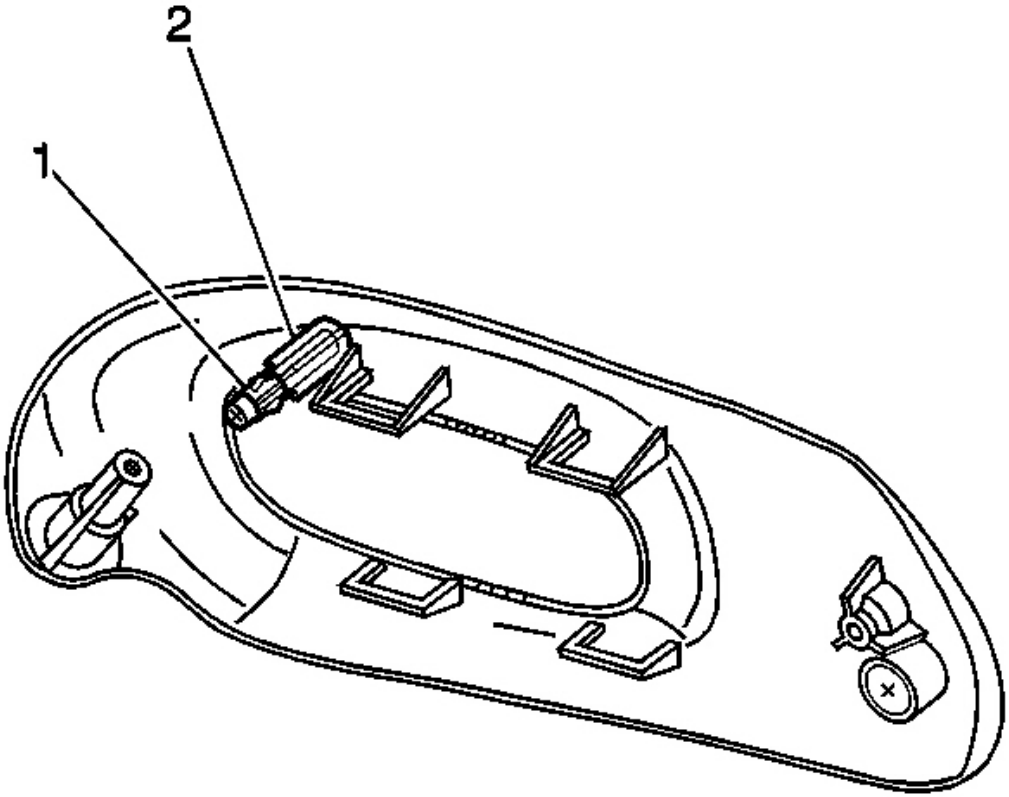

Fig. 123: Panel Side To Seat Frame
Courtesy of GENERAL MOTORS CORP.

2. Install a new barrel clip (1) to the trim panel upper barrel post (2).
3. Connect the switch harness.

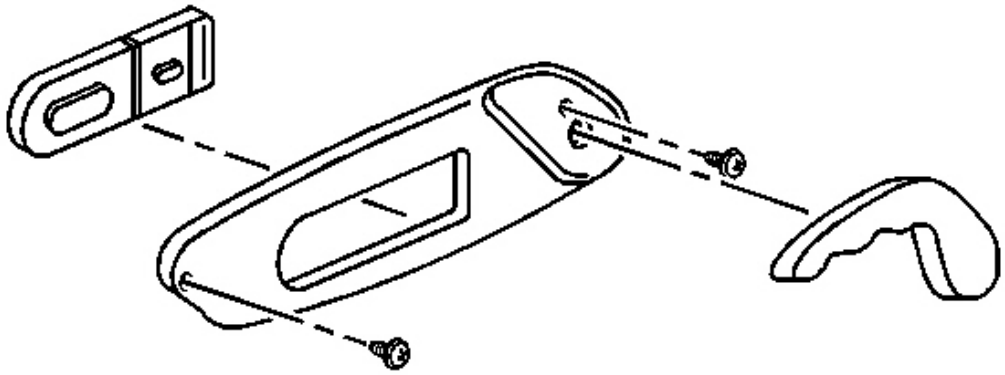

Fig. 124: Switch To Side Trim Panel & Screws
Courtesy of GENERAL MOTORS CORP.

4. Install the seat side trim panel.
    - Push the barrel post with clip through the hole in the seat cover and into the seat frame.
    - Install the front and rear trim panel attaching screws.

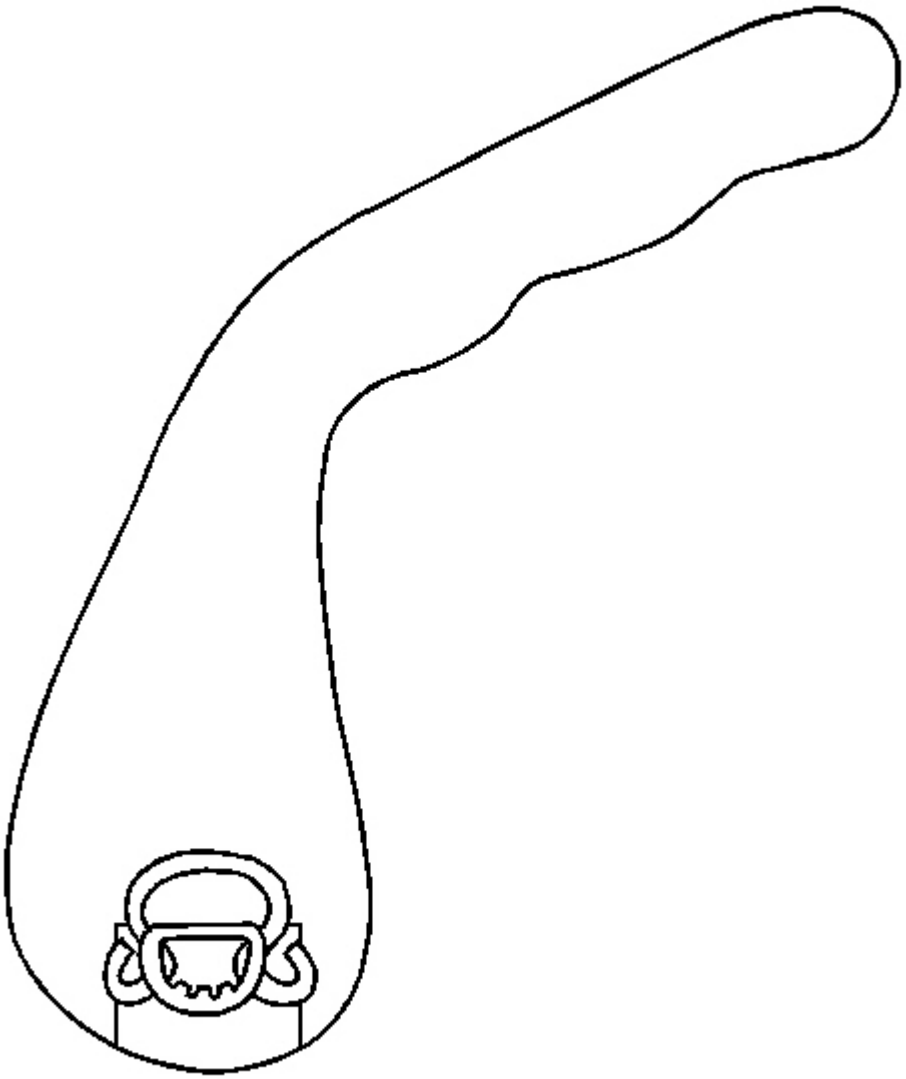

Fig. 125: Recliner Handle To Reclining Mechanism Shaft
Courtesy of GENERAL MOTORS CORP.

5. Install the seat back recliner handle.
    1. Position the handle retaining spring clip into the lock position.
    2. Snap the handle onto the reclining mechanism shaft.

MEMORY SEAT CONTROL MODULE REPLACEMENT

Removal Procedure

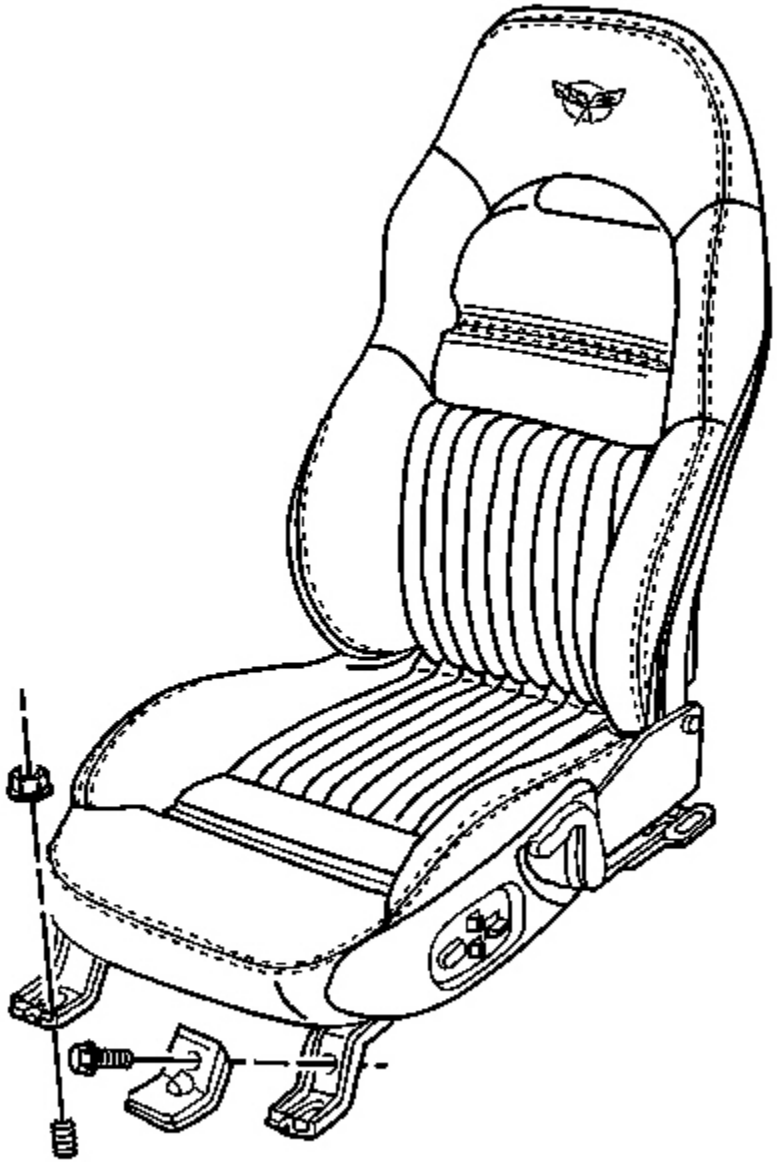

Fig. 126: Seat Mounting Component View
Courtesy of GENERAL MOTORS CORP.

1. Remove the seat. Refer to **Seat Replacement (Power)** or **Seat Replacement (Manual)** .

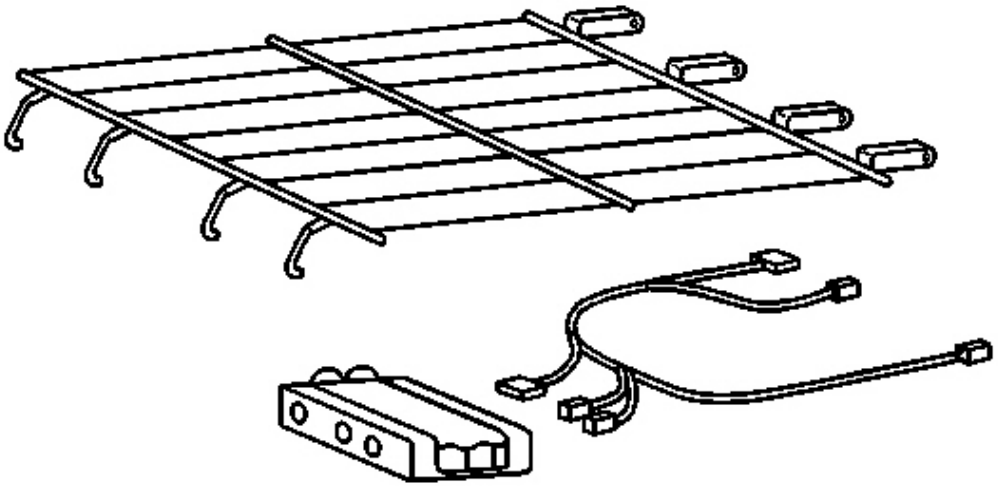

Fig. 127: Wire Assembly To Seat Cushion Frame
Courtesy of GENERAL MOTORS CORP.

2. Remove the memory seat control module from the seat foam support wires.
3. Reposition the memory seat control module out through the opening.
4. Disconnect the harness connectors.

Installation Procedure

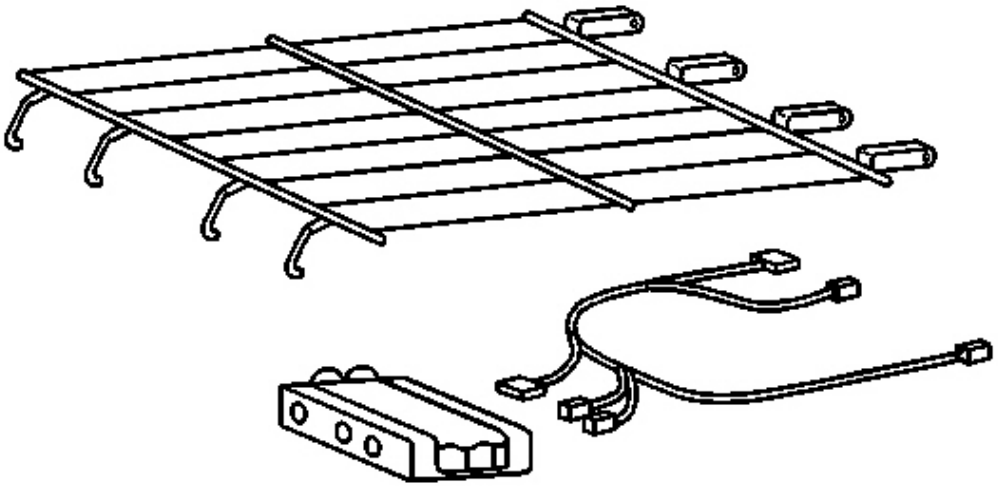

Fig. 128: Wire Assembly To Seat Cushion Frame
Courtesy of GENERAL MOTORS CORP.

1. Connect harness connectors to the memory seat control module.
2. Install the memory seat control module to the seat cushion foam support wires.

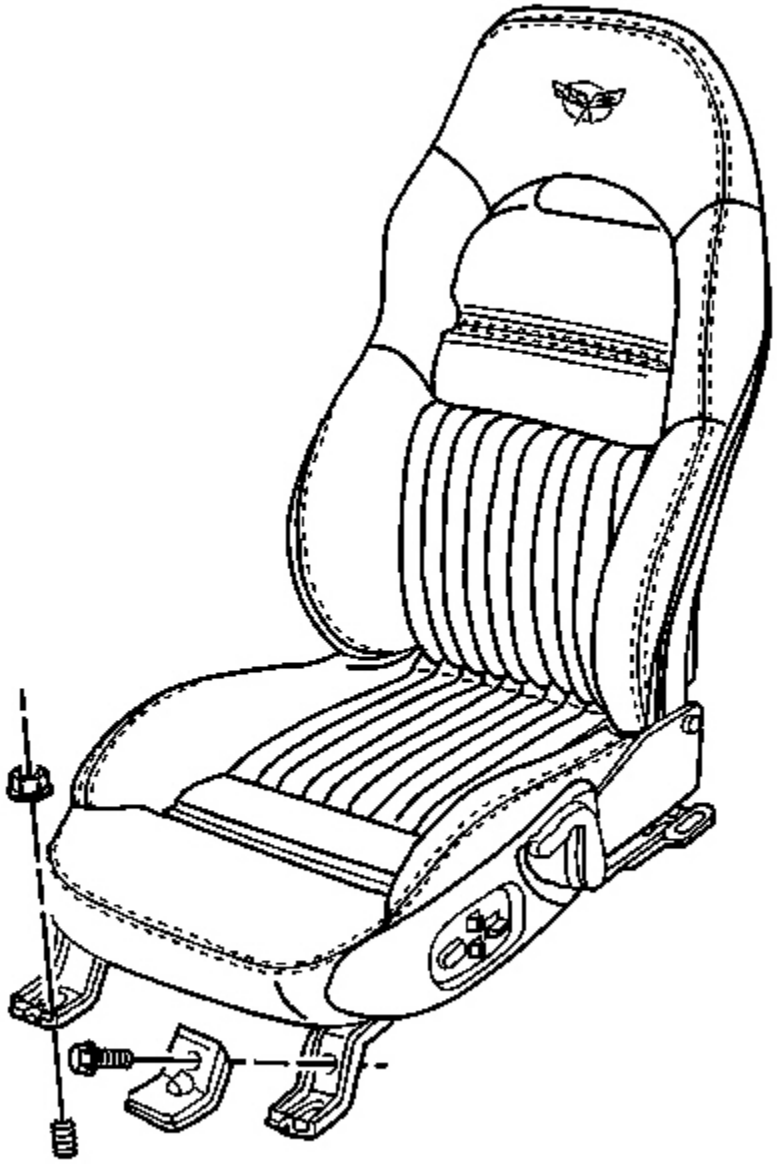

Fig. 129: Seat Mounting Component View
Courtesy of GENERAL MOTORS CORP.

3. Install the seat. Refer to **Seat Replacement (Power)** or **Seat Replacement (Manual)** .
4. Calibrate the seat. Refer to **Memory Seat Calibration Procedure** .

MEMORY SEAT CALIBRATION PROCEDURE

The memory seat module uses position sensor inputs to establish soft stop locations for the adjuster motors several millimeters ahead of the physical limits of the adjuster assembly. After replacing a memory seat module or adjuster components, it may be necessary to reset the adjuster motor soft stop locations. When the repair procedure has been completed, operate the seat adjuster switch in every direction until the seat adjuster reaches its mechanical hard stop by repeatedly pressing and releasing the switch as necessary.

TRIM PANEL REPLACEMENT - FRONT SEAT

Removal Procedure

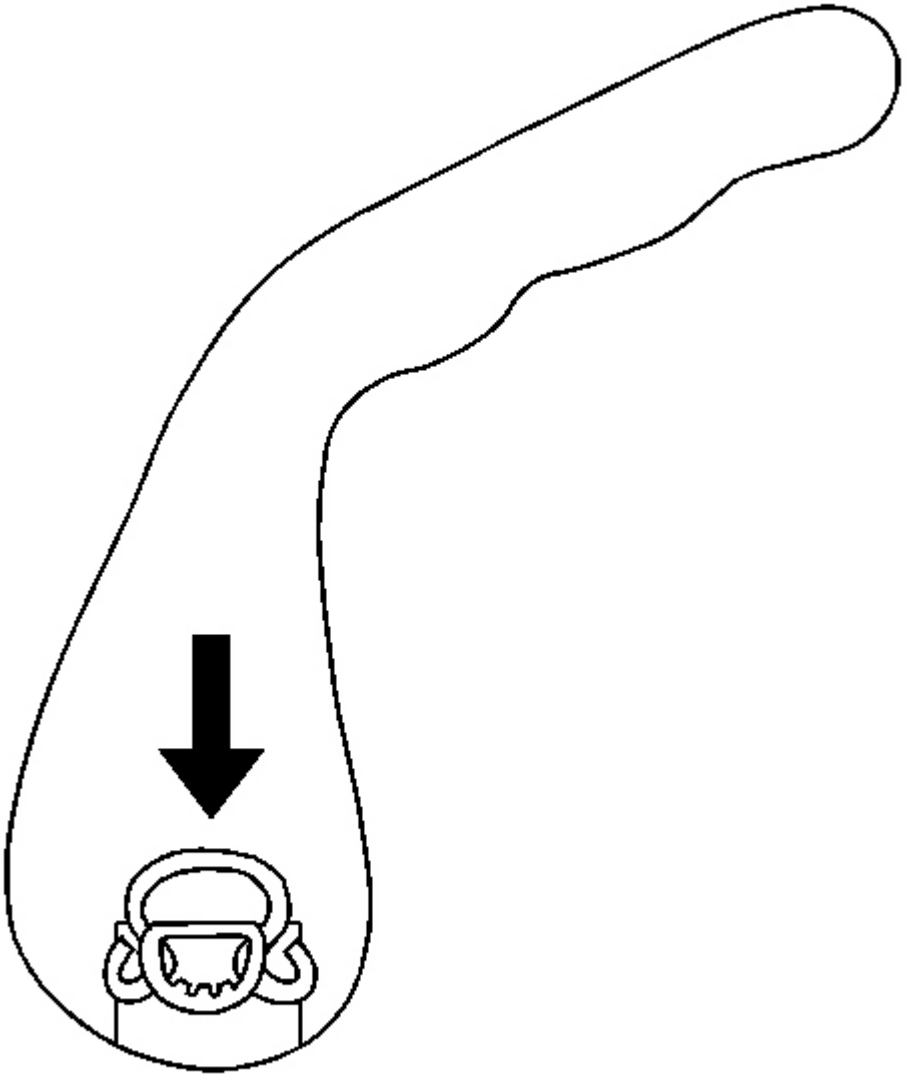

Fig. 130: Seat Back Recliner Handle
Courtesy of GENERAL MOTORS CORP.

1. Remove the seat back recliner handle. Refer to **Seat Back Recliner Handle Replacement - Front** .

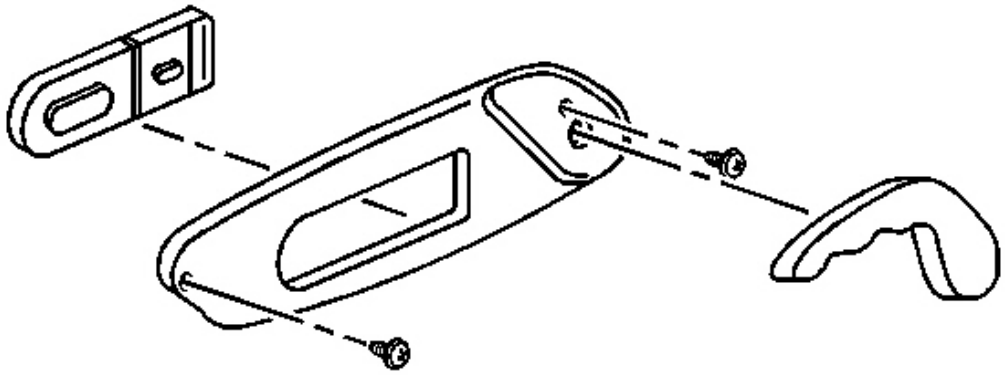

Fig. 131: Switch To Side Trim Panel & Screws
Courtesy of GENERAL MOTORS CORP.

2. Remove the screws attaching the seat side trim panel.

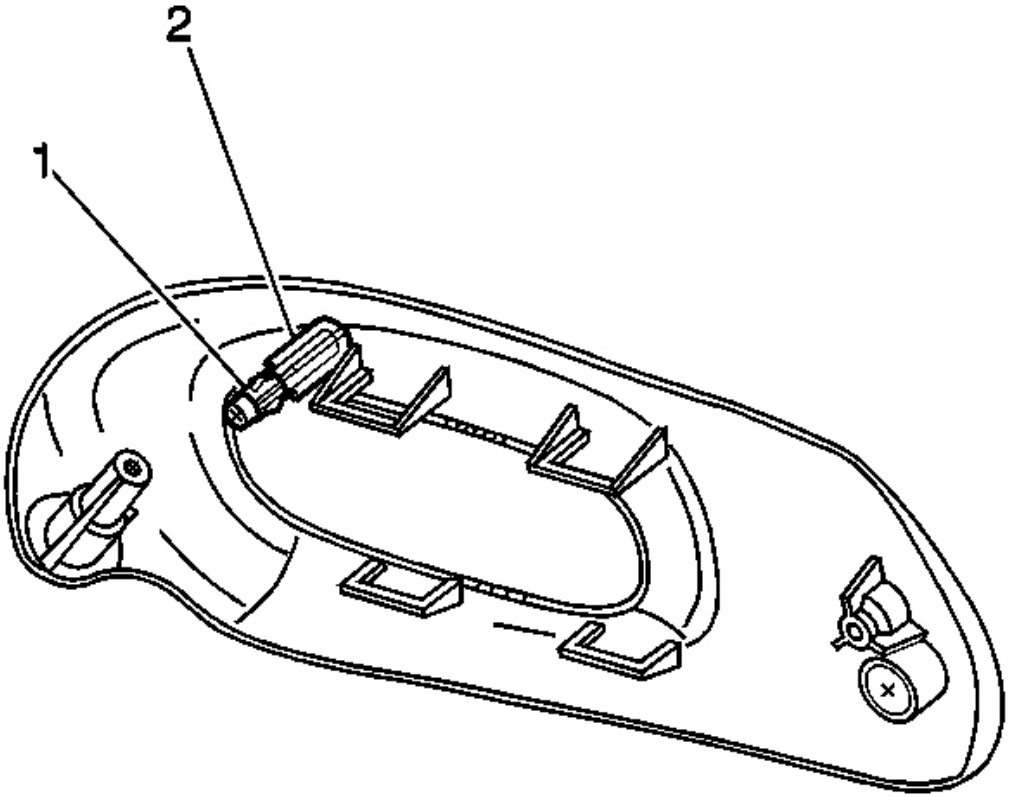

Fig. 132: Panel Side To Seat Frame
Courtesy of GENERAL MOTORS CORP.

3. Rock the panel side to side working the barrel post clip (1) out of the seat frame.

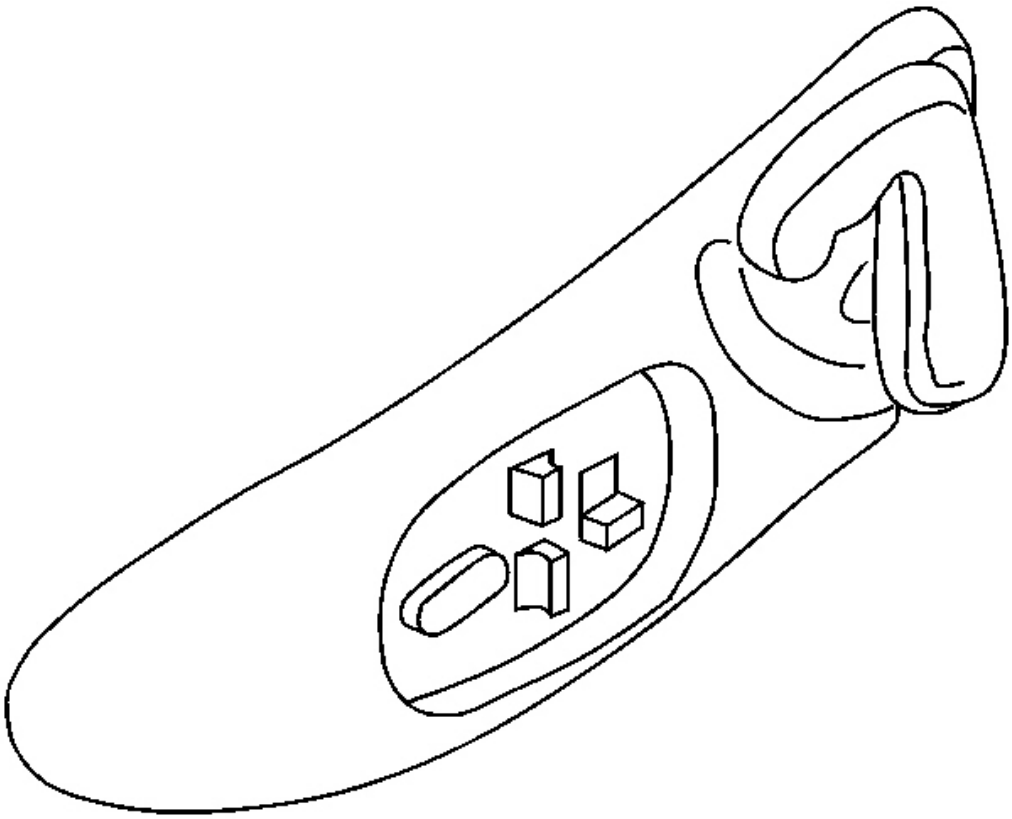

Fig. 133: Side Trim Panel & Switch Harness
Courtesy of GENERAL MOTORS CORP.

4. Disconnect the switch harness.
5. Remove the trim panel.
6. Transfer the switch if necessary.

Installation Procedure

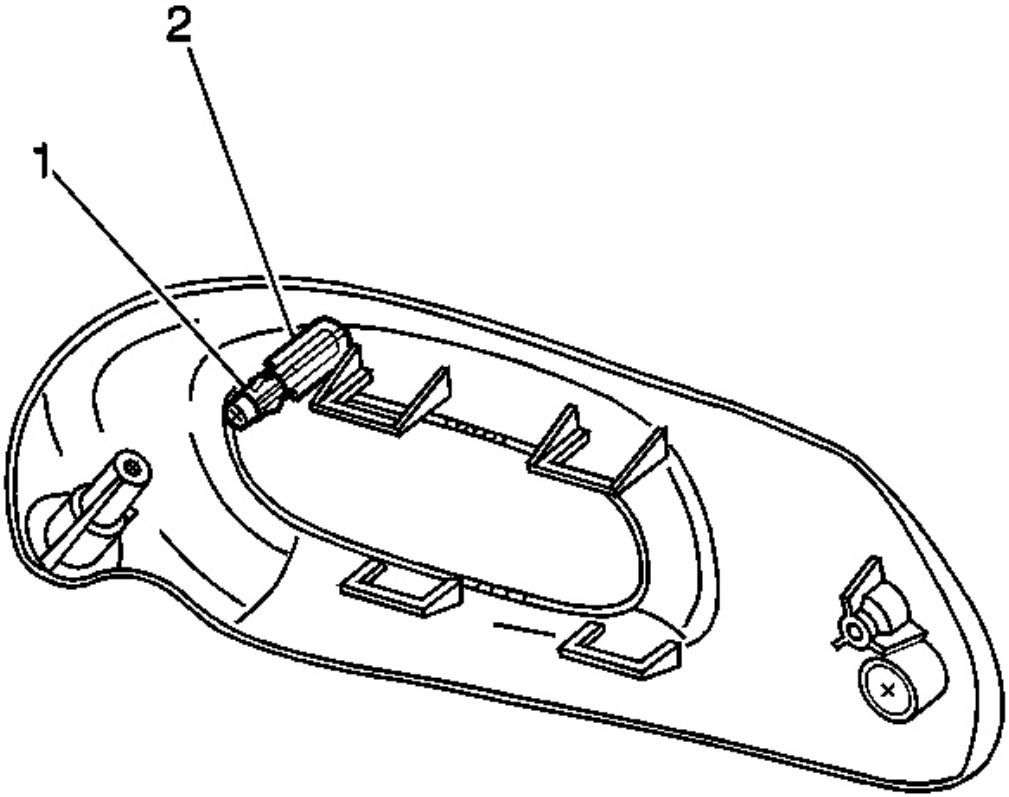

Fig. 134: Panel Side To Seat Frame
Courtesy of GENERAL MOTORS CORP.

1. Install a new barrel clip (1) to the trim panel upper barrel post (2)

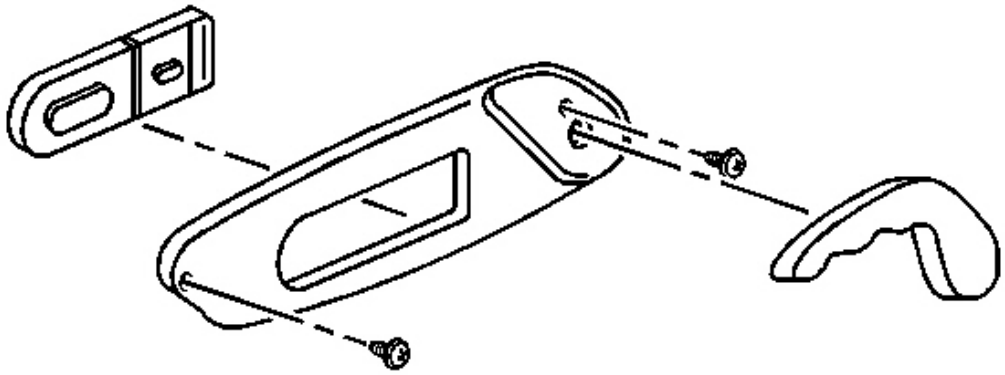

Fig. 135: Switch To Side Trim Panel & Screws
Courtesy of GENERAL MOTORS CORP.

2. Install the switch to the panel (if removed).
3. Connect the switch harness.

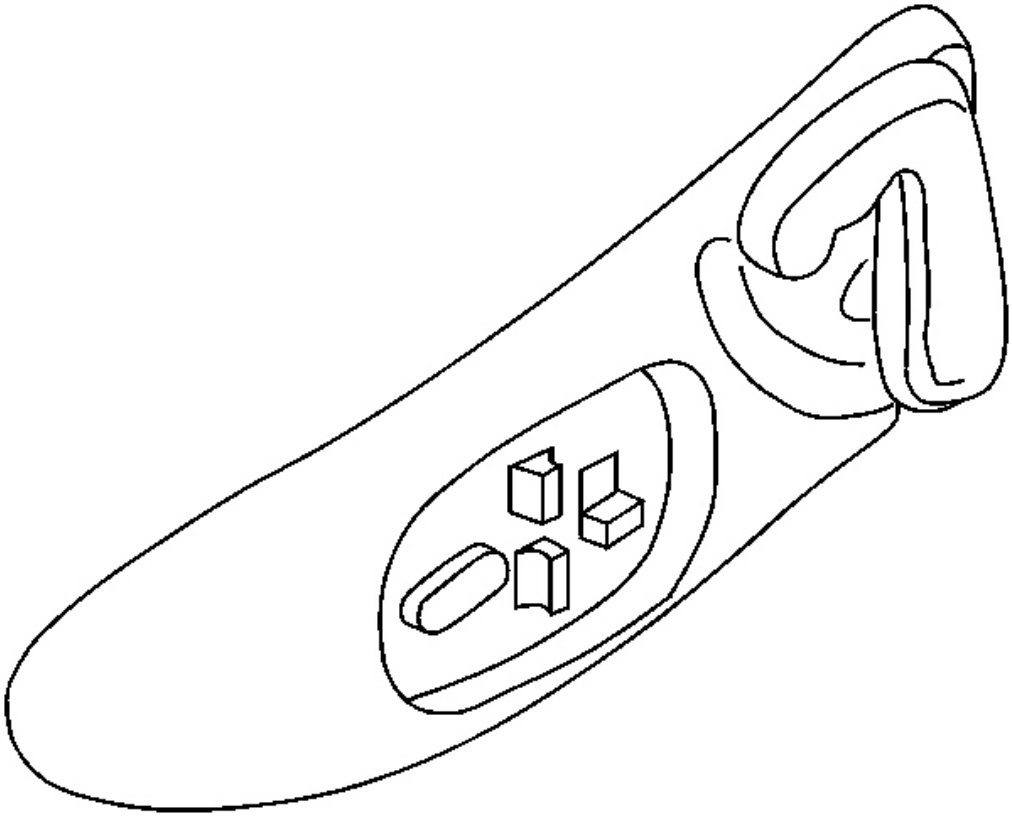

Fig. 136: Side Trim Panel & Switch Harness
Courtesy of GENERAL MOTORS CORP.

4. Install the seat side trim panel.
    - Push the barrel post with clip through the hole in the seat cover and into the hole in the seat frame.
    - Install the front and rear trim panel attaching screws.

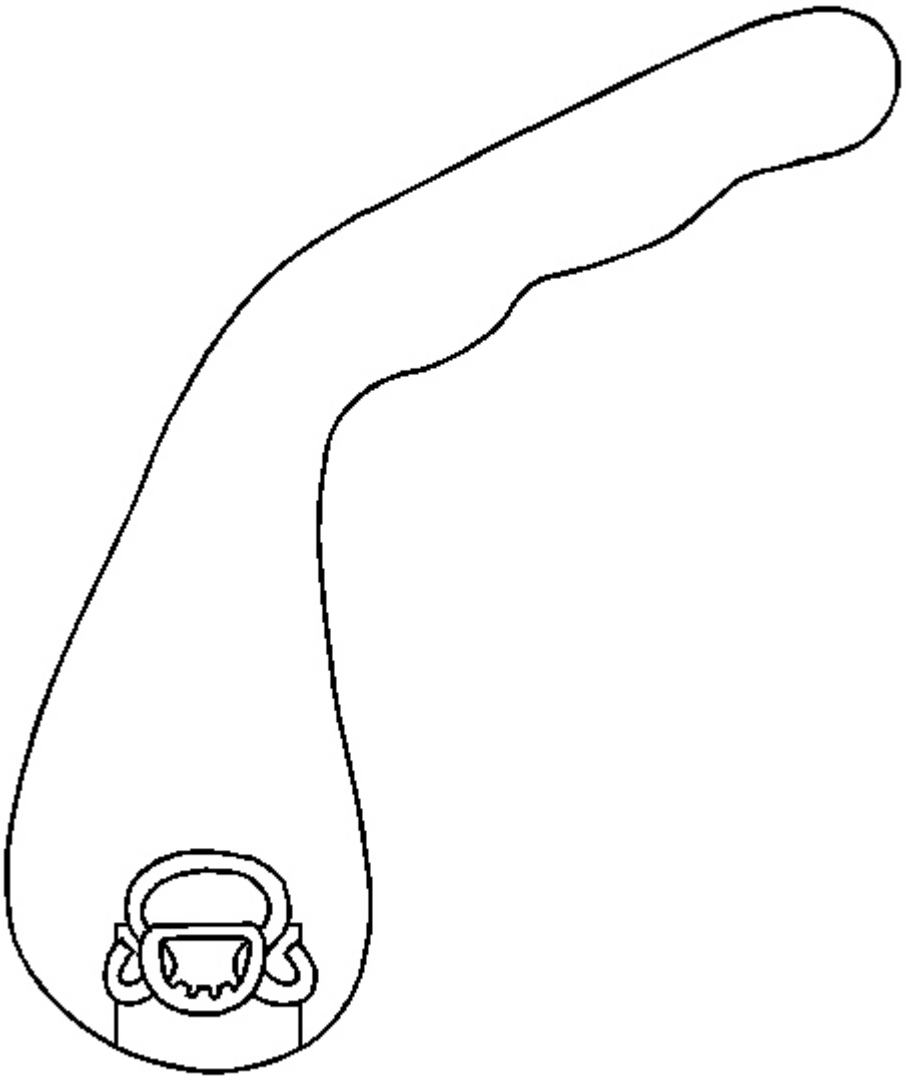

Fig. 137: Recliner Handle To Reclining Mechanism Shaft
Courtesy of GENERAL MOTORS CORP.

5. Install the seat back recliner handle. Refer to **Seat Back Recliner Handle Replacement - Front** .

DESCRIPTION AND OPERATION

POWER SEATS SYSTEM DESCRIPTION AND OPERATION

Power Seat System Components

The power seat system consists of the following components:

- The driver seat adjuster switch
- The passenger seat adjuster switch
- The driver seat relay center
- The passenger seat relay center
- The driver horizontal adjuster motor
- The driver front vertical adjuster motor
- The driver rear vertical adjuster motor
- The passenger horizontal adjuster motor
- The passenger front vertical adjuster motor
- The passenger rear vertical adjuster motor
- The SCM-L 10A fuse
- The PWR ST/DRV 20A circuit breaker
- The LUMBAR 15A fuse
- The PWR ST/PAS 20A circuit breaker

Driver and Passenger Power Seat Operation

The seat adjuster motors are controlled by relays through the adjuster motor supply circuits. The adjuster motor relays are controlled by the seat adjuster switches. The relay coils are supplied fused battery positive voltage from the instrument panel electrical center. The relay coils use separate ground circuits or control circuits connected to the seat adjuster switch. When an adjuster switch is pressed the relay coil control circuit is closed to ground and the relay is energized. There is one relay for each supply circuit which provides power or ground used for adjuster motor operation. When the relays are de-energized the supply circuits are closed to ground. When one adjuster motor relay is energized voltage is supplied to the adjuster motor and ground is provided through the de-energized relay. The direction of the adjuster motor rotation is determined by which of the adjuster motor relays are energized and de-energized.

LUMBAR SUPPORT DESCRIPTION AND OPERATION

Lumbar Support System Components

The lumbar support system consists of the following components:

- The driver seat adjuster switch
- The passenger seat adjuster switch
- The driver seat lumbar pump and module
- The passenger seat pump and module
- The driver seat lumbar and side bladders

- The passenger seat lumbar and side bladders
- The SCM-L 10A fuse
- The LUMBAR 15A fuse

Lumbar Support System Operation

Lumbar pump operation is controlled through relays in the lumbar module. Battery positive voltage from the instrument panel electrical center is supplied to the lumbar module and is used for pump operation. Battery positive voltage from the instrument panel electrical center is supplied to the lumbar control switches and is used to energize the relay coils. When a lumbar switch is pressed voltage is supplied to the control circuit which supplies the inflate or deflate relay coil and the pressure switch relay coil. Either the inflate or deflate relay along with the pressure switch relay must be energized in order for pump operation to occur. The lumbar control circuits are also used to control valves in the air lines from the lumbar pump to the seat lumbar and side bladders.

MEMORY SEATS DESCRIPTION AND OPERATION

Memory Seat System Components

The memory seat system consists of the following components:

- The seat adjuster switch
- The LH door switch
- The memory seat module
- The horizontal adjuster motor
- The front vertical adjuster motor
- The rear vertical adjuster motor
- The SCM-L 10A fuse
- The PWR ST/DRV 20A circuit breaker

Memory Seat System Controls

The memory seat system is controlled by the following components:

- The seat adjuster switch
- The memory seat module
- The body control module
- The LH door control module

Memory Seat System Operation

The seat adjuster motors are controlled by the memory seat module through the adjuster motor supply circuits. In an inactive state the adjuster motor supply circuits are grounded through switch contacts within the memory seat module. Adjuster motor operation occurs when the memory seat module switches one of the adjuster motor

supply circuits to battery positive voltage. The direction of the adjuster motor rotation is determined by which of the adjuster motor supply circuits is switched to battery positive voltage and which remains grounded.

The seat adjuster switch signal circuits are supplied with 12 volts through resistors within the memory seat module. When a seat adjuster switch is pressed the signal circuit is grounded. Closing the signal circuit to ground pulls the voltage low indicating to the memory seat module the switch status is active. The memory seat module also relies on messages received through the serial data circuit from other control modules to perform some memory seat functions.

The seat adjuster motors are equipped with position sensors. The position sensors are supplied with a 5 volt reference circuit and low reference circuit from the memory seat module. Whenever a memory seat module function is active the memory seat module receives a signal from each position sensor which varies from 0 to 5 volts depending on the seat position. The memory seat module uses the position sensor signal voltages to determine the seat position when storing or recalling seat position settings.

SPECIAL TOOLS AND EQUIPMENT

SPECIAL TOOLS

Special Tools

Illustration	Tool Number/ Description
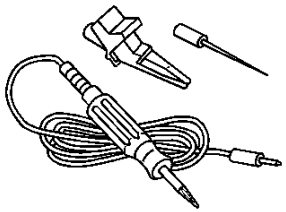	J 34142-B Test Light
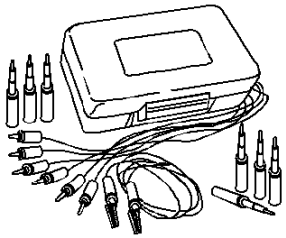	J 35616-A Connector Test Adapter Kit
	J 39200 Digital Multimeter

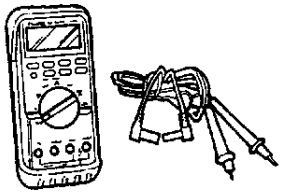	
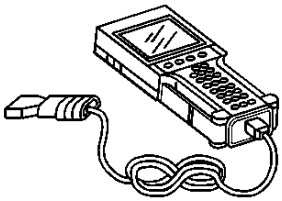	7000081 Tech 2 Kit